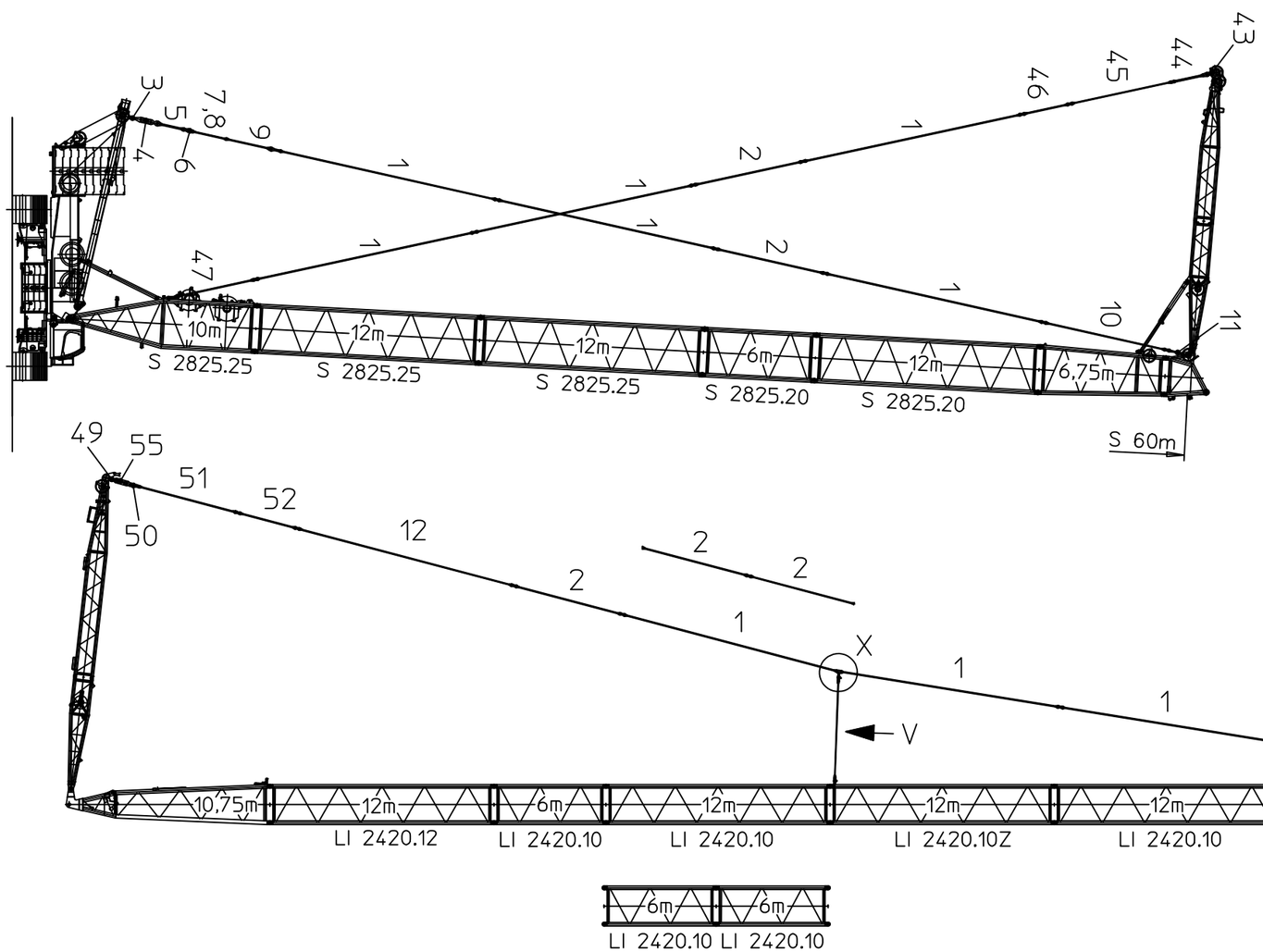

Ansicht V

M 1:20

für Zusatzabspannung

W 96m, W 90m, W 78m, W 72m u. W 60m

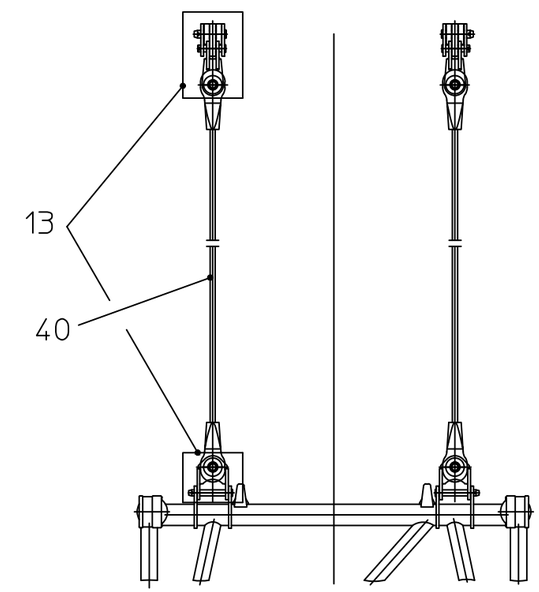

PROJECT:

LR 1600 SW

LOCATION:	Graham, NC
BUCKNER CONTACT:	Kevin Long Kevin@BucknerHeavylift.com
LIFT PLAN BY:	Dan Ives, PE Dani@BucknerHeavylift.com

DRAWING NOTES:

LR 1600 197' + 256' SW

FILE:	C:\Users\Dan Ives\OneDrive – Buckner Heavylift Cranes\Engineering\Drawings\BHL\Buckner\Build Sheets\LR 1600 SW.dwg		
CREATED:	04.29.2025 @ 10:37:37 AM		
EDITING TIME:	11h59m	FILE SIZE:	7601.87Kb
PAPER SIZE:	ANSI B (17.00 x 11.00 Inches)		
SAVED:	04.29.2025 @ 10:37:37 AM		
PLOTTED:	04.29.2025 @ 10:37:57 AM		

Revisions

All Sheets Same Revision Level

Rev.	Date	Description
000	08.08.2019	Preliminary Planning & Initial Layout
001	----	----
002	----	----
003	----	----
004	----	----
005	----	----
006	----	----
007	----	----
008	----	----
009	----	----
010	----	----

SHEET: 010 OF 010

BUCKNER HEAVYLIFT CRANES