Ersatzteilkatalog
Spare parts catalogue
Catalogue de pièces de rechange
Catálogue de repuestos
Каталог запасных частей

LIEBHERR

VORBEMERKUNGEN

Dieser Ersatzteilkatalog soll Ihnen die Ermittlung und Bestellung von Ersatzteilen für die Wartung bzw. Reparatur Ihres Liebherr-Kranes erleichtern.
Zum schnelleren Auffinden der Ersatzteile sind im Inhaltsverzeichnis die in Ihrem Kran verwendeten Baugruppen aufgeführt.

Inhaltsverzeichnis

Im Inhaltsverzeichnis verweist der Pfeil (➪) in der zweiten Textzeile der Baugruppenartikelnummer. auf die Artikel-Nr. hin.

Bild und Textseiten

Die Bild- und Textseiten für die Baugruppen und Einzelteile sind sortiert nach Unterwagen, Oberwagen und Ausleger. Ein Artikel kann aus einer oder mehreren Bild- und/oder Textseiten bestehen.

Verweise

- Ein Pfeil (→) in der Stückliste führt zu einer detaillierten Bild- und/oder Textseite des Artikels
- Befindet sich eine Positionsnummer in Klammern (x), handelt es sich um Einzelteile des vorangegangenen Artikels
- Schlauchleitungen (Unterwagen, Oberwagen, Ausleger) werden folgendermaßen dargestellt:

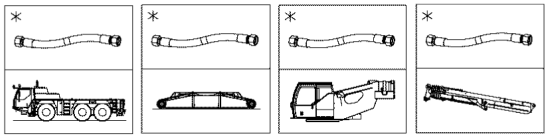

- Rohrleitungen (Unterwagen, Oberwagen, Ausleger) werden folgendermaßen dargestellt:

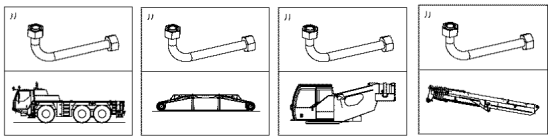

Fahrtrichtung

Der Pfeil (⇦/⇨) in der Abbildung verweist auf die Fahrtrichtung des Krans.

Numerischer Index

Der numerische Index ist sortiert nach Artikel-Nr. mit Hinweisen auf die Baugruppen-Nr. und Position-Nr.

Alphabetischer Index

Der alphabetische Index ist sortiert nach Bezeichnung mit Hinweisen auf Artikel-Nr., Position-Nr. und Baugruppen-Nr.
Für die sachliche Richtigkeit des Kataloges ist ausschließlich der deutsche Text maßgebend.

PRELIMINARY REMARKS

This spare parts catalogue should make it easier for you to identify and order spare parts for the maintenance and repair of your Liebherr crane.
In order to find the spare parts faster, the assemblies used in your crane are listed in the table of contents.

Table of contents

In the table of contents, the arrow (⇨) in the second text row of the assembly article no. refers to the article no.

Illustration and text pages

The illustration and text pages for the assemblies and individual parts are sorted according to chassis, superstructure and boom. An item can consist of one or multiple illustration and / or text pages.

References

- An arrow (→) in the parts list leads to a detailed image and / or text page of the item
- If there is a position number between parentheses (x), then it is an individual part of the previous item.
- Hoses (chassis, superstructure, boom) are shown as follows:

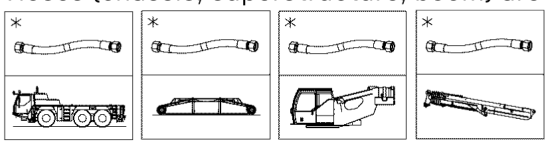

- Piping (chassis, superstructure, boom) is shown as follows:

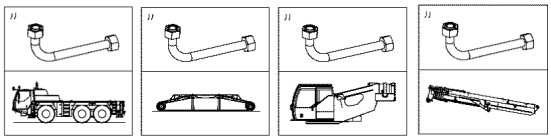

Travel direction

The arrow (⇦/⇨) in the illustration refers to the travel direction of the crane.

Numeric index

The numerical index is sorted according to the item no. with references to the assembly no. and the position no.

Alphabetic index

The alphabetic index is sorted according to the designation with references to the article no., position no. and assembly no.
For the factual accuracy of the catalogue, only the German text is applicable.

REMARQUES PREALABLES

Ce catalogue de pièces de rechange est conçu pour faciliter la sélection et la commande des pièces de rechange pour les opérations de maintenance et de réparation sur votre grue Liebherr.
Les groupes de composants utilisés sur votre grue sont énumérés dans la table des matières, pour en faciliter la recherche.

Table des matières

Dans la table des matières, la flèche (⇨), dans la deuxième ligne de texte de la référence des groupes de composants, renvoie à la référence de chaque article.

Pages d'illustrations et de texte

Les pages d'illustrations et de texte dédiées aux groupes de composants et différentes pièces sont triées selon le châssis, la partie tournante et la flèche. Un article peut être constitué d'une ou plusieurs pages d'illustrations et/ou de texte.

Renvois

- Une flèche (→) dans la nomenclature mène à une page d'illustrations et/ou de texte détaillée de l'article
- Un numéro de position entre parenthèses (x) correspond à différentes pièces de l'article précédent
- Les conduites flexibles (châssis, partie tournante, flèche) sont représentées de la manière suivante :

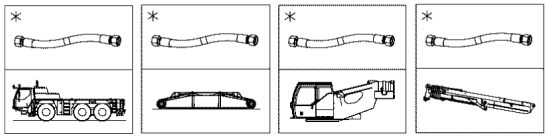

- Les conduites (châssis, partie tournante, flèche) sont représentées de la manière suivante :

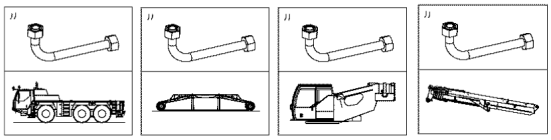

Sens de marche

La flèche (⇦/⇨) sur l'illustration renvoie au sens de marche de la grue.

Index numérique

L'index numérique est trié selon la référence article avec des indications sur le numéro de groupe de composants et le numéro de position.

Index alphabétique

L'index alphabétique est trié selon la désignation de l'article avec des indications sur la référence article, le numéro de position et le numéro de groupe de composants.
Seul le texte en langue allemande est déterminant pour la fiabilité du catalogue.

OBSERVACIONES PREVIAS

Este catálogo de piezas de repuesto debe servir para facilitarle la labor de encontrar y pedir las piezas de repuesto que necesita para el mantenimiento o la reparación de su grúa Liebherr.
Para que encuentre más rápido las piezas de repuesto, en el índice se enumeran los grupos constructivos usados en su grúa.

Índice

En el índice, la flecha (⇨) que hay en la segunda línea de texto del número de artículo del grupo constructivo se refiere al n.° de artículo.

Páginas de imagen y de texto

Las páginas de imagen y de texto para los grupos constructivos y las piezas individuales están clasificadas según el chasis inferior, la superestructura y la pluma. Un artículo puede constar de una o varias páginas de imagen y/o de texto.

Referencias

- Una flecha (→) en la lista de piezas conduce a una página de imagen y/o de texto detallada del artículo
- Si hay un número de posición entre paréntesis (x), se trata de piezas individuales del artículo precedente
- Las tuberías flexibles (chasis inferior, superestructura, pluma) se representan de la manera siguiente:

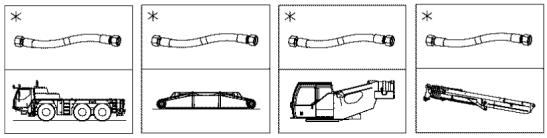

- Las tuberías rígidas (chasis inferior, superestructura, pluma) se representan de la manera siguiente:

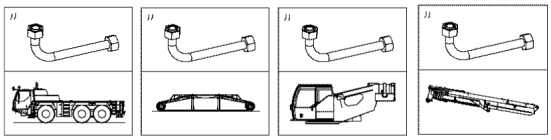

Dirección de marcha

La flecha (⇦/⇨) de la figura se refiere a la dirección de marcha de la grúa.

Índice numérico

El índice numérico está clasificado según el n.° de artículo, con alusiones al n.° de grupo constructivo y el n.° de posición.

Índice alfabético

El índice alfabético está clasificado según la denominación, con alusiones al n.° de artículo, el n.° de posición y el n.° de grupo constructivo.
La versión correcta determinante del catálogo es exclusivamente el texto en alemán.

ПРЕДВАРИТЕЛЬНЫЕ ЗАМЕЧАНИЯ

Этот каталог запасных частей поможет легче определить и заказать запасные части для техобслуживания или ремонта крана Liebherr.

Чтобы можно было быстрее найти запасные части, используемые в вашем кране конструктивные узлы, приведены в перечне.

Перечень

В содержании стрелка (⇨) во второй текстовой строке номера артикула конструктивного узла указывает на номер артикула.

Страницы с рисунками и текстами

Страницы с рисунками и описанием конструктивных узлов и отдельных частей рассортированы согласно их принадлежности ходовому устройству, поворотной платформе и стреле. Один артикул может включать одну или несколько страниц с рисунками и / или текстами.

Ссылки

- Стрелка (→) в спецификации ведёт к странице с подробным рисунком и / или описанием.
- Если номер позиции заключён в скобки (x), речь идёт об отдельных частях из предыдущего артикула.
- Шлангопроводы (ходовое устройство, поворотная платформа, стрела) представлены следующим образом:

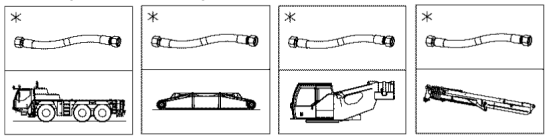

- Трубопроводы (ходовое устройство, поворотная платформа, стрела) представлены следующим образом:

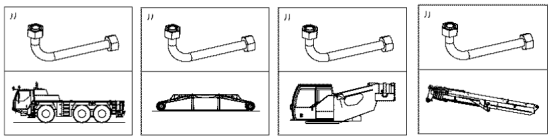

Направление движения

Стрелка (⇦/⇨) на рисунке указывает на направление движения крана.

Числовой индекс

Числовой индекс сортирует по номеру артикула с указанием номера конструктивного узла и позиции.

Алфавитный индекс

Алфавитный индекс сортирует по наименованию со указанием номера артикула, номера позиции и номера конструктивного узла.

Определяющим для правильности предметной классификации каталога является исключительно немецкий текст.

WIE BESTELLE ICH EIN ERSATZTEIL

Prüfen Sie zunächst, ob der Kran-Typ und die Werk-Nr. auf dem Typenschild Ihres Liebherr-Kranes mit dem Kran-Typ und der Werk-Nr. im Ersatzteilkatalog übereinstimmen.

Ihre Bestellung muss folgende Angaben enthalten:

anzugeben:	**zu ersehen:**	**Beispiel:**
Krantyp	Typenschild	LTM 1070-4.2
Werk-Nr.	Typenschild	060647
Bestellmenge	Ihr Bedarf	1 Stück
Artikel-Nr.	Bildseite/Textseite	938587501
Bezeichnung	Bildseite/Textseite	Seilwinde
Versandanschrift		
Versandart		

ACHTUNG:

Bei Aggregaten, für die auch Einzelteile bestellt werden können, weist der Pfeil (⇨) in der zweiten Textzeile der Bezeichnung auf die entsprechende Artikelnummer hin.

Bildseiten der Leitungssysteme (Hydraulik, Pneumatik, Elektrik) beinhalten nicht alle Aggregate.

Diese Aggregate sind auf den Bildseiten zu sehen, die die Einbaulage darstellen.

Für die Lieferung von Ersatzteilen gelten unsere Lieferungs- und Zahlungsbedingungen.

HOW DO I ORDER A SPARE PART

First check if the crane type and the plant no. on the data tag of your Liebherr crane comply with the crane type and plant number in the spare parts catalogue.

Your order must include the following data:

indicate:	**refer to:**	**Example:**
Crane type	Data tag	LTM 1070-4.2
Factory No.	Data tag	060647
Order amount	Your requirement	1 item
Article no.	Figure page / text page	938587501
Designation	Figure page / text page	Rope winch
Shipping address		
Shipping method		

NOTICE:

In the case of aggregates for which individual parts can also be ordered, the arrow (⇨) in the second line of text of the designation refers to the corresponding article number.

Figure pages for the hydraulic, pneumatic and electrical lines do not contain all aggregates.

These aggregates can be seen on the figure pages that represent the installation position.

For the delivery of the spare parts, our delivery and payment conditions apply.

COMMENT COMMANDER UNE PIECE DE RECHANGE

Commencer par vérifier si le type de grue et le numéro d'usine sur la plaque signalétique de votre grue Liebherr correspondent bien au type de grue et au numéro d'usine dans le catalogue des pièces de rechange.

Votre commande doit contenir les informations suivantes :

A indiquer :	**Information disponible :**	**Exemple :**
Type de grue	Plaque signalétique	LTM 1070-4.2
Numéro d'usine	Plaque signalétique	060647
Quantité commandée	Votre besoin	1 pce
Référence	Page d'illustrations / de texte	938587501
Désignation	Page d'illustrations / de texte	Treuil à câble
Adresse d'expédition		
Mode d'expédition		

ATTENTION :

Pour les groupes comportant des pièces pouvant être commandées séparément, la flèche (⇨), dans la deuxième ligne de texte de la désignation, indique la référence de l'article.

Les pages d'illustration des systèmes de conduites (hydraulique, pneumatique, électrique) ne détaillent pas tous les groupes disponibles.

Ces groupes sont détaillés sur les pages d'illustration représentant la position de montage.

La livraison des pièces de rechange est régie par nos conditions générales de vente.

CÓMO PEDIR UNA PIEZA DE REPUESTO

Compruebe primero si el modelo de grúa y el n.° de fábrica que hay en la placa de características de su grúa Liebherr coinciden con el modelo de grúa y el n.° de fábrica indicados en el catálogo de piezas de repuesto.

Su pedido debe contener los siguientes datos:

Qué indicar:	**Dónde consultarlo:**	**Ejemplo:**
Modelo de grúa	Placa de características	LTM 1070-4.2
N.° de fábrica	Placa de características	060647
Cantidad de pedido	Según su demanda	1 unidad
N.° de artículo	Página de imagen/Página de texto	938587501
Denominación	Página de imagen/Página de texto	Cabrestante
Dirección de envío		
Forma de envío		

ATENCIÓN:

En el caso de agregados para los que también se pueden pedir piezas individuales, la flecha (⇨) de la segunda línea de texto de la denominación alude al número de artículo correspondiente.

Las páginas de imagen de los sistemas de control (sistema hidráulico, sistema neumático, sistema eléctrico) no incluyen todos los agregados.

Estos agregados se pueden ver en las páginas de imagen que representan la posición de montaje.

Para el suministro de piezas de repuesto son válidas nuestras condiciones de envío y de pago.

КАК ЗАКАЗАТЬ ЗАПАСНУЮ ЧАСТЬ

Сначала проверьте, совпадает ли тип и заводской номер крана, указанные на заводской табличке данного крана Liebherr, с типом и заводским номером крана в каталоге запасных частей.

Ваш заказ должен содержать следующую информацию:

Следует указать:	**Следует смотреть:**	**Пример:**
Тип крана	Заводская табличка	LTM 1070-4.2
Заводской номер	Заводская табличка	060647
Объём заказа	По потребности	1 шт.
Номер артикула	Страницы с рисунками / страницы с описанием	938587501
Название	Страницы с рисунками / страницы с описанием	Канатная лебёдка
Адрес отправки		
Способ отправки		

ВНИМАНИЕ!

В агрегатах, для которых также можно заказать отдельные части, стрелка (⇨) во второй текстовой строке названия указывает на соответствующий номер артикула.

Страницы с рисунками модульного размера трубопроводов и каналов (гидравлических, пневматических, электрических) охватывают не все агрегаты.

Эти агрегаты можно найти на страницах с рисунками, представляющих монтажное положение.

На поставку запасных частей распространяются наши Условия поставки и оплаты.

Pos.	Item	Quantity	Description	Bezeichnung
2	919950108	1	UNDERCARRIAGE COMPLETE ⇨ ❑ 16	UNTERWAGEN KPL.M.SCHNEL
29	914860508	1	FIXING PARTS SLEWING RING ⇨ ❑ 101	BEFESTIGUNGSTEILE DREHVE
30	915562508	1	CRAWLER OUTFIT 900 FLACHB ⇨ ❑ 53	RAUPENBESTUECKUNG
40	917155308	1	PREPARATION HYDR JACKUP ⇨ ❑ 61	HYDRAULIK VORB.
50	917155408	1	QUICK-FITTING UNION JACKUP ⇨ ❑ 67	SCHNELLKUPPLUNG
55	914860608	1	TOOLS AND ACCESSORIES ⇨ ❑ 102	WERKZEUG M.ZUBEHOER
58	915447908	1	HYDRAULIC SUPPORT ⇨ ❑ 68	HYDRAULISCHE ABSTUETZUN
59	917155508	1	ADD.HYDR.UNIT SUPPORT CYLINDER ⇨ ❑ 72	ZUSATZHYDR.ABSTUETZZYLIN
60	914950208	1	CRAW.TRACK CARRIER QUICK COUP. ⇨ ❑ 75	SCHNELLKUPPL.RAUPENTRAE
62	914950308	1	CRAWLER-TRACK CARRIER ⇨ ❑ 76	TRANSPORTRAUPE
66	919938908	1	ELECTR.FOR CRAWLER CARRIER ⇨ ❑ 79	ELEKTRIK RAUPE
71	915731908	1	EL.COMP. DISPATCH ASSEMBLY ⇨ ❑ 106	EL.TEILE VERSANDMONTAGE
72	91003809	1	ADDITIONAL LABEL.FACTORY DATA ⇨ ❑ 107	ZUSATZBESCHILD.FABRIKDATE
74	919933708	1	LABELLING GREAT BRITAIN ⇨ ❑ 108	BESCHILDERUNG GROSSBRITA
75	917026008	1	HATCHING PLAN SPF ⇨ ❑ 112	SCHRAFFURPLAN
78	919553608	1	ADDITIONAL SIGNAGE CALIFORNIA ⇨ ❑ 114	ZUSATZBESCHILD.CALIFORNIE
80	919498808	1	CENTRAL BALLAST 15T ⇨ ❑ 116	ZENTRALBALLAST
82	919499008	1	BALLAST MONITORING ⇨ ❑ 96	BALLASTUEBERWACHUNG
98	916959808	1	PERSONAL PROTECTION EQUIPMENT ⇨ ❑ 120	PERSOENLICHE SCHUTZAUSRU
103	918728408	1	ASSEMBLY PARTS F.SLEWING PLTF. ⇨ ❑ 121	MONTAGETEILE DREHBUEHNE
104	919832408	1	DIESEL ENGINE PURCHASED PARTS ⇨ ❑ 128	DIESELMOTOR KAUFTEIL
105	918728708	1	DRIVE ASSEMBLY CPL. ⇨ ❑ 262	ANTRIEBSAGGREGAT KPL.
107	918955208	1	BATTERY BOX CPL. ⇨ ❑ 285	BATTERIEKASTEN KPL.
108	917962508	1	FUEL TANK ADD-ON UNIT ⇨ ❑ 289	KRAFTSTOFFBEHAELTER ANBA
109	918008908	1	OIL RESERVOIR, EXTENSION ⇨ ❑ 292	OELBEHAELTER ANBAU
110	91002857	1	FUEL FEED ⇨ ❑ 304	KRAFTSTOFFFOERDERUNG
111	919616808	1	LUFFING RAM W. PIVOT ⇨ ❑ 626	WIPPZYLINDER M.LAGERUNG
112	917357108	1	CRANE DRIVER CAB ADDITION ⇨ ❑ 314	KRANFUEHRERKABINE ANBAU
113	919010108	1	CRANE OPERATOR CABIN PREASS 2 ⇨ ❑ 318	KRANFUEHRERKABINE VORM.2
114	917304508	1	CRANE OPERATOR CABIN PREASS 1 ⇨ ❑ 333	KRANFUEHRERKABINE VORM.1

Pos.	Item	Quantity	Description	Bezeichnung
115	917304608	1	CRANE DRIVER CABIN, UNFINISHED ⇨ ❑ 357	KRANFUEHRERKABINE ROH
116	917304708	1	SLIDING DOOR INSTALLATION SPF ⇨ ❑ 358	SCHIEBETUER EINBAU
117	917472008	1	ROLLER SLEWING RING ⇨ ❑ 365	ROLLENDREHVERBINDUNG
119	919235408	1	SLEWING GEAR ⇨ ❑ 367	DREHWERK
121	916109208	1	ROTATING PLATFORM LOCK ⇨ ❑ 374	DREHBUEHNENARRETIERUNG
123	773941308	2	POUCH SOCKET 19-22 SPF ⇨ ❑ 629	TASCHENSCHLOSS
125	919935508	1	MAIN HOIST GEAR ⇨ ❑ 375	HAUPTHUBWERK
127	917910508	1	ROPE WITH ACCESSORIES 1 ⇨ ❑ 632	SEIL F.WINDE 1
128	917894308	1	HEATING CRANE DRIVER'S CABIN MIT KLI ⇨ ❑ 385	HEIZUNG KRANFUEHRERKABIN
131	918810308	1	CONTROL STAND ⇨ ❑ 393	STEUERSTAND
132	916049908	1	MIRROR ATTACHM.IN CRANE CABIN ⇨ ❑ 402	SPIEGELANBAU KRANFUEHRER
135	918728908	1	TURNTABLE PANELLING ⇨ ❑ 403	DREHBUEHNENVERKLEIDUNG
136	919484908	1	FALL PROTECTION ⇨ ❑ 418	ABSTURZSICHERUNG
142	919284308	1	BALLAST MONITORING ENCODER ⇨ ❑ 633	GEBER BALLASTUEBERWACH
143	919812608	1	EL.INSTRUMENTS F.CRANE DRIV.CA ⇨ ❑ 424	ELEKTRIK KRANFUEHRERKABIN
144	916870808	1	MIRROR ATTACHM.AT SLEW.PLATFOR ⇨ ❑ 440	SPIEGELANBAU DREHBUEHNE
145	918759708	1	ADD HEATING SUPERSTRUCTURE ⇨ ❑ 442	ZUSATZHEIZUNG OW
147	915090008	1	COUNTERWEIGHT WITH CLAMP ⇨ ❑ 634	GEGENGEWICHT M.BEFESTIG
149	915090108	1	ADDITIONAL BALLAST ⇨ ❑ 637	ZUSATZBALLAST
153	919501608	1	HYDRAULIC BALLASTING ⇨ ❑ 453	HYDRAULISCHE BALLASTIERUN
160	919502708	1	BALLAST MONITORING ⇨ ❑ 638	BALLASTUEBERWACHUNG
161	918802108	2	BALLAST MONITORING ENCODER ⇨ ❑ 643	GEBER BALLASTUEBERWACH
162	91003833	1	UREA PLANT ⇨ ❑ 457	HARNSTOFFANLAGE
163	919674308	1	EXHAUST SYSTEM ⇨ ❑ 467	ABGASANLAGE
165	918729308	1	AIR FILTER UNIT ⇨ ❑ 476	LUFTFILTERANLAGE
169	915300208	1	CENT. LUBRIC. SYSTEM SUPERST. ⇨ ❑ 477	ZENTRALSCHMIERANLAGE OW
175	919950308	1	DISPATCH ASSY.MECH.PARTS ⇨ ❑ 644	MECH.TEILE VERSANDMONTAG
179	919940408	1	ELECTR. SYSTEM F.SLEWING PLATF ⇨ ❑ 484	EL.ANLAGE DREHBUEHNE
181	919940108	1	SWITCHBOX MOUNTING PARTS ⇨ ❑ 497	EINBAUTEILE SCHALTSCHRAN
185	918730608	1	HYDRAULICS ⇨ ❑ 510	HYDRAULIK

Pos.	Item	Quantity	Description	Bezeichnung
187	919528608	1	OIL COOLER INSTALLATION ⇨ ❑ 560	OELKUEHLER EINBAU
189	918118408	1	COMPRESSED-AIR SYST.SUPERSTR. ⇨ ❑ 564	DRUCKLUFTANLAGE OW
191	918730808	1	HOSE LINES SUPERSTRUCTURE STUFE 5 ⇨ ❑ 570	SCHLAUCHLEITUNGEN OBER
193	919028108	1	PIPELINES SUPERSTRUCTURE ⇨ ❑ 573	ROHRLEITUNGEN OBERWAGE
199	916166208	1	CAR RADIO ⇨ ❑ 649	AUTORADIO
201	919935408	1	TELESCOPIC BOOM CPL. SPF ⇨ ❑ 651	TELESKOPAUSLEGER KPL.
213	919938608	1	ELECTR. SYSTEM F. BOOM ⇨ ❑ 689	EL.ANLAGE AUSLEGER
217	915928608	1	HYDR.F.TELESCOPIC BOOM ⇨ ❑ 707	HYDRAULIK TELE
229	915928808	1	ADDNL.HYDR. FOLDING JIB ⇨ ❑ 715	ZUSATZHYDRAULIK KLAPPSPI
285	919868808	1	CARRIER, MEAS. & WARN. DEVICE WW+HF ⇨ ❑ 728	TRAEGER MESS-U.WARNEINRI
287	917825608	1	ADD-ON PARTS TELE ⇨ ❑ 737	ANBAUTEILE
299	917893008	1	SLINGING MEAN MONTAGE ⇨ ❑ 738	ANSCHLAGMITTEL
301	918627208	1	AIR COND. UNIT SUPERSTRUCTURE ⇨ ❑ 574	KLIMAANLAGE OW
310	910543708	1	LOAD HOOK 10 E SPF ⇨ ❑ 739	LASTHAKEN
311	919421708	1	HOOK BLOCK 32 EM SPF ⇨ ❑ 740	HAKENFLASCHE
312	910445708	1	HOOK BLOCK 63DM SPF ⇨ ❑ 743	HAKENFLASCHE
327	918988908	1	A-HEADLIGHT SLEWING PLATFORM ⇨ ❑ 576	A-SCHEINWERFER DREHBUEHN
330	919935608	1	AUXILIARY HOISTING GEAR CPL. 4B-23 ⇨ ❑ 578	HILFSHUBWERK KPL.
332	917910708	1	AUXILIARY HOIST.ROPE W.ACCESSO ⇨ ❑ 744	HILFSHUBSEIL M.ZUBEHOER
333	91004922	1	HYD.AUX.LIFT GEAR UPPER CARRIA ⇨ ❑ 596	HYDRAULIK HILFSHUBWERK D
350	919933308	1	TRANSPORT MOUNTING ⇨ ❑ 745	TRANSPORTHALTERUNG DKS
351	919932208	1	DOUBLE FOLDING JIB MECH.COMP. 3A-34 ⇨ ❑ 754	DOPPELKLAPPSPITZE MECH.K
352	917508408	1	TOOLS ⇨ ❑ 779	WERKZEUG KLAPPSPITZE
356	915415908	1	BOOM NOSE ⇨ ❑ 721	MASTNASE
362	918258408	1	EL.2 HOISTING LIMIT SWITCH ⇨ ❑ 725	ELEKTRIK 2.HUBENDSCHALTE
363	914557108	1	INST.BACK SHEAVE FOR BOOM NOSE ⇨ ❑ 727	EINBAU NACKENROLLE
381	91003677	1	EXTERNAL FEED 110V ⇨ ❑ 603	FREMDEINSPEISUNG
383	91002360	1	CHARGER 110V-230V ⇨ ❑ 605	LADEGERAET
384	91000484	1	WIRING FAN HEATER ROTARY PLAT. ⇨ ❑ 607	VERKABELUNG HEIZLUEFTER D
385	919584608	1	SOCKET KABINE ⇨ ❑ 609	STECKDOSE

Pos.	Item	Quantity	Description	Bezeichnung
391	913753108	1	RADIO PREPARATION UPPER CARRIA ⇨ ❑ 612	FUNKVORBEREITUNG OW
401	919386708	1	COOLING WATER PRE-HEATING 110V ⇨ ❑ 613	KUEHLWASSERVORWAERMUN
403	919392208	1	LAP BELT INSTALLATION ⇨ ❑ 614	BECKENGURT EINBAU
404	91000497	1	EL.COOLANT PREHEAT OW ⇨ ❑ 616	EL.KUEHLWASSERVORWAERM
440	915037208	1	AUXILIARY REEVING CABLE, COMPL 16X18 ⇨ ❑ 784	HILFSEINSCHERSEIL KPL.
488	915927808	1	ADDITIONAL HYDRAULICS ⇨ ❑ 617	ZUSATZHYDRAULIK OELVORWA
494	918805408	1	CAMERA MONITOR OW ⇨ ❑ 622	KAMERAUEBERWACHUNG OW
891	917028508	1	ANTI-SLIP COATING LTR 1100 ⇨ ❑ 785	ANTIRUTSCHBESCHICHTUNG

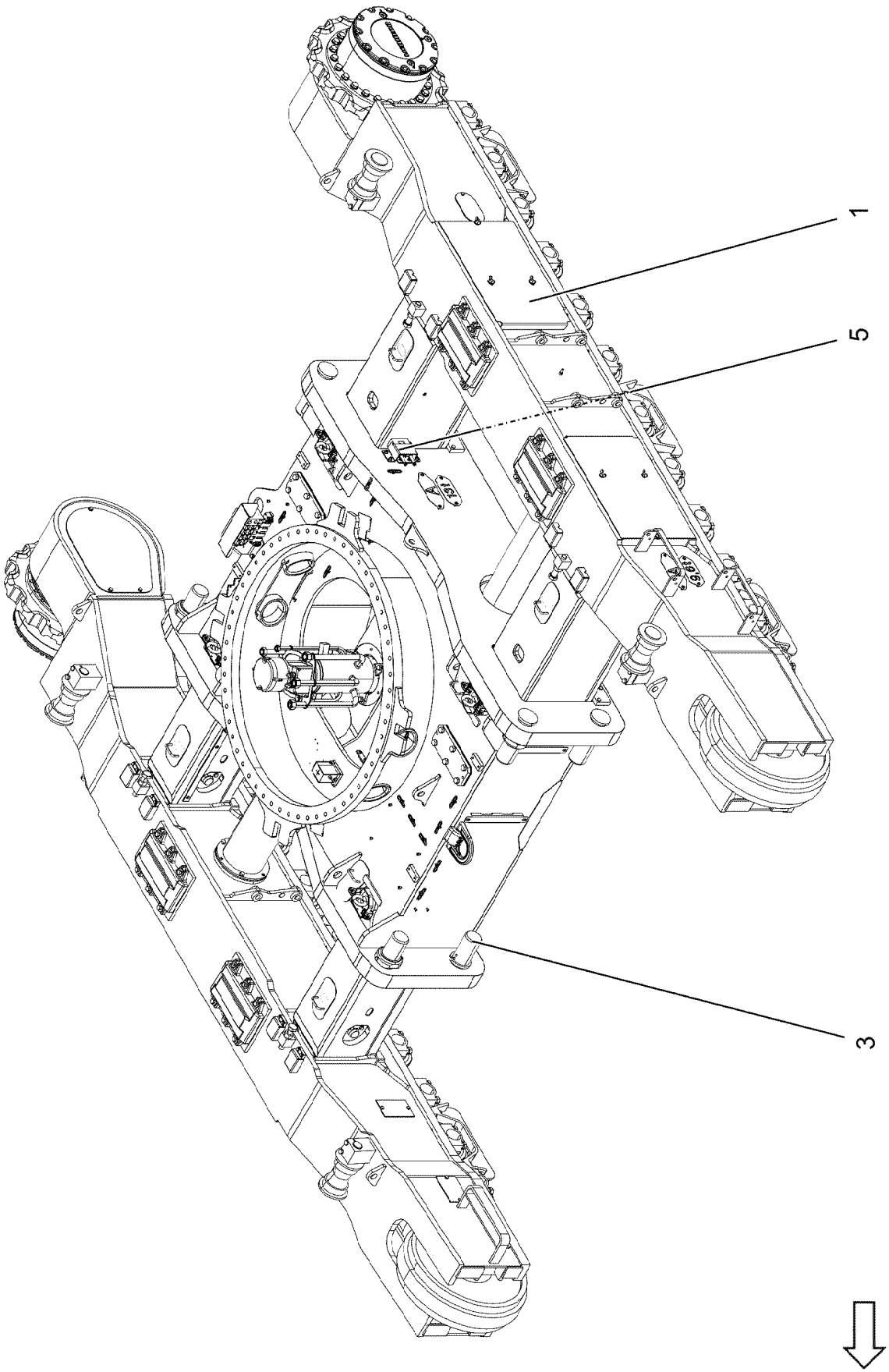
1
5
3

Pos.	Item	Quantity	Description	Bezeichnung
1	96062225	1	UNDERCARRIAGE CPL. B7B ⇨ ❑ 18	UNTERWAGEN KPL.
3	968374708	1	MOUNTING PARTS LWE ⇨ ❑ 45	MONTAGETEILE
5	968374908	1	LIMIT SWITCH ADD-ON ⇨ ❑ 51	ENDSCHALTER ANBAU

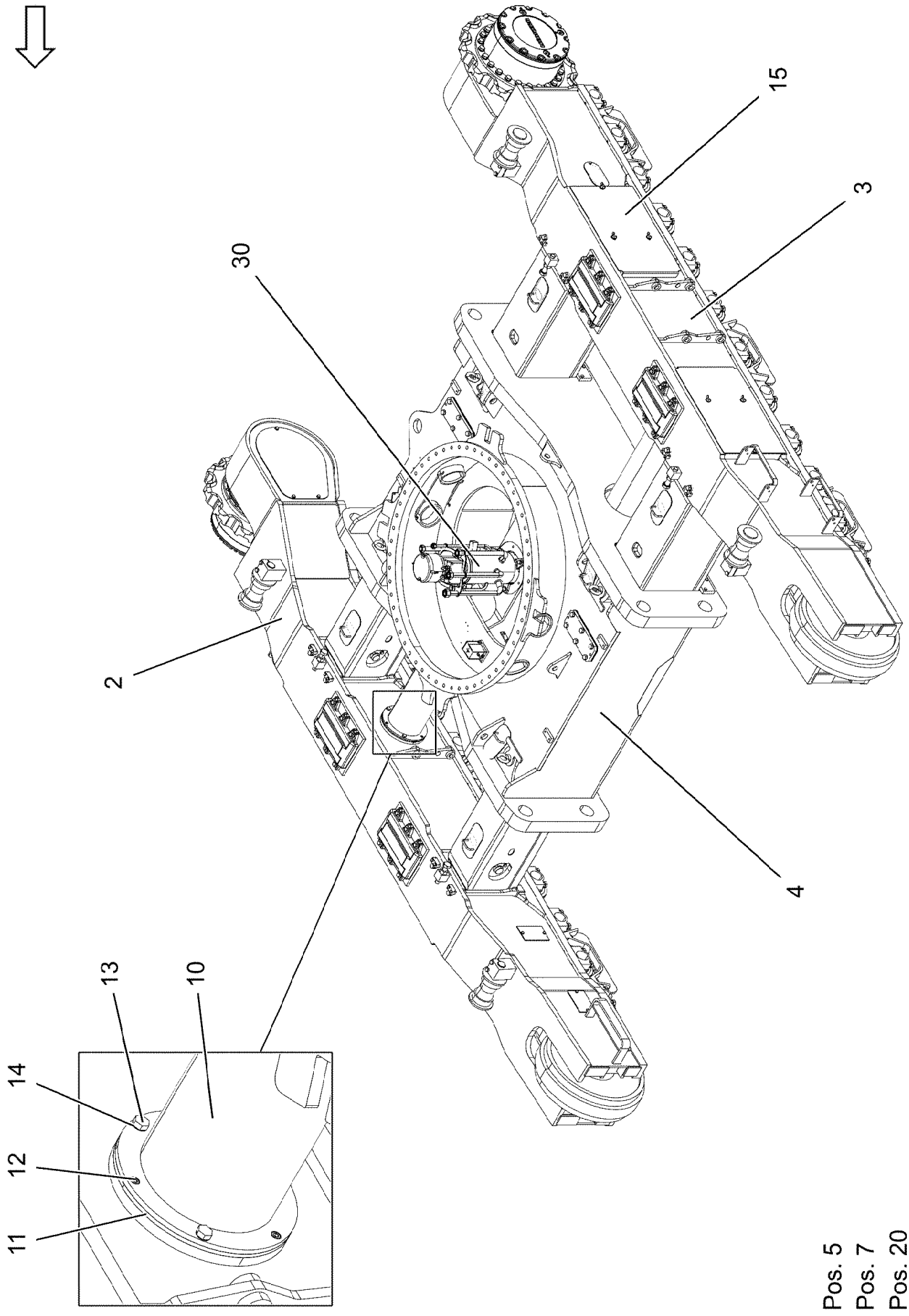
15
3
30
2
4
13
10
14
12
11
Pos. 5
Pos. 7
Pos. 20

Pos.	Item	Quantity	Description	Bezeichnung
2	96062226	1	CRAWLER CARRIER RIGHT CPL ⇨ ❑ 20	RAUPENTRAEGER KPL.RE.
3	96062228	1	CRAWLER TRACK CARRIER LEFT CPL ⇨ ❑ 27	RAUPENTRAEGER KPL.LI.
4	992078314	1	CENTRE PIECE KPL. ⇨ ❑ 29	MITTELTEIL
5	967304508	1	UNDERCARRIAGE HYDRAULICS ⇨ ❑ 32	HYDRAULIK UNTERWAGEN
7	917598608	1	HOSE LINES CRAWLER SCR ⇨ ❑ 38	SCHLAUCHLEITUNGEN RAUPE
10	918998614	2	PIPE COMPL.	ROHR KPL.
11	97042667	2	PLATE 8X325X325 S355MC FE//ZNNI8//CN//T	BLECH
12	12219296	6	SOCKET HEAD SCREW ISO 4762 M10X20 8	ZYLINDERSCHRAUBE
13	12214938	6	HEX SCREW ISO 4017 M16X35 8.8 FLZN SP	SECHSKANTSCHRAUBE
14	425221608	6	SERRATED LOCK WASHER DIN 6798 J 16,5	FAECHERSCHEIBE
15	990840414	1	COVER NRS ⇨ ❑ 40	ABDECKUNG
20	973567608	1	PLATE IDENTIFICATION NUMBER IDENT-N	SCHILD IDENTNR.
30	96048348	1	INSTALLATION PARTS F.HYDRAULIC ⇨ ❑ 41	HYDR.INSTALLATIONSTEILE

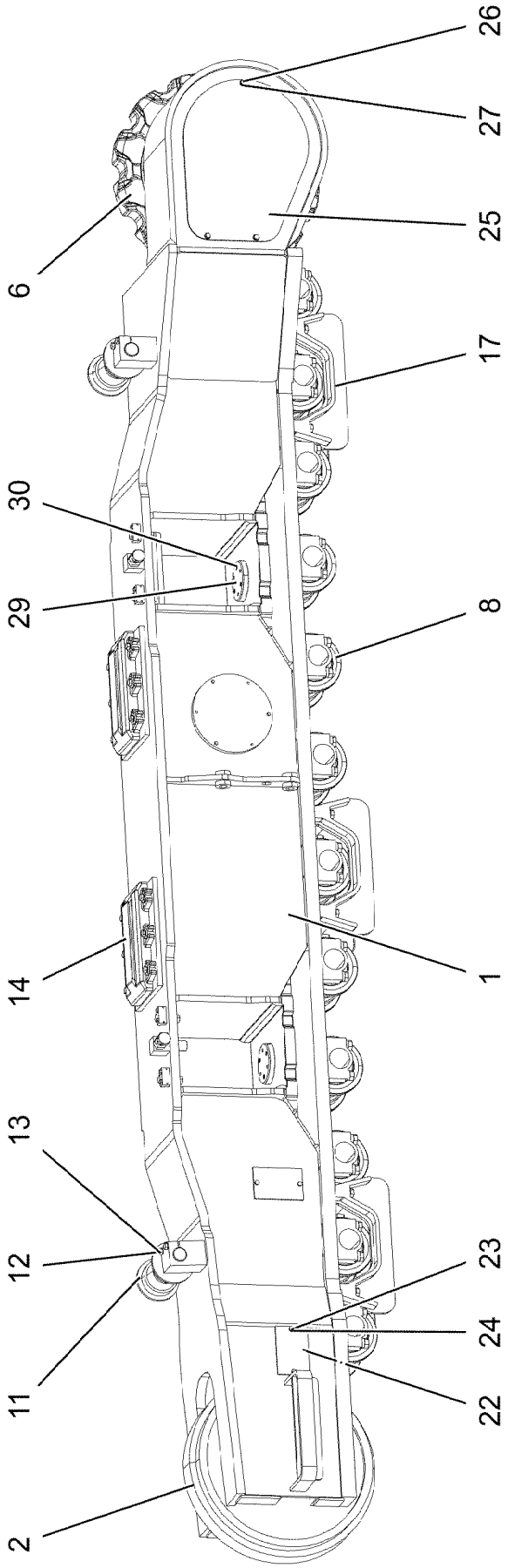
26
27
25
6
17
30
29
8
14
1
13
12
23
24
11
22
2

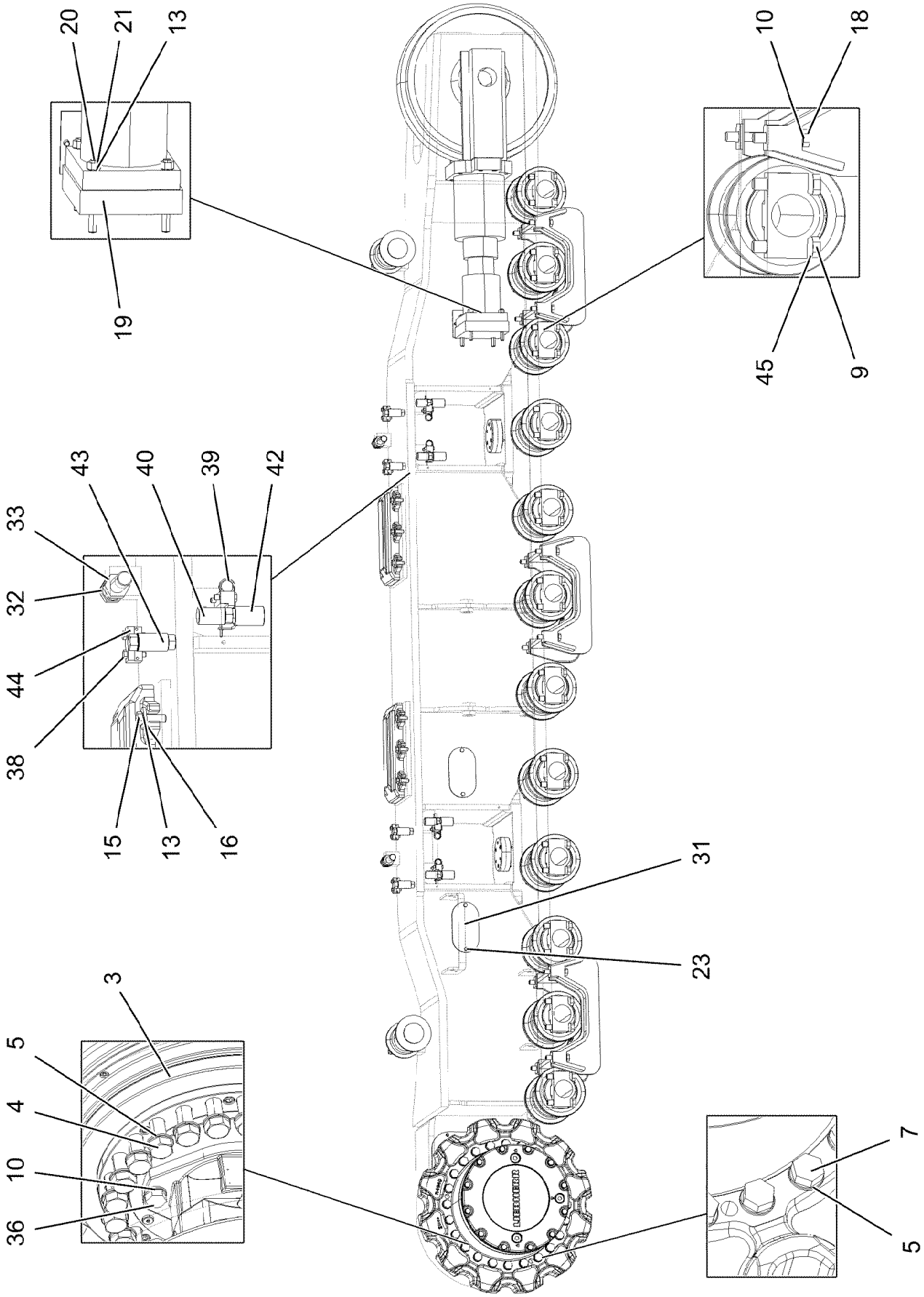

16.11.2023 173981 LIEBHERR	**etk_en_de_078966 LTR 1100** **CRAWLER CARRIER RIGHT CPL** **RAUPENTRAEGER KPL.RE.**	❑ 21 (2/3) **96062226**

Pos.	Item	Quantity	Description	Bezeichnung
1	10225969	1	CRAWLER TRACK CARRIER, RIGHT	RAUPENTRAEGER RE.
2	790256114	1	GUIDE WHEEL UNIT CPL B7X710 LH-GRAU ⇨ ❑ 23	LEITRADEINHEIT KPL
3	13587399	1	TRACTION DRIVE LPI1000 30S 0033 RAL 704	FAHRANTRIEB
(1)	13710427	1	TRACTION DRIVE LPI1000 30S 0033	FAHRANTRIEB
(94)	944214403	1	COVER 8X225X290	DECKEL
(391)	12224035	2	HEX SCREW ISO 4017 M20X30 8.8 FLZN SP	SECHSKANTSCHRAUBE
(393)	779006901	1	CONICAL PLUG GPN 600 LD-PE	KEGELSTOPFEN
(395)	10289808	2	WASHER ISO 7089 20 300HV FLZN SPF	SCHEIBE
4	12691274	24	HEX SCREW ISO 4014 M24X120 10.9 FLZN	SECHSKANTSCHRAUBE
5	4600146	48	WASHER EN 14399-6 24 300-370HV FLZN SP	SCHEIBE
6	11306946	1	DRIVE WHEEL 12XB7X215,9 983593114 LH	ANTRIEBSRAD
7	4062144	24	HEX SCREW ISO 4017 M24X70 10.9 FLZN SP	SECHSKANTSCHRAUBE
8	10874655	12	TRACK ROLLER COMPL. 200X210 LH-GRAU	LAUFROLLE KPL.
9	10876069	48	HEX SCREW ISO 4014 M24X120 8.8 FLZN SP	SECHSKANTSCHRAUBE
10	460022203	14	WASHER DIN 6916 21 C 45 A3C	SCHEIBE
11	749065314	2	CARRYING ROLLER CPL LH-GRAU ⇨ ❑ 26	TRAGROLLE KPL
12	11642377	4	HEX SCREW ISO 4014 M16X70 8.8 FLZN SP	SECHSKANTSCHRAUBE
13	425221608	20	SERRATED LOCK WASHER DIN 6798 J 16,5	FAECHERSCHEIBE
14	308115114	2	SLIPPER 65X340X450 GS-CK 45 983593114	GLEITSCHUH
15	10875520	12	HEX SCREW ISO 4017 M16X50 8.8 FLZN SP	SECHSKANTSCHRAUBE
16	4600180	12	WASHER DIN 6340 17 FLZN SPF	SCHEIBE
17	964650808	3	TRACK GUIDE WELDMENT SPF	KETTENFUEHRUNG SCHWK.
18	406207208	12	HEX SCREW ISO 4017 M20X100 10.9 FLZN	SECHSKANTSCHRAUBE
19	977240208	1	PLATE 50X250X210 S355J2+N	BLECH
20	948996914	4	THREADED ROD DIN 975 M16X150 8.8	GEWINDESTANGE
21	10875617	4	HEX NUT ISO 4032 M16 8 FLZN SPF	SECHSKANTMUTTER
22	977441008	2	PLATE 5X200X130 S355MC	BLECH
23	11652470	8	HEX SCREW ISO 4017 M10X16 8.8 FLZN SP	SECHSKANTSCHRAUBE
24	425221208	8	SERRATED LOCK WASHER DIN 6798 J 10,5	FAECHERSCHEIBE
25	976540508	1	PLATE 5X670X510 S355MC	BLECH
26	11651006	3	HEX SCREW ISO 4017 M12X20 8.8 FLZN SP	SECHSKANTSCHRAUBE
27	10289804	3	WASHER ISO 7089 12 300HV FLZN SPF	SCHEIBE
29	956214014	2	PIN 160X50 35NICRMOV125 GASN. SPF	BOLZEN
30	10875573	6	SOCKET HEAD SCREW ISO 4762 M10X50 8	ZYLINDERSCHRAUBE
31	976540808	2	PLATE 5X240X130 S355MC	BLECH
32	10878793	2	HEX SCREW ISO 4017 M30X150 8.8 FLZN SP	SECHSKANTSCHRAUBE
33	10425689	2	HEX NUT ISO 4032 M30 10 FLZN SPF	SECHSKANTMUTTER
36	12224018	2	HEX SCREW ISO 4017 M20X55 8.8 FLZN SP	SECHSKANTSCHRAUBE
38	11626706	16	HEX SCREW ISO 4017 M10X40 8.8 FLZN SP	SECHSKANTSCHRAUBE
39	433101208	4	RETAINING SPRING 4X68 ISO 2081 FE/ZN8/	SICHERUNGSFEDER
40	957095914	4	THREADED ROD RD36X85 42CRMO4+QT	GEWINDESTANGE
42	957095714	4	THRUST PIECE RD40X60 42CRMO4+QT	DRUCKSTUECK
43	957095814	4	THREADED ROD RD36X95 42CRMO4+QT	GEWINDESTANGE
44	978068708	8	LOCKING PLATE 30X70X30 S355J2+N FE//	SICHERUNGSBLECH
45	959552614	48	WASHER 40/25X18 42CRMO4+QT	SCHEIBE

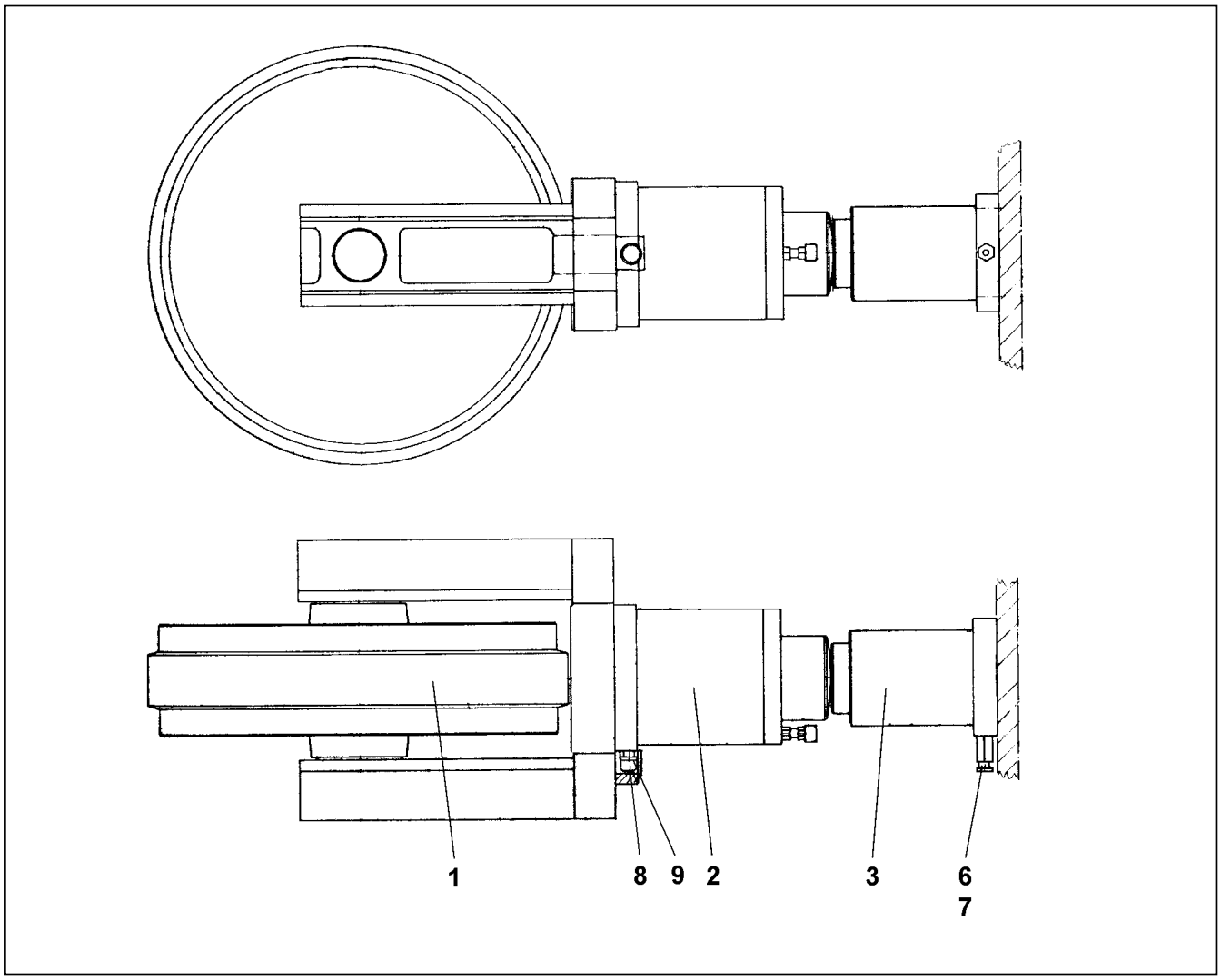

Pos.	Item	Quantity	Description	Bezeichnung
1	749013714	1	GUIDE WHEEL CPL B7X710 LH-GRAU ⇨ ❑ 24	LEITRAD KPL
2	790336014	1	NITROGEN TENSIONER CPL LH-GRAU	STICKSTOFFSPANNER KPL
(999)	12103474	1	SEAL KIT	DICHTSATZ
3	749065414	1	TENSION JACK HYDR CPL LH-GRAU ⇨ ❑ 25	SPANNER HYDR KPL
6	774351714	1	GREASE NIPPLE M16X1.5	SCHMIERNIPPEL
7	710121114	1	FLAT SEALING RING 17,4X24X1,5	FLACHDICHTRING
8	5000569	1	GAS LINE NON-RETURN VALVE	GASRUECKSCHLAGVENTIL
9	7371064	1	SEAL	DICHTUNG

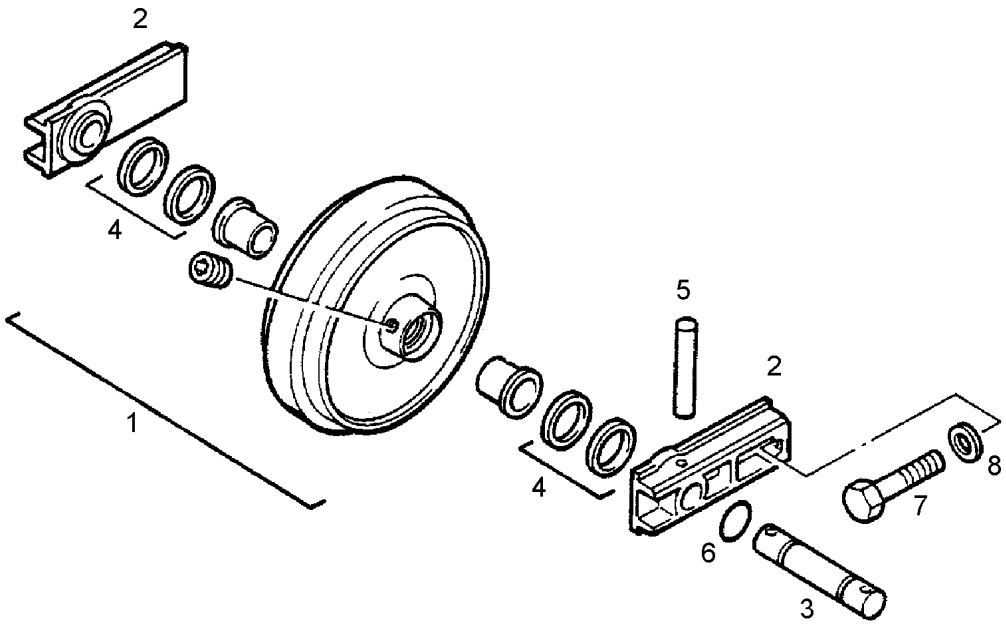

Pos.	Item	Quantity	Description	Bezeichnung
1	749063614	1	GUIDE WHEEL	LEITRAD
2	749063714	2	SLIDER	GLEITSTUECK
3	5200017	1	AXLE	ACHSE
4	749068514	2	AXIAL FACE SEAL CPL	GLEITRINGDICHTUNG KPL
5	432013108	2	DOWEL PIN ISO 8752 21X140	SPANNSTIFT
6	726431114	2	O-RING 88,49X3,53	O-RING
7	406212901	4	HEX SCREW ISO 4014 M20X110 10.9 A3C SP	SECHSKANTSCHRAUBE
8	11968421	4	WASHER SPRING DIN 128 A 20 FST 480H SP	FEDERRING

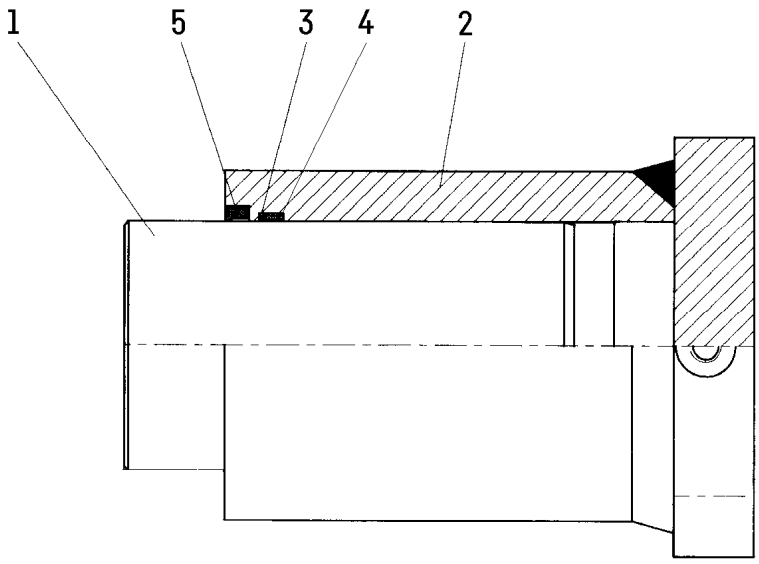

Pos. 6

Pos.	Item	Quantity	Description	Bezeichnung
1	790272214	1	PISTON	KOLBEN
2	790272314	1	CYL CPL	ZYL KPL
3	790272414	1	ROD SEAL 125X133X6	NUTRING
4	790272514	1	SUPPORTING RING	STUETZRING
5	7371745	1	SCRAPER 125X140X9,5	ABSTREIFER
6	7368257	1	ROD SEAL 125X133X11,5	NUTRING

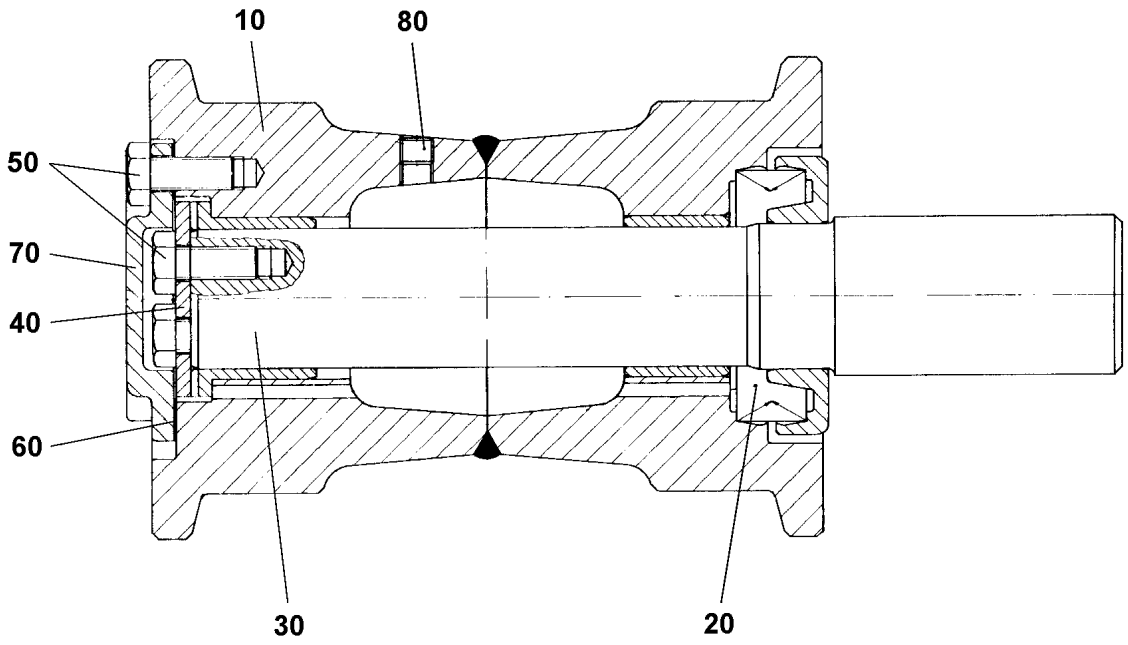

Pos.	Item	Quantity	Description	Bezeichnung
20	749057314	1	AXIAL FACE SEAL	GLEITRINGDICHTUNG
40	749015614	1	THRUST WASHER	ANLAUFSCHEIBE
50	11631742	5	HEX SCREW ISO 4017 M12X30 8.8 FLZN SP	SECHSKANTSCHRAUBE
60	7363427	1	SHEET GASKET	DICHTSCHEIBE
80	4600370	1	SCREW PLUG DIN 906 M12X1,5 ST A3C	VERSCHLUSSSCHRAUBE

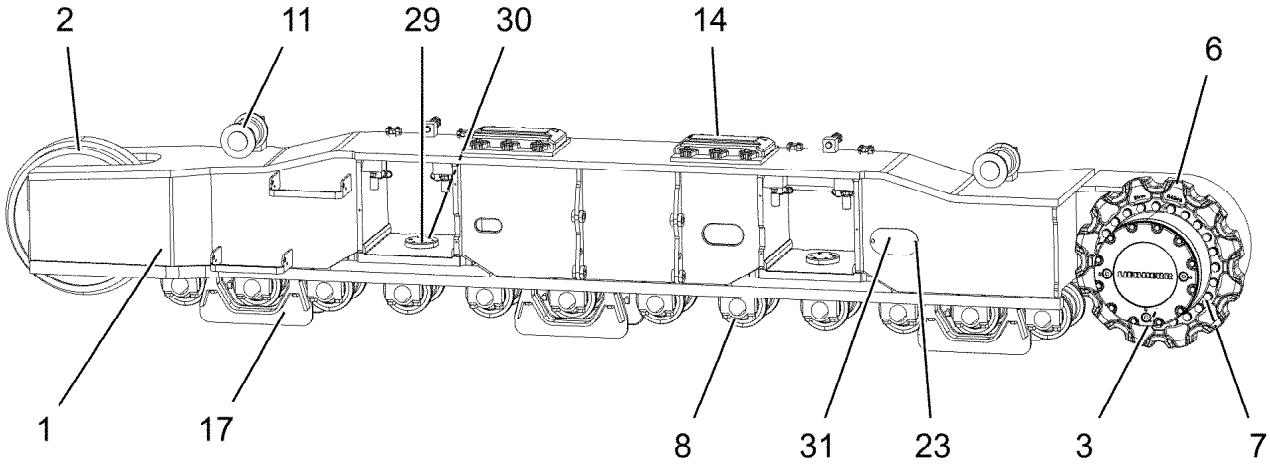

Pos.	Item	Quantity	Description	Bezeichnung
1	10225967	1	CRAWLER TRACK CARRIER, LEFT	RAUPENTRAEGER LI.
2	790256114	1	GUIDE WHEEL UNIT CPL B7X710 LH-GRAU ⇨ ❑ 23	LEITRADEINHEIT KPL
3	13587399	1	TRACTION DRIVE LPI1000 30S 0033 RAL 704	FAHRANTRIEB
4	12691274	24	HEX SCREW ISO 4014 M24X120 10.9 FLZN	SECHSKANTSCHRAUBE
5	4600146	48	WASHER EN 14399-6 24 300-370HV FLZN SP	SCHEIBE
6	11306946	1	DRIVE WHEEL 12XB7X215,9 983593114 LH	ANTRIEBSRAD
7	4062144	24	HEX SCREW ISO 4017 M24X70 10.9 FLZN SP	SECHSKANTSCHRAUBE
8	10874655	12	TRACK ROLLER COMPL. 200X210 LH-GRAU	LAUFROLLE KPL.
9	10876069	48	HEX SCREW ISO 4014 M24X120 8.8 FLZN SP	SECHSKANTSCHRAUBE
10	460022203	14	WASHER DIN 6916 21 C 45 A3C	SCHEIBE
11	749065314	2	CARRYING ROLLER CPL LH-GRAU ⇨ ❑ 26	TRAGROLLE KPL
12	11642377	4	HEX SCREW ISO 4014 M16X70 8.8 FLZN SP	SECHSKANTSCHRAUBE
13	425221608	20	SERRATED LOCK WASHER DIN 6798 J 16,5	FAECHERSCHEIBE
14	308115114	2	SLIPPER 65X340X450 GS-CK 45 983593114	GLEITSCHUH
15	10875520	12	HEX SCREW ISO 4017 M16X50 8.8 FLZN SP	SECHSKANTSCHRAUBE
16	4600180	12	WASHER DIN 6340 17 FLZN SPF	SCHEIBE
17	964650808	3	TRACK GUIDE WELDMENT SPF	KETTENFUEHRUNG SCHWK.
18	406207208	12	HEX SCREW ISO 4017 M20X100 10.9 FLZN	SECHSKANTSCHRAUBE
19	977240208	1	PLATE 50X250X210 S355J2+N	BLECH
20	948996914	4	THREADED ROD DIN 975 M16X150 8.8	GEWINDESTANGE
21	10875617	4	HEX NUT ISO 4032 M16 8 FLZN SPF	SECHSKANTMUTTER
22	977441008	2	PLATE 5X200X130 S355MC	BLECH
23	11652470	6	HEX SCREW ISO 4017 M10X16 8.8 FLZN SP	SECHSKANTSCHRAUBE
24	425221208	6	SERRATED LOCK WASHER DIN 6798 J 10,5	FAECHERSCHEIBE

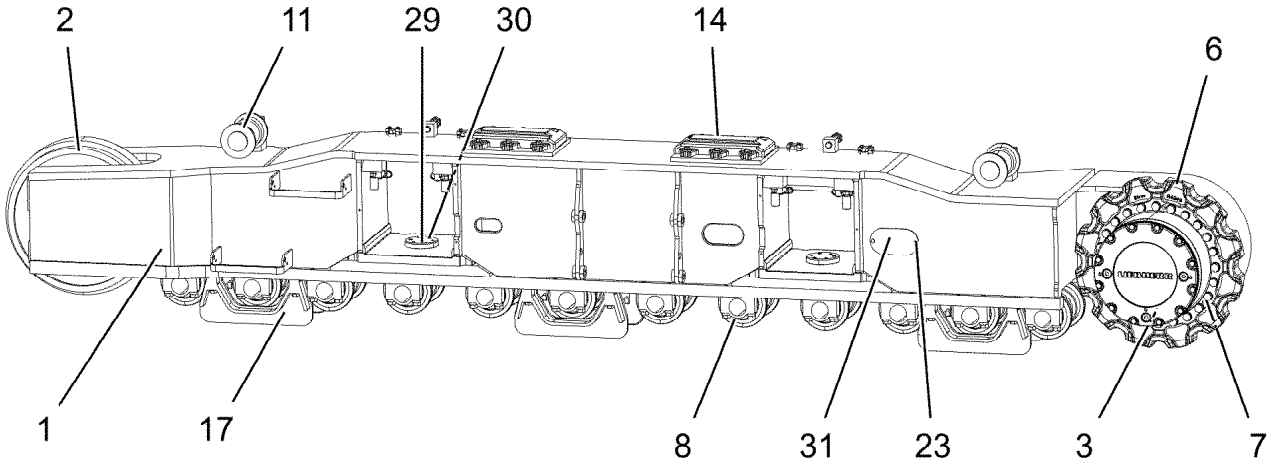

Pos.	Item	Quantity	Description	Bezeichnung
25	976540508	1	PLATE 5X670X510 S355MC	BLECH
26	11651006	3	HEX SCREW ISO 4017 M12X20 8.8 FLZN SP	SECHSKANTSCHRAUBE
27	10289804	3	WASHER ISO 7089 12 300HV FLZN SPF	SCHEIBE
29	956214014	2	PIN 160X50 35NICRMOV125 GASN. SPF	BOLZEN
30	10875573	6	SOCKET HEAD SCREW ISO 4762 M10X50 8	ZYLINDERSCHRAUBE
31	976540808	1	PLATE 5X240X130 S355MC	BLECH
32	10878793	2	HEX SCREW ISO 4017 M30X150 8.8 FLZN SP	SECHSKANTSCHRAUBE
33	10425689	2	HEX NUT ISO 4032 M30 10 FLZN SPF	SECHSKANTMUTTER
36	12224018	2	HEX SCREW ISO 4017 M20X55 8.8 FLZN SP	SECHSKANTSCHRAUBE
38	11626706	16	HEX SCREW ISO 4017 M10X40 8.8 FLZN SP	SECHSKANTSCHRAUBE
39	433101208	4	RETAINING SPRING 4X68 ISO 2081 FE/ZN8/	SICHERUNGSFEDER
40	957095914	4	THREADED ROD RD36X85 42CRMO4+QT	GEWINDESTANGE
42	957095714	4	THRUST PIECE RD40X60 42CRMO4+QT	DRUCKSTUECK
43	957095814	4	THREADED ROD RD36X95 42CRMO4+QT	GEWINDESTANGE
44	978068708	8	LOCKING PLATE 30X70X30 S355J2+N FE//	SICHERUNGSBLECH
45	959552614	48	WASHER 40/25X18 42CRMO4+QT	SCHEIBE

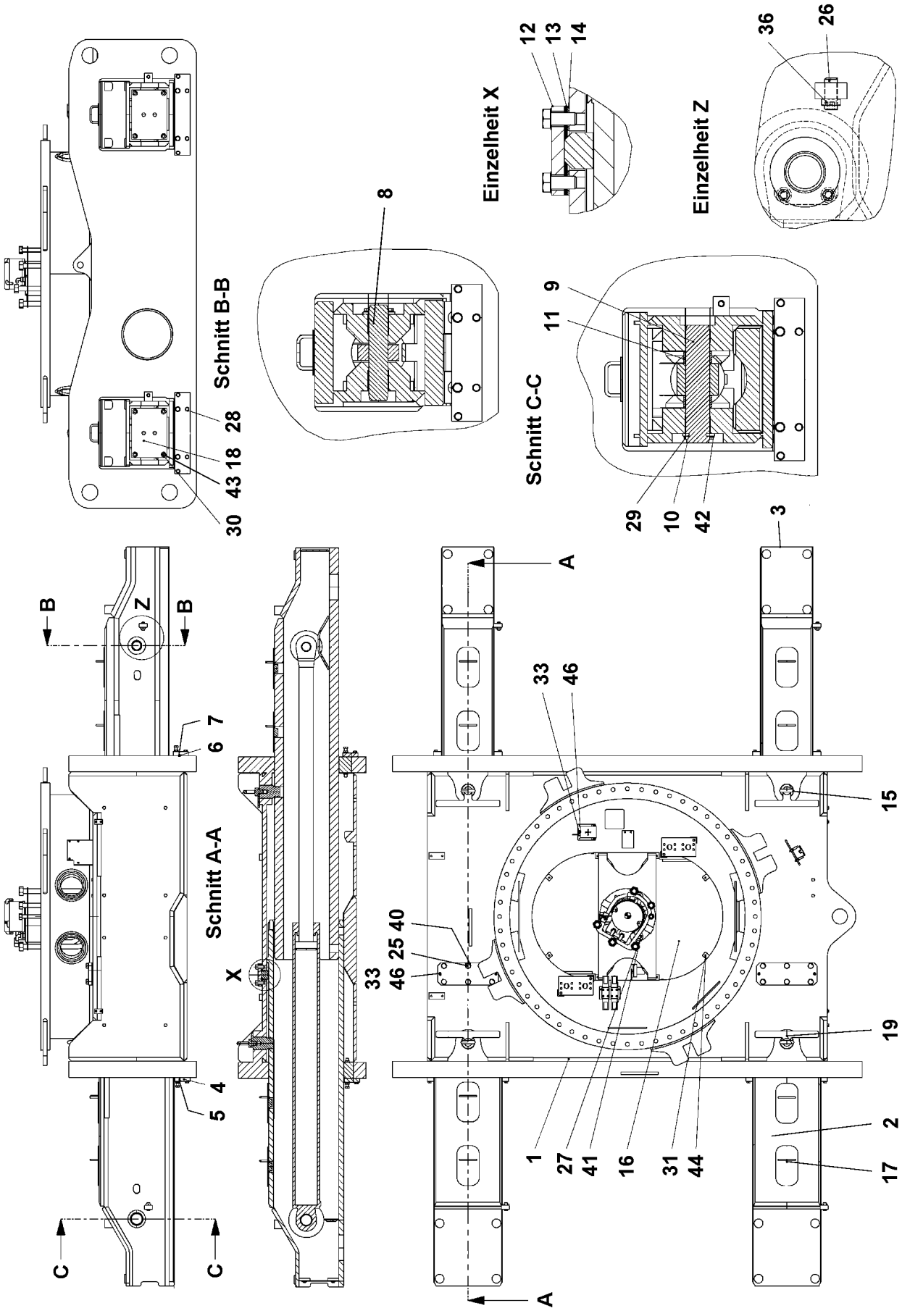

16.11.2023 046719 LIEBHERR	etk_en_de_078966 LTR 1100 CENTRE PIECE MITTELTEIL	29 (1/3) 992078314

Pos.	Item	Quantity	Description	Bezeichnung
1	10222999	1	CENTRE PART MACHINING 983593114 RAL7	MITTELTEIL BEARB
2	10224278	2	SLIDING BEAM LEFT LH-GRAU	SCHIEBEHOLM LI
3	10224279	2	TELESCOPIC OUTRIGGER RIGHT LH-GRAU	SCHIEBEHOLM RE
4	970759803	1	WEDGING LEFT REAR CPL	VERKEILUNG LI HINTEN KPL
5	970760403	1	WEDGING LEFT FRONT CPL	VERKEILUNG LI VORNE KPL
6	970760703	1	WEDGING RIGHT REAR CPL	VERKEILUNG RE HINTEN KPL
7	970760103	1	WEDGING RIGHT FRONT CPL	VERKEILUNG RE VORNE KPL
8	977240308	2	PIN 65.0X300 35NICRMOV125 SPF	BOLZEN
9	956210114	2	PIN 75X370X325 35NICRMOV125	BOLZEN
10	967230603	4	AXLE HOLDER 8X29X100 S235JR EN 12329	ACHSHALTER
11	977267208	4	TUBE 88.9X36 S235JRH FE//ZNNI8//CN//T0	ROHR
12	955746303	2	LIMIT STOP CPL	ANSCHLAG KPL.
13	955747203	10	WP DC01 EN 12329 FE/ZN 12 C	WP
14	967232803	2	PLATE 5X140X380 S355MC	BLECH
15	965010008	2	PIN COMPL.	BOLZEN KPL.
16	955532403	1	COVER DC01 LH-GRAU	DECKEL
17	967576308	8	COVER COMPL.	DECKEL KPL.
(1)	967569908	1	COVER WELDED FE//ZNNI8//CN//T0	DECKEL SCHWK.
(2)	977240008	2	RUBBER PLATE 184X10X2 GUMMI	GUMMIPLATTE
18	956211014	2	WELD PLATE S315MC RAL 7043	ANSCHWEISSPLATTE
19	965010008	2	PIN COMPL.	BOLZEN KPL.
25	4600199	12	HEX SCREW ISO 4017 M20X40 8.8 FLZN SP	SECHSKANTSCHRAUBE
26	11968244	4	GRUB SCREW ISO 4026 M20X50 45H 480H	GEWINDESTIFT
27	12214938	3	HEX SCREW ISO 4017 M16X35 8.8 FLZN SP	SECHSKANTSCHRAUBE
28	11651578	16	HEX SCREW ISO 4014 M12X50 8.8 FLZN SP	SECHSKANTSCHRAUBE
29	11658892	18	HEX SCREW ISO 4017 M12X25 8.8 FLZN SP	SECHSKANTSCHRAUBE
30	10197730	8	HEX SCREW ISO 4017 M10X20 8.8 ZNNI-480	SECHSKANTSCHRAUBE
31	11652470	8	HEX SCREW ISO 4017 M10X16 8.8 FLZN SP	SECHSKANTSCHRAUBE
33	11140465	7	SOCKET HEAD SCREW ISO 4762 M6X20 8.8	ZYLINDERSCHRAUBE
36	10544163	4	HEX NUT ISO 4036 M20 ST FLZN SPF	SECHSKANTMUTTER
40	425221908	12	SERRATED LOCK WASHER DIN 6798 J 21	FAECHERSCHEIBE
41	10289806	3	WASHER ISO 7089 16 300HV FLZN SPF	SCHEIBE
42	10289804	24	WASHER ISO 7089 12 300HV FLZN SPF	SCHEIBE
43	11491889	8	WASHER ISO 7093-1 10 300HV FLZN SPF	SCHEIBE
44	10289795	8	WASHER ISO 7089 10 300HV FLZN SPF	SCHEIBE
46	12102694	7	SERRATED LOCK WASHER DIN 6798 A 6.4	FAECHERSCHEIBE

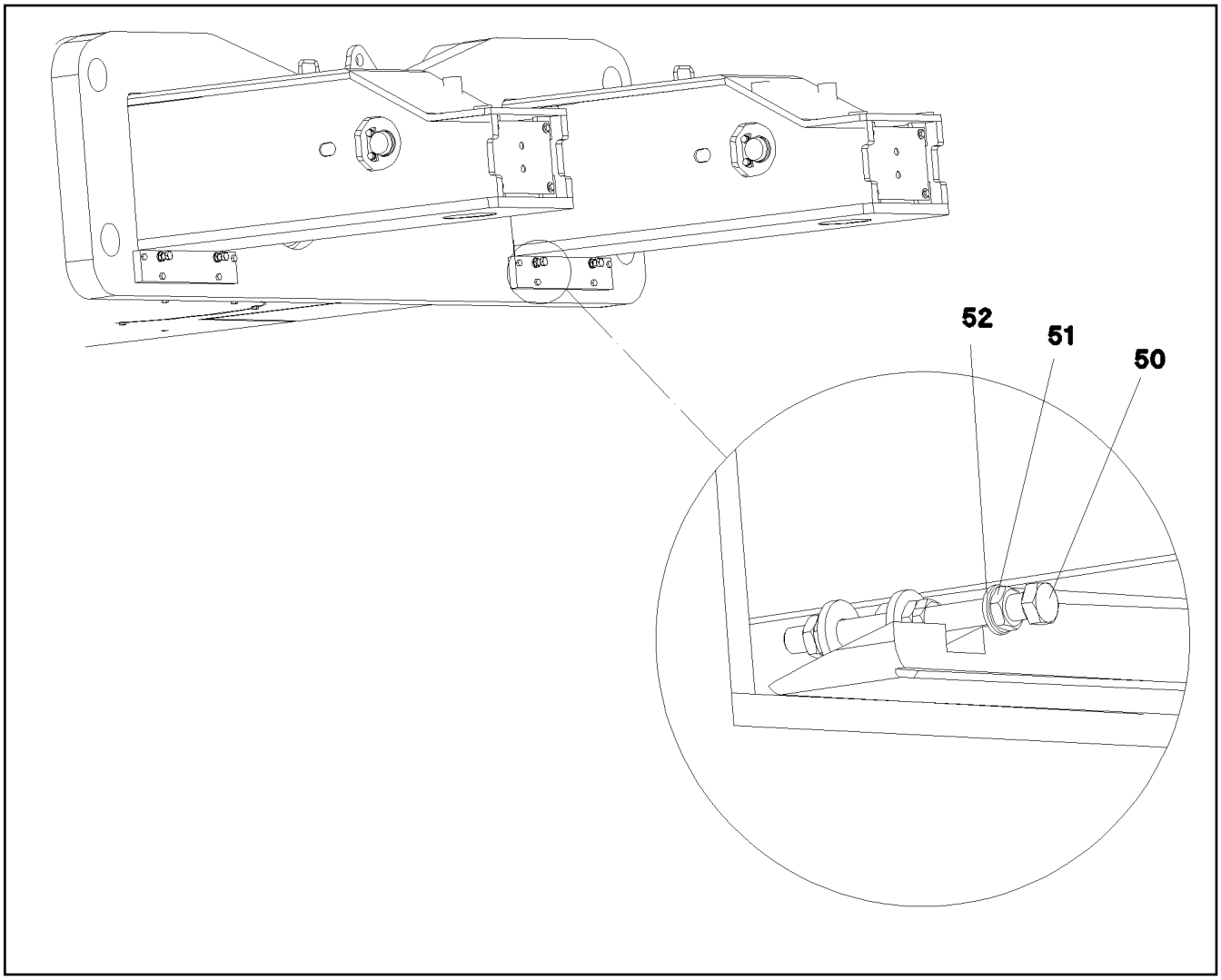

Pos.	Item	Quantity	Description	Bezeichnung
50	10179032	8	HEX SCREW ISO 4017 M16X180 8.8 FLZN SP	SECHSKANTSCHRAUBE
51	4600037	40	HEX NUT ISO 4035 M16 05 FLZN SPF	SECHSKANTMUTTER
52	4600242	24	WASHER EN 14399-6 16 300-370HV FLZN SP	SCHEIBE

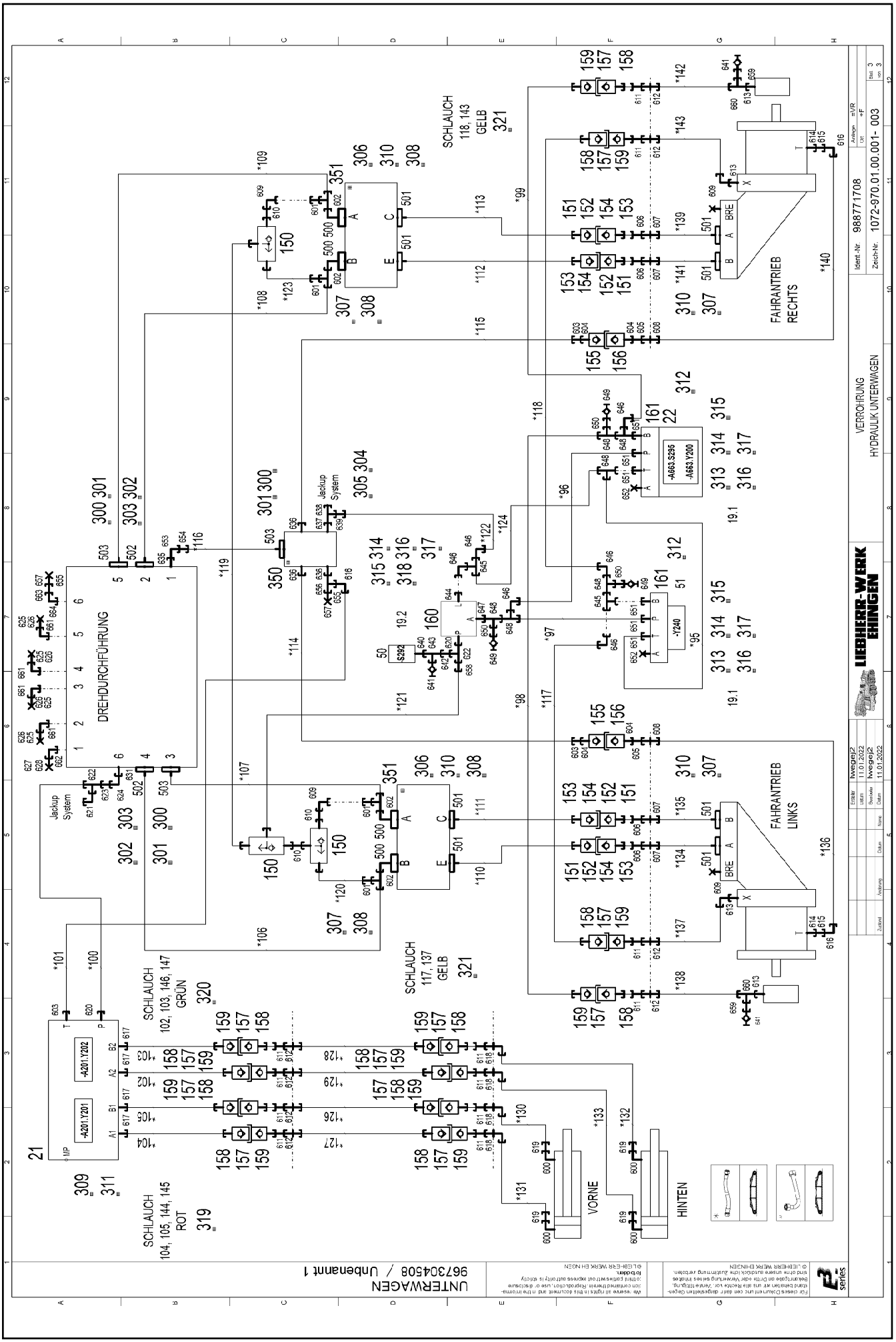
DREHDURCHFÜHRUNG
Jackup System
FAHRANTRIEB RECHTS
FAHRANTRIEB LINKS
VORNE
HINTEN
SCHLAUCH 118, 143 GELB 321
SCHLAUCH 117, 137 GELB 321
SCHLAUCH 102, 103, 146, 147 GRUN 320
SCHLAUCH 104, 105, 144, 145 ROT 319
VERROHRUNG HYDRAULIK UNTERWAGEN
LIEBHERR-WERK EHINGEN
UNTERWAGEN
9673045O8 / Unbenannt 1

Pos.	Item	Quantity	Description	Bezeichnung
19	968521308	1	MECHANICAL AUXILIARIES	MECH.BEFESTIGUNGSTEILE
(1)	970762808	2	PLATE S315MC FE//ZNNI8//CN//T0	BLECH
(2)	970771908	1	PLATE 3X146X80 DC01 FE//ZNNI8//CN//T0	BLECH
21	10675161	1	CONTROL BLOCK 300BAR SPF ⇨ ❑ 35	STEUERBLOCK
22	10652724	1	DIRECTIONAL CONTROL VALVE 4/2 NG6-3	WEGEVENTIL
(1)	10564740	1	MAGNET COIL	MAGNETSPULE
(2)	7027459	1	NUT	MUTTER
(999)	571840008	1	SEAL KIT	DICHTSATZ
50	510676908	1	PRESSURE SWITCH 10-100/400 BAR	DRUCKSCHALTER
51	511302008	1	DIRECTIONAL CONTROL VALVE 4/2 NG6-3 ⇨ ❑ 36	WEGEVENTIL
150	511491914	3	SHUTTLE VALVE 500BAR CR6-FREI	WECHSELVENTIL
151	510541108	4	DUST PLUG	STAUBSTECKER
152	510541008	4	COUPLING PLUG HDS-E1	KUPPLUNGSSTECKER
(1)	571426108	1	SEAL KIT	DICHTSATZ
153	510540908	4	SOCKET DUST-PROOF	STAUBMUFFE
154	510540808	4	COUPLING SLEEVE HDM-E2	KUPPLUNGSMUFFE
(1)	571426108	1	SEAL KIT	DICHTSATZ
155	511708314	2	QUICK-FITTING THREAD COUPLING NW16	SCHNELLVERSCHRAUBUNGSK
(1)	7405495	1	DUST PLUG	STAUBSTECKER
156	511708414	2	QUICK-FITTING THREAD COUPLING NW16	SCHNELLVERSCHRAUBUNGSK
(1)	7405494	1	SOCKET DUST-PROOF	STAUBMUFFE
157	510548108	12	COUPLING SLEEVE	KUPPLUNGSMUFFE
158	510548208	12	SOCKET DUST-PROOF	STAUBMUFFE
159	510541908	12	COUPLING PLUG DN8/GERADE SPF	KUPPLUNGSSTECKER
(1)	7364491	1	DUST PLUG DN6	STAUBSTECKER
160	510438508	1	PRESSURE RELIEF VALVE pv=30BAR pmax ⇨ ❑ 37	DRUCKMINDERVENTIL
161	510629508	2	CONNECTING PLATE	ANSCHLUSSPLATTE
300	7367610	3	RECTANGULAR SECTION RING 32,30X2,80X	RECHTECKRING
301	11691328	12	HEX SCREW ISO 4017 M10X35 8.8 FLZN SP	SECHSKANTSCHRAUBE
302	10490781	2	RECTANGULAR SECTION RING 40,15-2,80-	RECHTECKRING
303	11645384	8	HEX SCREW ISO 4017 M12X40 8.8 FLZN SP	SECHSKANTSCHRAUBE
304	10876386	2	HEX SCREW ISO 4017 M8X80 8.8 480H SPF	SECHSKANTSCHRAUBE
305	12103465	2	WASHER ISO 7089 8 300HV ZNNI-480H SPF	SCHEIBE
306	4600167	4	SOCKET HEAD SCREW ISO 4762 M12X140	ZYLINDERSCHRAUBE
307	10878799	24	HEX SCREW ISO 4017 M14X45 8.8 FLZN SP	SECHSKANTSCHRAUBE
308	10876373	24	SOCKET HEAD SCREW ISO 4762 M14X45 8	ZYLINDERSCHRAUBE
309	12202784	2	SOCKET HEAD SCREW ISO 4762 M6X60 8.8	ZYLINDERSCHRAUBE
310	7367612	8	RECTANGULAR SECTION RING 45,05X2,80X	RECHTECKRING
311	11066908	8	BLANKING PLUG PE-LD	VERSCHLUSSSTOPFEN
312	10181382	8	SOCKET HEAD SCREW ISO 4762 M5X50 10	ZYLINDERSCHRAUBE
313	11140465	4	SOCKET HEAD SCREW ISO 4762 M6X20 8.8	ZYLINDERSCHRAUBE
314	12102692	6	HEX NUT DIN 985 M6 8 ZNNI-480H SPF	SECHSKANTMUTTER
315	10875648	8	WASHER ISO 7093-1 6 200HV 480H SPF	SCHEIBE
316	11651767	7	HEX SCREW ISO 4017 M8X20 8.8 480H SPF	SECHSKANTSCHRAUBE
317	11140469	7	WASHER ISO 7093-1 8 200HV 480H SPF	SCHEIBE
318	10875591	2	SOCKET HEAD SCREW ISO 4762 M6X40 8.8	ZYLINDERSCHRAUBE
319	603032214	0.3	HEATSHRINK SLEEVING 38,1/19X1,02	SCHRUMPFSCHLAUCH
320	603032614	0.3	HEATSHRINK SLEEVING 38/19X1	SCHRUMPFSCHLAUCH
321	603032314	0.6	HEATSHRINK SLEEVING 38,1/19X1,02	SCHRUMPFSCHLAUCH
350	511475314	1	BLOCK GR.12	BLOCK
351	956442614	2	FLANGE 120X150X217 S355J2+N	FLANSCH
500	474906608	4	SAE FLANGE CONNECTION WFS65/30-S C	SAE-FLANSCHVERBINDUNG
501	510586608	16	FLANGE HALF SAE1 1/4-C62-M14 CR6-FREI	FLANSCHHAELFTE
502	510586908	4	FLANGE HALF SAE1-C62-M12 CR6-FREI	FLANSCHHAELFTE
503	510587508	6	FLANGE HALF SAE3/4-C62-M10 CR6-FREI	FLANSCHHAELFTE
600	473231208	4	FITTING RSWS16-SR-WD CR6-FREI	VERSCHRAUBUNG
601	475433908	4	FITTING REDSD30/10-S CR6-FREI	VERSCHRAUBUNG

Pos.	Item	Quantity	Description	Bezeichnung
602	482331814	4	FITTING ISO 8434 EL 30S CR6-FREI	VERSCHRAUBUNG
603	471033208	3	FITTING XGE16-SR-ED CR6-FREI	VERSCHRAUBUNG
604	475500708	4	FITTING RI G1AXG1/2 CR6-FREI	VERSCHRAUBUNG
605	471900608	2	FITTING EGESD16-SR-WD CR6-FREI	VERSCHRAUBUNG
606	470011108	4	FITTING SNV30-S CR6-FREI	VERSCHRAUBUNG
607	474032908	4	FITTING XSV30-S CR6-FREI	VERSCHRAUBUNG
608	474032608	2	FITTING XSV16-S CR6-FREI	VERSCHRAUBUNG
609	7617268	4	FITTING EW 10S CR6-FREI	VERSCHRAUBUNG
610	470010208	3	FITTING SNV10-S CR6-FREI	VERSCHRAUBUNG
611	470010308	12	FITTING SNV12-S CR6-FREI	VERSCHRAUBUNG
612	474032408	8	FITTING XSV12-S CR6-FREI	VERSCHRAUBUNG
613	471008214	4	FITTING ISO 8434 GE 10S M14X1,5 CR6-FRE	VERSCHRAUBUNG
614	977253208	2	FITTING 36.0X46 11SMN30+C	VERSCHRAUBUNG
615	471033108	2	FITTING XGE16-SR-ED3/4" CR6-FREI	VERSCHRAUBUNG
616	7617460	3	FITTING EW 16S CR6-FREI	VERSCHRAUBUNG
617	471032808	4	FITTING ISO 8434-1 GE 10S G3/8A CR6-FRE	VERSCHRAUBUNG
618	474232408	4	FITTING WSV 12S CR6-FREI	VERSCHRAUBUNG
619	475433308	4	FITTING REDSD16/12-S CR6-FREI	VERSCHRAUBUNG
620	471032608	2	FITTING GE 12S G1/2A CR6-FREI	VERSCHRAUBUNG
621	7617354	1	FITTING EW 12S CR6-FREI	VERSCHRAUBUNG
622	7617461	2	FITTING EL 12S CR6-FREI	VERSCHRAUBUNG
623	475434808	1	FITTING REDSD20/12-S CR6-FREI	VERSCHRAUBUNG
624	7407108	1	FITTING EW 20S M30X2 CR6-FREI	VERSCHRAUBUNG
625	477701608	4	FITTING BUZ 30S CR6-FREI	VERSCHRAUBUNG
626	477400908	4	BOX NUT DIN 3870 AS30 A3C	UEBERWURFMUTTER
627	477700808	1	STOPPER BUZ 28L CR6-FREI	BUTZEN
628	477401708	1	BOX NUT DIN 3870 AL28 A3P	UEBERWURFMUTTER
631	471033308	1	FITTING XGE20-SM-ED CR6-FREI	VERSCHRAUBUNG
635	471033508	1	FITTING XGE25-SM-ED CR6-FREI	VERSCHRAUBUNG
636	471033008	3	FITTING XGE16-SM-ED CR6-FREI	VERSCHRAUBUNG
637	471031108	1	FITTING GE 18L M22X1,5 CR6-FREI	VERSCHRAUBUNG
638	247128502	1	L NECK EL 18L CR6-FREI	L-STUTZEN
639	475436308	1	FITTING REDSD18/12-L CR6-FREI	VERSCHRAUBUNG
640	471900308	1	FITTING EGESD6-SR-WD CR6-FREI	VERSCHRAUBUNG
641	475601508	3	TEST POINT FITTING BMA3 6S CR6-FREI	MESSANSCHLUSS
642	475432908	1	FITTING REDSD12/6-S CR6-FREI	VERSCHRAUBUNG
643	472331208	1	FITTING EL 6S CR6-FREI	VERSCHRAUBUNG
644	471035308	1	FITTING XGE12-LR-ED1/4" CR6-FREI	VERSCHRAUBUNG
645	247105602	2	T CONNECTION PIECE ET 12L CR6-FREI	T-STUTZEN
646	247117702	6	SWIVEL ELBOW EW 12L M18X1,5 CR6-FREI	WINKELSTUTZEN
647	471034808	1	FITTING GE 12L G1/2 CR6-FREI	VERSCHRAUBUNG
648	247128602	6	L NECK EL 12L M18X1,5 CR6-FREI	L-STUTZEN
649	510629008	3	TEST POINT FITTING VKA3 10LM16X1,5 CR6	MESSANSCHLUSS
650	475431408	3	FITTING REDSD12/10-L CR6-FREI	VERSCHRAUBUNG
651	471030808	6	FITTING XGE12-LR-ED CR6-FREI	VERSCHRAUBUNG
652	477704108	2	STOP PLUG VSTI3/8"ED CR6-FREI	STOPFEN
653	7407119	1	FITTING EW 25S CR6-FREI	VERSCHRAUBUNG
654	475432308	1	FITTING REDSDN25/20-S CR6-FREI	VERSCHRAUBUNG
655	477400608	2	BOX NUT DIN 3870 AS16 A3P	UEBERWURFMUTTER
656	7407098	1	FITTING EL 16S CR6-FREI	VERSCHRAUBUNG
657	477701108	2	FITTING BUZ 16S CR6-FREI	VERSCHRAUBUNG
658	475433408	1	FITTING REDSD12/10-S CR6-FREI	VERSCHRAUBUNG
659	475432008	2	FITTING REDSDN10/6-S CR6-FREI	VERSCHRAUBUNG
660	7367776	2	FITTING EL 10S CR6-FREI	VERSCHRAUBUNG
661	470233008	4	FITTING XW30-S CR6-FREI	VERSCHRAUBUNG
662	470230808	1	FITTING W 28L CR6-FREI	VERSCHRAUBUNG
663	475432108	1	FITTING REDSDN20/16-S CR6-FREI	VERSCHRAUBUNG
664	470232708	1	FITTING W 20S CR6-FREI	VERSCHRAUBUNG

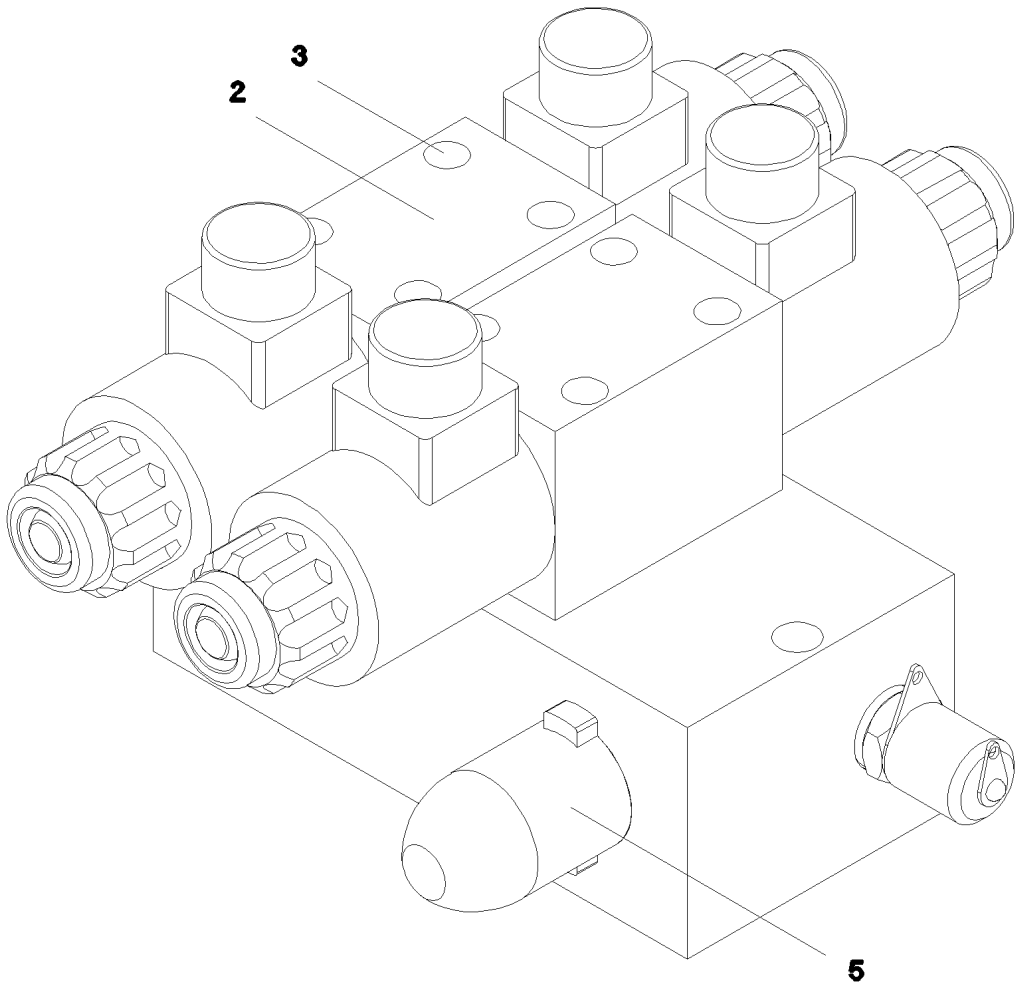

Pos.	Item	Quantity	Description	Bezeichnung
2	10430280	2	DIRECTIONAL CONTROL VALVE	WEGEVENTIL
(1)	11342414	2	MAGNET COIL 24V	MAGNETSPULE
(2)	11342417	1	NUT	RAENDELMUTTER
(999)	11342418	1	SEAL KIT DIRECTIONAL VALVE	DS WEGEVENTIL
3	404202701	8	SOCKET HEAD SCREW ISO 4762 M5X45 8.8	ZYLINDERSCHRAUBE
5	12106454	1	PRESSURE LIMITING VALVE pv=330BAR	DRUCKBEGRENZUNGSVENTIL

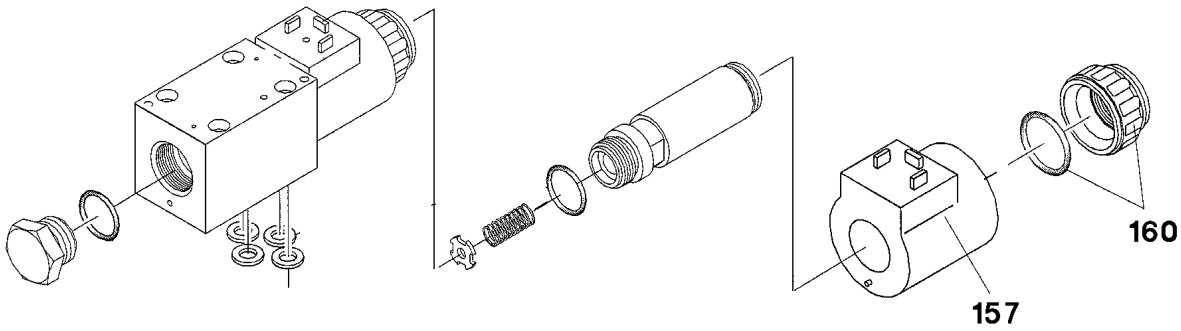

999

Pos.	Item	Quantity	Description	Bezeichnung
157	10564740	2	MAGNET COIL	MAGNETSPULE
160	7027459	2	NUT	MUTTER
999	571840008	1	SEAL KIT	DICHTSATZ

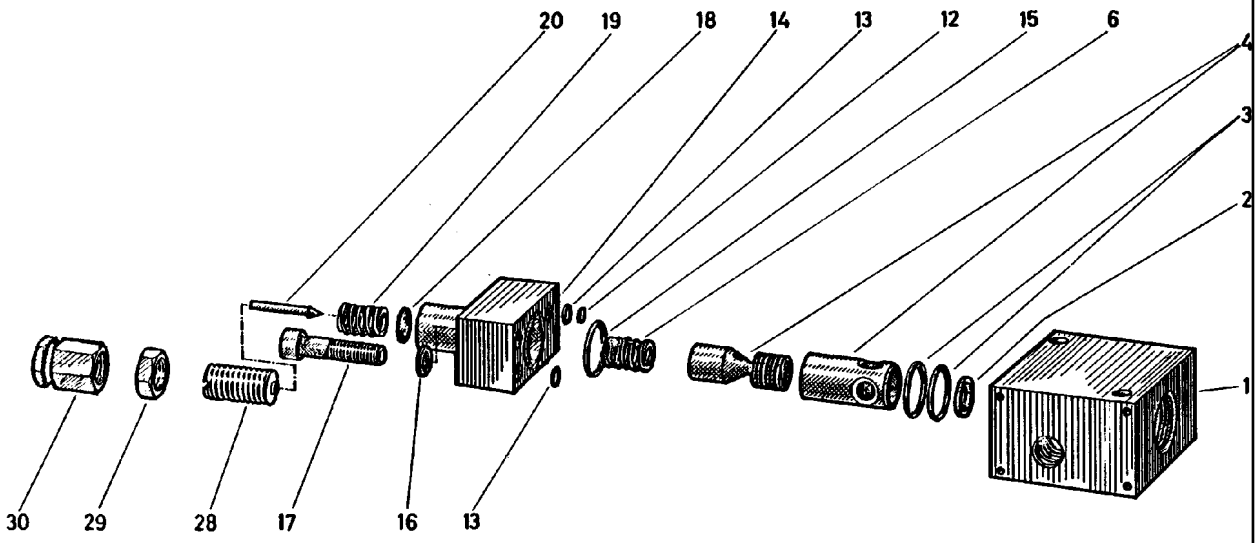

Pos.	Item	Quantity	Description	Bezeichnung
1	510713808	1	BLOCK	BLOCK
2	510713908	1	WASHER	SCHEIBE
3	510710108	2	O-RING ARP 568 17,12X2,62 NBR90	O-RING
4	510713708	1	PISTON	KOLBEN
6	510714008	1	COMPRESSION SPRING	DRUCKFEDER
12	510714108	1	WASHER	SCHEIBE
13	510714208	2	O-RING ARP 568 4,47X1,78 NBR70	O-RING
14	510714308	1	BLOCK	BLOCK
15	510710108	1	O-RING ARP 568 17,12X2,62 NBR90	O-RING
16	11659025	2	WASHER SPRING DIN 127 B 8 FLZN SPF	FEDERRING
17	11691424	2	SOCKET HEAD SCREW ISO 4762 M8X35 8.8	ZYLINDERSCHRAUBE
18	510714408	1	COLLAR WASHER	BUNDSCHEIBE
19	510714508	1	COMPRESSION SPRING	DRUCKFEDER
20	510710408	1	VALVE CONE	VENTILKEGEL
28	510779808	1	ADJUSTING SCREW	EINSTELLSCHRAUBE
29	510779908	1	NUT	MUTTER
30	510710608	1	CAP NUT	HUTMUTTER

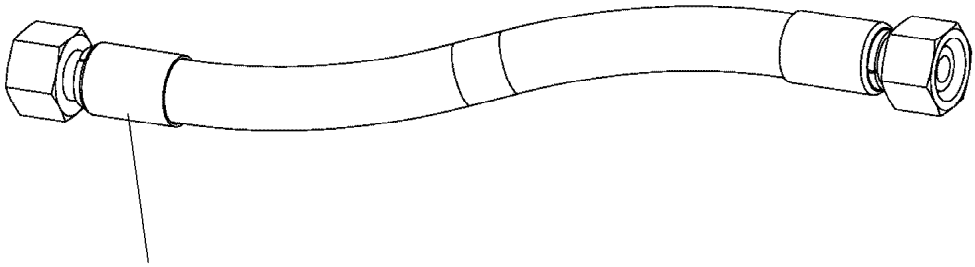

Schlauchnummer
Hose number
Numéro de flexible
Número de flexible
Номера шланга

Die Schlauchnummern auf den Schläuchen entsprechen den Positionen in der Schlauchliste.

The hose numbers from the hoses are in accordance with the items in the hose list.

Les numéros indiqués sur les flexibles correspondent aux repères de la nomenclature des flexibles.

Los números indicados en los flexibles corresponden a las posiciones de la lista de flexibles.

Нанесенные на шлангах номера соответствуют позициям в перечне.

Pos.	Item	Quantity	Description	Bezeichnung
95	923015008	1	HOSE CPL. 2SN 10X430	SCHLAUCH KPL.
96	962760208	1	HOSE CPL. 2SN 10X520	SCHLAUCH KPL.
97	968600608	1	HOSE CPL. 2SN 10X460	SCHLAUCH KPL.
98	968600508	1	HOSE CPL. 2SN 10X3920	SCHLAUCH KPL.
99	964275408	1	HOSE CPL. 2SN 10X5300	SCHLAUCH KPL.
100	928037508	1	HOSE CPL. 2SN 10X1160	SCHLAUCH KPL.
101	924028408	1	HOSE CPL. GH425 12X1700	SCHLAUCH KPL.
102	964324708	1	HOSE CPL. 2SN 8X2280	SCHLAUCH KPL.
103	929614008	1	HOSE CPL. 2SN 8X2350	SCHLAUCH KPL.
104	963593008	1	HOSE CPL. 2SN 8X2250	SCHLAUCH KPL.
105	964324808	1	HOSE CPL. 2SN 8X2300	SCHLAUCH KPL.
106	964324908	1	HOSE CPL. GH425 25X1900	SCHLAUCH KPL.
107	964325008	1	HOSE CPL. GH425 25X2050	SCHLAUCH KPL.
108	964325108	1	HOSE CPL. GH425 25X1950	SCHLAUCH KPL.
109	964325208	1	HOSE CPL. GH425 25X2150	SCHLAUCH KPL.
110	964325308	1	HOSE CPL. GH425 25X2100	SCHLAUCH KPL.
111	964325308	1	HOSE CPL. GH425 25X2100	SCHLAUCH KPL.
112	964325308	1	HOSE CPL. GH425 25X2100	SCHLAUCH KPL.
113	964325308	1	HOSE CPL. GH425 25X2100	SCHLAUCH KPL.
114	922298008	1	HOSE CPL. GH425 12X3500	SCHLAUCH KPL.
115	922099408	1	HOSE CPL. GH425 12X2300	SCHLAUCH KPL.
116	964325408	1	HOSE CPL. GH425 16X450	SCHLAUCH KPL.
117	968600508	1	HOSE CPL. 2SN 10X3920	SCHLAUCH KPL.
118	964275408	1	HOSE CPL. 2SN 10X5300	SCHLAUCH KPL.
119	964325508	1	HOSE CPL. 2SN 8X2300	SCHLAUCH KPL.
120	929630508	1	HOSE CPL. 2SN 8X600	SCHLAUCH KPL.
121	926872208	1	HOSE CPL. 2SN 8X1200	SCHLAUCH KPL.
122	962439008	1	HOSE CPL. 2SN 10X2700	SCHLAUCH KPL.
123	929630508	1	HOSE CPL. 2SN 8X600	SCHLAUCH KPL.
124	962760208	1	HOSE CPL. 2SN 10X520	SCHLAUCH KPL.
126	964325608	1	HOSE CPL. 2SN 10X850	SCHLAUCH KPL.
127	964325608	1	HOSE CPL. 2SN 10X850	SCHLAUCH KPL.
128	928006908	1	HOSE CPL. 2SN 10X1550	SCHLAUCH KPL.
129	928006908	1	HOSE CPL. 2SN 10X1550	SCHLAUCH KPL.
130	964325708	1	HOSE CPL. 2SN 10X2190	SCHLAUCH KPL.
131	927612108	1	HOSE CPL. 2SN 10X500	SCHLAUCH KPL.
132	964325708	1	HOSE CPL. 2SN 10X2190	SCHLAUCH KPL.
133	927612108	1	HOSE CPL. 2SN 10X500	SCHLAUCH KPL.
134	964325808	1	HOSE CPL. GH425 25X2960	SCHLAUCH KPL.
135	964325908	1	HOSE CPL. GH425 25X3040	SCHLAUCH KPL.
136	964326008	1	HOSE CPL. GH425 12X3550	SCHLAUCH KPL.
137	964326108	1	HOSE CPL. 2SN 8X3450	SCHLAUCH KPL.
138	968600708	1	HOSE CPL. 2SN 8X4000	SCHLAUCH KPL.
139	964326308	1	HOSE CPL. GH425 25X2350	SCHLAUCH KPL.
140	922417208	1	HOSE CPL. GH425 12X2750	SCHLAUCH KPL.
141	964326408	1	HOSE CPL. GH425 25X2210	SCHLAUCH KPL.
142	966351608	1	HOSE CPL. 2SN 8X3200	SCHLAUCH KPL.
143	964274408	1	HOSE CPL. 2SN 8X2650	SCHLAUCH KPL.

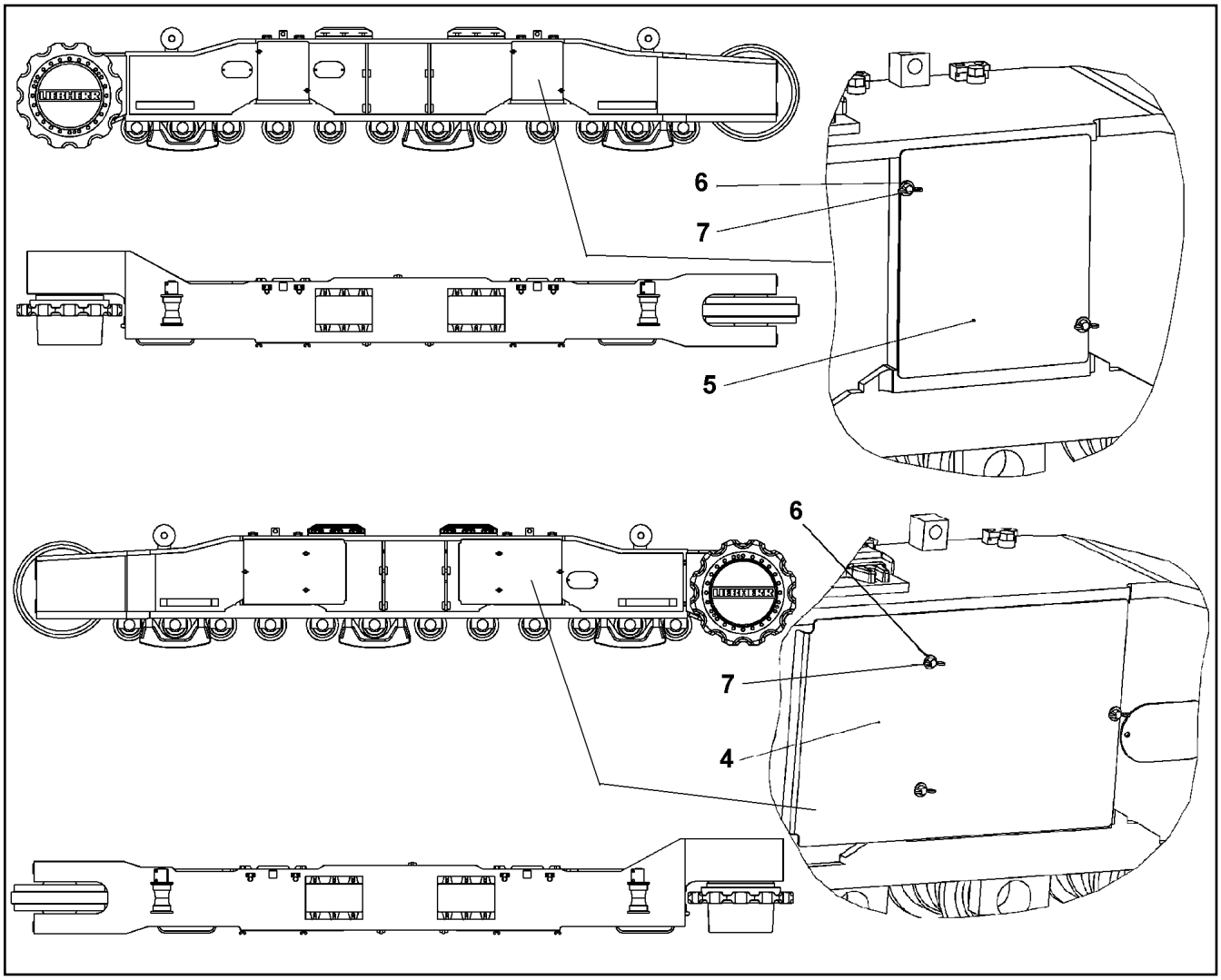

Pos.	Item	Quantity	Description	Bezeichnung
4	958346414	2	PLATE 4X510X850 S235JR	BLECH
5	958340414	2	PLATE RST 37-2 LH-GRAU	BLECH
6	11491889	20	WASHER ISO 7093-1 10 300HV FLZN SPF	SCHEIBE
7	11968431	10	WING SCREW DIN 316 M10X25 GT FLZN SP	FLUEGELSCHRAUBE

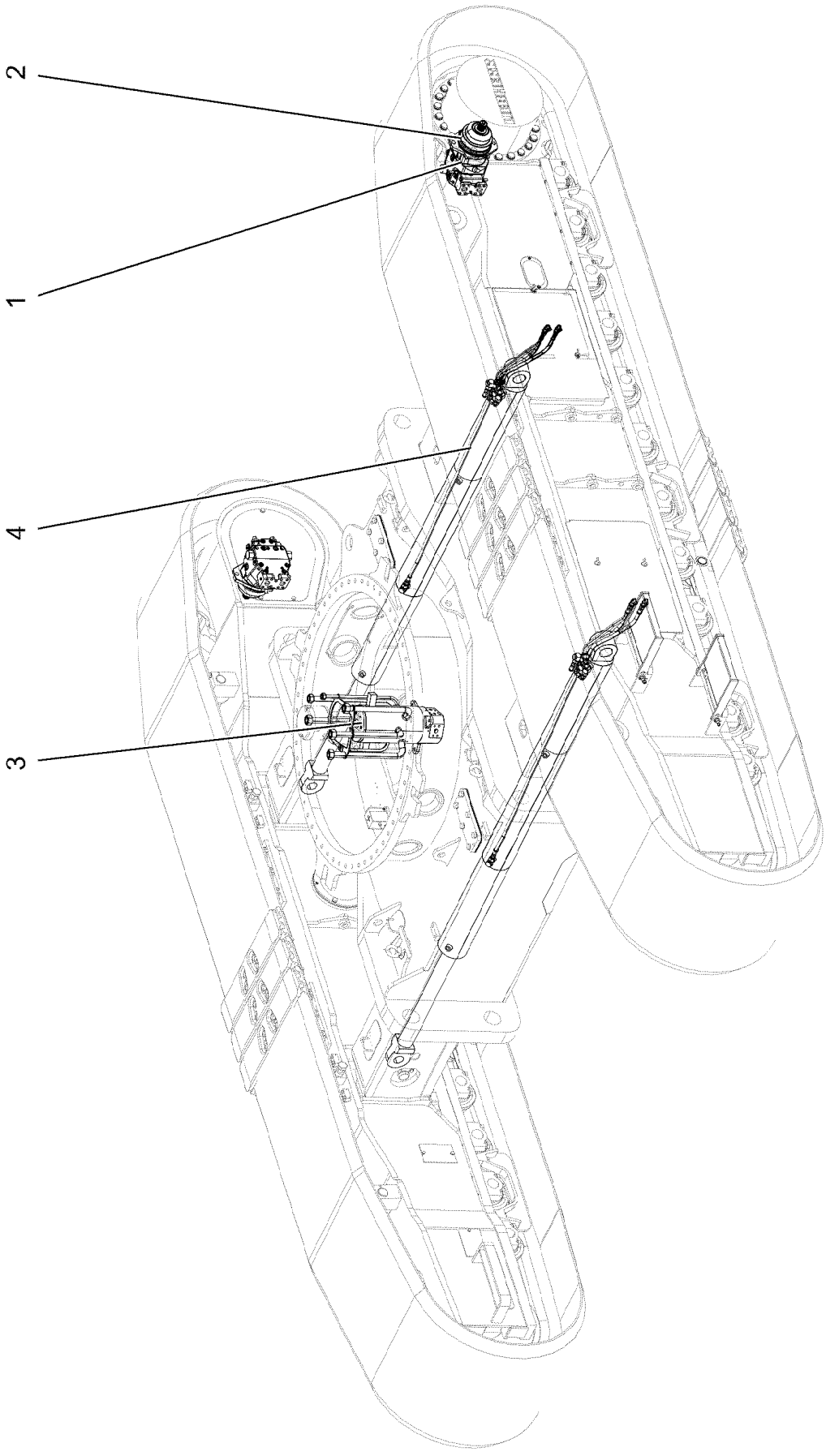
2
1
4
3

Pos.	Item	Quantity	Description	Bezeichnung
1	592326914	2	VARIABLE DISPLACEMENT MOTOR A6VE 1 ⇨ ❑ 43	VERSTELLMOTOR
2	726401808	2	O-RING 180X4 NBR70	O-RING
3	10282928	1	ROTARY FEED THROUGH 6 KANAELE SPF	DREHDURCHFUEHRUNG
(31)	10492566	8	ROTOR GASKET 150X165,5X6,3	ROTORDICHTUNG
4	12102924	2	TRACK WIDTH ADJUSTING CYLINDER 140/	SPURVERSTELLZYLINDER
(999)	12108598	1	SEAL KIT	DICHTSATZ

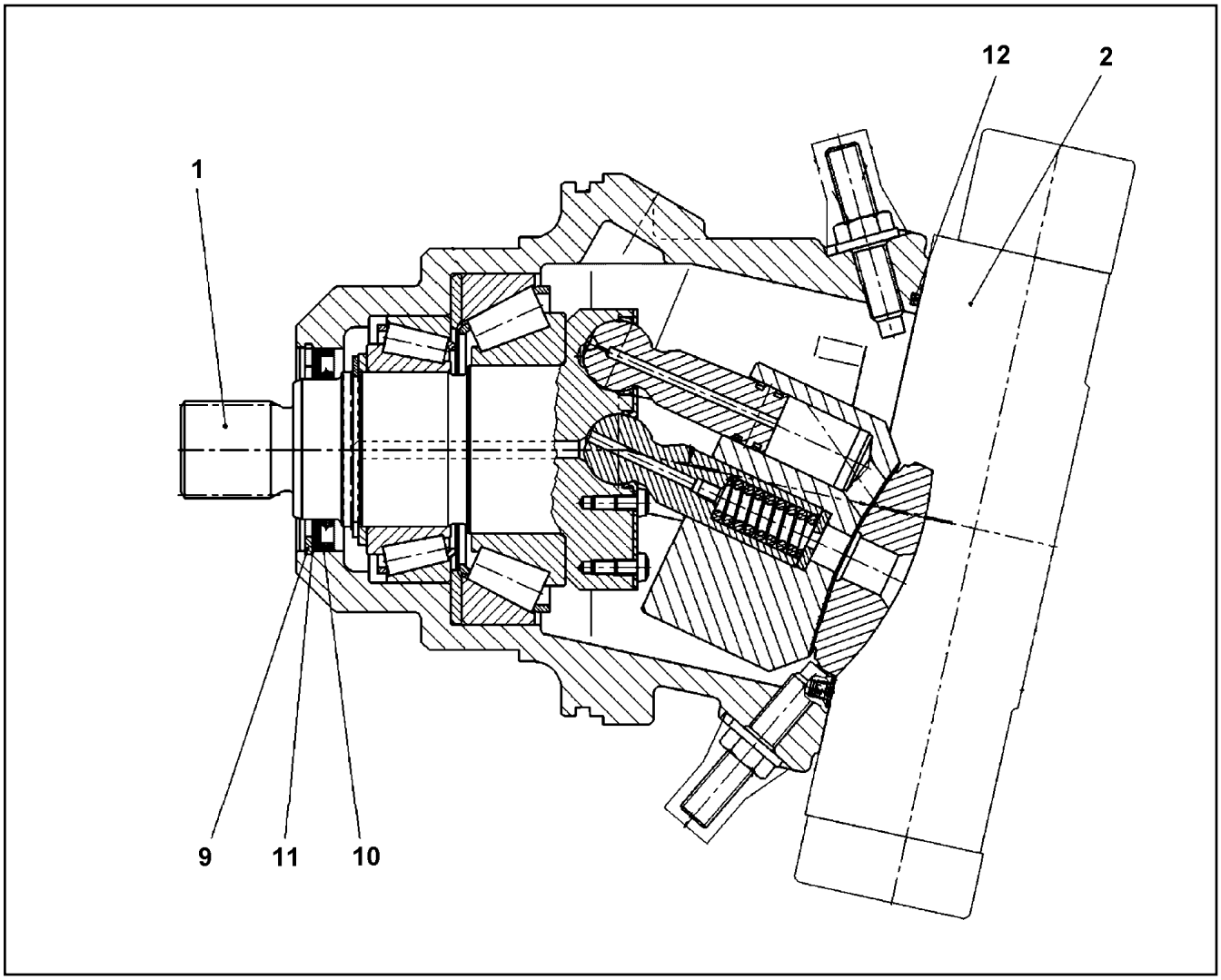

Pos.	Item	Quantity	Description	Bezeichnung
1	571541208	1	DRIVING GEAR	TRIEBWERK
2	10801751	1	ADJUSTMENT ⇨ ❑ 44	VERSTELLUNG
9	10171632	1	RETAINING RINGS DIN 472 90X3 FLZNNC-1	SICHERUNGSRING
10	7008986	1	RADIAL SEAL 70X90X7	RADIALDICHTRING
11	5009001	1	SUPPORTING WASHER DIN 988 S 75X90X3	STUETZSCHEIBE
12	514604208	1	O-RING ARP 568 190,09X3,53 NBR70	O-RING

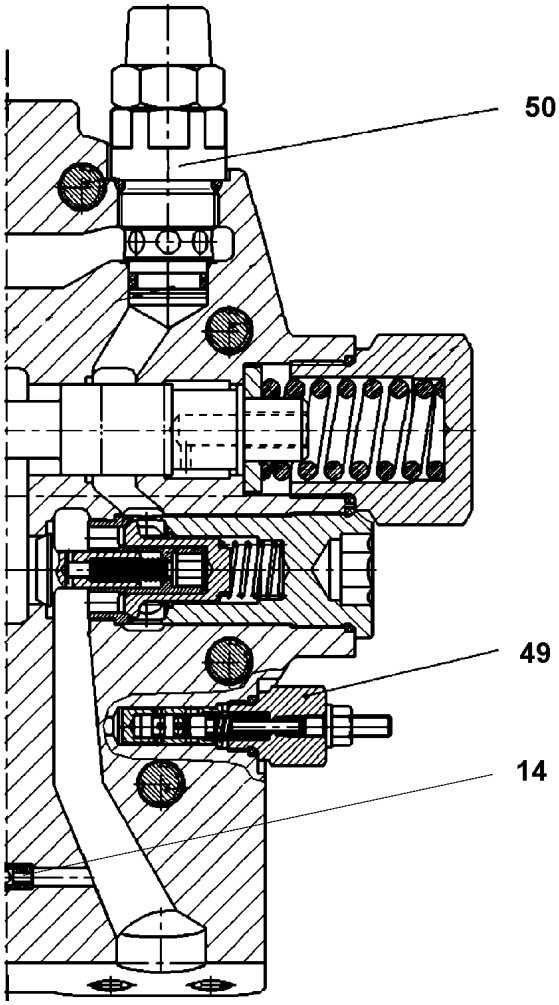

Pos.	Item	Quantity	Description	Bezeichnung
14	10115233	1	SHUTTLE VALVE	WECHSELVENTIL
49	10450051	1	PRESSURE CONTROL VALVE	DRUCKREGELVENTIL
50	511655114	2	PRESSURE LIMITING VALVE	DRUCKBEGRENZUNGSVENTIL

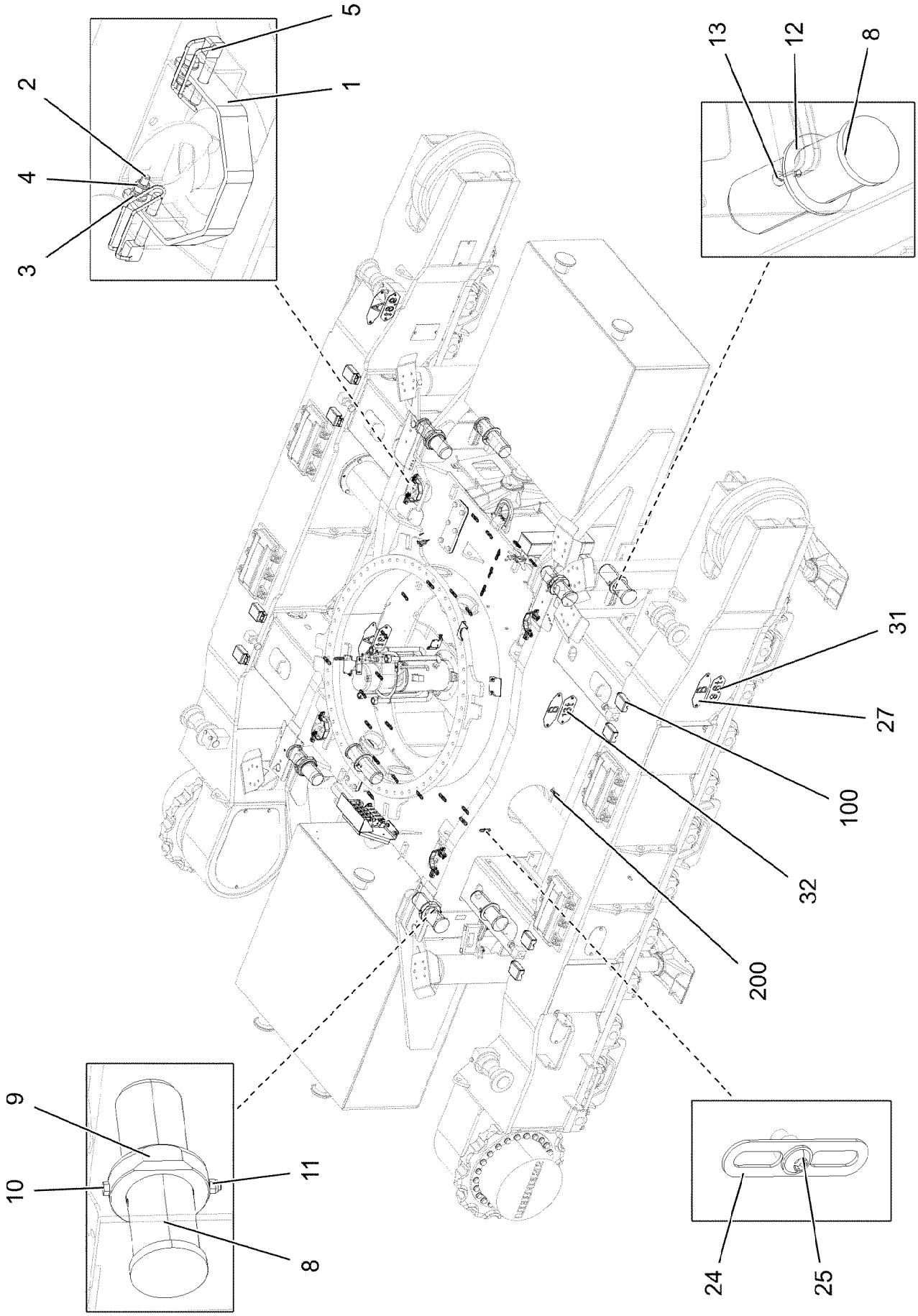
5
1
2
4
3
13
12
8
31
27
100
32
200
9
10
11
8
24
25

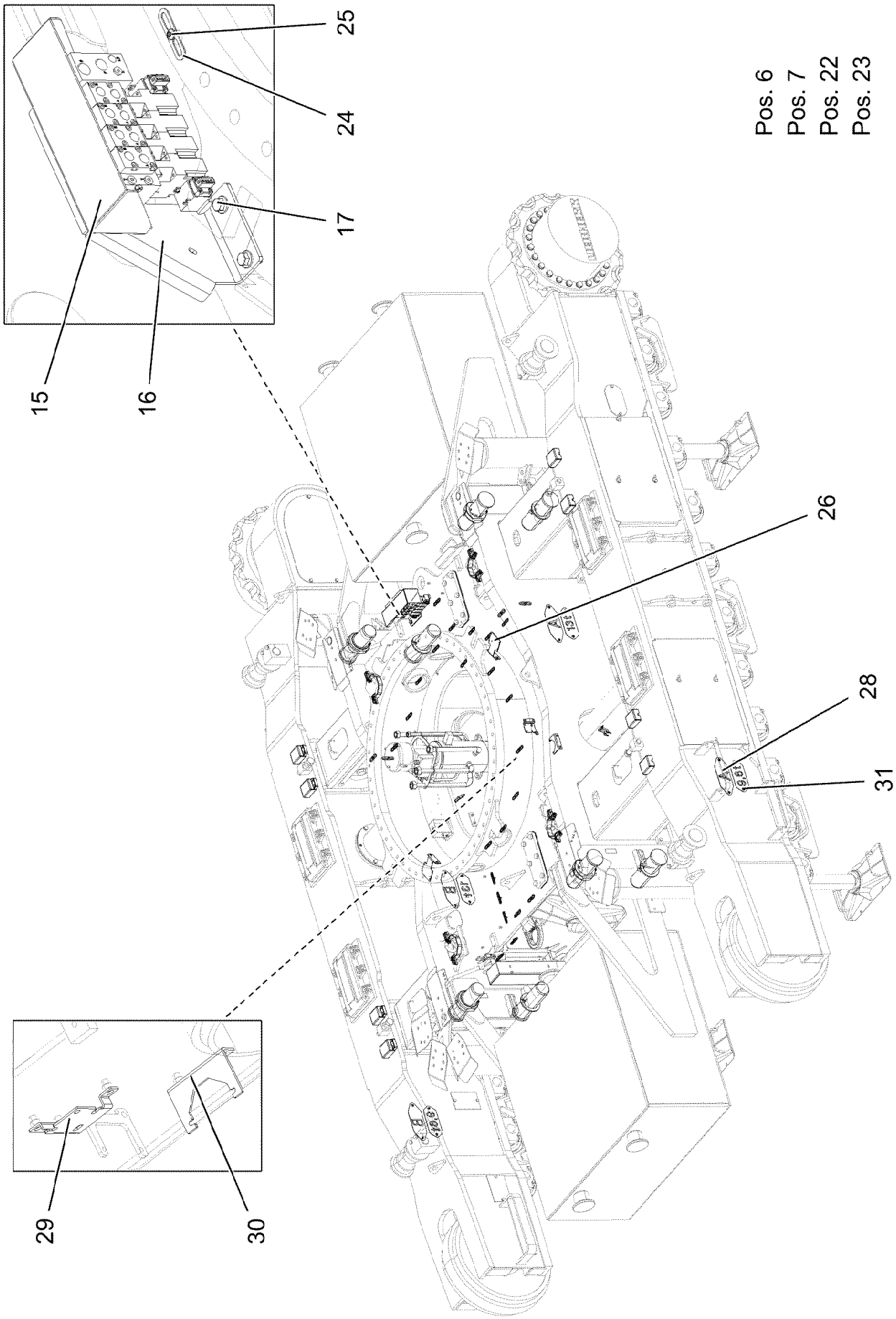
Pos. 6
Pos. 7
Pos. 22
Pos. 23
25
24
17
15
16
26
28
31
29
30

Pos.	Item	Quantity	Description	Bezeichnung
1	976993208	4	PLATE 5X349X30 S355MC FE//ZNNI8//CN//T	BLECH
2	11826527	8	HEX SCREW ISO 4017 M8X30 8.8 480H SPF	SECHSKANTSCHRAUBE
3	12103465	24	WASHER ISO 7089 8 300HV ZNNI-480H SPF	SCHEIBE
4	10875614	8	HEX NUT DIN 985 M8 8 480H SPF	SECHSKANTMUTTER
5	433200908	8	FORMCLIP 10X55 VERZ	FORMCLIP
6	11160431	2	ROPE 2 2,3KN EDELSTAHL	SEIL
7	11170565	16	FERRULE 2 CU	PRESSKLEMME
8	956657414	8	PIN 118X340 35NICRMOV125 SPF	BOLZEN
9	956657514	4	DISTANCE RING 152X25X50 ST.37.0 FE//ZN	DISTANZRING
10	12224027	4	HEX SCREW ISO 4014 M12X170 8.8 FLZN SP	SECHSKANTSCHRAUBE
11	10875607	4	HEX NUT DIN 985 M12 8 FLZN SPF	SECHSKANTMUTTER
12	97016807	4	WASHER 8X140X140 S355MC FE//ZNNI8//C	SCHEIBE
13	10180381	4	SPLIT PIN ISO 1234 13X125 St 480H SPF	SPLINT
15	97092558	1	PLATE 3X530X215 S355MC FE//ZNNI8//CN//T	BLECH
16	97042444	1	PLATE 6X363X312 S355MC	BLECH
17	11690641	2	HEX SCREW EN 1665 M12X25 8.8 FLZN SPF	SECHSKANTSCHRAUBE
22	7367238	8	CLAMP-HALF AEHNL.DIN 3015 S 3 G 38 PP	KLEMMHAELFTE
23	10560807	8	SOCKET HEAD SCREW ISO 4762 M10X110 8	ZYLINDERSCHRAUBE
24	953650008	27	CABLE CLAMP DC01 FE//ZNNI8//CN//T0	KABELHALTER
25	12102696	47	BUTTON HEAD SCREW AEHNL.ISO 7380-2	HALBRUNDKOPFSCHRAUBE
26	97037626	2	PLATE 4X125X178 S315MC FE//ZNNI8//CN//T	BLECH
27	97011478	2	PLATE 100X290 DC01 FE//ZNNI8//CN//T0	BLECH
28	97037945	2	PLATE 2X290X100 DC01 FE//ZNNI8//CN//T0	BLECH
29	970771908	1	PLATE 3X146X80 DC01 FE//ZNNI8//CN//T0	BLECH
30	970762808	1	PLATE S315MC FE//ZNNI8//CN//T0	BLECH
31	97003792	2	SIGN 2X100X240 DC01 FE//ZNNI8//CN//T0	SCHILD
32	97044861	2	SIGN 2X100X240 DC01 FE//ZNNI8//CN//T0	SCHILD
100	96046146	8	PROTECTION CPL. LWE ⇨ ❑ 48	SCHUTZ KPL.
200	96070203	1	TRANSPORT LASHING ⇨ ❑ 49	TRANSPORTSICHERUNG

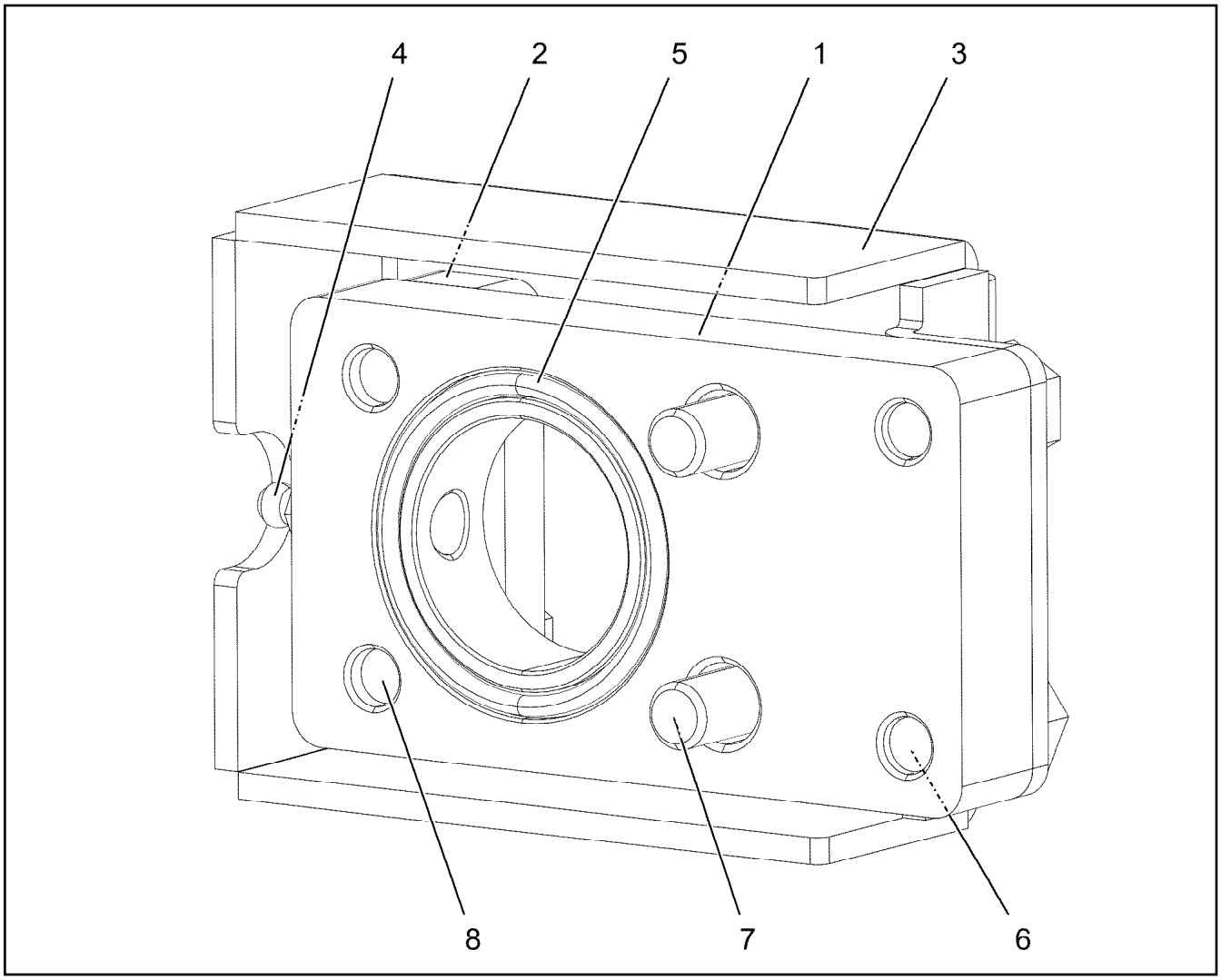

Pos.	Item	Quantity	Description	Bezeichnung
1	97133540	1	PLATE 18X66X117 S355J2+N FE//ZNNI8//CN/	BLECH
2	97133541	1	PLATE 10X22X66 S355MC FE//ZNNI8//CN//T	BLECH
3	97133542	1	PLATE 4X190X158 S315MC FE//ZNNI8//CN//T	BLECH
4	7743242	1	HYDRAULIC-TYPE LUBRICAT.NIPPLE DIN 71	KEGELSCHMIERNIPPEL
5	726405908	1	O-RING DIN 3771 44X3 NBR70	O-RING
6	10197730	2	HEX SCREW ISO 4017 M10X20 8.8 ZNNI-480	SECHSKANTSCHRAUBE
7	11642358	2	HEX SCREW ISO 4017 M10X30 8.8 FLZN SP	SECHSKANTSCHRAUBE
8	11631816	2	HEX SCREW ISO 4017 M10X25 8.8 FLZN SP	SECHSKANTSCHRAUBE

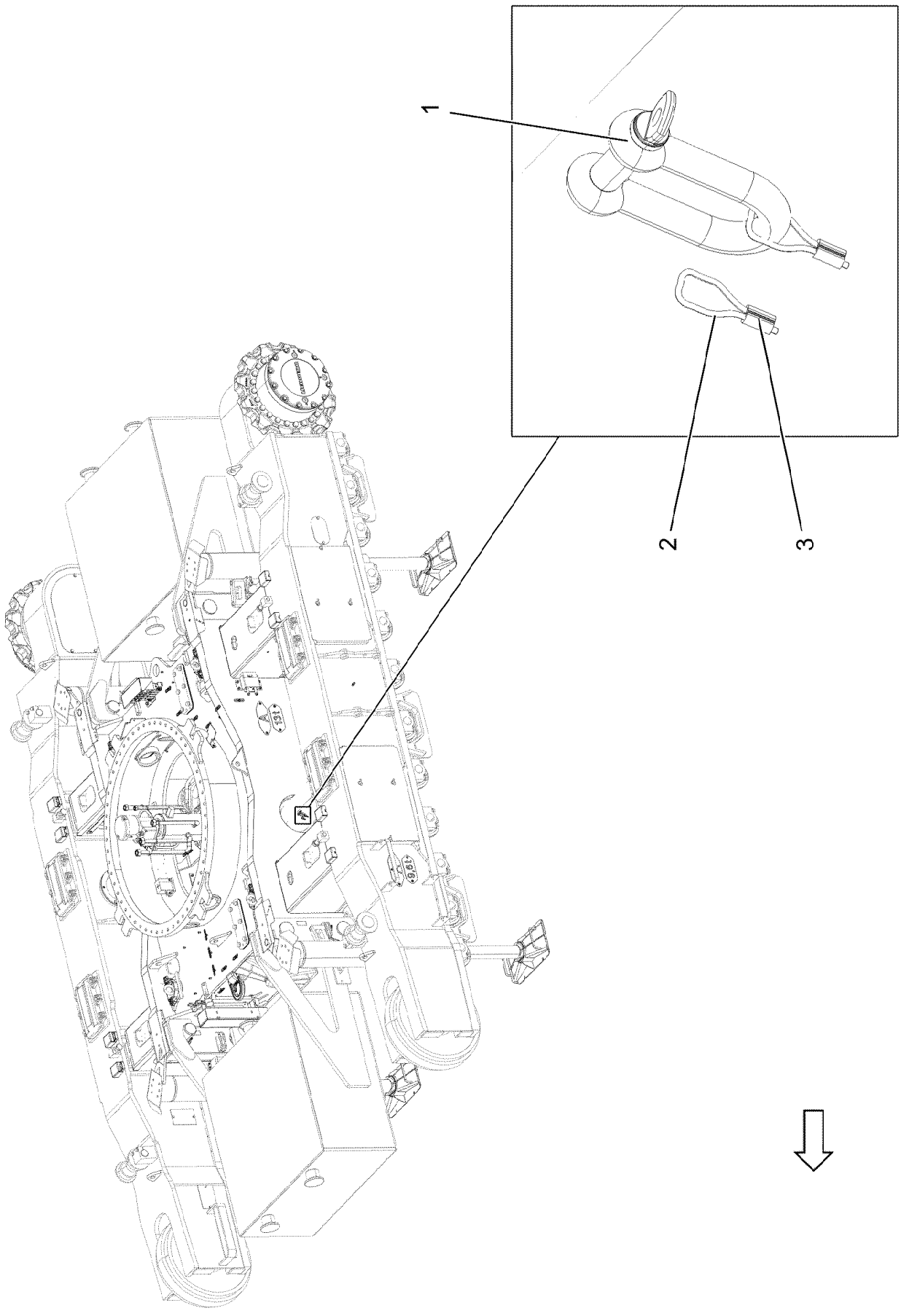
1
2
3

Pos.	Item	Quantity	Description	Bezeichnung
1	773930008	2	SHACKLE DIN 82101 0,4T NG10 EDELSTAH	SCHAEKEL
2	11160431	0.6	ROPE 2 2,3KN EDELSTAHL	SEIL
3	11170565	4	FERRULE 2 CU	PRESSKLEMME

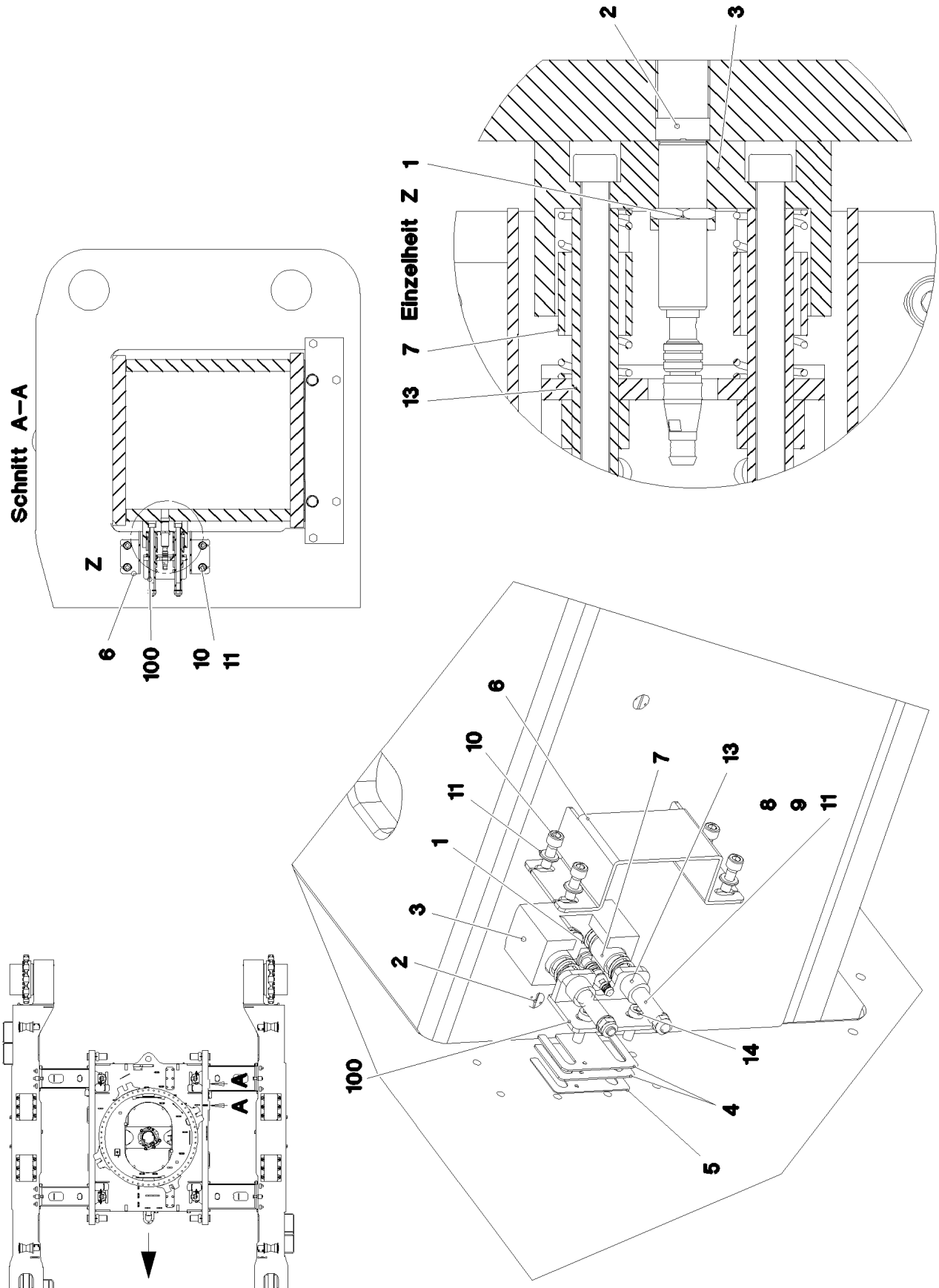
Schnitt A–A
Z
6
100
10
11
Einzelheit Z
1
2
3
7
13
A
A
100
1
2
3
4
5
6
7
8
9
10
11
13
14

Pos.	Item	Quantity	Description	Bezeichnung
1	10354584	2	INDUCTIVE SENSOR BERUEHRUNGSLOS	INDUKTIVSENSOR
(1)	12109804	2	NUT M18X1	MUTTER
2	10354922	6	TRANSPONDER SPF	TRANSPONDER
3	97054040	2	SLIDER 110X56X65	GLEITBLOCK
4	97032617	4	PLATE 2X90X60 DC01 FE//ZNNI8//CN//T0	BLECH
5	97032616	2	PLATE 1X90X60 DC01 FE//ZNNI8//CN//T0	BLECH
6	97040100	2	PLATE 4X104X325 S315MC FE//ZNNI8//CN//T	BLECH
7	720007108	4	COMPRESSION SPRING DIN 2098 2,5X25X	DRUCKFEDER
8	11320360	4	SOCKET HEAD SCREW ISO 4762 M10X170	ZYLINDERSCHRAUBE
9	10197769	4	HEX NUT DIN 985 M10 8 ZNNI-480H SPF	SECHSKANTMUTTER
10	10875571	8	SOCKET HEAD SCREW ISO 4762 M10X30 8	ZYLINDERSCHRAUBE
11	10289795	12	WASHER ISO 7089 10 300HV FLZN SPF	SCHEIBE
12	11658580	4	WASHER DIN 7349 10,5 200HV-St FLZN SPF	SCHEIBE
13	97080775	4	SLEEVE 18.0X145 S355J2C+C FE//ZNNI8//C	HUELSE
14	10178345	4	SOCKET HEAD SCREW DIN 7984 M10X30 10	ZYLINDERSCHRAUBE
100	968376808	2	BRACKET WELDED CONST. FE//ZNNI8//CN/	KONSOLE SCHWK.

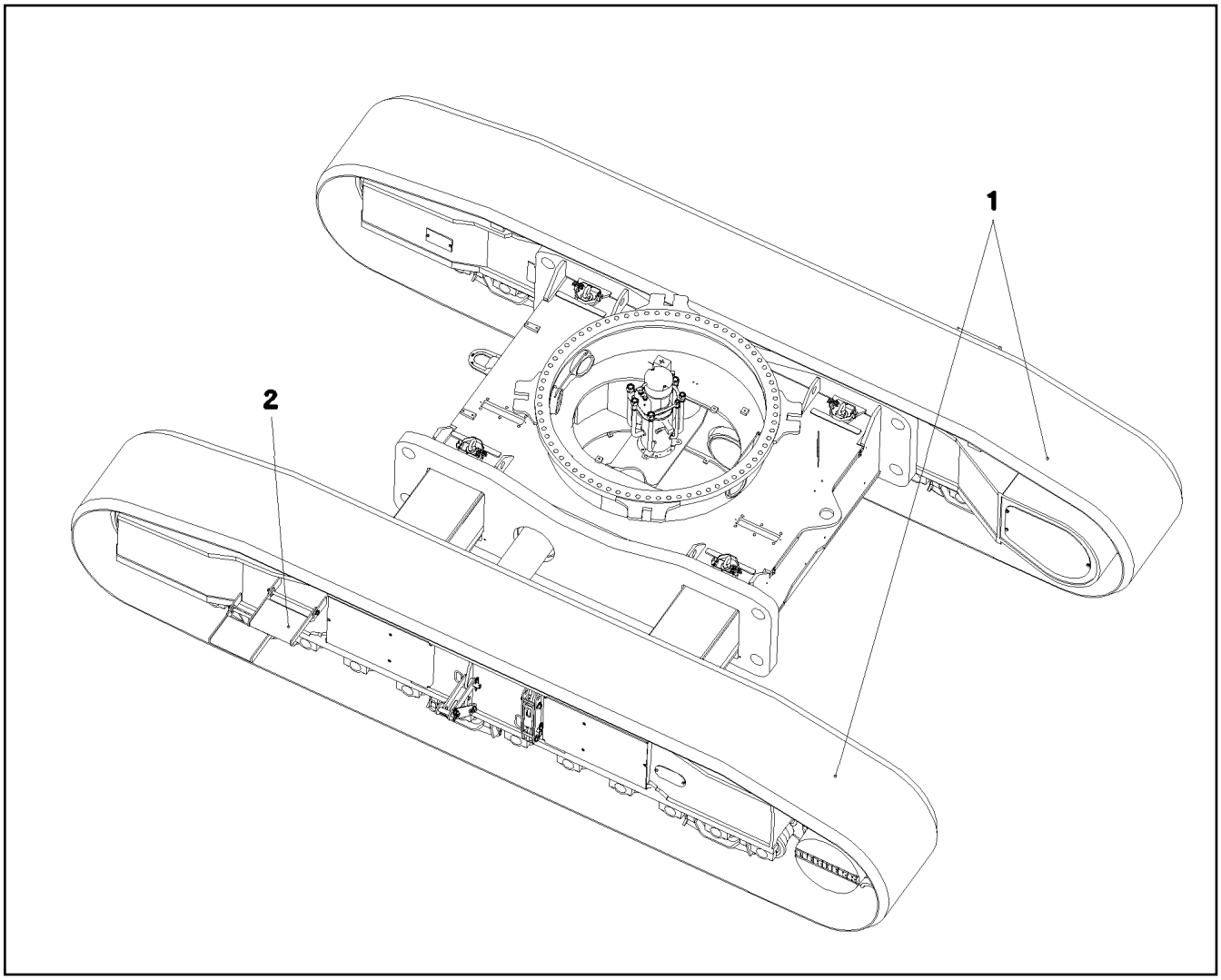

Pos.	Item	Quantity	Description	Bezeichnung
1	10430241	2	CRAWLER CHAIN CPL. 62GL.B7B/900 ⇨ ❑ 54	RAUPENKETTE KPL.
2	991456314	4	ACCESS COMPL ⇨ ❑ 60	AUFSTIEG KPL.

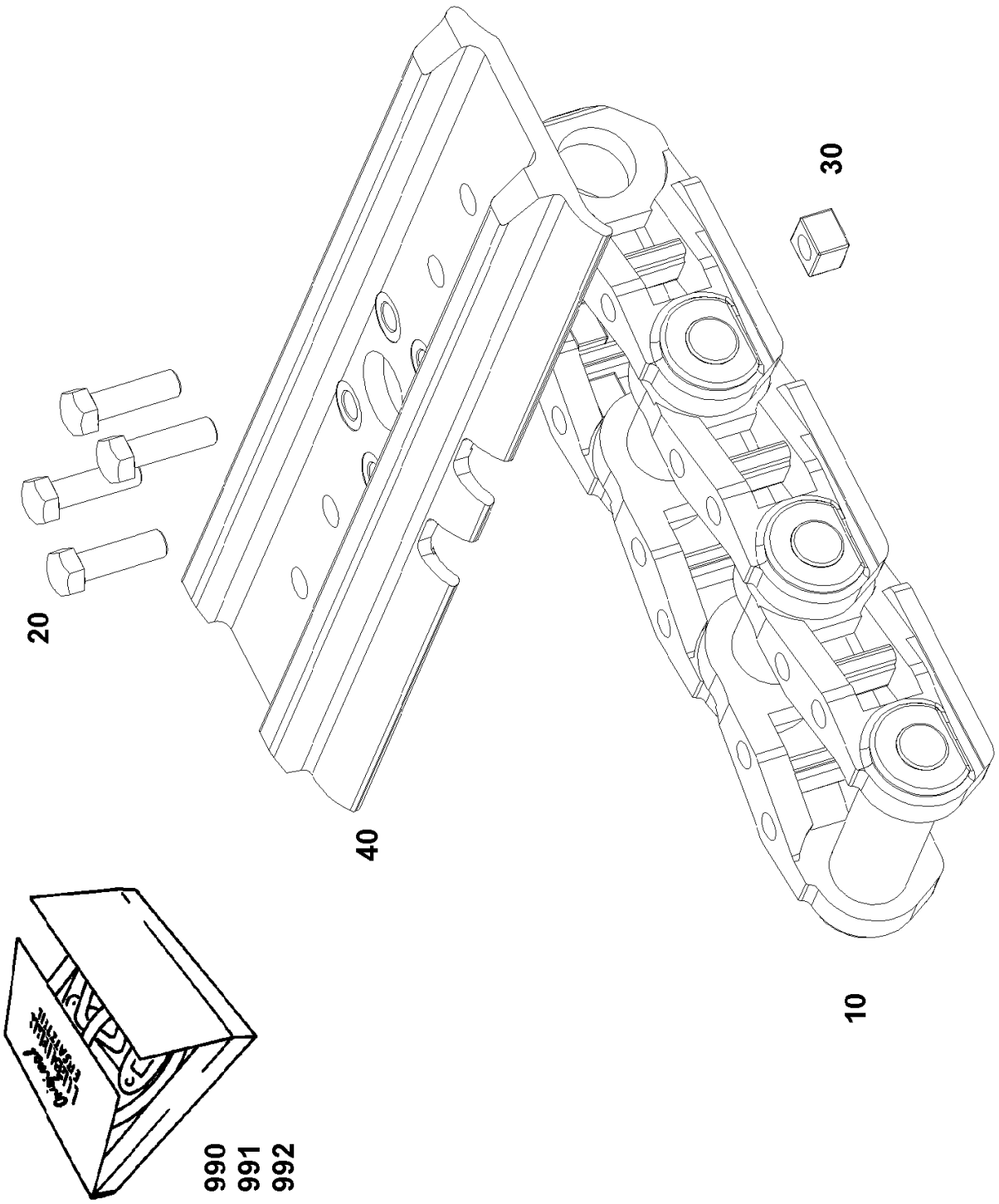
30
20
40
10
990
991
992

Pos.	Item	Quantity	Description	Bezeichnung
10	790258414	1	CRAWLER CHAIN CPL 62GL.B7B ⇨ ❑ 56	RAUPENKETTE KPL
20	485507414	248	SCREW UNF7/8X14X3 3/4 13.9	SCHRAUBE
30	10515048	248	NUT UNF7/8X14 13.9	MUTTER
40	11161944	62	FLAT BOTTOM PLATE B7B BPL-FL	FLACHBODENPLATTE
990	965336308	1	REPAIR KIT CRAWLER CHAIN 1-FACH ⇨ ❑ 57	RS RAUPENKETTE
991	965359808	1	REPAIR KIT CRAWLER CHAIN 2-FACH ⇨ ❑ 58	RS RAUPENKETTE
992	965359908	1	REPAIR KIT CRAWLER CHAIN 3-FACH ⇨ ❑ 59	RS RAUPENKETTE

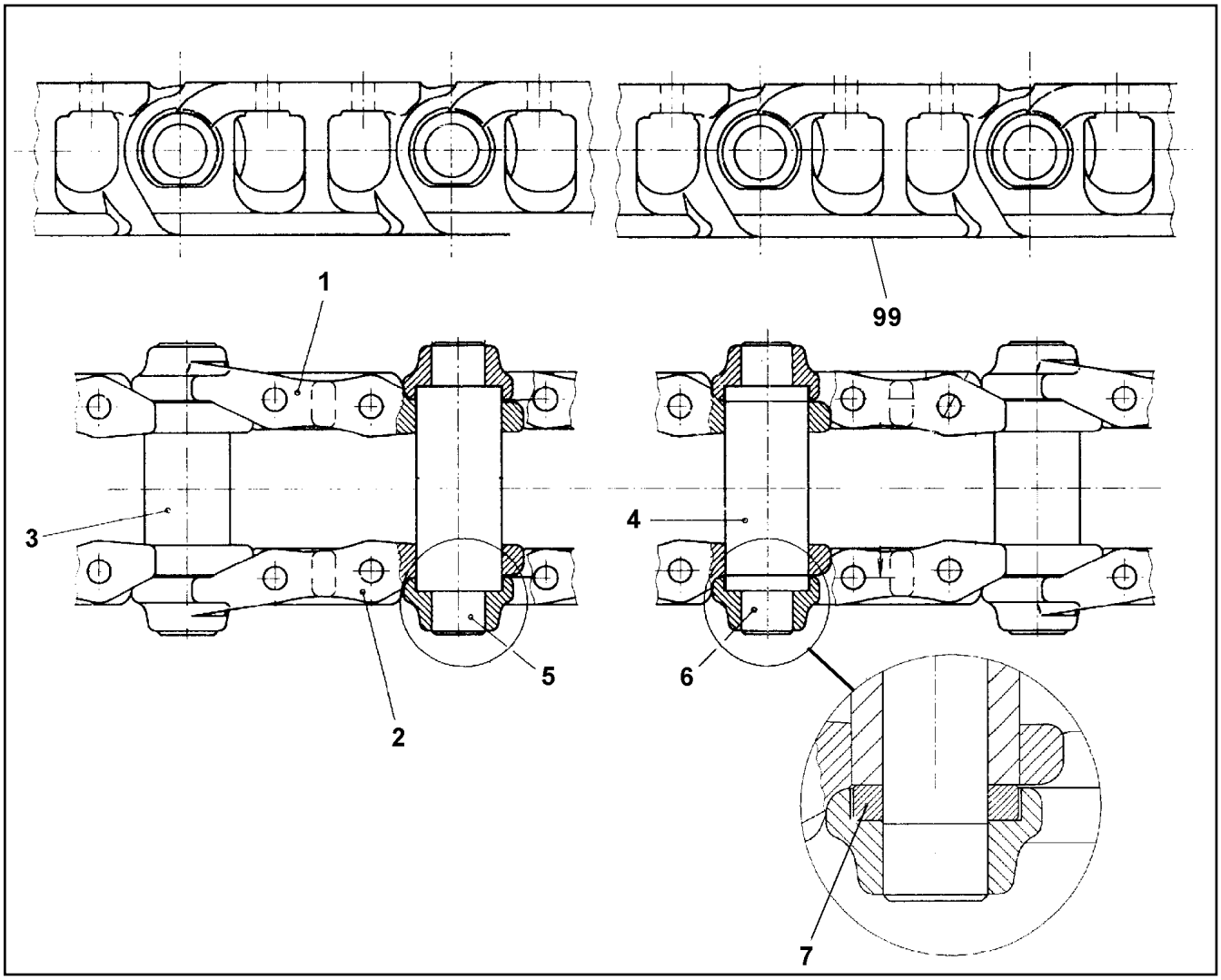

Pos.	Item	Quantity	Description	Bezeichnung
1	786526614	62	CHAIN LINK	KETTENGLIED
2	786526714	62	CHAIN LINK	KETTENGLIED
3	11951828	60	CHAIN BUSHING 48,74X71,45X184	KETTENBUCHSE
4	5209131	1	END BUSHING 48,49X71,38X158,	ENDBUCHSE
5	11951831	60	CHAIN BOLT 47,71	KETTENBOLZEN
6	786525214	1	CHAIN PIN	KETTENENDBOLZEN
7	11951833	2	TERMINAL DISK	SCHLUSSSCHEIBE
99	786528114	1	CHAIN END SEGMENT CPL	KETTENENDSEGMENT KPL

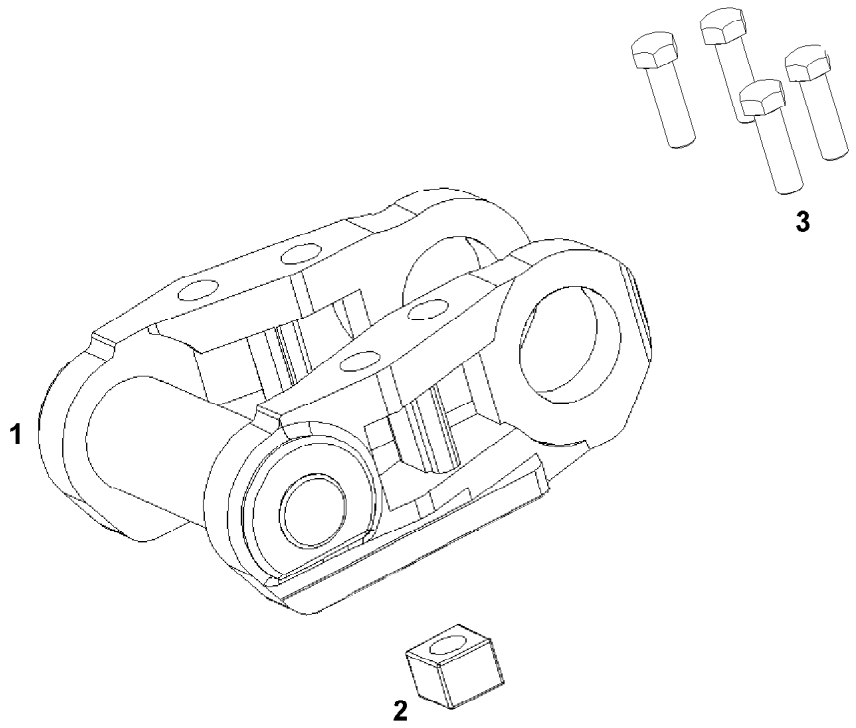

Pos.	Item	Quantity	Description	Bezeichnung
1	10814497	1	REPAIR SEGMENT 1-FACH	REPARATURSEGMENT
2	10515048	4	NUT UNF7/8X14 13.9	MUTTER
3	485507414	4	SCREW UNF7/8X14X3 3/4 13.9	SCHRAUBE
3	786511414	4	SCREW UNF7/8X14X3 12.9	SCHRAUBE

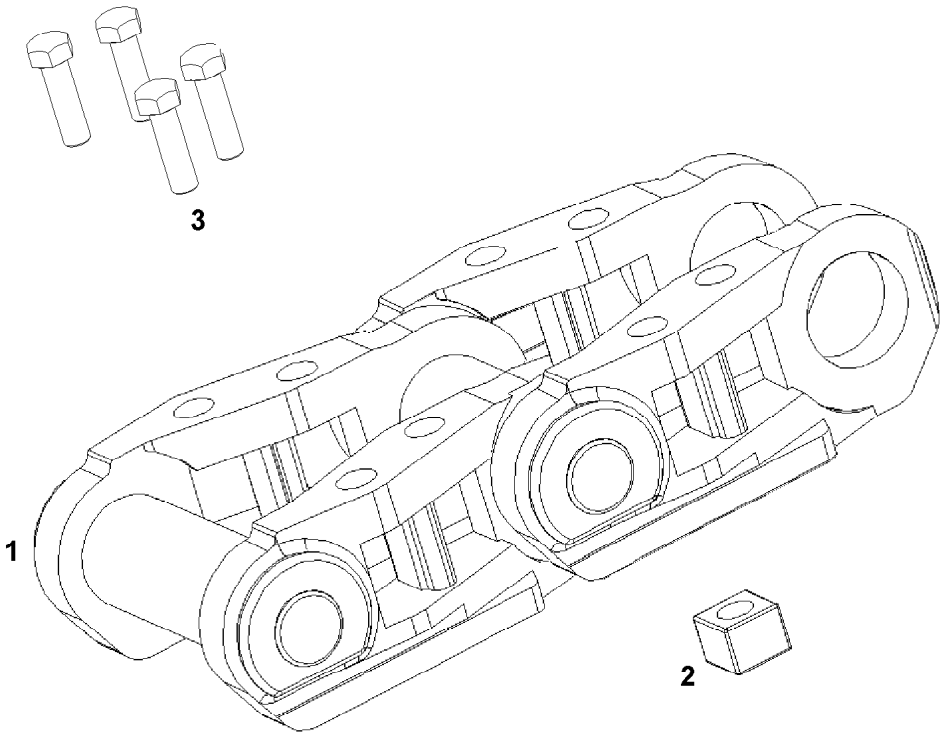

Pos.	Item	Quantity	Description	Bezeichnung
1	10816194	1	REPAIR SEGMENT 2-FACH	REPARATURSEGMENT
2	10515048	8	NUT UNF7/8X14 13.9	MUTTER
3	485507414	8	SCREW UNF7/8X14X3 3/4 13.9	SCHRAUBE
3	786511414	8	SCREW UNF7/8X14X3 12.9	SCHRAUBE

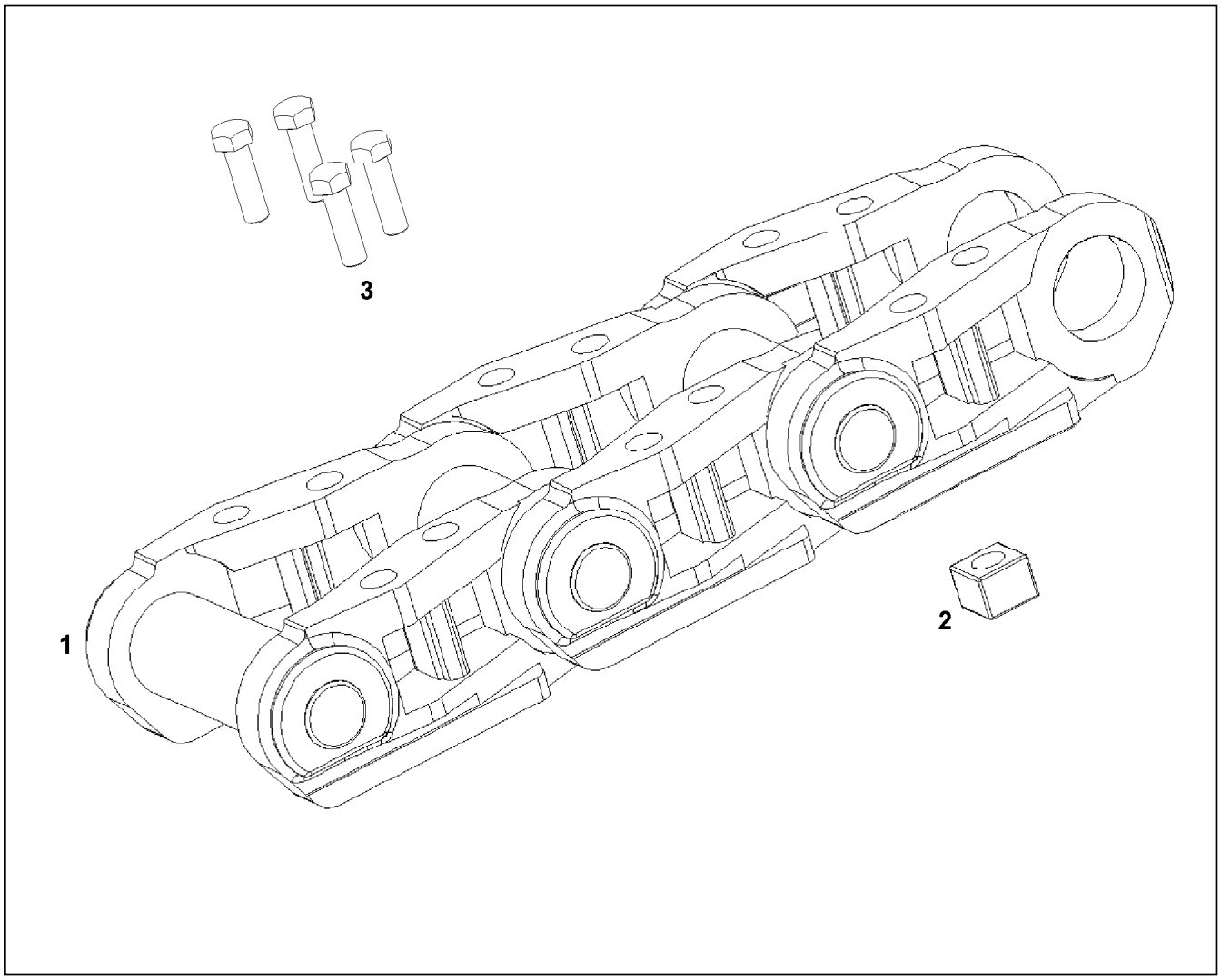

Pos.	Item	Quantity	Description	Bezeichnung
1	10816195	1	REPAIR SEGMENT 3-FACH	REPARATURSEGMENT
2	10515048	12	NUT UNF7/8X14 13.9	MUTTER
3	485507414	12	SCREW UNF7/8X14X3 3/4 13.9	SCHRAUBE
3	786511414	12	SCREW UNF7/8X14X3 12.9	SCHRAUBE

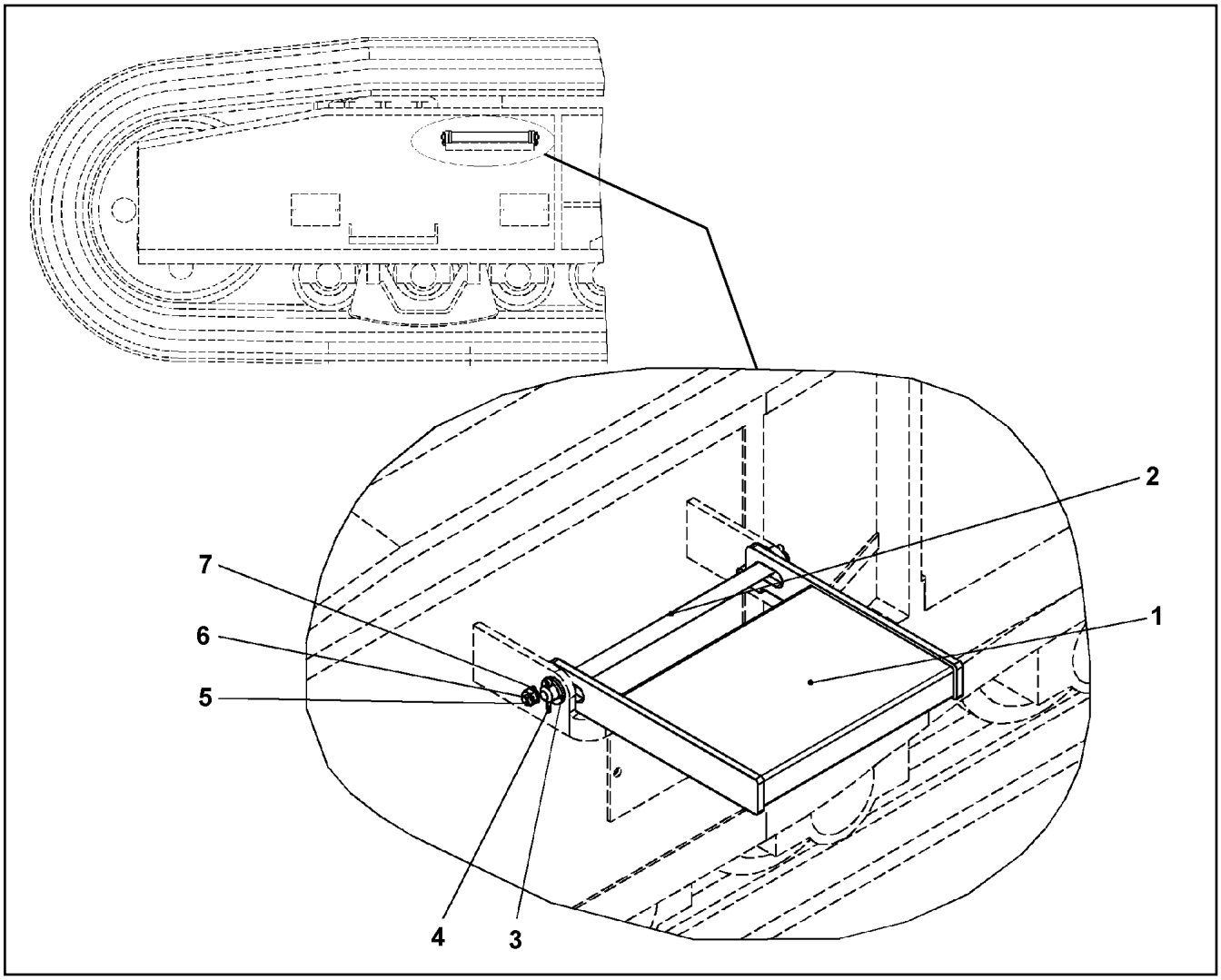

Pos.	Item	Quantity	Description	Bezeichnung
1	10099161	1	STEP DIN EN ISO 1461 T ZN K	TRITTSTUFE
2	452550908	1	PIN ISO 2340 B20X400X387 ST FE//ZN20//C	BOLZEN
3	12100631	2	WASHER ISO 8738 22 ST FLZN SPF	SCHEIBE
4	10180357	2	SPLIT PIN ISO 1234 5X32 St 480H SPF	SPLINT
5	10415162	2	SOCKET HEAD SCREW ISO 4762 M10X25 8	ZYLINDERSCHRAUBE
6	411503103	2	HEX NUT ISO 4032 M10 8 A2E	SECHSKANTMUTTER
7	10289795	2	WASHER ISO 7089 10 300HV FLZN SPF	SCHEIBE

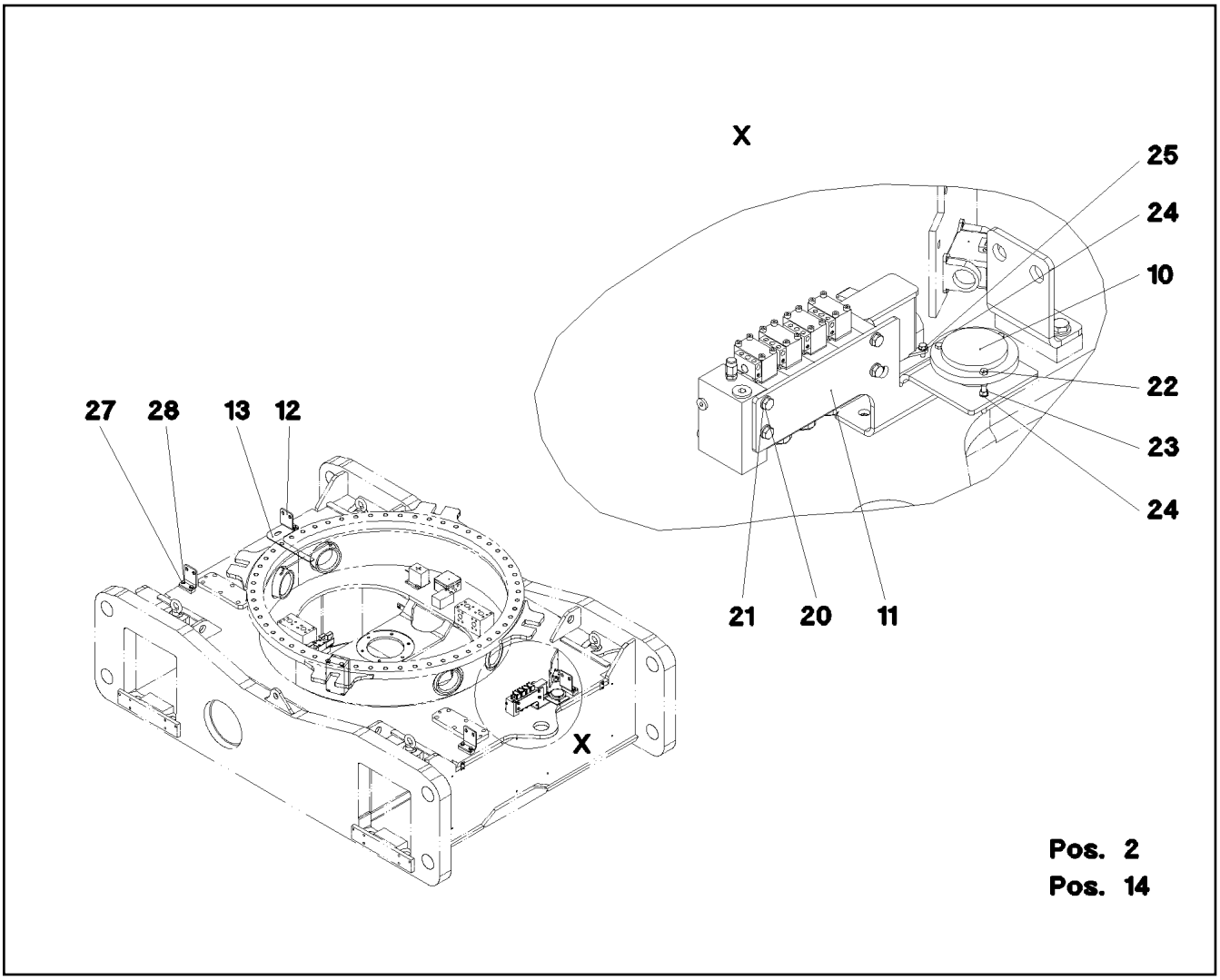

Pos.	Item	Quantity	Description	Bezeichnung
2	967301408	1	PREPARATION HYDR JACK-UP NRS ⇨ ❑ 62	HYDRAULIK VORB.
10	714000808	2	SPIRIT LEVEL	LIBELLE
11	976541508	1	PLATE 6X346X227 S355MC	BLECH
12	976541308	4	PLATE 8X100X166 S355MC FE//ZNNI8//CN//T	BLECH
13	977753708	1	PLATE 4X400X200 S315MC FE//ZNNI8//CN//T	BLECH
14	977905308	1	PLATE 5X110X210 S355MC FE//ZNNI8//CN//T	BLECH
20	11651767	4	HEX SCREW ISO 4017 M8X20 8.8 480H SPF	SECHSKANTSCHRAUBE
21	420001014	4	WASHER ISO 7089 8 200HV-A4	SCHEIBE
22	12100540	6	HEX SCREW ISO 4017 M5X55 8.8 480H SPF	SECHSKANTSCHRAUBE
23	400100703	18	HEX NUT ISO 4032 M5 8 A2E	SECHSKANTMUTTER
24	10197808	18	WASHER ISO 7089 5 200HV ZNNI-480H	SCHEIBE
25	11140402	4	HEX SCREW ISO 4017 M5X12 8.8 480H SPF	SECHSKANTSCHRAUBE
27	11658892	8	HEX SCREW ISO 4017 M12X25 8.8 FLZN SP	SECHSKANTSCHRAUBE
28	10289804	8	WASHER ISO 7089 12 300HV FLZN SPF	SCHEIBE

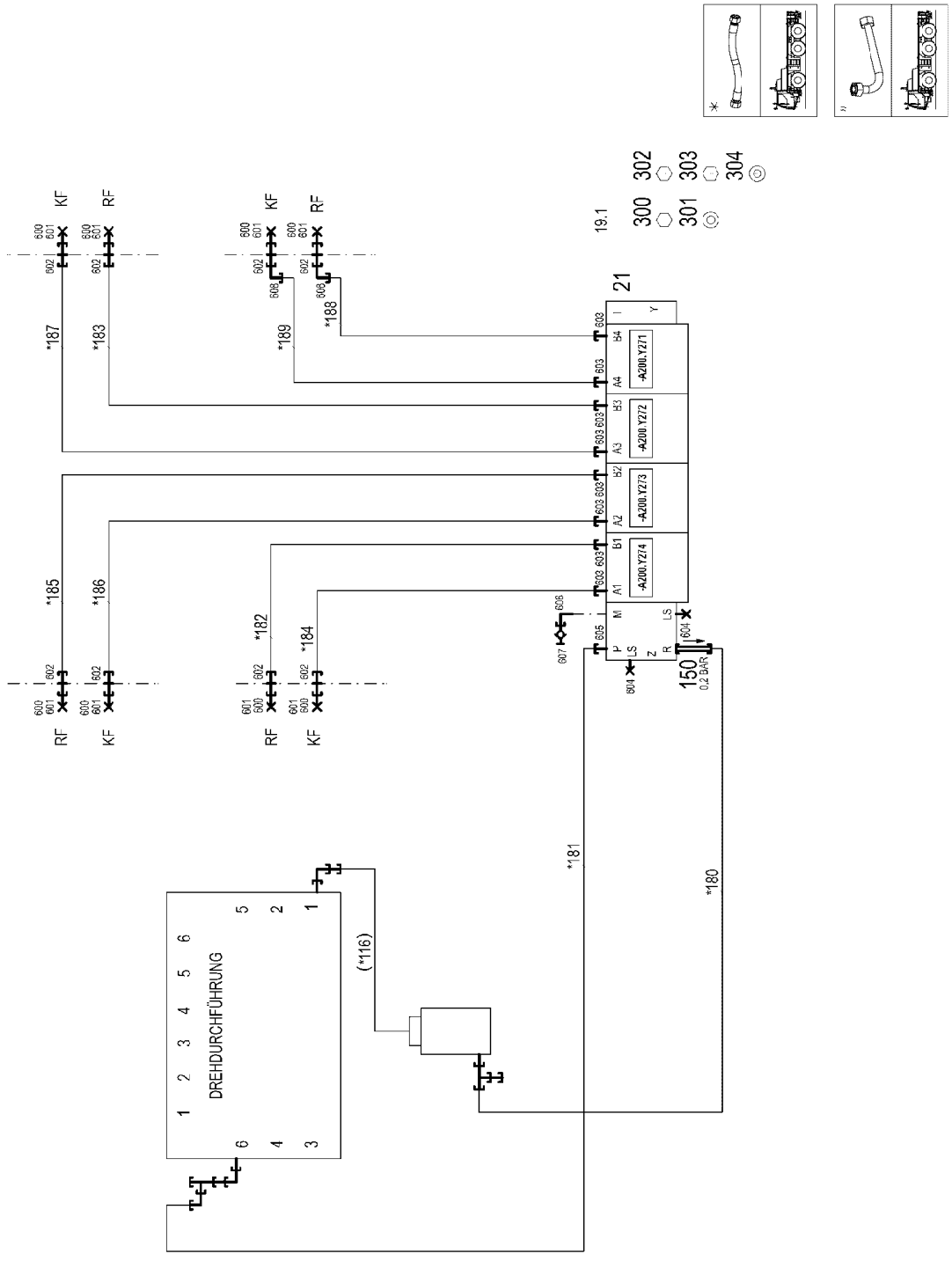

DREHDURCHFÜHRUNG
(*116)
*180
*181
*182
*183
*184
*185
*186
*187
*188
*189
19.1
21
150
0.2 BAR
-A200.Y271
-A200.Y272
-A200.Y273
-A200.Y274
300
301
302
303
304
KF
RF

Pos.	Item	Quantity	Description	Bezeichnung
10	967499008	1	HOSE LINES SUPPORT SYSTEM SCR ⇨ ❑ 64	SCHLAUCHLEITUNGEN ABSTUE
19	968522208	1	MECHANICAL AUXILIARIES	MECH.BEFESTIGUNGSTEILE
(1)	97042444	1	PLATE 6X363X312 S355MC	BLECH
21	11481975	1	CONTROL BLOCK 420BAR SPF ⇨ ❑ 65	STEUERBLOCK
150	511431514	1	NON-RETURN VALVE 400BAR CR6-FREI	RUECKSCHLAGVENTIL
300	10299649	4	HEX SCREW ISO 4017 M8X16 10.9 480H SP	SECHSKANTSCHRAUBE
301	420060705	4	WASHER ISO 7089 8 200HV-A2	SCHEIBE
302	11626706	1	HEX SCREW ISO 4017 M10X40 8.8 FLZN SP	SECHSKANTSCHRAUBE
303	11690628	1	SOCKET HEAD SCREW ISO 4762 M10X40 8	ZYLINDERSCHRAUBE
304	420001114	2	WASHER ISO 7089 10 200HV-A4	SCHEIBE
600	477700508	8	BLANKING PLUG ISO 8434-1 PL 12L/S CR6-F	VERSCHLUSSSTOPFEN
601	477400408	8	BOX NUT DIN 3870 AS12 A3C	UEBERWURFMUTTER
602	474032408	8	FITTING XSV12-S CR6-FREI	VERSCHRAUBUNG
603	471032708	8	FITTING GE 12S G3/8A CR6-FREI	VERSCHRAUBUNG
604	477704008	2	STOPPER PLUG VSTI1/4"ED CR6-FREI	BLINDSTOPFEN
605	471032608	1	FITTING GE 12S G1/2A CR6-FREI	VERSCHRAUBUNG
606	473230608	1	FITTING RSWS6-SR-WD CR6-FREI	VERSCHRAUBUNG
607	475601508	1	TEST POINT FITTING BMA3 6S CR6-FREI	MESSANSCHLUSS
608	7617354	2	FITTING EW 12S CR6-FREI	VERSCHRAUBUNG

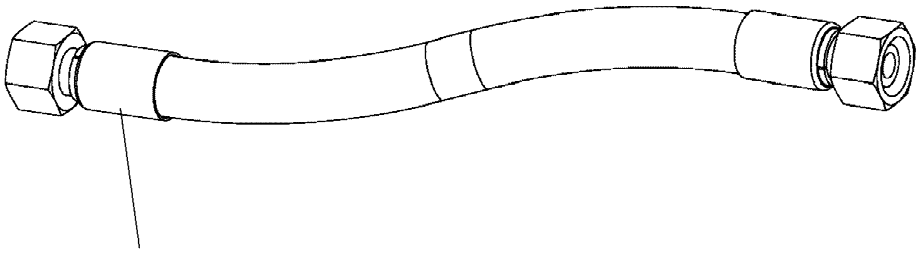

Schlauchnummer
Hose number
Numéro de flexible
Número de flexible
Номера шланга

Die Schlauchnummern auf den Schläuchen entsprechen den Positionen in der Schlauchliste.

The hose numbers from the hoses are in accordance with the items in the hose list.

Les numéros indiqués sur les flexibles correspondent aux repères de la nomenclature des flexibles.

Los números indicados en los flexibles corresponden a las posiciones de la lista de flexibles.

Нанесенные на шлангах номера соответствуют позициям в перечне.

Pos.	Item	Quantity	Description	Bezeichnung
180	964327408	1	HOSE CPL. 2SN 16X1580	SCHLAUCH KPL.
181	964327508	1	HOSE CPL. 2SN 10X1480	SCHLAUCH KPL.
182	964327608	1	HOSE CPL. 2SN 10X790	SCHLAUCH KPL.
183	964327708	1	HOSE CPL. 2SN 10X3360	SCHLAUCH KPL.
184	964327808	1	HOSE CPL. 2SN 10X730	SCHLAUCH KPL.
185	964327908	1	HOSE CPL. 2SN 10X3830	SCHLAUCH KPL.
186	964327908	1	HOSE CPL. 2SN 10X3830	SCHLAUCH KPL.
187	964328008	1	HOSE CPL. 2SN 10X3300	SCHLAUCH KPL.
188	964327808	1	HOSE CPL. 2SN 10X730	SCHLAUCH KPL.
189	964327608	1	HOSE CPL. 2SN 10X790	SCHLAUCH KPL.

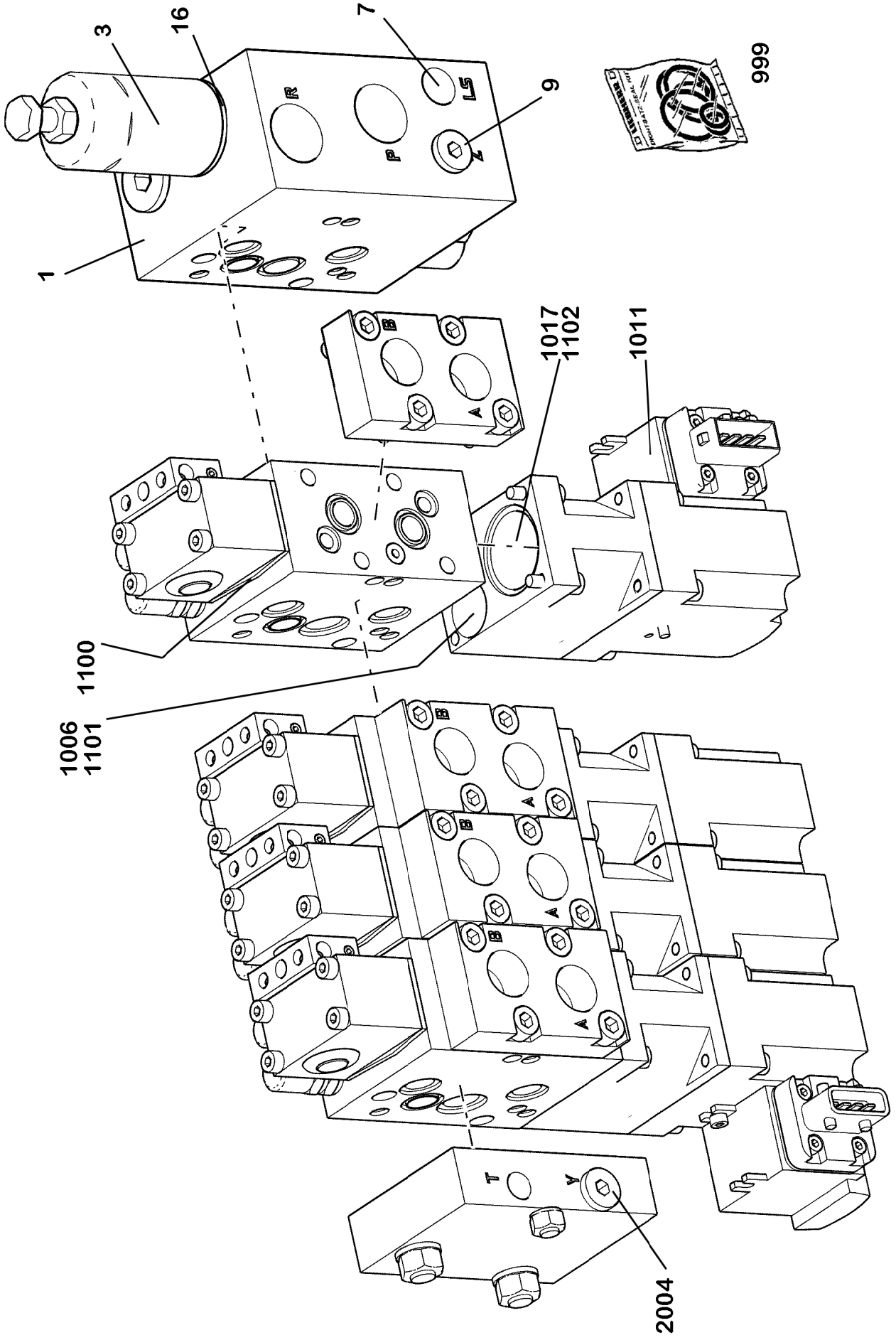
3
16
7
9
999
1
1017
1102
1011
1100
1006
1101
2004
R
P
LS
T
Y
A
B

Pos.	Item	Quantity	Description	Bezeichnung
1	12105785	1	COMPLETE CONNECTION BLOCK	ANSCHLUSSBLOCK KPL.
3	12105786	1	COMPRESSION SPRING	DRUCKFEDER
7	12105789	1	OIL FILTER SCREW	OELFILTERSCHRAUBE
9	11232679	1	SCREW PLUG G1/8"A NBR	VERSCHLUSSSCHRAUBE
16	12105791	1	O-RING 23,52X1,78 HNBR 610 SH	O-RING
999	11220418	1	SEALING SET	DS
1006	12105795	8	NOZZLE HOLDER	DUESENHALTER
1011	12102524	4	CONNECTOR PLUG A	ANSCHLUSSSTECKER
1017	12105803	4	SOCKET WRENCH SW8	STECKSCHLUESSEL
1100	12105806	4	O-RING 25,5X2,3 TPU 90 SH	O-RING
1101	12105807	8	O-RING 12,42X1,78 TPU 90 SH	O-RING
1102	12156873	4	O-RING 26,7X1,78	O-RING
2004	11232679	4	SCREW PLUG G1/8"A NBR	VERSCHLUSSSCHRAUBE

Pos.	Item	Quantity	Description	Bezeichnung
4	967292708	1	QUICK-FITTING UNION HYDR NRS	SCHNELLKUPPLUNG HYDR.
(150)	510548108	8	COUPLING SLEEVE	KUPPLUNGSMUFFE
(151)	510548208	8	SOCKET DUST-PROOF	STAUBMUFFE
(152)	510541908	8	COUPLING PLUG DN8/GERADE SPF	KUPPLUNGSSTECKER
(600)	470010308	8	FITTING SNV12-S CR6-FREI	VERSCHRAUBUNG

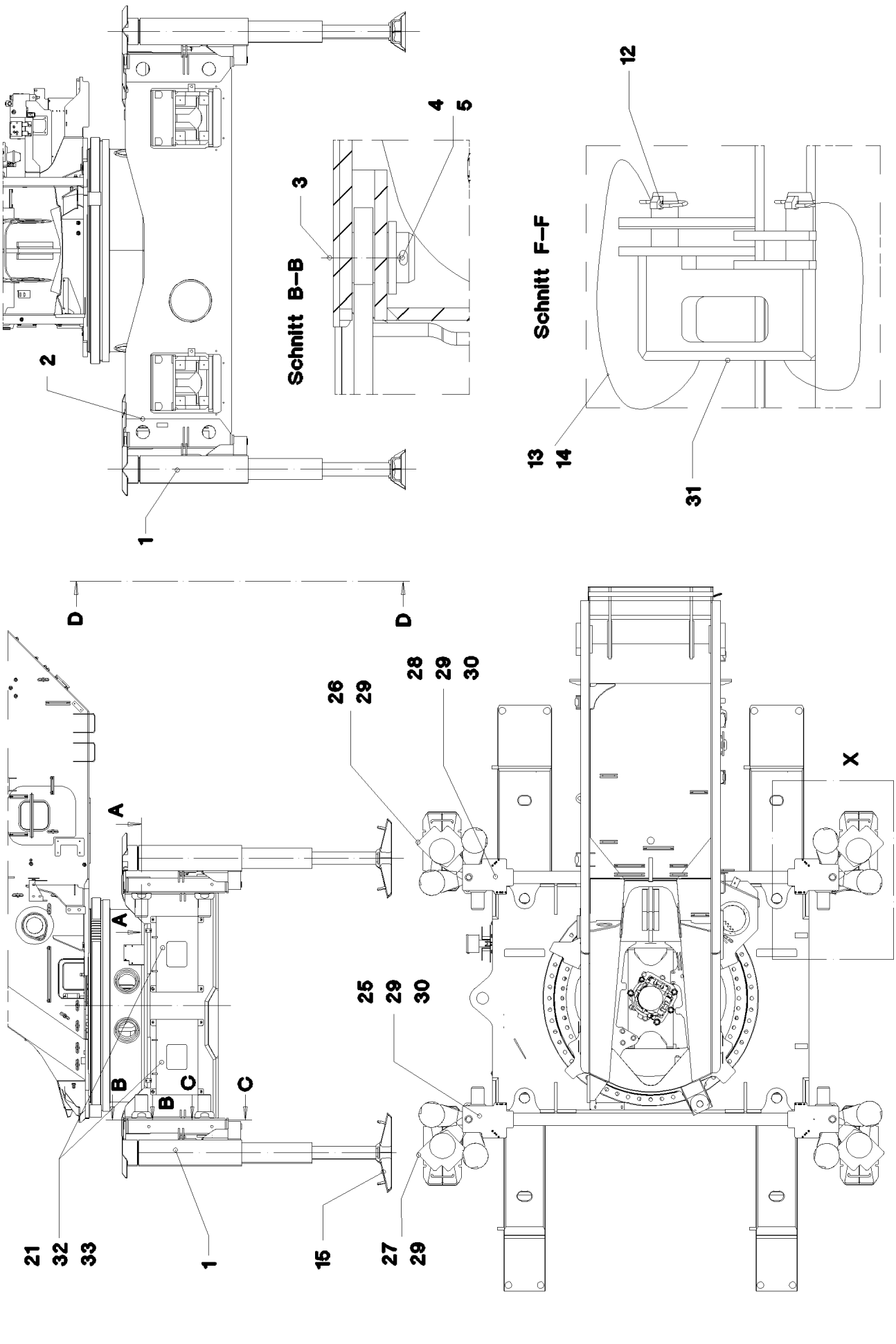
Schnitt B–B
Schnitt F–F
D
D
A
A
B
B
C
C
X
1
2
3
4
5
12
13
14
15
21
25
26
27
28
29
30
31
32
33

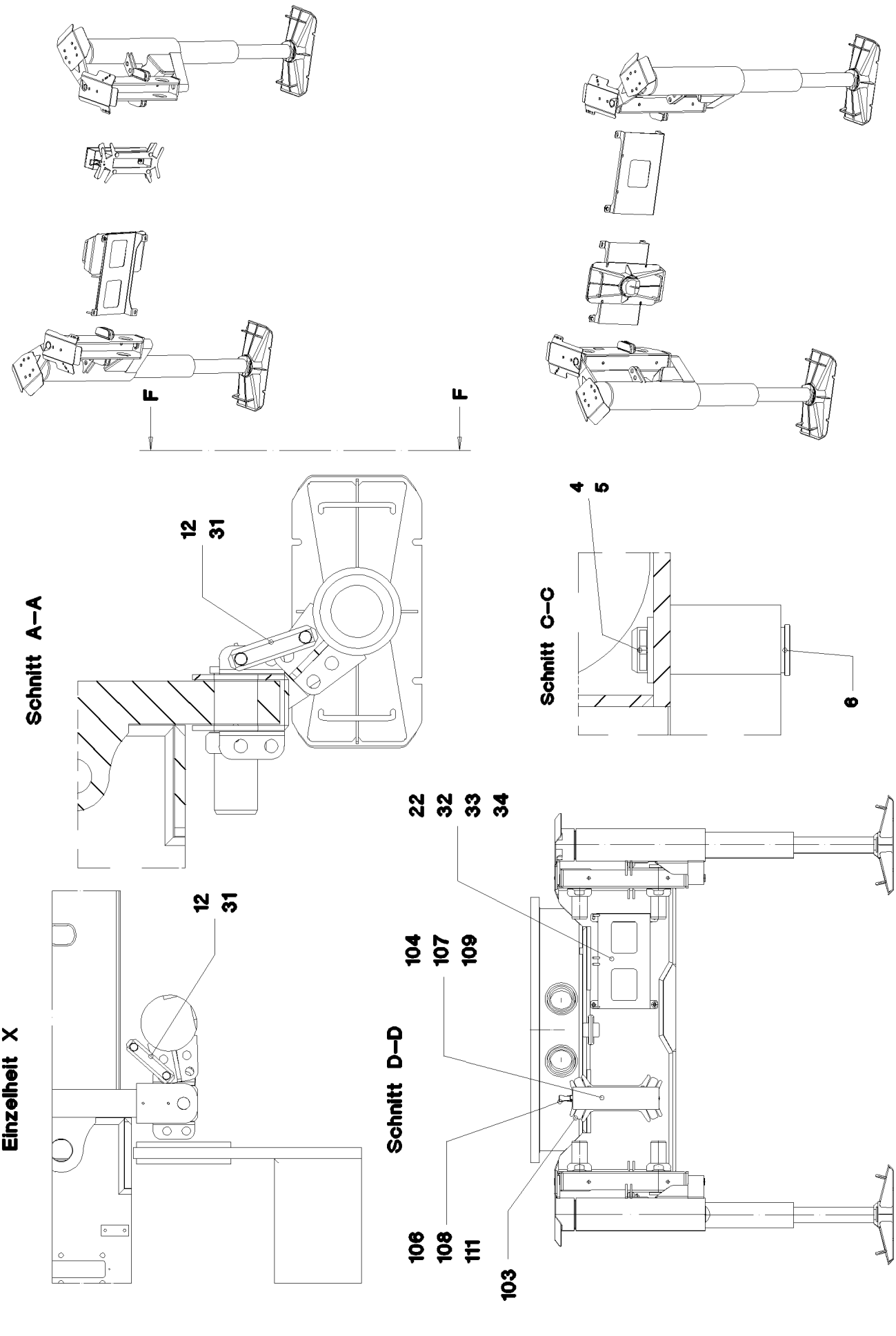
F
F
Schnitt A–A
12
31
Schnitt C–C
4
5
6
Einzelheit X
12
31
Schnitt D–D
22
32
33
34
104
107
109
106
108
111
103

Pos.	Item	Quantity	Description	Bezeichnung
1	10356288	4	SUPPORT CYLINDER 170/100-1070 SPF ⇨ ❑ 71	ABSTUETZZYLINDER
2	964003208	4	BRACKET WELDED CONST.	KONSOLE SCHWK.
3	975758508	4	PIN 45.0X65 35NICRMOV125 GASN. SPF	BOLZEN
4	10180365	8	SPLIT PIN ISO 1234 6,3X63 St 480H SPF	SPLINT
5	10179377	8	WASHER DIN 1441 41 St FLZN SPF	SCHEIBE
6	975686908	4	PIN 45.0X140 35NICRMOV125 GASN. SPF	BOLZEN
12	10875870	8	SAFETY PLUG W HINGE-LID 6X42X5,5X32 4	SICHERHEITSKLAPPSTECKER
13	11170565	16	FERRULE 2 CU	PRESSKLEMME
14	11160431	3	ROPE 2 2,3KN EDELSTAHL	SEIL
15	964536408	4	BRACE PLATE	ABSTUETZPLATTE
21	965080808	2	CONSOLE T ZN O	KONSOLE
22	965080908	1	CONSOLE T ZN O	KONSOLE
25	976514408	2	PLATE 5X409X288 X5CRNI18-10	BLECH
26	976514908	2	PLATE 5X366X288 X5CRNI18-10	BLECH
27	976515008	2	PLATE 5X366X288 X5CRNI18-10	BLECH
28	976515108	2	PLATE 5X409X288 X5CRNI18-10	BLECH
29	10875552	16	COUNTERSUNK SCREW DIN 7991 M8X16 8	SENKSCHRAUBE
30	10181421	32	COUNTERSUNK SCREW ISO 10642 M6X40	SENKSCHRAUBE
31	964541408	4	CONNECTING LINK PRE-ASS.	LASCHE VORM.
32	11631742	12	HEX SCREW ISO 4017 M12X30 8.8 FLZN SP	SECHSKANTSCHRAUBE
33	10289804	16	WASHER ISO 7089 12 300HV FLZN SPF	SCHEIBE
34	10875607	4	HEX NUT DIN 985 M12 8 FLZN SPF	SECHSKANTMUTTER
103	12102696	4	BUTTON HEAD SCREW AEHNL.ISO 7380-2	HALBRUNDKOPFSCHRAUBE
104	10875471	2	BUTTON HEAD SCREW AEHNL.ISO 7380-2	HALBRUNDKOPFSCHRAUBE
106	10181487	2	COUNTERSUNK SCREW ISO 7046-1 M5X16	SENKSCHRAUBE
107	11693875	2	HEX NUT ISO 4032 M8 8 480H SPF	SECHSKANTMUTTER
108	10875620	2	HEX NUT ISO 4032 M5 8 480H SPF	SECHSKANTMUTTER
109	420604208	2	WASHER DIN 440 V 9 ST VERZ	SCHEIBE
111	12227697	2	WASHER SPRING DIN 128 A 5 FST 480H SP	FEDERRING

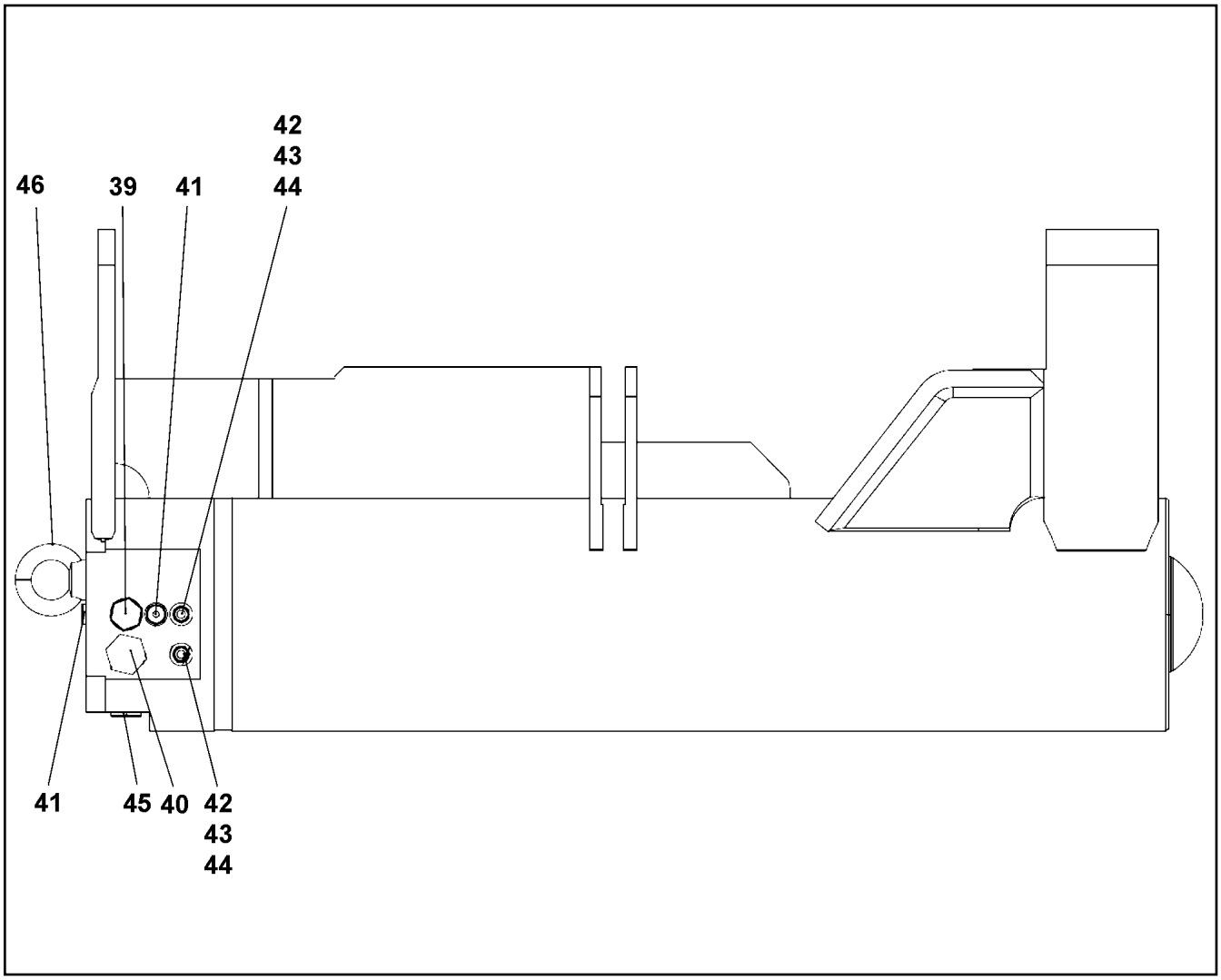

Pos.	Item	Quantity	Description	Bezeichnung
39	10801852	1	PRESSURE LIMITING VALVE	DRUCKBEGRENZUNGSVENTIL
40	10801853	1	NON-RETURN VALVE	RUECKSCHLAGVENTIL
41	477704308	2	STOP PLUG VSTI M12X1,5 CR6-FREI	STOPFEN
42	518620508	2	VENTILATION SCREW R1/4"	ENTLUEFTUNGSSCHRAUBE
43	747000208	6	BALL DIN 5401 6 G20	KUGEL
44	518620608	2	DUST CAP	STAUBKAPPE
45	477704208	2	STOP PLUG VSTI G1/2A CR6-FREI	STOPFEN
46	402600508	1	RING BOLT DIN 580 M16X27 C15E A2K	RINGSCHRAUBE
999	10801854	1	DS SUPPORT CYLINDER	DS ABSTUETZZYLINDER

Pos.	Item	Quantity	Description	Bezeichnung
4	967314108	1	ADD.HYDR.UNIT SUPPORT CYLINDER ⇨ ❑ 73	ZUSATZHYDR.ABSTUETZZYLIN

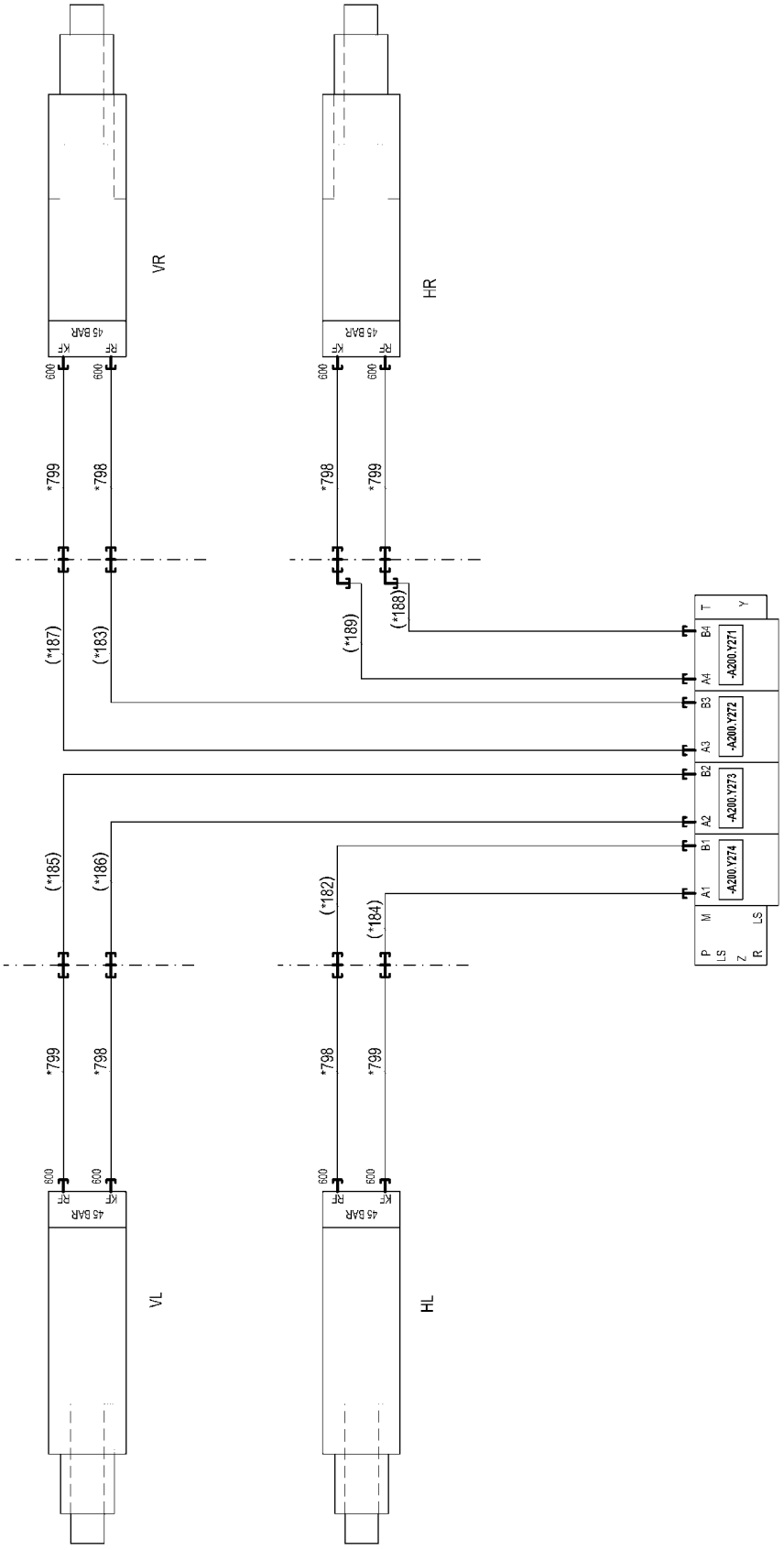
VR
HR
VL
HL
45 BAR
KF
RF
600
*799
*798
(*187)
(*183)
(*189)
(*188)
(*185)
(*186)
(*182)
(*184)
T
Y
B4
A4
B3
A3
B2
A2
B1
A1
-A200.Y271
-A200.Y272
-A200.Y273
-A200.Y274
P
LS
Z
M
R
LS

Pos.	Item	Quantity	Description	Bezeichnung
10	967499208	1	HOSE LINES SUPPORT SYSTEM SCR	SCHLAUCHLEITUNGEN ABSTUE
(798)	928469408	4	HOSE CPL. 2SN 10X1500	SCHLAUCH KPL.
(799)	928756608	4	HOSE CPL. 2SN 10X1550	SCHLAUCH KPL.
600	471032608	8	FITTING GE 12S G1/2A CR6-FREI	VERSCHRAUBUNG

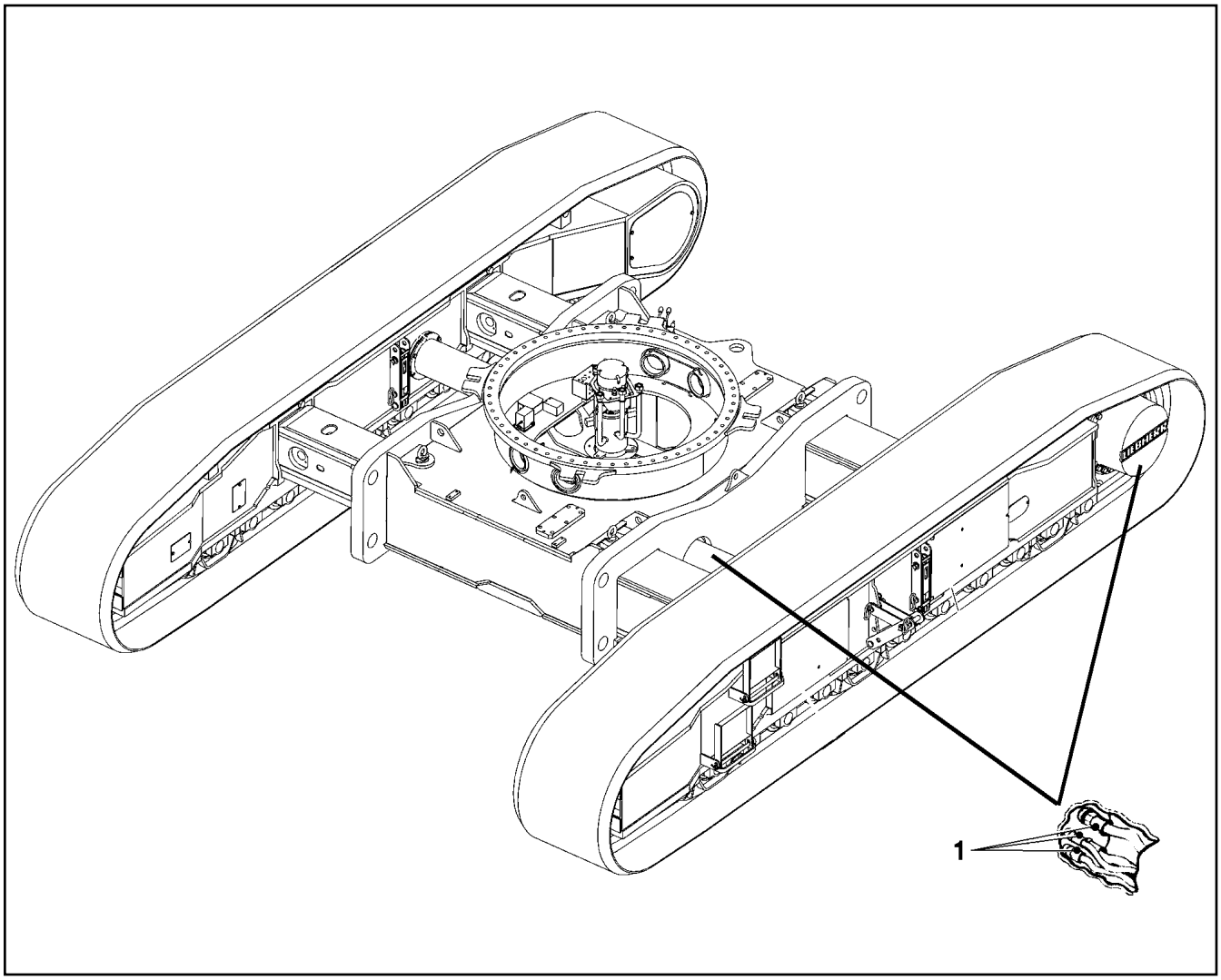

Pos.	Item	Quantity	Description	Bezeichnung
1	919926114	1	QUICK FITTING UNION RFK	SCHNELLKUPPLUNG NRS

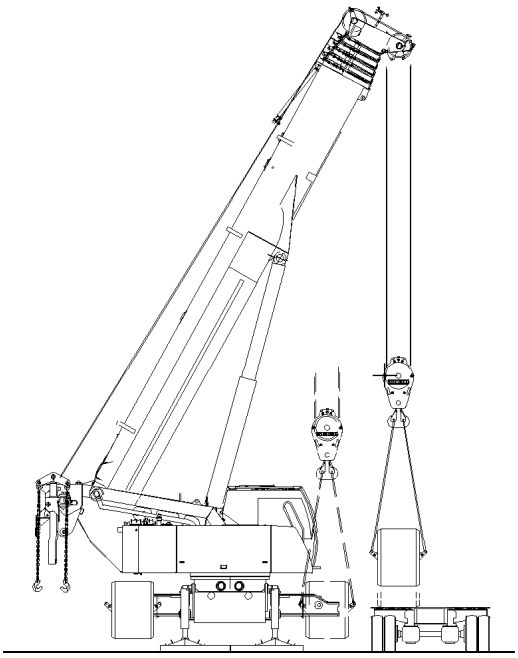

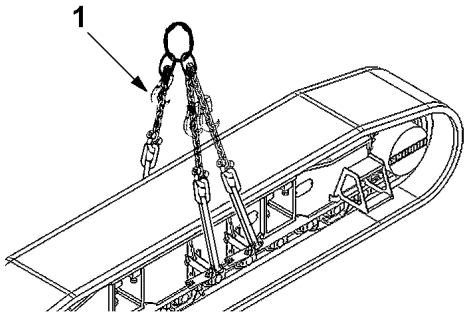

Pos.	Item	Quantity	Description	Bezeichnung
1	990618314	6	TRANSPORT SUPPORT ⇨ ❑ 77	TRANSPORTABSTUETZUNG

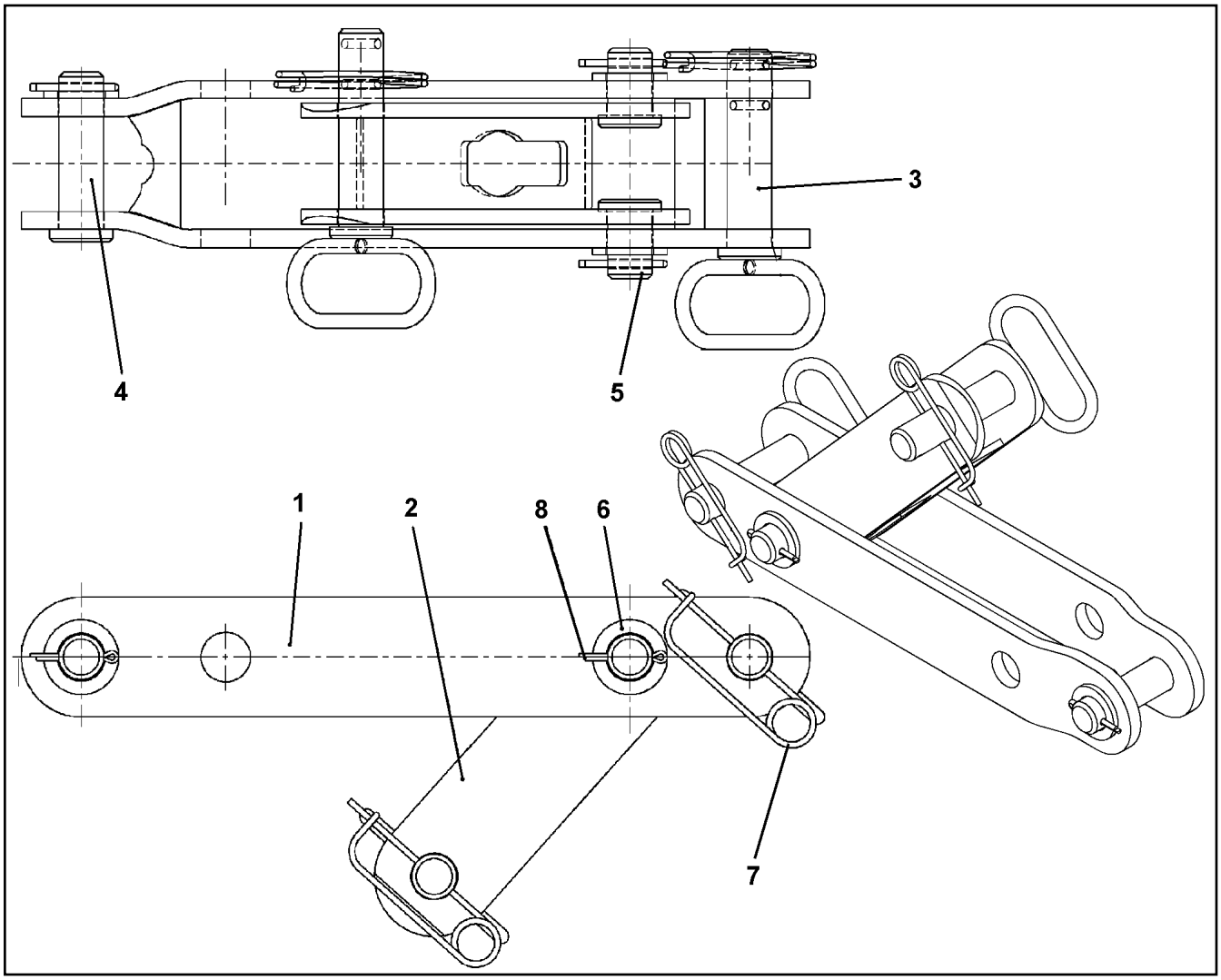

Pos.	Item	Quantity	Description	Bezeichnung
1	964764908	1	HOLDER	HALTER
2	919032814	1	HOLDER	HALTER
3	964765008	2	PIN COMPL. ⇨ ❑ 78	BOLZEN KPL.
4	451430808	1	PIN DIN 1436 30X105X97 35NICRMOV125 GA	BOLZEN
5	977242408	2	PIN 45.0X53 35NICRMOV125 GASN. SPF	BOLZEN
6	421102608	3	WASHER DIN 1440 32 ST VERZ	SCHEIBE
7	433101208	2	RETAINING SPRING 4X68 ISO 2081 FE/ZN8/	SICHERUNGSFEDER
8	10180360	3	SPLIT PIN ISO 1234 5X45 St 480H SPF	SPLINT

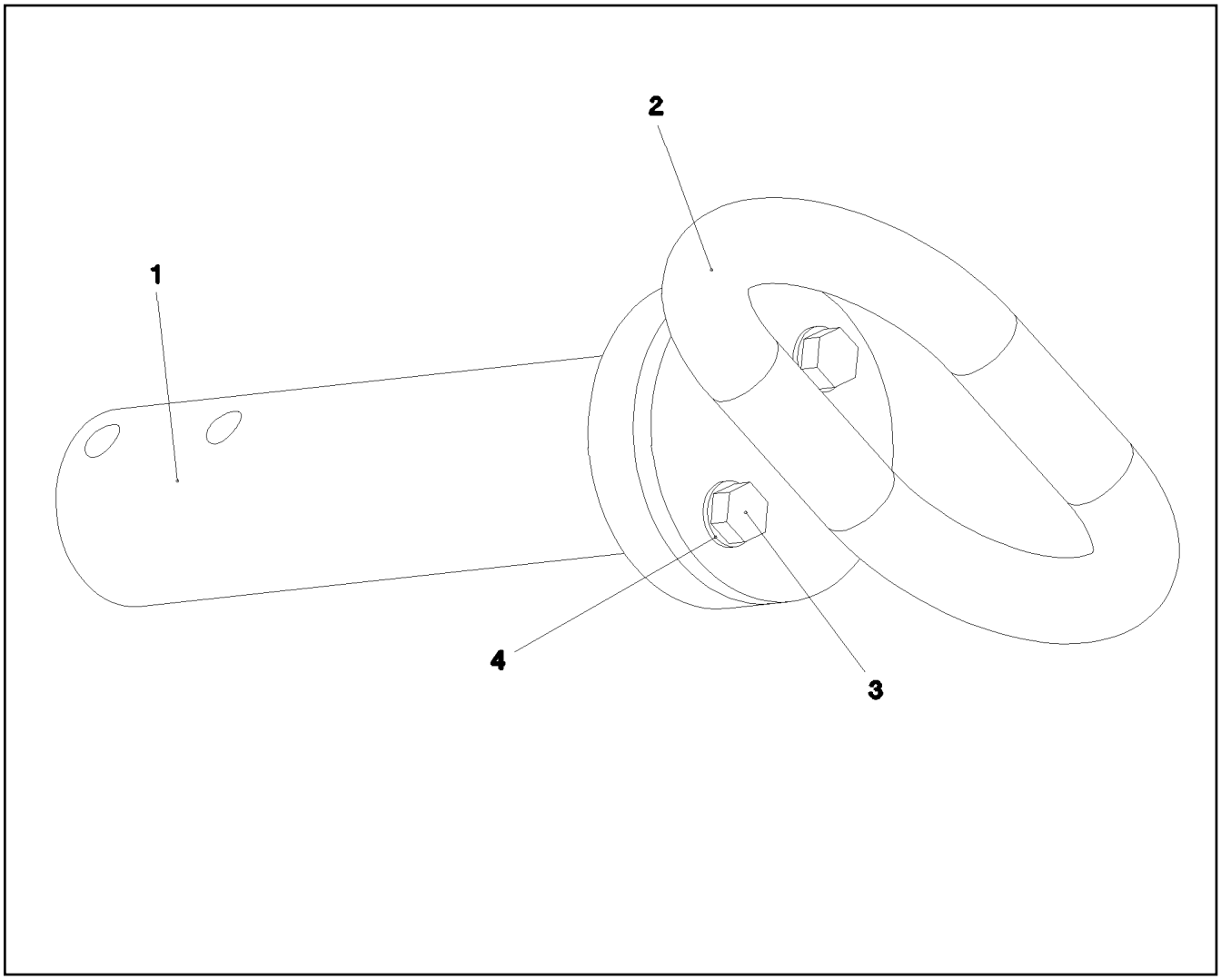

Pos.	Item	Quantity	Description	Bezeichnung
1	977252108	1	PIN 30X132X95 35NICRMOV125 GASN. SPF	BOLZEN
2	963557408	1	HANDLE WELD.CONST. FE//ZNNI8//CN//T0	GRIFF SCHWK.
3	12211444	2	HEX SCREW ISO 4017 M5X10 8.8 480H SPF	SECHSKANTSCHRAUBE
4	10197808	2	WASHER ISO 7089 5 200HV ZNNI-480H	SCHEIBE

Pos.	Item	Quantity	Description	Bezeichnung
1	96062917	1	ELECTR.FOR CENTER SECTION ⇨ ❑ 80	ELEKTRIK MITTELSTUECK

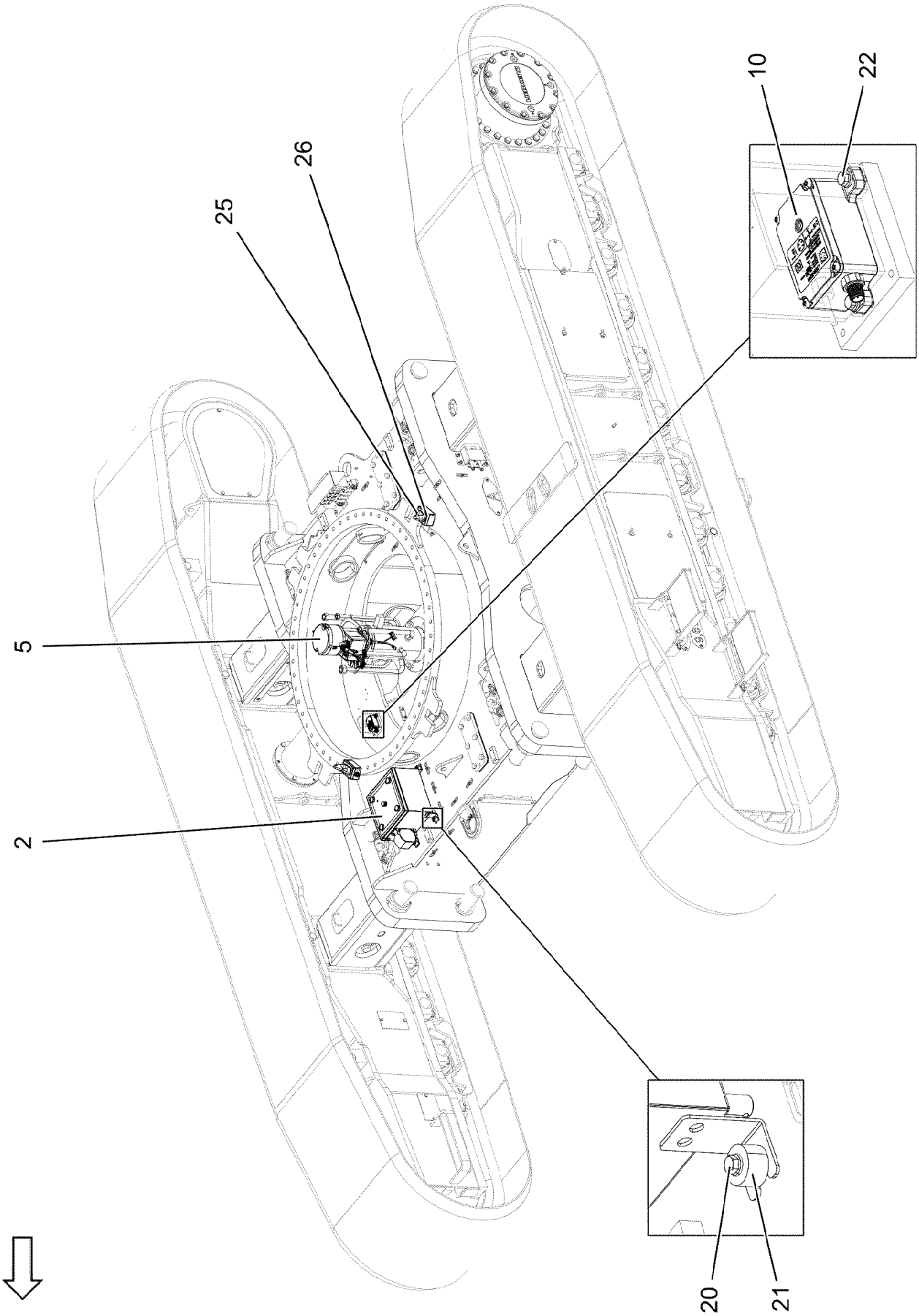
10
22
26
25
5
2
20
21

Pos.	Item	Quantity	Description	Bezeichnung
2	96062918	1	SWITCH BOX CPL. ⇨ ❑ 82	SCHALTKASTEN KPL.
5	10878097	1	SLIP RING TRANSMITTER 21X16A/24V SPF ⇨ ❑ 94	SCHLEIFRINGUEBERTRAGER
10	12102799	1	INCLINATION SENSOR +/-5°X/Y/ +/-25 LSB P	NEIGUNGSGEBER
20	11656991	4	HEX SCREW EN 1665 M8X12 8.8 480H SPF	SECHSKANTSCHRAUBE
21	978787708	4	SLEEVE 33X19 11SMNPB37 FE//ZNNI8//CN/	HUELSE
22	11840297	3	HEX SCREW EN 1665 M6X16 8.8 480H SPF	SECHSKANTSCHRAUBE
25	10875584	8	SOCKET HEAD SCREW ISO 4762 M5X25 8.8	ZYLINDERSCHRAUBE
26	10301317	8	HEX NUT DIN 985 M5 A2-70	SECHSKANTMUTTER

Pos.	Item	Quantity	Description	Bezeichnung
2	96075205	1	SWITCH BOX COMPL. ⇨ ❑ 83	SCHALTKASTEN VORM.
3	96062920	1	WIRING HARNESS W202 ⇨ ❑ 90	KABELSTRANG
4	96062921	1	WIRING HARNESS W200 ⇨ ❑ 91	KABELSTRANG
5	96060493	1	ANTENNA CPL. ⇨ ❑ 92	ANTENNE KPL.
6	96060494	1	ANTENNA CPL. ⇨ ❑ 93	ANTENNE KPL.

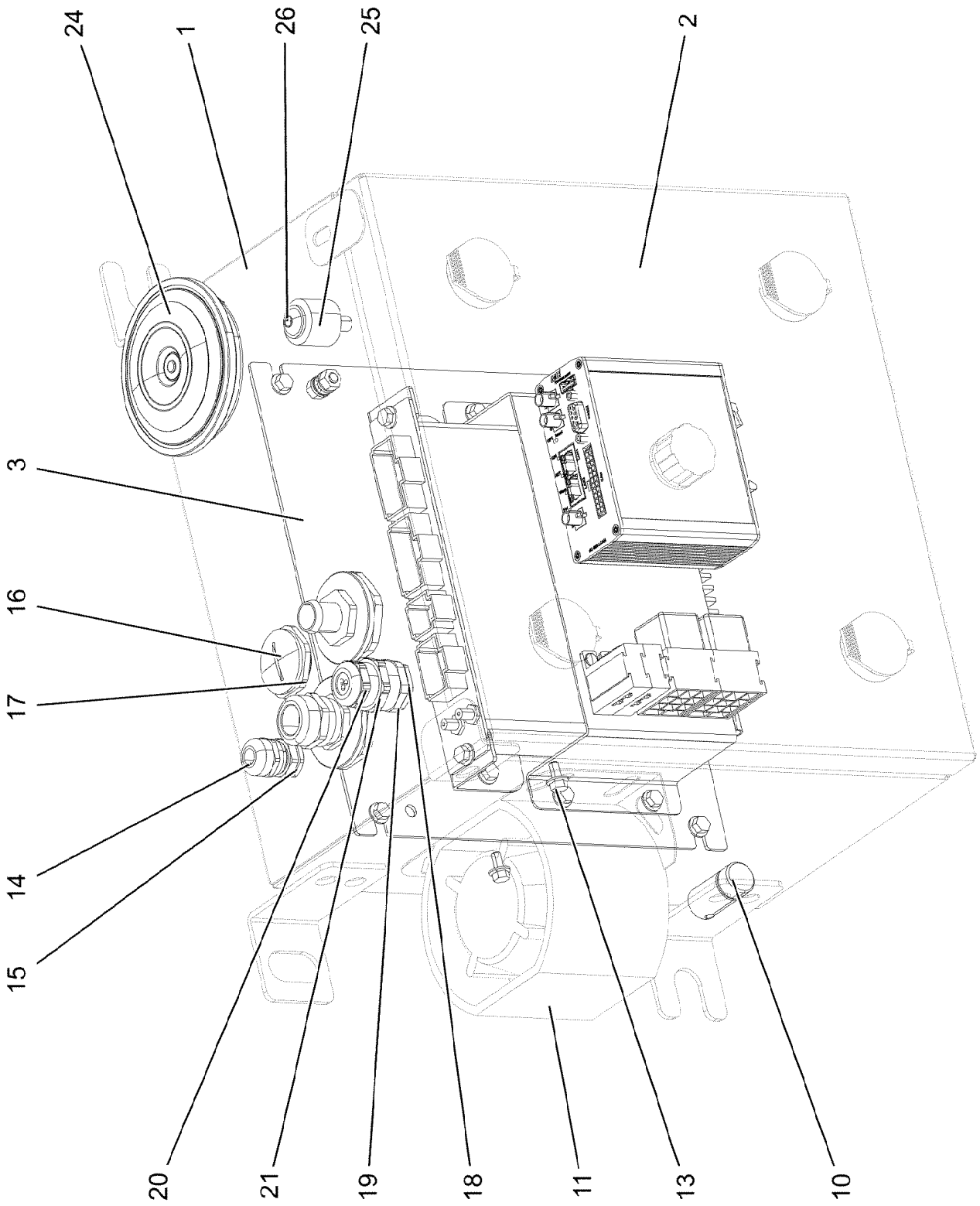

16.11.2023 176399 LIEBHERR	**etk_en_de_078966 LTR 1100** **SWITCH BOX COMPL.** **SCHALTKASTEN VORM.**	❑ 83 (1/2) **96075205**

Pos.	Item	Quantity	Description	Bezeichnung
1	96072660	1	SWITCH BOX WELDED RAL 7037 SPF	SCHALTKASTEN SCHWK.
2	966167808	1	COVER COMPL. ⇨ ❑ 85	DECKEL KPL.
3	96062922	1	MOUNTING PLATE PRE-ASS. ⇨ ❑ 86	MONTAGEPLATTE VORM.
10	602501208	2	WATER DRAIN PLUG M12 PA6G SPF	ENTWAESSERUNGSSTOPFEN
11	614009908	1	FALL-BACK GUARD 12-36V 82-107DBA	RUECKFAHRWARNUNG
13	10875503	6	HEX SCREW EN 1665 M5X10 10.9 480H SPF	SECHSKANTSCHRAUBE
14	602424108	1	CABLE GLAND M16X1,5X4-11 MS	KABELVERSCHRAUBUNG
15	602504108	1	HEX NUT M16X1,5 MS	SECHSKANTMUTTER
16	602425208	1	SCREW PLUG M32X1,5 MS	VERSCHLUSSSCHRAUBE
17	602504408	1	HEX NUT M32X1,5 MS	SECHSKANTMUTTER
18	602504208	1	HEX NUT M20X1,5 MS	SECHSKANTMUTTER
19	602613208	1	EXTENSION M20X1,5/M25X1,5 MS	ERWEITERUNG
20	12104695	1	CABLE GLAND M25X1,5	KABELVERSCHRAUBUNG
21	12104694	1	LOCKING PIN 3X25 PVDF	VERSCHLUSSBOLZEN
24	614003108	1	HORN 24V	HORN
25	953873408	1	SLEEVE 25X20 11SMNPB37 FE//ZNNI8//CN/	HUELSE
26	10182032	1	BUTTON HEAD SCREW ISO 7380-2 M8X35 0	HALBRUNDKOPFSCHRAUBE

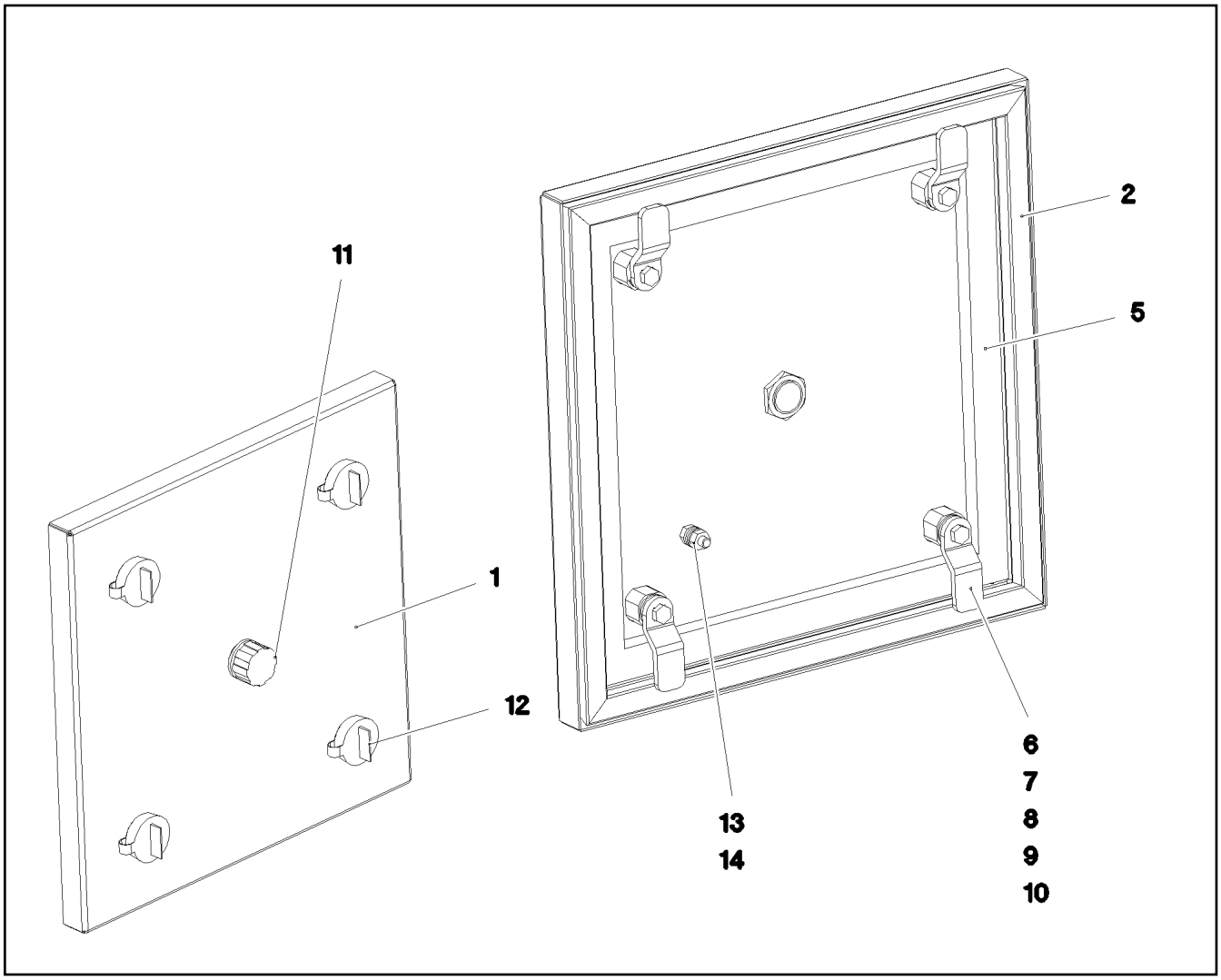

Pos.	Item	Quantity	Description	Bezeichnung
1	966189708	1	COVER GLUED	DECKEL GEKLEBT
2	979896308	1	SEALING PROFILE	ABDICHTPROFIL
5	262104308	1.08	CELL RUBBER 20X12 CR SCHWARZ	ZELLGUMMI
6	704253308	4	HOUSING GD-ZN SW GEPULVERT	GEHAEUSE
(1)	704253408	1	ACTUATION SPIKE GD-ZN SW GEPULVERT	BETAETIGUNGSDORN
7	704253408	4	ACTUATION SPIKE GD-ZN SW GEPULVERT	BETAETIGUNGSDORN
8	704256708	4	TONGUE	ZUNGE
9	704274808	4	O-RING 12X2 NBR70	O-RING
10	704274908	4	FLAT GASKET	FLACHDICHTUNG
11	602501308	1	VENTILATION SCREW G1/2"X30 POLYAMID	ENTLUEFTUNGSSCHRAUBE
12	704254808	4	DUST CAP POLYETHYLEN SCHWARZ	STAUBKAPPE
13	10197764	2	HEX NUT ISO 4032 M6 10 ZNNI-480H SPF	SECHSKANTMUTTER
14	10197771	2	WASHER ISO 7089 6 200HV ZNNI-480H SPF	SCHEIBE

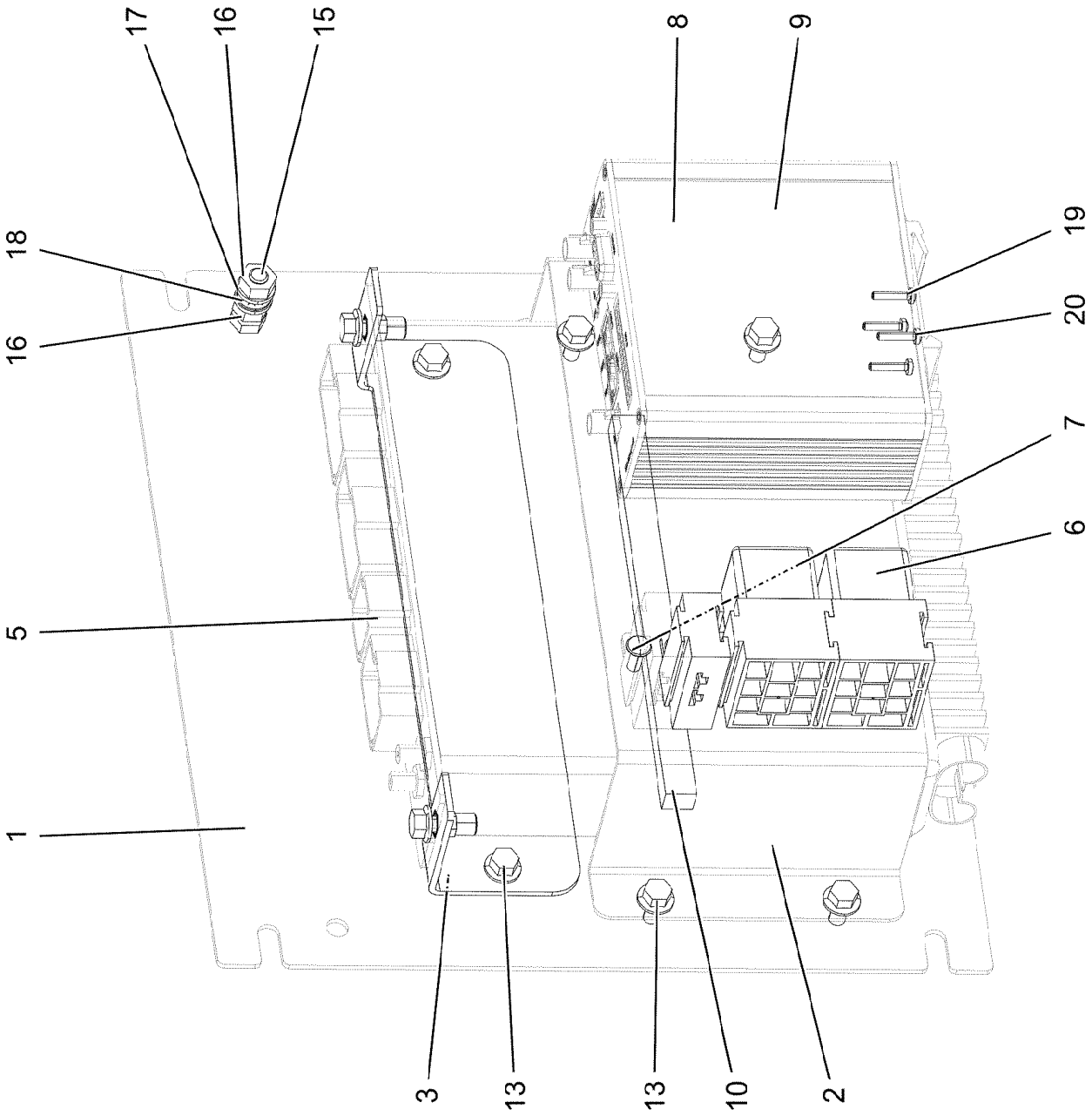
17
16
15
8
9
18
19
16
20
7
6
5
1
3
13
13
10
2

Pos.	Item	Quantity	Description	Bezeichnung
1	979896608	1	PLATE 2X275X250 DC01 FE//ZNNI8//CN//T0	BLECH
2	97154530	1	PLATE 1.5X349X152 DC01 FE//ZNNI8//CN//T	BLECH
3	965256808	1	FASTENER	HALTERUNG
5	968252908	1	BTB PROGRAMMED ⇨ ❑ 88	BTB PROGRAMMIERT
6	630121508	2	CENTER-ZERO RELAY 24V 10A SPF	WECHSLERRELAIS
7	704207608	4	MANDRIL RIVET 4X10,3	DORNNIET
8	12104397	1	MODEM TELEMETRIEMODUL SPF	MODEM
9	12105779	1	ADAPTER CABLE AWG22+CAN-0,2M	ADAPTERKABEL
10	262109108	0.15	CELL RUBBER 10X8	ZELLGUMMI
13	10875503	8	HEX SCREW EN 1665 M5X10 10.9 480H SPF	SECHSKANTSCHRAUBE
15	11644899	1	HEX SCREW ISO 4017 M6X20 8.8 480H SPF	SECHSKANTSCHRAUBE
16	10197764	2	HEX NUT ISO 4032 M6 10 ZNNI-480H SPF	SECHSKANTMUTTER
17	10197771	2	WASHER ISO 7089 6 200HV ZNNI-480H SPF	SCHEIBE
18	12102694	1	SERRATED LOCK WASHER DIN 6798 A 6.4	FAECHERSCHEIBE
19	408311208	4	PAN-HEAD SCREW ISO 7045 M2,5X12 4.8 A2	FLACHKOPFSCHRAUBE
20	425100408	4	TOOTH LOCK WASHER DIN 6797 A 2,7	ZAHNSCHEIBE

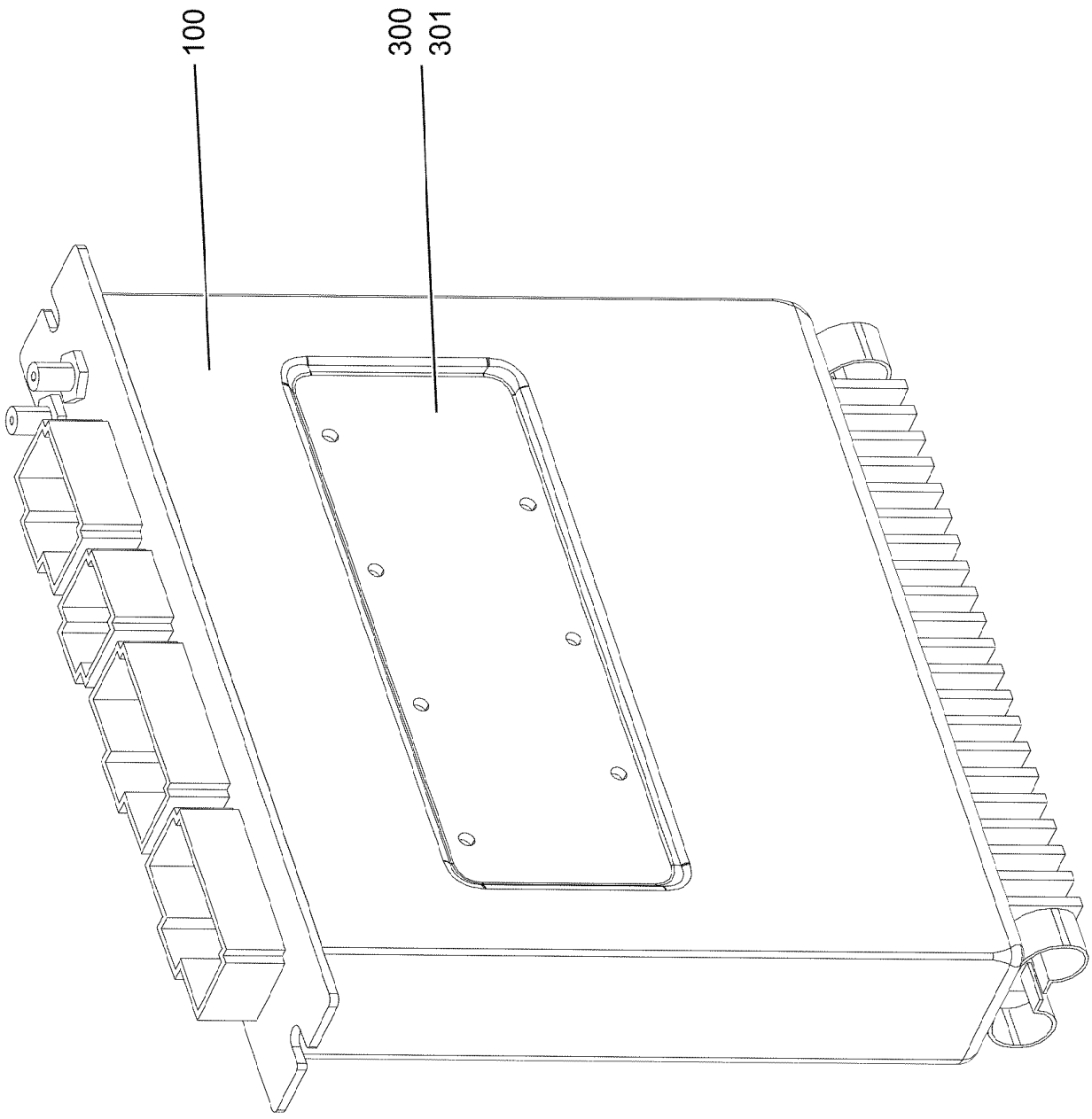
100
300
301

Pos.	Item	Quantity	Description	Bezeichnung
100	11212256	1	REMOTE CONTROL APPARATUS LSB-BTB-	FERNSTEUEREMPFAENGER
300	10288121	1	NAME PLATE 70X40 POLYESTER SPF	BEZEICHNUNGSSCHILD
301	11007853	1	LABELS 10X90 POLYESTER	ETIKETTEN

Pos.	Item	Quantity	Description	Bezeichnung
5	680001408	1	COUPLING SOCKET 4-POL SPF	KUPPLUNGSDOSE
6	11840113	4.28	BUS LINE 2 X 0,5	BUSLEITUNG
7	10678491	1	COUPLING SOCKET 4-POL SPF	KUPPLUNGSDOSE
8	10678491	1	COUPLING SOCKET 4-POL SPF	KUPPLUNGSDOSE
9	680000008	1	COUPLING SOCKET 4-POLE SPF	KUPPLUNGSDOSE
86	602307708	14	WIRED END FERRULE DIN 46228-1 A1X5 V	ADERENDHUELSE
121	602300108	3	CONTACT 1-2,5MM2	KONTAKT
125	602300308	22	CONTACT 0,5-1MM2	KONTAKT
134	602303308	2	RECEPTACLE FOR TABS 6,3X0,5-1,5	FLACHSTECKHUELSE
202	11082602	6.14	INSULATING HOSE DN6X0,5 PUR SPF	ISOLIERSCHLAUCH
203	11082603	0.83	INSULATING HOSE DN8X0,65 PUR SPF	ISOLIERSCHLAUCH
204	11082604	1.16	INSULATING HOSE DN10X0,65 PUR SPF	ISOLIERSCHLAUCH
223	11124205	1.43	CABLE CONDUIT DN16X0,6 PUR SPF	KABELSCHLAUCH
225	11124208	1.66	CABLE CONDUIT DN25X0,6 PUR SPF	KABELSCHLAUCH
261	12104809	1	CABLE TIE 3,6X142-SCHWARZ PA66 SPF	KABELBINDER
305	10870540	59.66	ELECTR.CABLE 1,0	KFZ-LEITUNG
500	923512208	18	CABLE MARKER	KABELMARKER
501	602301408	1	HOUSING 8-POL	GEHAEUSE
502	920381108	1	PLUG	STECKER
503	602300208	2	PLUG SHELL 18-POL	STECKERGEHAEUSE
504	602339308	1	HOUSING 4-POL	GEHAEUSE
505	605007908	5	APPLIANCE SOCKET 2POL+PE	GERAETESTECKDOSE
506	605210608	1	APPLIANCE SOCKET 2-POL+PE SPF	GERAETESTECKDOSE
507	605006608	1	DEVICE PLUG 3POL+PE	GERAETESTECKER
508	11067833	1	BUSHING HOUSING 18-POL 20A	BUCHSENGEHAEUSE
509	602504508	1	HEX NUT M40X1,50 MS	SECHSKANTMUTTER
510	602441508	1	HOSE UNION JOINT M32X1,5 MS	SCHLAUCHVERSCHRAUBUNG
511	602606808	1	REDUCTION M40X1,5/M32X1,5 MS	REDUKTION
512	6004195	1	PLUG SHELL 2-POL	STECKERGEHAEUSE
513	11697580	1	PROTECTING CAP HDSCS GROUP E 18	SCHUTZKAPPE
514	10875279	1	PROTECTING CAP HDSCS GROUP E	SCHUTZKAPPE
515	602339608	1	PROTECTING CAP STECKER 4-POL ELAST	SCHUTZKAPPE
516	967709108	1	WIRING HARNESS WRCAN	KABELSTRANG
617	602329108	4	CONTACT 0,5-1MM2	KONTAKT
671	10097470	2	FLAT PLUG 0,8X0,5-1 CuSn4	FLACHSTECKER
690	10335820	14	SLEEVE CONTACT 0,2-0,5MM2	BUCHSENKONTAKT
726	10493495	6	SLEEVE CONTACT 0,5-1,0MM2 CuNiSi	BUCHSENKONTAKT
802	602330808	6	SINGLE STRAND SEALING 1,2-2,1MM BLAU	EINZELADERABDICHTUNG
806	602331108	12	STOPPER PLUG 3,6MM SILIKON WEIS	BLINDSTOPFEN
813	605619708	7	SINGLE STRAND SEALING 2	EINZELADERABDICHTUNG
830	10014387	6	SINGEL SEAL 1,0-1,5MM2	EINZELDICHTUNG
996	965622108	8	LETTERING WIRE	BESCHRIFTUNG ADER
998	965622208	1	LETTERING WIRING HARNESS	BESCHRIFTUNG KABELBAUM

Pos.	Item	Quantity	Description	Bezeichnung
5	12100217	0.4	DATA LINE 2 X 1 FEP SPF	DATENLEITUNG
6	12100217	0.4	DATA LINE 2 X 1 FEP SPF	DATENLEITUNG
7	11840113	0.3	BUS LINE 2 X 0,5	BUSLEITUNG
8	11840113	0.4	BUS LINE 2 X 0,5	BUSLEITUNG
9	11840113	0.45	BUS LINE 2 X 0,5	BUSLEITUNG
10	11840113	0.45	BUS LINE 2 X 0,5	BUSLEITUNG
34	602217908	3	CABLE LUG DIN 46237 M6/1-2,5mm²	KABELSCHUH
39	602213308	2	CABLE LUG DIN 46237 6/6mm² VERZINNT	KABELSCHUH
72	602203408	1	RECEPTACLE 6,3X1-2,5 MESSING VERZINN	STECKHUELSE
75	602203908	2	FLAT PLUG 6,3X1-2,5 SN	FLACHSTECKER
120	602323208	18	FLAT PLUG 1,0-2,5MM2	FLACHSTECKER
121	602300108	9	CONTACT 1-2,5MM2	KONTAKT
124	602323508	45	FLAT PLUG 2,8X0,5-1 SN	FLACHSTECKER
125	602300308	47	CONTACT 0,5-1MM2	KONTAKT
261	12104809	15	CABLE TIE 3,6X142-SCHWARZ PA66 SPF	KABELBINDER
305	10870540	29.82	ELECTR.CABLE 1,0	KFZ-LEITUNG
307	10870541	0.7	ELECTR.CABLE 1,5	KFZ-LEITUNG
500	923512208	22	CABLE MARKER	KABELMARKER
501	10099856	2	HOUSING 21-POLE	GEHAEUSE
502	10099868	2	CONTACT RETAINING PIN JPT 21 POL	KONTAKTSICHERUNGSSTIFT
503	602323308	4	FLAT PLUG HOUSING 18-POL	FLACHSTECKERGEHAEUSE
504	10021571	1	PLUG SHELL 8-POL	STECKERGEHAEUSE
505	630122908	2	PLUG BASE	RELAISSTECKSOCKEL
506	10099860	1	HOUSING 9-POL	GEHAEUSE
507	10045101	1	CONTACT RETAINING PIN 9POL GELB	KONTAKTSICHERUNGSSTIFT
508	10099861	1	HOUSING 12-POL	GEHAEUSE
509	10099866	1	CONTACT RETAINING PIN JPT 12 POL	KONTAKTSICHERUNGSSTIFT
510	10099863	1	HOUSING 15-POLE	GEHAEUSE
511	10099867	1	CONTACT RETAINING PIN JPT 15 POLE	KONTAKTSICHERUNGSSTIFT
512	602305908	1	FLAT PLUG HOUSING FASTIN-FASTON	FLACHSTECKERGEHAEUSE
513	96008399	1	COTTER PIN 36POL	STECKER VORM.
514	11067930	1	PLUG SHELL 18-POL	STECKERGEHAEUSE
515	602335908	1	PLUG SHELL 4-POL	STECKERGEHAEUSE
516	604501708	2	ATTACHABLE SLEEVE HOUSING	STECKHUELSENGEHAEUSE
517	604007008	2	FLAT FUSE LINK 7,5A	FLACHSICHERUNGSEINSATZ
518	602209708	1	ATTACHABLE SLEEVE HOUSING 2-POL	STECKHUELSENGEHAEUSE
519	11067932	1	FLAT PLUG HOUSING 18-POL	FLACHSTECKERGEHAEUSE
642	602339108	4	RECEPTACLE 5X1,5-2,5	STECKHUELSE
758	11080881	9	RECEPTACLE 6,3X0,5-1,0 VERZINNT	STECKHUELSE
766	602305605	1	CABLE LUG AEHNL.DIN 46237 6,5/6-10MM² V	KABELSCHUH
996	965622108	24	LETTERING WIRE	BESCHRIFTUNG ADER
998	965622208	1	LETTERING WIRING HARNESS	BESCHRIFTUNG KABELBAUM
2211	10874057	7	SLEEVE CONTACT 0,5-1,0MM2 CuNiSi	BUCHSENKONTAKT
2267	6001703	2	DOUBLE SPRING CONTACT 0,5-1,0MM2	DOPPELFEDERKONTAKT

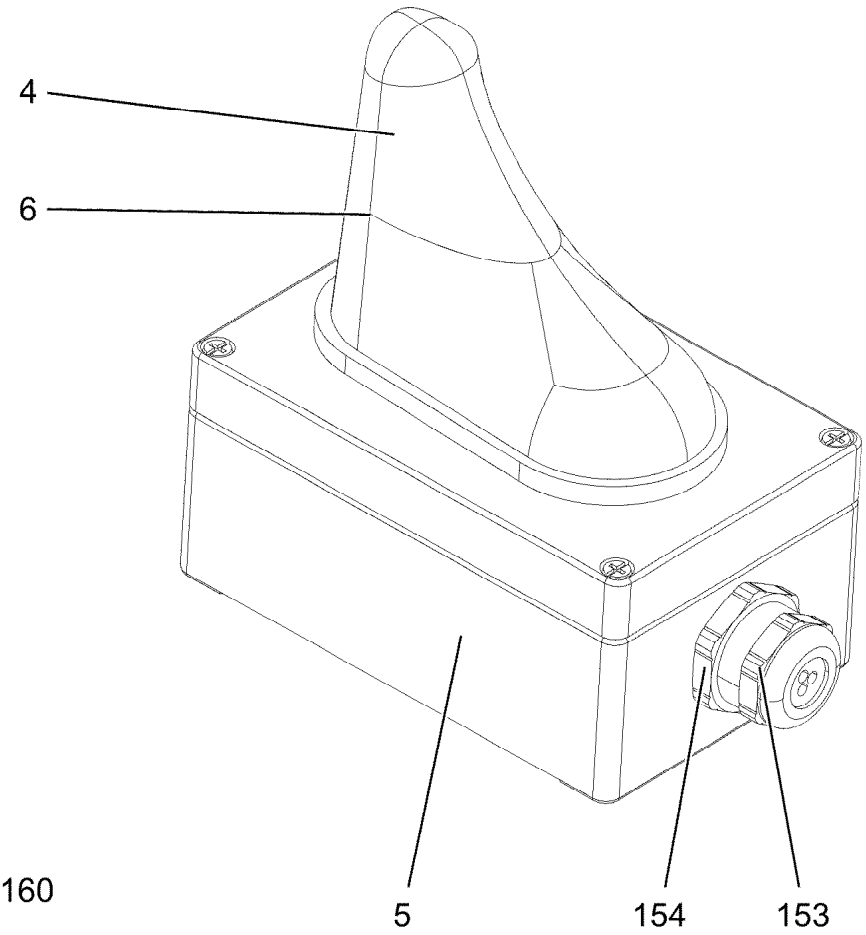

Pos. 160

Pos.	Item	Quantity	Description	Bezeichnung
4	12102773	1	ANTENNA	ANTENNE
5	97148691	1	EMPTY CASING 57X80X 125 AL	LEERGEHAEUSE
6	12104638	1	ANTENNA CABLE 1X0,34-4M	ANTENNENKABEL
153	12104695	1	CABLE GLAND M25X1,5	KABELVERSCHRAUBUNG
154	12104694	2	LOCKING PIN 3X25 PVDF	VERSCHLUSSBOLZEN
160	10475426	3.8	CORRUGATED PIPE DN10 PA 6	WELLROHR

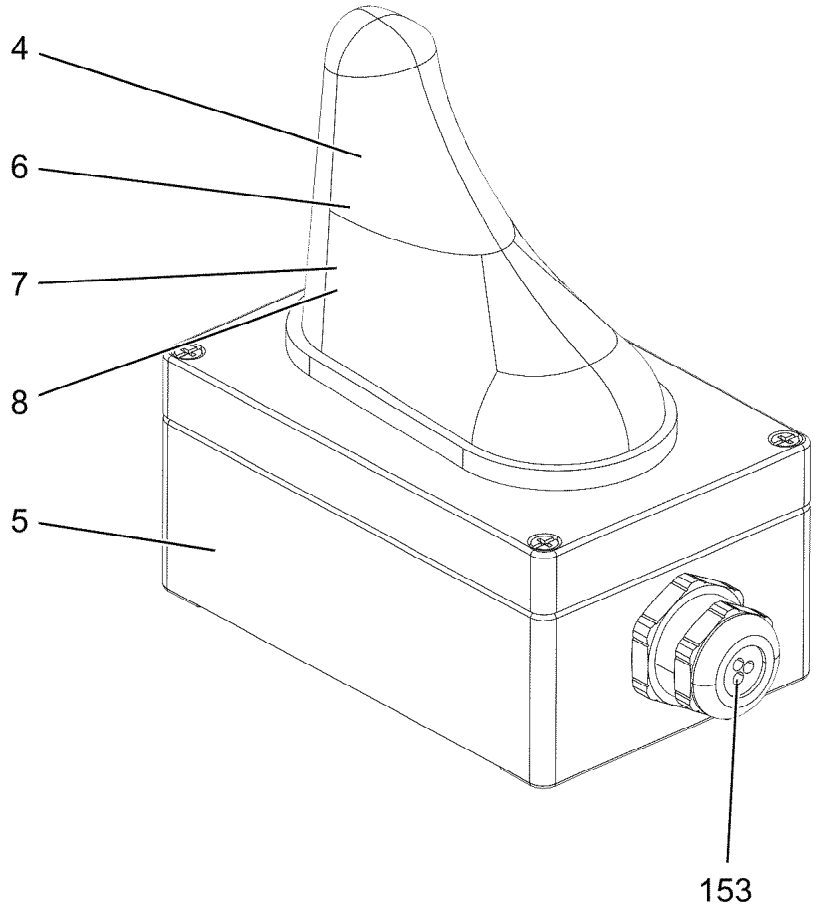

Pos. 160

Pos.	Item	Quantity	Description	Bezeichnung
4	12102772	1	ANTENNA	ANTENNE
5	97148691	1	EMPTY CASING 57X80X 125 AL	LEERGEHAEUSE
6	12104638	1	ANTENNA CABLE 1X0,34-4M	ANTENNENKABEL
7	12104640	1	ANTENNA CABLE 1X0,34-5M	ANTENNENKABEL
8	12104642	1	ANTENNA CABLE 1X0,34-2M	ANTENNENKABEL
153	12104695	1	CABLE GLAND M25X1,5	KABELVERSCHRAUBUNG
160	11124205	1.3	CABLE CONDUIT DN16X0,6 PUR SPF	KABELSCHLAUCH

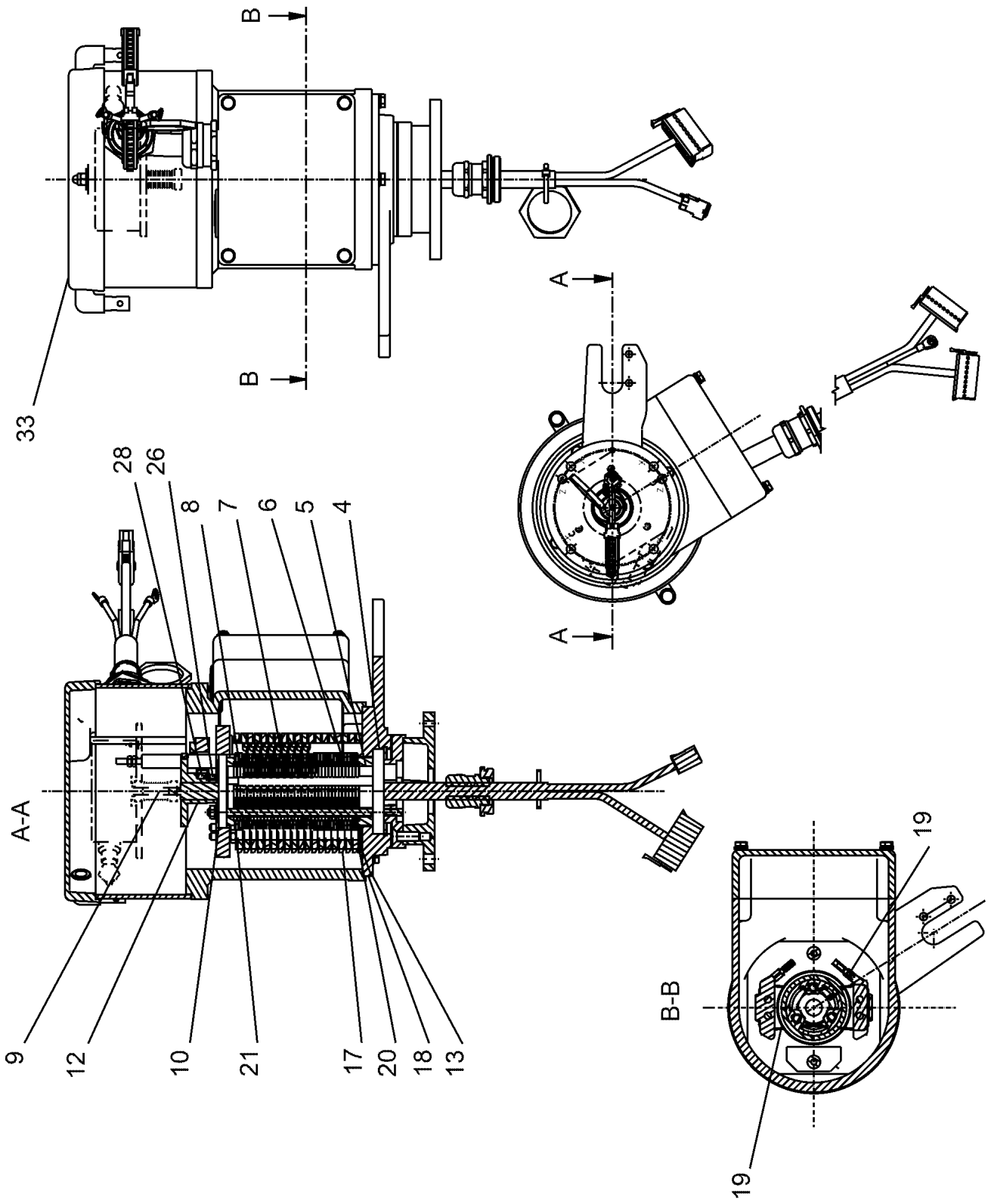
B
B
33
A
A
28
26
8
7
6
5
4
A-A
9
12
10
21
17
20
18
13
19
B-B
19

Pos.	Item	Quantity	Description	Bezeichnung
4	10114839	1	DEEP GROOVE BALL BEARING	RILLENKUGELLAGER
5	11181884	1	SPACER RING	ABSTANDSRING
6	691041708	37	INSULATING RING	ISOLIERRING
7	10114843	21	SLIP RING 60X2 2,5²	SCHLEIFRING
8	10114850	15	SEPARATING RING	TRENNRING
9	691041808	1	COVER DISK 8X60	DECKSCHEIBE
10	10114838	1	DEEP GROOVE BALL BEARING 50X65X7	RILLENKUGELLAGER
12	11181886	1	TRIP CAM	SCHALTNOCKE
13	11100949	1	BEARING MOUNT	LAGERAUFNAHME
17	691043108	35	CONTACT BOW HOLDER	SCHLEIFBUEGELHALTER
18	10115155	4	EQUALIZER PLATE	AUSGLEICHSPLATTE
19	691041608	21	CONTACT BOW	SCHLEIFBUEGEL
20	10359124	2	EQUALIZER PLATE	AUSGLEICHSPLATTE
21	10359128	2	CONTACT BOW HOLDER	SCHLEIFBUEGELHALTER
26	570338308	1	PROTECTIVE MOTOR SWITCH	NOCKENSCHALTER
28	571486808	1	SNAP SWITCH	SCHNAPPSCHALTER
33	11181887	1	HOOD COVER	HAUBENDECKEL

Pos.	Item	Quantity	Description	Bezeichnung
10	96045215	1	CABLE LIST ⇨ ❑ 97	KABELLISTE
30	96045217	1	MECHANICAL AUXILIARIES ⇨ ❑ 99	MECHANISCHE ANBAUTEILE

Pos.	Item	Quantity	Description	Bezeichnung
30	96045216	1	WIRING HARNESS W227 ⇨ ❑ 98	KABELSTRANG

Pos.	Item	Quantity	Description	Bezeichnung
5	680001408	1	COUPLING SOCKET 4-POL SPF	KUPPLUNGSDOSE
6	680000008	1	COUPLING SOCKET 4-POLE SPF	KUPPLUNGSDOSE
500	923512208	3	CABLE MARKER	KABELMARKER
501	11644347	1	FLAT PLUG HOUSING 18-POL PBT-GF30/V-	FLACHSTECKERGEHAEUSE
502	11697580	1	PROTECTING CAP HDSCS GROUP E 18	SCHUTZKAPPE
806	602331108	12	STOPPER PLUG 3,6MM SILIKON WEIS	BLINDSTOPFEN
849	10678471	6	SINGLE STRAND SEALING 1,2-1,6MM VMQ	EINZELADERABDICHTUNG
996	965622108	6	LETTERING WIRE	BESCHRIFTUNG ADER
998	965622208	2	LETTERING WIRING HARNESS	BESCHRIFTUNG KABELBAUM
2222	10874243	6	FLAT PLUG 0,2-0,5MM2	FLACHSTECKER

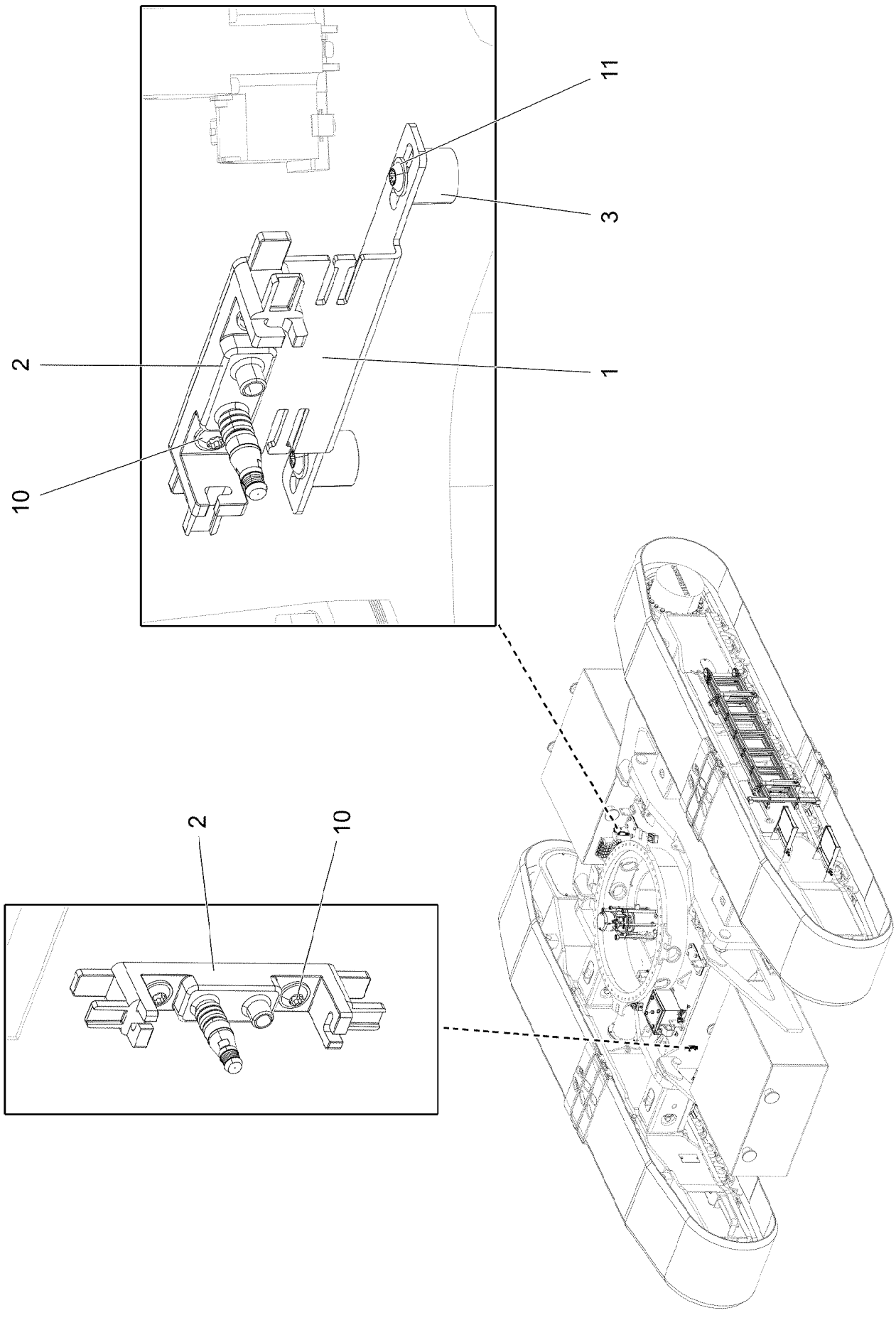
11
3
2
1
10
2
10

Pos.	Item	Quantity	Description	Bezeichnung
1	97132207	1	PLATE 3X240X109 S355MC FE//ZNNI8//CN//T	BLECH
2	97098446	2	HOLDER PA6MDGF30 SPF	HALTER
3	953873408	2	SLEEVE 25X20 11SMNPB37 FE//ZNNI8//CN/	HUELSE
10	10875485	4	BUTTON HEAD SCREW AEHNL.ISO 7380-2	HALBRUNDKOPFSCHRAUBE
11	10876082	2	BUTTON HEAD SCREW AEHNL.ISO 7380-2	HALBRUNDKOPFSCHRAUBE

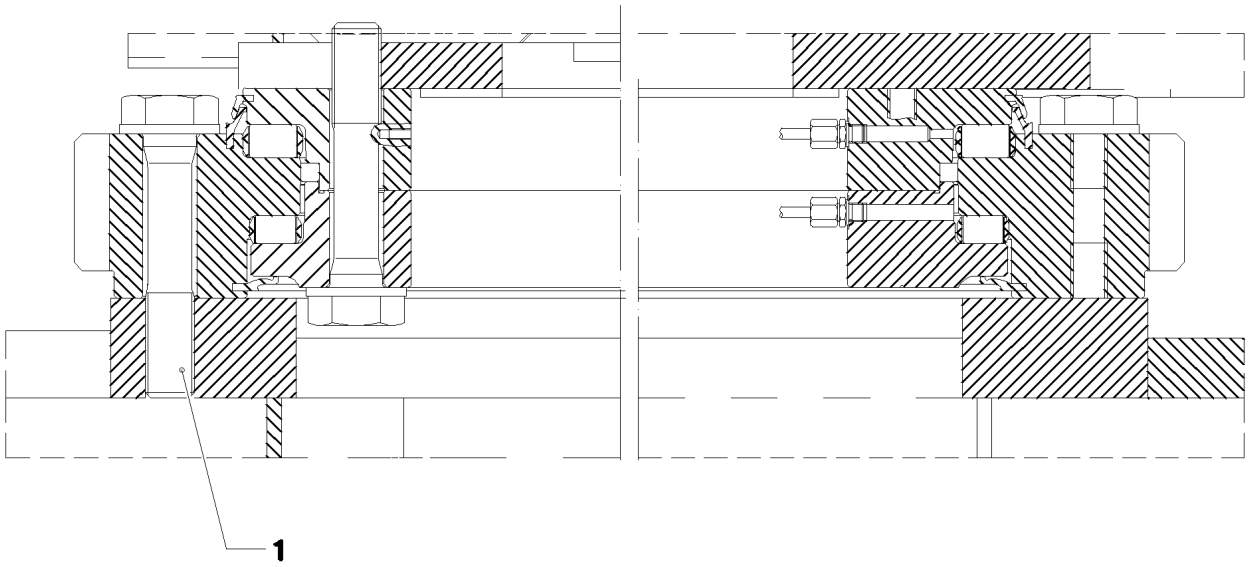

Pos.	Item	Quantity	Description	Bezeichnung
1	409817708	56	EXPANSION BOLT M27X145 30CRNIMO8 SP	DEHNSCHRAUBE

Pos.	Item	Quantity	Description	Bezeichnung
1	928569808	1	MAIN TOOLS ⇨ ❑ 103	GRUNDWERKZEUG
2	928620108	1	ACCESSORIES ⇨ ❑ 105	ZUBEHOER
3	520402808	1	PROTECTIVE PADDING	SCHUTZPOLSTER
4	790065608	1	FITTING	VERSCHRAUBUNG
5	790533908	2	FITTING	VERSCHRAUBUNG
6	885602114	1	HAND LEVER PRESS	HANDHEBELPRESSE
(1)	12104544	1	HOSE DIN1283 11X300	SCHLAUCH
7	790042214	1	HOSE LINE X300	SCHLAUCHLEITUNG
8	790042914	1	HOSE LINE X300	SCHLAUCHLEITUNG
9	790042708	1	QUICK ACTING COUPLING	SCHIEBEKUPPLUNG
10	7361649	1	DRIVE SOCKET DIN 3124 SW1 5/16"	STECKSCHLUESSELEINSATZ
11	885182808	1	ARTICULATED HOOK WRENCH 155/6	GELENKHAKENSCHLUESSEL
12	885182208	1	ARTICULATED HOOK WRENCH 60/4	GELENKHAKENSCHLUESSEL
13	97127072	1	GAUGE 1.5X130X23 X5CRNI18-10	LEHRE

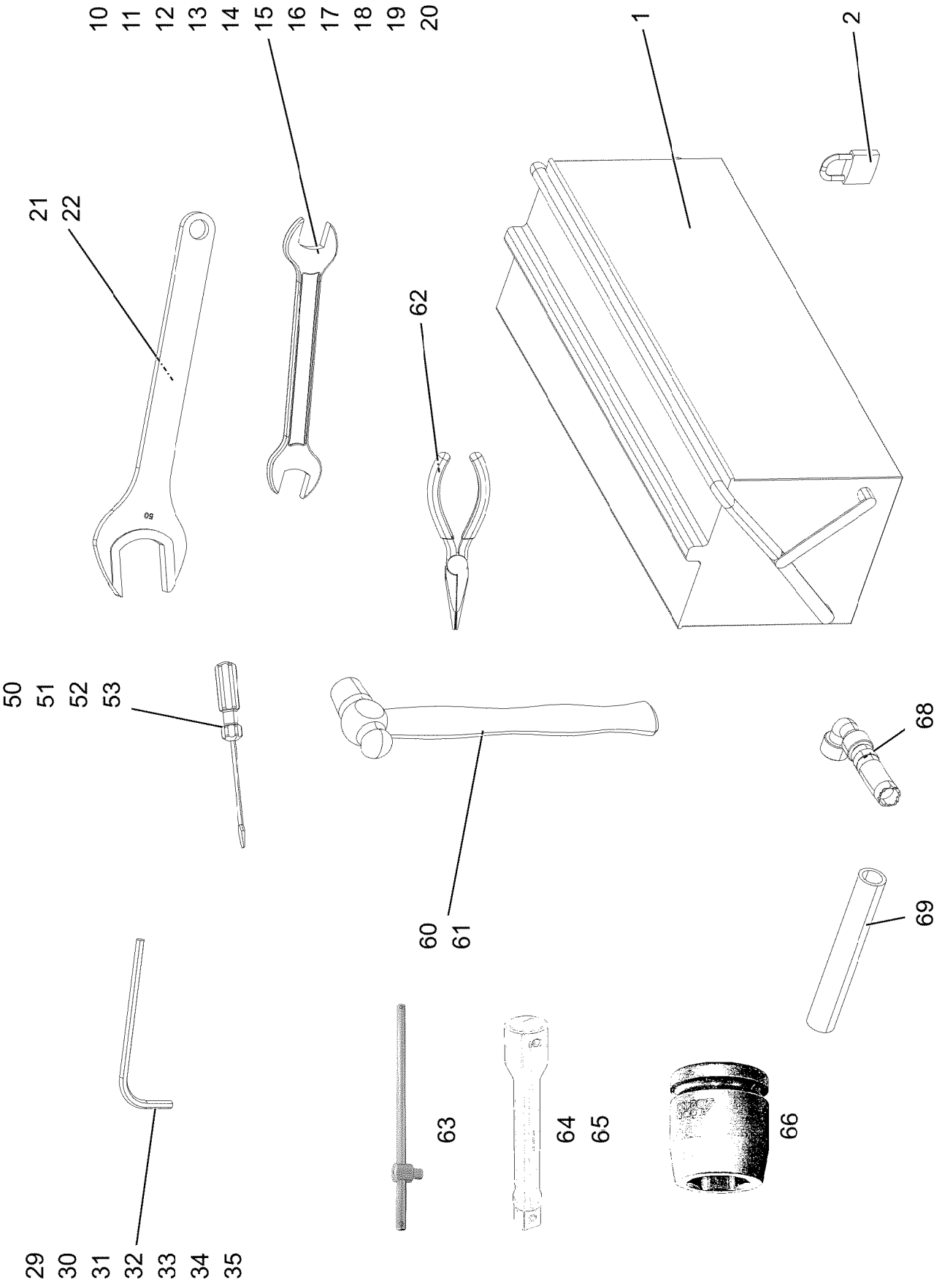
10
11
12
13
14
15
16
17
18
19
20
1
2
21
22
62
50
51
52
53
68
60
61
69
29
30
31
32
33
34
35
63
64
65
66

Pos.	Item	Quantity	Description	Bezeichnung
1	790045408	1	ASSEMBLY TOOL BOX	MONTAGEWERKZEUGKASTEN
2	885251508	1	PADLOCK ABUS-64TI/40 TITALIUM	VORHAENGESCHLOSS
10	790001708	1	DOUBLE-HEADED SPANNER DIN 3110 SW8	DOPPELMAULSCHLUESSEL
11	790003308	1	DOUBLE-HEADED SPANNER DIN 3110 SW10	DOPPELMAULSCHLUESSEL
12	790002208	1	DOUBLE-HEADED SPANNER DIN 3110 SW12	DOPPELMAULSCHLUESSEL
13	790002408	1	DOUBLE-HEADED SPANNER DIN 3110 SW14	DOPPELMAULSCHLUESSEL
14	10652772	1	DOUBLE-HEADED SPANNER SW16X18 CRV-	DOPPELMAULSCHLUESSEL
15	790003608	1	DOUBLE-HEADED SPANNER DIN 3110 SW17	DOPPELMAULSCHLUESSEL
16	790002508	1	DOUBLE-HEADED SPANNER DIN 3110 SW19	DOPPELMAULSCHLUESSEL
17	790002608	1	DOUBLE-HEADED SPANNER DIN 3110 SW24	DOPPELMAULSCHLUESSEL
18	790002808	1	DOUBLE-HEADED SPANNER DIN 3110 SW30	DOPPELMAULSCHLUESSEL
19	790002908	1	DOUBLE-HEADED SPANNER DIN 3110 SW36	DOPPELMAULSCHLUESSEL
20	790003908	1	DOUBLE-HEADED SPANNER DIN 3110 46X5	DOPPELMAULSCHLUESSEL
21	885132208	1	SINGLE-END SPANNER DIN 894 55	EINMAULSCHLUESSEL
22	790004608	1	SINGLE-END SPANNER DIN 894 60	EINMAULSCHLUESSEL
29	885166108	1	ALLEN KEY GR.3	SECHSKANTSTIFTSCHLUESSE
30	790021608	1	HEXAGON KEY DIN 911 4 GLANZVERN.	INBUSSCHLUESSEL
31	790020008	1	HEXAGON KEY DIN 911 5 GLANZVERN.	INBUSSCHLUESSEL
32	790020108	1	HEXAGON KEY DIN 911 6 GLANZVERN.	INBUSSCHLUESSEL
33	790021008	1	HEXAGON KEY DIN 911 GR.8 GLANZVERN.	INBUSSCHLUESSEL
34	790021208	1	HEXAGON KEY DIN 911 10 GLANZVERN.	INBUSSCHLUESSEL
35	790021308	1	HEXAGON KEY DIN 911 12 GLANZVERN.	INBUSSCHLUESSEL
40	10471363	1	ANGLE SCREW DRIVER TX30 PHOSPHATI	WINKELSCHRAUBENDREHER
41	10043002	1	ANGLE SCREW DRIVER TX 40 BRUENIERT	WINKELSCHRAUBENDREHER
50	790032008	1	SCREWDRIVER 3,5 CRV-VERNICKELT	SCHRAUBENDREHER
51	790032308	1	SCREWDRIVER 5,5 CRV-VERNICKELT	SCHRAUBENDREHER
52	790032508	1	SCREWDRIVER 10 CRV-VERNICKELT	SCHRAUBENDREHER
53	790033208	1	SCREWDRIVER 2 CRV-VERNICKELT	KREUZSCHL.SCHR.DREHER
60	790030008	1	HAND HAMMER DIN 1041 800G CRV-VERC	HANDHAMMER
61	790031108	1	LUMP HAMMER DIN 6475 3000	FAEUSTEL
62	790031508	1	COMBI PLIERS DIN 5244 180	KOMBIZANGE
63	790026208	1	GRIP DIN 3122 A 3/4"	GRIFF
64	790026308	1	EXTENSION DIN 3123 400X3/4"	VERLAENGERUNG B
65	790026408	1	EXTENSION DIN 3123 200X3/4"	VERLAENGERUNG B
66	790028508	1	DRIVE SOCKET DIN 3129 32X3/4" CRV-BRU	STECKSCHLUESSELEINSATZ
67	520190408	1	TYRE INFLATING HOSE 4,5X10000	REIFENFUELLSCHLAUCH
68	10032297	1	OIL DRAINING HOSE COMPL. 20X1500	OELABLASSSCHLAUCH KPL.
70	790042008	1	HAND LEVER PRESS VERZ.	HANDHEBELPRESSE
71	790042908	1	REINFORCED RUBBER HOSE 300 RH-30 M1	GUMMIPANZERSCHLAUCH

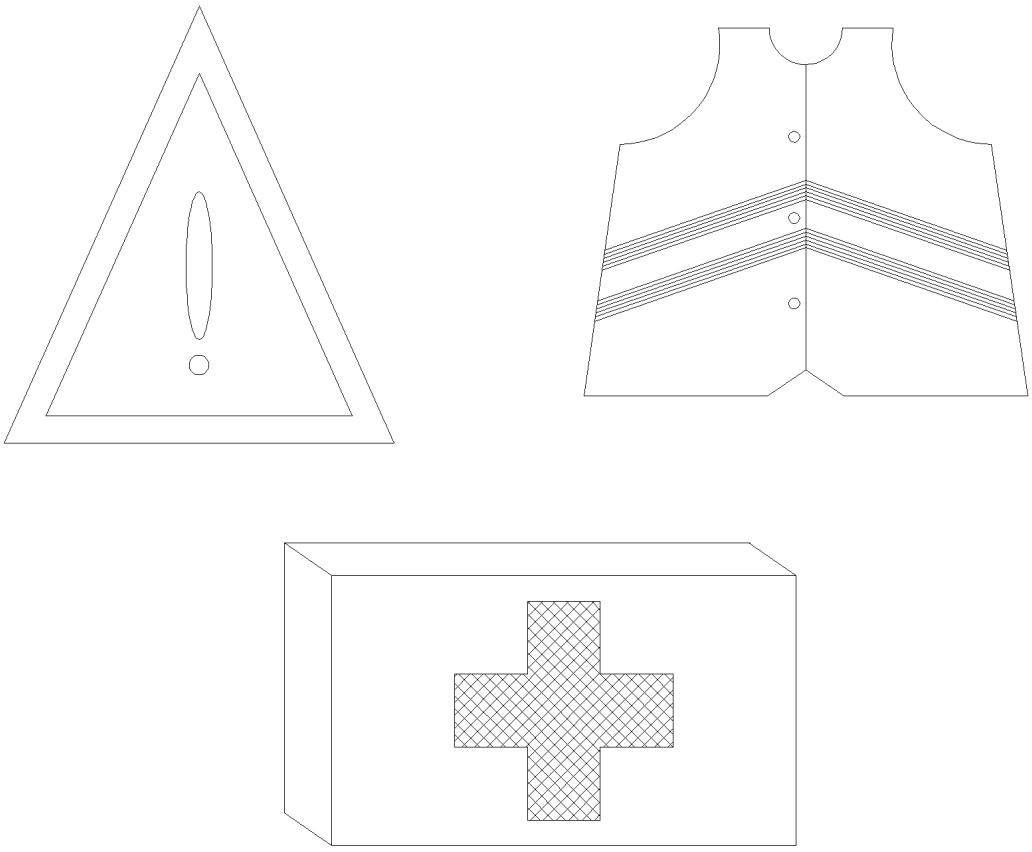

Pos.	Item	Quantity	Description	Bezeichnung
1	10044762	1	WARNING TRIANGLE 430X45X30	WARNDREIECK
2	607106208	2	HAZARD WARNING FLASHER 2,4W 6V WEI	SICHERHEITSWARNBLINKLEUC
(1)	607011108	2	LIGHT BULB DIN 49848 2,4W 6V	GLUEHLAMPE
3	613200608	10	BATTERY 1.5V 16.5AH	BATTERIE
4	12101159	1	FIRE EXTINGUISHER DIN EN 3	FEUERLOESCHER
5	789000308	1	FIRST AID KIST DIN 13164 260X170X80	VERBANDSKASTEN
6	872101908	1	SAFETY JACKET EN ISO 20471 GR.ONESIZE	WARNWESTE
7	704271108	2	HOLLOW KEY	HOHLSCHLUESSEL
8	10877437	1	ASSORTMENT BOX FLACHSICHERUNG	SORTIMENTKASTEN

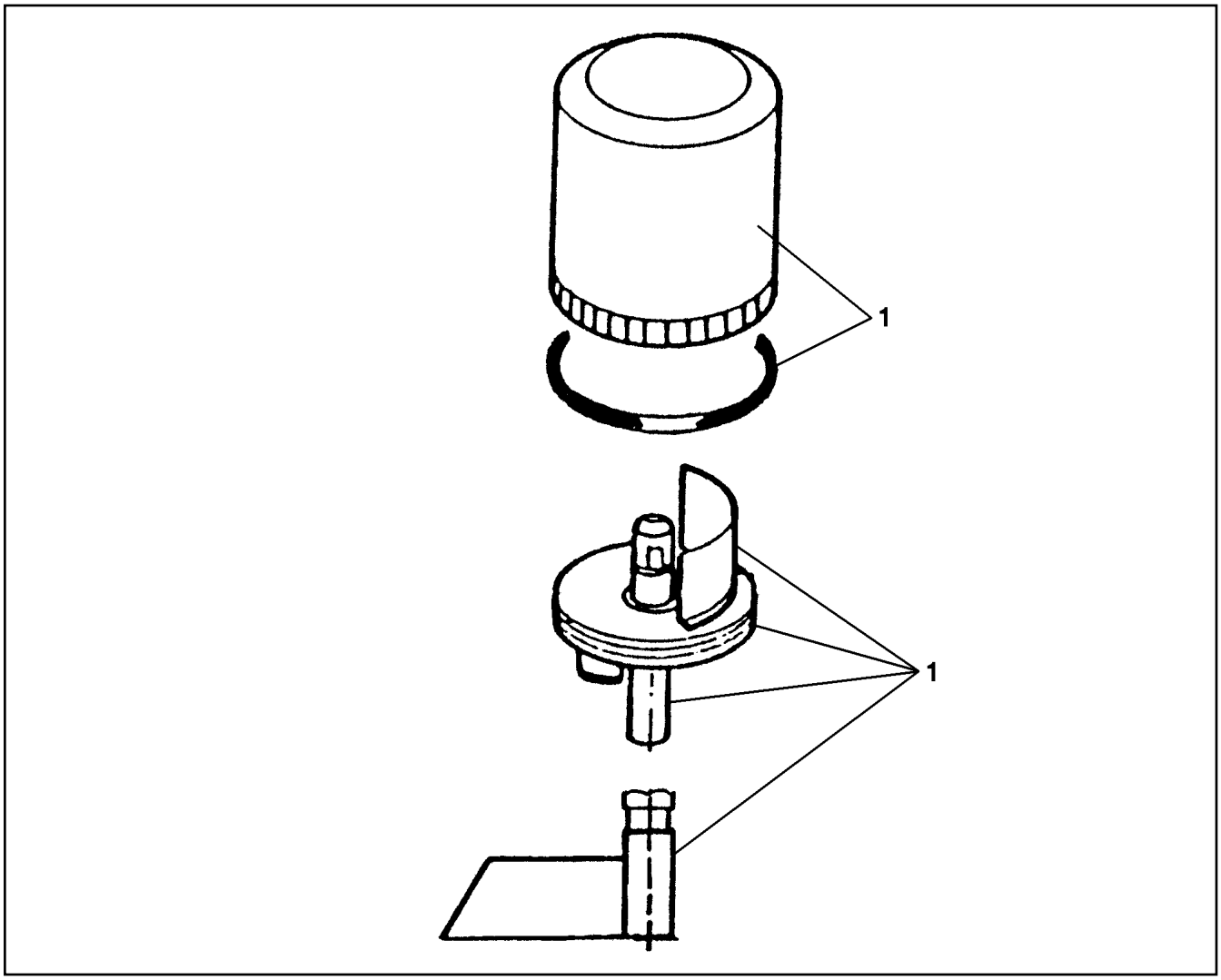

Pos.	Item	Quantity	Description	Bezeichnung
1	10470032	1	ROTATING BEACON 55W 24V	RUNDUMKENNLEUCHTE
(1)	11346616	1	FLASHING LIGHT GLASS	LICHTHAUBE
2	607023708	1	LIGHT BULB DIN 72601 70W 24V	GLUEHLAMPE

Pos.	Item	Quantity	Description	Bezeichnung
1	97160609	1	SIGN 6X107X237 G-ALSI12	SCHILD

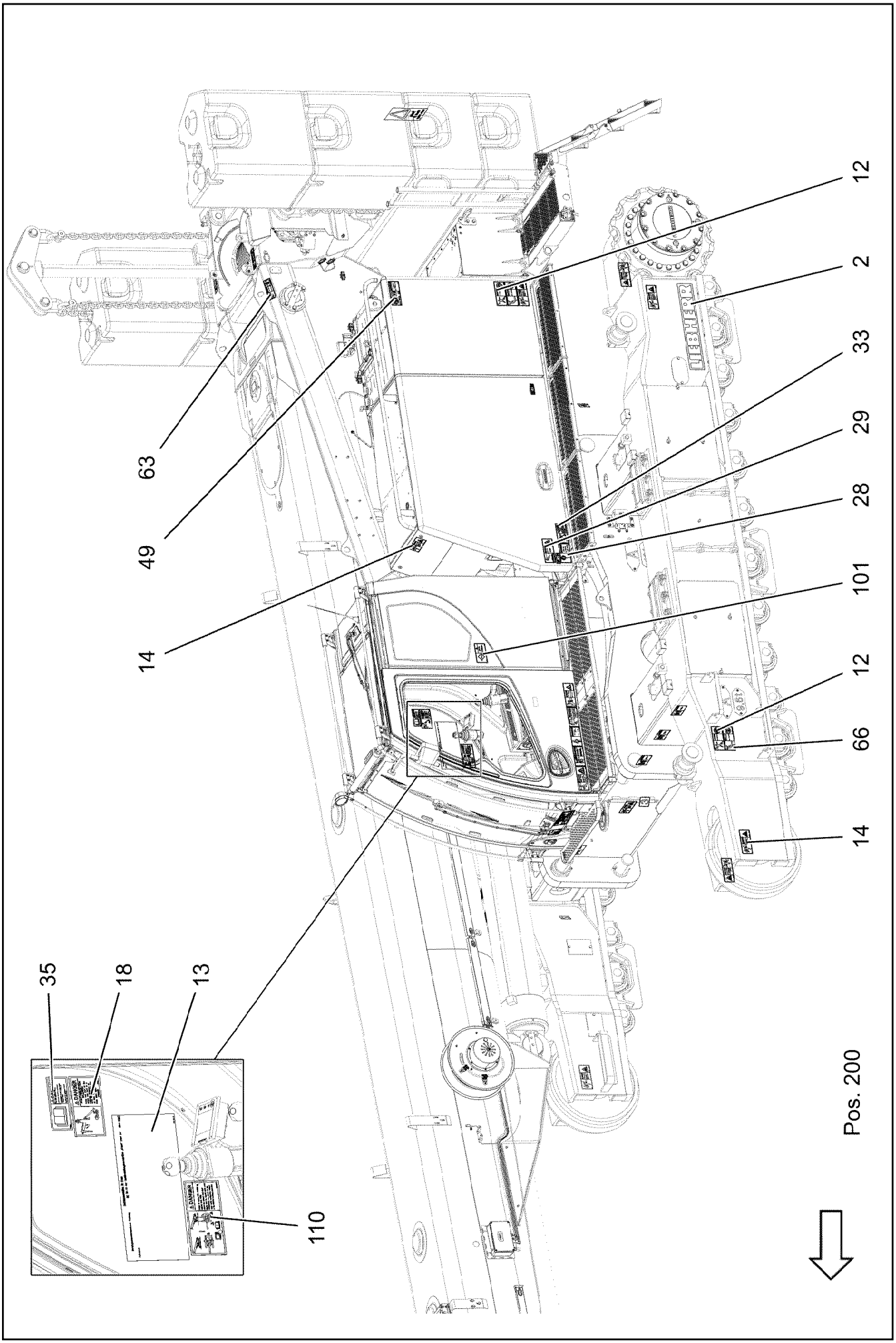
12
2
33
29
28
101
12
66
14
63
49
14
35
18
13
110
Pos. 200

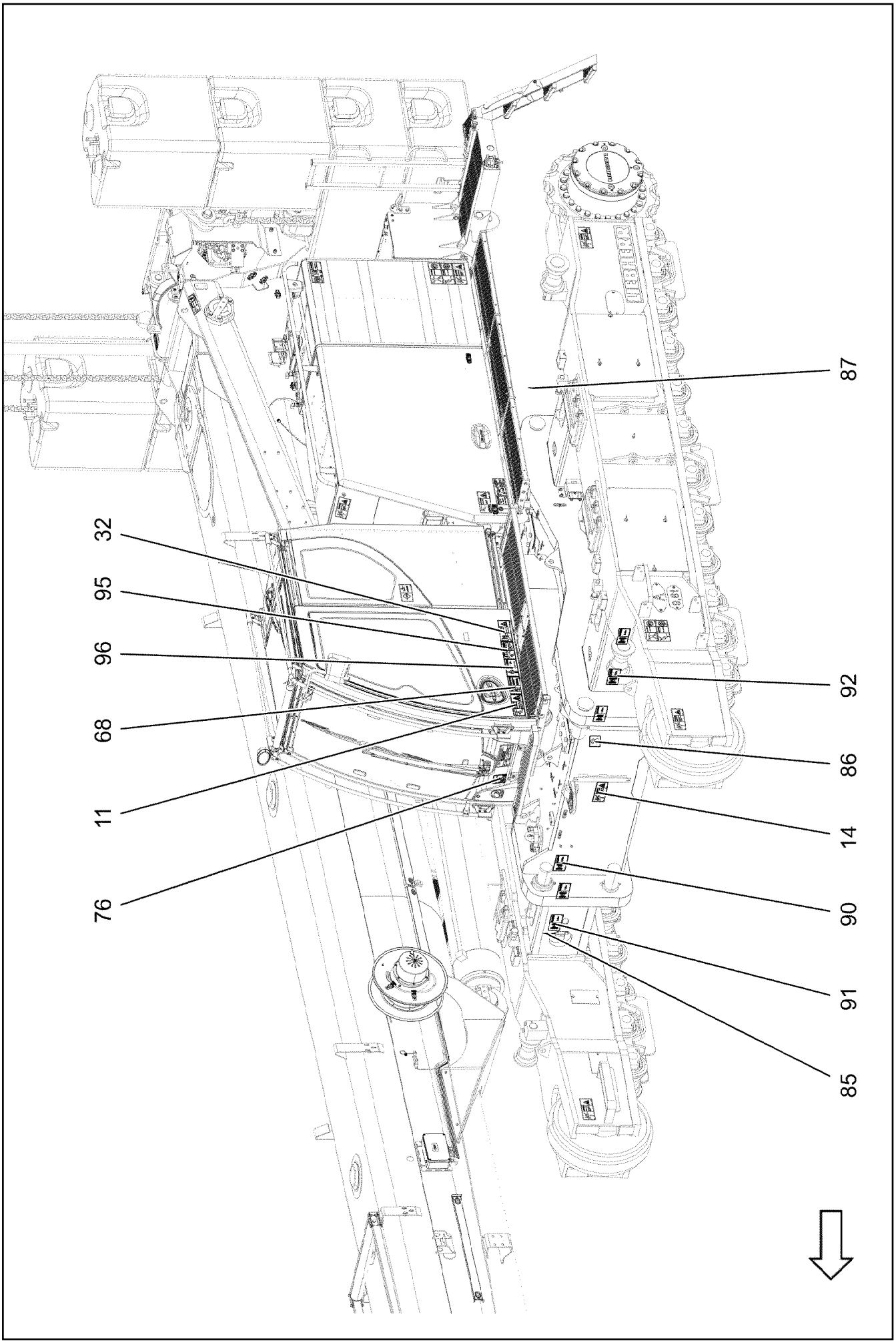
87
32
95
96
68
11
76
92
86
14
90
91
85

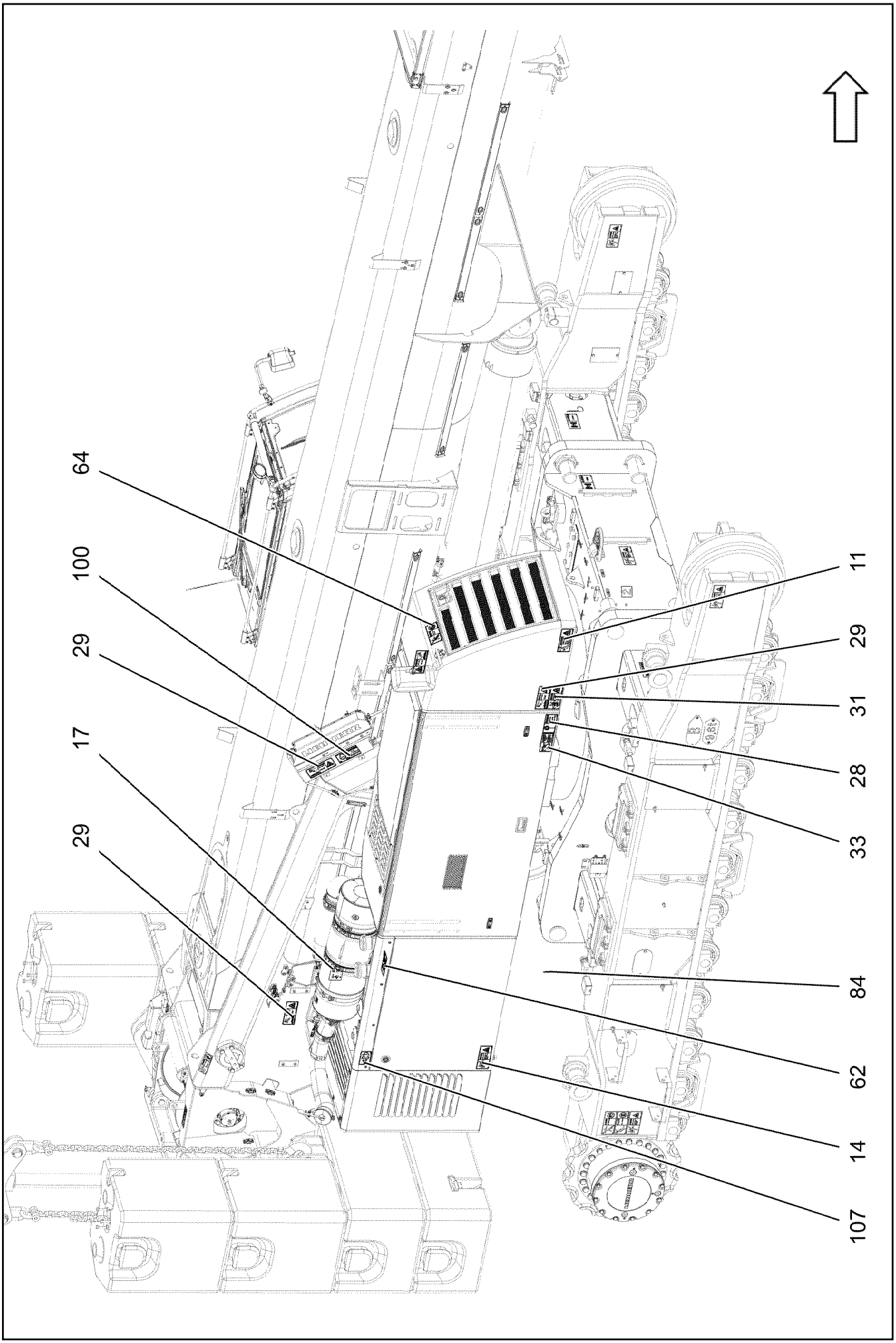
64
100
29
17
29
11
29
31
28
33
84
62
14
107

Pos.	Item	Quantity	Description	Bezeichnung
2	971749908	2	SIGN	SCHILD
11	978673908	2	SIGN 208X88 KLEBEFOLIE SPF	SCHILD
12	978674008	3	SIGN 208X88 KLEBEFOLIE SPF	SCHILD
14	978674108	13	SIGN 208X88 KLEBEFOLIE SPF	SCHILD
17	772637308	1	SIGN	SCHILD
18	97037952	1	SIGN 168X88 KLEBEFOLIE SPF	SCHILD
28	978674308	2	SIGN 168X88 KLEBEFOLIE SPF	SCHILD
29	978674408	5	SIGN 208X88 KLEBEFOLIE SPF	SCHILD
31	978674508	1	SIGN 208X88 KLEBEFOLIE SPF	SCHILD
32	978674608	1	SIGN 208X88 KLEBEFOLIE SPF	SCHILD
33	978867108	2	SIGN 168X88 KLEBEFOLIE SPF	SCHILD
35	9412158	1	CAUTION DECAL ACCID.PREVENTION 60X	WARNSCHILD UNFALLVERHUET
49	97016304	1	SIGN 208X88 KLEBEFOLIE SPF	SCHILD
62	979383308	1	SIGN 168X88 KLEBEFOLIE SPF	SCHILD
63	978674808	4	SIGN 168X62 KLEBEFOLIE SPF	SCHILD
64	978674908	1	SIGN 208X88 KLEBEFOLIE SPF	SCHILD
66	978675008	3	SIGN 208X88 KLEBEFOLIE SPF	SCHILD
68	97036732	1	SIGN 168X88 KLEBEFOLIE SPF	SCHILD
76	975809508	1	SIGN 105DBA/100X90 KLEBEFOLIE SPF	SCHILD
84	974150408	1	SIGN 1X80X80 KLEBEFOLIE SPF	SCHILD
85	974150508	1	SIGN 1X80X80 KLEBEFOLIE SPF	SCHILD
86	974150608	1	SIGN 1X80X80 KLEBEFOLIE SPF	SCHILD
87	974150708	1	SIGN 1X80X80 KLEBEFOLIE SPF	SCHILD
90	97017044	4	SIGN 168X88 KLEBESCHILD SPF	SCHILD
91	97017045	4	SIGN 168X88 KLEBESCHILD SPF	SCHILD
92	97017046	4	SIGN 168X88 KLEBESCHILD SPF	SCHILD
95	97011689	1	SIGN 168X88 KLEBEFOLIE SPF	SCHILD
96	97011690	1	SIGN 168X88 KLEBEFOLIE SPF	SCHILD
100	97060689	1	SIGN 168X88 KLEBEFOLIE SPF	SCHILD
101	97009799	1	SIGN 168X88 KLEBEFOLIE SPF	SCHILD
107	97094940	1	INFORMATION SIGN 120X80 KLEBEFOLIE	HINWEISSCHILD
110	97131530	1	INFORMATION SIGN 208X100 KLEBEFOLIE	HINWEISSCHILD
200	704207708	4	MANDRIL RIVET 4X15	DORNNIET

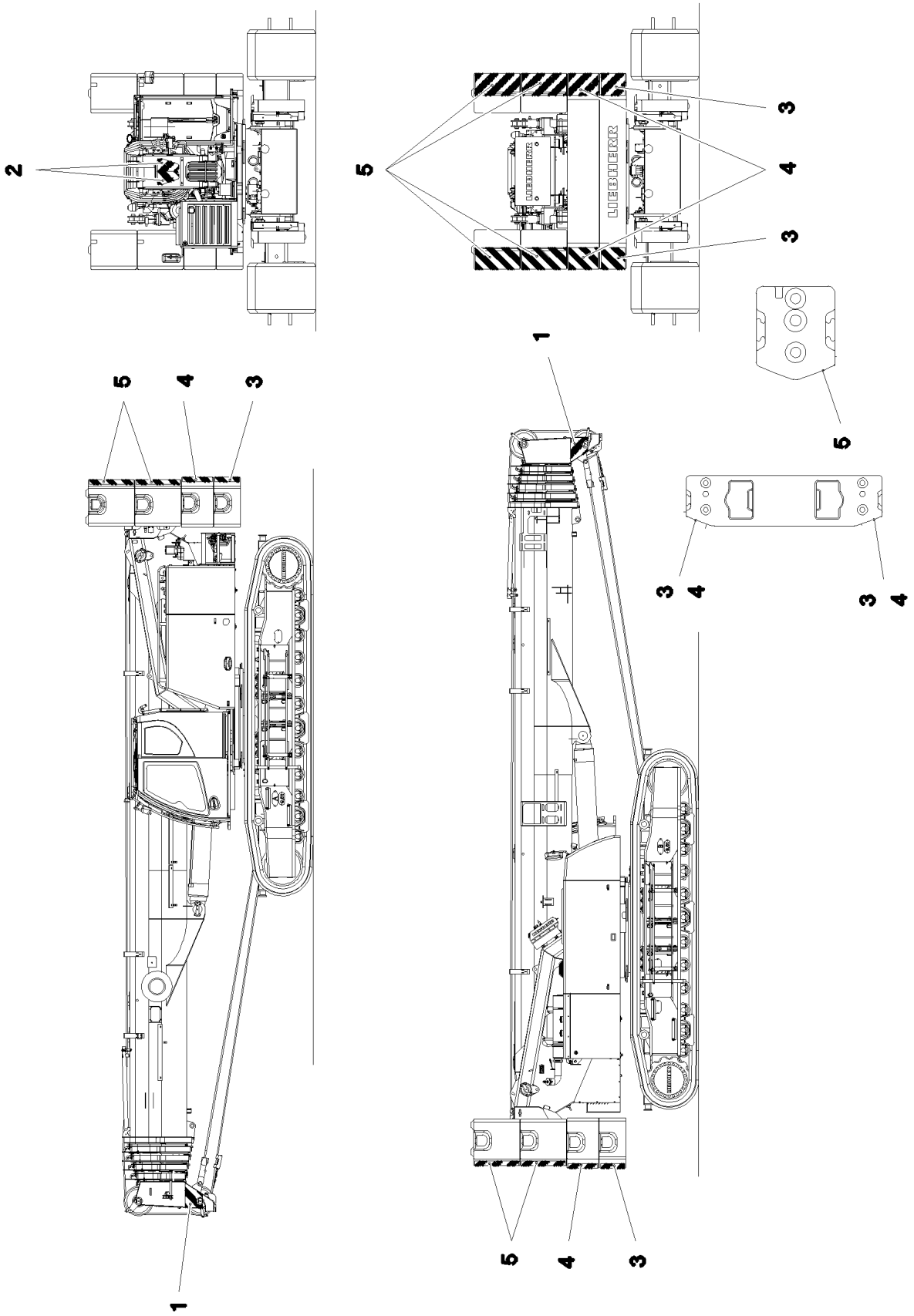
2
5
3
4
3
1
5
5
4
3
3
4
3
4
1
5
4
3

Pos.	Item	Quantity	Description	Bezeichnung
1	11067612	0.254	WARNING DESIGNATION DIN 30710 TYP 1	WARNMARKIERUNG
2	11067611	0.173	WARNING DESIGNATION DIN 48844-01 LAMI	WARNMARKIERUNG
3	11067611	0.404	WARNING DESIGNATION DIN 48844-01 LAMI	WARNMARKIERUNG
4	11067611	0.498	WARNING DESIGNATION DIN 48844-01 LAMI	WARNMARKIERUNG
5	11067611	1.485	WARNING DESIGNATION DIN 48844-01 LAMI	WARNMARKIERUNG

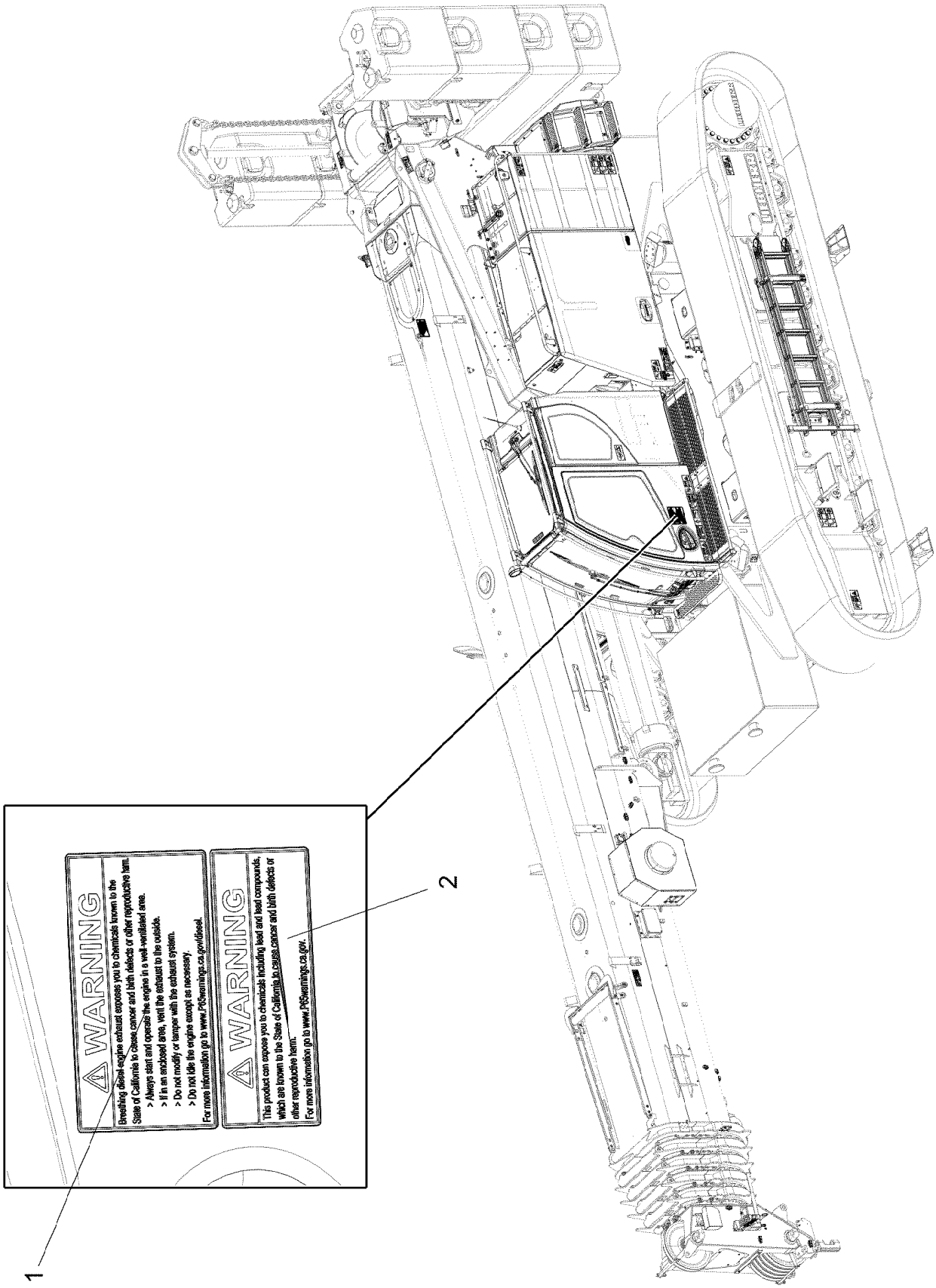
1
2
WARNING
Breathing diesel engine exhaust exposes you to chemicals known to the State of California to cause cancer and birth defects or other reproductive harm.
> Always start and operate the engine in a well-ventilated area.
> If in an enclosed area, vent the exhaust to the outside.
> Do not modify or tamper with the exhaust system.
> Do not idle the engine except as necessary.
For more information go to www.P65warnings.ca.gov/diesel.
WARNING
This product can expose you to chemicals including lead and lead compounds, which are known to the State of California to cause cancer and birth defects or other reproductive harm.
For more information go to www.P65warnings.ca.gov.

Pos.	Item	Quantity	Description	Bezeichnung
1	11952500	2	SIGN 100X184X0,1 KLEBEFOLIE SPF	SCHILD
2	13187353	1	SIGN 70X184X0,1 KLEBEFOLIE	SCHILD

Pos.	Item	Quantity	Description	Bezeichnung
1	96045221	2	CENTRAL BALLAST ⇨ ❑ 117	ZENTRALBALLAST
2	96045222	1	MOUNTING PARTS ⇨ ❑ 118	MONTAGETEILE

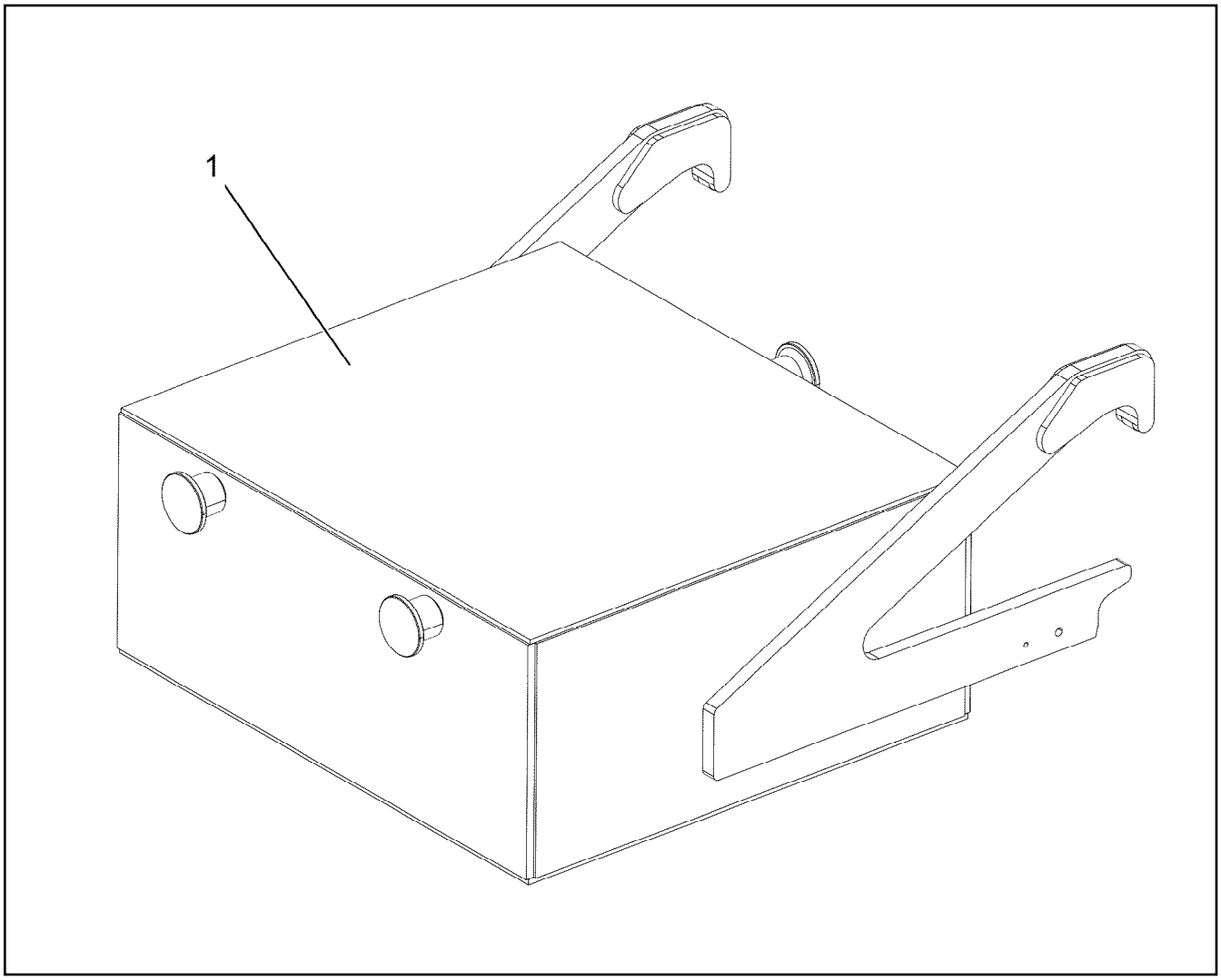

Pos.	Item	Quantity	Description	Bezeichnung
1	919418714	1	CENTRAL BALLAST LH355-40 LH-GRAU	ZENTRALBALLAST

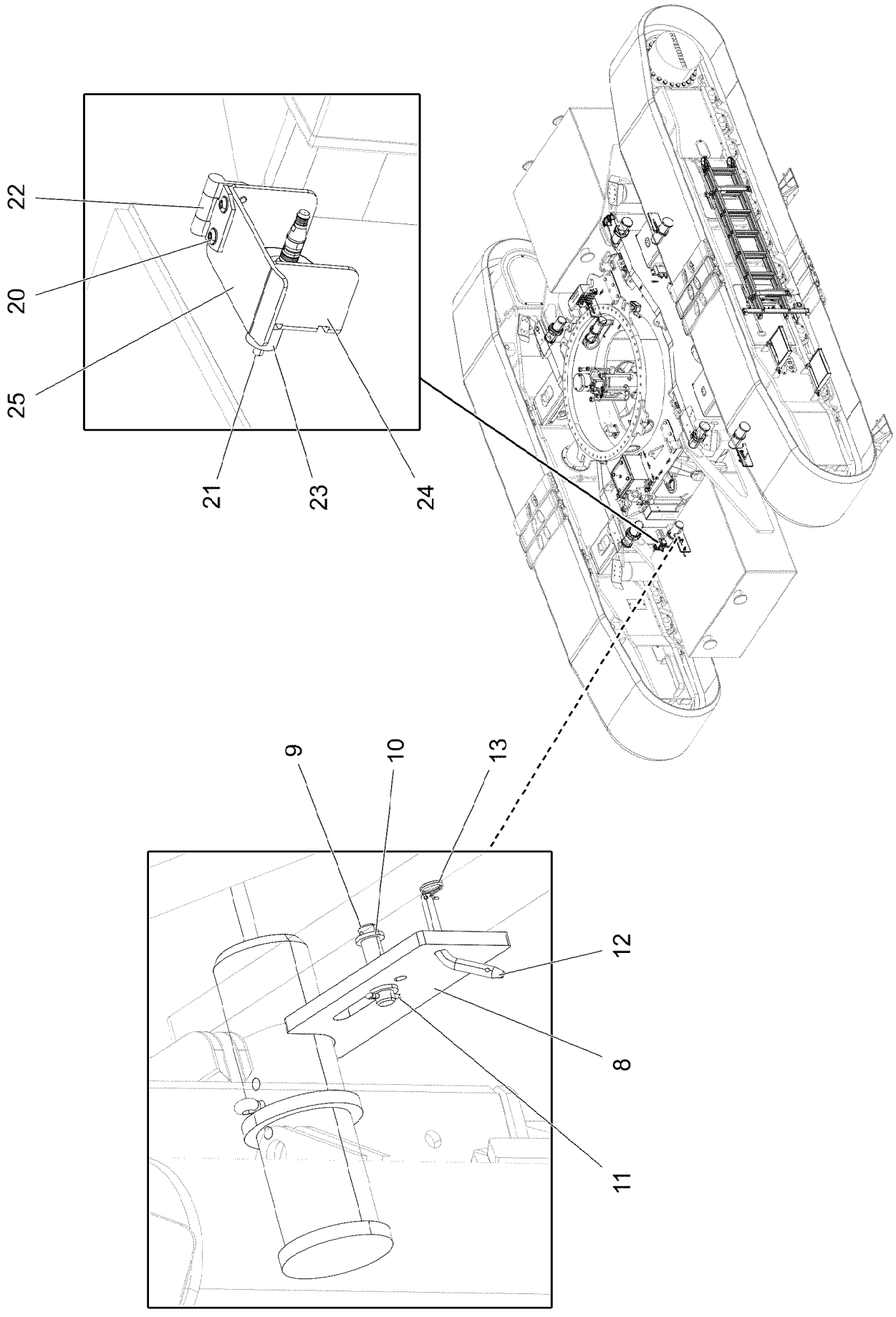
22
20
25
21
23
24
9
10
13
12
8
11

Pos.	Item	Quantity	Description	Bezeichnung
8	976541108	4	PLATE 15X300X120 S355MC FE//ZNNI8//CN/	BLECH
9	450022014	4	PIN ISO 2340-B B20X85X69 S355J2 DIN EN	BOLZEN
10	10179404	8	WASHER ISO 8738 20 160HV-St FLZN SPF	SCHEIBE
11	10180357	8	SPLIT PIN ISO 1234 5X32 St 480H SPF	SPLINT
12	942053708	4	PIN 12.0X140 S355J2C+C FE//ZNNI8//CN//T0	BOLZEN
13	433206114	4	SPRING PLUG DIN 11024 3,2-2,8-48	FEDERSTECKER
20	10813359	8	BUTTON HEAD SCREW AEHNL.ISO 7380-2	HALBRUNDKOPFSCHRAUBE
21	11691424	4	SOCKET HEAD SCREW ISO 4762 M8X35 8.8	ZYLINDERSCHRAUBE
22	704228108	2	HINGE 35X35X50/180° ST FE//ZN12//B	SCHARNIER
23	953873408	4	SLEEVE 25X20 11SMNPB37 FE//ZNNI8//CN/	HUELSE
24	97132168	2	PLATE 4X74X219 S315MC FE//ZNNI8//CN//T	BLECH
25	97132169	2	PLATE 4X62X134 S315MC	BLECH

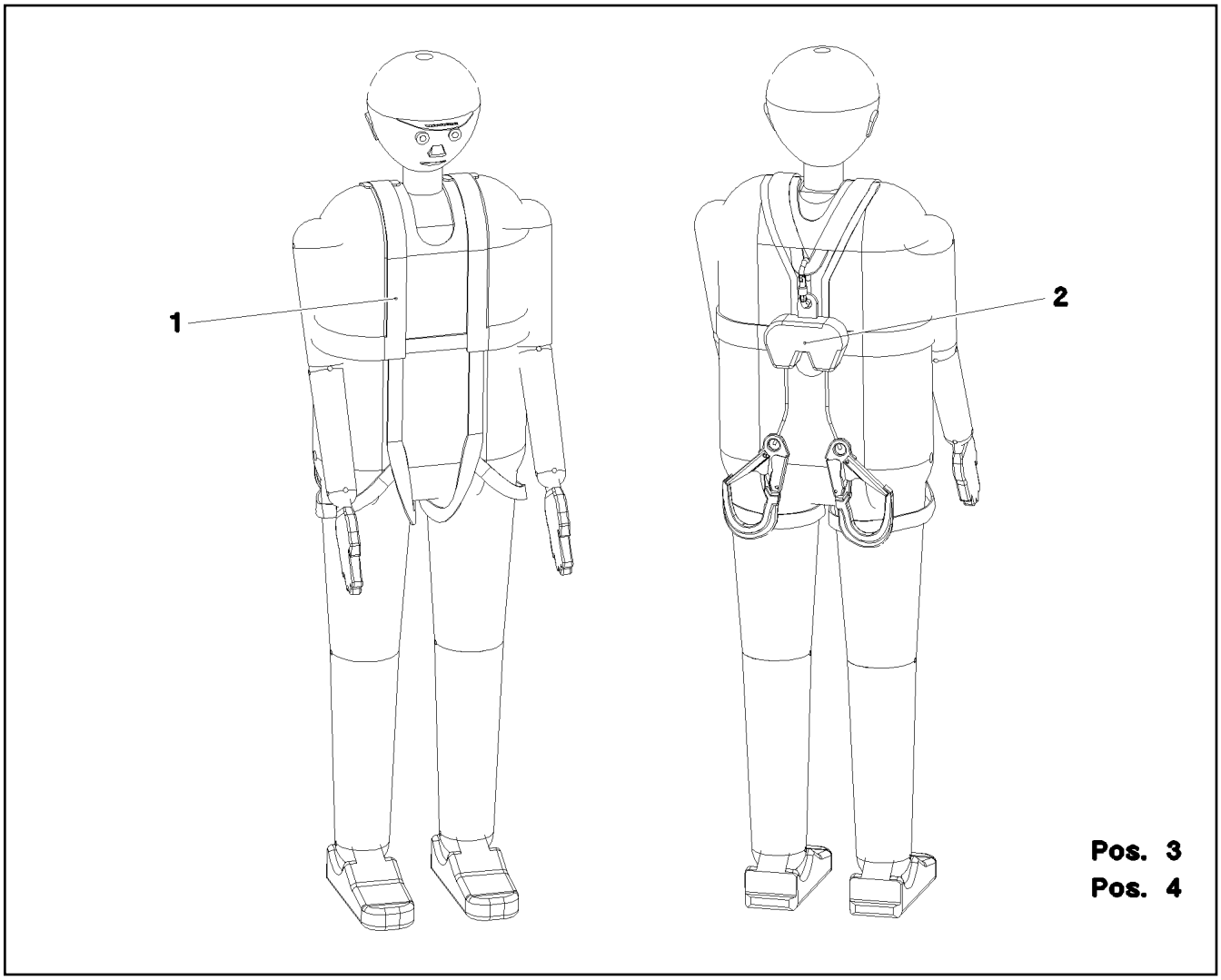

Pos.	Item	Quantity	Description	Bezeichnung
1	11007305	1	SAFETY HARNESS EN 361 IK G 2 BLH	AUFFANGGURT
(1)	11320720	1	IMPLEMENT BAG 300X600	GERAETEBEUTEL
2	12107776	1	RETRACTING LIFELINES EN 360 HWB 2 R S	HOEHENSICHERUNGSGERAET
3	12102869	1	CONNECTING DEVICE EN 358 45-IK30 B70 A	VERBINDUNGSMITTEL

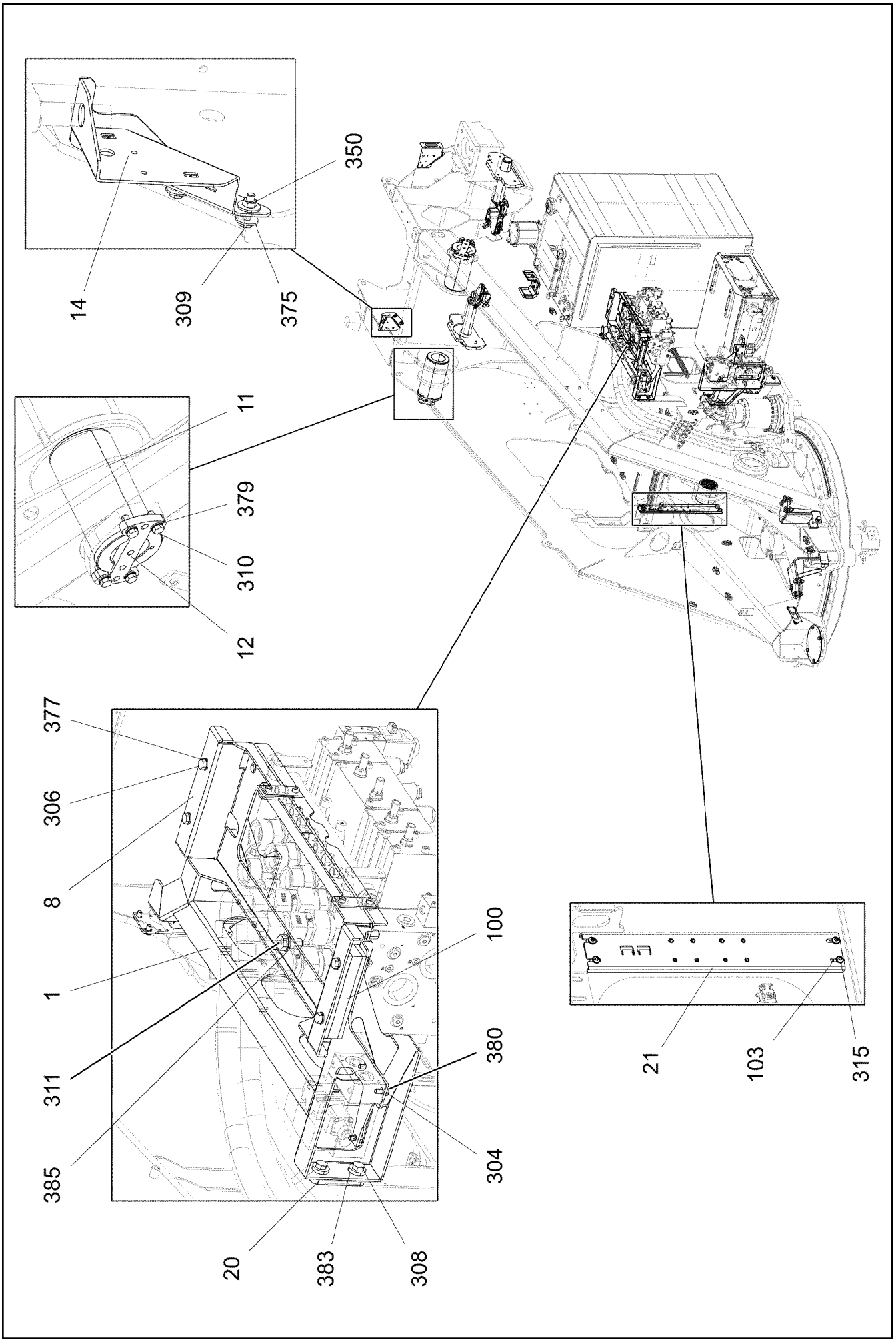
14
309
375
350
11
379
310
12
377
306
8
1
311
385
20
383
308
100
380
304
21
103
315

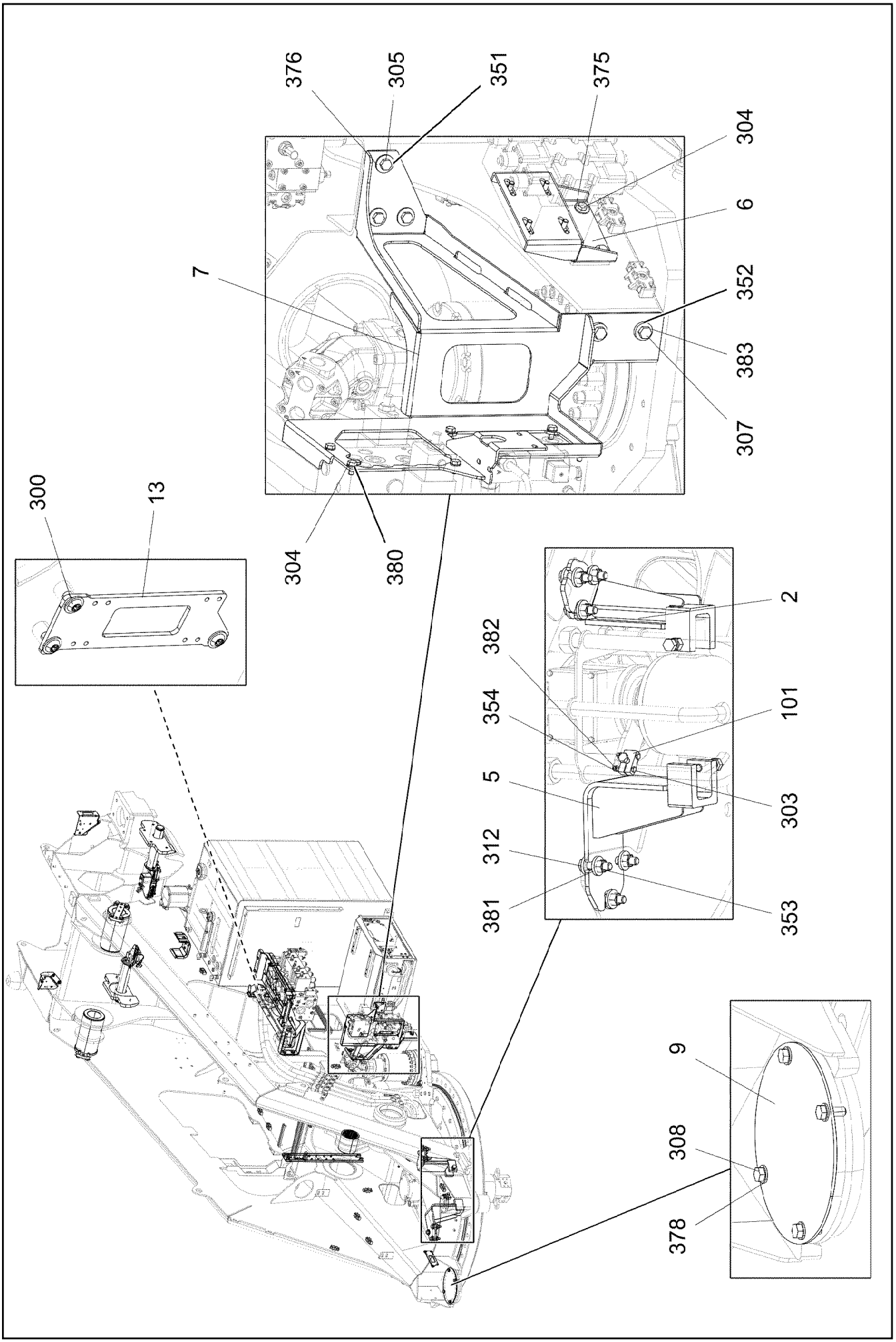
376
305
351
375
304
6
7
352
383
307
304
380
300
13
382
354
5
312
381
2
101
303
353
9
308
378

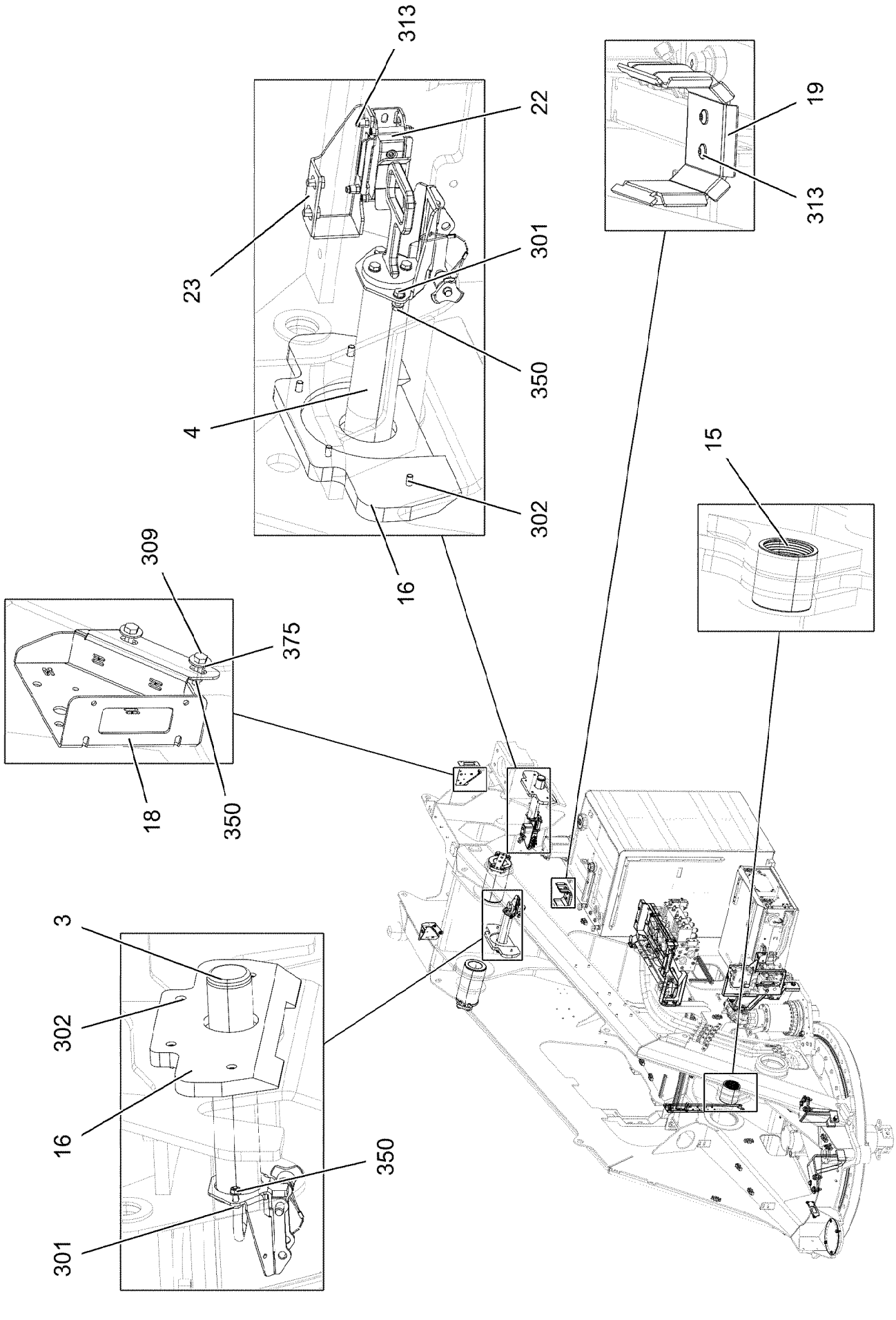
313
22
23
301
350
4
302
16
19
313
15
309
375
18
350
3
302
16
350
301

Pos.	Item	Quantity	Description	Bezeichnung
1	968300908	1	BRACKET WELDED CONST.	KONSOLE SCHWK.
2	968301008	1	BRACKET WELDED CONST.	KONSOLE SCHWK.
3	963260408	1	LOCKING ⇨ ❑ 125	VERRIEGELUNG
4	96049764	1	LOCKING ⇨ ❑ 126	VERRIEGELUNG
5	963672408	1	BRACKET WELDED CONST.	KONSOLE SCHWK.
6	97042207	1	CONSOLE 4X235X224 S315MC FE//ZNNI8//C	KONSOLE
7	968510608	1	BRACKET WELDED CONST.	KONSOLE SCHWK.
8	968510708	1	CLAMP WELDED CONST. FE//ZNNI8//CN//T0	HALTER SCHWK.
9	97042701	1	COVER PLATE 4X270X270 S315MC FE//ZNNI	ABDECKBLECH
11	957100008	2	AXLE 170X310 35NICRMOV125 SPF	ACHSE
12	951913908	2	AXLE HOLDER 20x250x119 S690QL	ACHSHALTER
13	955668108	2	PLATE 196X63 S315MC FE//ZNNI8//CN//T0	BLECH
14	97042788	1	PLATE 3X274X221 S355MC FE//ZNNI8//CN//T	BLECH
15	972503408	1	BUSHING RD150X130 GZ-CUZN25AL5	BUCHSE
16	975778508	2	GUIDE PA6G	FUEHRUNG
18	97042787	1	PLATE 3X294X224 S355MC FE//ZNNI8//CN//T	BLECH
19	965225808	1	HOSE HOLDER FE//ZNNI8//CN//T0	SCHLAUCHHALTER
20	97001665	1	THREADED PLATE 10X100X30 S355MC FE//	GEWINDEPLATTE
21	962207008	1	HOLDER PRE-ASSEMBLY FE//ZNNI8//CN//T0	HALTER VORM.
22	968305308	1	LIMIT SWITCH, PRE-ASSEMBLED ⇨ ❑ 127	ENDSCHALTER VORM.
23	96049767	1	CLAMP WELDED CONST. FE//ZNNI8//CN//T0	HALTER SCHWK.
100	726617008	2	RUBBER-METAL RAIL 170	METALLGUMMISCHIENE
101	288176208	1	SHEET 15X30X50 PA6G	PLATTE
103	953873408	4	SLEEVE 25X20 11SMNPB37 FE//ZNNI8//CN/	HUELSE
300	10876082	6	BUTTON HEAD SCREW AEHNL.ISO 7380-2	HALBRUNDKOPFSCHRAUBE
301	10197831	4	HEX SCREW ISO 4017 M8X25 8.8 ZNNI-480	SECHSKANTSCHRAUBE
302	10875599	8	SOCKET HEAD SCREW ISO 4762 M8X25 8.8	ZYLINDERSCHRAUBE
303	12216202	2	HEX SCREW ISO 4017 M6X50 8.8 480H SPF	SECHSKANTSCHRAUBE
304	11651612	18	HEX SCREW ISO 4017 M8X16 8.8 480H SPF	SECHSKANTSCHRAUBE
305	11631816	3	HEX SCREW ISO 4017 M10X25 8.8 FLZN SP	SECHSKANTSCHRAUBE
306	11652470	10	HEX SCREW ISO 4017 M10X16 8.8 FLZN SP	SECHSKANTSCHRAUBE
307	11645384	2	HEX SCREW ISO 4017 M12X40 8.8 FLZN SP	SECHSKANTSCHRAUBE
308	11631742	9	HEX SCREW ISO 4017 M12X30 8.8 FLZN SP	SECHSKANTSCHRAUBE
309	11826527	4	HEX SCREW ISO 4017 M8X30 8.8 480H SPF	SECHSKANTSCHRAUBE
310	10875803	8	HEX SCREW ISO 4017 M16X45 8.8 FLZN SP	SECHSKANTSCHRAUBE
311	4902326	3	HEX SCREW ISO 4017 M16X30 8.8 FLZN SP	SECHSKANTSCHRAUBE
312	10875521	8	HEX SCREW ISO 4017 M16X60 8.8 FLZN SP	SECHSKANTSCHRAUBE
313	10875486	4	BUTTON HEAD SCREW AEHNL.ISO 7380-2	HALBRUNDKOPFSCHRAUBE
315	10875485	4	BUTTON HEAD SCREW AEHNL.ISO 7380-2	HALBRUNDKOPFSCHRAUBE
350	11693875	10	HEX NUT ISO 4032 M8 8 480H SPF	SECHSKANTMUTTER
351	12102695	3	HEX NUT ISO 4032 M10 8 ZNNI-480H SPF	SECHSKANTMUTTER
352	12218127	2	HEX NUT DIN 985 M12 10 FLZN SPF	SECHSKANTMUTTER
353	10873081	8	HEX NUT ISO 4032 M16 10 FLZN SPF	SECHSKANTMUTTER
354	10197764	2	HEX NUT ISO 4032 M6 10 ZNNI-480H SPF	SECHSKANTMUTTER
375	11140469	14	WASHER ISO 7093-1 8 200HV 480H SPF	SCHEIBE
376	11491889	8	WASHER ISO 7093-1 10 300HV FLZN SPF	SCHEIBE
377	10289795	8	WASHER ISO 7089 10 300HV FLZN SPF	SCHEIBE
378	10289804	4	WASHER ISO 7089 12 300HV FLZN SPF	SCHEIBE
379	4600242	8	WASHER EN 14399-6 16 300-370HV FLZN SP	SCHEIBE
380	12103465	22	WASHER ISO 7089 8 300HV ZNNI-480H SPF	SCHEIBE
381	4600021	12	WASHER DIN 7349 17 200HV FLZN SPF	SCHEIBE
382	10197771	2	WASHER ISO 7089 6 200HV ZNNI-480H SPF	SCHEIBE
383	10006370	8	WASHER DIN 7349 13 200HV FLZN SPF	SCHEIBE
385	10289806	3	WASHER ISO 7089 16 300HV FLZN SPF	SCHEIBE

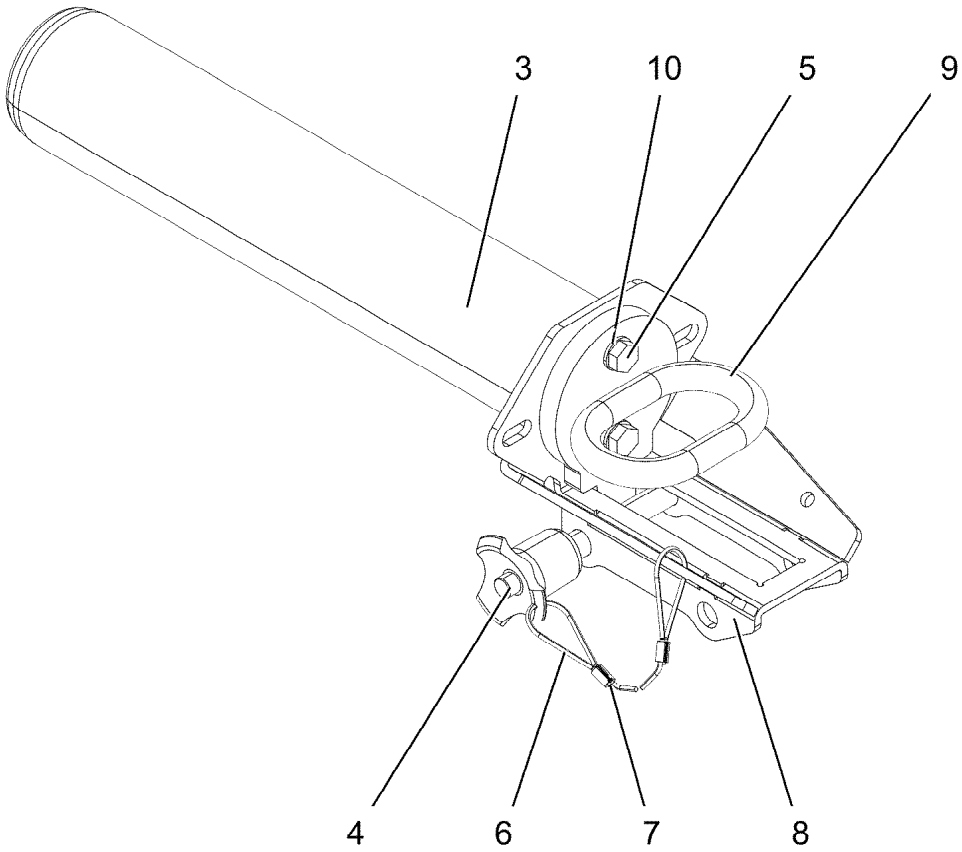

Pos.	Item	Quantity	Description	Bezeichnung
3	975766808	1	INTERLOCK BOLT 70.0X342 35NICRMOV125	VERRIEGELUNGSBOLZEN
4	11320193	1	QUICK RELEASE PIN 12X130,3X80 NIROST	KUGELSPERRBOLZEN
5	10197831	2	HEX SCREW ISO 4017 M8X25 8.8 ZNNI-480	SECHSKANTSCHRAUBE
6	11160431	0.75	ROPE 2 2,3KN EDELSTAHL	SEIL
7	11170565	2	FERRULE 2 CU	PRESSKLEMME
8	97111977	1	PLATE 4X246X213 S315MC FE//ZNNI8//CN//T	BLECH
9	96030352	1	BOLT HANDLE FE//ZNNI8//CN//T0	BOLZENGRIFF
10	12103465	2	WASHER ISO 7089 8 300HV ZNNI-480H SPF	SCHEIBE

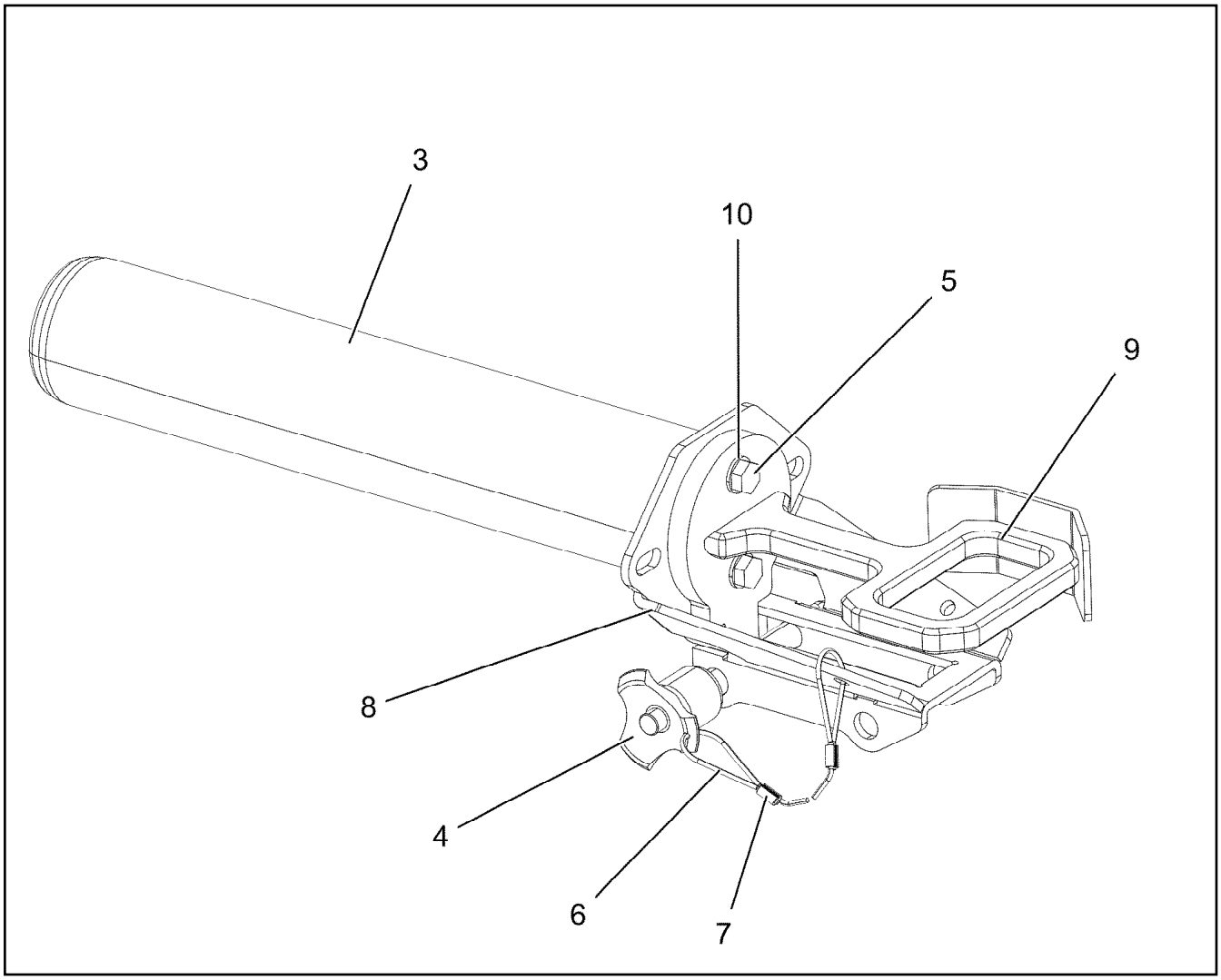

Pos.	Item	Quantity	Description	Bezeichnung
3	975766808	1	INTERLOCK BOLT 70.0X342 35NICRMOV125	VERRIEGELUNGSBOLZEN
4	11320193	1	QUICK RELEASE PIN 12X130,3X80 NIROST	KUGELSPERRBOLZEN
5	10197831	2	HEX SCREW ISO 4017 M8X25 8.8 ZNNI-480	SECHSKANTSCHRAUBE
6	11160431	0.75	ROPE 2 2,3KN EDELSTAHL	SEIL
7	11170565	2	FERRULE 2 CU	PRESSKLEMME
8	97111977	1	PLATE 4X246X213 S315MC FE//ZNNI8//CN//T	BLECH
9	96049765	1	BOLT HANDLE FE//ZNNI8//CN//T0	BOLZENGRIFF
10	12103465	2	WASHER ISO 7089 8 300HV ZNNI-480H SPF	SCHEIBE

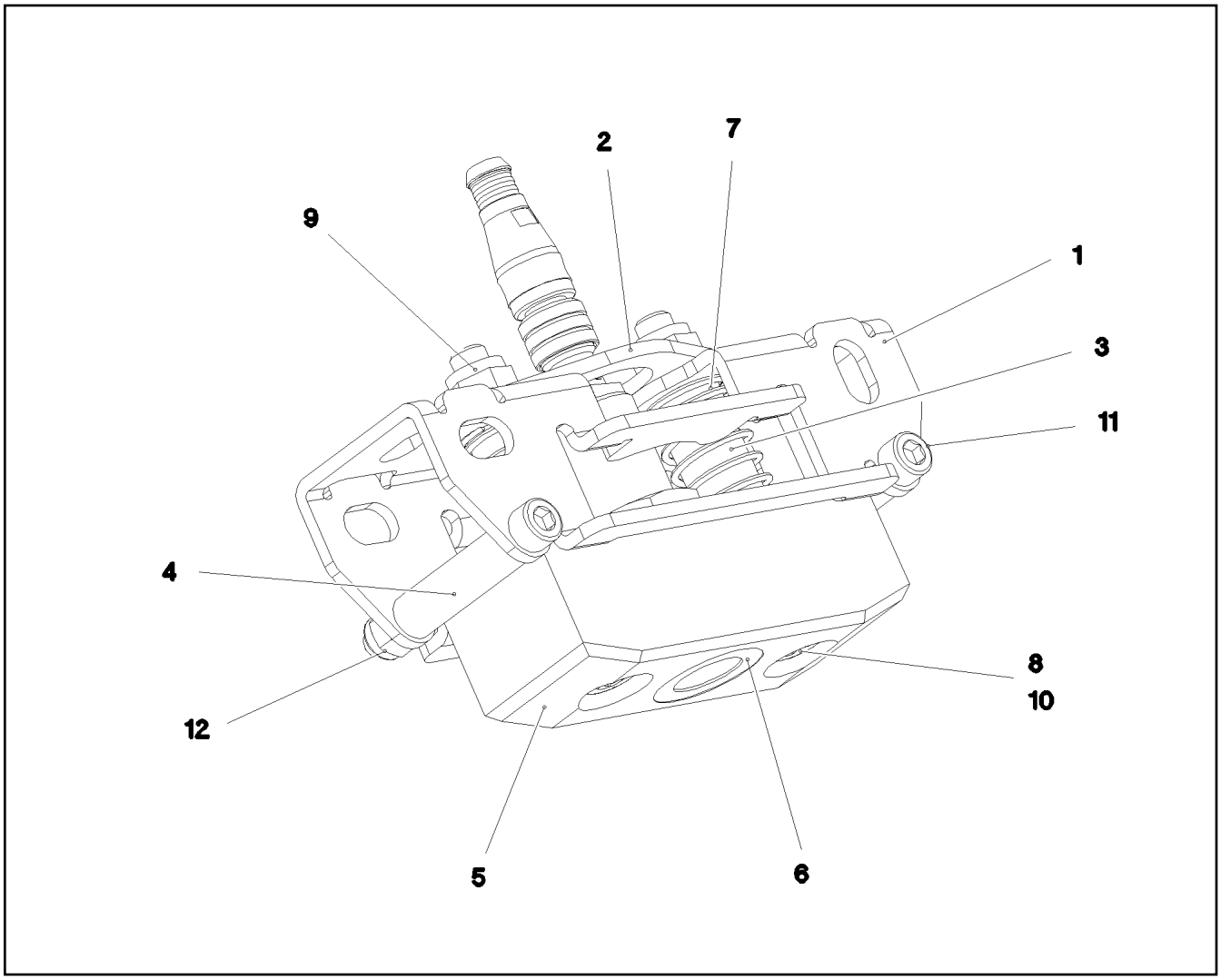

Pos.	Item	Quantity	Description	Bezeichnung
1	97038824	1	PLATE 3X130X140 X5CRNI18-10	BLECH
2	97038825	1	PLATE 3X44X75 DC01 FE//ZNNI8//CN//T0	BLECH
3	943122808	2	TUBE 15X1,5X35 E235+N VERZ	ROHR
4	97038827	2	TUBE 10.0 X38 E235+N	ROHR
5	979589208	1	RETAINER	AUFNAHME
6	955600008	1	SLEEVE 25X21 X12CRNIS188	HUELSE
7	720009408	2	COMPRESSION SPRING 1,6X18,2X44	DRUCKFEDER
8	12202901	2	SOCKET HEAD SCREW ISO 4762 M8X70 8.8	ZYLINDERSCHRAUBE
9	10875614	2	HEX NUT DIN 985 M8 8 480H SPF	SECHSKANTMUTTER
10	10299679	2	WASHER ISO 7092 8 200HV 480H SPF	SCHEIBE
11	10876359	2	SOCKET HEAD SCREW ISO 4762 M6X55 8.8	ZYLINDERSCHRAUBE
12	11656734	2	HEX NUT ISO 7040 M6 8 480H SPF	SECHSKANTMUTTER

Pos.	Item	Quantity	Description	Bezeichnung
1	13471292	1	DRIVE UNIT AG 944 P380 ⇨ ❑ 129	ANTRIEBSGRUPPE

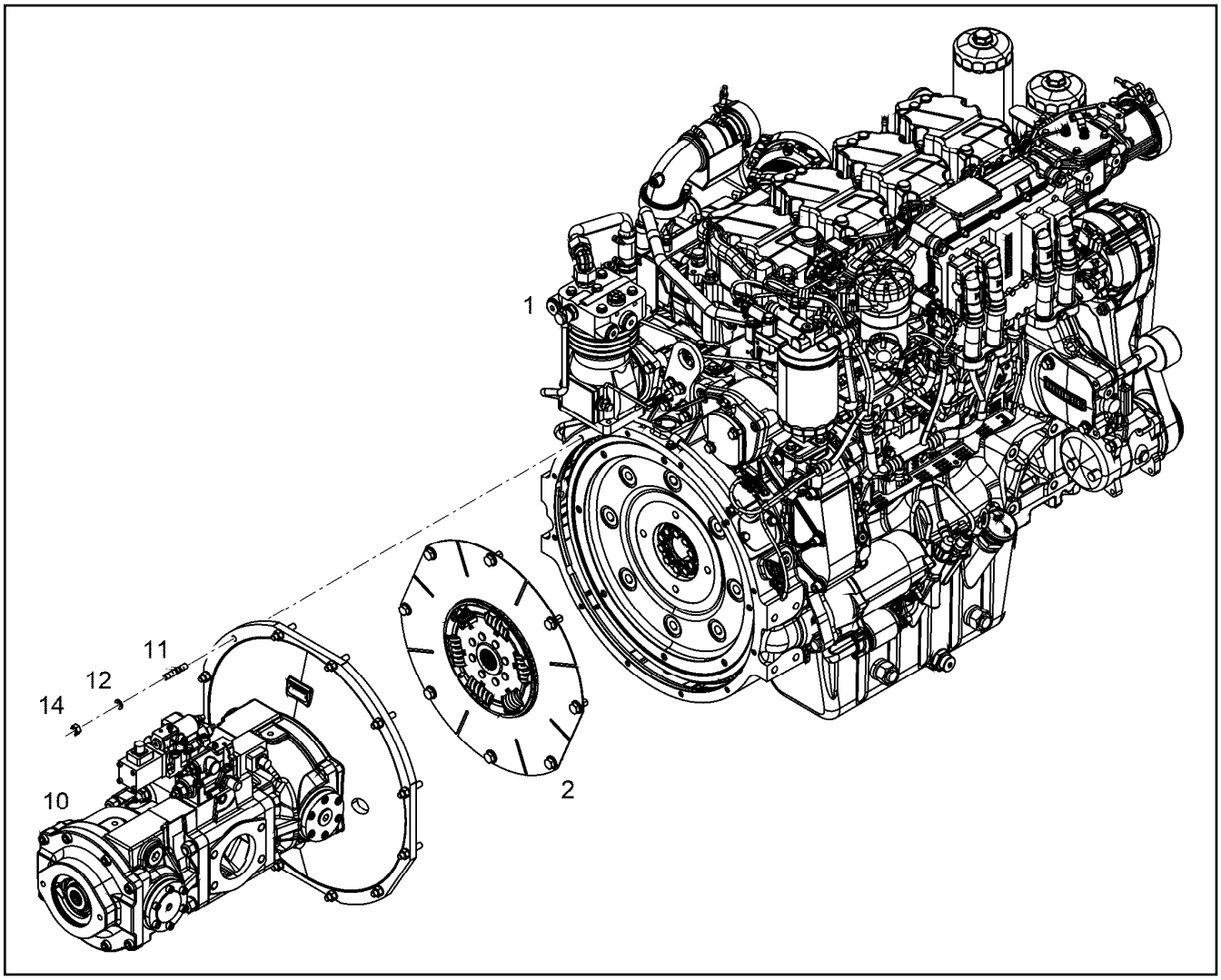

Pos.	Item	Quantity	Description	Bezeichnung
1	13455311	1	DIESEL ENGINE D944 A7-05 ⇨ ❑ 130	DIESELMOTOR
2	10115780	1	CLUTCH ASSEMBLY ⇨ ❑ 255	KUPPLUNGSANBAU
10	12487540	1	HYDR.DOUBLE PUMP LPVD ⇨ ❑ 256	HYDRAULIKDOPPELPUMPE
11	12211782	12	DOUBLE-ENDED STUD DIN 835 M10X35 10.9	STIFTSCHRAUBE
12	4229913	12	LOCK WASHER VS 10 ZN8M+PASSIVIERUN	SICHERUNGSSCHEIBE
14	11002807	12	HEX NUT ISO 4032 M10 10 FLZN SPF	SECHSKANTMUTTER

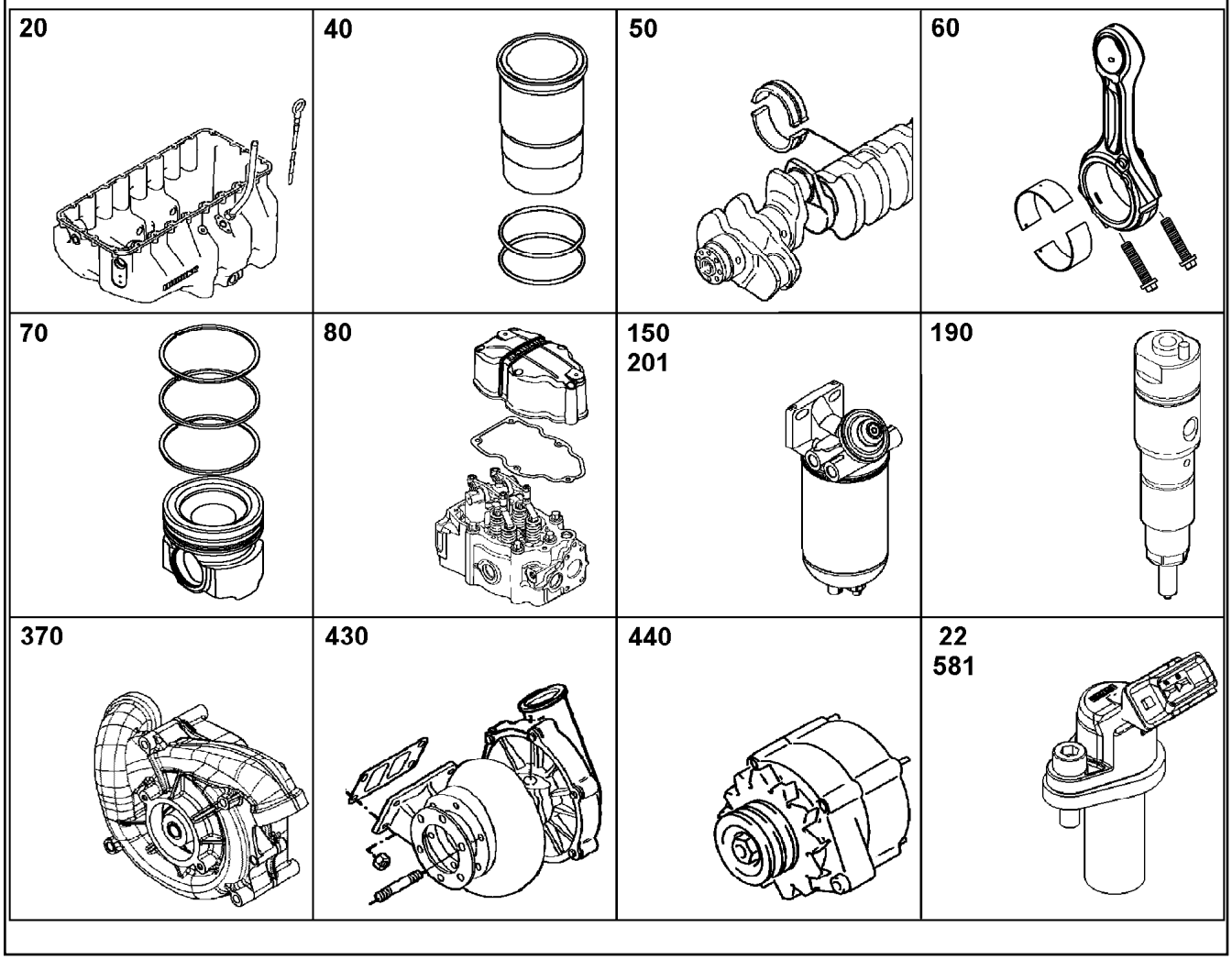

Pos.	Item	Quantity	Description	Bezeichnung
10	11389608	1	CRANKCASE CPL. WITH CYLINDER R-MOT ⇨ ❑ 136	KURBELGEHAEUSE KPL. MIT ZY
12	10147687	1	POWER UNIT SUPPORT ATTACHMENT R-M ⇨ ❑ 139	AGGREGATETRAEGER ANBAU
14	10138450	1	FINAL CONTROL VALVE pmax=4.5BAR ⇨ ❑ 141	ENDREGELVENTIL
15	10142749	4	PISTON COOLING ⇨ ❑ 142	KOLBENKUEHLUNG
16	10126713	1	CRANKCASE BREATHER ASSEMBLY ⇨ ❑ 143	KURBELGEHAEUSEENTLUEFT.
20	10132560	1	OIL SUMP WITH FASTENING R-MOTOR/D93 ⇨ ❑ 144	OELWANNE MIT BEFEST.
21	10150934	1	OIL DIPSTICK CPL. ⇨ ❑ 149	OELMESSSTAB KPL.
22	10130406	1	LEVEL SENSOR L=115 24V ⇨ ❑ 150	NIVEAUGEBER
23	10118839	1	OIL FILLER INLET ⇨ ❑ 151	OELEINFUELLUNG
25	10139112	1	OIL LINE PRE-ASSEMBLY 10X1 ⇨ ❑ 152	OELLEITUNG VORM.
50	10147438	1	CRANKSHAFT WITH GEAR R-MOTORXD934/ ⇨ ❑ 153	KURBELWELLE MIT ZAHNRAD
51	9076457	1	SET MAIN BEARINGS ⇨ ❑ 154	KURBELWELLENLAGERSATZ
52	10153583	1	CRANKSHAFT SEALING ⇨ ❑ 156	KURBELWELLENDICHTUNG

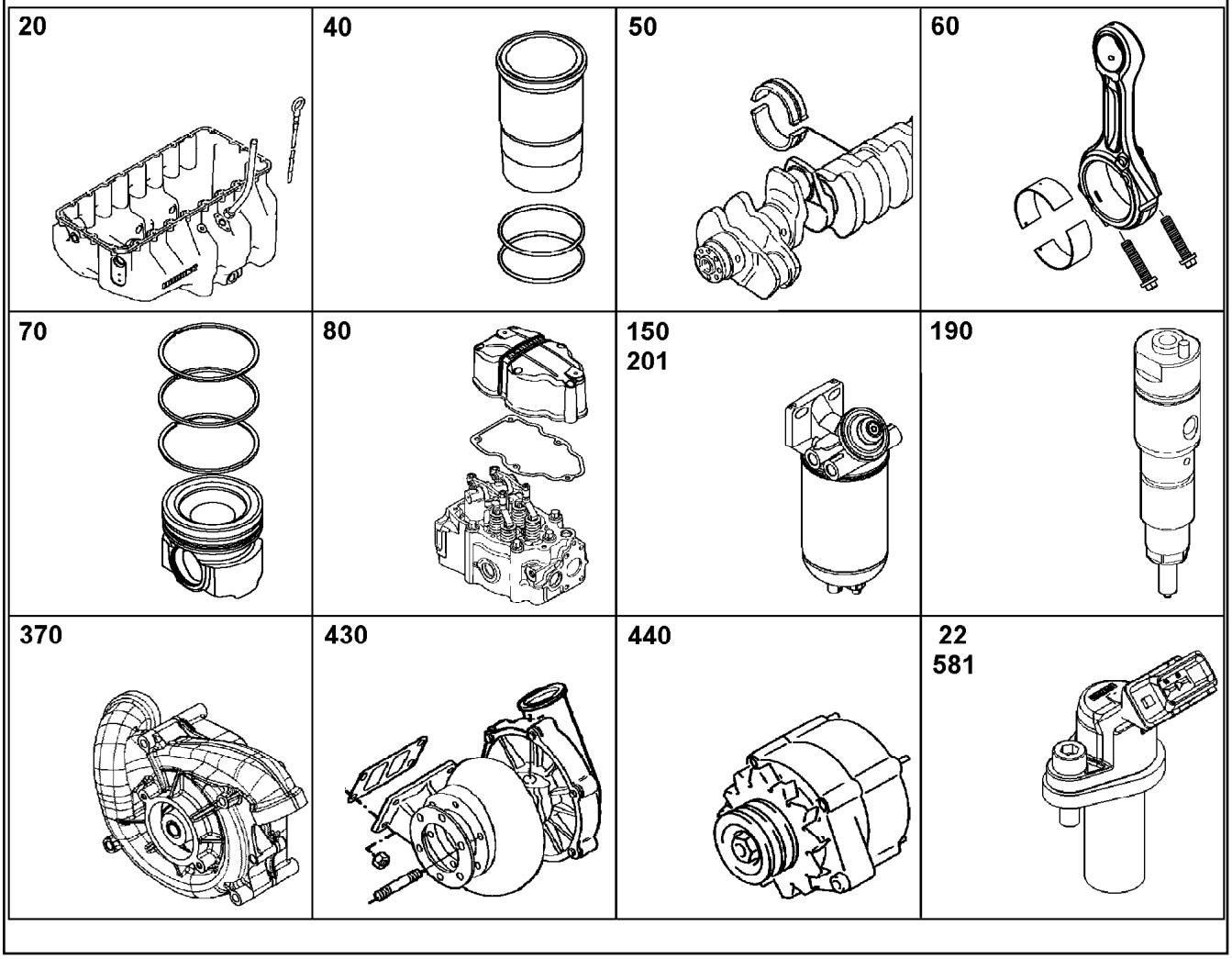

Pos.	Item	Quantity	Description	Bezeichnung
53	10141974	1	CRANKSHAFT ADD-ON PARTS ⇨ ❑ 157	KURBELWELLENANBAUTEILE
60	11348072	4	CONROD R-MOTORX88 ⇨ ❑ 158	PLEUELSTANGE
70	10146367	4	PISTON CPL. R-MOTORX130 ⇨ ❑ 159	KOLBEN KPL.
80	10149580	4	CYLINDER HEAD ASSEMBLY R-MOTOR ⇨ ❑ 160	ZYLINDERKOPF ANBAU
81	10148438	4	ROCKER ARM BRACKET CPL. NEIN ⇨ ❑ 164	KIPPHEBELBOCK KPL.
82	11358036	1	CYLINDER HEAD COVER ASSEMBLY ⇨ ❑ 167	ZYLINDERKOPFDECKEL ANBAU
90	10120186	1	BALANCER ASSEMBLY ⇨ ❑ 168	MASSENAUSGLEICH ANBAU
100	10147787	1	CAMSHAFT CPL. R-MOTORXD934/D94 ⇨ ❑ 170	NOCKENWELLE KPL.
110	9079870	4	CONTROL PARTS ⇨ ❑ 172	STEUERUNGSTEILE
130	10129475	1	OIL COOLER ASSEMBLY ⇨ ❑ 173	OELKUEHLER ANBAU
140	10148432	1	LUBE OIL PUMP WITH FASTENING B=50 ⇨ ❑ 177	SCHMIEROELPUMPE MIT BEFE
150	10142942	1	LUBE OIL FILTER ASSEMBLY ⇨ ❑ 178	SCHMIEROELFILTER ANBAU
171	10150741	1	HIGH PRESSURE PUMP W.FASTENING R-M ⇨ ❑ 181	HOCHDRUCKPUMPE MIT BEFE

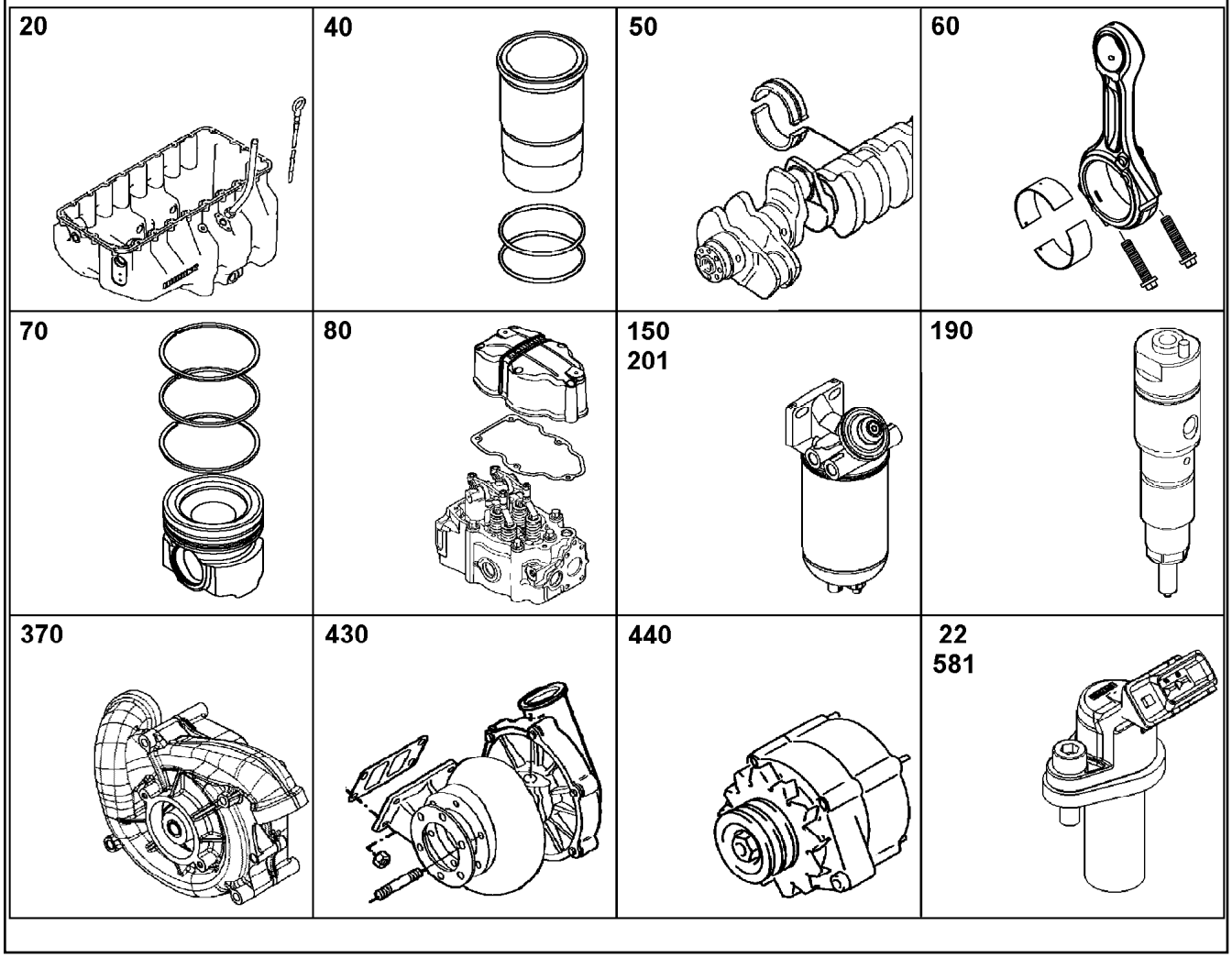

Pos.	Item	Quantity	Description	Bezeichnung
180	11407917	1	DRIVE FOR HIGH PRESSURE PUMP	ANTRIEB FUER HOCHDRUCKPU
190	10152867	4	INJECTOR WITH FASTENING LI2.7-20-SF-95 ⇨ ❑ 184	INJEKTOR MIT BEFEST.
191	10153151	4	HIGH PRESS.CONNECTOR W.FASTEN. ⇨ ❑ 189	DRUCKROHRSTUTZEN MIT BE
201	10146791	1	FUEL FINE-FILTER ASSEMBLY ⇨ ❑ 192	KRAFTSTOFF-FEINFILTERANBA
212	10143341	1	FUEL LINES ⇨ ❑ 196	KRAFTSTOFFLEITUNGEN
214	10143342	1	LEAK OIL RETURN LINE ⇨ ❑ 198	LECKOELRUECKLAUF
215	10143825	1	INJECTION LINES R-MOTORXD934 ⇨ ❑ 199	EINSPRITZLEITUNGEN
220	10147365	1	AIR INTAKE PIPE ASS. R-MOTORXD934/D94 ⇨ ❑ 200	LUFTANSAUGROHR ANBAU
221	10145173	1	INTAKE STACK ASSEMBLY R-MOTORXD93 ⇨ ❑ 201	ANSAUGSTUTZEN ANBAU
224	10147364	1	AIR INTAKE ASSEMBLY R-MOTORXD934/D9 ⇨ ❑ 202	LUFTANSAUGUNG ANBAU
230	10149677	1	CONNECTING LINE ADD-ON R-MOTOR ⇨ ❑ 203	VERBINDUNGSLEITUNG ANBAU
260	9078314	1	HEATING FLANGE ADD-ON ⇨ ❑ 204	HEIZFLANSCH ANBAU
330	10127566	1	INSTALLATION BRAKE COMPRESSOR 293 ⇨ ❑ 206	LUFTPRESSER ANBAU

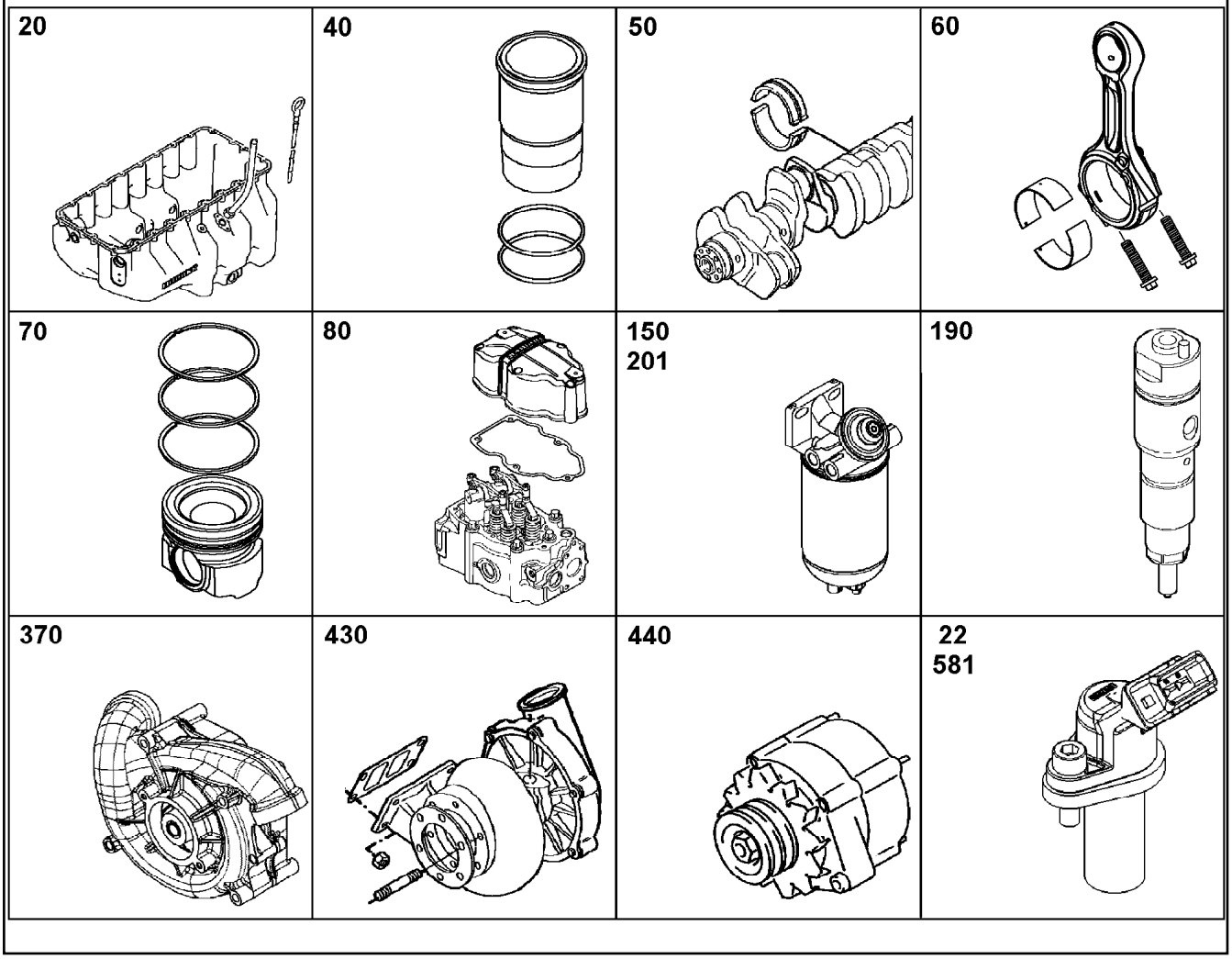

Pos.	Item	Quantity	Description	Bezeichnung
331	9072906	1	INTERMEDIATE GEAR CPL. ⇨ ❑ 210	ZWISCHENRAD KPL.
333	10145176	1	PIPELINE INSTALLATION ⇨ ❑ 211	ROHRLEITUNG ANBAU
334	10145278	1	ACCESSORIES AIR COMPRESSOR ⇨ ❑ 212	ANBAUTEILE LUFTPRESSER
340	12418347	1	AIR COND. COMPRESSOR ADD-ON ⇨ ❑ 213	KLIMAKOMPRESSOR ANBAU
370	10142733	1	WATER PUMP WITH FASTENING R-MOTOR ⇨ ❑ 215	WASSERPUMPE MIT BEFEST.
380	10148215	1	THERMOSTAT HOUSING ASSEMBLY ⇨ ❑ 216	THERMOSTATGEHAEUSE ANBA
381	10148216	1	PIPELINE INSTALLATION ⇨ ❑ 217	ROHRLEITUNG ANBAU
382	10142742	1	COOLANT PIPE BEND ADD-ON ⇨ ❑ 218	KUEHLMITTELKRUEMMER ANBA
387	10142744	1	COOLING WATER AIR BLEEDING ⇨ ❑ 219	KUEHLWASSERENTLUEFTUNG
410	10140087	1	EXHAUST PIPE ASSEMBLY R-MOTOR D934 ⇨ ❑ 220	ABGASROHR ANBAU
415	10144756	1	HEAT PROTECTION W.FASTENING ⇨ ❑ 221	HITZESCHUTZ MIT BEFESTIGUN
430	10140729	1	EXHAUST TC MOUNTING HE300 ⇨ ❑ 222	ATL-ANBAU
432	12512627	1	EXHAUST NOZZLE ATTACHMENT R-MOTOR ⇨ ❑ 223	ABGASSTUTZEN ANBAU

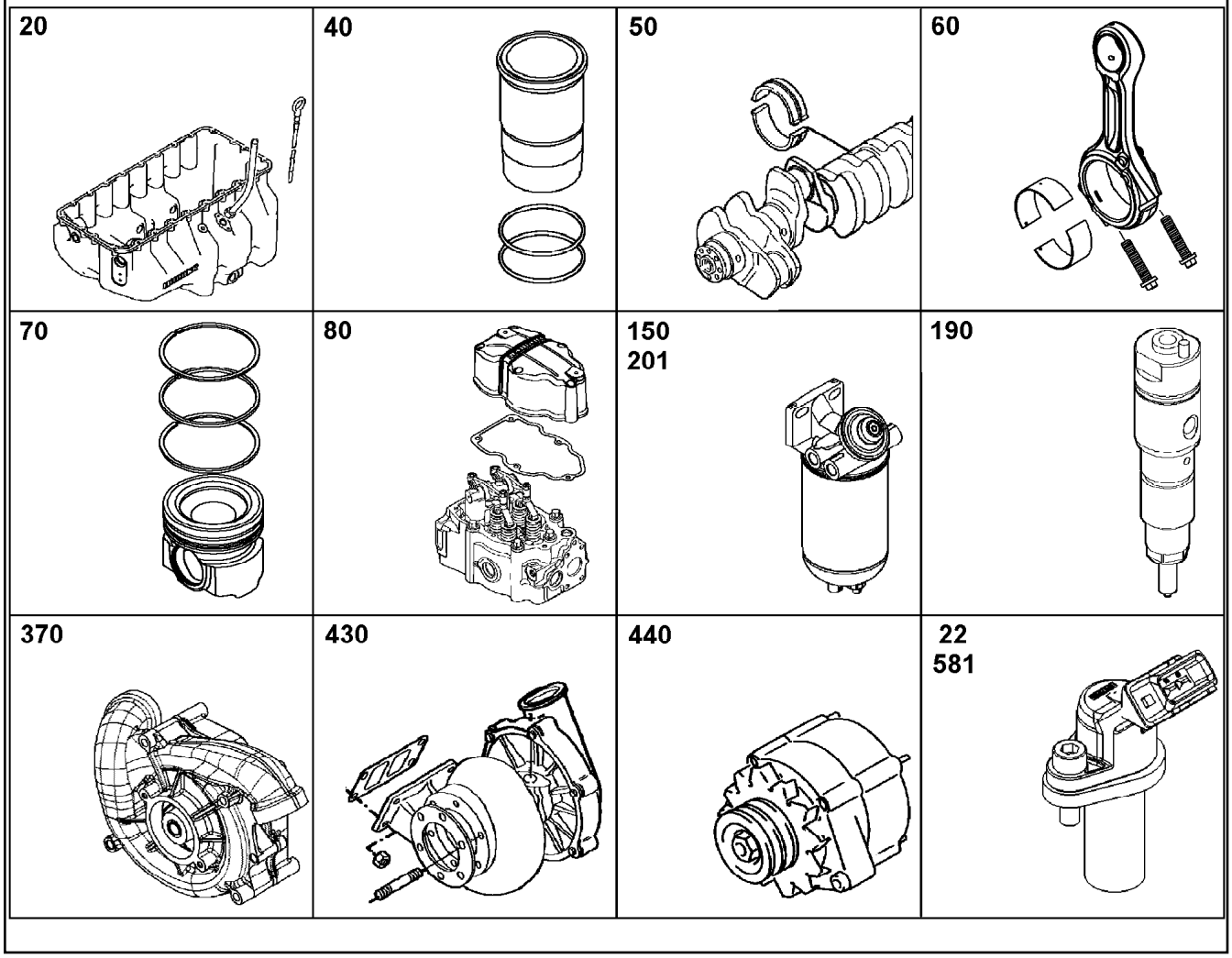

Pos.	Item	Quantity	Description	Bezeichnung
436	11420633	1	CYCLE VALVE 3.4BAR 8L/MIN 6m ⇨ ❑ 224	TAKTVENTIL
440	10142863	1	GENERATOR, PRE-ASSEMBLED 4.32KW 24 ⇨ ❑ 225	GENERATOR VORM.
450	10115539	1	STARTER ASSEMBLY 7.8KW 24V ⇨ ❑ 226	STARTER ANBAU
452	10115664	1	LOCKING PIECES ⇨ ❑ 229	VERSCHLUSSTEILE
480	9079823	1	TRANSPORT DEVICE ATTACHEMENT ⇨ ❑ 230	TRANSPORTVORRICHTUNG AN
481	10142864	1	TRANSPORT DEVICE ATTACHEMENT ⇨ ❑ 231	TRANSPORTVORRICHTUNG AN
520	10115829	1	FLYWHEEL HOUSING ASSEMBLY SAE 1 ⇨ ❑ 232	SCHWUNGRADGEHAEUSE AN
521	10116110	1	LOCKING PIECES ⇨ ❑ 233	VERSCHLUSSTEILE
524	10128439	1	LOCKING PIECES ⇨ ❑ 234	VERSCHLUSSTEILE
526	10127979	1	LOCKING PIECES ⇨ ❑ 235	VERSCHLUSSTEILE
530	9077238	1	FLYWHEEL ASSEMBLY SAE 1X1,68 ⇨ ❑ 236	SCHWUNGRAD ANBAU
570	13470818	1	MOTOR CONTROL DEVICE ECU2	MOTORSTEUERGERAET
571	10144227	1	CONTROL BOX ANNEXE ⇨ ❑ 237	STEUERGERAET ANBAU

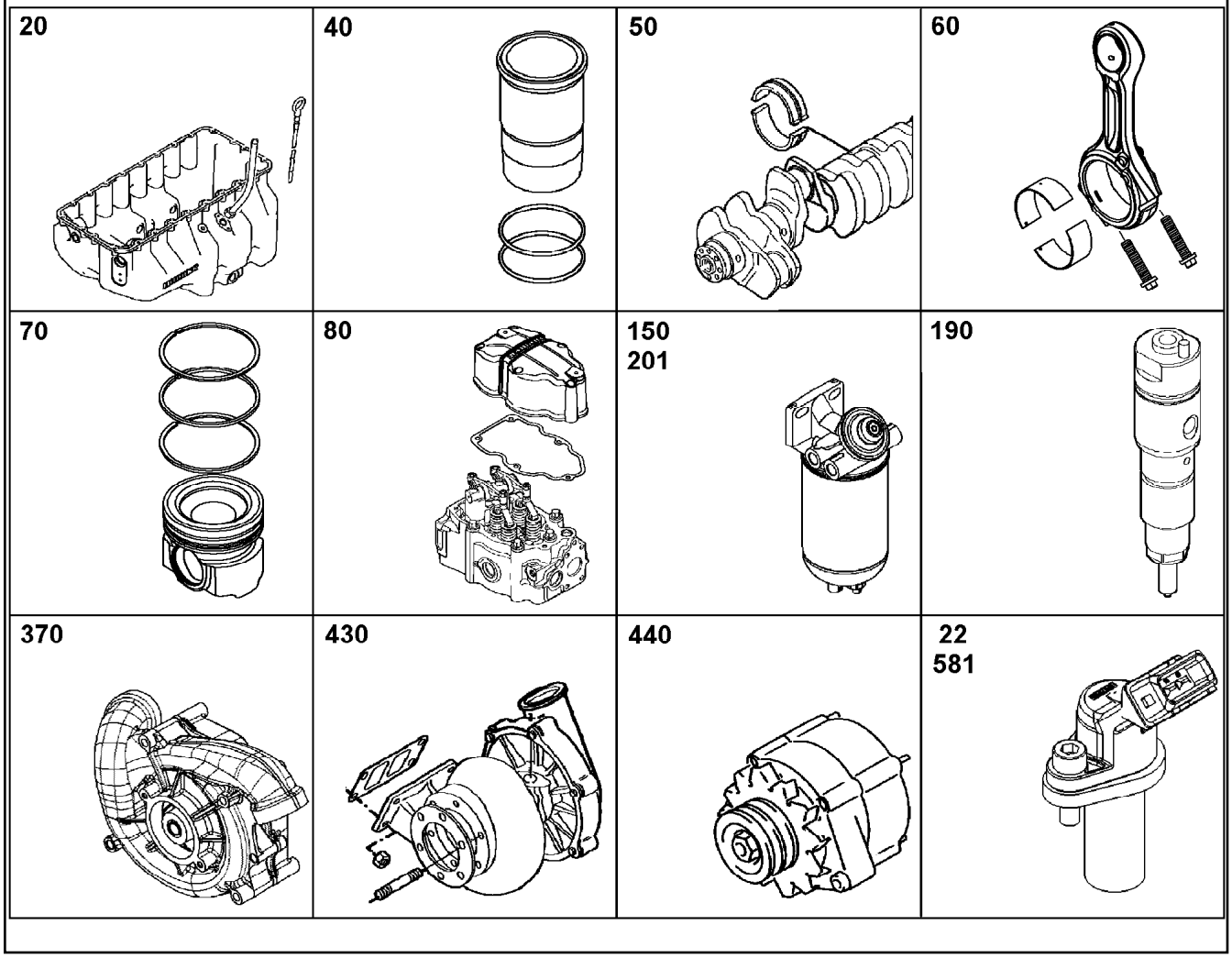

Pos.	Item	Quantity	Description	Bezeichnung
580	10151328	1	CABLE HARNESS MOUNTING ⇨ ❑ 239	KABELBAUM ANBAU
581	12583633	1	ENGINE CONTROL SENSORS D936 A7 ⇨ ❑ 243	MOTORREGELUNGSENSORIK
630	10142747	1	LOCKING PIECES ⇨ ❑ 245	VERSCHLUSSTEILE
650	9078249	1	LOCKING PIECES ⇨ ❑ 246	VERSCHLUSSTEILE
652	10144027	1	LOCKING PIECES ⇨ ❑ 247	VERSCHLUSSTEILE
654	9078961	1	POWER TAKE-OFF ADD-ON ⇨ ❑ 248	NEBENABTRIEB ANBAU
939	10148366	1	SEAL KIT DIESEL ENGINE D944 A7-04 ⇨ ❑ 250	DS DIESELMOTOR

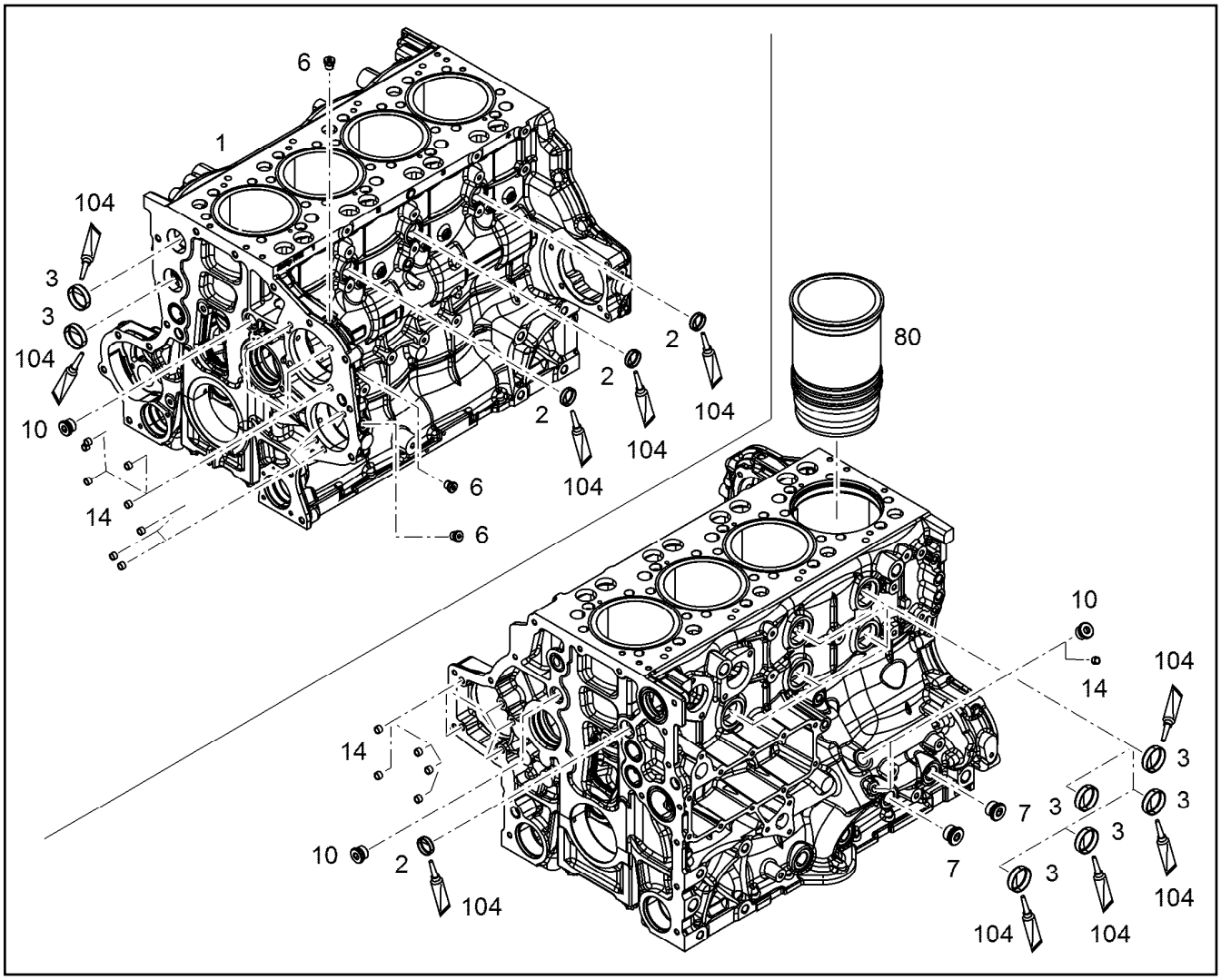

Pos.	Item	Quantity	Description	Bezeichnung
1	10154379	1	CRANKCASE PRE-ASSY. R-MOTORXD944 ⇨ ❑ 137	KURBELGEHAEUSE VORM.
2	12209779	4	END COVER DIN 443 B 480H	VERSCHLUSSDECKEL
3	12209783	7	END COVER DIN 443 B 480H	VERSCHLUSSDECKEL
6	7380566	3	SCREW PLUG VSTI M14X1,5	VERSCHLUSSSCHRAUBE
7	7381457	2	SCREW PLUG VSTI M26X1,5 CR6-FREI	VERSCHLUSSSCHRAUBE
10	7380177	3	SCREW PLUG VSTI M22X1,5 CR6-FREI	VERSCHLUSSSCHRAUBE
14	10030837	14	SEALING PLUG LK 950	DICHTSTOPFEN
80	10154458	4	CYLINDER R-MOTORXD944/D94 ⇨ ❑ 138	ZYLINDER
104	8655032	1	GLUE 10ML FLASCHE -50/+175 °C	KLEBSTOFF

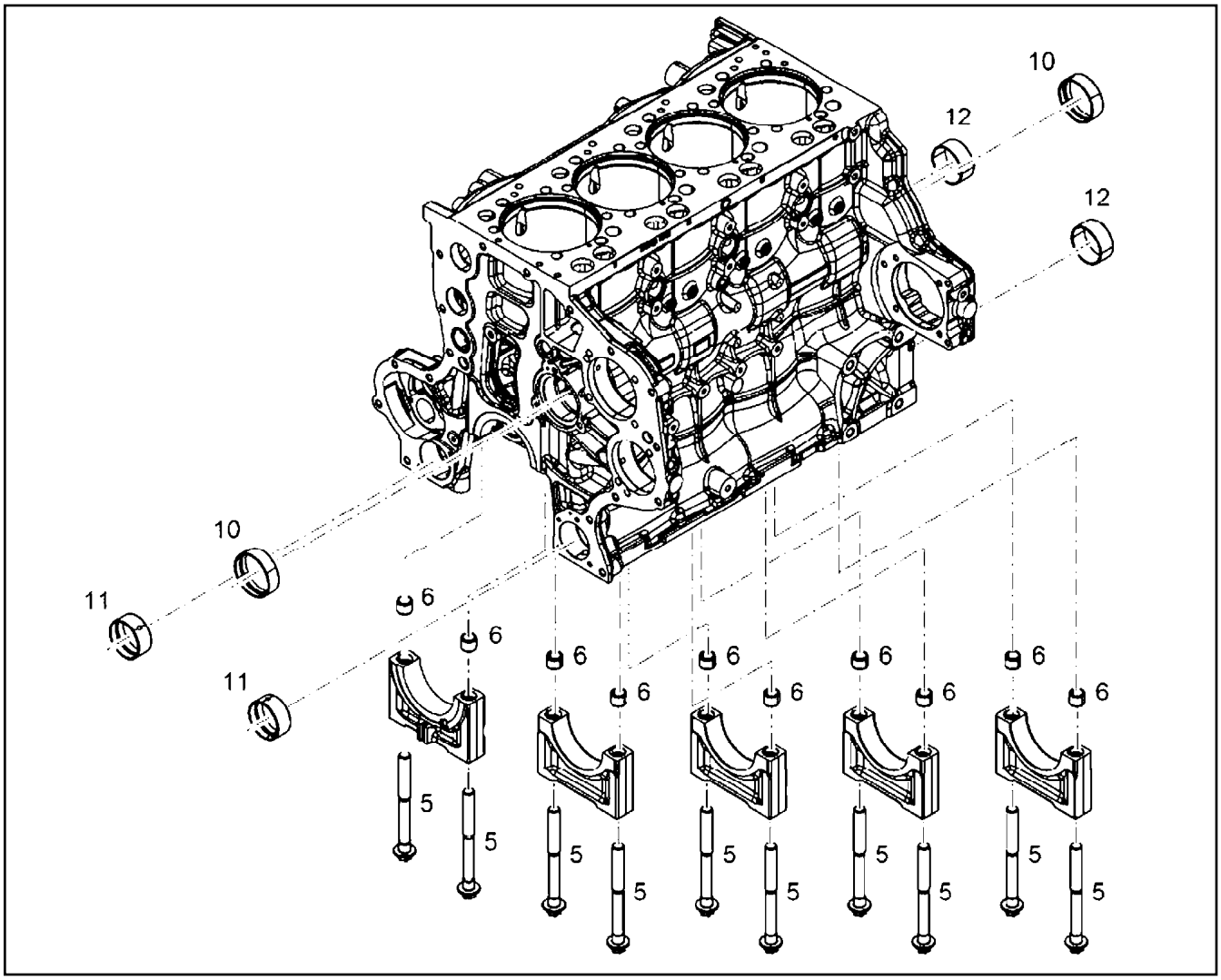

Pos.	Item	Quantity	Description	Bezeichnung
5	10130816	10	HEXALOBULAR HEAD SCREW M18X2X181	SECHSRUNDSCHRAUBE
6	9177636	10	TIGHT FIT SLEEVE 15,5X19,5X24	PASSHUELSE
10	9274859	5	CAMSHAFT BUSHING 70,912X75,112X23	NOCKENWELLENBUCHSE
11	9132281	2	CAMSHAFT BUSHING 60,897X65,097X28	NOCKENWELLENBUCHSE
12	9888259	6	BEARING BUSH 60X65X28 GLYCO 48	LAGERBUCHSE

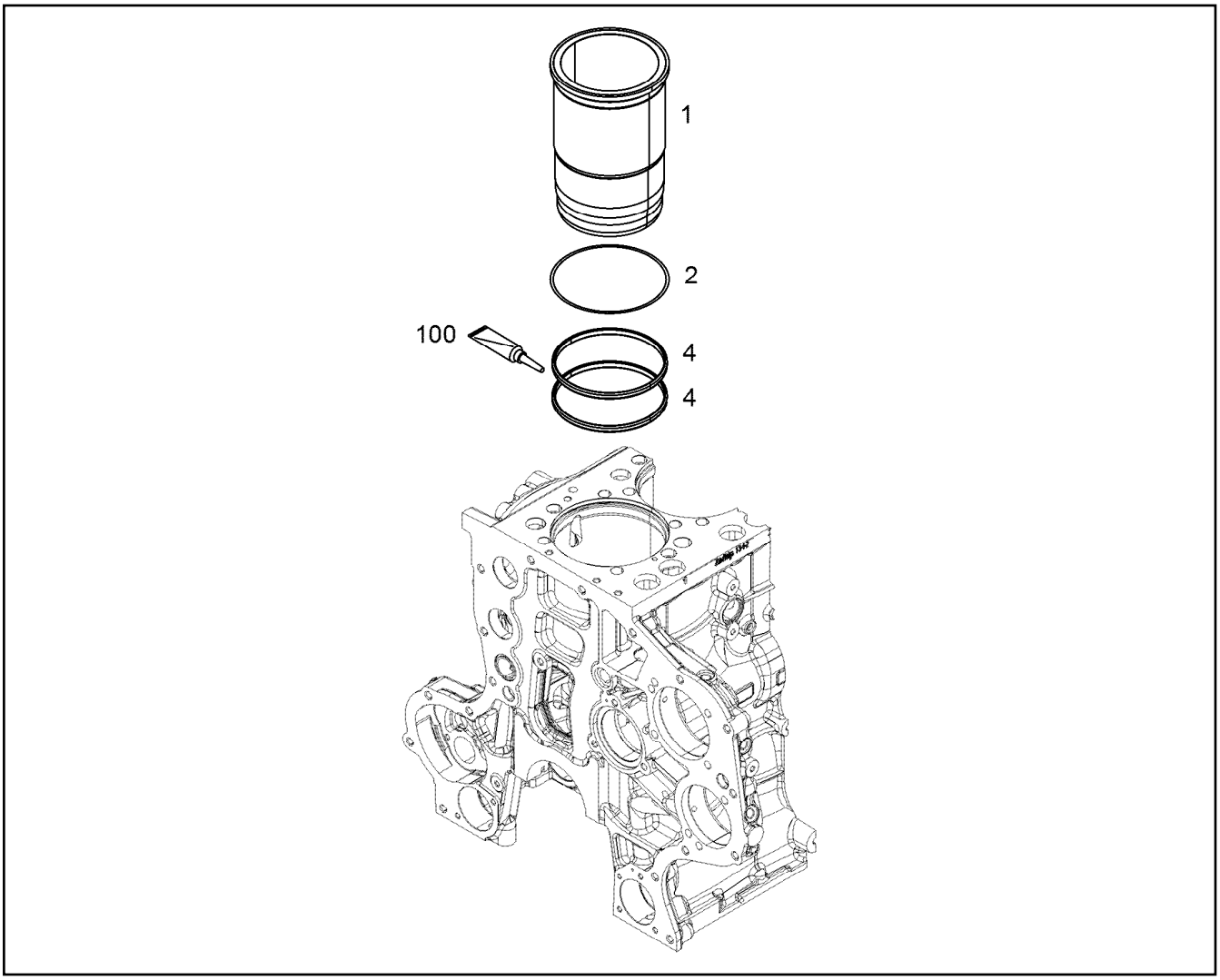

Pos.	Item	Quantity	Description	Bezeichnung
1	10153973	1	CYLINDER BUSHING R-MOTORXD944/D94 E	ZYLINDERBUCHSE
1	12898375	1	CYLINDER BUSHING R-MOTORXD944/D94 E	ZYLINDERBUCHSE
2	10154459	1	SHEET GASKET 150X158X0,10 CuZn30	DICHTSCHEIBE
2	12993450	1	REP-SHEET GASKET 151,6X157,3X0,12 AISI	REP-DICHTSCHEIBE
4	10282774	2	O-RING 145 FKM 75-17939	O-RING
100	10285708	1	GREASE NBU 30 1KG DOSE	FETT
(10)	10282622	1	GREASE STABURAGS NBU 30 0.010KG	FETT

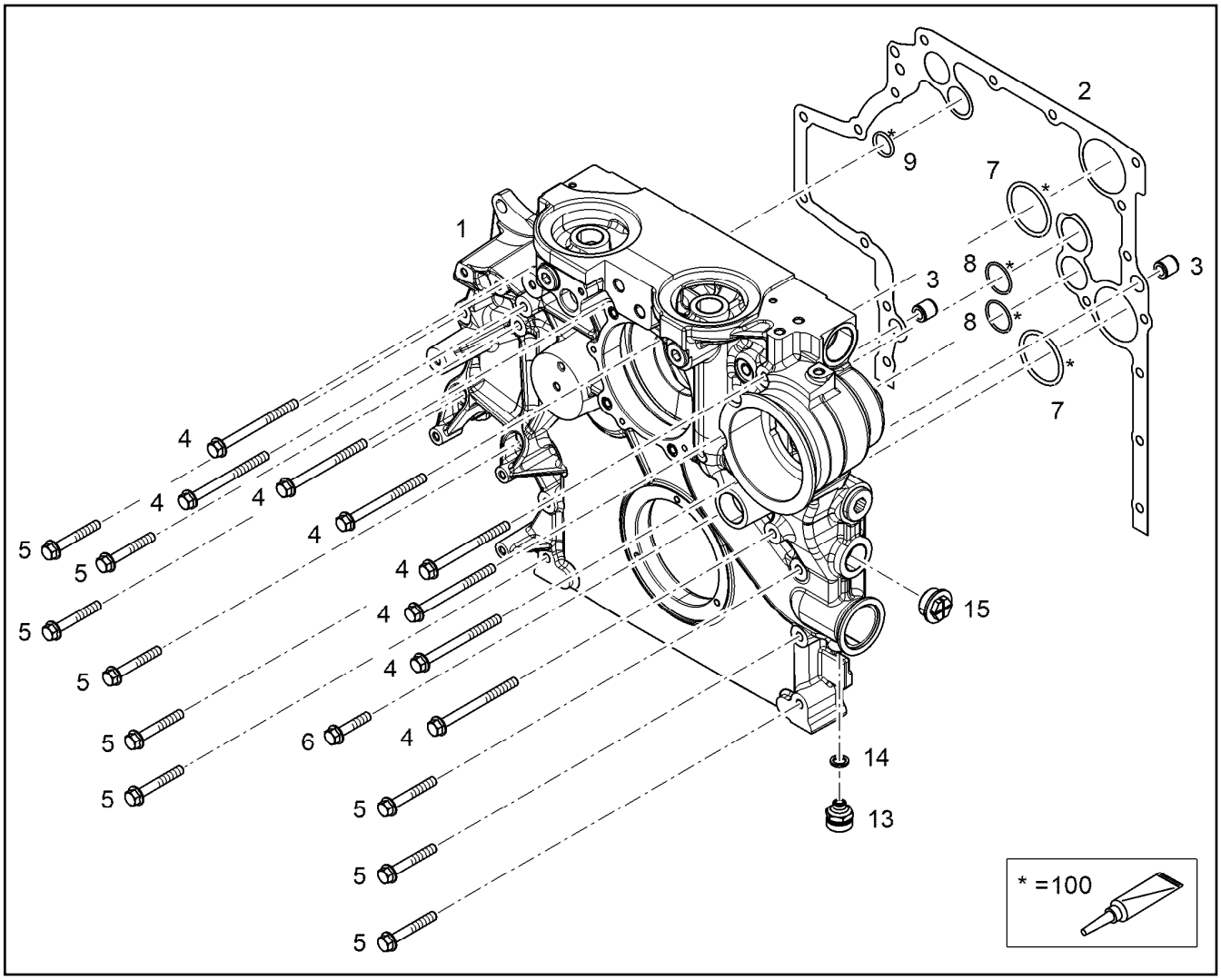

Pos.	Item	Quantity	Description	Bezeichnung
1	13782803	1	AGGREGATE SUPPORT PRE-ASS. R-MOT ⇨ ❑ 140	AGGREGATETRAEGER VORM.
2	10126738	1	SEAL 0,33 METALOSEAL 1	DICHTUNG
3	10134348	2	TIGHT FIT SLEEVE 12X20X20 100Cr6	PASSHUELSE
4	12207562	8	HEX SCREW EN 1665 M10X120 10.9 FLZN	SECHSKANTSCHRAUBE
5	10299589	9	HEX SCREW EN 1665 M10X70 10.9 FLZN	SECHSKANTSCHRAUBE
6	10299585	1	HEX SCREW EN 1665 M10X50 10.9 FLZN	SECHSKANTSCHRAUBE
7	7381779	2	O-RING 59,92X3,53 HNBR 70	O-RING
8	7380653	2	O-RING ISO 3601-1 34,59X2,62 FKM 90 A,BK	O-RING
9	10004261	1	O-RING AEHNL.ISO 3601-1 26X3 HNBR 70	O-RING
13	10011832	1	VALVE	VENTIL
14	7381225	1	SEALING RING DIN 7603 A14X20X2,5 Cu	DICHTRING
15	10465711	2	SEALING PLUG GPN 735 M33X2 PA 6	DICHTSTOPFEN
15	13687089	1	SEALING PLUG GPN 738 M33X2 PA 6	DICHTSTOPFEN
100	10285708	1	GREASE NBU 30 1KG DOSE	FETT

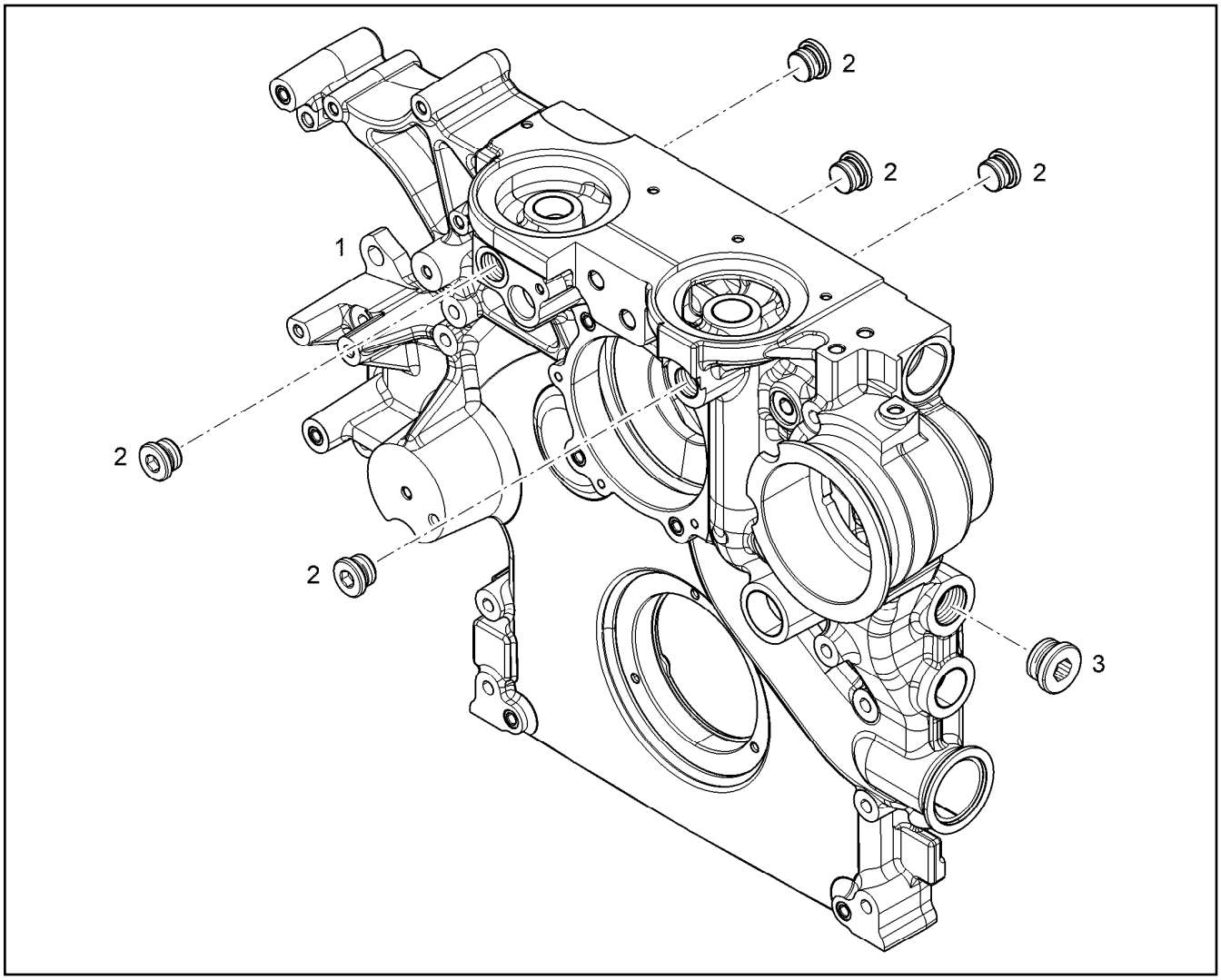

Pos.	Item	Quantity	Description	Bezeichnung
1	12542812	1	AGGREGATE SUPPORT PRE-ASS. R-MOT	AGGREGATETRAEGER VORM.
2	10041903	5	SCREW PLUG VSTI M24X1,5	VERSCHLUSSSCHRAUBE
3	10137121	1	SCREW PLUG VSTI M33X2 11SMnPb30 CR6	VERSCHLUSSSCHRAUBE

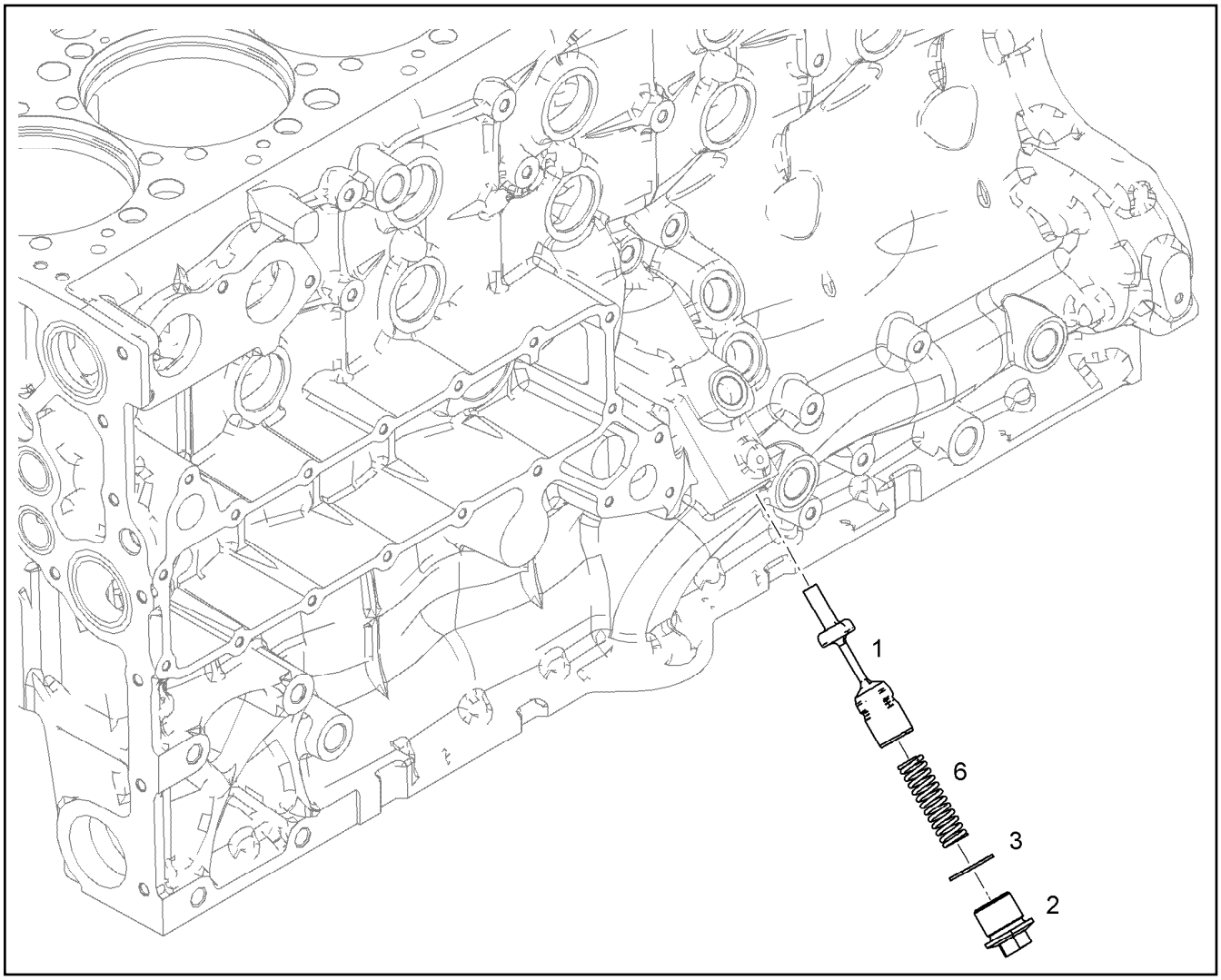

Pos.	Item	Quantity	Description	Bezeichnung
1	10149655	1	PISTON 31CrMoV9	KOLBEN
2	10137918	1	SCREW PLUG M30X1,5 11SMnPb30+C VER	VERSCHLUSSSCHRAUBE
3	710106508	1	SEALING RING DIN 7603 A30X36X2 CU	DICHTRING
6	11118160	1	COMPRESSION SPRING 3X17X74,67 OTEVA	DRUCKFEDER

Pos.	Item	Quantity	Description	Bezeichnung
1	10151634	1	PISTON COOLING PRE-ASS.	KOLBENKUEHLUNG VORM.

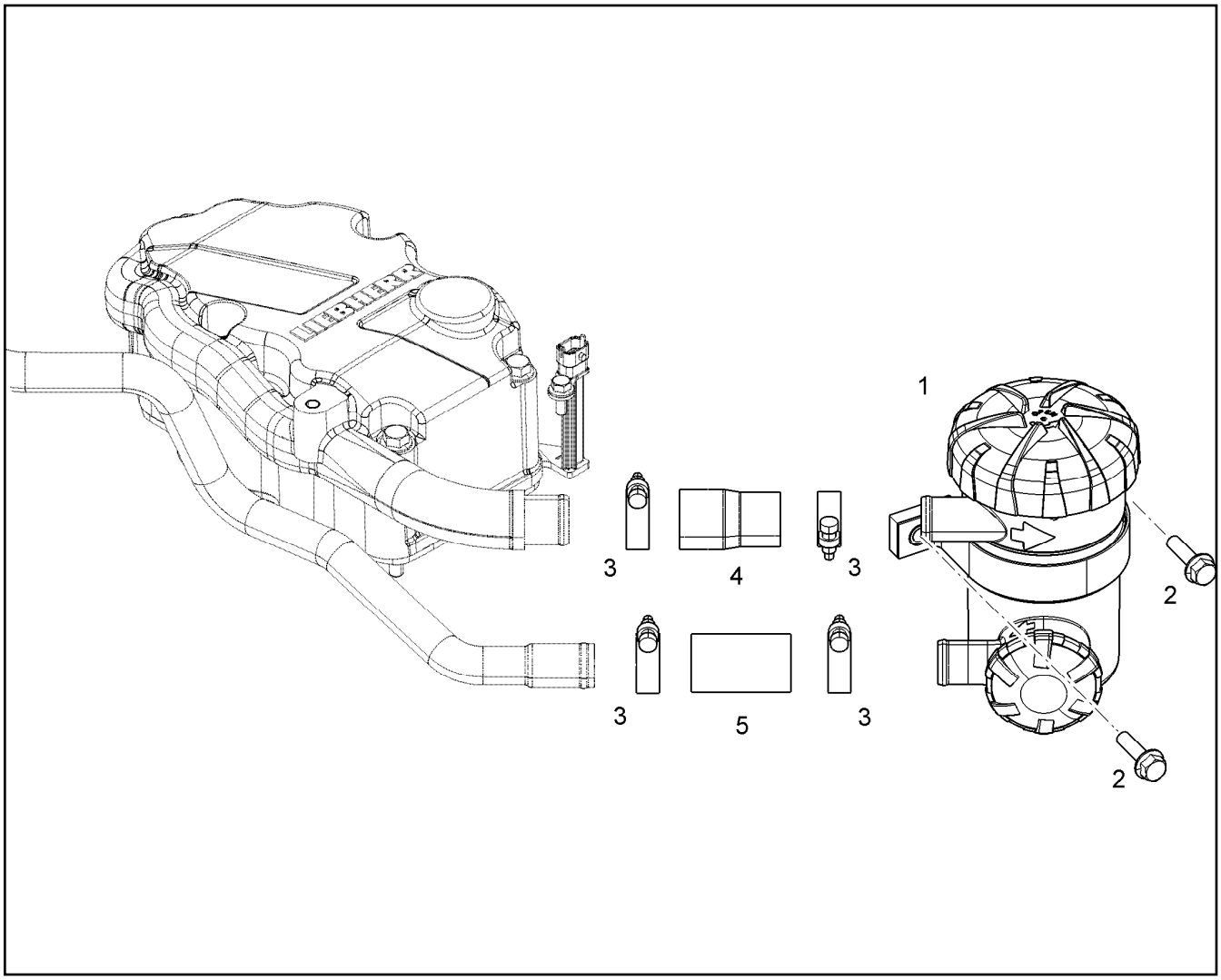

Pos.	Item	Quantity	Description	Bezeichnung
1	12886223	1	CRANKCASE BREATHER	KURBELGEHAEUSEENTLUEFT
(1)	12886224	1	SPARE ELEMENT OEL	ERSATZELEMENT
2	11826563	2	HEX SCREW EN 1665 M8X30 8.8 480H	SECHSKANTSCHRAUBE
3	774215008	1	HOSE CLAMP 26/20-32/12 W3	SCHLAUCHSCHELLE
4	10126417	1	RUBBER CONNECTION Rubber	GUMMIMUFFE
5	9271340	1	RUBBER CONNECTION 25X33X56L.	GUMMIMUFFE

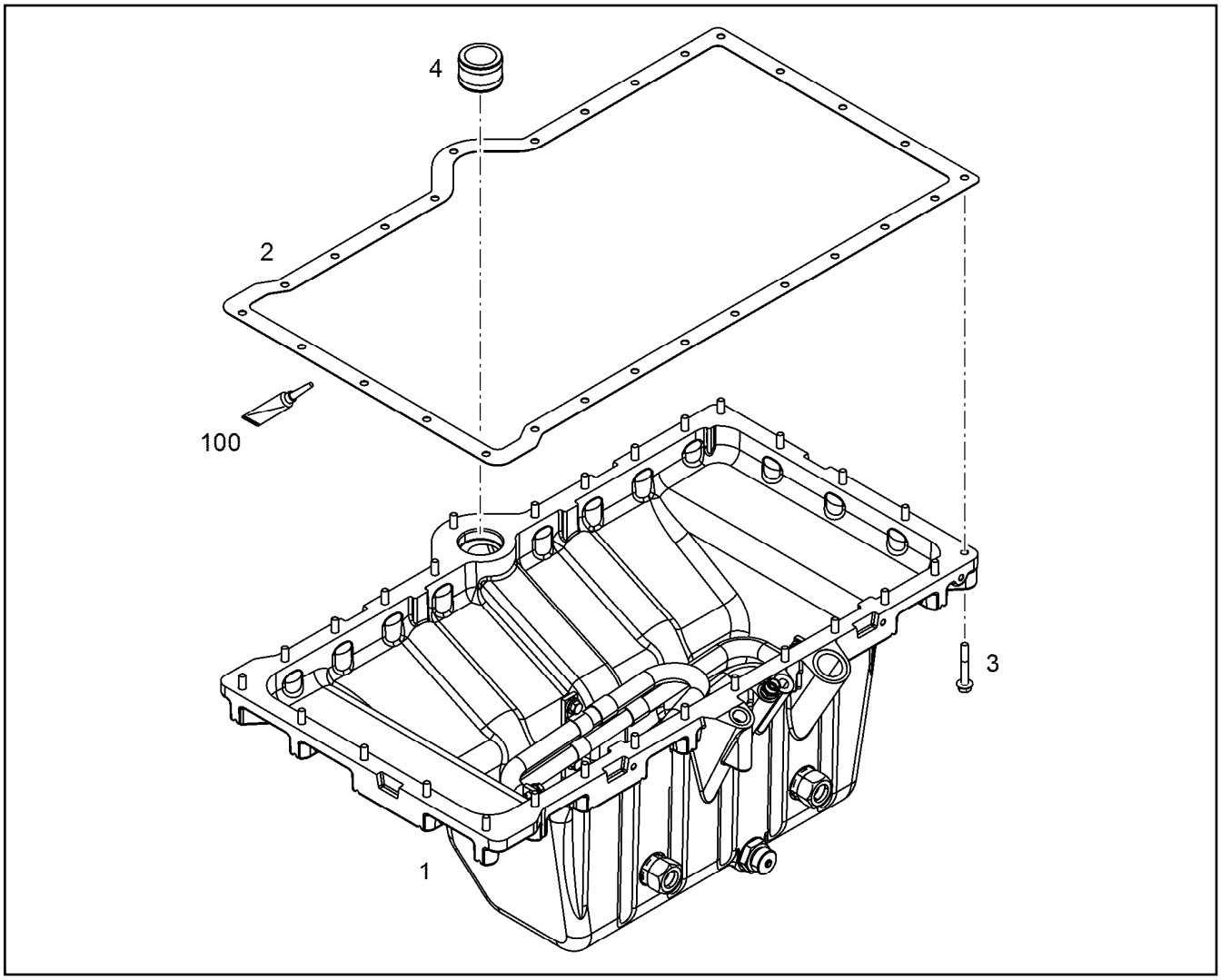

Pos.	Item	Quantity	Description	Bezeichnung
1	10133837	1	OIL SUMP PRE-ASS. R-MOTOR/D934 ⇨ ❑ 145	OELWANNE VORM.
2	10128516	1	SEAL AFM 30	DICHTUNG
3	12210060	28	HEX SCREW EN 1665 M8X55 8.8 480H	SECHSKANTSCHRAUBE
4	10121667	1	CONNECTING PIECE W.O-RING ⇨ ❑ 148	VERBINDUNGSSTUECK M.O-RIN
100	10354595	1	SURFACE SEALING 300ML KARTUSCHE BI	FLAECHENDICHTUNG

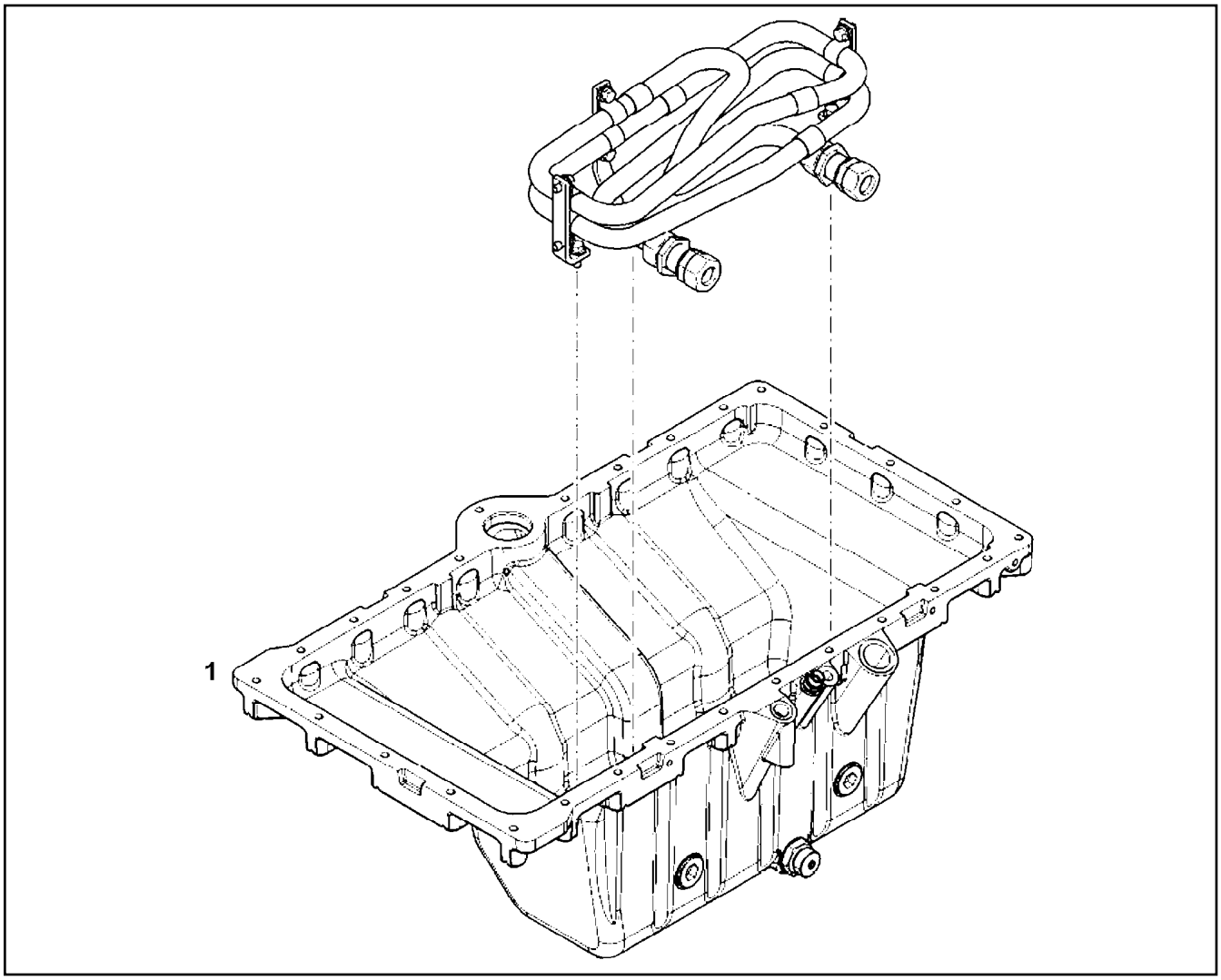

Pos.	Item	Quantity	Description	Bezeichnung
1	10155227	1	OIL SUMP PRE-ASS. R-MOTOR ⇨ ❑ 146	OELWANNE VORM.

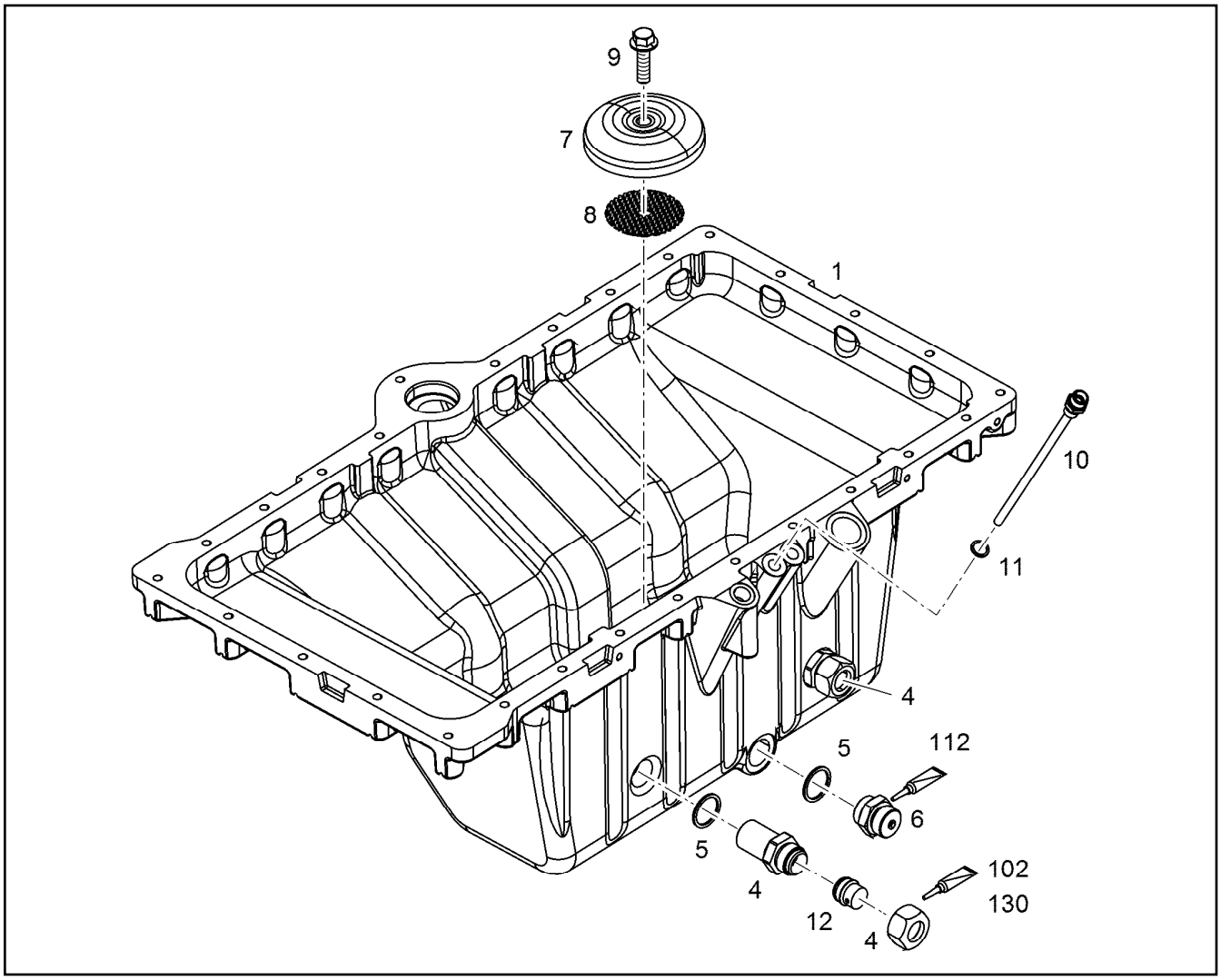

Pos.	Item	Quantity	Description	Bezeichnung
5	710106508	3	SEALING RING DIN 7603 A30X36X2 CU	DICHTRING
6	5004624	1	OIL DRAIN PLUG M 30 1,5 ⇨ ❑ 147	OELABLASSSCHRAUBE
7	10115832	1	COVER LID 112,7 PPA	ABDECKKAPPE
8	9080377	1	PERFORATED PLATE 75X75	LOCHBLECH
9	11656452	1	HEX SCREW EN 1665 M12X45 8.8 FLZN SPF	SECHSKANTSCHRAUBE
10	9080660	1	TUBE 8X1X222	ROHR
11	710102508	1	SEALING RING DIN 7603 A14X18X1,5 CU	DICHTRING
12	4772028	2	TAPER COLLET VKA 22L CR6-FREI	VERSCHLUSSKEGEL
102	811208001	1	THREAD LOCK 50ML FLASCHE	GEWINDESICHERUNG
112	8627609	1	SEALANT 90G TUBE	DICHTUNGSMITTEL

Pos.	Item	Quantity	Description	Bezeichnung
2	7011131	1	SEAL	DICHTUNG
3	7013456	1	PROTECTING CAP M26X1,5	SCHUTZKAPPE

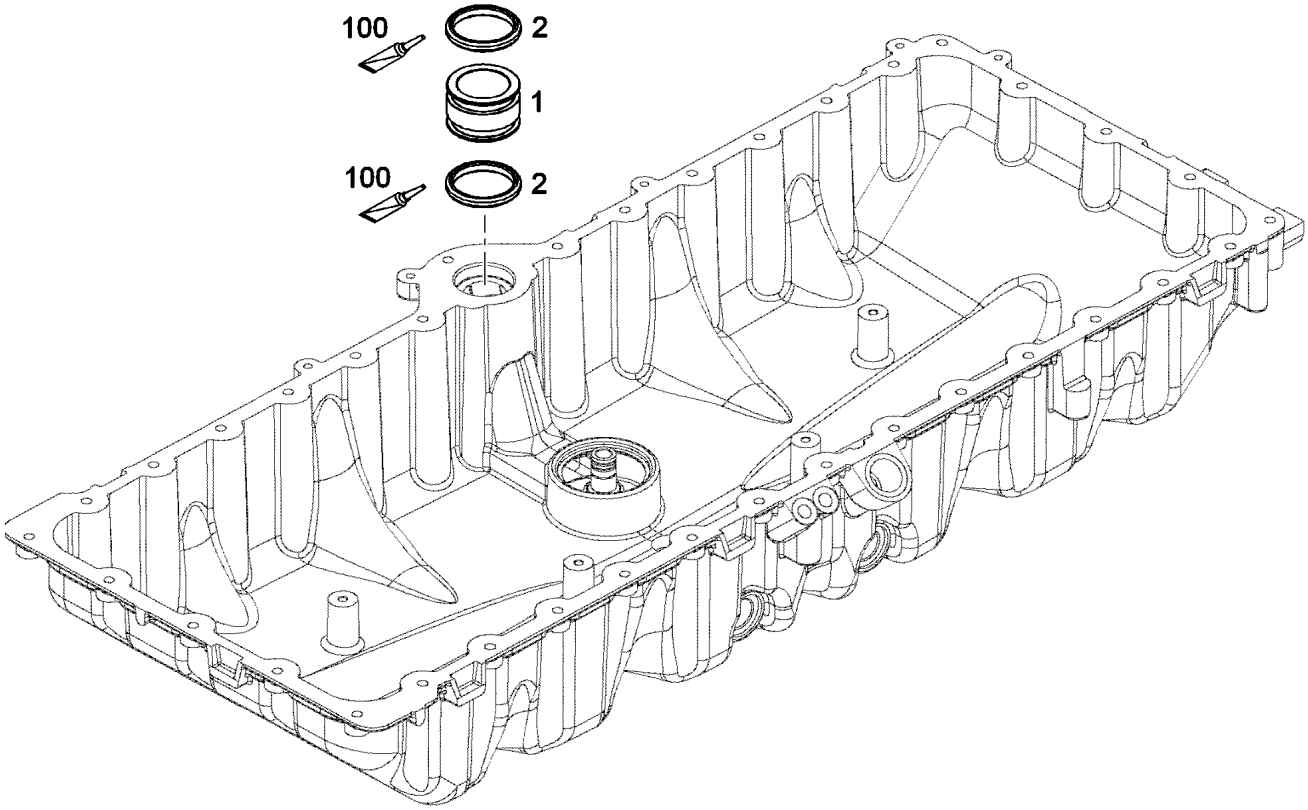

Pos.	Item	Quantity	Description	Bezeichnung
1	10121666	1	CONNECTING PIECE Al Rm>=200MP	VERBINDUNGSSTUECK
2	7381566	2	O-RING 40,64X5,33 FKM 70	O-RING
100	10285708	1	GREASE NBU 30 1KG DOSE	FETT

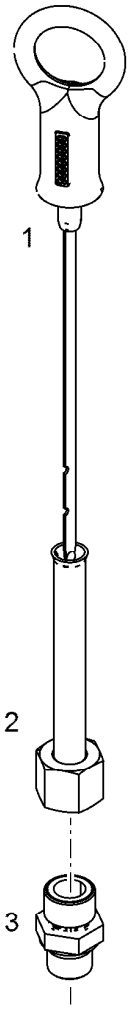

Pos.	Item	Quantity	Description	Bezeichnung
1	10150935	1	OIL DIPSTICK	OELMESSSTAB MIT RING
2	9079532	1	GUIDING PIPE 10X1X90	FUEHRUNGSROHR
3	4981235	1	FITTING ISO 8434-1 GE 10L M14X1,5 CR6-F	VERSCHRAUBUNG

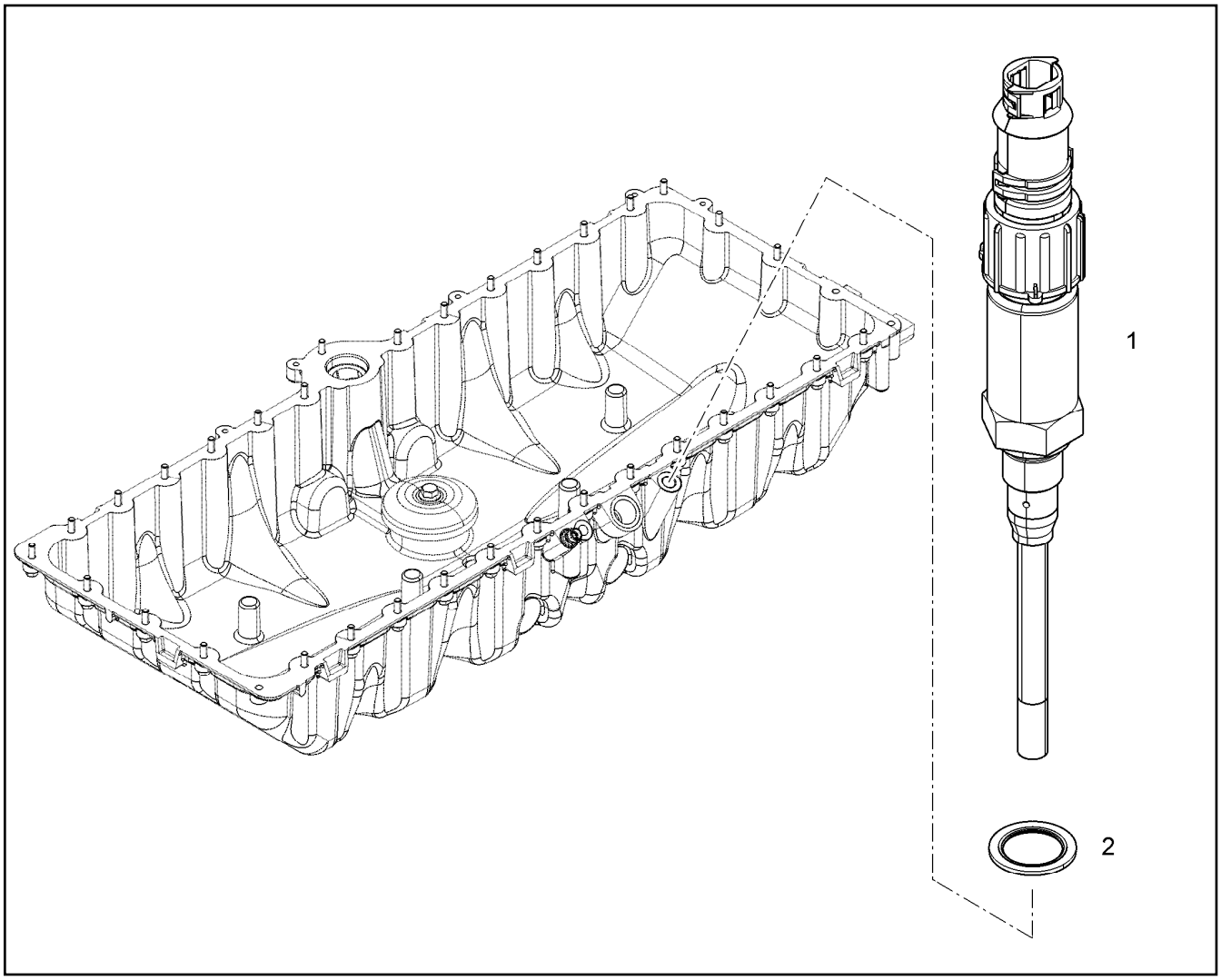

Pos.	Item	Quantity	Description	Bezeichnung
1	10816943	1	LEVEL SENSOR L=115 24V	NIVEAUGEBER
2	10011868	1	SEALING RING 18,7X26X1,5 St/FPM1-80	DICHTRING

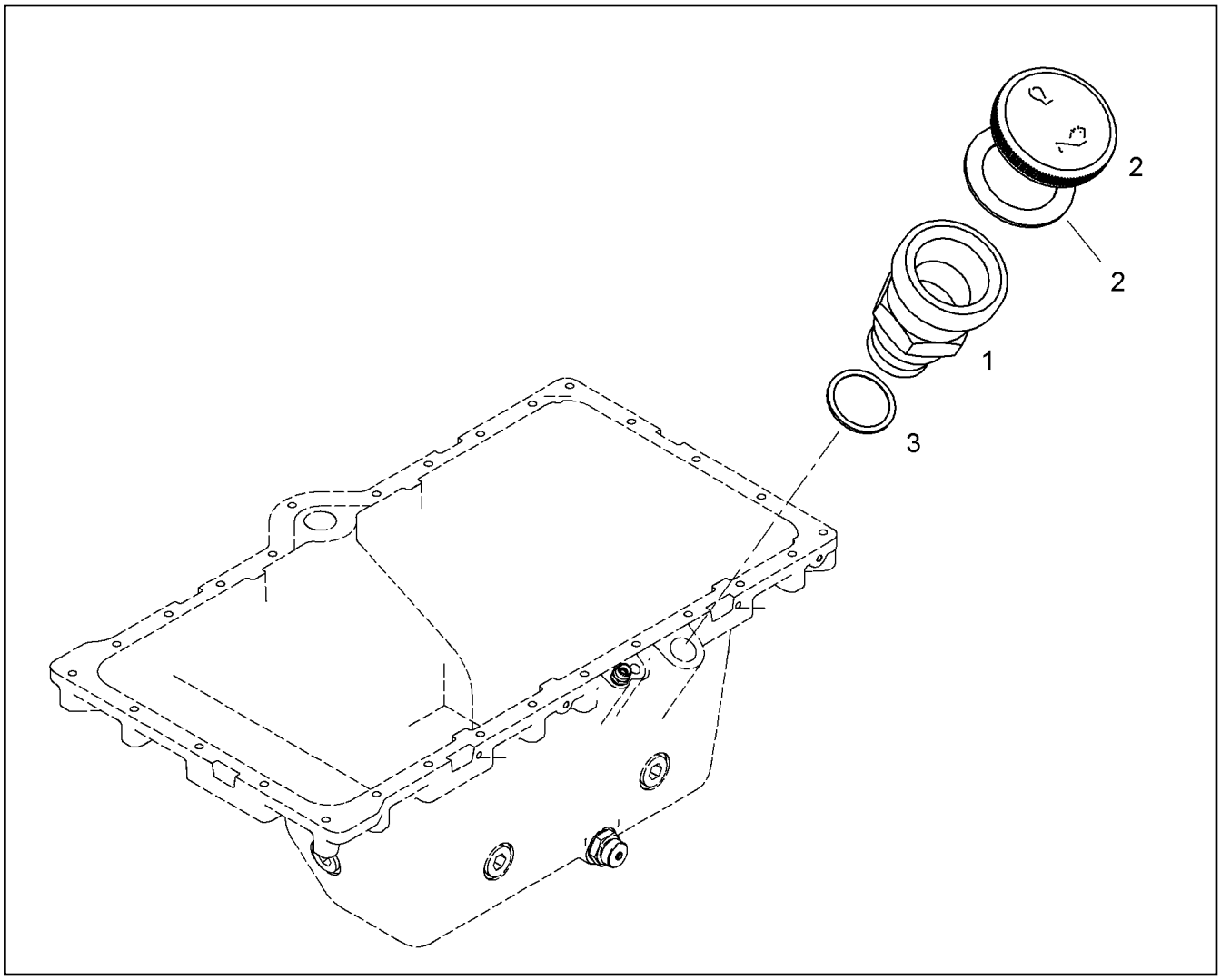

Pos.	Item	Quantity	Description	Bezeichnung
1	10118838	1	FILLER NECK CPL.	EINFUELLSTUTZEN KPL.
2	9144757	1	END COVER 60	VERSCHLUSSDECKEL
(3)	9144762	1	SEAL	DICHTUNG
3	10335629	1	PROFILE PACKING DIN 3869 33X29,7 FKM	PROFILDICHTRING

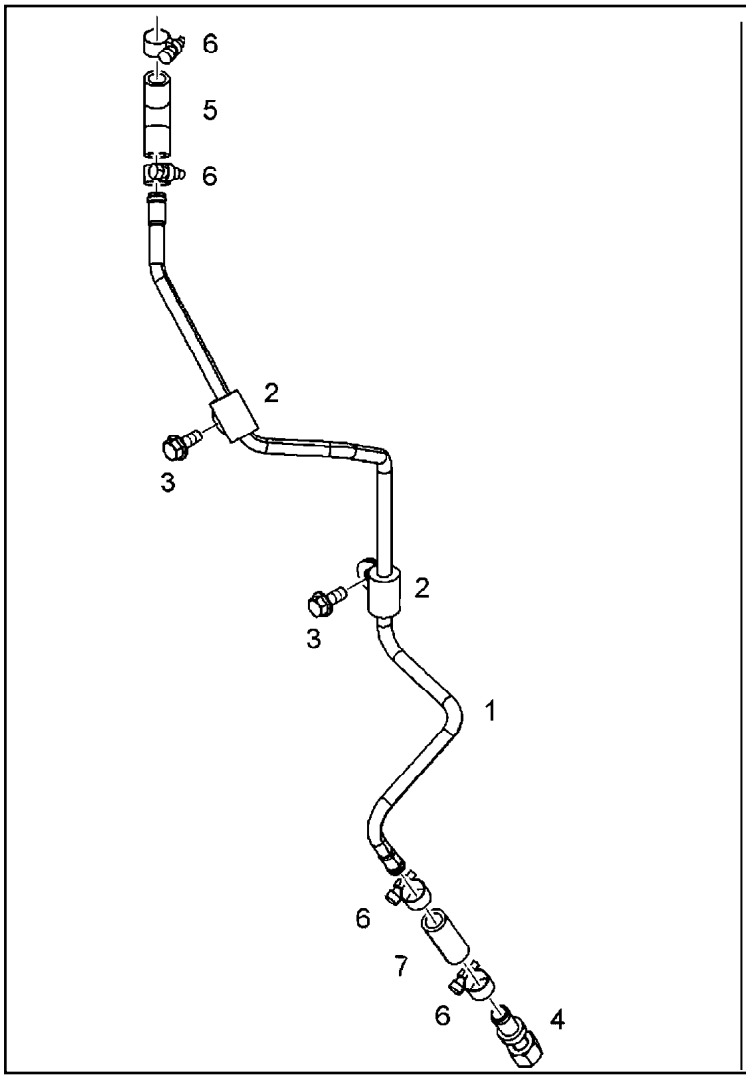

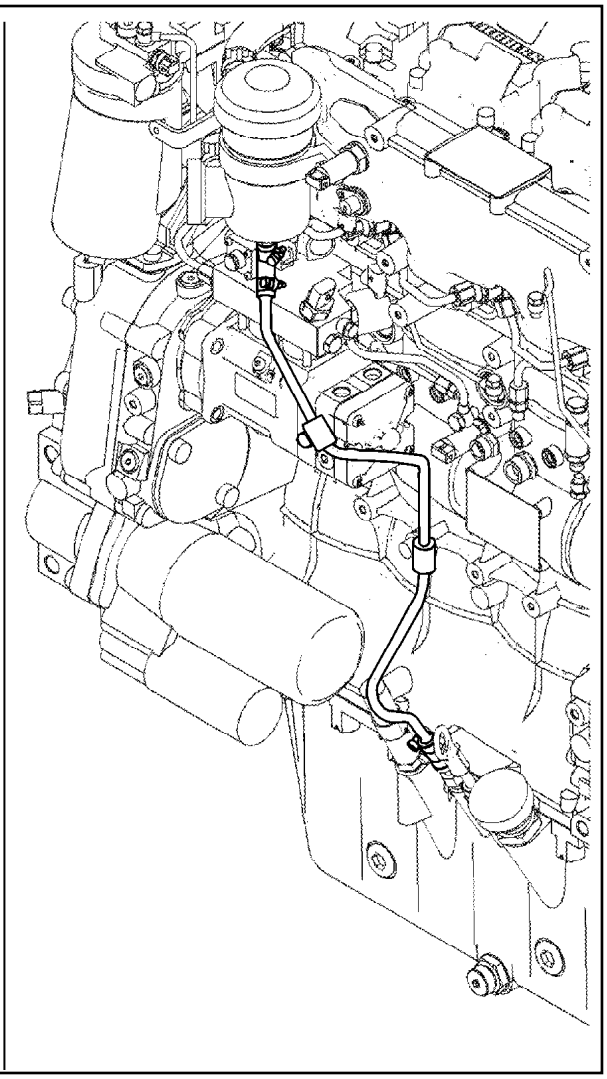

Pos.	Item	Quantity	Description	Bezeichnung
1	10139111	1	OIL RETURN PIPE 10X1	OELRUECKLAUFLEITUNG
2	7382092	2	CLAMP DIN 3016-1 10X25XD1 W1-2-MVQ	SCHELLE
3	11656153	2	HEX SCREW EN 1665 M10X20 8.8 FLZN SPF	SECHSKANTSCHRAUBE
4	10119971	1	NON-RETURN VALVE	RUECKSCHLAGVENTIL
5	10126317	1	RUBBER CONNECTION	GUMMIMUFFE
6	4981029	4	HOSE CLAMP DIN 3017-2 17/16 - 18/12 W1-2	SCHLAUCHSCHELLE
6	4601105	1	CLAMP DIN 3017-1 16/12-20/9 W2-2	SCHELLE
7	9079603	1	RUBBER CONNECTION 12X18X45	GUMMIMUFFE

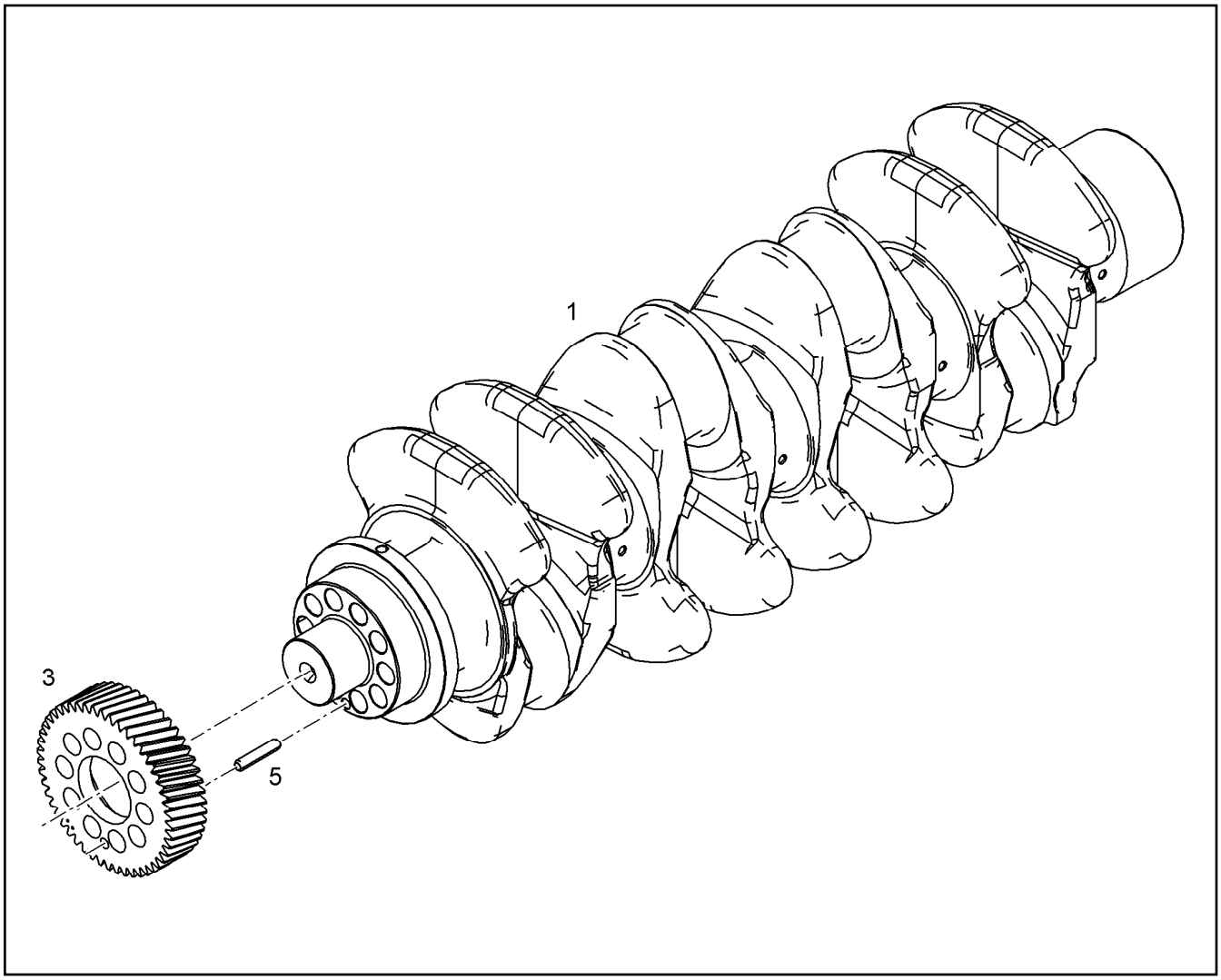

Pos.	Item	Quantity	Description	Bezeichnung
1	10131177	1	CRANKSHAFT R-MOTORXD934 C38 mod BY	KURBELWELLE
3	9072834	1	GEAR WHEEL 2,5	ZAHNRAD
5	4980376	1	DOWEL PIN ISO 8752 8X40 St	SPANNSTIFT

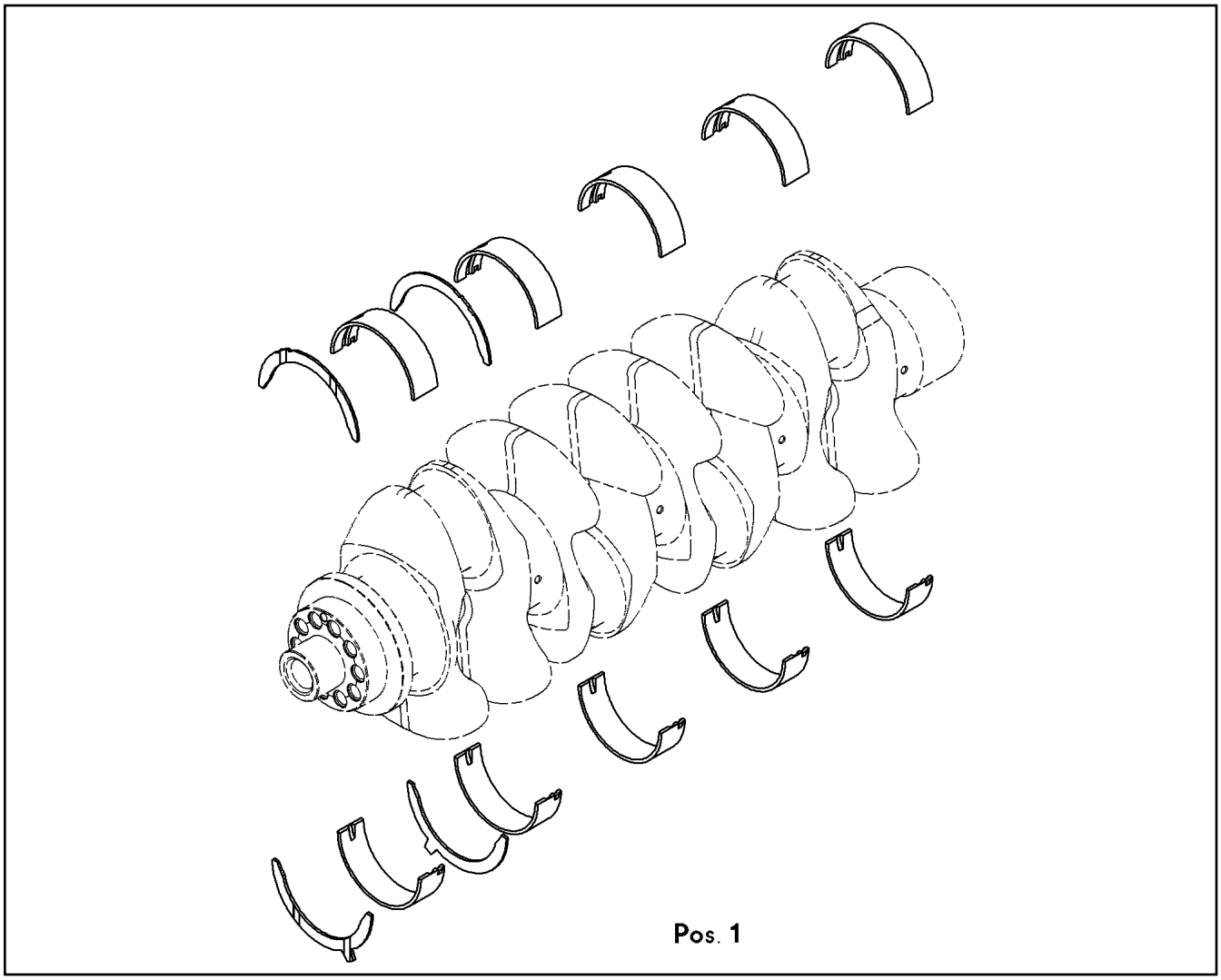

Pos.	Item	Quantity	Description	Bezeichnung
1	10116939	1	RS CRANKSHAFT BEARING KPL. D934 ⇨ ❑ 155	RS KURBELWELLENLAGERUNG

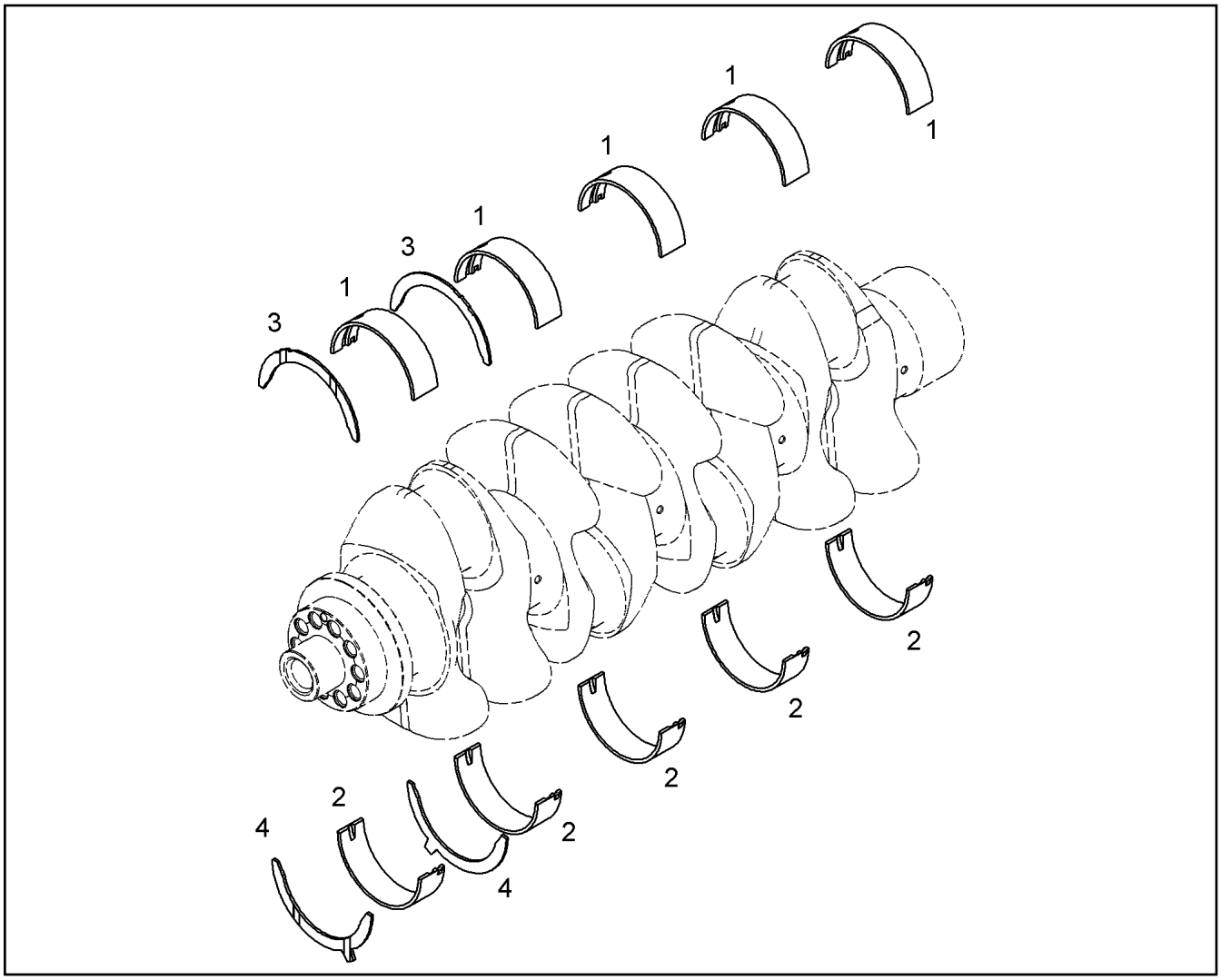

Pos.	Item	Quantity	Description	Bezeichnung
1	9073734	5	MAIN BEARING 104/111/32	HAUPTLAGER
2	9075606	5	MAIN BEARING 104/111/32 MIBA	HAUPTLAGER
3	10119927	2	THRUST WASHER 112X138X3	ANLAUFSCHEIBE
4	10119928	2	THRUST WASHER 112X138X3	ANLAUFSCHEIBE

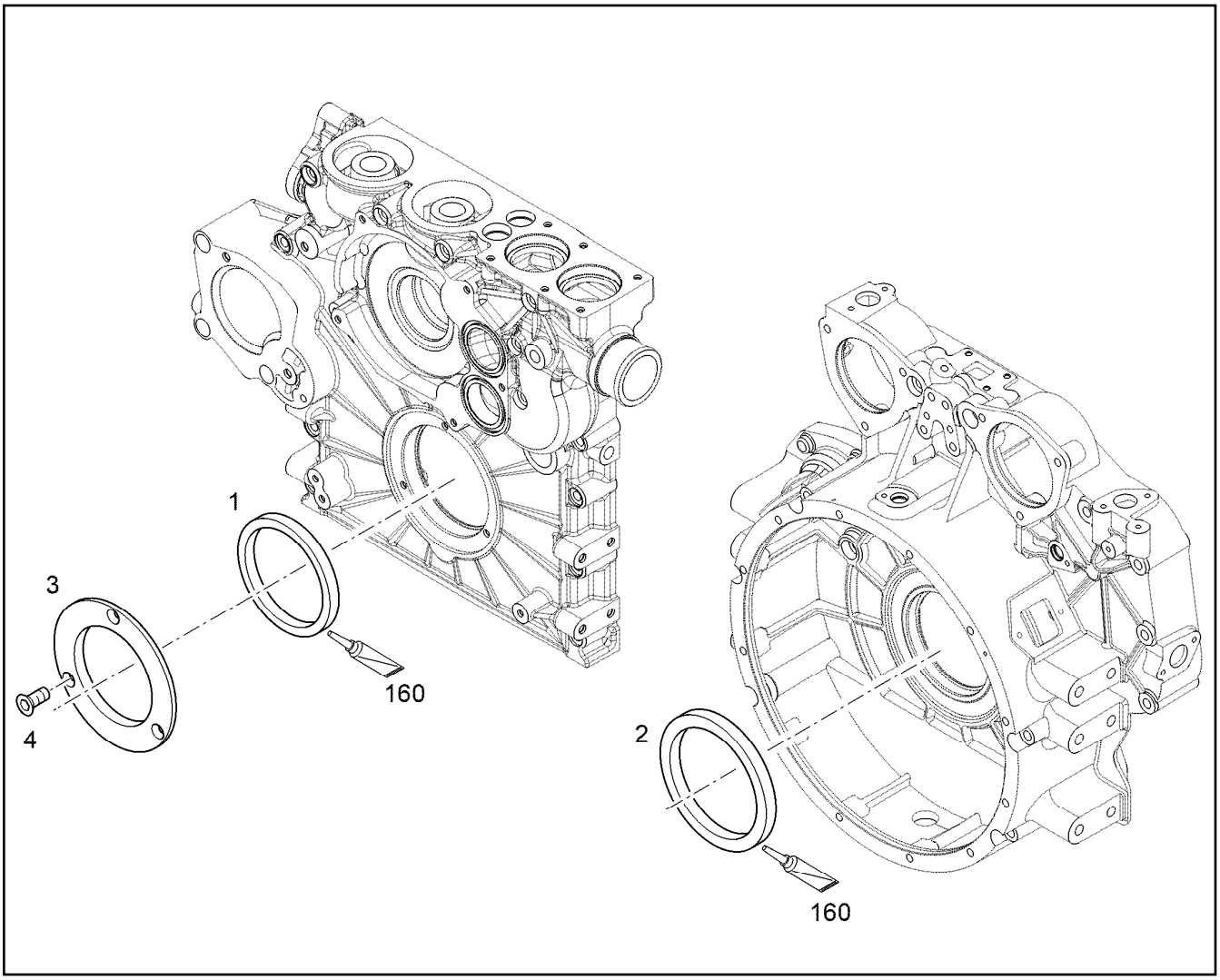

Pos.	Item	Quantity	Description	Bezeichnung
1	10006550	1	ROTARY SHAFT LIP SEAL ASWRD 110X13	RADIALWELLENDICHTRING
2	10121335	1	RK CRANKSHAFT SEAL 115 HINTEN	RS KURBELWELLENDICHTUNG
3	10152974	1	GUARD RING EN AC-Al Si1	SCHUTZRING
4	12210040	3	COUNTERSUNK SCREW ISO 14581 M8X20 8	SENKSCHRAUBE

Pos.	Item	Quantity	Description	Bezeichnung
1	10146185	1	BELT PULLEY 31.5X8PKX215	RIEMENSCHEIBE
2	10142170	1	CENTERING FLANGE 42CrMo4+N	ZENTRIERFLANSCH
8	10118526	1	VISCOSE DAMPER D934 L	VISKOSEDAEMPFER
10	10118912	6	HEXALOBULAR HEAD SCREW M16X1,5X88	SECHSRUNDSCHRAUBE
11	10144311	1	WASHER 52,2X107X3 -S355J2G3	SCHEIBE

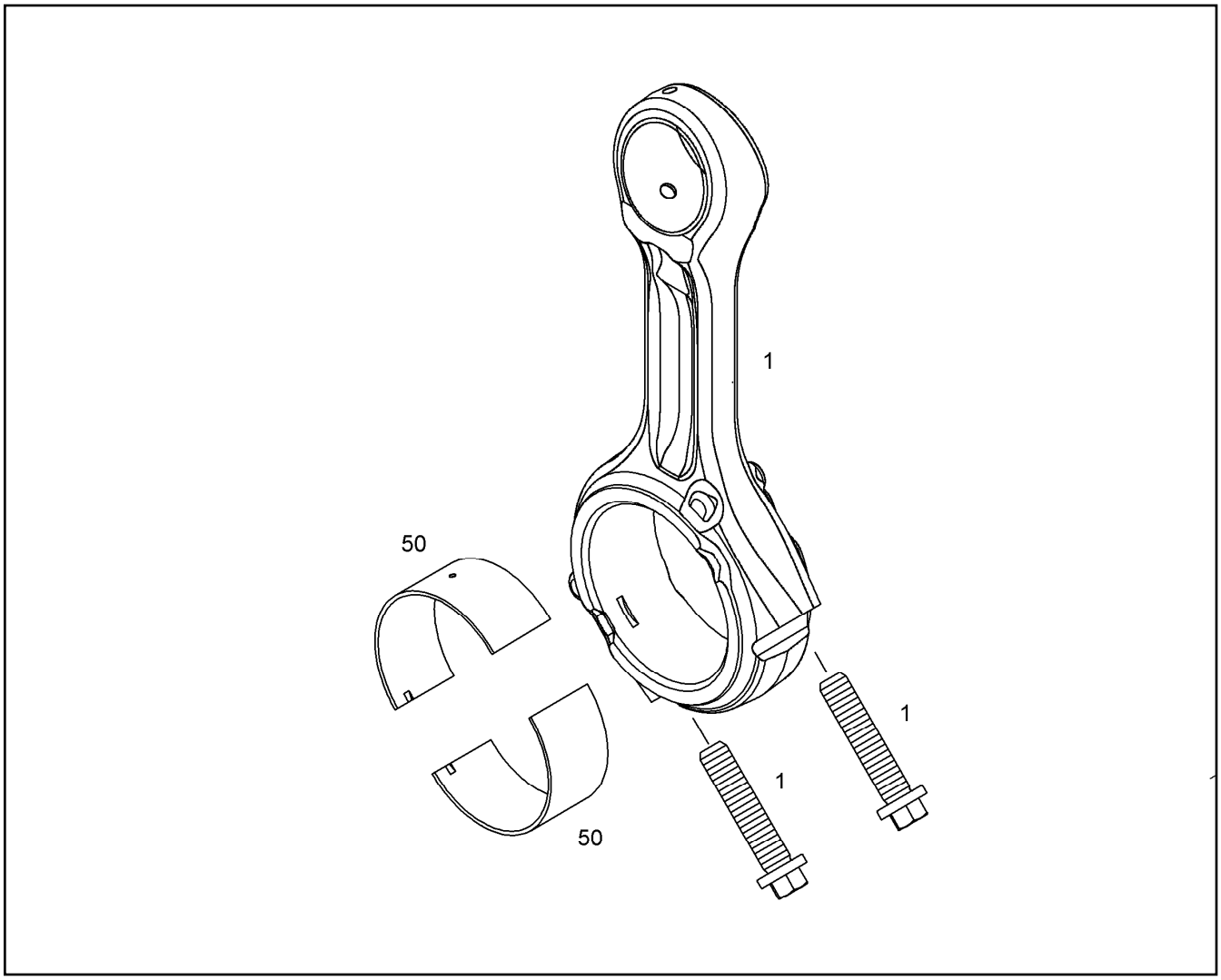

Pos.	Item	Quantity	Description	Bezeichnung
1	11348054	1	CONROD R-MOTORX88	PLEUELSTANGE
1	9174981	2	CONROD BOLT M14X1,5X65	PLEUELSCHRAUBE
50	10116934	1	RK BIG-END BEARING D930	RS PLEUELLAGER

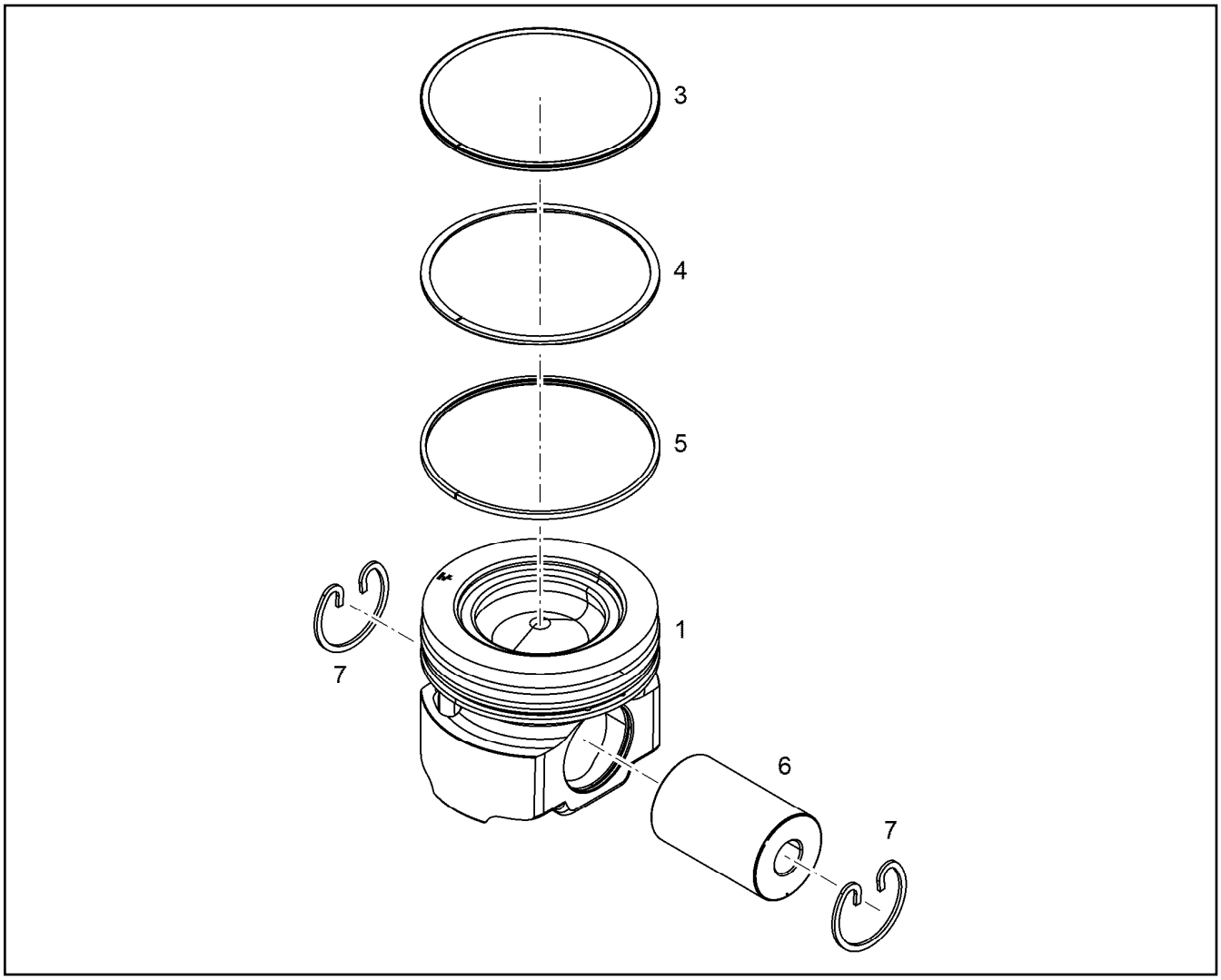

Pos.	Item	Quantity	Description	Bezeichnung
3	11351303	1	KBA-RING 130X121,1X3,5	KBA-RING
4	12476138	1	PISTON RING MG 130X120,5X2,5 F14	M-RING
5	12478647	1	DSF RING 130X121,9X3,5	DSF-RING
7	4980482	2	SNAP RING 52X2 FSt	SPRENGRING

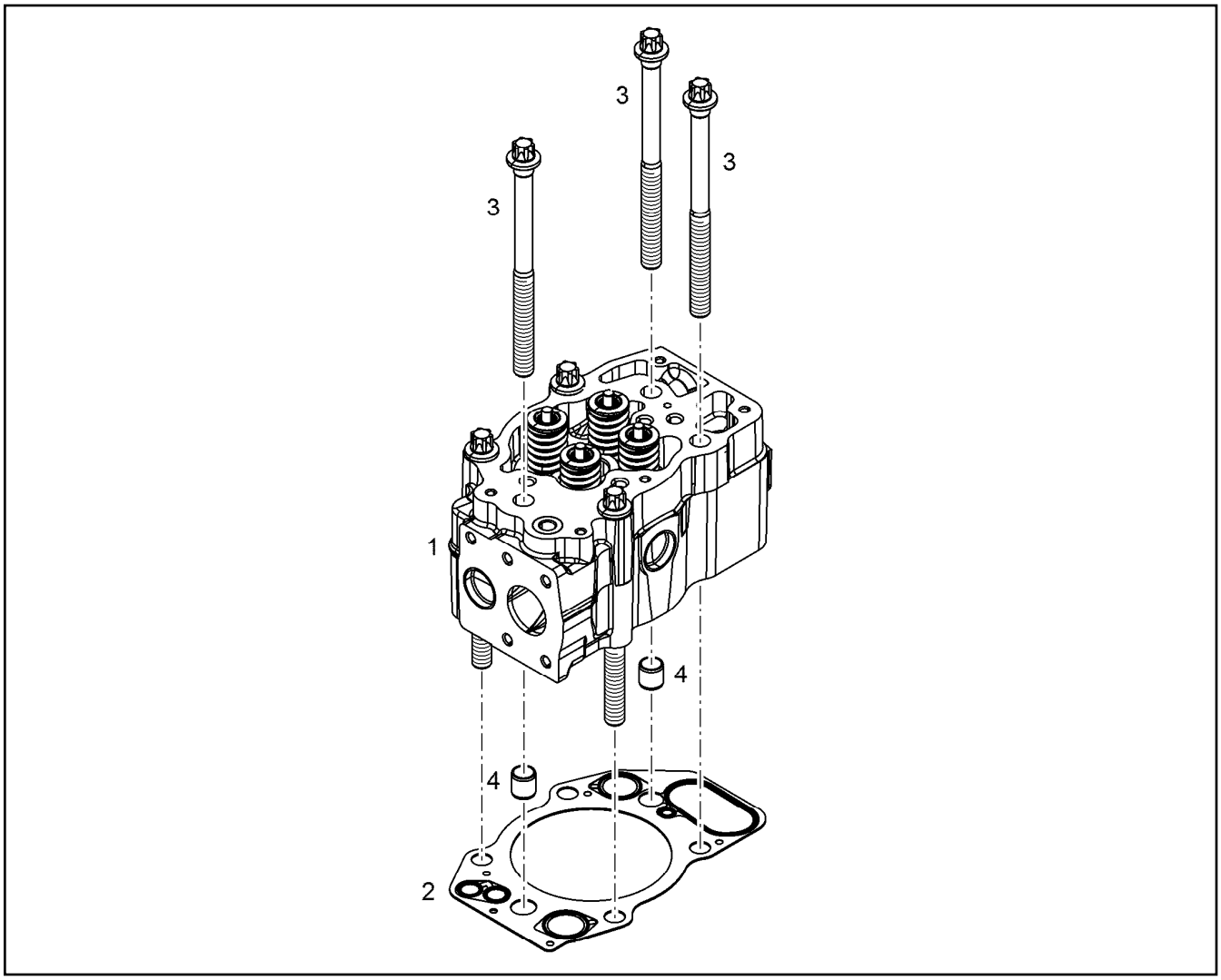

Pos.	Item	Quantity	Description	Bezeichnung
1	10149579	1	CYLINDER HEAD PRE-ASSY. R-MOTOR ⇨ ❑ 161	ZYLINDERKOPF VORM.
1	13476764	1	CYLINDER HEAD PRE-ASSY. R-MOTOR	ZYLINDERKOPF VORM.
(1)	10149578	1	CYLINDER HEAD R-MOTOR ⇨ ❑ 163	ZYLINDERKOPF
(2)	10144556	2	INLET VALVE	EINLASSVENTIL
(4)	10136751	2	OUTLET VALVE	AUSLASSVENTIL
(5)	10120334	4	VALVE STEM SEAL RING	VENTILSCHAFTDICHTRING
(7)	9074480	4	SPRING CUP ABOVE 11,7X23X3,5 41Cr4	FEDERTELLER OBEN
(9)	9074481	4	COMPRESSION SPRING 4,60X28,40X62,70	DRUCKFEDER
(998)	13486106	1	RK CYLINDER HEAD	RS ZYLINDERKOPF
2	10133667	1	CYLINDER HEAD GASKET	ZYLINDERKOPFDICHTUNG
3	10125439	6	HEXALOBULAR HEAD SCREW M16X1,5X210	SECHSRUNDSCHRAUBE
4	9074798	2	TIGHT FIT SLEEVE 16X20X20 S235JR	PASSHUELSE

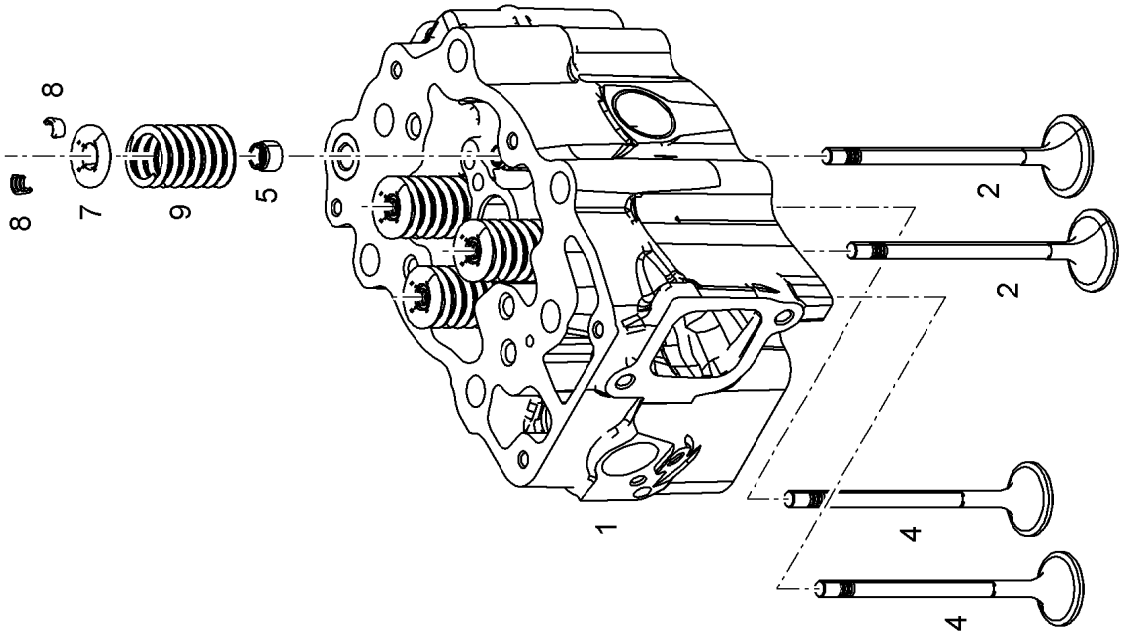
8
8
7
9
5
1
2
2
4
4

Pos.	Item	Quantity	Description	Bezeichnung
1	10149578	1	CYLINDER HEAD R-MOTOR ⇨ ❑ 163	ZYLINDERKOPF
2	10144556	2	INLET VALVE	EINLASSVENTIL
4	10136751	2	OUTLET VALVE	AUSLASSVENTIL
5	10120334	4	VALVE STEM SEAL RING	VENTILSCHAFTDICHTRING
7	9074480	4	SPRING CUP ABOVE 11,7X23X3,5 41Cr4	FEDERTELLER OBEN
8	11357514	8	VALVE COLLET MK9	VENTILKEGELSTUECK
9	9074481	4	COMPRESSION SPRING 4,60X28,40X62,70	DRUCKFEDER

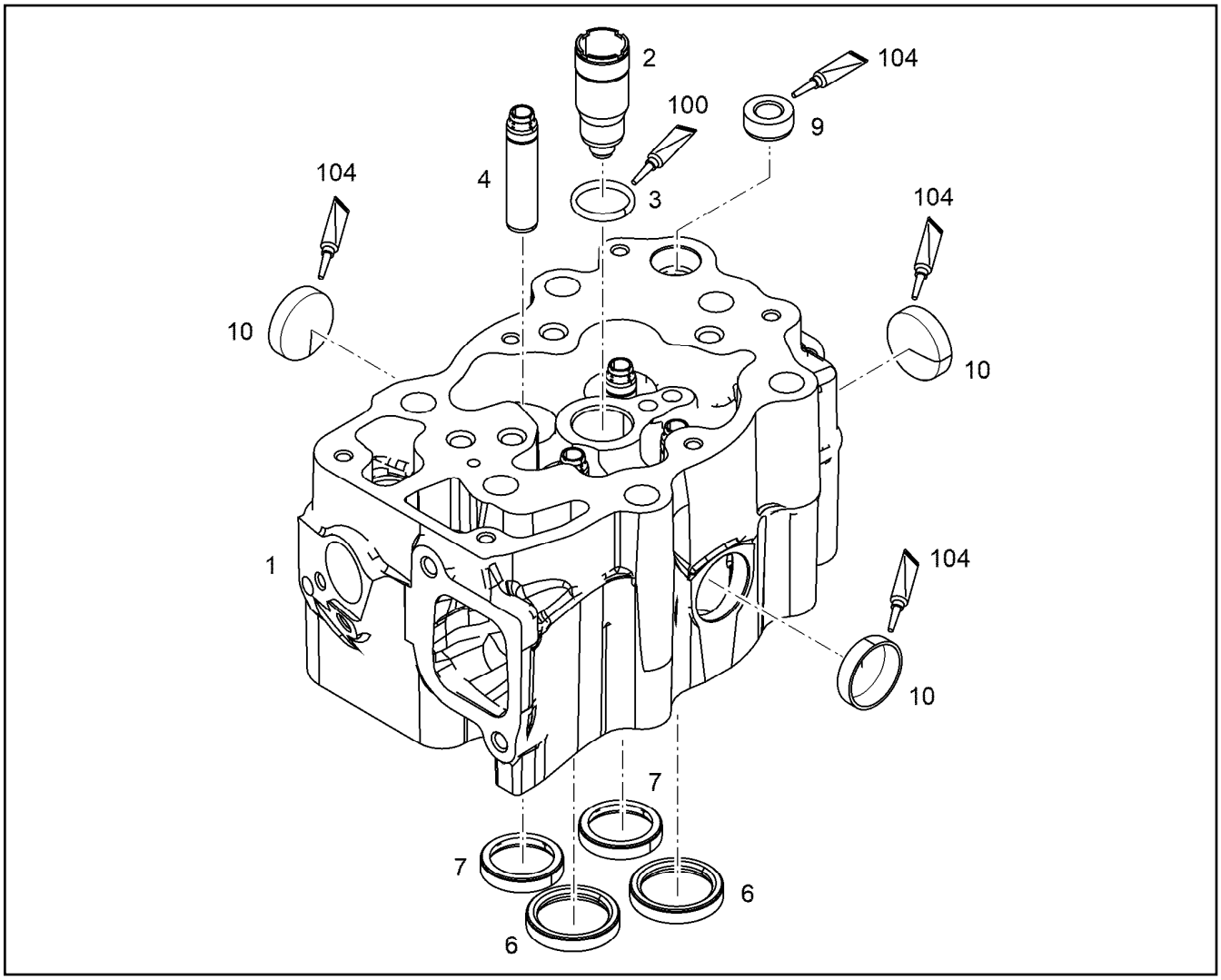

Pos.	Item	Quantity	Description	Bezeichnung
1	10145862	1	CYLINDER HEAD R-MOTOR	ZYLINDERKOPF
2	10152168	1	SLEEVE 8X26X64,5 X46Cr13	HUELSE
3	10342770	1	O-RING AEHNL.ISO 3601-1 25X3 FKM 75	O-RING
4	10150204	4	VALVE STEM GUIDE NOVOFER BLV	VENTILFUEHRUNG
6	10149739	2	INLET VALVE SEAT INSERT PL 510	VENTILSITZRING EINLASS
7	10128680	2	EXHAUST VALVE SEAT INSERT PL 510	VENTILSITZRING AUSLASS
9	9079078	1	THREADED BUSHING 14,5X24X10	GEWINDEBUCHSE
10	12209781	3	END COVER DIN 443 B 480H	VERSCHLUSSDECKEL
100	10285708	1	GREASE NBU 30 1KG DOSE	FETT
104	8655032	1	GLUE 10ML FLASCHE -50/+175 °C	KLEBSTOFF

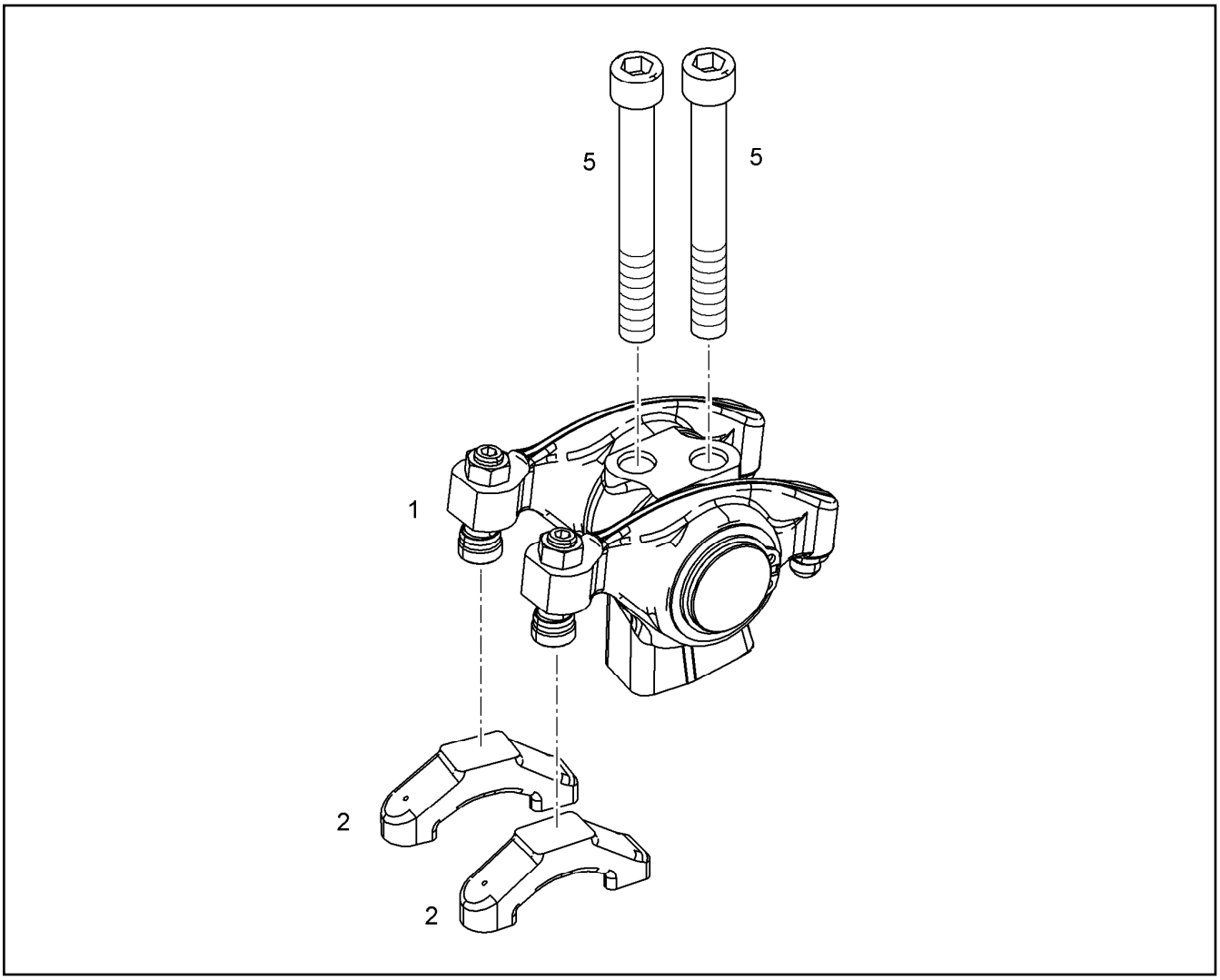

Pos.	Item	Quantity	Description	Bezeichnung
1	11448005	1	ROCKER ARM BRACKET PRE-ASS. ⇨ ❑ 165	KIPPHEBELBOCK VORM.
1	12549825	1	ROCKER ARM BRACKET PRE-ASS. ⇨ ❑ 166	KIPPHEBELBOCK VORM.
2	10119695	2	VALVE BRIDGE	VENTILBRUECKE
5	4043006	2	SOCKET HEAD SCREW ISO 4762 M12X100 1	ZYLINDERSCHRAUBE

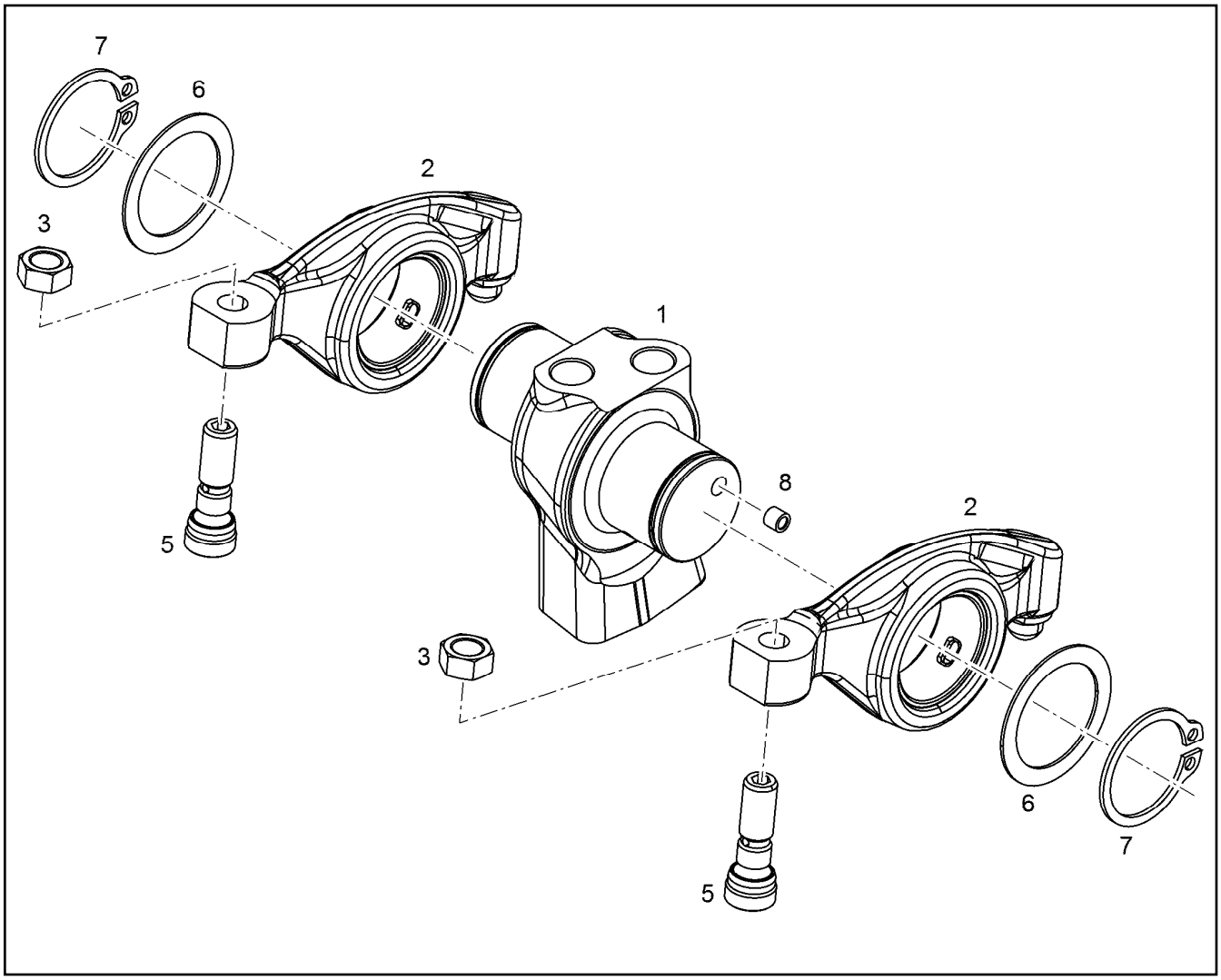

Pos.	Item	Quantity	Description	Bezeichnung
1	11448002	1	ROCKER ARM SUPPORT	KIPPHEBELBOCK
2	11448000	2	ROCKER ARM PRE-ASSY.	KIPPHEBEL VORM.
3	10012557	2	HEX NUT M10X1	SECHSKANTMUTTER
5	10012225	2	ADJUSTING SCREW M10X1	EINSTELLSCHRAUBE
6	9078522	2	WASHER 34X45X1	SCHEIBE
7	428011301	2	RETAINING RINGS DIN 471 34X1,5	SICHERUNGSRING
8	10036325	1	SEALING PLUG LK 950	DICHTSTOPFEN

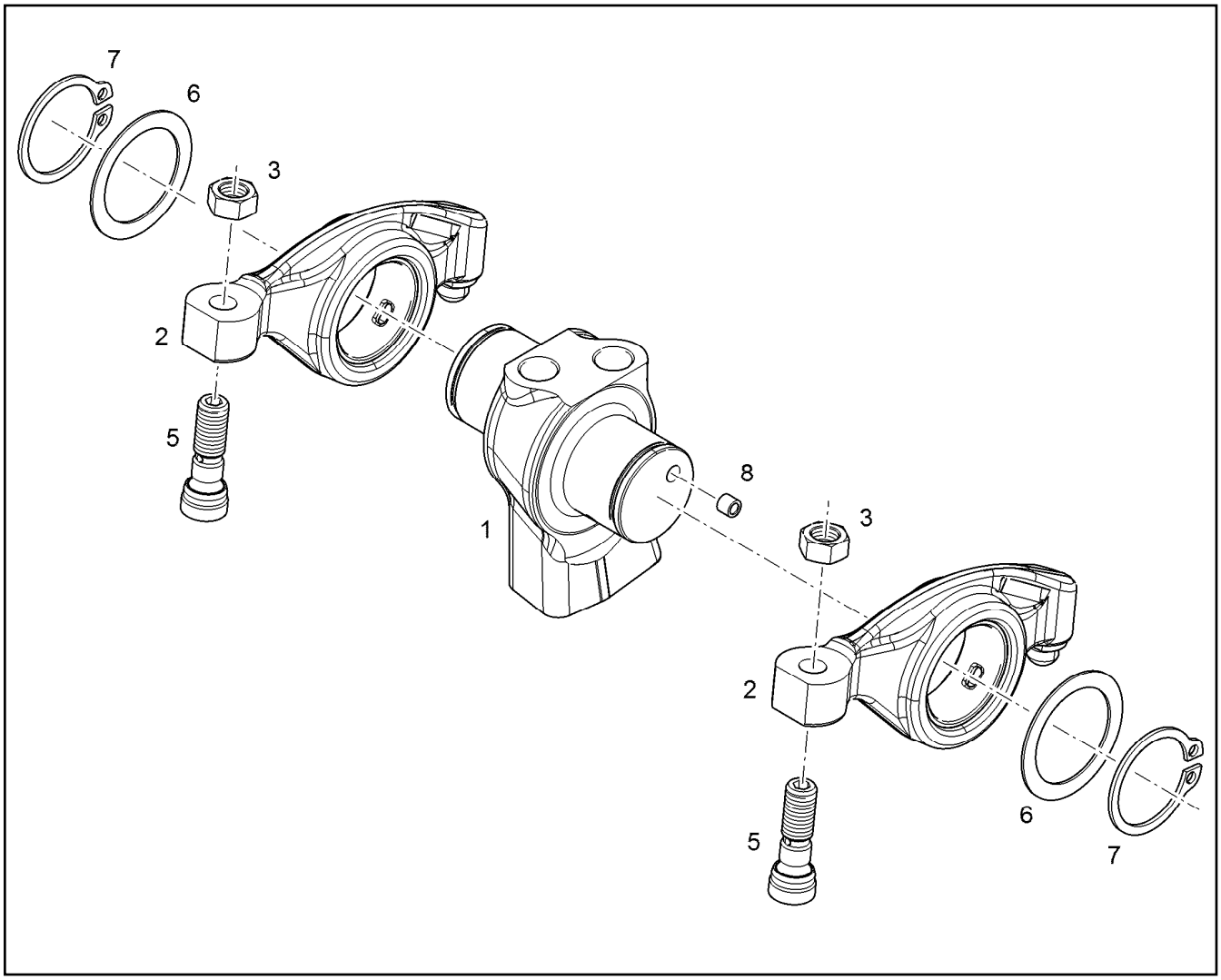

Pos.	Item	Quantity	Description	Bezeichnung
1	11448002	1	ROCKER ARM SUPPORT	KIPPHEBELBOCK
2	12549824	2	ROCKER ARM PRE-ASSY.	KIPPHEBEL VORM.
3	10012557	2	HEX NUT M10X1	SECHSKANTMUTTER
5	10012225	2	ADJUSTING SCREW M10X1	EINSTELLSCHRAUBE
6	9078522	2	WASHER 34X45X1	SCHEIBE
7	428011301	2	RETAINING RINGS DIN 471 34X1,5	SICHERUNGSRING
8	10036325	1	SEALING PLUG LK 950	DICHTSTOPFEN

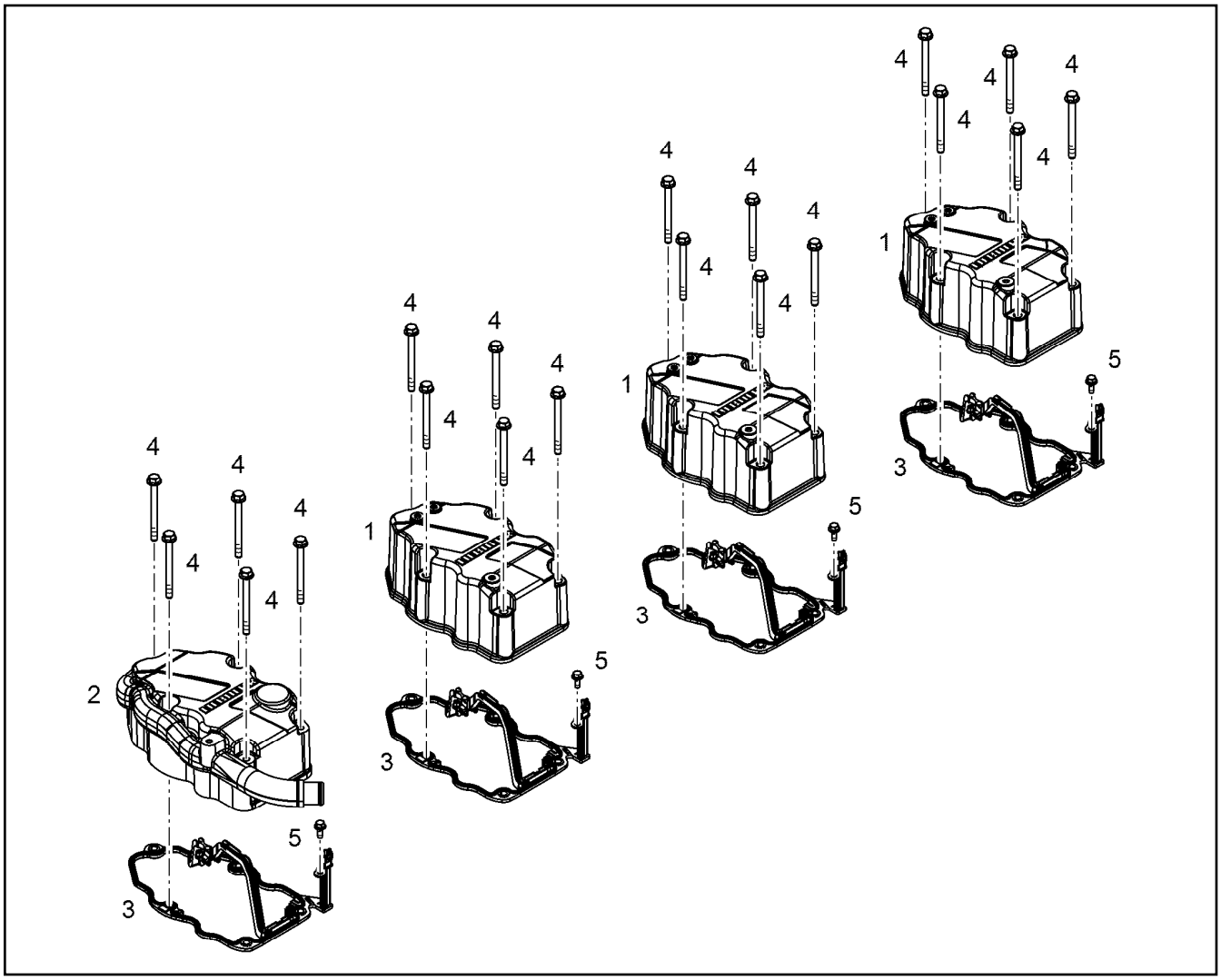

Pos.	Item	Quantity	Description	Bezeichnung
1	10134750	3	CYLINDER HEAD COVER	ZYLINDERKOPFDECKEL
2	12874086	1	CYLINDER HEAD COVER	ZYLINDERKOPFDECKEL
3	13484584	4	SEAL	DICHTUNG
4	10876385	20	HEX SCREW EN 1665 M8X90 8.8 480H SPF	SECHSKANTSCHRAUBE
5	11840297	4	HEX SCREW EN 1665 M6X16 8.8 480H SPF	SECHSKANTSCHRAUBE

Pos.	Item	Quantity	Description	Bezeichnung
1	10152441	2	BALANCER SHAFT PRE-ASS.	AUSGLEICHWELLE VORM.
2	12408221	1	FLANGE PRE-ASS. ⇨ ❑ 169	FLANSCH VORM.
3	12400857	1	FLANGE	FLANSCH
4	10139764	1	GEAR WHEEL 2,5	ZAHNRAD
5	10139765	1	GEAR WHEEL 2,5	ZAHNRAD
6	10139578	2	HEXALOBULAR HEAD SCREW M14X50 32C	SECHSRUNDSCHRAUBE
7	240049702	5	SOCKET HEAD SCREW ISO 4762 M8X25 8.8	ZYLINDERSCHRAUBE
8	7381685	1	O-RING AEHNL.ISO 3601-1 7X1,5 FKM 90 A,B	O-RING
9	4980000	1	PARALLEL PIN ISO 8734 6m6X14 St	ZYLINDERSTIFT
10	243034002	2	DOWEL PIN ISO 8752 6X30 ST	SPANNSTIFT
100	10285708	1	GREASE NBU 30 1KG DOSE	FETT
105	811205708	1	SCREW LOCKING FLASCHE 50ML 150°C	SCHRAUBENSICHERUNG

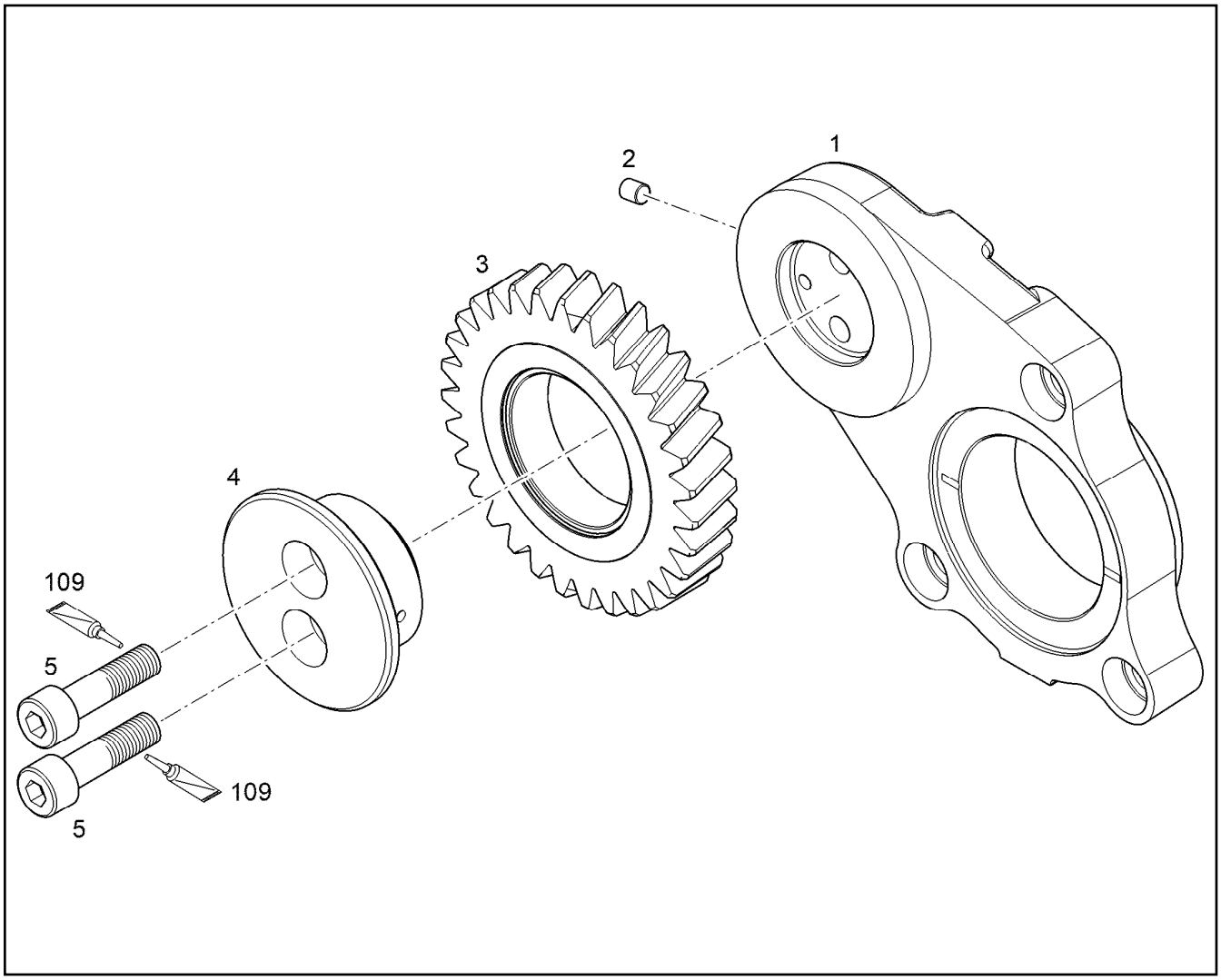

Pos.	Item	Quantity	Description	Bezeichnung
2	7380123	1	SEALING PLUG MB 850 CR6-FREI	DICHTSTOPFEN
3	9072633	1	INTERMEDIATE GEAR PRE-ASSY.	ZWISCHENRAD VORM.
4	9267273	1	HUB 42CrMo4+N+QT	NABE
5	240049802	2	SOCKET HEAD SCREW ISO 4762 M8X30 8.8	ZYLINDERSCHRAUBE
109	811205708	1	SCREW LOCKING FLASCHE 50ML 150°C	SCHRAUBENSICHERUNG

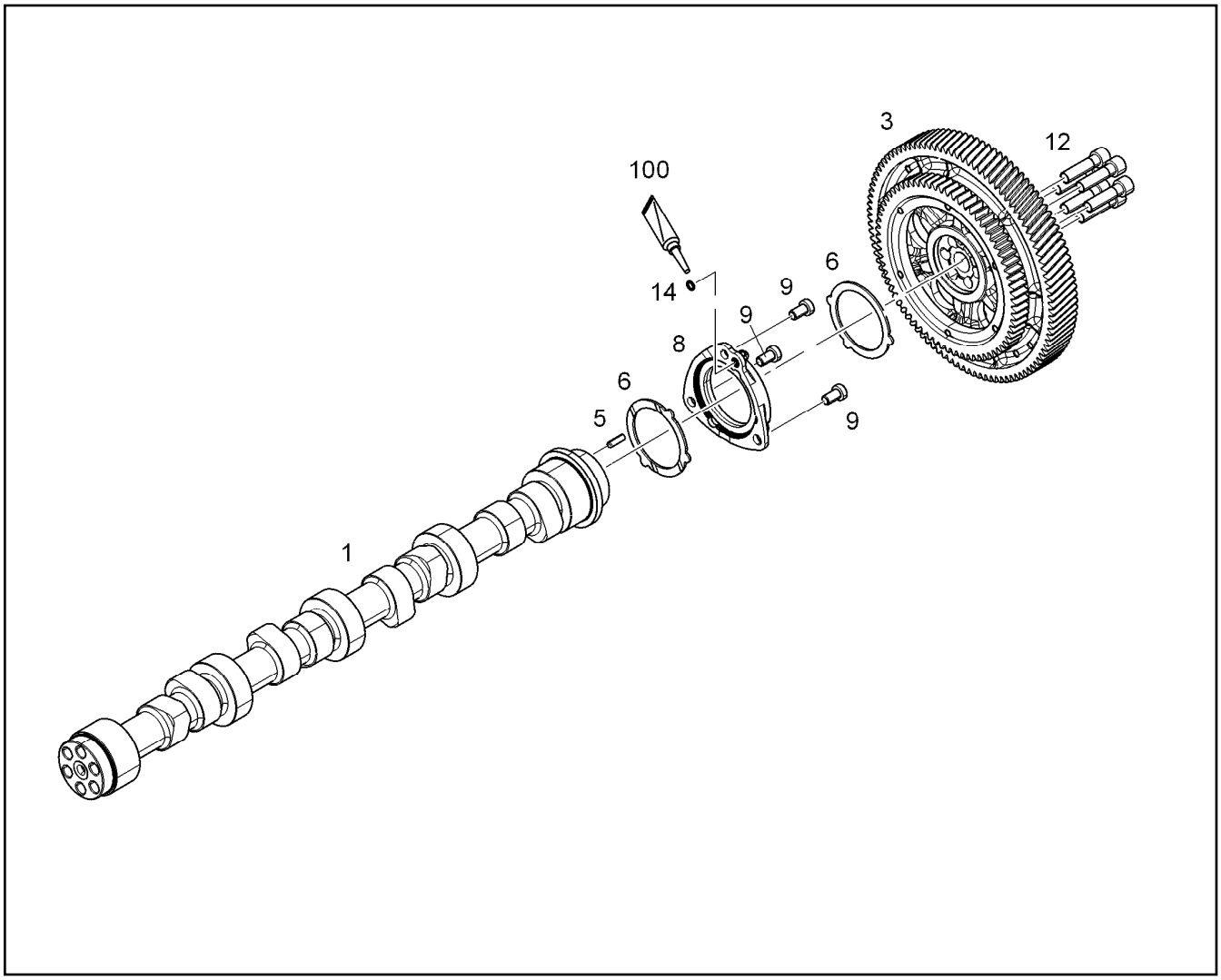

Pos.	Item	Quantity	Description	Bezeichnung
1	10125742	1	CAMSHAFT R-MOTORXD934/D94	NOCKENWELLE
3	10138447	1	GEARWHEEL PRE-ASS.	ZAHNRAD VORM.
(1)	10145049	1	GEARWHEEL PRE-ASS.	ZAHNRAD VORM.
(2)	10137602	1	GEAR WHEEL 2,75	ZAHNRAD
(4)	11600960	6	HEX SCREW DIN 6921 M8X40 10.9	SECHSKANTSCHRAUBE
(5)	4980000	1	PARALLEL PIN ISO 8734 6m6X14 St	ZYLINDERSTIFT
5	4980736	1	PARALLEL PIN ISO 8734 6m6X22 St	ZYLINDERSTIFT
6	10133693	2	WEARING RING AlSn20Cu	ANLAUFRING
6	11348100	1	WEARING RING AlSn20Cu	ANLAUFRING
8	10145815	1	RS FLANGE ⇨ ❑ 171	RS FLANSCH
8	11348648	1	FLANGE PRE-ASS.	FLANSCH VORM.
9	4980927	3	SOCKET HEAD SCREW DIN 7984 M10X18 0	ZYLINDERSCHRAUBE
12	4980257	6	SOCKET HEAD SCREW ISO 4762 M12X45 1	ZYLINDERSCHRAUBE
14	7381685	1	O-RING AEHNL.ISO 3601-1 7X1,5 FKM 90 A,B	O-RING
100	10285708	1	GREASE NBU 30 1KG DOSE	FETT

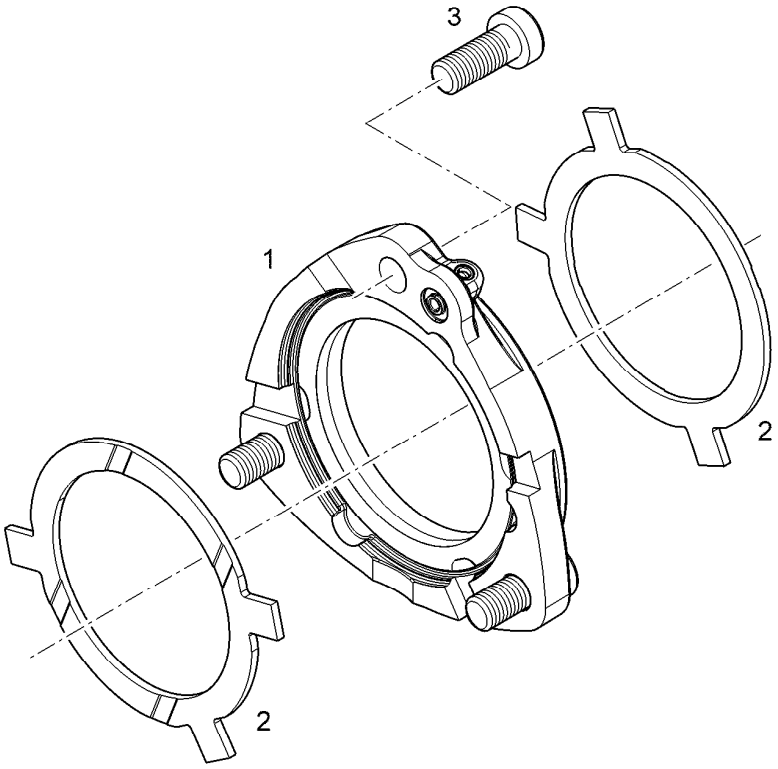

Pos.	Item	Quantity	Description	Bezeichnung
1	11348648	1	FLANGE PRE-ASS.	FLANSCH VORM.
2	11348100	2	WEARING RING AlSn20Cu	ANLAUFRING
3	240122602	3	SOCKET HEAD SCREW DIN 7984 M10X25 0	ZYLINDERSCHRAUBE

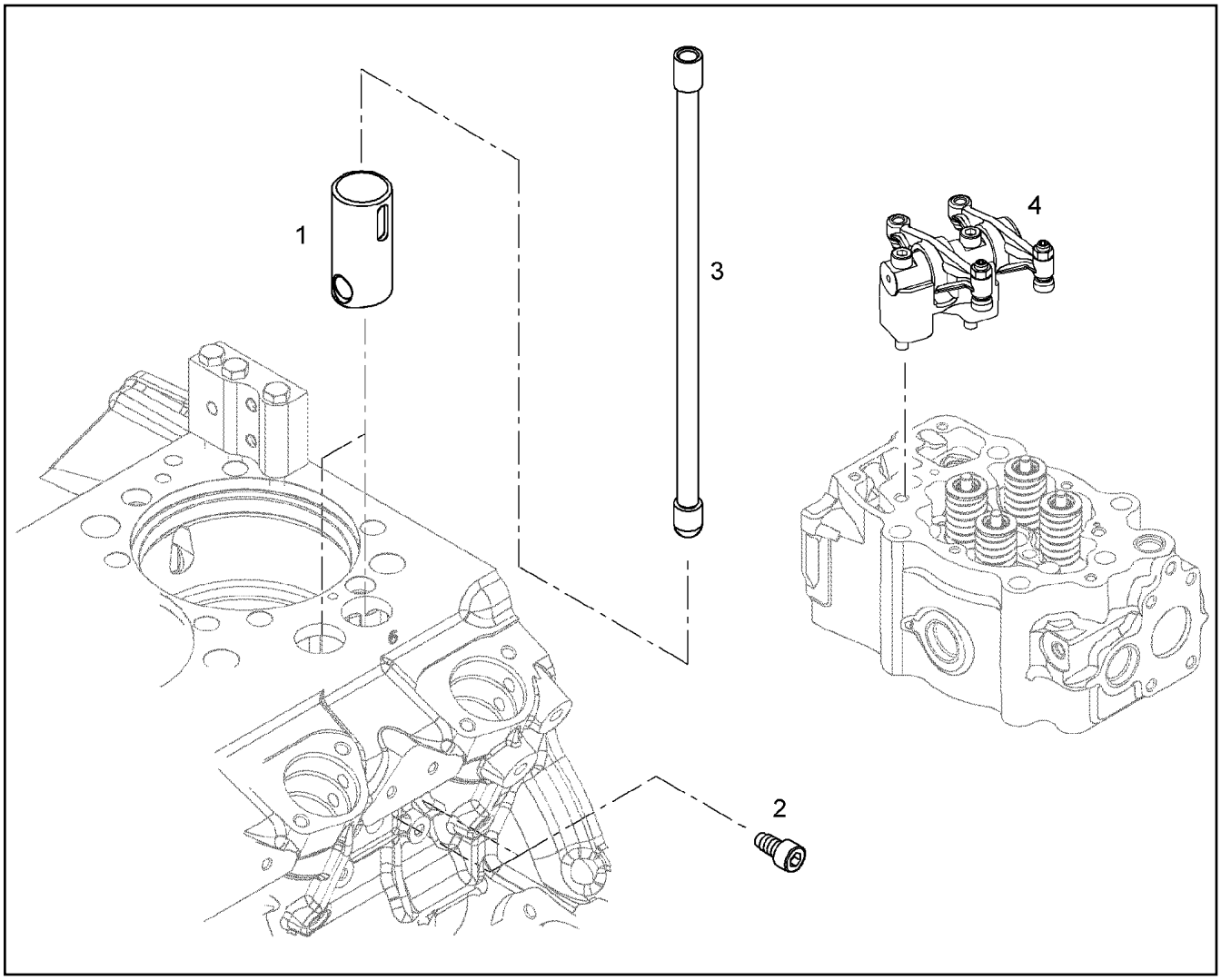

Pos.	Item	Quantity	Description	Bezeichnung
1	10153536	2	ROLLER TAPPET	ROLLENSTOESSEL
2	10153538	2	LOCKING SCREW M10X19 10.9	SICHERUNGSSCHRAUBE
3	9079131	2	TAPPET PUSH ROD	STOESSELSTANGE

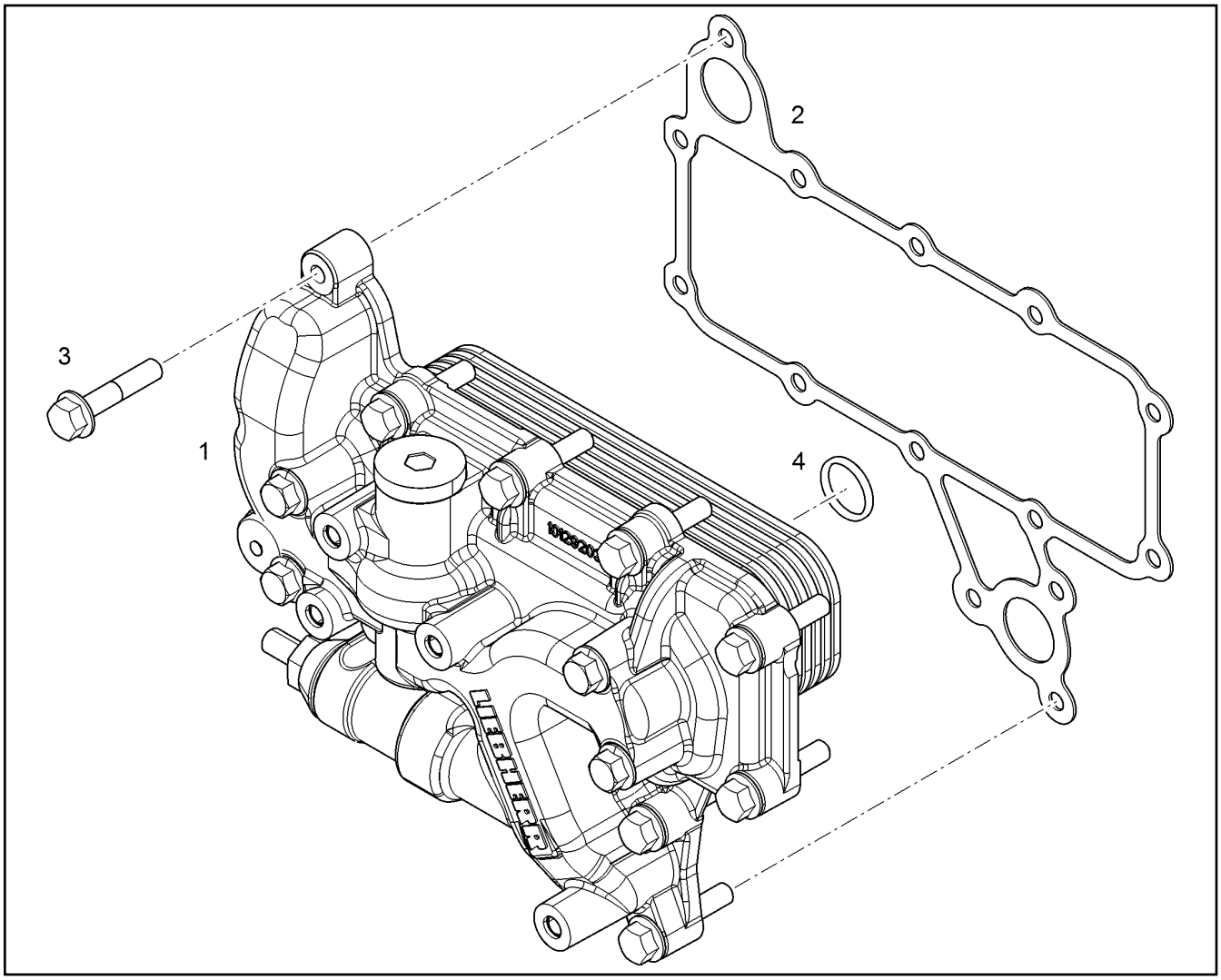

Pos.	Item	Quantity	Description	Bezeichnung
1	10129474	1	OIL COOLER, PRE-ASSEMBLED ⇨ ❑ 174	OELKUEHLER VORM.
2	10117709	1	SEAL AFM 30	DICHTUNG
3	10299604	14	HEX SCREW EN 1665 M8X40 10.9 480H	SECHSKANTSCHRAUBE
4	10004261	1	O-RING AEHNL.ISO 3601-1 26X3 HNBR 70	O-RING

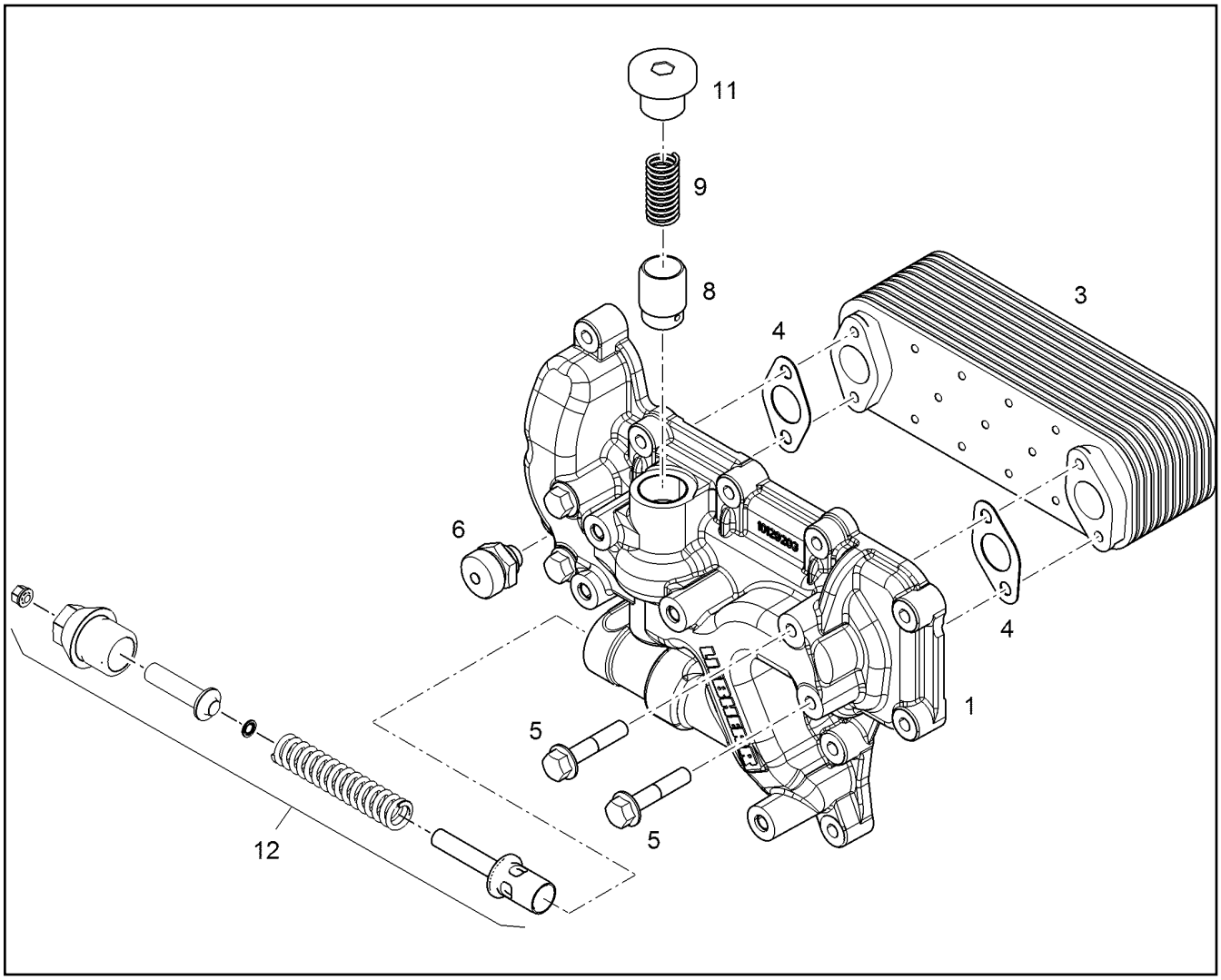

Pos.	Item	Quantity	Description	Bezeichnung
1	10146722	1	OIL COOLER HOUSING	OELKUEHLERGEHAEUSE
3	10325001	1	OIL COOLER	OELKUEHLER
4	4980359	2	SEAL DIN 71511 1,5X25X48 AFM 30	DICHTUNG
5	11691686	4	HEX SCREW EN 1665 M8X50 8.8 480H SPF	SECHSKANTSCHRAUBE
6	9078233	1	VALVE M14X1,5 ⇨ ❑ 175	VENTIL
8	13730923	1	PISTON 16MnCrS5	KOLBEN
9	9886756	1	COMPRESSION SPRING 2,10X17,80X75,00	DRUCKFEDER
11	7382204	1	SCREW PLUG VSTI M30X1,5 St Rm>=500MP	VERSCHLUSSSCHRAUBE
12	10152592	1	PRESSURE RELIEF VALVE pmax=9BAR ⇨ ❑ 176	UEBERDRUCKVENTIL

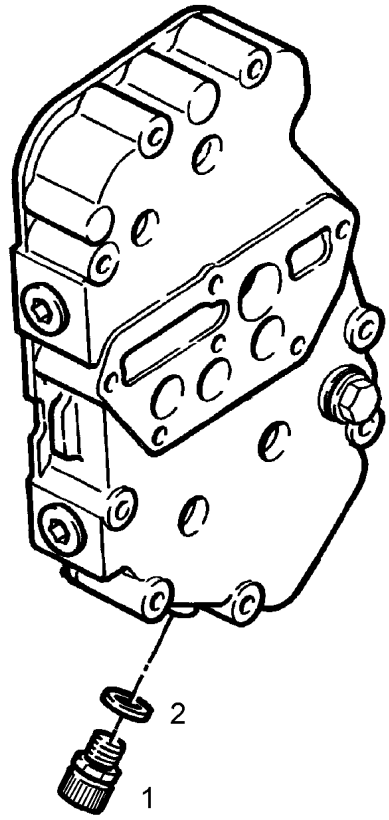

Pos.	Item	Quantity	Description	Bezeichnung
1	10011832	1	VALVE	VENTIL
2	738122523	1	SEALING RING DIN 7603 A14X20X2 CU	DICHTRING

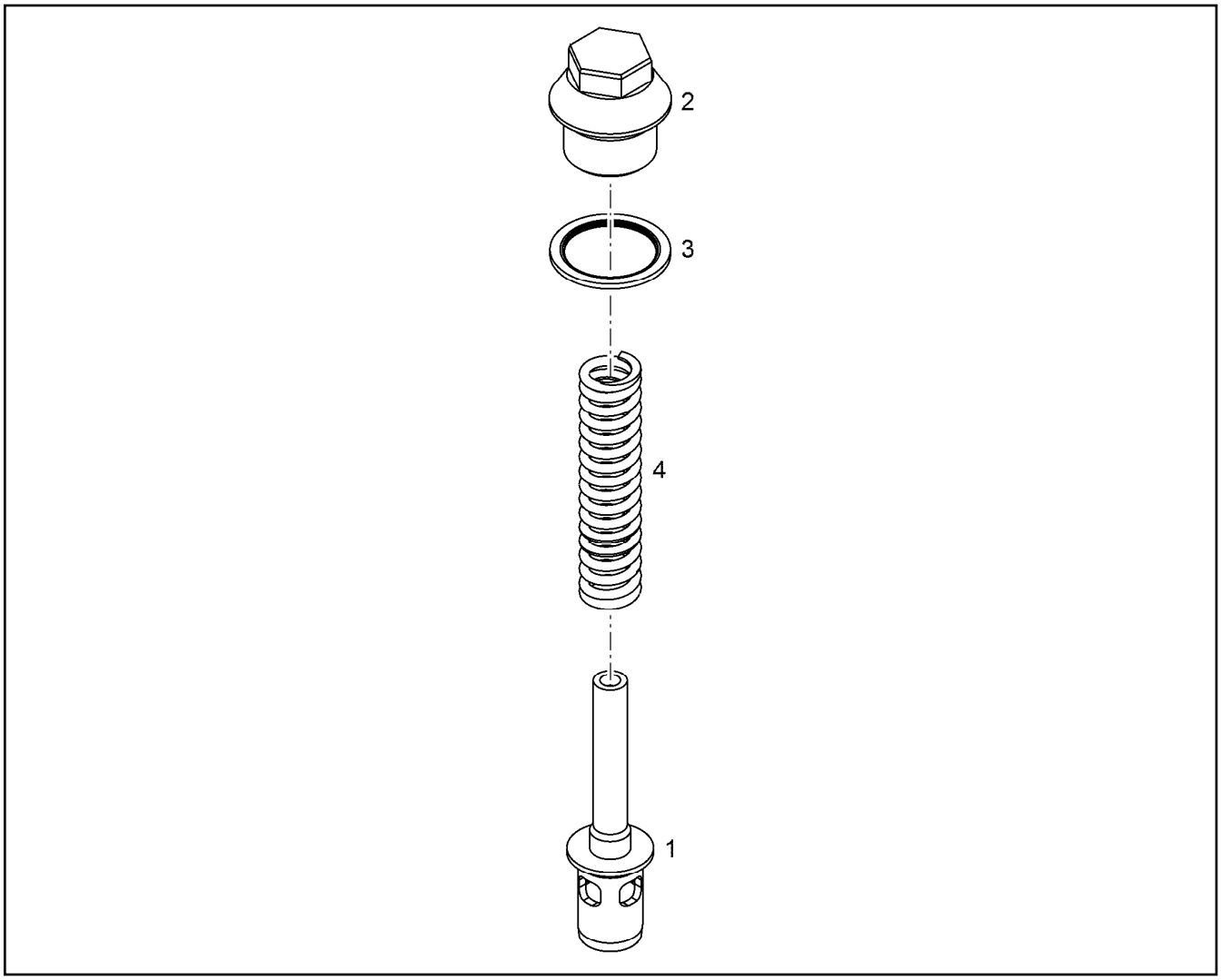

Pos.	Item	Quantity	Description	Bezeichnung
1	10152593	1	PISTON	KOLBEN
2	10152594	1	SCREW PLUG M30X1,5 ETG 100	VERSCHLUSSSCHRAUBE
3	10113731	1	SEALING RING 30,7X39X2 St/FPM1-80	DICHTRING
4	10129501	1	COMPRESSION SPRING 3,2X16,8X100,7 O	DRUCKFEDER

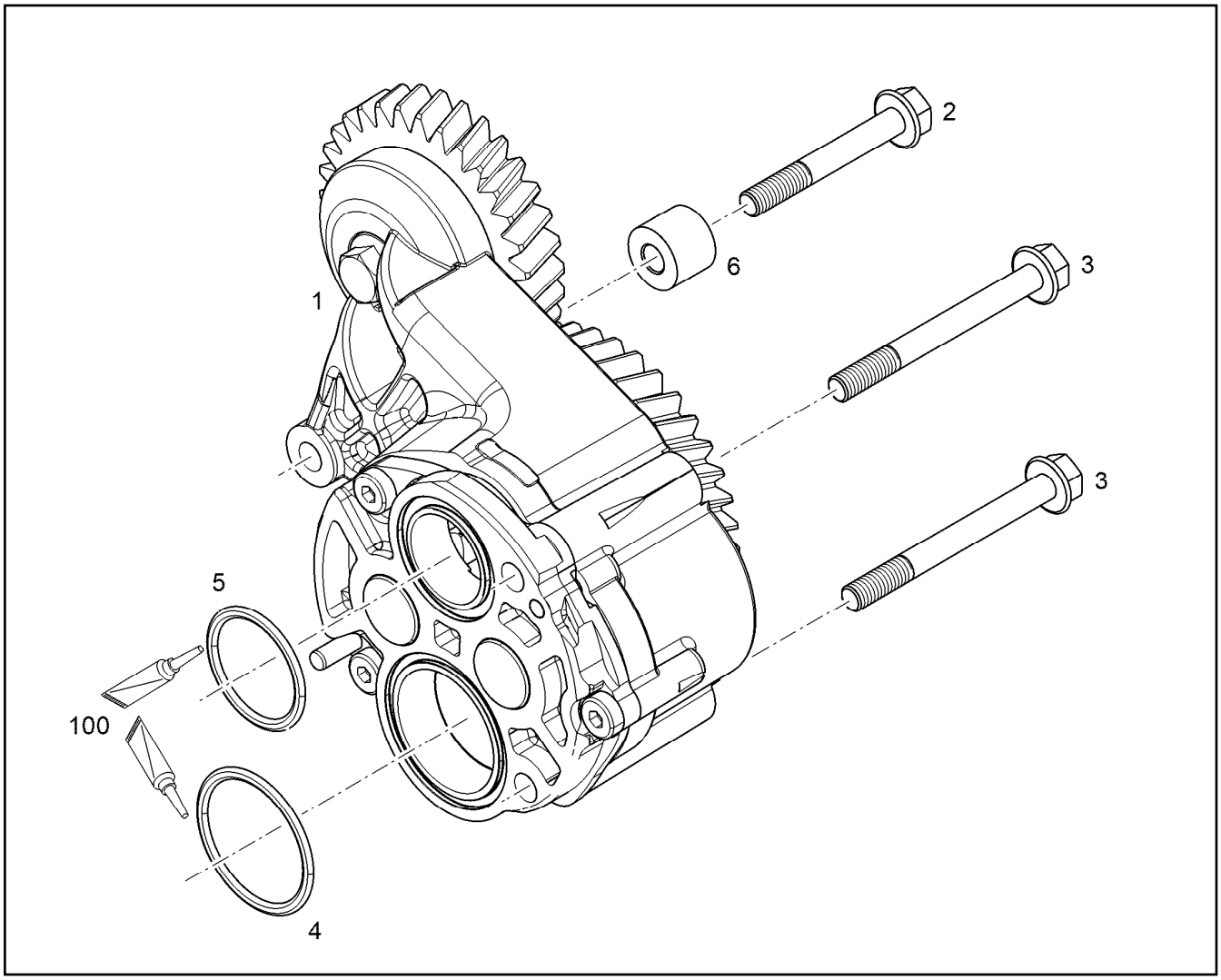

Pos.	Item	Quantity	Description	Bezeichnung
1	12438990	1	LUBRICATING OIL PUMP B=41,4	SCHMIEROELPUMPE
2	10005713	1	HEX SCREW DIN 6921 M8X45 8.8	SECHSKANTSCHRAUBE
2	12697335	1	HEX SCREW EN 1665 M8X60 8.8	SECHSKANTSCHRAUBE
3	11645138	2	HEX SCREW DIN 6921 M8X80 8.8	SECHSKANTSCHRAUBE
4	11066168	1	O-RING AEHNL.ISO 3601-1 43X2 FKM 70	O-RING
5	7382059	1	O-RING ISO 3601-1 34,59X2,62 FKM 70 A,GN	O-RING
6	13566415	1	SPACER PIECE 8,4X20X15,6 S355J0	DISTANZSTUECK
100	10285708	1	GREASE NBU 30 1KG DOSE	FETT

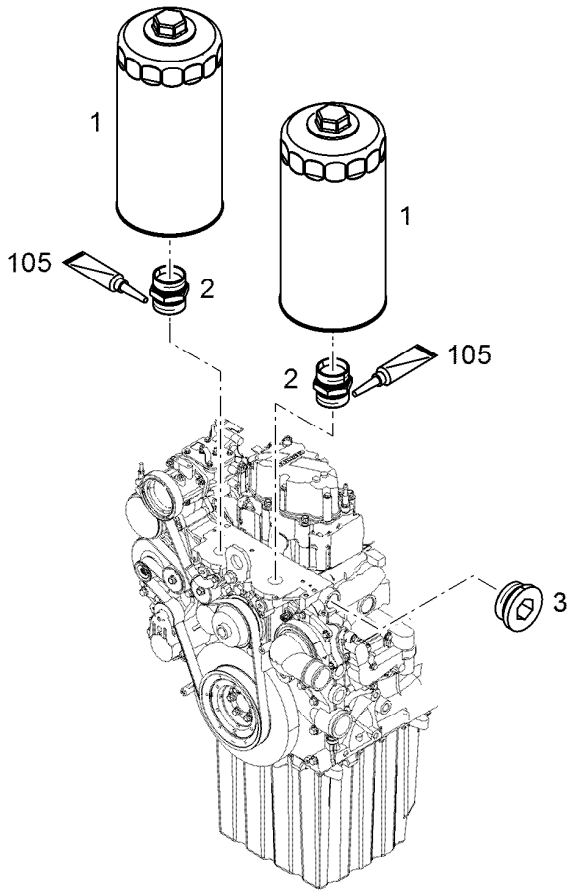

Pos.	Item	Quantity	Description	Bezeichnung
1	10297295	2	EASY-CHANGE FILTER OEL 9µm ⇨ ❑ 179	WECHSELFILTER
2	9273271	2	FITTING G 24 M30x2 11SMnPb30	VERSCHRAUBUNG
3	10285724	1	SCREW PLUG VSTI M42X2 CR6-FREI	VERSCHLUSSSCHRAUBE
105	811205708	1	SCREW LOCKING FLASCHE 50ML 150°C	SCHRAUBENSICHERUNG

Pos.1

Abbildung ähnlich
Illustration similar
Illustration similaire

Pos.	Item	Quantity	Description	Bezeichnung
1000	980288008	1	DOCUMENTATION	DOKUMENTATION

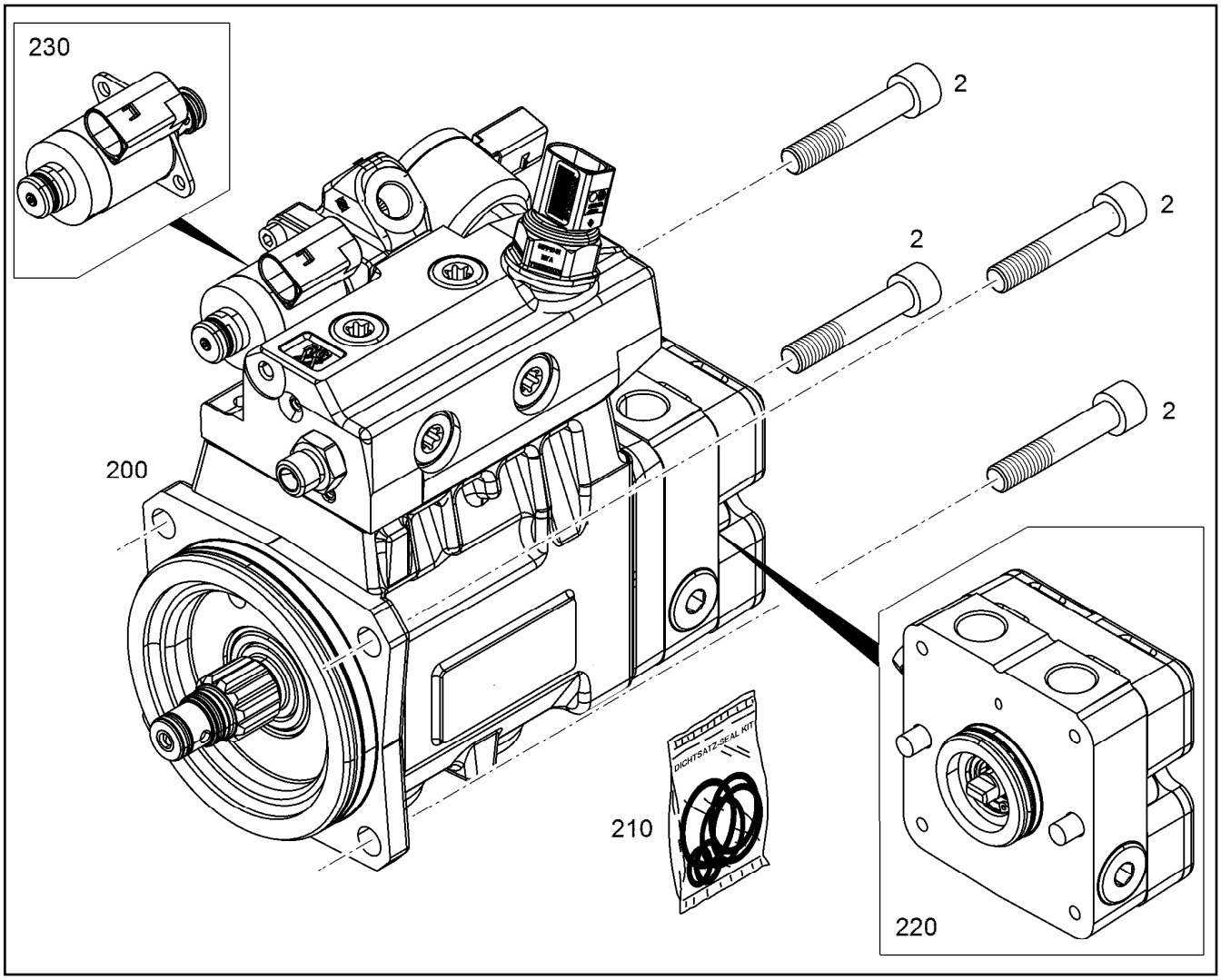

Pos.	Item	Quantity	Description	Bezeichnung
1	10146658	1	HIGH PRESSURE PUMP R-MOTORXD934 A7 ⇨ ❑ 182	HOCHDRUCKPUMPE
2	11008297	4	SOCKET HEAD SCREW ISO 4762 M10X55 10	ZYLINDERSCHRAUBE

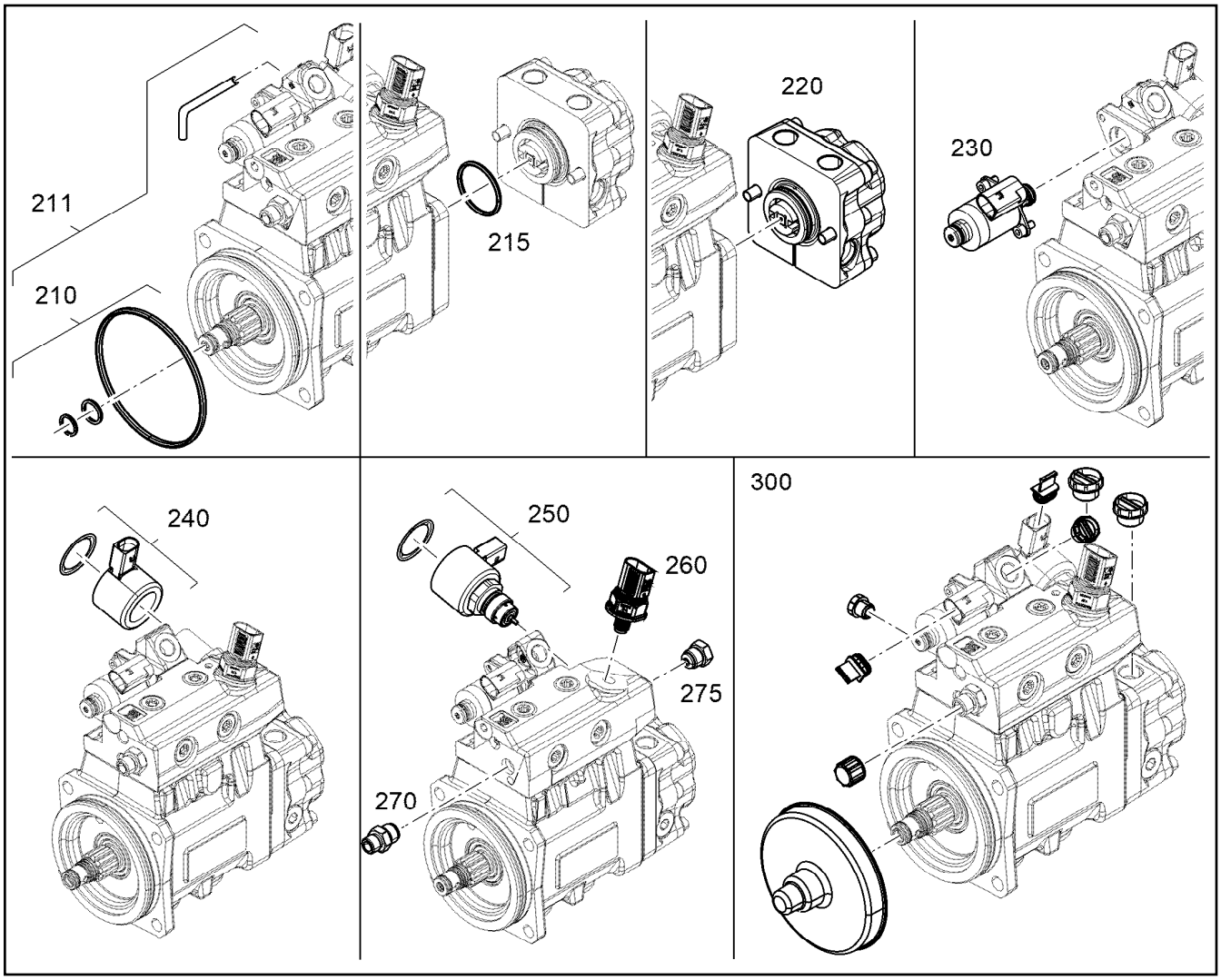

Pos.	Item	Quantity	Description	Bezeichnung
210	12417001	1	SEAL KIT HIGH PRESSURE PUMP	DS HOCHDRUCKPUMPE
211	12937883	1	SEAL KIT HIGH PRESSURE PUMP	DS HOCHDRUCKPUMPE
215	12424993	1	SEAL KIT PREFEEDING PUMP	DS VORFOERDERPUMPE
220	12923599	1	RK PRE-FEED PUMP	RS VORFOERDERPUMPE
230	12490199	1	RK VOLUME CONTROL VALVE	RS SAUGDROSSELVENTIL
240	12966286	1	REPAIR KIT VALVE	RS VENTIL
250	12917604	1	REPAIR KIT VALVE	RS VENTIL
260	12881001	1	RK HIGH PRESSURE SENSOR	RS HOCHDRUCKSENSOR
270	12932487	1	RK HIGH PRESSURE CONNECTING	RS HOCHDRUCKANSCHLUSS
275	12932488	1	REPAIR KIT SCREW PLUG	RS VERSCHLUSSSCHRAUBE
300	12489819	1	COVERING CAPS - KIT	ABDECKKAPPEN-KIT
			⇨ ❑ 183	

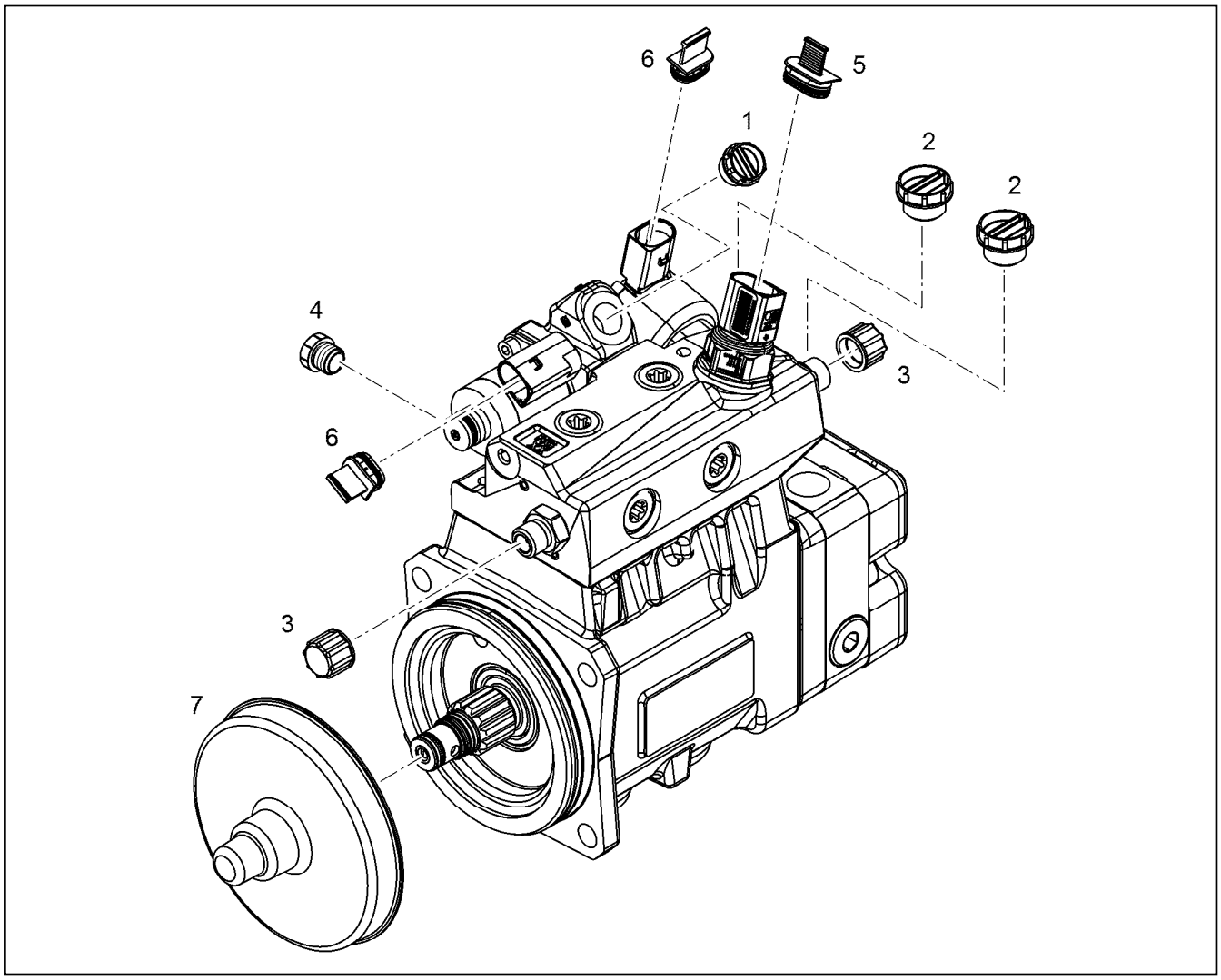

Pos.	Item	Quantity	Description	Bezeichnung
1	7011745	1	SCREW STOPPER GPN 700 M14X1,5 PE-HD	SCHRAUBSTOPFEN
2	10129392	2	COVER LID 700 M18X1,5 PA 6	ABDECKKAPPE
3	10021410	2	SCREW CAP GPN 800 M14X1,5	SCHRAUBKAPPE
4	7003652	1	SCREW STOPPER GPN 700 M12X1,5 PE-HD	SCHRAUBSTOPFEN
5	11698481	1	BLANKING PLUG GPN 360 FORM B PE-LLD	VERSCHLUSSSTOPFEN
6	11835061	2	BLANKING PLUG GPN 360 PE-LLD	VERSCHLUSSSTOPFEN
7	10129394	1	COVER LID PP	ABDECKKAPPE

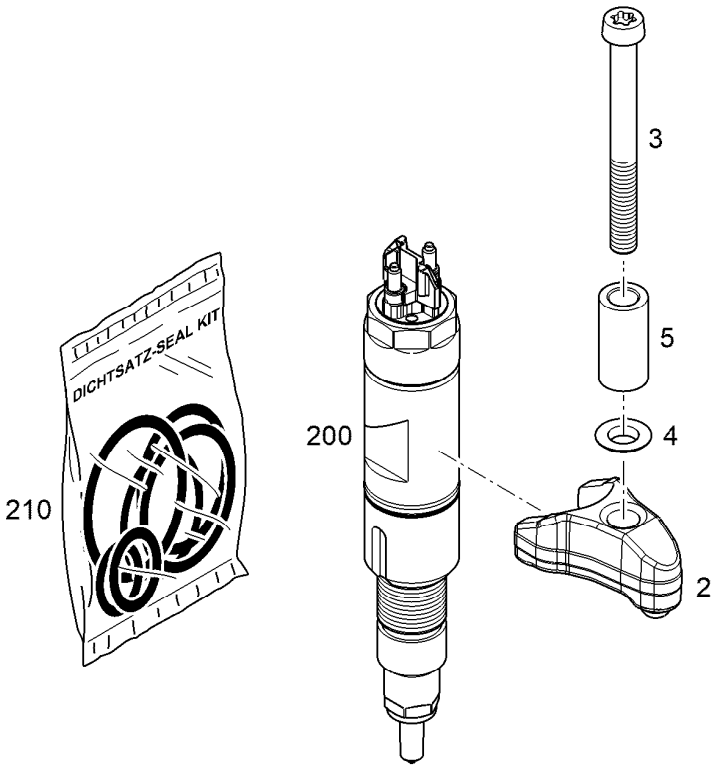

Pos.	Item	Quantity	Description	Bezeichnung
2	11403994	1	JAW 42CrMoS4+QT	PRATZE
3	12219491	1	SOCKET HEAD SCREW ISO 14580 M8X80 1	ZYLINDERSCHRAUBE
4	11622278	1	SPHERICAL WASHER DIN 6319 C 8,4X17X3	KUGELSCHEIBE
5	12843150	1	DISTANCE SLEEVE 9X15X30 42CrMoS4+QT	DISTANZHUELSE
200	13743036	1	RK INJECTOR LI2.7-20-SF-950 ⇨ ❑ 185	RS INJEKTOR
210	13703082	1	SEAL KIT INJECTOR ⇨ ❑ 188	DS INJEKTOR

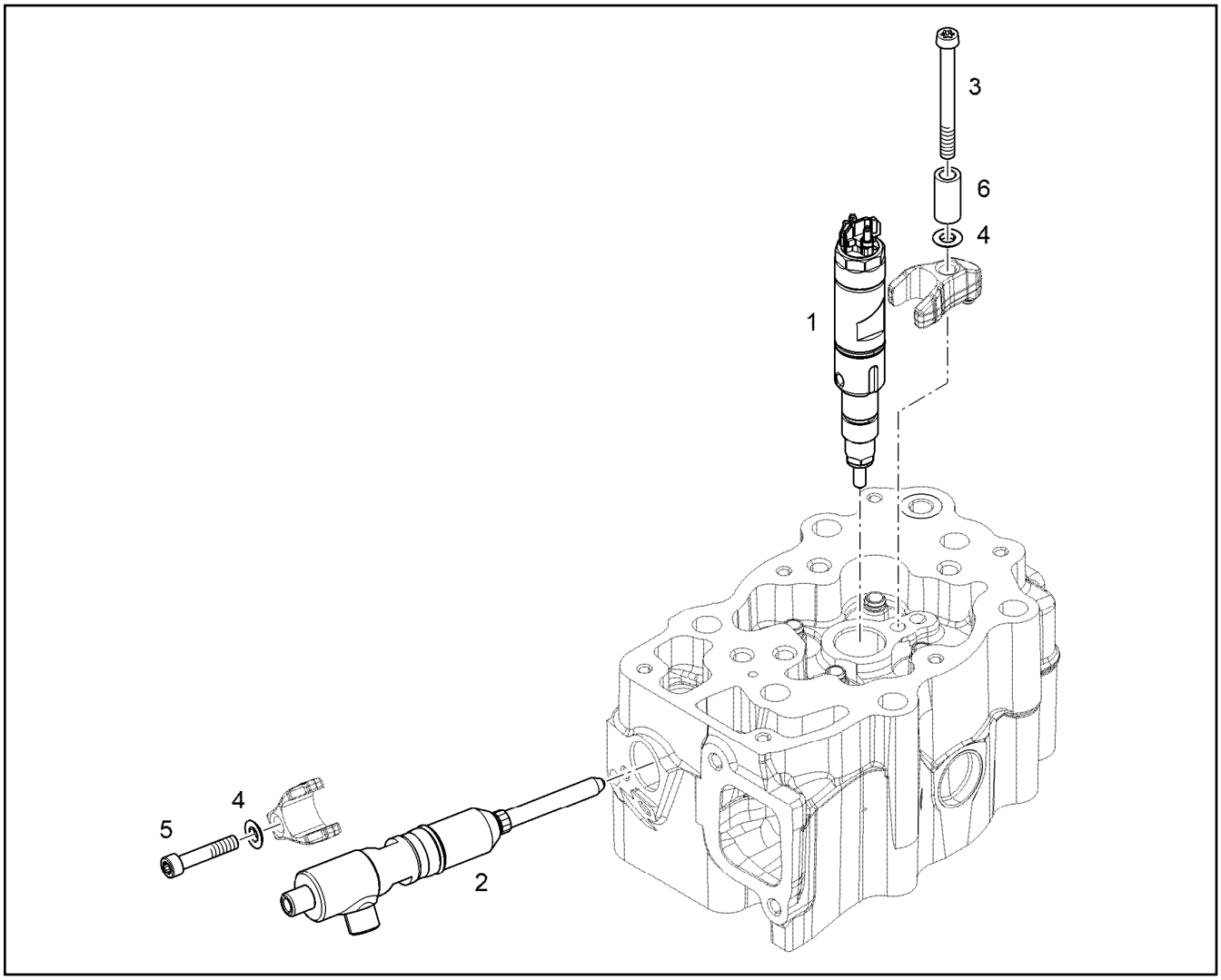

Pos.	Item	Quantity	Description	Bezeichnung
1	13574085	1	INJECTOR LI2.7-20-SF-950	INJEKTOR
2	10141140	1	RK HIGH PRESSURE CONNECTOR ⇨ ❑ 186	RS DRUCKROHRSTUTZEN
3	12219491	1	SOCKET HEAD SCREW ISO 14580 M8X80 1	ZYLINDERSCHRAUBE
4	11622278	2	SPHERICAL WASHER DIN 6319 C 8,4X17X3	KUGELSCHEIBE
5	10135434	1	PRESSURE ADAPTER FASTENING ⇨ ❑ 187	BEFESTIGUNG DRUCKROHRST
6	12843150	1	DISTANCE SLEEVE 9X15X30 42CrMoS4+QT	DISTANZHUELSE

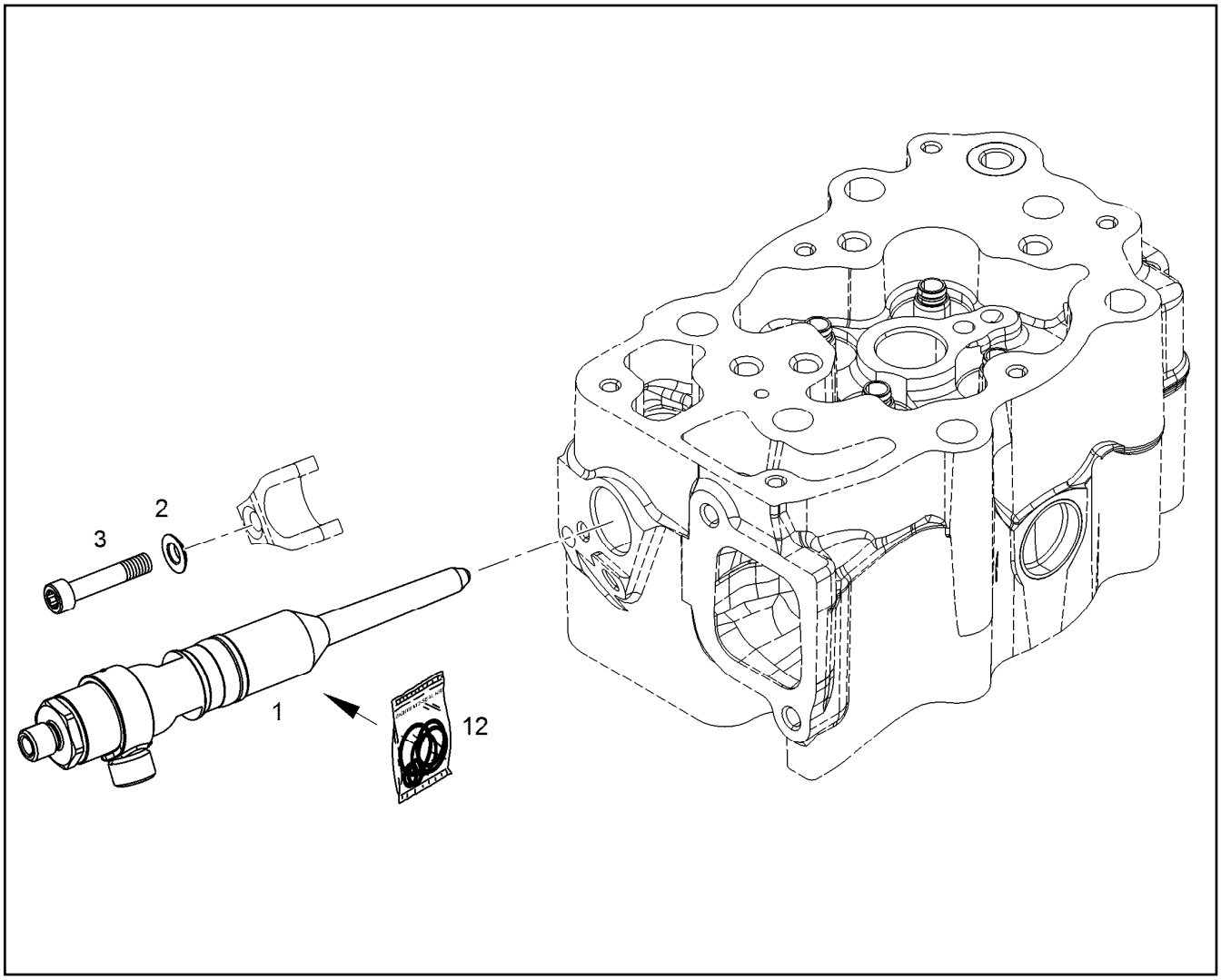

Pos.	Item	Quantity	Description	Bezeichnung
2	11622278	1	SPHERICAL WASHER DIN 6319 C 8,4X17X3	KUGELSCHEIBE
3	10135434	1	PRESSURE ADAPTER FASTENING ⇨ ❑ 187	BEFESTIGUNG DRUCKROHRST
12	10141216	1	SEAL KIT HIGH PRESS.CONNECTOR	DS DRUCKROHRSTUTZEN

Pos.	Item	Quantity	Description	Bezeichnung
1	10150144	1	JAW 42CrMoS4+QT	PRATZE
2	11622278	1	SPHERICAL WASHER DIN 6319 C 8,4X17X3	KUGELSCHEIBE
3	11600879	1	SOCKET HEAD SCREW ISO 14579 M8X40 10	ZYLINDERSCHRAUBE

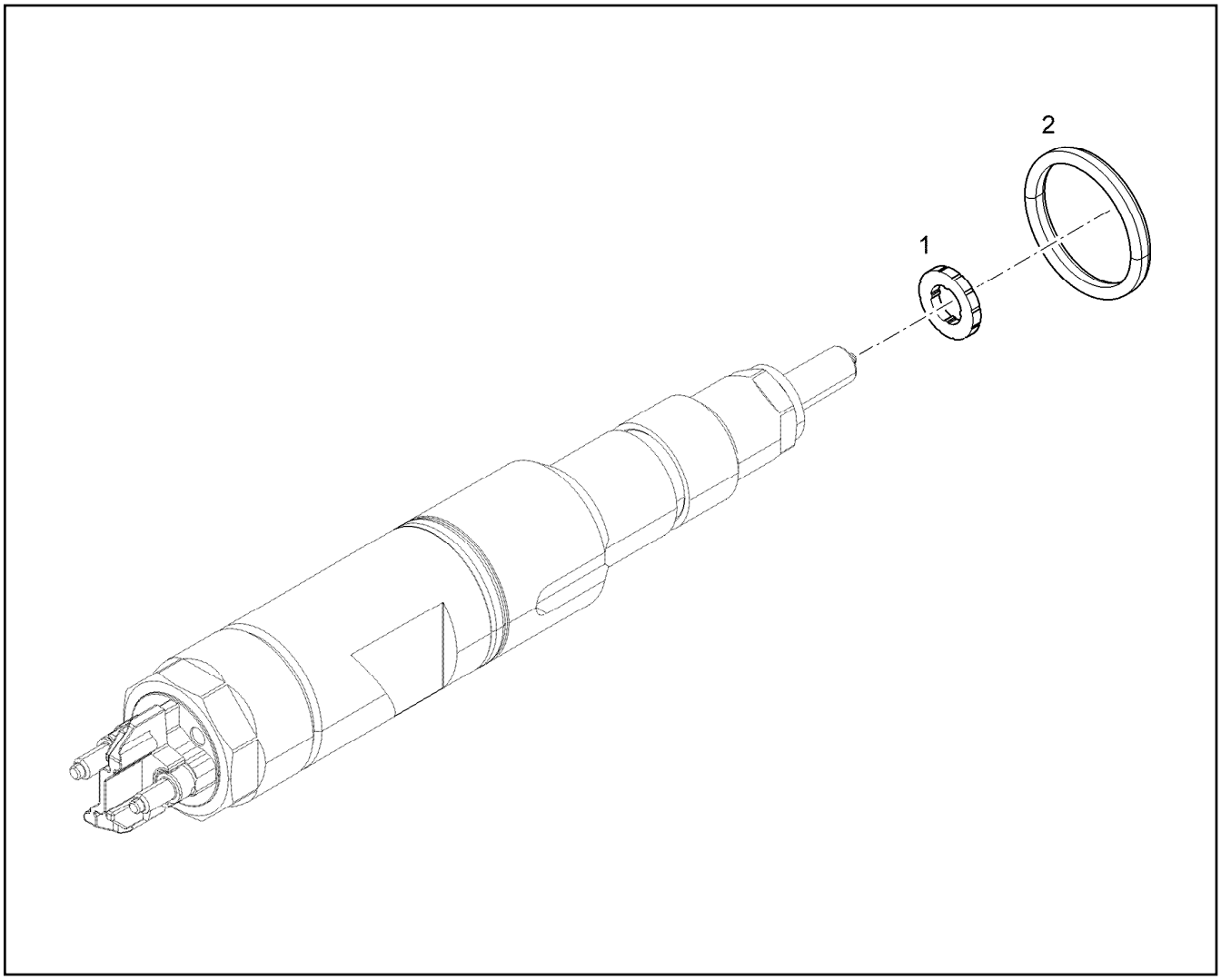

Pos.	Item	Quantity	Description	Bezeichnung
1	12931997	1	SHEET GASKET A7X13,6X2 CuSn6	DICHTSCHEIBE
2	10129193	1	O-RING 23,47X2,95 FKM 70-MoS2	O-RING

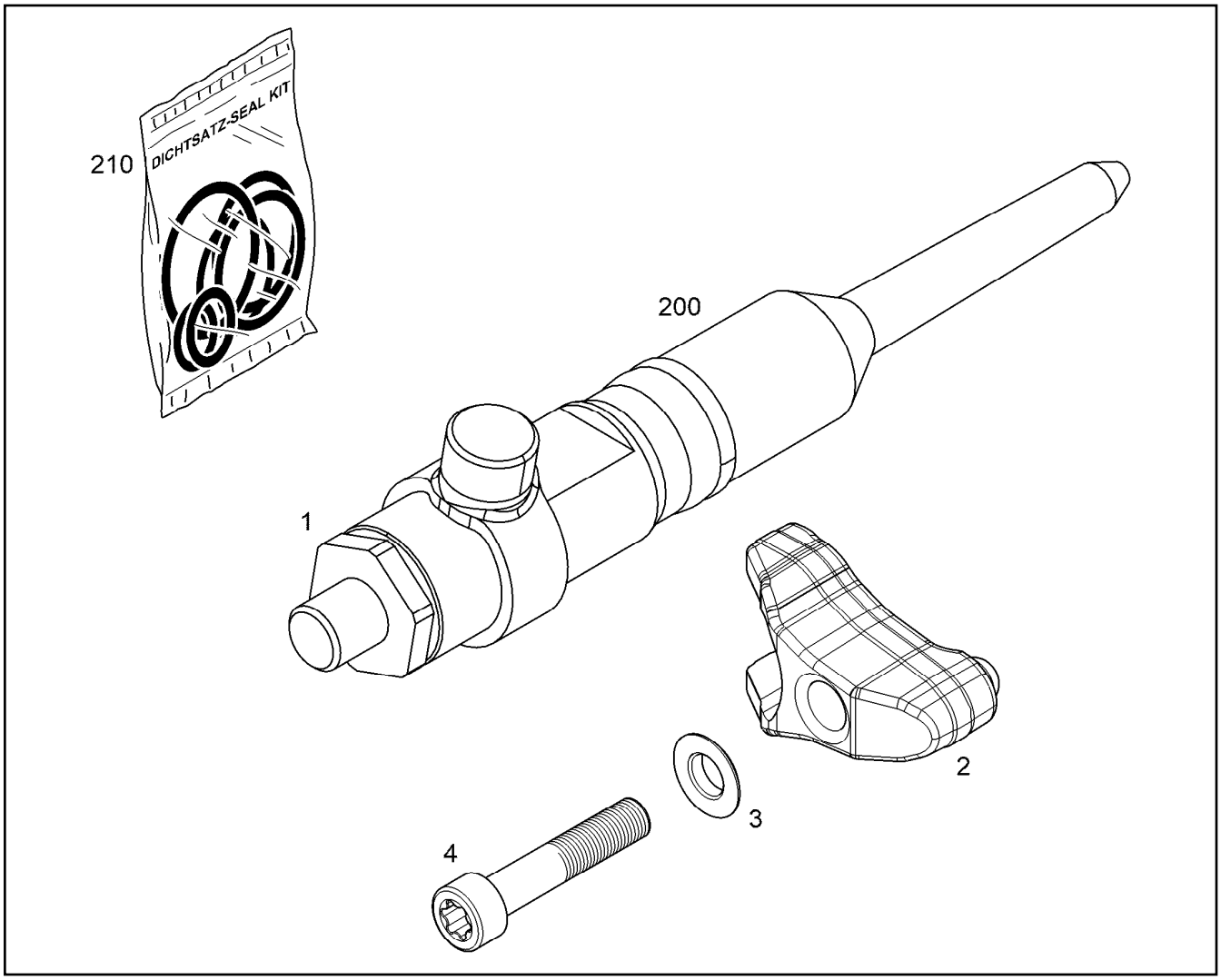

Pos.	Item	Quantity	Description	Bezeichnung
1	10135080	1	HIGH PRESSURE CONNECTOR LCRC-R ⇨ ❑ 190	DRUCKROHRSTUTZEN
2	10150144	1	JAW 42CrMoS4+QT	PRATZE
3	11622278	1	SPHERICAL WASHER DIN 6319 C 8,4X17X3	KUGELSCHEIBE
4	11600879	1	SOCKET HEAD SCREW ISO 14579 M8X40 10	ZYLINDERSCHRAUBE
200	13757616	1	RK HIGH PRESSURE CONNECTOR ⇨ ❑ 191	RS DRUCKROHRSTUTZEN
210	10141216	1	SEAL KIT HIGH PRESS.CONNECTOR	DS DRUCKROHRSTUTZEN

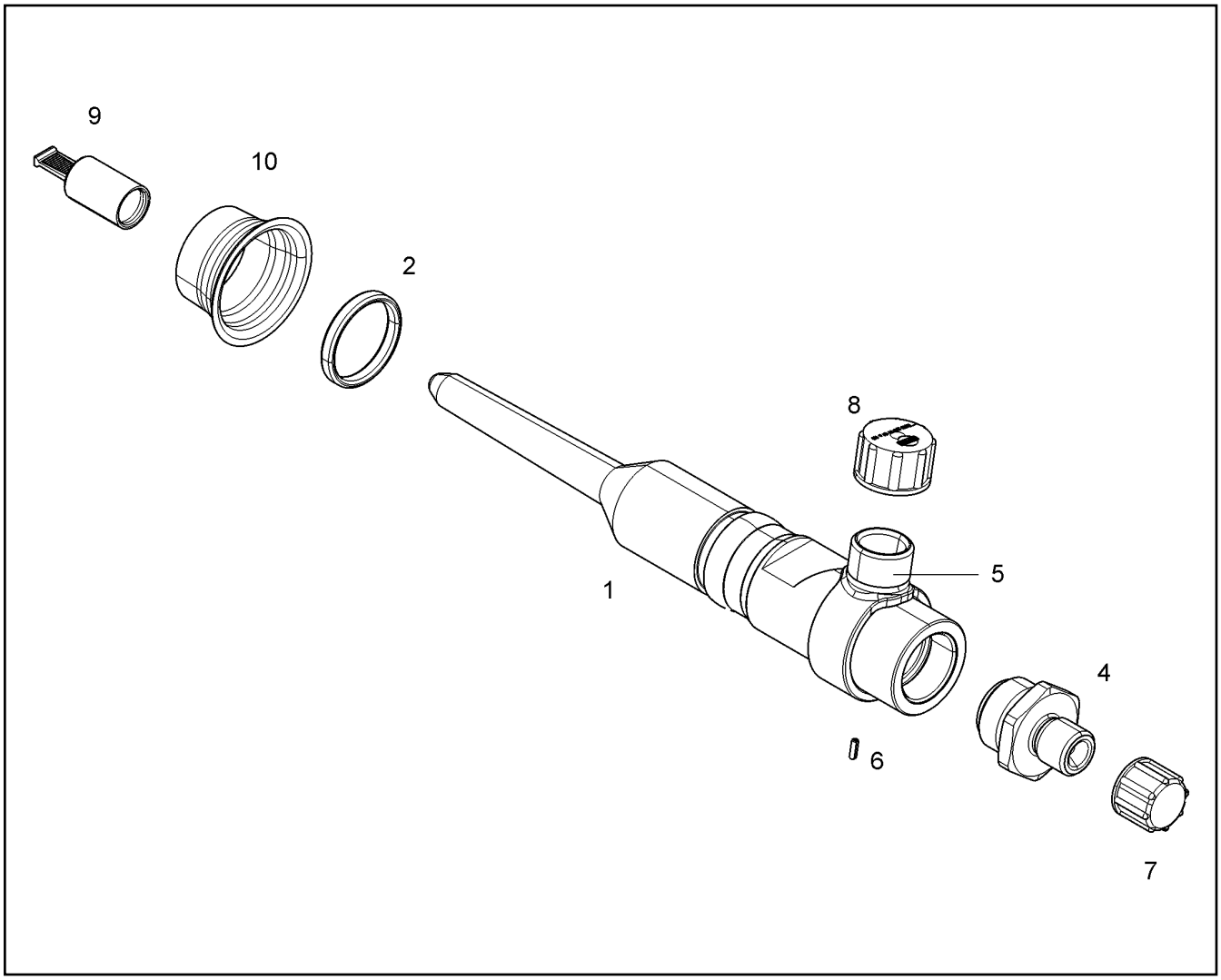

Pos.	Item	Quantity	Description	Bezeichnung
210	10141216	1	SEAL KIT HIGH PRESS.CONNECTOR	DS DRUCKROHRSTUTZEN
220	12485523	1	COVERING CAPS - KIT	ABDECKKAPPEN-KIT

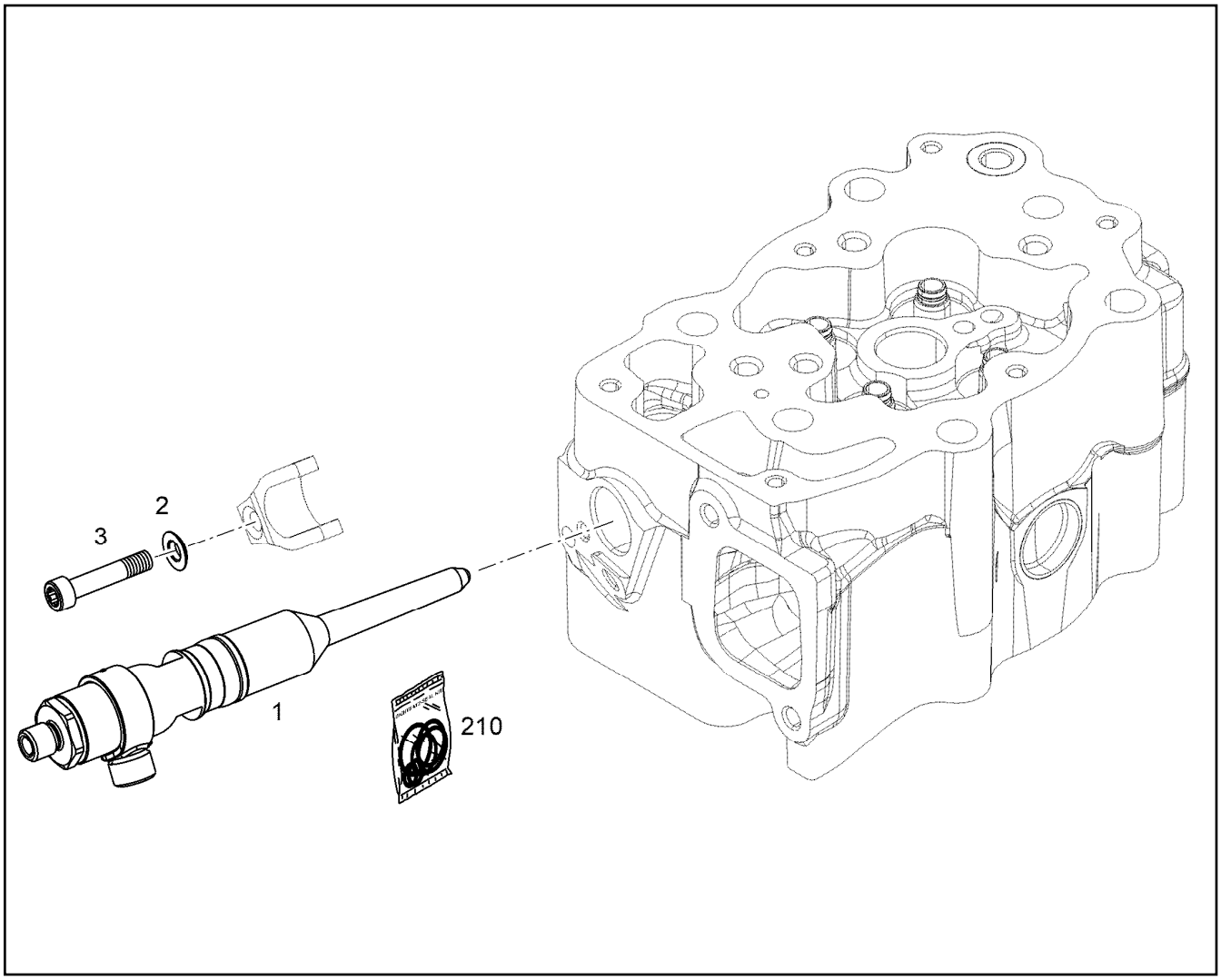

Pos.	Item	Quantity	Description	Bezeichnung
1	10141140	1	RK HIGH PRESSURE CONNECTOR ⇨ ❑ 186	RS DRUCKROHRSTUTZEN
2	11622278	1	SPHERICAL WASHER DIN 6319 C 8,4X17X3	KUGELSCHEIBE
3	10135434	1	PRESSURE ADAPTER FASTENING ⇨ ❑ 187	BEFESTIGUNG DRUCKROHRST
210	10141216	1	SEAL KIT HIGH PRESS.CONNECTOR	DS DRUCKROHRSTUTZEN

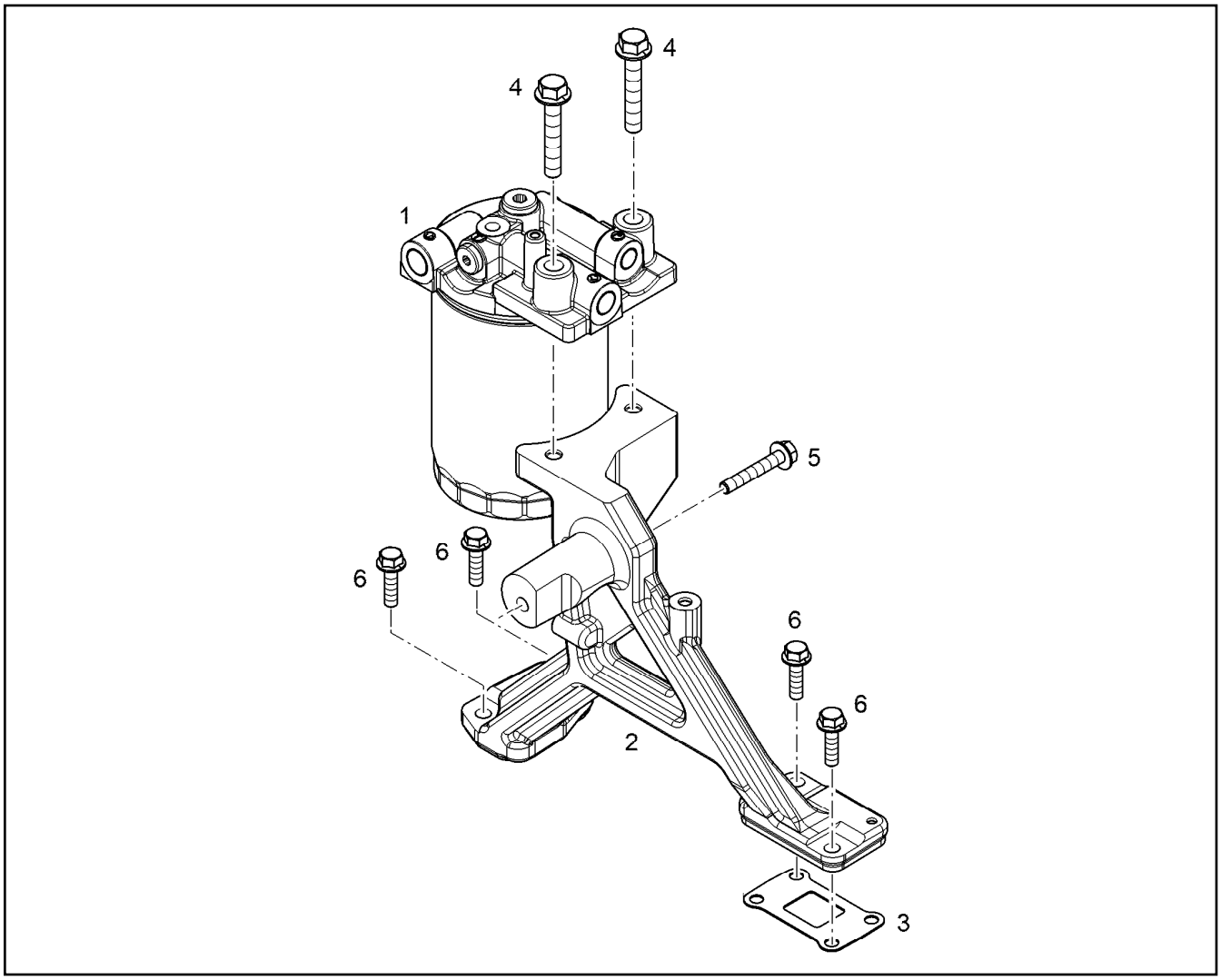

Pos.	Item	Quantity	Description	Bezeichnung
1	13512036	1	CONSOLE FOR FILTER PRE-ASS. ⇨ ❑ 193	FILTERKONSOLE VORM.
2	10146789	1	HOLDER	HALTER
3	9079130	1	SEAL 1	DICHTUNG
4	11656158	2	HEX SCREW EN 1665 M10X60 8.8 FLZN	SECHSKANTSCHRAUBE
5	11691686	1	HEX SCREW EN 1665 M8X50 8.8 480H SPF	SECHSKANTSCHRAUBE
6	11826563	4	HEX SCREW EN 1665 M8X30 8.8 480H	SECHSKANTSCHRAUBE

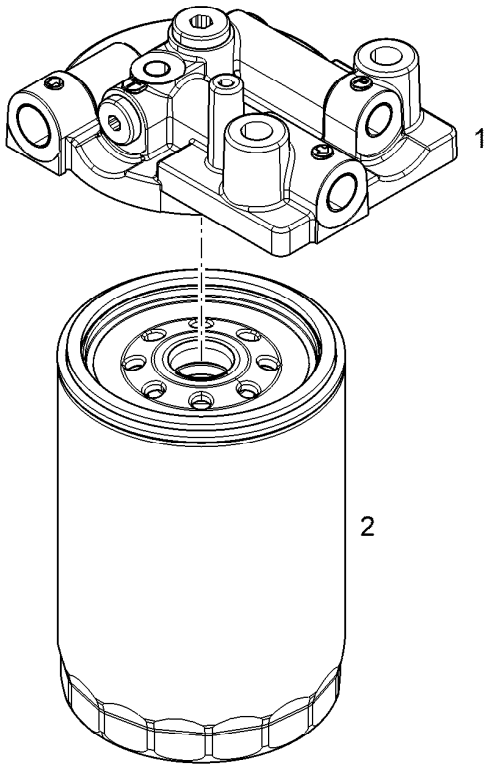

Pos.	Item	Quantity	Description	Bezeichnung
1	13472766	1	FILTER HEAD PRE-ASSY.	FILTERKOPF VORM.
2	12820742	1	FUEL FINE FILTER ⇨ ❑ 194	KRAFTSTOFFFEINFILTER

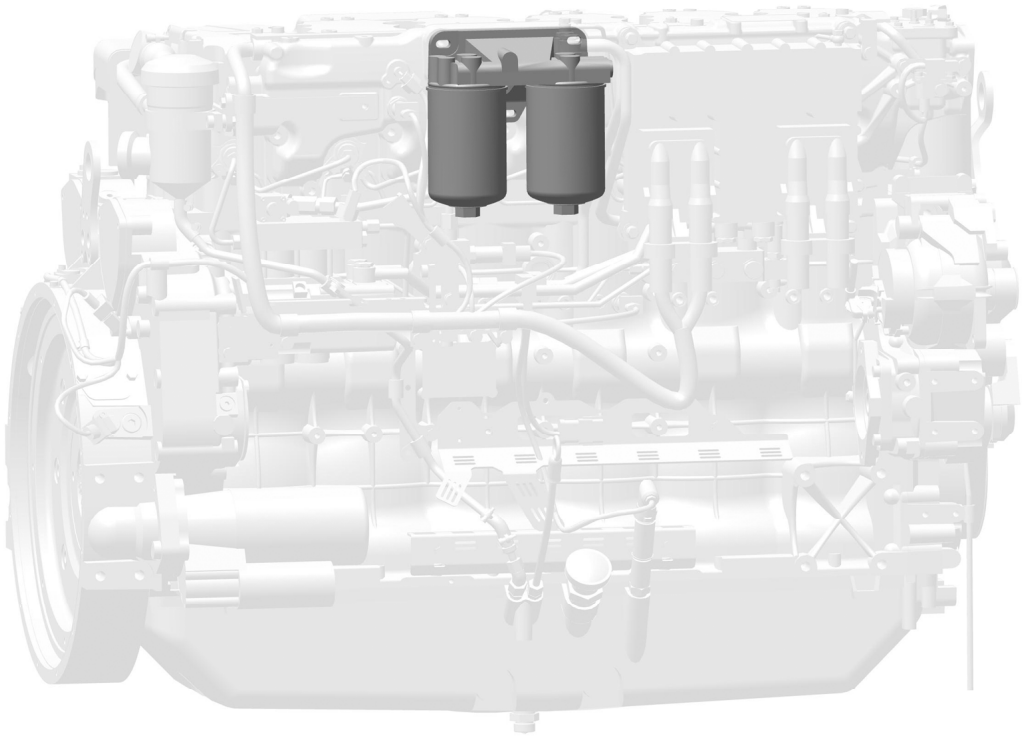

Abbildung ähnlich
Illustration similar
Illustration similaire

Pos. 140

Pos.	Item	Quantity	Description	Bezeichnung
1	980288008	1	DOCUMENTATION	DOKUMENTATION

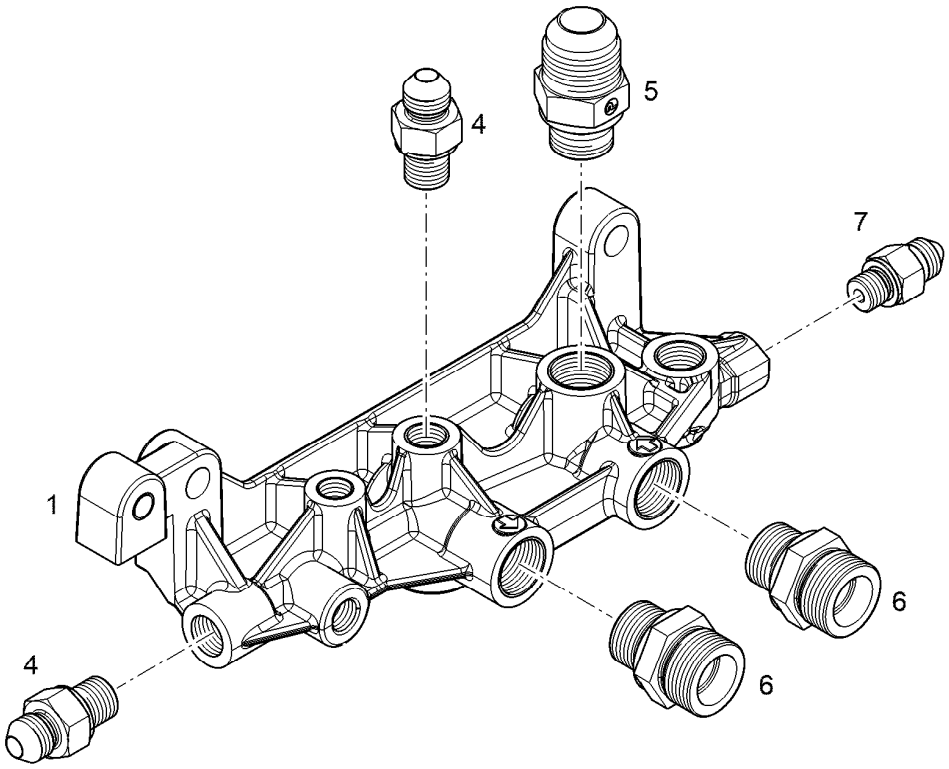

Pos.	Item	Quantity	Description	Bezeichnung
1	13472510	1	DISTRIBUTOR BLOCK PRE-ASS. ⇨ ❑ 197	VERTEILERBLOCK VORM.
2	11002995	1	HOLLOW SCREW DIN 7643 12-3-M16X1,5 X5	HOHLSCHRAUBE
3	10143543	1	PIPELINE	ROHRLEITUNG
4	10143542	1	PIPELINE	ROHRLEITUNG
5	11002988	1	FITTING GE 12 M14X1,5/3/ EDELSTAHL	VERSCHRAUBUNG
6	10130104	1	PIPELINE 15X1,5	ROHRLEITUNG
7	10143240	1	FUEL LINE 12X1	KRAFTSTOFFLEITUNG
9	10011867	2	SEALING RING 16,7X24,00X1,5 FKM 80	DICHTRING
12	11657219	1	HEX SCREW EN 1665 M8X20 8.8 480H SPF	SECHSKANTSCHRAUBE
13	7382085	1	CLAMP DIN 3016-1 16X20XD1 W1-2-MVQ	SCHELLE
14	11690637	2	HEX SCREW EN 1665 M8X25 8.8 480H SPF	SECHSKANTSCHRAUBE
15	10011868	10	SEALING RING 18,7X26X1,5 St/FPM1-80	DICHTRING
16	12210015	3	HOLLOW SCREW DIN 7643 15-3-M18X1,5 4	HOHLSCHRAUBE
17	12987460	2	HOLLOW SCREW 15-3-M18X1.5 11SMnPb3	HOHLSCHRAUBE

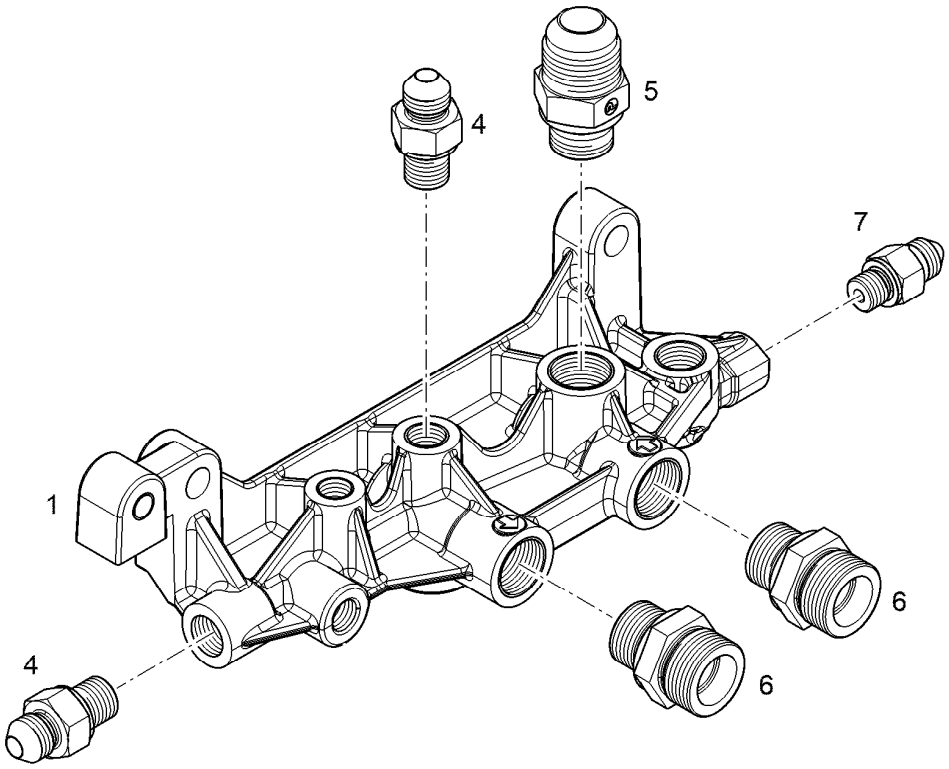

Pos.	Item	Quantity	Description	Bezeichnung
1	12511916	1	DISTRIBUTOR BLOCK EN AC-Al Si1	VERTEILERBLOCK
2	10813935	2	FITTING GE 8 M12X1,5/1/2 CR6-FREI	VERSCHRAUBUNG
5	10813942	1	FITTING GE 14,15,16 M18X CR6-FREI	VERSCHRAUBUNG
6	4981232	2	FITTING ISO 8434-1 GE 15L M18X1,5 CR6-F	VERSCHRAUBUNG
7	10813933	1	FITTING GE 6 M10X1,0/7/1 CR6-FREI	VERSCHRAUBUNG

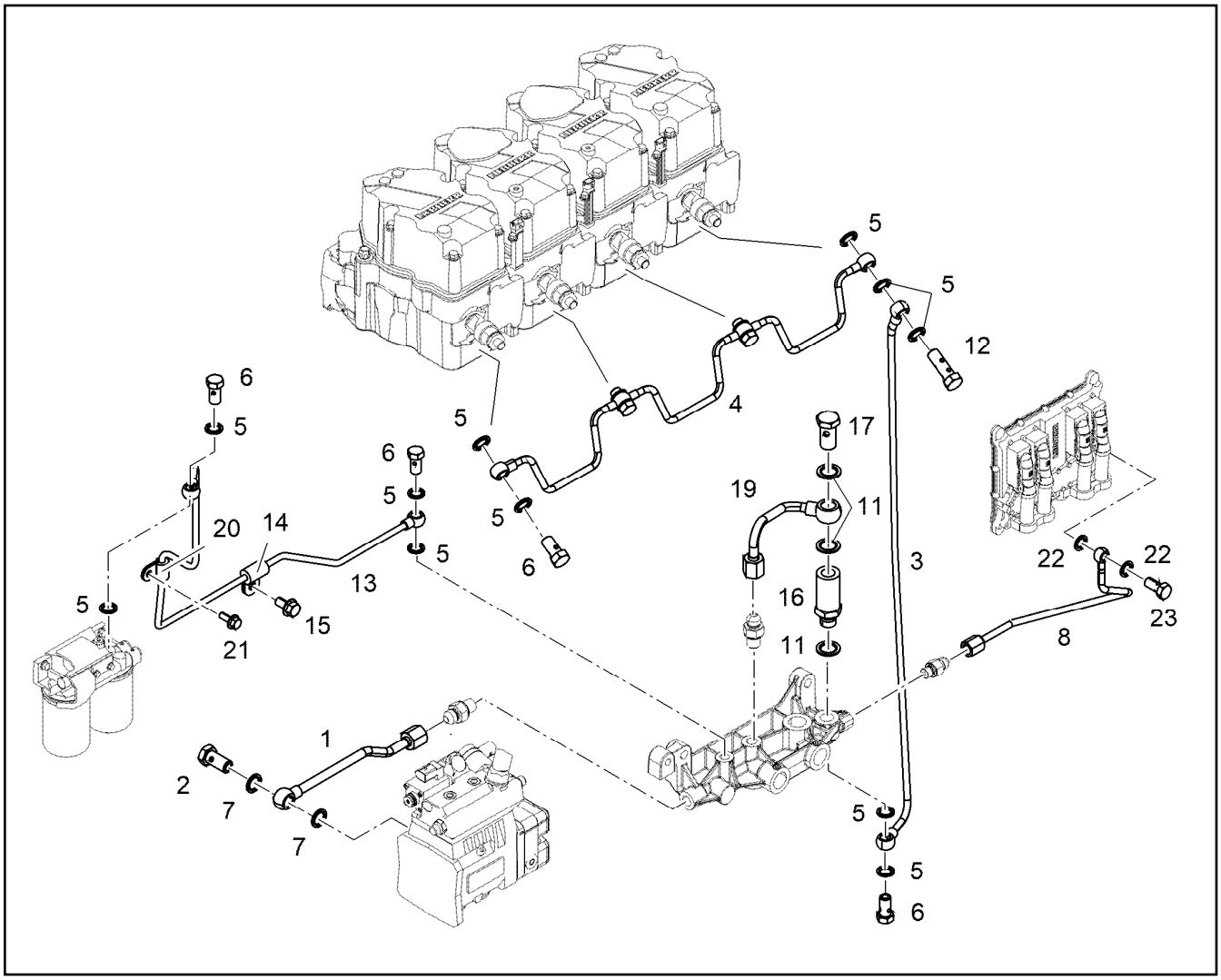

Pos.	Item	Quantity	Description	Bezeichnung
1	10143251	1	PIPELINE 8X2	ROHRLEITUNG
2	12210024	1	HOLLOW SCREW DIN 7643 8-3-M12X1,5 480	HOHLSCHRAUBE
3	10132170	1	PIPELINE 6X1	ROHRLEITUNG
4	9078935	1	FUEL LINE	KRAFTSTOFFLEITUNG
5	10011864	15	SEALING RING 10,7X16X1,5 St/FPM1-80	DICHTRING
6	12210010	6	HOLLOW SCREW DIN 7643 6-3-M10X1 480H	HOHLSCHRAUBE
7	10011865	2	SEALING RING 12,7X18,00X1,5 FKM 80	DICHTRING
8	10141846	1	PIPELINE 6X1	ROHRLEITUNG
11	10011866	3	SEALING RING 14,7X22,00X1,5 FKM 80	DICHTRING
12	12210029	1	DOUBLE BANJO BOLT 6-M10X1 11SMnPb3	DOPPELHOHLSCHRAUBE
13	10133607	1	PIPELINE 6X1	ROHRLEITUNG
14	7382088	1	CLAMP DIN 3016-1 6X20XD1 W1-2-MVQ	SCHELLE
15	11656992	1	HEX SCREW EN 1665 M8X16 8.8 480H SPF	SECHSKANTSCHRAUBE
16	10132935	1	INTERMEDIATE PART 11SMnPb30+C	ZWISCHENSTUECK
17	12210013	1	HOLLOW SCREW DIN 7643 10-3-M14X1,5 4	HOHLSCHRAUBE
19	10132180	1	PIPELINE 8X1	ROHRLEITUNG
20	7381292	1	CLAMP DIN 3016-1 6X15XD1 W1-2-MVQ	SCHELLE
21	11840297	1	HEX SCREW EN 1665 M6X16 8.8 480H SPF	SECHSKANTSCHRAUBE
22	10011871	2	SEALING RING 8,7X14X1 St/FPM1-80	DICHTRING
23	12210009	1	HOLLOW SCREW DIN 7643 4-3-M8X1 480H	HOHLSCHRAUBE

Pos.	Item	Quantity	Description	Bezeichnung
1	10143826	1	INJECTION LINE R-MOTORXD934	EINSPRITZLEITUNG
2	10143827	3	INJECTION LINE R-MOTORXD934	EINSPRITZLEITUNG
3	11389287	1	SEALING PLUG M18X1.5	DICHTSTOPFEN

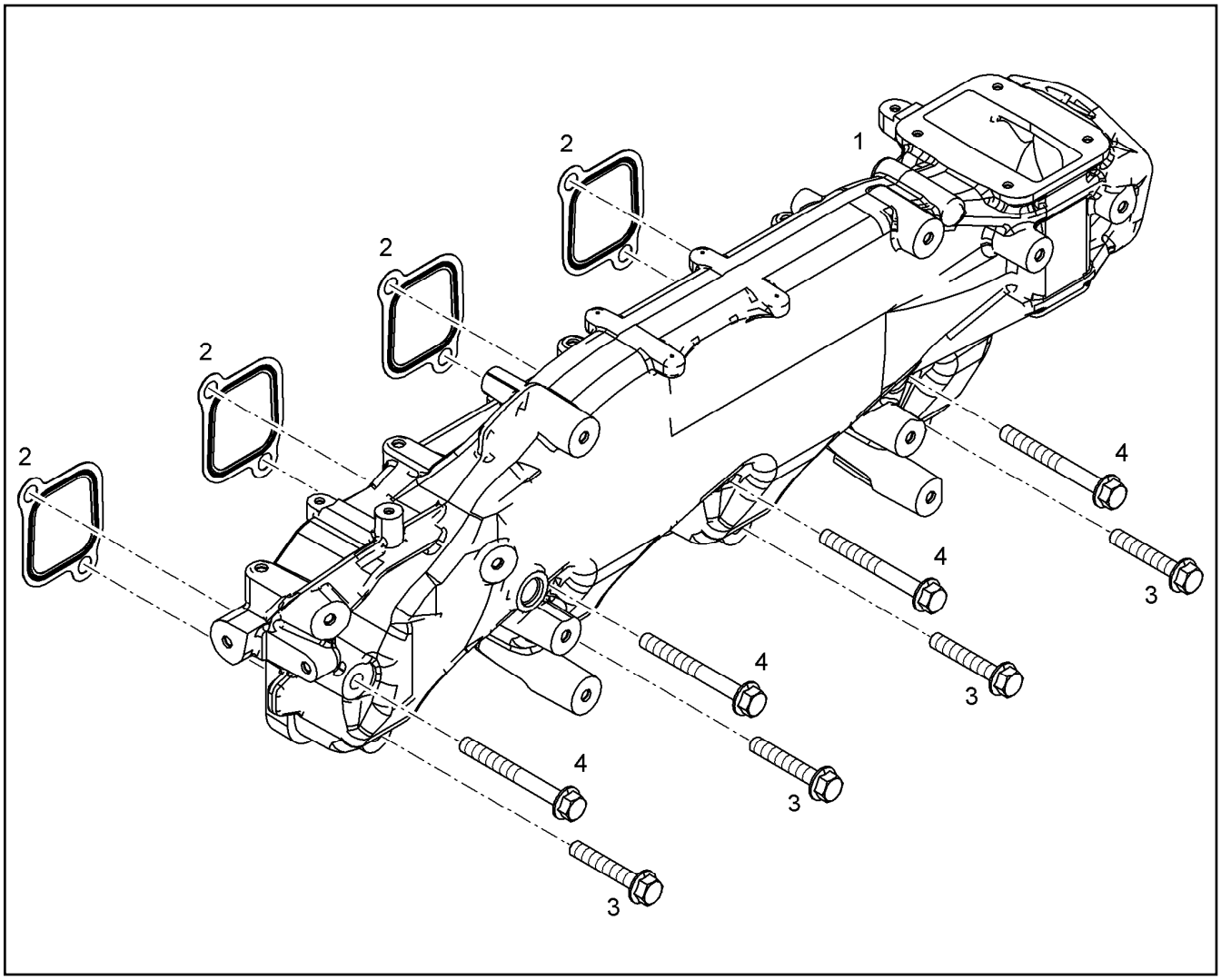

Pos.	Item	Quantity	Description	Bezeichnung
1	11415774	1	AIR SUCTION PIPE R-MOTORXD934/D94	LUFTANSAUGROHR
2	10118556	4	SEAL S235JR	DICHTUNG
3	11656158	4	HEX SCREW EN 1665 M10X60 8.8 FLZN	SECHSKANTSCHRAUBE
4	12208088	4	HEX SCREW EN 1665 M10X90 8.8 FLZN	SECHSKANTSCHRAUBE

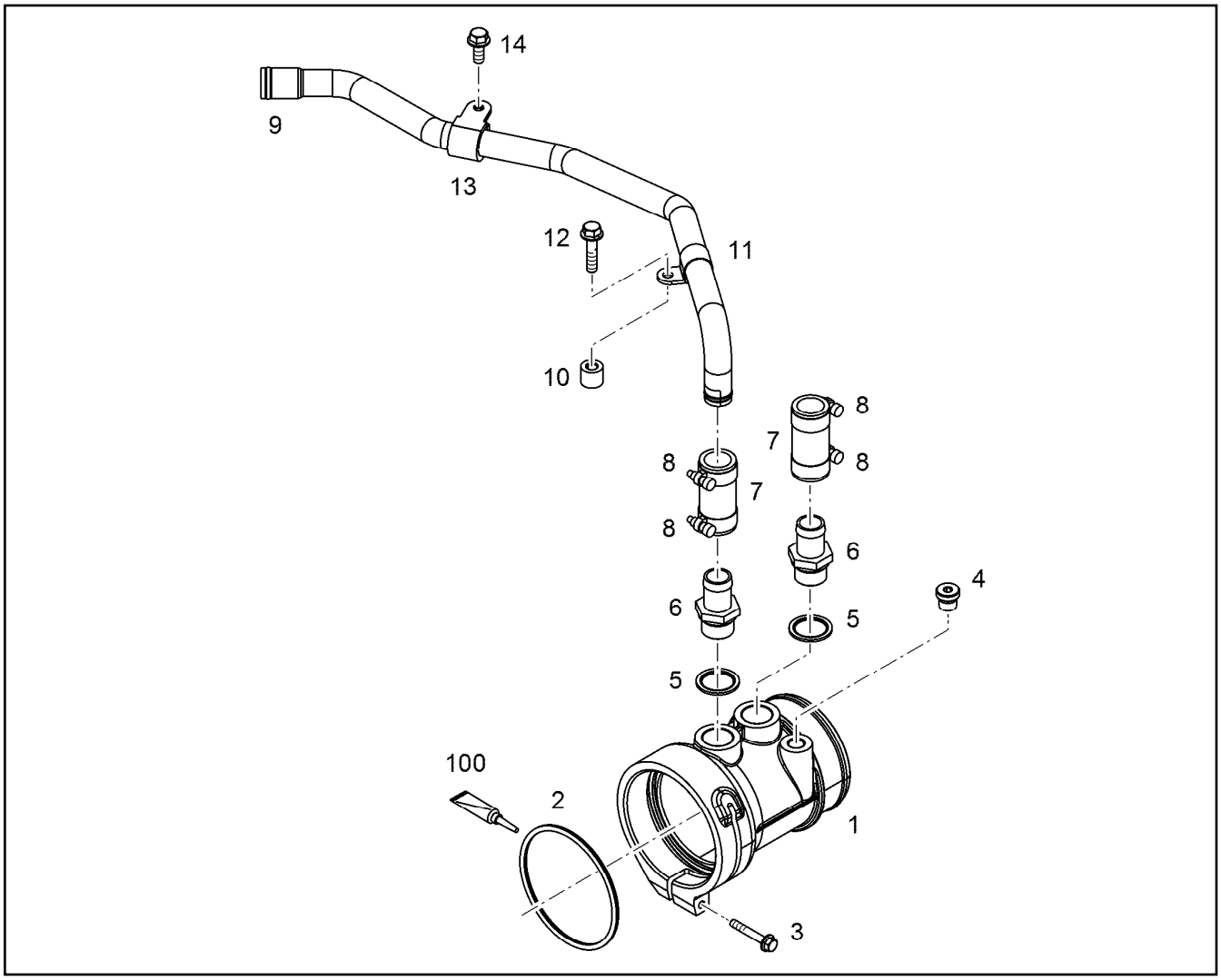

Pos.	Item	Quantity	Description	Bezeichnung
1	11444999	1	INTAKE STACK R-MOTORXD934/D94	ANSAUGSTUTZEN
2	11008055	1	O-RING AEHNL.ISO 3601-1 100X5 FKM 70	O-RING
3	12207587	1	HEX SCREW EN 1665 M6X40 8.8 480H	SECHSKANTSCHRAUBE
4	7380566	1	SCREW PLUG VSTI M14X1,5	VERSCHLUSSSCHRAUBE
5	10011870	2	SEALING RING 26,7X34,93X2 St/FPM1-80	DICHTRING
6	9140351	2	HOSE NIPPLE	SCHLAUCHNIPPEL
7	9273161	2	RUBBER CONNECTION 22X30X65L.	GUMMIMUFFE
8	774215008	4	HOSE CLAMP 26/20-32/12 W3	SCHLAUCHSCHELLE
9	10140732	1	PIPELINE 22X1,5	ROHRLEITUNG
10	9177776	1	WASHER 8,4X18X15 -	SCHEIBE
11	7381286	1	CLAMP DIN 3016-1 22X20XA1 W1-2	SCHELLE
12	11826563	1	HEX SCREW EN 1665 M8X30 8.8 480H	SECHSKANTSCHRAUBE
13	7381630	1	CLAMP DIN 3016-1 22X20XD1 W1-2-MVQ	SCHELLE
14	11657219	1	HEX SCREW EN 1665 M8X20 8.8 480H SPF	SECHSKANTSCHRAUBE
100	10285708	1	GREASE NBU 30 1KG DOSE	FETT

Pos.	Item	Quantity	Description	Bezeichnung
1	10141549	1	CONNECTING LINE R-MOTORXD936	VERBINDUNGSLEITUNG
2	10127984	1	RETAINER CLIP 122,5/K1 St/Inox	SPANNSCHELLE
3	12210035	3	DOUBLE-ENDED STUD DIN 835 M10X25 8.8	STIFTSCHRAUBE
4	12215460	3	HEX NUT EN 1661 M10 10 FLZN	SECHSKANTMUTTER
5	7380605	1	O-RING ISO 3601-1 101,27X2,62 FKM 70 A,B	O-RING

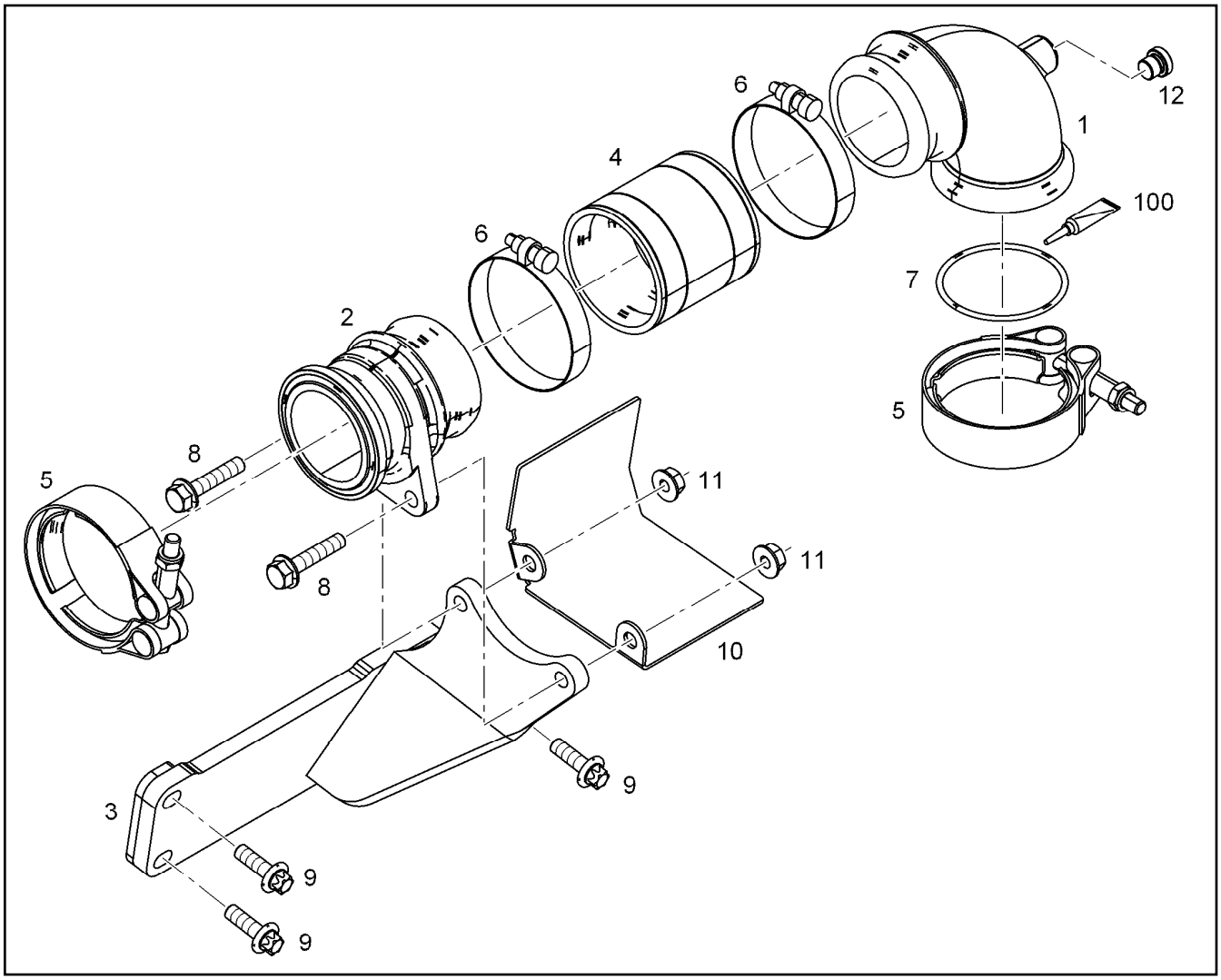

Pos.	Item	Quantity	Description	Bezeichnung
1	10143612	1	CHARGE AIR LINE	LADELUFTLEITUNG
2	10143614	1	CHARGE AIR LINE	LADELUFTLEITUNG
3	10149679	1	CONSOLE X5CrNi18-10	KONSOLE
4	10129904	1	RUBBER CONNECTION	GUMMIMUFFE
5	10124798	2	RETAINER CLIP 77/K1 St/Inox	SPANNSCHELLE
6	5004929	2	HOSE CLAMP DIN 3017-1 70/60-80/13 W2-2	SCHLAUCHSCHELLE
7	7380970	1	O-RING AEHNL.ISO 3601-1 63,17X2,62 FKM	O-RING
8	11658660	2	HEX SCREW EN 1665 M8X40 8.8 480H SPF	SECHSKANTSCHRAUBE
9	10118695	3	HEXALOBULAR HEAD SCREW M8X25 X6NiC	SECHSRUNDSCHRAUBE
10	11382888	1	HEAT PROTECTION SHEET S355JR	HITZESCHUTZBLECH
10	12428325	1	HEAT PROTECTION SHEET S355JR	HITZESCHUTZBLECH
11	11820285	2	HEX NUT EN 1661 M8 8 480H SPF	SECHSKANTMUTTER
12	7381638	1	SCREW PLUG VSTI M10X1	VERSCHLUSSSCHRAUBE
100	10285708	1	GREASE NBU 30 1KG DOSE	FETT

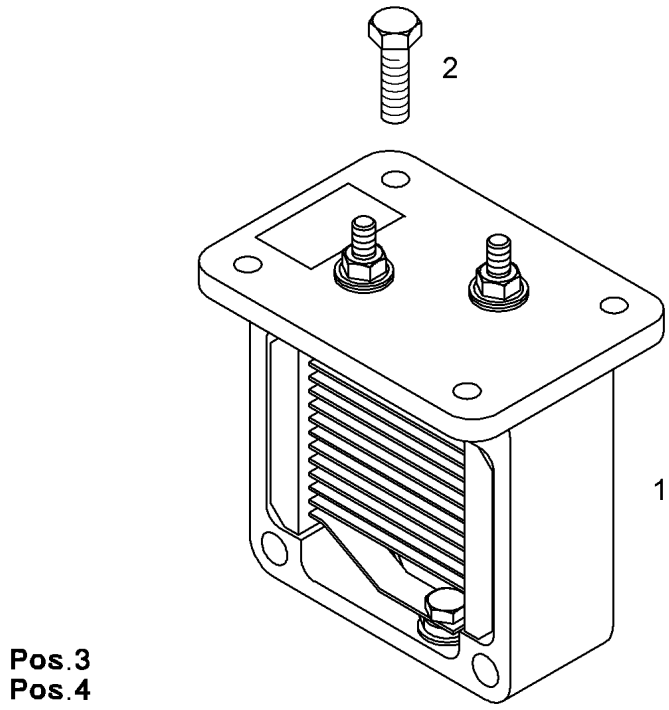

Pos.	Item	Quantity	Description	Bezeichnung
1	13701882	1	HEATING FLANGE COMPLETE 24V 1,9KW ⇨ ❑ 205	HEIZFLANSCH KOMPLETT
2	12207548	4	HEX SCREW EN 1665 M6X20 8.8 480H SPF	SECHSKANTSCHRAUBE
3	10003366	1	RIBBED HEX NUT M6 10	SECHSKANTRIPPENMUTTER
4	12826252	1	EARTH CONNECTION PLATE Cu	MASSEVERBINDUNGSBLECH

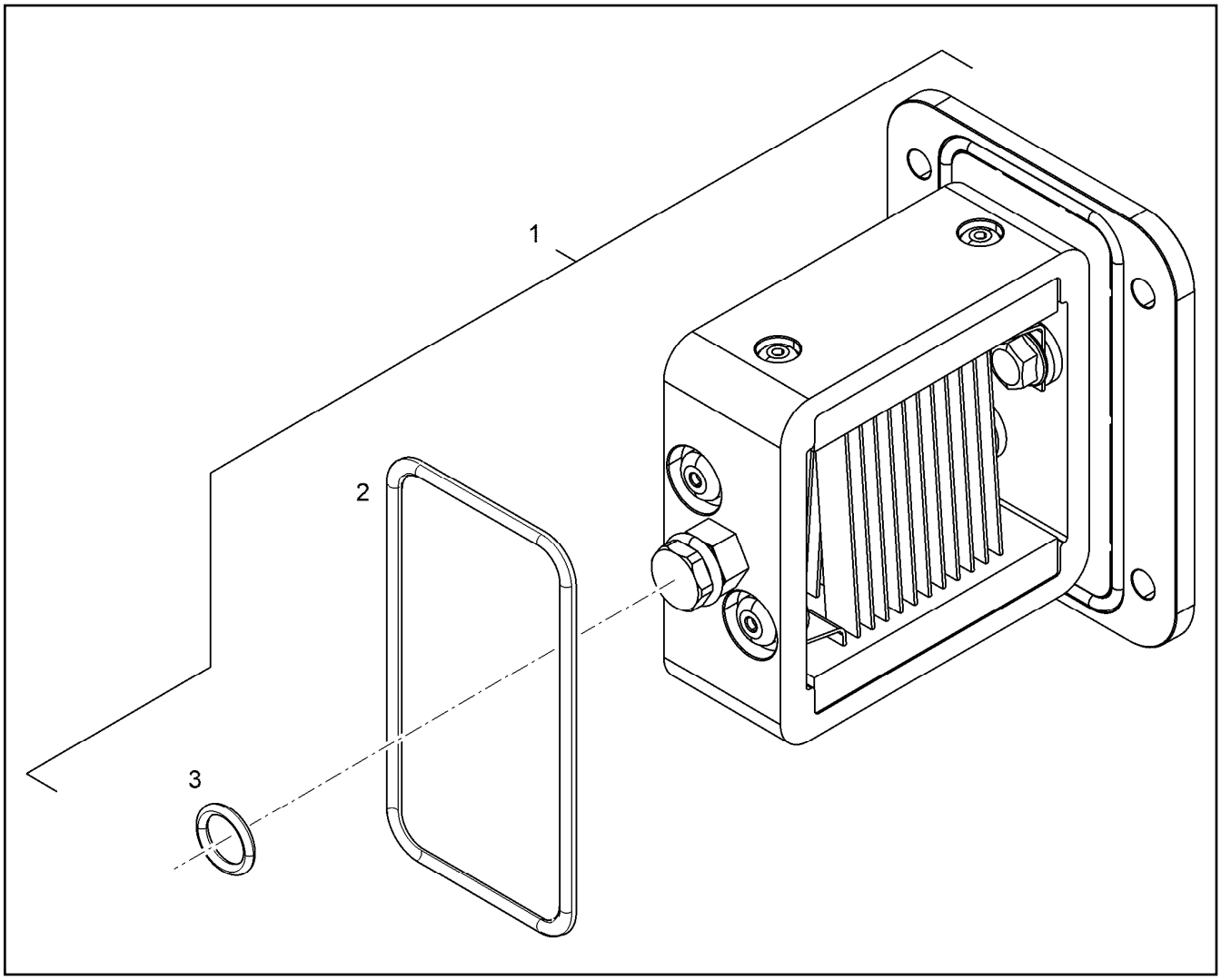

Pos.	Item	Quantity	Description	Bezeichnung
1	12856186	1	HEATING FLANGE 24V 1,9KW	HEIZFLANSCH
(1)	10116255	1	O-RING AEHNL.ISO 3601-1 94,5X3 FKM 80	O-RING
(2)	7380935	1	O-RING ISO 3601-1 12,37X2,62 FKM 90	O-RING
2	13711602	1	O-RING 94,5X3 VMQ 70	O-RING
3	7380935	1	O-RING ISO 3601-1 12,37X2,62 FKM 90	O-RING

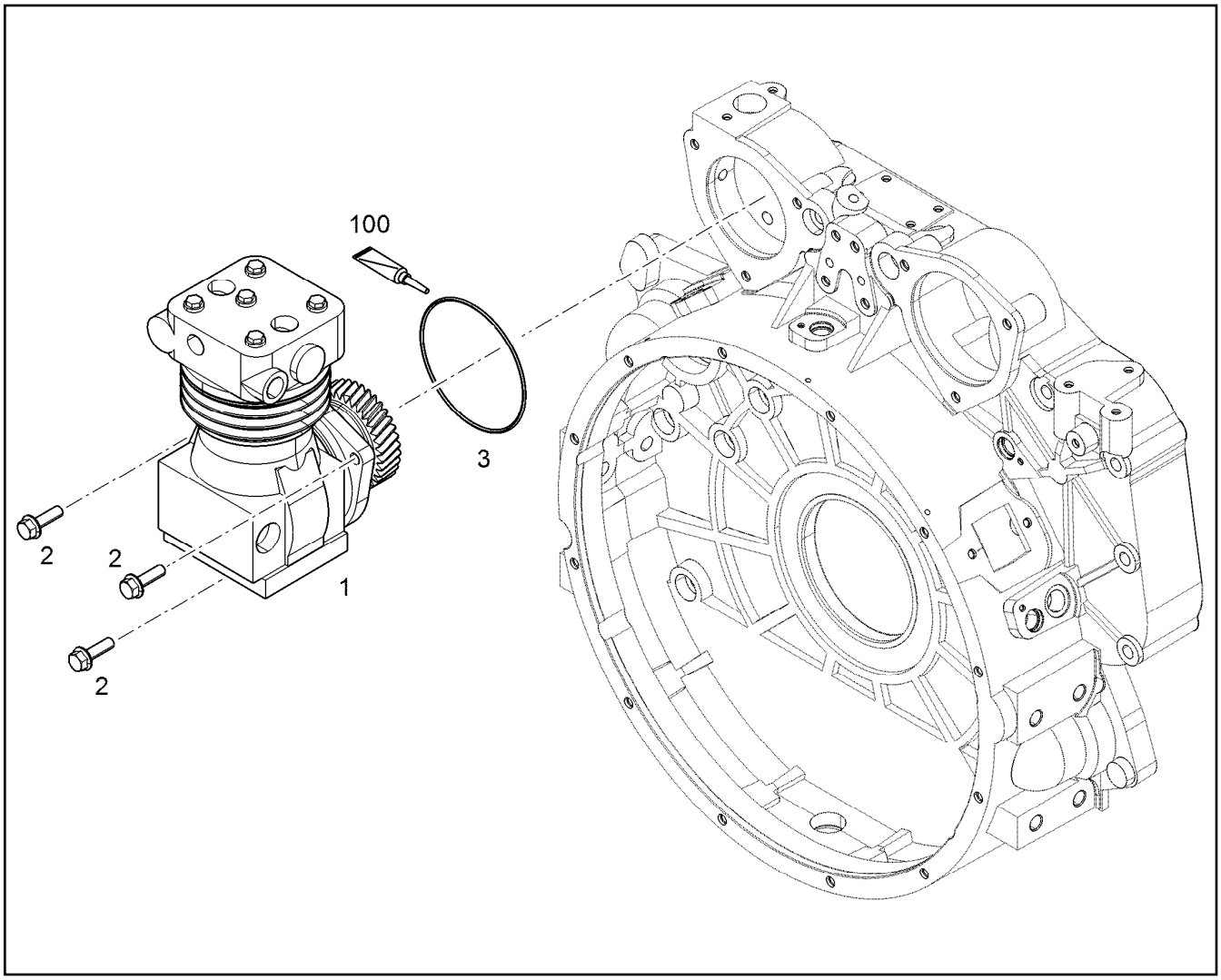

Pos.	Item	Quantity	Description	Bezeichnung
1	9080294	1	AIR COMPRESSOR PRE-ASSY. 293CM3 ⇨ ❑ 207	LUFTPRESSER VORM.
2	11643686	3	HEX SCREW EN 1665 M10X35 8.8 FLZN SPF	SECHSKANTSCHRAUBE
3	10002310	1	O-RING AEHNL.ISO 3601-1 125X2 VMQ 70	O-RING
100	10285708	1	GREASE NBU 30 1KG DOSE	FETT

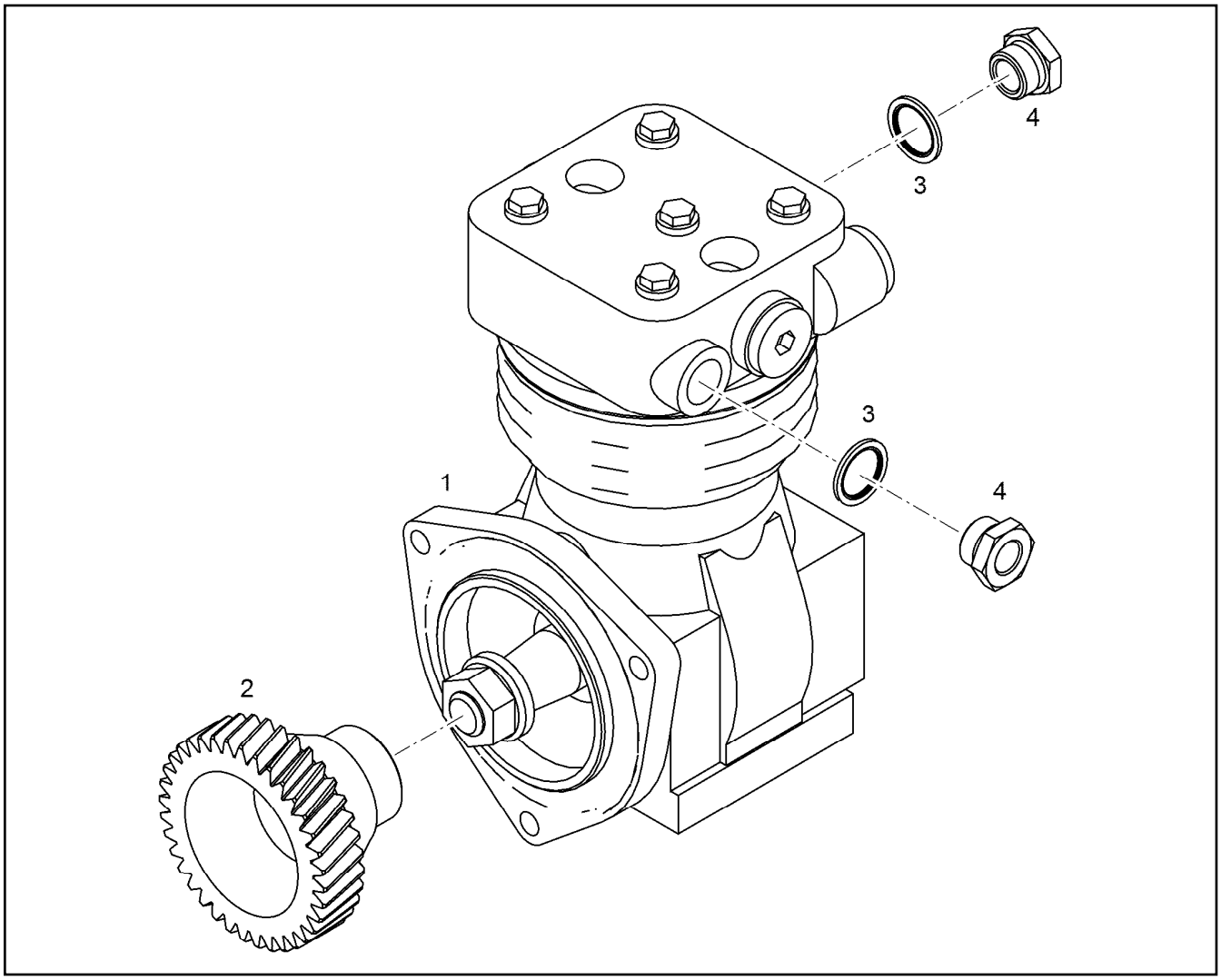

Pos.	Item	Quantity	Description	Bezeichnung
1	5700161	1	AIR COMPRESSOR 293CM3 ⇨ ❑ 208	LUFTPRESSER
2	9073343	1	GEAR WHEEL 2,5	ZAHNRAD
3	10011869	2	SEALING RING 22,7X30X2 St/FPM1-80	DICHTRING
4	7381363	2	FITTING RI M22X1,5/M16X CR6-FREI	VERSCHRAUBUNG

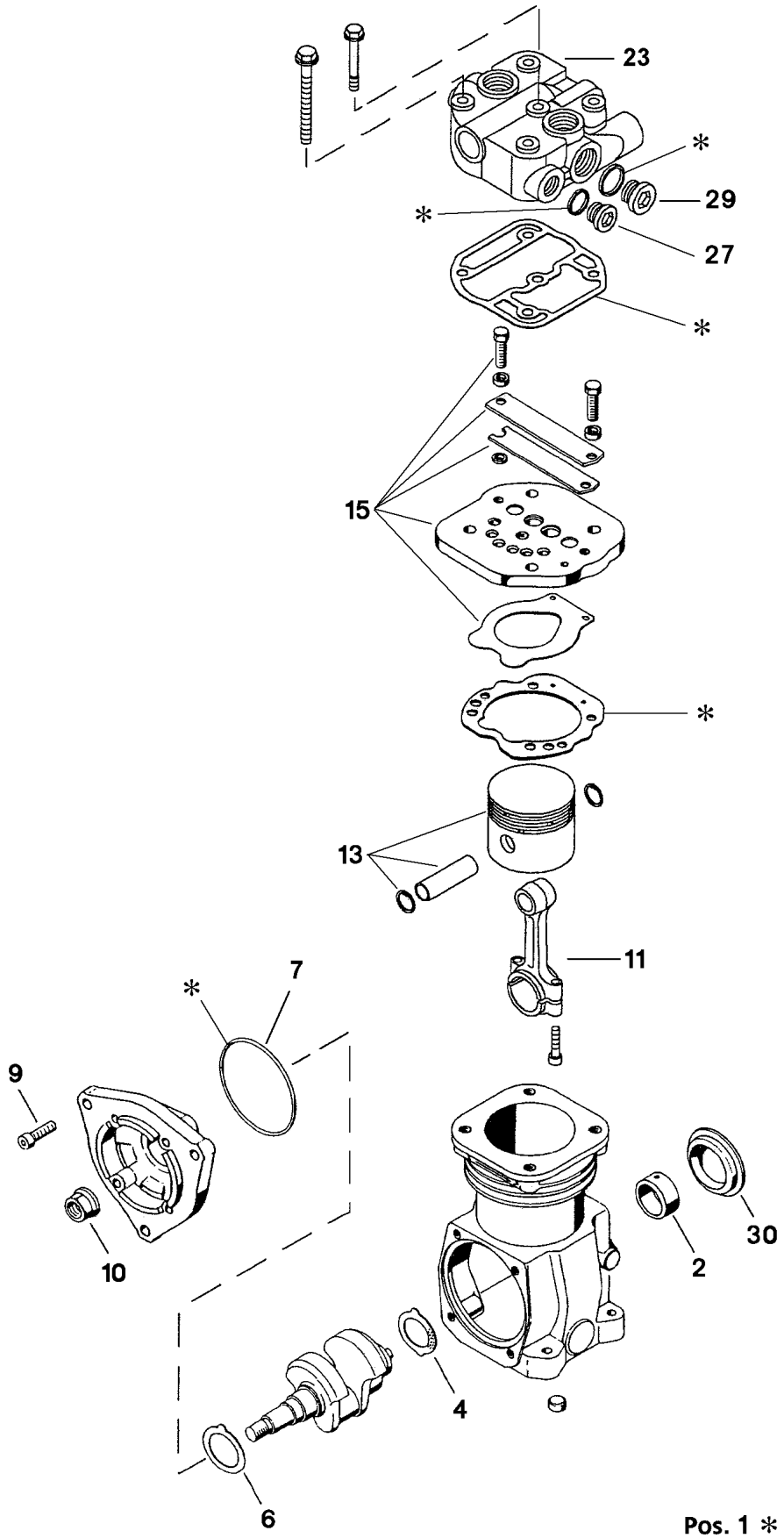
23
*
29
*
27
*
15
*
13
11
7
*
9
10
2
30
4
6
Pos. 1 *

Pos.	Item	Quantity	Description	Bezeichnung
1	571582108	1	REPAIR KIT	REPARATURSATZ
2	10043610	1	BUSHING	BUCHSE
4	571582308	1	THRUST WASHER	ANLAUFSCHEIBE
6	571582408	1	THRUST WASHER	ANLAUFSCHEIBE
7	570979708	1	O-RING 88X3 ACM70	O-RING
9	570613877	4	SCREW DIN 912 M8X25 12.9	SCHRAUBE
10	520303308	1	WHEEL NUT DIN 74361 M20X1,5 8 A2K	RADMUTTER
11	571582508	1	CONROD	PLEUELSTANGE
13	571582608	1	PISTON	KOLBEN
15	571582708	1	REPAIR KIT	REPARATURSATZ
23	7025732	1	CYLINDER HEAD	ZYLINDERKOPF
24	11066521	4	HEX SCREW M8X80 10.9 SCHWARZ VERG	SECHSKANTSCHRAUBE
27	10878578	1	SCREW PLUG DIN 908 M22X1,5X18 ST 480H	VERSCHLUSSSCHRAUBE
29	4600232	3	SCREW PLUG DIN 908 M26X1,5 ST A3C	VERSCHLUSSSCHRAUBE
30	571582808	1	CAP	KAPPE

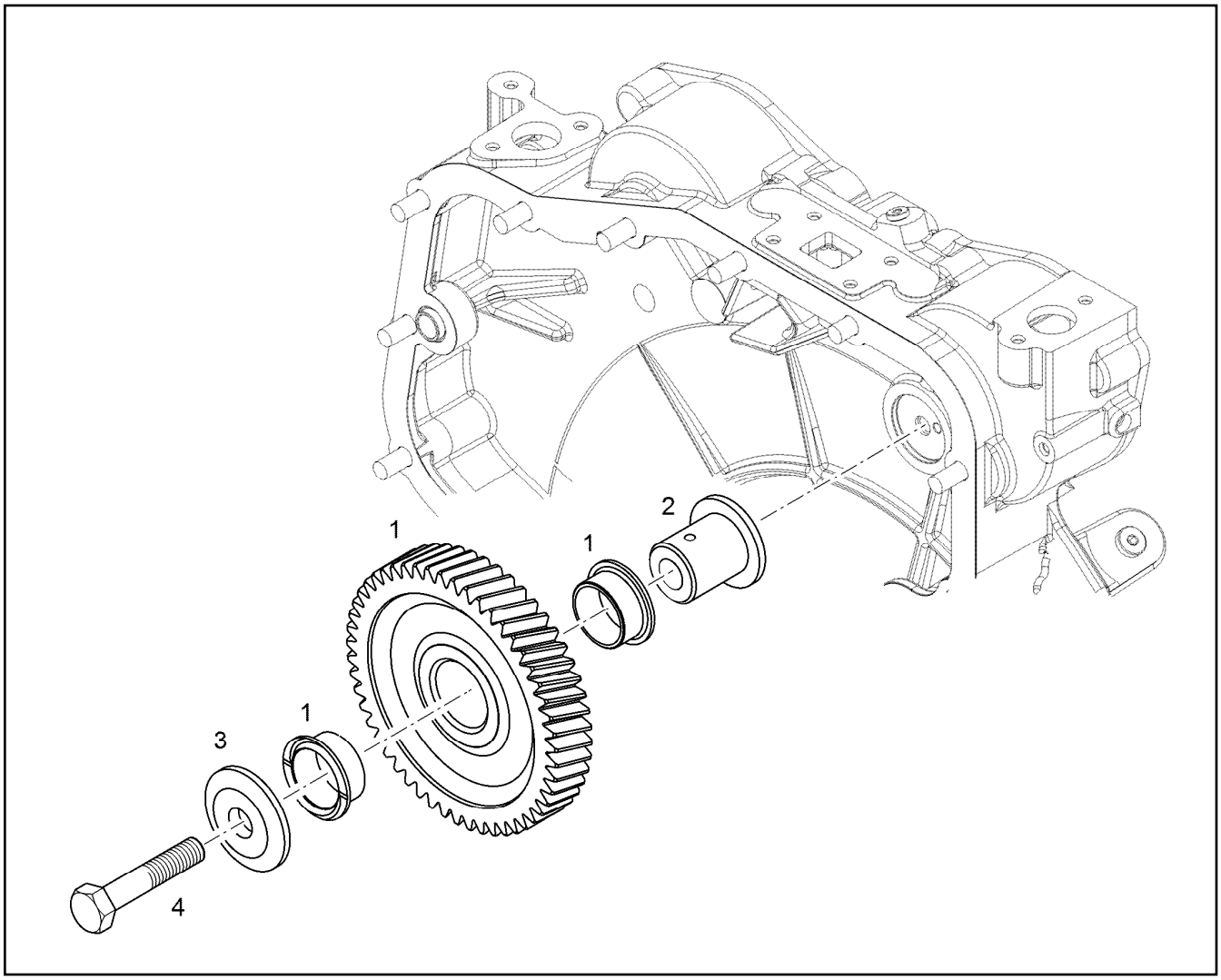

Pos.	Item	Quantity	Description	Bezeichnung
1	9072904	1	INTERMEDIATE GEAR PRE-ASSY.	ZWISCHENRAD VORM.
(2)	9889290	2	PLAIN BEARING BUSHING 30X34X16 G-CuS	GLEITLAGERBUCHSE
2	9072907	1	INTERMEDIATE WHEEL AXLE 42CrMo4+QT	ZWISCHENRADACHSE
3	9072908	1	BEARING COVER 31CrMoV9	LAGERDECKEL
4	11658890	1	HEX SCREW ISO 4014 M12X65 8.8 FLZN SP	SECHSKANTSCHRAUBE

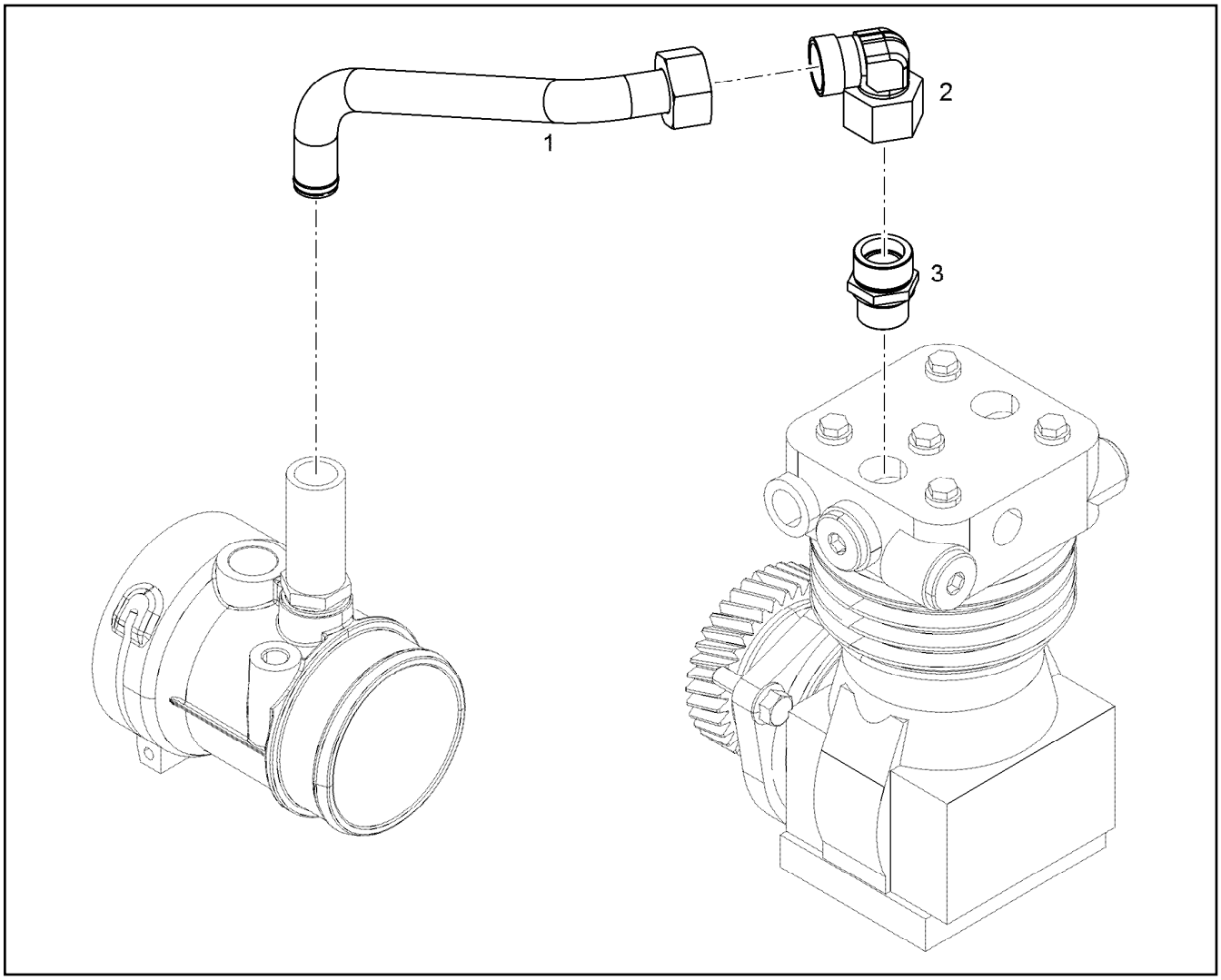

Pos.	Item	Quantity	Description	Bezeichnung
1	10145175	1	PIPELINE 22X1,5	ROHRLEITUNG
2	247126202	1	SWIVEL ELBOW EW 22L CR6-FREI	WINKELSTUTZEN
3	7362515	1	FITTING ISO 8434-1 GE 22L M26X1,5 CR6-F	VERSCHRAUBUNG

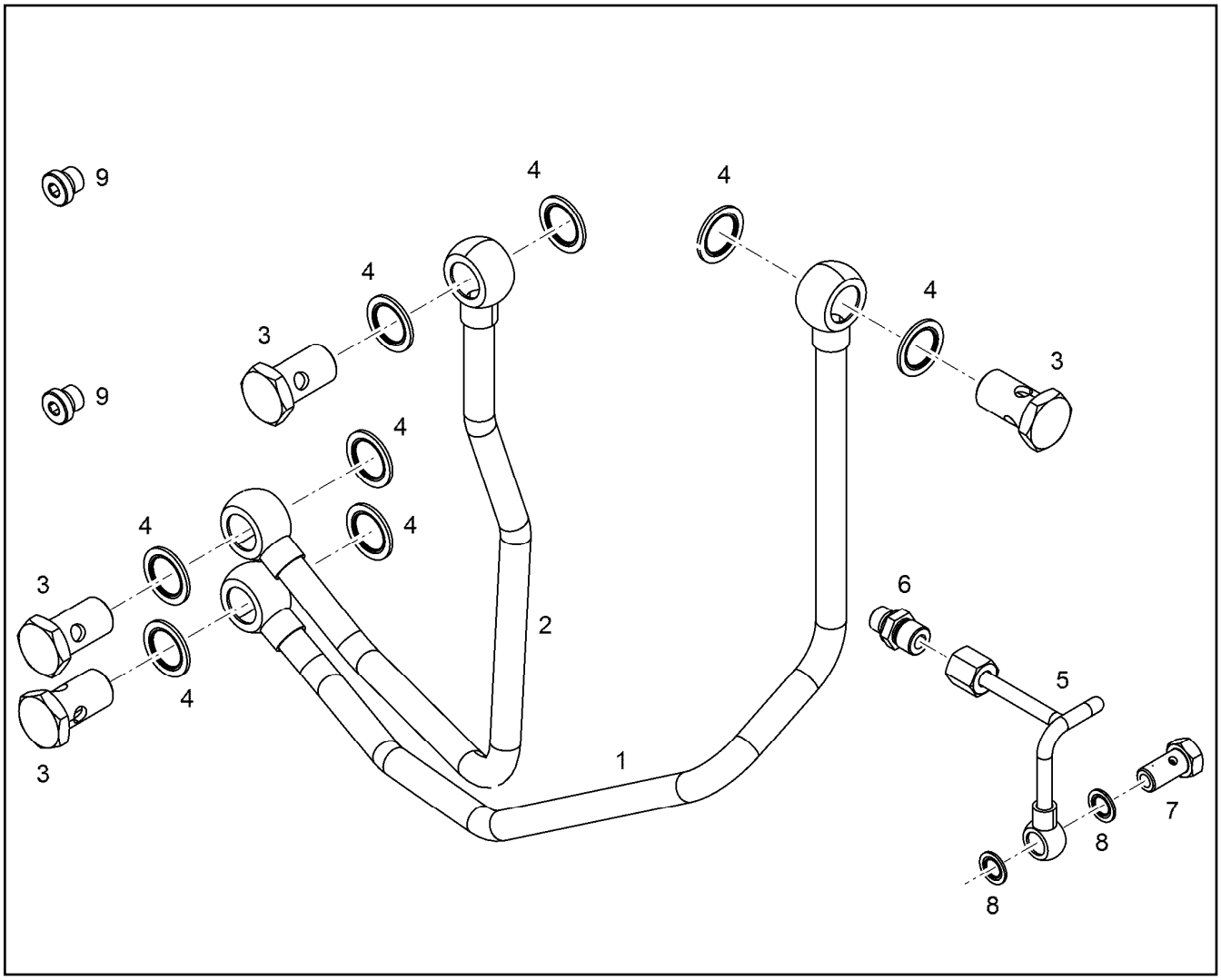

Pos.	Item	Quantity	Description	Bezeichnung
1	10145177	1	COOLING WATER LINE 12X1	KUEHLWASSERLEITUNG
2	10145178	1	COOLING WATER LINE 12X1	KUEHLWASSERLEITUNG
3	12210025	4	HOLLOW SCREW DIN 7643 12-3-M16X1,5 4	HOHLSCHRAUBE
4	10011867	8	SEALING RING 16,7X24,00X1,5 FKM 80	DICHTRING
5	9080310	1	LUBRICATING OIL LINE 6X1	SCHMIEROELLEITUNG
6	4981233	1	FITTING ISO 8434-1 GE 6L M10X1 CR6-FREI	VERSCHRAUBUNG
7	12210010	1	HOLLOW SCREW DIN 7643 6-3-M10X1 480H	HOHLSCHRAUBE
8	10011864	2	SEALING RING 10,7X16X1,5 St/FPM1-80	DICHTRING
9	7381638	2	SCREW PLUG VSTI M10X1	VERSCHLUSSSCHRAUBE

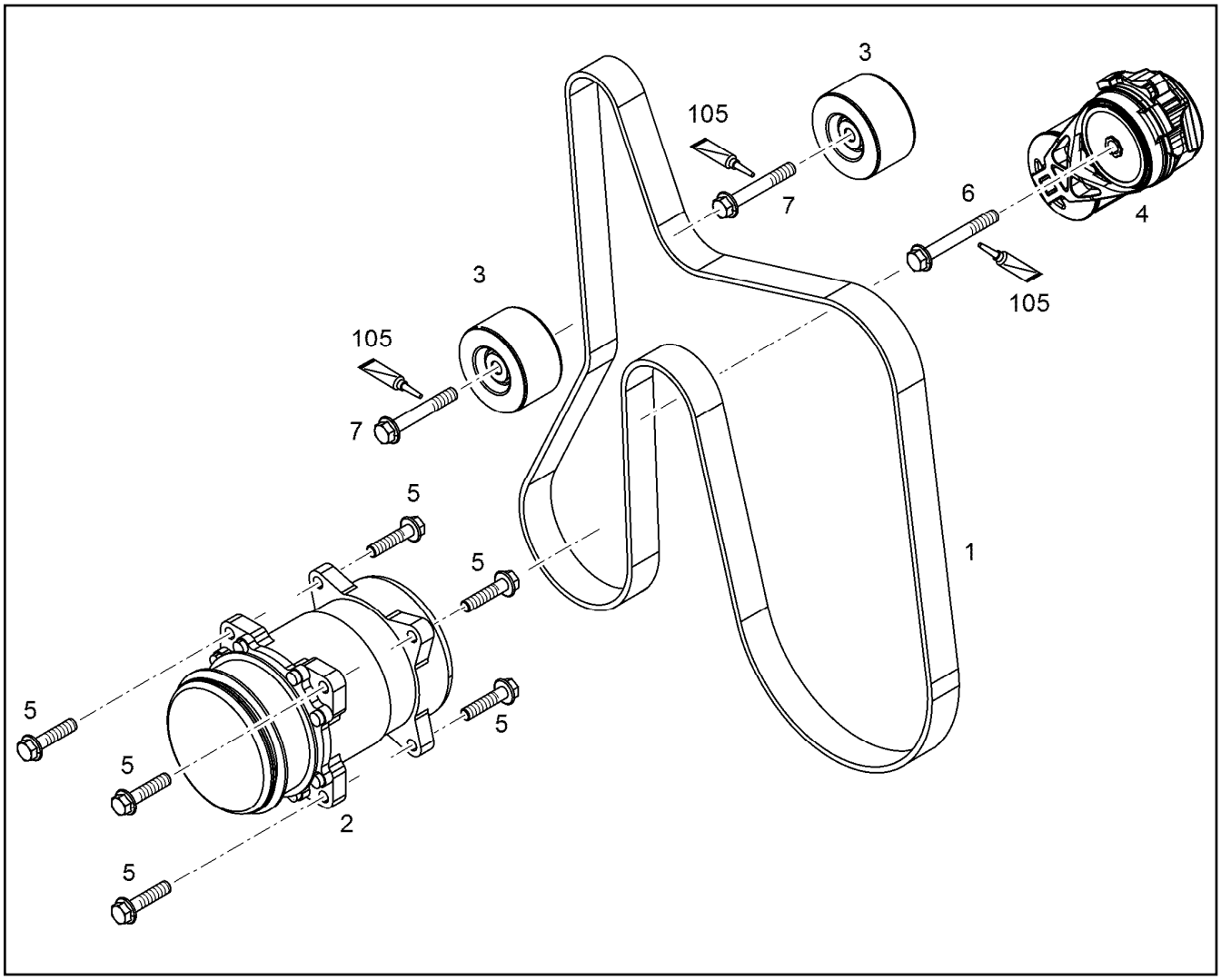

Pos.	Item	Quantity	Description	Bezeichnung
1	11482426	1	V-RIPPED BELT 8XPKX2152 EPDM2	KEILRIPPENRIEMEN
2	13719288	1	COMPRESSOR FOR AIR CONDIT. CPL D936 ⇨ ❑ 214	KLIMAKOMPRESSOR KPL.
3	10149360	2	GUIDE PULLEY COMPL.	UMLENKROLLE VORM.
4	10153374	1	FASTENING DEVICE	SPANNVORRICHTUNG
5	11626068	6	HEX SCREW EN 1665 M10X40 8.8 FLZN SPF	SECHSKANTSCHRAUBE
6	11656160	1	HEX SCREW EN 1665 M10X80 8.8 FLZN SPF	SECHSKANTSCHRAUBE
7	11656158	2	HEX SCREW EN 1665 M10X60 8.8 FLZN	SECHSKANTSCHRAUBE
105	811205708	1	SCREW LOCKING FLASCHE 50ML 150°C	SCHRAUBENSICHERUNG

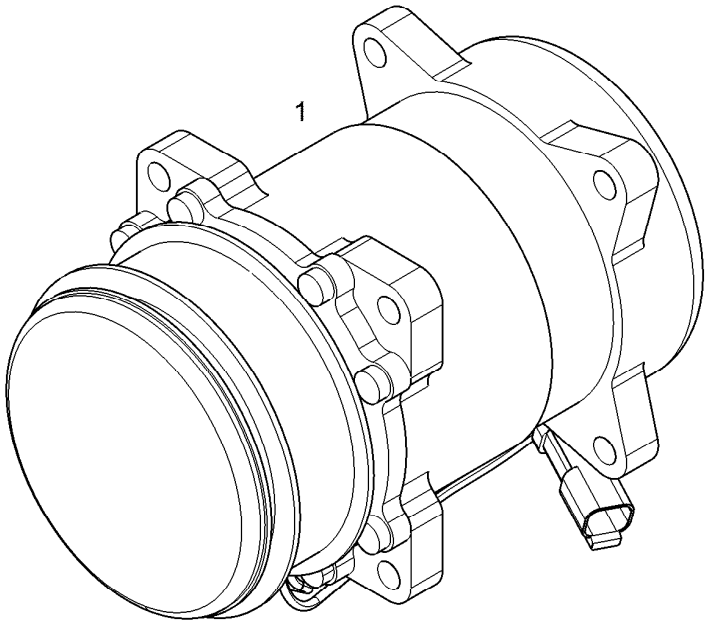

Pos.	Item	Quantity	Description	Bezeichnung
1	12922849	1	AIR CONDITIONING COMPRESSOR	KLIMAKOMPRESSOR

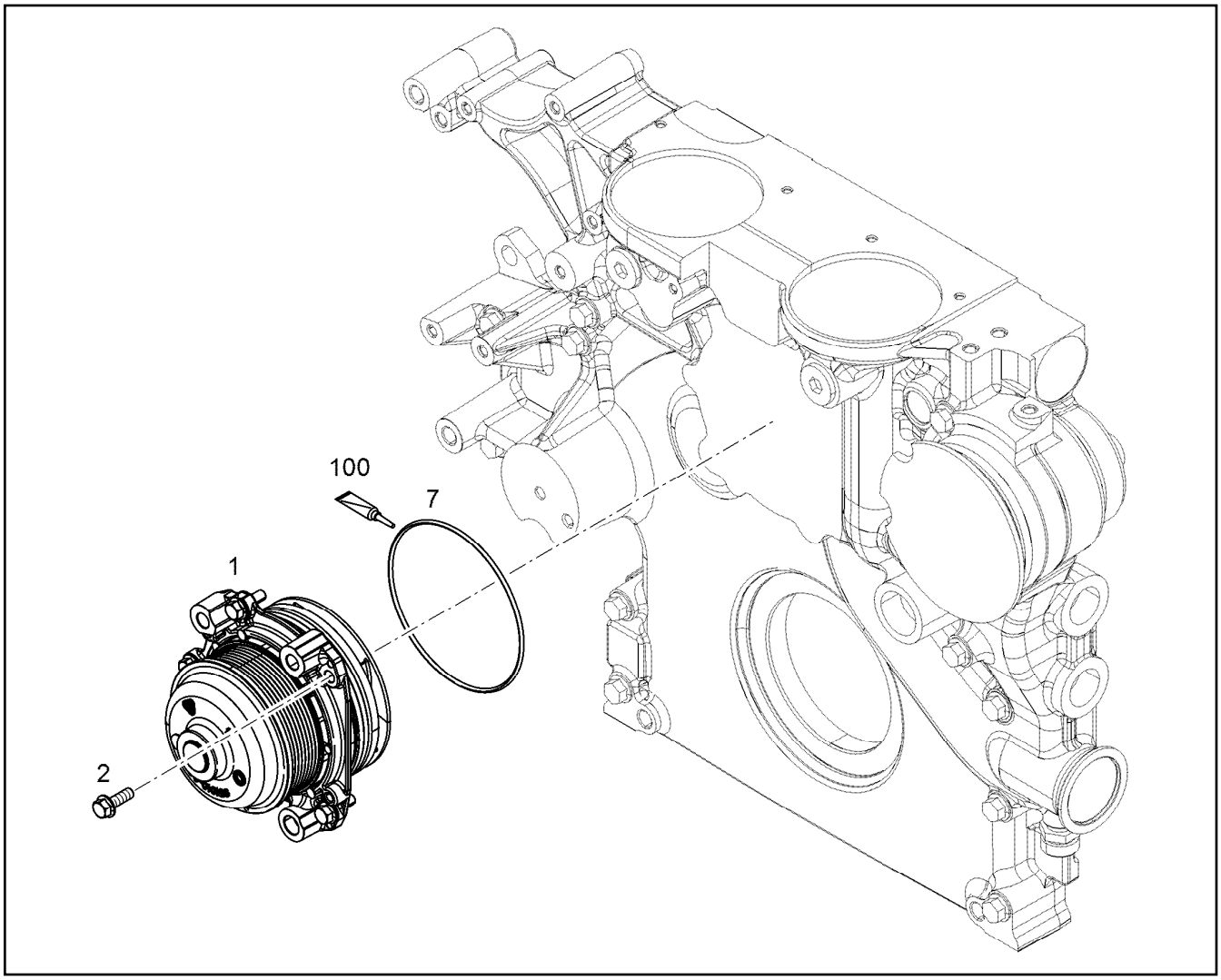

Pos.	Item	Quantity	Description	Bezeichnung
1	10150386	1	WATER PUMP, PRE-ASSEMBLED R-MOTOR	WASSERPUMPE VORM.
1	12863021	1	WATER PUMP, PRE-ASSEMBLED R-MOTOR	WASSERPUMPE VORM.
(1)	7016016	1	O-RING ISO 3601-1 132,94X3,53 FKM 70	O-RING
(7)	7016016	1	O-RING ISO 3601-1 132,94X3,53 FKM 70	O-RING
2	10009007	5	HEX SCREW DIN 6921 M8X25 8.8 A2C	SECHSKANTSCHRAUBE
7	7016016	1	O-RING ISO 3601-1 132,94X3,53 FKM 70	O-RING
100	10285708	1	GREASE NBU 30 1KG DOSE	FETT

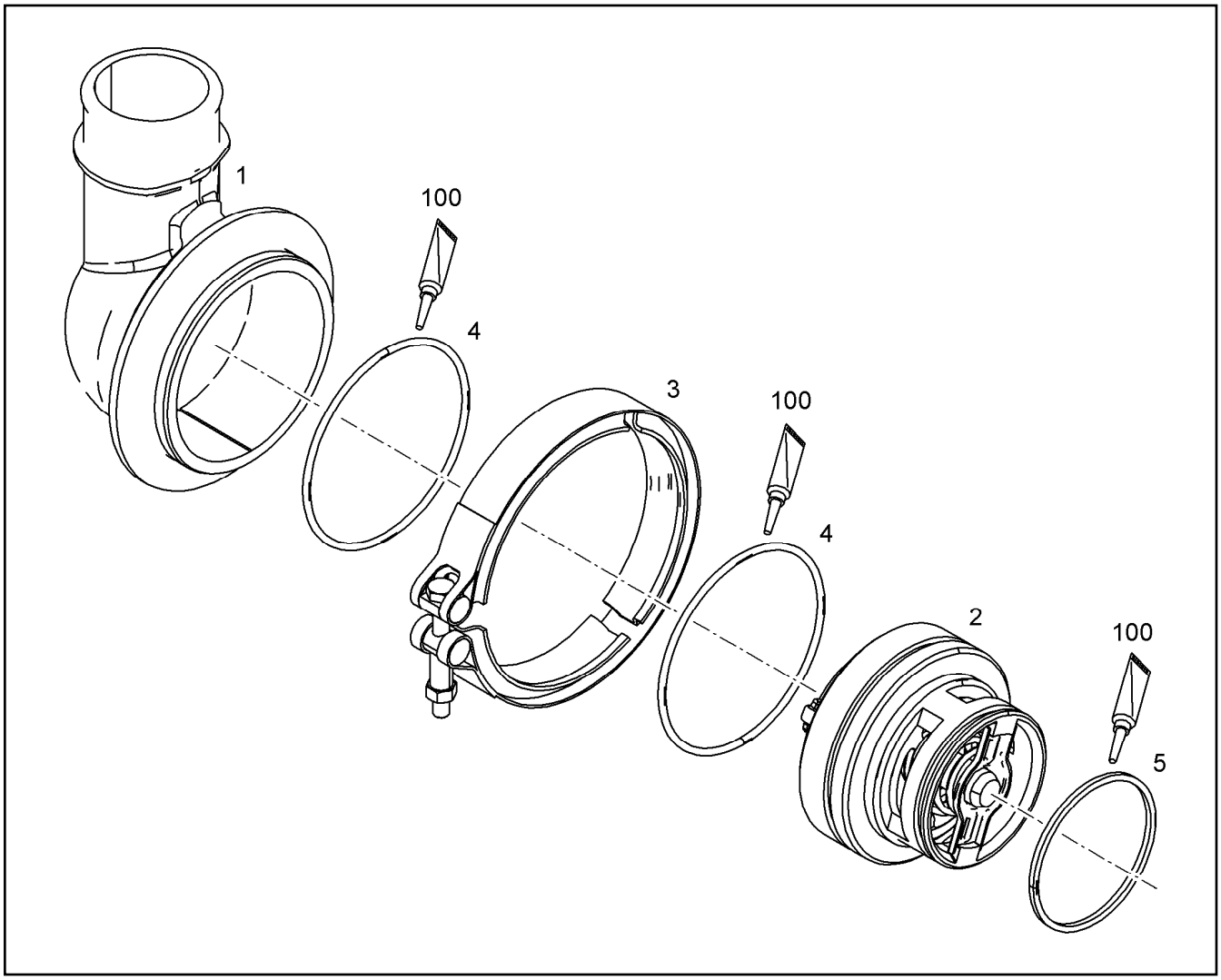

Pos.	Item	Quantity	Description	Bezeichnung
2	10154798	1	THERMOSTAT	THERMOSTAT
3	10138820	1	RETAINER CLIP 150/K1 Inox	SPANNSCHELLE
4	10002167	2	O-RING ISO 3601-1 107,54X3,53 FKM 70	O-RING
5	7009080	1	O-RING ISO 3601-1 75,79X3,53 MVQ,70 SH	O-RING
100	10285708	1	GREASE NBU 30 1KG DOSE	FETT

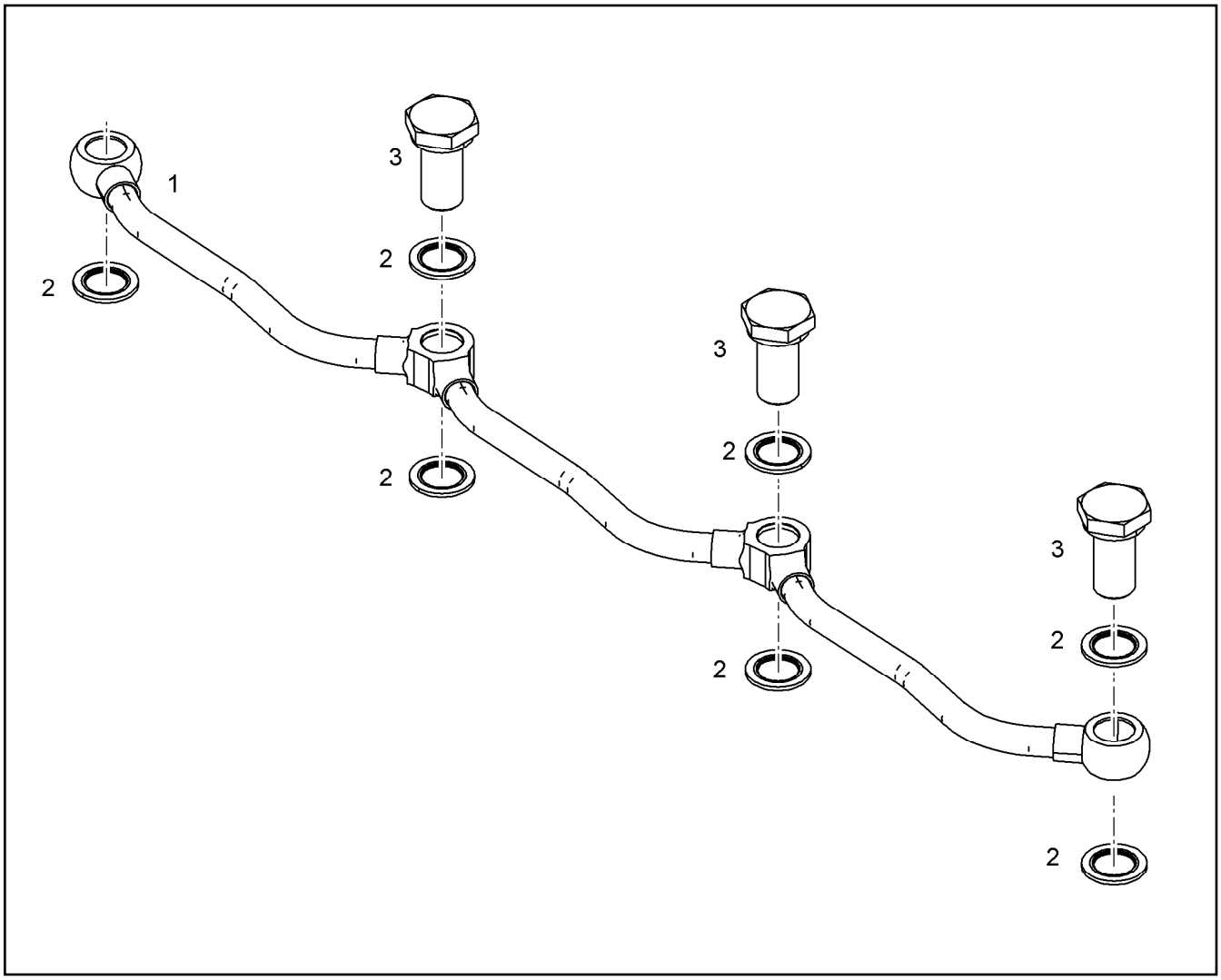

Pos.	Item	Quantity	Description	Bezeichnung
1	12921811	1	PIPELINE 10X1	ROHRLEITUNG
2	10011866	7	SEALING RING 14,7X22,00X1,5 FKM 80	DICHTRING
3	9080466	3	HOLLOW SCREW 10X1X27 11SMn30+C FE/	HOHLSCHRAUBE

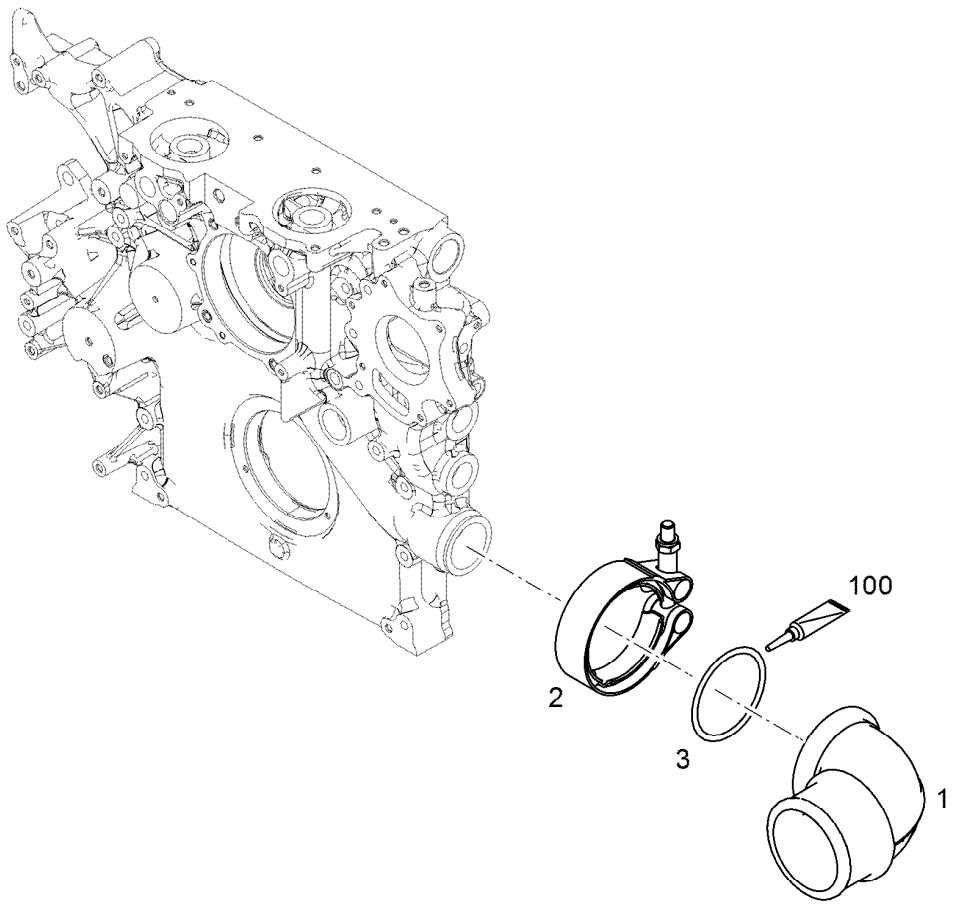

Pos.	Item	Quantity	Description	Bezeichnung
1	10142671	1	ELBOW	KRUEMMER
2	10122841	1	RETAINER CLIP 73/K1 St/Inox	SPANNSCHELLE
3	7380083	1	O-RING ISO 3601-1 55,25X2,62 NBR 70 A,BK	O-RING
100	10285708	1	GREASE NBU 30 1KG DOSE	FETT

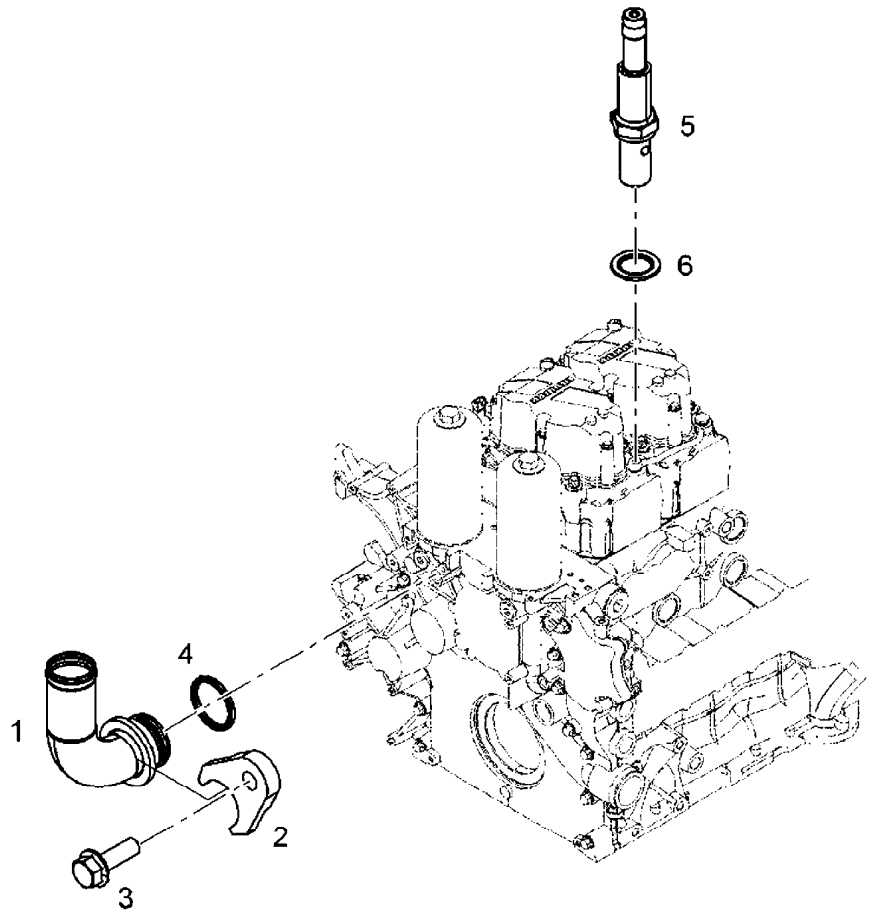

Pos.	Item	Quantity	Description	Bezeichnung
1	10142668	1	HOSE NIPPLE	SCHLAUCHNIPPEL
2	10142763	1	PLATE	BLECH
3	12215999	1	HEX SCREW EN 1665 M8X25 10.9 480H	SECHSKANTSCHRAUBE
4	7381526	1	O-RING AEHNL.ISO 3601-1 21,3X2,4 V70GA	O-RING
5	10140969	1	HOSE NIPPLE 11SMn30+C	SCHLAUCHNIPPEL
6	10011866	1	SEALING RING 14,7X22,00X1,5 FKM 80	DICHTRING

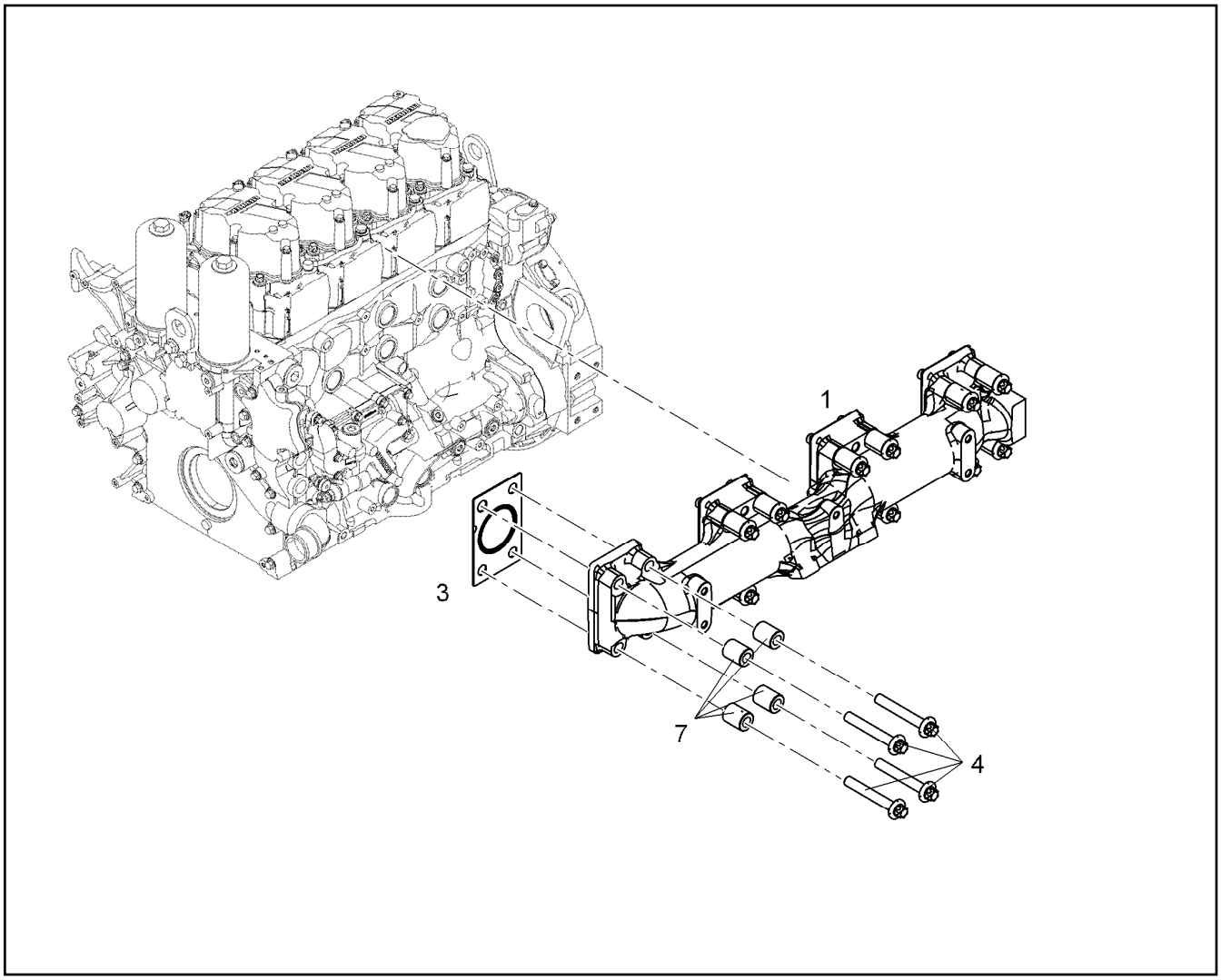

Pos.	Item	Quantity	Description	Bezeichnung
1	10145524	1	EXHAUST PIPE R-MOTOR D934	ABGASROHR
3	10135885	4	SEAL	DICHTUNG
4	10138656	14	HEXALOBULAR HEAD SCREW M10X70 21C	SECHSRUNDSCHRAUBE
7	10138657	14	DISTANCE SLEEVE 11X20X25 42CrMo4	DISTANZHUELSE

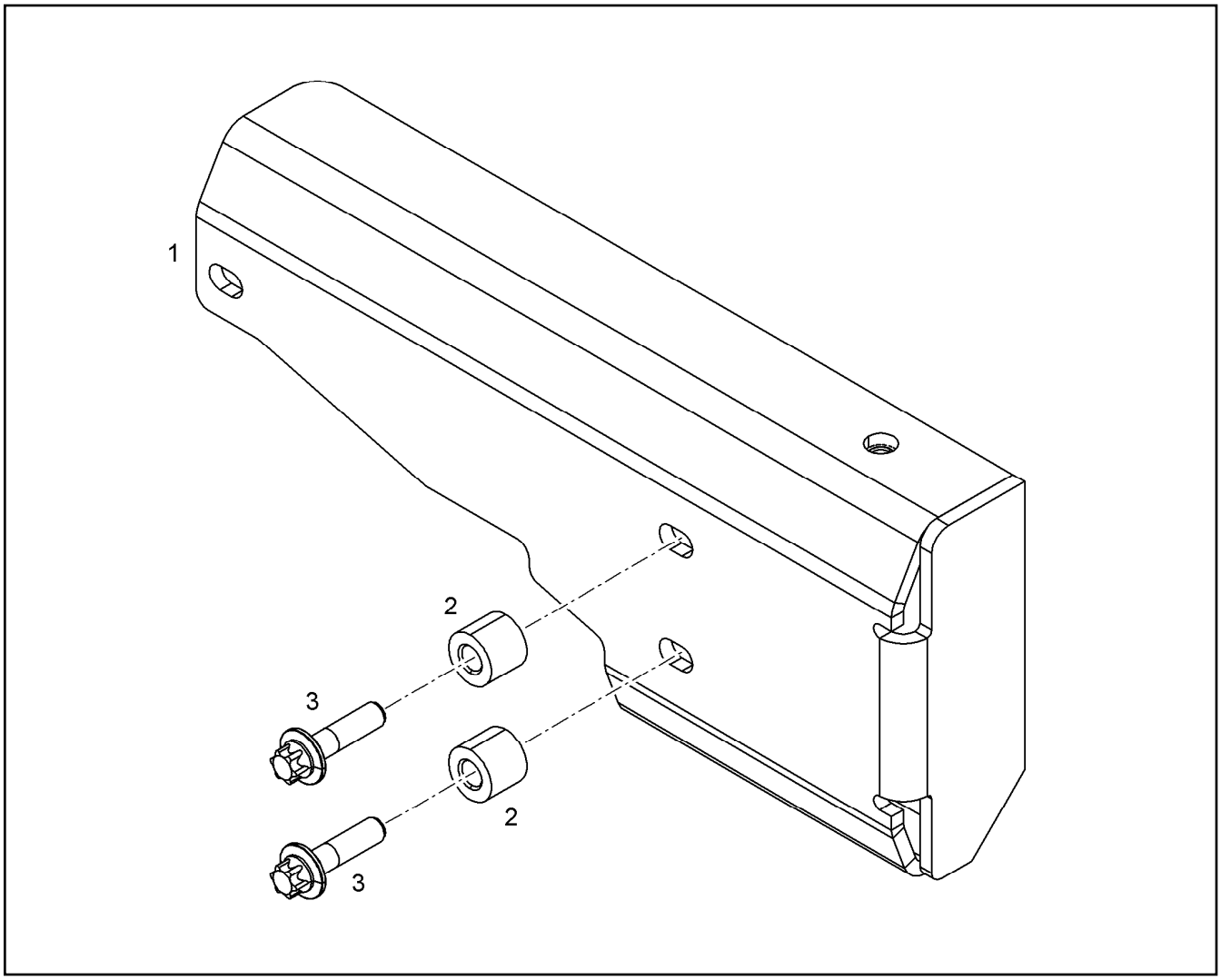

Pos.	Item	Quantity	Description	Bezeichnung
1	10144755	1	HEAT PROTECTION SHEET	HITZESCHUTZBLECH
2	9177776	2	WASHER 8,4X18X15 -	SCHEIBE
3	10125702	2	HEXALOBULAR HEAD SCREW M8X30 21CrM	SECHSRUNDSCHRAUBE

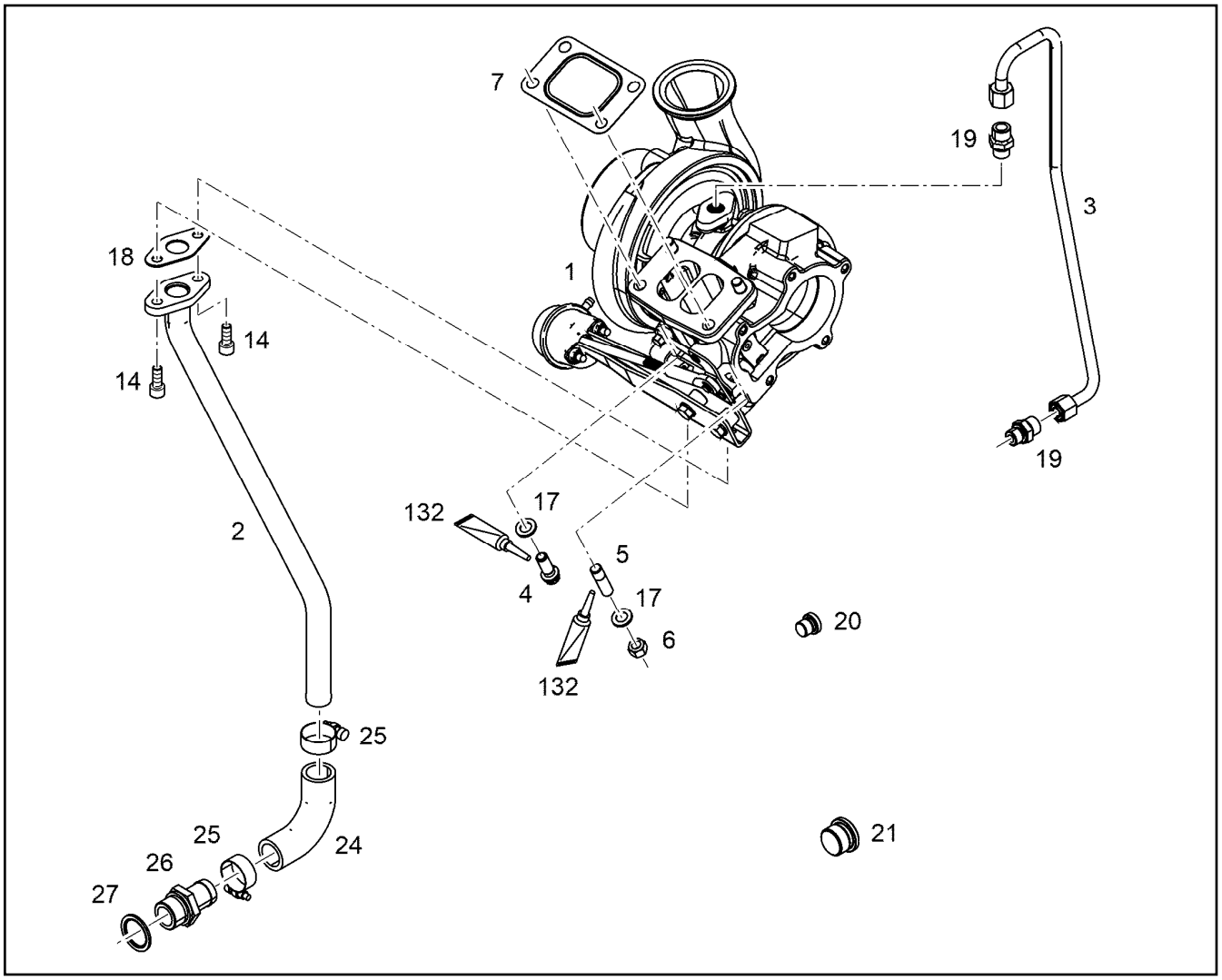

Pos.	Item	Quantity	Description	Bezeichnung
1	10139626	1	TURBOCHARGER HE300	TURBOLADER
2	12847441	1	OIL RETURN PIPE 22X1,5	OELRUECKLAUFLEITUNG
3	10140757	1	LUBRICATING OIL LINE 10X1	SCHMIEROELLEITUNG
4	12475399	1	12-SIDED SCREW M10X25 X5NiCrTi26-1	ZWOELFKANTSCHRAUBE
5	4981172	3	DOUBLE-ENDED STUD DIN 939 M10X25 X6N	STIFTSCHRAUBE
6	10120639	3	NUT M10X1,5 X6NiCrTiMoVB	MUTTER
7	10125739	1	SEAL X15CrNiSi20-	DICHTUNG
14	10663523	2	SOCKET HEAD SCREW ISO 4762 M8X20 10	ZYLINDERSCHRAUBE
17	9076638	4	WASHER 10,5X18,5X2	SCHEIBE
18	9268131	1	SEAL 1,5 AFM 32/2	DICHTUNG
19	4981235	2	FITTING ISO 8434-1 GE 10L M14X1,5 CR6-F	VERSCHRAUBUNG
20	7380566	1	SCREW PLUG VSTI M14X1,5	VERSCHLUSSSCHRAUBE
21	7381457	1	SCREW PLUG VSTI M26X1,5 CR6-FREI	VERSCHLUSSSCHRAUBE
24	10116310	1	RUBBER CONNECTION	GUMMIMUFFE
25	774215008	2	HOSE CLAMP 26/20-32/12 W3	SCHLAUCHSCHELLE
26	9140351	1	HOSE NIPPLE	SCHLAUCHNIPPEL
27	10011870	1	SEALING RING 26,7X34,93X2 St/FPM1-80	DICHTRING
132	10002552	1	COPPER PASTE MOTOREX 14 0.850KG DOS	KUPFERPASTE

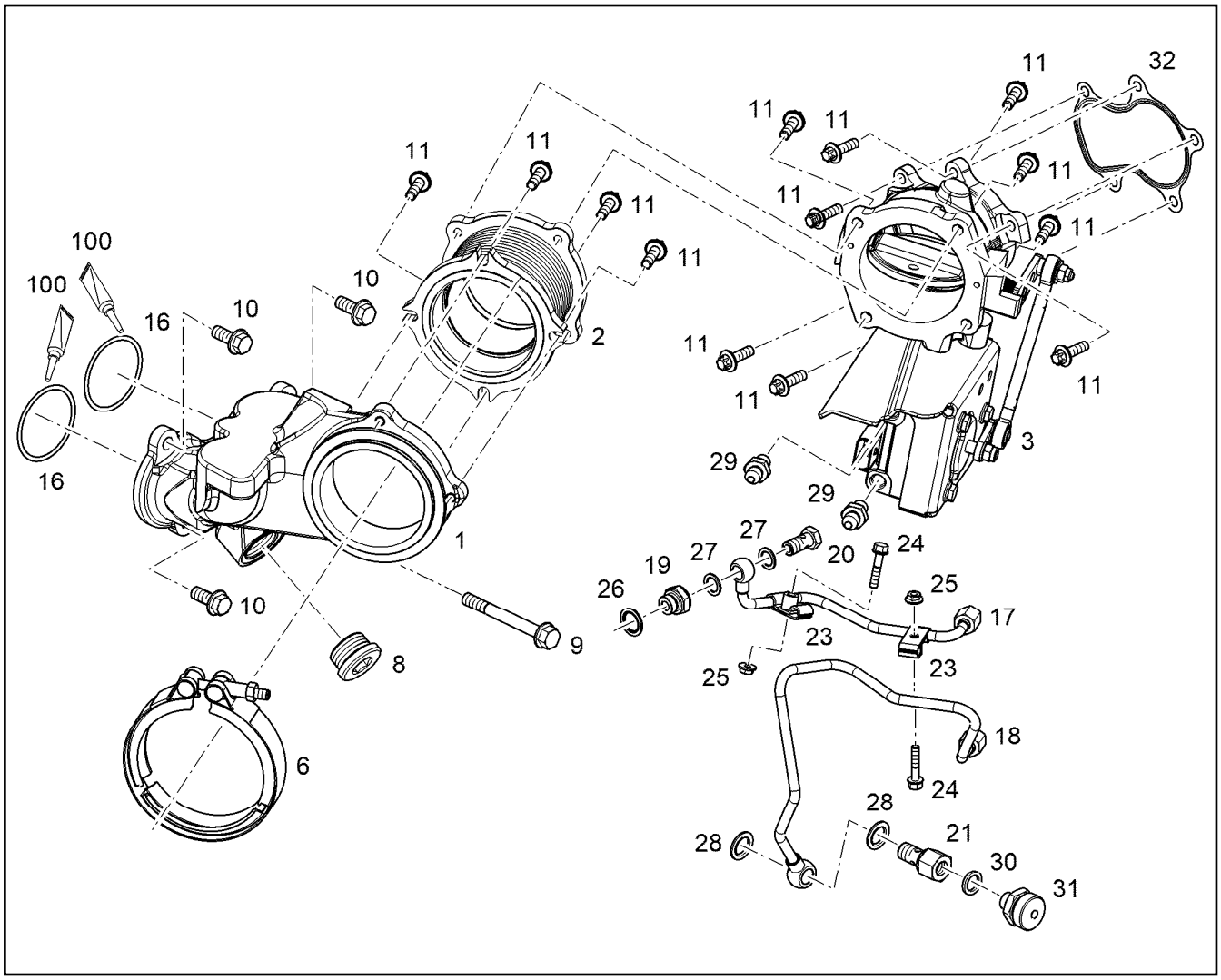

Pos.	Item	Quantity	Description	Bezeichnung
1	10153666	1	EXHAUST NOZZLE R-MOTOR D934	ABGASSTUTZEN
2	10149144	1	COMPENSATOR	KOMPENSATOR
3	10153116	1	EXHAUST FLAP	ABGASKLAPPE
3	12983604	1	EXHAUST FLAP	ABGASKLAPPE
6	10138826	1	RETAINER CLIP 125/K1 Inox	SPANNSCHELLE
8	10043136	1	SCREW PLUG VSTI M33X2 CR6-FREI	VERSCHLUSSSCHRAUBE
9	12208088	1	HEX SCREW EN 1665 M10X90 8.8 FLZN	SECHSKANTSCHRAUBE
10	11656154	3	HEX SCREW EN 1665 M10X25 8.8 FLZN SPF	SECHSKANTSCHRAUBE
11	13569467	13	HEXALOBULAR HEAD SCREW M8X25 21CrM	SECHSRUNDSCHRAUBE
16	12212022	2	O-RING AEHNL.ISO 3601-1 60X3 FKM 80	O-RING
17	10145069	1	PIPELINE 8X1	ROHRLEITUNG
18	10145070	1	PIPELINE 8X1	ROHRLEITUNG
19	10120066	1	REDUCING STUD RI 8 M16x1.5 / M 11SMnP	REDUZIERSTUTZEN
20	12210024	1	HOLLOW SCREW DIN 7643 8-3-M12X1,5 480	HOHLSCHRAUBE
21	10130906	1	FITTINGS 11SMnPb30+C	STUTZEN
23	10127139	2	PIPE CLAMP 8 S235JR	ROHRSCHELLE
24	12207549	2	HEX SCREW EN 1665 M6X30 8.8 480H	SECHSKANTSCHRAUBE
25	10003366	2	RIBBED HEX NUT M6 10	SECHSKANTRIPPENMUTTER
26	10011867	1	SEALING RING 16,7X24,00X1,5 FKM 80	DICHTRING
27	10011865	2	SEALING RING 12,7X18,00X1,5 FKM 80	DICHTRING
28	10011866	2	SEALING RING 14,7X22,00X1,5 FKM 80	DICHTRING
29	10801399	2	FITTING GE 8 M12X1,5/1/2 CR6-FREI	VERSCHRAUBUNG
30	7381225	1	SEALING RING DIN 7603 A14X20X2,5 Cu	DICHTRING
31	10011832	1	VALVE	VENTIL
32	12436701	1	SEAL X5CrNi18-10	DICHTUNG
100	10285708	1	GREASE NBU 30 1KG DOSE	FETT

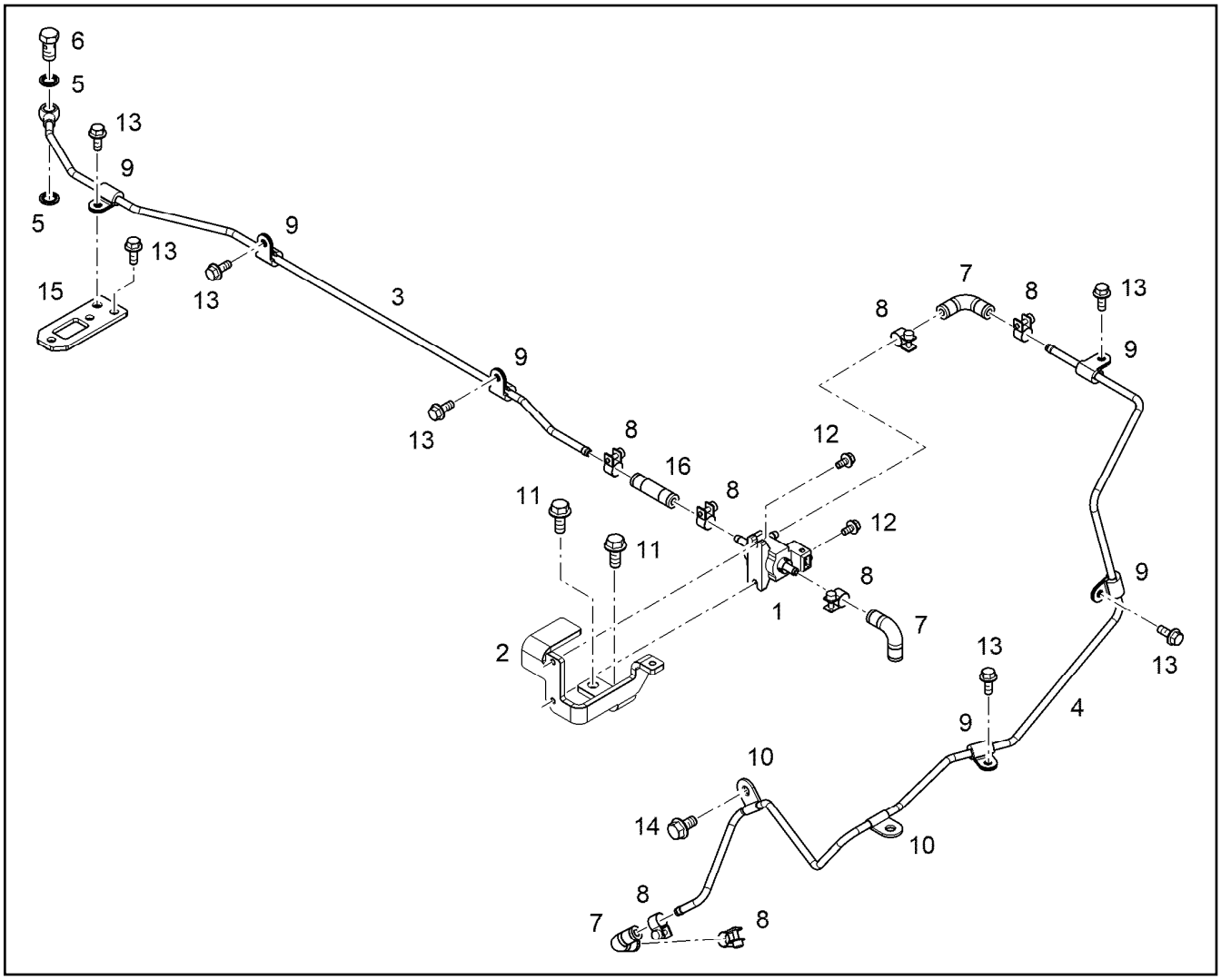

Pos.	Item	Quantity	Description	Bezeichnung
1	10149191	1	CYCLE VALVE 3.4BAR 8L/MIN 6m	TAKTVENTIL
2	12429351	1	HOLDER S235JR	HALTER
3	11420632	1	PIPELINE 6X1	ROHRLEITUNG
4	12429430	1	PIPELINE 6X1	ROHRLEITUNG
5	10011864	2	SEALING RING 10,7X16X1,5 St/FPM1-80	DICHTRING
6	12210010	1	HOLLOW SCREW DIN 7643 6-3-M10X1 480H	HOHLSCHRAUBE
7	10128228	3	RUBBER CONNECTION Silicone	GUMMIMUFFE
8	12696398	7	HOSE CLAMP DIN 3017-2 12/11,5-12,5/9 W1	SCHLAUCHSCHELLE
9	7381292	6	CLAMP DIN 3016-1 6X15XD1 W1-2-MVQ	SCHELLE
10	11000593	2	CLAMP DIN 3016-1 6X20XA1 W4	SCHELLE
11	11657219	2	HEX SCREW EN 1665 M8X20 8.8 480H SPF	SECHSKANTSCHRAUBE
12	12207546	2	HEX SCREW EN 1665 M5X10 8.8 480H	SECHSKANTSCHRAUBE
13	11840297	7	HEX SCREW EN 1665 M6X16 8.8 480H SPF	SECHSKANTSCHRAUBE
14	11656992	1	HEX SCREW EN 1665 M8X16 8.8 480H SPF	SECHSKANTSCHRAUBE
15	10145373	1	HOLDER	HALTER
16	10126119	1	RUBBER CONNECTION 06-12X45 Silicone	GUMMIMUFFE

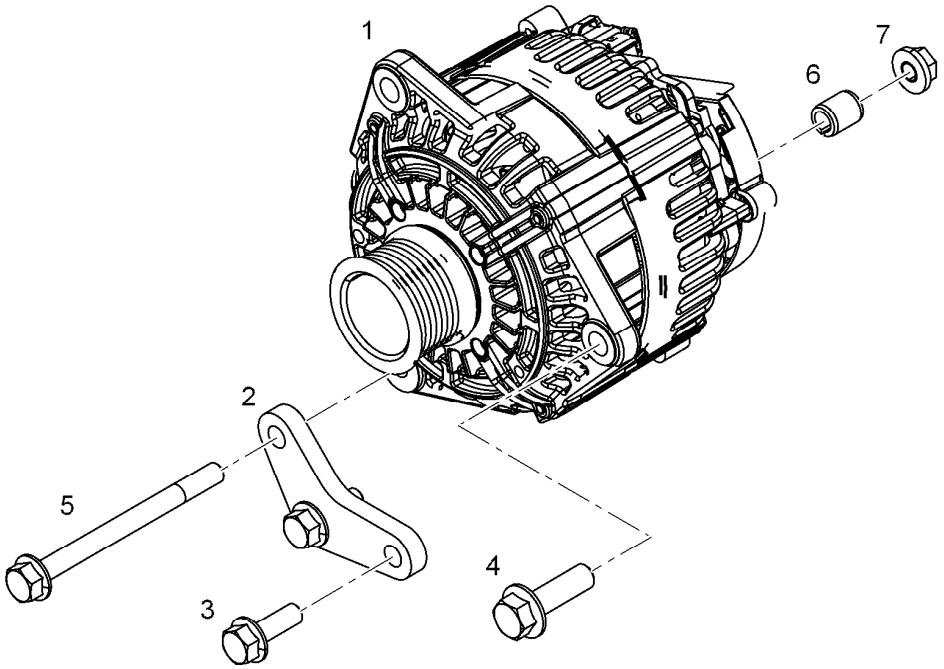

Pos.	Item	Quantity	Description	Bezeichnung
1	10148088	1	GENERATOR, PRE-ASSEMBLED 4.32KW 24	GENERATOR VORM.
2	10149476	1	MOUNTING SHEET 61,7 S235JR	BEFESTIGUNGSBLECH
3	11656155	2	HEX SCREW EN 1665 M10X30 8.8 FLZN SPF	SECHSKANTSCHRAUBE
4	10875423	1	HEX SCREW EN 1665 M12X40 8.8 FLZN SPF	SECHSKANTSCHRAUBE
5	12207559	1	HEX SCREW EN 1665 M10X120 8.8 FLZN	SECHSKANTSCHRAUBE
6	10145395	1	BUSHING 10,5X16X19 11SMnPb30+C	BUCHSE
7	12215460	1	HEX NUT EN 1661 M10 10 FLZN	SECHSKANTMUTTER

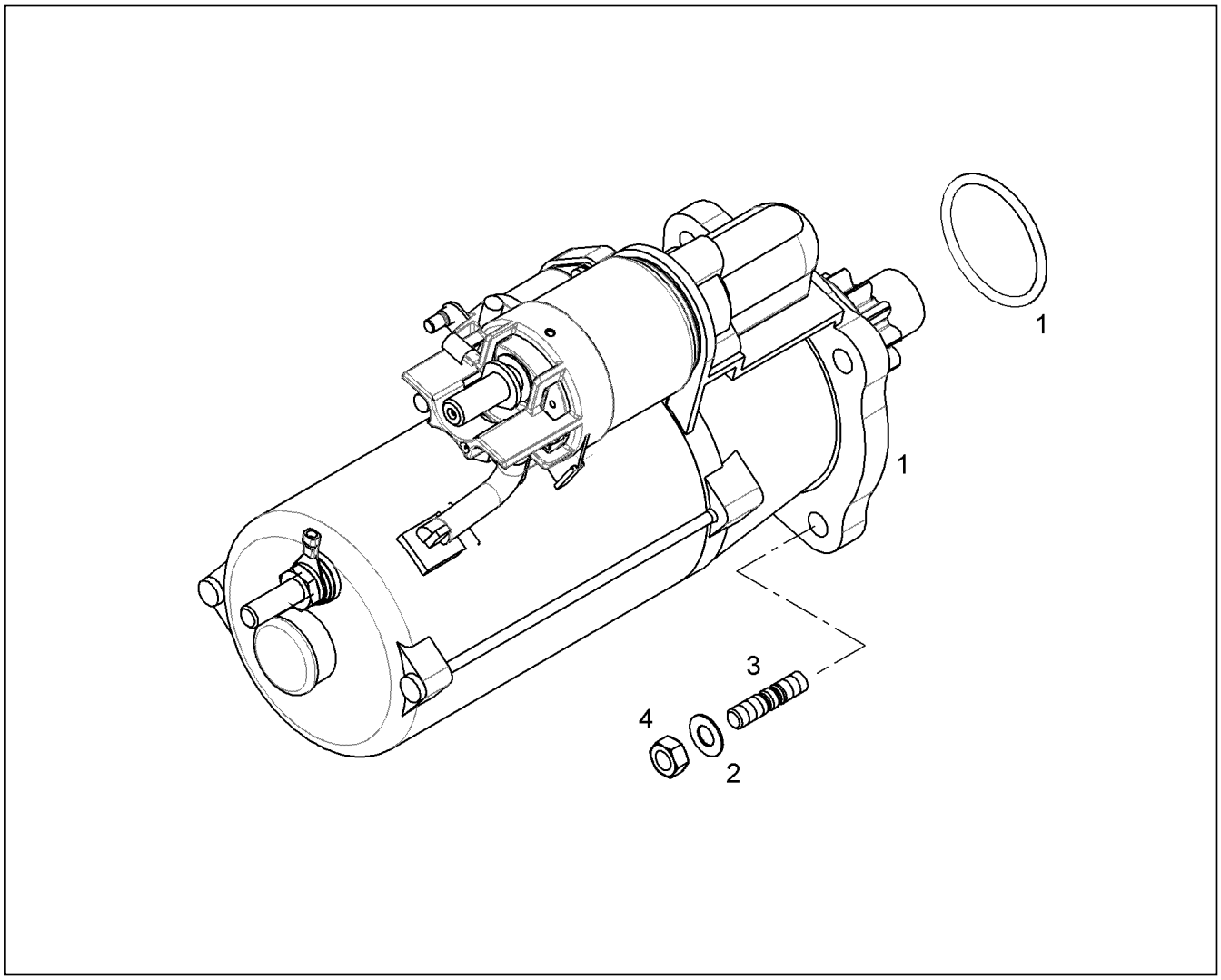

Pos.	Item	Quantity	Description	Bezeichnung
1	11386644	1	STARTER 7.8KW 24V ⇨ ❑ 227	STARTER
3	12215460	3	HEX NUT EN 1661 M10 10 FLZN	SECHSKANTMUTTER
4	10179459	3	DOUBLE-ENDED STUD DIN 835 M10X30 8.8	STIFTSCHRAUBE
109	811205708	1	SCREW LOCKING FLASCHE 50ML 150°C	SCHRAUBENSICHERUNG

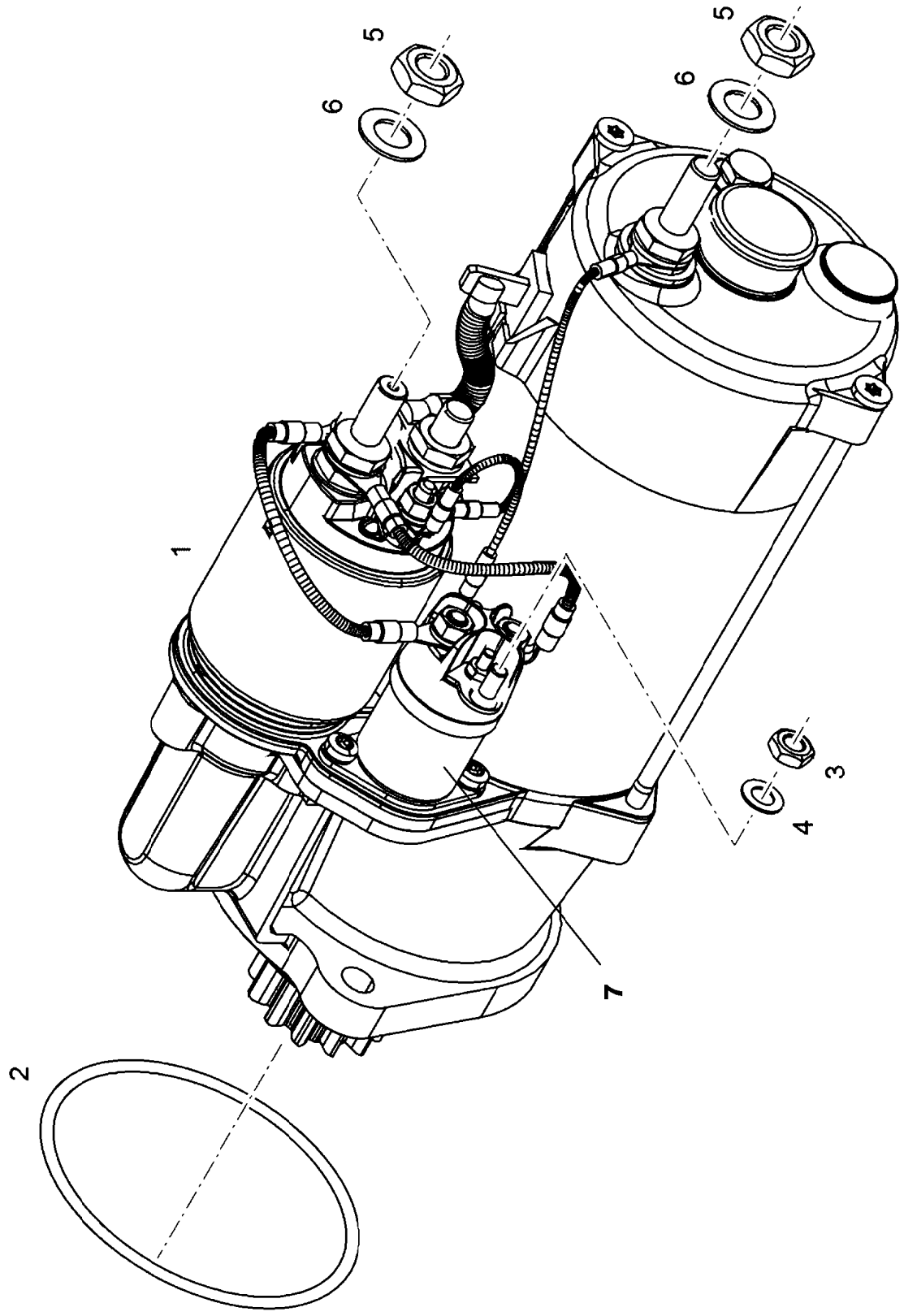
1
2
3
4
5
6
5
6
7

Pos.	Item	Quantity	Description	Bezeichnung
2	10218370	1	O-RING 85X2 HNBR 70	O-RING
3	10411094	1	HEX NUT M6 8	SECHSKANTMUTTER
4	10411092	1	SPRING WASHER DIN 137 6 X10CrNi18-8	FEDERSCHEIBE
5	10411095	2	HEX NUT ISO 4035 M10X1,5 04 ZnNi	SECHSKANTMUTTER
6	10411093	2	SPRING WASHER DIN 137 10 X10CrNi18-8	FEDERSCHEIBE
7	12108716	1	MAGNET SWITCH	MAGNETSCHALTER

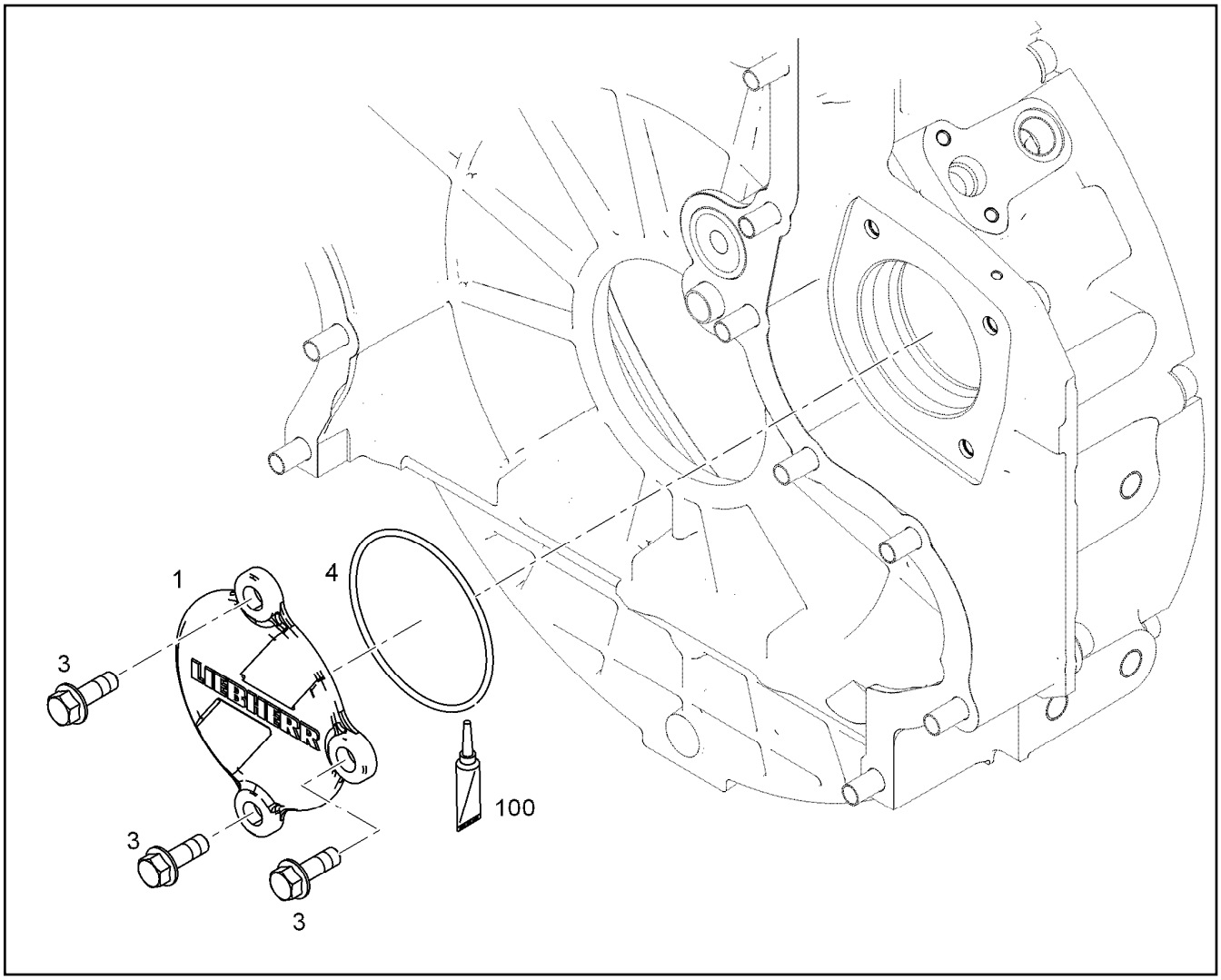

Pos.	Item	Quantity	Description	Bezeichnung
1	10124116	1	COVER EN AC-Al Si1	DECKEL
3	11656155	3	HEX SCREW EN 1665 M10X30 8.8 FLZN SPF	SECHSKANTSCHRAUBE
4	7381995	1	O-RING 98,02X3,53 HNBR 70	O-RING
100	10282622	1	GREASE STABURAGS NBU 30 0.010KG	FETT

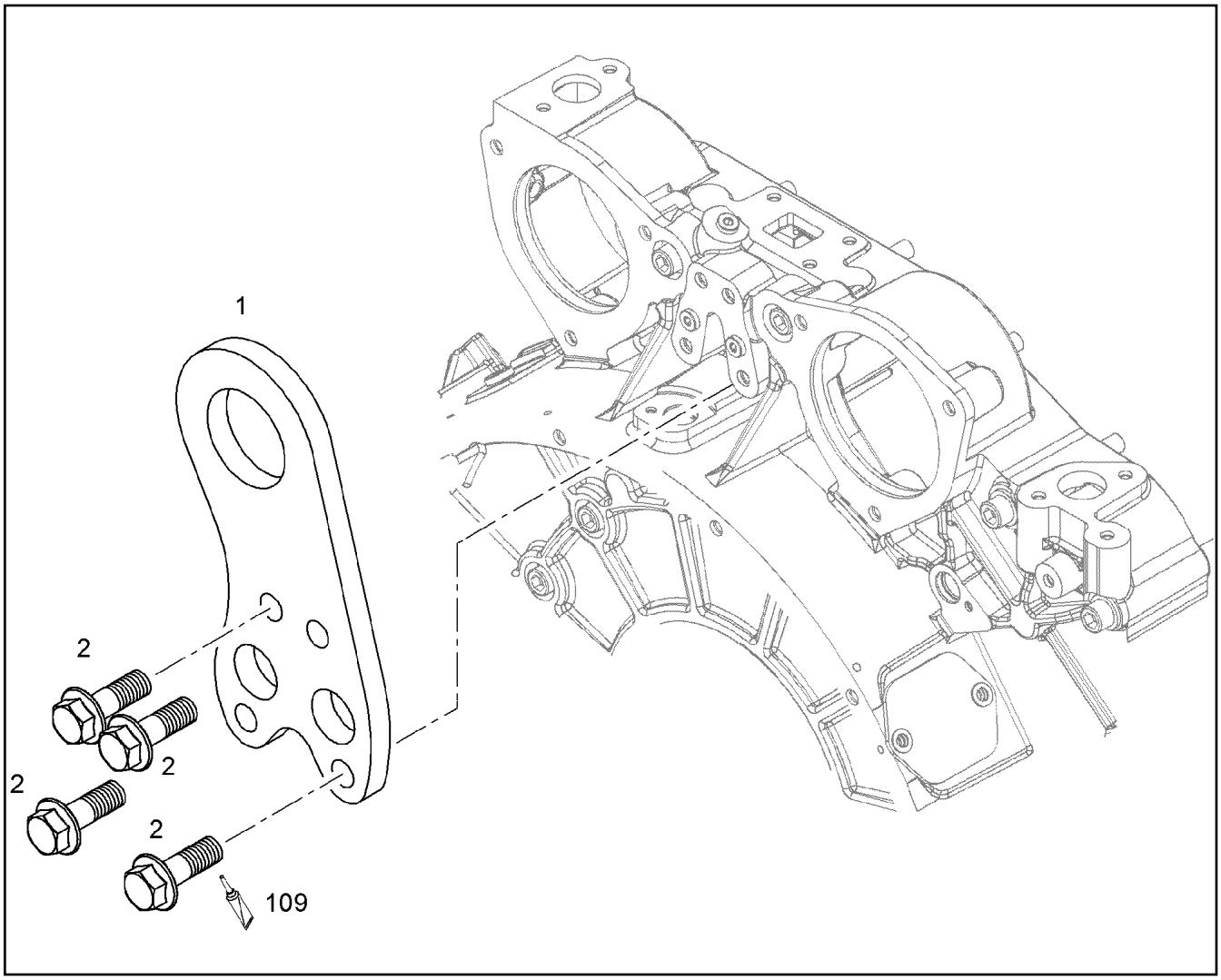

Pos.	Item	Quantity	Description	Bezeichnung
1	9078849	1	TRANSPORTER CONSOLE S355J0	TRANSPORTKONSOLE
2	10299564	4	HEX SCREW EN 1665 M10X30 10.9 FLZN SP	SECHSKANTSCHRAUBE
109	811205708	1	SCREW LOCKING FLASCHE 50ML 150°C	SCHRAUBENSICHERUNG

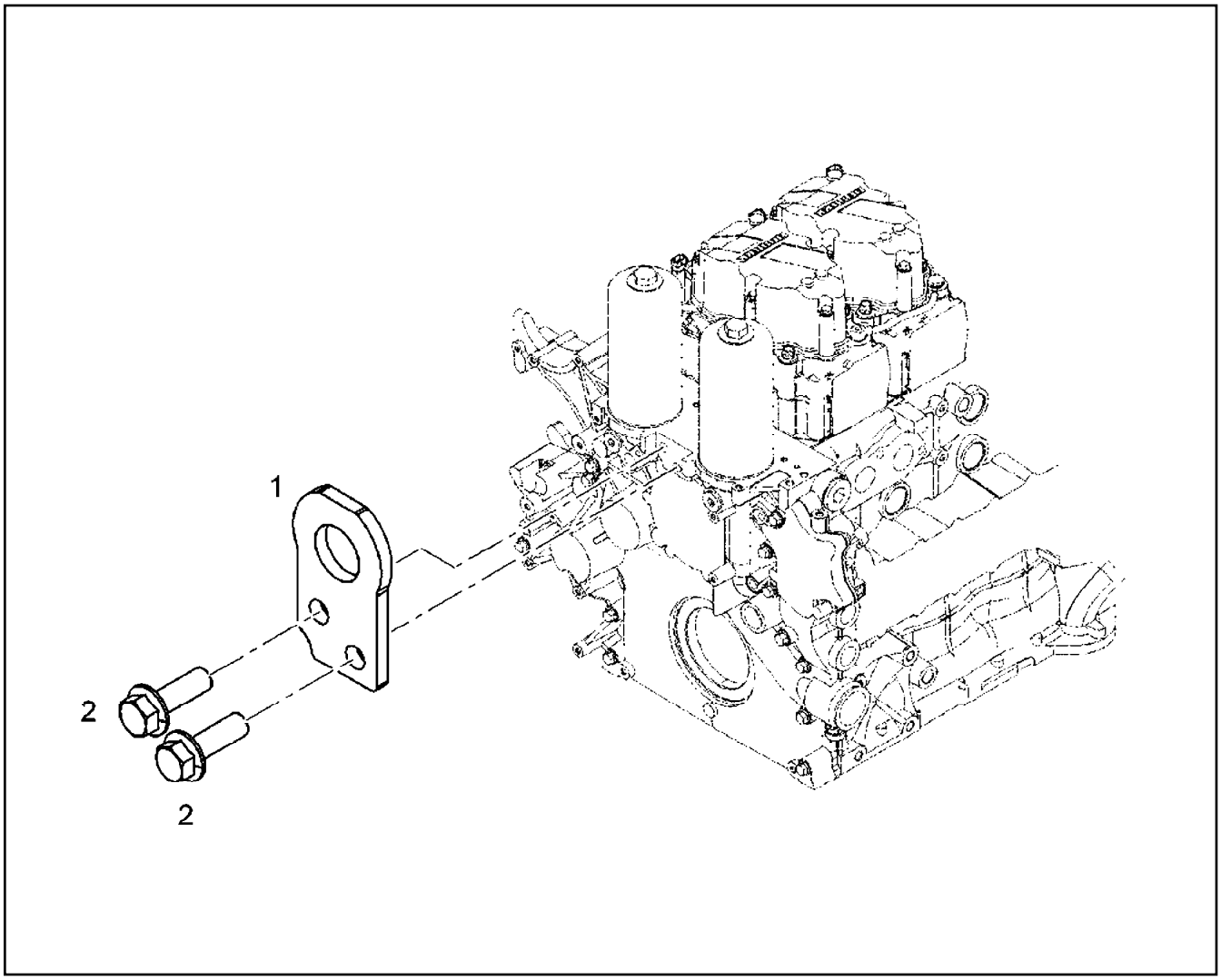

Pos.	Item	Quantity	Description	Bezeichnung
2	12207570	2	HEX SCREW EN 1665 M16X50 8.8 FLZN SPF	SECHSKANTSCHRAUBE

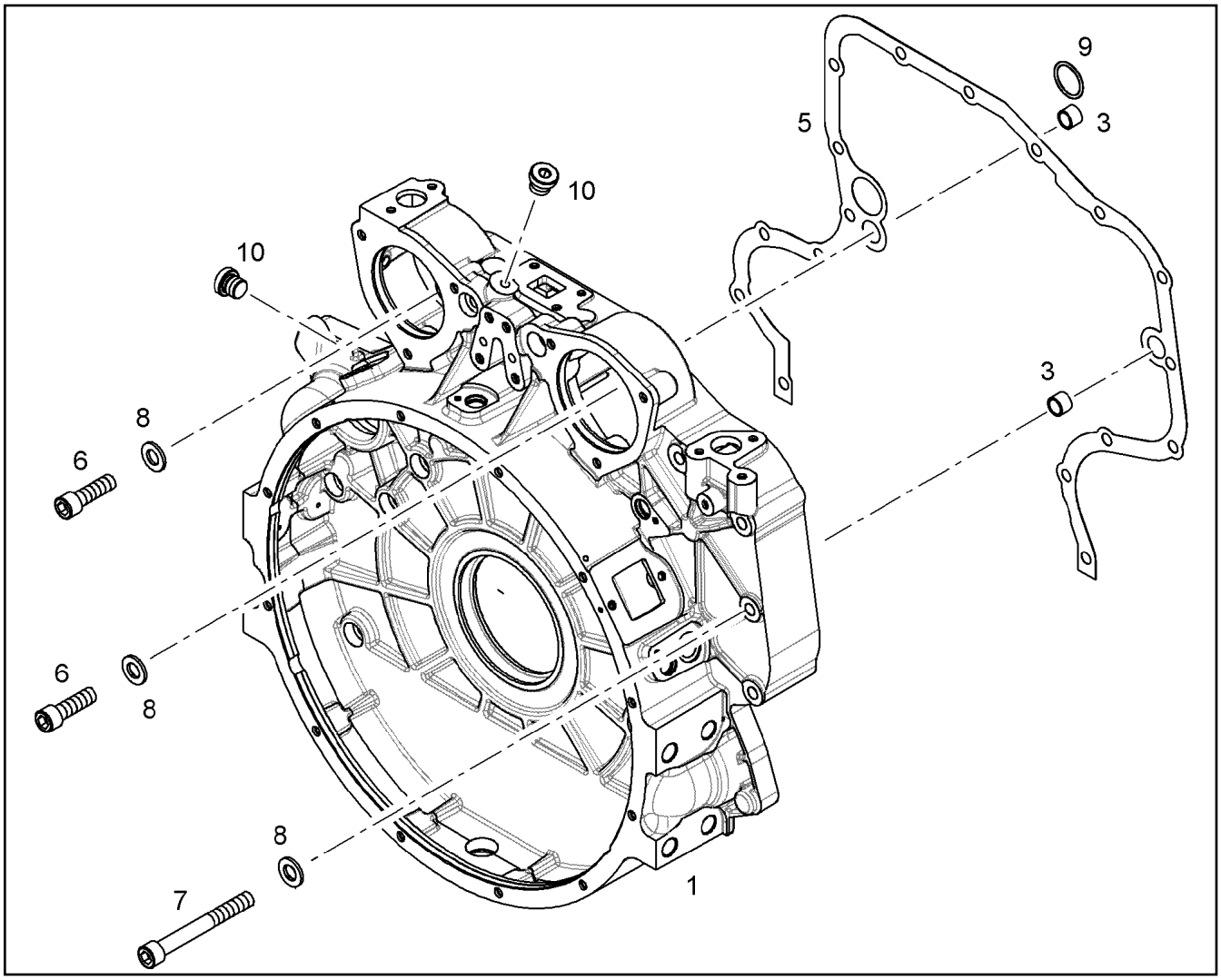

Pos.	Item	Quantity	Description	Bezeichnung
1	10118148	1	FLYWHEEL HOUSING PRE-ASS. SAE 1	SCHWUNGRADGEHAEUSE VO
3	10134348	2	TIGHT FIT SLEEVE 12X20X20 100Cr6	PASSHUELSE
5	10137721	1	SEAL 0,33 METALOSEAL 1	DICHTUNG
6	4980012	2	SOCKET HEAD SCREW ISO 4762 M12X40 1	ZYLINDERSCHRAUBE
7	11321144	15	SOCKET HEAD SCREW ISO 4762 M12X100	ZYLINDERSCHRAUBE
8	10289804	17	WASHER ISO 7089 12 300HV FLZN SPF	SCHEIBE
9	7380653	1	O-RING ISO 3601-1 34,59X2,62 FKM 90 A,BK	O-RING
10	7381638	2	SCREW PLUG VSTI M10X1	VERSCHLUSSSCHRAUBE
100	10285708	1	GREASE NBU 30 1KG DOSE	FETT

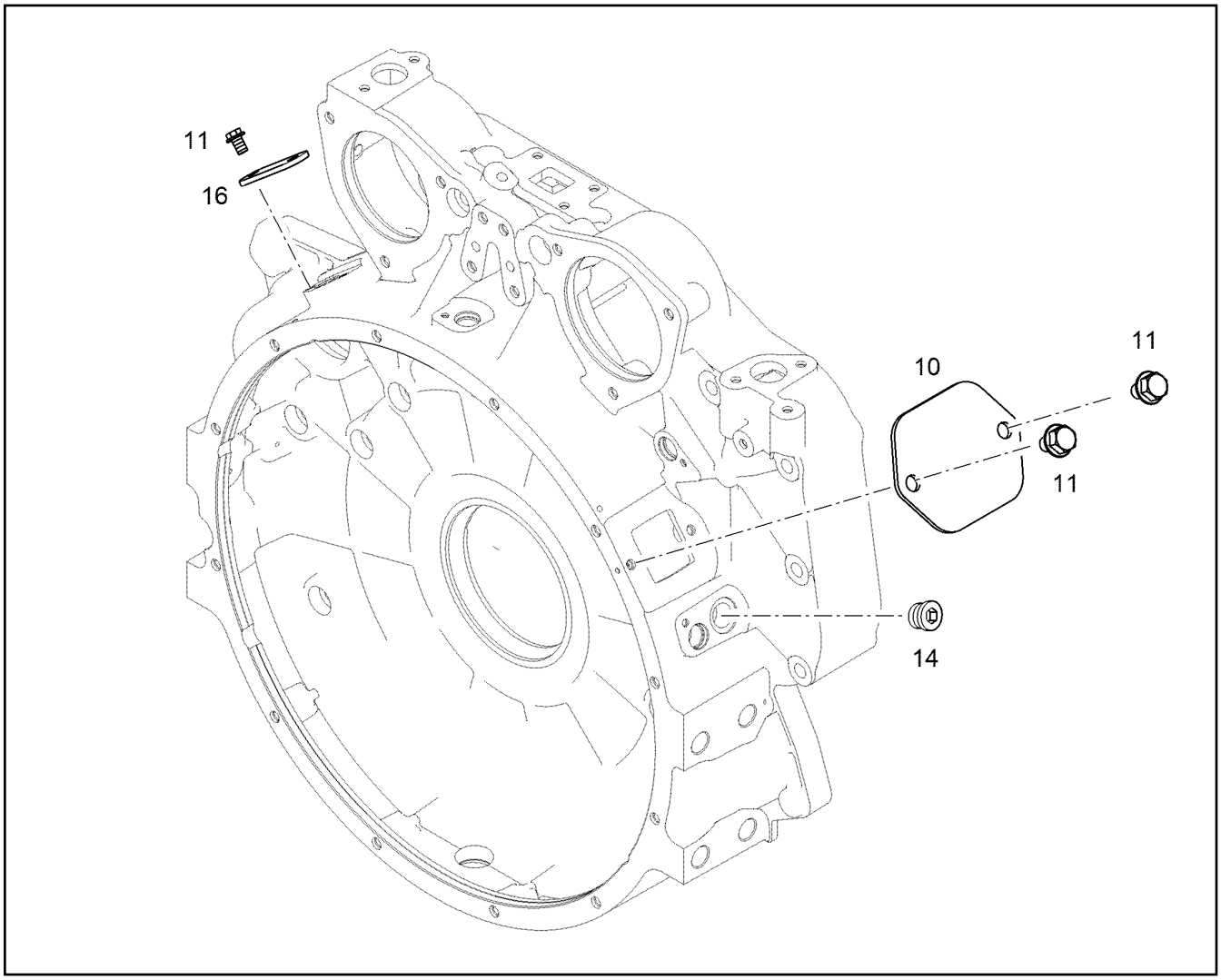

Pos.	Item	Quantity	Description	Bezeichnung
10	10117094	1	COVER S235JR	DECKEL
11	11656992	4	HEX SCREW EN 1665 M8X16 8.8 480H SPF	SECHSKANTSCHRAUBE
14	7380177	1	SCREW PLUG VSTI M22X1,5 CR6-FREI	VERSCHLUSSSCHRAUBE
16	9275826	1	SHEET S235JR	PLATTE

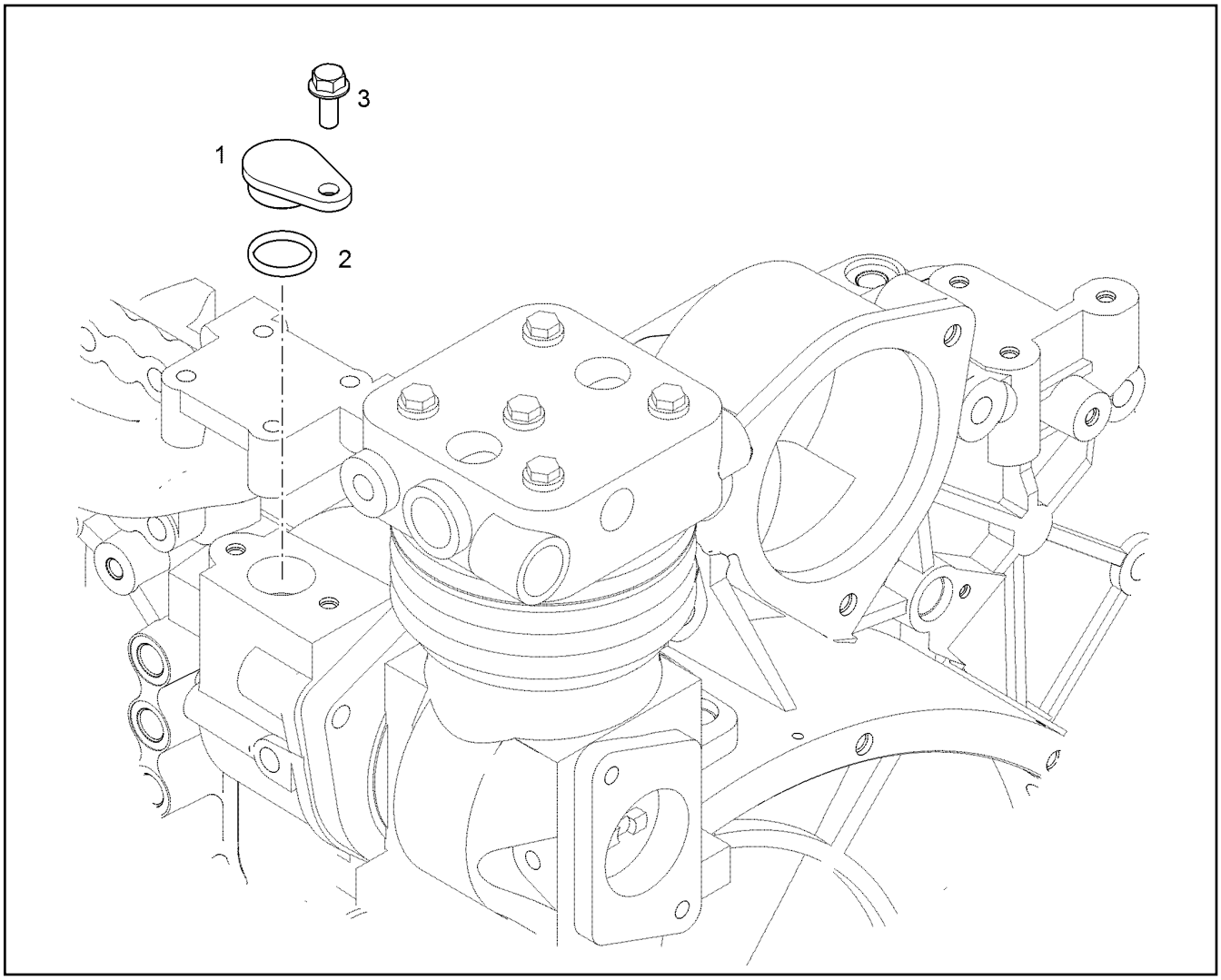

Pos.	Item	Quantity	Description	Bezeichnung
1	10128440	1	LOCKING PIECES Al Rm>150N/m	VERSCHLUSSTEILE
2	10217777	1	O-RING 24X3 FKM 70	O-RING
3	11657219	1	HEX SCREW EN 1665 M8X20 8.8 480H SPF	SECHSKANTSCHRAUBE

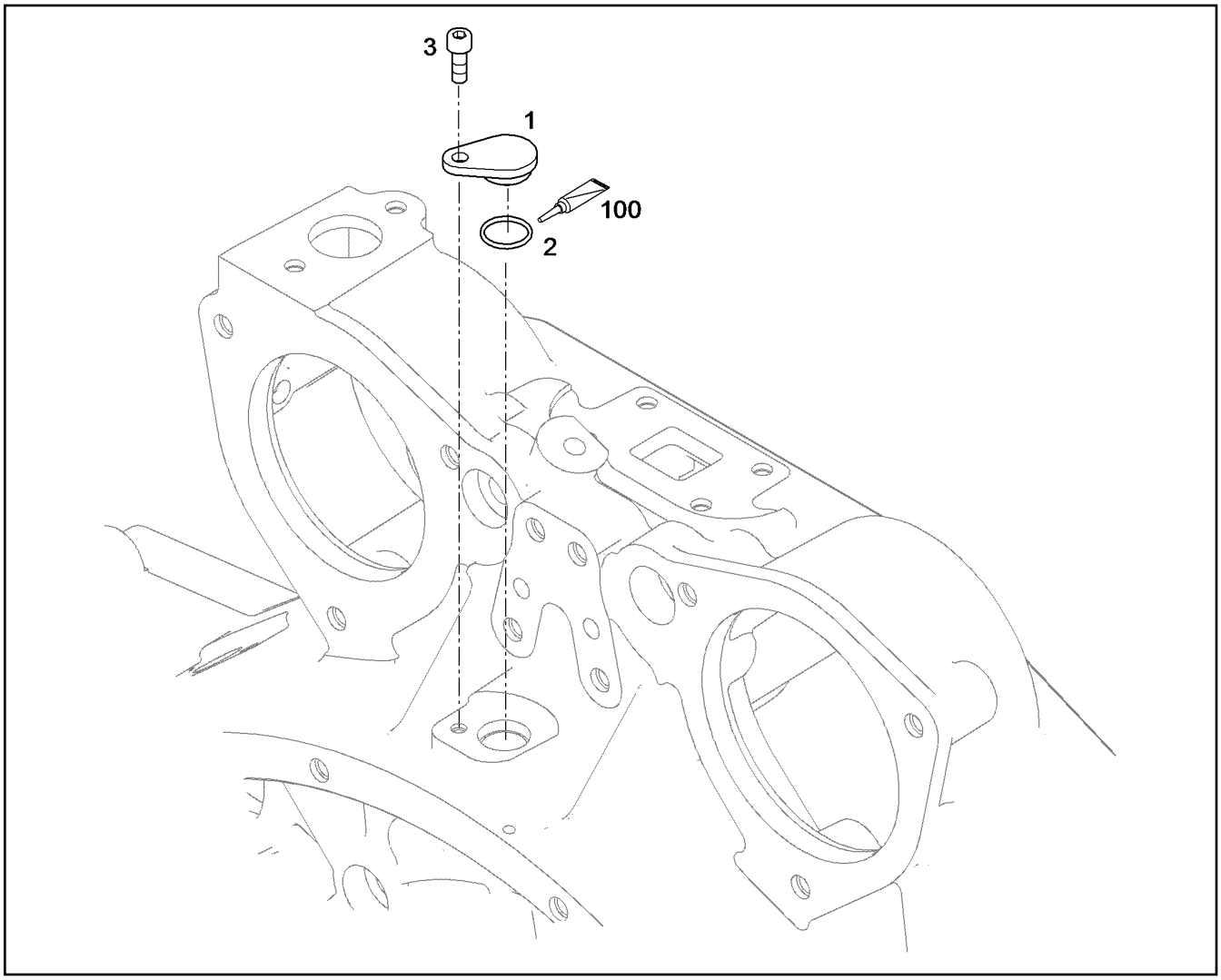

Pos.	Item	Quantity	Description	Bezeichnung
1	10127967	1	COVER Al Rm>200N/m	DECKEL
2	7381103	1	O-RING ISO 3601-1 17,17X1,78 FKM 70 A,GN	O-RING
3	10875586	1	SOCKET HEAD SCREW ISO 4762 M6X16 8.8	ZYLINDERSCHRAUBE
100	10285708	1	GREASE NBU 30 1KG DOSE	FETT

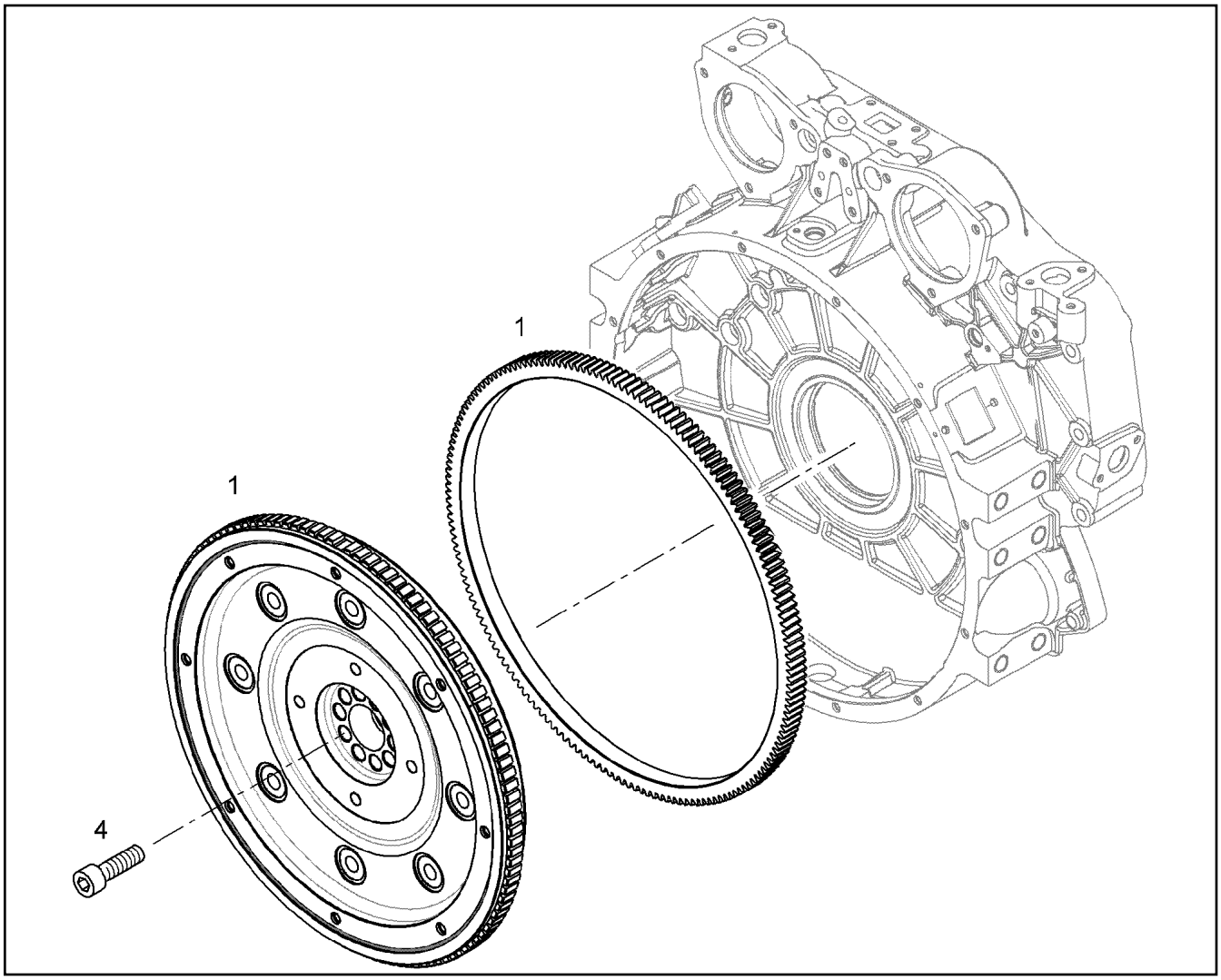

Pos.	Item	Quantity	Description	Bezeichnung
1	12809567	1	FLYWHEEL PRE-ASS. SAE 1X1,67	SCHWUNGRAD VORM.
4	10118910	10	HEXALOBULAR HEAD SCREW M16X1,5X72	SECHSRUNDSCHRAUBE

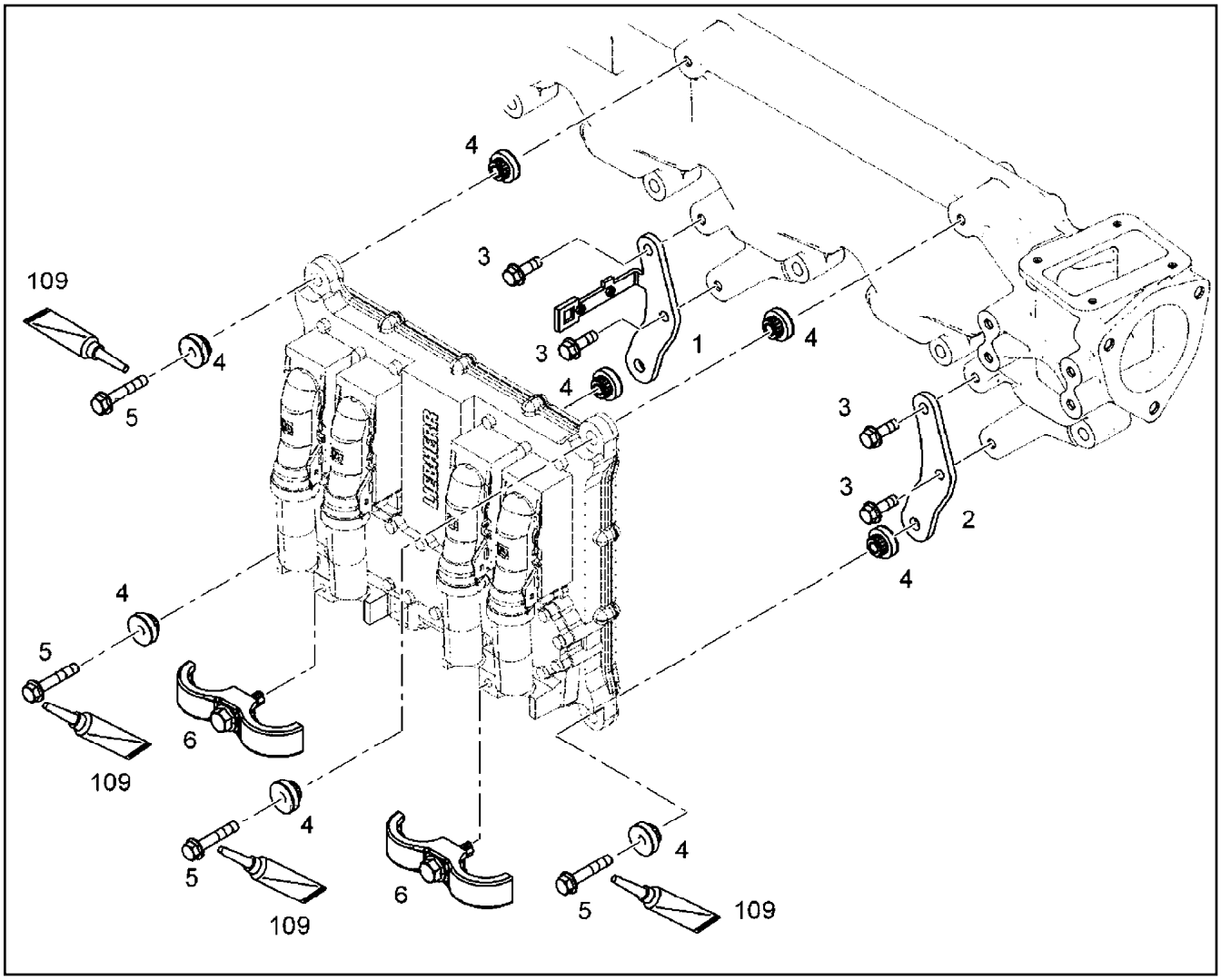

Pos.	Item	Quantity	Description	Bezeichnung
1	10143454	1	RETAINER CPL.	HALTER KPL.
2	10127689	1	RETAINER CPL.	HALTER KPL.
3	10009007	4	HEX SCREW DIN 6921 M8X25 8.8 A2C	SECHSKANTSCHRAUBE
4	10116274	8	RUBBER BUFFER 8,3/26X7,2 30 VMQ 21577	GUMMIPUFFER
5	10016907	4	HEX SCREW DIN 6921 M8X45 8.8 A2C	SECHSKANTSCHRAUBE
6	10144098	2	FASTENING CLAMP 34X34 ⇨ ❑ 238	BEFESTIGUNGSSCHELLE
109	811205708	1	SCREW LOCKING FLASCHE 50ML 150°C	SCHRAUBENSICHERUNG

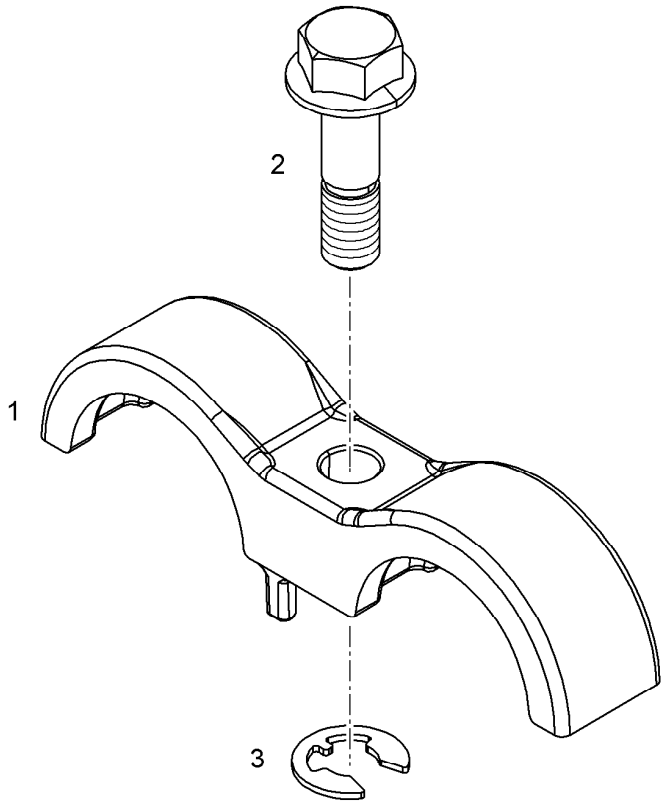

Pos.	Item	Quantity	Description	Bezeichnung
1	10123304	1	FASTENING CLAMP 34 EN AC-AlSi10	BEFESTIGUNGSSCHELLE
2	13541106	1	SCREW M8X30 St Rm>=800MP	SCHRAUBE
3	12210037	1	LOCK WASHER DIN 6799 7X0,9 480H	SICHERUNGSSCHEIBE

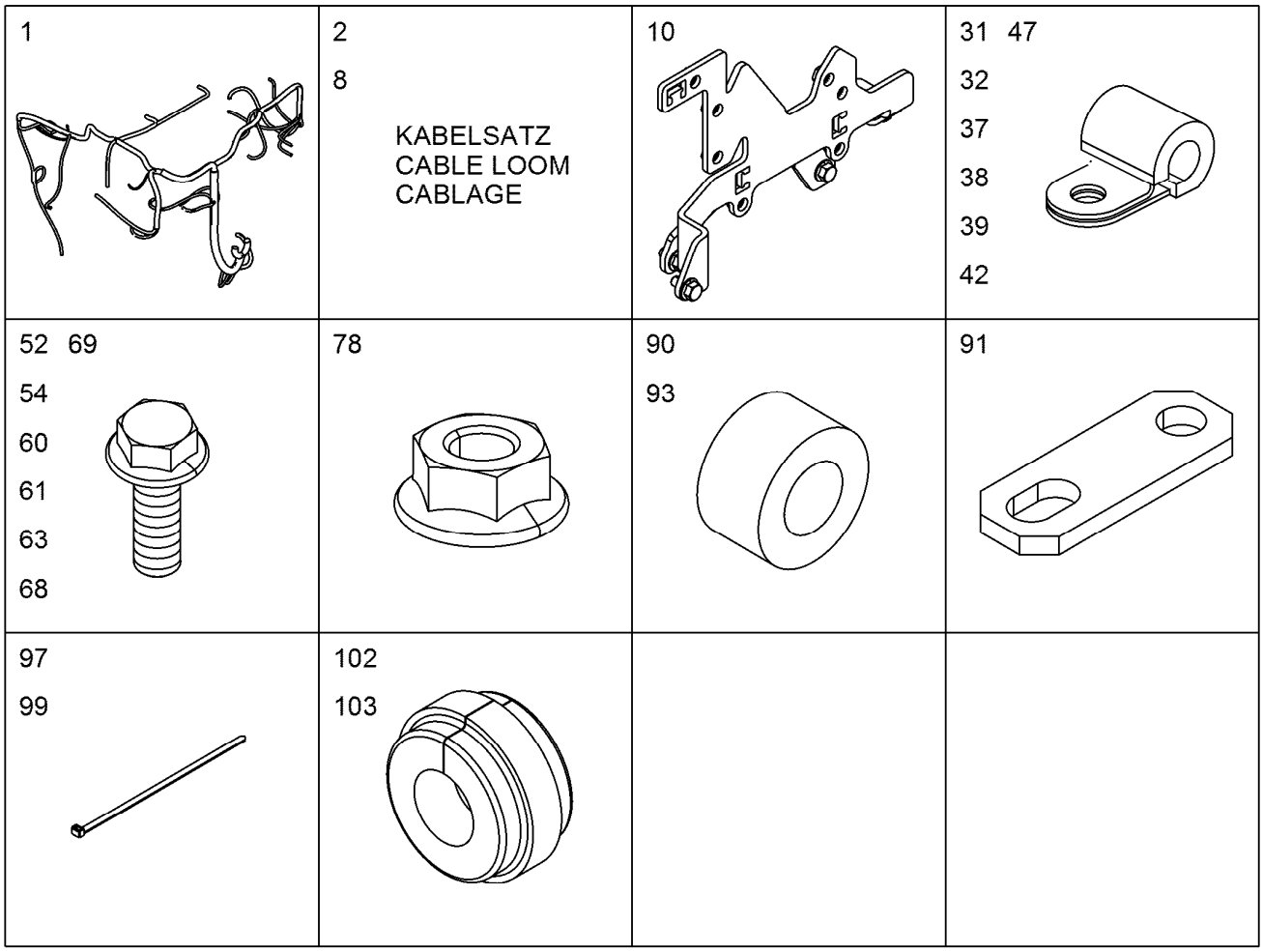

Pos.	Item	Quantity	Description	Bezeichnung
1	10153987	1	CABLE HARNESS W700	KABELBAUM
2	10151329	1	WIRING HARNESS ASSEMBLY ⇨ ❑ 241	KABELSATZ ANBAU
8	10151390	1	WIRING HARNESS ASSEMBLY	KABELSATZ ANBAU
(1)	10150081	1	CABLE LOOM WL720	KABELSATZ
(46)	10299560	1	HEX SCREW EN 1665 M10X20 10.9 FLZN	SECHSKANTSCHRAUBE
10	10143707	1	CLAMP - ADD-ON UNIT ⇨ ❑ 242	HALTER ANBAU
31	7381771	1	CLAMP DIN 3016-1 8X15XD1 W1-2-MVQ	SCHELLE
32	7381770	6	CLAMP DIN 3016-1 10X15XD1 W1-2-MVQ	SCHELLE
37	7382090	4	CLAMP DIN 3016-1 8X20XD1 W1-2-MVQ	SCHELLE
38	7381628	2	CLAMP DIN 3016-1 10X20XD1 W1-2-MVQ	SCHELLE
39	7381629	5	CLAMP DIN 3016-1 12X20XD1 W1-2-MVQ	SCHELLE
42	7381630	3	CLAMP DIN 3016-1 22X20XD1 W1-2-MVQ	SCHELLE
47	7382092	4	CLAMP DIN 3016-1 10X25XD1 W1-2-MVQ	SCHELLE
52	12207546	1	HEX SCREW EN 1665 M5X10 8.8 480H	SECHSKANTSCHRAUBE
54	11840297	7	HEX SCREW EN 1665 M6X16 8.8 480H SPF	SECHSKANTSCHRAUBE
60	11656992	2	HEX SCREW EN 1665 M8X16 8.8 480H SPF	SECHSKANTSCHRAUBE
61	11657219	14	HEX SCREW EN 1665 M8X20 8.8 480H SPF	SECHSKANTSCHRAUBE
63	11826563	1	HEX SCREW EN 1665 M8X30 8.8 480H	SECHSKANTSCHRAUBE
68	11656153	3	HEX SCREW EN 1665 M10X20 8.8 FLZN SPF	SECHSKANTSCHRAUBE
69	11656155	1	HEX SCREW EN 1665 M10X30 8.8 FLZN SPF	SECHSKANTSCHRAUBE
78	11820285	1	HEX NUT EN 1661 M8 8 480H SPF	SECHSKANTMUTTER
90	9076588	1	DISTANCE SLEEVE 11X24X10,5 St Rm>=50	DISTANZHUELSE
91	9275178	1	HOLDER S235JR	HALTER
93	9132577	1	DISTANCE SLEEVE 8,5X18X10 11SMnPb30	DISTANZHUELSE

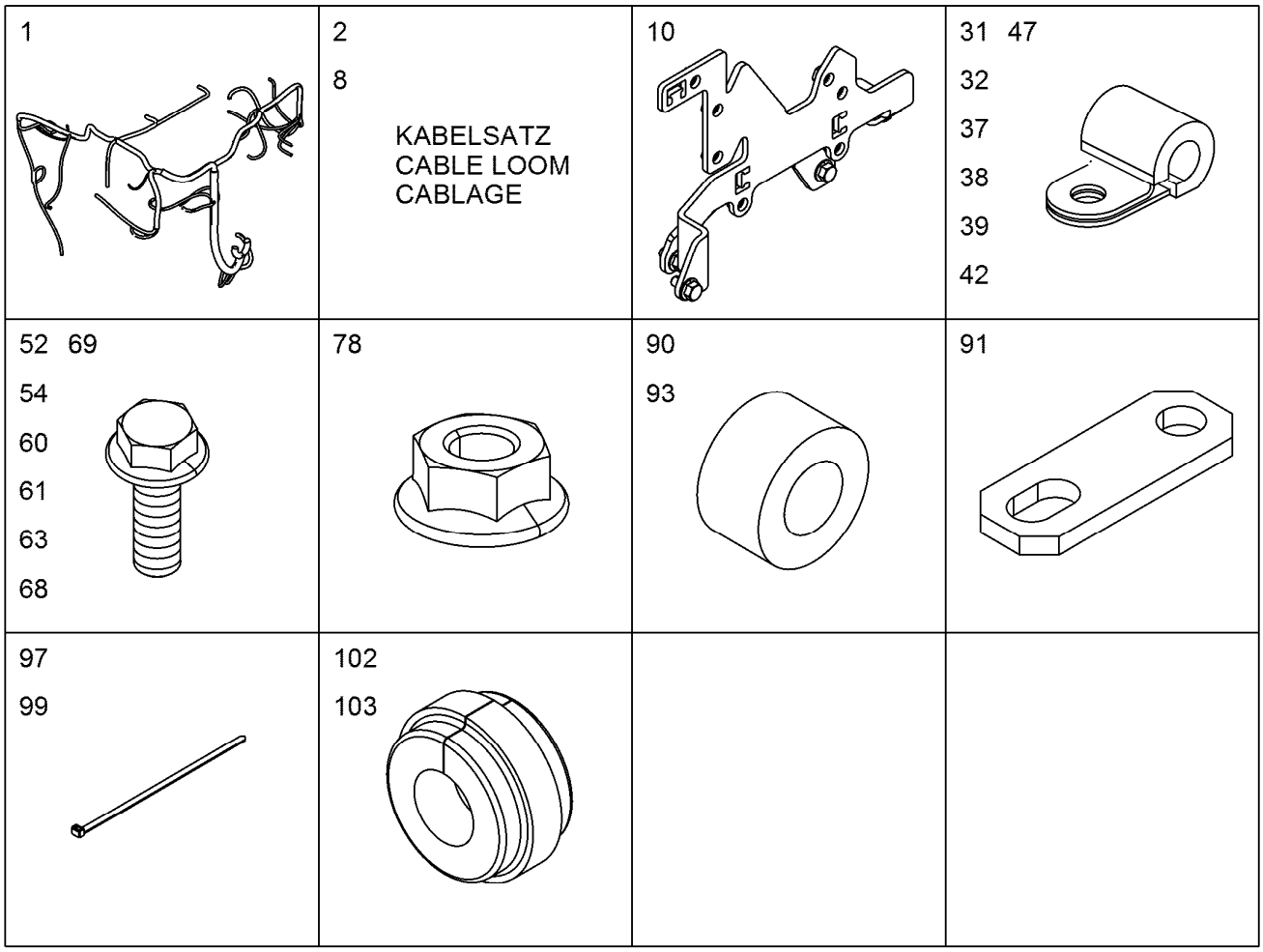

Pos.	Item	Quantity	Description	Bezeichnung
97	11691013	2	CABLE TIE 4,6X202-SCHWARZ/ PA 66-HS, P	KABELBINDER
99	10874588	3	CABLE TIE 4,8X292-SCHWARZ PA66 SPF	KABELBINDER
102	10133991	1	RUBBER RING X12	GUMMIRING
103	10123876	1	RUBBER RING X16	GUMMIRING

1 KABELSATZ CABLE LOOM CABLAGE	10 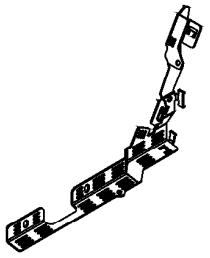	13 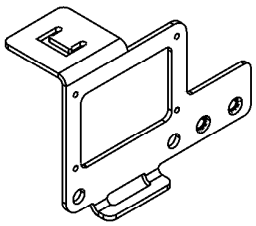	39 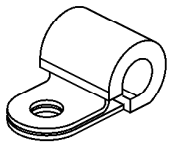
42 51 53 58 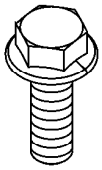	77 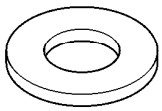	100 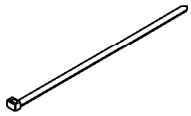	

Pos.	Item	Quantity	Description	Bezeichnung
1	10151164	1	CABLE LOOM WL705	KABELSATZ
(1)	6905877	1	FUSE CARTRIDGE DIN 72581 1A DC32	SICHERUNGSEINSATZ
10	10150252	1	HOLDER S235JR	HALTER
13	10150838	1	HOLDER S235JR	HALTER
39	7382086	1	CLAMP DIN 3016-1 18X25XD1 W1-2-MVQ	SCHELLE
42	12207546	1	HEX SCREW EN 1665 M5X10 8.8 480H	SECHSKANTSCHRAUBE
51	11657219	2	HEX SCREW EN 1665 M8X20 8.8 480H SPF	SECHSKANTSCHRAUBE
53	11826563	2	HEX SCREW EN 1665 M8X30 8.8 480H	SECHSKANTSCHRAUBE
58	11656153	2	HEX SCREW EN 1665 M10X20 8.8 FLZN SPF	SECHSKANTSCHRAUBE
77	11658580	1	WASHER DIN 7349 10,5 200HV-St FLZN SPF	SCHEIBE
100	10874588	8	CABLE TIE 4,8X292-SCHWARZ PA66 SPF	KABELBINDER

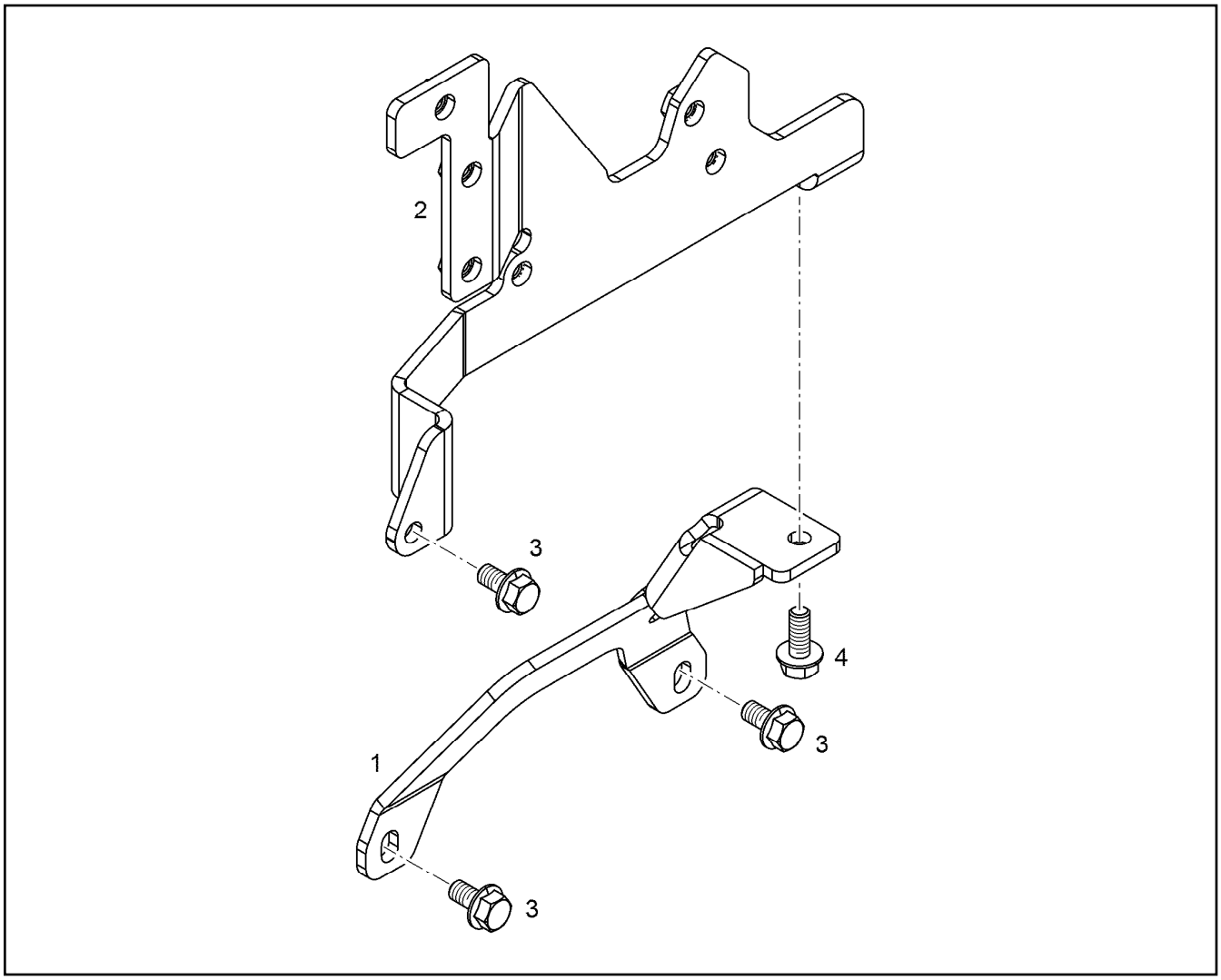

Pos.	Item	Quantity	Description	Bezeichnung
1	12978423	1	RETAINER CPL. S235JR	HALTER KPL.
2	10145371	1	RETAINER CPL. S235JR	HALTER KPL.
3	11656992	3	HEX SCREW EN 1665 M8X16 8.8 480H SPF	SECHSKANTSCHRAUBE
4	11657219	1	HEX SCREW EN 1665 M8X20 8.8 480H SPF	SECHSKANTSCHRAUBE

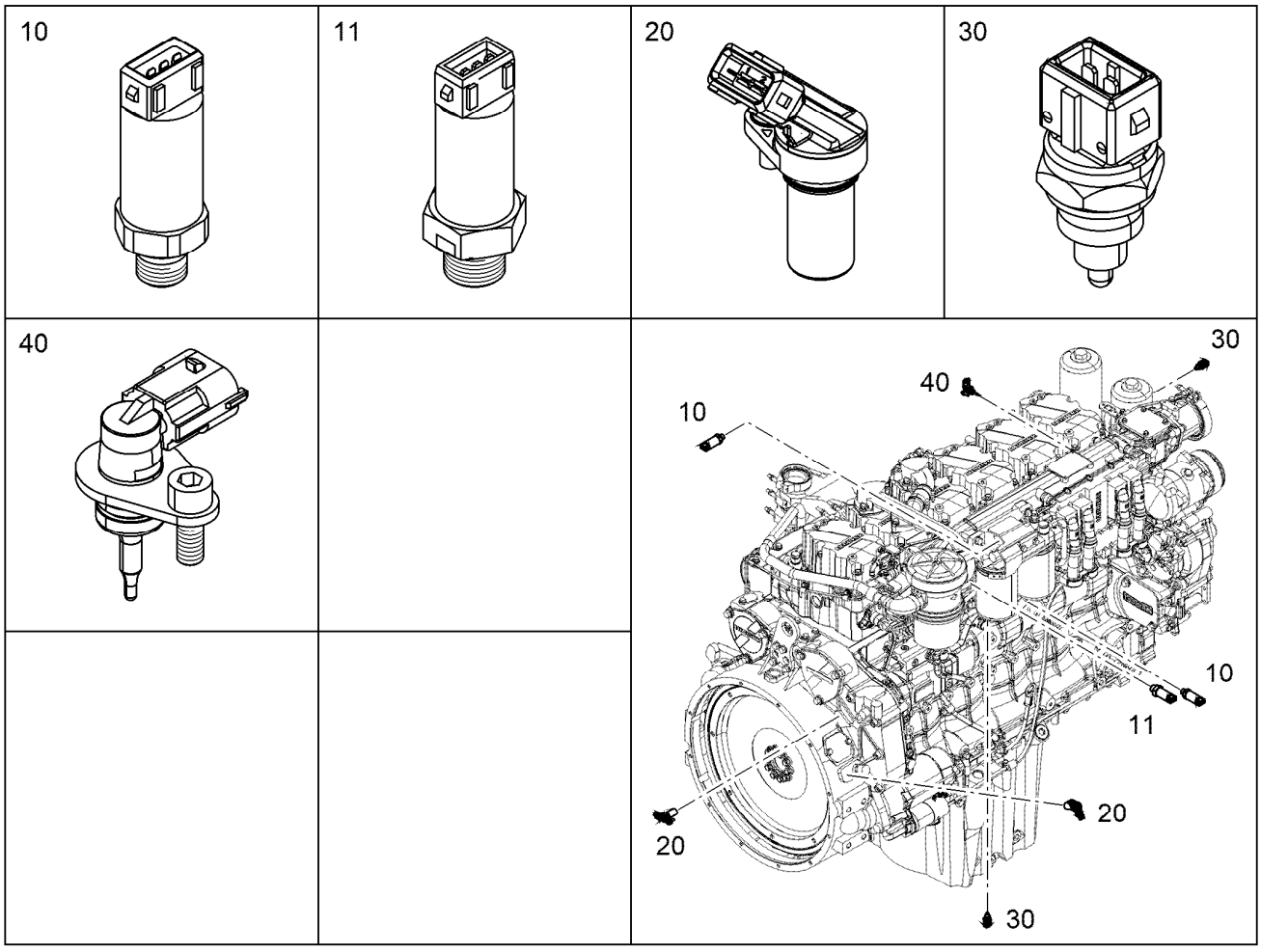

Pos.	Item	Quantity	Description	Bezeichnung
10	9076531	2	PRESSURE TRANSMITTER CPL. 0-10 BAR	DRUCKGEBER KPL.
(1)	12907001	1	PRESSURE TRANSMITTER 0-10 BAR	DRUCKGEBER
(2)	10040984	1	PROFILE PACKING DIN 3869 14X11,6 FKM 8	PROFILDICHTRING
11	9076550	1	PRESSURE TRANSMITTER CPL. 0,5-4,5 BA	DRUCKGEBER KPL.
(1)	12907020	1	PRESSURE TRANSMITTER 0,5-4,5 BAR	DRUCKGEBER
(2)	10113975	1	O-RING AEHNL.ISO 3601-1 15,5X2 FKM 80	O-RING
20	12544505	2	ROTATIONAL SPEED SENSOR CPL. 10-1000 ⇨ ❑ 244	DREHZAHLGEBER KPL.
30	13410342	2	TEMPERATURE PROBE CPL. -40°C BIS +15	TEMPERATURFUEHLER KPL.
40	10152036	1	TEMPERATURE PROBE CPL. -40°C BIS +15	TEMPERATURFUEHLER KPL.
(1)	10493625	1	TEMPERATURE SENSOR -40°C BIS +150°C	TEMPERATURFUEHLER
(2)	10875586	1	SOCKET HEAD SCREW ISO 4762 M6X16 8.8	ZYLINDERSCHRAUBE
(100)	10285708	1	GREASE NBU 30 1KG DOSE	FETT

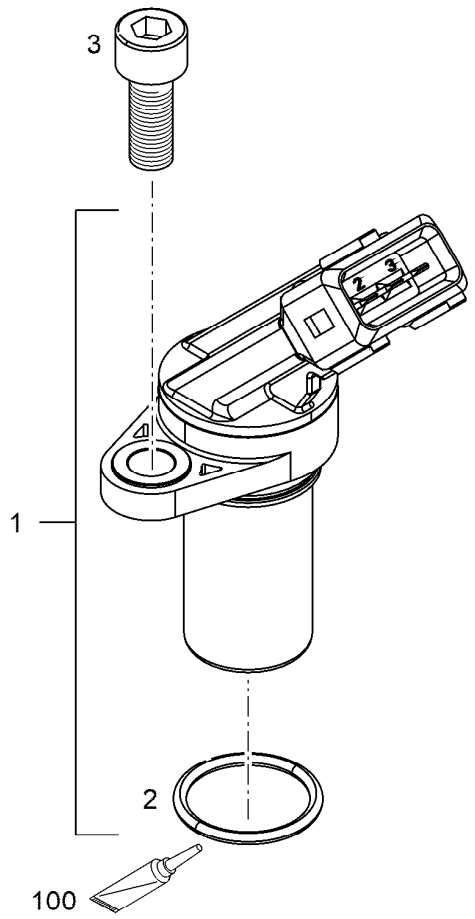

Pos.	Item	Quantity	Description	Bezeichnung
1	13736146	1	ROTATIONAL SPEED SENSOR 10-10000HZ	DREHZAHLGEBER
2	7381103	1	O-RING ISO 3601-1 17,17X1,78 FKM 70 A,GN	O-RING
3	10875586	1	SOCKET HEAD SCREW ISO 4762 M6X16 8.8	ZYLINDERSCHRAUBE
100	10285708	1	GREASE NBU 30 1KG DOSE	FETT

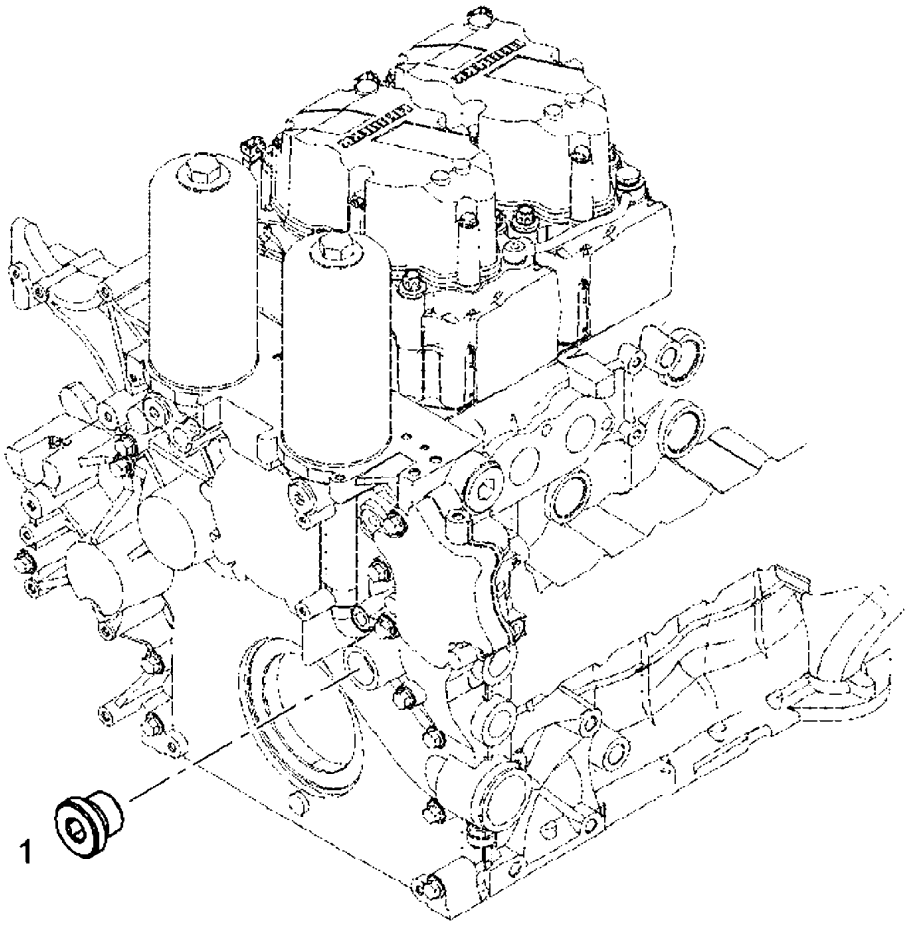

Pos.	Item	Quantity	Description	Bezeichnung
1	7382202	1	SCREW PLUG VSTI M38X1,5 CR6-FREI	VERSCHLUSSSCHRAUBE

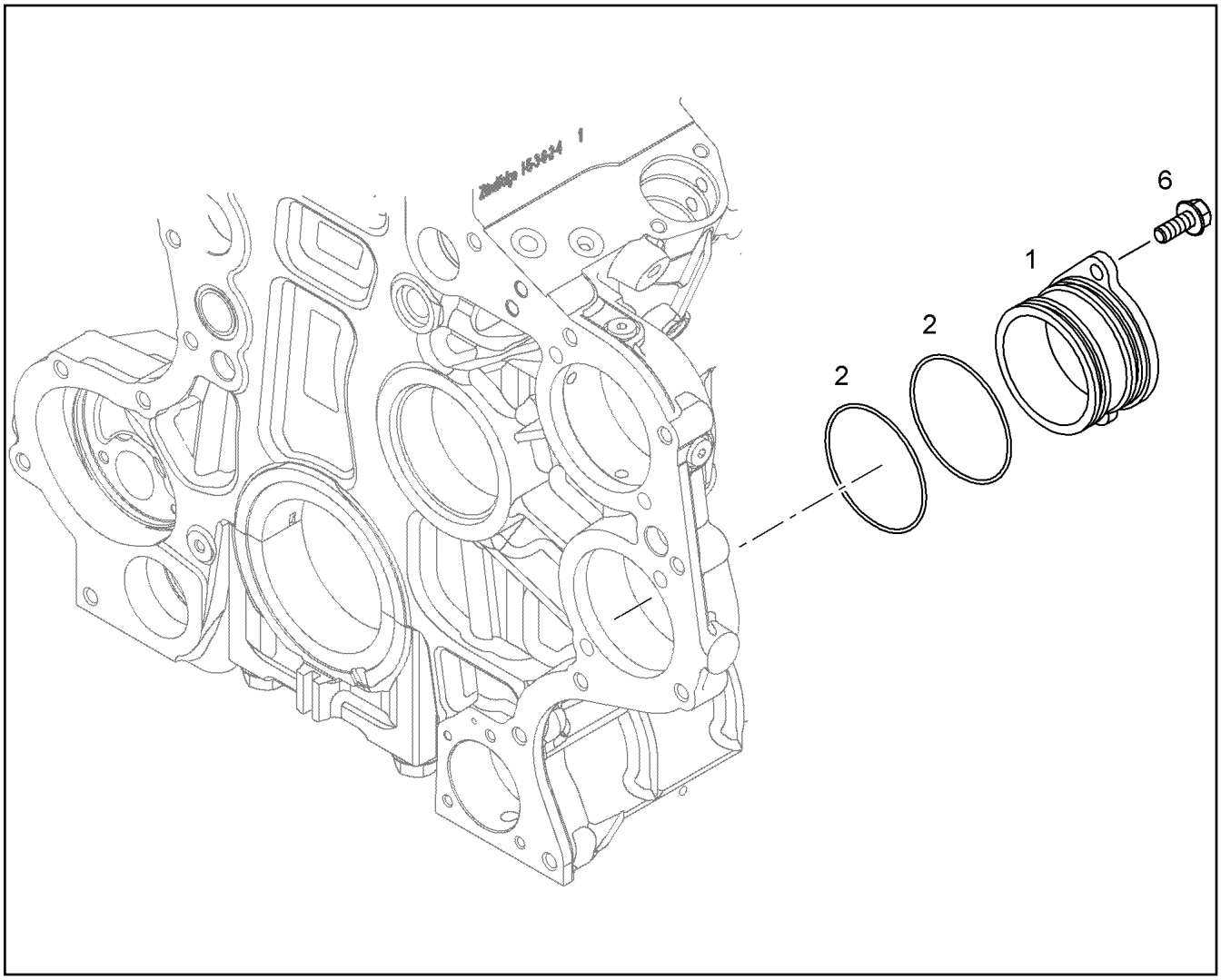

Pos.	Item	Quantity	Description	Bezeichnung
1	10147409	1	COVER	DECKEL
2	7381361	2	O-RING ISO 3601-1 85,32X3,53 FKM 70 A,GN	O-RING
6	11656153	2	HEX SCREW EN 1665 M10X20 8.8 FLZN SPF	SECHSKANTSCHRAUBE
100	10285708	1	GREASE NBU 30 1KG DOSE	FETT

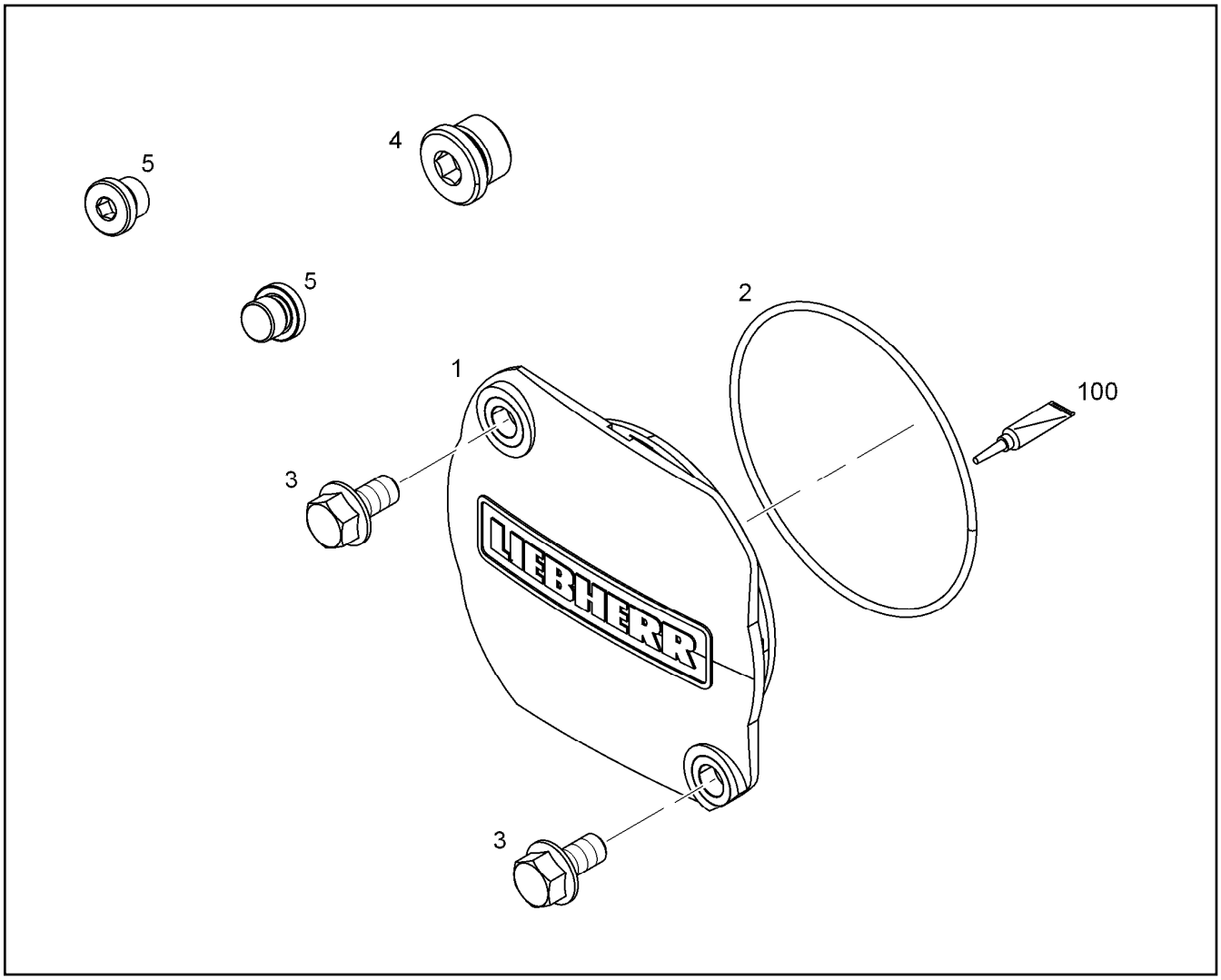

Pos.	Item	Quantity	Description	Bezeichnung
1	9078881	1	COVER PA 66	DECKEL
2	7382158	1	O-RING AEHNL.ISO 3601-1 101,2X3,53 FKM	O-RING
3	11656153	2	HEX SCREW EN 1665 M10X20 8.8 FLZN SPF	SECHSKANTSCHRAUBE
4	7380177	1	SCREW PLUG VSTI M22X1,5 CR6-FREI	VERSCHLUSSSCHRAUBE
5	7382203	2	SCREW PLUG VSTI M16X1,5	VERSCHLUSSSCHRAUBE
100	10285708	1	GREASE NBU 30 1KG DOSE	FETT

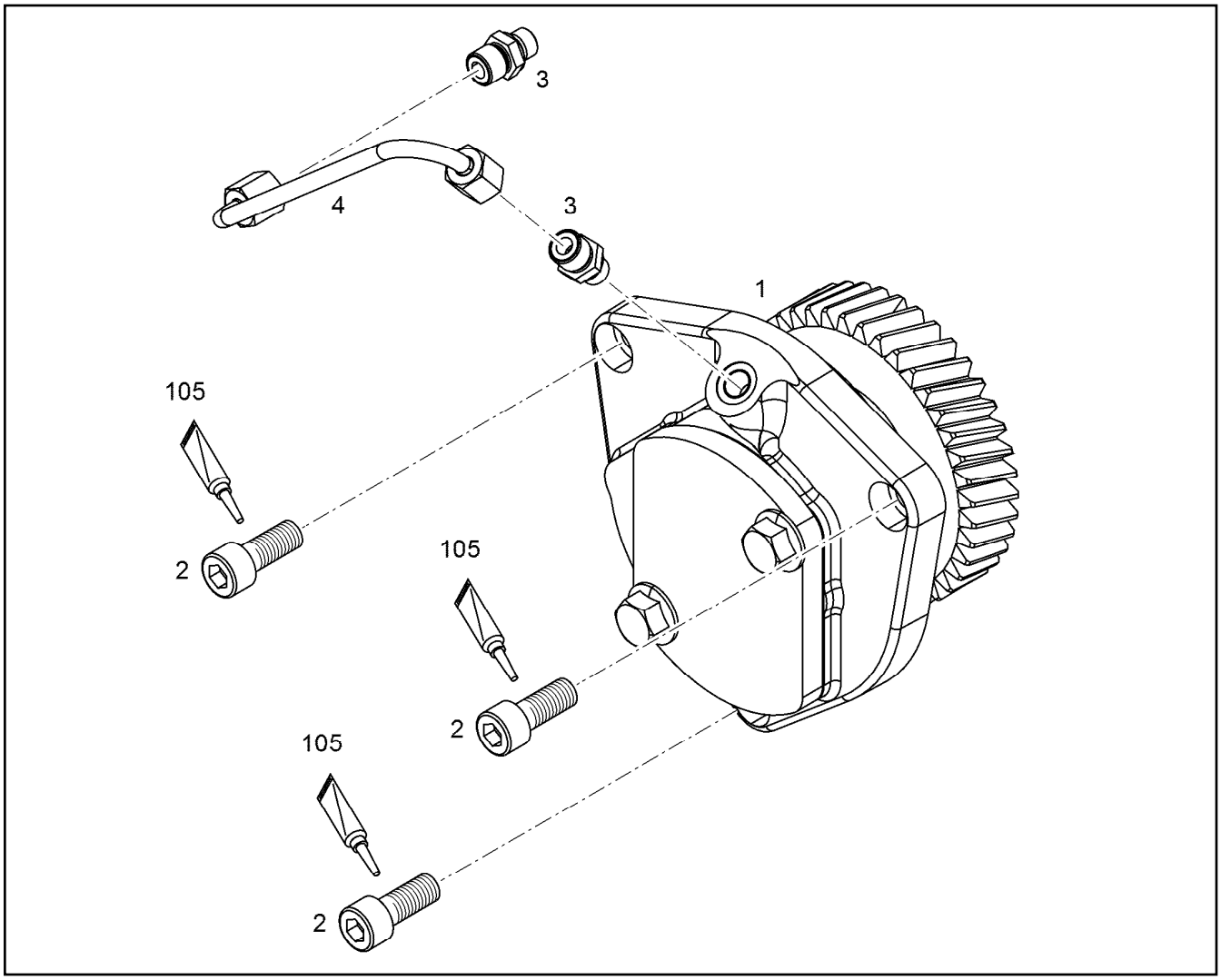

Pos.	Item	Quantity	Description	Bezeichnung
1	9078962	1	AUXILIARY DRIVE PRE-ASS. ⇨ ❑ 249	NEBENABTRIEB VORM.
2	10415162	3	SOCKET HEAD SCREW ISO 4762 M10X25 8	ZYLINDERSCHRAUBE
3	4981233	2	FITTING ISO 8434-1 GE 6L M10X1 CR6-FREI	VERSCHRAUBUNG
4	9078984	1	PIPELINE 6X1	ROHRLEITUNG
105	811205708	1	SCREW LOCKING FLASCHE 50ML 150°C	SCHRAUBENSICHERUNG

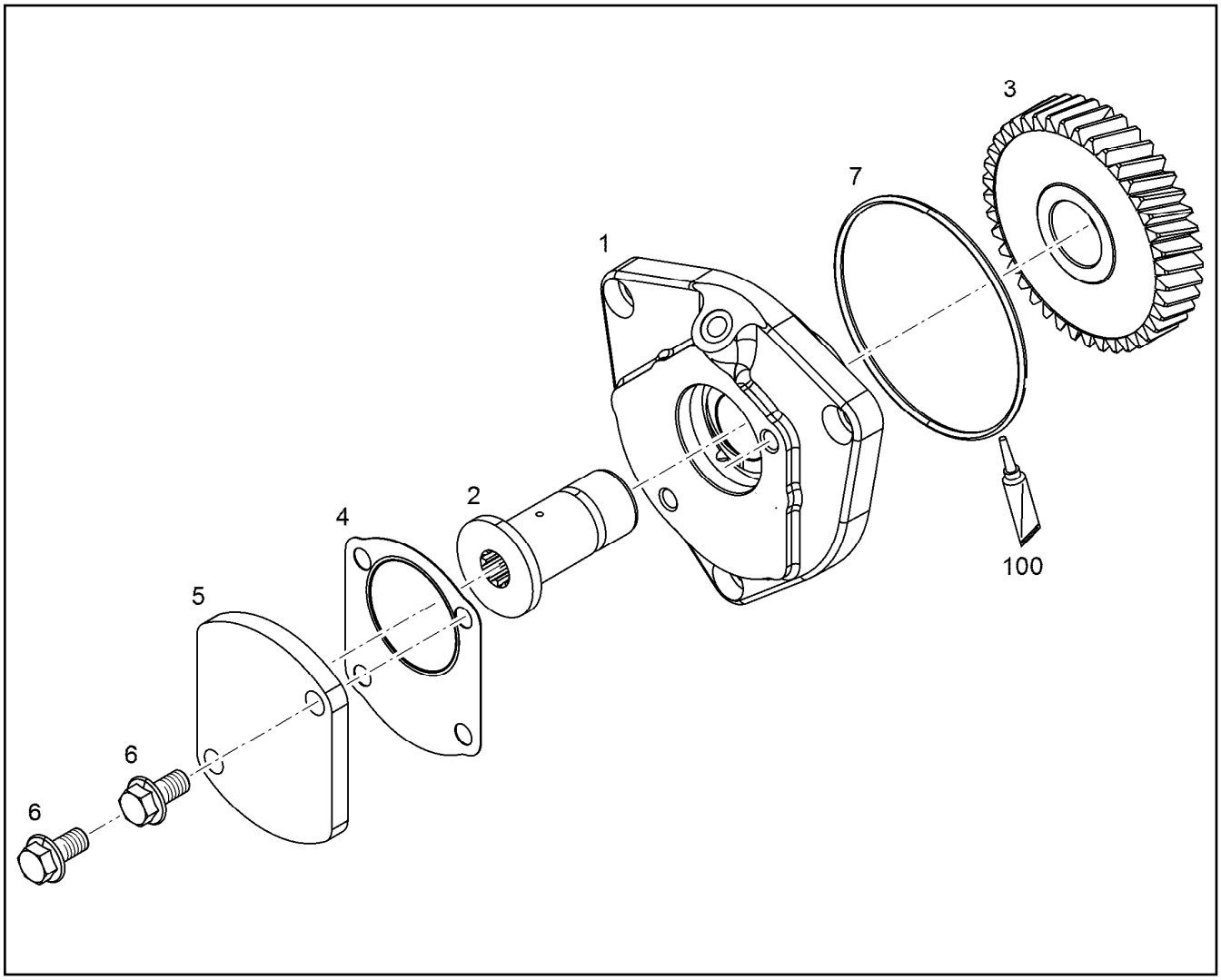

Pos.	Item	Quantity	Description	Bezeichnung
1	9078963	1	BEARING HOUSING, PRE-ASSEMBLED	LAGERGEHAEUSE VORM.
2	9078964	1	PUMP SHAFT 31CrMoV9	PUMPENWELLE
3	9079001	1	GEAR WHEEL 2,5 20MnCr5	ZAHNRAD
4	9885529	1	SEAL	DICHTUNG
5	9178294	1	COVER	DECKEL
6	11656153	2	HEX SCREW EN 1665 M10X20 8.8 FLZN SPF	SECHSKANTSCHRAUBE
7	7382158	1	O-RING AEHNL.ISO 3601-1 101,2X3,53 FKM	O-RING
100	10285708	1	GREASE NBU 30 1KG DOSE	FETT

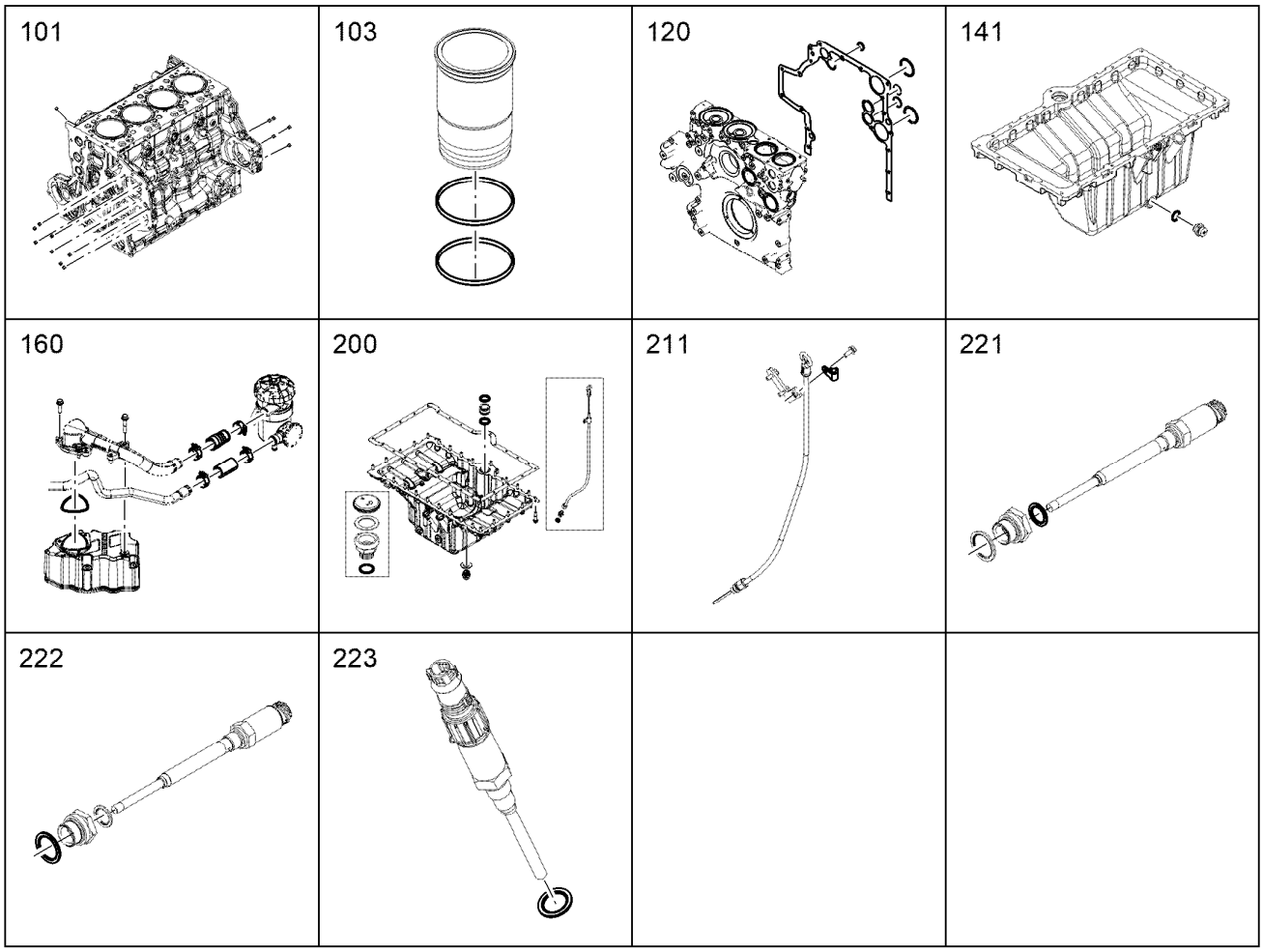

Pos.	Item	Quantity	Description	Bezeichnung
101	10030837	14	SEALING PLUG LK 950	DICHTSTOPFEN
103	12894049	8	O-RING 145 FKM 75-606	O-RING
120	10141157	1	SEAL KIT AGGREGATE CARRIER	DS AGGREGATETRAEGER
141	710106508	1	SEALING RING DIN 7603 A30X36X2 CU	DICHTRING
160	10141165	1	SEAL KIT CRANKCASE BREATHER	DS KURBELGEHAEUSEENTLUE
200	10141167	1	SEAL KIT OIL SUMP	DS OELWANNE
			⇨ ❑ 253	
211	7381628	1	CLAMP DIN 3016-1 10X20XD1 W1-2-MVQ	SCHELLE
221	10011868	1	SEALING RING 18,7X26X1,5 St/FPM1-80	DICHTRING
222	10011870	1	SEALING RING 26,7X34,93X2 St/FPM1-80	DICHTRING
223	7101012	1	SEALING RING DIN 7603 A18X22 CU	DICHTRING
231	10335629	1	PROFILE PACKING DIN 3869 33X29,7 FKM	PROFILDICHTRING
232	9144762	1	SEAL	DICHTUNG
250	10141169	1	SEAL KIT OIL LINE	DS OELLEITUNG
(2)	10126317	1	RUBBER CONNECTION	GUMMIMUFFE
(3)	4601105	4	CLAMP DIN 3017-1 16/12-20/9 W2-2	SCHELLE
(4)	9079603	1	RUBBER CONNECTION 12X18X45	GUMMIMUFFE
520	10141178	1	RK CRANKSHAFT SEAL D934/936A7	RS KURBELWELLENDICHTUNG
800	10141181	4	SEAL KIT ZYLINDER HEAD CPL.	DS ZYLINDERKOPF KPL.
811	10036325	4	SEALING PLUG LK 950	DICHTSTOPFEN
901	7381685	1	O-RING AEHNL.ISO 3601-1 7X1,5 FKM 90 A,B	O-RING
902	7380123	1	SEALING PLUG MB 850 CR6-FREI	DICHTSTOPFEN
1001	7381685	1	O-RING AEHNL.ISO 3601-1 7X1,5 FKM 90 A,B	O-RING
1002	7380123	1	SEALING PLUG MB 850 CR6-FREI	DICHTSTOPFEN
1300	10141182	1	SEALING SET OIL COOLER	DS OELKUEHLER
1400	11351510	1	SEAL KIT LUBRICATING OIL PUMP	DS SCHMIEROELPUMPE

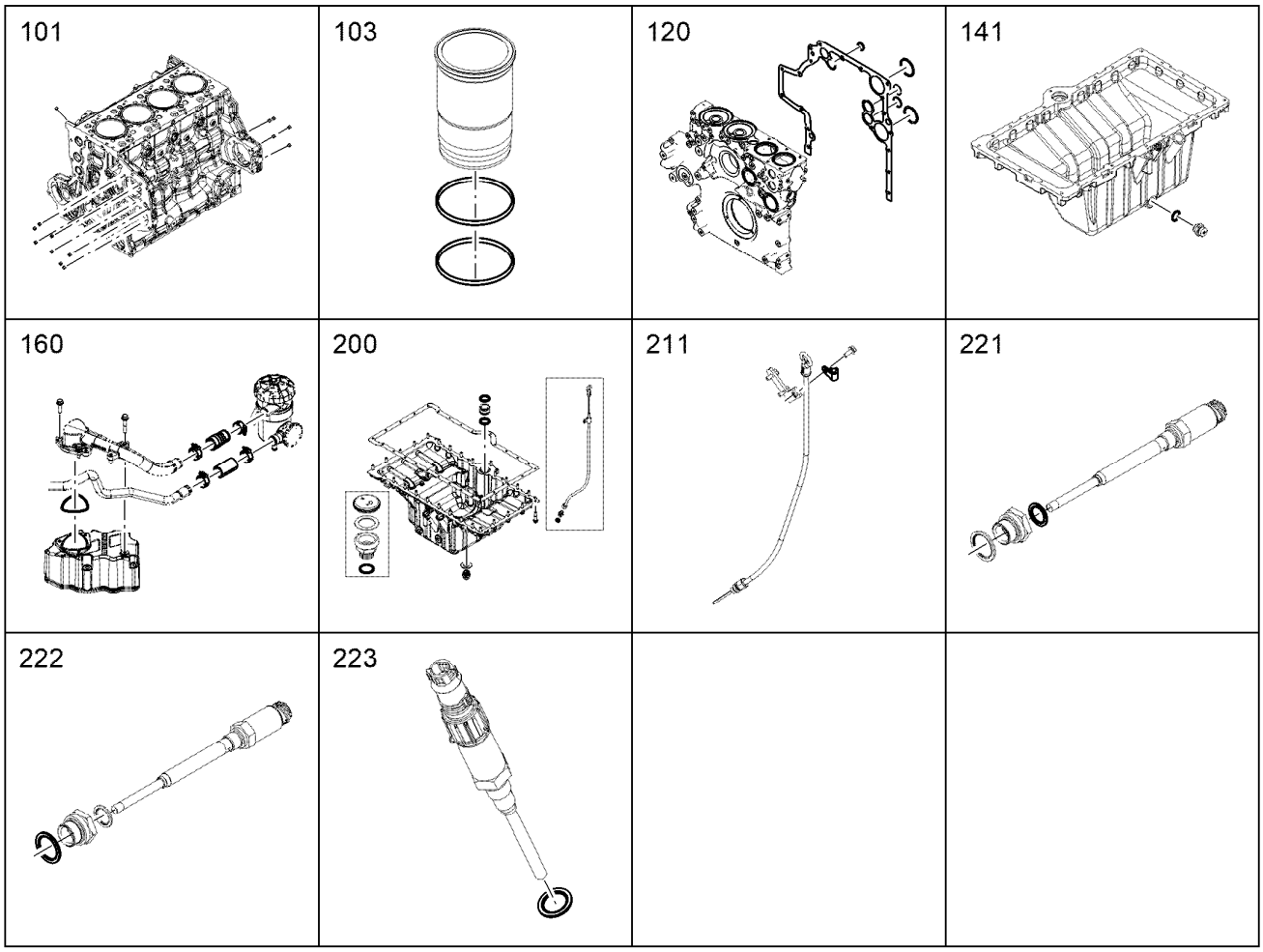

Pos.	Item	Quantity	Description	Bezeichnung
1710	12937883	1	SEAL KIT HIGH PRESSURE PUMP	DS HOCHDRUCKPUMPE
1711	11002988	1	FITTING GE 12 M14X1,5/3/ EDELSTAHL	VERSCHRAUBUNG
1719	12424993	1	SEAL KIT PREFEEDING PUMP	DS VORFOERDERPUMPE
1801	10128671	2	O-RING 98,02X3,53 FKM 70-MoS2	O-RING
2011	9079130	1	SEAL 1	DICHTUNG
2120	10141217	1	SEAL KIT FUEL LINE ⇨ ❑ 254	DS KRAFTSTOFFLEITUNG
2121	7382085	1	CLAMP DIN 3016-1 16X20XD1 W1-2-MVQ	SCHELLE
2140	11351500	1	SEAL KIT LEAKAGE-OIL RET. LINE	DS LECKOELRUECKLAUF
2151	11389287	1	SEALING PLUG M18X1.5	DICHTSTOPFEN
2210	11351429	1	SEAL KIT INTAKE NOZZLE	DS ANSAUGSTUTZEN
2240	11351430	1	SEAL KIT AIR INTAKE	DS LUFTANSAUGUNG
2300	11351425	1	SEAL KIT CONNECTING LINE	DS VERBINDUNGSLEITUNG
2601	10116255	1	O-RING AEHNL.ISO 3601-1 94,5X3 FKM 80	O-RING
2602	7380935	1	O-RING ISO 3601-1 12,37X2,62 FKM 90	O-RING
3701	7016016	1	O-RING ISO 3601-1 132,94X3,53 FKM 70	O-RING
3800	11351503	1	SEAL KIT THERMOSTAT HOUSING	DS THERMOSTATGEHAEUSE
3820	11351432	1	SEAL KIT COOLANT PIPE BEND	DS KUEHLMITTELKRUEMMER
3871	7381526	1	O-RING AEHNL.ISO 3601-1 21,3X2,4 V70GA	O-RING
3872	10011866	1	SEALING RING 14,7X22,00X1,5 FKM 80	DICHTRING
4300	11351313	1	SEAL KIT TURBOCHARGER MOUNTING	DS ATL-ANBAU
4320	11351426	1	SEAL KIT EXHAUST ADAPTER	DS ABGASSTUTZEN
4360	11351427	1	SEAL KIT CYCLE VALVE	DS TAKTVENTIL
4501	10218370	1	O-RING 85X2 HNBR 70	O-RING
4521	7381995	1	O-RING 98,02X3,53 HNBR 70	O-RING
5200	11351428	1	SEAL KIT FLYWHEEL HOUSING	DS SCHWUNGRADGEHAEUSE

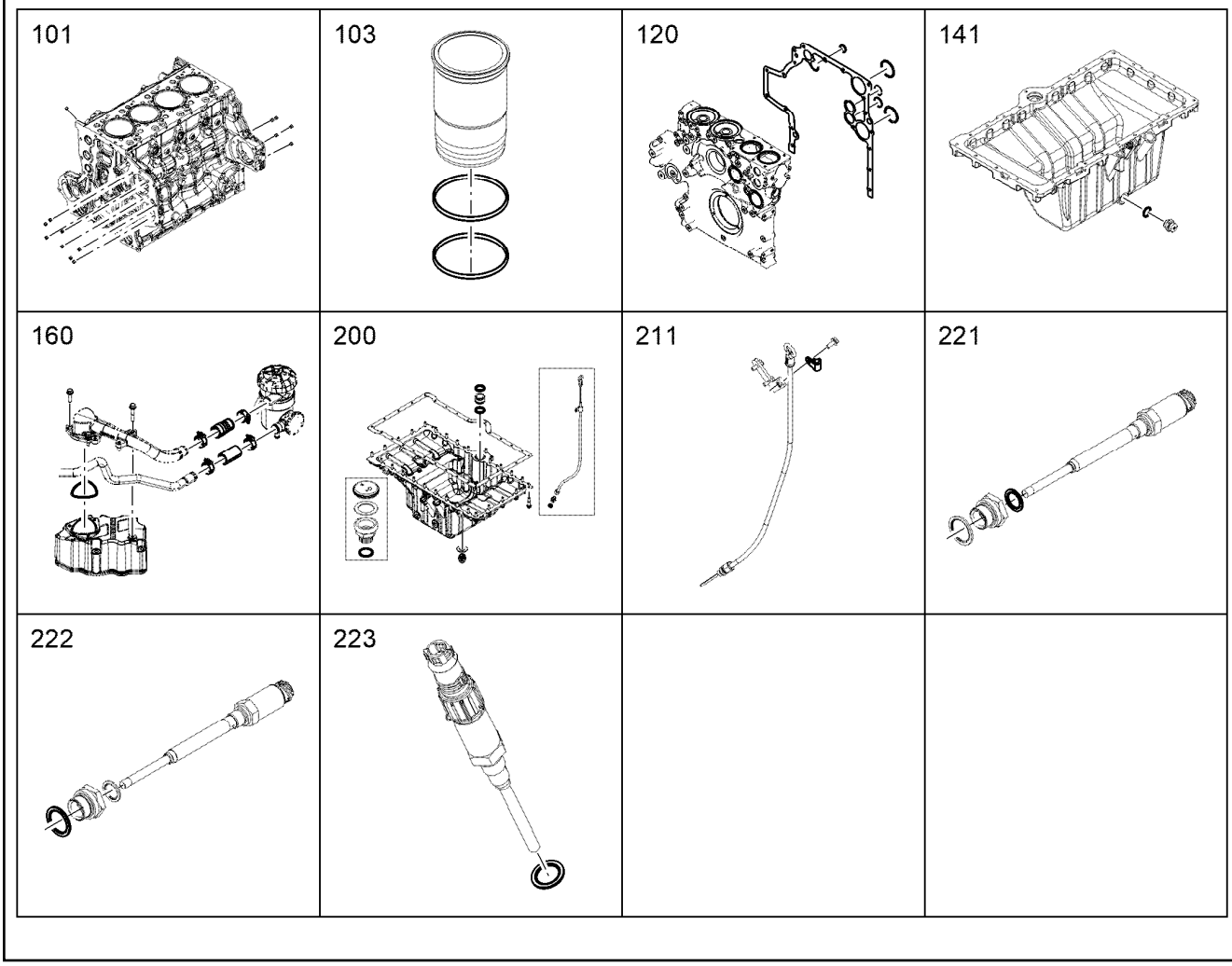

Pos.	Item	Quantity	Description	Bezeichnung
5241	10217777	1	O-RING 24X3 FKM 70	O-RING
5261	7381103	1	O-RING ISO 3601-1 17,17X1,78 FKM 70 A,GN	O-RING

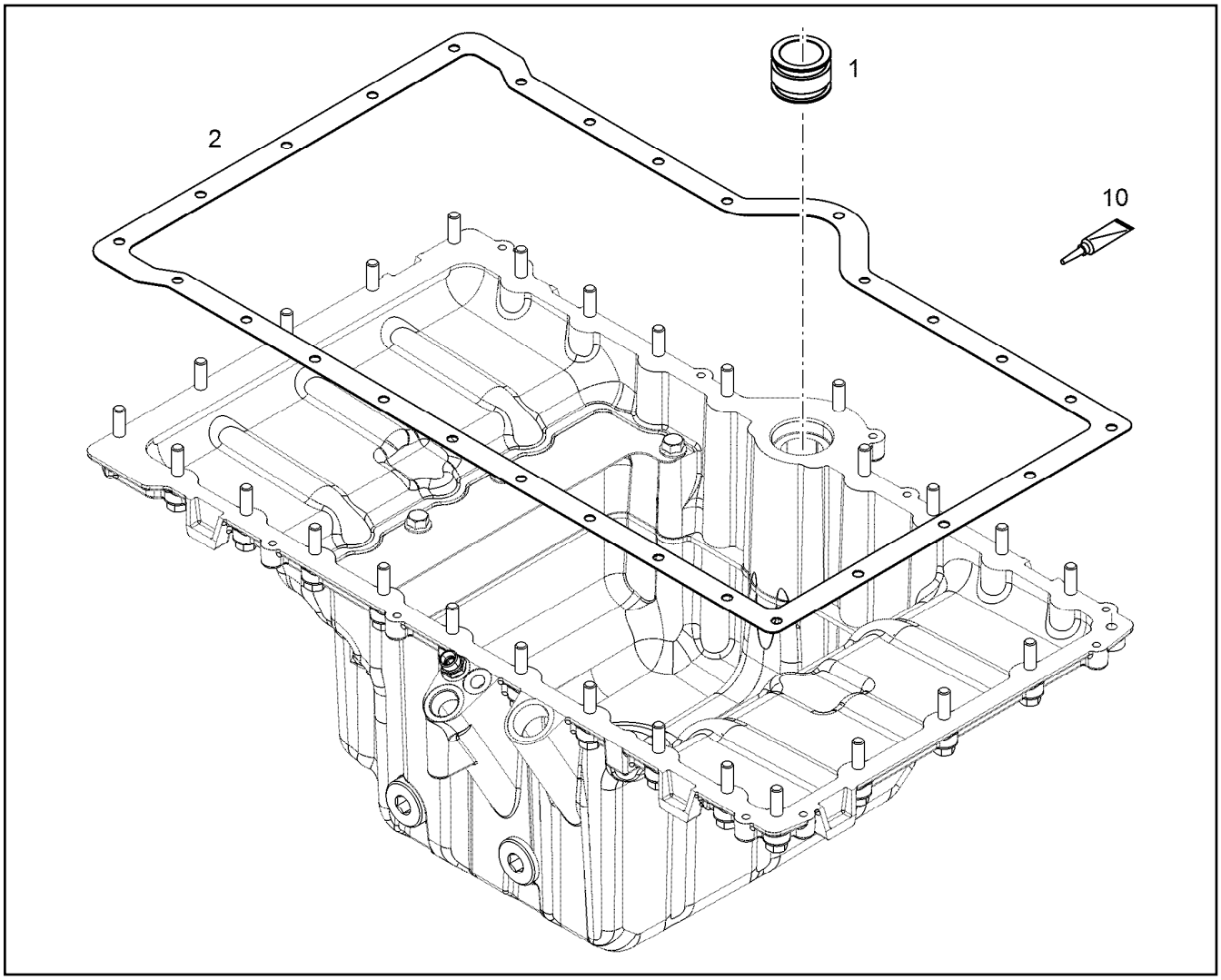

Pos.	Item	Quantity	Description	Bezeichnung
1	10121667	1	CONNECTING PIECE W.O-RING ⇨ ❑ 148	VERBINDUNGSSTUECK M.O-RIN
2	10128516	1	SEAL AFM 30	DICHTUNG
10	10354595	1	SURFACE SEALING 300ML KARTUSCHE BI	FLAECHENDICHTUNG

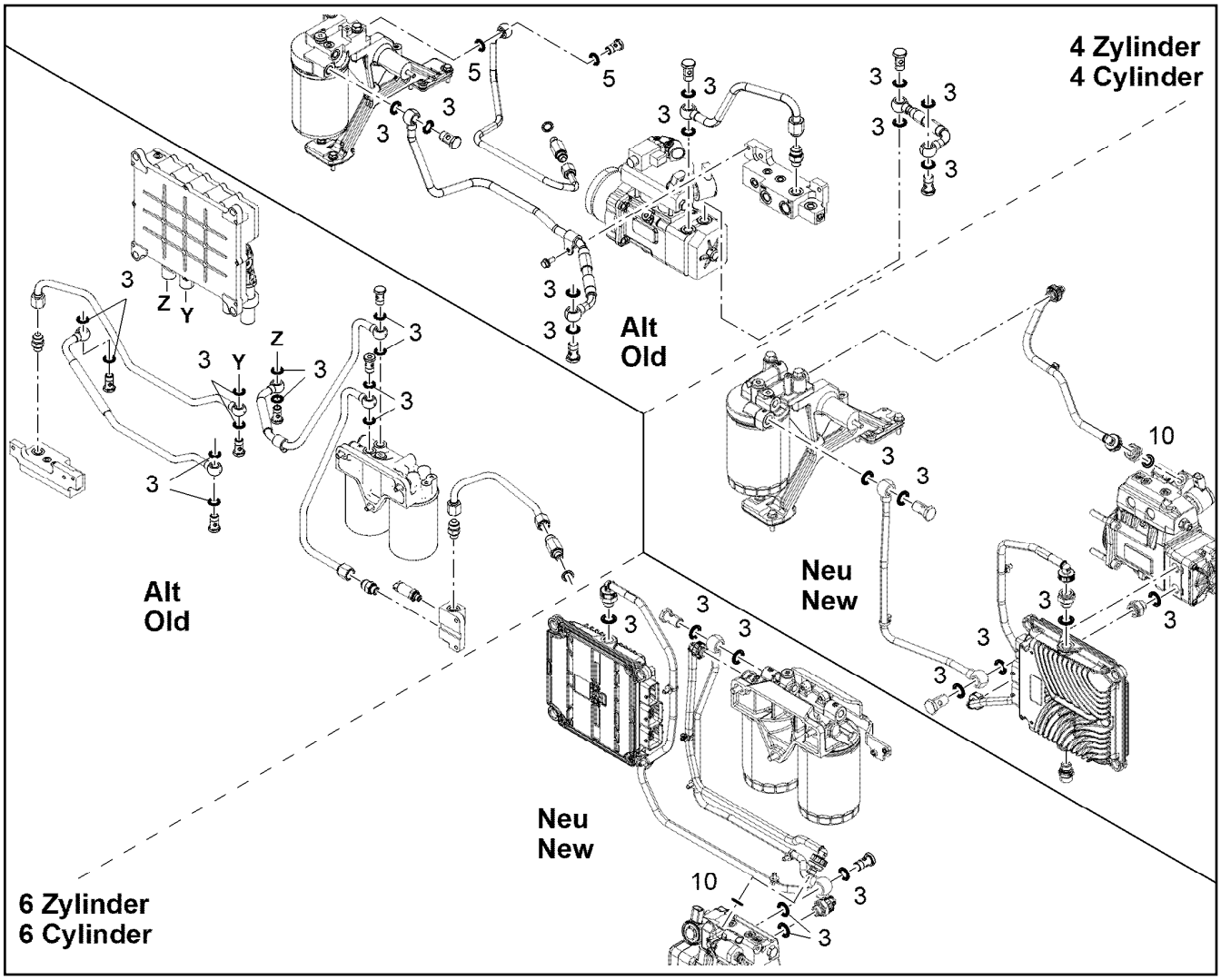

Pos.	Item	Quantity	Description	Bezeichnung
3	10011868	14	SEALING RING 18,7X26X1,5 St/FPM1-80	DICHTRING
5	10011867	2	SEALING RING 16,7X24,00X1,5 FKM 80	DICHTRING
10	10011866	4	SEALING RING 14,7X22,00X1,5 FKM 80	DICHTRING

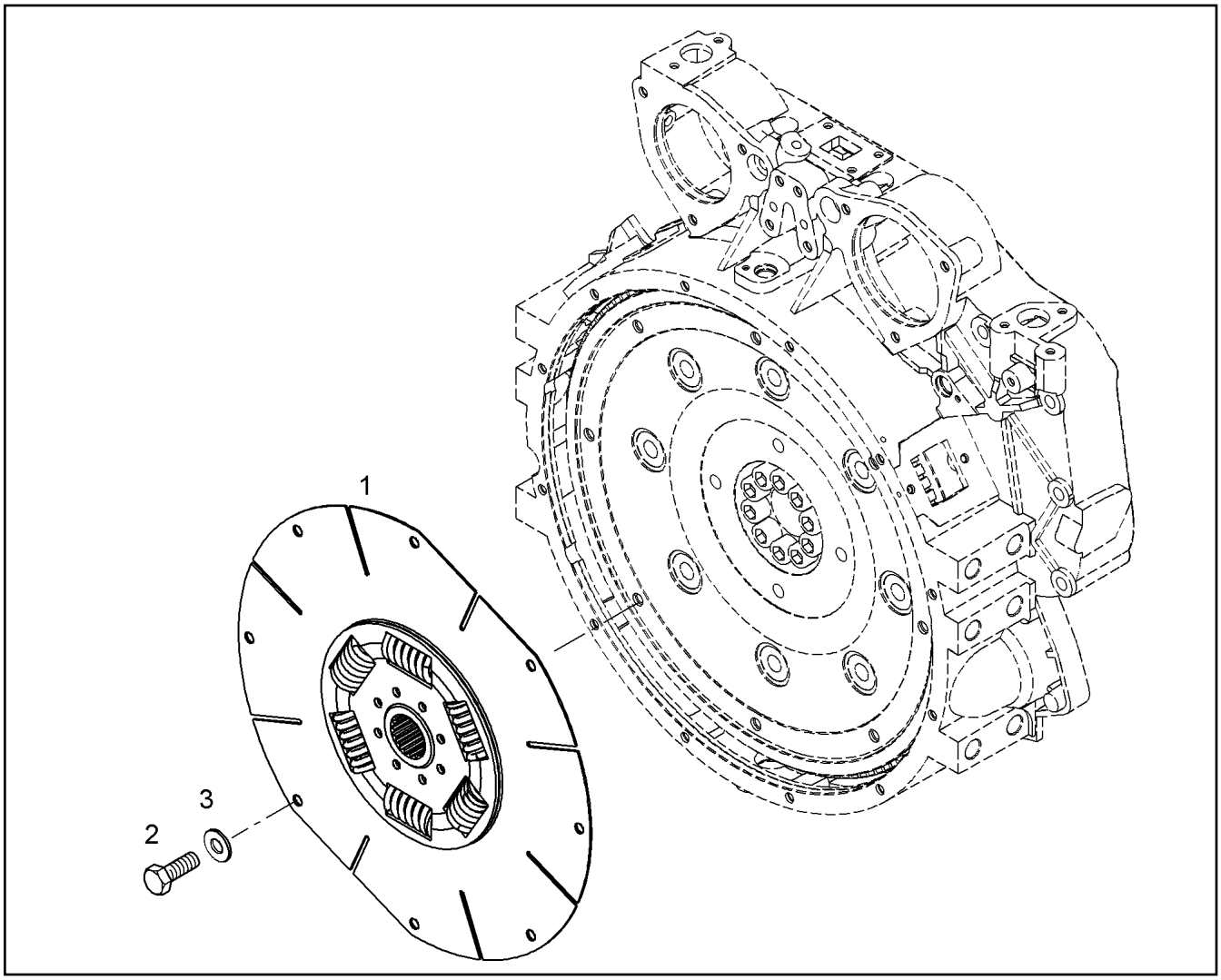

Pos.	Item	Quantity	Description	Bezeichnung
1	10228100	1	TORSIONAL VIBRATION DAMPER	TORSIONSDAEMPFER
2	406609008	8	HEX SCREW ISO 4017 M12X25 10.9 VERZ.	SECHSKANTSCHRAUBE
3	10289804	8	WASHER ISO 7089 12 300HV FLZN SPF	SCHEIBE

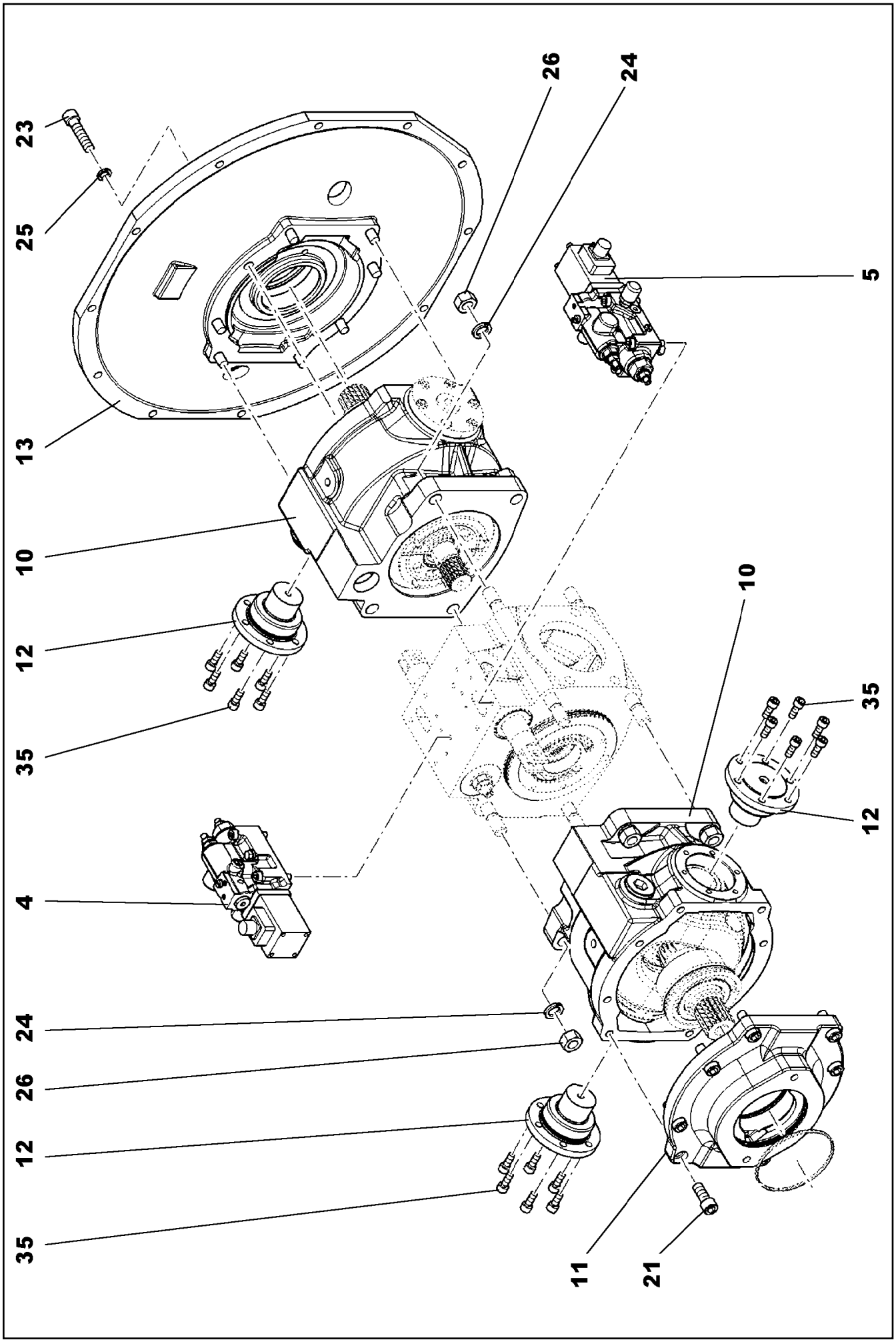

16.11.2023 079536	**etk_en_de_078966 LTR 1100**	256 (1/6)
LIEBHERR	**HYDR.DOUBLE PUMP** **HYDRAULIKDOPPELPUMPE**	**12487540**

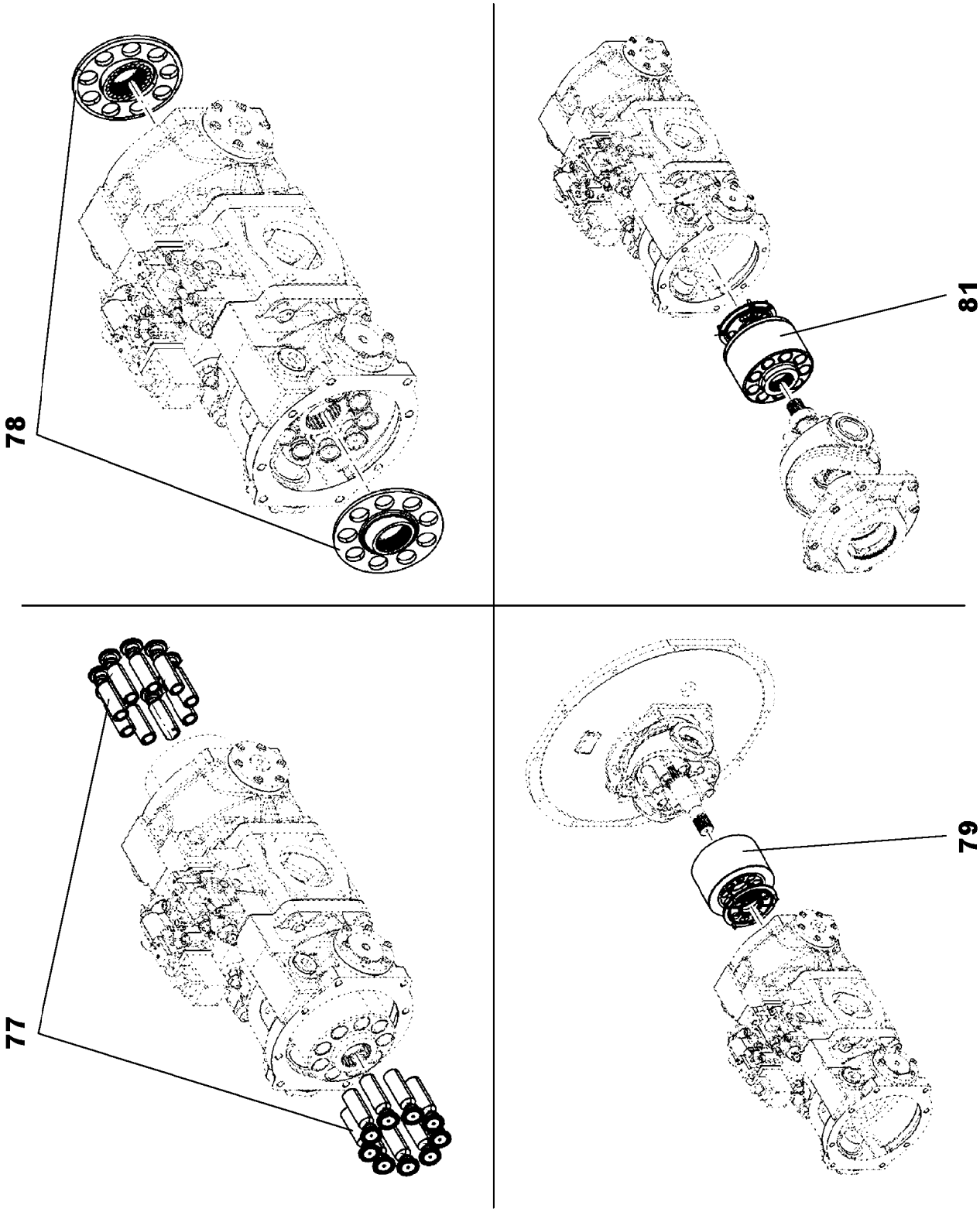
78
81
77
79

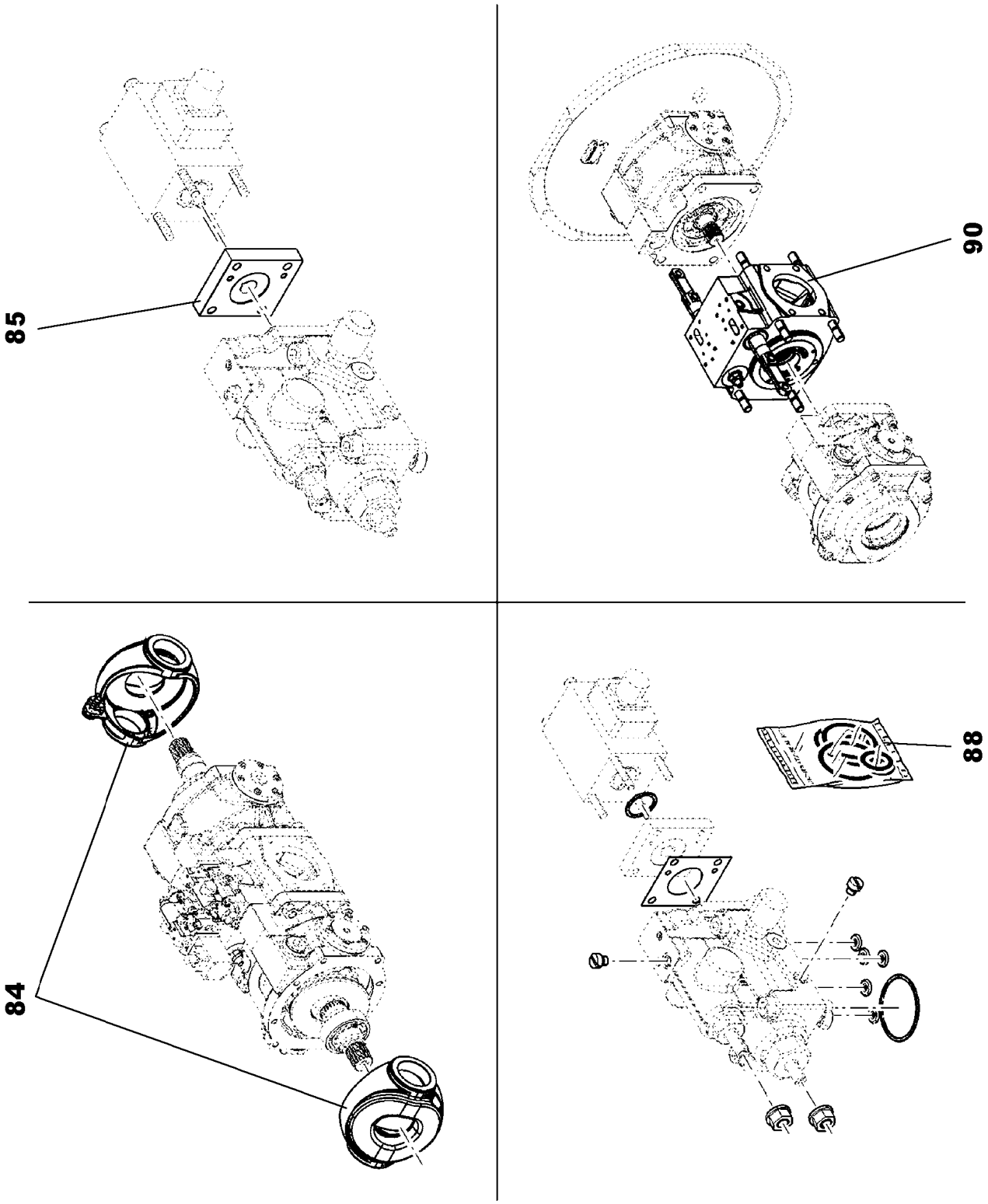
85
90
84
88

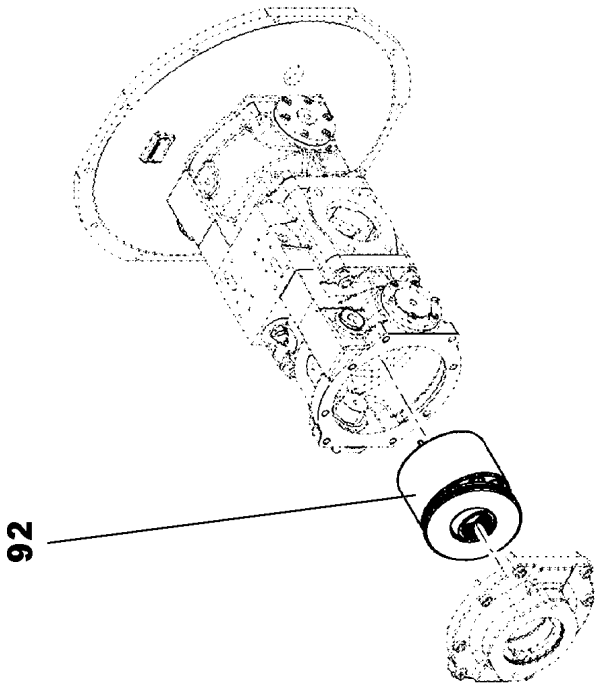
92

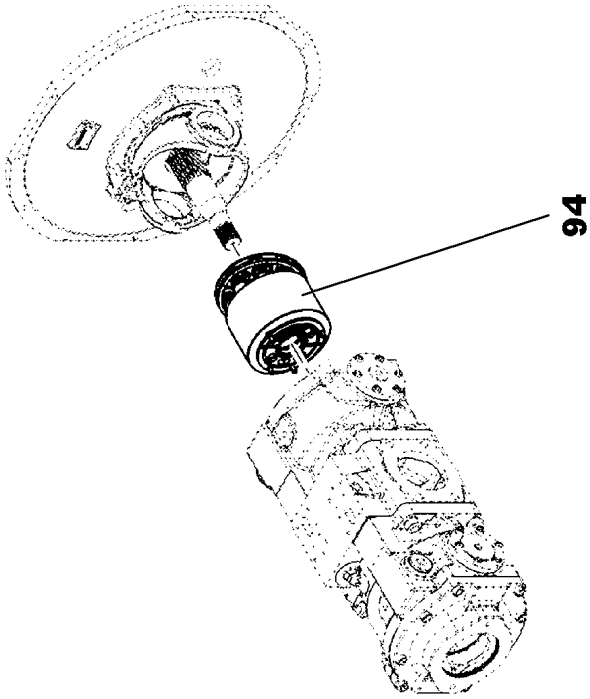
94

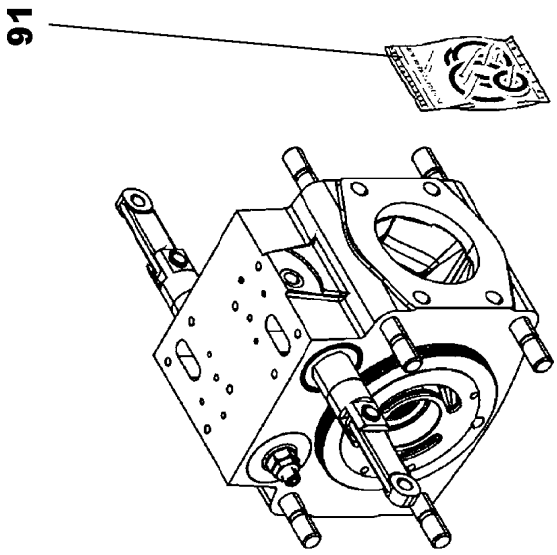
91

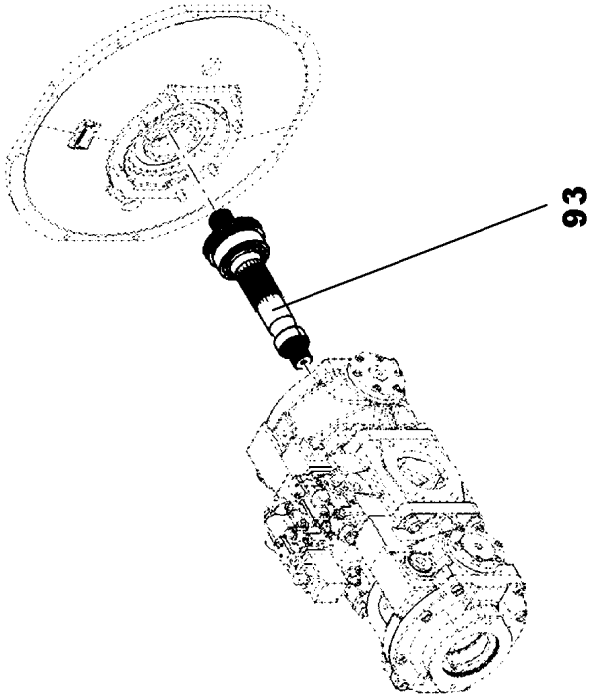
93

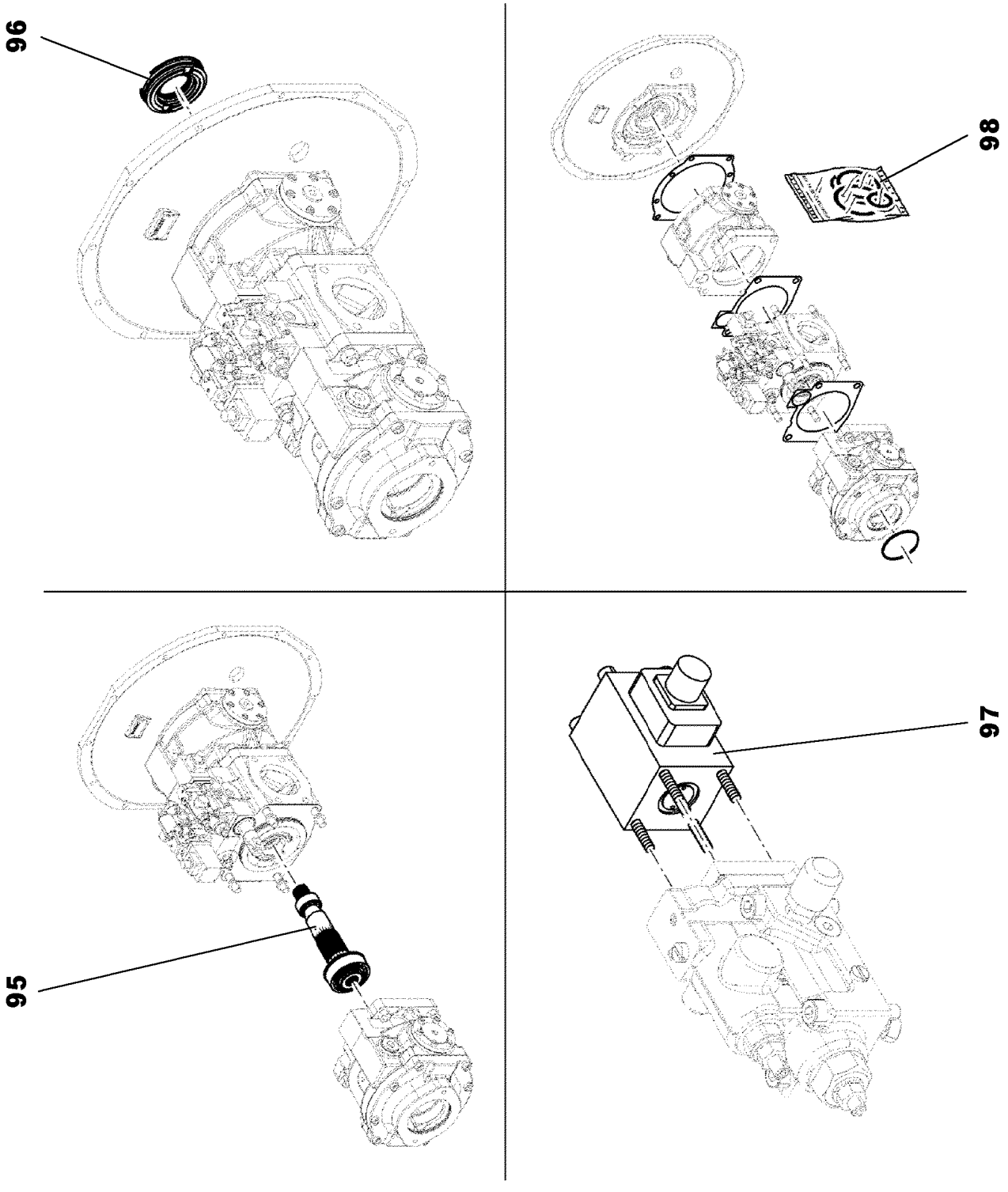
96
98
95
97

Pos.	Item	Quantity	Description	Bezeichnung
4	9074716	1	REGULATING VALVE EL-DA	REGELVENTIL
(20)	10468234	4	SOCKET HEAD SCREW ISO 4762 M8X45 10	ZYLINDERSCHRAUBE
(90)	9270147	1	SEAL KIT REGULATING VALVE	DS REGELVENTIL
11	9276423	1	TERMINAL FLANGE NG 125-150	ABSCHLUSSFLANSCH
21	4980947	8	SOCKET HEAD SCREW ISO 4762 M12X30 1	ZYLINDERSCHRAUBE
23	4980434	8	SOCKET HEAD SCREW ISO 4762 M12X50 1	ZYLINDERSCHRAUBE
24	4239009	8	LOCK WASHER VS 16 GESCHWAERZT	SICHERUNGSSCHEIBE
25	4980013	16	WASHER SPRING DIN 7980 12 FSt	FEDERRING
35	4980007	18	SOCKET HEAD SCREW ISO 4762 M8X20 8.8	ZYLINDERSCHRAUBE
77	9073393	2	RK PISTON WITH SLIPPER NG 125	RS KOLBEN MIT GLEITSCHUH
78	9073389	2	RK PULL-BACK BALL+PULL-B.PLATE NG 12	RS RUECKZUGKUGEL+RUECKZ.
79	9073484	1	RK CYLINDER+CONTROL PLATE NG 125-13	RS ZYLINDER+STEUERPLATTE
81	9073918	1	RK CYLINDER+CONTROL PLATE NG 125	RS ZYLINDER+STEUERPLATTE
84	10139744	2	REPAIR SET SWIVEL YOKE NG 125	RS SCHWENKJOCH
85	9275443	2	REPAIR SET LID NG 100	RS DECKEL
88	9270147	2	SEAL KIT REGULATING VALVE	DS REGELVENTIL
90	9889837	1	REPAIR KIT CONNECTION HOUSING NG 14	RS ANSCHLUSSGEHAEUSE
91	9274731	1	SEAL KIT CONNECTING HOUSING	DS ANSCHLUSSGEHAEUSE
92	9073916	1	REPAIR KIT DRIVING MECHANISM NG 125	RS TRIEBWERK
93	9073528	1	REPAIR KIT SHAFT NG 125	RS WELLE
94	9073486	1	REPAIR KIT DRIVING MECHANISM NG 125-	RS TRIEBWERK
95	9073915	1	REPAIR KIT SHAFT NG 125	RS WELLE
96	9268016	1	REPAIR KIT LOCK RING NG 125	RS VERSCHLUSSRING
97	9273187	2	REPAIR KIT MAGNET	RS MAGNET
(70)	514611808	1	O-RING 23,52X1,78 NBR90	O-RING
(74)	404364108	4	SOCKET HEAD SCREW ISO 4762 M5X85 12.	ZYLINDERSCHRAUBE
98	9276426	1	SEAL KIT DOUBLE PUMP	DS DOPPELPUMPE

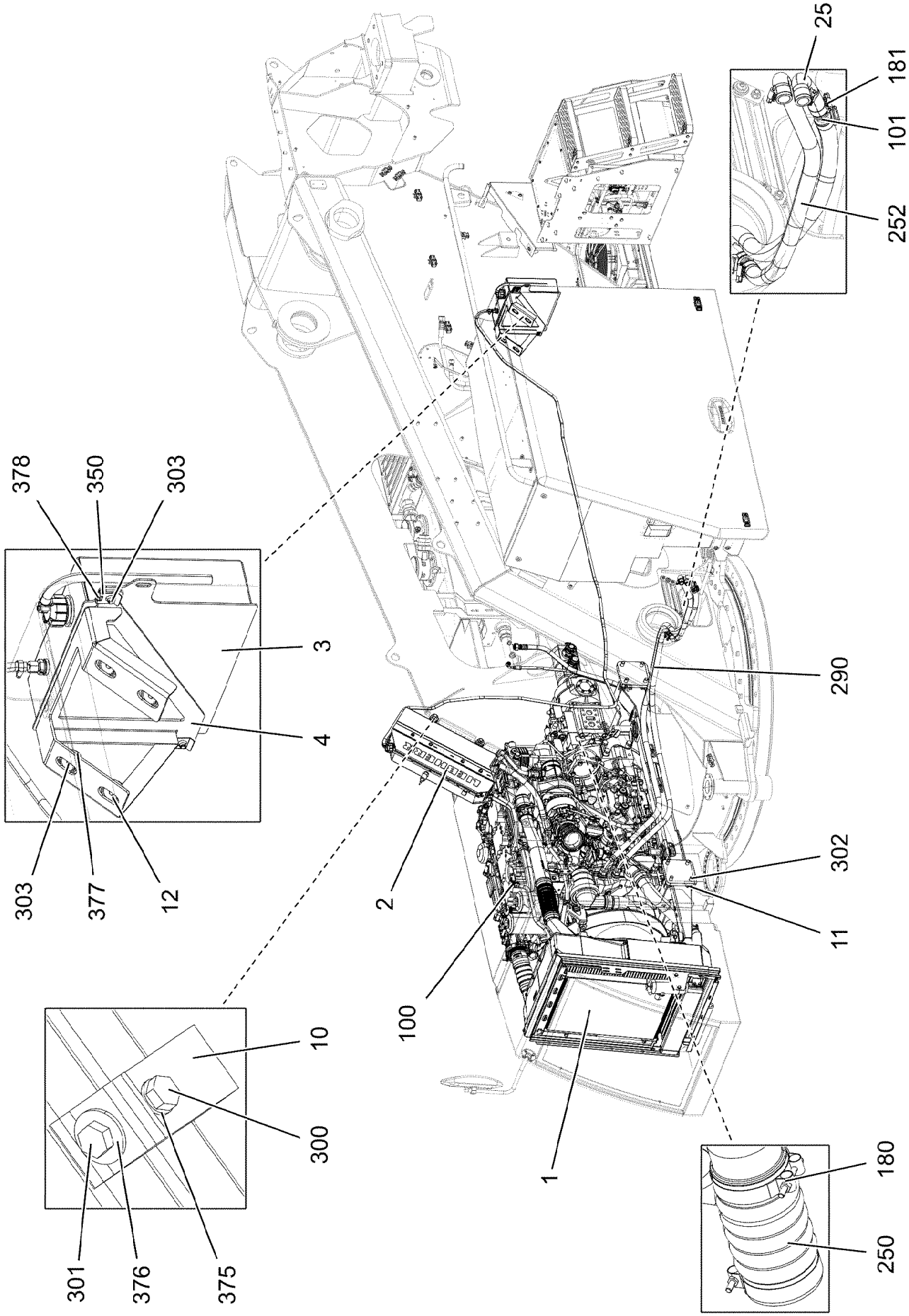

16.11.2023 098516	**etk_en_de_078966 LTR 1100**	❑ 262 (1/2)
LIEBHERR	**DRIVE ASSEMBLY CPL.** **ANTRIEBSAGGREGAT KPL.**	**918728708**

Pos.	Item	Quantity	Description	Bezeichnung
1	918811108	1	DRIVE ASSEMBLY, PRE-ASSEMBLED ⇨ ❑ 264	ANTRIEBSAGGREGAT VORM.
2	96035595	1	EXPANSION TANK PRE-ASS. ⇨ ❑ 280	AUSGLEICHSBEHAELTER VORM
3	96035743	1	EQUALIZING RESERVOIR ⇨ ❑ 281	AUSGLEICHSBEHAELTER
4	97117576	1	PLATE 4X564X493 S315MC FE//ZNNI8//CN//T	BLECH
10	970365108	2	BEARING BLOCK 40x115x42	LAGERBOCK
11	952177008	8	DISTANCE SLEEVE 30.0 X0 42CRMO4+QT	DISTANZHUELSE
12	978787708	4	SLEEVE 33X19 11SMNPB37 FE//ZNNI8//CN/	HUELSE
100	11839607	1	NON-RETURN VALVE 2.5BAR PA 66-GF30	RUECKSCHLAGVENTIL
101	11000700	2	CONNECTING PIPE 0	VERBINDUNGSROHR
180	774223808	2	HOSE CLAMP DIN 3017-3 108/104-112/25 W	SCHLAUCHSCHELLE
181	774208508	4	HOSE CLAMP 32/25-40/12 W3	SCHLAUCHSCHELLE
250	972965408	1	SUCTION HOSE	SAUGSCHLAUCH
251	97042068	1	FORM HOSE DN20 X3.5 B SPF	FORMSCHLAUCH
252	97042071	1	FORM HOSE DN20 X3.5 B SPF	FORMSCHLAUCH
290	96021213	1	HOSE LINES DRIVE UNIT ⇨ ❑ 284	SCHLAUCHLEITUNGEN ANTRIE
300	11626706	2	HEX SCREW ISO 4017 M10X40 8.8 FLZN SP	SECHSKANTSCHRAUBE
301	11631816	2	HEX SCREW ISO 4017 M10X25 8.8 FLZN SP	SECHSKANTSCHRAUBE
302	12226910	8	HEX SCREW ISO 4017 M16X65 8.8 FLZN SP	SECHSKANTSCHRAUBE
303	11651767	6	HEX SCREW ISO 4017 M8X20 8.8 480H SPF	SECHSKANTSCHRAUBE
350	12100332	2	SHEET METAL NUT M8 480H SPF	BLECHMUTTER
375	10289795	2	WASHER ISO 7089 10 300HV FLZN SPF	SCHEIBE
376	11491889	2	WASHER ISO 7093-1 10 300HV FLZN SPF	SCHEIBE
377	11840501	4	WASHER DIN 7349 8,4 200HV 480H SPF	SCHEIBE
378	11140469	2	WASHER ISO 7093-1 8 200HV 480H SPF	SCHEIBE

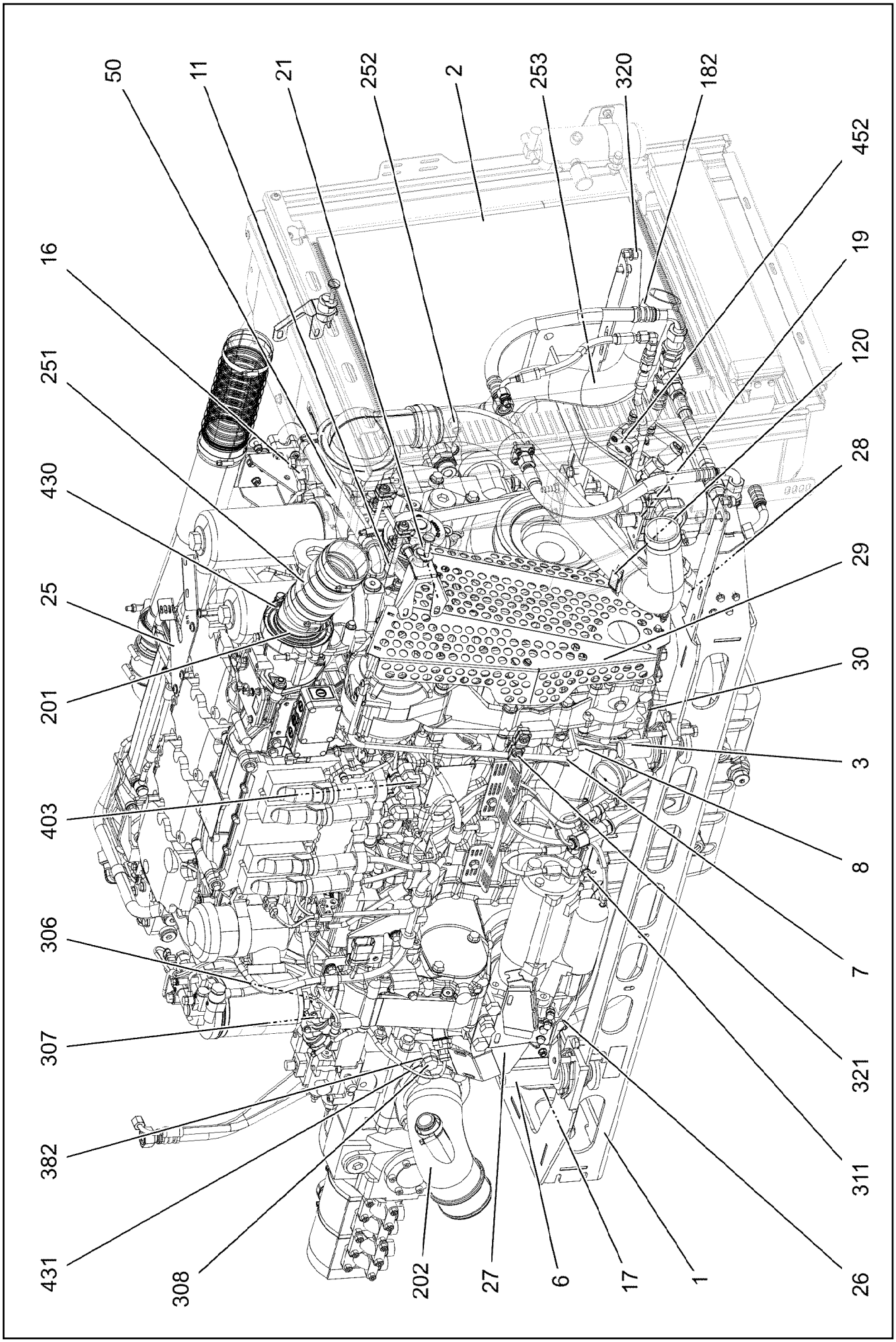

16.11.2023 098512 LIEBHERR	**etk_en_de_078966 LTR 1100** **DRIVE ASSEMBLY, PRE-ASSEMBLED** **ANTRIEBSAGGREGAT VORM.**	❑ 264 (1/6) **918811108**

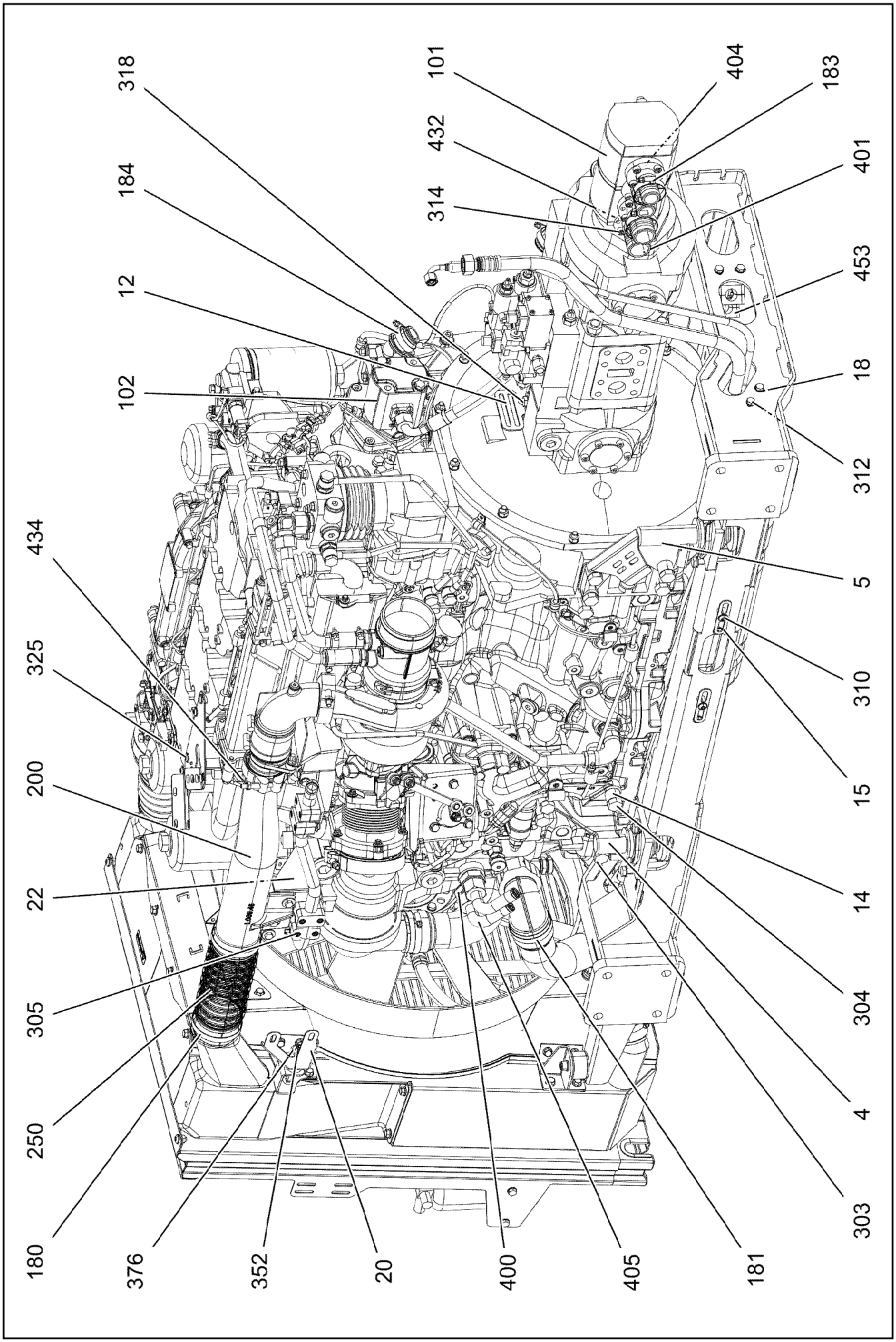

16.11.2023 098513	**etk_en_de_078966 LTR 1100**	❑ 265 (2/6)
LIEBHERR	**DRIVE ASSEMBLY, PRE-ASSEMBLED** **ANTRIEBSAGGREGAT VORM.**	**918811108**

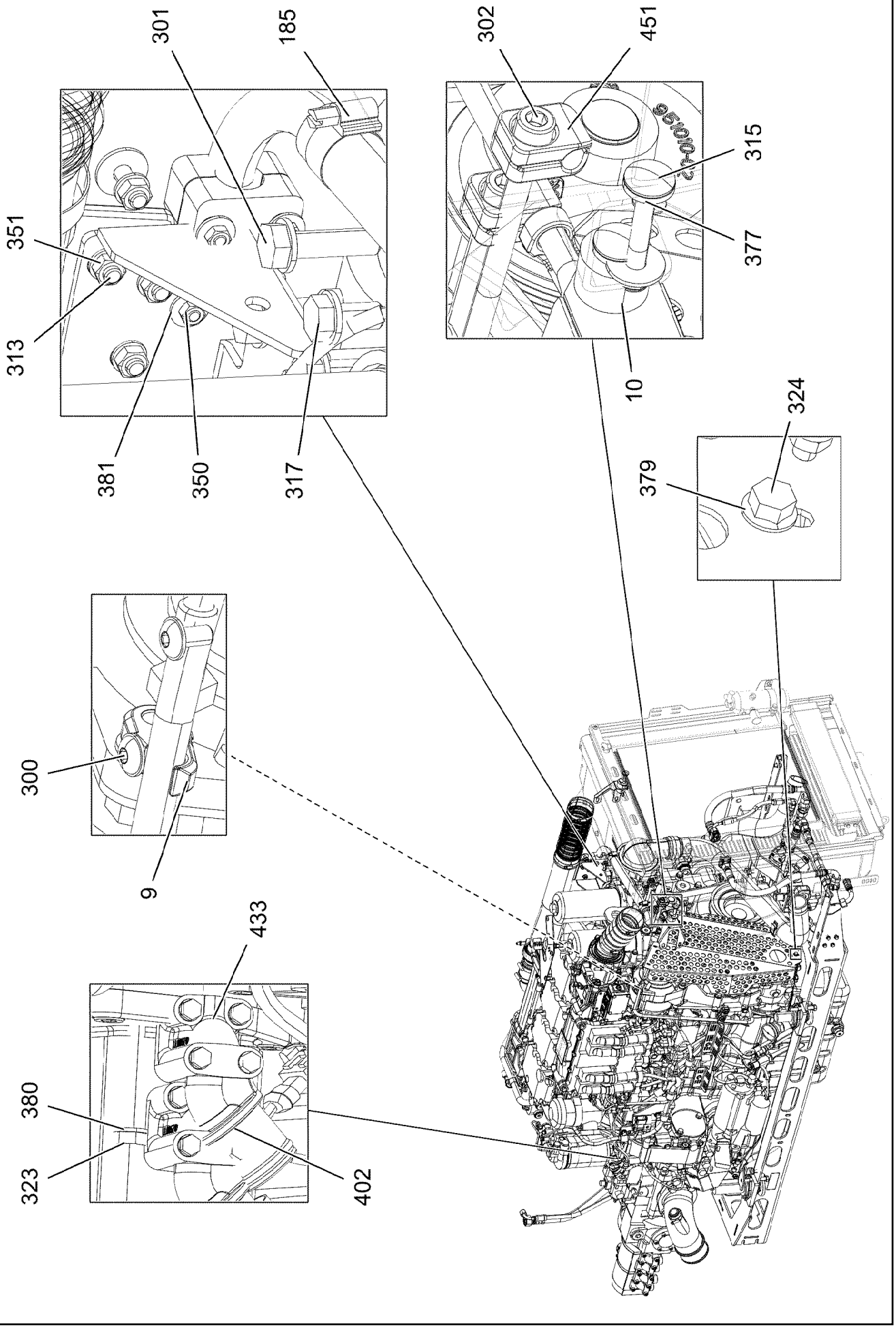
301
185
351
313
381
350
317
302
451
315
377
10
324
379
300
9
433
380
323
402

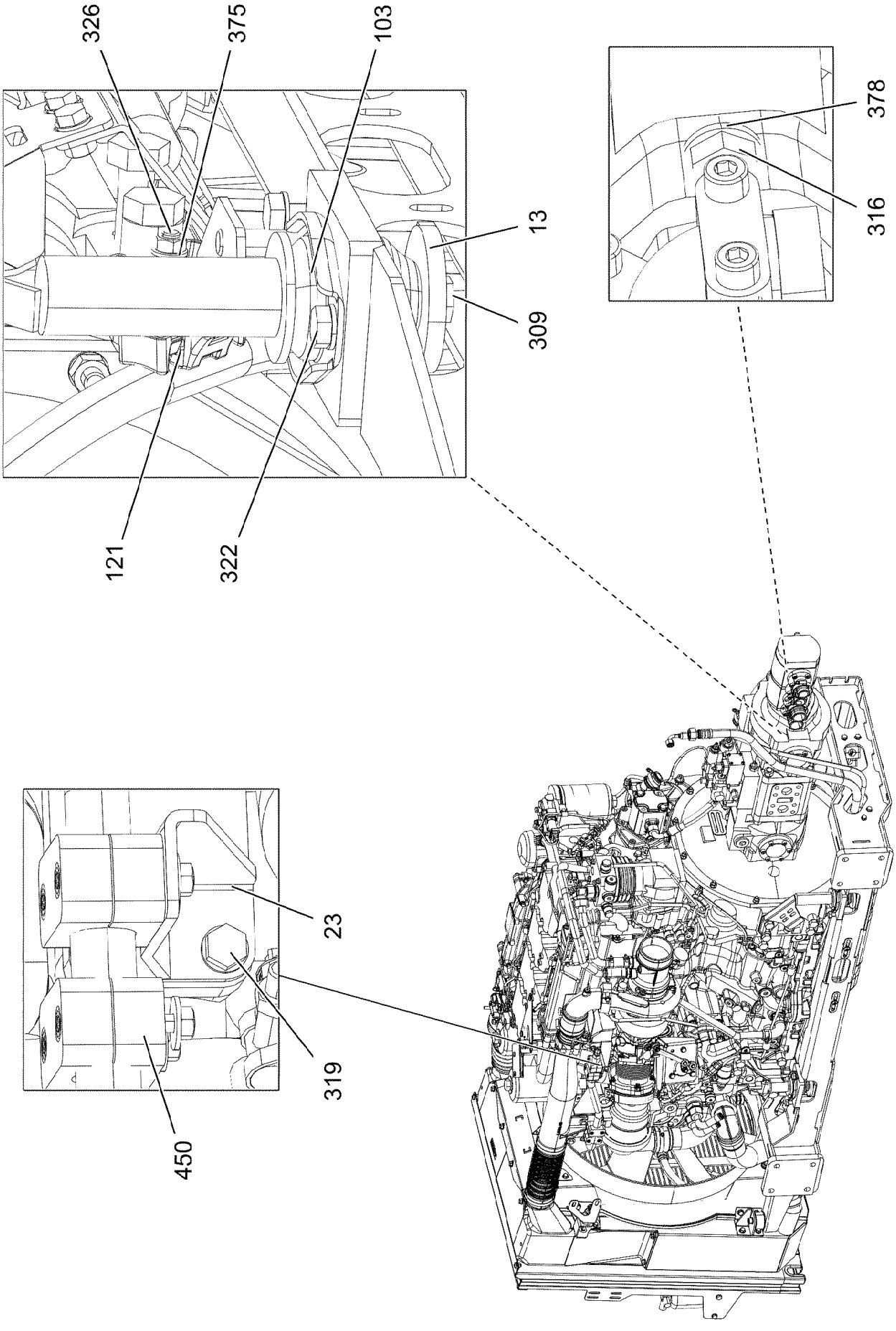
326
375
103
13
309
121
322
378
316
23
319
450

Pos.	Item	Quantity	Description	Bezeichnung
1	969269308	1	EQUIPMENT CARRIER WELDED	AGGREGATETRAEGER SCHWK.
2	96020819	1	RADIATOR, PRE-ASSEMBLED ⇨ ❑ 270	KUEHLER VORM.
3	97061151	1	ENGINE BRACKET RIGHT G28MN6 +QT1	MOTORKONSOLE RE.
4	97061306	1	ENGINE BRACKET LEFT G28MN6 +QT1	MOTORKONSOLE LI.
5	968764008	1	ENGINE BRACKET WELD.REAR LEFT	MOTORKONSOLE SCHWK.HI.LI.
6	968764108	1	ENGINE BRACKET WELD.REAR RIGHT	MOTORKONSOLE SCHWK.HI.RE
7	96002103	1	PIPELINES DRIVE ASSEMBLY STUFE 4	ROHRLEITUNGEN ANTRIEBSAG
(297)	97045170	1	TUBE 22.0X633 X6CRNITI1810	ROHR
(299)	97066840	1	TUBE 12.0X1285 E235+N	ROHR
8	97061320	1	PLATE 2X158X79 DC01 FE//ZNNI8//CN//T0	BLECH
9	97077297	1	HOLDER GX5CRNI19-10	HALTER
10	97025484	4	BUFFER 30X20 GUMMI 50SH	PUFFER
11	946104608	2	TUBE 16X2X70 E235+N VERZ	ROHR
12	97030183	1	PLATE 3X88X96 DC01 FE//ZNNI8//CN//T0	BLECH
13	97038431	4	WASHER 8X65X65 S355MC FE//ZNNI8//CN//T	SCHEIBE
14	952177008	8	DISTANCE SLEEVE 30.0 X0 42CRMO4+QT	DISTANZHUELSE
15	953650008	2	CABLE CLAMP DC01 FE//ZNNI8//CN//T0	KABELHALTER
16	97047984	1	DISTANCE SLEEVE 18.0X26 E235+N	DISTANZHUELSE
17	973717308	1	PLATE 3X80X68 DC01 FE//ZNNI8//CN//T0	BLECH
18	973717208	2	PLATE 3X60X80 DC01 FE//ZNNI8//CN//T0	BLECH
19	97045111	1	PLATE 4X60X163 S315MC FE//ZNNI8//CN//T	BLECH
20	97013089	1	PLATE 2X162X131 DC01 FE//ZNNI8//CN//T0	BLECH
21	973733508	1	PLATE 2X165X115 DC01 FE//ZNNI8//CN//T0	BLECH
22	97043211	1	PLATE 4X222X213 S315MC FE//ZNNI8//CN//T	BLECH
23	97041747	1	PLATE 4X132X73 S315MC FE//ZNNI8//CN//T	BLECH
25	97045050	1	PLATE 2X300X125 DC01 FE//ZNNI8//CN//T0	BLECH
26	97075057	1	PLATE 3X229X285 DC01 FE//ZNNI8//CN//T0	BLECH
27	97072740	1	PLATE 3X342X268 DC01 FE//ZNNI8//CN//T0	BLECH
28	97071587	1	PLATE 3X71X218 DC01 FE//ZNNI8//CN//T0	BLECH
29	96004318	1	PROTECTING SHEET CPL.	SCHUTZBLECH KPL.
(1)	97072923	1	PLATE 2X377X579 X5CRNI18-10	BLECH
(2)	97077309	3	HOLDER GX5CRNI19-10	HALTER
(300)	10813359	2	BUTTON HEAD SCREW AEHNL.ISO 7380-2	HALBRUNDKOPFSCHRAUBE
(301)	510762108	3	GRUB SCREW DIN 913 M5X6 45H A2	GEWINDESTIFT
(302)	11642497	1	HEX SCREW ISO 4017 M6X10 8.8 480H SPF	SECHSKANTSCHRAUBE
30	97072959	1	PLATE 2X361X79 DC01 FE//ZNNI8//CN//T0	BLECH
50	96020707	1	HOSE LINES ENGINE PREASSEMBLY	SCHLAUCHLEITUNGEN MOTOR
101	512142508	1	TWO-STAGE PUMP WP15 SPF ⇨ ❑ 277	ZWEIFACHZAHNRADPUMPE
102	10488363	1	GEAR PUMP WP9 ⇨ ❑ 279	ZAHNRADPUMPE
103	10287383	4	VIBRATION DAMPER 45NR39	SCHWINGUNGSDAEMPFER
120	10020520	1	LASHING STRAP 0,75MX18MM	ZURRGURT
121	10872676	1	CABLE CLIP HOLDER 46X70-SCHWARZ PA	KABELBINDERHALTER
180	774206408	4	HOSE CLAMP 80/70-90/12 W3	SCHLAUCHSCHELLE
181	774214308	2	HOSE CLAMP 70/60-80/12 W3	SCHLAUCHSCHELLE
182	774208008	2	HOSE CLAMP 60/50-70/12 W3	SCHLAUCHSCHELLE
183	550838008	2	HOSE CLAMP 50/40-60/12 W3	SCHLAUCHSCHELLE
184	550849508	2	HOSE CLAMP 41/35-50/12 W3	SCHLAUCHSCHELLE
185	774215008	2	HOSE CLAMP 26/20-32/12 W3	SCHLAUCHSCHELLE
200	97045610	1	CHARGE AIR PIPE G-ALSI10MG SPF	LADELUFTROHR
201	97055366	1	CHARGE AIR PIPE G-ALST10MG SPF	LADELUFTROHR
202	973861408	1	SUCTION PIPE OIL SPF	SAUGROHR-OEL
250	551719708	1	FORM HOSE	FORMSCHLAUCH
251	10337349	1	CHARGE AIR CORRUGATED HOSE DN80X	LADELUFTWELLSCHLAUCH
252	97042031	1	FORM HOSE 55/65X900 B PER-EPDM SPF	FORMSCHLAUCH
253	97042032	1	FORM HOSE 55/65X504 B PER-EPDM SPF	FORMSCHLAUCH
300	10875488	1	BUTTON HEAD SCREW ISO 7380-2 M6X12 0	HALBRUNDKOPFSCHRAUBE
301	11645386	1	HEX SCREW ISO 4017 M12X45 8.8 FLZN SP	SECHSKANTSCHRAUBE

Pos.	Item	Quantity	Description	Bezeichnung
302	12208101	2	SOCKET HEAD SCREW ISO 4762 M10X120 8	ZYLINDERSCHRAUBE
303	12226910	6	HEX SCREW ISO 4017 M16X65 8.8 FLZN SP	SECHSKANTSCHRAUBE
304	10875520	6	HEX SCREW ISO 4017 M16X50 8.8 FLZN SP	SECHSKANTSCHRAUBE
305	10875591	10	SOCKET HEAD SCREW ISO 4762 M6X40 8.8	ZYLINDERSCHRAUBE
306	12216183	2	HEX SCREW ISO 4014 M6X40 8.8 480H SPF	SECHSKANTSCHRAUBE
307	12216186	2	HEX SCREW ISO 4014 M6X65 8.8 480H SPF	SECHSKANTSCHRAUBE
308	10875519	4	HEX SCREW ISO 4017 M16X40 8.8 FLZN SP	SECHSKANTSCHRAUBE
309	11840139	4	HEX SCREW ISO 4014 M12X90 8.8 FLZN SP	SECHSKANTSCHRAUBE
310	12102696	2	BUTTON HEAD SCREW AEHNL.ISO 7380-2	HALBRUNDKOPFSCHRAUBE
311	11651612	3	HEX SCREW ISO 4017 M8X16 8.8 480H SPF	SECHSKANTSCHRAUBE
312	11651767	6	HEX SCREW ISO 4017 M8X20 8.8 480H SPF	SECHSKANTSCHRAUBE
313	10197831	4	HEX SCREW ISO 4017 M8X25 8.8 ZNNI-480	SECHSKANTSCHRAUBE
314	10875599	8	SOCKET HEAD SCREW ISO 4762 M8X25 8.8	ZYLINDERSCHRAUBE
315	10181375	2	CUP HEAD SQUARE NECK BOLT DIN 603 M8	FLACHRUNDSCHRAUBE
316	11642349	2	HEX SCREW ISO 4017 M12X35 8.8 FLZN SP	SECHSKANTSCHRAUBE
317	11658892	3	HEX SCREW ISO 4017 M12X25 8.8 FLZN SP	SECHSKANTSCHRAUBE
318	11652470	1	HEX SCREW ISO 4017 M10X16 8.8 FLZN SP	SECHSKANTSCHRAUBE
319	11826527	2	HEX SCREW ISO 4017 M8X30 8.8 480H SPF	SECHSKANTSCHRAUBE
320	12222407	2	SOCKET HEAD SCREW ISO 4762 M10X16 8	ZYLINDERSCHRAUBE
321	10415162	1	SOCKET HEAD SCREW ISO 4762 M10X25 8	ZYLINDERSCHRAUBE
322	11631816	8	HEX SCREW ISO 4017 M10X25 8.8 FLZN SP	SECHSKANTSCHRAUBE
323	12218490	2	HEX SCREW ISO 4014 M10X110 8.8 FLZN SP	SECHSKANTSCHRAUBE
324	11840297	4	HEX SCREW EN 1665 M6X16 8.8 480H SPF	SECHSKANTSCHRAUBE
325	10876067	2	BUTTON HEAD SCREW AEHNL.ISO 7380-2	HALBRUNDKOPFSCHRAUBE
326	10301319	1	BUTTON HEAD SCREW ISO 7380-2 M8X25 A	HALBRUNDKOPFSCHRAUBE
350	10197764	12	HEX NUT ISO 4032 M6 10 ZNNI-480H SPF	SECHSKANTMUTTER
351	11693875	13	HEX NUT ISO 4032 M8 8 480H SPF	SECHSKANTMUTTER
352	11656731	2	HEX NUT ISO 7040 M8 8 480H SPF	SECHSKANTMUTTER
375	12103465	26	WASHER ISO 7089 8 300HV ZNNI-480H SPF	SCHEIBE
376	11140469	4	WASHER ISO 7093-1 8 200HV 480H SPF	SCHEIBE
377	973618208	2	WASHER 3X21X21 DC01 FE//ZNNI8//CN//T0	SCHEIBE
378	10289804	5	WASHER ISO 7089 12 300HV FLZN SPF	SCHEIBE
379	10197771	6	WASHER ISO 7089 6 200HV ZNNI-480H SPF	SCHEIBE
380	10289795	13	WASHER ISO 7089 10 300HV FLZN SPF	SCHEIBE
381	10875648	10	WASHER ISO 7093-1 6 200HV 480H SPF	SCHEIBE
382	10875866	4	WASHER DIN 7989-2 16 -ST FLZN SPF	SCHEIBE
400	471034308	2	FITTING XGE20-SM-ED M33X2 CR6-FREI	VERSCHRAUBUNG
401	953641308	1	FLANGE FITTING 70.0X80 S355J2C+C FE//	FLANSCHVERSCHRAUBUNG
402	974558708	1	SUCTION PIPE OIL	SAUGROHR-OEL
403	7615379	2	FITTING ISO 8434-1 EW 15L CR6-FREI	VERSCHRAUBUNG
404	953641408	1	FITTING RD70X70 S355J2C+C	VERSCHRAUBUNG
405	968661408	2	PIPE COMPL.	ROHR KPL.
430	7380605	1	O-RING ISO 3601-1 101,27X2,62 FKM 70 A,B	O-RING
431	514613208	1	O-RING ARP 568 98,02X3,53 NBR70	O-RING
432	510587008	2	O-RING ARP 568 32,92X3,53 NBR90	O-RING
433	502643508	1	O-RING 26X2,5 NBR70	O-RING
434	7380970	1	O-RING AEHNL.ISO 3601-1 63,17X2,62 FKM	O-RING
450	11160668	4	CLAMP-HALF L 3 R 22 AL	KLEMMHAELFTE
451	380057108	6	CLAMPING PIECE 12 G20MN5 FE//ZN20//C	KLEMMSTUECK
452	7005052	4	CLAMP-HALF DIN 3015-1 L 3 R 25 PP SW	KLEMMHAELFTE
453	602008508	2	CLAMP-HALF DIN 3015-1 L 3 R 22 PP SW	KLEMMHAELFTE

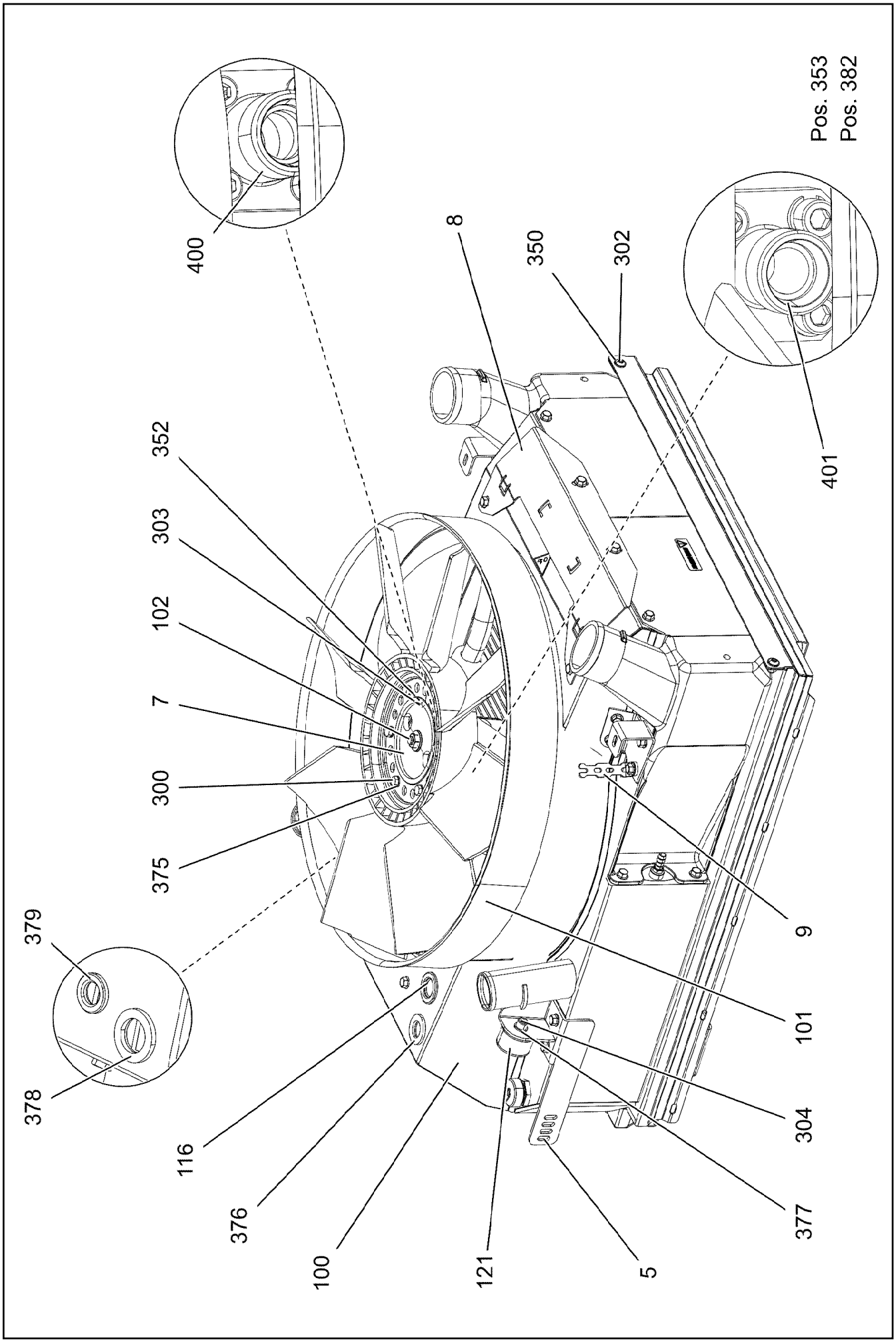

16.11.2023 098510	**etk_en_de_078966 LTR 1100**	❑ 270 (1/3)
LIEBHERR	**RADIATOR, PRE-ASSEMBLED** **KUEHLER VORM.**	**96020819**

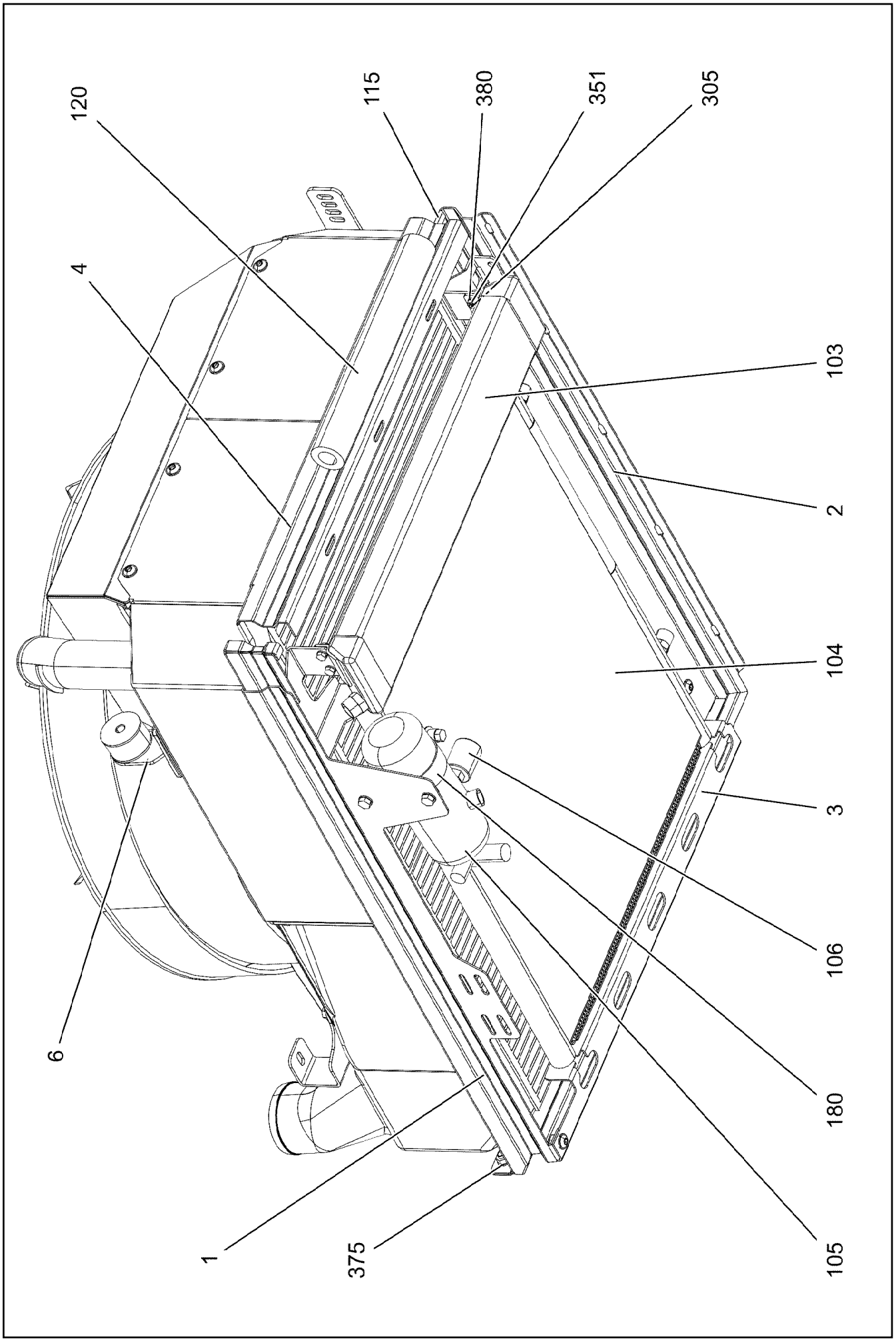
120
115
380
351
305
4
103
2
104
3
6
106
180
1
375
105

Pos.	Item	Quantity	Description	Bezeichnung
1	968481208	1	SIDE PANEL WELDED SPF	SEITENBLECH SCHWK.
2	968481308	1	SIDE PANEL WELDED SPF	SEITENBLECH SCHWK.
3	97042029	1	PLATE 2X703X192 ALMG3 H111 SPF	BLECH
4	97041782	1	PLATE 2X759X264 ALMG3 H111 SPF	BLECH
5	97044948	1	PLATE 4X173X230 S315MC FE//ZNNI8//CN//T	BLECH
6	97044949	1	PLATE 4X113X87 S315MC FE//ZNNI8//CN//T	BLECH
7	970003708	1	FLANGE 25.0X16 9 42CRMO4+QT	FLANSCH
8	97047025	1	PLATE 2X405X202 ALMG3 H111	BLECH
9	952859808	1	PLATE 103X20 S315MC FE//ZNNI8//CN//T0	BLECH
100	97095949	1	COMBINATED RADIATOR ⇨ ❑ 273	KOMBIKUEHLER
101	550639508	1	RING FAN D=654	RINGLUEFTER
102	10429930	1	GEAR WHEEL MOTOR AZMF 16CM³/U SPF ⇨ ❑ 275	ZAHNRADMOTOR
103	550628308	1	OIL AIR COOLER	OEL-LUFTKUEHLER
104	10815368	1	CAPACITOR	KONDENSATOR
105	571489008	1	DRYER	TROCKNER
(1)	10015404	1	BLANKING PLUG	VERSCHLUSSSTOPFEN
106	571489108	1	PRESSURE SWITCH 1,5-26 BAR	DRUCKSCHALTER
115	262103908	0.3	EDGE PROTECTION 1-2X9,5X6,5	KANTENSCHUTZ
116	553027808	1	DIAPHRAGM SOCKET 29/37/44	MEMBRANTUELLE
120	11006584	4	INSULATING HOSE ISO 3302-1 E3 DN40 10 E	ISOLIERSCHLAUCH
121	726905008	2	CIRCULAR BEARING C50X30XM10	RUNDLAGER
180	774209708	1	RETAINER CLIP 75/25	SPANNSCHELLE
300	11651612	12	HEX SCREW ISO 4017 M8X16 8.8 480H SPF	SECHSKANTSCHRAUBE
302	10875485	9	BUTTON HEAD SCREW AEHNL.ISO 7380-2	HALBRUNDKOPFSCHRAUBE
303	11826527	4	HEX SCREW ISO 4017 M8X30 8.8 480H SPF	SECHSKANTSCHRAUBE
304	12222407	2	SOCKET HEAD SCREW ISO 4762 M10X16 8	ZYLINDERSCHRAUBE
305	11657360	4	HEX SCREW ISO 4017 M6X16 8.8 480H SPF	SECHSKANTSCHRAUBE
350	11693875	11	HEX NUT ISO 4032 M8 8 480H SPF	SECHSKANTMUTTER
351	10197764	4	HEX NUT ISO 4032 M6 10 ZNNI-480H SPF	SECHSKANTMUTTER
352	11656731	4	HEX NUT ISO 7040 M8 8 480H SPF	SECHSKANTMUTTER
353	12100600	1	HEX NUT DIN 985 M14X1,5 010 FLZN SPF	SECHSKANTMUTTER
375	12103465	21	WASHER ISO 7089 8 300HV ZNNI-480H SPF	SCHEIBE
376	10289810	1	WASHER ISO 7089 24 300HV FLZN SPF	SCHEIBE
377	10289795	2	WASHER ISO 7089 10 300HV FLZN SPF	SCHEIBE
378	10179376	1	WASHER DIN 1441 26 -St FLZN SPF	SCHEIBE
379	4600242	1	WASHER EN 14399-6 16 300-370HV FLZN SP	SCHEIBE
380	10197771	8	WASHER ISO 7089 6 200HV ZNNI-480H SPF	SCHEIBE
382	10289805	1	WASHER ISO 7089 14 300HV FLZN SPF	SCHEIBE
400	510146208	1	SUCTION FLANGE CR6-FREI	SAUGFLANSCH
(1)	570322408	1	O-RING ARP 568 23,47x2,62 NBR70	O-RING
401	511518808	1	FLANGE FITTING CR6-FREI	FLANSCHVERSCHRAUBUNG

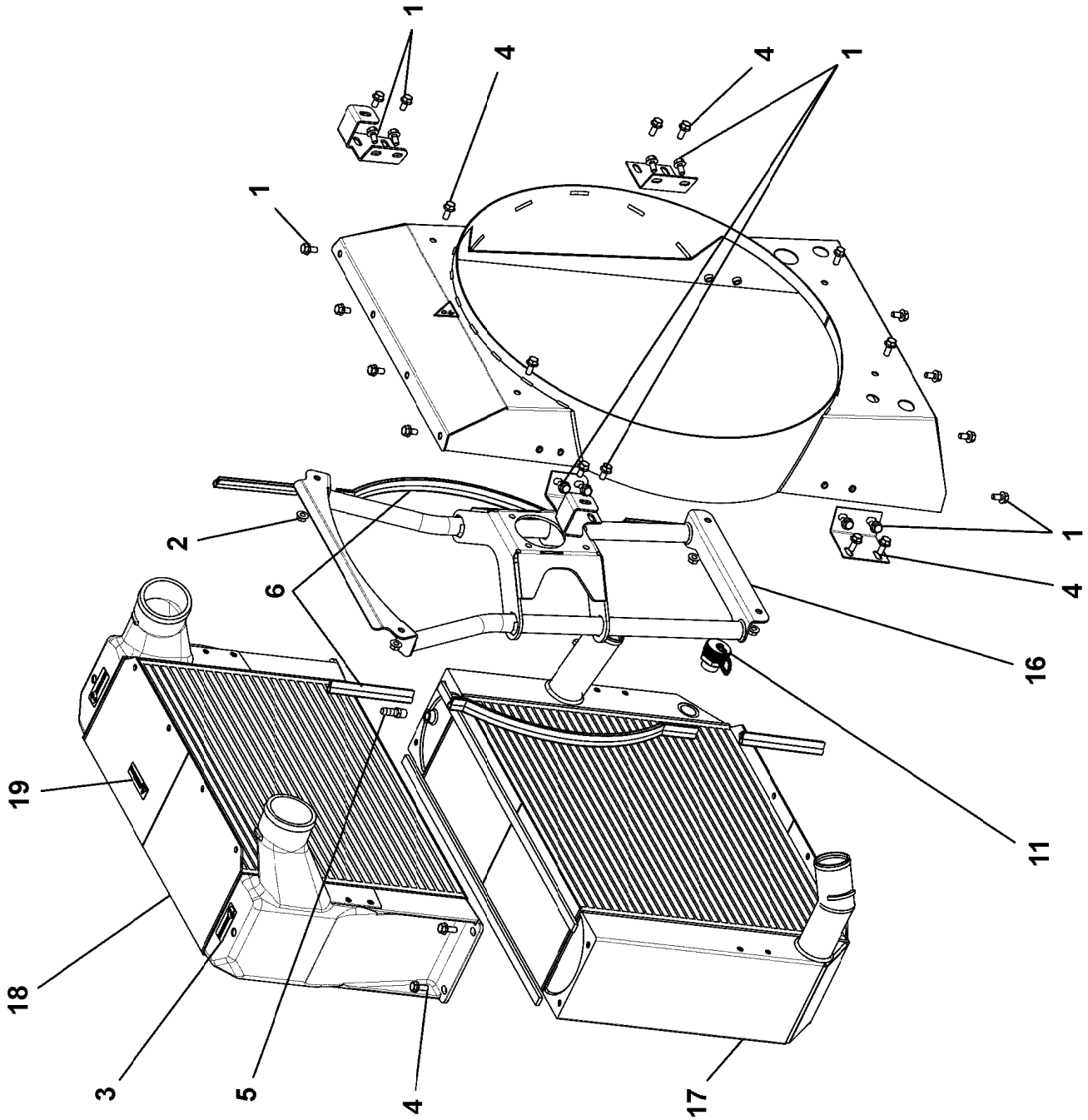
1
4
4
1
1
2
6
1
4
16
19
11
18
3
5
4
17

Pos.	Item	Quantity	Description	Bezeichnung
1	10005511	20	HEX SCREW DIN 6921 M8X16 8.8	SECHSKANTSCHRAUBE
2	11646255	4	LOCK NUT M8 GEOMET 500A	SICHERUNGSMUTTER
3	11696245	2	SIGN	SCHILD
4	11494008	12	LOCKING SCREW GEOMET 500A	SICHERUNGSSCHRAUBE
5	11170727	1	HOSE NIPPLE	SCHLAUCHNIPPEL
6	10331637	6	PROFILE	PROFIL
11	7365034	1	OIL DRAIN PLUG M26X1,5	OELABLASSSCHRAUBE
16	12108533	1	MOTOR SUSPENSION	MOTORAUFHAENGUNG
17	11651349	1	WATER COOLER	WASSERKUEHLER
18	12108602	1	CHARGE AIR COOLER	LADELUFTKUEHLER
19	12237851	1	SIGN	SCHILD

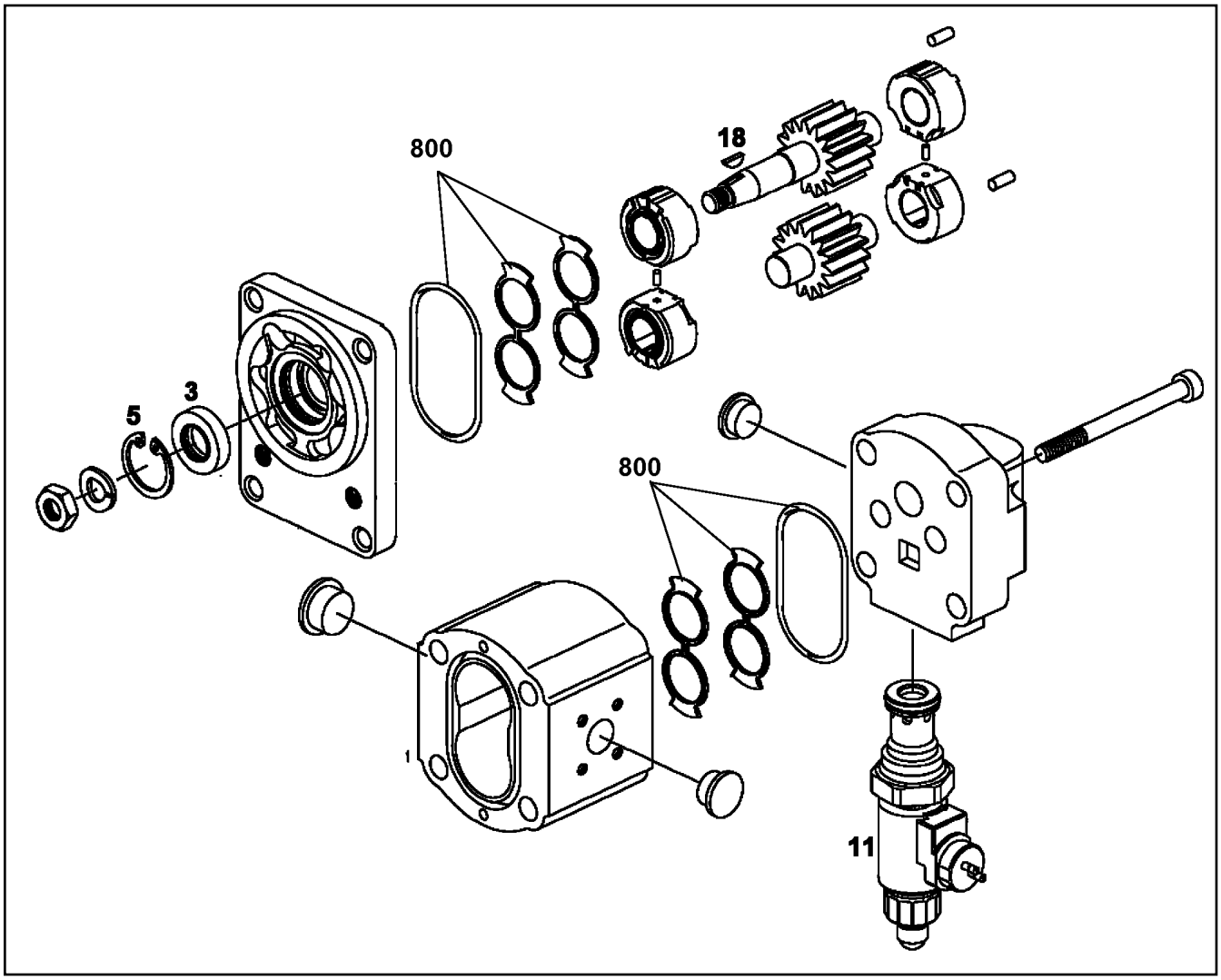

Pos.	Item	Quantity	Description	Bezeichnung
3	10335855	1	SHAFT SEAL	WELLENDICHTRING
5	428100708	1	RETAINING RINGS DIN 472 30X1,2	SICHERUNGSRING
11	10492431	1	PRESSURE LIMITING VALVE ⇨ ❑ 276	DRUCKBEGRENZUNGSVENTIL
18	570435508	1	WOODRUFF KEY DIN 6888 3X5 ST.60-2K	SCHEIBENFEDER
800	10331947	1	SEAL KIT	DICHTUNGSSATZ

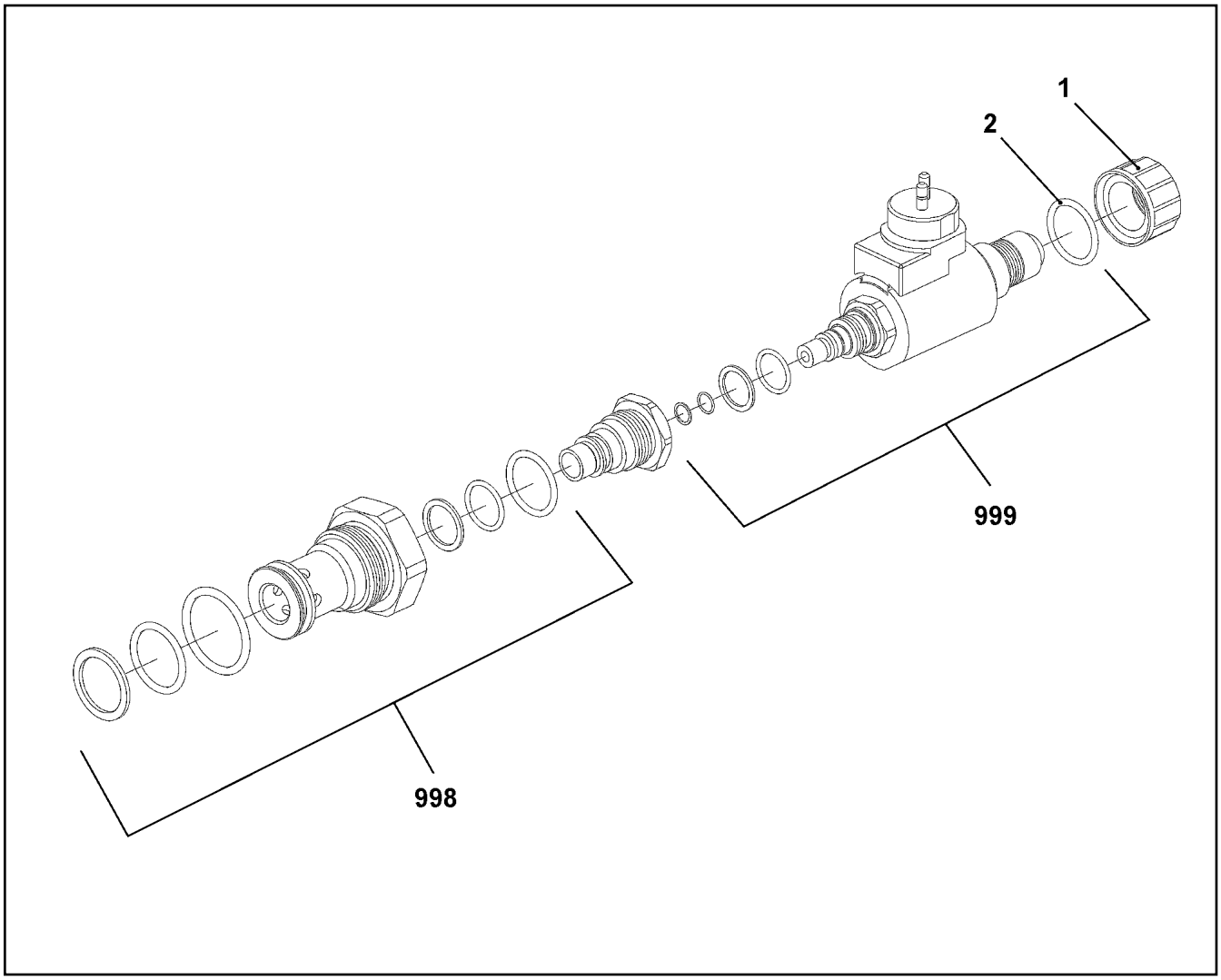

Pos.	Item	Quantity	Description	Bezeichnung
1	10219618	1	NUT	MUTTER
2	10219619	1	O-RING 19X2,5 FKM80	O-RING
998	10331946	1	SEAL KIT	DICHTSATZ
999	10219620	1	SEAL KIT	DICHTSATZ

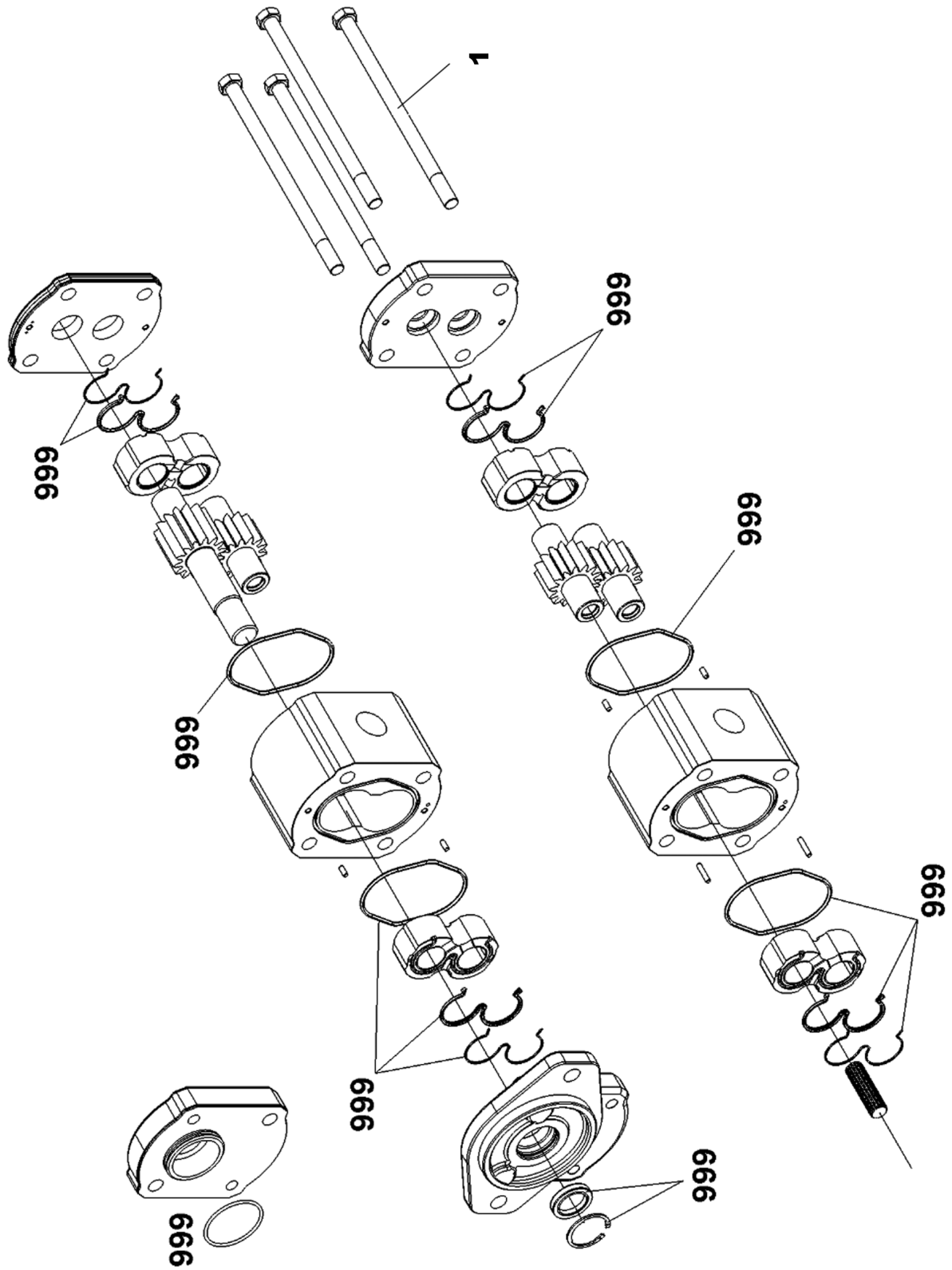
1
999
999
999
999
999
999
999

Pos.	Item	Quantity	Description	Bezeichnung
1	11600193	1	SEAL KIT GEAR PUMP	DS ZAHNRADPUMPE

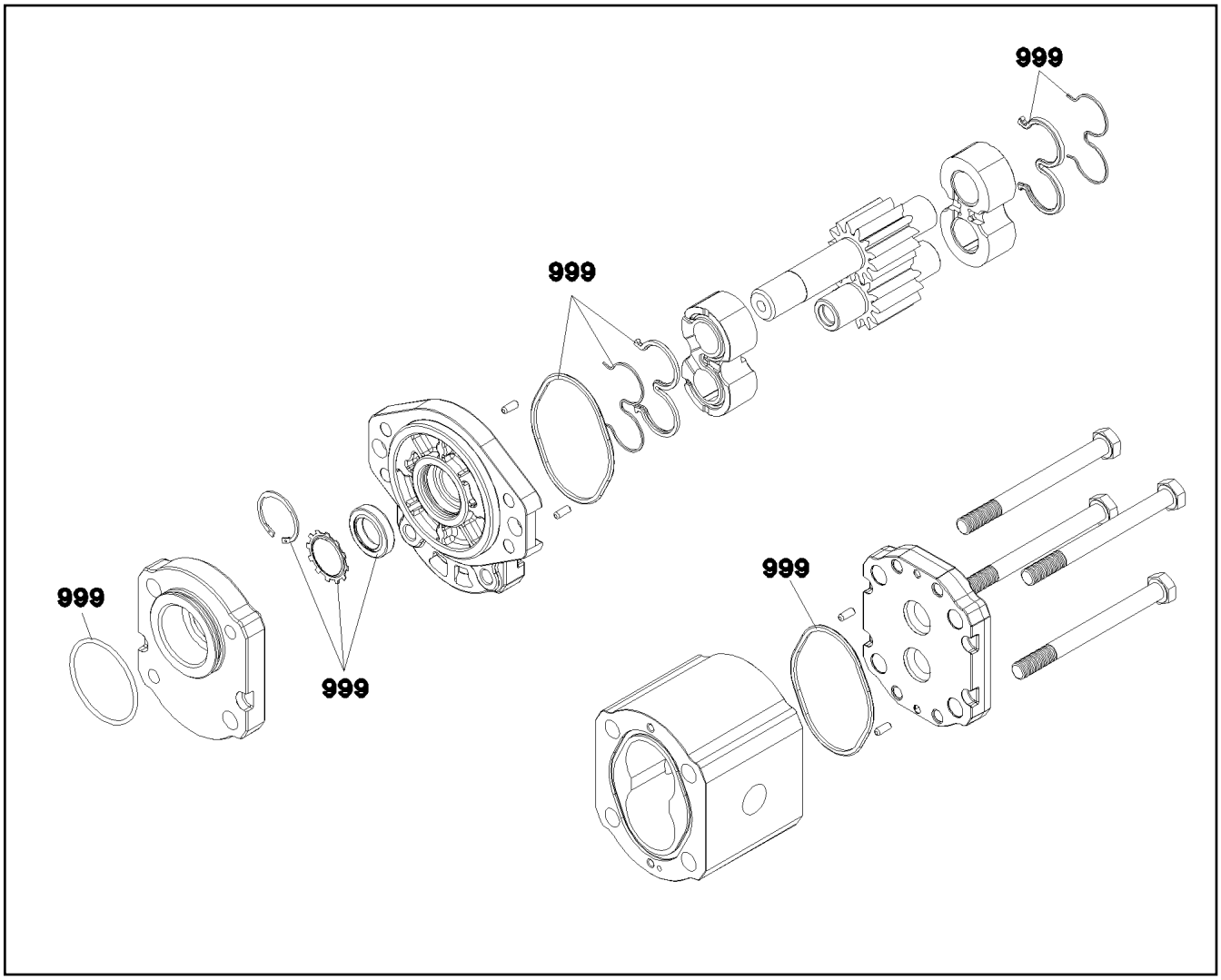

Pos.	Item	Quantity	Description	Bezeichnung
999	10492710	1	SEAL KIT GEAR PUMP	DS ZAHNRADPUMPE

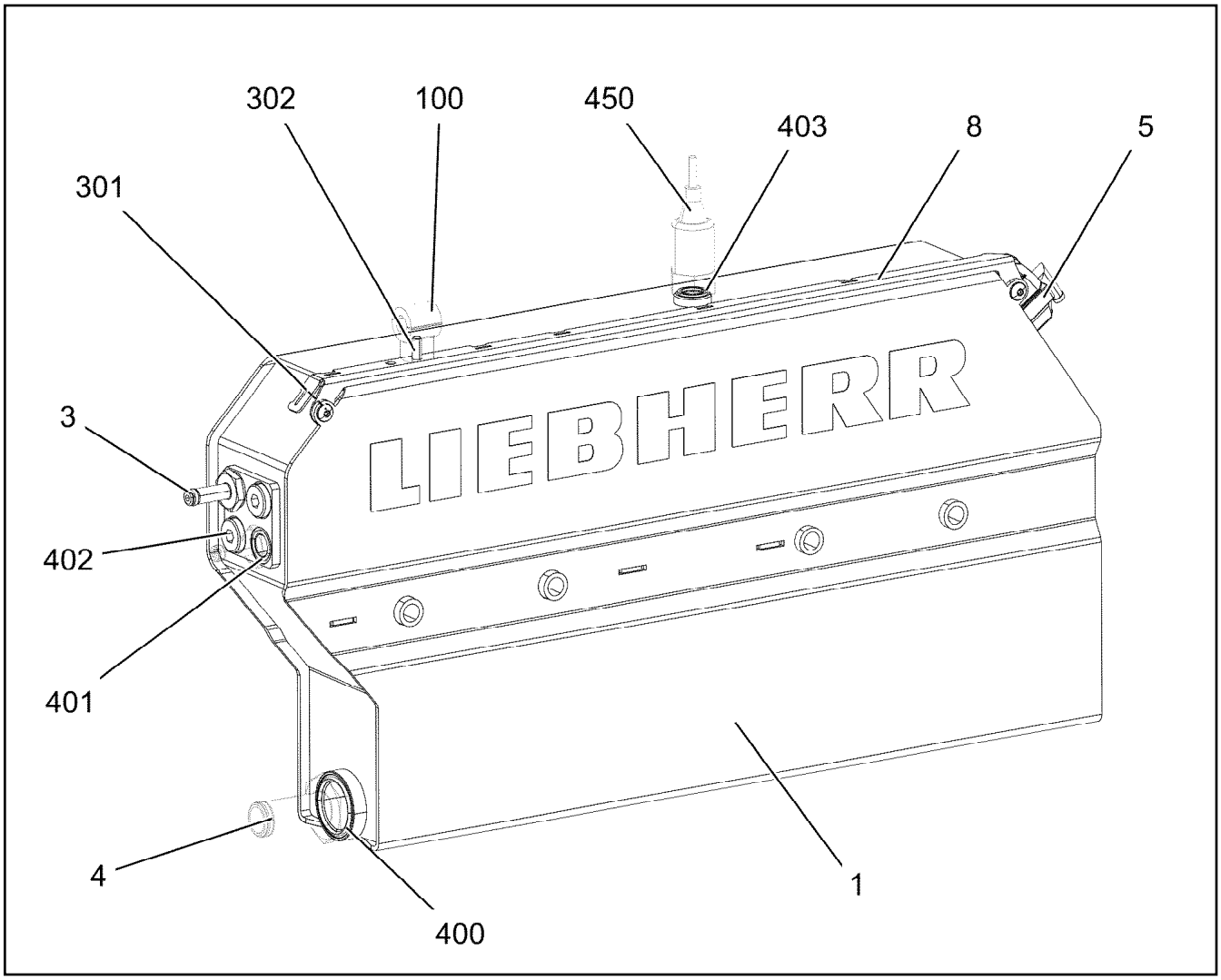

Pos.	Item	Quantity	Description	Bezeichnung
1	96035326	1	EXPANSION TANK WELDED ALMG3	AUSGLEICHSBEHAELTER SCH
3	96035597	2	CONNECTION PIECE	STUTZEN KPL.
4	97119563	1	FITTINGS X5CRNI18-10	STUTZEN
5	12101064	1	VALVE COVER 45 PA6.6	VENTILDECKEL
8	97091350	1	PLATE 1.5X560X43 DC01 FE//ZNNI8//CN//T0	BLECH
100	6202909	1	CLAMP	KLAMMER
301	11160744	2	BUTTON HEAD SCREW AEHNL.ISO 7380-2	HALBRUNDKOPFSCHRAUBE
302	10875468	1	BUTTON HEAD SCREW AEHNL.ISO 7380-2	HALBRUNDKOPFSCHRAUBE
400	726424708	1	O-RING 33X2,5 NBR70	O-RING
401	726407908	2	O-RING 16X2 NBR70	O-RING
402	477704408	2	STOP PLUG VSTIM16X1,5ED CR6-FREI	STOPFEN
403	570116908	1	FLAT SEALING RING 14X19,5X1,5	FLACHDICHTRING
450	10335960	1	WATER LEVEL SENSOR L=50 5V CuZnN38	WASSERSTANDSSONDE

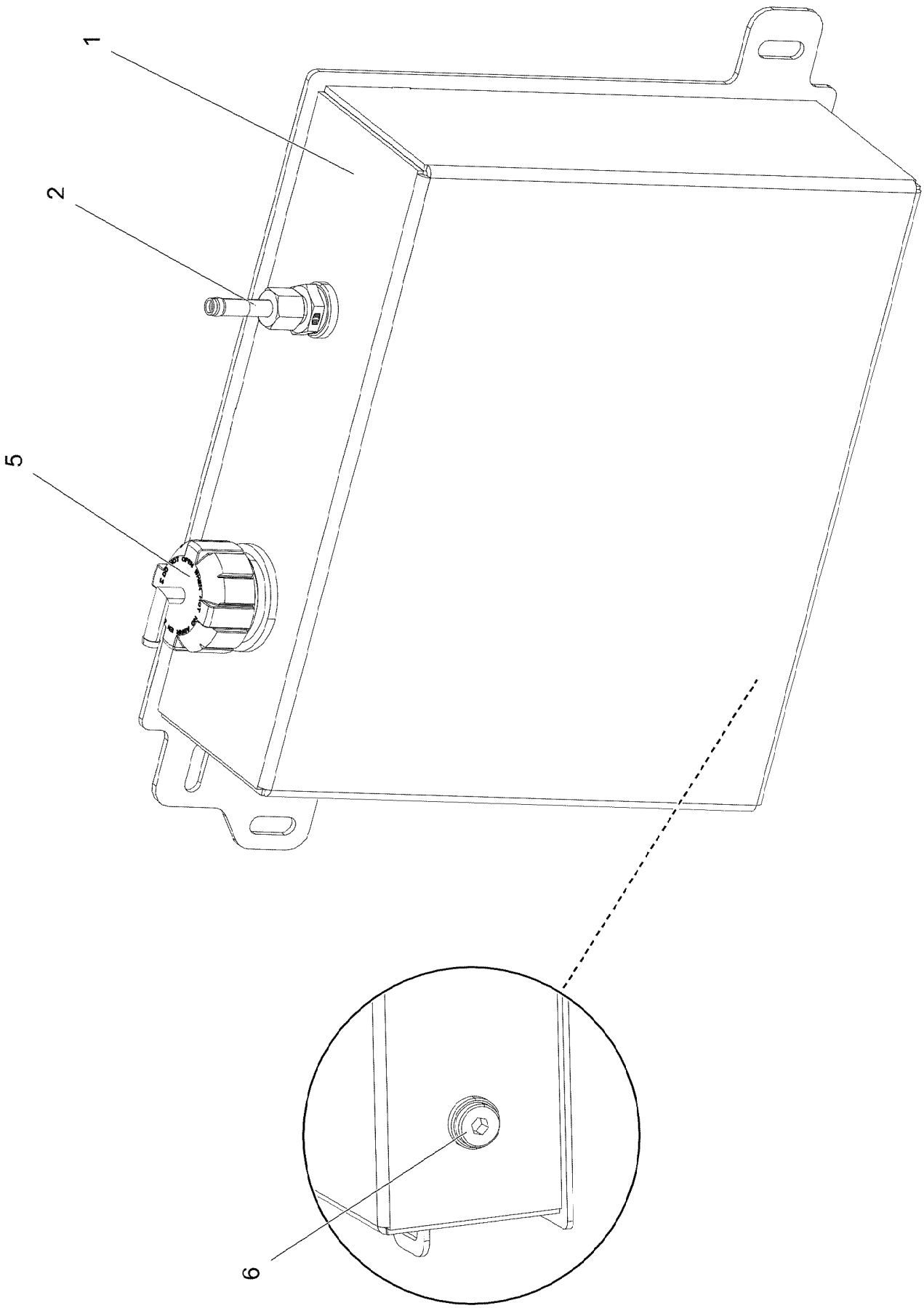
1
2
5
6

Pos.	Item	Quantity	Description	Bezeichnung
1	96035739	1	EXPANSION TANK WELDED	AUSGLEICHSBEHAELTER SCH
2	96038054	1	CONNECTION PIECE ⇨ ❑ 283	STUTZEN KPL.
5	12101064	1	VALVE COVER 45 PA6.6	VENTILDECKEL
6	477704408	1	STOP PLUG VSTIM16X1,5ED CR6-FREI	STOPFEN

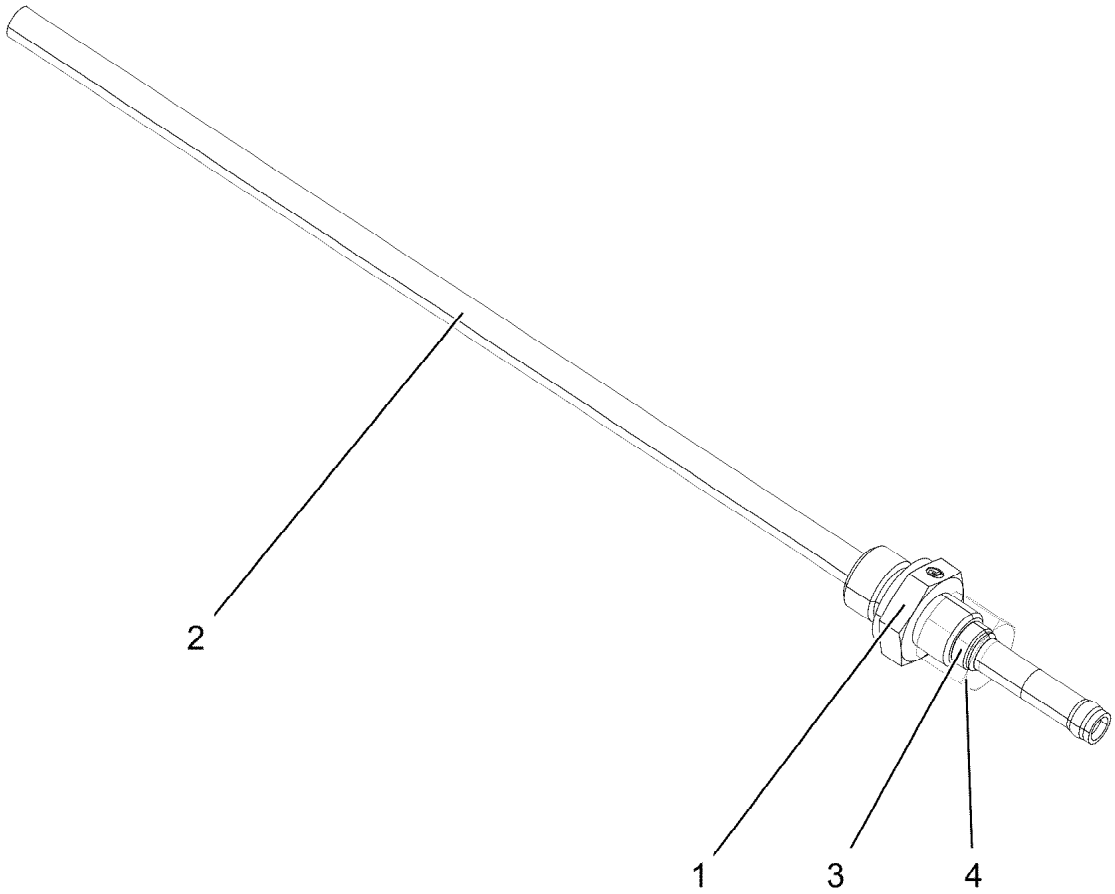

Pos.	Item	Quantity	Description	Bezeichnung
1	97123127	1	FITTING GE8L M16X1.5	VERSCHRAUBUNG
2	97122611	1	TUBE 8.0X320 X5CRNI18-10	ROHR
3	477100208	1	PROFILE RING P-R8-L/S A2GS	PROFILRING
4	477401408	1	BOX NUT AL8 CR6-FREI	UEBERWURFMUTTER

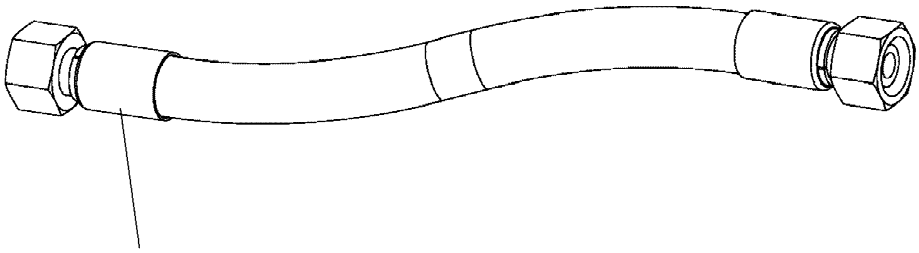

Schlauchnummer
Hose number
Numéro de flexible
Número de flexible
Номера шланга

Die Schlauchnummern auf den Schläuchen entsprechen den Positionen in der Schlauchliste.

The hose numbers from the hoses are in accordance with the items in the hose list.

Les numéros indiqués sur les flexibles correspondent aux repères de la nomenclature des flexibles.

Los números indicados en los flexibles corresponden a las posiciones de la lista de flexibles.

Нанесенные на шлангах номера соответствуют позициям в перечне.

Pos.	Item	Quantity	Description	Bezeichnung
2450	96031888	1	HOSE CPL. CONTI-KWS 8X300	SCHLAUCH KPL.
2451	96021231	1	HOSE CPL. CONTI-KWS 22X420	SCHLAUCH KPL.
2453	96039477	1	HOSE CPL. CONTI-KWS 8X4500	SCHLAUCH KPL.
2455	96021238	1	HOSE CPL. CONTI-KWS 10X720	SCHLAUCH KPL.
2456	96014023	1	HOSE CPL. CONTI-KWS 10X1360	SCHLAUCH KPL.
2457	96021241	1	HOSE CPL. CONTI-KWS 10X820	SCHLAUCH KPL.
2463	96026635	1	HOSE CPL. CONTI-KWS 20X2400	SCHLAUCH KPL.
2466	96032715	1	HOSE CPL. CONTI-KWS 20X1900	SCHLAUCH KPL.

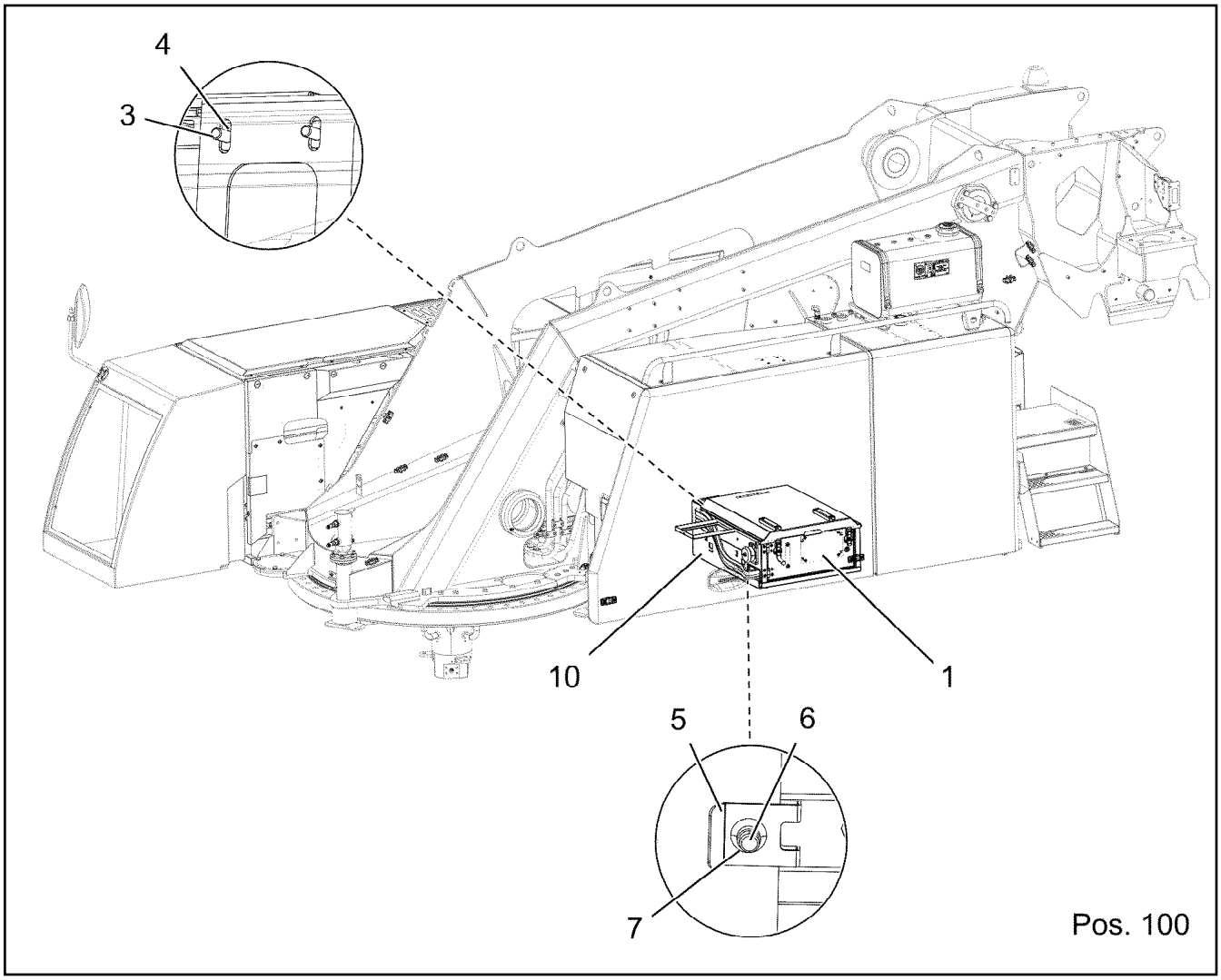

Pos.	Item	Quantity	Description	Bezeichnung
1	96024716	1	BATTERY BOX, PRE-ASSEMBLED ⇨ ❑ 286	BATTERIEKASTEN VORM.
3	11631816	4	HEX SCREW ISO 4017 M10X25 8.8 FLZN SP	SECHSKANTSCHRAUBE
4	11658580	4	WASHER DIN 7349 10,5 200HV-St FLZN SPF	SCHEIBE
5	12100332	4	SHEET METAL NUT M8 480H SPF	BLECHMUTTER
6	11651767	4	HEX SCREW ISO 4017 M8X20 8.8 480H SPF	SECHSKANTSCHRAUBE
7	11140469	4	WASHER ISO 7093-1 8 200HV 480H SPF	SCHEIBE
10	97103234	1	CONSOLE 4X893X546 S315MC FE//ZNNI8//C	KONSOLE
100	96023914	1	ELECTRIC FOR BATTERY BOX ⇨ ❑ 288	ELEKTRIK BATTERIEKASTEN

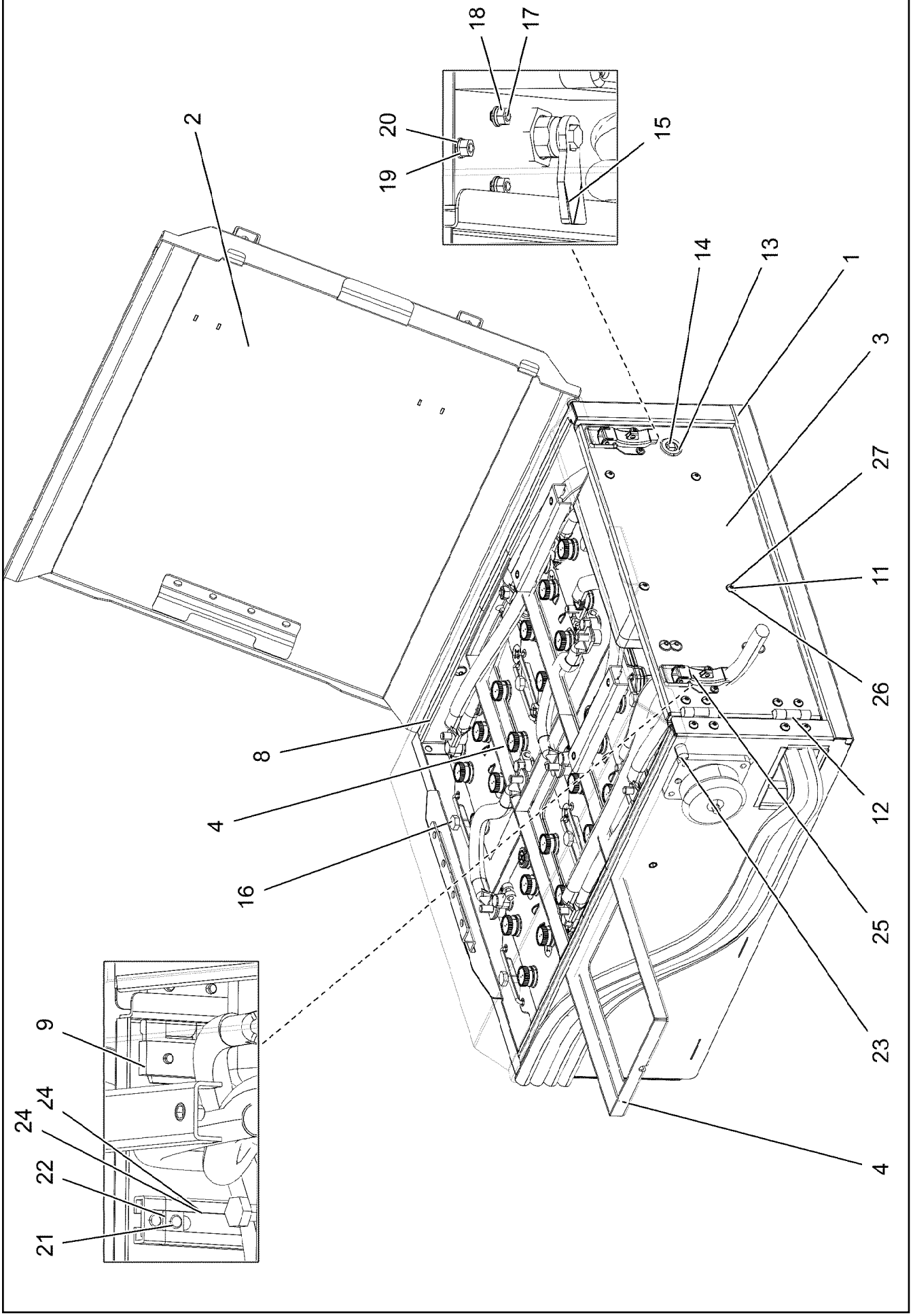

16.11.2023 098517 LIEBHERR	**etk_en_de_078966 LTR 1100** **BATTERY BOX, PRE-ASSEMBLED** **BATTERIEKASTEN VORM.**	❑ 286 (1/2) **96024716**

Pos.	Item	Quantity	Description	Bezeichnung
1	96023028	1	BATTERY BOX ST.CONST. SPF	BATTERIEKASTEN SCHWK.
2	96024977	1	COVER/LID 1 WELDED RAL 7037,SDGL,GT	DECKEL 1 SCHWK.
3	97100598	1	PLATE 2X550X297 DC01	BLECH
4	97100731	1	PLATE 235X575 DC01 FE//ZNNI8//CN//T0	BLECH
8	262103908	1.55	EDGE PROTECTION 1-2X9,5X6,5	KANTENSCHUTZ
9	953695308	4	THREADED PLATE 8.0 X0 S235JR FE//ZNNI8/	GEWINDEPLATTE
11	10412851	12	BUTTON HEAD SCREW AEHNL.ISO 7380-2	HALBRUNDKOPFSCHRAUBE
12	704228108	2	HINGE 35X35X50/180° ST FE//ZN12//B	SCHARNIER
13	704253308	1	HOUSING GD-ZN SW GEPULVERT	GEHAEUSE
14	704253408	1	ACTUATION SPIKE GD-ZN SW GEPULVERT	BETAETIGUNGSDORN
15	704259008	1	TONGUE 45X19 STAHL VERZ	ZUNGE
16	10878922	4	HEX SCREW ISO 4014 M10X220 8.8 FLZN SP	SECHSKANTSCHRAUBE
17	10875483	6	BUTTON HEAD SCREW ISO 7380-2 M5X10 0	HALBRUNDKOPFSCHRAUBE
18	10875620	6	HEX NUT ISO 4032 M5 8 480H SPF	SECHSKANTMUTTER
20	10197808	6	WASHER ISO 7089 5 200HV ZNNI-480H	SCHEIBE
21	10353737	4	BUTTON HEAD SCREW ISO 7380-2 M8X10 A	HALBRUNDKOPFSCHRAUBE
22	704262608	2	THREADED PLATE M8	GEWINDEPLATTE
23	10412105	4	WELDING SLEEVE M8X17 ST37-3K A3K	SCHWEISSBUCHSE
24	954117308	1	CARRIER RAIL X0	TRAGSCHIENE
25	704230208	2	LOCK PIECE HAKEN	VERSCHLUSS
26	10197771	4	WASHER ISO 7089 6 200HV ZNNI-480H SPF	SCHEIBE
27	10197764	4	HEX NUT ISO 4032 M6 10 ZNNI-480H SPF	SECHSKANTMUTTER

Pos.	Item	Quantity	Description	Bezeichnung
5	10664204	2	BATTERY 12V 180AH	BATTERIE
10	96023930	1	LEAD W593	LEITUNG
11	96023931	1	LEAD W591	LEITUNG
14	96023932	1	LEAD W592	LEITUNG
19	96023960	1	BATTERY MAIN SWITCH	BATTERIEHAUPTSCHALTER
(10)	10878680	1	HIGH CURRENT DISTRIBUTOR	HOCHSTROMVERTEILER
(20)	10023751	1	FUSE 50A 32V SPF	SICHERUNG
(21)	10878142	1	FUSE CARTRIDGE 80A DC32 MIDI FUSE	SICHERUNGSEINSATZ
(22)	10878143	1	FUSE CARTRIDGE 100A DC32 MIDI FUSE	SICHERUNGSEINSATZ
21	613206608	2	BATTERY TERMINAL CLAMP 15,9MM² VERZI	BATTERIEKLEMME
22	613206508	2	BATTERY TERMINAL CLAMP 17,5MM² VERZI	BATTERIEKLEMME
30	965356108	1	ADDITIONAL KIT	NACHRUESTSATZ

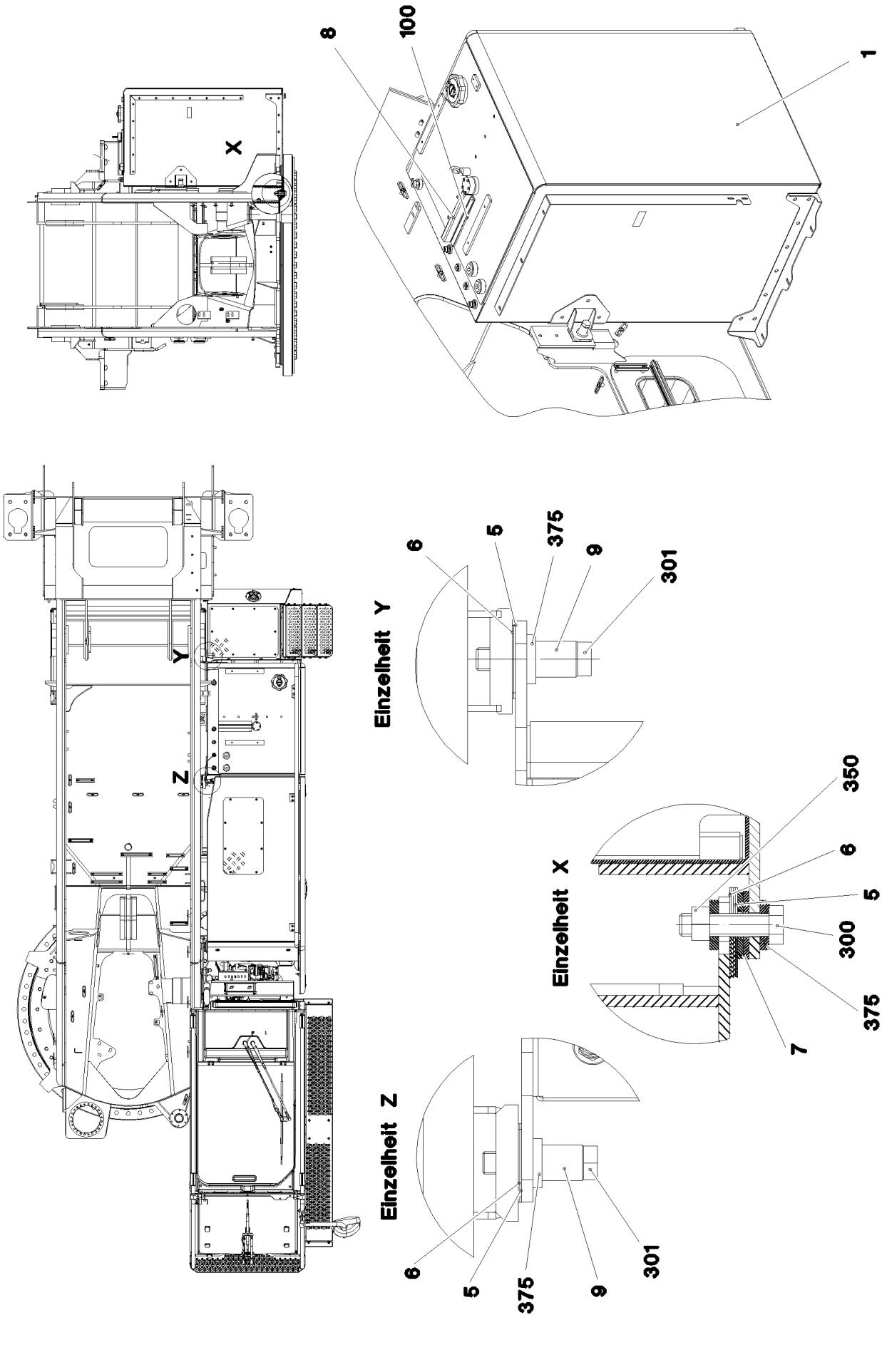
8
100
1
X
Y
Z
Einzelheit Y
6
5
375
9
301
Einzelheit X
350
6
5
300
375
7
Einzelheit Z
6
5
375
9
301

Pos.	Item	Quantity	Description	Bezeichnung
1	969543308	1	FUEL TANK, PRE-ASSEMBLED ⇨ ❑ 291	KRAFTSTOFFBEHAELTER VO
5	953515408	5	PLATE 2X70X80 DC01 FE//ZNNI8//CN//T0	BLECH
6	953515508	3	PLATE 1X70X80 DC01 FE//ZNNI8//CN//T0	BLECH
7	953676308	2	PLATE 5X60X60 S355MC FE//ZNNI8//CN//T0	BLECH
8	975874208	1	PLATE 3X255X133 DC01	BLECH
9	970780908	2	DISTANCE SLEEVE 35.0X40 35NICRMOV12	DISTANZHUELSE
100	704232408	0.6	VELCRO 25MMBREIT	KLETTVERSCHLUSS
290	96046807	1	HOSE LINES	SCHLAUCHLEITUNGEN
(2412)	96044527	1	HOSE CPL. 2TE 8X350	SCHLAUCH KPL.
300	12219312	1	HEX SCREW ISO 4017 M20X80 8.8 FLZN SP	SECHSKANTSCHRAUBE
301	12219309	2	HEX SCREW ISO 4014 M20X90 8.8 FLZN SP	SECHSKANTSCHRAUBE
350	10875610	1	HEX NUT DIN 985 M20 10 FLZN SPF	SECHSKANTMUTTER
375	4600604	4	WASHER DIN 7349 21 100HV FLZN SPF	SCHEIBE

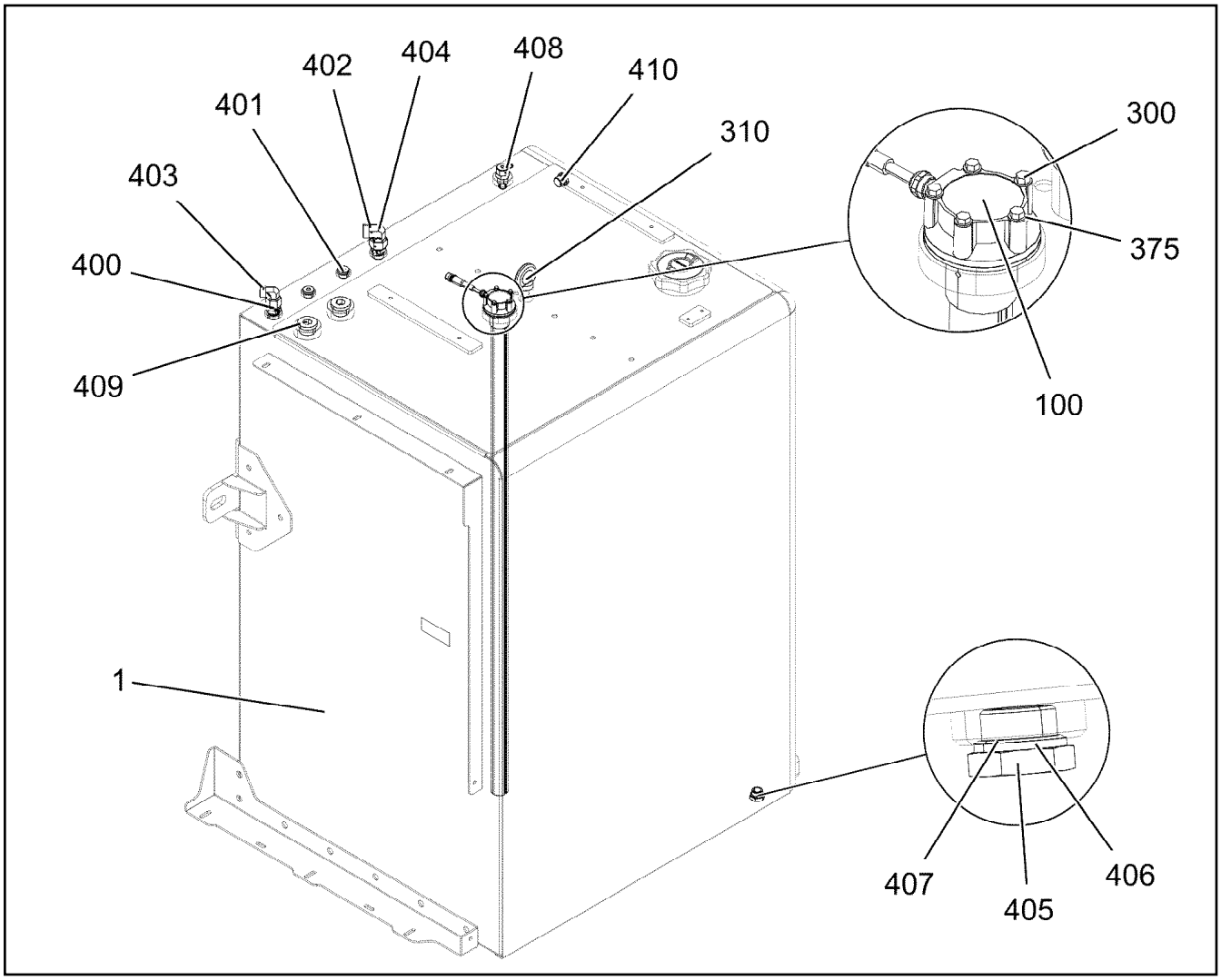

Pos.	Item	Quantity	Description	Bezeichnung
1	969543408	1	FUEL TANK WELDED CONSTR. SPF	KRAFTSTOFFBEHAELTER SCH
100	789015608	1	TANK SENSOR L=1200 24V SPF	TANKSENSOR
(5)	10346938	1	FLANGE SEAL	FLANSCHDICHTUNG
300	12220684	5	HEX SCREW ISO 4017 M5X30 8.8 480H SPF	SECHSKANTSCHRAUBE
310	10179932	1	RING BOLT DIN 580 M12 C15E FLZN SPF	RINGSCHRAUBE
375	10197808	5	WASHER ISO 7089 5 200HV ZNNI-480H	SCHEIBE
400	471035508	1	FITTING GE 15L M22X1,5 CR6-FREI	VERSCHRAUBUNG
401	477705108	2	STOP PLUG VSTIM18X1,5ED CR6-FREI	STOPFEN
402	471031108	1	FITTING GE 18L M22X1,5 CR6-FREI	VERSCHRAUBUNG
403	7615379	1	FITTING ISO 8434-1 EW 15L CR6-FREI	VERSCHRAUBUNG
404	10815664	1	FITTING EW 18L ST CR6-FREI	VERSCHRAUBUNG
405	502940108	1	HOLLOW SCREW DIN 74305 22-1-M22X1,5 4	HOHLSCHRAUBE
406	502932508	1	COMPRESSION RING DR/R22X27	DRUCKRING
407	502932908	1	O-RING 20,3X2,4 NBR70	O-RING
408	10097910	1	VENTILATION VALVE	ENTLUEFTUNGSVENTIL
409	477704608	2	STOP PLUG VSTI G1A CR6-FREI	STOPFEN
410	477704208	1	STOP PLUG VSTI G1/2A CR6-FREI	STOPFEN

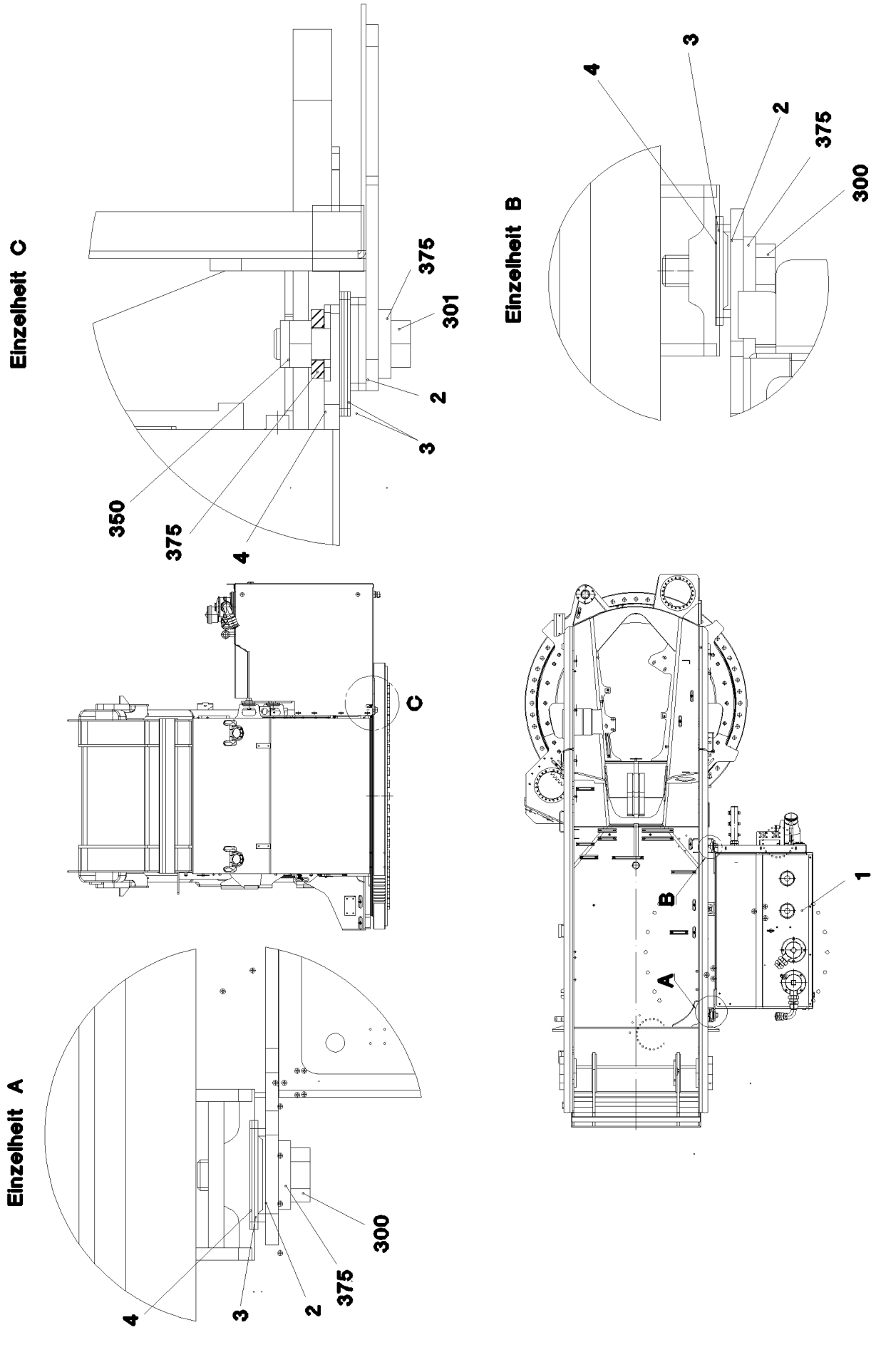

16.11.2023 085910	**etk_en_de_078966 LTR 1100**	❑ 292 (1/2)
LIEBHERR	**OIL RESERVOIR, EXTENSION** **OELBEHAELTER ANBAU**	**918008908**

Pos.	Item	Quantity	Description	Bezeichnung
1	969219208	1	OIL TANK PRE-ASS. SPF ⇨ ❑ 294	OELBEHAELTER VORM.
2	953676308	4	PLATE 5X60X60 S355MC FE//ZNNI8//CN//T0	BLECH
3	953515408	7	PLATE 2X70X80 DC01 FE//ZNNI8//CN//T0	BLECH
4	953515508	3	PLATE 1X70X80 DC01 FE//ZNNI8//CN//T0	BLECH
300	10875806	2	HEX SCREW ISO 4017 M20X60 8.8 FLZN SP	SECHSKANTSCHRAUBE
301	11656999	1	HEX SCREW ISO 4014 M20X75 8.8 FLZN SP	SECHSKANTSCHRAUBE
350	10875610	1	HEX NUT DIN 985 M20 10 FLZN SPF	SECHSKANTMUTTER
375	4600604	4	WASHER DIN 7349 21 100HV FLZN SPF	SCHEIBE

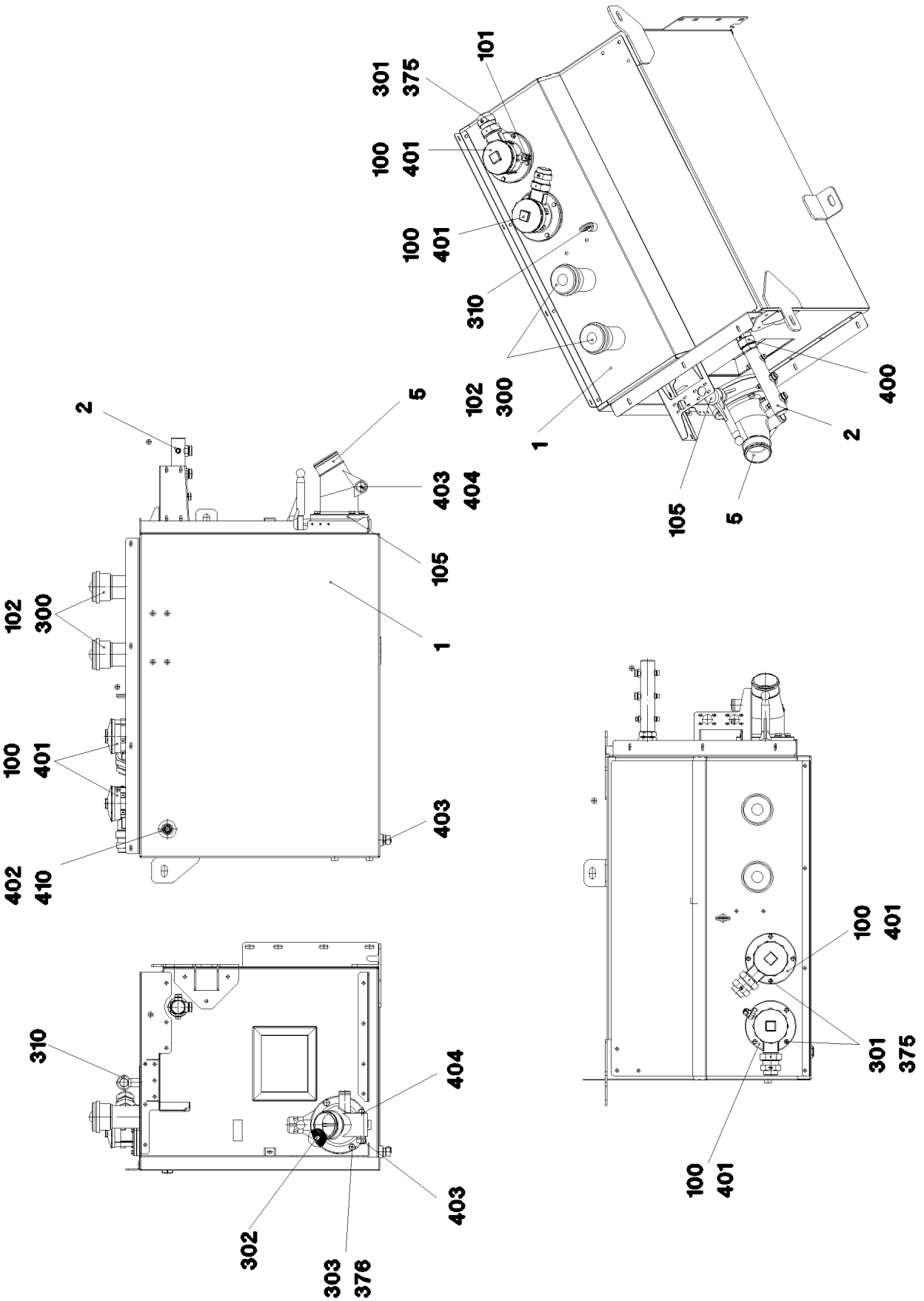

16.11.2023 085911 LIEBHERR	**etk_en_de_078966 LTR 1100** **OIL TANK PRE-ASS.** **OELBEHAELTER VORM.**	❑ 294 (1/2) **969219208**

Pos.	Item	Quantity	Description	Bezeichnung
1	969392608	1	OIL TANK ST.CONST. SPF	OELBEHAELTER SCHWK.
2	925933208	1	COLLECTING PIPE FE//ZNNI8//CN//T0	SAMMELROHR
5	973021008	1	SUCTION PIPE OIL G-ALSI10MG SPF	SAUGROHR-OEL
100	10871354	2	RETURN FILTER 400L/MIN ⇨ ❑ 296	RUECKLAUFFILTER
101	11068222	1	CLOGGING INDICATOR	VERSCHMUTZUNGSANZEIGE
102	510667308	2	AERATION FILTER	BELUEFTUNGSFILTER
(1)	510671808	1	FILTER INSERT 1m³/min 10µm	FILTEREINSATZ
105	10475262	1	SHUT OFF DEVICE DN125-FLANSCH SPF ⇨ ❑ 303	ABSPERRORGAN
300	12216233	12	COUNTERSUNK SCREW ISO 7047 M5X16 4	SENKSCHRAUBE
301	10197831	8	HEX SCREW ISO 4017 M8X25 8.8 ZNNI-480	SECHSKANTSCHRAUBE
302	10875565	4	SOCKET HEAD SCREW ISO 4762 M12X40 8	ZYLINDERSCHRAUBE
303	10875507	4	HEX SCREW ISO 4014 M12X75 8.8 FLZN SP	SECHSKANTSCHRAUBE
310	10179932	1	RING BOLT DIN 580 M12 C15E FLZN SPF	RINGSCHRAUBE
375	420001014	8	WASHER ISO 7089 8 200HV-A4	SCHEIBE
376	10289804	8	WASHER ISO 7089 12 300HV FLZN SPF	SCHEIBE
400	471903608	1	FITTING EGE 42L G1 1/2 CR6-FREI	VERSCHRAUBUNG
401	511457808	2	NON-RETURN VALVE 250BAR 2.5BAR CR6-F	RUECKSCHLAGVENTIL
402	774320108	1	OIL SIGHT GLASS G1" ALU	OELSTANDSAUGE
403	789011908	2	OIL DRAIN PLUG M26X1,5	OELABLASSSCHRAUBE
404	477705208	1	STOP PLUG VSTIM33X2ED CR6-FREI	STOPFEN
410	726404508	1	O-RING DIN 3771 28X3,55 NBR70	O-RING

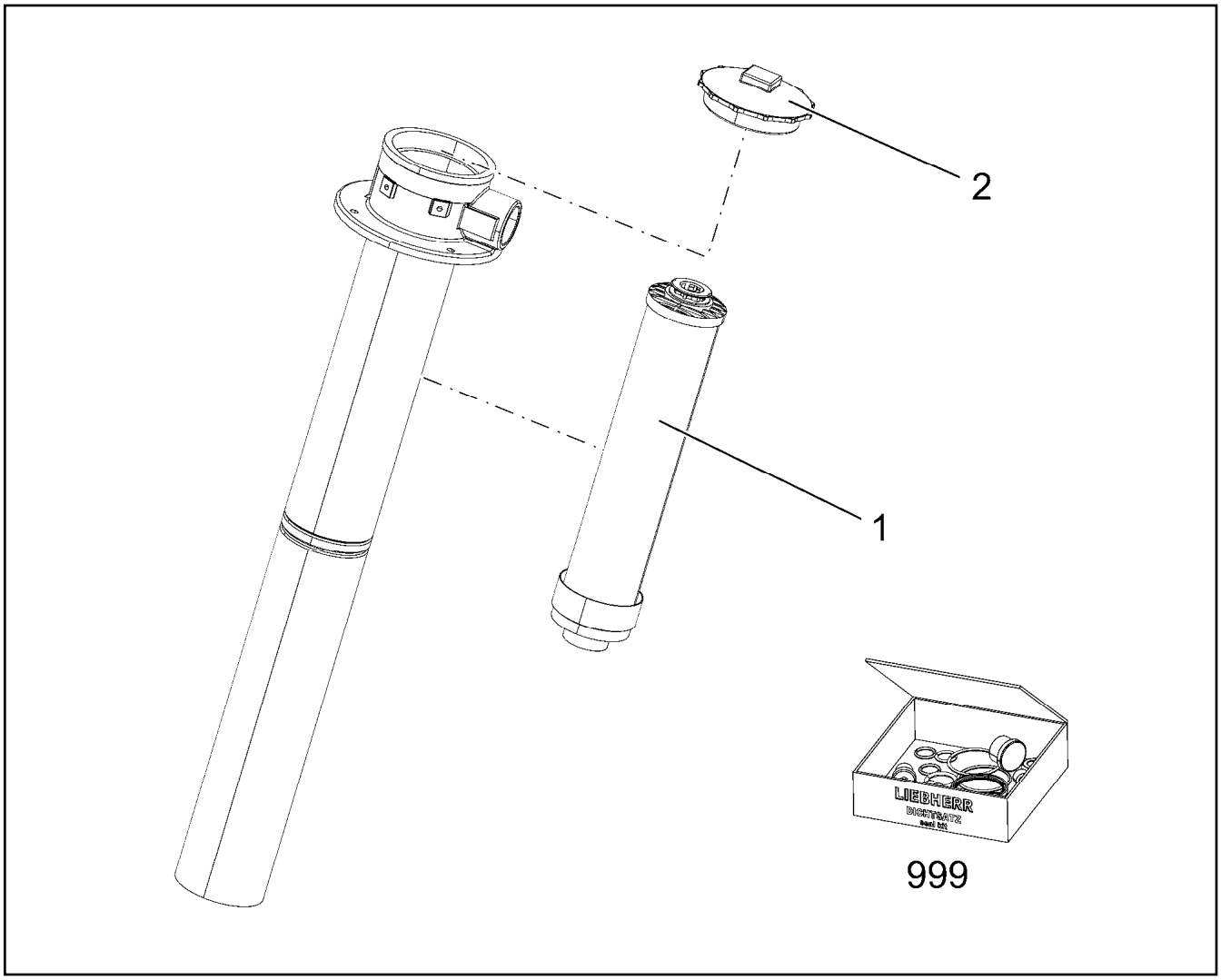

Pos.	Item	Quantity	Description	Bezeichnung
1	11068050	1	FILTER ELEMENT OEL 8µm ⇨ ❑ 297	FILTERELEMENT
2	11600977	1	COVER ⇨ ❑ 298	DECKEL
999	11341871	1	SEAL KIT RETURN FILTER ⇨ ❑ 301	DS RUECKLAUFFILTER

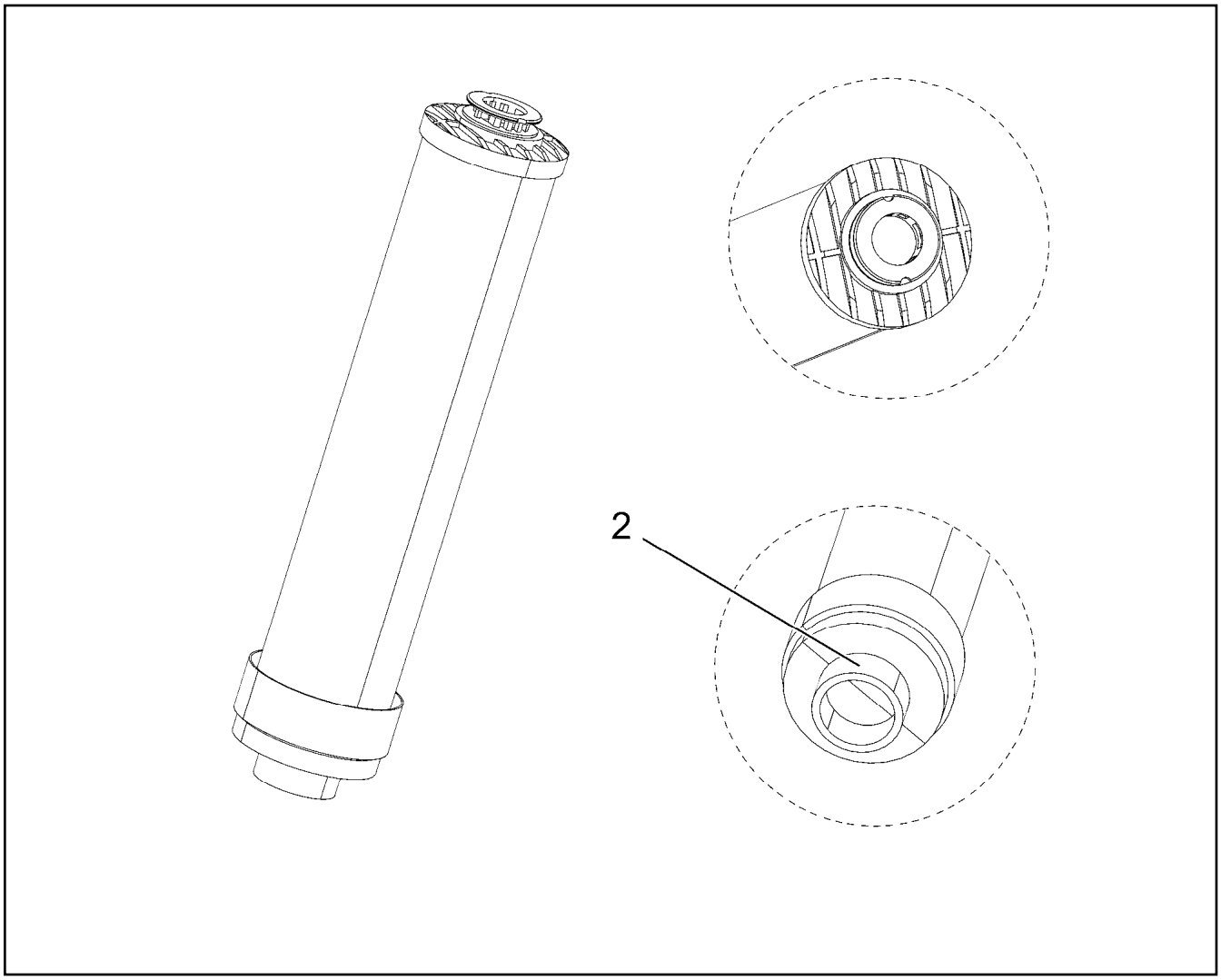

Pos.	Item	Quantity	Description	Bezeichnung
2	570296608	1	O-RING ARP 568 44,04X3,53 NBR90	O-RING
1000	980288008	1	DOCUMENTATION	DOKUMENTATION

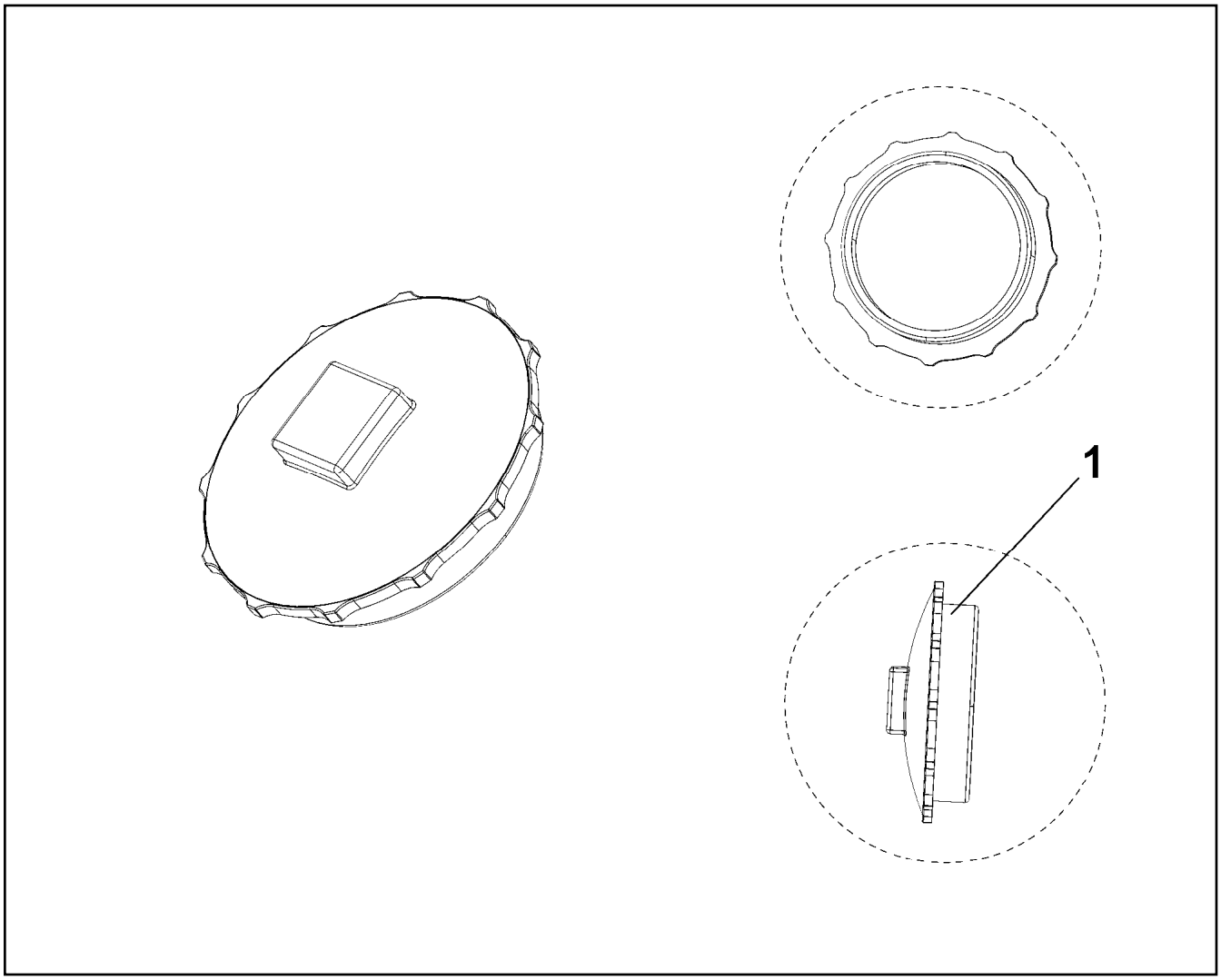

Pos.	Item	Quantity	Description	Bezeichnung
1	514615408	1	O-RING ARP 568 110,72X3,53 NBR70 ⇨ ❑ 299	O-RING

Pos. 3075

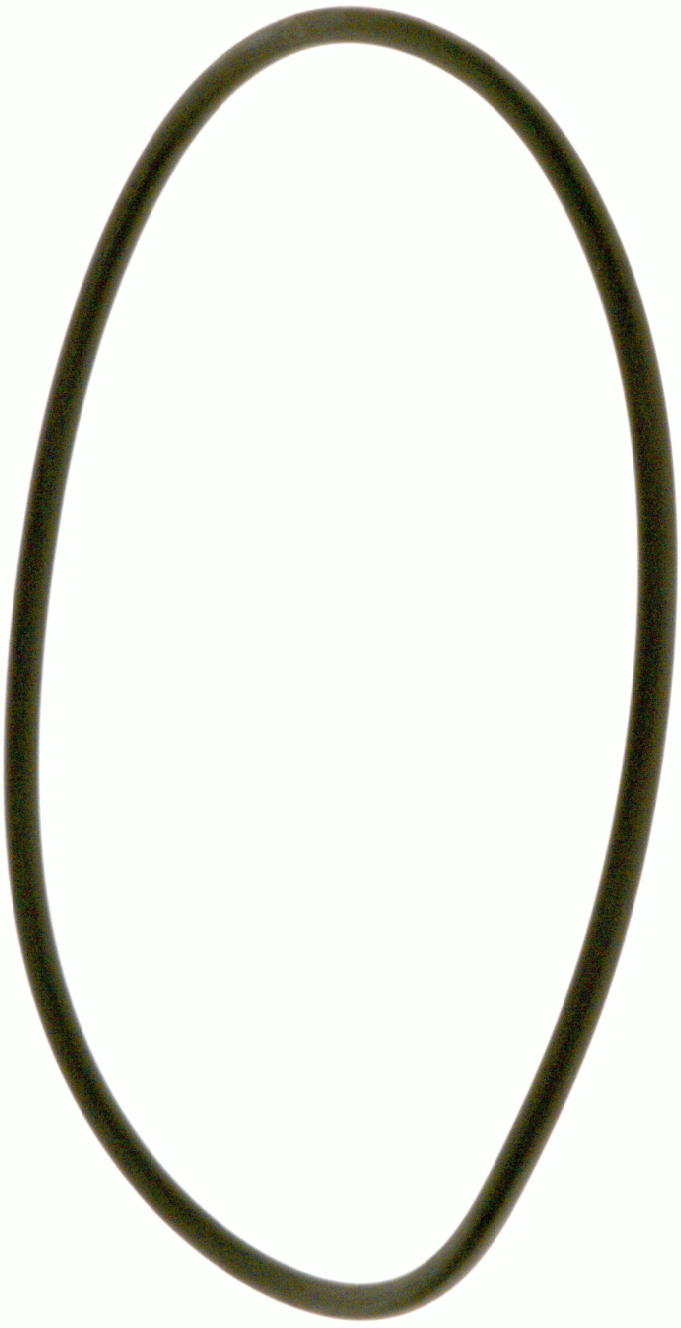

Abbildung ähnlich
Illustration similar
Illustration similaire

Pos.	Item	Quantity	Description	Bezeichnung
1	980288008	1	DOCUMENTATION	DOKUMENTATION

Pos. 3006

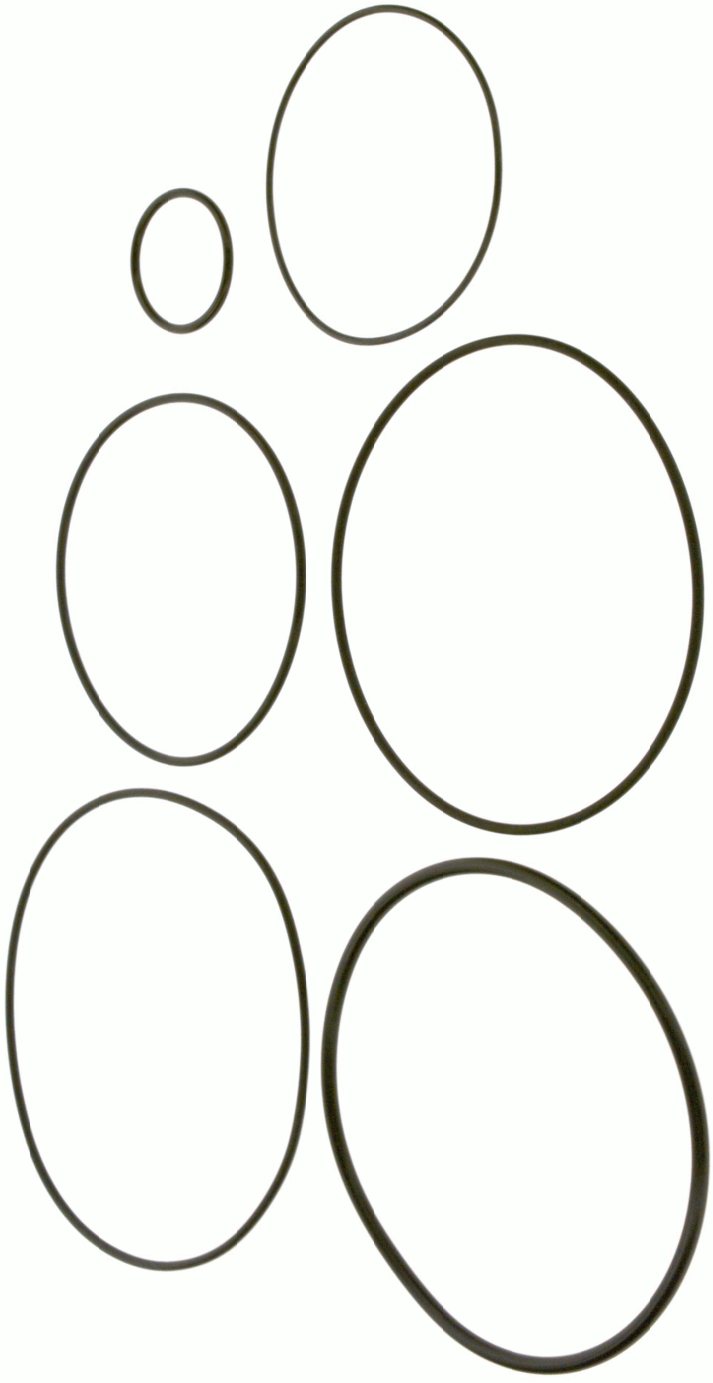

Abbildung ähnlich
Illustration similar
Illustration similaire

Pos.	Item	Quantity	Description	Bezeichnung
1	980288008	1	DOCUMENTATION	DOKUMENTATION

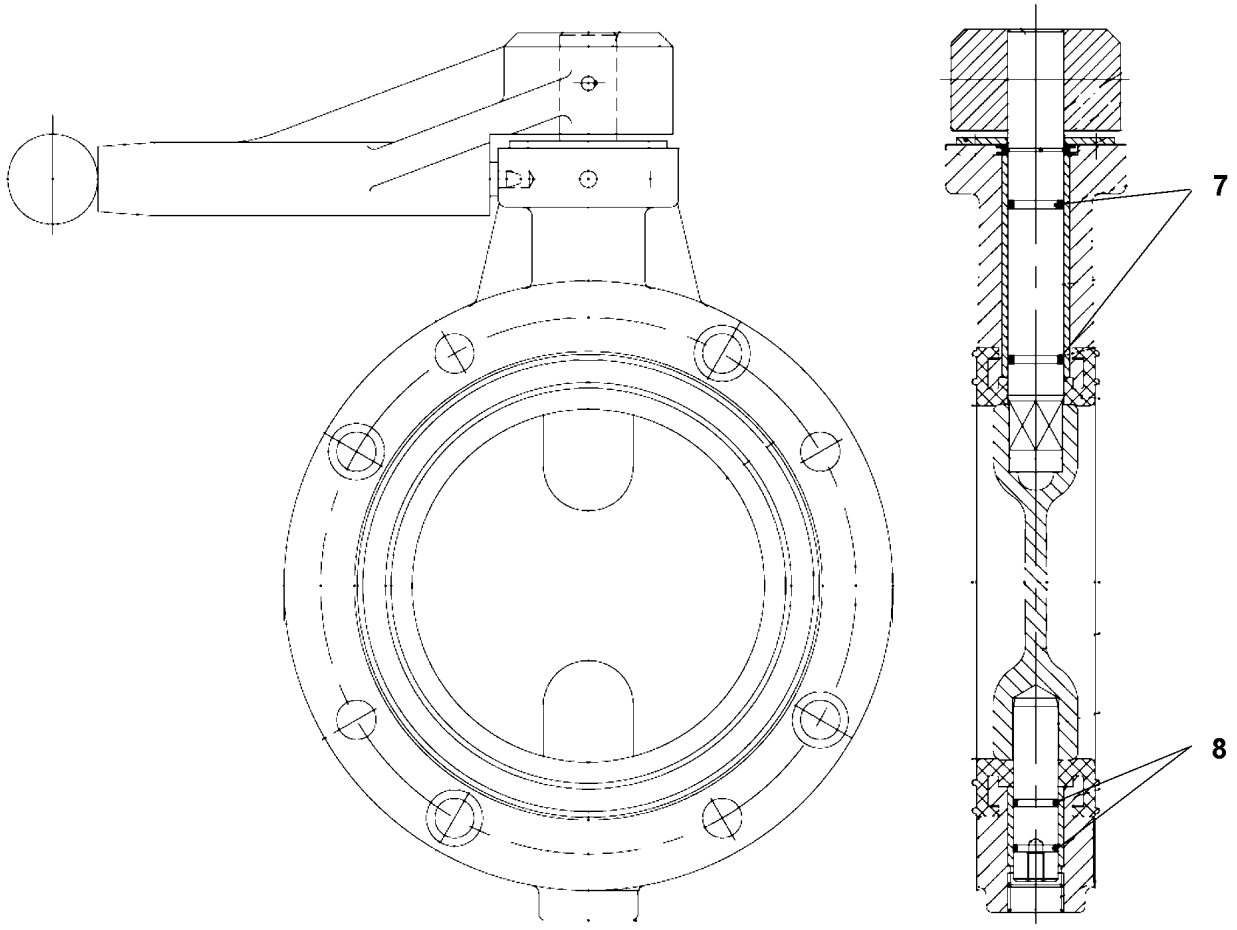

Pos.	Item	Quantity	Description	Bezeichnung
2	11311955	2	SEALS CPL NBR	DICHTUNGEN KPL
7	726407908	2	O-RING 16X2 NBR70	O-RING
8	704274808	2	O-RING 12X2 NBR70	O-RING

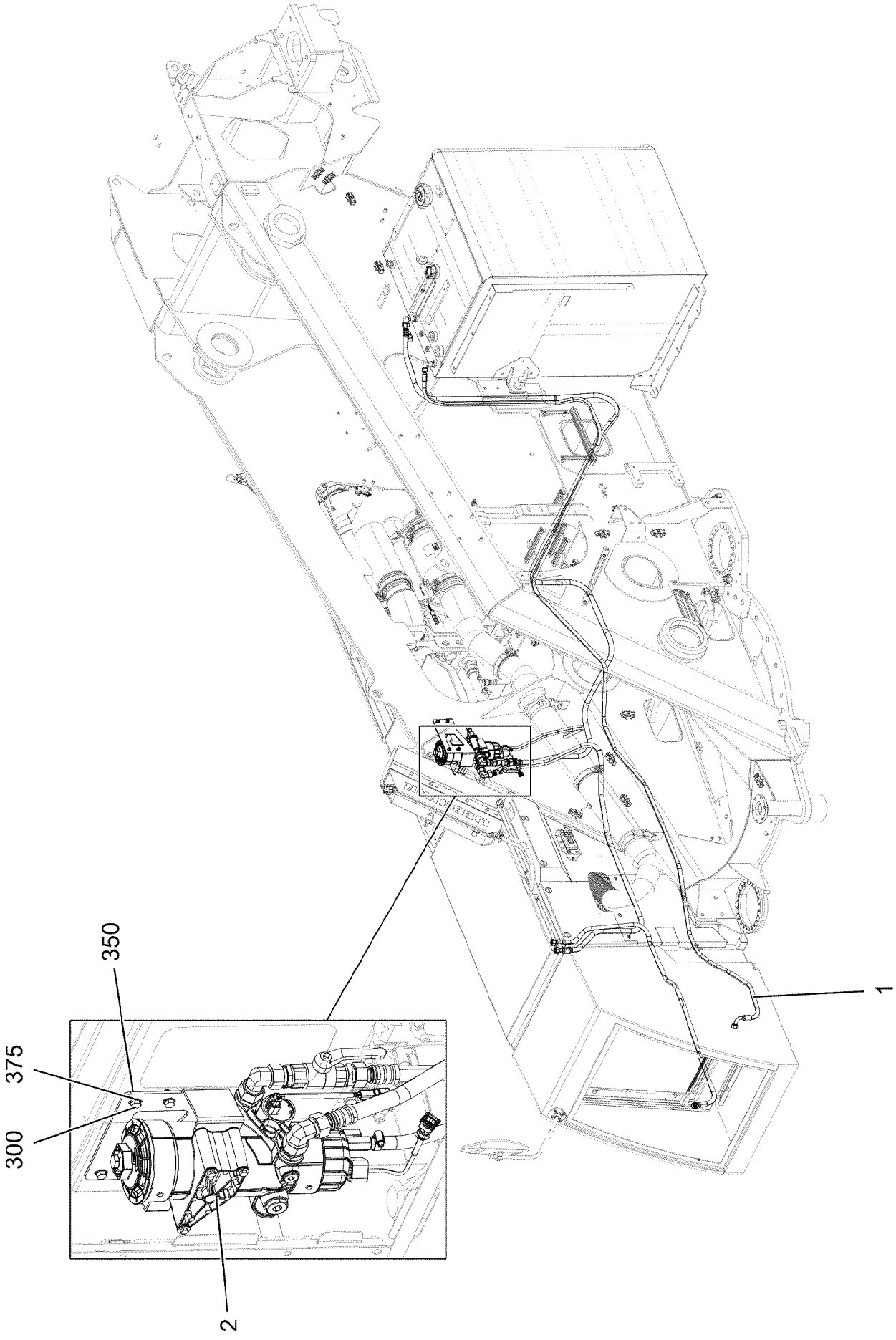
350
375
300
2
1

Pos.	Item	Quantity	Description	Bezeichnung
1	96033380	1	HOSE LINES FUEL	SCHLAUCHLEITUNGEN KRAFT
(2390)	926495008	1	HOSE CPL. 2TE 16X4500	SCHLAUCH KPL.
(2391)	96033765	1	HOSE CPL. 2TE 16X2200	SCHLAUCH KPL.
(2393)	967650208	1	HOSE CPL. 2TE 12X1750	SCHLAUCH KPL.
(2394)	964193608	1	HOSE CPL. 2TE 12X5500	SCHLAUCH KPL.
(2395)	96033235	1	HOSE CPL. 2TE 12X650	SCHLAUCH KPL.
2	96066239	1	PREMOUNTED FUEL FILTER ⇨ ❑ 306	KRAFTSTOFFFILTER VORM.
300	11651767	4	HEX SCREW ISO 4017 M8X20 8.8 480H SPF	SECHSKANTSCHRAUBE
350	11693875	4	HEX NUT ISO 4032 M8 8 480H SPF	SECHSKANTMUTTER
375	12103465	8	WASHER ISO 7089 8 300HV ZNNI-480H SPF	SCHEIBE

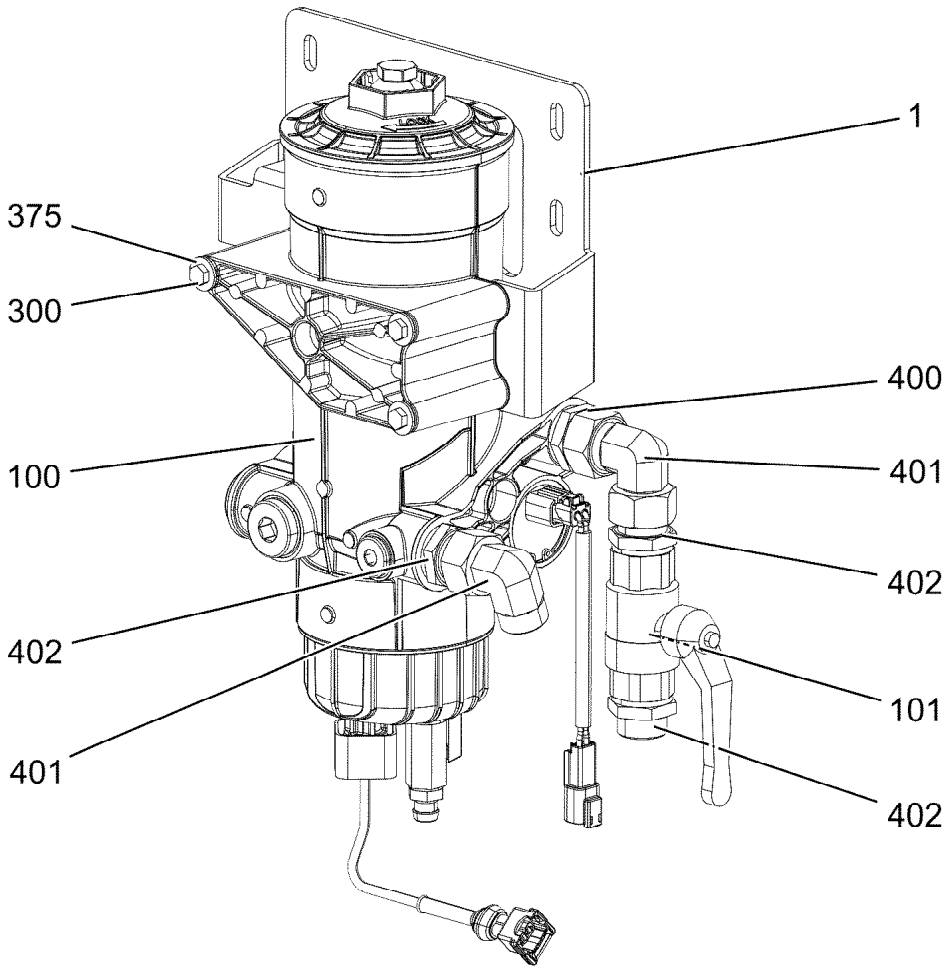

Pos.	Item	Quantity	Description	Bezeichnung
1	97116341	1	PLATE 4X478X160 S315MC FE//ZNNI8//CN//T	BLECH
100	12106874	1	FUEL FILTER ⇨ ❑ 307	KRAFTSTOFFFILTER
101	10044661	1	BALL VALVE DN20-G 3/4	KUGELHAHN
300	12219810	3	HEX SCREW ISO 4014 M6X80 8.8 480H SPF	SECHSKANTSCHRAUBE
375	10540500	3	WASHER ISO 7093-1 6 200HV-A4	SCHEIBE
400	10878394	1	FITTING EGE 18L G3/4 CR6-FREI	VERSCHRAUBUNG
401	247108302	2	SWIVEL ELBOW EW 18L M26X1,5 CR6-FREI	WINKELSTUTZEN
402	471037508	3	FITTING XGE18-LR-ED3/4" CR6-FREI	VERSCHRAUBUNG
(1)	726407908	1	O-RING 16X2 NBR70	O-RING

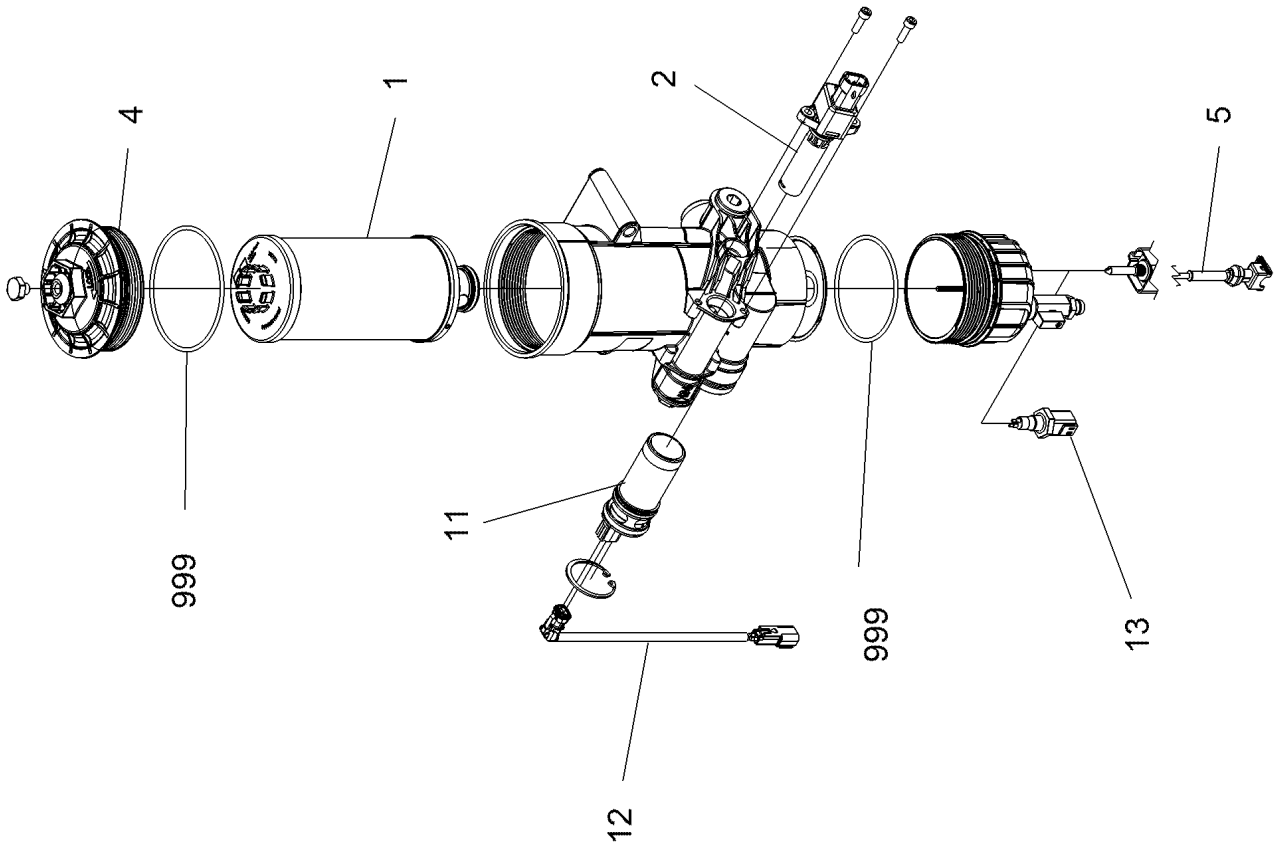
4
1
2
5
999
11
999
13
12

Pos.	Item	Quantity	Description	Bezeichnung
1	10149977	1	FUEL FILTER ELEMENT KRAFTSTOFF 7µm ⇨ ❑ 309	KRAFTSTOFFFILTEREINSATZ
2	11381100	1	FUEL HEATER 24V 0,25KW	KRAFTSTOFFHEIZER
4	11368890	1	COVER	DECKEL
5	11370365	1	WATER SENSOR 5V	WASSERSONDE
11	12107190	1	FUEL PUMP	KRAFTSTOFFPUMPE KPL.
12	12107191	1	LEAD	LEITUNG
13	12101984	1	WATER SENSOR	WASSERSONDE
999	12101886	1	SEAL KIT ⇨ ❑ 311	DICHTSATZ

Pos. 138

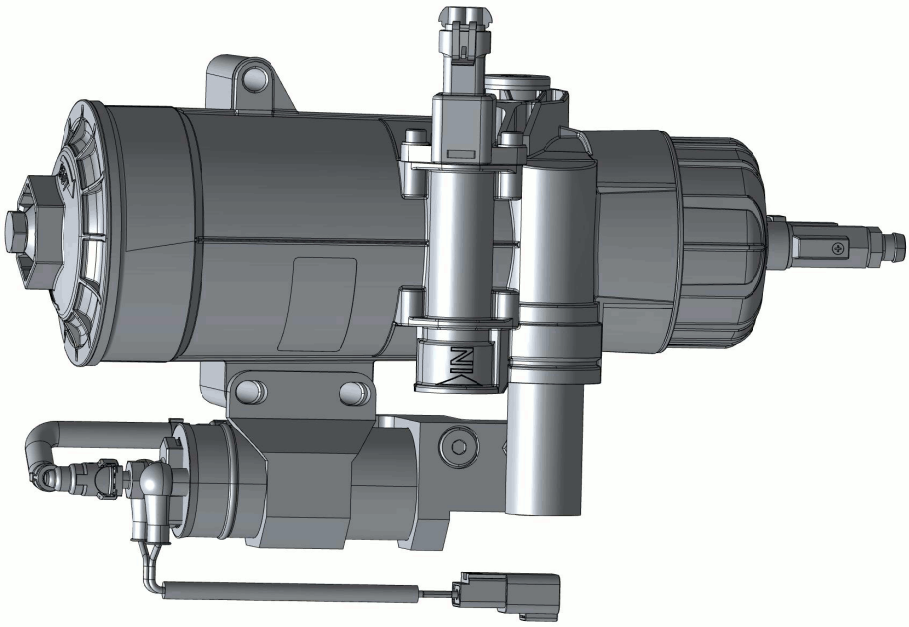

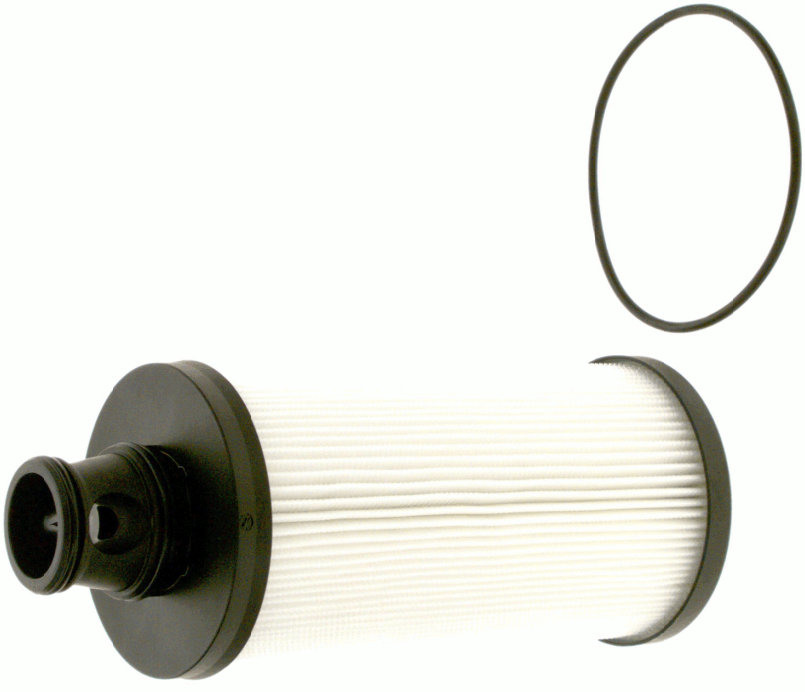

Abbildung ähnlich
Illustration similar
Illustration similaire

Pos.	Item	Quantity	Description	Bezeichnung
1	980288008	1	DOCUMENTATION	DOKUMENTATION

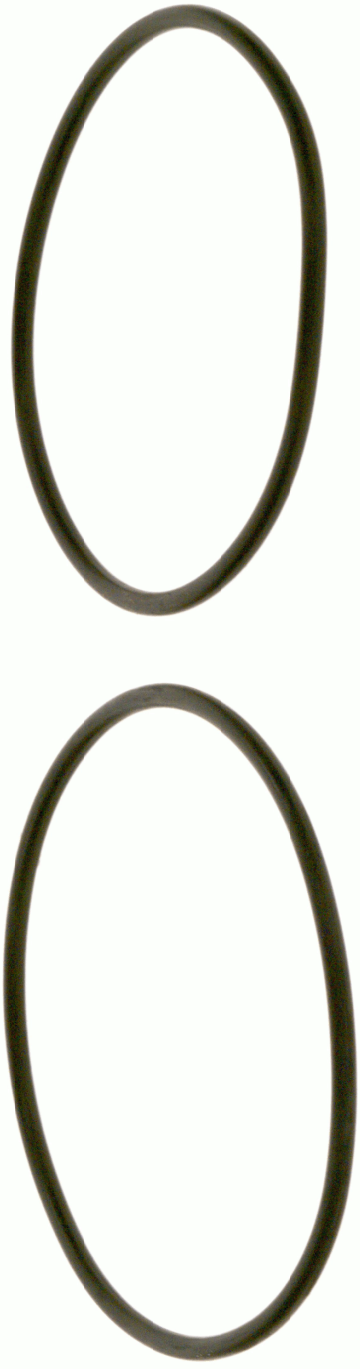

Pos. 3116

Abbildung ähnlich
Illustration similar
Illustration similaire

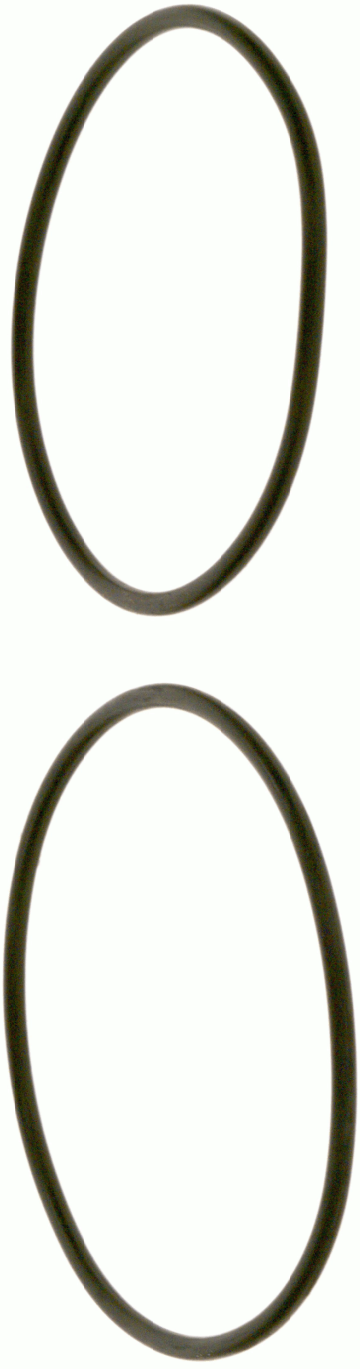

Pos. 3138

Abbildung ähnlich
Illustration similar
Illustration similaire

Pos.	Item	Quantity	Description	Bezeichnung
1	980288008	1	DOCUMENTATION	DOKUMENTATION

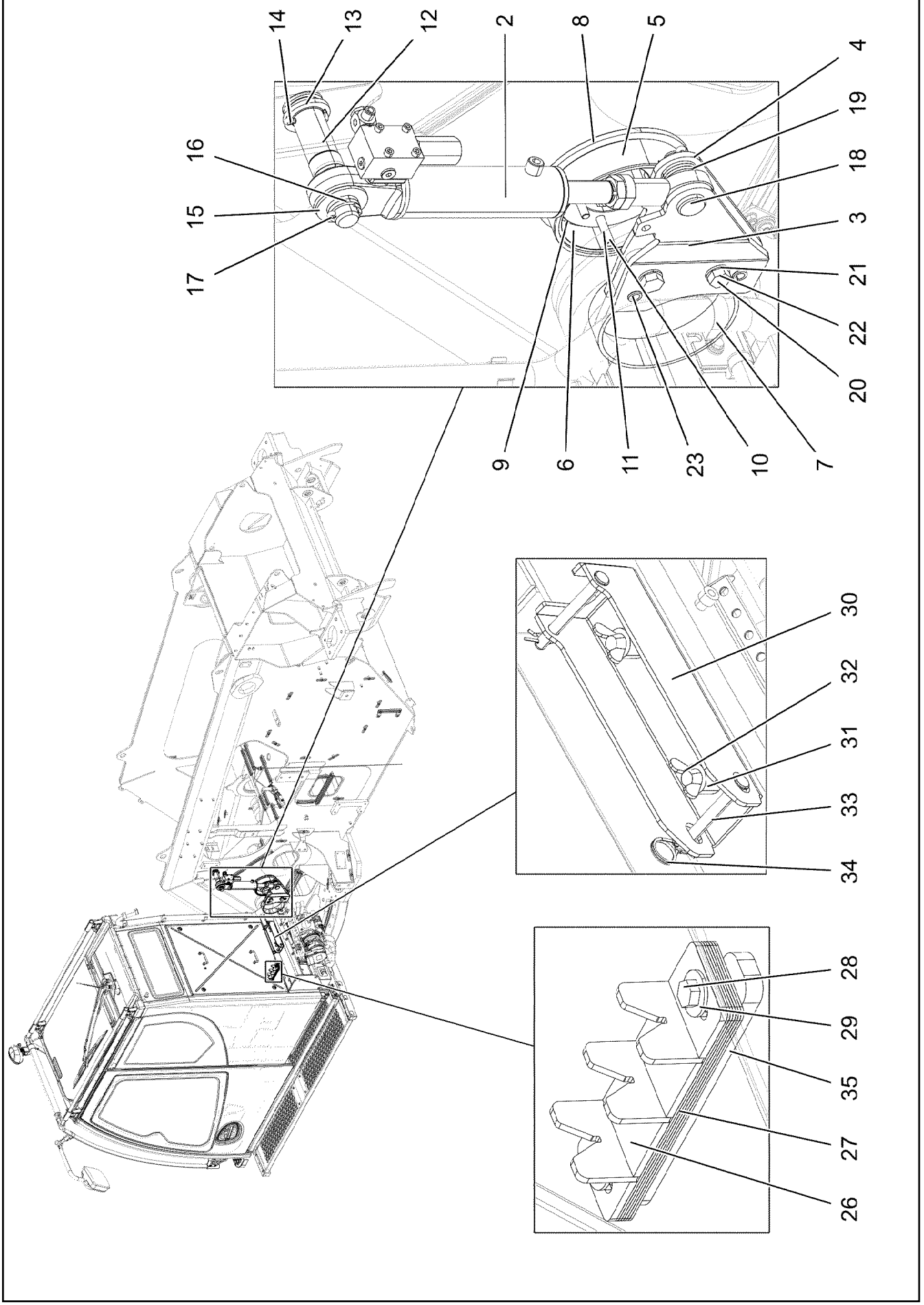
14
13
12
2
8
5
4
19
18
3
21
22
20
7
10
23
11
6
9
17
15
16
30
32
31
33
34
28
29
35
27
26

Pos.	Item	Quantity	Description	Bezeichnung
2	10650940	1	TILT CYLINDER 50/28-110 -40°C SPF ⇨ ❑ 316	KIPPZYLINDER
3	97020761	1	PLATE 8X274X228 S355MC	BLECH
4	97020762	1	PLATE 8X270X228 S355MC	BLECH
5	976641108	1	BEARING PA6	LAGER
6	976641208	1	BEARING PA6	LAGER
7	976641308	1	BEARING PA6	LAGER
8	976641408	1	COVER 18X205X205 S960QL	DECKEL
9	976986008	4	PLATE 1X157X157 DC01 FE//ZNNI8//CN//T0	BLECH
10	11002718	4	HEX SCREW ISO 4017 M10X50 10.9 FLZN SP	SECHSKANTSCHRAUBE
11	10289795	4	WASHER ISO 7089 10 300HV FLZN SPF	SCHEIBE
12	97035300	1	PIN WITH HEAD 50.0X182 35NICRMOV125	BOLZEN MIT KOPF
13	10179377	1	WASHER DIN 1441 41 St FLZN SPF	SCHEIBE
14	10180365	1	SPLIT PIN ISO 1234 6,3X63 St 480H SPF	SPLINT
15	979326008	1	PLATE 4X65X65 S315MC FE//ZNNI8//CN//T0	BLECH
16	97040356	3	WASHER 5X40X40 S355MC FE//ZNNI8//CN//T	SCHEIBE
17	10180364	2	SPLIT PIN ISO 1234 6,3X50 St 480H SPF	SPLINT
18	451226408	1	PIN DIN 1435 25X75X65 ST.50 VERZ	BOLZEN
19	10289810	6	WASHER ISO 7089 24 300HV FLZN SPF	SCHEIBE
20	10875804	2	HEX SCREW ISO 4017 M16X55 8.8 FLZN SP	SECHSKANTSCHRAUBE
21	10289806	4	WASHER ISO 7089 16 300HV FLZN SPF	SCHEIBE
22	10875609	2	HEX NUT DIN 985 M16 8 FLZN SPF	SECHSKANTMUTTER
23	10875877	2	DOWEL PIN ISO 8752 18X36 480H SPF	SPANNSTIFT
26	965255408	1	SUPPORT TRESTLE FE//ZNNI8//CN//T0	AUFLAGEBOCK
27	976673908	6	PLATE 1.5X170X50 DC01 FE//ZNNI8//CN//T0	BLECH
28	11692827	2	HEX SCREW ISO 4017 M8X35 8.8 480H SPF	SECHSKANTSCHRAUBE
29	11140469	2	WASHER ISO 7093-1 8 200HV 480H SPF	SCHEIBE
30	97020763	1	CABIN PROTECTION 4X302X180 S315MC R	KABINENSICHERUNG
31	953873408	2	SLEEVE 25X20 11SMNPB37 FE//ZNNI8//CN/	HUELSE
32	12215977	2	WING SCREW DIN 316 M8X16 4.6 480H SPF	FLUEGELSCHRAUBE
33	451000508	2	PIN DIN 1434 10X90X85 ST.50-2K VERZ	BOLZEN
34	11968422	2	SPRING PLUG DIN 11024 2,5-2,25-42 480H	FEDERSTECKER
35	97051989	1	THREADED PLATE 10X180X30 S355MC FE//	GEWINDEPLATTE

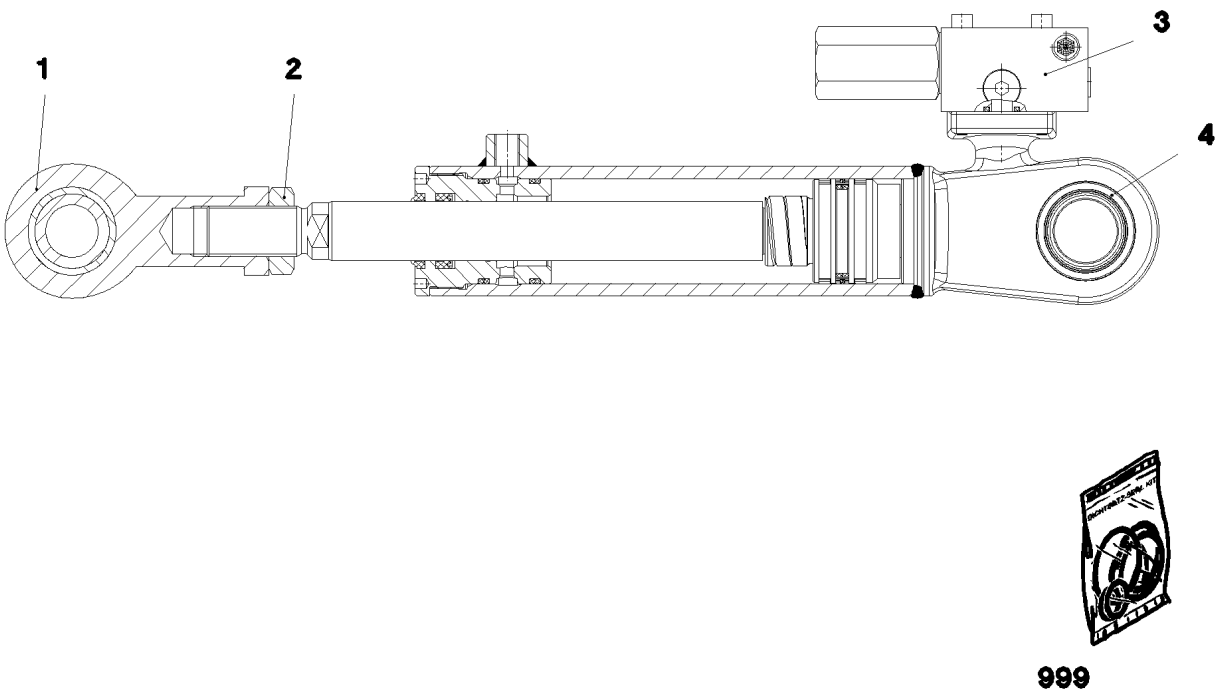

Pos.	Item	Quantity	Description	Bezeichnung
1	10491613	1	PIVOT HEAD	GELENKKOPF
2	411703308	1	HEX NUT ISO 8675 M24X2 05 A3C	SECHSKANTMUTTER
3	10218310	1	LOAD HOLDING VALVE 400BAR SPF ⇨ ❑ 317	LASTHALTEVENTIL
4	10491694	1	SPHERICAL BEARING	GELENKLAGER
999	10491695	1	DS HYDRO CYLINDER	DS HYDROZYLINDER

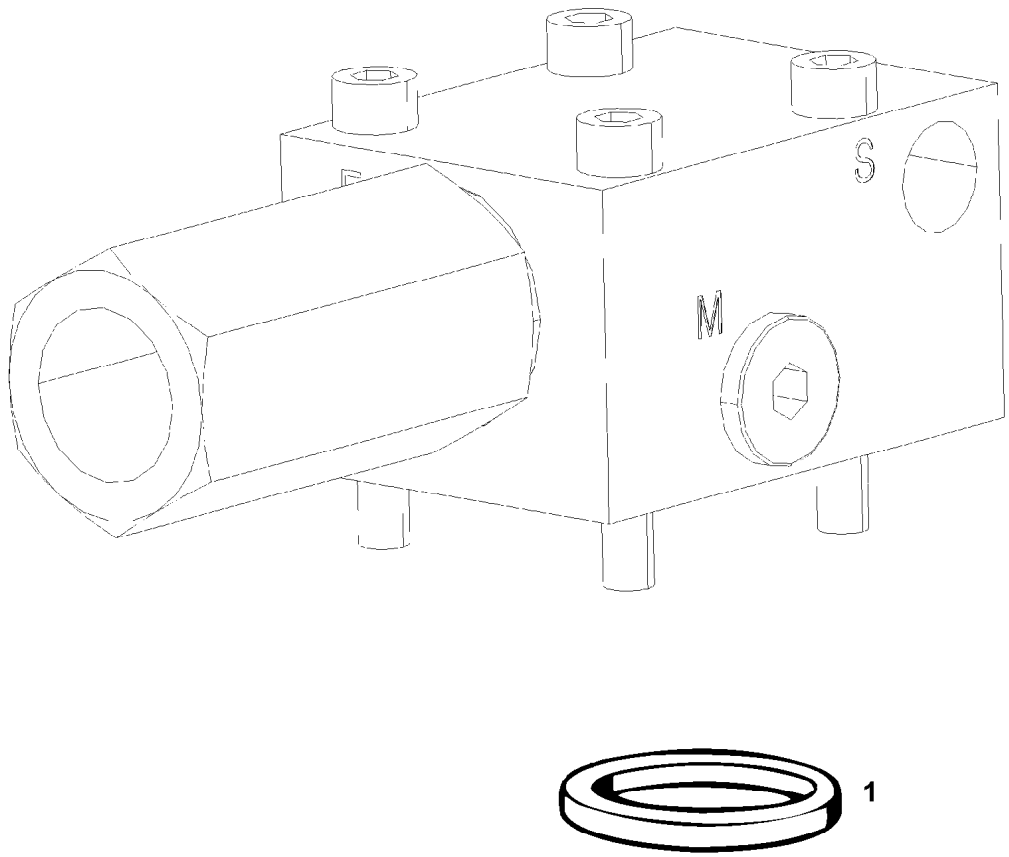

Pos.	Item	Quantity	Description	Bezeichnung
1	510746108	1	O-RING ARP 568 12,37X2,62 NBR90	O-RING

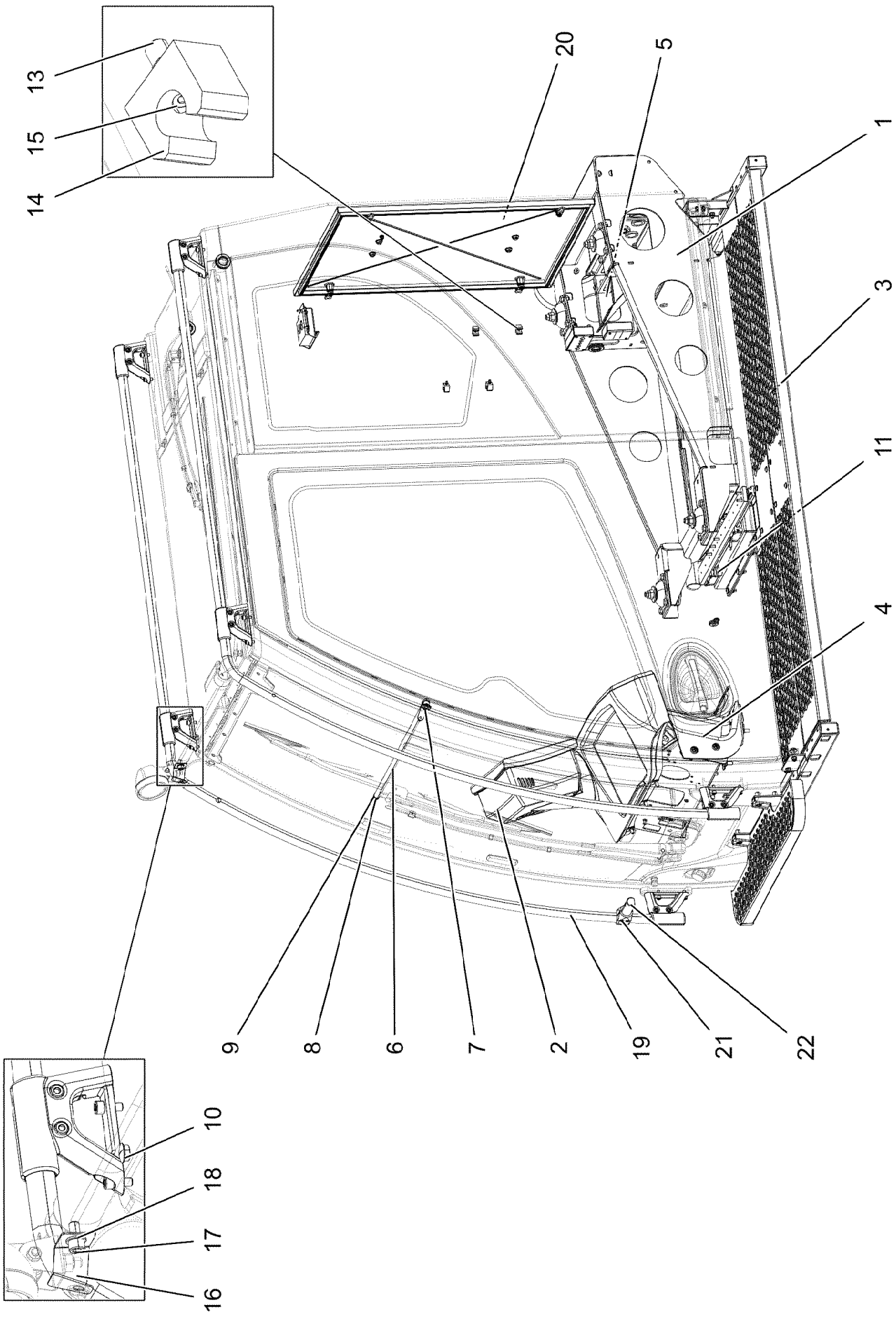
13
15
14
20
5
1
3
11
4
9
8
6
7
2
19
21
22
10
18
17
16

Pos.	Item	Quantity	Description	Bezeichnung
1	916164208	1	BEARING INSTALLATION BLKAB. ⇨ ❑ 320	LAGERUNG EINBAU
2	96015921	1	OPERATING ELEMENT INSTALLATION ⇨ ❑ 321	BEDIENELEMENTE EINBAU
3	968483708	1	STEP CPL. ⇨ ❑ 324	TRITT KPL.
4	96025887	1	PEDAL CANTILEVER INSTALLATION ⇨ ❑ 327	PEDALTRAEGER EINBAU
5	916170808	1	CABLE INLET ⇨ ❑ 328	KABELEINFUEHRUNG
6	966662508	1	PIPE WELDED SCHWARZ PULVERB.	ROHR SCHWK.
7	10429635	1	BUTTON HEAD SCREW ISO 7380-2 M8X16	HALBRUNDKOPFSCHRAUBE
8	11690048	1	HEX SCREW ISO 4017 M8X12 8.8 480H SPF	SECHSKANTSCHRAUBE
9	12103465	1	WASHER ISO 7089 8 300HV ZNNI-480H SPF	SCHEIBE
10	602424908	2	SCREW PLUG M16X1,5 MS	VERSCHLUSSSCHRAUBE
11	779020508	1	MULTI-PLATE PLUG PE-LLD	LAMELLENSTOPFEN
13	413006208	4	BLIND RIVET NUT M4 K=1,0-3,0	BLINDNIETMUTTER
14	602116008	4	LATCH CLAMP	RIEGELKLEMME
15	11691539	4	SOCKET HEAD SCREW ISO 4762 M4X10 8.8	ZYLINDERSCHRAUBE
16	97015722	1	PLATE 1.5X44X97 X5CRNI18-10	BLECH
17	404293213	1	SOCKET HEAD SCREW ISO 4762 M10X20 A2	ZYLINDERSCHRAUBE
18	420001114	1	WASHER ISO 7089 10 200HV-A4	SCHEIBE
19	916162808	1	RELING ⇨ ❑ 330	RELING
20	968462608	1	INSTALLATION SWITCH CAB. COVER ⇨ ❑ 332	SCHALTSCHRANKDECKEL EIN
21	10285701	1	TEE 30 G-ALMG TROWALPOLIERT	T-STUECK
(1)	10875588	2	SOCKET HEAD SCREW ISO 4762 M6X25 8.8	ZYLINDERSCHRAUBE
22	97011246	1	AXLE 30.0X95 S355J2C+C FE//ZNNI8//CN//T	ACHSE

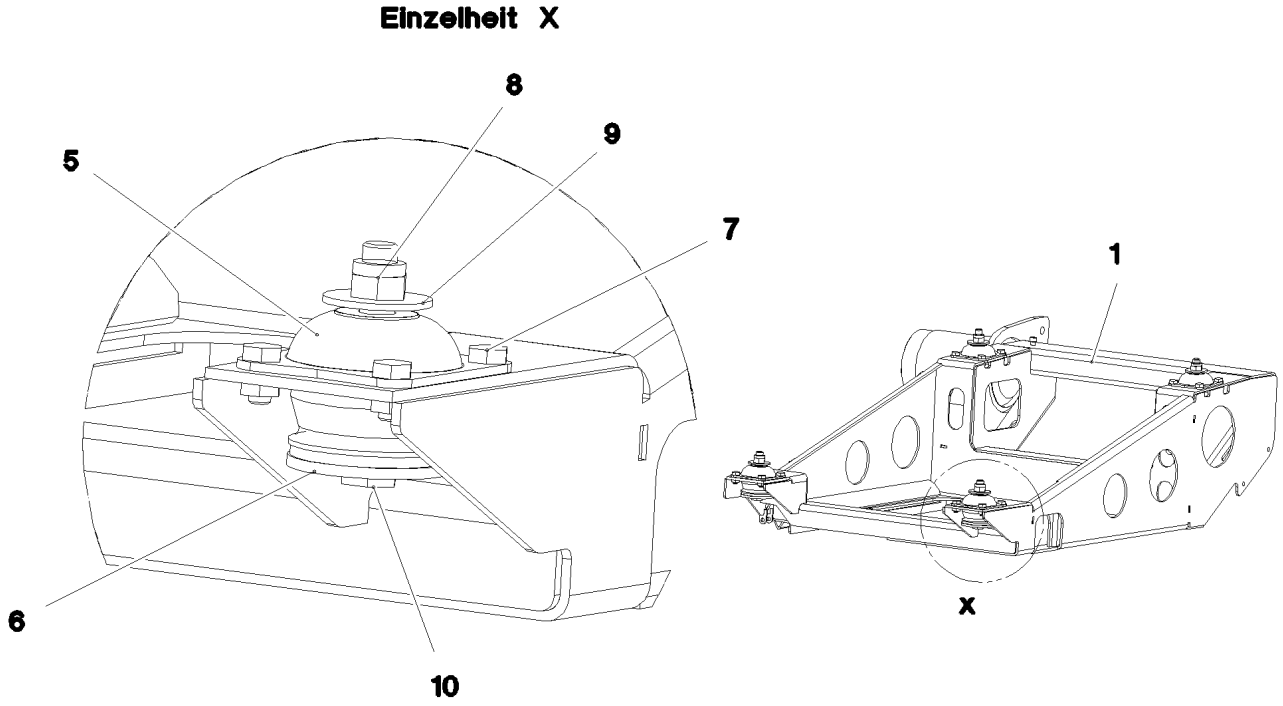

Pos.	Item	Quantity	Description	Bezeichnung
1	966553108	1	SUPPORT FRAME RAL 7016 SPF	TRAGRAHMEN
5	10291989	4	CONICAL MOUNT	KONUSLAGER
6	10875905	4	LIMIT STOP RING 16,5X75X5 ST FLZN SPF	ANSCHLAGSCHEIBE
7	10197730	16	HEX SCREW ISO 4017 M10X20 8.8 ZNNI-480	SECHSKANTSCHRAUBE
8	10875609	4	HEX NUT DIN 985 M16 8 FLZN SPF	SECHSKANTMUTTER
9	4000809	4	WASHER ISO 7093-1 16 300HV FLZN	SCHEIBE
10	10875797	4	HEX SCREW ISO 4014 M16X100 8.8 FLZN SP	SECHSKANTSCHRAUBE

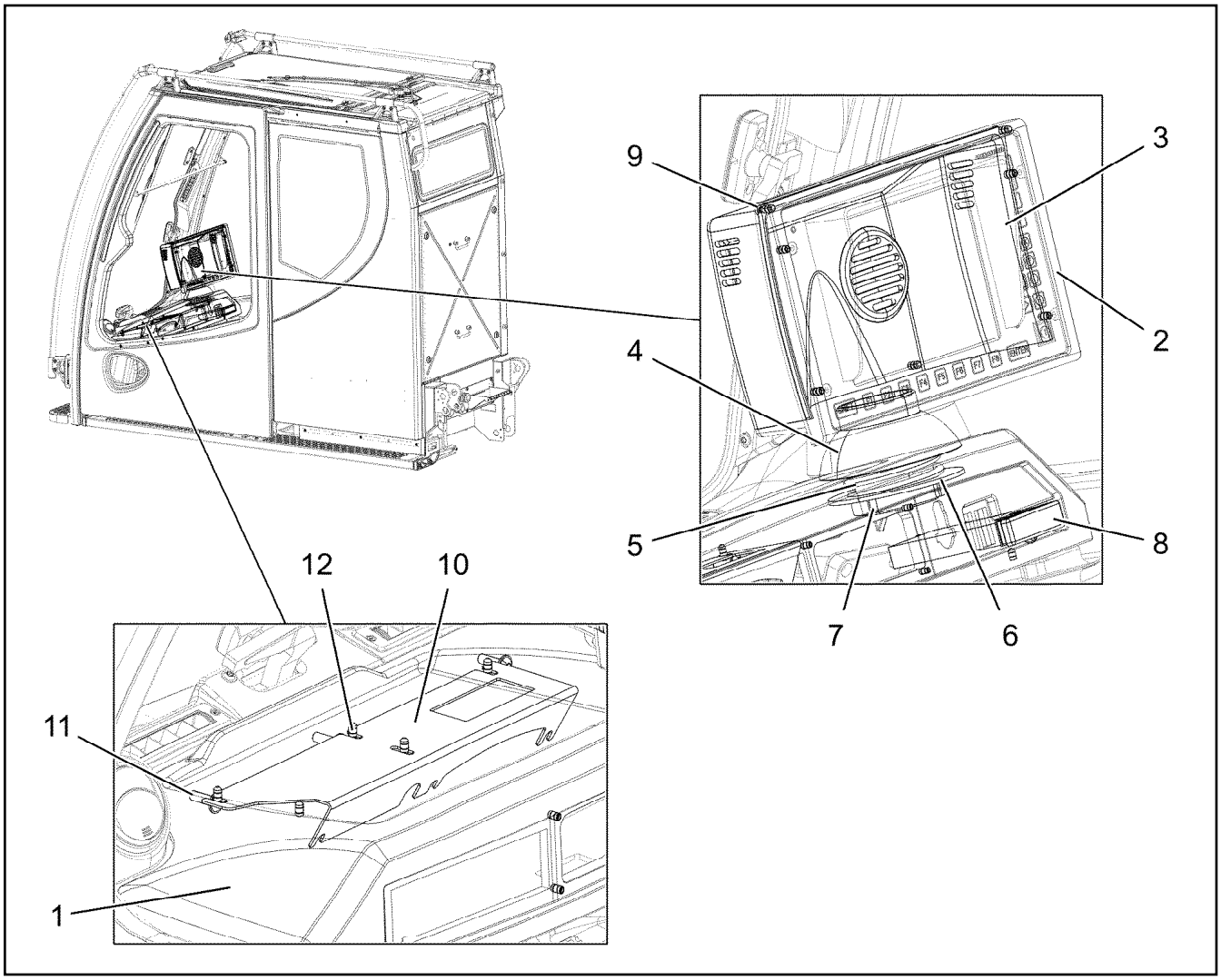

Pos.	Item	Quantity	Description	Bezeichnung
1	96015926	1	MONITOR SUPPORT 162X765X328 PLIXXOP	MONITORTRAEGER
2	963257908	1	MONITOR HOUSING GLUED SPF	MONITORGEHAEUSE GEKLEBT
3	979207008	1	PANELLING MONITOR HOUSING ABS SPF	VERKLEIDUNG MONITORGEHAE
4	975040308	1	BALL ELEMENT 145X43 PLIXXOPOL R* SPF	KUGELELEMENT
5	10297691	1	COMPRESSION SPRING 8X92X50 FEDERST	DRUCKFEDER
6	975208408	1	PLATE 4X138X138 S315MC FE//ZNNI8//CN//T	BLECH
7	241047802	1	SLOTTED NUT DIN 1804 M80X2 H	NUTMUTTER
8	96057226	1	CUP HOLDER INSTALLATION ⇨ ❑ 322	BECHERHALTER EINBAU
9	11658059	4	PAN-HEAD SCREW ISO 7045 M5X12 4.8 480	FLACHKOPFSCHRAUBE
10	97003805	1	PLATE 2X381X148 DC01 FE//ZNNI8//CN//T0	BLECH
11	10301319	5	BUTTON HEAD SCREW ISO 7380-2 M8X25 A	HALBRUNDKOPFSCHRAUBE
12	11697855	4	BUTTON HEAD SCREW ISO 7380-2 M5X8 0	HALBRUNDKOPFSCHRAUBE

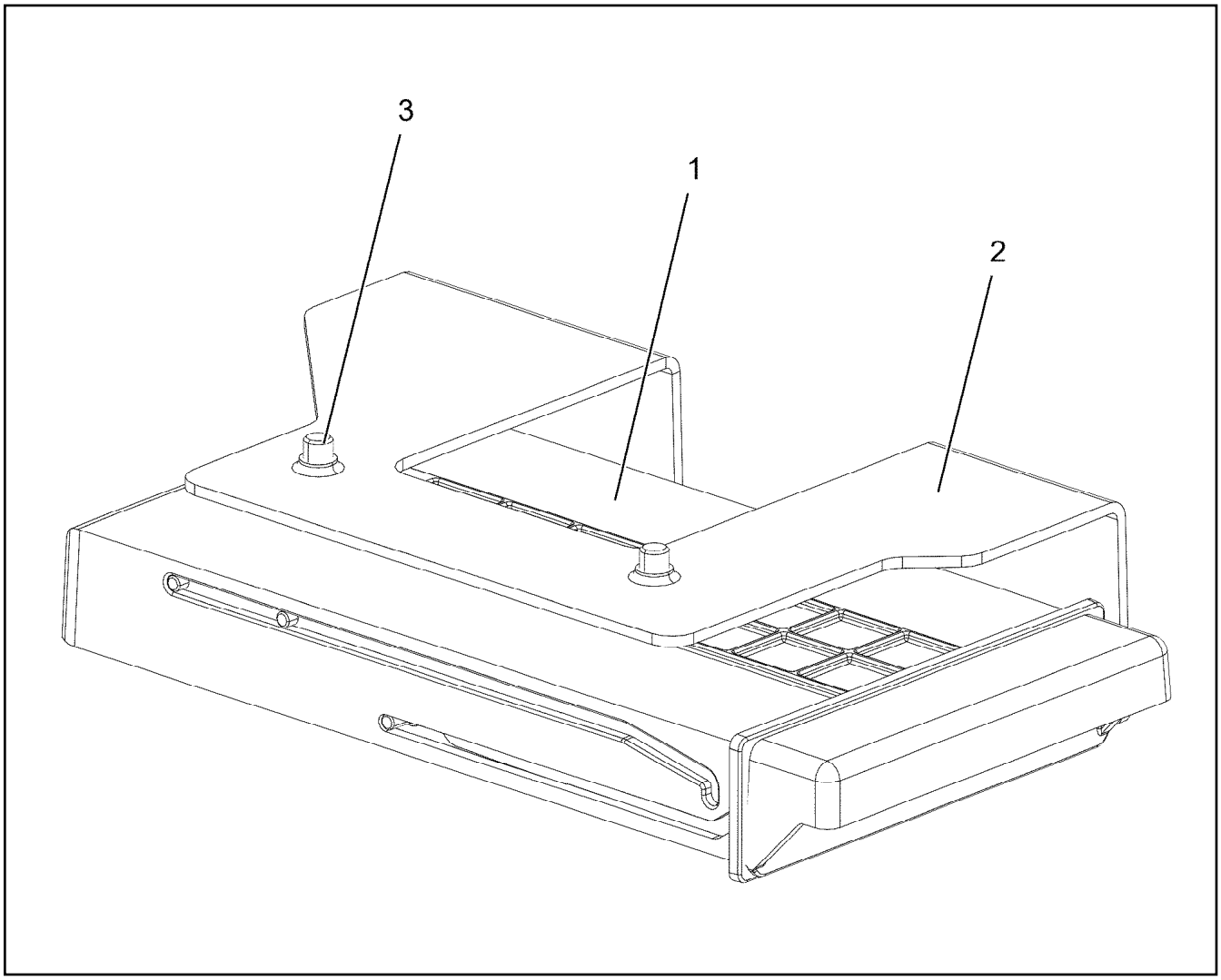

Pos.	Item	Quantity	Description	Bezeichnung
1	96048757	1	CUP HOLDER ⇨ ❑ 323	BECHERHALTER
2	97134822	1	HOLDER 2X163X140 DC01 FE//ZNNI8//CN//T	HALTER
3	10875483	2	BUTTON HEAD SCREW ISO 7380-2 M5X10 0	HALBRUNDKOPFSCHRAUBE

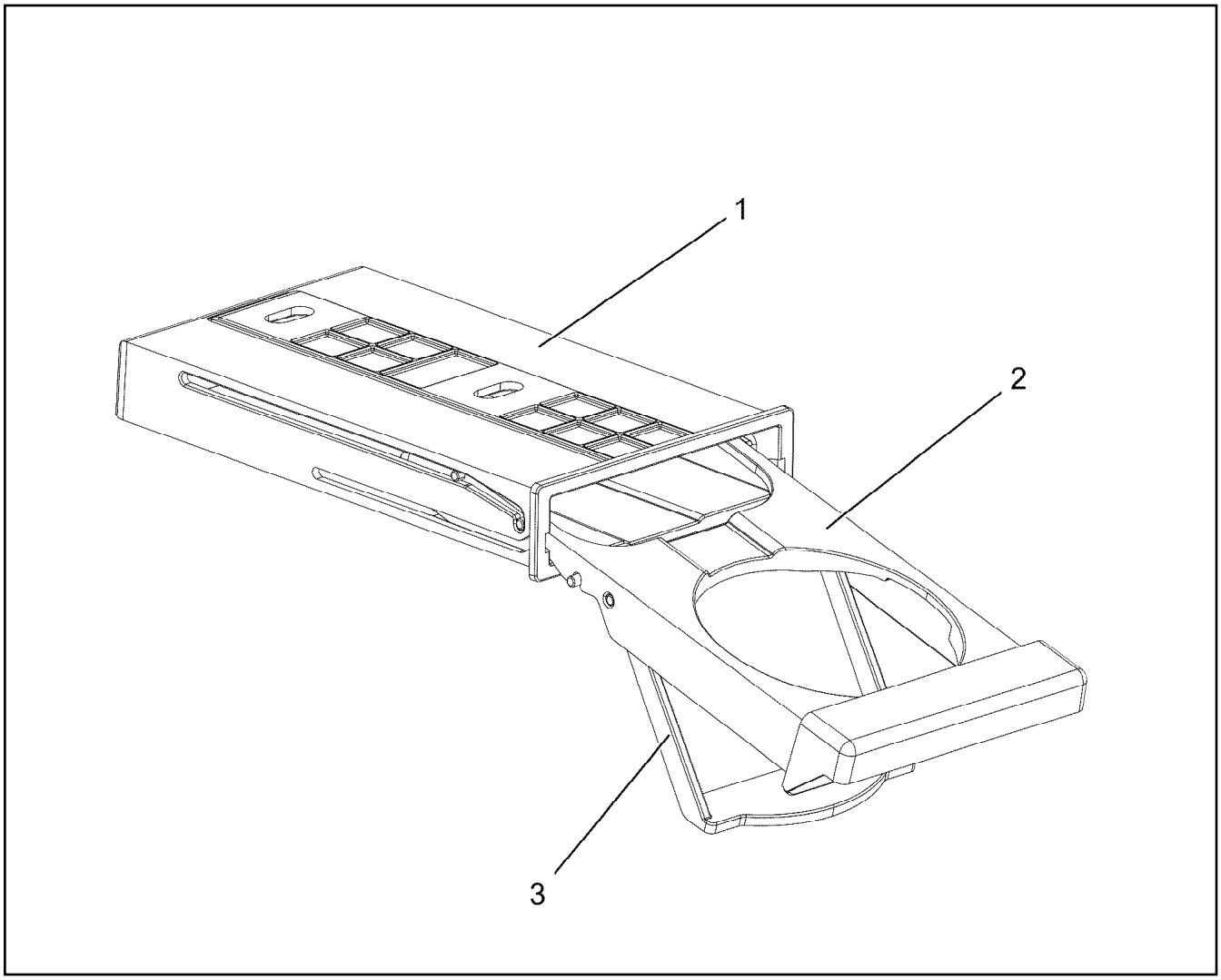

Pos.	Item	Quantity	Description	Bezeichnung
1	97136698	1	HOUSING RAL 9005 SPF	GEHAEUSE
2	97136699	1	FRAME RAL 9005 SPF	SCHIEBERAHMEN
3	97136700	1	HOLDING BRACKET RAL 9005 SPF	HALTEBUEGEL

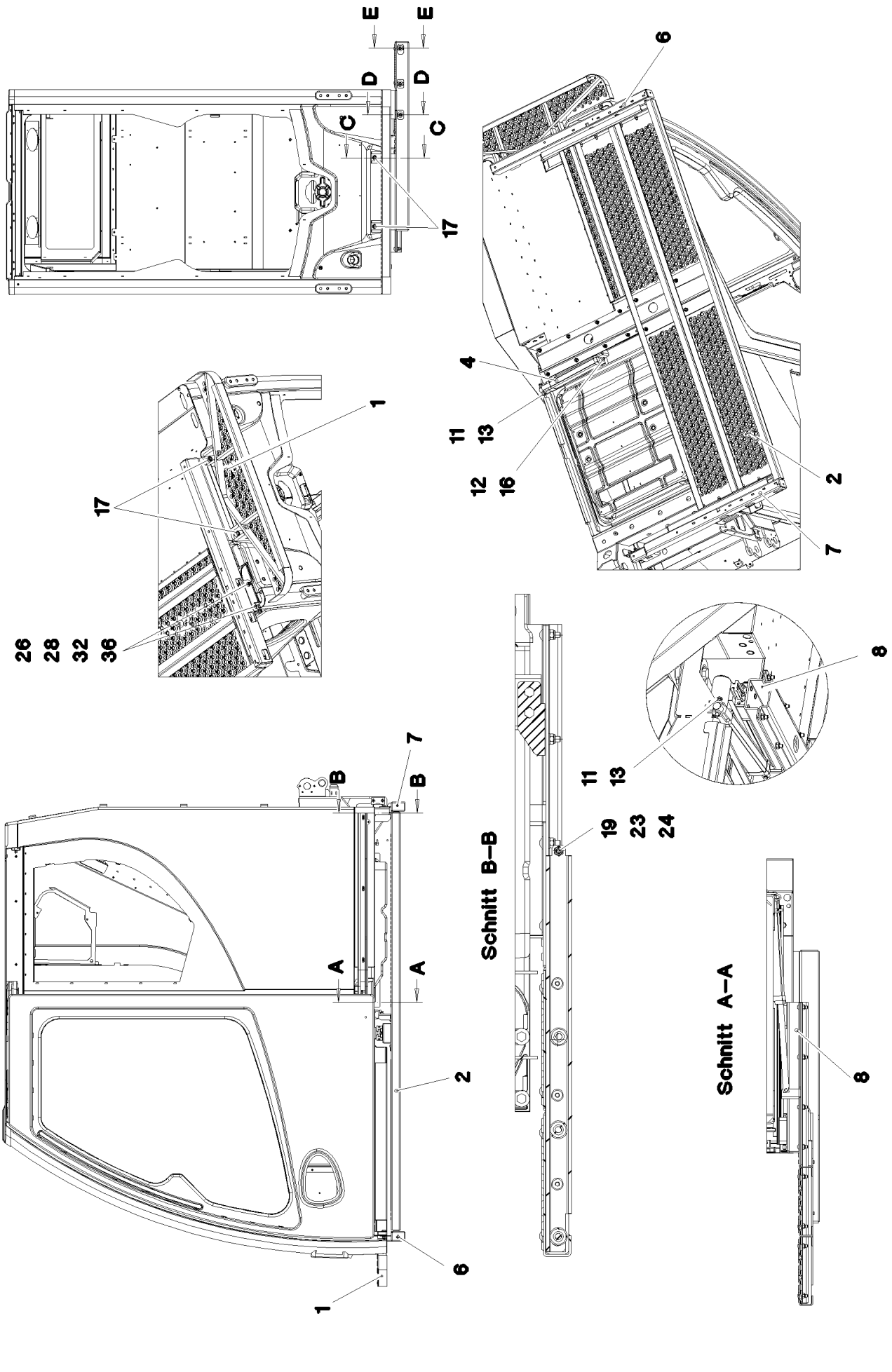

16.11.2023 085914 LIEBHERR	**etk_en_de_078966 LTR 1100** **STEP CPL.** **TRITT KPL.**	❑ 324 (1/3) **968483708**

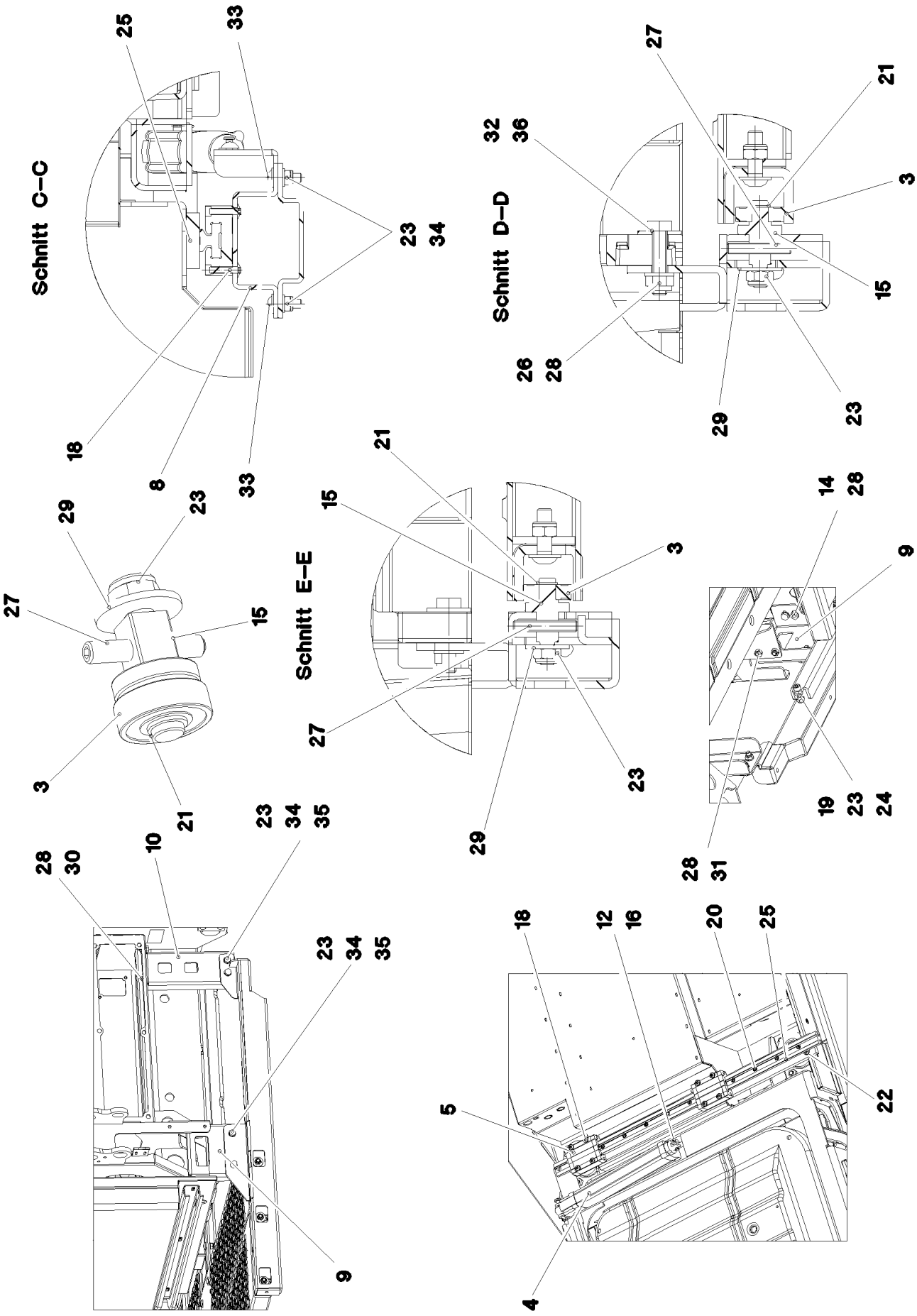
Schnitt C–C
25
33
23
34
18
8
33
Schnitt D–D
27
21
32
36
3
15
26
28
29
23
Schnitt E–E
21
15
3
27
23
29
14
28
9
19
23
24
28
31
29
23
27
15
3
21
23
34
35
10
28
30
23
34
35
9
18
12
16
20
25
5
22
4

Pos.	Item	Quantity	Description	Bezeichnung
1	966270808	1	TREAD IN FRONT SPF	TRITT VORN
2	968485308	1	SIDE STEP	TRITT SEITLICH
(1)	968493408	1	TREAD SPF	TRITT
(2)	97042014	1	PLATE 4X927X220 X5CRNI18-10 GLASPERL	BLECH
(3)	97042015	1	PLATE 5X590X79 X5CRNI18-10 GLASPERL	BLECH
(4)	97042016	1	PLATE 5X590X79 X5CRNI18-10 GLASPERL	BLECH
(5)	10301319	21	BUTTON HEAD SCREW ISO 7380-2 M8X25 A	HALBRUNDKOPFSCHRAUBE
(6)	411903108	21	HEX NUT DIN 985 M8 A2-70	SECHSKANTMUTTER
(7)	420060705	8	WASHER ISO 7089 8 200HV-A2	SCHEIBE
3	10294494	6	DEEP GROOVE BALL BEARING DIN 625 S6	RILLENKUGELLAGER
4	10292008	1	ELECTRIC CYLINDER 24V	ELEKTROZYLINDER
5	11007589	1	LINEAR SLIDEWAY SYSTEM 20-722	LINEARGLEITFUEHRUNGSSYS
6	968485508	1	CARRIER T ZN O	TRAEGER VORN
7	968485608	1	CARRIER T ZN O	TRAEGER HINTEN
8	97041914	1	PLATE 4X528X266 S315MC RAL 7016,SDGL	BLECH
9	97041915	1	PLATE 4X142X218 S315MC RAL 7016,SDGL	BLECH
10	97041916	1	PLATE 4X138X242 S315MC RAL 7016,SDGL	BLECH
11	451210308	1	PIN DIN 1435 8X50X47 ST.50 FE//ZN20//C	BOLZEN
12	10875872	1	SPLIT PIN ISO 1234 1X14 ST 480H SPF	SPLINT
13	10180340	1	SPLIT PIN ISO 1234 1,6X14 A2	SPLINT
14	11690048	2	HEX SCREW ISO 4017 M8X12 8.8 480H SPF	SECHSKANTSCHRAUBE
15	974922808	6	PIN 25.0X50 42CRMO4+QT	BOLZEN
16	10875678	1	PIN ISO 2341 B6X25X22 ST 480H SPF	BOLZEN
17	404294613	4	SOCKET HEAD SCREW ISO 4762 M12X30 A2	ZYLINDERSCHRAUBE
18	10412853	8	BUTTON HEAD SCREW AEHNL.ISO 7380-2	HALBRUNDKOPFSCHRAUBE
19	510737408	2	HEX NUT ISO 4032 M8 A2-70	SECHSKANTMUTTER
20	10875583	11	SOCKET HEAD SCREW ISO 4762 M5X20 8.8	ZYLINDERSCHRAUBE
21	12100338	6	RETAINING RINGS DIN 471 9X1 480H SPF	SICHERUNGSRING
22	10875598	5	SOCKET HEAD SCREW ISO 4762 M8X20 8.8	ZYLINDERSCHRAUBE
23	411903108	20	HEX NUT DIN 985 M8 A2-70	SECHSKANTMUTTER
24	404230208	2	SOCKET HEAD SCREW ISO 4762 M8X30 A2	ZYLINDERSCHRAUBE
25	97001317	1	PROFILE 667X50X12 ALMGSI0.5	PROFIL
26	10875614	2	HEX NUT DIN 985 M8 8 480H SPF	SECHSKANTMUTTER
27	12106077	6	GRUB SCREW ISO 4026 M6X35 45H 480H SP	GEWINDESTIFT
28	12103465	8	WASHER ISO 7089 8 300HV ZNNI-480H SPF	SCHEIBE
29	421861405	6	WASHER ISO 7093-1 8 200HV-A2	SCHEIBE
30	11651612	2	HEX SCREW ISO 4017 M8X16 8.8 480H SPF	SECHSKANTSCHRAUBE
31	11651767	2	HEX SCREW ISO 4017 M8X20 8.8 480H SPF	SECHSKANTSCHRAUBE
32	11692827	2	HEX SCREW ISO 4017 M8X35 8.8 480H SPF	SECHSKANTSCHRAUBE
33	10301319	8	BUTTON HEAD SCREW ISO 7380-2 M8X25 A	HALBRUNDKOPFSCHRAUBE
34	420060705	16	WASHER ISO 7089 8 200HV-A2	SCHEIBE
35	406590105	4	HEX SCREW ISO 4017 M8X25 A2-70	SECHSKANTSCHRAUBE
36	11140469	2	WASHER ISO 7093-1 8 200HV 480H SPF	SCHEIBE

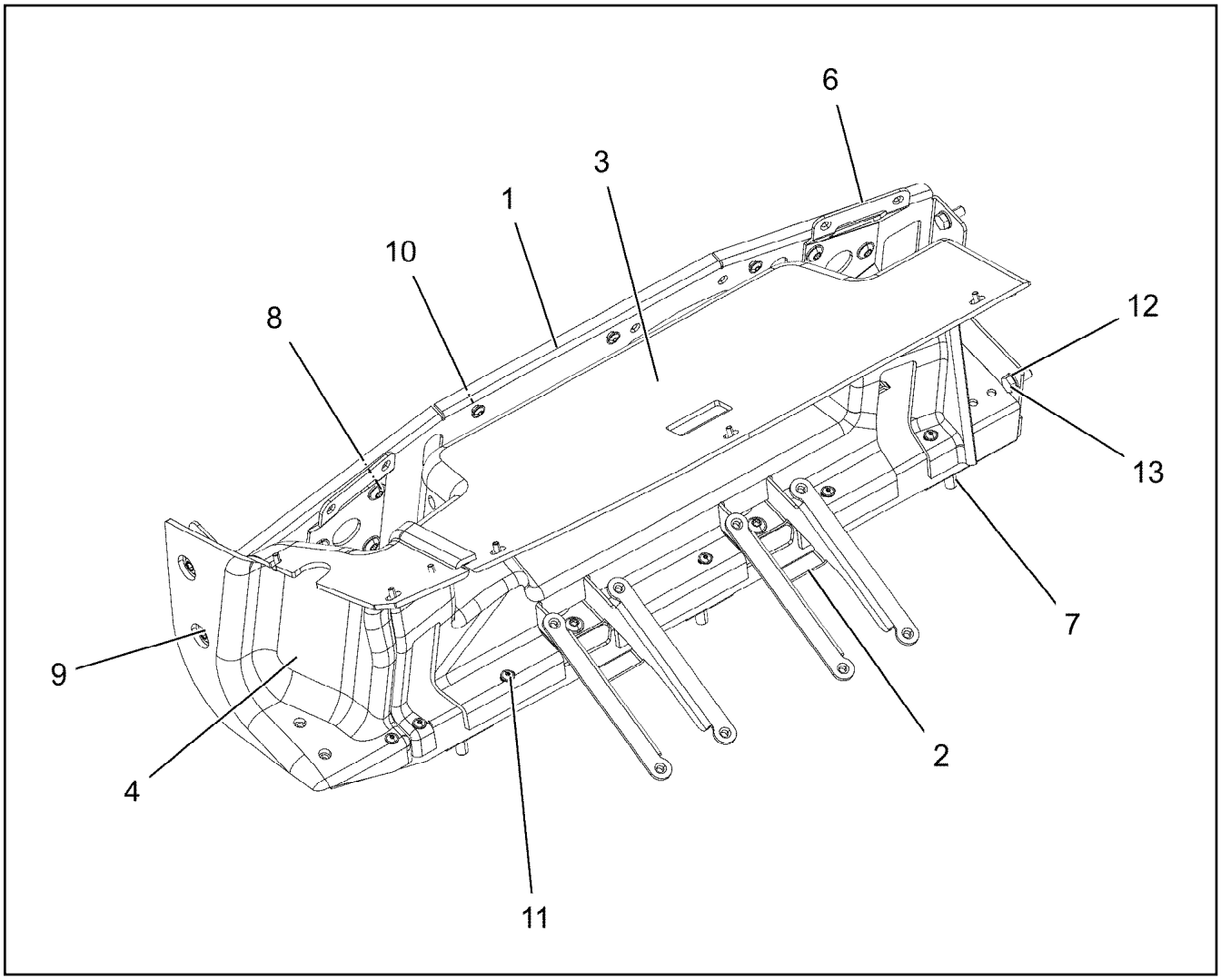

Pos.	Item	Quantity	Description	Bezeichnung
1	966629308	1	PLATE WELDED FE//ZNNI8//CN//T0	BLECH SCHWK.
2	974680008	2	PLATE 3X295X159 S355MC FE//ZNNI8//CN//T	BLECH
3	97105652	1	PANELLING PEDAL 258X599X279 ABS SPF	VERKLEIDUNG PEDALE
4	97089358	1	PANELLING PEDAL 315X118X279 ABS SPF	VERKLEIDUNG PEDALE
6	97081862	2	PLATE 3X193X93 S355MC FE//ZNNI8//CN//T	BLECH
7	10875448	3	BUTTON HEAD SCREW ISO 7380-2 M10X25	HALBRUNDKOPFSCHRAUBE
8	12102696	10	BUTTON HEAD SCREW AEHNL.ISO 7380-2	HALBRUNDKOPFSCHRAUBE
9	10875475	2	BUTTON HEAD SCREW AEHNL.ISO 7380-2	HALBRUNDKOPFSCHRAUBE
10	10875468	3	BUTTON HEAD SCREW AEHNL.ISO 7380-2	HALBRUNDKOPFSCHRAUBE
11	12229337	14	BUTTON HEAD SCREW ISO 7380-2 M5X12	HALBRUNDKOPFSCHRAUBE
12	12103465	3	WASHER ISO 7089 8 300HV ZNNI-480H SPF	SCHEIBE
13	11651767	3	HEX SCREW ISO 4017 M8X20 8.8 480H SPF	SECHSKANTSCHRAUBE

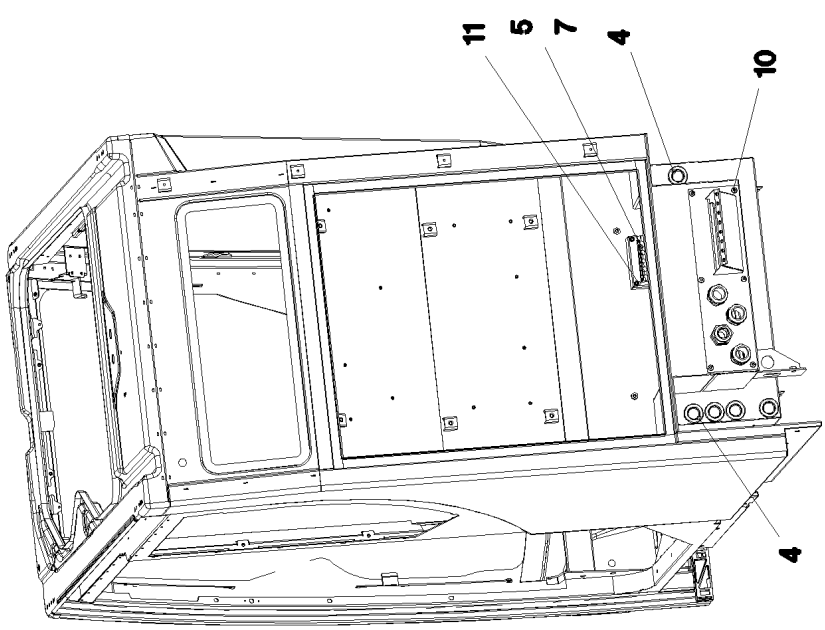

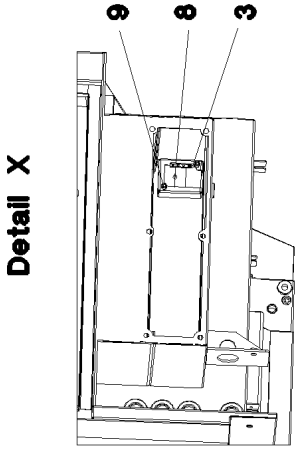

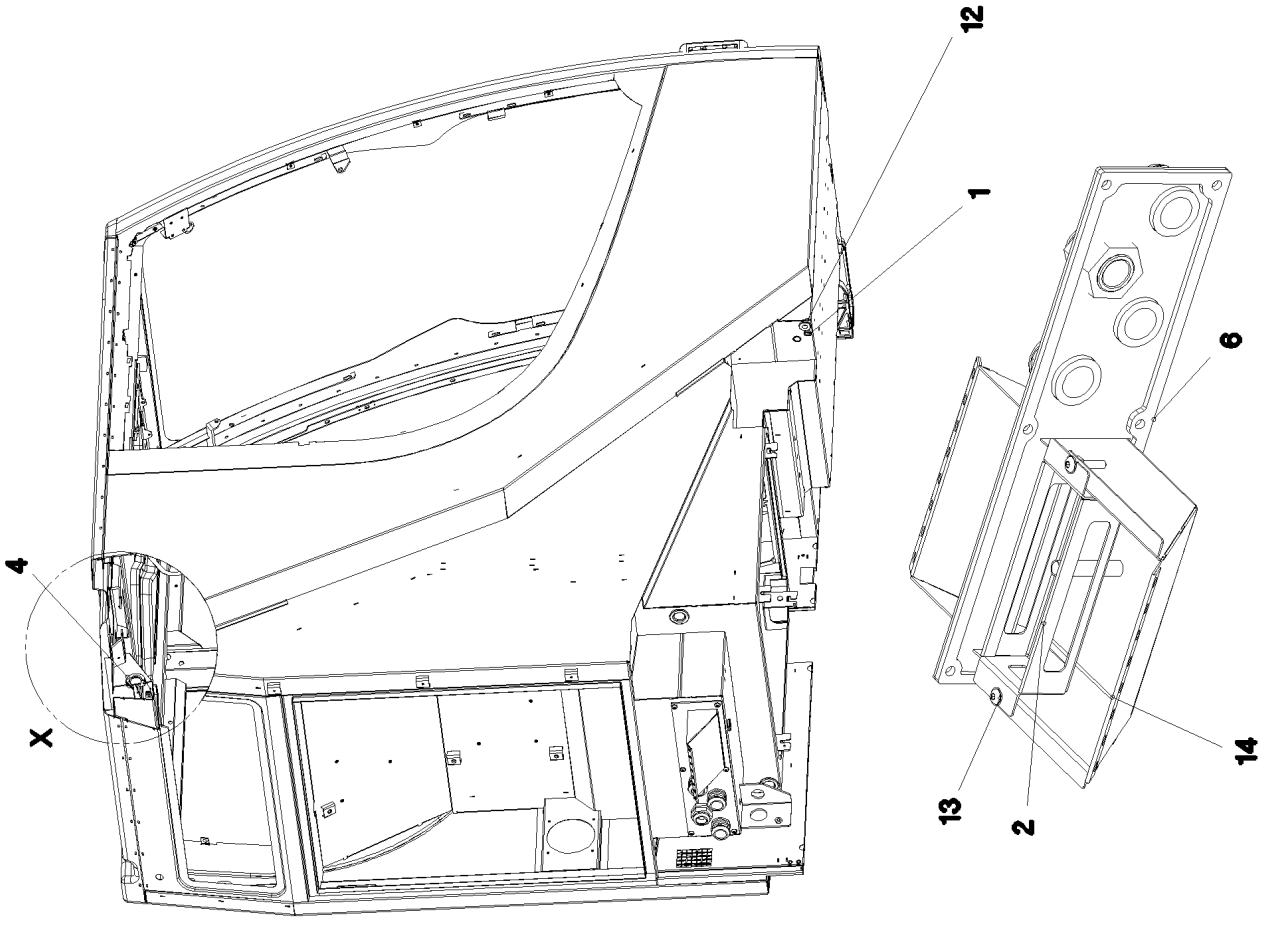

16.11.2023 068850 LIEBHERR	**etk_en_de_078966 LTR 1100** **CABLE INLET** **KABELEINFUEHRUNG**	❑ 328 (1/2) **916170808**

Pos.	Item	Quantity	Description	Bezeichnung
1	602701308	1	GROMMET 10/12/17,5 PVC BK	DURCHFUEHRUNGSTUELLE
2	97000735	1	PLATE 1.5X290X162 DC01 FE//ZNNI8//CN//T	BLECH
3	97002645	1	PLATE 1.5X131X117 DC01 FE//ZNNI8//CN//T	BLECH
4	553027808	7	DIAPHRAGM SOCKET 29/37/44	MEMBRANTUELLE
5	976094108	1	PLATE 1.5X174X114 DC01 RAL 7037 SPF	BLECH
6	97012288	1	SEAL 439X120X5 POLYALEFIN	DICHTUNG
7	976094308	1	SEAL 120X60X 30 SCHWARZ	DICHTUNG
8	976193208	1	SEAL 78X64 30	DICHTUNG
9	10875590	2	SOCKET HEAD SCREW ISO 4762 M6X35 8.8	ZYLINDERSCHRAUBE
10	10412851	6	BUTTON HEAD SCREW AEHNL.ISO 7380-2	HALBRUNDKOPFSCHRAUBE
11	11820284	4	SOCKET HEAD SCREW ISO 4762 M6X30 8.8	ZYLINDERSCHRAUBE
12	602600808	2	CABLE COUPLING BOX 12/21/25 EDPM 60	KABELMUFFE
13	10410198	2	BUTTON HEAD SCREW ISO 7380-2 M6X30 A	HALBRUNDKOPFSCHRAUBE
14	966241008	1	TRAY RAL 7016 SPF	WANNE SCHWK.
15	97071962	1	PLATE 2X156X137 DC01 RAL 7037 SPF	BLECH
16	97071963	1	SEAL 85.5X89X30 ZP-30 S	DICHTUNG
17	10875488	3	BUTTON HEAD SCREW ISO 7380-2 M6X12 0	HALBRUNDKOPFSCHRAUBE

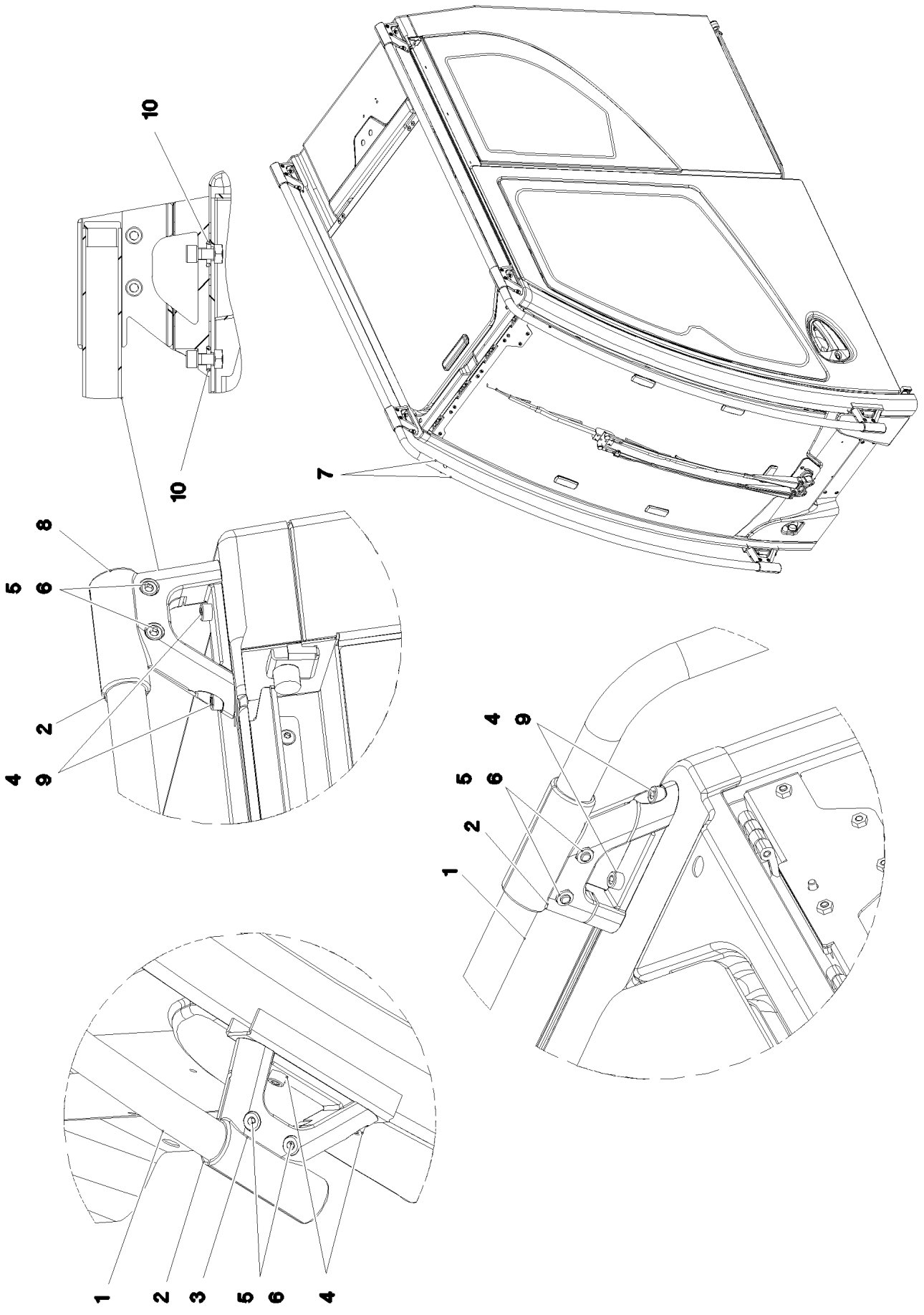
10
10
7
8
5
6
2
4
9
4
9
5
6
2
1
1
2
3
5
6
4

Pos.	Item	Quantity	Description	Bezeichnung
1	975218508	2	TUBE 1959X1553X30 X5CRNI18-10	ROHR
2	975218608	6	HOLDER 1.4308	HALTER
3	975384508	6	HOLDER 1.4308	HALTER
4	10007677	12	SOCKET HEAD SCREW ISO 4762 M8X20 A2	ZYLINDERSCHRAUBE
5	10007205	12	SOCKET HEAD SCREW ISO 4762 M8X25 A2	ZYLINDERSCHRAUBE
6	411903108	12	HEX NUT DIN 985 M8 A2-70	SECHSKANTMUTTER
7	10678375	2	STOP PLUG D10,7 LD-PE	STOPFEN
8	10678377	2	MULTI-PLATE PLUG 28MM PE-LLD	LAMELLENSTOPFEN
9	710100708	8	SEALING RING DIN 7603 A8X12X1 CU	DICHTRING
10	726405608	12	O-RING 14X3 NBR70	O-RING

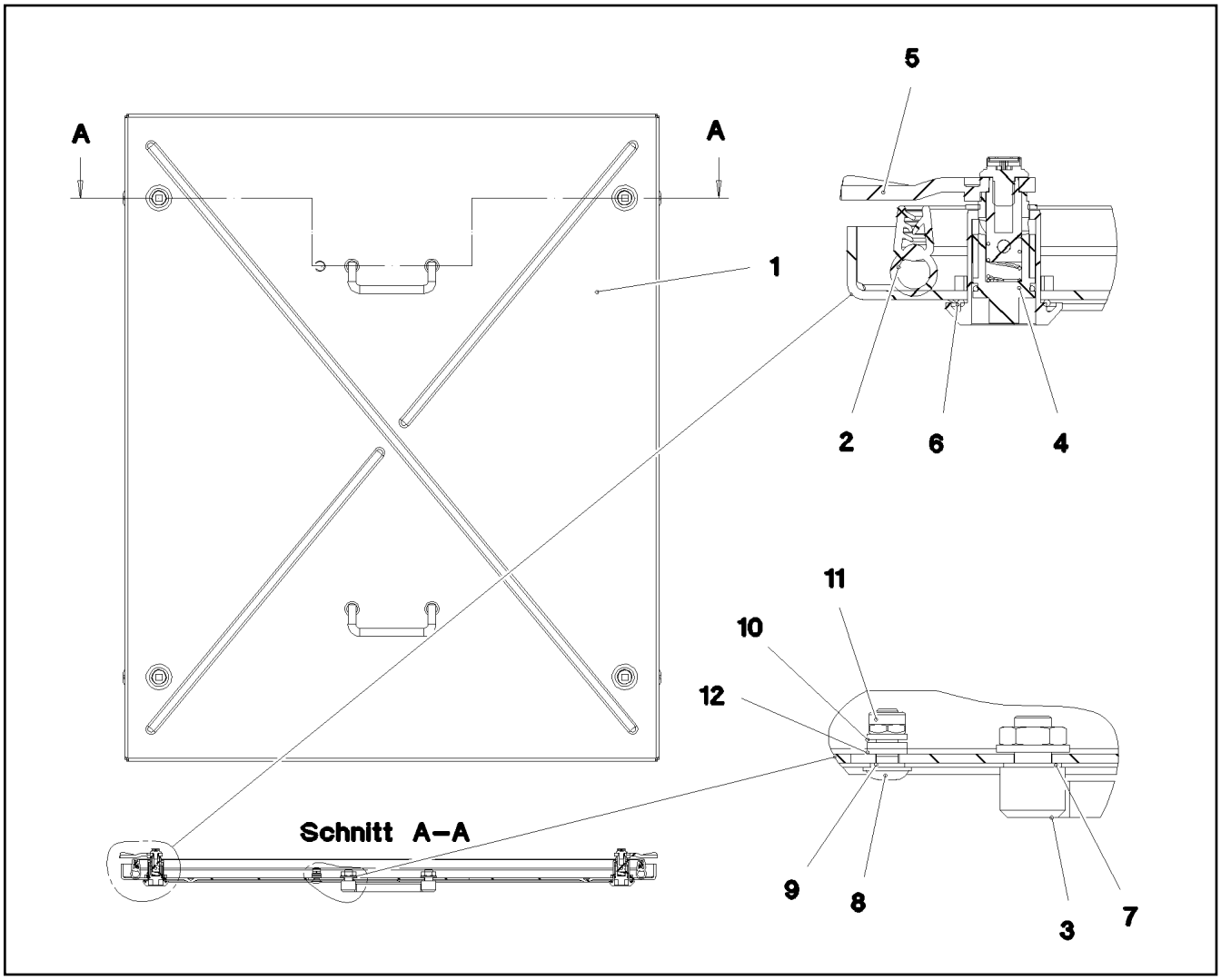

Pos.	Item	Quantity	Description	Bezeichnung
1	97039558	1	PLATE 2.5X699X839 ALMG3 H111 RAL 7016,	BLECH
2	97007649	1	SEAL 645X786 EPDM	DICHTUNG
3	10870376	2	POIGNEE 118X18X43	KLAPPGRIFF
4	10650295	4	SASH LOCK	VORREIBER
5	570340077	4	TONGUE	ZUNGE
7	710101408	4	SEALING RING DIN 7603 A10X16X1 CU	DICHTRING
8	10412851	1	BUTTON HEAD SCREW AEHNL.ISO 7380-2	HALBRUNDKOPFSCHRAUBE
9	710100408	1	SEALING RING DIN 7603 A6,5X9,5X1 CU	DICHTRING
10	10035694	2	WASHER ISO 7092 6 200HV-A2	SCHEIBE
11	411903008	1	HEX NUT DIN 985 M6 A2-70	SECHSKANTMUTTER
12	12102694	1	SERRATED LOCK WASHER DIN 6798 A 6.4	FAECHERSCHEIBE

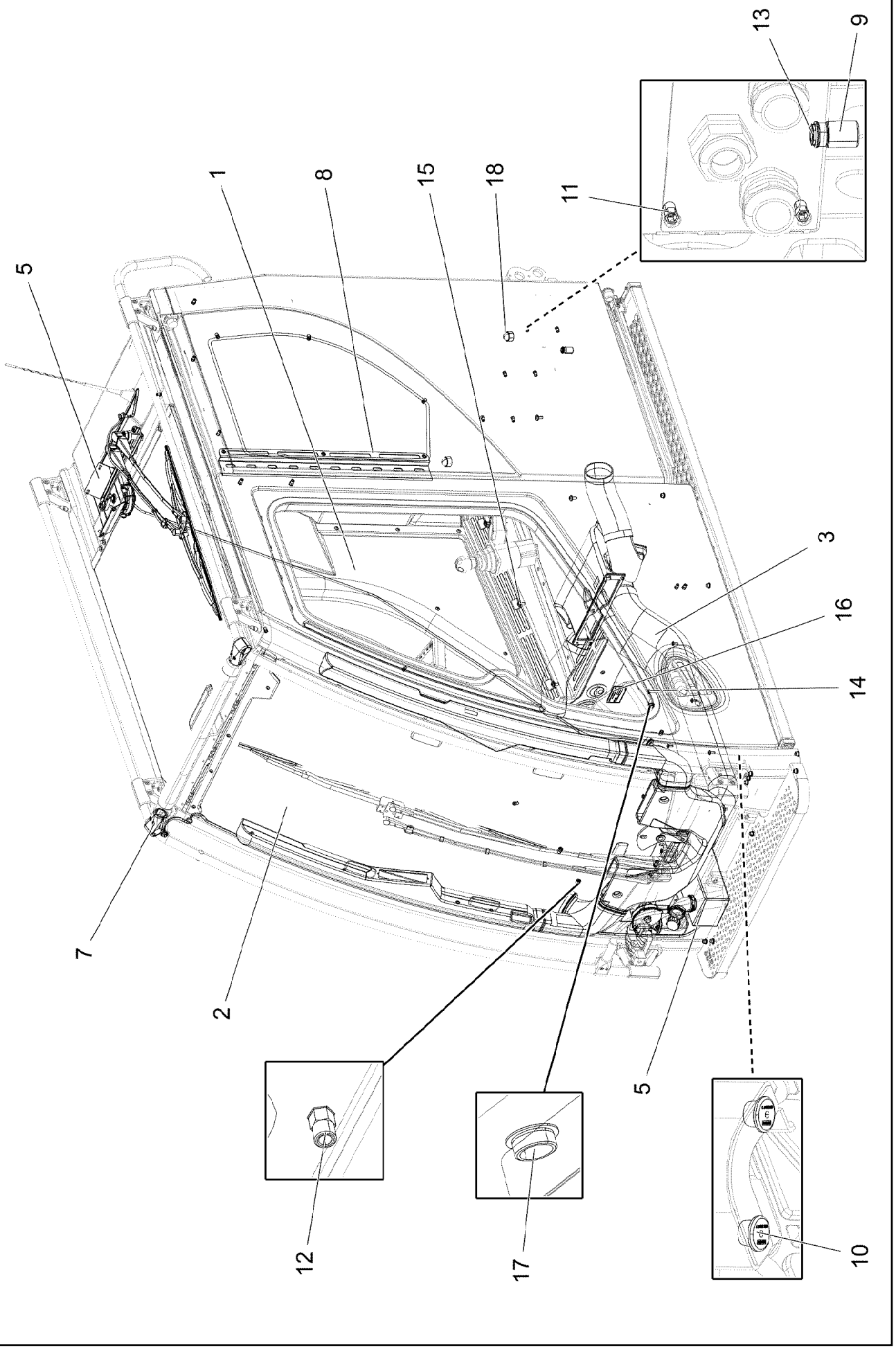
13
9
1
8
15
18
11
5
3
16
14
7
2
5
12
17
10

Pos.	Item	Quantity	Description	Bezeichnung
1	917305408	1	INTERNAL PANELLING INSTALLATIO ⇨ ❑ 335	INNENVERKLEIDUNG EINBAU
2	916162508	1	WINDOW ASSEMBLY SPF ⇨ ❑ 345	SCHEIBEN EINBAU
3	916168308	1	AIR DUCT ⇨ ❑ 351	LUFTFUEHRUNG
5	916163008	1	WIPERS INSTALLATION ⇨ ❑ 353	WISCHANLAGE EINBAU
7	97009160	2	HOLDER 44X88.5X40 G-ALSIMG	HALTER
8	97025690	1	PLATE 2X700X109 DC01 FE//ZNNI8//CN//T0	BLECH
9	971565208	1	SPOUT	TUELLE
10	779016501	10	BLANKING PLUG GPN 300 F7 M12X1 LD-PE	VERSCHLUSSSTOPFEN
11	10042593	19	BLIND RIVET NUT M6 K=1,5-3,5 ST CR6-FRE	BLINDNIETMUTTER
12	12100289	9	BLIND RIVET NUT M8 K=3,0-5,0 480H SPF	BLINDNIETMUTTER
13	12100265	1	BLIND RIVET NUT M10 K=2,0-5,5 480H SPF	BLINDNIETMUTTER
14	10875468	12	BUTTON HEAD SCREW AEHNL.ISO 7380-2	HALBRUNDKOPFSCHRAUBE
15	10875485	6	BUTTON HEAD SCREW AEHNL.ISO 7380-2	HALBRUNDKOPFSCHRAUBE
16	97038433	1	SIGN 1X75X45 ALUMINIUM	SCHILD
17	602424908	1	SCREW PLUG M16X1,5 MS	VERSCHLUSSSCHRAUBE
18	779040801	2	PROTECTING CAP SW 24	SCHUTZKAPPE

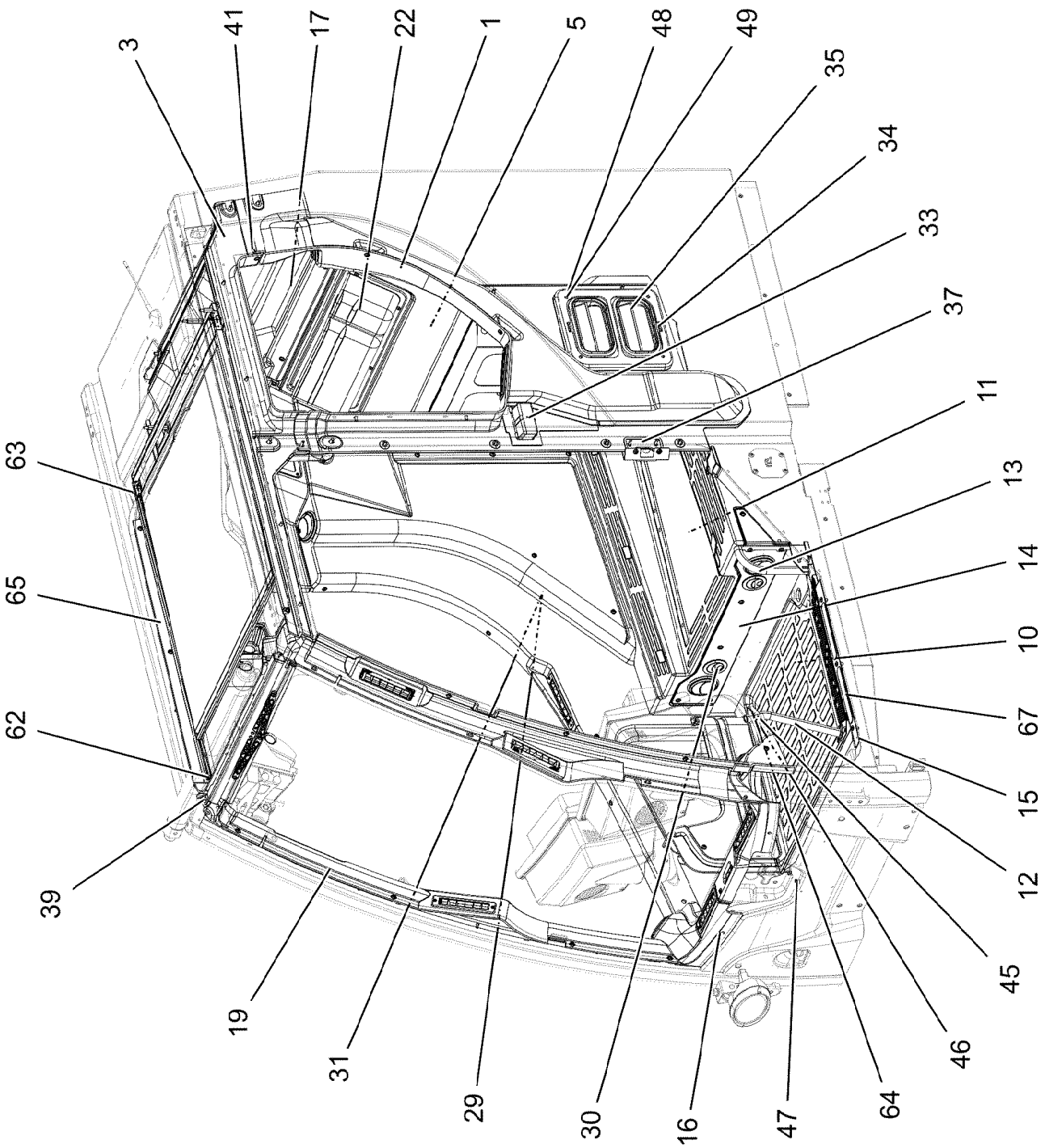
3
41
17
22
1
5
48
49
35
34
33
37
11
13
14
10
67
15
12
45
46
64
47
16
30
29
31
19
39
62
65
63

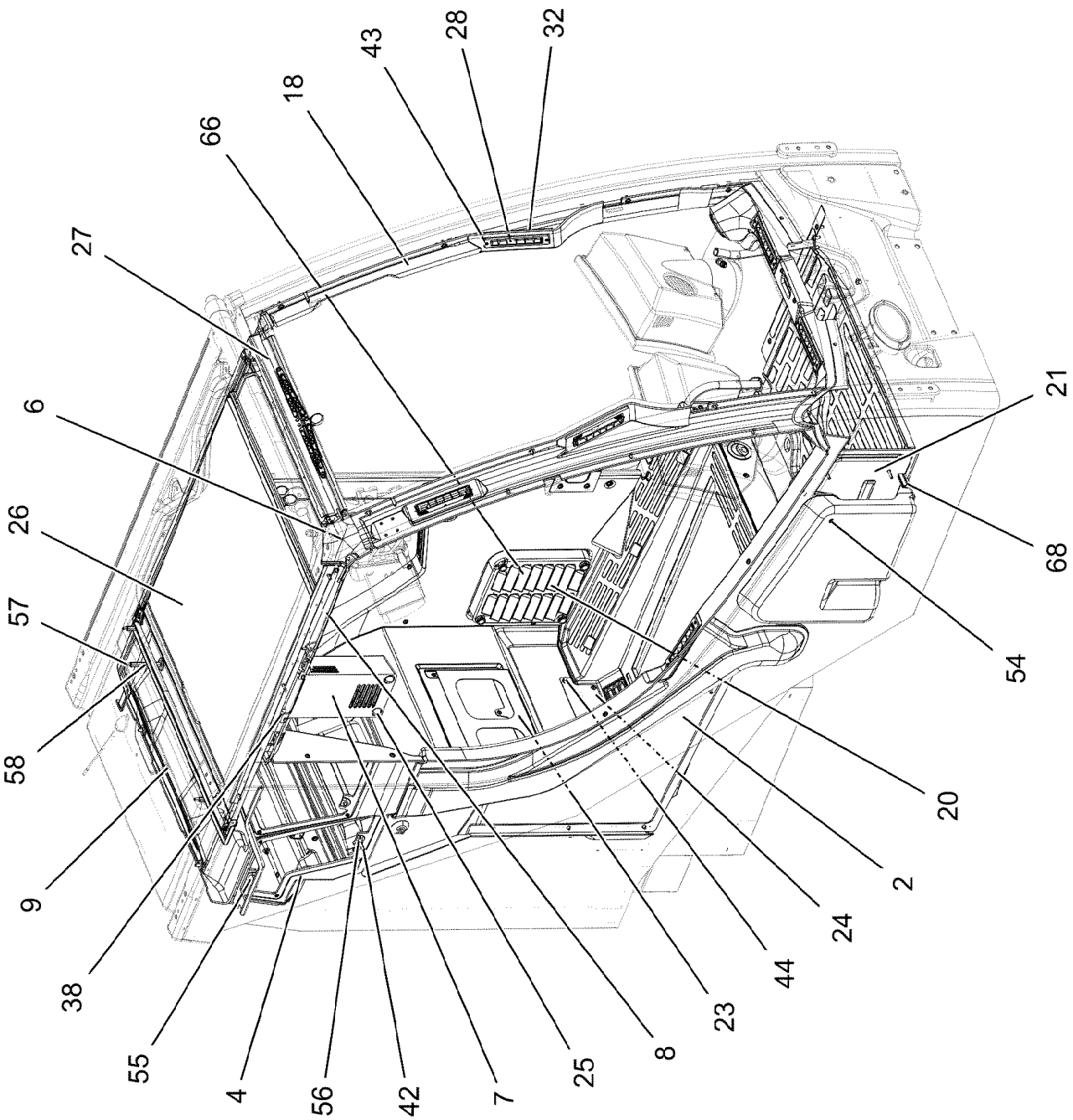
32
28
43
18
66
27
6
26
57
58
9
38
55
4
56
42
7
25
8
23
44
24
2
20
54
68
21

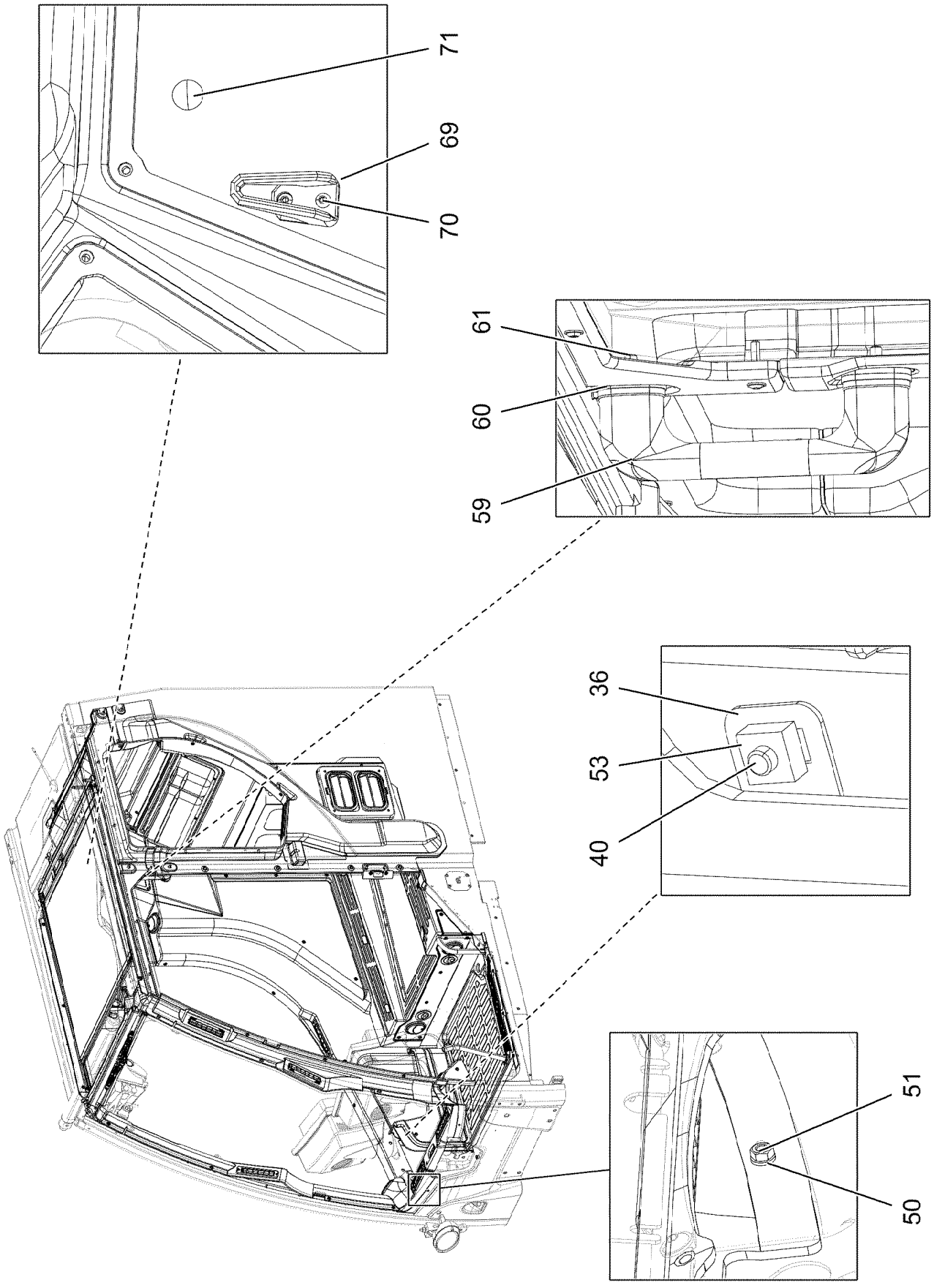
71
69
70
61
60
59
36
53
40
51
50

Pos.	Item	Quantity	Description	Bezeichnung
1	966282308	1	PANELLING,LEFT ⇨ ❑ 340	VERKLEIDUNG LI.
2	966282408	1	PANELLING ⇨ ❑ 341	VERKLEIDUNG RE.
3	97001015	1	PANELLING,STRUT LEFT 84X1361X160 ABS	VERKLEIDUNG HOLM LI.
4	97001589	1	PANELLING ABOVE RIGHT 188X647X441 AB	VERKLEIDUNG OBEN RECHTS
5	97001404	1	CLADDING REAR PANEL 193X729X817 PP/G	VERKLEIDUNG RUECKWAND
6	97001048	1	PANELLING ROLLER BLIND 96X818X144 AB	VERKLEIDUNG ROLLO
7	975850708	1	HOUSING PLIXXOPOL R* SPF	GEHAEUSE
8	979206708	1	SMALL HILL COVERING 65X292X46 ABS SP	VERKLEIDUNG HOLM RE.
9	965763608	1	ROOF COVERING COMPL.	DACHVERKLEIDUNG KPL.
10	97000466	1	FLOOR MAT 61X753X552 PU-SCHAUM SPF	BODENMATTE
11	97000467	1	FLOOR MAT 227X798X849 PU-SCHAUM SP	BODENMATTE
12	966621108	1	PIPE WELDED RAL 9005,M,GT SPF	ROHR SCHWK.
13	966620008	1	PIPE WELDED RAL 9005,M,GT SPF	ROHR SCHWK.
14	97000470	1	PLATE 2X810X132 DC01 RAL 7016,SDGL,GT	BLECH
15	97000469	1	PLATE 1.5X72X538 X5CRNI18-10	BLECH
16	97006863	1	PANELLING 201X846X165 ABS SPF	VERKLEIDUNG VORN
17	97001553	1	PANELLING REST 82X599X144 ABS SPF	VERKLEIDUNG ABLAGE
18	97002207	1	A COLUMN CLADDING LEFT 117X508X1174	VERKLEIDUNG A-SAEULE LI.
19	97002209	1	A COLUMN CLADDING RIGHT 134X494X115	VERKLEIDUNG A-SAEULE RE.
20	979206908	1	PANELLING FORCED AERATION 45.2X225X	VERKLEIDUNG ZWANGSENTL
21	97138958	1	PANELLING 120X526X308 ABS SPF	VERKLEIDUNG RE.
22	740300008	1	POCKET KUNSTSTOFF	TASCHE
23	97002609	1	PLATE 1.5X551X299 DC01 RAL 9005,M,GT	BLECH
24	97003298	1	PLATE 1.5X436X90 DC01 RAL 7016,SDGL,G	BLECH
25	10354670	2	RUBBER BUFFER 19X9,6 PU SCHWARZ	GUMMIPUFFER
26	11002447	1	BLIND ⇨ ❑ 342	ROLLO
27	11002446	1	BLIND	ROLLO
28	10292013	8	ROLLING NOZZLE	WALZENDUESE
29	553193208	6	OUTLET JET D=82 T=5 PA	AUSSTROEMDUESE
30	10301409	2	OUTLET JET D=63 ABS	AUSSTROEMDUESE
31	518629608	2	O-RING ARP 568 72,62X3,53 NBR70	O-RING
32	97006874	6	SEAL 7X182X51 POLYOLEFIN	DICHTUNG
33	10291997	1	ASH TRAY KUNSTSTOFF	ASCHENBECHER
34	967775308	1	PLATE WELDED FE//ZNNI8//CN//T0	BLECH SCHWK.
35	10292000	2	VENTILATION	ENTLUEFTUNG
36	97006875	1	PLATE 1.5X25X47 DC01 RAL 7016 SPF	BLECH
37	97006876	1	PLATE 1.5X107X120 DC01 RAL 9005,M,GT	BLECH
38	10875474	16	BUTTON HEAD SCREW ISO 7380-2 M5X16 0	HALBRUNDKOPFSCHRAUBE
39	10874884	13	BUTTON HEAD SCREW ISO 7380-2 M6X12 0	HALBRUNDKOPFSCHRAUBE
40	10875468	73	BUTTON HEAD SCREW AEHNL.ISO 7380-2	HALBRUNDKOPFSCHRAUBE
41	10875469	10	BUTTON HEAD SCREW ISO 7380-2 M6X30 0	HALBRUNDKOPFSCHRAUBE
42	10875470	2	BUTTON HEAD SCREW ISO 7380-2 M6X40 0	HALBRUNDKOPFSCHRAUBE
43	10876382	16	SHEET-METAL SCREW ISO 7050 ST3,5X16 4	BLECHSCHRAUBE
44	10875538	2	HEX SCREW ISO 4017 M8X50 8.8 480H SPF	SECHSKANTSCHRAUBE
45	11826527	1	HEX SCREW ISO 4017 M8X30 8.8 480H SPF	SECHSKANTSCHRAUBE
46	10875614	1	HEX NUT DIN 985 M8 8 480H SPF	SECHSKANTMUTTER
47	10678375	1	STOP PLUG D10,7 LD-PE	STOPFEN
48	97028159	4	DISTANCE STUD M5X30 11SMN30+C FE//ZN	ABSTANDSBOLZEN
49	10800916	4	KNURLED BUTTON PA	RAENDELKNOPF
50	10197771	3	WASHER ISO 7089 6 200HV ZNNI-480H SPF	SCHEIBE
51	10197764	2	HEX NUT ISO 4032 M6 10 ZNNI-480H SPF	SECHSKANTMUTTER
53	413002808	1	CAGE NUT M6	KAEFIGMUTTER
54	11642497	1	HEX SCREW ISO 4017 M6X10 8.8 480H SPF	SECHSKANTSCHRAUBE
55	10441664	1	DISTANCE SLEEVE 15X6,3X25 PA66	DISTANZHUELSE
56	10354375	1	DISTANCE SLEEVE 10X6,2X10 PA66	DISTANZHUELSE
57	11001955	3	DISTANCE STUD M6X30 ST VERZ	ABSTANDSBOLZEN
58	10875447	2	DISTANCE STUD M6X50 STAHL 480H SPF	ABSTANDSBOLZEN

Pos.	Item	Quantity	Description	Bezeichnung
59	10443309	1	HANDGRIP 215X25X59,2X169	HALTEGRIFF
60	97007597	4	PLATE 4X48X29 S315MC RAL 9005,M,GT SP	BLECH
61	10875570	2	SOCKET HEAD SCREW ISO 4762 M8X55 8.8	ZYLINDERSCHRAUBE
62	10875582	2	SOCKET HEAD SCREW ISO 4762 M5X18 8.8	ZYLINDERSCHRAUBE
63	10875584	1	SOCKET HEAD SCREW ISO 4762 M5X25 8.8	ZYLINDERSCHRAUBE
64	12103465	4	WASHER ISO 7089 8 300HV ZNNI-480H SPF	SCHEIBE
65	97027494	1	PLATE 1.5X832X41 DC01 RAL 7016,SDGL,G	BLECH
66	11182242	1	FILTER SYNFASAN ⇨ ❑ 343	FILTER
67	97037477	2	ANTI-SLIP SURFACE 1.6X25X170 3M TYP4	ANTIRUTSCHBELAG
68	262101308	0.04	CLAMP FITTING 1-3X21X9,3 ZELLGUMMI	KLEMMBAND
69	12106136	1	COAT HOOK SCHWARZ	GARDEROBENHAKEN
70	10875017	2	BUTTON HEAD SCREW ISO 7380-1 M4X10 0	HALBRUNDKOPFSCHRAUBE
71	591064708	1	COVER LID 9,5X11 POLYACETAL	ABDECKKAPPE

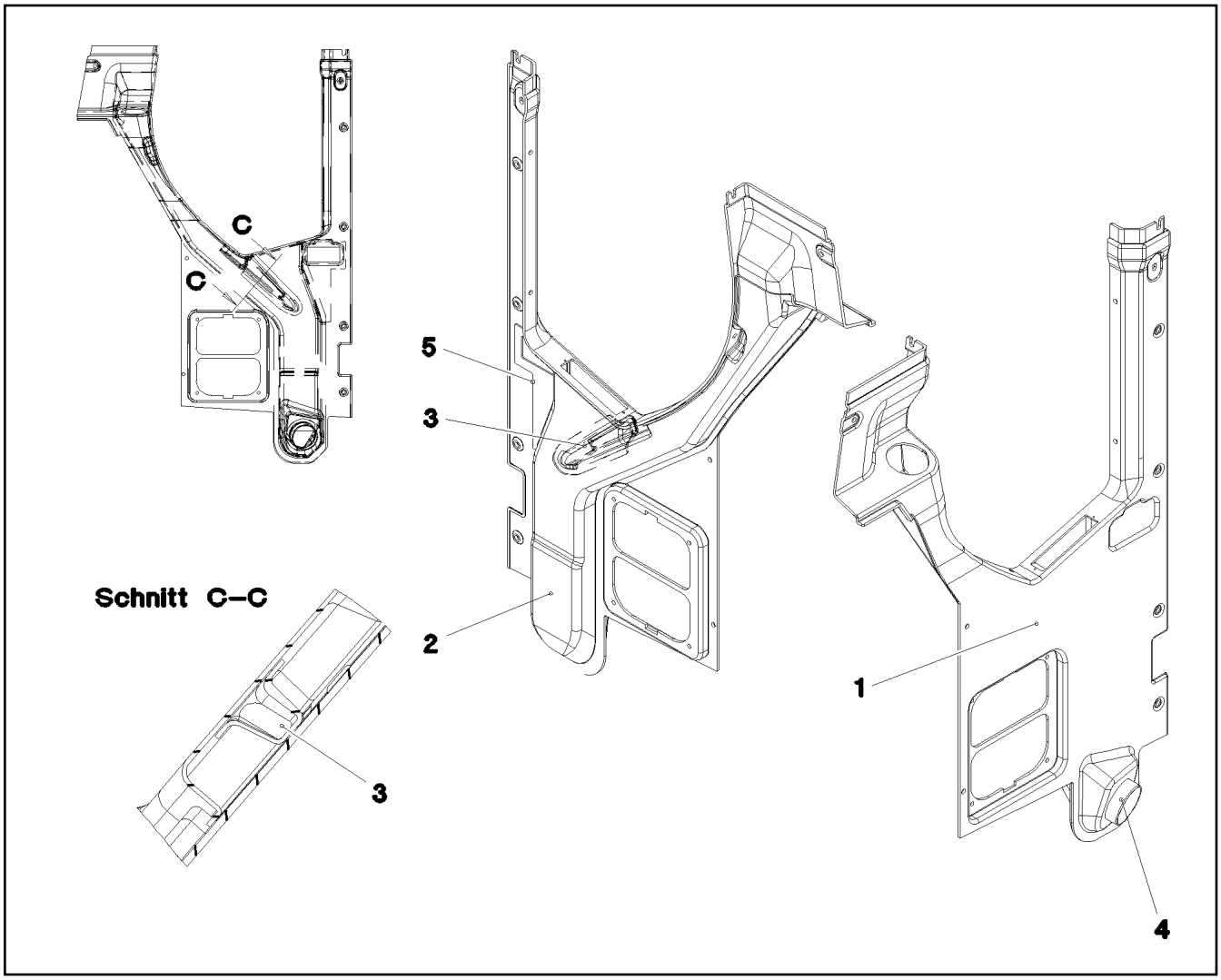

Pos.	Item	Quantity	Description	Bezeichnung
1	97001013	1	PANELLING,LEFT 130X832X1260 ABS SPF	VERKLEIDUNG LI.
2	97001699	1	AIR GUIDE L 113X705X1091 ABS SPF	LUFTFUEHRUNG LI.
3	97004696	1	AIR GUIDE CHANNEL 39X75X227 ABS SPF	LUFTLEITKANAL
4	97005143	1	TUBE 100X33 ABS	ROHR
5	97045292	1	PLATE 3X135X251 ALMG3 H111 ELOXIERT	BLECH

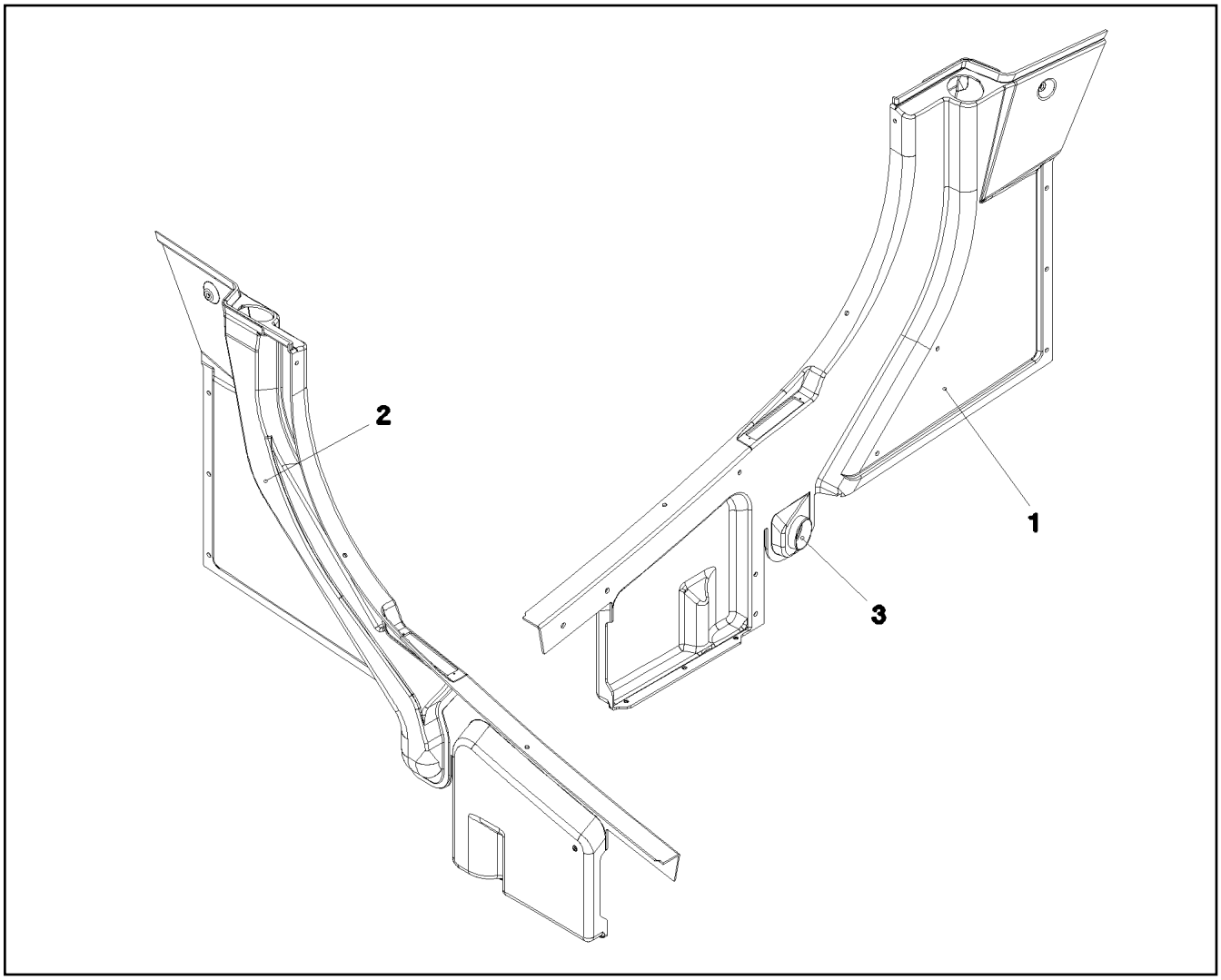

Pos.	Item	Quantity	Description	Bezeichnung
1	97001014	1	PANELLING 127X1598X1088 ABS SPF	VERKLEIDUNG RE.
2	97001700	1	AIR GUIDE R 100X714X953 ABS SPF	LUFTFUEHRUNG RE.
3	97005144	1	TUBE 85X27 ABS	ROHR

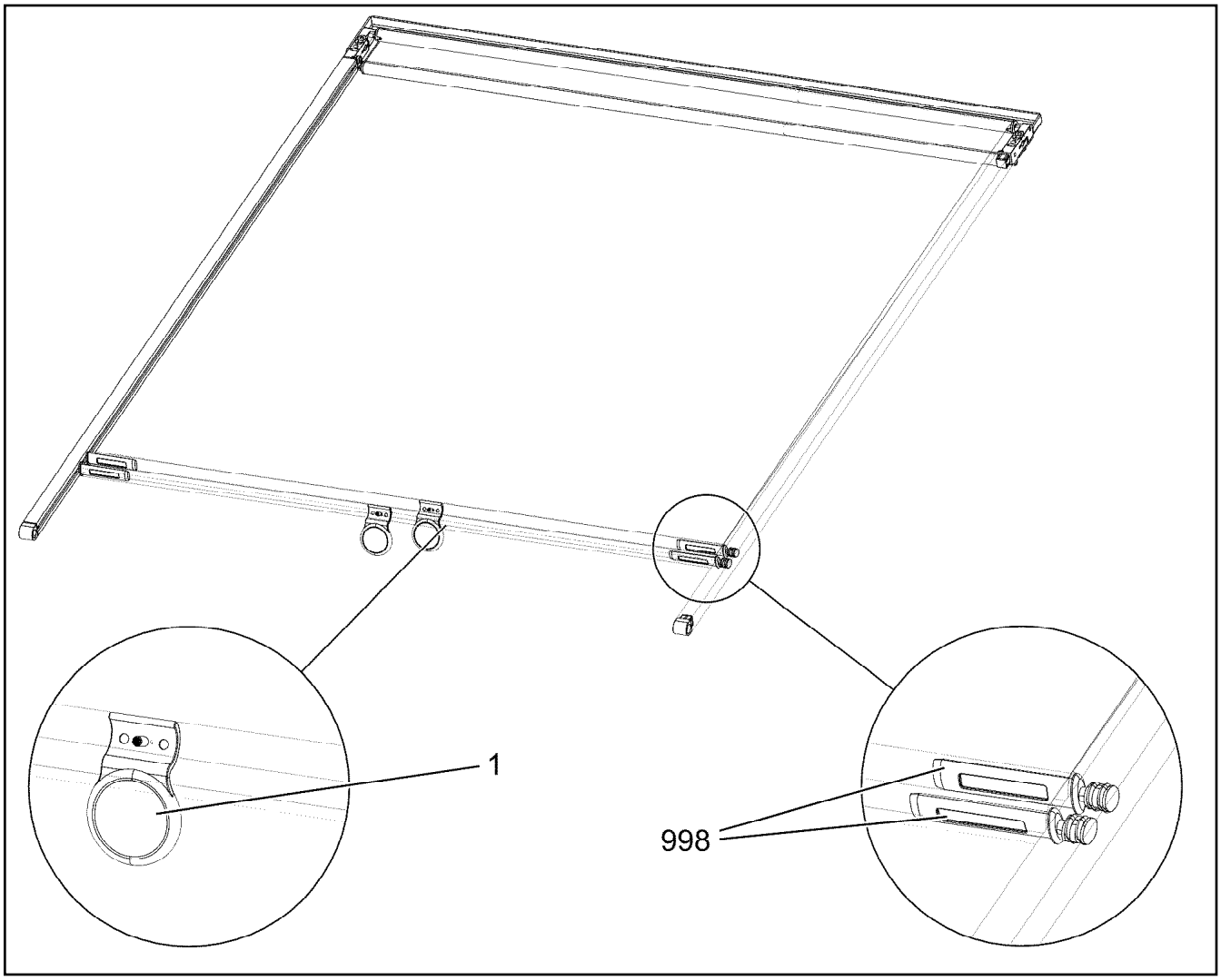

Pos.	Item	Quantity	Description	Bezeichnung
1	12100622	1	REPAIR KIT HANDLE	RS GRIFF
998	10872672	1	REGULATION REPAIR KIT	RS VERSTELLUNG

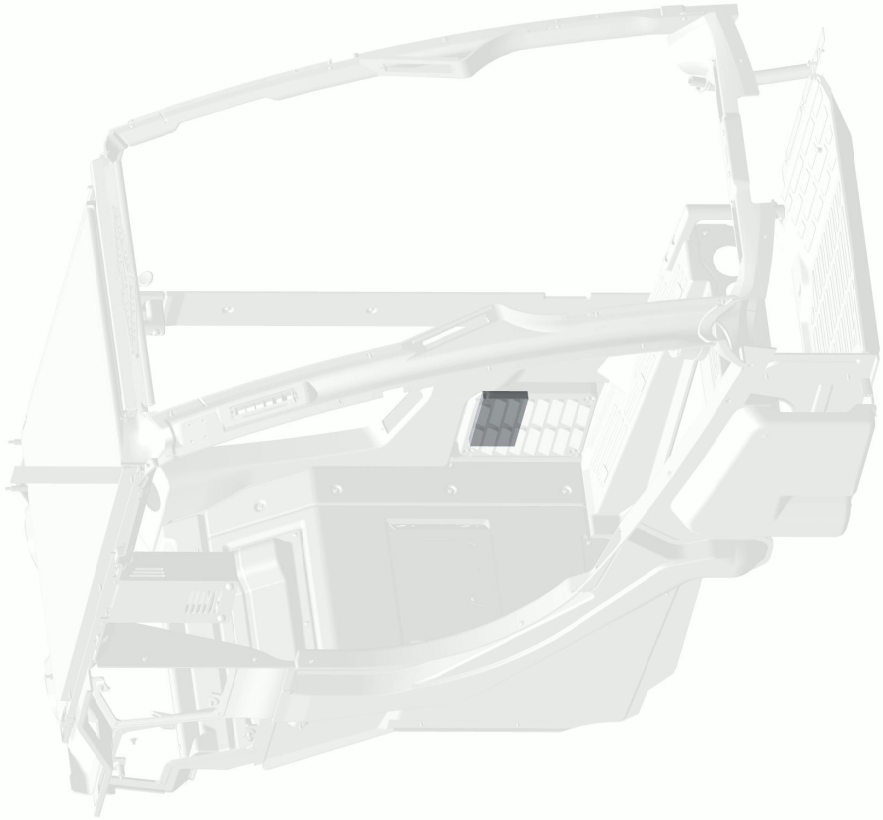

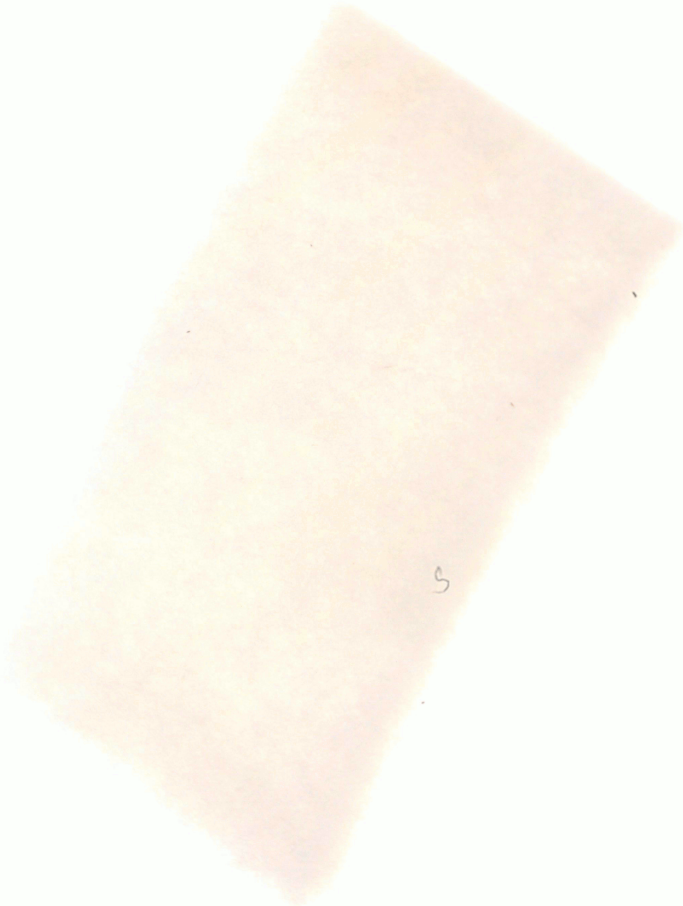

Pos. 208

Abbildung ähnlich
Illustration similar
Illustration similaire

Pos.	Item	Quantity	Description	Bezeichnung
1	980288008	1	DOCUMENTATION	DOKUMENTATION

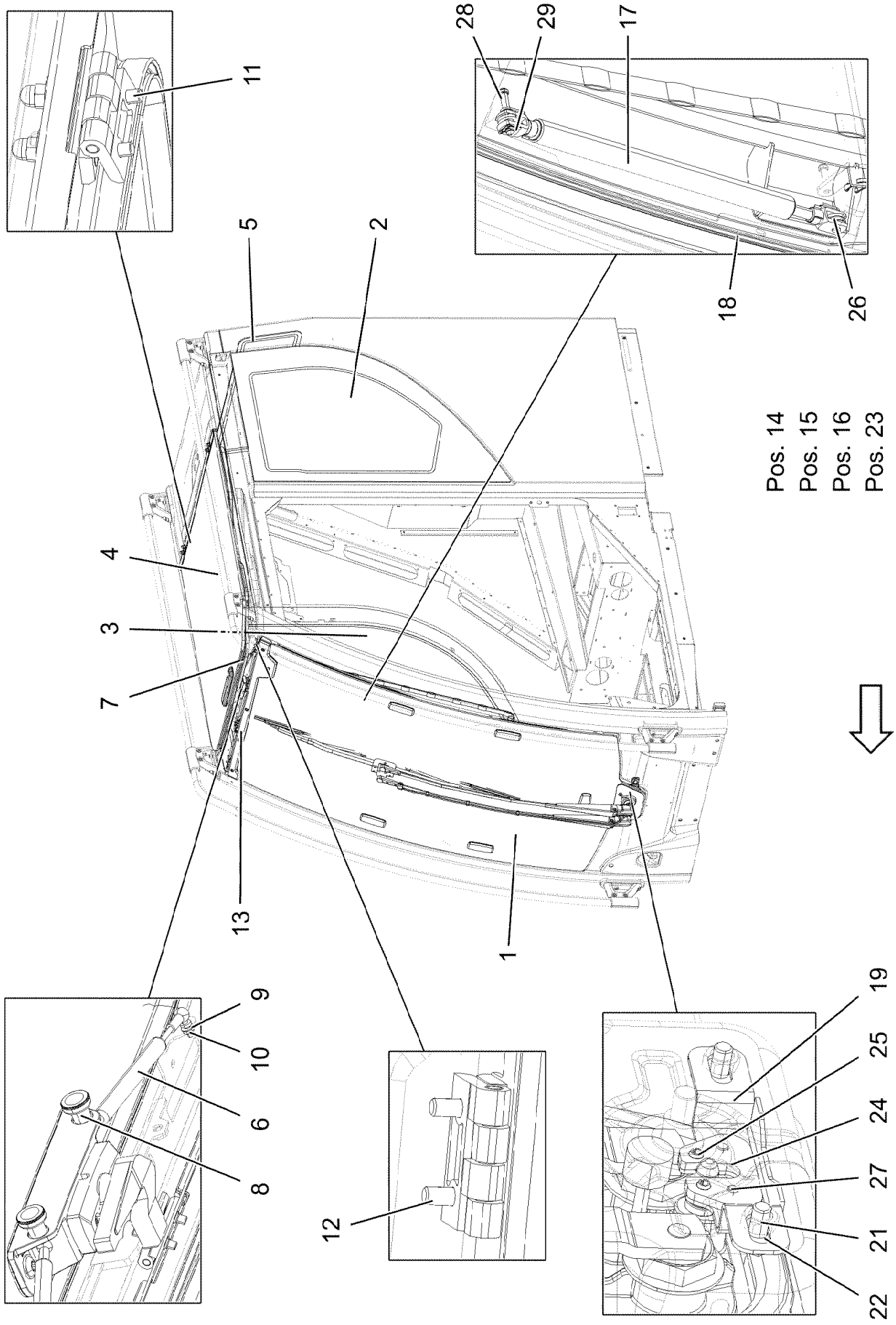
11
28
29
17
5
2
18
26
4
3
7
13
1
Pos. 14
Pos. 15
Pos. 16
Pos. 23
9
10
6
8
12
19
25
24
27
21
22

Pos.	Item	Quantity	Description	Bezeichnung
1	966497908	1	FRONT WINDOW CPL. ⇨ ❑ 347	FRONTSCHEIBE KPL.
2	97003560	1	SIDE WINDOW LEFT 646.2X94X4 ESG SPF	SEITENSCHEIBE LI.
3	97003561	1	SIDE WINDOW RIGHT 1252X125X4 ESG SP	SEITENSCHEIBE RE.
4	965784408	1	ROOF WINDOW PRE-ASS. ⇨ ❑ 350	DACHSCHEIBE VORM.
5	97000279	1	REAR WINDOW ESG SPF	HECKSCHEIBE
6	10476211	2	GAS SPRING 12X80-100N ST	GASFEDER
7	97033487	1	SEAL 25X892X720 EPDM	DICHTUNG
8	10652206	2	KNURLED BUTTON 21-M4 PA	RAENDELKNOPF
9	10875645	2	WASHER ISO 7089 4 200HV 480H SPF	SCHEIBE
10	10875619	2	HEX NUT ISO 4032 M4 8 480H SPF	SECHSKANTMUTTER
11	10875809	4	COUNTERSUNK SCREW DIN 7991 M6X12 8	SENKSCHRAUBE
12	10875551	8	COUNTERSUNK SCREW DIN 7991 M6X16 8	SENKSCHRAUBE
13	97008572	1	COVER 8X735X83 PE SCHWARZ	ABDECKUNG
14	10815283	1	ACTIVATOR 250ML DOSE	AKTIVATOR
15	811203308	1	ADHESIVE 600ML FC-BEUTEL	KLEBER
16	811203108	1	TOOLING AGENT KANISTER-5L 5/35°C	ABGLAETTMITTEL
17	11003837	2	GAS SPRING 23X251-550N ST	GASFEDER
18	97046043	1	SEAL 25X14X4080 EPDM	DICHTUNG
19	97024781	1	PLATE 2X170X51 DC01 FE//ZNNI8//CN//T0	BLECH
21	11651612	2	HEX SCREW ISO 4017 M8X16 8.8 480H SPF	SECHSKANTSCHRAUBE
22	11140469	2	WASHER ISO 7093-1 8 200HV 480H SPF	SCHEIBE
23	870004108	1	ACTIVATOR 1000ML	AKTIVATOR
24	97024783	1	PLATE 4X52X32 S315MC FE//ZNNI8//CN//T0	BLECH
25	10875881	2	DOWEL PIN ISO 8752 6X10 ST 480H SPF	SPANNSTIFT
26	97072035	4	BUSHING RD20X7.5 X5CRNI18-10	BUCHSE
27	11697855	7	BUTTON HEAD SCREW ISO 7380-2 M5X8 0	HALBRUNDKOPFSCHRAUBE
28	97170279	1	PIN 12X49 X5CRNI18-10	BOLZEN
29	704271208	1	SAFETY DEVICE 8X0,94	SL-SICHERUNG

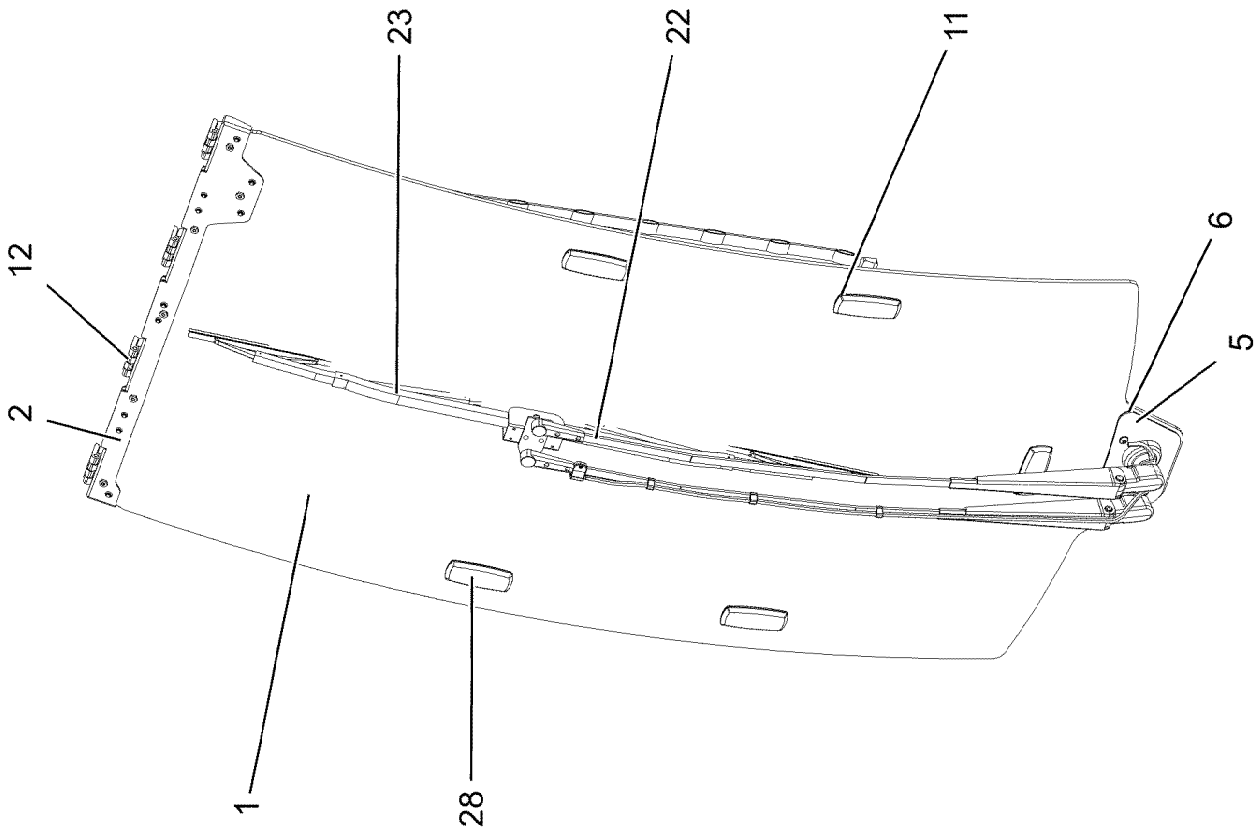
23
22
11
12
6
5
2
1
28

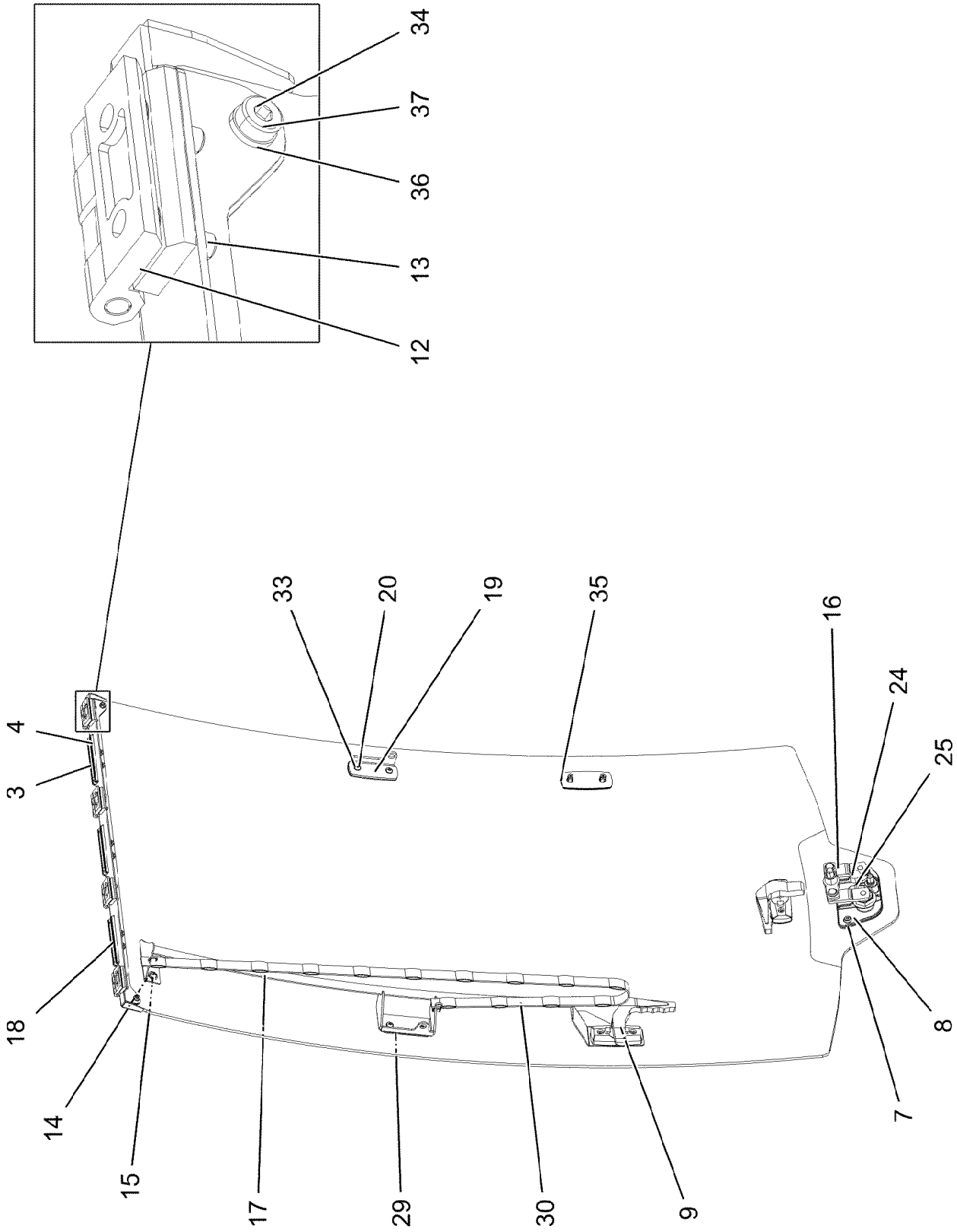
34
37
36
13
12
33
20
19
35
16
24
25
4
3
18
14
15
17
29
30
9
8
7

Pos.	Item	Quantity	Description	Bezeichnung
1	97003558	1	FRONT WINDOW 6X735X1506 ESG SPF	FRONTSCHEIBE
2	966497808	1	PLATE WELDED FE//ZNNI8//FN//T2	BLECH SCHWK.
3	97005272	1	SEAL 1.5X721X86 EPDM	DICHTUNG
4	97005273	1	PLATE 2X719X40 DC01 FE//ZNNI8//FN//T2	BLECH
5	97005289	1	PLATE 2X227X109 DC01 FE//ZNNI8//CN//T0	BLECH
6	97005290	1	SEAL 2X225X107 EPDM	DICHTUNG
7	97005291	1	SEAL 2X148X84 EPDM	DICHTUNG
8	97052119	1	BEARING WIPERS UNIT 50X146X82	LAGER FRONTWISCHANLAGE
9	704232208	1	HAND GRIP CPL. DREH KUNSTSTOFF	HANDGRIFF KPL.
10	591066808	2	HANDLE	HANDGRIFF
11	97005309	9	SEAL 2X94X39 EPDM	DICHTUNG
12	10871177	4	SCREW-ON HINGE 25X25X50/180° AISI 316	ANSCHRAUBSCHARNIER
13	10875551	8	COUNTERSUNK SCREW DIN 7991 M6X16 8	SENKSCHRAUBE
14	421801708	2	WASHER ISO 7093-1 6 200HV-A2	SCHEIBE
15	10412852	6	BUTTON HEAD SCREW AEHNL.ISO 7380-2	HALBRUNDKOPFSCHRAUBE
16	11001115	1	WIPER BEARING ST	WISCHLAGER
17	966513708	1	PIPE WELDED SCHWARZ PULVERB.	ROHR SCHWK.
18	97006055	1	SEAL 721X43X 1.5 EPDM	DICHTUNG
19	97006057	1	PLATE 4X93X68 S315MC RAL 9005,M,GT SP	BLECH
20	97094637	10	BUSHING 14X14X5 PA6 SCHWARZ	BUCHSE
22	10292015	1	WIPER ARM 900MM	WISCHERARM
23	10292017	1	WIPER BLADE 1000	WISCHERBLATT
24	726617408	1	RUBBER METAL STOP BUFFER	GUMMI-METALLANSCHLAGPUF
25	10450694	1	GRUB SCREW M6X50 A2-70	GEWINDESTIFT
28	11004117	2	THREADED PLATE M6 PA6GF30	GEWINDEPLATTE
29	97012017	2	SEAL 2X86X28 EPDM	DICHTUNG
30	97170326	1	RETAINING STRAP 3X20X1295 POLYESTER	HALTEGURT
31	10300552	2	SHACKLE 0,08T NG4 STAINLESS ST	SCHAEKEL
33	10875488	4	BUTTON HEAD SCREW ISO 7380-2 M6X12 0	HALBRUNDKOPFSCHRAUBE
34	10876084	14	SOCKET HEAD SCREW DIN 7984 M6X18 08	ZYLINDERSCHRAUBE
35	97025127	3	PLATE 1.5X95X40 DC01 RAL 9005,M,GT SPF	BLECH
36	10035694	8	WASHER ISO 7092 6 200HV-A2	SCHEIBE
37	97155801	10	BUSHING 8X6 PA6	BUCHSE

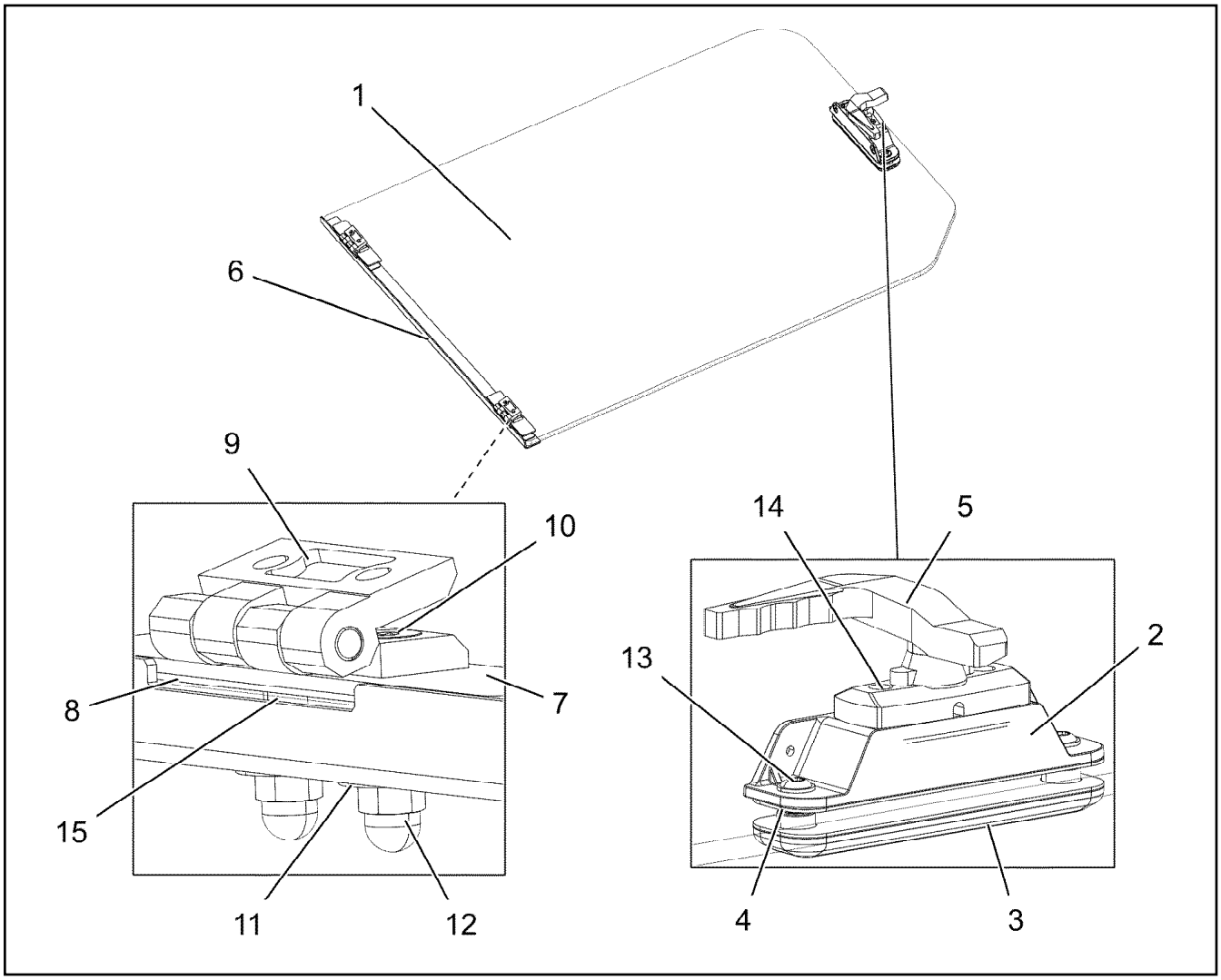

Pos.	Item	Quantity	Description	Bezeichnung
1	979240608	1	ROOF WINDOW 10.28X941X740 VSG SPF	DACHSCHEIBE
2	979243408	1	ADAPTOR 32X185X45 PAGF30 SPF	ADAPTER
3	979243508	1	THREADED PLATE 20X185X45 PAGF30 SPF	GEWINDEPLATTE
4	979243608	2	RUBBER PLATE 1.5X185X45 EPDM	GUMMIPLATTE
5	591066808	1	HANDLE	HANDGRIFF
6	979022508	1	PLATE 2X737X46 DC01 FE//ZNNI8//CN//T0	BLECH
7	979022608	2	PLATE 2.5X130X28 DC01 RAL 9005,M,GT SP	BLECH
8	979142208	4	SHEET 126X24X1.5 EPDM 80	PLATTE
9	10871177	2	SCREW-ON HINGE 25X25X50/180° AISI 316	ANSCHRAUBSCHARNIER
10	12100279	4	COUNTERSUNK SCREW ISO 10642 M6X30	SENKSCHRAUBE
11	10875648	4	WASHER ISO 7093-1 6 200HV 480H SPF	SCHEIBE
12	10219361	4	CAP NUT DIN 1587 M6 A2-70	HUTMUTTER
13	10875471	2	BUTTON HEAD SCREW AEHNL.ISO 7380-2	HALBRUNDKOPFSCHRAUBE
14	10875586	2	SOCKET HEAD SCREW ISO 4762 M6X16 8.8	ZYLINDERSCHRAUBE
15	11082602	0.04	INSULATING HOSE DN6X0,5 PUR SPF	ISOLIERSCHLAUCH

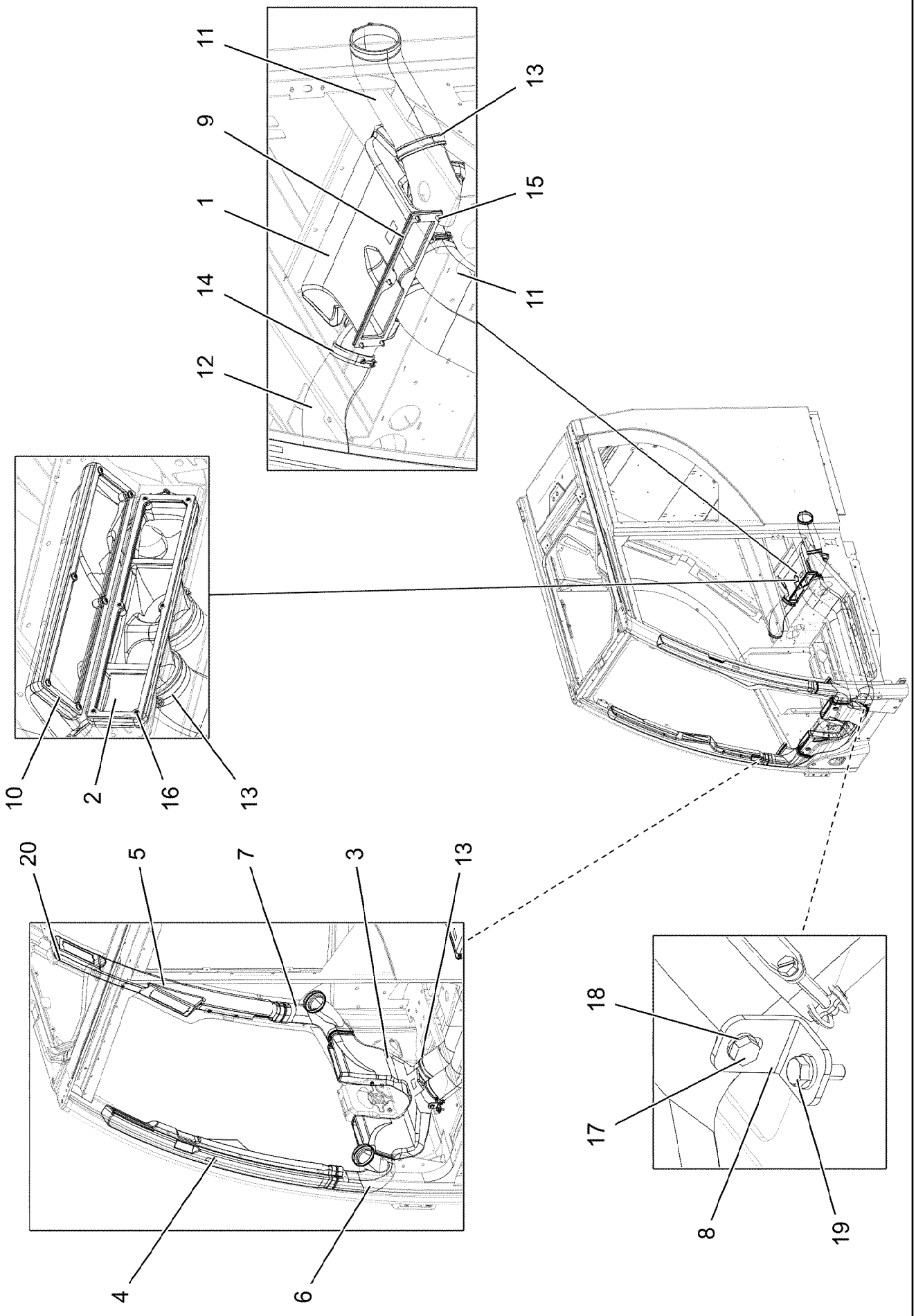

16.11.2023 067368	**etk_en_de_078966 LTR 1100**	351 (1/2)
LIEBHERR	**AIR DUCT** **LUFTFUEHRUNG**	**916168308**

Pos.	Item	Quantity	Description	Bezeichnung
1	97000436	1	AIR DUCT 81X233X419 PP SPF	LUFTFUEHRUNG
2	97000437	1	AIR DUCT 128X523X170 PP SPF	LUFTFUEHRUNG
3	97000438	1	AIR DUCT 152X627X339 PP SPF	LUFTFUEHRUNG
4	97000440	1	AIR GUIDE L 107X394X947 PP SPF	LUFTFUEHRUNG LI.
5	97000442	1	AIR GUIDE R 109X391X941 PP SPF	LUFTFUEHRUNG RE.
6	97001248	1	AIR GUIDE L 144X143X275 PVC SPF	LUFTFUEHRUNG LI.
7	97001249	1	AIR GUIDE R 143X150X273 PVC SPF	LUFTFUEHRUNG RE.
8	97001250	2	PLATE 3X60X25 DC01 FE//ZNNI8//CN//T0	BLECH
9	97005040	1	SEAL 4X322X62 EPDM 20SHORE	DICHTUNG
10	97005042	2	SEAL 4X407X85 EPDM 20SHORE	DICHTUNG
11	11000901	2.15	HOSE DN82-UNIE13 SCHWARZ	SCHLAUCH
12	553181208	0.25	HEATING HOSE 70/PRIMAFLEX	HEIZUNGSSCHLAUCH
13	11000903	6	WIRE HOSE CLAMP 79-85	DRAHTSCHLAUCHKLEMME
14	11000902	2	WIRE HOSE CLAMP 70-75	DRAHTSCHLAUCHKLEMME
15	10875474	5	BUTTON HEAD SCREW ISO 7380-2 M5X16 0	HALBRUNDKOPFSCHRAUBE
16	10875483	14	BUTTON HEAD SCREW ISO 7380-2 M5X10 0	HALBRUNDKOPFSCHRAUBE
17	11692824	4	HEX SCREW ISO 4017 M6X12 8.8 480H SPF	SECHSKANTSCHRAUBE
18	10197771	4	WASHER ISO 7089 6 200HV ZNNI-480H SPF	SCHEIBE
19	11840297	2	HEX SCREW EN 1665 M6X16 8.8 480H SPF	SECHSKANTSCHRAUBE
20	10875549	2	COUNTERSUNK SCREW DIN 7991 M5X10 8	SENKSCHRAUBE

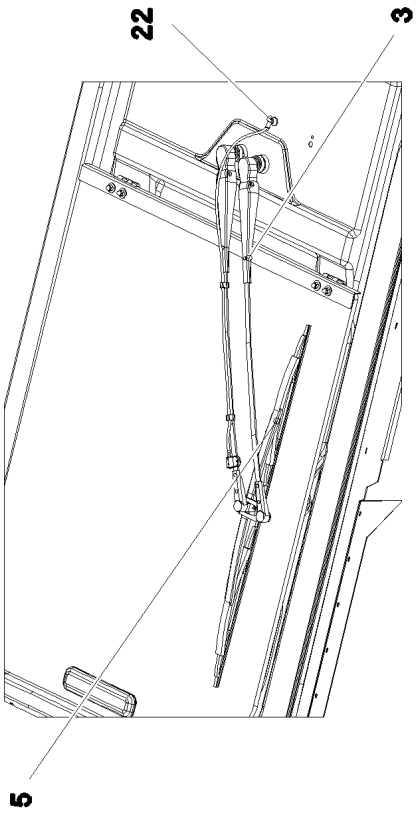

Einzelheit A

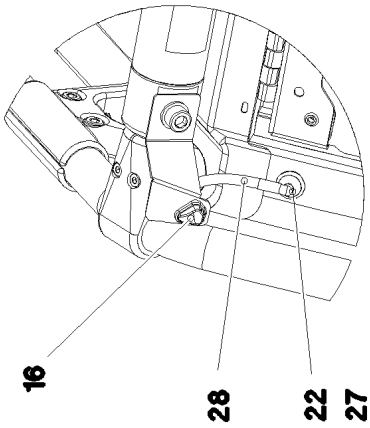

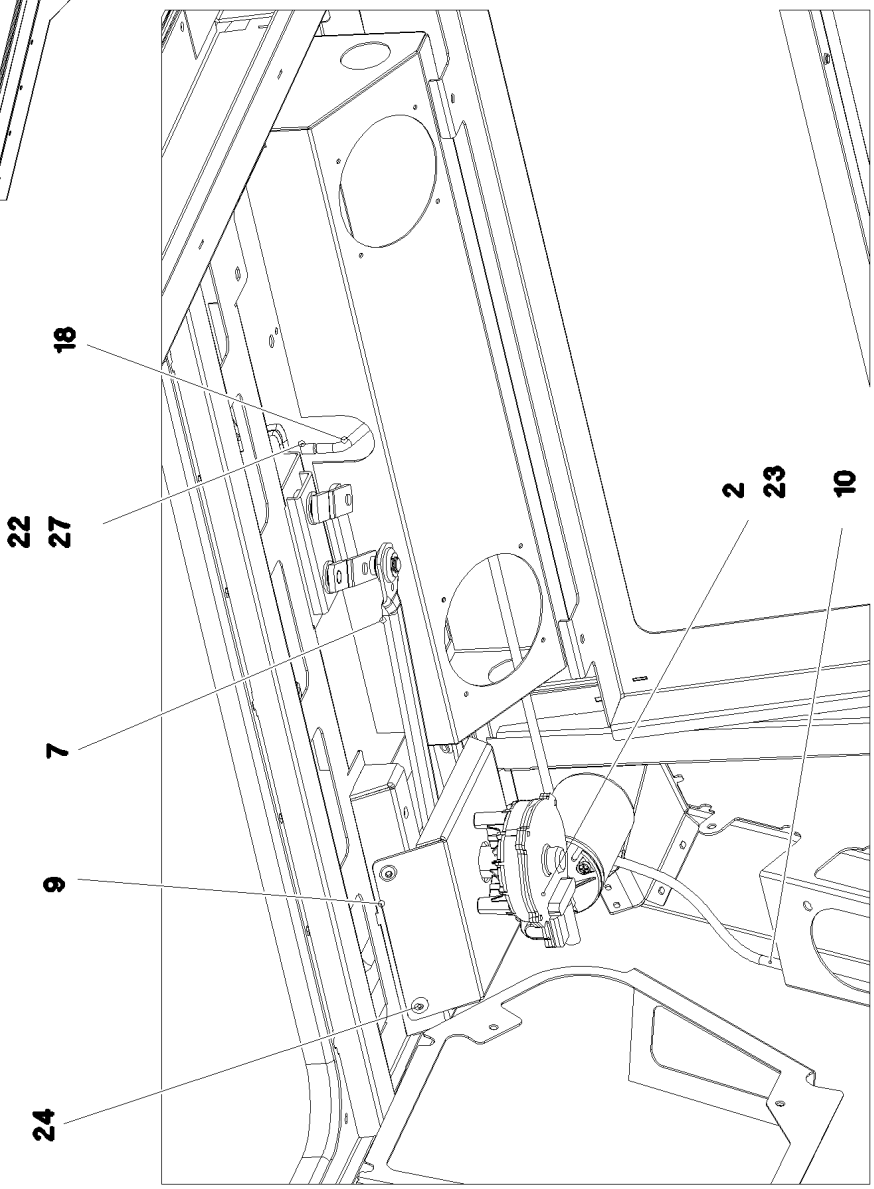

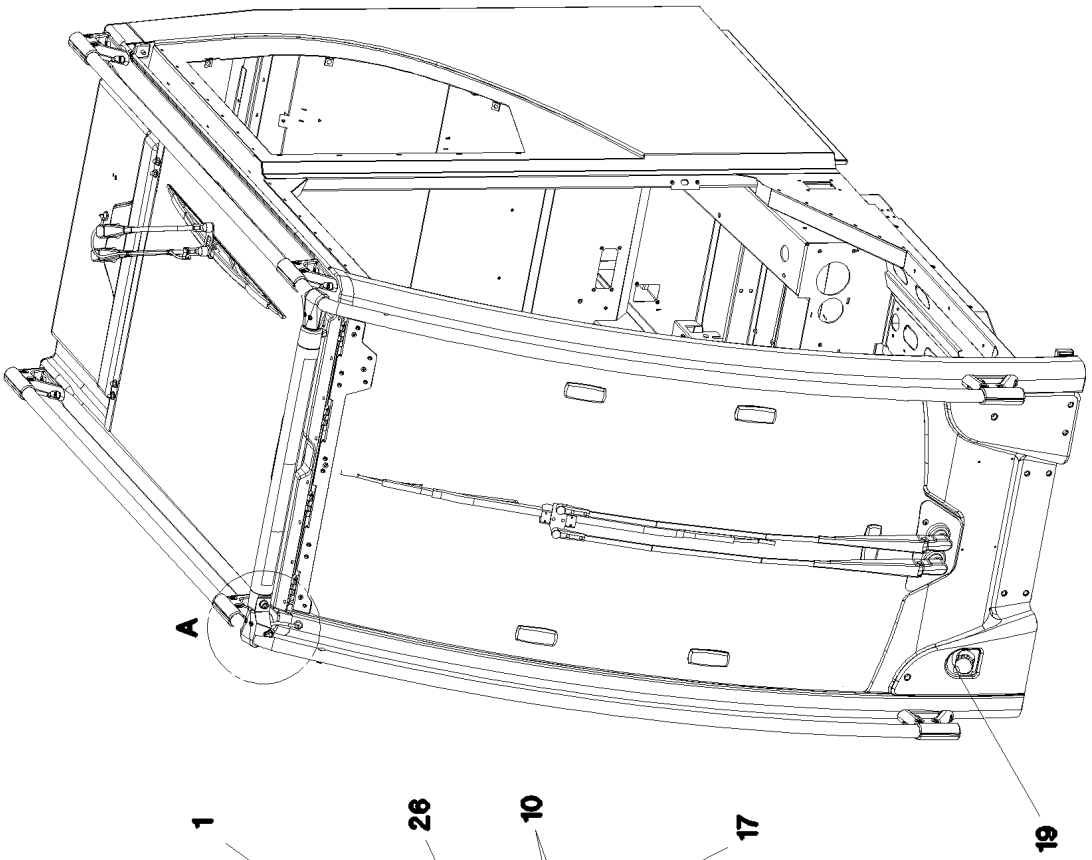
A
19

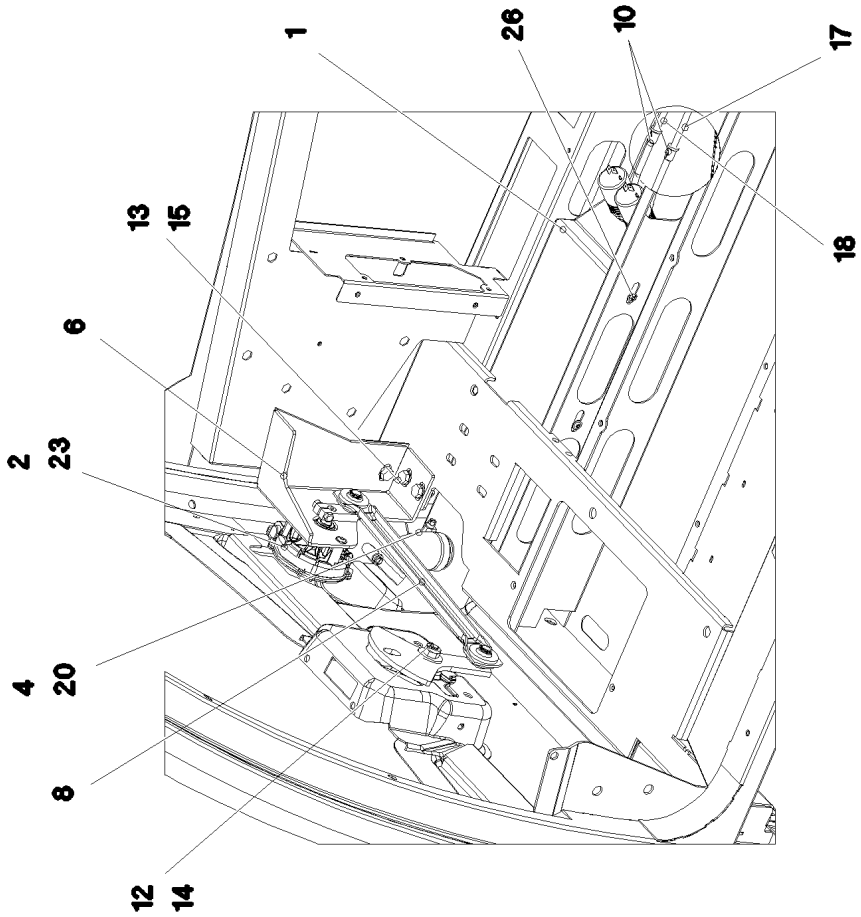
1
26
10
17
18
13
15
6
2
23
4
20
8
12
14

Pos.	Item	Quantity	Description	Bezeichnung
1	966408908	1	WATER CONTAINER CPL ⇨ ❑ 356	WASSERBEHAELTER KPL.
2	10292021	2	WIPER MOTOR 55NM 24V SPF	WISCHERMOTOR
3	10292014	1	WIPER ARM 650MM	WISCHERARM
4	97006624	1	TUBE 49X68X78 EPDM	ROHR
5	10292016	1	WIPER BLADE 700	WISCHERBLATT
6	97000389	1	PLATE 4X347X222 S315MC FE//ZNNI8//CN//T	BLECH
7	10292018	1	WIPER FRAME	WISCHERGESTAENGE
8	10870968	1	WIPER FRAME	WISCHERGESTAENGE
9	97006461	1	PLATE 2X177X240 DC01 FE//ZNNI8//CN//T0	BLECH
10	591055608	2	NON-RETURN VALVE	RUECKSCHLAGVENTIL
12	10197769	1	HEX NUT DIN 985 M10 8 ZNNI-480H SPF	SECHSKANTMUTTER
13	12103465	4	WASHER ISO 7089 8 300HV ZNNI-480H SPF	SCHEIBE
14	421802108	1	WASHER ISO 7093-1 10 A2	SCHEIBE
15	11651767	4	HEX SCREW ISO 4017 M8X20 8.8 480H SPF	SECHSKANTSCHRAUBE
16	10815496	1	NOZZLE SET PA	DUESENSATZ
17	11000710	1.3	WATER HOSE DN4-RAUCLAIR-E PVC TRAN	WASSERSCHLAUCH
18	11000710	2.8	WATER HOSE DN4-RAUCLAIR-E PVC TRAN	WASSERSCHLAUCH
19	10815416	1	FILLER CAP 42 PA	EINFUELLDECKEL
20	10878445	2	HOSE CLAMP 45/30-45/9 W3	SCHLAUCHSCHELLE
22	591051008	2	SWIVEL ELBOW	WINKELSTUTZEN
23	10875468	6	BUTTON HEAD SCREW AEHNL.ISO 7380-2	HALBRUNDKOPFSCHRAUBE
24	11840297	4	HEX SCREW EN 1665 M6X16 8.8 480H SPF	SECHSKANTSCHRAUBE
26	10875483	2	BUTTON HEAD SCREW ISO 7380-2 M5X10 0	HALBRUNDKOPFSCHRAUBE
27	11693875	2	HEX NUT ISO 4032 M8 8 480H SPF	SECHSKANTMUTTER
28	591080608	0.25	HOSE DN3,5-GU23725 GUMMI	SCHLAUCH

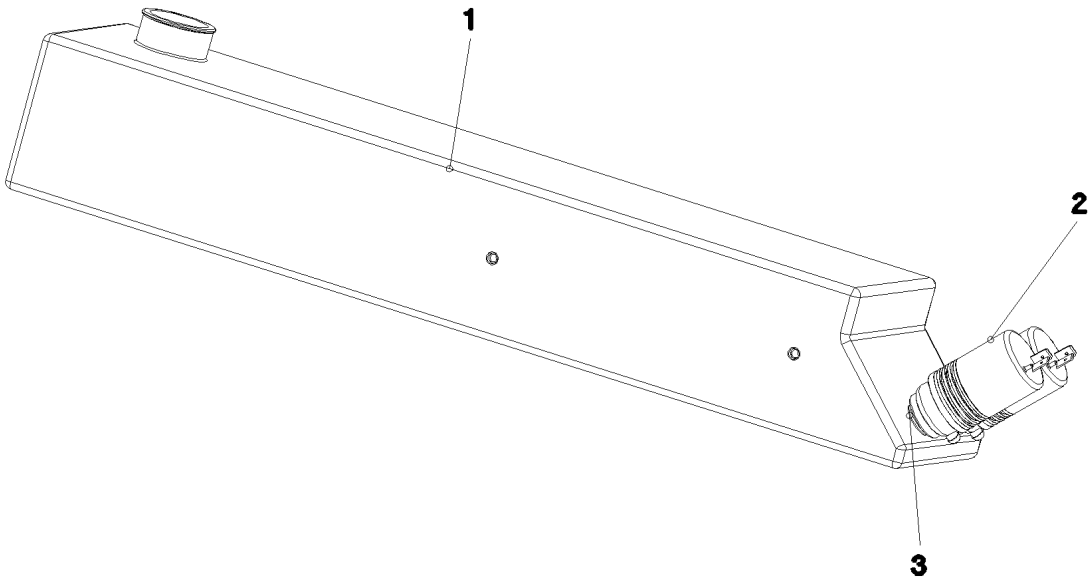

Pos.	Item	Quantity	Description	Bezeichnung
1	97003164	1	WATER BASIN 505X126X100 PE SPF	WASSERBEHAELTER
2	591055408	2	PUMP MP41 SPF	PUMPE
3	591055508	2	SPOUT 6,5/6,5/2 GUMMI	TUELLE

Pos.	Item	Quantity	Description	Bezeichnung
1	916165808	1	CRANE DRIVER'S CABIN PUR.PARTS RAL 7	KRANFUEHRERKABINE KAUFT

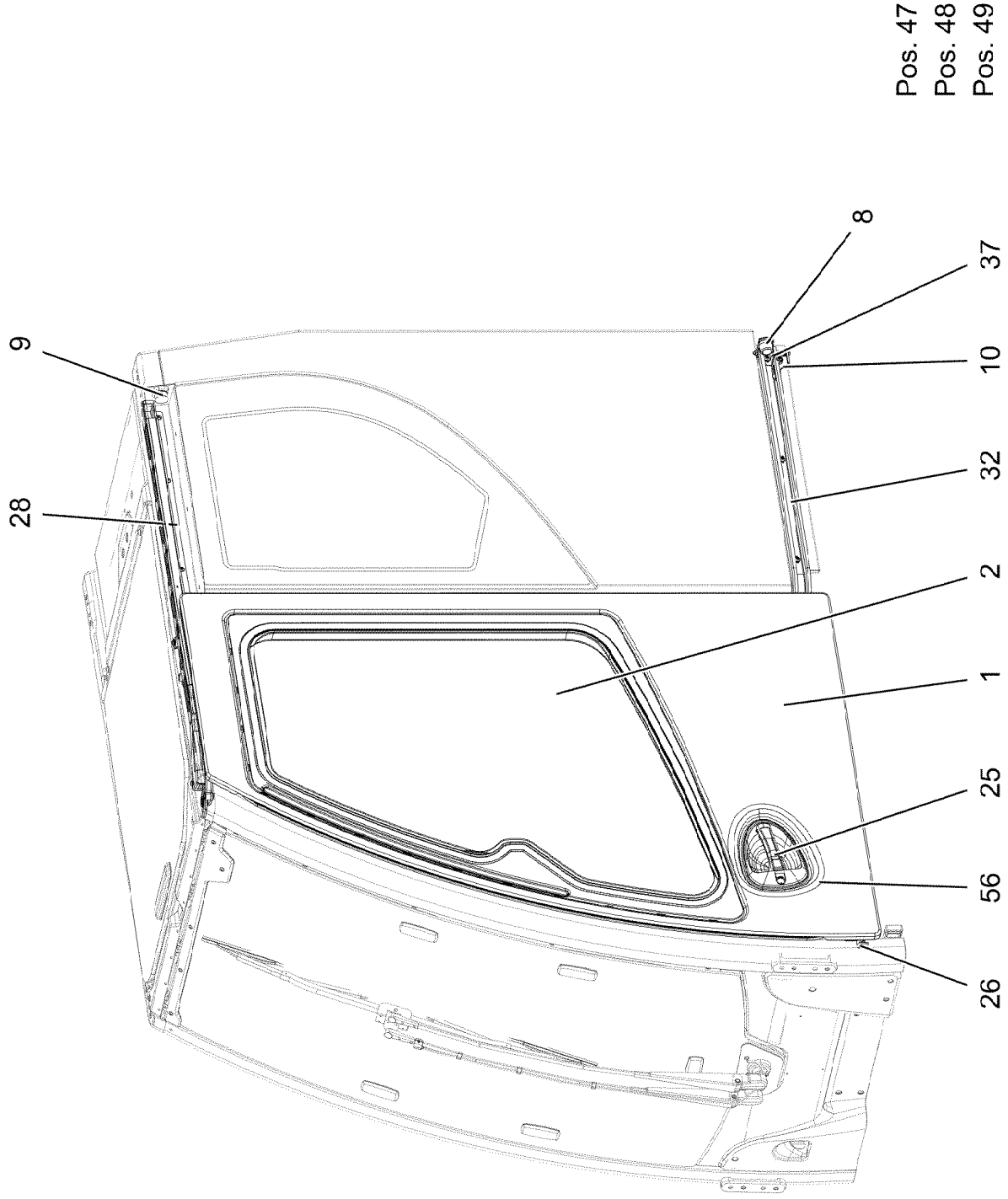
Pos. 47
Pos. 48
Pos. 49
8
37
9
10
32
28
2
1
25
56
26

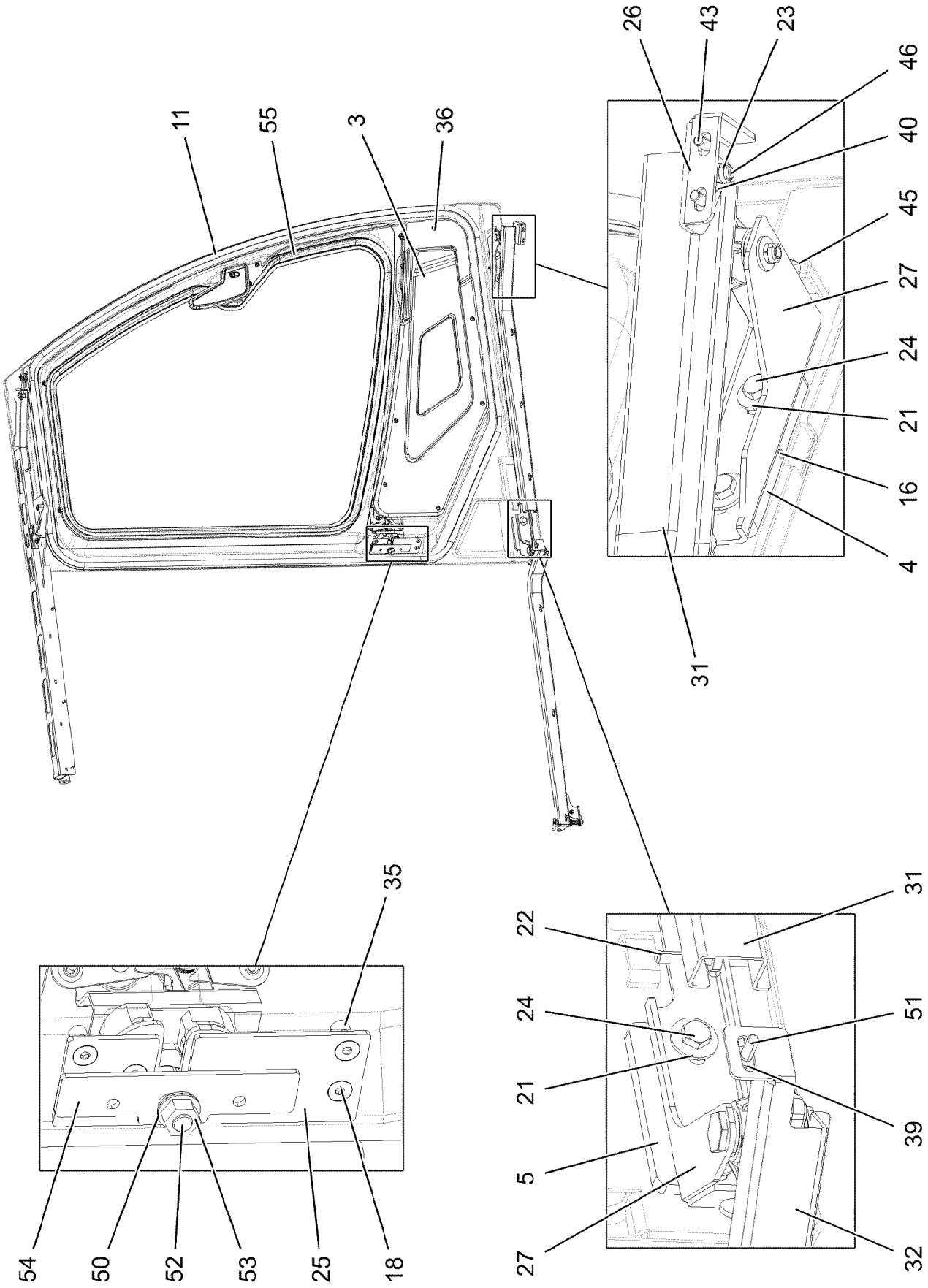
11
55
3
36
26
43
23
46
40
45
27
24
21
16
4
31
35
54
50
52
53
25
18
22
24
21
5
27
31
51
39
32

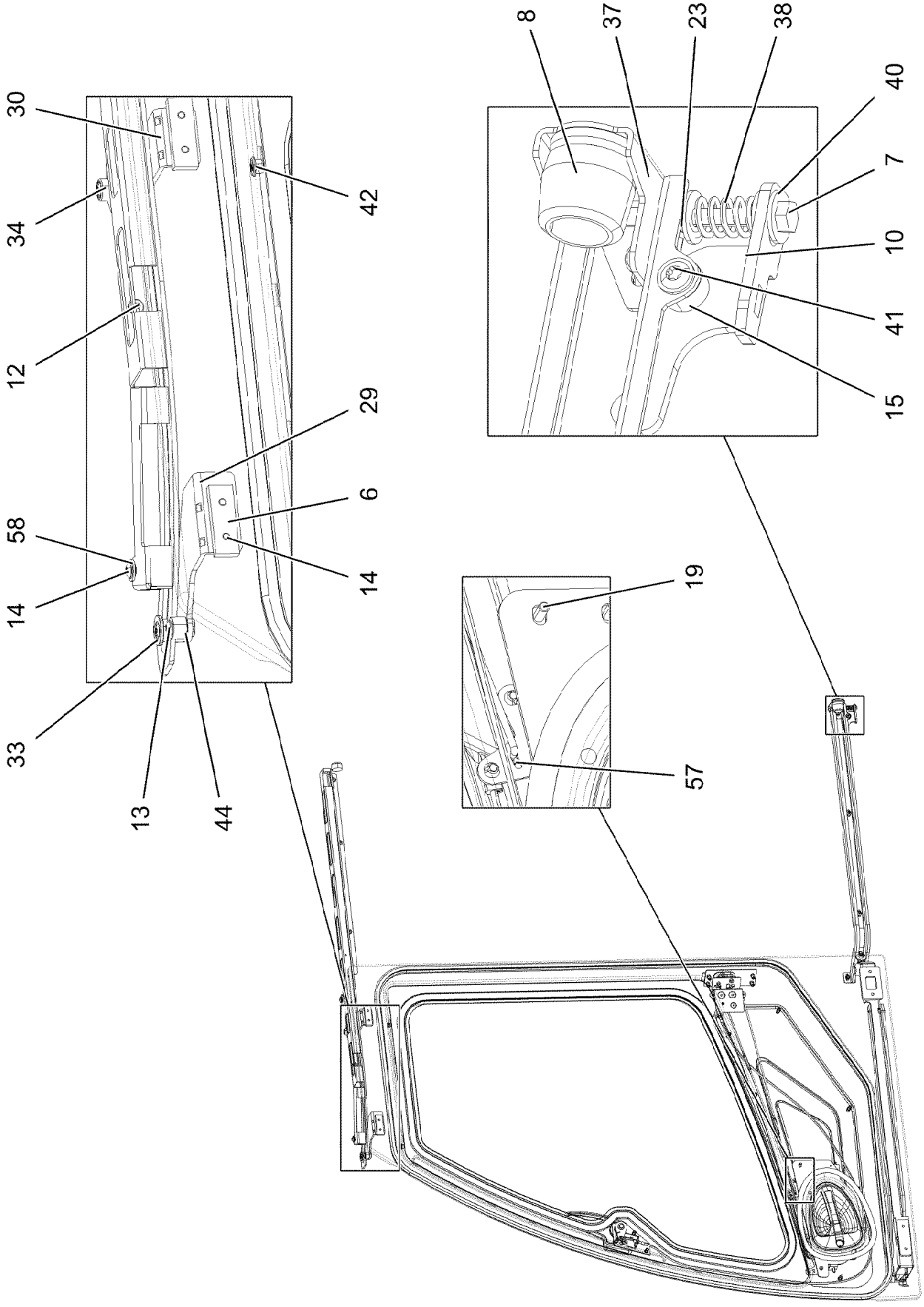
30
34
12
58
14
33
13
44
42
29
6
14
8
37
23
38
40
7
10
41
15
19
57

Pos.	Item	Quantity	Description	Bezeichnung
2	97000274	1	DOOR PANE 4X1161X 950 ESG SPF	TUERSCHEIBE
3	97000275	1	DOOR COVERING 880X390X28 ABS SPF	TUERVERKLEIDUNG
4	97000276	1	THREADED PLATE 8X110X35 S355MC FE//	GEWINDEPLATTE
5	97000277	1	THREADED PLATE 8X98X60 S355MC FE//ZN	GEWINDEPLATTE
6	953695308	2	THREADED PLATE 8.0 X0 S235JR FE//ZNNI8/	GEWINDEPLATTE
7	11007009	1	HEX SCREW ISO 4017 M6X85 A2-70	SECHSKANTSCHRAUBE
8	10472890	1	RUBBER BUFFER 32X32XM6 ELASTOMER	GUMMIPUFFER
9	10030440	1	RUBBER METAL STOP BUFFER 30X17 M8 7	GUMMI-METALLANSCHLAGPUF
10	966825408	1	LOCKING BAR WELDMENT	RIEGEL SCHWK.
11	10300600	4.2	CLAMPING PROFILE 2X13,5X20 EPDM/MOO	KLEMMPROFIL
12	10412851	4	BUTTON HEAD SCREW AEHNL.ISO 7380-2	HALBRUNDKOPFSCHRAUBE
13	11160744	3	BUTTON HEAD SCREW AEHNL.ISO 7380-2	HALBRUNDKOPFSCHRAUBE
14	10475893	10	BUTTON HEAD SCREW AEHNL.ISO 7380-2	HALBRUNDKOPFSCHRAUBE
15	97002990	1	BUSHING 16X12 1.4301	BUCHSE
16	404400508	1	GRUB SCREW DIN 913 M6X25 45H VERZ	GEWINDESTIFT
18	10875551	4	COUNTERSUNK SCREW DIN 7991 M6X16 8	SENKSCHRAUBE
19	10875468	5	BUTTON HEAD SCREW AEHNL.ISO 7380-2	HALBRUNDKOPFSCHRAUBE
21	10540510	4	WASHER ISO 7093-1 8 200HV-A4	SCHEIBE
22	10450694	1	GRUB SCREW M6X50 A2-70	GEWINDESTIFT
23	411903008	4	HEX NUT DIN 985 M6 A2-70	SECHSKANTMUTTER
24	406527808	4	HEX SCREW ISO 4017 M8X16 A2-70	SECHSKANTSCHRAUBE
25	966230408	1	CLOSING DEVICE ⇨ ❑ 362	SCHLIESSANLAGE
26	97000492	1	PLATE 3X75X61 X5CRNI18-10	BLECH
27	966230508	1	GUIDE PRE-ASS. ⇨ ❑ 363	FUEHRUNG VORM.
28	966230608	1	GUIDE WELDED GLASPERLENGESTRAHLT	FUEHRUNG SCHWK.
29	966230708	1	CLAMP WELDED CONST.	HALTER SCHWK.
30	966230808	1	CLAMP WELDED CONST.	HALTER SCHWK.
31	97000516	1	FRONT PROFILE 803X122X44 1.4305	PROFIL VORN
32	97000517	1	REAR PROFILE 820X125X72.6 1.4305	PROFIL HINTEN
33	97001711	1	SLEEVE 25X15 PA 12	HUELSE
34	97001760	1	SLEEVE 18X24 PA12	HUELSE
35	10042593	13	BLIND RIVET NUT M6 K=1,5-3,5 ST CR6-FRE	BLINDNIETMUTTER
36	10875469	7	BUTTON HEAD SCREW ISO 7380-2 M6X30 0	HALBRUNDKOPFSCHRAUBE
37	966363808	1	PLATE WELDED	BLECH SCHWK.
38	11067867	1	COMPRESSION SPRING 2X12X41,73 EN10	DRUCKFEDER
39	420060201	2	WASHER ISO 7089 6 200HV-A2	SCHEIBE
40	10540500	4	WASHER ISO 7093-1 6 200HV-A4	SCHEIBE
41	10412853	1	BUTTON HEAD SCREW AEHNL.ISO 7380-2	HALBRUNDKOPFSCHRAUBE
42	779016501	2	BLANKING PLUG GPN 300 F7 M12X1 LD-PE	VERSCHLUSSSTOPFEN
43	10813359	7	BUTTON HEAD SCREW AEHNL.ISO 7380-2	HALBRUNDKOPFSCHRAUBE
44	97012184	1	SLEEVE 18X12 PA 12	HUELSE
45	404230308	1	SOCKET HEAD SCREW ISO 4762 M6X40 A2	ZYLINDERSCHRAUBE
46	10001739	1	HEX SCREW ISO 4017 M6X16 A2-70	SECHSKANTSCHRAUBE
47	811205108	1	ADHESIVE CLEANER 250ML	HAFTREINIGER
48	811203308	1	ADHESIVE 600ML FC-BEUTEL	KLEBER
49	811203108	1	TOOLING AGENT KANISTER-5L 5/35°C	ABGLAETTMITTEL
50	7015814	2	WEDGE LOCK WASHER NORD-LOCK 10SP	KEILSICHERUNGSSCHEIBE
51	404250914	1	SOCKET HEAD SCREW ISO 4762 M6X16 A4	ZYLINDERSCHRAUBE
52	97019129	1	CLOSING PIN 1.4305	SCHLIESSBOLZEN
53	10179115	1	HEX NUT ISO 8673 M10X1 8 FLZN SPF	SECHSKANTMUTTER
54	97026779	1	PLATE 3X30X119 X5CRNI18-10	BLECH
55	10876056	3.4	CLAMPING PROFILE 25,7X21,5 EPDM	KLEMMPROFIL
56	97088496	1	ADHESIVE FOIL OUTSIDE HANDLE 240X319	KLEBEFOLIE AUSSENGRIFF
57	704259608	1	RAPID FIXING	SCHNELLBEFESTIGER
58	421801708	2	WASHER ISO 7093-1 6 200HV-A2	SCHEIBE

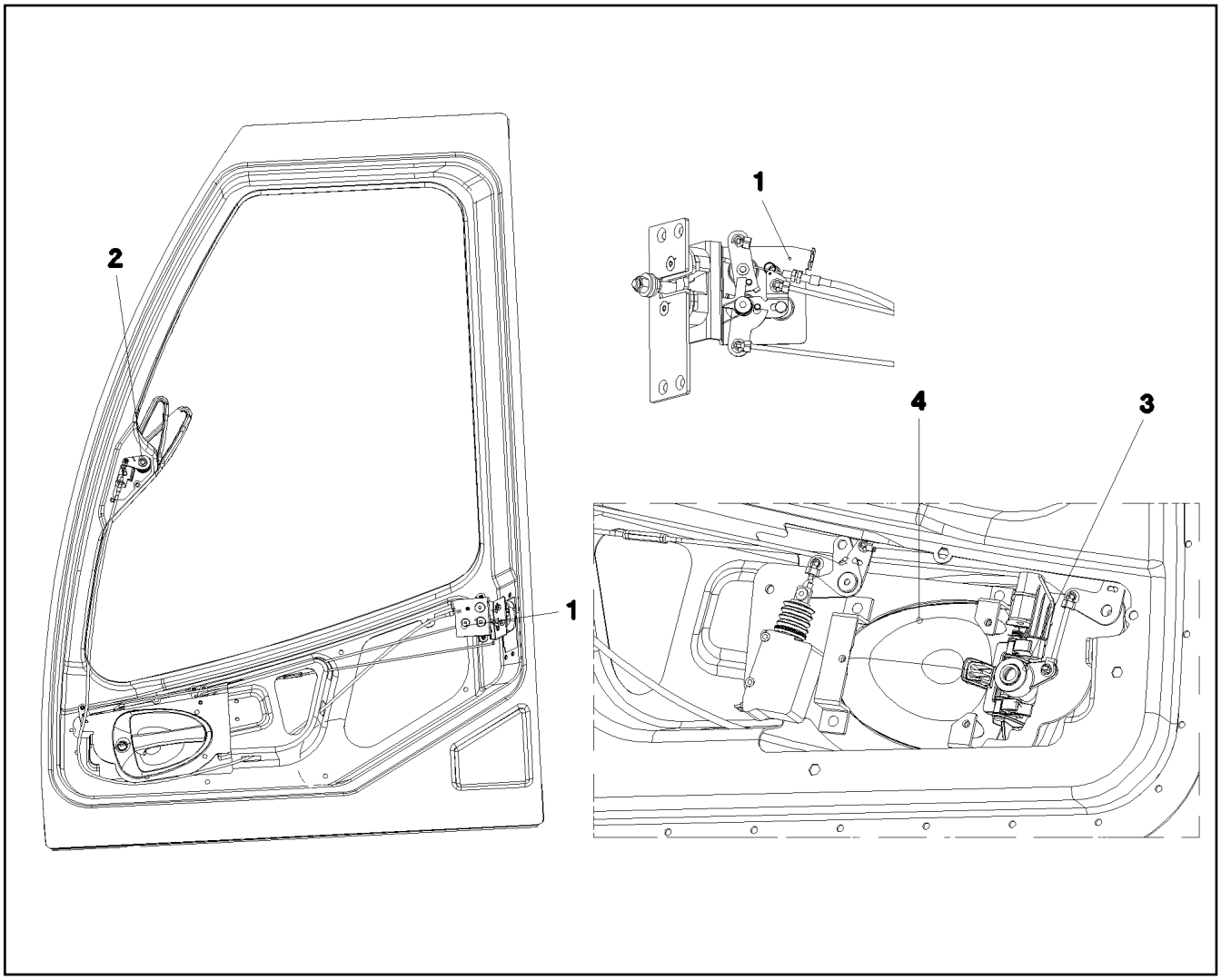

Pos.	Item	Quantity	Description	Bezeichnung
1	11005985	1	LOCK WITH FALLING LATCH LINKS	DREHFALLENSCHLOSS
2	11005984	1	INSIDE HANDLE ZUG	INNENGRIFF
3	11005983	1	HANDLEADAPTER	GRIFFADAPTION
4	11005987	1	OUTSIDE HANDLE ZUG	AUSSENGRIFF

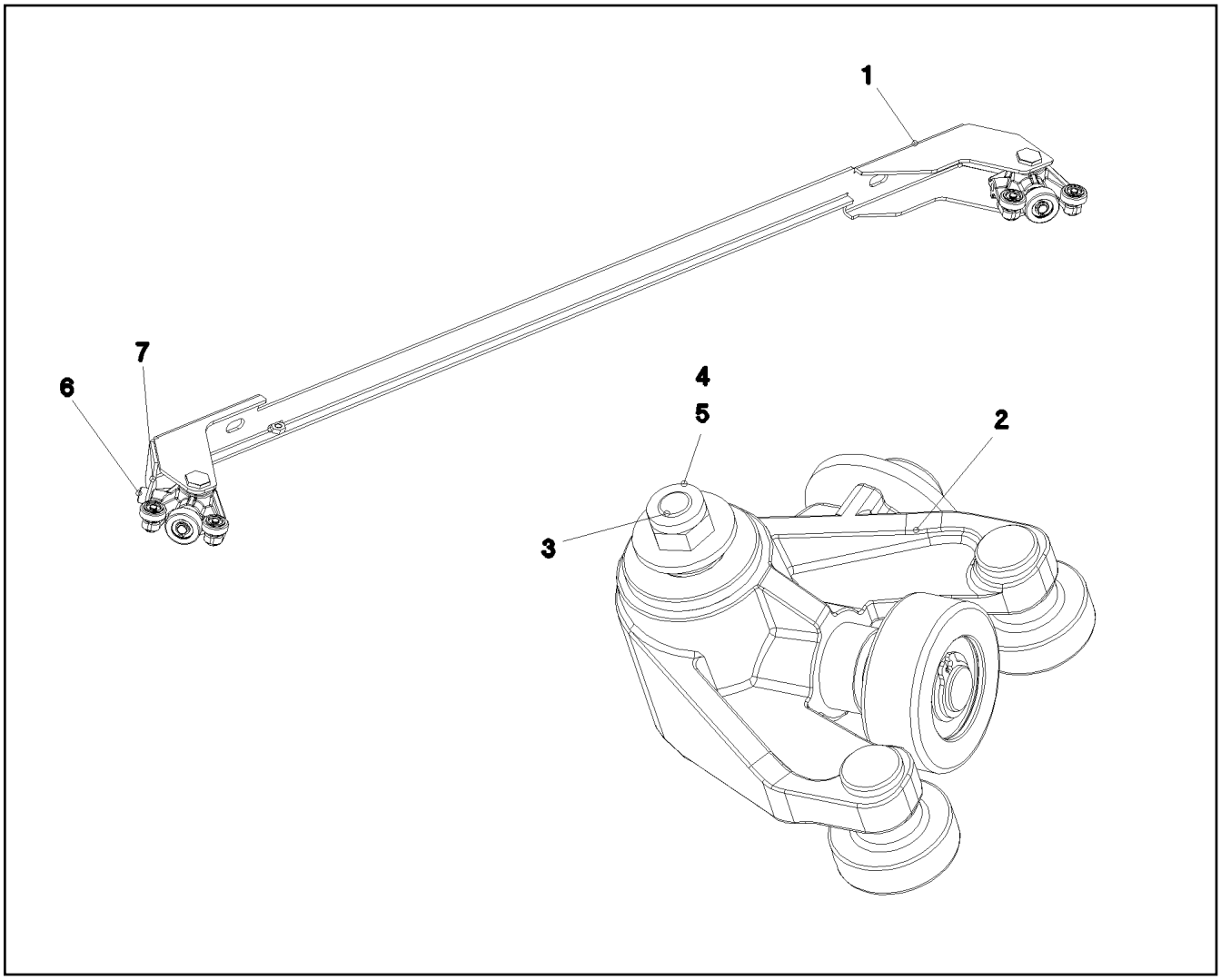

Pos.	Item	Quantity	Description	Bezeichnung
1	966253708	1	HOLDER	HALTER
2	966253908	2	WAGON ⇨ ❑ 364	WAGEN
3	97001095	2	PIN 22X57 1.4305	BOLZEN
4	421801708	2	WASHER ISO 7093-1 6 200HV-A2	SCHEIBE
5	411903008	2	HEX NUT DIN 985 M6 A2-70	SECHSKANTMUTTER
6	10875593	1	SOCKET HEAD SCREW ISO 4762 M8X10 8.8	ZYLINDERSCHRAUBE
7	421802108	1	WASHER ISO 7093-1 10 A2	SCHEIBE

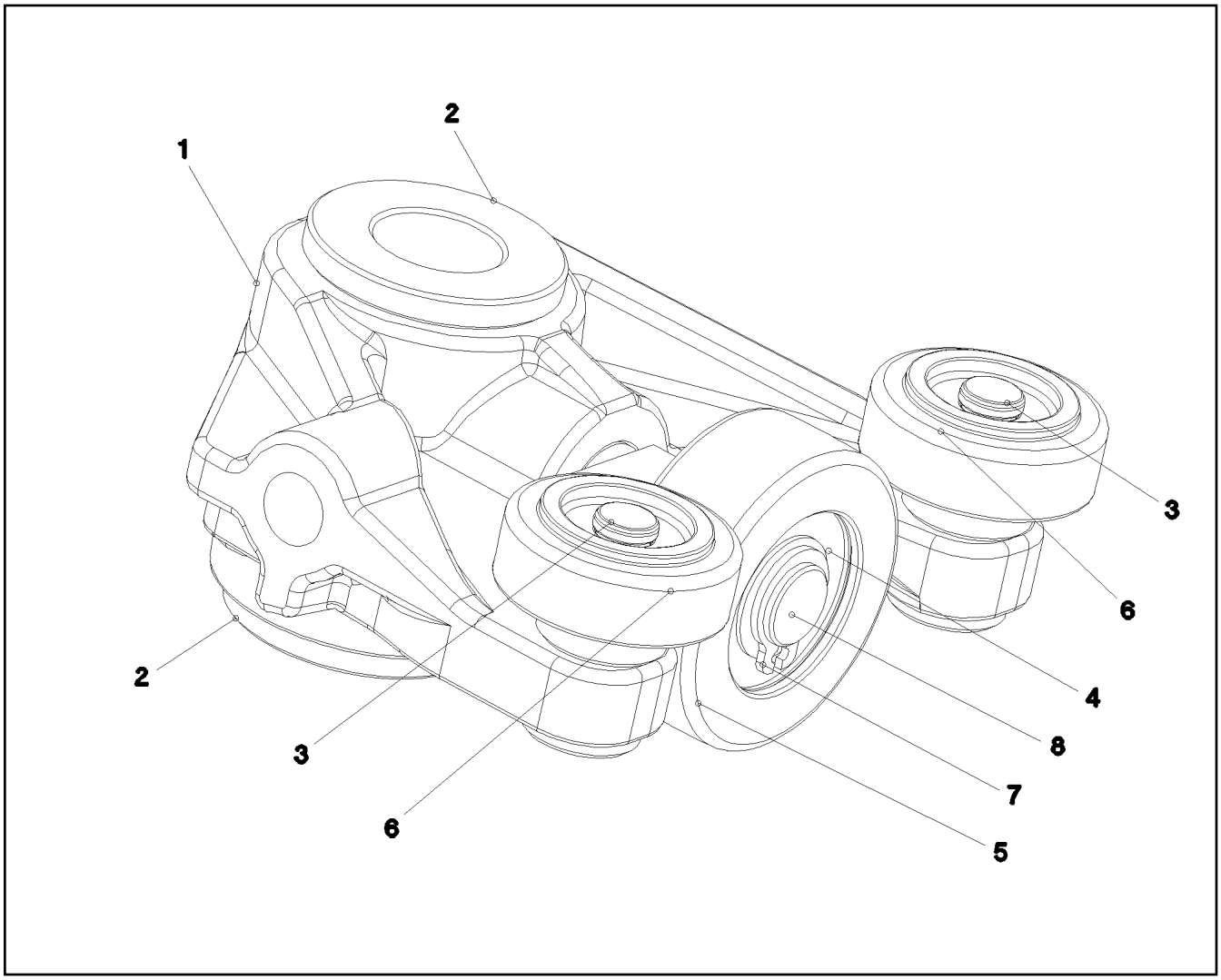

Pos.	Item	Quantity	Description	Bezeichnung
1	97001102	1	WAGON 68X64.5X33 G-ALSI7MG WA	WAGEN
2	10424489	2	FLANGE SLEEVE DIN 1850 / ISO 2795 12X1	BUNDLAGER
3	97001103	2	PIN 22X11 1.4301	BOLZEN
4	745129501	1	DEEP GROOVE BALL BEARING DIN 625 S6	RILLENKUGELLAGER
5	97008171	1	ROLLER 30X11 PA 12	ROLLE
6	97001109	2	ROLLER 22X13 PA 12	ROLLE
7	10450160	1	RETAINING RINGS DIN 471 8X0,8 EDELST	SICHERUNGSRING
8	97007043	1	PIN 39X18 1.4301	BOLZEN

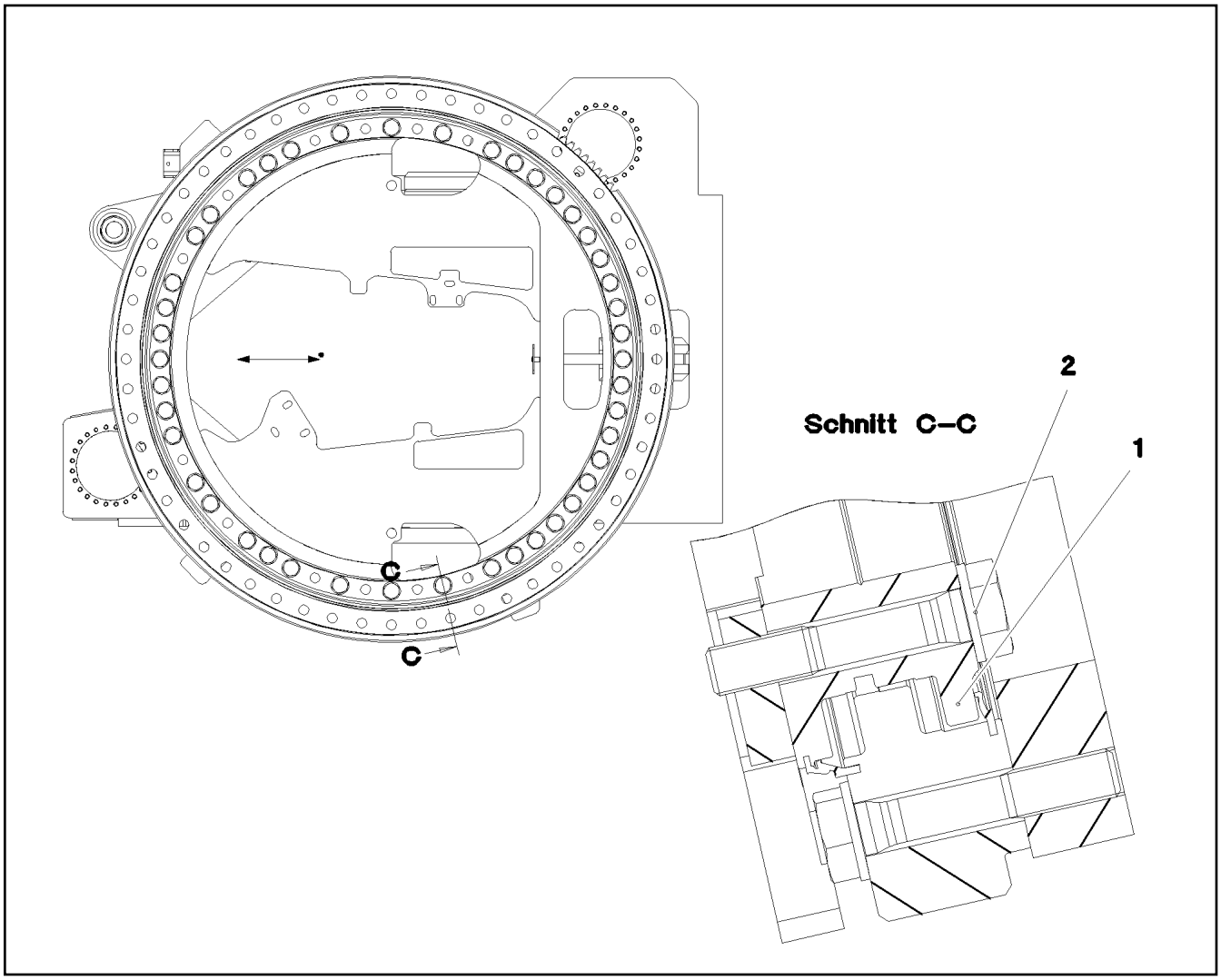

Pos.	Item	Quantity	Description	Bezeichnung
1	931696301	1	ROLLER SLEWING RING 1340-115 42CrMo4 ⇨ ❑ 366	ROLLENDREHVERBINDUNG
2	409817708	44	EXPANSION BOLT M27X145 30CRNIMO8 SP	DEHNSCHRAUBE

Pos.	Item	Quantity	Description	Bezeichnung
314	262183501	4.8	SEALING PROFILE	DICHTPROFIL
315	262181001	4.83	SEALING PROFILE NBR 70-4833	DICHTPROFIL
316	262181001	4.78	SEALING PROFILE NBR 70-4833	DICHTPROFIL

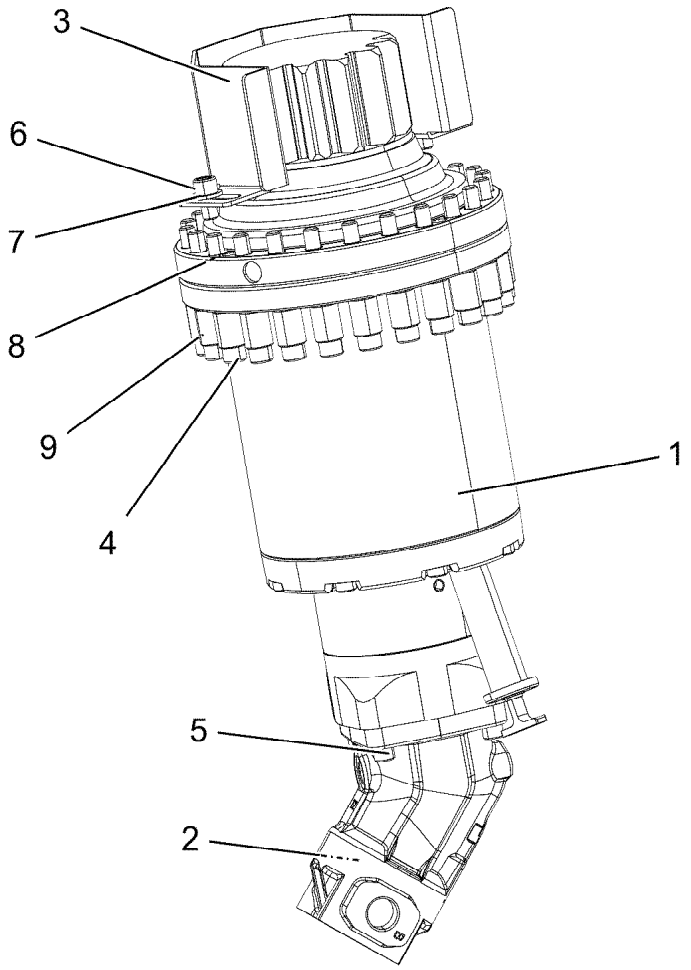

Pos.	Item	Quantity	Description	Bezeichnung
1	933074801	1	SLEWING GEAR DRIVE DAT 225/458 LIEBHE ⇨ ❑ 368	DREHWERKANTRIEB
2	510229408	1	HYDRO MOTOR A2FM 23CM³/U ⇨ ❑ 371	HYDROMOTOR
3	970596208	1	PROTECTION GUARD 3x146x437 DC01 FE//	SCHUTZBLECH
4	10663388	24	SOCKET HEAD SCREW ISO 4762 M12X90 10	ZYLINDERSCHRAUBE
5	10468820	4	SOCKET HEAD SCREW ISO 4762 M10X35 10	ZYLINDERSCHRAUBE
6	10875577	2	SOCKET HEAD SCREW ISO 4762 M12X20 8	ZYLINDERSCHRAUBE
7	10289804	2	WASHER ISO 7089 12 300HV FLZN SPF	SCHEIBE
8	97116895	3	FRICTION PLATE 3M TYP35	REIBPLATTE
9	97114100	24	SLEEVE 25.0X30 35NICRMOV125 SCHWAR	HUELSE

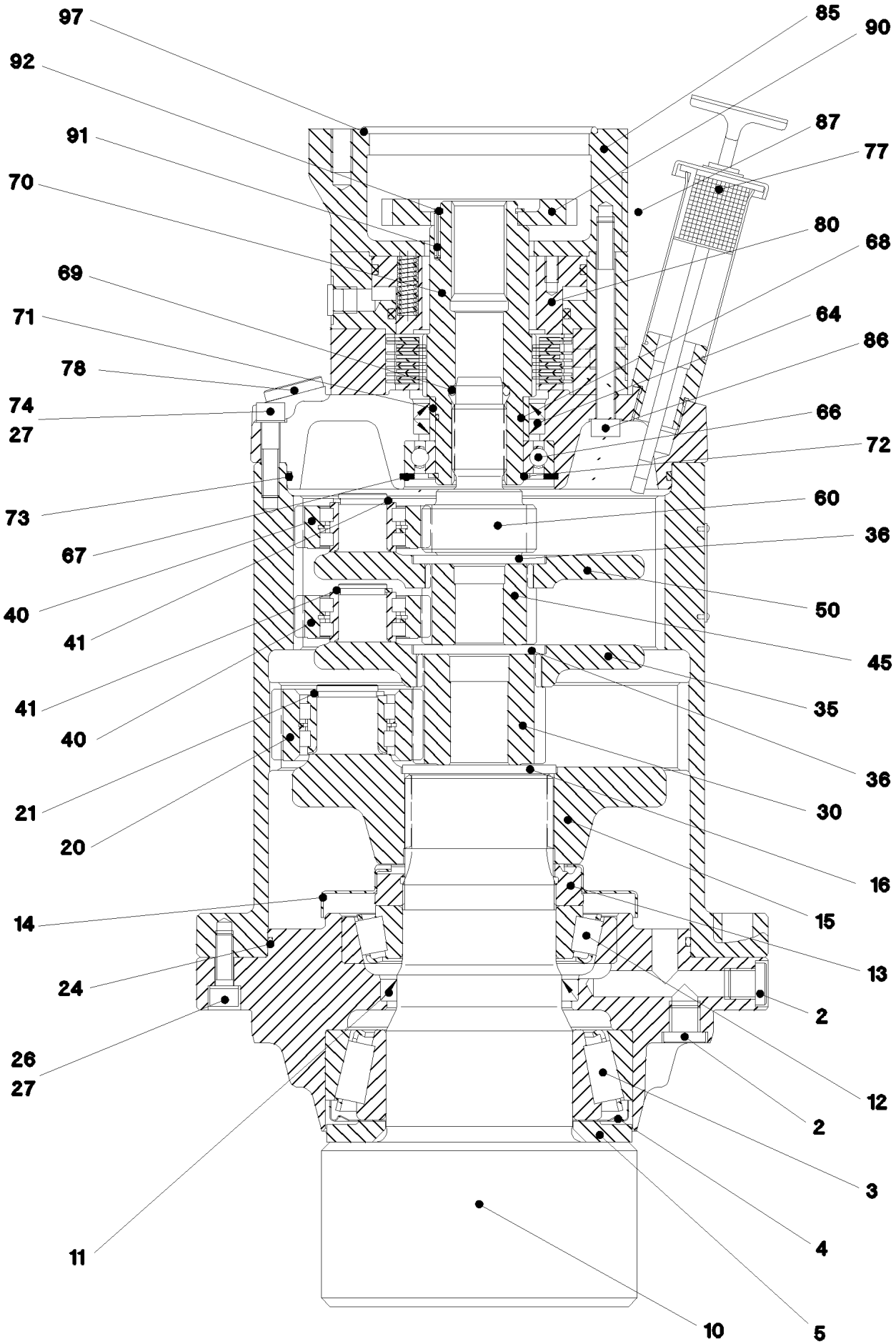
97
92
91
70
69
71
78
74
27
73
67
40
41
41
40
21
20
14
24
26
27
11
85
90
87
77
80
68
64
86
66
72
60
36
50
45
35
36
30
16
15
13
2
12
2
3
4
5
10

Pos.	Item	Quantity	Description	Bezeichnung
2	477704908	4	STOP PLUG VSTIM14X1,5ED CR6-FREI	STOPFEN
3	746246001	1	TAPERED ROLLER BEARING DIN 720 33117	KEGELROLLENLAGER
4	747258401	1	BEARING COVER RING 33117 AV	LAGERABDECKRING
5	931807501	1	WASHER 85,2X139X9,5 C45	SCHEIBE
10	933074901	1	OUTPUT SHAFT 143,8 18CrNiMo7-6	ABTRIEBSWELLE
11	710059301	1	ROTARY SHAFT LIP SEAL DIN 3760 A 75X9	RADIALWELLENDICHTRING
12	746201408	1	TAPERED ROLLER BEARING DIN 720 30214-	KEGELROLLENLAGER
13	927530201	1	SLOTTED NUT M70X2X19 C45	NUTMUTTER
14	927530301	1	PLATE DC01	BLECH
15	939250301	1	PLANETARY CARRIER 170 42CrMo4	PLANETENTRAEGER
16	927531901	1	RETAINING DISK 4X70X4 -42CrMo4	HALTESCHEIBE
20	939251101	5	PLANET WHEEL Z=28	PLANETENRAD
21	463000103	5	RETAINING RINGS DIN 471 28X2	SICHERUNGSRING
24	726453601	1	O-RING 175X3 NBR 70	O-RING
26	10875599	8	SOCKET HEAD SCREW ISO 4762 M8X25 8.8	ZYLINDERSCHRAUBE
27	423901408	16	LOCK WASHER VS 8 ST	SICHERUNGSSCHEIBE
30	939251401	1	SUN WHEEL Z=24 18CrNiMo7-6	SONNENRAD
35	939251501	1	PLANETARY CARRIER 150 42CrMo4+QT	PLANETENTRAEGER
36	944134103	2	RETAINING DISK 4X60X4 -42CrMo4	HALTESCHEIBE
40	927530801	6	PLANET WHEEL	PLANETENRAD
41	463000003	6	RETAINING RINGS DIN 471 22X1,75	SICHERUNGSRING
45	939251601	1	SUN WHEEL Z=24 18CrNiMo7-6	SONNENRAD
50	939257301	1	PLANETARY CARRIER 150 42CrMo4+QT	PLANETENTRAEGER
60	939251701	1	SUN WHEEL Z=24 18CrNiMo7-6	SONNENRAD
64	10167462	2	ROTARY SHAFT LIP SEAL DIN 3760 A 45X60	RADIALWELLENDICHTRING
66	745139101	1	DEEP GROOVE BALL BEARING DIN 625 60	RILLENKUGELLAGER
67	428102108	1	RETAINING RINGS DIN 472 68X2,5	SICHERUNGSRING
68	530151508	1	O-RING DIN 3771 35,00X2,00 NBR70	O-RING
69	726414901	1	O-RING 20X4 NBR 70	O-RING
70	927716701	1	MULTI-DISC CARRIER 42CrMo4+QT	LAMELLENTRAEGER
71	747404001	1	INNER RING 40X45X20	INNENRING
72	10875657	1	RETAINING RINGS DIN 471 40X1,75 480H SP	SICHERUNGSRING
73	726440001	1	O-RING 165X3 FKM 70	O-RING
74	11691424	8	SOCKET HEAD SCREW ISO 4762 M8X35 8.8	ZYLINDERSCHRAUBE
77	927554301	1	VENTILATION CONNECTING PIECE ⇨ ❑ 370	ENTLUEFTUNGSSTUTZEN
78	477704508	1	STOP PLUG VSTIM22X1,5ED CR6-FREI	STOPFEN
80	502036301	1	SPRING LOADED MULTI-DISC BRAKE	FEDERDRUCKLAMELLENBREMS
(1)	571935508	1	ACTUATING UNIT	BETAETIGUNGSEINHEIT
(999)	96082028	1	SEAL KIT	DICHTSATZ
85	938996401	1	MOTOR FLANGE EN-GJL-250	MOTORFLANSCH
86	12213825	10	SOCKET HEAD SCREW ISO 4762 M8X90 8.8	ZYLINDERSCHRAUBE
87	477705608	2	STOP PLUG VSTIM27X2ED CR6-FREI	STOPFEN
90	938996501	1	TOOTH LOCK WASHER 12X99/17RD S355J	ZAHNSCHEIBE
91	431200501	3	CORE PIN ISO 8740 3X20	KERBSTIFT
92	428002908	1	RETAINING RINGS DIN 471 35X1,5	SICHERUNGSRING
97	726405708	1	O-RING 95X3 NBR70	O-RING
950	12572663	1	REPAIR KIT BREMSE LIEBHERR-GRAU	REPARATURSATZ

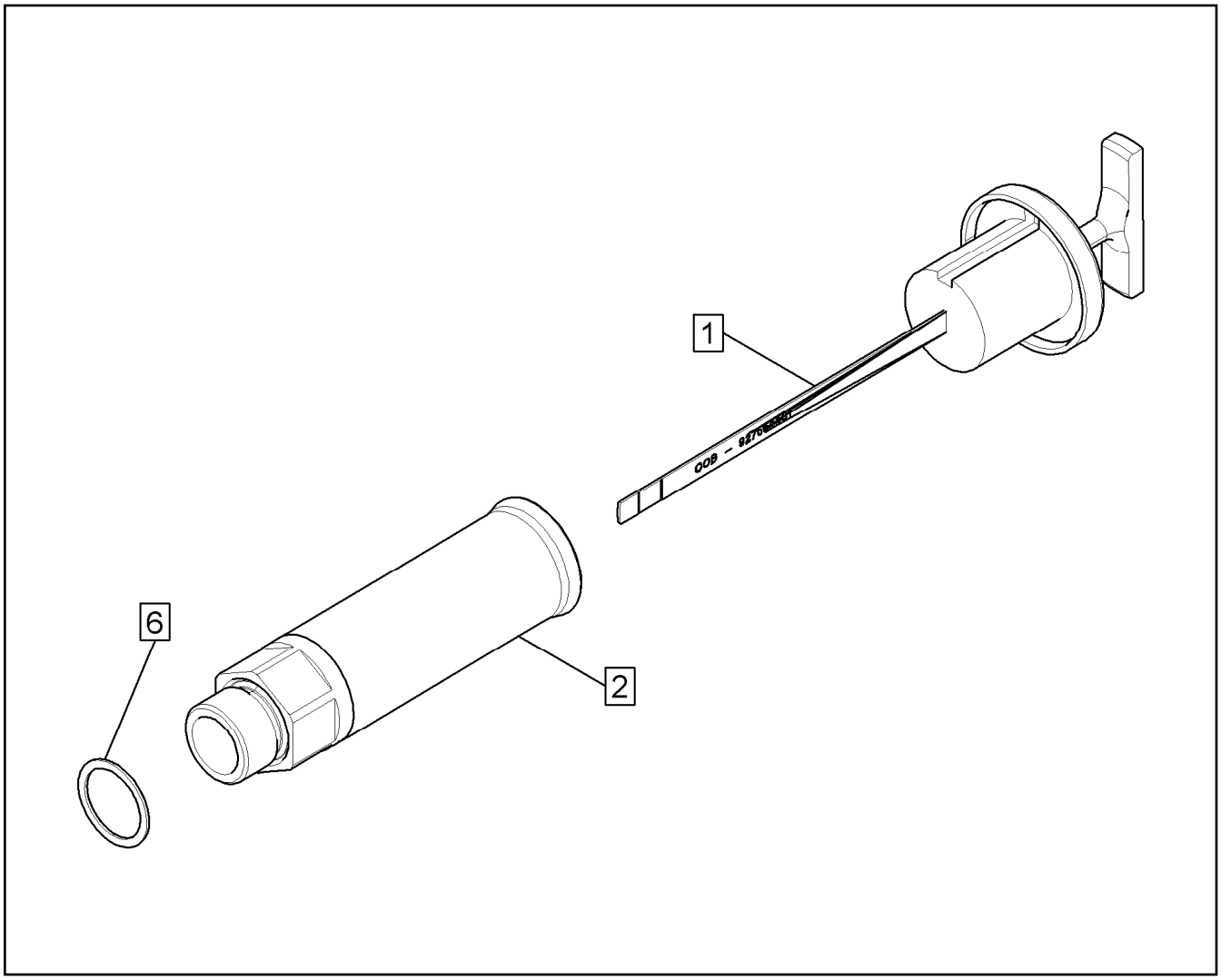

Pos.	Item	Quantity	Description	Bezeichnung
1	927554401	1	OIL DIPSTICK 1 1/8"	OELMESSSTAB
2	927501901	1	VENTILATION CONNECTING PIECE	ENTLUEFTUNGSSTUTZEN
6	761022503	1	SEALING RING 19,6X24,3X1,5 NBR 85 Shore	DICHTRING

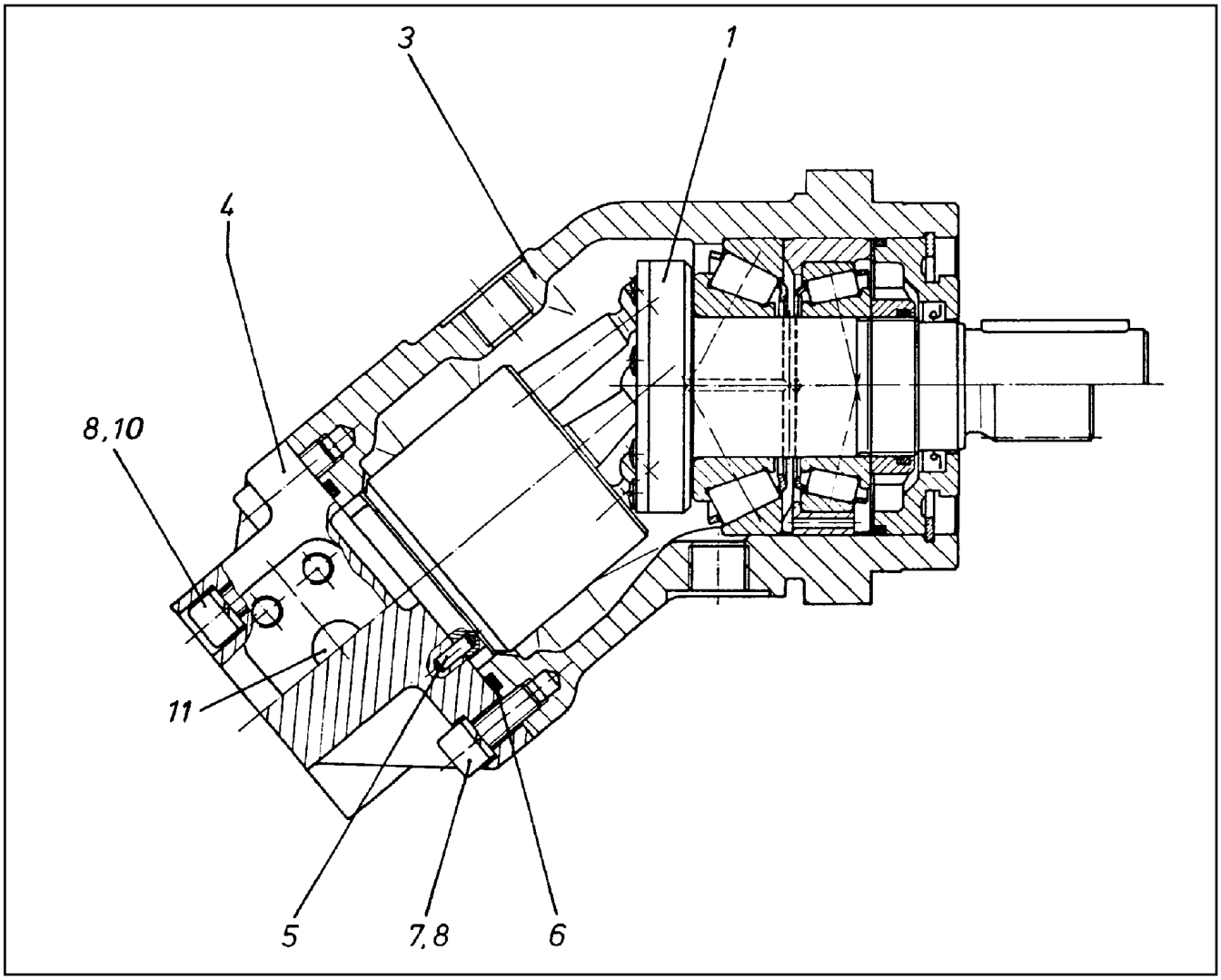

Pos.	Item	Quantity	Description	Bezeichnung
1	570109008	1	DRIVING GEAR ⇨ ❑ 372	TRIEBWERK
3	570109108	1	HOUSING	GEHAEUSE
4	570109208	1	CONNECTING PLATE	ANSCHLUSSPLATTE
5	570109308	1	PARALLEL PIN ISO 2338 4M6X10 ST	ZYLINDERSTIFT
6	518648508	1	O-RING ARP 568 66,27X3,53 NBR70	O-RING
7	10875598	2	SOCKET HEAD SCREW ISO 4762 M8X20 8.8	ZYLINDERSCHRAUBE
8	424100708	6	WASHER SPRING DIN 7980 8 FST VERZ	FEDERRING
10	10875601	4	SOCKET HEAD SCREW ISO 4762 M8X50 8.8	ZYLINDERSCHRAUBE
11	570109408	2	SCREW PLUG M27X2	VERSCHLUSSSCHRAUBE
14	10803065	1	CLOSING RING	VERSCHLUSSRING
(14)	7022315	1	SHAFT SEAL 35X52X6/5 FKM	WELLENDICHTRING

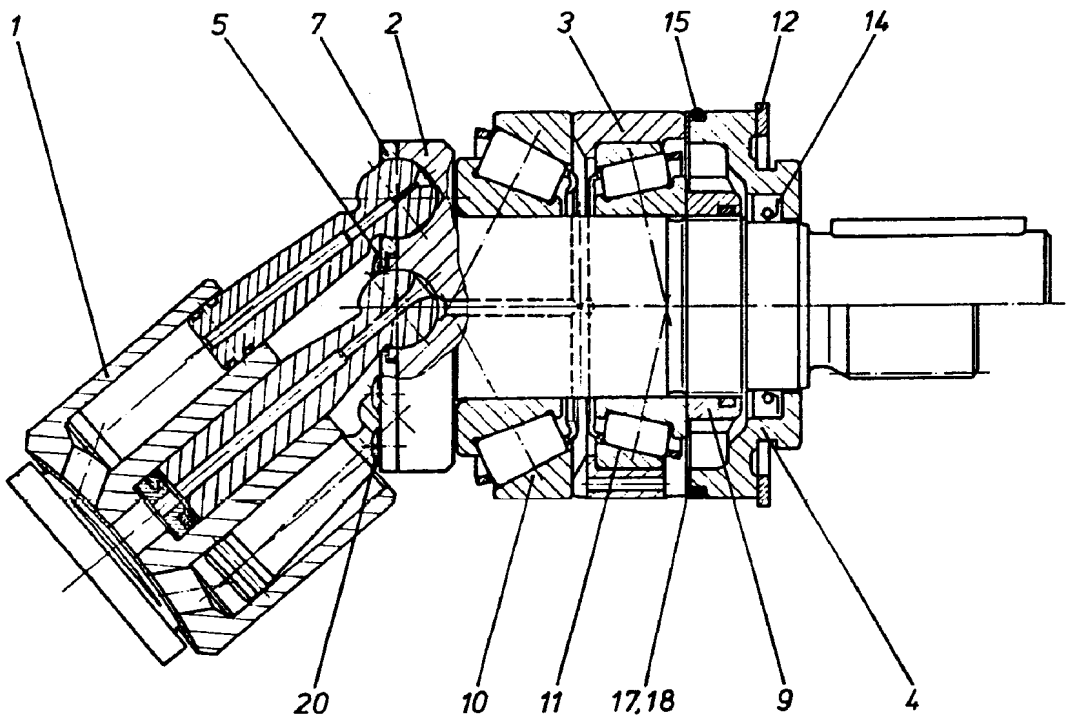

Pos.	Item	Quantity	Description	Bezeichnung
1	570109508	1	DRIVING GEAR ⇨ ❑ 373	TRIEBWERK
2	570109608	1	DRIVING SHAFT	TRIEBWELLE
3	570109708	1	BEARING RING	LAGERRING
4	570109808	1	CLOSING RING	VERSCHLUSSRING
5	10293786	1	SHIM WASHER	UNTERLEGSCHEIBE
7	570110008	1	PULL-BACK PLATE	RUECKZUGPLATTE
9	570110108	1	SLOTTED NUT M38X1,5	NUTMUTTER
10	10293775	1	TAPERED ROLLER BEARING	KEGELROLLENLAGER
11	746221908	1	TAPERED ROLLER BEARING DIN 720 32008	KEGELROLLENLAGER
12	428102508	1	RETAINING RINGS DIN 472 80X2,5	SICHERUNGSRING
14	7022315	1	SHAFT SEAL 35X52X6/5 FKM	WELLENDICHTRING
15	514530408	1	O-RING ARP 568 75,87X2,62 NBR90	O-RING
17	421000408	2	SHIM RING DIN 988 63X80X0,1	PASSSCHEIBE
18	421000508	1	SHIM RING DIN 988 63X80X0,3	PASSSCHEIBE
20	514525208	7	OVAL SCREW M4X12 10.9	LINSENSCHRAUBE

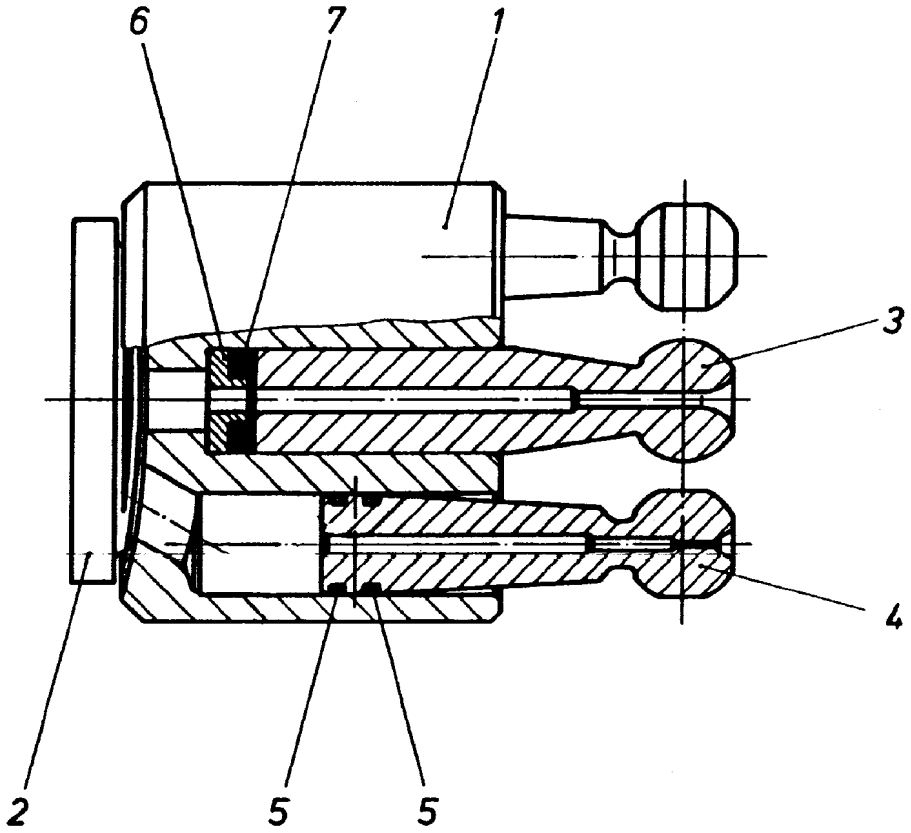

Pos.	Item	Quantity	Description	Bezeichnung
1	570110308	1	CYLINDER	ZYLINDER
2	570110408	1	CONTROL PLATE	STEUERPLATTE
3	570110508	1	CENTER STUD	MITTELZAPFEN
4	570110608	7	PISTON	KOLBEN
5	570110708	14	RING	RING
6	570110808	1	SPRING SUPPORT	FEDERTELLER
7	570110908	4	DISC SPRING	TELLERFEDER

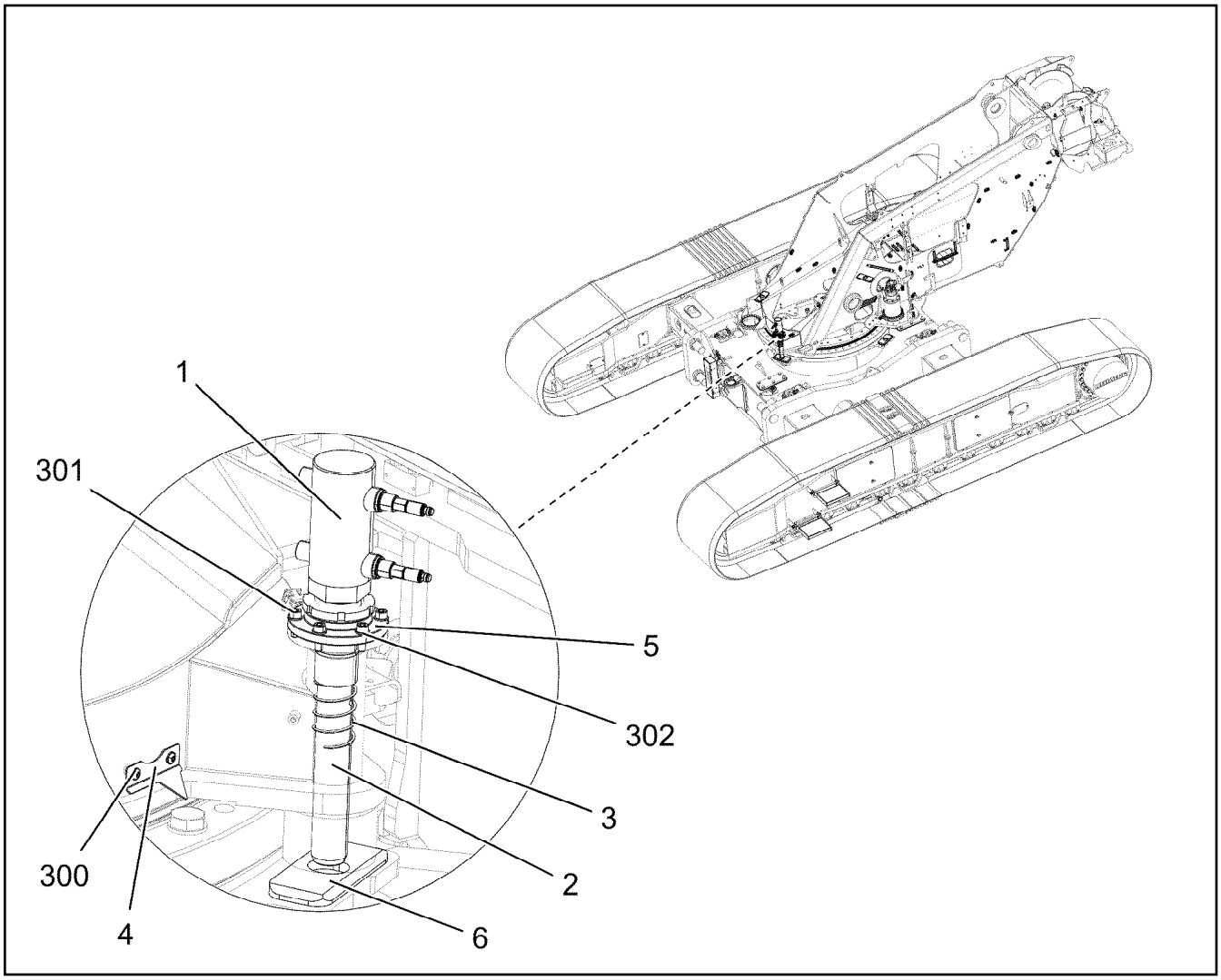

Pos.	Item	Quantity	Description	Bezeichnung
1	10443748	1	HYDRO CYLINDER 70/45-50 SPF	HYDROZYLINDER
(999)	10490901	1	DS HYDRO CYLINDER	DS HYDROZYLINDER
2	951493908	1	PIN 65.0 X340 35NICRMOV125 SPF	BOLZEN
3	10876108	1	COMPRESSION SPRING 3,6X56,4X122 EN1	DRUCKFEDER
4	979673208	1	POINTER 2X120X82 X5CRNI18-10	ZEIGER
5	972140108	1	SLEEVE 140.0X25 35NICRMOV125	MUFFE
6	975257708	4	PLATE 15X95X220 S960QL	BLECH
300	12102696	2	BUTTON HEAD SCREW AEHNL.ISO 7380-2	HALBRUNDKOPFSCHRAUBE
301	10875571	6	SOCKET HEAD SCREW ISO 4762 M10X30 8	ZYLINDERSCHRAUBE
302	10289795	6	WASHER ISO 7089 10 300HV FLZN SPF	SCHEIBE

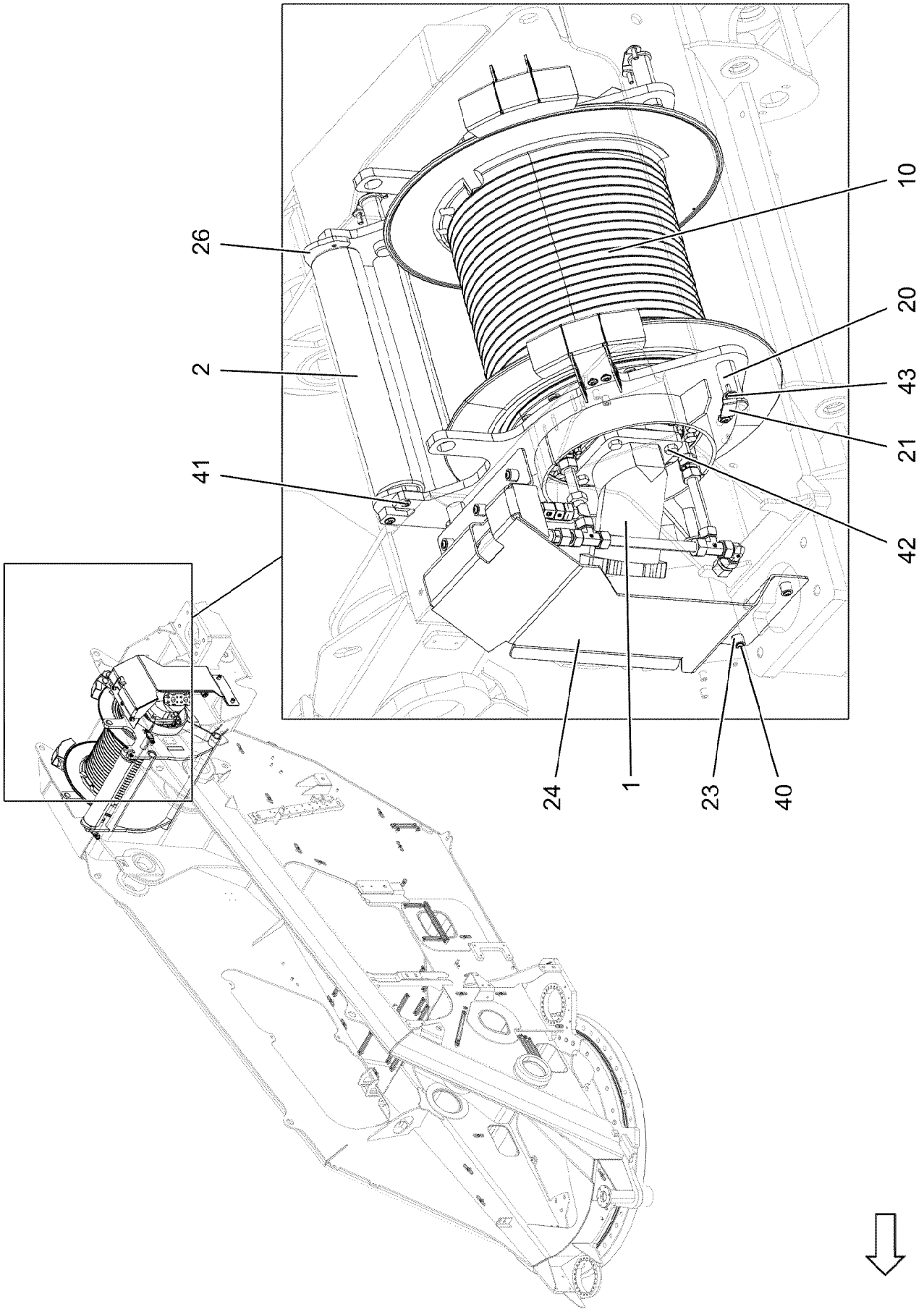
10
26
20
2
43
21
41
42
24
1
23
40

Pos.	Item	Quantity	Description	Bezeichnung
1	510240708	1	HYDRO MOTOR A2FM 125CM³/U SPF ⇨ ❑ 377	HYDROMOTOR
2	749014508	1	CARRYING ROLLER 107/8/40X590 GASN. SP	TRAGROLLE
10	963564908	1	MAIN HOISTING GEAR PRE-ASS. ⇨ ❑ 378	HAUPTHUBWERK VORM.
20	973106708	4	PIN 50.0X135 35NICRMOV125 GASN. SPF	BOLZEN
21	973114708	4	PLATE 3X128X30 DC01 FE//ZNNI8//CN//T0	BLECH
23	953873408	5	SLEEVE 25X20 11SMNPB37 FE//ZNNI8//CN/	HUELSE
24	976638108	1	PLATE 5X1099X558 X5CRNI18-10	BLECH
26	973105408	2	AXLE HOLDER 12X108X84 S690QL	ACHSHALTER
40	10875485	5	BUTTON HEAD SCREW AEHNL.ISO 7380-2	HALBRUNDKOPFSCHRAUBE
41	10875475	4	BUTTON HEAD SCREW AEHNL.ISO 7380-2	HALBRUNDKOPFSCHRAUBE
42	10875803	4	HEX SCREW ISO 4017 M16X45 8.8 FLZN SP	SECHSKANTSCHRAUBE
43	10875448	8	BUTTON HEAD SCREW ISO 7380-2 M10X25	HALBRUNDKOPFSCHRAUBE

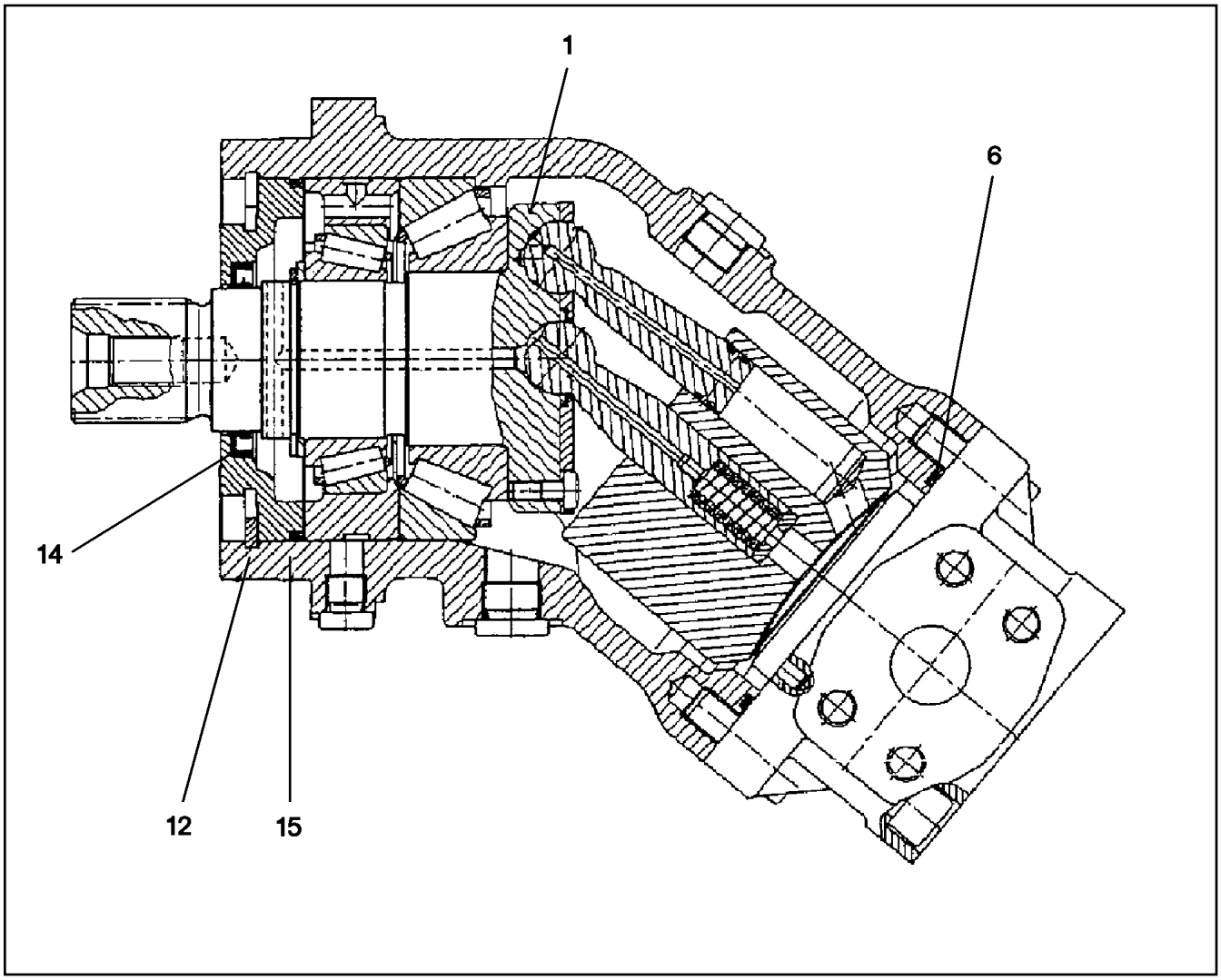

Pos.	Item	Quantity	Description	Bezeichnung
1	10289549	1	DRIVING GEAR	TRIEBWERK
6	514613208	1	O-RING ARP 568 98,02X3,53 NBR70	O-RING
12	428103808	1	RETAINING RINGS DIN 472 125X4	SICHERUNGSRING
14	7003478	1	SHAFT SEAL 50X72X7	WELLENDICHTRING
15	514614108	1	O-RING ARP 568 117,07X3,53 NBR70	O-RING

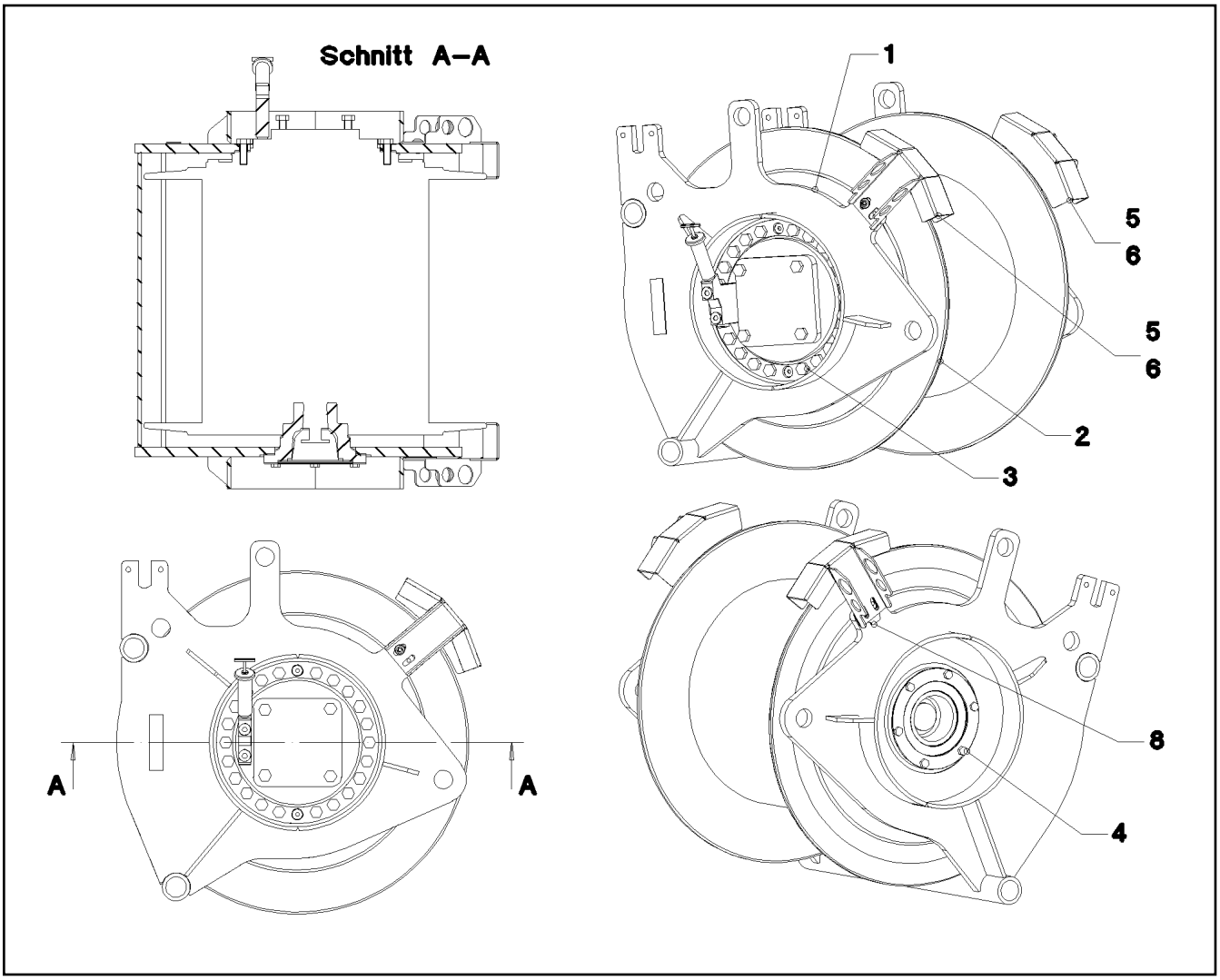

Pos.	Item	Quantity	Description	Bezeichnung
1	962573308	1	MAIN HOISTING GEAR WELDED	HAUPTHUBWERK SCHWK.
2	968558601	1	COMPACT ROPE WINCH KSW 400S820 ⇨ ❑ 379	KOMPAKTSEILWINDE
3	406603108	22	HEX SCREW ISO 4017 M16X45 10.9 FLZN SP	SECHSKANTSCHRAUBE
4	406601008	6	HEX SCREW ISO 4017 M10X35 10.9 FLZN SP	SECHSKANTSCHRAUBE
5	10875448	4	BUTTON HEAD SCREW ISO 7380-2 M10X25	HALBRUNDKOPFSCHRAUBE
6	973116808	2	ROPE GUARD LEFT 4X311X318 S315MC	SEILSCHUTZ LI.
8	973536508	6	PLATE 2X50X76 X5CRNI18-10	BLECH

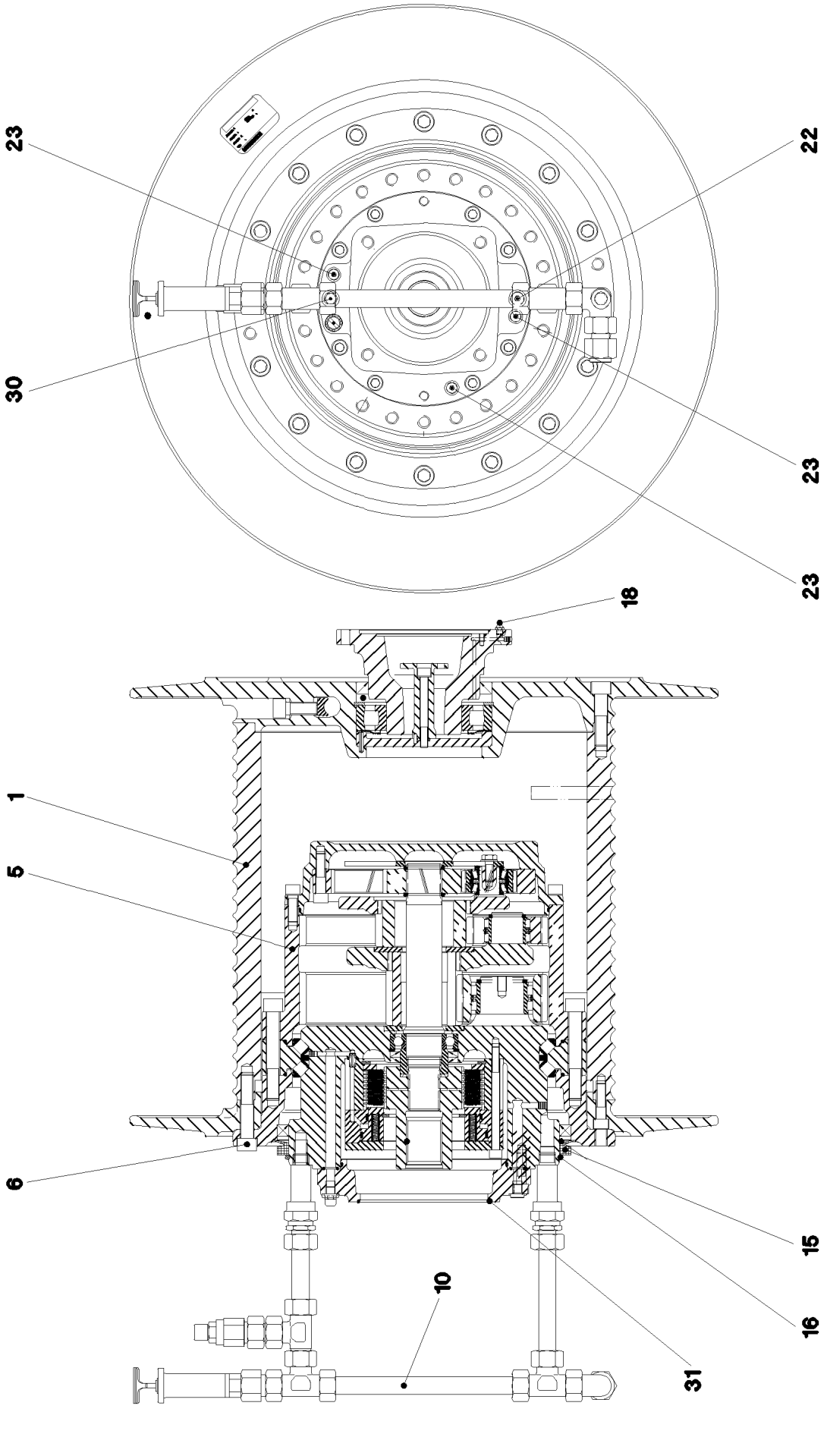
23
22
30
23
23
18
1
5
6
15
16
10
31

Pos.	Item	Quantity	Description	Bezeichnung
1	938759601	1	ROPE DRUM ⇨ ❑ 381	SEILTROMMEL
5	968607101	1	PLANETARY GEARBOX ⇨ ❑ 382	PLANETENGETRIEBE
6	4000521	16	SOCKET HEAD SCREW ISO 4762 M16X80 10	ZYLINDERSCHRAUBE
10	939368401	1	OIL-GAUGING INSTRUMENT ⇨ ❑ 384	OELMESSEINRICHTUNG
15	710908701	1	V-RING 350 NBR,60 SHORE	V-RING
16	726421508	1	O-RING 300X6 NBR70	O-RING
18	774301101	1	HYDRAULIC-TYPE LUBRICAT.NIPPLE DIN 7	KEGELSCHMIERNIPPEL
22	477704308	1	STOP PLUG VSTI M12X1,5 CR6-FREI	STOPFEN
23	477705508	3	STOPPER PLUG VSTIM10X1ED CR6-FREI	BLINDSTOPFEN
30	721114701	1	VENTILATION VALVE	ENTLUEFTUNGSVENTIL
31	726426601	1	O-RING 155X3 NBR 70 SPF	O-RING

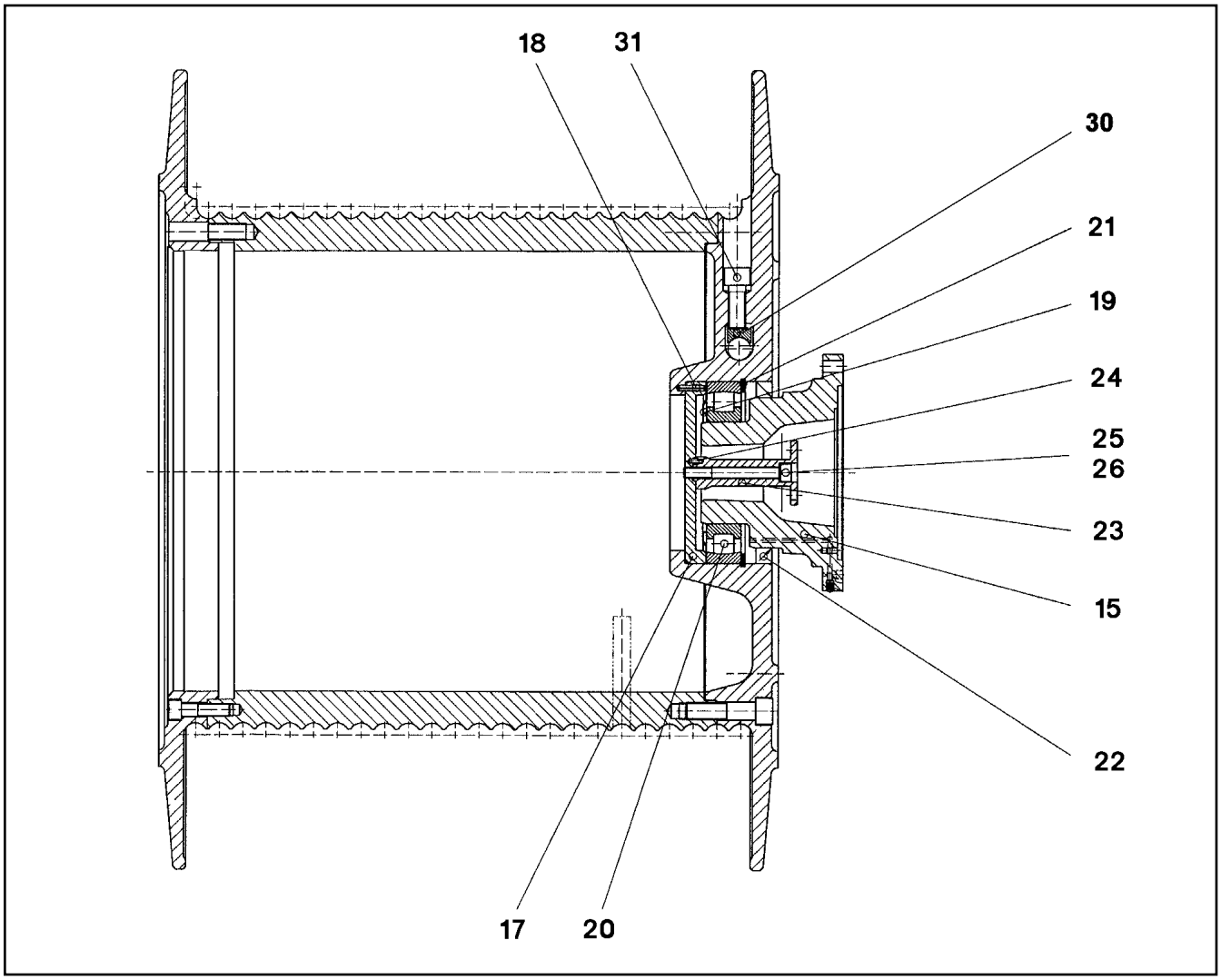

Pos.	Item	Quantity	Description	Bezeichnung
15	927504801	1	FLANGE	FLANSCH
17	927504601	1	COVER 170X19,5	DECKEL
18	431202401	1	CORE PIN ISO 8740 4H11X24 ST	KERBSTIFT
19	747272501	1	BEARING COVER RING 6219 JV	LAGERABDECKRING
20	746001601	1	SELF-ALIGNING ROLLER BEARING DIN 635	PENDELROLLENLAGER
21	428105908	1	RETAINING RINGS DIN 472 170X4	SICHERUNGSRING
22	710032508	1	ROTARY SHAFT LIP SEAL DIN 3760 A 140X	RADIALWELLENDICHTRING
23	927504701	1	FLANGE	FLANSCH
24	431100201	1	CORE PIN DIN 1472 4X12	KERBSTIFT
25	12223034	1	SOCKET HEAD SCREW ISO 4762 M10X90 8	ZYLINDERSCHRAUBE
26	423901508	1	LOCK WASHER VS 10	SICHERUNGSSCHEIBE
30	927638801	1	CLAMPING PIECE 22	KLEMMSTUECK
31	10001075	4	SOCKET HEAD SCREW ISO 4762 M16X40 10	ZYLINDERSCHRAUBE

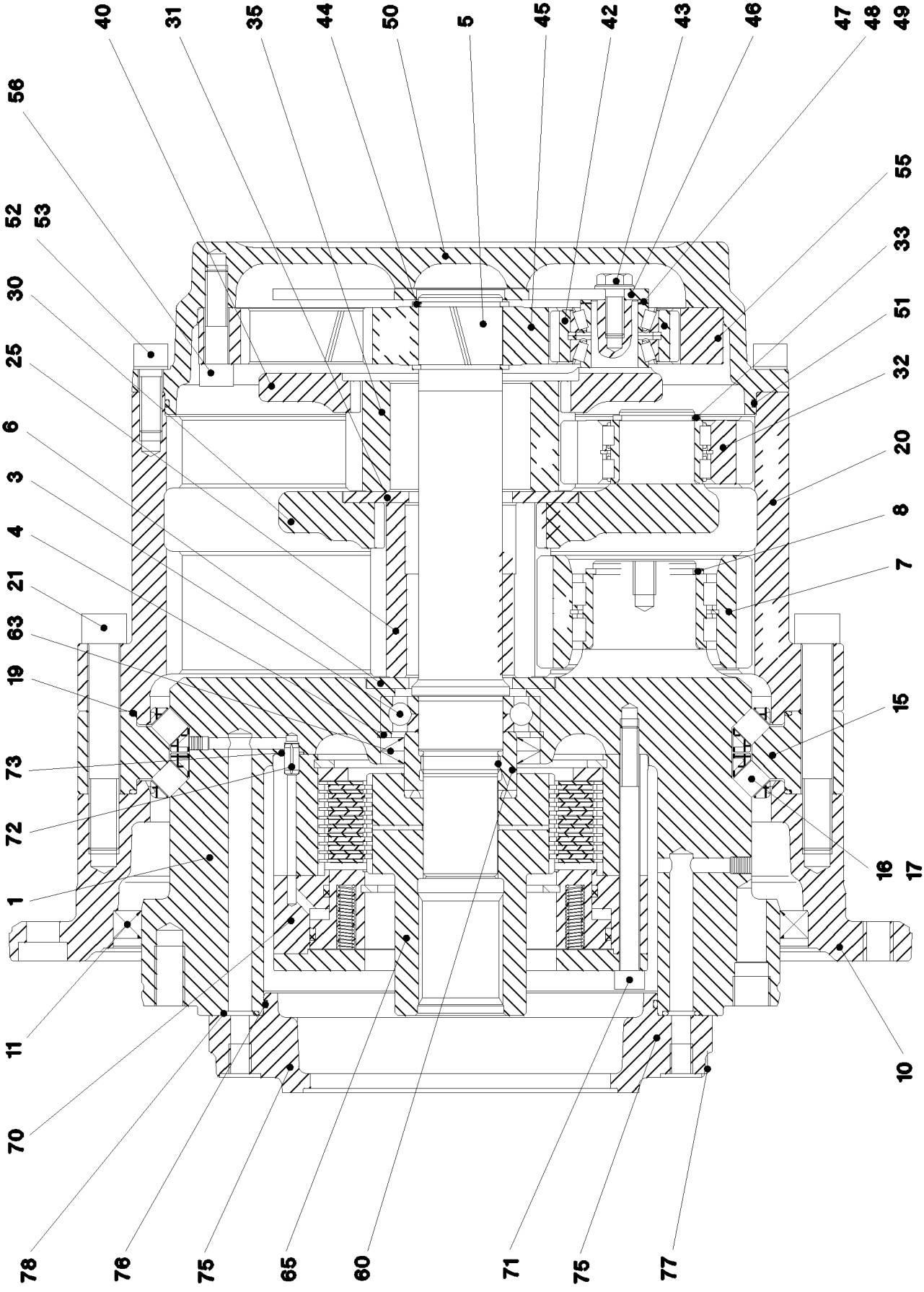
40
31
35
44
50
5
45
42
43
46
47
48
49
56
52
53
30
25
6
3
4
21
63
19
73
72
1
11
70
78
76
75
65
60
71
75
77
10
16
17
15
8
7
20
33
55
51
32

Pos.	Item	Quantity	Description	Bezeichnung
1	968607201	1	CONNECTION CARRIER 42CrMo4	ANSCHLUSSTRAEGER
3	10013601	1	STEEP-ANGLE BEARING DIN 628 QJ-209-N2	SCHRAEGKUGELLAGER
4	428102708	1	RETAINING RINGS DIN 472 85X3	SICHERUNGSRING
5	938760001	1	DRIVE SHAFT	ANTRIEBSWELLE
6	927601301	1	RETAINING DISK 100X55X6	HALTESCHEIBE
7	927601401	5	PLANET WHEEL	PLANETENRAD
8	530133308	5	RETAINING RINGS DIN 471 55X3	SICHERUNGSRING
10	927639801	1	POWER TAKE-OFF FLANGE	ABTRIEBSFLANSCH
11	965335608	1	SEAL KIT ABTRIEBSFLANSCH	DICHTSATZ
(1)	710054601	1	ROTARY SHAFT LIP SEAL DIN 3760 AS 340X	RADIALWELLENDICHTRING
(2)	710908701	1	V-RING 350 NBR,60 SHORE	V-RING
(3)	726458401	1	O-RING 300X6 EPDM 70	O-RING
15	927601701	1	BEARING RING 42CrMo4+QT	LAGERRING
16	927514301	38	ROLLER CAGE	ROLLENKAEFIG
17	747006101	114	CYL.ROLLER 14X14	ZYLINDERROLLE
19	726429901	2	O-RING 330X3 NBR 70	O-RING
20	927601801	1	INNER WHEEL Z=74 42CrMo4	INNENRAD
21	10001471	24	SOCKET HEAD SCREW ISO 4762 M16X110	ZYLINDERSCHRAUBE
25	927601901	1	SUN WHEEL Z=21 18CrNiMo7-6	SONNENRAD
30	927602001	1	PLANETARY CARRIER 275 42CrMo4+QT	PLANETENTRAEGER
31	927602801	1	RETAINING DISK 55X125X6	HALTESCHEIBE
32	927602101	3	PLANET WHEEL	PLANETENRAD
33	428003308	3	RETAINING RINGS DIN 471 40X2,5	SICHERUNGSRING
35	927602901	1	SUN WHEEL Z=28 18CrNiMo7-6	SONNENRAD
40	938760101	1	PLANETARY CARRIER 215 42CrMo4	PLANETENTRAEGER
42	938760201	3	PLANET WHEEL Z=27	PLANETENRAD
43	12692417	3	SCREW M10X1,5X25 FLZN	SCHRAUBE
44	428004008	2	RETAINING RINGS DIN 471 45X2,5	SICHERUNGSRING
45	938760401	1	SUN WHEEL Z=42 18CrNiMo7-6	SONNENRAD
46	938760501	1	THRUST WASHER 47X200X6	ANLAUFSCHEIBE
47	422062101	3	SHIM RING DIN 988 25X36X1,5 ST BLANK	PASSSCHEIBE
48	422061401	9	SHIM RING DIN 988 25X36X0,15 ST BLANK	PASSSCHEIBE
49	422061501	6	SHIM RING DIN 988 25X36X0,1 ST BLANK	PASSSCHEIBE
50	938760601	1	SUPPORT FLANGE	STUETZFLANSCH
51	530032508	1	O-RING 300X3 NBR70	O-RING
52	10875578	8	SOCKET HEAD SCREW ISO 4762 M12X35 8	ZYLINDERSCHRAUBE
53	423901708	8	LOCK WASHER VS 12	SICHERUNGSSCHEIBE
55	938760701	1	INNER WHEEL Z=-96 42CrMo4	INNENRAD
56	10012659	8	SOCKET HEAD SCREW ISO 4762 M12X50 10	ZYLINDERSCHRAUBE
60	938760801	1	SLOTTED NUT M42X1,5 42CrMo4+QT	NUTMUTTER
63	710062601	2	ROTARY SHAFT LIP SEAL BAB 60X85X7 N	RADIALWELLENDICHTRING
65	938760901	1	MULTI-DISC CARRIER 100	LAMELLENTRAEGER
70	502037201	1	SPRING LOADED MULTI-DISC BRAKE	FEDERDRUCKLAMELLENBREMS
(1)	502807501	1	BRAKE ACTUATING UNIT	BREMSBETAETIGUNGSEINHEIT
(997)	939589501	1	BRAKE MULTI-DISC SET	BREMSLAMELLENSATZ
(998)	939589601	1	BRAKE PACKING SET	BREMSE-DICHTUNGSSATZ
(999)	939589701	1	BRAKE SPRING SET	BREMSFEDERSATZ
71	11320344	12	SOCKET HEAD SCREW ISO 4762 M10X130	ZYLINDERSCHRAUBE
72	432007908	1	DOWEL PIN ISO 8752 A 8X16	SPANNSTIFT
73	10166157	1	O-RING 8X2 NBR90	O-RING
75	968607301	1	MOTOR FLANGE A2FM 125	MOTORFLANSCH
76	761021703	1	O-RING 195X3 NBR 70	O-RING
77	404312008	8	SOCKET HEAD SCREW ISO 4762 M12X40 10	ZYLINDERSCHRAUBE
78	726403401	6	O-RING 15X3 NBR 70	O-RING

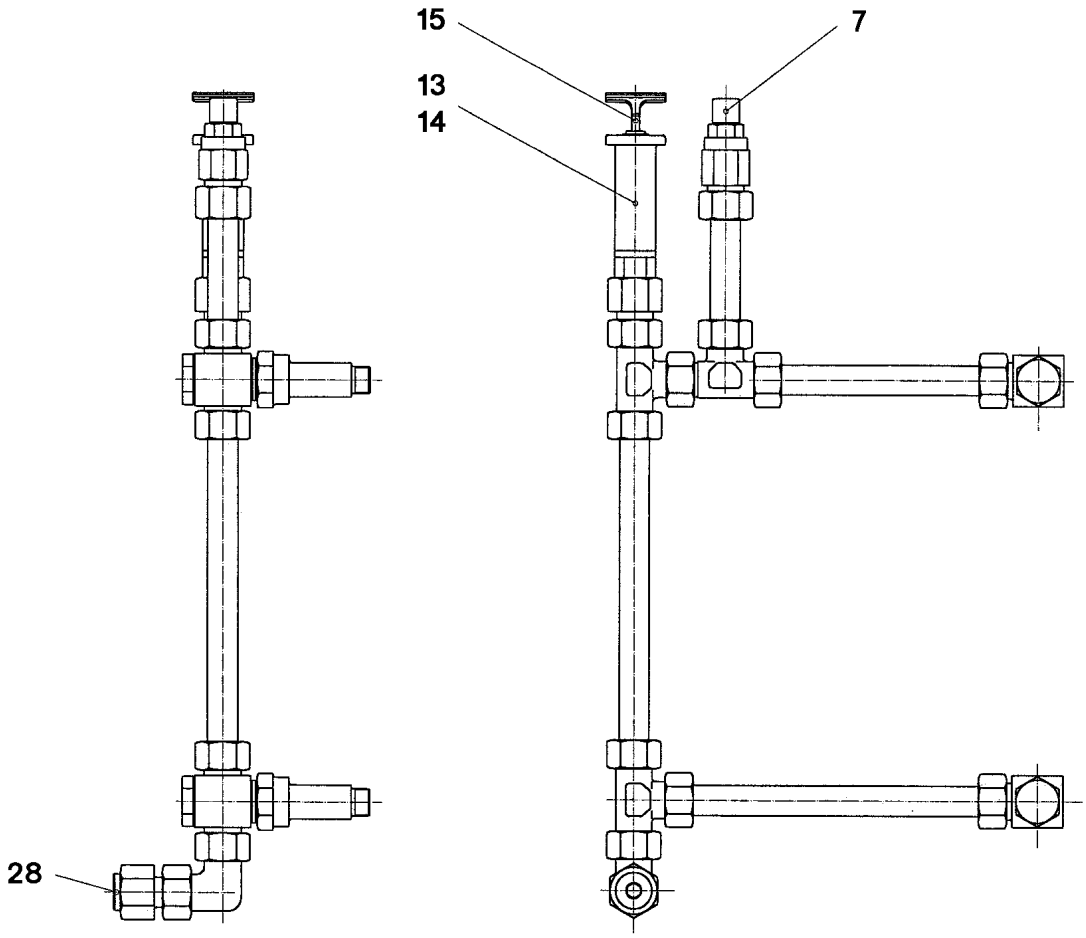

Pos.	Item	Quantity	Description	Bezeichnung
7	721108801	1	VENTILATION UNIT Steel CR6-FREI	BE- UND ENTLUEFTUNGSFILTE
13	927501901	1	VENTILATION CONNECTING PIECE	ENTLUEFTUNGSSTUTZEN
14	761022503	1	SEALING RING 19,6X24,3X1,5 NBR 85 Shore	DICHTRING
15	927610201	1	OIL DIPSTICK 1 1/8"	OELMESSSTAB
28	477704508	1	STOP PLUG VSTIM22X1,5ED CR6-FREI	STOPFEN

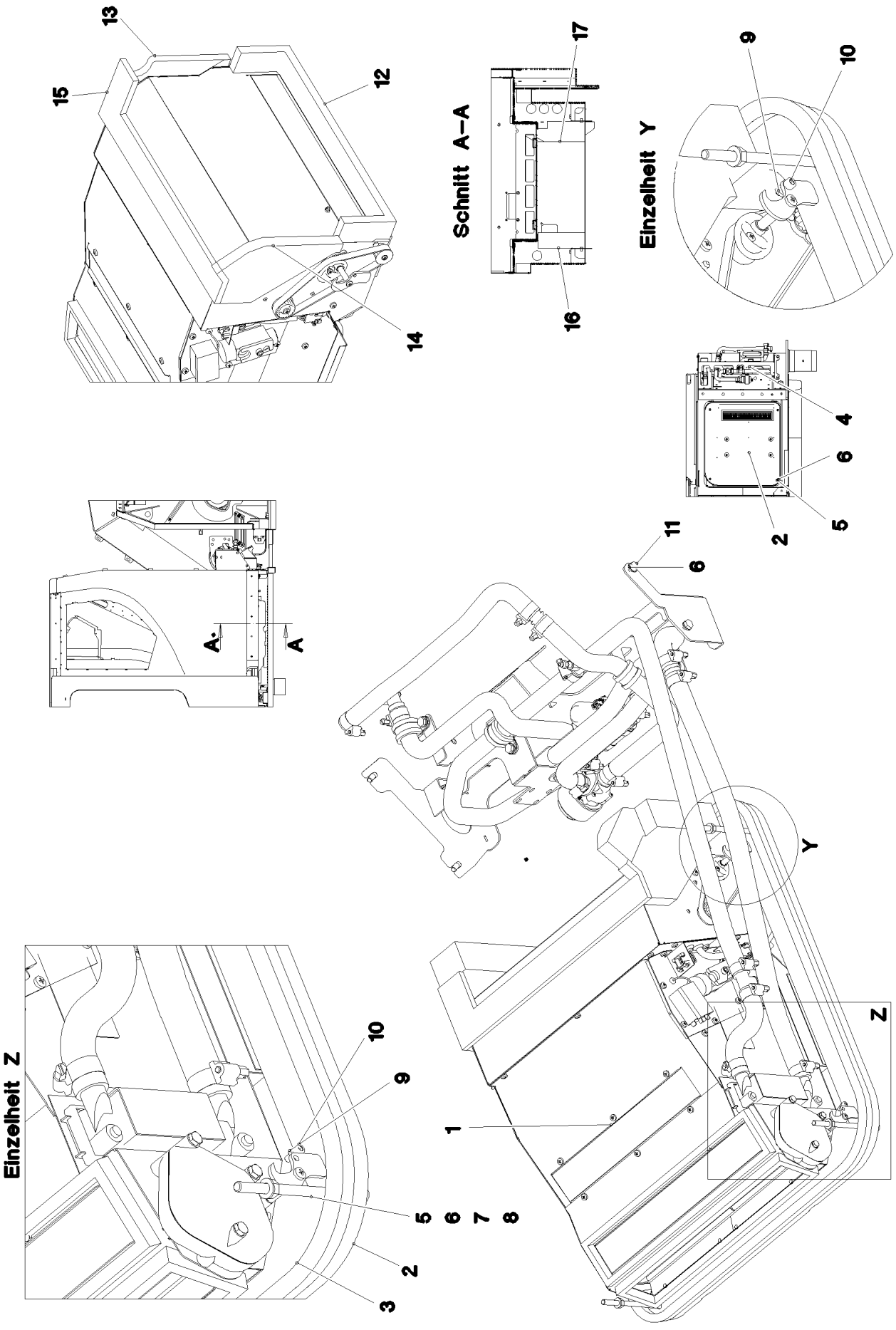
13
15
12
14
Schnitt A–A
17
16
Einzelheit Y
9
10
4
6
5
2
11
6
A
A
Y
Z
Einzelheit Z
10
9
5
6
7
8
2
3
1

Pos.	Item	Quantity	Description	Bezeichnung
1	11083498	1	AIR CONDITIONING UNIT ⇨ ❑ 387	HEIZKLIMAGERAET
2	97007030	1	COVER 635X575X95 ABS	DECKEL
3	11002218	2.22	CLAMPING PROFILE 1,5-4X25X13 EPDM	KLEMMPROFIL
4	969300008	1	HEATING, PRE-ASSEMBLED LTR1100 ⇨ ❑ 391	HEIZUNG VORM.
5	10875614	4	HEX NUT DIN 985 M8 8 480H SPF	SECHSKANTMUTTER
6	12103465	12	WASHER ISO 7089 8 300HV ZNNI-480H SPF	SCHEIBE
7	10332987	4	THREADED PIN DIN 976 M8X140 4.6 A2K	GEWINDEBOLZEN
8	11693875	4	HEX NUT ISO 4032 M8 8 480H SPF	SECHSKANTMUTTER
9	511001708	2	HEX NUT ISO 4035 M5 04	SECHSKANTMUTTER
10	11690042	2	SOCKET HEAD SCREW ISO 4762 M5X12 8.8	ZYLINDERSCHRAUBE
11	11651612	4	HEX SCREW ISO 4017 M8X16 8.8 480H SPF	SECHSKANTSCHRAUBE
12	97038833	1	INSULATING MAT 40X422X93 E30F/MH/D78	DAEMMMATTE
13	97038834	1	INSULATING MAT 13X115X179 ZP30S	DAEMMMATTE
14	97038835	1	INSULATING MAT 20X115X199 ZP30S	DAEMMMATTE
15	97038836	1	INSULATING MAT 10X455X110 E30F/MH/D78	DAEMMMATTE
16	97038837	1	INSULATING MAT 50X60X182 E30F/MH/D78	DAEMMMATTE
17	97038838	1	INSULATING MAT 50X78X235 E30F/MH/D78	DAEMMMATTE
19	774215008	4	HOSE CLAMP 26/20-32/12 W3	SCHLAUCHSCHELLE
20	11621770	3.5	COOLING WATER HOSE DN20-CONTI-KWS	KUEHLWASSERSCHLAUCH
21	11621770	3.5	COOLING WATER HOSE DN20-CONTI-KWS	KUEHLWASSERSCHLAUCH

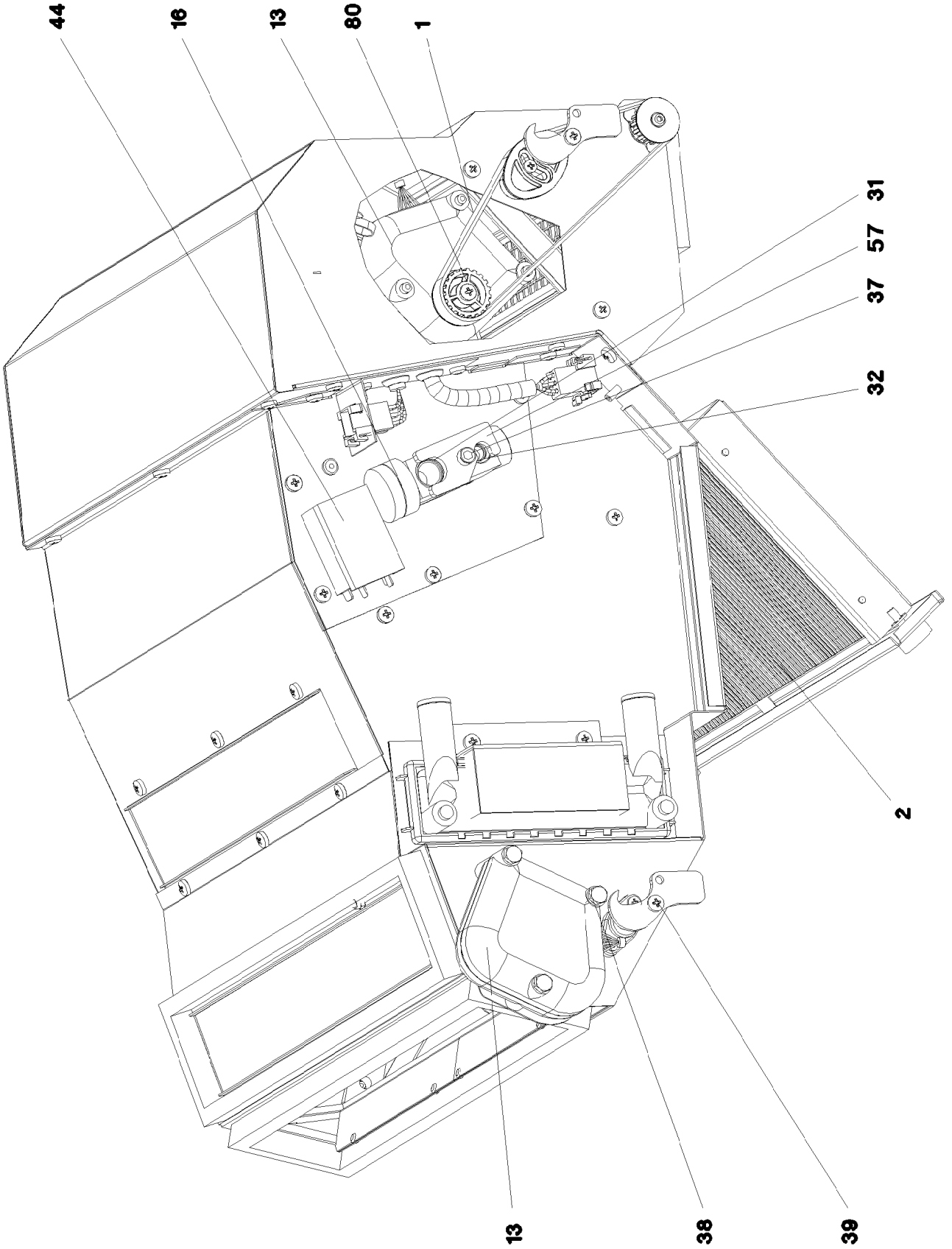

16.11.2023 079608	**etk_en_de_078966 LTR 1100**	387 (1/2)
LIEBHERR	**AIR CONDITIONING UNIT** **HEIZKLIMAGERAET**	**11083498**

Pos.	Item	Quantity	Description	Bezeichnung
1	11083453	1	TOOTHED BELT	ZAHNRIEMEN
2	11083438	1	FILTER ⇨ ❑ 389	FILTER
7	11083215	1	PLATE STAHLBLECH	BLECH
13	10287301	2	SERVOMOTOR 0,0024KW24V SPF	STELLMOTOR
14	10801858	1	HEAT EXCHANGER ALU	WAERMETAUSCHER
15	10874825	1	EVAPORATOR	VERDAMPFER
16	7622478	1	VALVE	VENTIL
31	515710608	1	O-RING ARP 568 14X1,78 NBR90	O-RING
32	510760408	1	O-RING ARP 568 10,82X1,78 NBR90	O-RING
37	12203070	2	SOCKET HEAD SCREW ISO 4762 M5X40 8.8	ZYLINDERSCHRAUBE
38	12203634	3	SOCKET HEAD SCREW ISO 4762 M6X50 8.8	ZYLINDERSCHRAUBE
39	12219804	4	PAN-HEAD SCREW ISO 7045 M4X10 4.8 480	FLACHKOPFSCHRAUBE
44	571867708	1	THERMOSTAT	THERMOSTAT
45	11083445	1	RADIAL FAN	RADIALGEBLAESE
45	13366890	1	RADIAL FAN D=170 26VDC	RADIALGEBLAESE
50	261101108	0.3	SEALING TAPE	DICHTBAND
57	10009700	1	CONTROL PANEL SUPPORT	ARMATURENHALTER
80	10872521	1	GEAR WHEEL	ZAHNRAD

Pos. 212

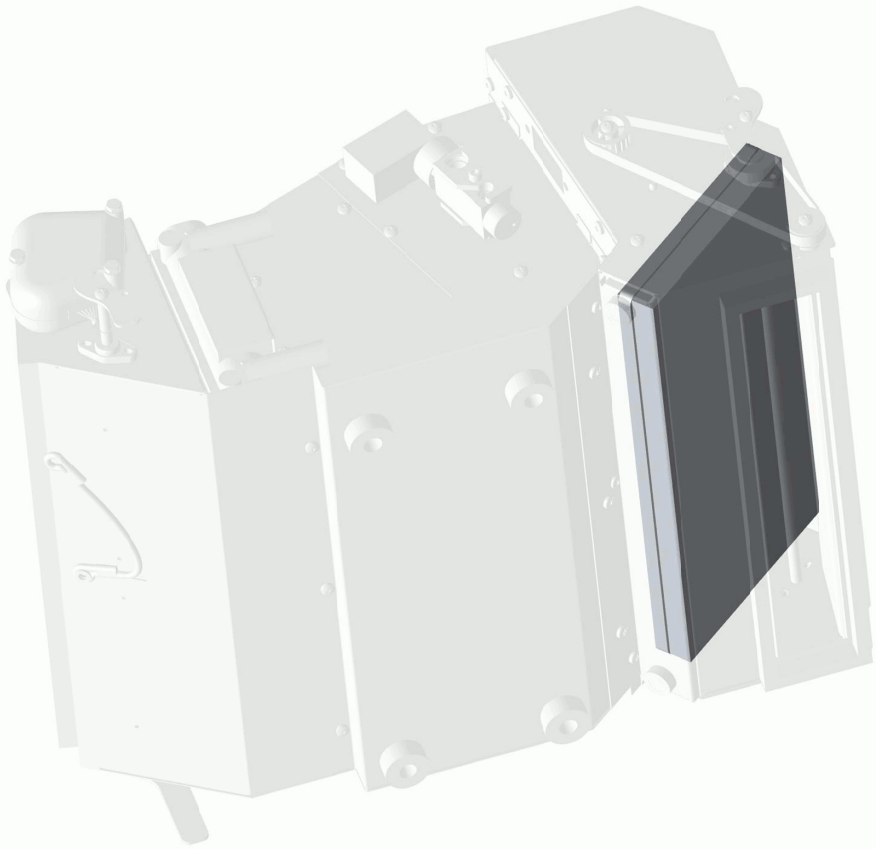

Abbildung ähnlich
Illustration similar
Illustration similaire

Pos.	Item	Quantity	Description	Bezeichnung
1	980288008	1	DOCUMENTATION	DOKUMENTATION

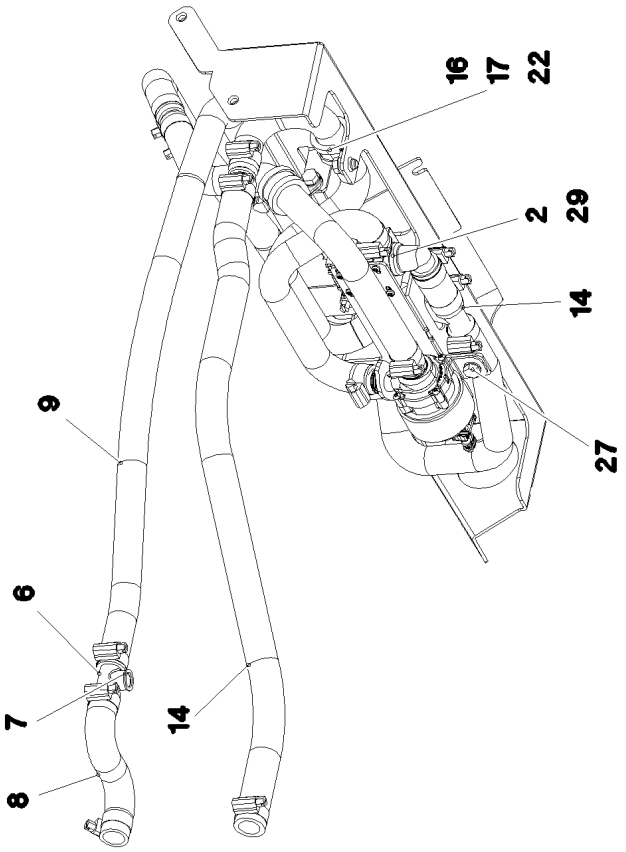
16
17
22
2
29
14
27
9
6
7
8
14

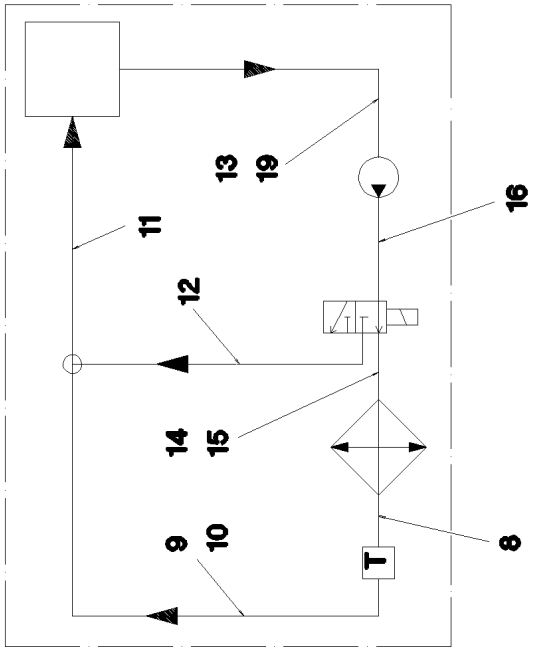
13
19
16
11
12
14
15
9
10
T
8

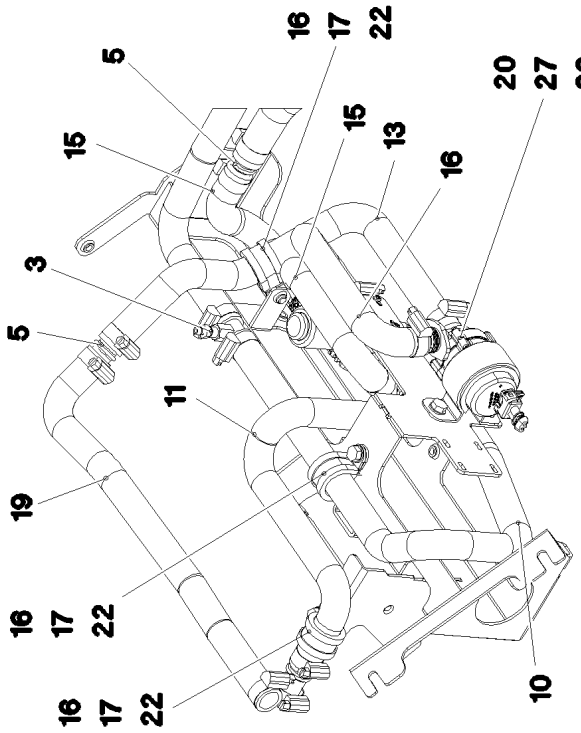
16
17
22
5
20
27
28
15
15
13
16
3
5
11
19
16
17
22
16
17
22
10

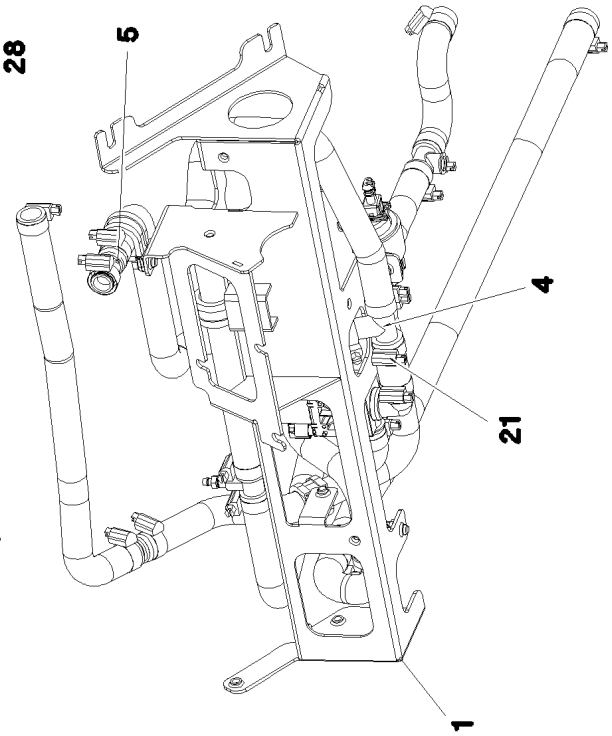
5
4
21
1

Pos.	Item	Quantity	Description	Bezeichnung
1	969304708	1	BRACKET WELDED CONST. RAL 7016,SDGL	KONSOLE SCHWK.
2	10343003	1	SOLENOID VALVE	MAGNETVENTIL
3	11622218	1	VENTILATION VALVE	ENTLUEFTUNGSVENTIL
4	10872612	1	TEE 20X20 L=90	T-STUECK
5	11000700	3	CONNECTING PIPE 0	VERBINDUNGSROHR
6	97042155	1	PIPE SOCKET GSCK45	ROHRSTUTZEN
7	710103008	1	SEALING RING DIN 7603 A14X20X1,5 CU	DICHTRING
8	97042069	1	FORM HOSE DN20 X3.5 B SPF	FORMSCHLAUCH
9	97042071	1	FORM HOSE DN20 X3.5 B SPF	FORMSCHLAUCH
10	97046324	1	FORM HOSE DN20 X3.5 B SPF	FORMSCHLAUCH
11	97050857	1	FORM HOSE DN20 X3.5 B SPF	FORMSCHLAUCH
12	11621770	0.06	COOLING WATER HOSE DN20-CONTI-KWS	KUEHLWASSERSCHLAUCH
13	97046326	1	FORM HOSE DN20 X3.5 B SPF	FORMSCHLAUCH
14	11621770	0.7	COOLING WATER HOSE DN20-CONTI-KWS	KUEHLWASSERSCHLAUCH
15	97055365	1	FORM HOSE DN20 X3.5 B SPF	FORMSCHLAUCH
16	97046328	1	FORM HOSE DN20 X3.5 B SPF	FORMSCHLAUCH
19	97042070	1	FORM HOSE DN20 X3.5 B SPF	FORMSCHLAUCH
20	11622224	1	CIRCULATING PUMP	UMWAELZPUMPE
21	11118077	21	HOSE CLAMP 21/16-27/12 W3	SCHLAUCHSCHELLE
22	11481080	4	CLAMP DIN 3016-1 28X20XD1 W5-CR	SCHELLE
26	11651612	3	HEX SCREW ISO 4017 M8X16 8.8 480H SPF	SECHSKANTSCHRAUBE
27	11690048	2	HEX SCREW ISO 4017 M8X12 8.8 480H SPF	SECHSKANTSCHRAUBE
28	12103465	6	WASHER ISO 7089 8 300HV ZNNI-480H SPF	SCHEIBE
29	10875795	4	TALLOW-DROP SCREW 4X10 10.9 P3E	LINSENKOPFSCHRAUBE

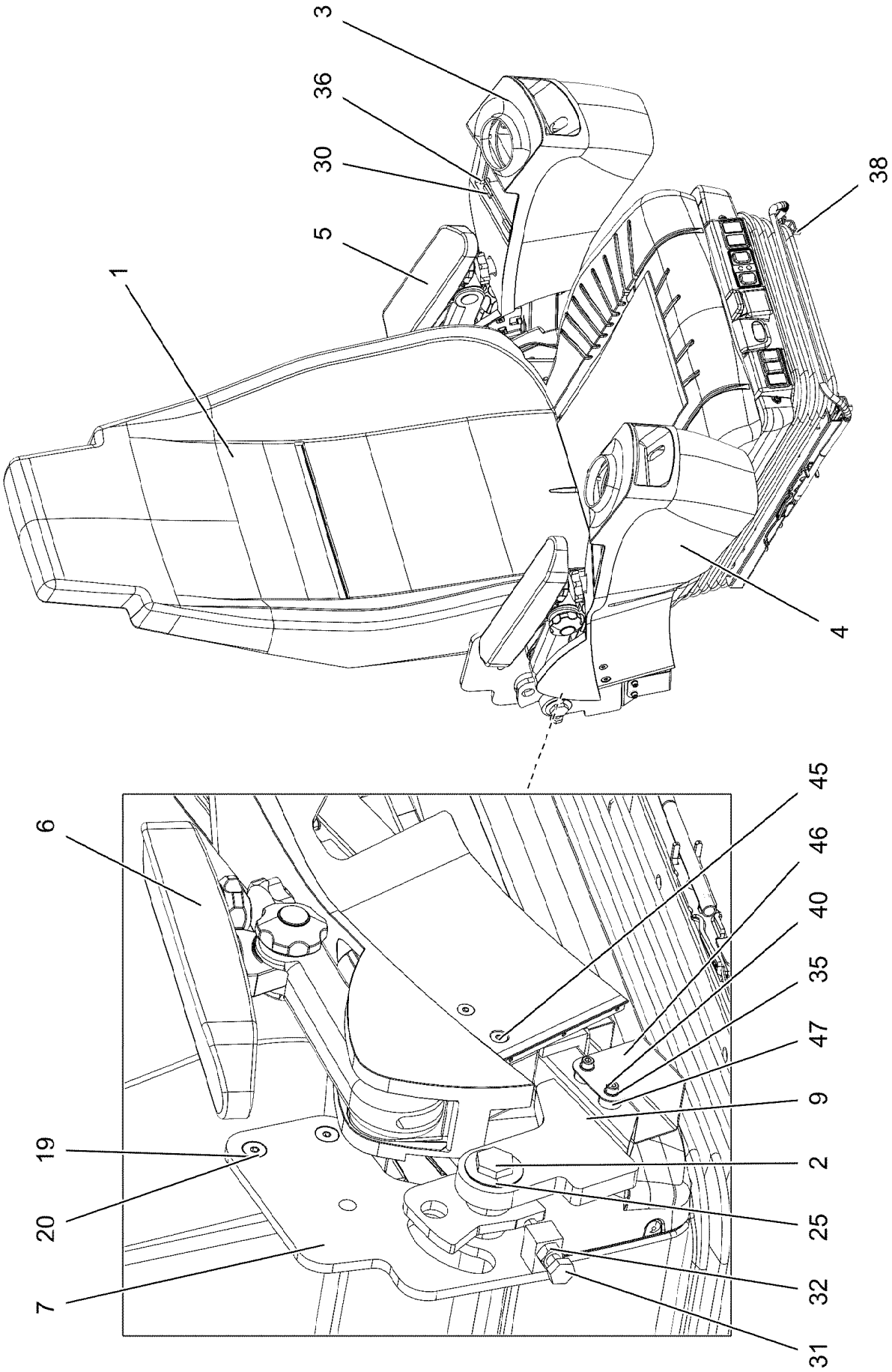
3
36
30
5
1
38
4
6
45
46
40
35
47
9
19
2
20
25
7
32
31

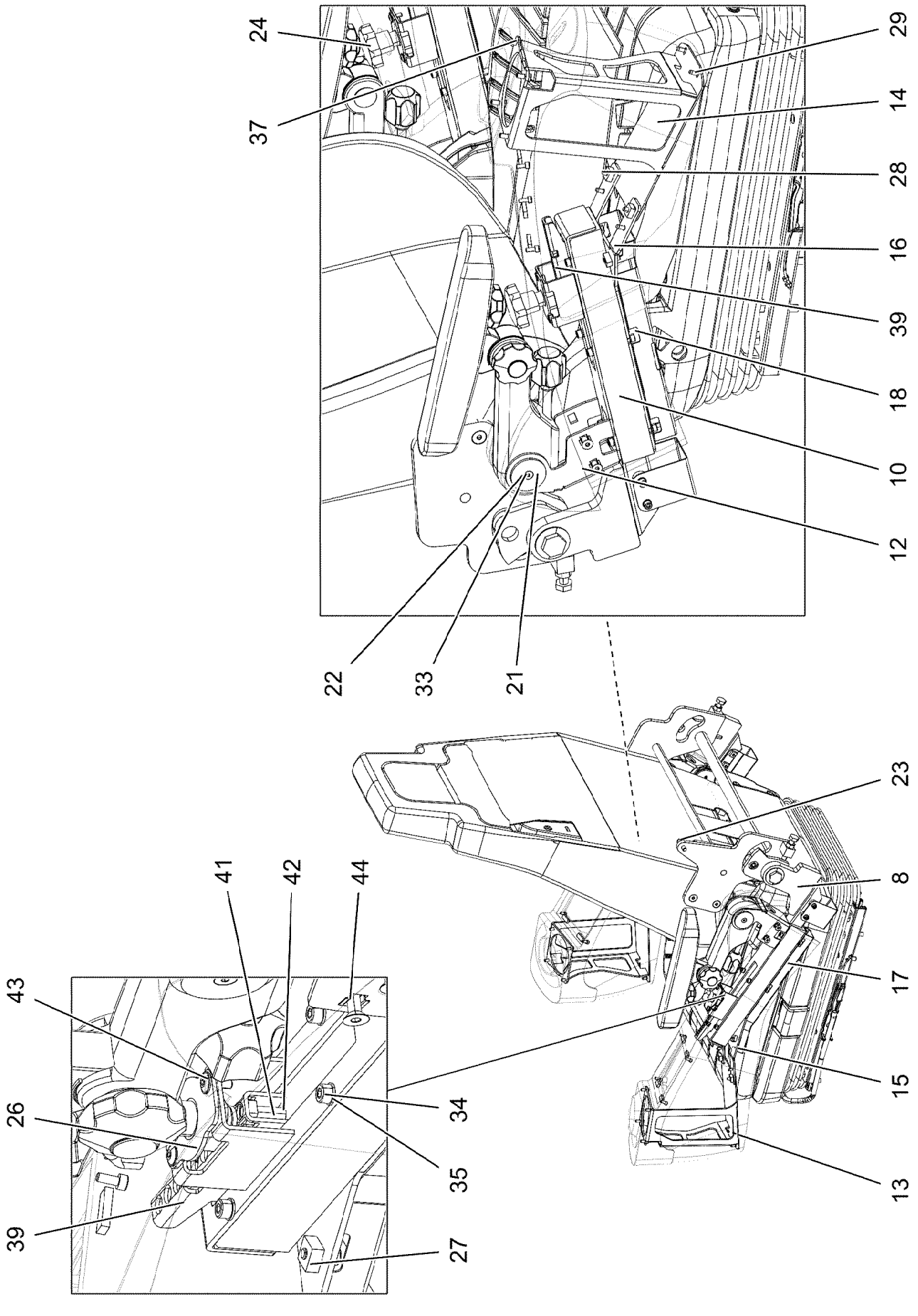
24
37
29
14
28
16
39
18
10
12
22
33
21
23
8
17
15
13
41
42
44
43
26
39
34
35
27

Pos.	Item	Quantity	Description	Bezeichnung
1	10877138	1	OPERATOR SEAT 1030/880NTS ⇨ ❑ 396	FAHRERSITZ
2	97096918	2	THREADED PIN 20X53X78 C45 FE//ZNNI8//C	GEWINDEBOLZEN
3	967588308	1	BRACKET LEFT SPF	KONSOLE LINKS
4	967588408	1	BRACKET RIGHT SPF	KONSOLE RECHTS
5	96032222	1	REWORK ARMREST LEFT ⇨ ❑ 398	NACHARBEIT ARMLEHNE LI.
6	96032223	1	REWORK ARMREST RIGHT ⇨ ❑ 400	NACHARBEIT ARMLEHNE RE.
7	96021362	1	BRACKET WELDED CONST. FE//ZNNI8//CN/	KONSOLE SCHWK.
8	96021363	1	BRACKET,LEFT WELDED FE//ZNNI8//CN//T0	KONSOLE SCHWK.LI.
9	96021365	1	BRACKET,RIGHT WELDED FE//ZNNI8//CN//T	KONSOLE SCHWK.RE.
10	977430408	2	GUIDE 306X48X37 ENAW6060-T66	FUEHRUNG
12	964843708	2	BRACKET WELDED CONST. RAL 9005 SPF	KONSOLE SCHWK.
13	964843808	1	BRACKET,LEFT WELDED RAL 9005 SPF	KONSOLE SCHWK.LI.
14	964843908	1	BRACKET,RIGHT WELDED RAL 9005 SPF	KONSOLE SCHWK.RE.
15	977444008	1	PLATE 3X366X104 DC01 RAL 9005 SPF	BLECH
16	977444108	1	PLATE 3X366X104 DC01 RAL 9005 SPF	BLECH
17	977444308	1	PLATE 1X285X126 DC01 RAL 9005 SPF	BLECH
18	977444408	1	PLATE 1X285X126 DC01 RAL 9005 SPF	BLECH
19	971805708	4	TUBE 15.0 X24 S355J2C+C FE//ZNNI8//CN//T	ROHR
20	12102051	4	THREAD FORM SCREW DIN 7500 M8X45 A2	GEWINDEFORMSCHRAUBE
21	971974108	4	PLATE 40X40 DC01 FE//ZNNI8//CN//T0	BLECH
22	971974208	2	PLATE 3X26X26 DC01 FE//ZNNI8//CN//T0	BLECH
23	591067008	1	GAS SPRING 19X60-550N	GASFEDER
24	10443625	2	STAR HANDLE SCREW	STERNGRIFFSCHRAUBE
25	720801908	4	DISC SPRING DIN 2093 40X20,4X1	TELLERFEDER
26	964984108	2	SHIM FE//ZNNI8//CN//T0	AUSGLEICHSBLECH
27	10455281	6	CAGE NUT M5 ST	KAEFIGMUTTER
28	10875474	6	BUTTON HEAD SCREW ISO 7380-2 M5X16 0	HALBRUNDKOPFSCHRAUBE
29	10019040	8	TALLOW-DROP SCREW K4X12 ST A3K	LINSENKOPFSCHRAUBE
30	262103108	0.064	SPONGE RUBBER 20X4 MOOSGUMMI	MOOSGUMMI
31	11642355	2	HEX SCREW ISO 4017 M10X50 8.8 FLZN SP	SECHSKANTSCHRAUBE
32	12102695	2	HEX NUT ISO 4032 M10 8 ZNNI-480H SPF	SECHSKANTMUTTER
33	10875549	4	COUNTERSUNK SCREW DIN 7991 M5X10 8	SENKSCHRAUBE
34	11690042	24	SOCKET HEAD SCREW ISO 4762 M5X12 8.8	ZYLINDERSCHRAUBE
35	10197808	28	WASHER ISO 7089 5 200HV ZNNI-480H	SCHEIBE
36	11691539	8	SOCKET HEAD SCREW ISO 4762 M4X10 8.8	ZYLINDERSCHRAUBE
37	11140402	8	HEX SCREW ISO 4017 M5X12 8.8 480H SPF	SECHSKANTSCHRAUBE
38	10875559	6	SOCKET HEAD SCREW DIN 6912 M8X16 08	ZYLINDERSCHRAUBE
39	967257808	2	PLATE WELDED FE//ZNNI8//CN//T0	BLECH SCHWK.
40	12216217	4	SOCKET HEAD SCREW ISO 4762 M5X50 8.8	ZYLINDERSCHRAUBE
41	12225935	4	SOCKET HEAD SCREW ISO 4762 M6X22 10	ZYLINDERSCHRAUBE
42	10197771	4	WASHER ISO 7089 6 200HV ZNNI-480H SPF	SCHEIBE
43	11835043	2	BUTTON HEAD SCREW ISO 7380-2 M4X12 0	HALBRUNDKOPFSCHRAUBE
44	413002708	4	CAGE NUT M6	KAEFIGMUTTER
45	12100589	4	COUNTERSUNK SCREW AEHNL.ISO 10642	SENKSCHRAUBE
46	965021508	2	COVER PLATE PRE-ASS.	ABDECKBLECH VORM.
47	97002990	4	BUSHING 16X12 1.4301	BUCHSE

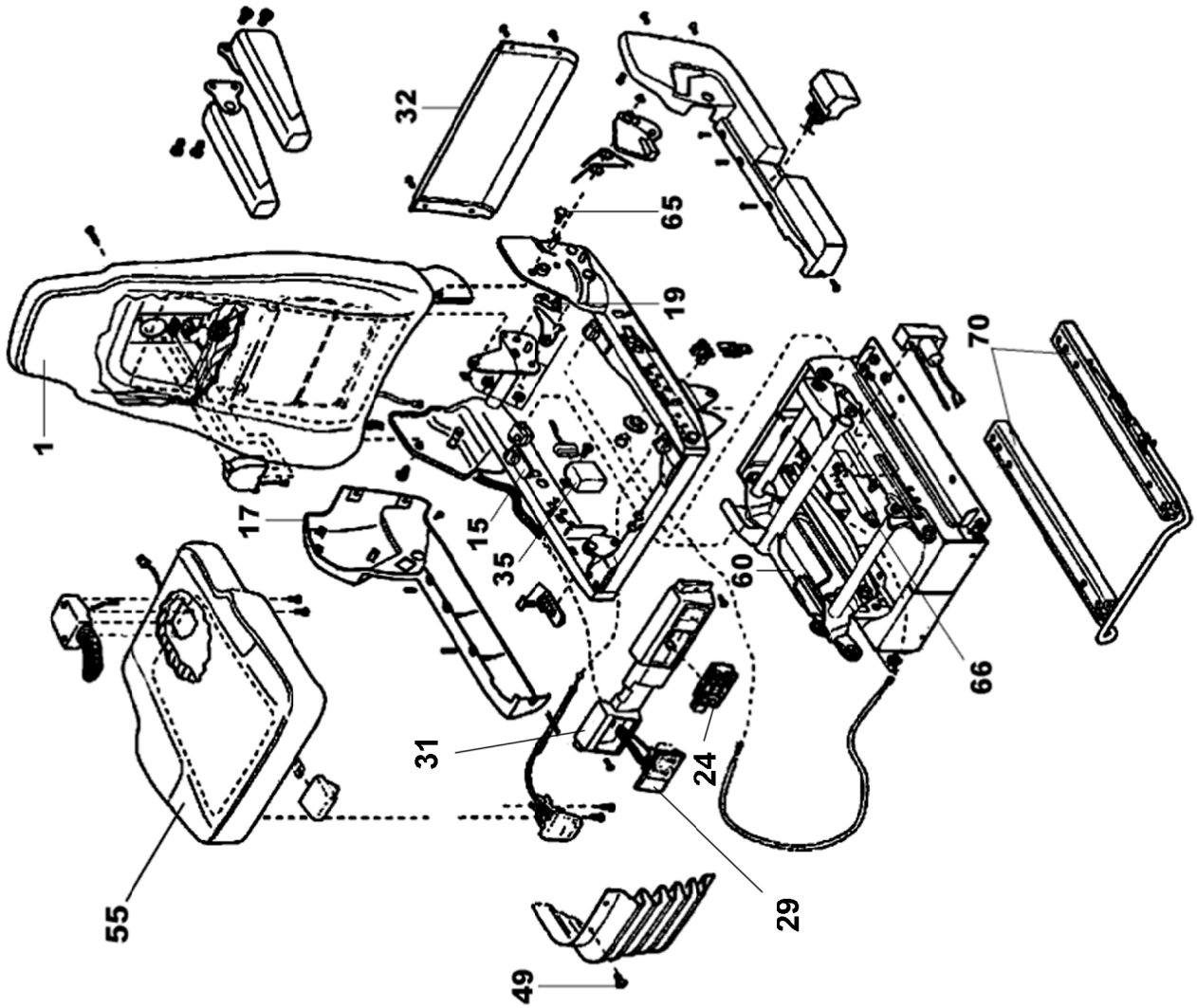
32
65
19
70
1
17
15
35
60
66
31
24
29
55
49

Pos.	Item	Quantity	Description	Bezeichnung
1	10663466	1	BACK PART	RUECKENTEIL
(1)	12100617	1	COVERING	BEZUG
(11)	10650386	1	FAN	LUEFTER
(13)	10650387	1	HEATING ELEMENT	HEIZELEMENT
15	10455144	1	SLIDE BLOCK CPL.	GLEITKLOTZ KPL.
17	11005170	1	COVER	ABDECKUNG
19	10492347	1	LOCKING PIECE	RASTE
24	11979975	1	SWITCH	SCHALTER
28	12102116	1	FIXED BOOM RAISING DEVICE	HOEHENVERSTELLUNG
29	11979976	1	VALVE	VENTIL
31	11979998	1	COVER	ABDECKUNG
32	11171270	1	COVER	ABDECKUNG
33	11171271	1	PUSH BUTTON	DRUCKTASTER
35	10650399	1	ELECTRONICS UNIT	ELEKTRONIKEINHEIT
49	10650403	1	MOUNTING PARTS	BEFESTIGUNGSMATERIAL
55	12100570	1	SEAT CPL.	SITZTEIL KPL.
(1)	12100619	1	COVERING	BEZUG
(2)	12103434	1	GRIP	GRIFF
(59)	12100177	1	FAN	LUEFTER
60	11171274	1	SUBSTRUCTURE	UNTERBAU
65	11171275	1	MOUNTING PARTS	BEFESTIGUNGSMATERIAL
66	10650488	1	ABSORBER	DAEMPFER
70	10650489	1	RAIL PAIR	SCHIENENPAAR
(71)	11171276	1	BRACKET	BUEGEL
85	10650490	1	AIR COMPRESSOR	LUFTPRESSER

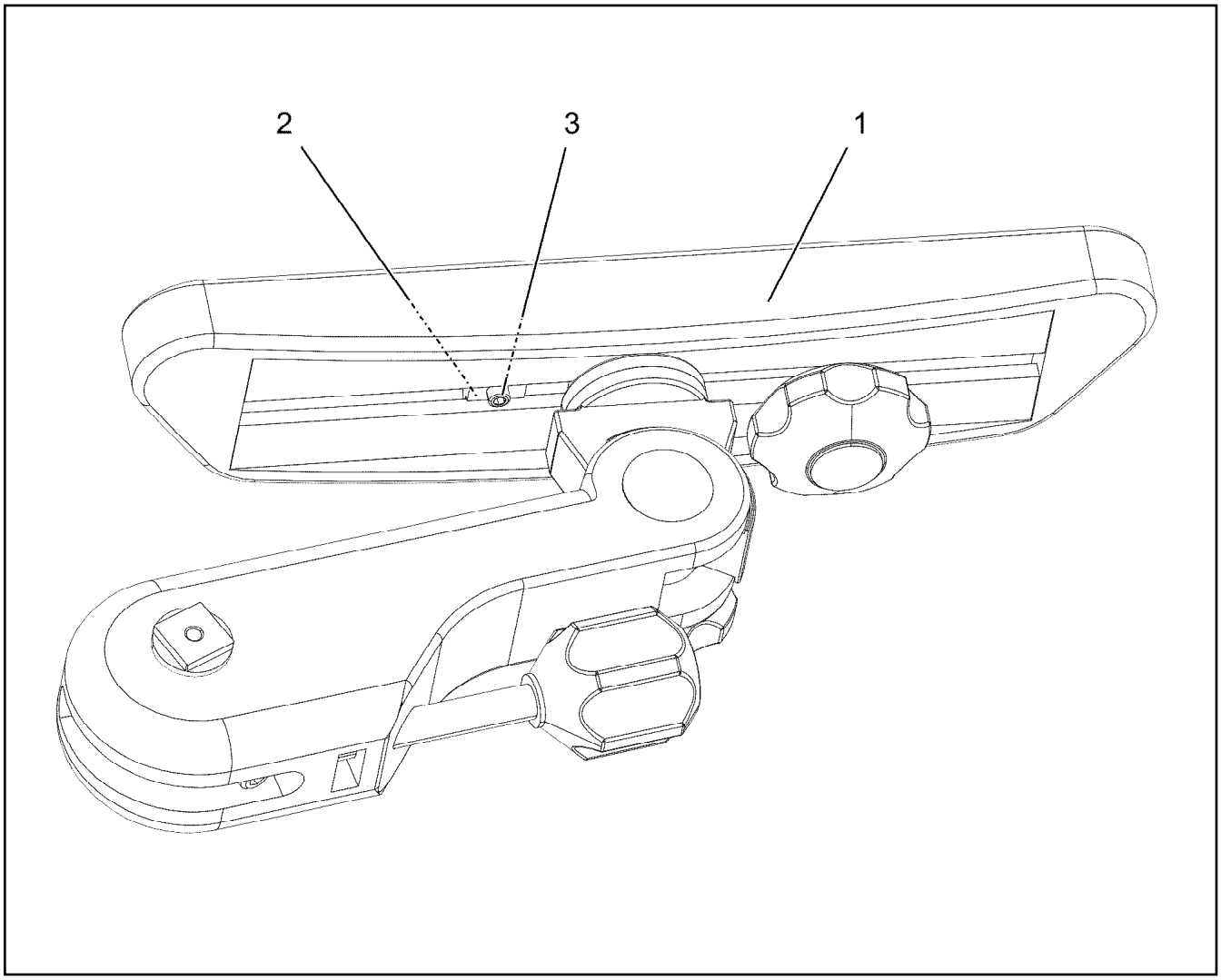

Pos.	Item	Quantity	Description	Bezeichnung
1	962282208	1	ARM REST LEFT ⇨ ❑ 399	ARMLEHNE LINKS
2	10878951	1	NUT M6X8	MUTTER
3	12100613	1	GRUB SCREW ISO 4026 M6X10 45H 480H SP	GEWINDESTIFT

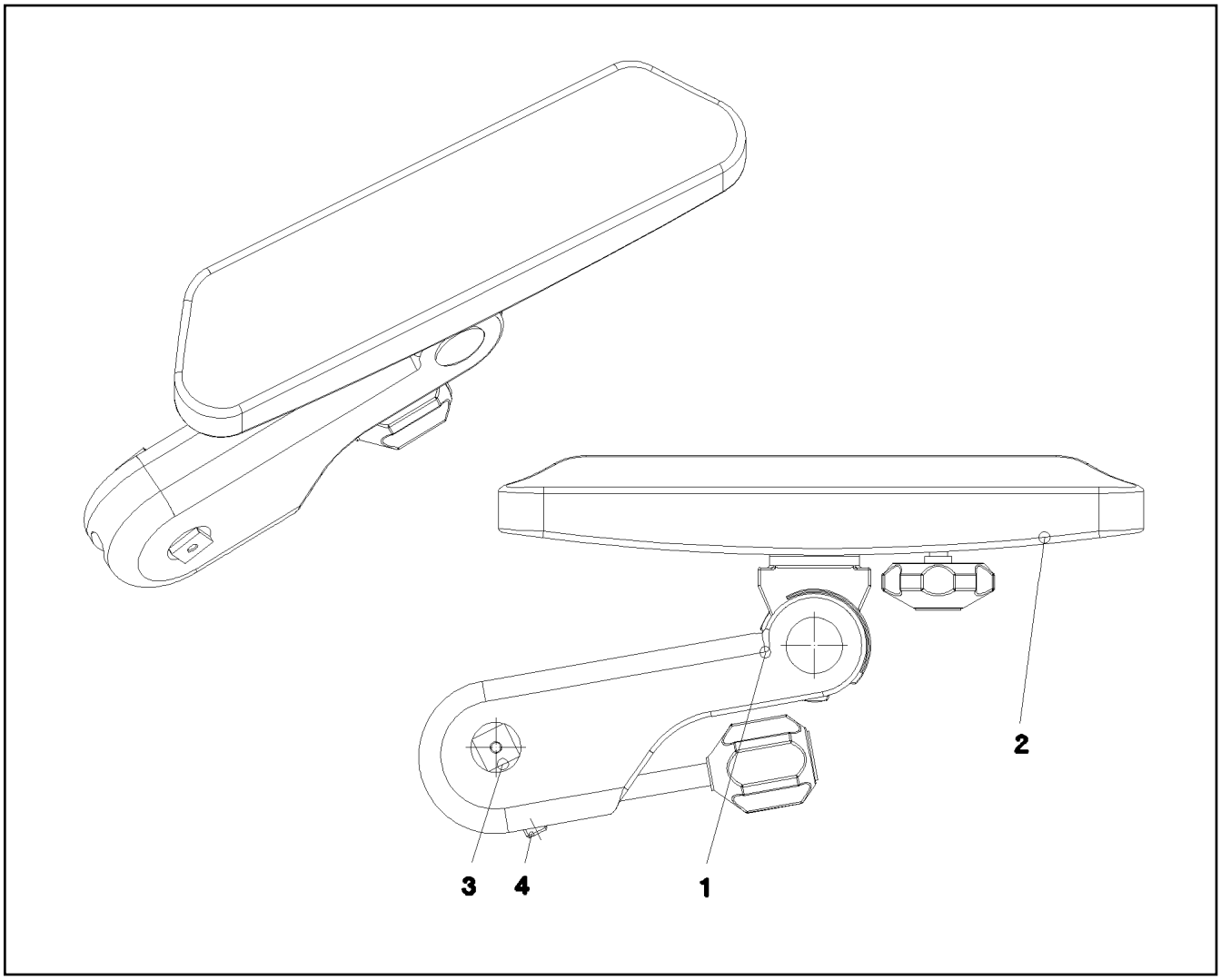

Pos.	Item	Quantity	Description	Bezeichnung
1	774119708	1	ARM REST 310ERGO	ARMLEHNE
2	971636608	1	ARM REST SUPPORT 45X65X287	ARMLEHNENAUFLAGE
3	971973608	1	PIN 25.0X52 S355J2G3C+C FE//ZNNI8//CN//T	BOLZEN
4	10179470	1	GRUB SCREW ISO 4026 M10X40 45H FLZN	GEWINDESTIFT
5	10878951	1	NUT M6X8	MUTTER
6	12100613	1	GRUB SCREW ISO 4026 M6X10 45H 480H SP	GEWINDESTIFT

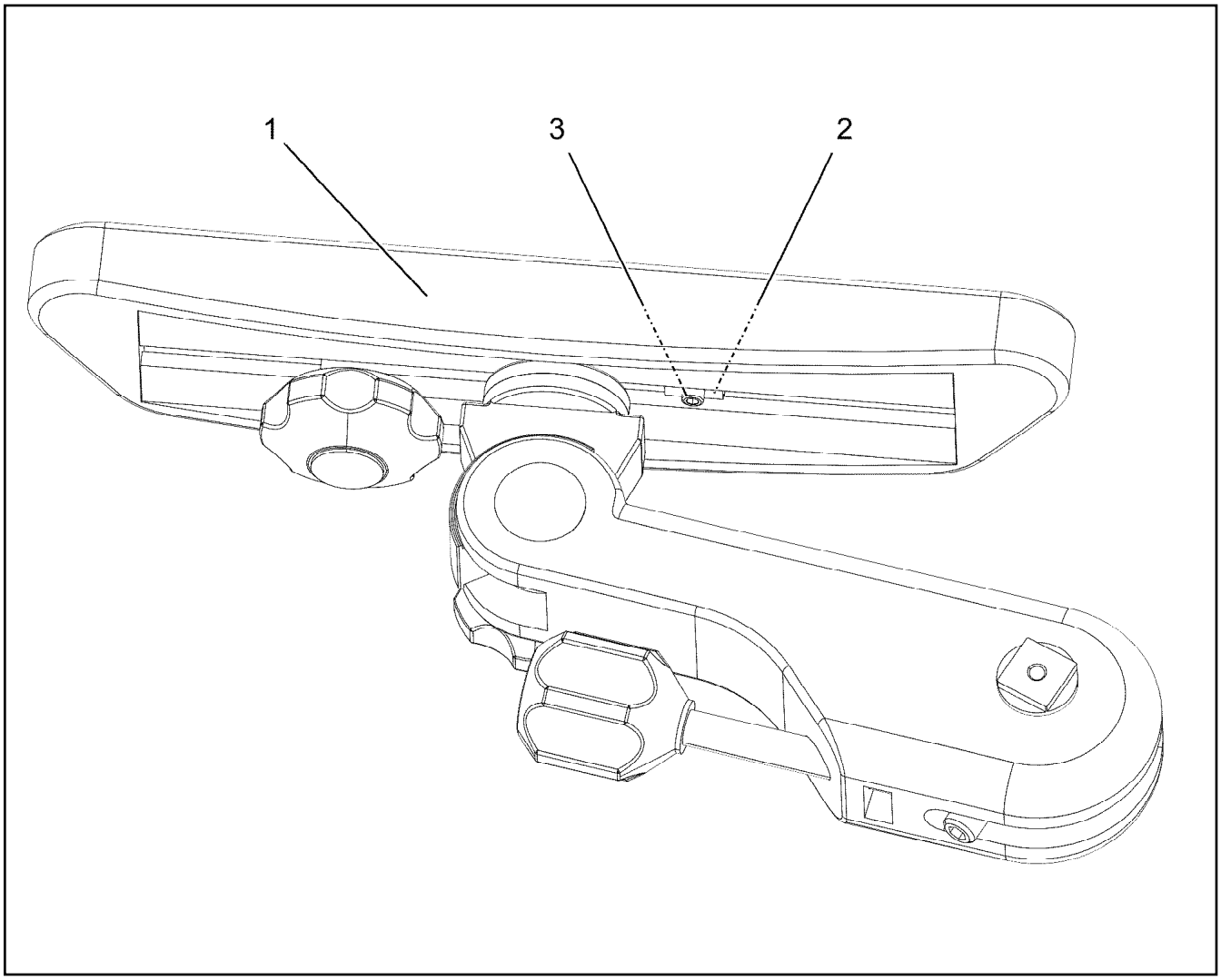

Pos.	Item	Quantity	Description	Bezeichnung
1	962282308	1	ARM REST RIGHT ⇨ ❑ 401	ARMLEHNE RECHTS
2	10878951	1	NUT M6X8	MUTTER
3	12100613	1	GRUB SCREW ISO 4026 M6X10 45H 480H SP	GEWINDESTIFT

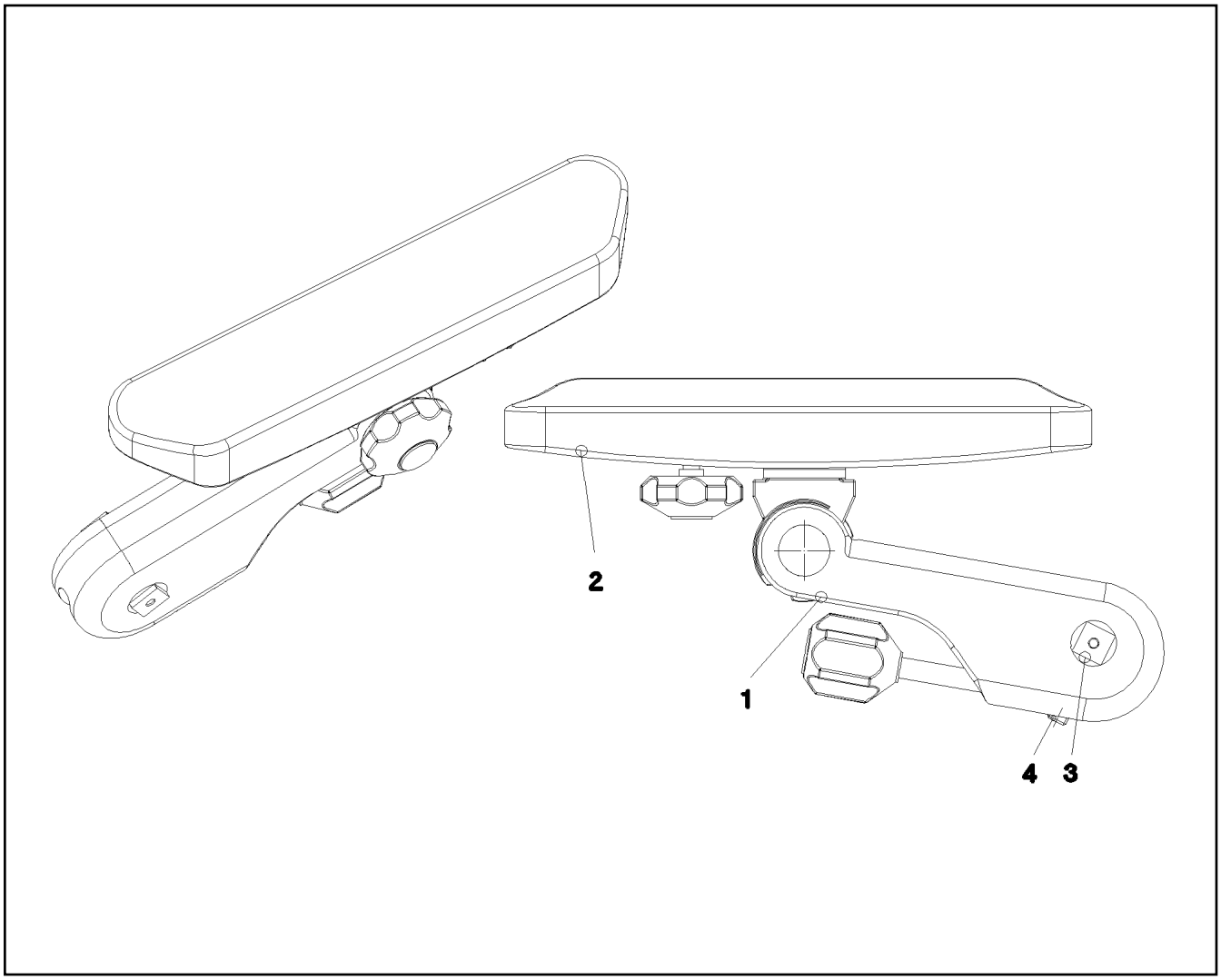

Pos.	Item	Quantity	Description	Bezeichnung
1	774119808	1	ARM REST 310ERGO	ARMLEHNE
2	971636608	1	ARM REST SUPPORT 45X65X287	ARMLEHNENAUFLAGE
3	971973608	1	PIN 25.0X52 S355J2G3C+C FE//ZNNI8//CN//T	BOLZEN
4	10179470	1	GRUB SCREW ISO 4026 M10X40 45H FLZN	GEWINDESTIFT
100	12100707	1	NUT	RAENDELMUTTER

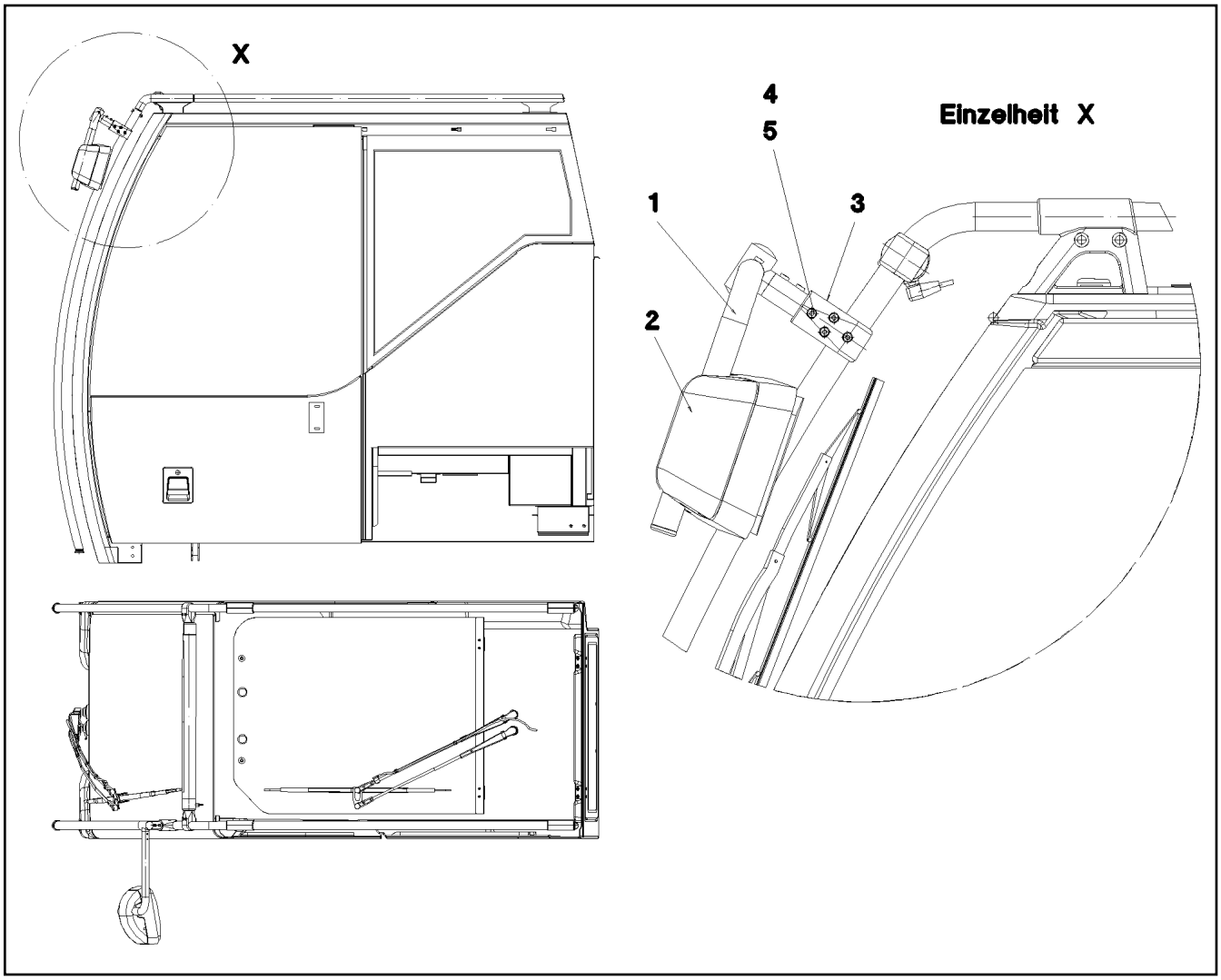

Pos.	Item	Quantity	Description	Bezeichnung
1	979320608	1	MIRROR SUPPORT 28X2 ST.37.4 KTL-BES	SPIEGELHALTER
2	591069508	1	WIDE ANGLE MIRROR 219X170	WEITWINKELSPIEGEL
(1)	10286840	1	REAR VISION MIRROR UNIT 203X154	GLASEINHEIT
(2)	10650507	1	COVER	ABDECKUNG
3	979489508	1	HOLDER 40X80X40 G-ALMG3	HALTER
4	10875601	1	SOCKET HEAD SCREW ISO 4762 M8X50 8.8	ZYLINDERSCHRAUBE
5	10875614	1	HEX NUT DIN 985 M8 8 480H SPF	SECHSKANTMUTTER

Pos.	Item	Quantity	Description	Bezeichnung
1	96022627	1	SLEWING PLATFORM PANELLING RIG ⇨ ❑ 404	DREHBUEHNENVERKLEIDUNG
2	96024809	1	SLEWING PLATFORM PANELLING LEF ⇨ ❑ 412	DREHBUEHNENVERKLEIDUNG

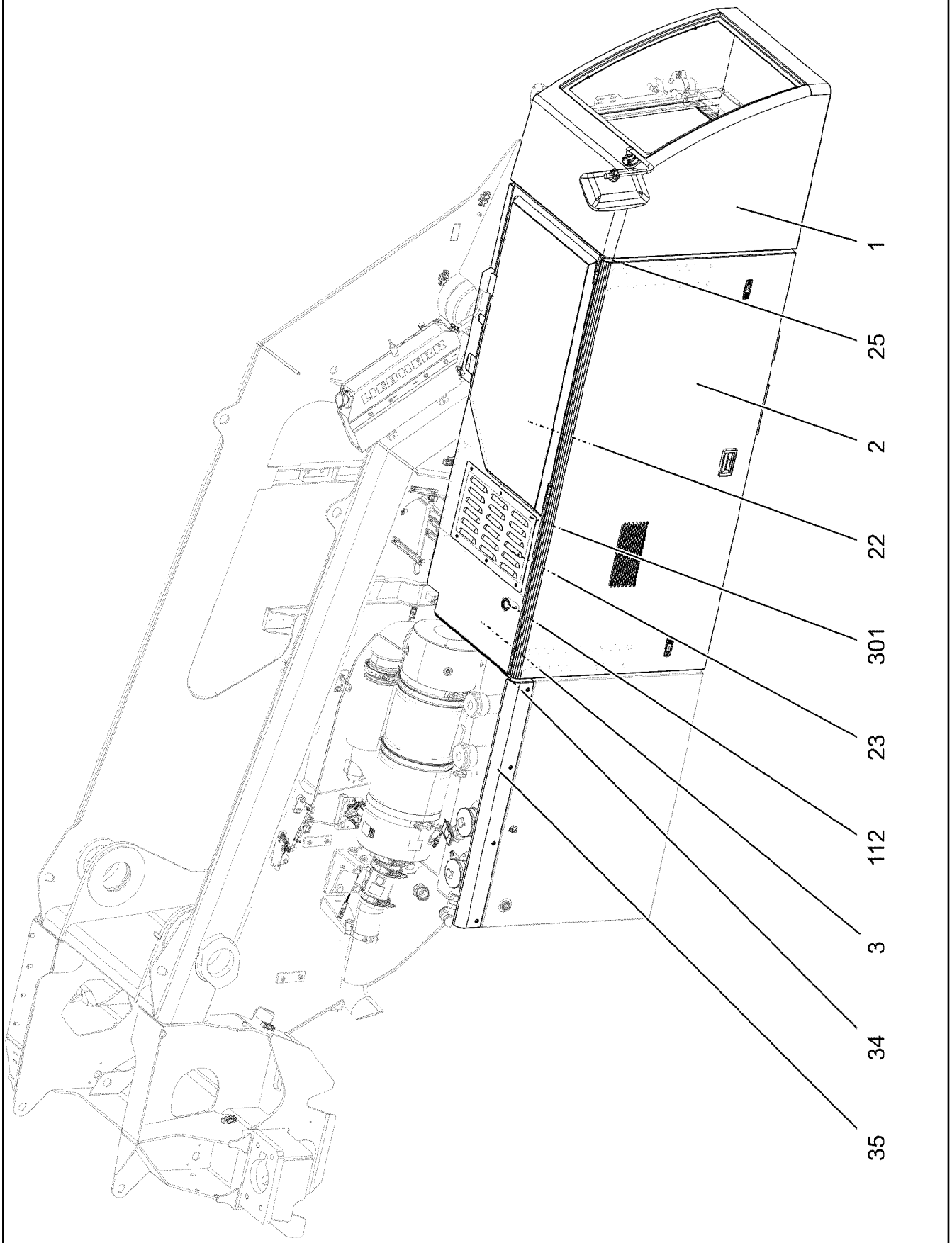
1
25
2
22
301
23
112
3
34
35

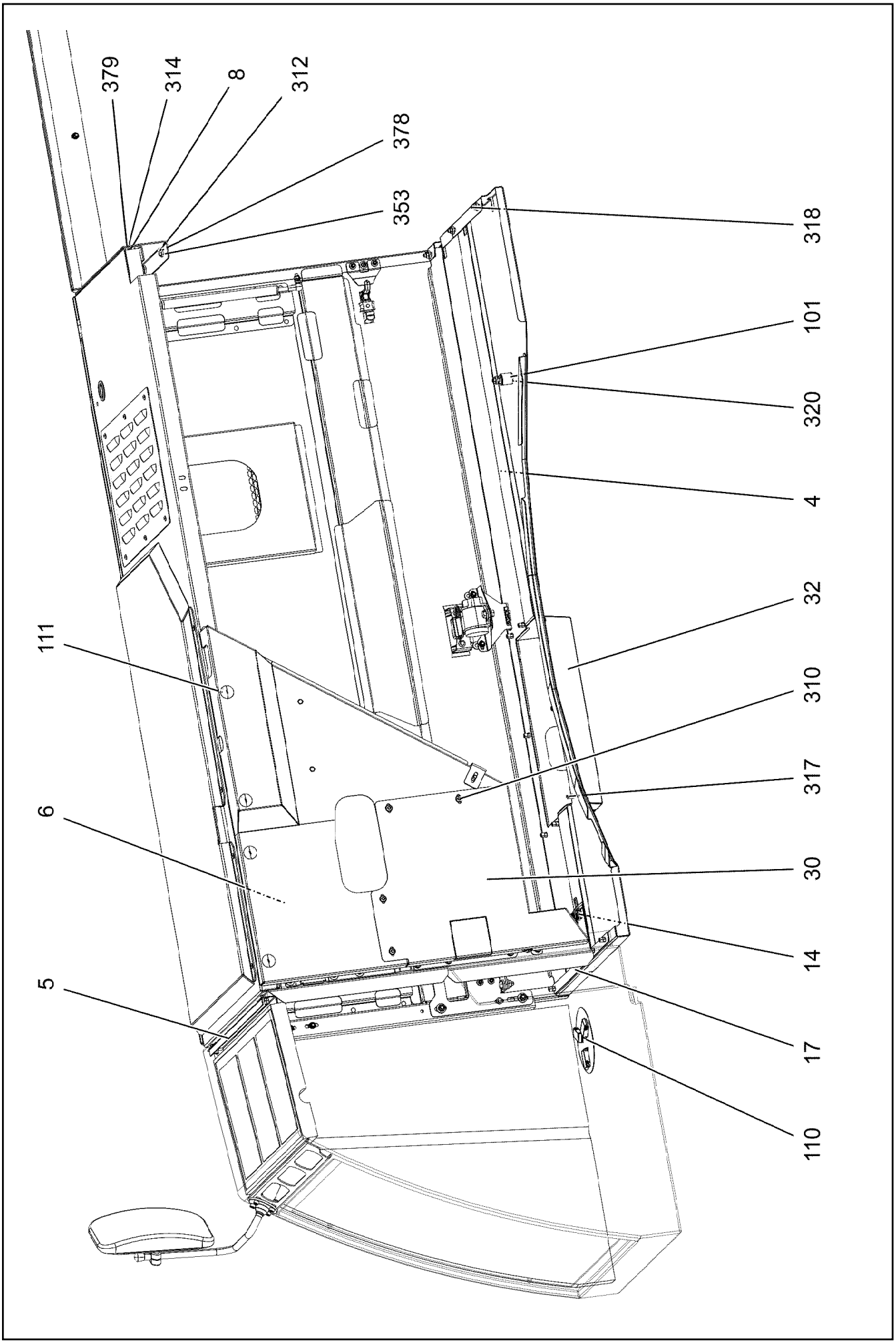
379
314
8
312
378
353
318
101
320
4
32
310
317
30
14
17
110
111
6
5

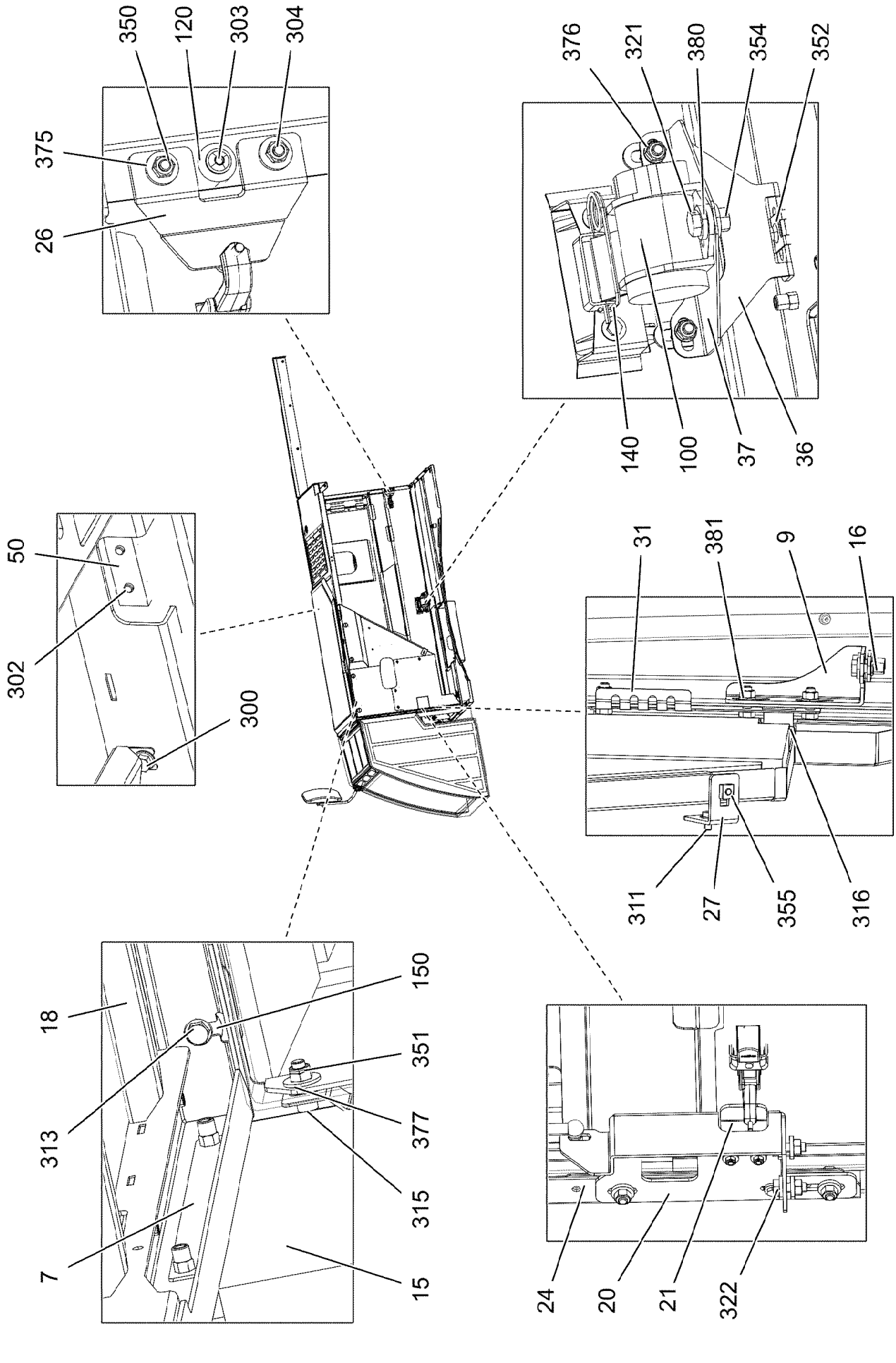
350
120
303
304
375
26
376
321
380
354
352
140
100
37
36
50
302
300
31
381
9
16
311
27
355
316
18
313
150
351
377
315
7
15
24
20
21
322

Pos.	Item	Quantity	Description	Bezeichnung
1	96017568	1	RADIATOR HOOD CPL. ⇨ ❑ 409	KUEHLERHAUBE KPL.
2	969425608	1	FLAP RIGHT PRE-ASS. SPF ⇨ ❑ 410	KLAPPE VORM.RECHTS
3	96022920	1	COVER PLATE ST.CONST. SPF	DECKBLECH SCHWK.
4	969426008	1	FLOOR SHEET WELDED	BODENBLECH SCHWK.
5	963930408	1	CONSOLE PRE-ASS. FE//ZNNI8//CN//T0	KONSOLE VORM.
6	969431908	1	PLATE WELDED SPF	BLECH SCHWK.
7	967695808	2	THREADED CARRIER FE//ZNNI8//CN//T0	GEWINDETRAEGER
8	968588908	1	THREADED CARRIER FE//ZNNI8//CN//T0	GEWINDETRAEGER
9	97048362	1	PLATE 4X224X146 S315MC FE//ZNNI8//CN//T	BLECH
14	969699108	1	COVER COMPL.	DECKEL KPL.
15	96022943	1	SOUND PROOFING/SOUND INSULAT. ⇨ ❑ 411	SCHALLDAEMMUNG
16	964307108	1	THREADED CARRIER FE//ZNNI8//CN//T0	GEWINDETRAEGER
17	963991608	1	THREADED CARRIER FE//ZNNI8//CN//T0	GEWINDETRAEGER
18	97027312	3	PLATE 1X681X57 DC01 FE//ZNNI8//CN//T0	BLECH
20	97045637	1	PLATE 4X206X342 S315MC FE//ZNNI8//CN//T	BLECH
21	979719508	1	PLATE 4X50X80 S315MC FE//ZNNI8//CN//T0	BLECH
22	97100175	1	COVER 3X1269X789 ALMG3 H111 SPF	DECKEL
23	97067253	1	PLATE 2X370X600 ALMG3 H111 SPF	BLECH
24	97048294	1	PLATE 2X300X27 DC01 FE//ZNNI8//CN//T0	BLECH
25	97047056	1	PLATE 2X310X22 DC01 FE//ZNNI8//CN//T0	BLECH
26	954113708	1	PLATE 4X90X67 S315MC FE//ZNNI8//CN//T0	BLECH
27	973720808	1	ANGLE 4X113X40 S315MC FE//ZNNI8//CN//T	WINKEL
30	97100184	1	PLATE 2X597X541 ALMG3 H111 SPF	BLECH
31	97043680	1	PLATE 2X721X107 DC01 FE//ZNNI8//CN//T0	BLECH
32	97063985	1	PLATE 2X752X515 DC01	BLECH
34	97100178	1	PLATE 3X630X160 DC01 FE//ZNNI8//CN//T0	BLECH
35	97058580	1	PLATE 3X1293X146 ALMG3 H111 SPF	BLECH
36	97049599	1	PLATE 3X155X139 DC01 FE//ZNNI8//CN//T0	BLECH
37	97049613	1	PLATE 2X170X116 DC01 FE//ZNNI8//CN//T0	BLECH
50	953695308	3	THREADED PLATE 8.0 X0 S235JR FE//ZNNI8/	GEWINDEPLATTE
100	10334488	1	TENSION FLANGE 47X2220	ZUGGURT
101	726906508	1	CIRCULAR BEARING B30X30XM8	RUNDLAGER
110	963544508	1	COVER COMPL.	DECKEL KPL.
(1)	974792608	1	PLATE 1X176X176 X5CRNI18-10	BLECH
(2)	10296157	3	SNAP LOCK ABS	SCHNAPPVERSCHLUSS
(3)	262103908	0.6	EDGE PROTECTION 1-2X9,5X6,5	KANTENSCHUTZ
111	591570908	7	COVER LID POLYSTIC27-33 ABS	ABDECKKAPPE
112	602717308	1	DIAPHRAGM GROMMET 35,5/47/53 TPE SC	MEMBRAN-DURCHFUEHRUNG
120	726907308	2	RUBBER METAL STOP BUFFER 20X15-M6 N	GUMMI-METALLANSCHLAGPUF
140	433102808	1	RETAINING SPRING 3X55 VERZ	SICHERUNGSFEDER
150	975529708	2	FRICTION DISK	REIBSCHEIBE
300	11840297	3	HEX SCREW EN 1665 M6X16 8.8 480H SPF	SECHSKANTSCHRAUBE
301	10412851	12	BUTTON HEAD SCREW AEHNL.ISO 7380-2	HALBRUNDKOPFSCHRAUBE
302	10875551	6	COUNTERSUNK SCREW DIN 7991 M6X16 8	SENKSCHRAUBE
303	10875468	1	BUTTON HEAD SCREW AEHNL.ISO 7380-2	HALBRUNDKOPFSCHRAUBE
304	11644899	5	HEX SCREW ISO 4017 M6X20 8.8 480H SPF	SECHSKANTSCHRAUBE
310	10875485	5	BUTTON HEAD SCREW AEHNL.ISO 7380-2	HALBRUNDKOPFSCHRAUBE
311	11651612	2	HEX SCREW ISO 4017 M8X16 8.8 480H SPF	SECHSKANTSCHRAUBE
312	11651767	12	HEX SCREW ISO 4017 M8X20 8.8 480H SPF	SECHSKANTSCHRAUBE
313	11690637	2	HEX SCREW EN 1665 M8X25 8.8 480H SPF	SECHSKANTSCHRAUBE
314	11826527	3	HEX SCREW ISO 4017 M8X30 8.8 480H SPF	SECHSKANTSCHRAUBE
315	10875599	3	SOCKET HEAD SCREW ISO 4762 M8X25 8.8	ZYLINDERSCHRAUBE
316	10875486	1	BUTTON HEAD SCREW AEHNL.ISO 7380-2	HALBRUNDKOPFSCHRAUBE
317	10875471	12	BUTTON HEAD SCREW AEHNL.ISO 7380-2	HALBRUNDKOPFSCHRAUBE
318	10197831	8	HEX SCREW ISO 4017 M8X25 8.8 ZNNI-480	SECHSKANTSCHRAUBE
320	12102696	1	BUTTON HEAD SCREW AEHNL.ISO 7380-2	HALBRUNDKOPFSCHRAUBE
321	406509808	1	HEX SCREW ISO 4017 M10X20 8.8 A3C	SECHSKANTSCHRAUBE

Pos.	Item	Quantity	Description	Bezeichnung
322	11642358	10	HEX SCREW ISO 4017 M10X30 8.8 FLZN SP	SECHSKANTSCHRAUBE
350	10197764	4	HEX NUT ISO 4032 M6 10 ZNNI-480H SPF	SECHSKANTMUTTER
351	10875614	8	HEX NUT DIN 985 M8 8 480H SPF	SECHSKANTMUTTER
352	12100332	2	SHEET METAL NUT M8 480H SPF	BLECHMUTTER
353	11693875	13	HEX NUT ISO 4032 M8 8 480H SPF	SECHSKANTMUTTER
354	12102695	9	HEX NUT ISO 4032 M10 8 ZNNI-480H SPF	SECHSKANTMUTTER
355	413003208	1	CAGE NUT M8 A2/ST A2K	KAEFIGMUTTER
375	11693878	9	WASHER DIN 7349 6,4 200HV 480H SPF	SCHEIBE
376	12103465	24	WASHER ISO 7089 8 300HV ZNNI-480H SPF	SCHEIBE
377	11140469	6	WASHER ISO 7093-1 8 200HV 480H SPF	SCHEIBE
378	11840501	17	WASHER DIN 7349 8,4 200HV 480H SPF	SCHEIBE
379	10540510	3	WASHER ISO 7093-1 8 200HV-A4	SCHEIBE
380	11658580	10	WASHER DIN 7349 10,5 200HV-St FLZN SPF	SCHEIBE
381	10289795	10	WASHER ISO 7089 10 300HV FLZN SPF	SCHEIBE

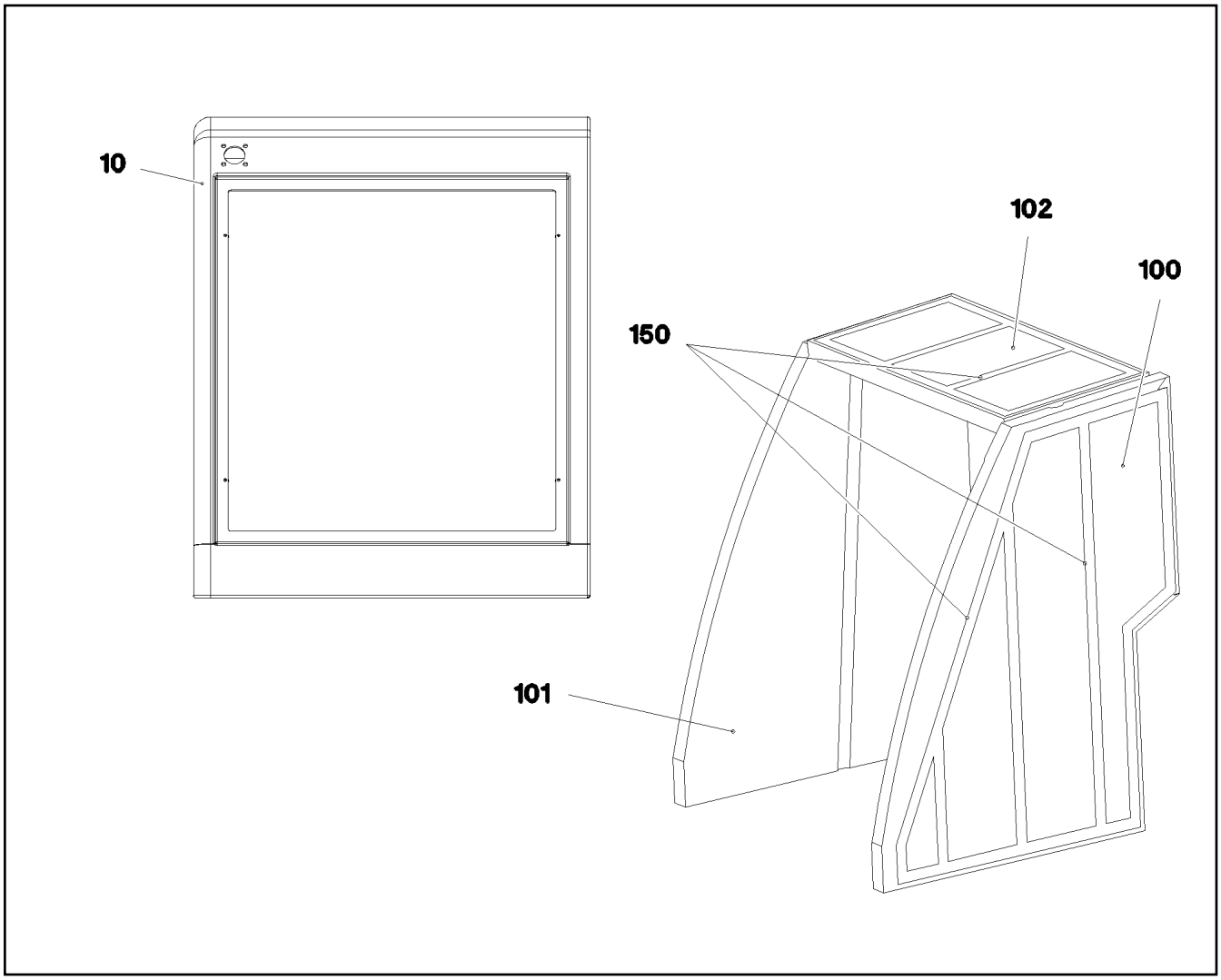

Pos.	Item	Quantity	Description	Bezeichnung
10	968700608	1	RADIATOR HOOD	KUEHLERHAUBE
100	973073208	1	INSULATING MAT 40X975X755 PUR-SCHAU	DAEMMMATTE
101	973073308	1	INSULATING MAT 40X964X749 PUR-SCHAU	DAEMMMATTE
102	973767608	1	INSULATING MAT 40X740X370 PUR-SCHAU	DAEMMMATTE
150	802102008	13.5	ADHESIVE INSULATING STRIP 25MM PS18	PILZKOPFBAND

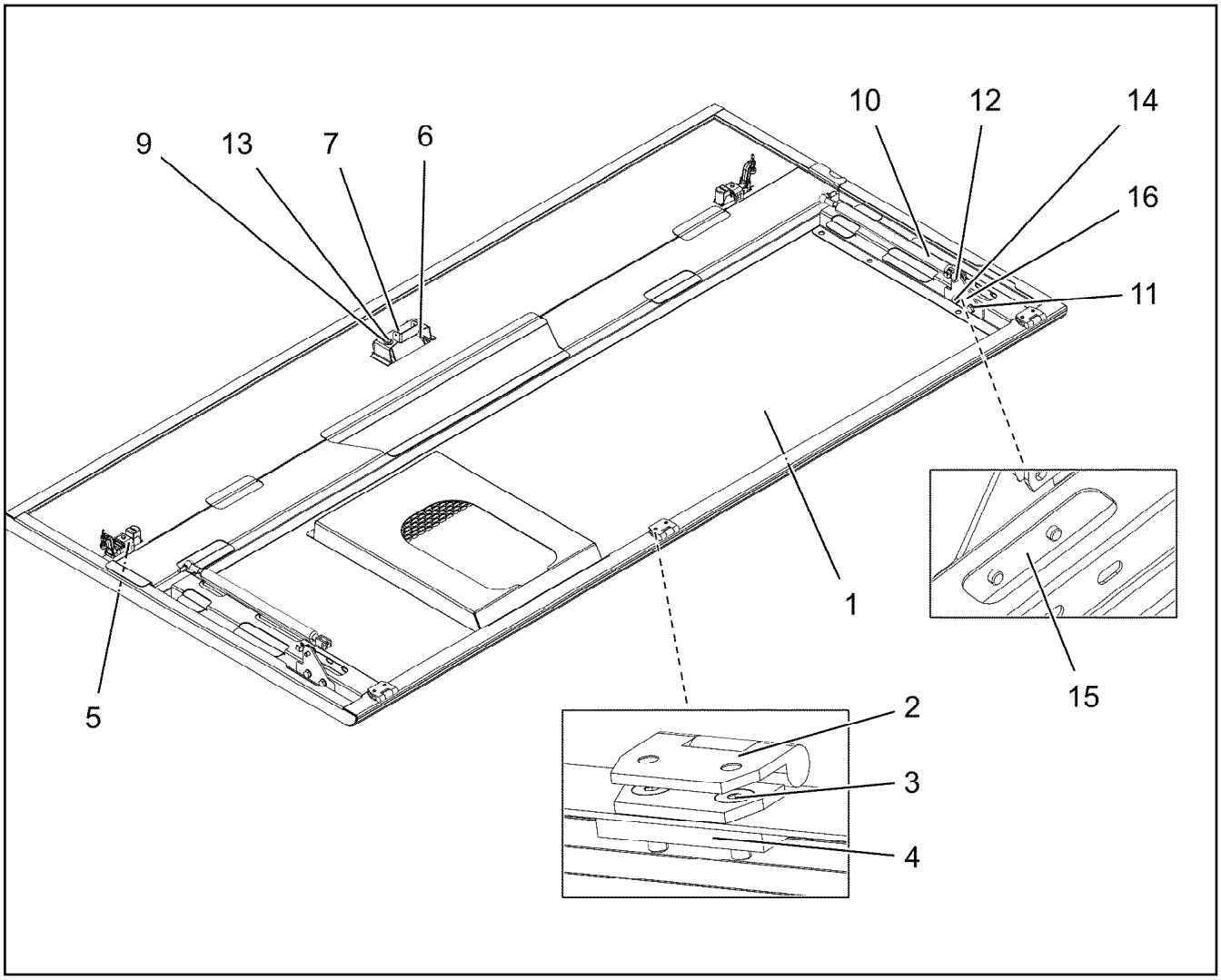

Pos.	Item	Quantity	Description	Bezeichnung
1	969425708	1	FLAP PRE-ASS. SPF	KLAPPE VORM.
2	704228108	3	HINGE 35X35X50/180° ST FE//ZN12//B	SCHARNIER
3	12100589	6	COUNTERSUNK SCREW AEHNL.ISO 10642	SENKSCHRAUBE
4	953695308	3	THREADED PLATE 8.0 X0 S235JR FE//ZNNI8/	GEWINDEPLATTE
5	11450420	2	LEVER FASTENER	HEBELVERSCHLUSS
6	955500008	1	FINGER-HOLD X0 KUNSTSTOFF	GRIFFMULDE
7	974742308	1	PLATE 2X195X66 X5CRNI18-10	BLECH
9	10875648	2	WASHER ISO 7093-1 6 200HV 480H SPF	SCHEIBE
10	591061908	2	GAS SPRING 23X265-500N	GASFEDER
11	12103465	4	WASHER ISO 7089 8 300HV ZNNI-480H SPF	SCHEIBE
12	725111808	2	ES PIN 8X16 FE/ZN8/CN/T2	ES BOLZEN
13	11642497	2	HEX SCREW ISO 4017 M6X10 8.8 480H SPF	SECHSKANTSCHRAUBE
14	11651767	4	HEX SCREW ISO 4017 M8X20 8.8 480H SPF	SECHSKANTSCHRAUBE
15	952940908	2	PLATE 8X25X160 S355MC FE//ZNNI8//CN//T	BLECH
16	979717908	2	PLATE 4X110X77 S315MC FE//ZNNI8//CN//T	BLECH

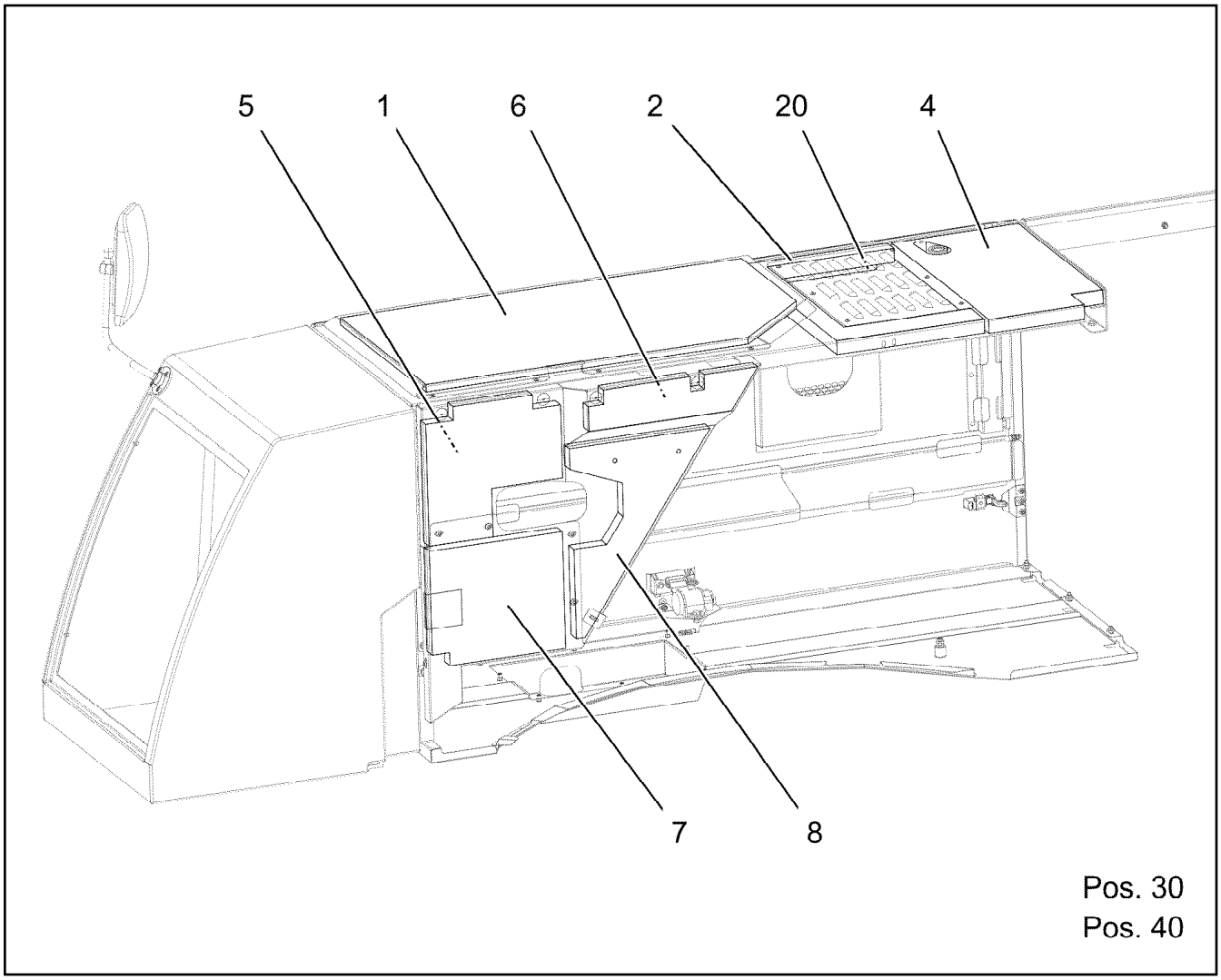

Pos.	Item	Quantity	Description	Bezeichnung
1	97058663	1	INSULATING MAT 20X1160X638 ME-SCHAU	DAEMMMATTE
2	97045991	1	INSULATING MAT 40X720X427 PUR-SCHAU	DAEMMMATTE
4	97100393	1	INSULATING MAT 40X726X368 ME-SCHAUM	DAEMMMATTE
5	97053105	1	INSULATING MAT 40X390X385 ME-SCHAUM	DAEMMMATTE
6	97058602	1	INSULATING MAT 40X491X112 ME-SCHAUM	DAEMMMATTE
7	97053106	1	INSULATING MAT 40X334X385 ME-SCHAUM	DAEMMMATTE
8	97053107	1	INSULATING MAT 40X540X407 ME-SCHAUM	DAEMMMATTE
20	10425409	1	INSULATING MATERIAL 20X20X2000 PUR	DAEMMSTOFF
30	802102008	15	ADHESIVE INSULATING STRIP 25MM PS18	PILZKOPFBAND
40	11006584	3.4	INSULATING HOSE ISO 3302-1 E3 DN40 10 E	ISOLIERSCHLAUCH

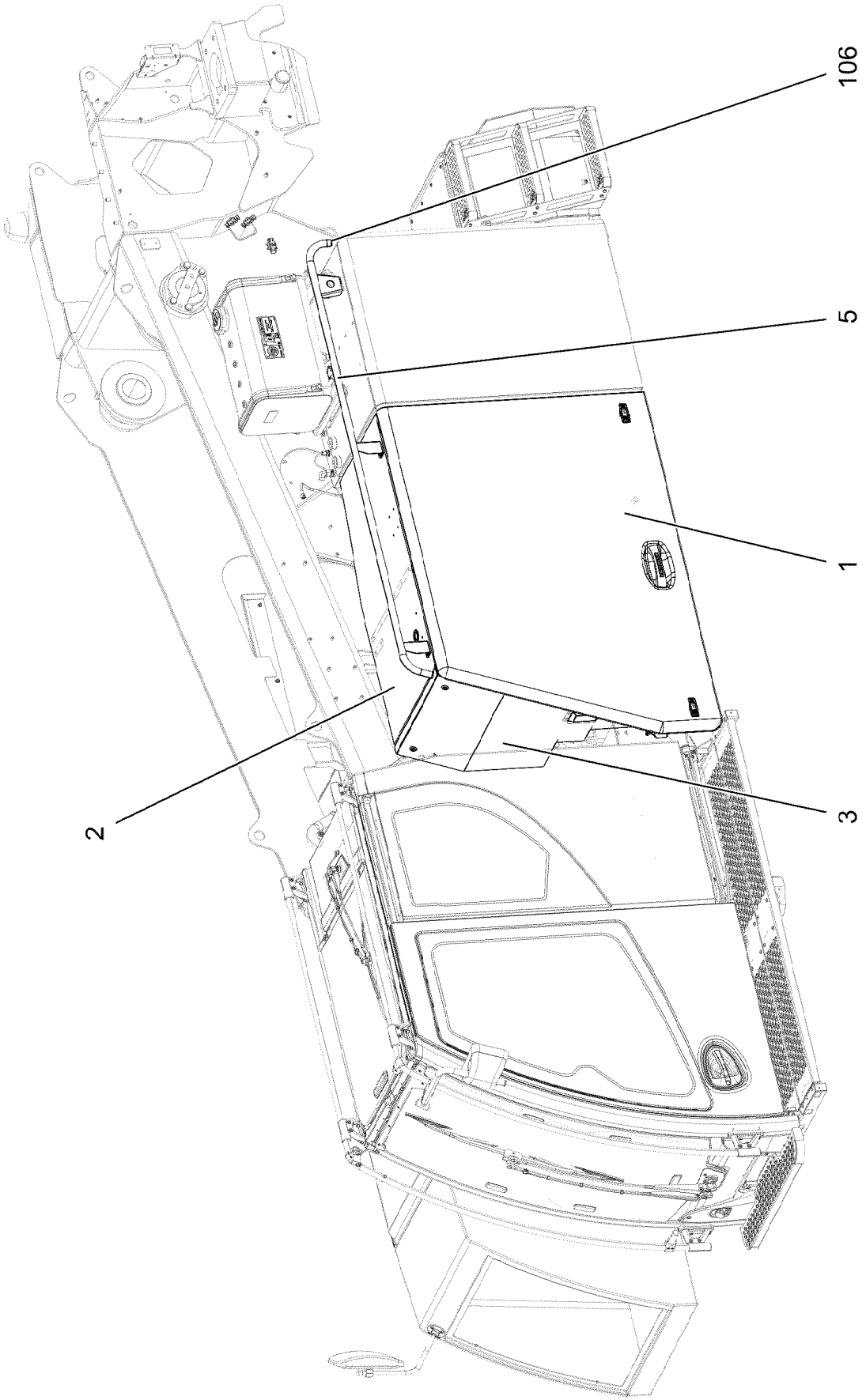
106
5
1
2
3

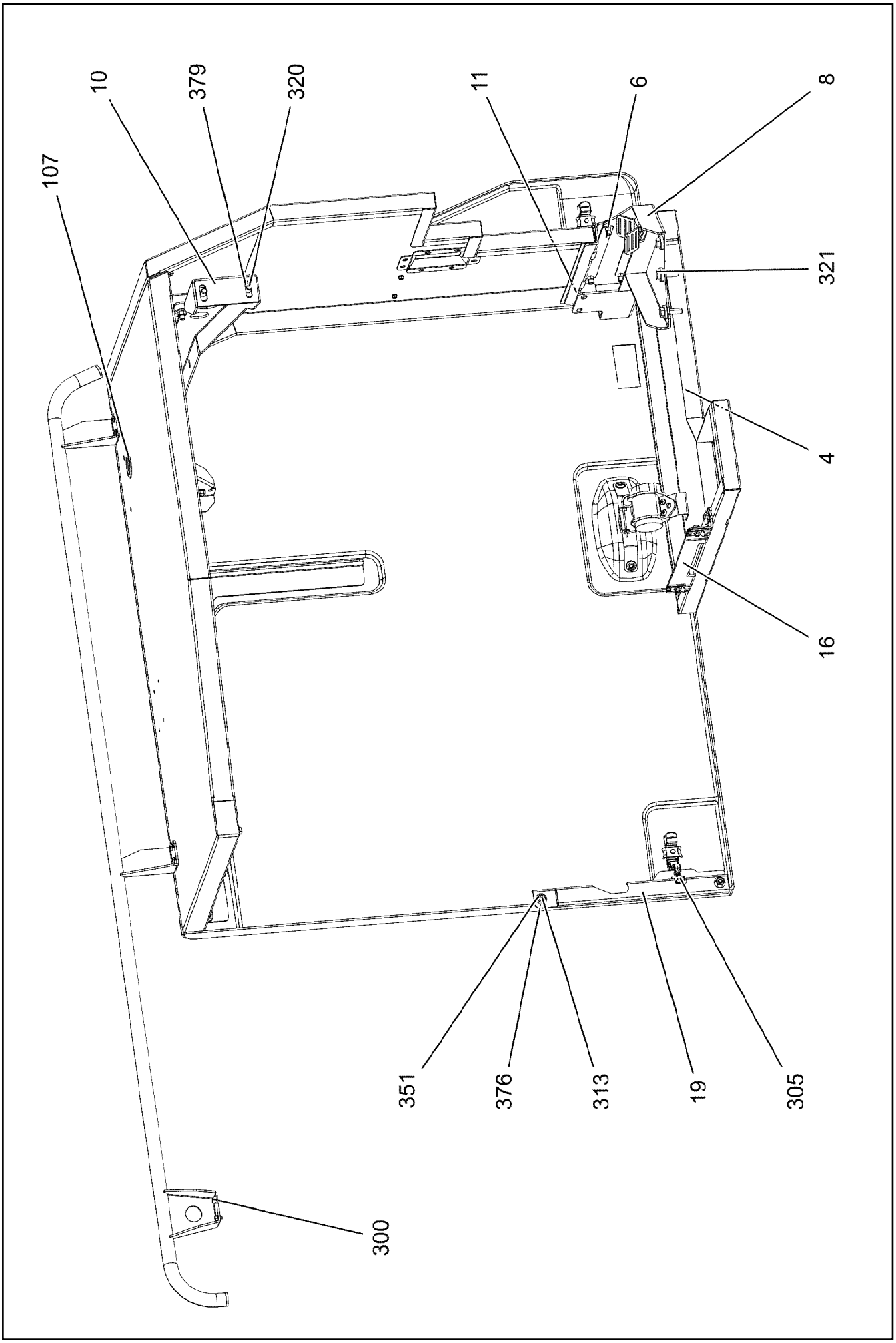
10
379
320
11
6
8
107
321
4
16
351
376
313
19
305
300

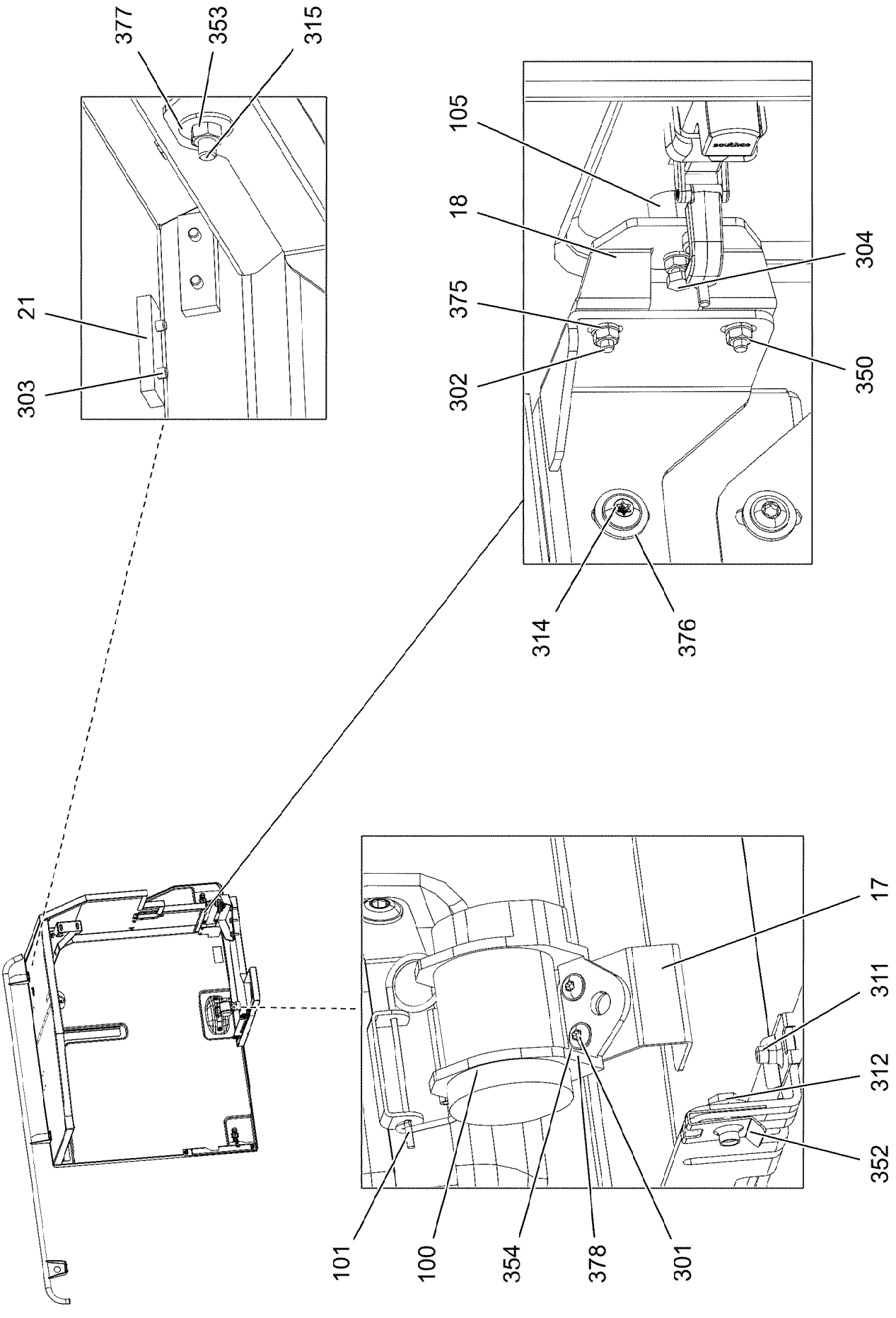
377
353
315
21
303
105
18
375
302
304
350
314
376
17
311
312
352
101
100
354
378
301

Pos.	Item	Quantity	Description	Bezeichnung
1	969399608	1	FLAP PRE-ASS. ⇨ ❑ 416	KLAPPE VORM.
2	969619708	1	COVER PLATE ST.CONST. SPF	DECKBLECH SCHWK.
3	969392008	1	FRONT LEFT-HAND HOOD ⇨ ❑ 417	FRONTHAUBE LI.
4	96024811	1	FLOOR SHEET WELDED SPF	BODENBLECH SCHWK.
5	968321608	1	GRIP PIPE WELDED	GRIFFROHR SCHWK.
6	968321708	2	THREADED CARRIER FE//ZNNI8//CN//T0	GEWINDETRAEGER
8	969856308	1	BRACKET WELDED CONST.	KONSOLE SCHWK.
10	97039169	1	PLATE 4X879X259 S315MC FE//ZNNI8//CN//T	BLECH
11	97056627	1	PLATE 4X465X159 S315MC FE//ZNNI8//CN//T	BLECH
16	979537108	1	PLATE 4X410X98 S315MC FE//ZNNI8//CN//T	BLECH
17	974657908	1	PLATE 2X50X115 X5CRNI18-10	BLECH
18	975170608	1	PLATE 4X90X70 S315MC FE//ZNNI8//CN//T0	BLECH
19	97084676	1	PLATE 3X430X104 DC01 FE//ZNNI8//CN//T0	BLECH
21	953695308	2	THREADED PLATE 8.0 X0 S235JR FE//ZNNI8/	GEWINDEPLATTE
100	10334488	1	TENSION FLANGE 47X2220	ZUGGURT
101	433102808	1	RETAINING SPRING 3X55 VERZ	SICHERUNGSFEDER
105	726907308	2	RUBBER METAL STOP BUFFER 20X15-M6 N	GUMMI-METALLANSCHLAGPUF
106	779020508	2	MULTI-PLATE PLUG PE-LLD	LAMELLENSTOPFEN
107	602717308	1	DIAPHRAGM GROMMET 35,5/47/53 TPE SC	MEMBRAN-DURCHFUEHRUNG
300	11692824	2	HEX SCREW ISO 4017 M6X12 8.8 480H SPF	SECHSKANTSCHRAUBE
301	10412851	4	BUTTON HEAD SCREW AEHNL.ISO 7380-2	HALBRUNDKOPFSCHRAUBE
302	11644899	2	HEX SCREW ISO 4017 M6X20 8.8 480H SPF	SECHSKANTSCHRAUBE
303	10412852	4	BUTTON HEAD SCREW AEHNL.ISO 7380-2	HALBRUNDKOPFSCHRAUBE
304	12217223	1	HEX SCREW ISO 4017 M6X30 8.8 480H SPF	SECHSKANTSCHRAUBE
305	12216201	1	HEX SCREW ISO 4017 M6X45 8.8 480H SPF	SECHSKANTSCHRAUBE
311	11651767	5	HEX SCREW ISO 4017 M8X20 8.8 480H SPF	SECHSKANTSCHRAUBE
312	11651612	2	HEX SCREW ISO 4017 M8X16 8.8 480H SPF	SECHSKANTSCHRAUBE
313	10875471	4	BUTTON HEAD SCREW AEHNL.ISO 7380-2	HALBRUNDKOPFSCHRAUBE
314	10875486	2	BUTTON HEAD SCREW AEHNL.ISO 7380-2	HALBRUNDKOPFSCHRAUBE
315	11642358	2	HEX SCREW ISO 4017 M10X30 8.8 FLZN SP	SECHSKANTSCHRAUBE
320	11658892	2	HEX SCREW ISO 4017 M12X25 8.8 FLZN SP	SECHSKANTSCHRAUBE
321	11645384	3	HEX SCREW ISO 4017 M12X40 8.8 FLZN SP	SECHSKANTSCHRAUBE
350	10197764	6	HEX NUT ISO 4032 M6 10 ZNNI-480H SPF	SECHSKANTMUTTER
351	11693875	3	HEX NUT ISO 4032 M8 8 480H SPF	SECHSKANTMUTTER
352	12100332	4	SHEET METAL NUT M8 480H SPF	BLECHMUTTER
353	12102695	2	HEX NUT ISO 4032 M10 8 ZNNI-480H SPF	SECHSKANTMUTTER
354	411903008	4	HEX NUT DIN 985 M6 A2-70	SECHSKANTMUTTER
375	10197771	10	WASHER ISO 7089 6 200HV ZNNI-480H SPF	SCHEIBE
376	11140469	17	WASHER ISO 7093-1 8 200HV 480H SPF	SCHEIBE
377	11491889	4	WASHER ISO 7093-1 10 300HV FLZN SPF	SCHEIBE
378	10540500	4	WASHER ISO 7093-1 6 200HV-A4	SCHEIBE
379	10006370	5	WASHER DIN 7349 13 200HV FLZN SPF	SCHEIBE

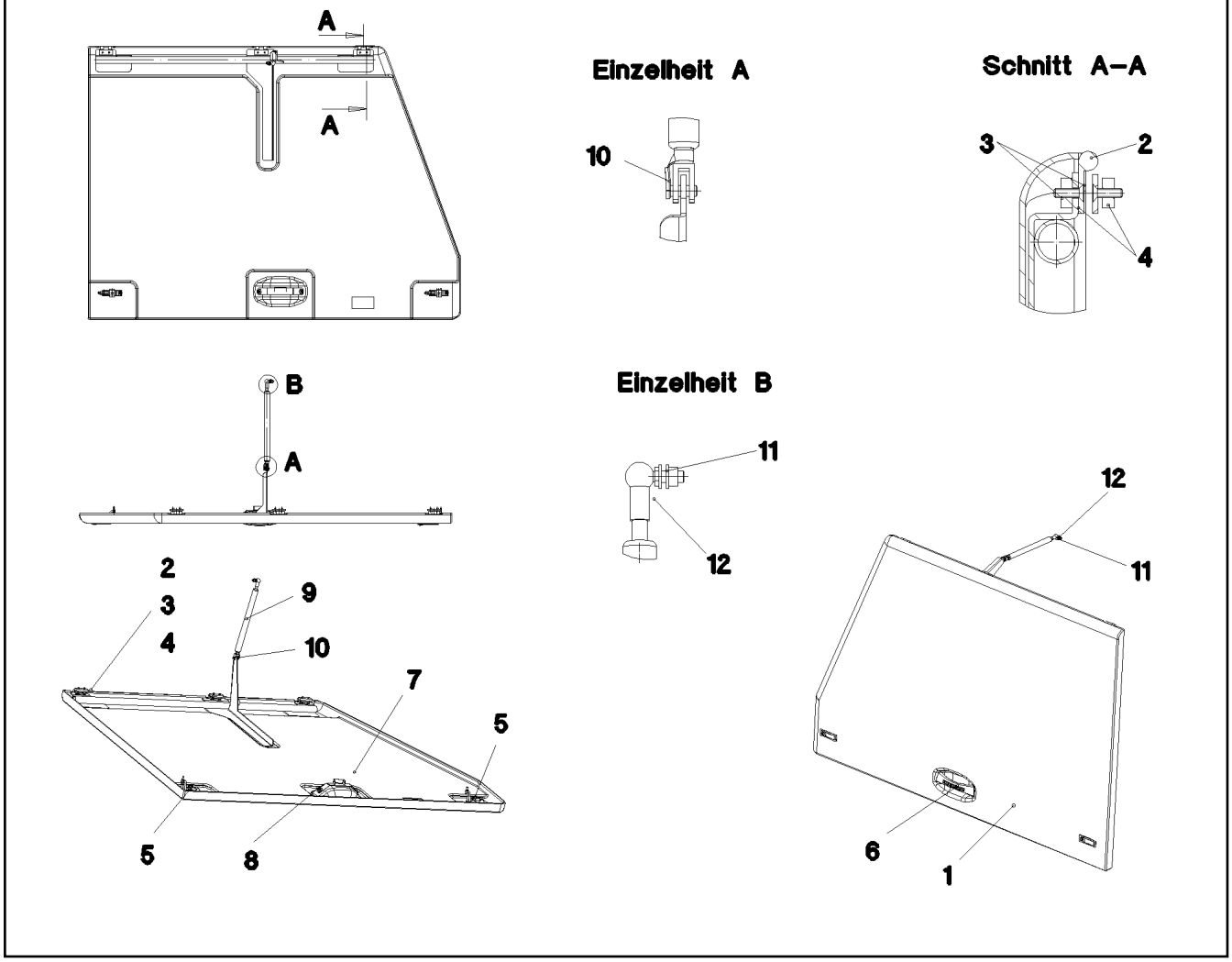

Pos.	Item	Quantity	Description	Bezeichnung
1	969399508	1	FLAP COMPL.	KLAPPE KPL.
2	704228108	3	HINGE 35X35X50/180° ST FE//ZN12//B	SCHARNIER
3	12100589	12	COUNTERSUNK SCREW AEHNL.ISO 10642	SENKSCHRAUBE
4	953695308	6	THREADED PLATE 8.0 X0 S235JR FE//ZNNI8/	GEWINDEPLATTE
5	11450420	2	LEVER FASTENER	HEBELVERSCHLUSS
6	12554272	1	HANDLE 212X53	HANDGRIFF
7	974656608	1	PLATE 2X236X50 X5CRNI18-10	BLECH
8	10875448	2	BUTTON HEAD SCREW ISO 7380-2 M10X25	HALBRUNDKOPFSCHRAUBE
9	591064508	1	GAS SPRING 23X265-1000N	GASFEDER
10	725111808	1	ES PIN 8X16 FE/ZN8/CN/T2	ES BOLZEN
11	11693875	1	HEX NUT ISO 4032 M8 8 480H SPF	SECHSKANTMUTTER
12	12103465	2	WASHER ISO 7089 8 300HV ZNNI-480H SPF	SCHEIBE

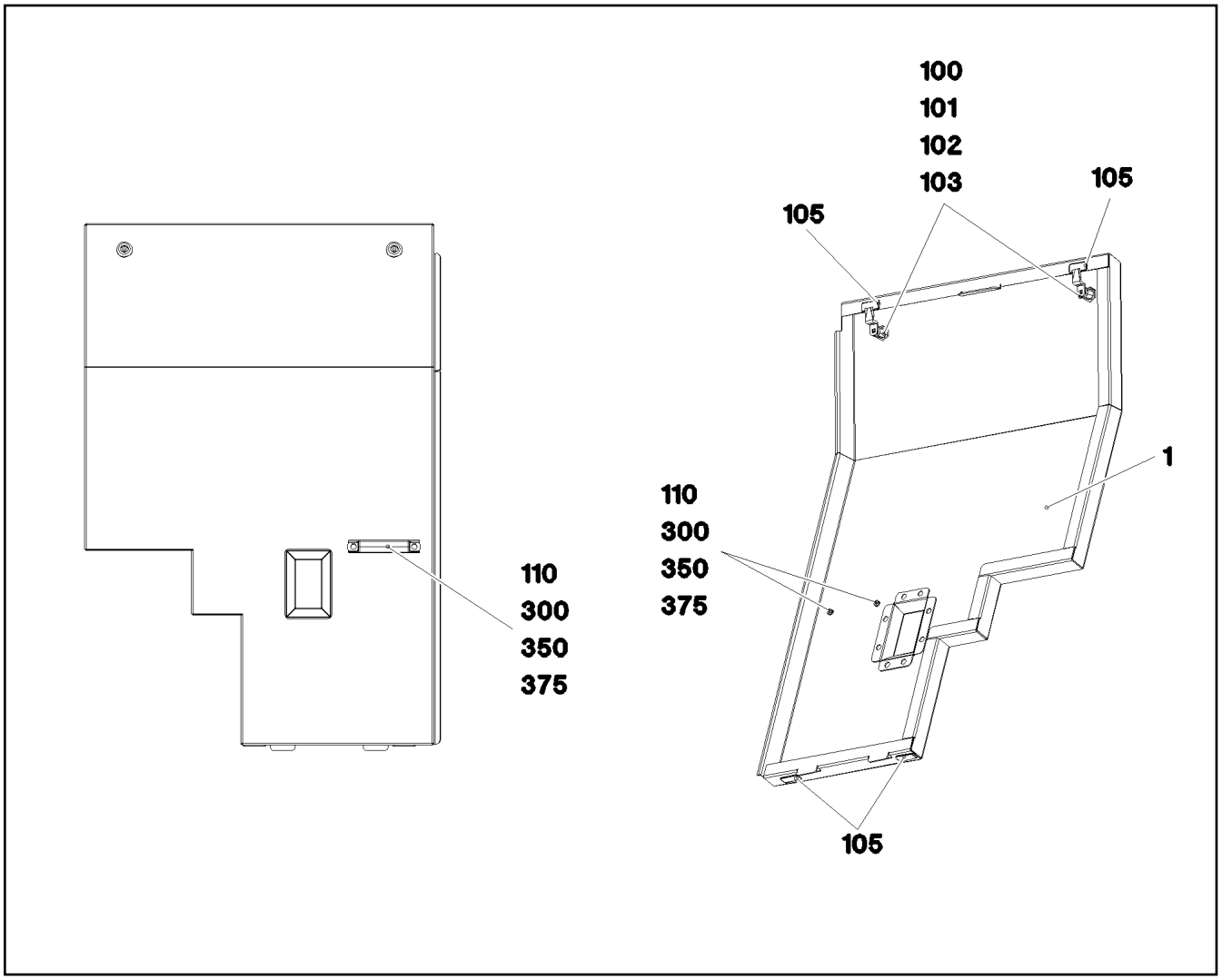

Pos.	Item	Quantity	Description	Bezeichnung
1	969392108	1	HOOD/BONNET WELDED LEFT SPF	FRONTHAUBE SCHWK.LI.
100	704256608	2	HOUSING GD-ZN SW GEPULVERT	GEHAEUSE
101	704253408	2	ACTUATION SPIKE GD-ZN SW GEPULVERT	BETAETIGUNGSDORN
102	704274808	2	O-RING 12X2 NBR70	O-RING
103	704255808	2	TONGUE	ZUNGE
105	704229908	4	HOOD SUPPORT	HAUBENAUFLAGE
110	704254508	1	GRIP KUNSTSTOFF	GRIFF
300	11692824	2	HEX SCREW ISO 4017 M6X12 8.8 480H SPF	SECHSKANTSCHRAUBE
350	10197764	2	HEX NUT ISO 4032 M6 10 ZNNI-480H SPF	SECHSKANTMUTTER
375	10197771	2	WASHER ISO 7089 6 200HV ZNNI-480H SPF	SCHEIBE

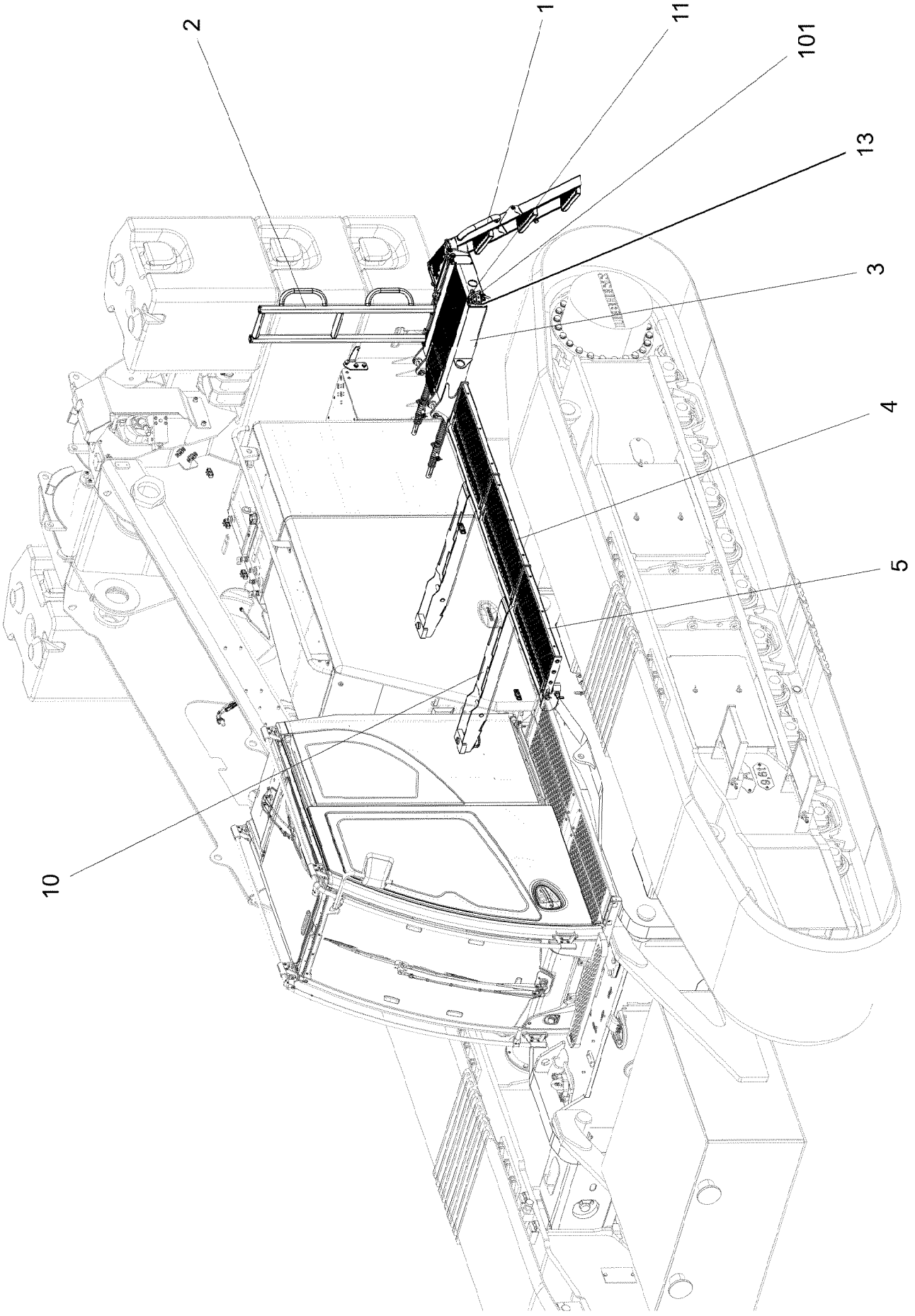
2
1
11
101
13
3
4
5
10

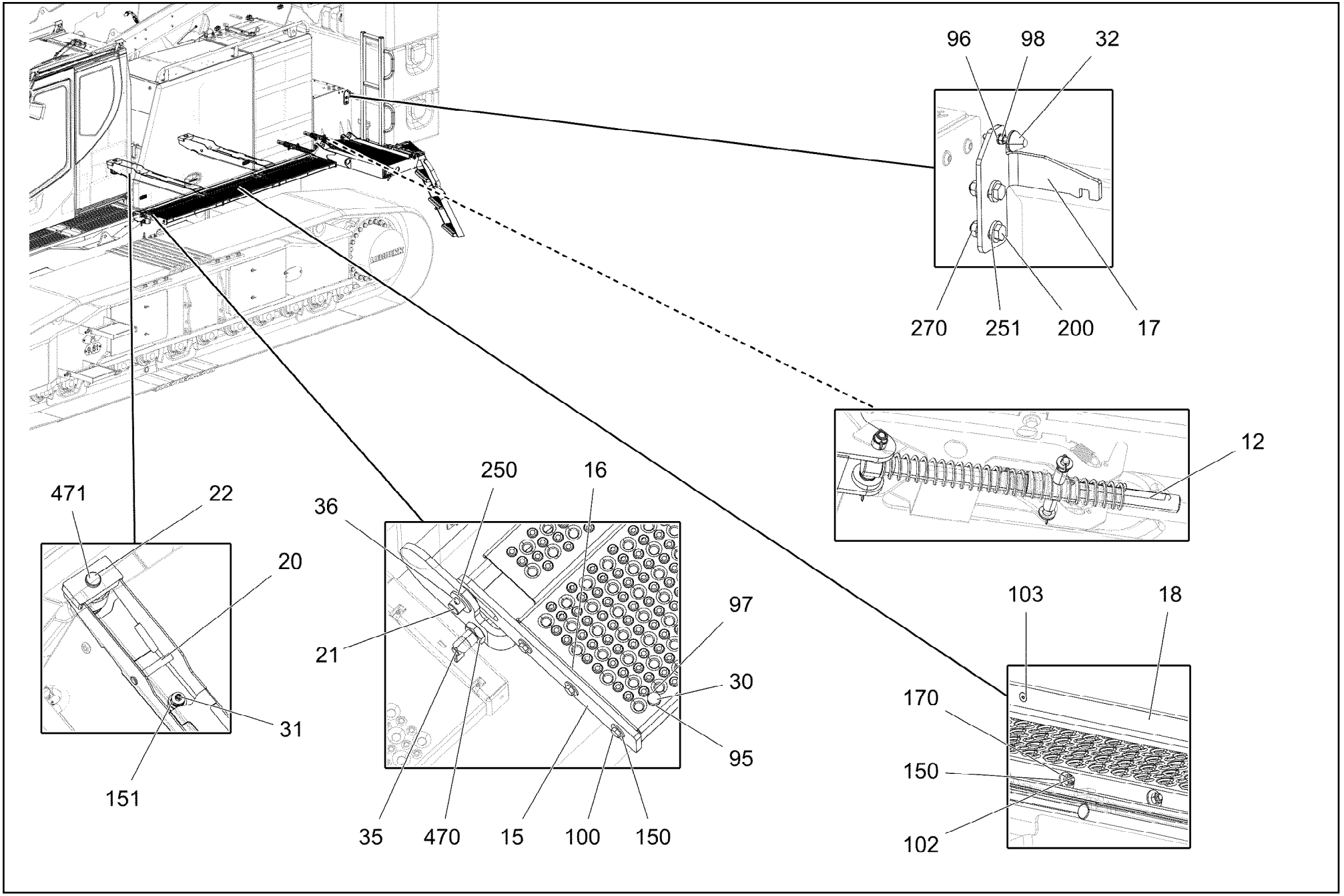
96
98
32
270
251
200
17
12
471
22
20
31
151
250
16
36
21
97
30
95
35
470
15
100
150
103
18
170
150
102

Pos.	Item	Quantity	Description	Bezeichnung
1	12102327	1	STAIR 4-360X0,9M ALMG3 ELOXIERT SPF	TREPPE
2	12102325	1	GUARD RAILING 50X250X1100 ALMGSI0,5 E	GELAENDER
3	12102326	1	PEDESTAL 120X460X907 ALMG3 ELOXIERT	PODEST
4	12102280	3	PEDESTAL 40X240X800 ALMG3 ELOXIERT	PODEST
5	12103227	3	PEDESTAL 40X103X720 ALMG3 ELOXIERT	PODEST
10	96044379	1	PLATFORM ST.CONST. T ZN O	PODEST SCHWK.
11	96044787	1	HOLDER PRE-ASSEMBLY ⇨ ❑ 421	HALTER VORM.
12	96044789	2	 ⇨ ❑ 422	SPANNEINHEIT KPL.
13	96045536	1	PLATE PRE-ASS. ⇨ ❑ 423	BLECH VORM.
15	97172678	4	PLATE 10X345X70 S355MC FE//ZNNI8//CN//T	BLECH
16	97130445	4	PLATE 8X195X15 S355MC FE//ZNNI8//CN//T	BLECH
17	96062526	1	BRACKET WELDED CONST. FE//ZNNI8//CN/	KONSOLE SCHWK.
18	97139849	1	STRIP PA6G	LEISTE
20	97061277	2	PIN 25.0 X152 S355J2G3C+C FE//ZNNI8//CN/	BOLZEN
21	97130460	2	ROD 20.0X1140 S355J2+AR FE//ZNNI8//CN//T	STANGE
22	288190908	2	SLIDER RD42X75 PA6G+OEL	GLEITSTUECK
30	726616708	4	RUBBER METAL STOP BUFFER 18X7,5	GUMMI-METALLANSCHLAGPUF
31	726613008	2	RUBBER METAL STOP BUFFER 50X20-M10	GUMMI-METALLANSCHLAGPUF
32	10870544	1	ROUND BUFFER 25X20-M6X38,0 NK	RUNDPUFFER
35	10010025	2	SNAP-IN LOCK NIROSTA	RASTRIEGEL
36	10180357	6	SPLIT PIN ISO 1234 5X32 St 480H SPF	SPLINT
95	11693878	4	WASHER DIN 7349 6,4 200HV 480H SPF	SCHEIBE
96	420000414	2	WASHER ISO 7089 6 200HV-A4	SCHEIBE
97	10197764	4	HEX NUT ISO 4032 M6 10 ZNNI-480H SPF	SECHSKANTMUTTER
98	411530301	2	HEX NUT ISO 4032 M6 A2-70	SECHSKANTMUTTER
100	11826527	12	HEX SCREW ISO 4017 M8X30 8.8 480H SPF	SECHSKANTSCHRAUBE
101	12100574	2	BUTTON HEAD SCREW ISO 7380-2 M8X30 0	HALBRUNDKOPFSCHRAUBE
102	11651767	15	HEX SCREW ISO 4017 M8X20 8.8 480H SPF	SECHSKANTSCHRAUBE
103	408606008	3	COUNTERSUNK SCREW DIN 7991 M6X12 A2	SENKSCHRAUBE
150	11140469	42	WASHER ISO 7093-1 8 200HV 480H SPF	SCHEIBE
151	421801908	8	WASHER ISO 7093-1 12 200HV-A2	SCHEIBE
170	11693875	15	HEX NUT ISO 4032 M8 8 480H SPF	SECHSKANTMUTTER
200	406601008	2	HEX SCREW ISO 4017 M10X35 10.9 FLZN SP	SECHSKANTSCHRAUBE
250	10289808	10	WASHER ISO 7089 20 300HV FLZN SPF	SCHEIBE
251	11658580	4	WASHER DIN 7349 10,5 200HV-St FLZN SPF	SCHEIBE
270	10814801	4	HEX NUT ISO 7042 M10 10 FLZN SPF	SECHSKANTMUTTER
470	10285016	2	HEX NUT ISO 8675 M20X1,5 A2-035	SECHSKANTMUTTER
471	10878614	2	HEX NUT ISO 8675 M42X3 05 FLZN SPF	SECHSKANTMUTTER

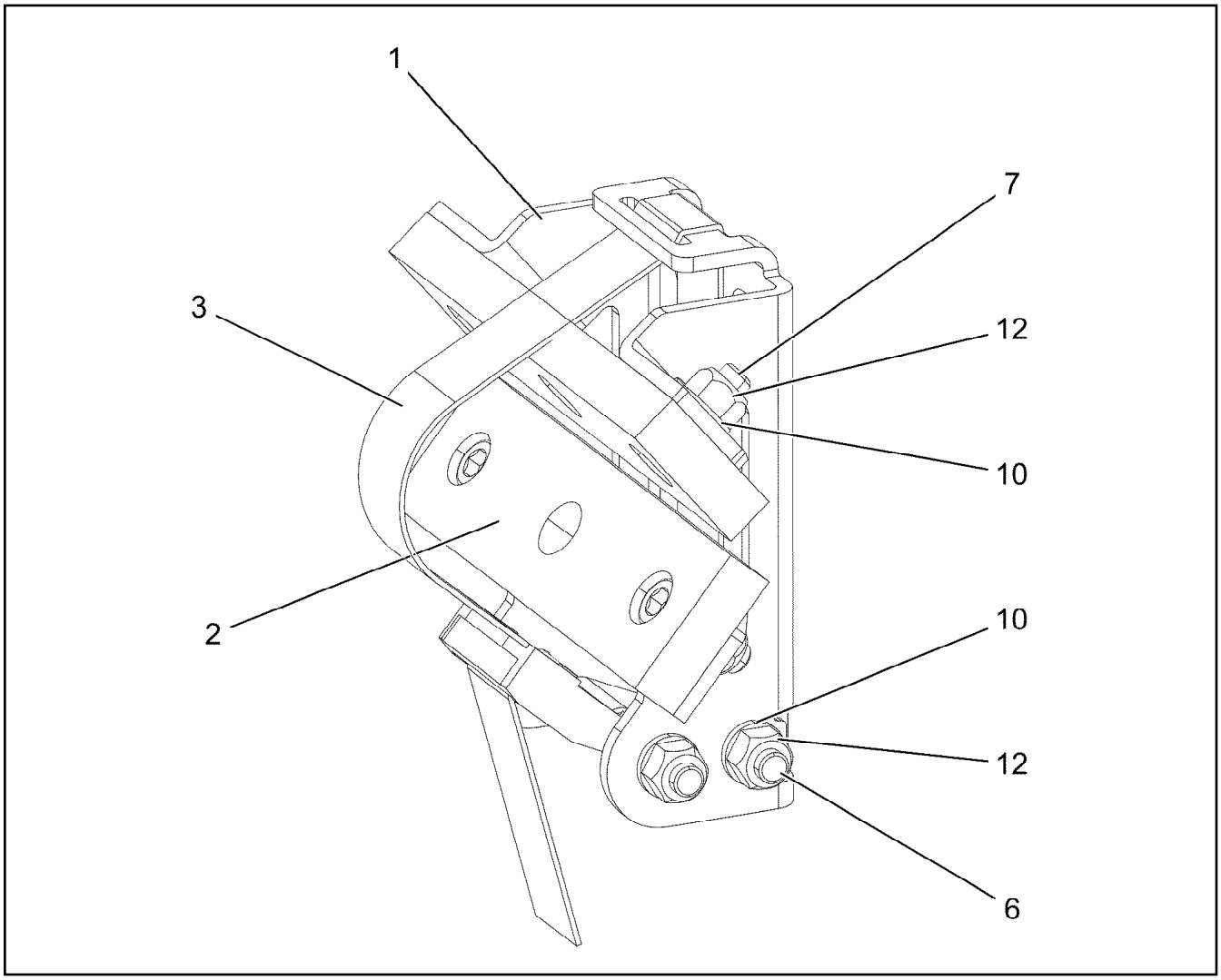

Pos.	Item	Quantity	Description	Bezeichnung
1	97131533	1	PLATE 3X157X121 DC01 FE//ZNNI8//CN//T0	BLECH
2	97086973	2	BASE PLATE 108X30X 10 PA6 SCHWARZ	AUFLAGEPLATTE
3	10020519	1	LASHING STRAP 0,5MX18MM	ZURRGURT
6	10876361	2	SOCKET HEAD SCREW ISO 4762 M6X70 8.8	ZYLINDERSCHRAUBE
7	10875586	4	SOCKET HEAD SCREW ISO 4762 M6X16 8.8	ZYLINDERSCHRAUBE
10	10197771	6	WASHER ISO 7089 6 200HV ZNNI-480H SPF	SCHEIBE
12	12102692	6	HEX NUT DIN 985 M6 8 ZNNI-480H SPF	SECHSKANTMUTTER

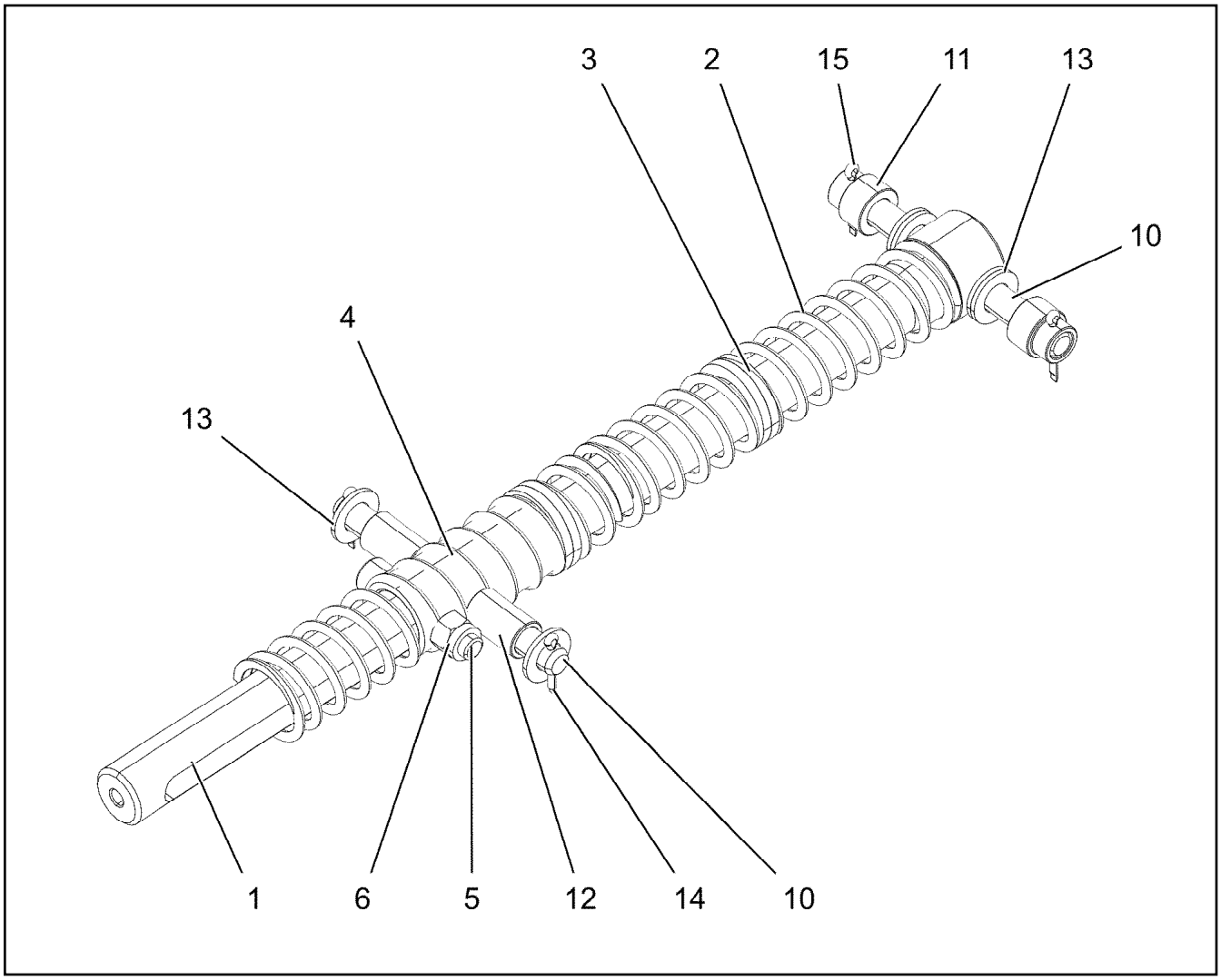

Pos.	Item	Quantity	Description	Bezeichnung
1	97131534	1	PIN 45.0X545 35NICRMOV125 GASN. SPF	BOLZEN
2	720008308	2	COMPRESSION SPRING 5X40X205 X10CRNI	DRUCKFEDER
3	10875638	4	WASHER DIN 1441 31 ST FLZN SPF	SCHEIBE
4	97131535	1	SLEEVE 40.0X87 S355J2C+C FE//ZNNI8//CN/	HUELSE
5	10876374	1	SOCKET HEAD SCREW ISO 4762 M12X60 8	ZYLINDERSCHRAUBE
6	11840127	1	HEX NUT ISO 7040 M12 8 FLZN SPF	SECHSKANTMUTTER
10	97134816	2	PIN 25.0X150 35NICRMOV125 GASN. SPF	BOLZEN
11	97131537	2	SLEEVE 25.0X24 S355J2G3C+C FE//ZNNI8//C	HUELSE
12	97131538	2	SLEEVE 20.0X32 S355J2C+C FE//ZNNI8//CN/	HUELSE
13	10289805	6	WASHER ISO 7089 14 300HV FLZN SPF	SCHEIBE
14	10180351	2	SPLIT PIN ISO 1234 4X25 St 480H SPF	SPLINT
15	10180352	2	SPLIT PIN ISO 1234 4X32 St 480H SPF	SPLINT

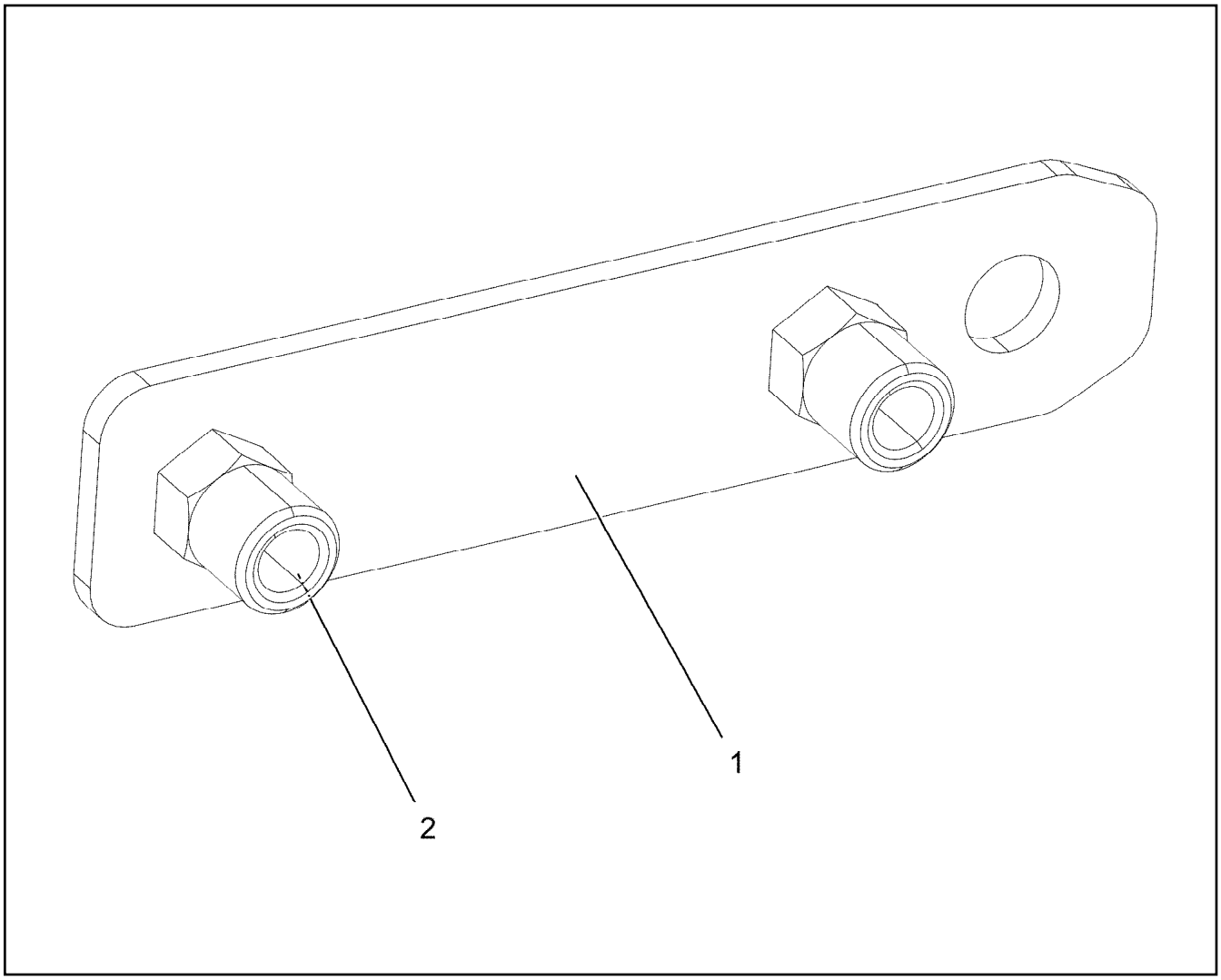

Pos.	Item	Quantity	Description	Bezeichnung
1	97132679	1	PLATE 3X25X112 X5CRNI18-10	BLECH
2	12100289	2	BLIND RIVET NUT M8 K=3,0-5,0 480H SPF	BLINDNIETMUTTER

Pos.	Item	Quantity	Description	Bezeichnung
5	96068695	1	CABLE LIST DRIVER'S CABIN ⇨ ❑ 425	KABELLISTE KRANFUEHRERK
6	96056347	1	ELECTRIC ADD-ON PARTS CABIN ⇨ ❑ 429	ELEKTRIK ANBAUTEILE KABINE

Pos.	Item	Quantity	Description	Bezeichnung
2	96023891	1	WIRING HARNESS W300 ⇨ ❑ 426	KABELSTRANG
3	967541908	1	WIRING HARNESS W301	KABELSTRANG
4	967542008	1	WIRING HARNESS W302	KABELSTRANG
5	10472203	1	PATCH CABLE 1M	PATCHKABEL
6	10219462	1	PATCH CABLE 4X2 AWG 26/7-5M	PATCHKABEL
7	96022870	1	WIRING HARNESS W310 ⇨ ❑ 428	KABELSTRANG

Pos.	Item	Quantity	Description	Bezeichnung
5	680000708	1	COUPLING SOCKET 4-POL 90° SPF	KUPPLUNGSDOSE
6	680000008	1	COUPLING SOCKET 4-POLE SPF	KUPPLUNGSDOSE
7	10428545	4.375	LEAD 25 X 0,34 TPE-U	LEITUNG
9	11620017	3	LEAD 2 X 1	LEITUNG
10	10428544	4.367	LEAD 15 X 0,34 TPE-U	LEITUNG
11	10428544	4.367	LEAD 15 X 0,34 TPE-U	LEITUNG
12	11840113	4.08	BUS LINE 2 X 0,5	BUSLEITUNG
13	11840113	4.08	BUS LINE 2 X 0,5	BUSLEITUNG
14	11840113	0.17	BUS LINE 2 X 0,5	BUSLEITUNG
15	11620017	0.48	LEAD 2 X 1	LEITUNG
16	10875121	1	DOUBLE SOCKET 2-POL	DOPPELSTECKDOSE
17	11840113	4.46	BUS LINE 2 X 0,5	BUSLEITUNG
18	10877798	1	CONNECTION CABLE 2X0,75-1,5M	ANSCHLUSSKABEL
34	602217908	1	CABLE LUG DIN 46237 M6/1-2,5mm²	KABELSCHUH
72	602203408	3	RECEPTACLE 6,3X1-2,5 MESSING VERZINN	STECKHUELSE
75	602203908	2	FLAT PLUG 6,3X1-2,5 SN	FLACHSTECKER
121	602300108	16	CONTACT 1-2,5MM2	KONTAKT
124	602323508	6	FLAT PLUG 2,8X0,5-1 SN	FLACHSTECKER
125	602300308	106	CONTACT 0,5-1MM2	KONTAKT
134	602303308	2	RECEPTACLE FOR TABS 6,3X0,5-1,5	FLACHSTECKHUELSE
143	602208408	2	RECEPTACLE 9,5X1-2,5 CUSN4	STECKHUELSE
202	11082602	6.8	INSULATING HOSE DN6X0,5 PUR SPF	ISOLIERSCHLAUCH
203	11082603	3.61	INSULATING HOSE DN8X0,65 PUR SPF	ISOLIERSCHLAUCH
204	11082604	3.4	INSULATING HOSE DN10X0,65 PUR SPF	ISOLIERSCHLAUCH
205	11082605	1.78	INSULATING HOSE DN12X0,65 PUR SPF	ISOLIERSCHLAUCH
224	11124207	0.83	CABLE CONDUIT DN20X0,6 PUR SPF	KABELSCHLAUCH
225	11124208	0.33	CABLE CONDUIT DN25X0,6 PUR SPF	KABELSCHLAUCH
227	11124210	1.36	CABLE CONDUIT DN35X0,6 PUR SPF	KABELSCHLAUCH
228	11124211	0.9	CABLE CONDUIT DN40X0,6 PUR SPF	KABELSCHLAUCH
261	12104809	1	CABLE TIE 3,6X142-SCHWARZ PA66 SPF	KABELBINDER
298	10441166	0.1	HEATSHRINK SLEEVING 11,6/2,5X2,29 POLY	SCHRUMPFSCHLAUCH
305	10870540	282.78	ELECTR.CABLE 1,0	KFZ-LEITUNG
309	10870542	39.7	ELECTR.CABLE 2,5	KFZ-LEITUNG
344	10870538	17	ELECTR.CABLE 0,5	KFZ-LEITUNG
345	10870539	8.76	ELECTR.CABLE 0,75	KFZ-LEITUNG
500	923512208	53	CABLE MARKER	KABELMARKER
501	602300208	9	PLUG SHELL 18-POL	STECKERGEHAEUSE
502	10024744	2	FEMALE PLUG 15-POLE	BUCHSENSTECKER
503	10355182	2	PLUG SHELL D-SUB METALL	STECKERGEHAEUSE
504	602322708	1	FEMALE PLUG 25-POLE	BUCHSENSTECKER
505	10355170	1	PLUG SHELL D-SUB METALL	STECKERGEHAEUSE
506	602325508	4	HOUSING 6-POL	GEHAEUSE
507	602331308	4	HOUSING 4-POL	GEHAEUSE
508	602209708	3	ATTACHABLE SLEEVE HOUSING 2-POL	STECKHUELSENGEHAEUSE
509	10342517	1	PLUG SHELL 2 13A TH.PLAST SW	STECKERGEHAEUSE
510	602336008	4	PLUG SHELL 14-POL	STECKERGEHAEUSE
511	10424622	2	BUSHING HOUSING 2-POL 5A	BUCHSENGEHAEUSE
512	920381108	1	PLUG	STECKER
513	602300508	1	HOUSING 8-POL	GEHAEUSE
514	602300608	1	HOUSING 8-POL	GEHAEUSE
515	5603876	1	LINE CONNECTOR	LEITUNGSVERBINDER
516	10875280	1	BUSHING HOUSING 8-POL 5A	BUCHSENGEHAEUSE
517	11822050	1	PLUG SHELL	STECKERGEHAEUSE
518	602225508	1	MASTER PLUG 4-POL	ZENTRALSTECKER
519	602225608	1	MASTER PLUG 6-POL	ZENTRALSTECKER
520	10301148	1	PLUG 9-POL PVC	STECKER
521	602319808	1	ATTACHABLE SLEEVE HOUSING VALEO	STECKHUELSENGEHAEUSE
522	602335908	3	PLUG SHELL 4-POL	STECKERGEHAEUSE
523	602305908	1	FLAT PLUG HOUSING FASTIN-FASTON	FLACHSTECKERGEHAEUSE
524	6001790	1	SOCKET HOUSING 2-POL	STECKDOSENGEHAEUSE

Pos.	Item	Quantity	Description	Bezeichnung
525	10342518	1	SOCKET 2-POL	STECKDOSE
526	11008024	4	COVER MOLERIT T59	ABDECKUNG
527	617000608	1	FERRITE KLAPPBAR	FERRIT
528	10874331	1	PROTECTING CAP JPT	SCHUTZKAPPE
615	602322808	55	CRIMPING CONTACT 0,2-0,56MM2 SPF	CRIMPKONTAKT
669	10100062	4	CONNECTOR PIN 0,75-2,0MM2 CuNi	STECKERSTIFT
670	10100063	2	PLUG BUSHING 0,75-2,0MM2 Cu	STECKERBUCHSE
689	10335819	3	PIN CONTACT 0,2-0,5MM2	STIFTKONTAKT
690	10335820	52	SLEEVE CONTACT 0,2-0,5MM2	BUCHSENKONTAKT
700	10873194	4	SLEEVE CONTACT 0,5-0,75MM2	BUCHSENKONTAKT
708	10473048	2	CABLE SLEEVE 2,4-3,0/2,4/0,6 SILIKON	KABELTUELLE
715	10300944	2	PIN CONTACT 0,5-1MM2MM2 Cu	STIFTKONTAKT
758	11080881	16	RECEPTACLE 6,3X0,5-1,0 VERZINNT	STECKHUELSE
761	7624353	2	PLUG BUSHING 0,5-1,0MM2	STECKERBUCHSE
802	602330808	2	SINGLE STRAND SEALING 1,2-2,1MM BLAU	EINZELADERABDICHTUNG
823	7368253	5	STOPPER PLUG DEUTSCH GROESSE	BLINDSTOPFEN
828	10424625	4	SINGLE STRAND SEALING 1,4-2,1MM VMQ	EINZELADERABDICHTUNG
995	965617208	6	SHIELDING TIED BACK	ABSCHIRMUNG ZURUECKGEB
996	965622108	8	LETTERING WIRE	BESCHRIFTUNG ADER
998	965622208	1	LETTERING WIRING HARNESS	BESCHRIFTUNG KABELBAUM
2238	10875281	6	SLEEVE CONTACT 0,5MM2	BUCHSENKONTAKT
2258	10877343	25	SLEEVE CONTACT 0,5-1MM2	BUCHSENKONTAKT
2259	10877344	5	CONTACT 1,0-2,5MM2	KONTAKT
2998	96014807	2	MACHINING CAN- STUETZP	BEARBEITUNG

Pos.	Item	Quantity	Description	Bezeichnung
5	680000008	1	COUPLING SOCKET 4-POLE SPF	KUPPLUNGSDOSE
6	680000308	1	COUPLING SOCKET 4-POLE 90° SPF	KUPPLUNGSDOSE
7	680000008	1	COUPLING SOCKET 4-POLE SPF	KUPPLUNGSDOSE
8	12100217	3	DATA LINE 2 X 1 FEP SPF	DATENLEITUNG
9	12100217	3	DATA LINE 2 X 1 FEP SPF	DATENLEITUNG
62	602320508	9	RECEPTACLE FOR TABS 0,5-1,5MM2	FLACHSTECKHUELSE
67	602203108	2	RECEPTACLE 2,8X0,3-1,5 VERZ	STECKHUELSE
72	602203408	5	RECEPTACLE 6,3X1-2,5 MESSING VERZINN	STECKHUELSE
121	602300108	25	CONTACT 1-2,5MM2	KONTAKT
125	602300308	117	CONTACT 0,5-1MM2	KONTAKT
140	602207608	3	RECEPTACLE 6,3X0,5-1,5 SN	STECKHUELSE
201	11082601	1.03	INSULATING HOSE DN4X0,5 PUR SPF	ISOLIERSCHLAUCH
202	11082602	6.72	INSULATING HOSE DN6X0,5 PUR SPF	ISOLIERSCHLAUCH
203	11082603	2.26	INSULATING HOSE DN8X0,65 PUR SPF	ISOLIERSCHLAUCH
204	11082604	0.73	INSULATING HOSE DN10X0,65 PUR SPF	ISOLIERSCHLAUCH
224	11124207	0.53	CABLE CONDUIT DN20X0,6 PUR SPF	KABELSCHLAUCH
225	11124208	0.43	CABLE CONDUIT DN25X0,6 PUR SPF	KABELSCHLAUCH
227	11124210	0.88	CABLE CONDUIT DN35X0,6 PUR SPF	KABELSCHLAUCH
261	12104809	20	CABLE TIE 3,6X142-SCHWARZ PA66 SPF	KABELBINDER
305	10870540	152.56	ELECTR.CABLE 1,0	KFZ-LEITUNG
309	10870542	18.4	ELECTR.CABLE 2,5	KFZ-LEITUNG
345	10870539	8.55	ELECTR.CABLE 0,75	KFZ-LEITUNG
500	923512208	28	CABLE MARKER	KABELMARKER
501	602300208	6	PLUG SHELL 18-POL	STECKERGEHAEUSE
502	10099864	3	HOUSING 18-POL	GEHAEUSE
503	602338208	3	SECURING PIN FOR JPT PLUG	SICHERUNGSSTIFT
504	11118242	1	BUSHING HOUSING 1-POL	BUCHSENGEHAEUSE
505	602331308	2	HOUSING 4-POL	GEHAEUSE
506	602209708	2	ATTACHABLE SLEEVE HOUSING 2-POL	STECKHUELSENGEHAEUSE
507	5603876	1	LINE CONNECTOR	LEITUNGSVERBINDER
508	602337008	2	CONNECTOR PLUG A AX	ANSCHLUSSSTECKER
509	602325508	1	HOUSING 6-POL	GEHAEUSE
510	602331808	2	PLUG SHELL 2-POLE 9,5A	STECKERGEHAEUSE
511	602335908	1	PLUG SHELL 4-POL	STECKERGEHAEUSE
512	617000608	1	FERRITE KLAPPBAR	FERRIT
611	602332108	4	SLEEVE CONTACT 0,3-0,89MM2	BUCHSENKONTAKT
689	10335819	4	PIN CONTACT 0,2-0,5MM2	STIFTKONTAKT
690	10335820	6	SLEEVE CONTACT 0,2-0,5MM2	BUCHSENKONTAKT
703	602225914	2	RECEPTACLE 4,8X1,5	STECKHUELSE
708	10473048	3	CABLE SLEEVE 2,4-3,0/2,4/0,6 SILIKON	KABELTUELLE
758	11080881	3	RECEPTACLE 6,3X0,5-1,0 VERZINNT	STECKHUELSE
996	965622108	8	LETTERING WIRE	BESCHRIFTUNG ADER
998	965622208	1	LETTERING WIRING HARNESS	BESCHRIFTUNG KABELBAUM

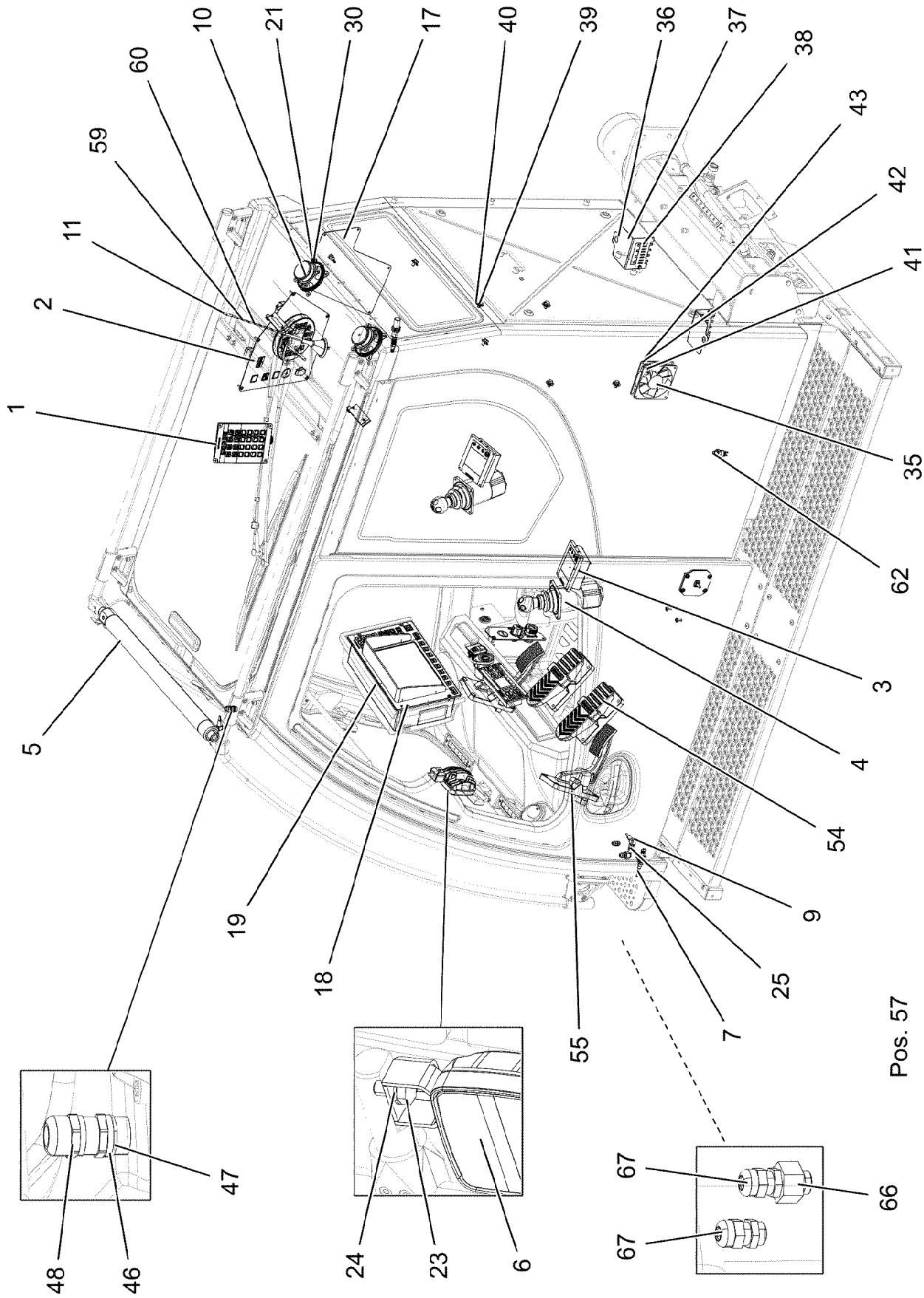
10
21
30
17
40
39
36
37
38
60
59
11
2
1
43
42
41
35
62
3
4
54
5
19
18
9
25
7
55
Pos. 57
47
48
46
24
23
6
67
67
66

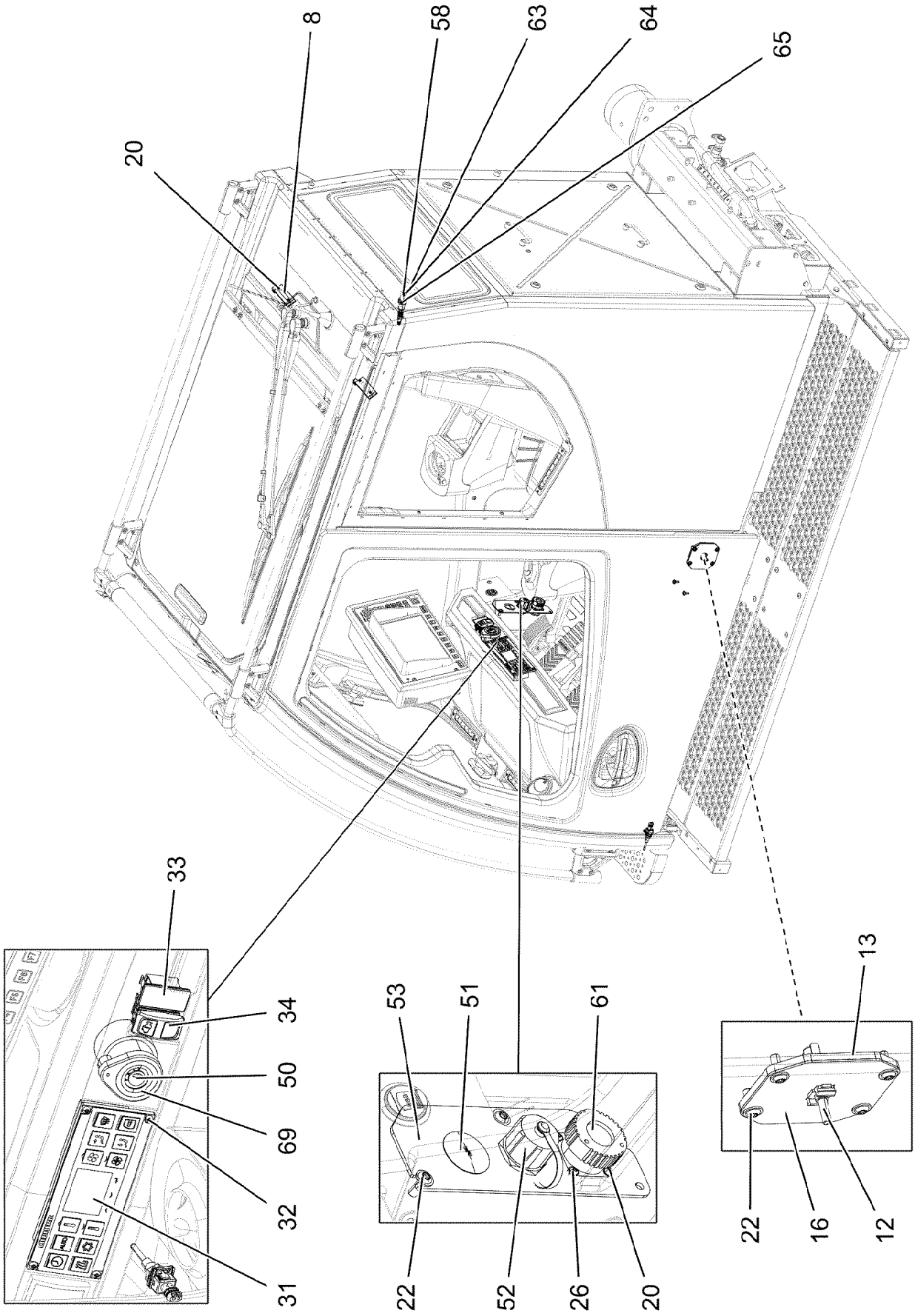
8
58
63
64
65
20
33
34
50
69
32
31
53
51
61
22
52
26
20
13
22
16
12

Pos.	Item	Quantity	Description	Bezeichnung
1	96030724	1	INSTRUMENT CLUSTER ELECTRICS LSB-BK ⇨ ❑ 433	ELEKTRIK ARMATURENKONSOL
2	96022872	1	CONTROL PANEL ROOF ⇨ ❑ 435	ARMATURENBRETT DACH
3	96052297	2	KEYBOARD UNIT LSB-TE PROG.	TASTATUREINHEIT
(80)	12101942	1	KEYBOARD UNIT LSB-TE-B SPF	TASTATUREINHEIT
(980)	10288121	1	NAME PLATE 70X40 POLYESTER SPF	BEZEICHNUNGSSCHILD
4	10343693	2	JOYSTICK LSB-AMS SPF ⇨ ❑ 436	MEISTERSCHALTER
5	10340105	1	WARNING LIGHT 14W 13-36V SPF ⇨ ❑ 437	WARNLEUCHTE
6	10877828	1	WORK LIGHT 20W 12-24V ALUMINIUM	ARBEITSSCHEINWERFER
7	10424276	1	TEMPERATURE SENSOR -30°C BIS +130°C	TEMPERATURFUEHLER
8	10342854	2	INTERNAL LIGHT 6W 24V WEISS SPF	INNENLEUCHTE
9	10449516	3	PRECISION RESISTOR -40/+125°C SPF	MESSWIDERSTAND
10	10489011	2	LOUDSPEAKER 2,77V 86DBA	LAUTSPRECHER
11	12107816	1	ANTENNA AKTIV	ANTENNE
(1)	12108590	1	ANTENNA ROD AKTIV	ANTENNENSTAB
12	606020708	1	DOOR CONTACT SWITCH	TUERKONTAKTSCHALTER
13	978172508	1	SEAL 90X97X5 POLYALEFIN	DICHTUNG
16	976167908	1	PLATE 1.5X90X96 DC01 RAL 9005,M,GT SPF	BLECH
17	965417108	1	PLATE WELDED RAL 9005,M,GT SPF	BLECH SCHWK.
18	10875474	18	BUTTON HEAD SCREW ISO 7380-2 M5X16 0	HALBRUNDKOPFSCHRAUBE
19	96033140	1	LICCON CONSOLE LSB-BSE LCD5C-A PROG	LICCON MONITOR LSB-BSE
(80)	10886525	1	LICCON CONSOLE LCD5C-A	LICCON MONITOR LCD5C-A
(980)	10288121	1	NAME PLATE 70X40 POLYESTER SPF	BEZEICHNUNGSSCHILD
20	10875482	8	BUTTON HEAD SCREW ISO 7380-2 M3X10 0	HALBRUNDKOPFSCHRAUBE
21	10875483	8	BUTTON HEAD SCREW ISO 7380-2 M5X10 0	HALBRUNDKOPFSCHRAUBE
22	10875468	7	BUTTON HEAD SCREW AEHNL.ISO 7380-2	HALBRUNDKOPFSCHRAUBE
23	10197730	1	HEX SCREW ISO 4017 M10X20 8.8 ZNNI-480	SECHSKANTSCHRAUBE
24	10011658	1	WASHER A 10X20X2 200HV-St MAN183-B1	SCHEIBE
25	10875633	1	HEX NUT ISO 8675 M12X1,0 04 480H SPF	SECHSKANTMUTTER
26	10876399	4	HEX NUT DIN 985 M3 8 480H SPF	SECHSKANTMUTTER
30	10197808	8	WASHER ISO 7089 5 200HV ZNNI-480H	SCHEIBE
31	10874785	1	KEYBOARD UNIT SPF	TASTATUREINHEIT
32	10875017	4	BUTTON HEAD SCREW ISO 7380-1 M4X10 0	HALBRUNDKOPFSCHRAUBE
33	11822051	1	BLANK COVER	BLINDABDECKUNG
34	10876030	1	PILOT LAMP 24V	MELDELEUCHTE
35	963398008	1	PREMOUNT.AXIAL FLOW FAN UPPER ⇨ ❑ 438	AXIALLUEFTER VORM.OBEN
36	966980708	2	SCREENING	ABSCHIRMUNG
(1)	97013718	1	PLATE 1.5X110X178 DC01 FE//ZNNI8//CN//T	BLECH
(2)	10875645	4	WASHER ISO 7089 4 200HV 480H SPF	SCHEIBE
(3)	11690047	2	HEX SCREW ISO 4017 M4X10 8.8 480H SPF	SECHSKANTSCHRAUBE
37	10424210	2	CLAMP EMVFSK 1 FEDERSTAHL	KLAMMER
38	602042808	2	CLAMP EMVSK 12	KLAMMER
39	11656991	6	HEX SCREW EN 1665 M8X12 8.8 480H SPF	SECHSKANTSCHRAUBE
40	11140469	6	WASHER ISO 7093-1 8 200HV 480H SPF	SCHEIBE
41	408401901	4	PAN-HEAD SCREW ISO 7045 M4X40 4.8 A2	FLACHKOPFSCHRAUBE
42	10875645	4	WASHER ISO 7089 4 200HV 480H SPF	SCHEIBE
43	425220708	4	SERRATED LOCK WASHER DIN 6798 J 4.3	FAECHERSCHEIBE
46	502923708	2	COMPRESSION RING	DRUCKRING
47	726411508	2	O-RING 14X2 NBR70	O-RING
48	10428532	2	CABLE GLAND M16X1,5X4-11 MS VERNICK	KABELVERSCHRAUBUNG
50	10335557	1	IGNITION STARTER SWITCH 3S SPF	ZUENDSTARTSCHALTER
51	591570908	1	COVER LID POLYSTIC27-33 ABS	ABDECKKAPPE
52	966979108	1	SOCKET ETHERNET ⇨ ❑ 439	STECKDOSE
53	97022452	1	PLATE 2.5X71X196 DC01 RAL 9005,M,GT SP	BLECH
54	10297310	2	FOOT ROCKER SPF	FUSSWIPPE

Pos.	Item	Quantity	Description	Bezeichnung
55	10343484	2	PEDAL TRANSDUCER 20° SPF	PEDALGEBER
57	11060128	2	TRANSPONDER SPF	TRANSPONDER
58	10354584	1	INDUCTIVE SENSOR BERUEHRUNGSLOS	INDUKTIVSENSOR
59	12107824	1	ANTENNA CABLE 1X0,34-5M	ANTENNENKABEL
60	12104642	1	ANTENNA CABLE 1X0,34-2M	ANTENNENKABEL
61	10331026	1	COVER	DECKEL
62	11080088	1	THERMAL SWITCH BERUEHRUNGSLOS	THERMOSCHALTER
63	591063508	1	WASHER	SCHEIBE
64	710207408	1	WASHER 20,2X25X3XA GUMMI	SCHEIBE
65	530609208	1	WASHER DIN 433 19 140HV A3C	SCHEIBE
66	97051324	1	ADAPTOR 19.0X17 S235JRC+C FE//ZNNI8//C	ADAPTER
67	602424008	2	CABLE GLAND M12X1,5X2-8 MS	KABELVERSCHRAUBUNG
69	10870472	1	ORIFICE	BLENDE

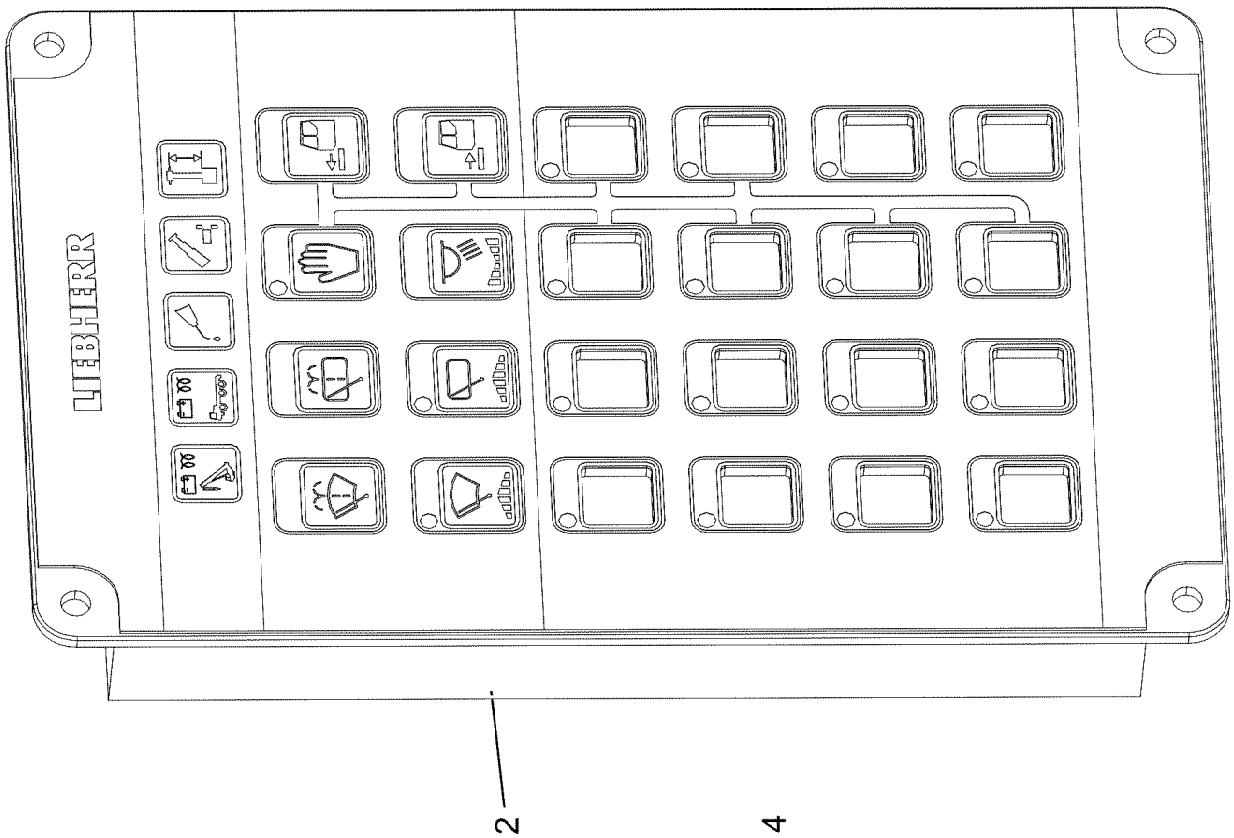
LIEBHERR
2
4

Pos.	Item	Quantity	Description	Bezeichnung
2	10816196	1	KEYBOARD UNIT SPF	TASTATUREINHEIT
4	967260908	1	EMERGENCY CUT-OFF CRANE DRIVER	NOTAUS KRANFUEHRERKABIN
(2)	606144108	1	EMERGENCY STOP BUTTON	NOT-AUS TASTE
(3)	11100197	1	TOUCH CONTACT TRANSMITTER 1OE+1S	TASTKONTAKTGEBER

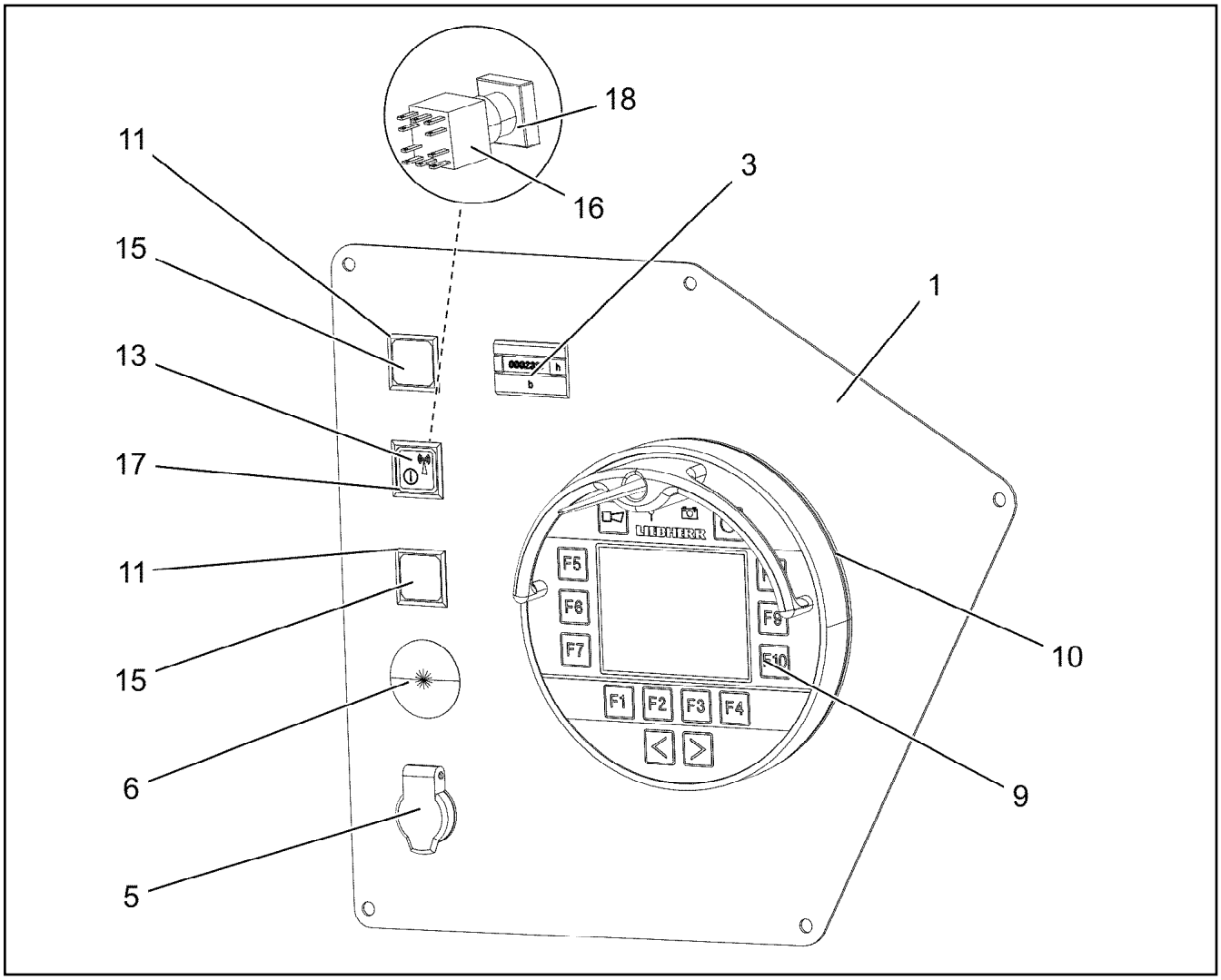

Pos.	Item	Quantity	Description	Bezeichnung
1	96022873	1	PLATE WELDED RAL 9005,M,GT SPF	BLECH SCHWK.
3	691798508	1	OPERATING HOURS COUNTER STUNDEN	BETRIEBSSTUNDENZAEHLER
5	605203908	1	BUILT-IN SOCKET 2-POL	EINBAUSTECKDOSE
6	591570908	1	COVER LID POLYSTIC27-33 ABS	ABDECKKAPPE
9	96033227	1	BTT PROGRAMMED BTTC	BTT PROGRAMMIERT
(1)	11160970	1	REMOTE CONTROL TRANSMITTER SPF	FERNSTEUERSENDER
(2)	10288121	1	NAME PLATE 70X40 POLYESTER SPF	BEZEICHNUNGSSCHILD
(3)	11007853	1	LABELS 10X90 POLYESTER	ETIKETTEN
10	10412777	1	CHARGING UNIT BTT SPF	LADEEINHEIT
11	606143508	2	INDICATOR LAMP	LEUCHTMELDER
13	607008708	1	LIGHT BULB 1,2W 30V	GLUEHLAMPE
15	606144008	2	KEYPAD BUTTON	TASTE
16	606143208	1	TOUCH CONTACT TRANSMITTER 1OE+1S	TASTKONTAKTGEBER
17	606144408	1	PUSH-BUTTON CAP FLACH KLAR	TASTERKAPPE
18	606143008	1	PUSH BUTTON	DRUCKTASTE

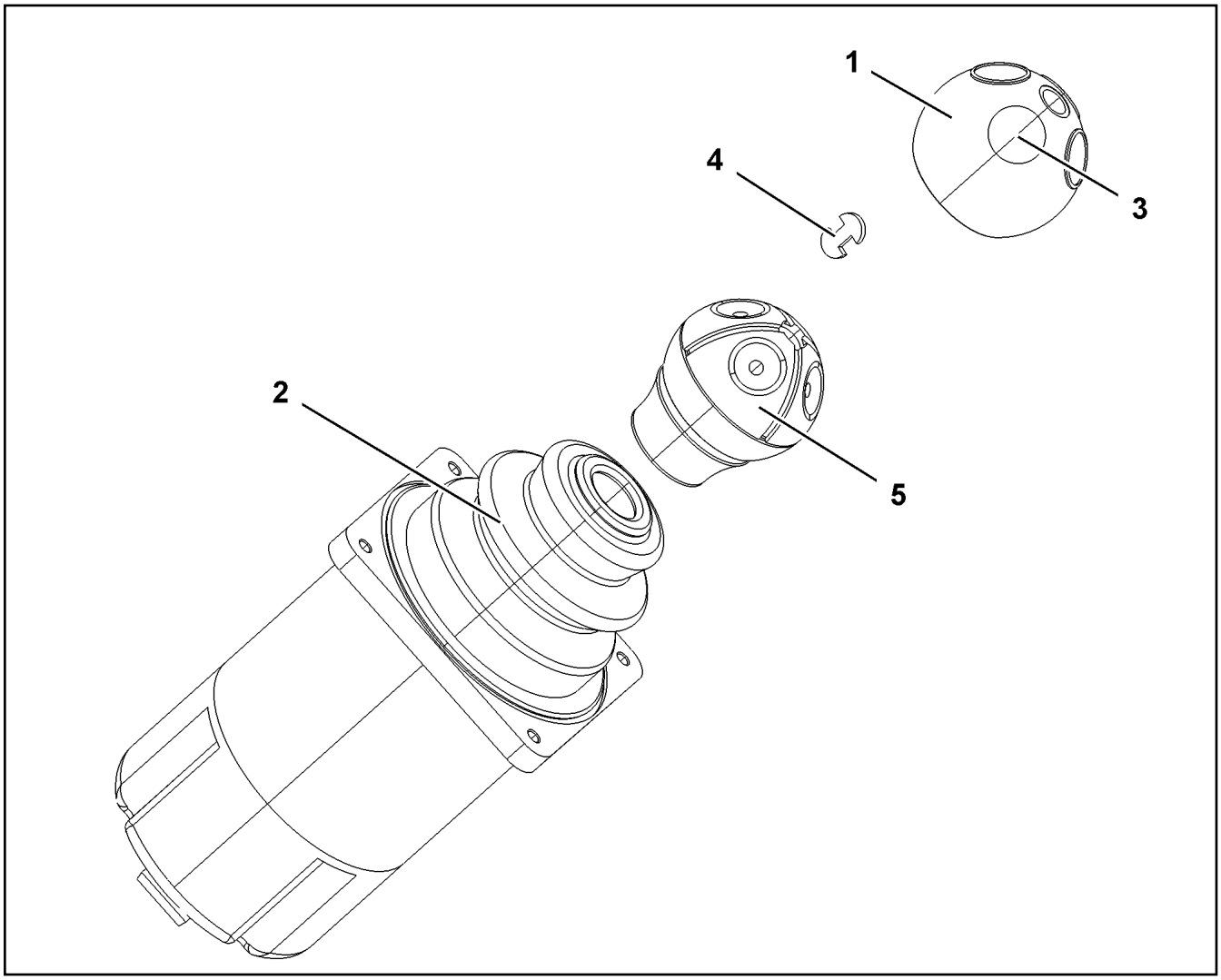

Pos.	Item	Quantity	Description	Bezeichnung
1	571824708	1	HANDLE CAP	GRIFFKAPPE
2	571912308	1	RUBBER BELLOWS	FALTENBALG
3	10335596	4	MICRO SWITCH	MIKROSCHALTER
4	10678848	2	CIRCLIP FUER GRIFFKAPPE	SICHERUNGSCLIP
5	10873517	1	SPARE PARTS SET GRIFF	ERSATZTEILSATZ

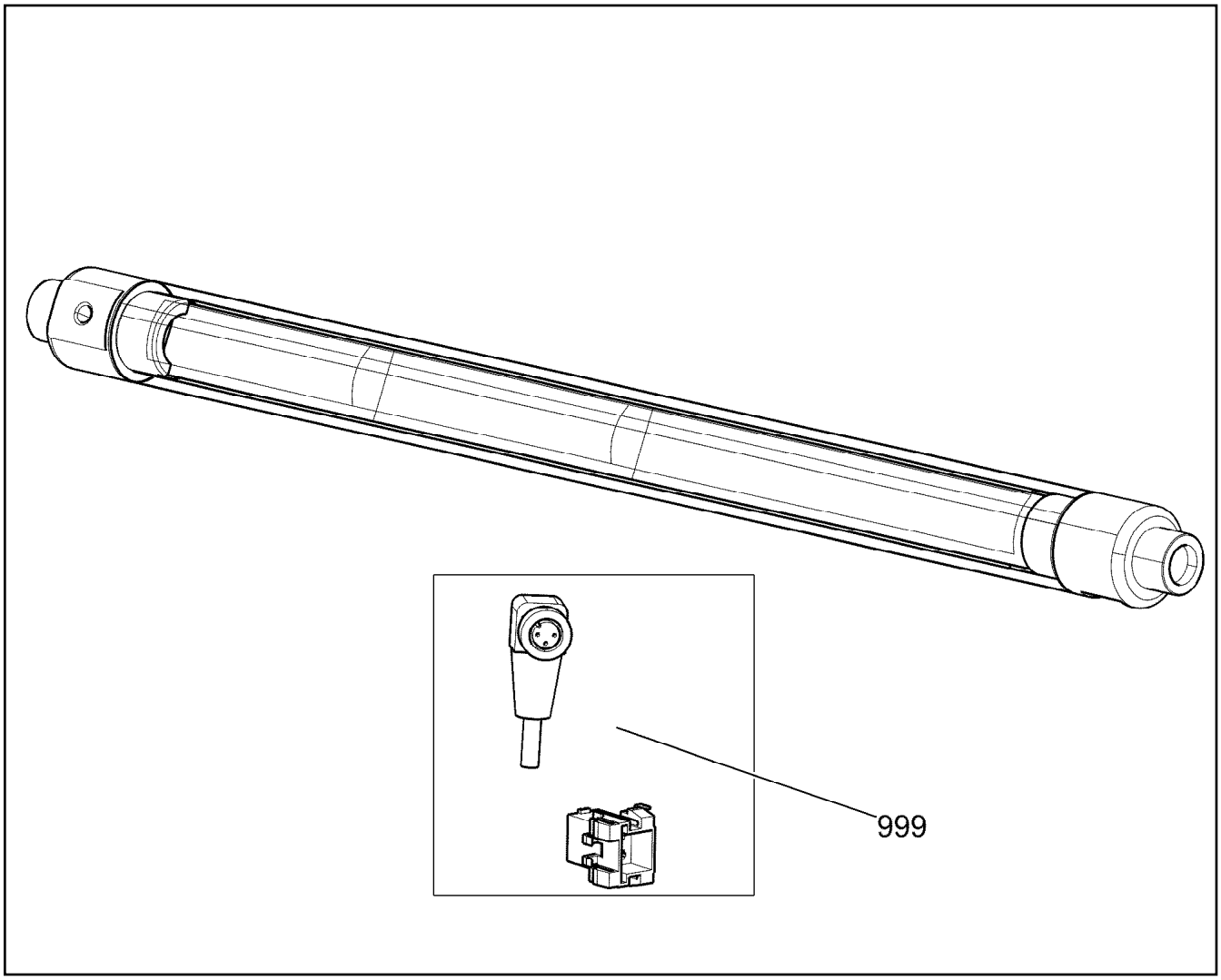

Pos.	Item	Quantity	Description	Bezeichnung
999	967363808	1	RK CABLE LOOM	RS KABELSATZ

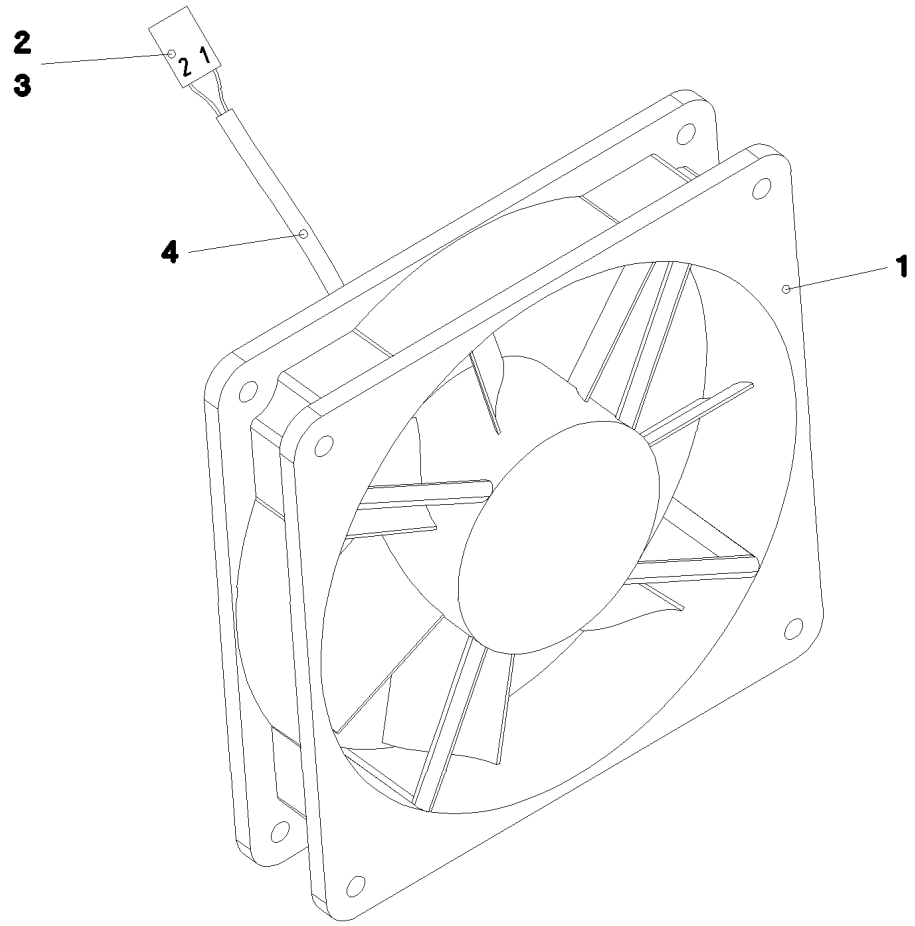

Pos.	Item	Quantity	Description	Bezeichnung
1	10222682	1	AXIAL FAN 24V	AXIALLUEFTER
2	602304808	2	FLAT PLUG	FLACHSTECKER
3	602305908	1	FLAT PLUG HOUSING FASTIN-FASTON	FLACHSTECKERGEHAEUSE
4	11082601	0.28	INSULATING HOSE DN4X0,5 PUR SPF	ISOLIERSCHLAUCH

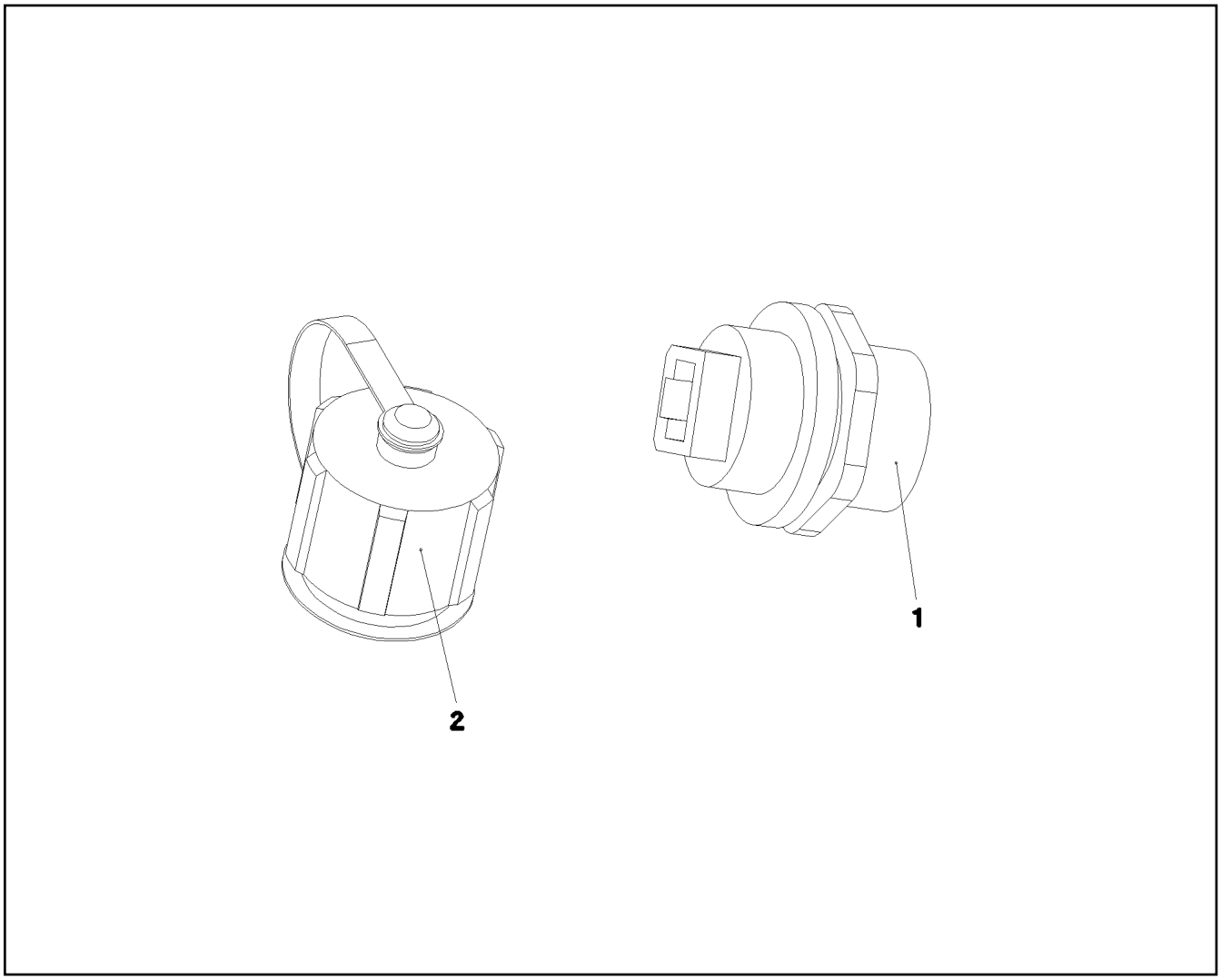

Pos.	Item	Quantity	Description	Bezeichnung
1	11008529	1	SOCKET 8-POL	STECKDOSE
2	11008530	1	PROTECTING CAP NETZW. RJ45/USB	SCHUTZKAPPE

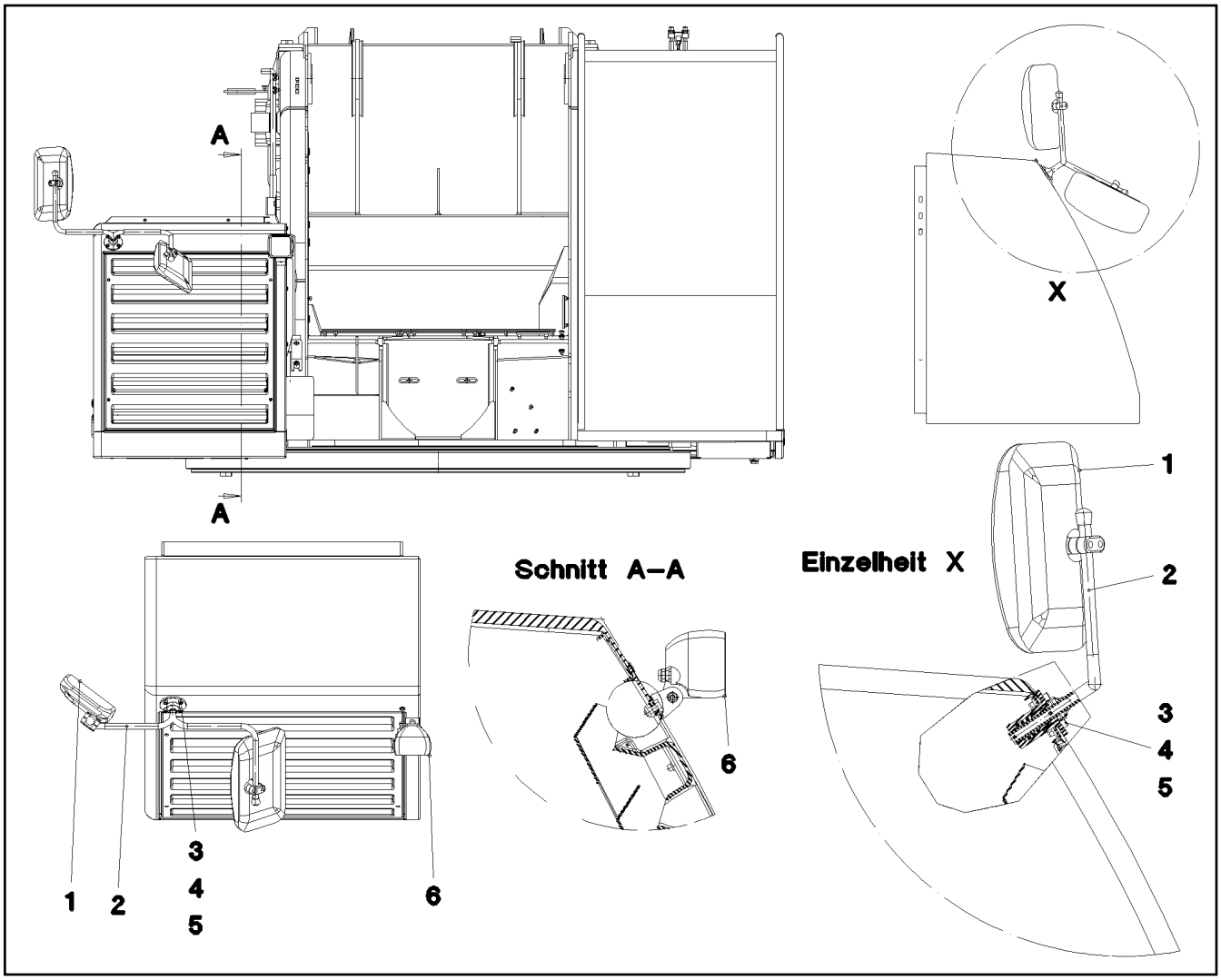

Pos.	Item	Quantity	Description	Bezeichnung
1	591070908	1	WIDE ANGLE MIRROR 316X178	WEITWINKELSPIEGEL
(1)	10675116	1	PLATE GLAS 315X178	SPIEGELGLAS
2	966707708	1	MIRROR RETAINER PRE-ASS. ⇨ ❑ 441	SPIEGELHALTER VORM.
3	10875599	4	SOCKET HEAD SCREW ISO 4762 M8X25 8.8	ZYLINDERSCHRAUBE
4	10875614	4	HEX NUT DIN 985 M8 8 480H SPF	SECHSKANTMUTTER
5	11840501	4	WASHER DIN 7349 8,4 200HV 480H SPF	SCHEIBE

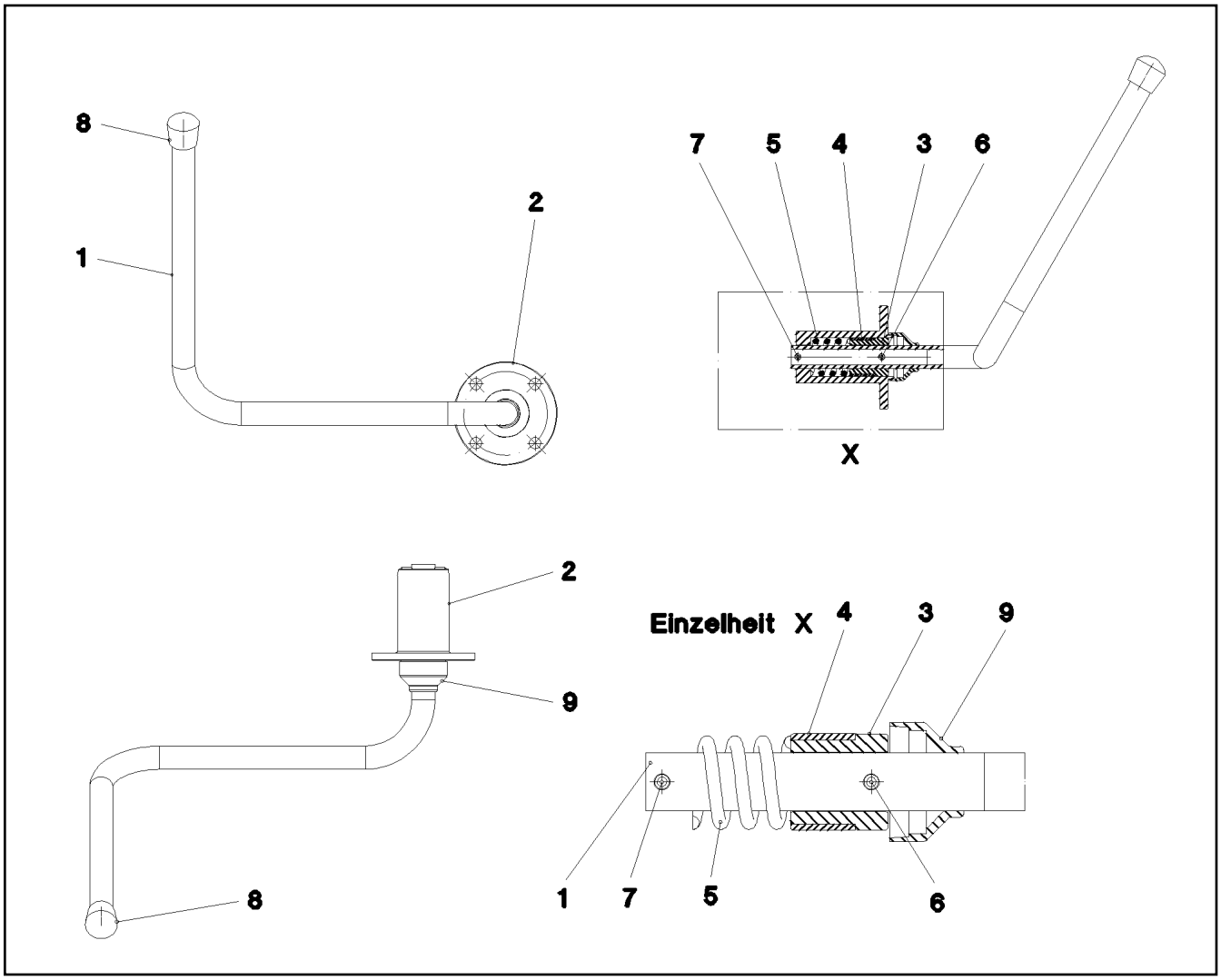

Pos.	Item	Quantity	Description	Bezeichnung
1	97008549	1	TUBE 18.0X622 X5CRNI18-10	ROHR
2	97008548	1	GUIDE 80.0X76 35NICRMOV125 SPF	FUEHRUNG
3	973998708	1	BUSHING 35.0X30 42CRMO4+QT SPF	BUCHSE
4	10215893	1	FRICTION BEARING 30X20 KUNSTSTOFF W	GLEITLAGER
5	11003426	1	COMPRESSION SPRING 4X25X41 EN 10270-	DRUCKFEDER
6	12100669	1	DOWEL PIN ISO 8752 5X28 480H SPF	SPANNSTIFT
7	12102738	1	DOWEL PIN ISO 8752 5X36 A2	SPANNSTIFT
8	591064408	1	CAP	KAPPE
9	10215892	1	COVER LID 36X22 PVC-SW	ABDECKKAPPE

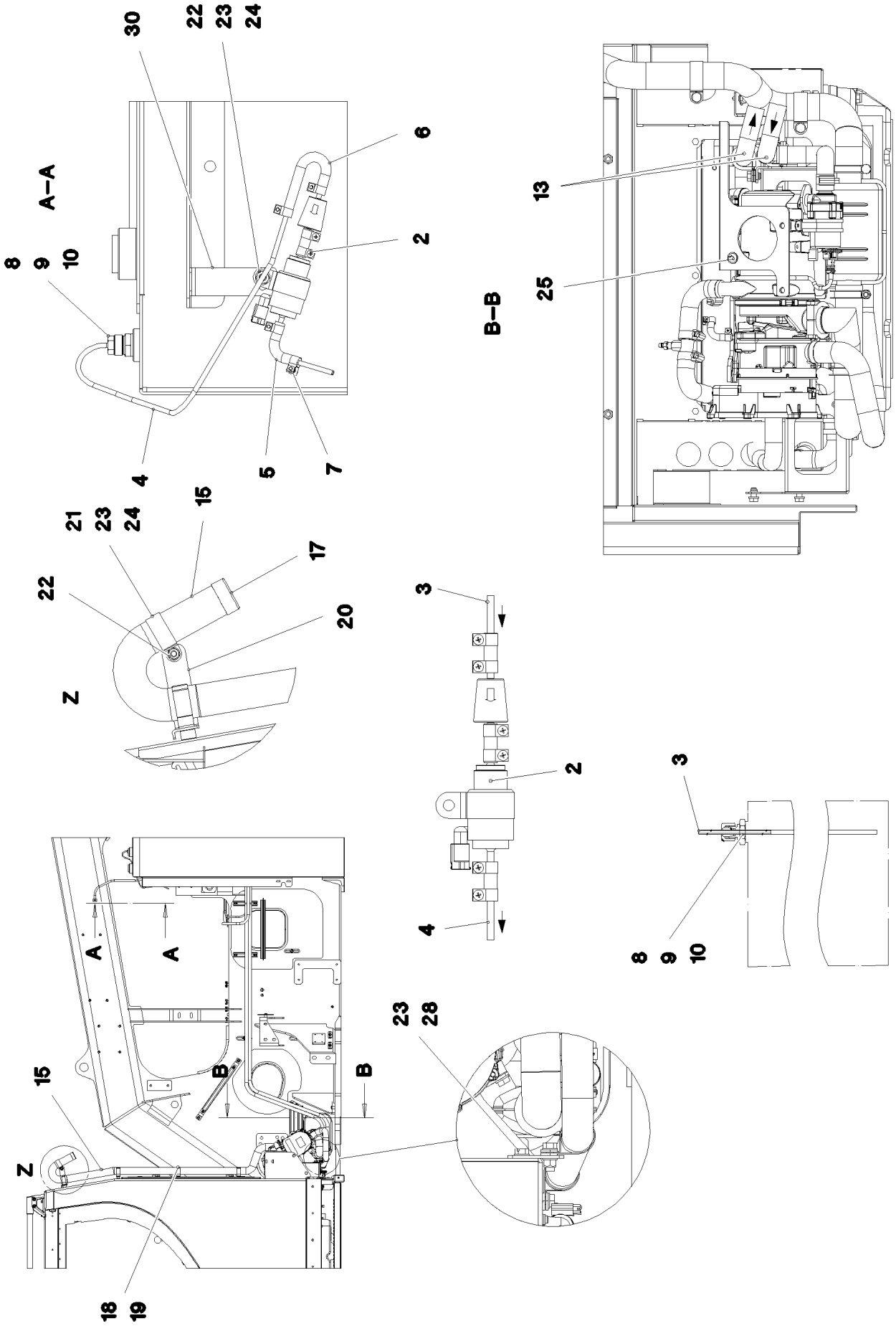
30
22
23
24
A–A
6
2
8
9
10
4
5
7
B–B
13
25
15
21
23
24
17
22
20
Z
3
2
4
3
8
9
10
A
A
B
B
15
Z
18
19
23
28

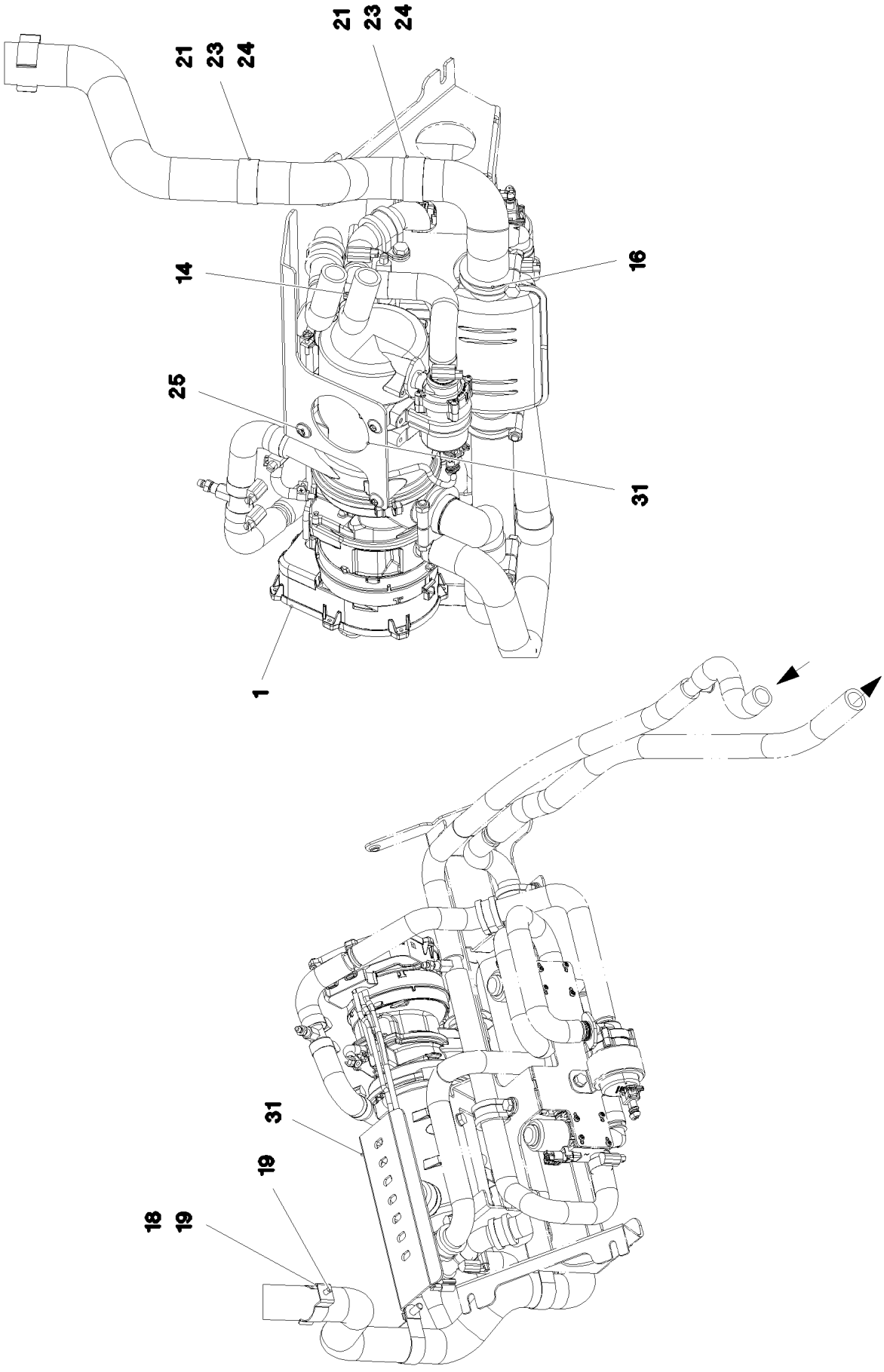
21
23
24
21
23
24
14
16
25
31
1
31
19
18
19

Pos.	Item	Quantity	Description	Bezeichnung
1	96019783	1	ADDNL.HEATING, PRE-ASSEMBLED ⇨ ❑ 445	ZUSATZHEIZUNG VORM.
2	11110051	1	DOSING PUMP DP42.4 HD ⇨ ❑ 449	DOSIERPUMPE
3	11626108	1.75	FUEL PIPING 5X1 PA12 ETFP	BRENNSTOFFLEITUNG
4	11626108	4	FUEL PIPING 5X1 PA12 ETFP	BRENNSTOFFLEITUNG
5	10815777	1	FUEL HOSE DN4,5	KRAFTSTOFFSCHLAUCH
6	11081453	1	FORM HOSE 4,5	FORMSCHLAUCH
7	553102308	5	HOSE CLAMP 10/9,5-10,5/9 EDELSTAHL	SCHLAUCHSCHELLE
8	477401408	1	BOX NUT AL8 CR6-FREI	UEBERWURFMUTTER
9	288182508	1	CLAMPING RING RD10X12 PA6G	KLEMMRING
10	471039308	1	FITTING GE 8L M18X1,5 CR6-FREI	VERSCHRAUBUNG
13	97042067	2	FORM HOSE DN20 X3.5 B SPF	FORMSCHLAUCH
14	774215008	1	HOSE CLAMP 26/20-32/12 W3	SCHLAUCHSCHELLE
15	553054108	2.25	EXHAUST PIPE 38/FLEXIBEL	ABGASROHR
16	553054208	1	TERMINAL CLIP 40,5/39-42	KLEMMSCHELLE
17	553174108	1	END CAP 42,3	ENDKAPPE
18	97003985	4	HOLDER X10CRNI18-8	HALTER
19	10813359	4	BUTTON HEAD SCREW AEHNL.ISO 7380-2	HALBRUNDKOPFSCHRAUBE
20	97003990	1	PLATE 3X145X42 DC01 FE//ZNNI8//CN//T0	BLECH
21	774221708	3	PIPE CLAMP 43/20	ROHRSCHELLE
22	10875614	2	HEX NUT DIN 985 M8 8 480H SPF	SECHSKANTMUTTER
23	12103465	7	WASHER ISO 7089 8 300HV ZNNI-480H SPF	SCHEIBE
24	10197831	4	HEX SCREW ISO 4017 M8X25 8.8 ZNNI-480	SECHSKANTSCHRAUBE
25	10875485	3	BUTTON HEAD SCREW AEHNL.ISO 7380-2	HALBRUNDKOPFSCHRAUBE
28	11651612	1	HEX SCREW ISO 4017 M8X16 8.8 480H SPF	SECHSKANTSCHRAUBE
30	970836008	1	PLATE 4X30X128 S315MC FE//ZNNI8//CN//T	BLECH
31	97057135	1	PLATE 3X212X271 DC01 FE//ZNNI8//CN//T0	BLECH

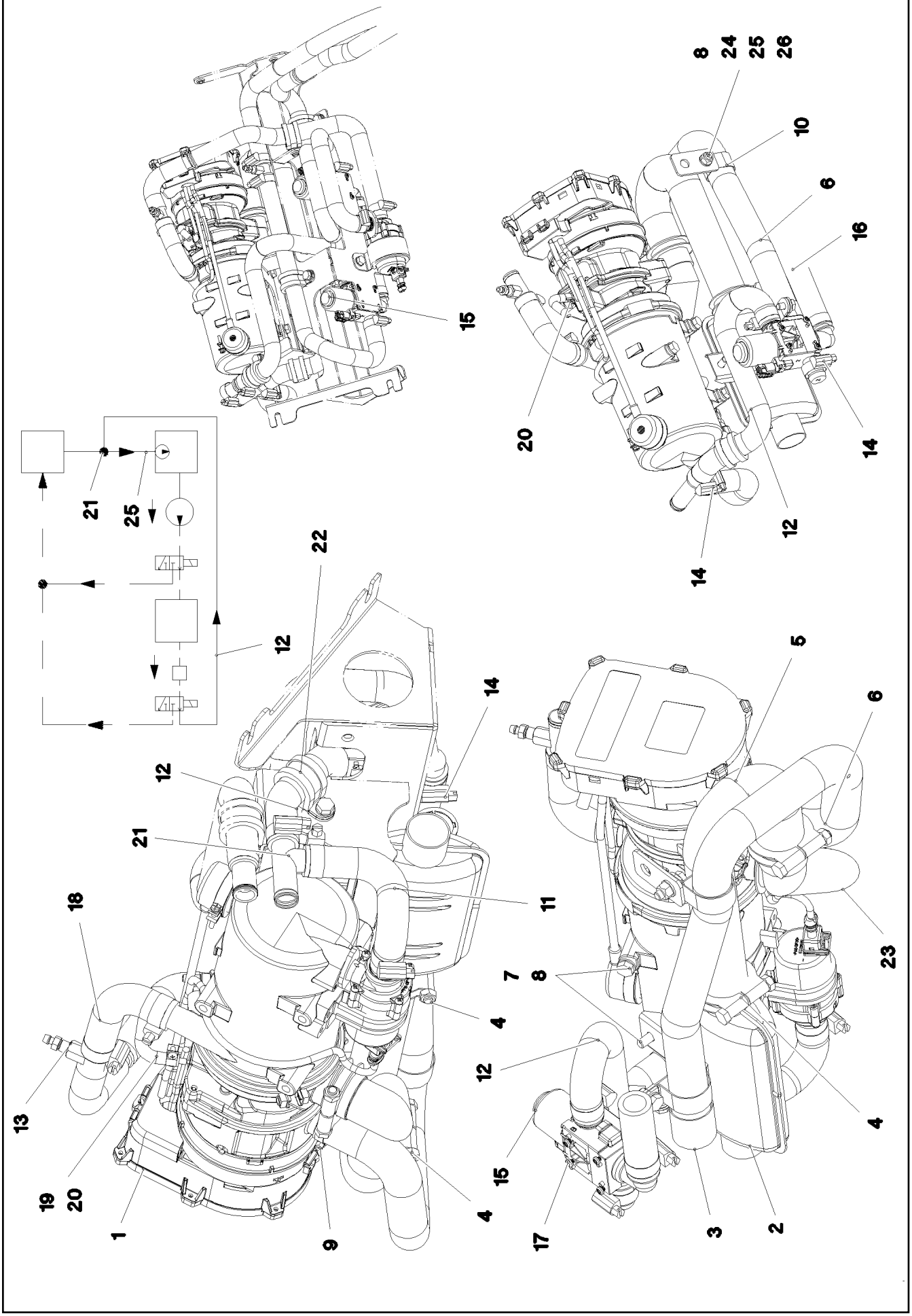

16.11.2023 094746	**etk_en_de_078966 LTR 1100**	❑ 445 (1/2)
LIEBHERR	**ADDNL.HEATING, PRE-ASSEMBLED** **ZUSATZHEIZUNG VORM.**	**96019783**

Pos.	Item	Quantity	Description	Bezeichnung
1	10876576	1	WATER HEATING SYSTEM 24V ⇨ ❑ 447	WASSERHEIZGERAET
2	553187208	1	EXHAUST MUFFLER 116/55X150	ABGASSCHALLDAEMPFER
3	553181108	1	END CAP 34	ENDKAPPE
4	553054208	3	TERMINAL CLIP 40,5/39-42	KLEMMSCHELLE
5	553054108	0.35	EXHAUST PIPE 38/FLEXIBEL	ABGASROHR
6	553159408	0.67	TUBE 30/FLEXIBEL PAK	ROHR
7	11651612	6	HEX SCREW ISO 4017 M8X16 8.8 480H SPF	SECHSKANTSCHRAUBE
8	12103465	8	WASHER ISO 7089 8 300HV ZNNI-480H SPF	SCHEIBE
9	774208508	1	HOSE CLAMP 32/25-40/12 W3	SCHLAUCHSCHELLE
10	774225008	2	PIPE CLAMP 33/20	ROHRSCHELLE
11	97046568	1	FORM HOSE DN20 X3.5 B SPF	FORMSCHLAUCH
12	97046567	1	FORM HOSE DN20 X3.5 B SPF	FORMSCHLAUCH
13	11622218	1	VENTILATION VALVE	ENTLUEFTUNGSVENTIL
14	11118077	8	HOSE CLAMP 21/16-27/12 W3	SCHLAUCHSCHELLE
15	10343003	1	SOLENOID VALVE	MAGNETVENTIL
16	11621770	0.08	COOLING WATER HOSE DN20-CONTI-KWS	KUEHLWASSERSCHLAUCH
17	10875795	4	TALLOW-DROP SCREW 4X10 10.9 P3E	LINSENKOPFSCHRAUBE
18	97042067	1	FORM HOSE DN20 X3.5 B SPF	FORMSCHLAUCH
19	10815777	1	FUEL HOSE DN4,5	KRAFTSTOFFSCHLAUCH
20	553102308	1	HOSE CLAMP 10/9,5-10,5/9 EDELSTAHL	SCHLAUCHSCHELLE
21	10872612	1	TEE 20X20 L=90	T-STUECK
22	11481080	1	CLAMP DIN 3016-1 28X20XD1 W5-CR	SCHELLE
23	97081905	1	OUTLET MANIFOLD NW=38 X5CRNI18-10	ABGASKRUEMMER
24	97095079	1	PLATE 3X30X60 S355MC RAL 7016,SDGL,G	BLECH
25	10197831	1	HEX SCREW ISO 4017 M8X25 8.8 ZNNI-480	SECHSKANTSCHRAUBE
26	10875614	1	HEX NUT DIN 985 M8 8 480H SPF	SECHSKANTMUTTER

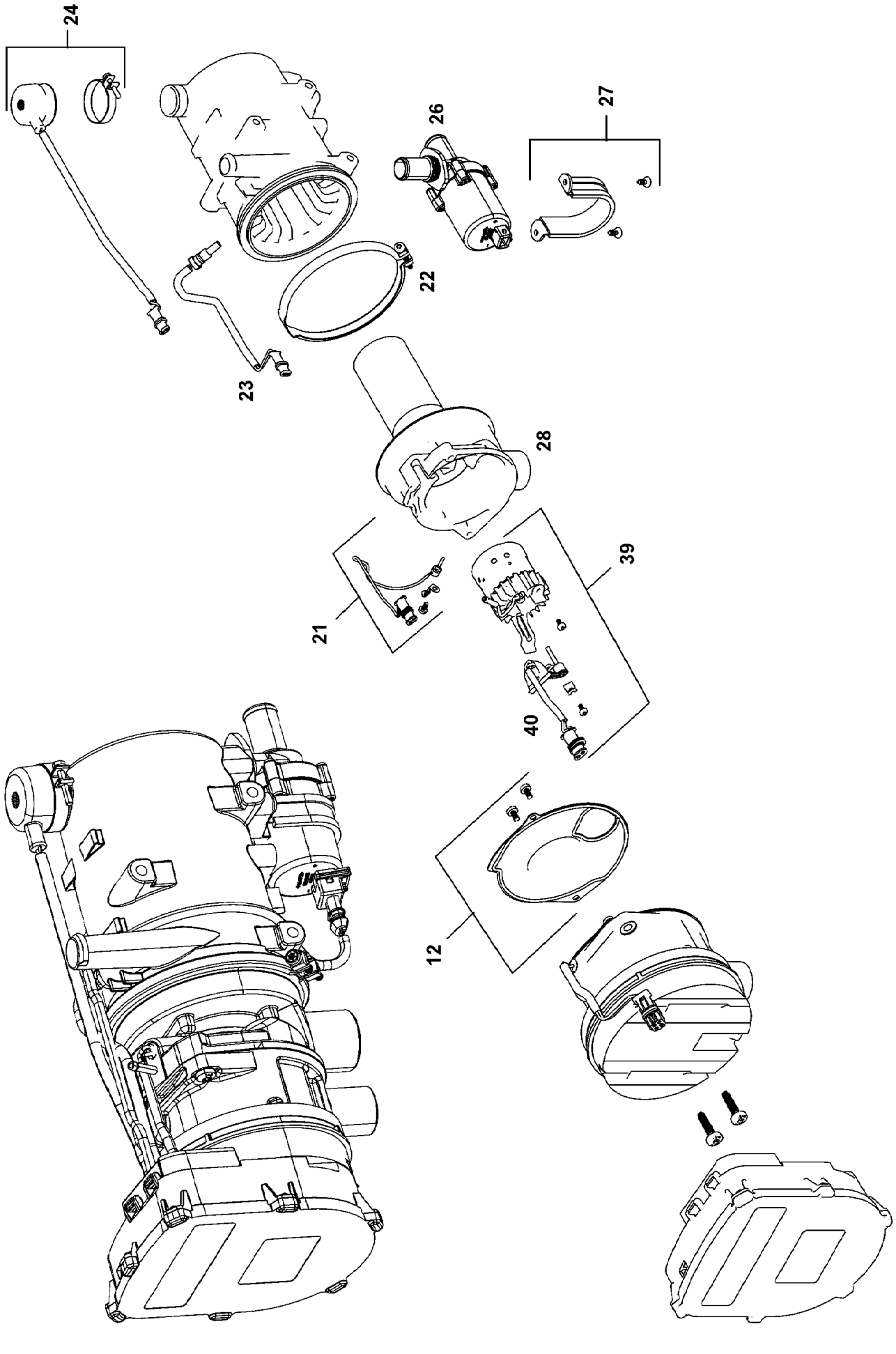

16.11.2023 099982	**etk_en_de_078966 LTR 1100**	❑ 447 (1/2)
LIEBHERR	**WATER HEATING SYSTEM** **WASSERHEIZGERAET**	**10876576**

Pos.	Item	Quantity	Description	Bezeichnung
12	11826653	1	SEAL	DICHTUNG
21	11826650	1	TEMPERATURE SENSOR	TEMPERATURSENSOR
22	12222896	1	RETAINER CLIP 129	SPANNSCHELLE
23	10290126	1	TEMPERATURE SENSOR	TEMPERATURFUEHLER
24	10290127	1	OVERHEAT PROTECTION	UEBERHITZUNGSSCHUTZ
26	11622224	1	CIRCULATING PUMP	UMWAELZPUMPE
27	11826654	1	MOUNTING PARTS	MONTAGETEILE
28	11826647	1	TORCH TIP	BRENNERKOPF
39	11826648	1	BURNER 24V	BRENNER
40	11826649	1	PENCIL-TYPE GLOW PLUG	GLUEHSTIFT
999	96004475	1	REPAIR KIT WATER HEATING DEV	RS WASSERHEIZGERAET
(3)	11826653	1	SEAL	DICHTUNG
(4)	11826650	1	TEMPERATURE SENSOR	TEMPERATURSENSOR
(5)	10290126	1	TEMPERATURE SENSOR	TEMPERATURFUEHLER
(6)	10290127	1	OVERHEAT PROTECTION	UEBERHITZUNGSSCHUTZ
(7)	11622224	1	CIRCULATING PUMP	UMWAELZPUMPE
(8)	11826647	1	TORCH TIP	BRENNERKOPF
(9)	11826648	1	BURNER 24V	BRENNER
(10)	11826649	1	PENCIL-TYPE GLOW PLUG	GLUEHSTIFT

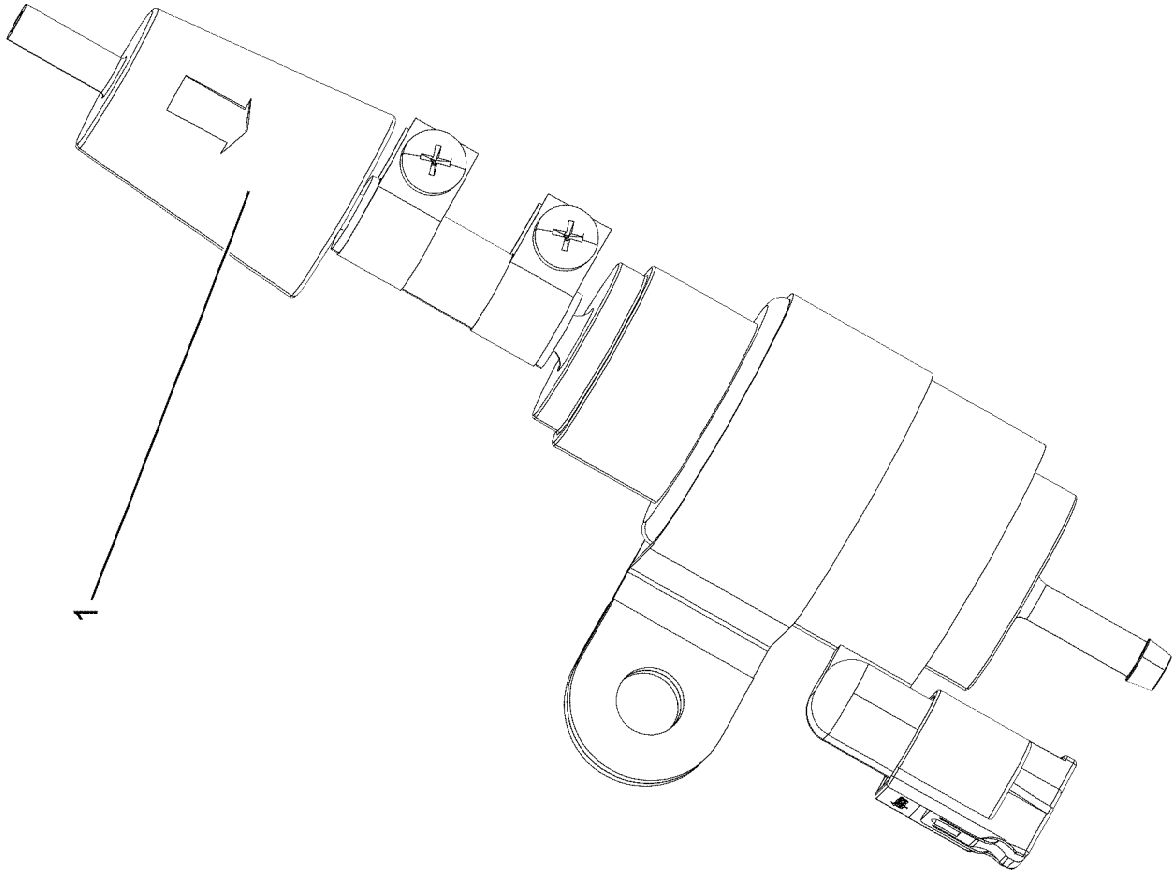
1

Pos.	Item	Quantity	Description	Bezeichnung
1	553174008	1	FUEL FILTER ⇨ ❑ 451	KRAFTSTOFFFILTER

Pos. 102

Abbildung ähnlich
Illustration similar
Illustration similaire

Pos.	Item	Quantity	Description	Bezeichnung
1000	980288008	1	DOCUMENTATION	DOKUMENTATION

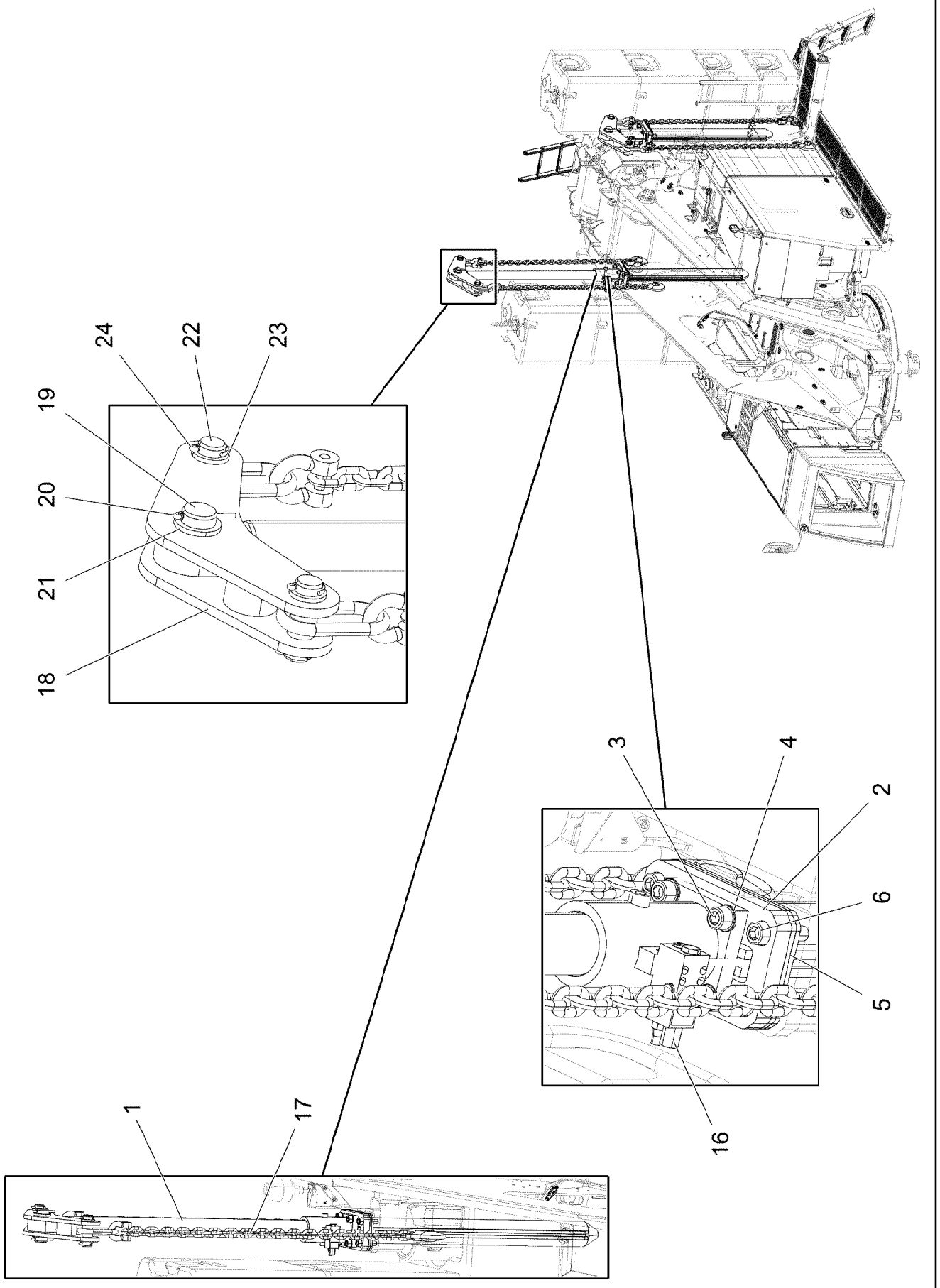
24
22
23
19
20
21
18
3
4
2
6
5
16
1
17

Pos.	Item	Quantity	Description	Bezeichnung
1	12102342	2	BALLAST EXTENSION RAM 110/100-1465 SP ⇨ ❑ 455	BALLASTIERZYLINDER
2	975761808	2	KEY PLATE 40X310X200 S960QL+Z25	KEILPLATTE
3	10878835	8	SOCKET HEAD SCREW ISO 4762 M24X60 8	ZYLINDERSCHRAUBE
4	4600146	8	WASHER EN 14399-6 24 300-370HV FLZN SP	SCHEIBE
5	97124340	4	SHEET 10X310X200 S355MC FE//ZNNI8//CN/	PLATTE
6	10001470	8	SOCKET HEAD SCREW ISO 4762 M24X90 10	ZYLINDERSCHRAUBE
16	511636314	2	LOWERING BRAKE VALVE 420BAR ZNNI	SENKBREMSVENTIL
(999)	510184001	1	SEAL KIT	DICHTUNGSSATZ
17	10326816	4	CHAIN SUSPENSION 10T-2132M DAC SPF	KETTENGEHAENGE
18	918578614	2	ROCKER 983593114 LH-GRAU	WIPPE
19	485501014	2	PIN ISO 2340-B B70X180X152 LHRD900-40	BOLZEN
20	10180377	4	SPLIT PIN ISO 1234 10X100 St 480H SPF	SPLINT
21	11964262	4	WASHER EN 28738 70 160HV-ST FLZN SPF	SCHEIBE
22	450044814	4	PIN DIN EN 22340 B55X170 42CRMO4+QT	BOLZEN
23	10179409	8	WASHER ISO 8738 55 160HV-St FLZN SPF	SCHEIBE
24	10180375	8	SPLIT PIN ISO 1234 10X80 St 480H SPF	SPLINT

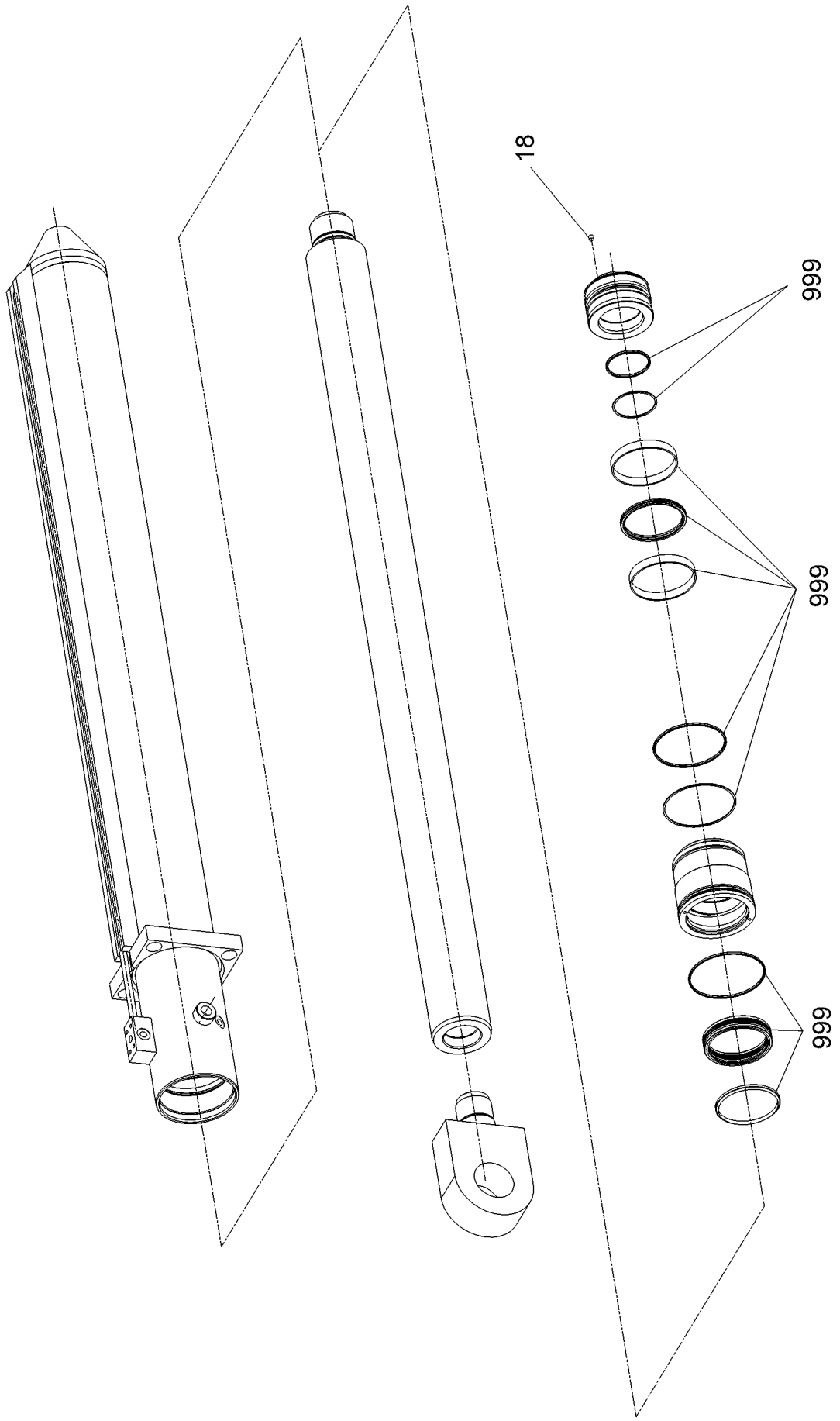
18
999
999
999

Pos.	Item	Quantity	Description	Bezeichnung
18	12100620	1	GRUB SCREW DIN 914 M8X10 45H 480H SP	GEWINDESTIFT
999	12104660	1	SEAL KIT BALLASTING CYLINDER	DS BALLASTIERZYLINDER

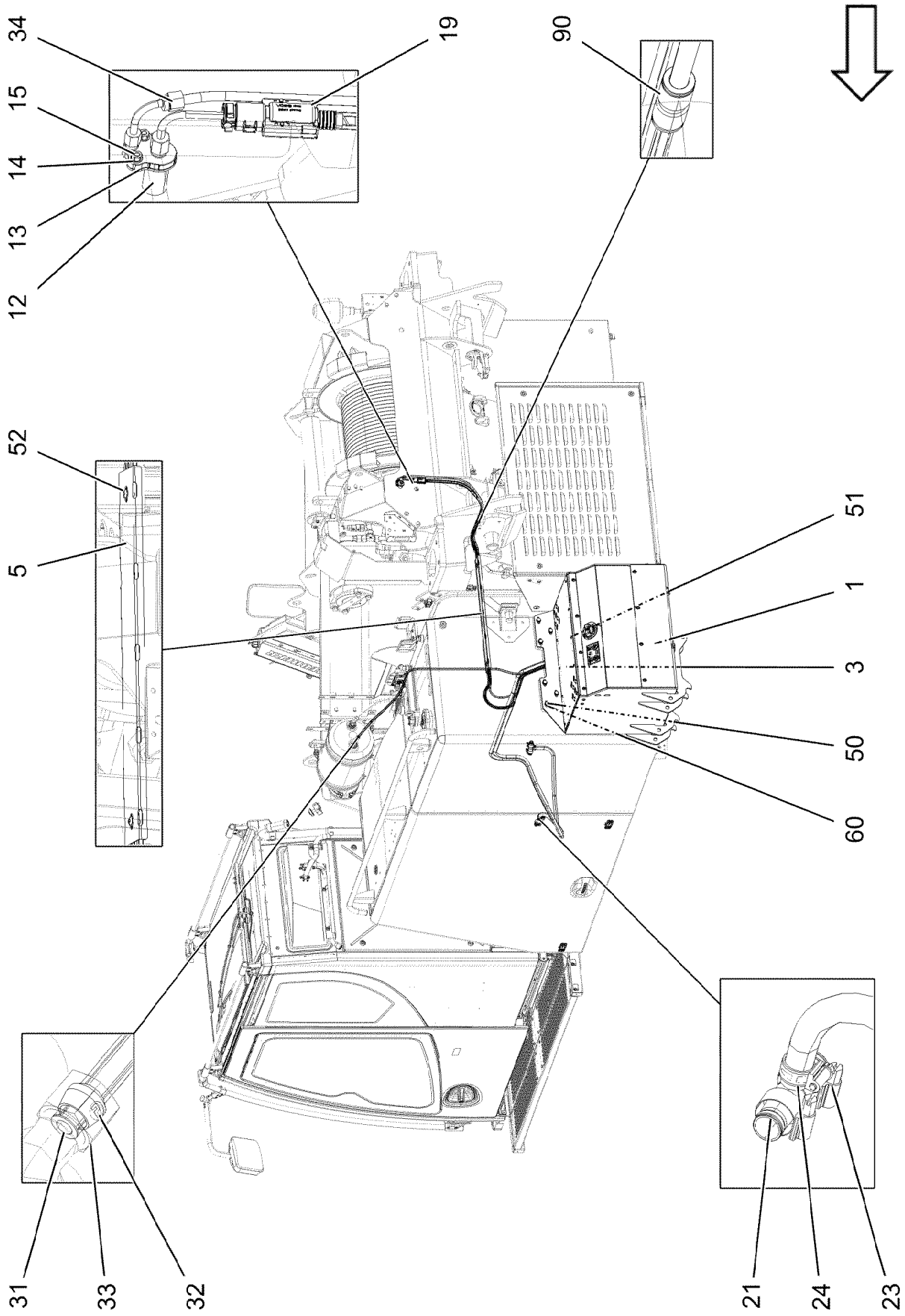
34
15
14
13
12
19
90
52
5
51
1
3
50
60
31
33
32
21
24
23

Pos.	Item	Quantity	Description	Bezeichnung
1	96074081	1	UREA TANK, PRE-MOUNTING ⇨ ❑ 459	HARNSTOFFTANK VORM.
3	97132471	1	PLATE 5X420X742 ALMG3 H114 SPF	BLECH
5	97068500	1	U-PROFILE 1.5X94X685 DC01 FE//ZNNI8//CN/	U-PROFIL
12	12445245	1	DEF INJECTOR SCR ONLY	REDUKTIONSMITTELINJEKTOR
13	10144861	1	SEAL	DICHTUNG
14	10410193	2	WASHER ISO 7089 5 -A2	SCHEIBE
15	10878117	2	HEX NUT ISO 4032 M5 TI2-WS8	SECHSKANTMUTTER
19	10144297	1	DEF PRESSURE LINE 2X4000 PA	REDUKTIONSMITTEL-DRUCKLE
21	11626529	2	TEE REDUCER 20X10 L=80	T-REDUZIERSTUECK
23	774208508	4	HOSE CLAMP 32/25-40/12 W3	SCHLAUCHSCHELLE
24	11162002	2	HOSE CLAMP DIN 3021 19/17,8-20,2/12 51Cr	SCHLAUCHSCHELLE
31	772002708	1	PLUG-IN SLEEVE E10-7	EINSTECKHUELSE
32	477100308	1	PROFILE RING PR10-S/L A3P	PROFILRING
33	477401508	1	BOX NUT DIN 3870 AL10 A3P	UEBERWURFMUTTER
34	10871759	1	PLUG-IN SLEEVE E8-6 EDELSTAHL	EINSTECKHUELSE
50	11658892	8	HEX SCREW ISO 4017 M12X25 8.8 FLZN SP	SECHSKANTSCHRAUBE
51	10412851	10	BUTTON HEAD SCREW AEHNL.ISO 7380-2	HALBRUNDKOPFSCHRAUBE
52	10875485	2	BUTTON HEAD SCREW AEHNL.ISO 7380-2	HALBRUNDKOPFSCHRAUBE
60	10870512	8	WASHER EN 14399-6 12 300HV-ST FLZN SP	SCHEIBE
90	12001446	1	PLUG-TYPE SCREW COUPLING 8	STECKVERSCHRAUBUNG

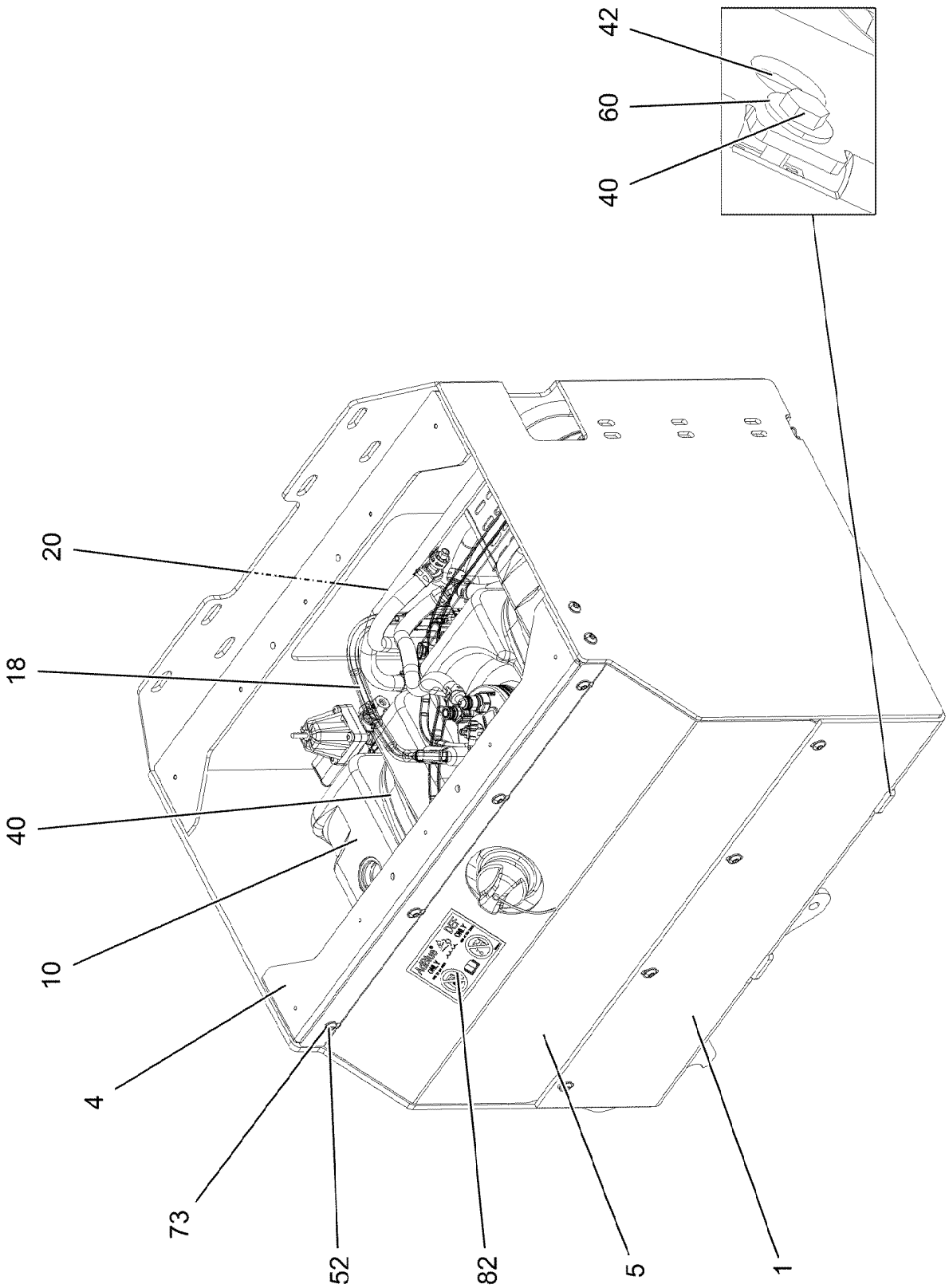
42
60
40
20
18
40
10
4
73
52
82
5
1

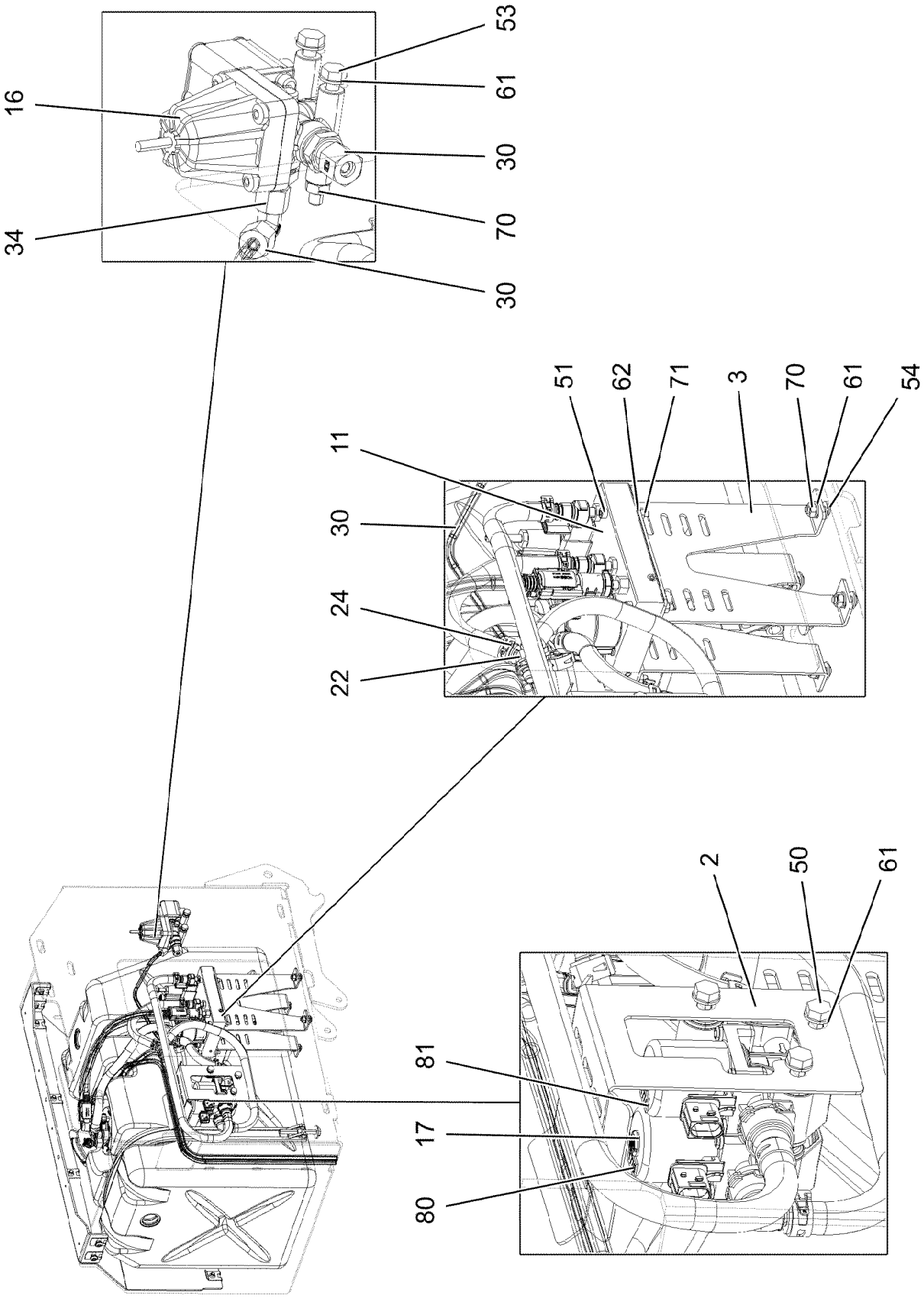

16.11.2023 176839 LIEBHERR	**etk_en_de_078966 LTR 1100** **UREA TANK, PRE-MOUNTING** **HARNSTOFFTANK VORM.**	460 (2/3) **96074081**

Pos.	Item	Quantity	Description	Bezeichnung
1	96045307	1	BRACKET WELDED CONST.	KONSOLE SCHWK.
2	97059260	1	PLATE 2X140X265 X5CRNI18-10	BLECH
3	97085847	2	PLATE 3X164X250 DC01 FE//ZNNI8//CN//T0	BLECH
4	97132325	1	PLATE 4X828X147 S315MC FE//ZNNI8//CN//T	BLECH
5	97132326	1	ORIFICE 3X741X401 ALMG3 H111 RAL 9005	BLENDE
10	96071742	1	UREA TANK 87L/78L PE SPF ⇨ ❑ 462	HARNSTOFFTANK
11	11373478	1	DEF PUMP ADBLUE STUFE 4 ⇨ ❑ 464	REDUKTIONSMITTELPUMPE
16	969904608	1	PRESSURE RELIEF VALVE PRE-ASS. ⇨ ❑ 465	DRUCKBEGRENZUNGSVENTIL
17	11082158	2	WATER VALVE NW12X2,5 NICHT LACKIERE	WASSERVENTIL
18	10144270	1	DEF SUCTION LINE 4X600 EPDM	REDUKTIONSMITTEL-SAUGLEIT
20	96074082	1	HOSE LINES STUFE 5 OW ⇨ ❑ 466	SCHLAUCHLEITUNGEN HARNST
22	10801609	2	HOSE CONNECTION SOCKET YS PA66-GF3	SCHLAUCHVERBINDUNGSSTUT
24	11162002	6	HOSE CLAMP DIN 3021 19/17,8-20,2/12 51Cr	SCHLAUCHSCHELLE
30	96074083	1	UREA SYSTEM AIR LINE STUFE 5 OW	LUFTLEITUNGEN HARNSTOFFA
(2331)	969383908	1	PLASTIC PIPE COMPLETE	KUNSTSTOFFROHR KPL.
34	247021802	1	SWIVEL ELBOW EW 8L CR6-FREI	WINKELSTUTZEN
40	10583974	2	SWIVEL BOLT CLAMPING BAND X1063X30/	GELENKBOLZENSPANNBAND
42	262001308	1.95	SEALING STRIP 40X4 NBR/SBR 65	DICHTSTREIFEN
50	12217239	3	HEX SCREW ISO 4014 M8X110 8.8 480H SP	SECHSKANTSCHRAUBE
51	10875592	4	SOCKET HEAD SCREW ISO 4762 M6X45 8.8	ZYLINDERSCHRAUBE
52	10875485	4	BUTTON HEAD SCREW AEHNL.ISO 7380-2	HALBRUNDKOPFSCHRAUBE
53	11632102	2	HEX SCREW ISO 4014 M8X80 8.8 480H SPF	SECHSKANTSCHRAUBE
54	10875471	12	BUTTON HEAD SCREW AEHNL.ISO 7380-2	HALBRUNDKOPFSCHRAUBE
60	11491889	4	WASHER ISO 7093-1 10 300HV FLZN SPF	SCHEIBE
61	12103465	9	WASHER ISO 7089 8 300HV ZNNI-480H SPF	SCHEIBE
62	10197771	4	WASHER ISO 7089 6 200HV ZNNI-480H SPF	SCHEIBE
70	11693875	9	HEX NUT ISO 4032 M8 8 480H SPF	SECHSKANTMUTTER
71	10197764	4	HEX NUT ISO 4032 M6 10 ZNNI-480H SPF	SECHSKANTMUTTER
73	12100332	12	SHEET METAL NUT M8 480H SPF	BLECHMUTTER
80	97064219	1	SIGN 20X10 KLEBEFOLIE SPF	SCHILD
81	97064220	1	SIGN 20X10 KLEBEFOLIE SPF	SCHILD
82	97037383	1	SIGN 120X80 KLEBEFOLIE SPF	SCHILD

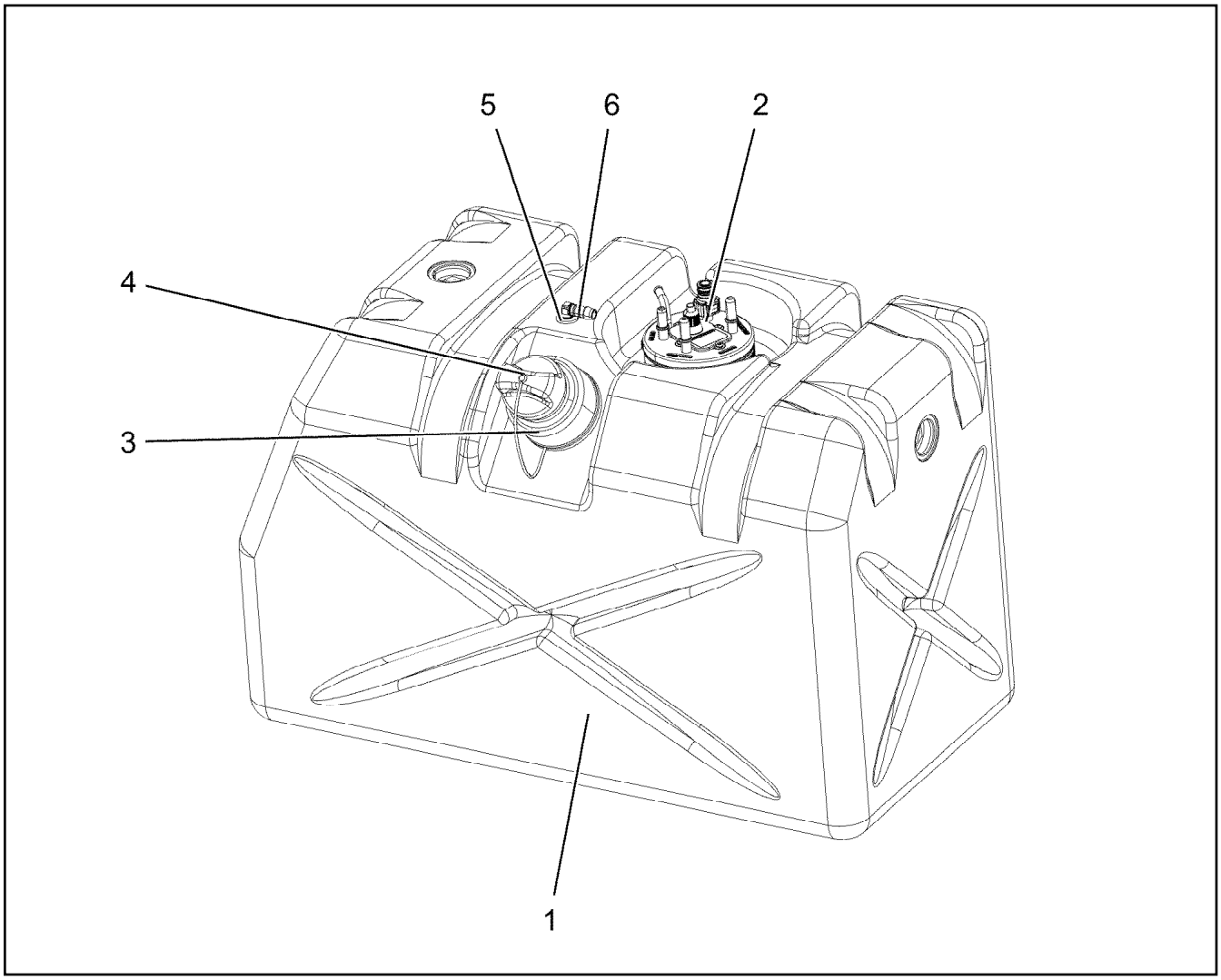

Pos.	Item	Quantity	Description	Bezeichnung
1	12108844	1	UREA CONTAINER 87,4L/78L PE SPF	HARNSTOFFBEHAELTER
2	13475475	1	SUCTION MODUL L=405 24V NICHT LACKIE ⇨ ❑ 463	ENTNAHMEMODUL
3	12211232	1	SCREW SOCKET	SCHRAUBSTUTZEN
(1)	12211223	1	FILTER	FILTER
4	10870226	1	LOCKABLE TANK CAP 40	TANKVERSCHLUSS
5	10873980	1	RUBBER GASKET 16X10,9 NBR SH60	GUMMIDICHTUNG
6	10873979	1	SWIVEL ELBOW 90,H33,5 POM	WINKELSTUTZEN

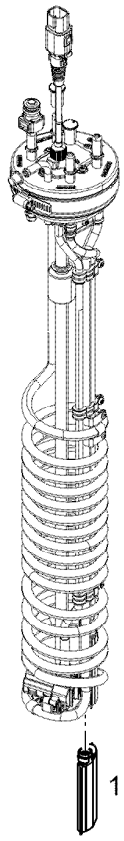

Pos.	Item	Quantity	Description	Bezeichnung
1	13562648	1	STRAINER FILTER	SIEBFILTER

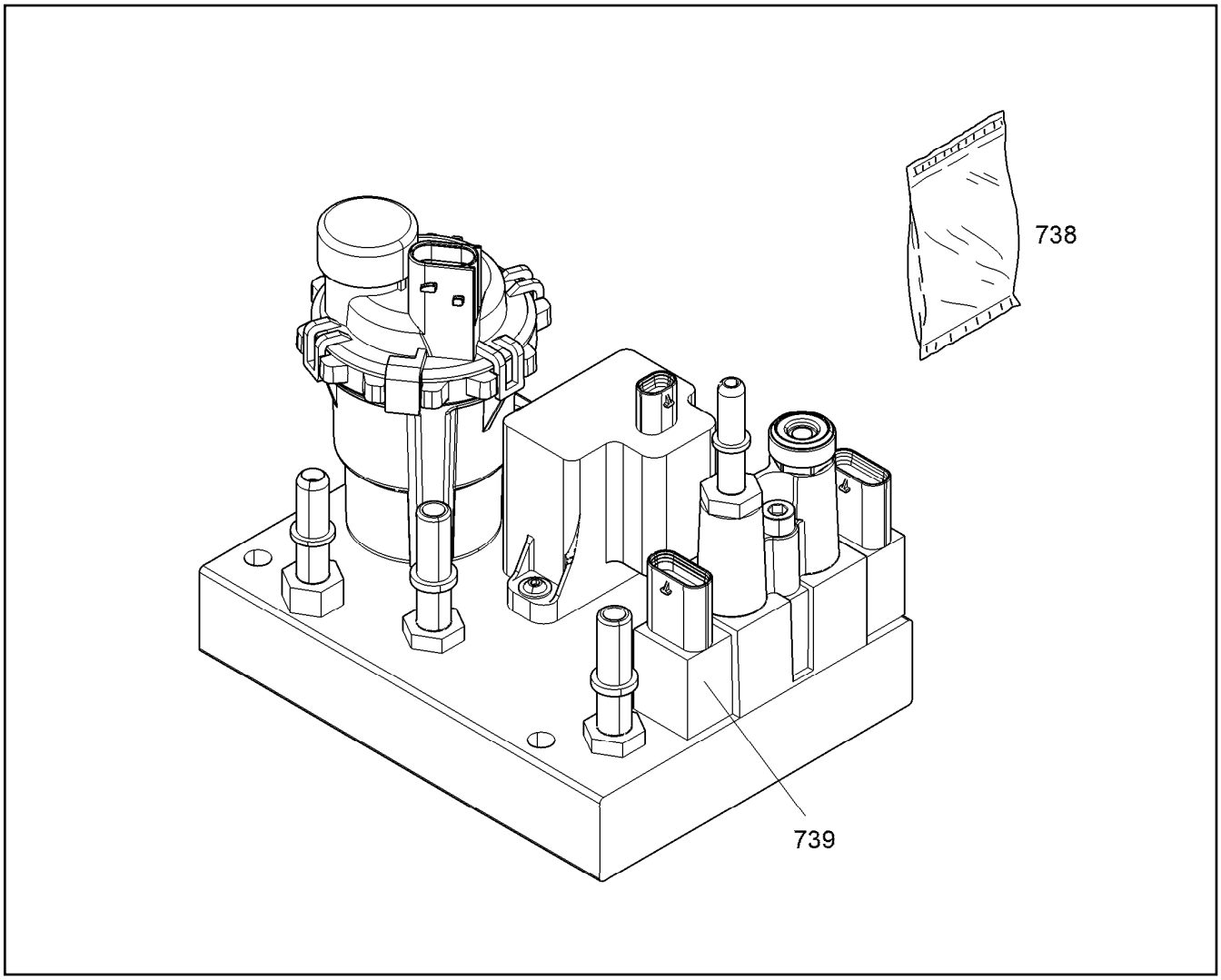

Pos.	Item	Quantity	Description	Bezeichnung
738	12466377	1	PLUGS SET NICHT LACKIEREN	STOPFENSATZ
739	12414685	1	PRESSURE/TEMPERATURE SENSOR NICH	DRUCK-/TEMPERATUR SENSO

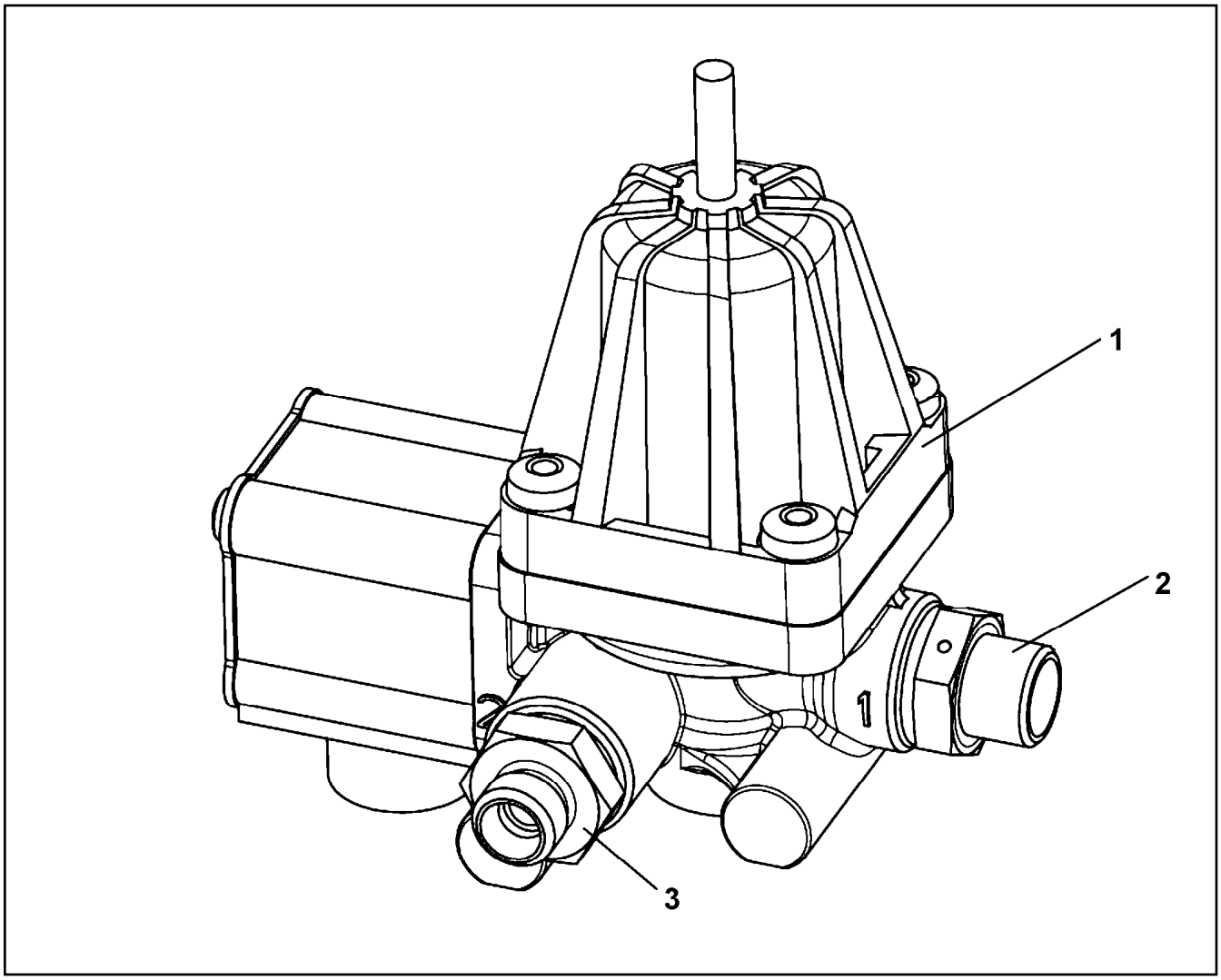

Pos.	Item	Quantity	Description	Bezeichnung
1	10872307	1	PRESSURE LIMITING VALVE 13BAR M16X1,	DRUCKBEGRENZUNGSVENTIL
2	7021521	1	FITTING GE 10L M16X1,5 CR6-FREI	VERSCHRAUBUNG
3	10872598	1	FITTING GEO 8L M16X1,5 CR6-FREI	VERSCHRAUBUNG

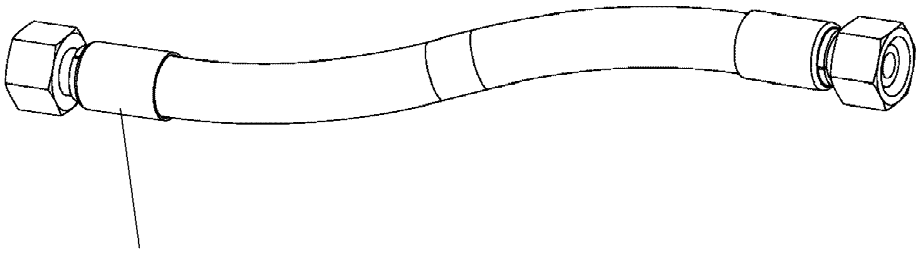

Schlauchnummer
Hose number
Numéro de flexible
Número de flexible
Номера шланга

Die Schlauchnummern auf den Schläuchen entsprechen den Positionen in der Schlauchliste.

The hose numbers from the hoses are in accordance with the items in the hose list.

Les numéros indiqués sur les flexibles correspondent aux repères de la nomenclature des flexibles.

Los números indicados en los flexibles corresponden a las posiciones de la lista de flexibles.

Нанесенные на шлангах номера соответствуют позициям в перечне.

Pos.	Item	Quantity	Description	Bezeichnung
2310	969450308	1	HOSE CPL. CONTI-KWS 10X4000	SCHLAUCH KPL.
2316	96014042	1	HOSE CPL. CONTI-KWS 10X3600	SCHLAUCH KPL.
2321	969384108	1	HOSE CPL. CONTI-KWS 10X350	SCHLAUCH KPL.
2322	969456008	2	HOSE CPL. CONTI-KWS 10X150	SCHLAUCH KPL.
2323	96016097	1	HOSE CPL. CONTI-KWS 10X780	SCHLAUCH KPL.
2324	969572308	1	HOSE CPL. CONTI-KWS 10X600	SCHLAUCH KPL.
2325	969962808	1	HOSE CPL. CONTI-KWS 10X340	SCHLAUCH KPL.
2333	96013921	1	HOSE CPL. KUNSTSTOFF 8X800	SCHLAUCH KPL.
2334	96014315	1	HOSE CPL. S45 10X800	SCHLAUCH KPL.

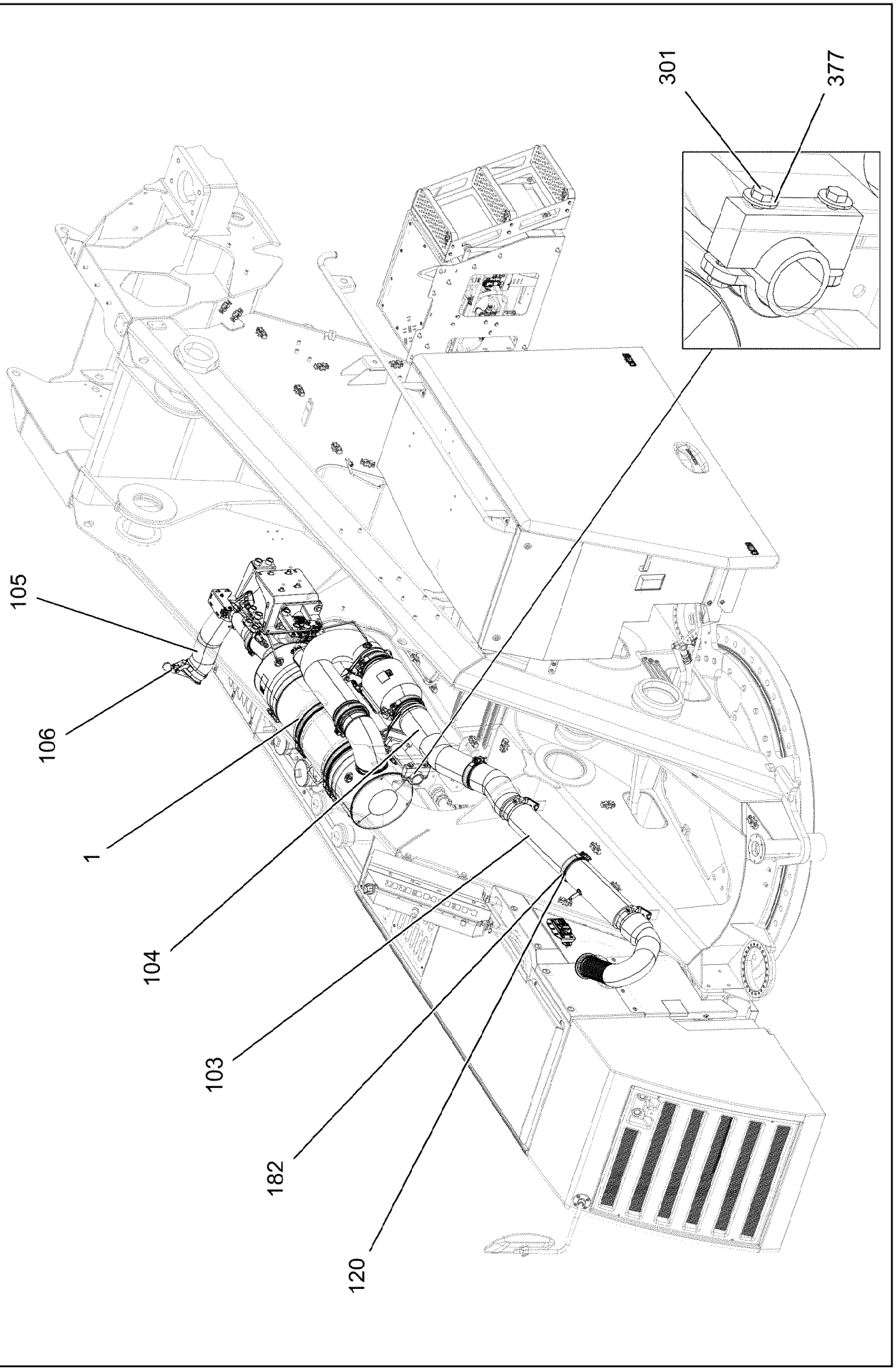
301
377
105
106
1
104
103
182
120

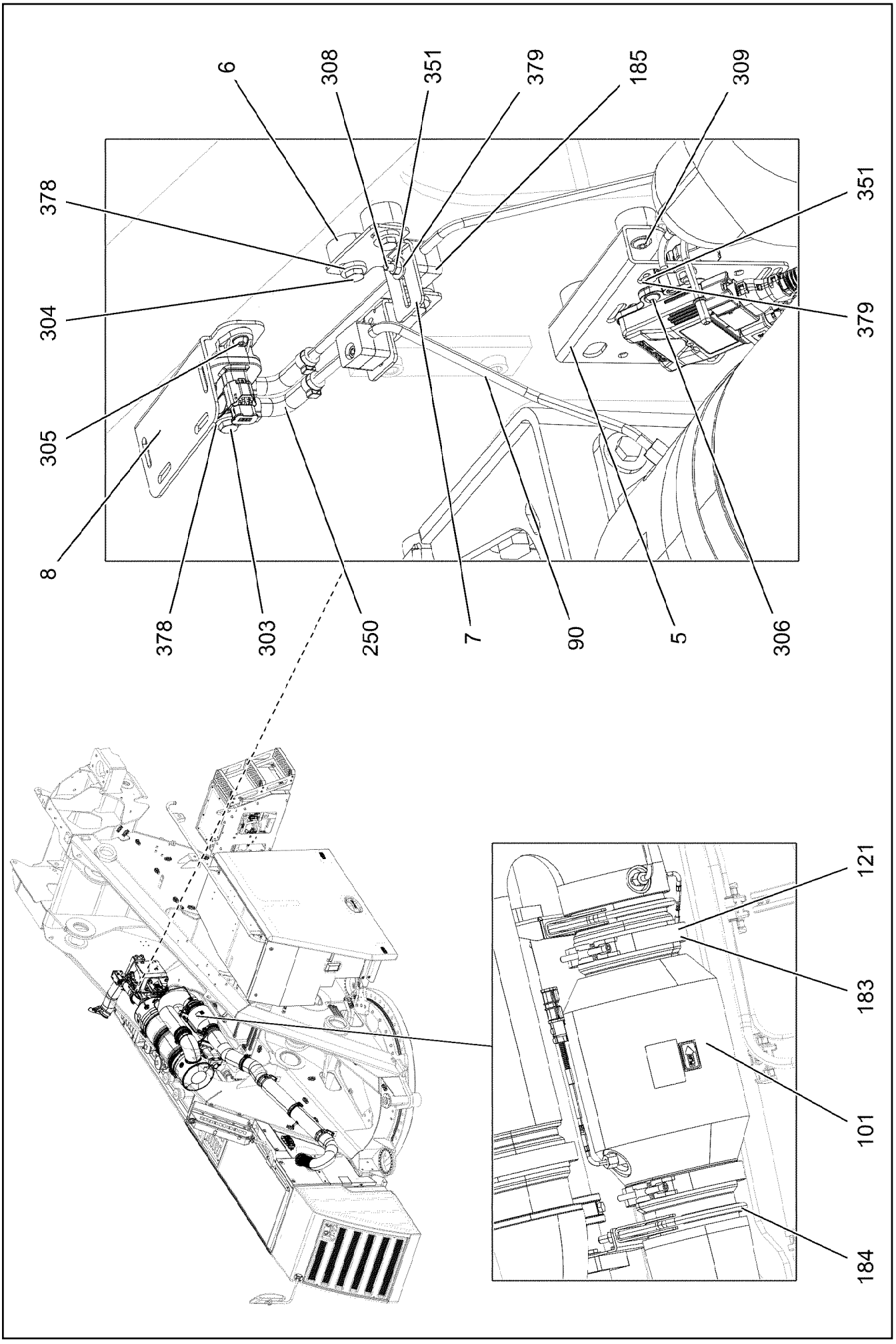
6
308
351
379
185
309
378
304
305
8
351
379
378
303
250
7
90
5
306
121
183
101
184

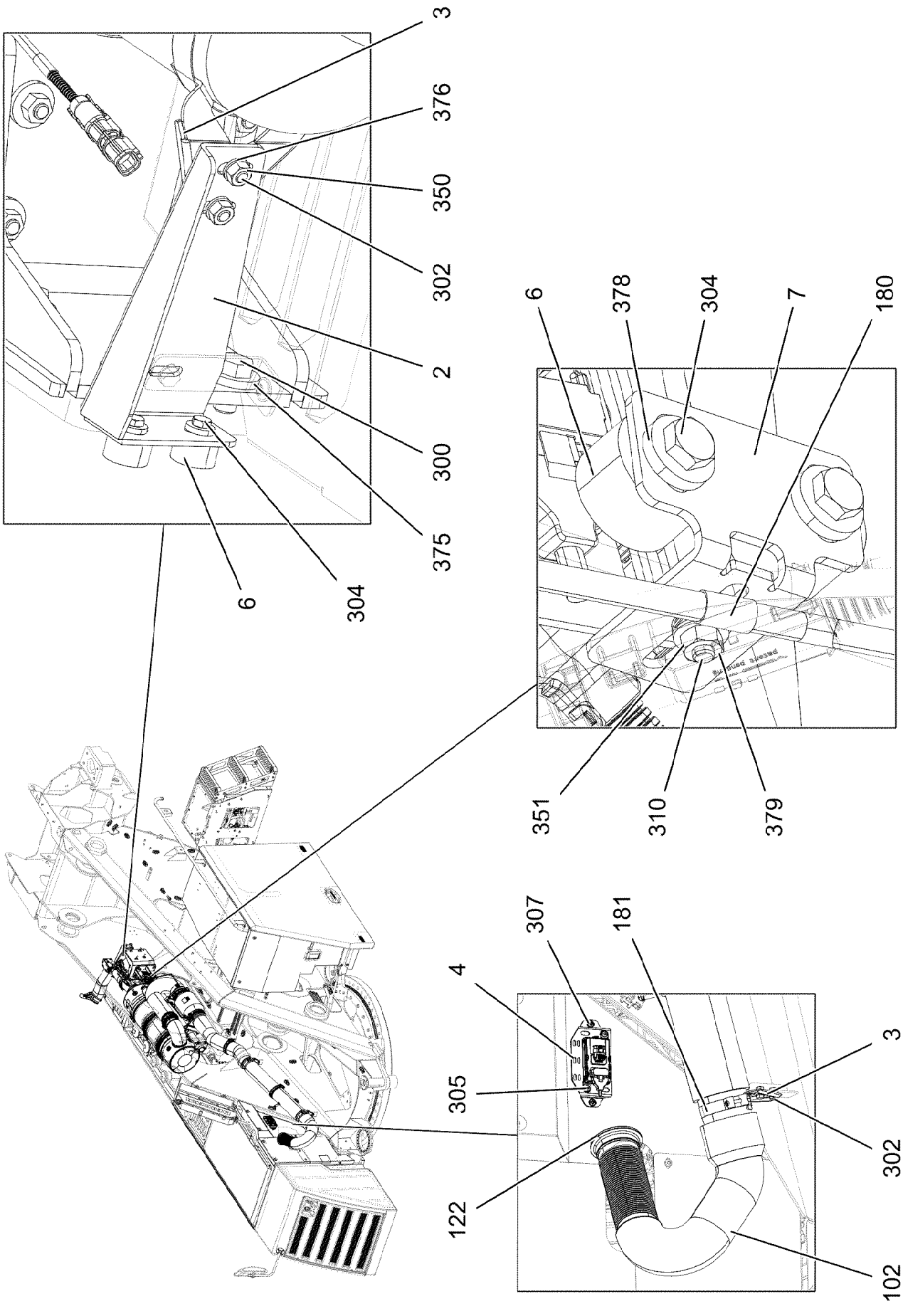
3
376
350
302
2
300
375
6
304
6
378
304
7
180
351
310
379
307
181
4
305
3
302
122
102

Pos.	Item	Quantity	Description	Bezeichnung
1	96051762	1	EXHAUST SYSTEM PRE-ASSEMBLED ⇨ ❑ 471	ABGASANLAGE VORM.
2	97055891	1	PLATE 4X293X157 X5CRNI18-10	BLECH
3	97055661	3	PLATE 3X127X139 X5CRNI18-10	BLECH
4	97055896	1	PLATE 3X240X98 X5CRNI18-10	BLECH
5	97060224	1	PLATE 3X155X210 X5CRNI18-10	BLECH
6	978787708	10	SLEEVE 33X19 11SMNPB37 FE//ZNNI8//CN/	HUELSE
7	97098871	3	PLATE 3X74X98 X5CRNI18-10	BLECH
8	97098872	1	PLATE 3X163X159 X5CRNI18-10	BLECH
90	96051451	1	EXHAUST SYSTEM PIPELINES	ROHRLEITUNGEN ABGASANL
(1)	96047747	1	PIPE COMPL.	ROHR KPL.
(2)	96051456	1	PIPE COMPL.	ROHR KPL.
101	12888562	1	DIESEL OXIDATION CATALYST	DIESELOXIDATIONSKATALYSA
102	97098876	1	FLEXIBLE WASHER X5CRNI18-10 SPF	FLEXROHR
103	97055658	1	EXHAUST PIPE X5CRNI18-10 SPF	ABGASROHR
104	97098877	1	EXHAUST PIPE X5CRNI18-10 SPF	ABGASROHR
105	97098879	1	END PIPE X5CRNI18-10	ENDROHR
106	12100105	1	WHEATHER CAP 114,3 EDELSTAHL	WETTERKAPPE
120	10802681	2	SEALING RING 114,6X130,4X13	DICHTRING
121	10802682	2	SEALING RING 140X155X13	DICHTRING
122	10125148	1	SEAL XTREME PLUS	DICHTUNG
180	10876636	1	PIPE CLAMP DIN3016 8X15XRS1-A1 W5 ROS	ROHRSCHELLE
181	12102528	3	HOSE CLAMP 115/113-121/25 A2	SCHLAUCHSCHELLE
182	10494115	3	PROFIL CLAMP 137,6/K1	PROFILSCHELLE
183	10494116	2	PROFIL CLAMP 163,0/K1	PROFILSCHELLE
184	11963742	1	BOW-TYPE CLAMP 132 X5CRNI18-10	BUEGELSCHELLE
185	10875557	4	CLAMP-HALF DIN 3015-1 L 0 R 8 AL	KLEMMHAELFTE
250	96046407	2	FORM HOSE	FORMSCHLAUCH
300	4902326	4	HEX SCREW ISO 4017 M16X30 8.8 FLZN SP	SECHSKANTSCHRAUBE
301	10197730	2	HEX SCREW ISO 4017 M10X20 8.8 ZNNI-480	SECHSKANTSCHRAUBE
302	406590805	6	HEX SCREW ISO 4017 M10X20 A2-70	SECHSKANTSCHRAUBE
303	406527808	2	HEX SCREW ISO 4017 M8X16 A2-70	SECHSKANTSCHRAUBE
304	406518814	8	HEX SCREW ISO 4017 M8X20 A4-70	SECHSKANTSCHRAUBE
305	10412851	6	BUTTON HEAD SCREW AEHNL.ISO 7380-2	HALBRUNDKOPFSCHRAUBE
306	10412852	2	BUTTON HEAD SCREW AEHNL.ISO 7380-2	HALBRUNDKOPFSCHRAUBE
307	408650608	2	BUTTON HEAD SCREW ISO 7380-2 M8X20 A	HALBRUNDKOPFSCHRAUBE
308	10022183	2	SOCKET HEAD SCREW ISO 4762 M6X35 A2	ZYLINDERSCHRAUBE
309	408650508	2	BUTTON HEAD SCREW ISO 7380-2 M8X16 A	HALBRUNDKOPFSCHRAUBE
310	10001739	1	HEX SCREW ISO 4017 M6X16 A2-70	SECHSKANTSCHRAUBE
350	411514614	6	HEX NUT ISO 4032 M10 A4-70	SECHSKANTMUTTER
351	411517114	11	HEX NUT ISO 4032 M6 A4-70	SECHSKANTMUTTER
375	4600021	4	WASHER DIN 7349 17 200HV FLZN SPF	SCHEIBE
376	500917508	12	WASHER ISO 7089 10 200HV-A2	SCHEIBE
377	11491889	2	WASHER ISO 7093-1 10 300HV FLZN SPF	SCHEIBE
378	11113931	10	WASHER DIN 7349 8,4 -A4	SCHEIBE
379	421801708	11	WASHER ISO 7093-1 6 200HV-A2	SCHEIBE

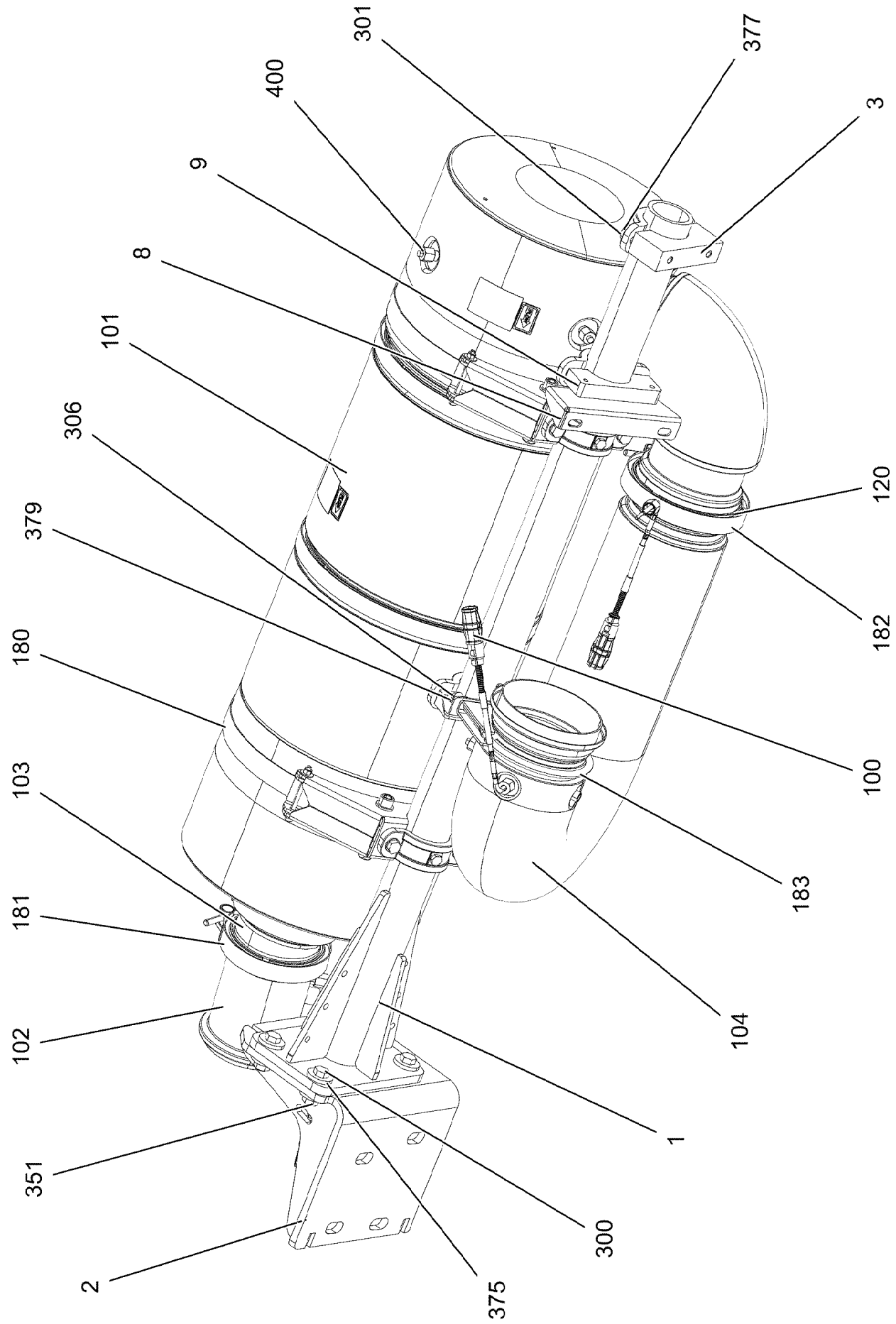
301
377
400
3
9
8
101
306
120
379
182
180
100
103
183
181
104
102
1
351
300
2
375

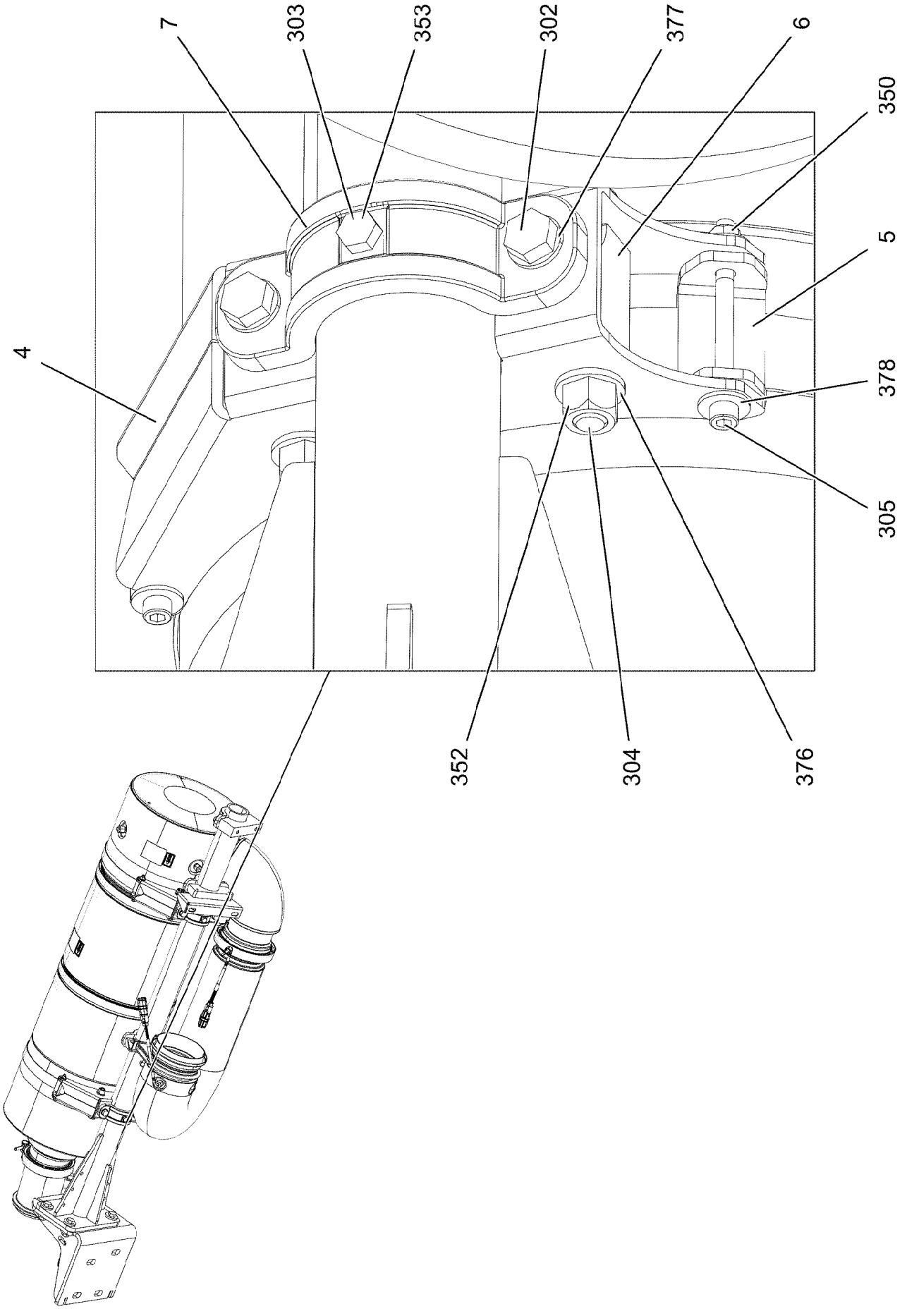
7
303
353
302
377
6
350
5
4
378
305
352
304
376

Pos.	Item	Quantity	Description	Bezeichnung
1	96022400	1	SUPPORTING ARM T ZN O	TRAGARM SCHWK.
2	96022401	1	CLAMP WELDED CONST. FE//ZNNI8//CN//T0	HALTER SCHWK.
3	97098868	1	PLATE 30X126X51 S355J2+N FE//ZNNI8//CN/	BLECH
4	97047477	2	PLATE 4X255X278 X5CRNI18-10	BLECH
5	97093827	4	PLATE 4X30X82 X5CRNI18-10	BLECH
6	979620608	4	TRAVERSE 20X61X37 S355J2+N FE//ZNNI8/	TRAVERSE
7	97039859	5	CLAMP G-ST-52 FE//ZN20//C	SCHELLE
8	97127896	2	PLATE 3X206X85 X5CRNI18-10	BLECH
9	97118866	2	PLATE 20X126X40 S355J2+N FE//ZNNI8//CN/	BLECH
100	96041566	1	ELECTRIC ADD-ON PARTS ⇨ ❑ 474	ELEKTRIK ANBAUTEILE
101	11429845	1	SCRFILTER ASSEMBLY SCRFILTER GEN 2 ⇨ ❑ 475	SCRFILTER-BAUGRUPPE
102	12898856	1	SENSOR PIPE	SENSORROHR
103	97098878	1	EXHAUST PIPE X5CRNI18-10	ABGASROHR
104	13402640	1	EXHAUST MIXING PIPE SCRFILTER GEN 2	ABGASMISCHROHR
120	10802682	1	SEALING RING 140X155X13	DICHTRING
180	12102925	2	HINGE PIN CLAMP 332X1022X30/A2 EDELS	GELENKBOLZENSCHELLE
181	10494115	2	PROFIL CLAMP 137,6/K1	PROFILSCHELLE
182	10494116	1	PROFIL CLAMP 163,0/K1	PROFILSCHELLE
183	11963742	1	BOW-TYPE CLAMP 132 X5CRNI18-10	BUEGELSCHELLE
300	11645386	4	HEX SCREW ISO 4017 M12X45 8.8 FLZN SP	SECHSKANTSCHRAUBE
301	11642358	6	HEX SCREW ISO 4017 M10X30 8.8 FLZN SP	SECHSKANTSCHRAUBE
302	11626706	4	HEX SCREW ISO 4017 M10X40 8.8 FLZN SP	SECHSKANTSCHRAUBE
303	10021245	2	HEX SCREW ISO 4014 M8X80 10.9 FLZN SP	SECHSKANTSCHRAUBE
304	10353713	4	SOCKET HEAD SCREW ISO 4762 M12X80 A2	ZYLINDERSCHRAUBE
305	10539468	4	SOCKET HEAD SCREW ISO 4762 M6X75 A4	ZYLINDERSCHRAUBE
306	406518814	4	HEX SCREW ISO 4017 M8X20 A4-70	SECHSKANTSCHRAUBE
350	11113917	4	HEX NUT AEHNL.ISO 7042 M6 A4 VERZINNT	SECHSKANTMUTTER
351	10875616	4	HEX NUT ISO 4032 M12 8 FLZN SPF	SECHSKANTMUTTER
352	11626393	4	HEX NUT AEHNL.ISO 7042 M12 A4	SECHSKANTMUTTER
353	10814800	2	HEX NUT ISO 7042 M8 10 480H SPF	SECHSKANTMUTTER
375	10179356	8	WASHER DIN 6340 13 FLZN SPF	SCHEIBE
376	10410178	8	WASHER ISO 7089 12 200HV-A2	SCHEIBE
377	10289795	10	WASHER ISO 7089 10 300HV FLZN SPF	SCHEIBE
378	421801708	8	WASHER ISO 7093-1 6 200HV-A2	SCHEIBE
379	421861405	4	WASHER ISO 7093-1 8 200HV-A2	SCHEIBE
400	10816958	6	FITTING BUZ 8 M14X1,5 EDELSTAHL	VERSCHRAUBUNG

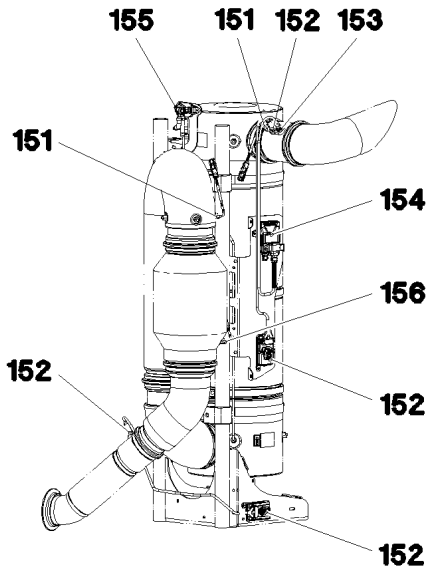

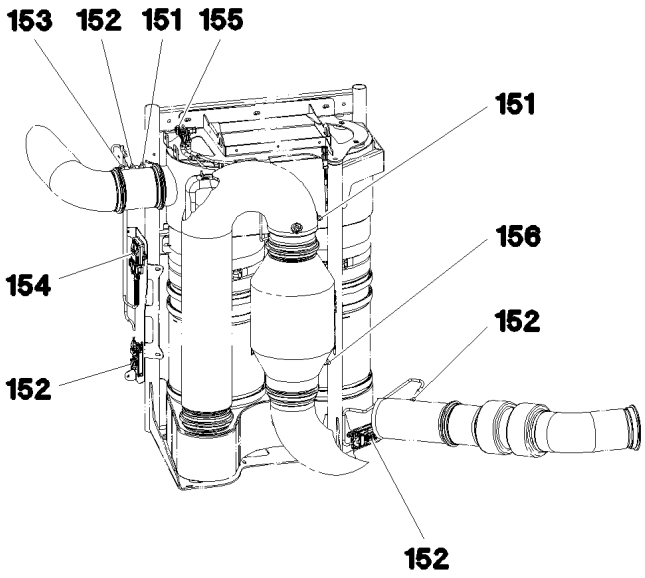

Pos.	Item	Quantity	Description	Bezeichnung
151	11349182	2	TEMPERATURE SENSOR -40°C BIS+800°C	TEMPERATURSENSOR
152	12984315	2	GAS SENSOR GEN 4.0 NICHT LACKIEREN	GASSENSOR
153	10144038	1	GAS SENSOR NICHT LACKIEREN	GASSENSOR
154	10144039	1	SENSOR CONTROL DEVICE NICHT LACKIE	SENSORSTEUERGERAET
155	10127114	1	DIFFERENTIAL PRESSURE SENSOR 0-0,3	DIFFERENZDRUCKSENSOR
156	12889334	1	TEMPERATURE SENSOR -40°C BIS +600°C	TEMPERATURSENSOR

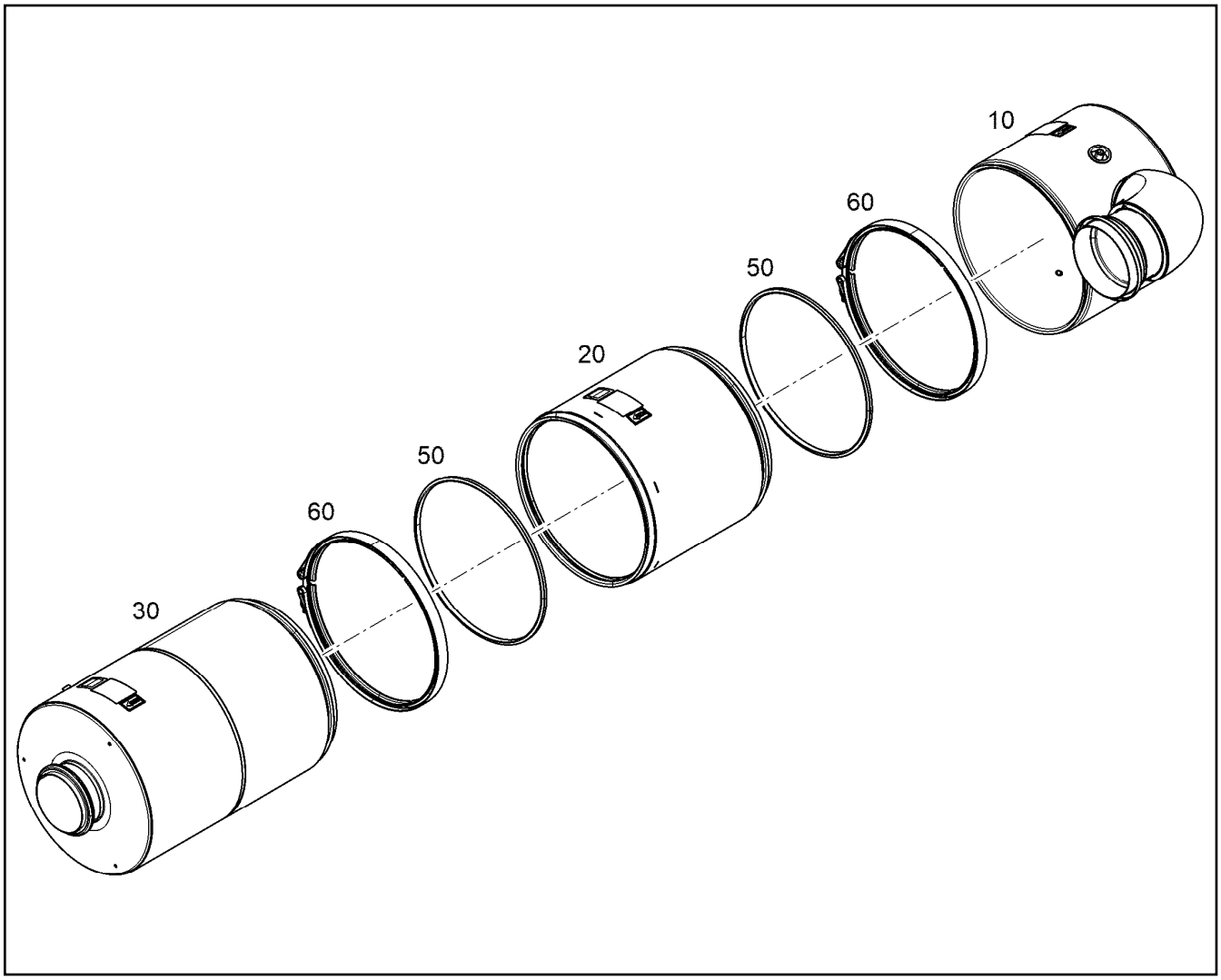

Pos.	Item	Quantity	Description	Bezeichnung
10	11428887	1	INLET MODULE SCRFILTER GEN 2	EINLASSMODUL
20	11429849	1	FILTER MODULE SCRFILTER GEN 2X	FILTERMODUL
30	11429877	1	OUTLET MODULE SCRFILTER GEN 2	AUSLASSMODUL
50	12462476	2	SEAL	DICHTUNG
60	12560584	2	PROFIL CLAMP 312/K1	PROFILSCHELLE

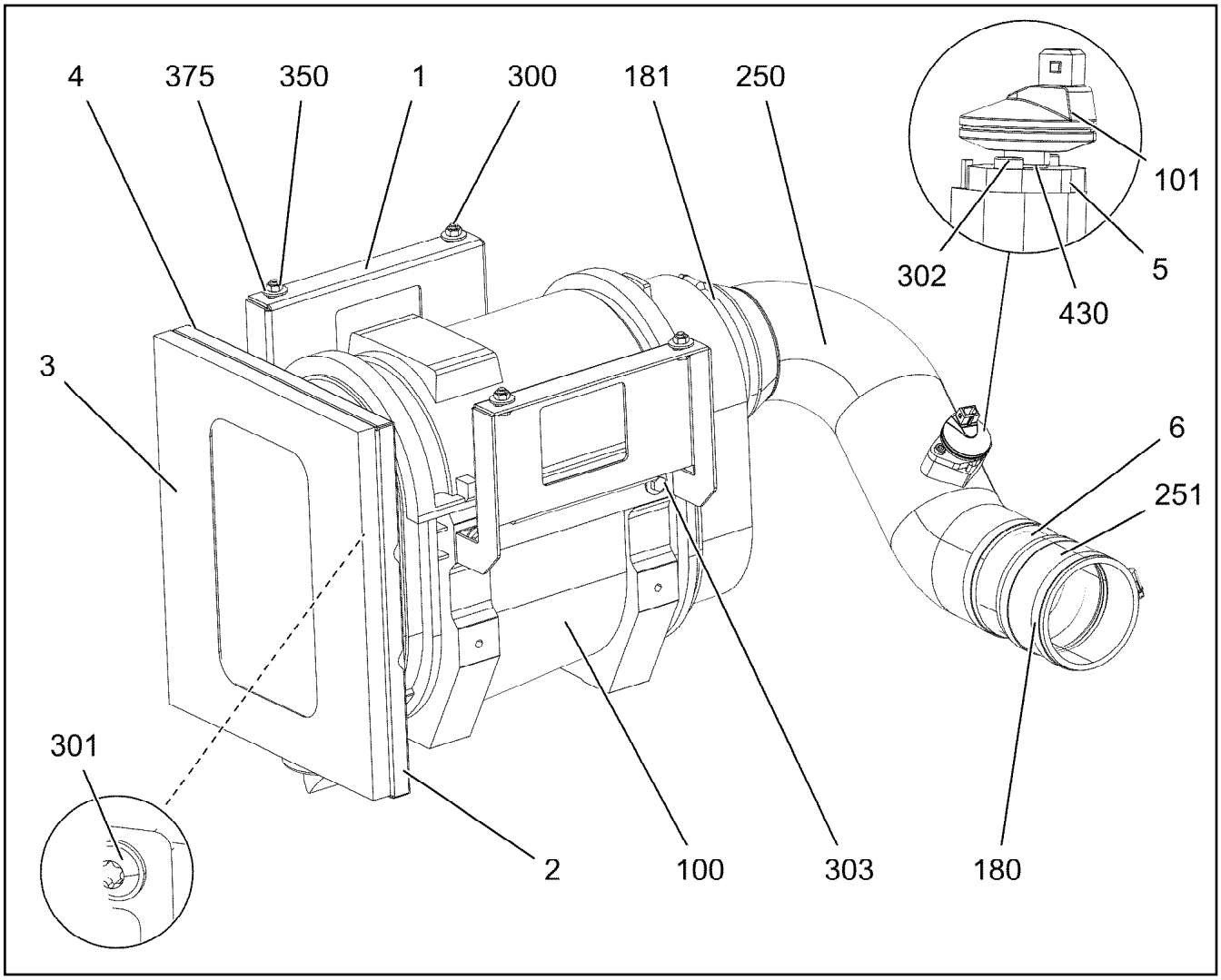

Pos.	Item	Quantity	Description	Bezeichnung
1	97045987	2	PLATE 3X232X317 ALMG3 H111	BLECH
2	97067161	1	PLATE 2X363X413 ALMG3 H111 SPF	BLECH
3	97067162	1	INSULATING MAT 20X376X326 PUR-SCHAU	DAEMMMATTE
4	97067163	1	INSULATING MAT 20X378X328 PUR-SCHAU	DAEMMMATTE
5	97057024	1	FLANGE 10X65X37 ALMG3 H111	FLANSCH
6	97087964	1	TUBE ST12 SPF	ROHR
100	10876238	1	AIR FILTER 12,7M³/MIN	LUFTFILTER
(1)	10294938	1	MAIN FILTER ELEMENT	HAUPTFILTERELEMENT
(2)	10294939	1	SAFETY ELEMENT	SICHERHEITSELEMENT
101	11101017	1	MAINTENANCE SWITCH 0,05 BAR	WARTUNGSSCHALTER
180	550849408	3	HOSE CLAMP 110/100-120/12 W3	SCHLAUCHSCHELLE
181	774209908	1	HOSE CLAMP 140/130-150/12 W3	SCHLAUCHSCHELLE
250	97042185	1	AIR GUIDING HOSE 100/127 X 6 ELASTOME	LUFTFUEHRUNGSSCHLAUCH
251	942875408	1	RUBBER HOSE 100X6X75 EPDM	GUMMISCHLAUCH
300	11651767	4	HEX SCREW ISO 4017 M8X20 8.8 480H SPF	SECHSKANTSCHRAUBE
301	10875485	4	BUTTON HEAD SCREW AEHNL.ISO 7380-2	HALBRUNDKOPFSCHRAUBE
302	11690044	2	SOCKET HEAD SCREW ISO 4762 M6X12 8.8	ZYLINDERSCHRAUBE
303	11651612	4	HEX SCREW ISO 4017 M8X16 8.8 480H SPF	SECHSKANTSCHRAUBE
350	11693875	4	HEX NUT ISO 4032 M8 8 480H SPF	SECHSKANTMUTTER
375	11140469	12	WASHER ISO 7093-1 8 200HV 480H SPF	SCHEIBE
430	502933208	1	O-RING 10X2,2 NBR70	O-RING

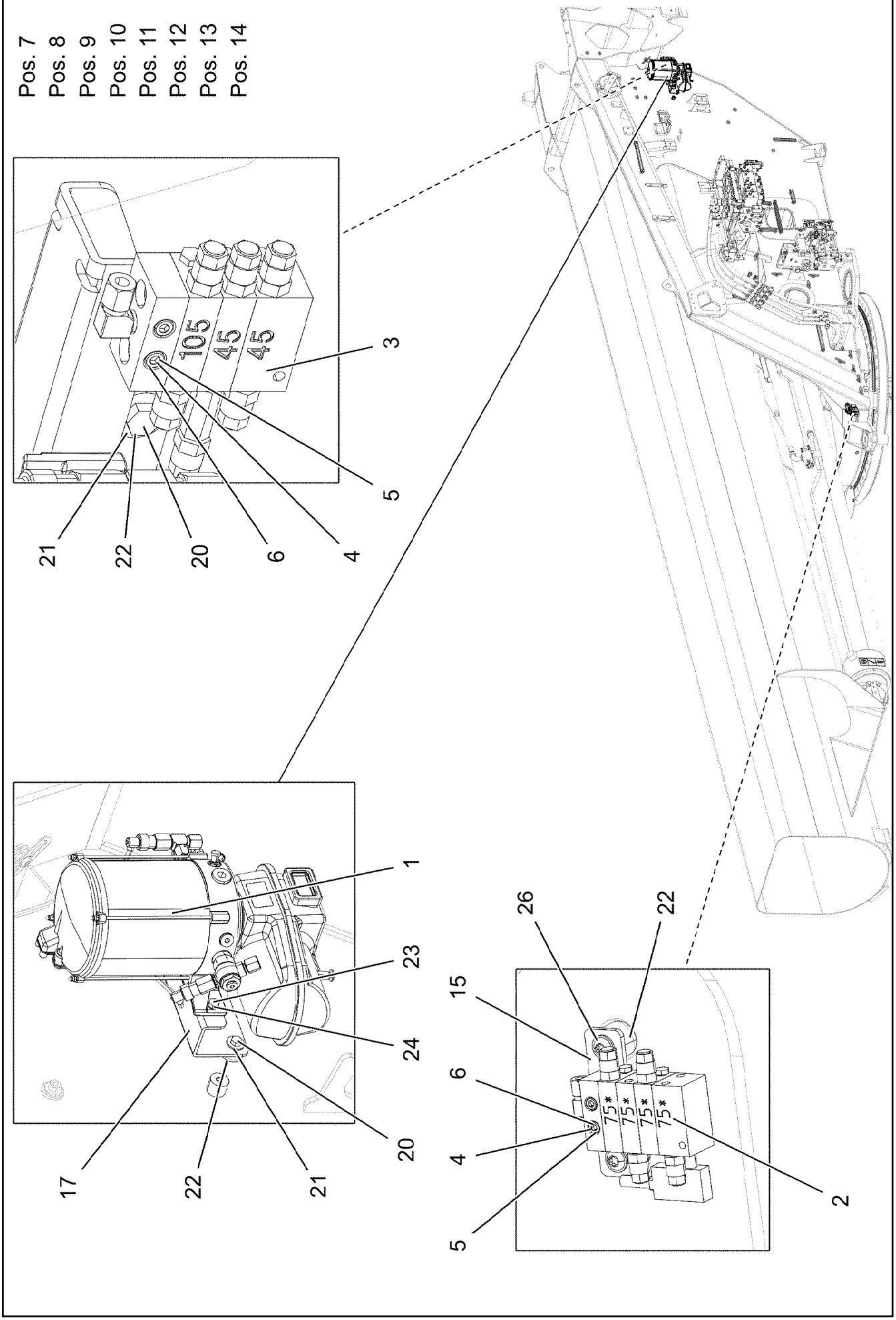
Pos. 7
Pos. 8
Pos. 9
Pos. 10
Pos. 11
Pos. 12
Pos. 13
Pos. 14
105
45
45
3
5
21
22
20
6
4
1
23
24
17
22
21
20
26
22
15
6
4
5
75*
75*
75*
75*
2

Pos.	Item	Quantity	Description	Bezeichnung
1	10327065	1	ELECTRIC PUMP ⇨ ❑ 479	ELEKTROPUMPE
2	12101719	1	DISTRIBUTION BLOCK MX-F 4/4 ⇨ ❑ 481	VERTEILERKOMBINATION
3	10028235	1	DISTRIBUTION BLOCK MX-F 3/6	VERTEILERKOMBINATION
(1)	774378108	1	NON-RETURN VALVE	RUECKSCHLAGVENTIL
4	12204614	4	SOCKET HEAD SCREW ISO 4762 M5X35 8.8	ZYLINDERSCHRAUBE
5	10875620	4	HEX NUT ISO 4032 M5 8 480H SPF	SECHSKANTMUTTER
6	10197808	4	WASHER ISO 7089 5 200HV ZNNI-480H	SCHEIBE
7	12102343	7	MALE CONNECTOR WSV 6 M10X1K MS	STECKANSCHLUSS
8	12101831	1	PLUG-IN CONNECTOR GE M10X1K MS	STECKVERBINDER
9	12101847	1	PLUG-IN CONNECTOR GE M8X1K MESSING	STECKVERBINDER
10	774373408	4	EXTENSION M10X1K/ M10X1	VERLAENGERUNG
11	774374208	1	FITTING G 6LL	VERSCHRAUBUNG
12	774375108	2	PASSAGE NIPPLE BLOCK ⇨ ❑ 483	DURCHGANGSNIPPELBLOCK
13	774372808	1	PUMP RETURN FLOW	PUMPENRUECKLAUF
14	10873149	40	POLYAMID PIPE DIN 73378 6X1,5 PA 12-HL	POLYAMIDROHR
15	953696908	1	PLATE S315MC FE//ZNNI8//CN//T0	BLECH
17	954141508	1	PLATE 4X270X157 S315MC FE//ZNNI8//CN//T	BLECH
20	11651612	3	HEX SCREW ISO 4017 M8X16 8.8 480H SPF	SECHSKANTSCHRAUBE
21	11140469	5	WASHER ISO 7093-1 8 200HV 480H SPF	SCHEIBE
22	953873408	5	SLEEVE 25X20 11SMNPB37 FE//ZNNI8//CN/	HUELSE
23	10197831	2	HEX SCREW ISO 4017 M8X25 8.8 ZNNI-480	SECHSKANTSCHRAUBE
24	11693875	2	HEX NUT ISO 4032 M8 8 480H SPF	SECHSKANTMUTTER
26	10875485	2	BUTTON HEAD SCREW AEHNL.ISO 7380-2	HALBRUNDKOPFSCHRAUBE

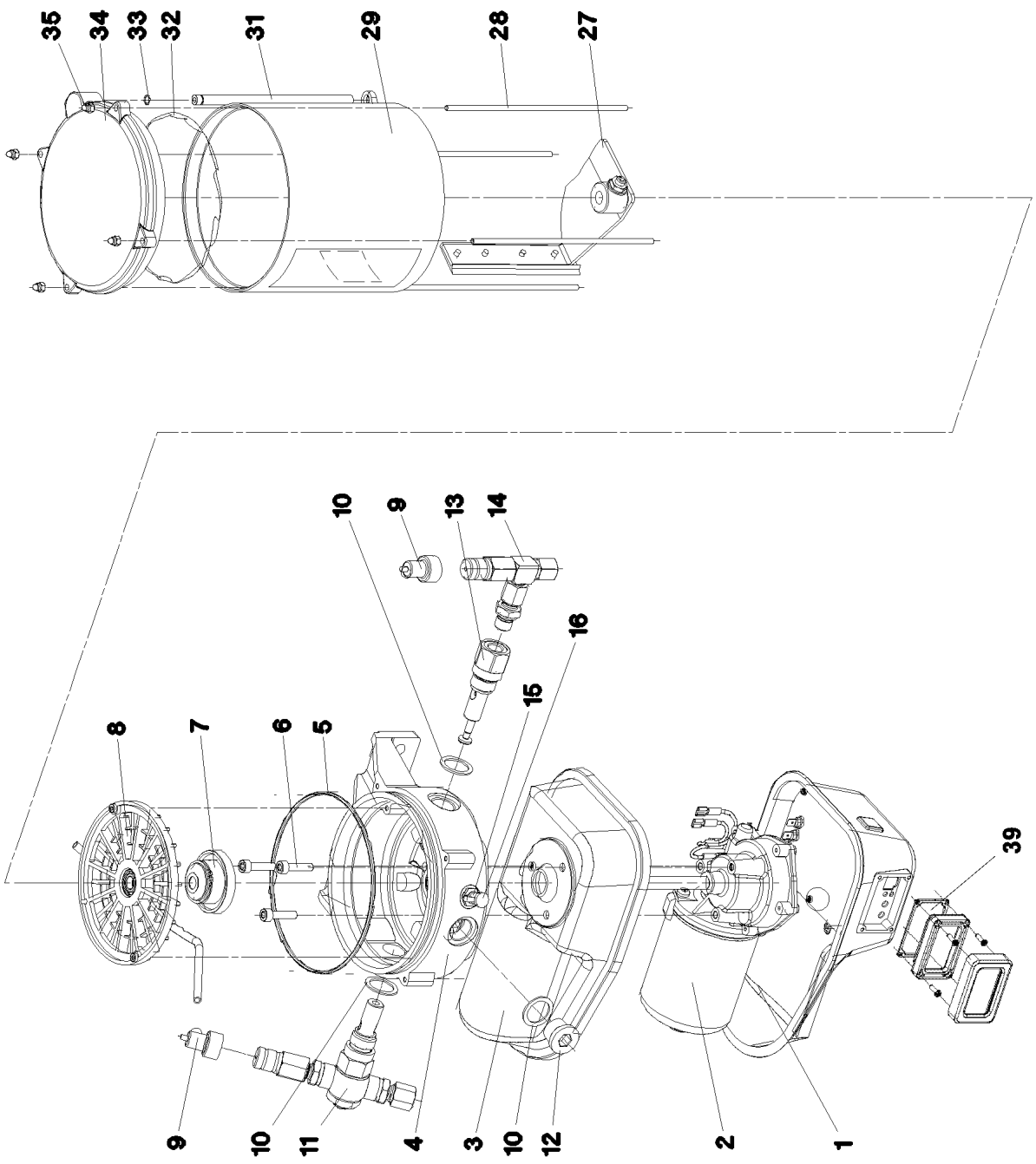
35
34
33
32
31
29
28
27
10
9
13
14
16
15
8
7
6
5
39
9
10
11
4
3
10
12
2
1

Pos.	Item	Quantity	Description	Bezeichnung
1	10493920	1	MOTOR HOUSING	MOTORGEHAEUSE
2	10355140	1	TRANSMISSION MOTOR 24V	GLEICHSTROMGETRIEBEMOTO
3	10014692	1	MOTOR HOUSING	MOTORGEHAEUSE
4	10014693	1	PUMP HOUSING	PUMPENGEHAEUSE
5	570163708	1	O-RING 140X3 NBR70	O-RING
6	10875588	3	SOCKET HEAD SCREW ISO 4762 M6X25 8.8	ZYLINDERSCHRAUBE
7	10014729	1	DRIVER	MITNEHMER
8	10014730	1	INTERMEDIATE RING	ZWISCHENRING
9	10429952	1	FAULT INDICATOR	STOERANZEIGE
10	10014697	3	SEALING RING 27X20X1,5 CU	DICHTRING
11	774387508	1	PUMP ELEMENT	PUMPENELEMENT
12	12218194	1	SCREW PLUG DIN 908 M20X1,5 St FLZN SP	VERSCHLUSSSCHRAUBE
13	10216340	1	PUMP ELEMENT	PUMPENELEMENT
14	571328408	1	PRESSURE RELIEF VALVE	UEBERDRUCKVENTIL
15	11080392	1	HYDRAULIC-TYPE LUBRICAT.NIPPLE	KEGELSCHMIERNIPPEL
16	10014701	1	GREASE NIPPLE CAP	SCHMIERNIPPELKAPPE
25	4002886	4	CAP NUT DIN 986 M4 A2-70	HUTMUTTER
27	10014712	1	AGITATOR PADDLE	RUEHRFLUEGEL
28	10099209	4	PULL ROD	ZUGSTANGE
29	10038271	1	CONTAINER	BEHAELTER
30	967421808	1	STICKER BEHAELTER 2,5KG	AUFKLEBER
(1)	10663909	1	STICKER	AUFKLEBER
(2)	11494432	1	SIGN	SCHILD
(3)	11494581	1	SIGN	SCHILD
32	10099208	1	O-RING 133,07X1,78 NBR 70	O-RING
33	570690608	1	O-RING 6X1 NBR90	O-RING
34	12102477	1	COVER	BEHAELTERDECKEL
39	11110060	1	WINDOW	SICHTFENSTER
99	10447539	1	SEALING COMPOUND	DICHTUNGSMASSE

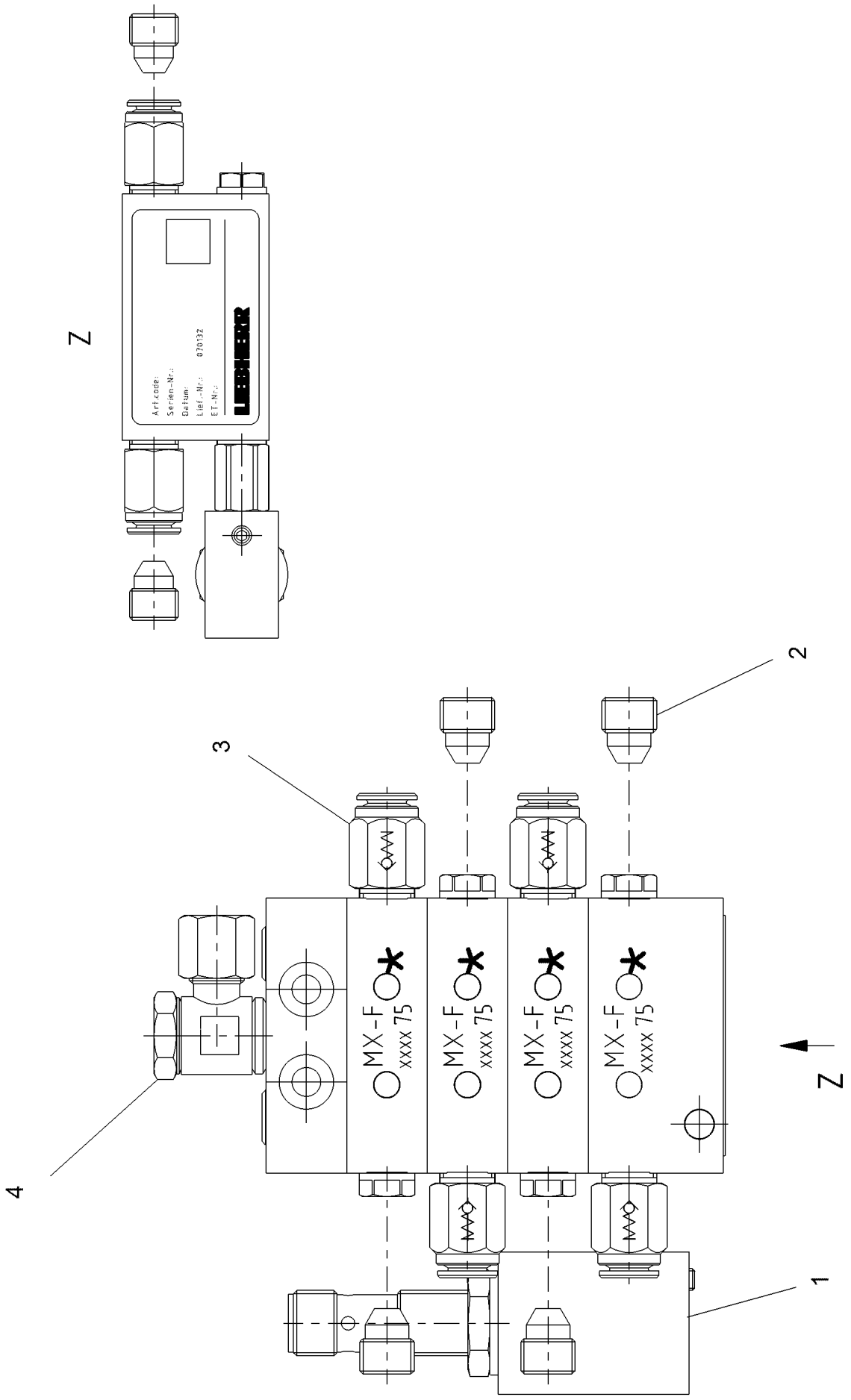
Z
Art.code:
Seriен-Nr.:
Datum:
Lief.-Nr.: 070132
ET-Nr.:
LIEBHERR
2
3
4
1
MX-F
XXXX 75
Z

Pos.	Item	Quantity	Description	Bezeichnung
1	10097621	1	PROXIMITY SWITCH	NAEHERUNGSSCHALTER
2	774378208	4	SCREW PLUG	VERSCHLUSSSCHRAUBE
3	12101681	4	NON-RETURN VALVE	RUECKSCHLAGVENTIL
4	7624176	1	BANJO COUPLING SWVE 6LLM10X1 VERZ	WINKELSCHWENKVERSCHRA

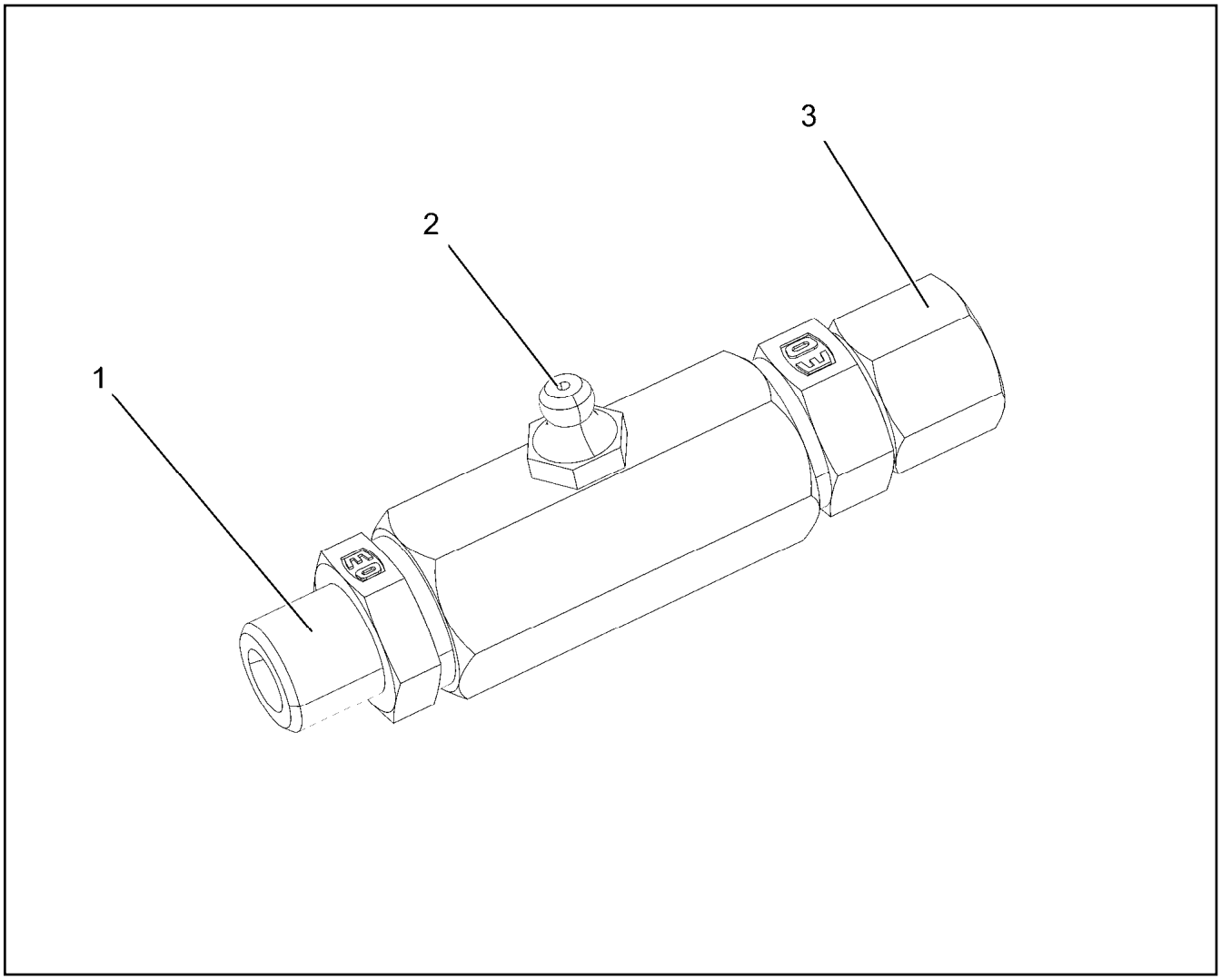

Pos.	Item	Quantity	Description	Bezeichnung
1	10014698	1	PIPE SOCKET R1/4"	ROHRSTUTZEN
2	571578608	1	HYDRAULIC-TYPE LUBRICAT.NIPPLE DIN 71	KEGELSCHMIERNIPPEL
3	11081053	1	FITTING	VERSCHRAUBUNG

Pos.	Item	Quantity	Description	Bezeichnung
8	966181208	1	TEMPERATURE SENSOR	TEMPERATURFUEHLER
(150)	10800266	1	TEMPERATURE SENSOR -50/+125°C SPF	TEMPERATURFUEHLER
9	965371508	1	LIMIT SWITCH ADD-ON AUSLEGERSTEIL ⇨ ❑ 485	ENDSCHALTER ANBAU
10	96047707	1	ELECTRIC FOR WINCH 1	ELEKTRIK WINDE 1
(5)	12102805	1	WINCH REVOLUTION TRANSDUCER 655360	WINDENDREHGEBER
(6)	606012608	1	DRIVE FLANGE EDELSTAHL	ANTRIEBSFLANSCH
(10)	11690044	3	SOCKET HEAD SCREW ISO 4762 M6X12 8.8	ZYLINDERSCHRAUBE
11	968365908	1	EL.ADD-ON SET-LIMIT SWITCHES + ⇨ ❑ 486	EL.GEBER U.ENDSCHALTER
12	96063648	1	CABLE LIST SLEWING PLATFORM ⇨ ❑ 489	KABELLISTE DREHBUEHNE
21	607226808	1	SLIP-ON TUBE	AUFSTECKROHR
30	968693208	1	MOUNTING MATERIAL	MONTAGEMATERIAL
(10)	10874588	50	CABLE TIE 4,8X292-SCHWARZ PA66 SPF	KABELBINDER
(20)	10874587	50	CABLE TIE 7,6X368-SCHWARZ PA66 SPF	KABELBINDER
(30)	10870333	100	CABLE TIE 7,6X380-SCHWARZ PA66HIRHS	KABELBINDER
(40)	11691035	10	CABLE TIE 4,6X200-SCHWARZ PA 66-HS SP	KABELBINDER
32	614003108	1	HORN 24V	HORN
33	10123878	2	RUBBER RING X22	GUMMIRING

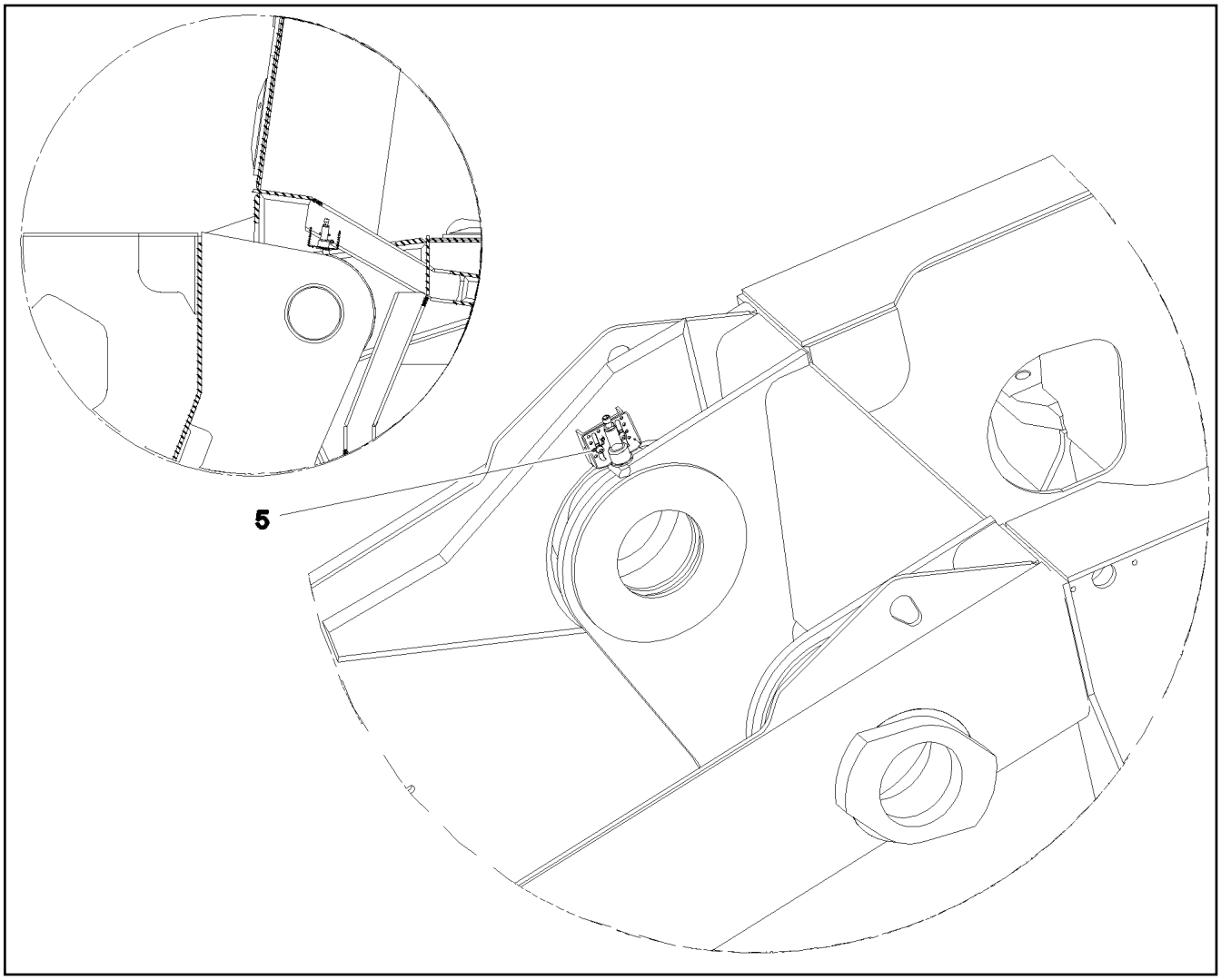

Pos.	Item	Quantity	Description	Bezeichnung
5	12100674	2	DOWEL PIN ISO 8752 6X40 480H SPF	SPANNSTIFT

Pos.	Item	Quantity	Description	Bezeichnung
15	966720708	1	ELECTR.FOR SLEWING GEAR ⇨ ❑ 487	ELEKTRIK DREHWERK
17	928828008	1	LIMIT SWITCH ⇨ ❑ 488	ENDSCHALTER
30	968248508	1	ROTARY ENCODER	DREHGEBER
(1)	11342313	1	ROTARY ENCODER 360° LSB PL:E SPF	DREHGEBER
(2)	11342308	1	SPRING COUPLING 16X35	FEDERKUPPLUNG

Pos.	Item	Quantity	Description	Bezeichnung
10	11003193	2	PROXIMITY SWITCH BERUEHRUNGSLOS 12	NAEHERUNGSSCHALTER
(1)	571817308	1	O-RING ISO 3601 23,6X2,9 NBR90SHORE	O-RING

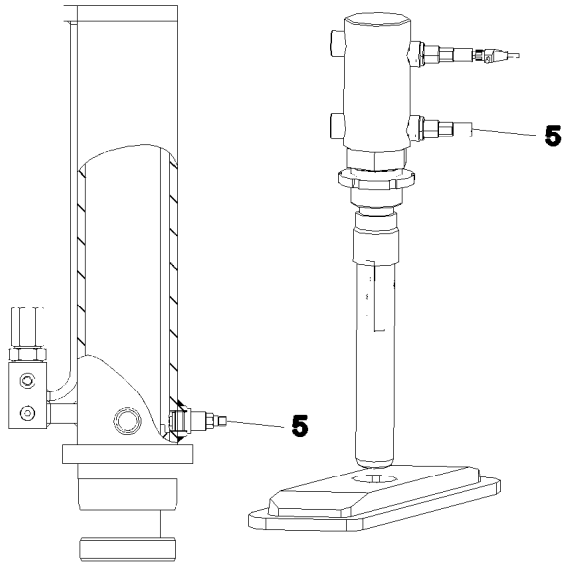

Pos.	Item	Quantity	Description	Bezeichnung
5	606053108	2	LIMIT SWITCH TASTEND SPF	ENDSCHALTER

Pos.	Item	Quantity	Description	Bezeichnung
1	96063649	1	WIRING HARNESS W500 ⇨ ❑ 490	KABELSTRANG
2	96063650	1	LEAD W510 ⇨ ❑ 492	LEITUNG
15	96022970	1	LEAD W588	LEITUNG
16	96023971	1	WIRING HARNESS W501 ⇨ ❑ 493	KABELSTRANG
17	96049294	1	WIRING HARNESS W555 ⇨ ❑ 495	KABELSTRANG
22	96022971	1	LEAD W587	LEITUNG
29	553186908	1	CABLE HARNESS 3300MM	KABELBAUM
(1)	10492113	1	PLUG 2	STECKER
(2)	10491808	1	PLUG 12-POL	STECKER

Pos.	Item	Quantity	Description	Bezeichnung
5	680001408	1	COUPLING SOCKET 4-POL SPF	KUPPLUNGSDOSE
6	680001408	1	COUPLING SOCKET 4-POL SPF	KUPPLUNGSDOSE
7	12102895	1	COUPLING SOCKET 14-POL GERADE	KUPPLUNGSDOSE
8	10678491	1	COUPLING SOCKET 4-POL SPF	KUPPLUNGSDOSE
9	680001408	1	COUPLING SOCKET 4-POL SPF	KUPPLUNGSDOSE
10	680001408	1	COUPLING SOCKET 4-POL SPF	KUPPLUNGSDOSE
11	10871126	1	COUPLING SOCKET 4-POL SPF	KUPPLUNGSDOSE
12	680001408	1	COUPLING SOCKET 4-POL SPF	KUPPLUNGSDOSE
13	680001408	1	COUPLING SOCKET 4-POL SPF	KUPPLUNGSDOSE
14	10678491	1	COUPLING SOCKET 4-POL SPF	KUPPLUNGSDOSE
15	10877801	1	CONNECTION CABLE 2X0,75-10M	ANSCHLUSSKABEL
16	10877801	1	CONNECTION CABLE 2X0,75-10M	ANSCHLUSSKABEL
17	10877801	1	CONNECTION CABLE 2X0,75-10M	ANSCHLUSSKABEL
18	10678491	1	COUPLING SOCKET 4-POL SPF	KUPPLUNGSDOSE
19	680001708	1	COUPLING SOCKET 4-POL GERADE PVC SP	KUPPLUNGSDOSE
48	602207508	2	CABLE LUG M8/16MM²	KABELSCHUH
49	602217008	3	CABLE LUG M6/16MM²	KABELSCHUH
50	602217308	1	CABLE LUG DIN 46234 M12/16MM²	KABELSCHUH
72	602203408	4	RECEPTACLE 6,3X1-2,5 MESSING VERZINN	STECKHUELSE
86	602307708	39	WIRED END FERRULE DIN 46228-1 A1X5 V	ADERENDHUELSE
95	6202444	1	PIN CONTACT 0,75-1,5MM2	STIFTKONTAKT
96	6202434	2	SLEEVE CONTACT 0,75-1,5MM2	BUCHSENKONTAKT
98	10872032	1	CABLE SLEEVE 12,0-3,0/12/1,4	KABELTUELLE
104	602308508	1	WIRED END FERRULE 16X12 VERZ	ADERENDHUELSE
114	602307808	3	WIRED END FERRULE DIN 46228-1 A0,5X5 E	ADERENDHUELSE
121	602300108	9	CONTACT 1-2,5MM2	KONTAKT
125	602300308	93	CONTACT 0,5-1MM2	KONTAKT
134	602303308	2	RECEPTACLE FOR TABS 6,3X0,5-1,5	FLACHSTECKHUELSE
140	602207608	2	RECEPTACLE 6,3X0,5-1,5 SN	STECKHUELSE
202	11082602	17.75	INSULATING HOSE DN6X0,5 PUR SPF	ISOLIERSCHLAUCH
203	11082603	12.61	INSULATING HOSE DN8X0,65 PUR SPF	ISOLIERSCHLAUCH
204	11082604	1.87	INSULATING HOSE DN10X0,65 PUR SPF	ISOLIERSCHLAUCH
205	11082605	0.53	INSULATING HOSE DN12X0,65 PUR SPF	ISOLIERSCHLAUCH
223	11124205	3.86	CABLE CONDUIT DN16X0,6 PUR SPF	KABELSCHLAUCH
224	11124207	3.11	CABLE CONDUIT DN20X0,6 PUR SPF	KABELSCHLAUCH
225	11124208	1.21	CABLE CONDUIT DN25X0,6 PUR SPF	KABELSCHLAUCH
226	11124209	2.84	CABLE CONDUIT DN30X0,6 PUR SPF	KABELSCHLAUCH
227	11124210	3.09	CABLE CONDUIT DN35X0,6 PUR SPF	KABELSCHLAUCH
229	11124212	0.9	CABLE CONDUIT DN50X0,6 PUR SPF	KABELSCHLAUCH
269	12104810	20	CABLE TIE 3,6X203-SCHWARZ PA66 SPF	KABELBINDER
305	10870540	435.76	ELECTR.CABLE 1,0	KFZ-LEITUNG
309	10870542	23	ELECTR.CABLE 2,5	KFZ-LEITUNG
345	10870539	10.2	ELECTR.CABLE 0,75	KFZ-LEITUNG
373	10678491	1	COUPLING SOCKET 4-POL SPF	KUPPLUNGSDOSE
374	10678491	1	COUPLING SOCKET 4-POL SPF	KUPPLUNGSDOSE
500	923512208	85	CABLE MARKER	KABELMARKER
501	602300208	12	PLUG SHELL 18-POL	STECKERGEHAEUSE
502	920381108	18	PLUG	STECKER
503	605007908	16	APPLIANCE SOCKET 2POL+PE	GERAETESTECKDOSE
504	692406308	1	PLUG DIN 72585 4-POL POLYBUTOLEN SPF	STECKER
505	605006608	3	DEVICE PLUG 3POL+PE	GERAETESTECKER
506	602325508	3	HOUSING 6-POL	GEHAEUSE
507	927996308	1	PLUG	STECKER
508	602209708	2	ATTACHABLE SLEEVE HOUSING 2-POL	STECKHUELSENGEHAEUSE
509	10424622	1	BUSHING HOUSING 2-POL 5A	BUCHSENGEHAEUSE
510	692406708	1	PLUG DIN 72585 7-POL POLYBUTOLEN SPF	STECKER
511	602331308	1	HOUSING 4-POL	GEHAEUSE
512	605251608	1	PLUG SOCKET BODY 4-POLE AL	STECKDOSENKOERPER
513	11067833	1	BUSHING HOUSING 18-POL 20A	BUCHSENGEHAEUSE
514	10324830	1	CABLE PLUG 4-POL 90°	KABELSTECKER

Pos.	Item	Quantity	Description	Bezeichnung
515	605212808	1	MOULDING 317-1397-000 SUR	FORMTEIL
516	605215508	1	CLAMP SURE-SEAL	KLAMMER
517	692406008	2	TERMINAL HOUSING DIN 72585 APD POLY	ENDGEHAEUSE
518	10875279	1	PROTECTING CAP HDSCS GROUP E	SCHUTZKAPPE
519	11697580	1	PROTECTING CAP HDSCS GROUP E 18	SCHUTZKAPPE
643	602339408	3	SLEEVE CONTACT DIN 72585 0,5-1MM2 SP	BUCHSENKONTAKT
647	602339508	4	SLEEVE CONTACT DIN 72585 0,5-1,5MM2	BUCHSENKONTAKT
690	10335820	51	SLEEVE CONTACT 0,2-0,5MM2	BUCHSENKONTAKT
708	10473048	2	CABLE SLEEVE 2,4-3,0/2,4/0,6 SILIKON	KABELTUELLE
726	10493495	6	SLEEVE CONTACT 0,5-1,0MM2 CuNiSi	BUCHSENKONTAKT
793	10873194	2	SLEEVE CONTACT 0,5-0,75MM2	BUCHSENKONTAKT
806	602331108	12	STOPPER PLUG 3,6MM SILIKON WEIS	BLINDSTOPFEN
811	692404908	1	STOPPER PLUG	BLINDSTOPFEN
813	605619708	19	SINGLE STRAND SEALING 2	EINZELADERABDICHTUNG
816	605619808	3	SINGLE STRAND SEALING DIN 72585 15BL	EINZELADERABDICHTUNG
817	692405808	1	STOPPER PLUG DIN 72585 4 SPF	BLINDSTOPFEN
821	605619908	4	SINGLE STRAND SEALING DIN 72585 10YE	EINZELADERABDICHTUNG
822	692405708	3	STOPPER PLUG DIN 72585 7 SPF	BLINDSTOPFEN
828	10424625	2	SINGLE STRAND SEALING 1,4-2,1MM VMQ	EINZELADERABDICHTUNG
830	10014387	6	SINGEL SEAL 1,0-1,5MM2	EINZELDICHTUNG
996	965622108	62	LETTERING WIRE	BESCHRIFTUNG ADER
998	965622208	1	LETTERING WIRING HARNESS	BESCHRIFTUNG KABELBAUM
2811	12102634	7.8	ELECTR.CABLE 16	KFZ-LEITUNG

Pos.	Item	Quantity	Description	Bezeichnung
5	12108364	16.4	LEAD 36 G 1	LEITUNG
120	602323208	17	FLAT PLUG 1,0-2,5MM2	FLACHSTECKER
121	602300108	4	CONTACT 1-2,5MM2	KONTAKT
124	602323508	22	FLAT PLUG 2,8X0,5-1 SN	FLACHSTECKER
125	602300308	16	CONTACT 0,5-1MM2	KONTAKT
305	10870540	9.6	ELECTR.CABLE 1,0	KFZ-LEITUNG
500	923512208	9	CABLE MARKER	KABELMARKER
501	602300208	1	PLUG SHELL 18-POL	STECKERGEHAEUSE
502	10021571	1	PLUG SHELL 8-POL	STECKERGEHAEUSE
503	602323308	1	FLAT PLUG HOUSING 18-POL	FLACHSTECKERGEHAEUSE
504	602325608	2	FLAT PLUG HOUSING JPT	FLACHSTECKERGEHAEUSE
505	602325508	1	HOUSING 6-POL	GEHAEUSE
506	602335908	3	PLUG SHELL 4-POL	STECKERGEHAEUSE
507	602606708	1	REDUCTION M40X1,5/M25X1,5 MS	REDUKTION
508	602424308	1	CABLE GLAND M25X1,5X11-20 MS	KABELVERSCHRAUBUNG
998	965622208	2	LETTERING WIRING HARNESS	BESCHRIFTUNG KABELBAUM

Pos.	Item	Quantity	Description	Bezeichnung
5	11341599	4.28	LEAD 2 X 1,5	LEITUNG
6	11341599	4.28	LEAD 2 X 1,5	LEITUNG
7	12100214	5.59	DATA LINE 2 X 2,5 FEP SPF	DATENLEITUNG
8	12100214	5.59	DATA LINE 2 X 2,5 FEP SPF	DATENLEITUNG
9	12100214	5.59	DATA LINE 2 X 2,5 FEP SPF	DATENLEITUNG
10	11840113	5.59	BUS LINE 2 X 0,5	BUSLEITUNG
11	11840113	5.59	BUS LINE 2 X 0,5	BUSLEITUNG
12	12100215	5.59	DATA LINE 3 X 1 FEP SPF	DATENLEITUNG
13	12100215	5.59	DATA LINE 3 X 1 FEP SPF	DATENLEITUNG
14	12100215	3.39	DATA LINE 3 X 1 FEP SPF	DATENLEITUNG
15	12100217	5.59	DATA LINE 2 X 1 FEP SPF	DATENLEITUNG
16	12100217	6.69	DATA LINE 2 X 1 FEP SPF	DATENLEITUNG
17	12100217	3.54	DATA LINE 2 X 1 FEP SPF	DATENLEITUNG
18	11840113	5.59	BUS LINE 2 X 0,5	BUSLEITUNG
19	12100217	1.89	DATA LINE 2 X 1 FEP SPF	DATENLEITUNG
49	602217008	2	CABLE LUG M6/16MM²	KABELSCHUH
75	602203908	3	FLAT PLUG 6,3X1-2,5 SN	FLACHSTECKER
86	602307708	4	WIRED END FERRULE DIN 46228-1 A1X5 V	ADERENDHUELSE
95	6202444	3	PIN CONTACT 0,75-1,5MM2	STIFTKONTAKT
96	6202434	2	SLEEVE CONTACT 0,75-1,5MM2	BUCHSENKONTAKT
106	602301708	1	CABLE LUG DIN 46234 M8/16-25MM² VERZI	KABELSCHUH
111	602205808	1	CABLE LUG M6/16,8-26,7MM²	KABELSCHUH
121	602300108	22	CONTACT 1-2,5MM2	KONTAKT
125	602300308	70	CONTACT 0,5-1MM2	KONTAKT
202	11082602	7.51	INSULATING HOSE DN6X0,5 PUR SPF	ISOLIERSCHLAUCH
203	11082603	6.16	INSULATING HOSE DN8X0,65 PUR SPF	ISOLIERSCHLAUCH
204	11082604	1.96	INSULATING HOSE DN10X0,65 PUR SPF	ISOLIERSCHLAUCH
208	11082608	0.28	INSULATING HOSE DN18X0,85 PUR SPF	ISOLIERSCHLAUCH
223	11124205	3.66	CABLE CONDUIT DN16X0,6 PUR SPF	KABELSCHLAUCH
225	11124208	3.03	CABLE CONDUIT DN25X0,6 PUR SPF	KABELSCHLAUCH
226	11124209	0.6	CABLE CONDUIT DN30X0,6 PUR SPF	KABELSCHLAUCH
228	11124211	4.36	CABLE CONDUIT DN40X0,6 PUR SPF	KABELSCHLAUCH
261	12104809	1	CABLE TIE 3,6X142-SCHWARZ PA66 SPF	KABELBINDER
269	12104810	1	CABLE TIE 3,6X203-SCHWARZ PA66 SPF	KABELBINDER
305	10870540	189.51	ELECTR.CABLE 1,0	KFZ-LEITUNG
307	10870541	11.18	ELECTR.CABLE 1,5	KFZ-LEITUNG
309	10870542	19.5	ELECTR.CABLE 2,5	KFZ-LEITUNG
370	12100217	1	DATA LINE 2 X 1 FEP SPF	DATENLEITUNG
371	11840113	5.59	BUS LINE 2 X 0,5	BUSLEITUNG
372	12100216	5.59	DATA LINE 2 X 1,5 FEP SPF	DATENLEITUNG
373	12100217	5.59	DATA LINE 2 X 1 FEP SPF	DATENLEITUNG
374	12100215	5.59	DATA LINE 3 X 1 FEP SPF	DATENLEITUNG
375	12100217	5.59	DATA LINE 2 X 1 FEP SPF	DATENLEITUNG
376	12100217	5.59	DATA LINE 2 X 1 FEP SPF	DATENLEITUNG
377	12100217	5.59	DATA LINE 2 X 1 FEP SPF	DATENLEITUNG
378	12100217	5.59	DATA LINE 2 X 1 FEP SPF	DATENLEITUNG
379	12100217	5.59	DATA LINE 2 X 1 FEP SPF	DATENLEITUNG
380	12100217	5.59	DATA LINE 2 X 1 FEP SPF	DATENLEITUNG
381	12100215	5.59	DATA LINE 3 X 1 FEP SPF	DATENLEITUNG
382	12100215	5.59	DATA LINE 3 X 1 FEP SPF	DATENLEITUNG
383	10877801	1	CONNECTION CABLE 2X0,75-10M	ANSCHLUSSKABEL
384	10877801	1	CONNECTION CABLE 2X0,75-10M	ANSCHLUSSKABEL
500	923512208	34	CABLE MARKER	KABELMARKER
501	602300208	5	PLUG SHELL 18-POL	STECKERGEHAEUSE
502	10678453	1	PLUG SHELL 62-POL PBT-GF20 GRAU	STECKERGEHAEUSE
503	10678458	2	PROTECTING CAP MCP BUCHSENGEHAE	SCHUTZKAPPE
504	605613908	1	PLUG BODY 4-POL	STECKERKOERPER
505	10342517	3	PLUG SHELL 2 13A TH.PLAST SW	STECKERGEHAEUSE
506	10678452	1	PLUG SHELL 62-POL PBT-GF20 SCH	STECKERGEHAEUSE
507	602331308	2	HOUSING 4-POL	GEHAEUSE

Pos.	Item	Quantity	Description	Bezeichnung
508	605007908	1	APPLIANCE SOCKET 2POL+PE	GERAETESTECKDOSE
509	10099861	1	HOUSING 12-POL	GEHAEUSE
510	10099866	1	CONTACT RETAINING PIN JPT 12 POL	KONTAKTSICHERUNGSSTIFT
511	602208608	2	ATTACHABLE SLEEVE HOUSING FASTIN-F	STECKHUELSENGEHAEUSE
512	602208908	1	FLAT PLUG HOUSING FASTIN-FASTON	FLACHSTECKERGEHAEUSE
513	10412433	1	PLUG SHELL 12-POL 13A TH.PLAST SW	STECKERGEHAEUSE
514	10216772	1	CONTACT LOCK DT 12 POLIG TH.PLAST G	KONTAKTVERRIEGELUNG
515	605210608	1	APPLIANCE SOCKET 2-POL+PE SPF	GERAETESTECKDOSE
516	962196208	1	CONNECTOR FOR FUEL HEATING	STECKER FUER DIESELHEIZUN
517	6202637	2	PLUG 2POL	STECKER
518	603020508	2	HEATSHRINK PIECE 24	SCHRUMPFFORMTEIL
519	920381108	1	PLUG	STECKER
520	6004195	1	PLUG SHELL 2-POL	STECKERGEHAEUSE
521	605212708	1	PLUG SOCKET BODY 3-POL	STECKDOSENKOERPER
522	927996308	1	PLUG	STECKER
523	10342518	3	SOCKET 2-POL	STECKDOSE
524	10874331	1	PROTECTING CAP JPT	SCHUTZKAPPE
525	10342519	3	CONTACT LOCK DT 2 POLIG	KONTAKTVERRIEGELUNG
526	605215508	2	CLAMP SURE-SEAL	KLAMMER
527	610701108	1	PROTECTING CAP	SCHUTZKAPPE
528	605212808	2	MOULDING 317-1397-000 SUR	FORMTEIL
529	7368241	2	CONTACT LOCK 2-POL	KONTAKTVERRIEGELUNG
530	10353004	1	DUMMY PLUG DT 2 POLIG PA GRAU	BLINDSTECKER
531	10429638	1	PLUG SHELL 2-POL 13A TH.PLAST SW	STECKERGEHAEUSE
532	10041876	2	HOLDER DT/DTM	HALTER
669	10100062	4	CONNECTOR PIN 0,75-2,0MM2 CuNi	STECKERSTIFT
670	10100063	11	PLUG BUSHING 0,75-2,0MM2 Cu	STECKERBUCHSE
709	10872033	2	CABLE SLEEVE 16,0-4,0/16/1,78	KABELTUELLE
724	10493493	6	SLEEVE CONTACT 1,0-2,5MM2 CuNiSi	BUCHSENKONTAKT
726	10493495	67	SLEEVE CONTACT 0,5-1,0MM2 CuNiSi	BUCHSENKONTAKT
727	10493496	4	SLEEVE CONTACT 1,0-1,5MM2 CuNiSi	BUCHSENKONTAKT
753	10800631	4	SLEEVE CONTACT 0,5-1,0MM2 CuNiSi	BUCHSENKONTAKT
758	11080881	4	RECEPTACLE 6,3X0,5-1,0 VERZINNT	STECKHUELSE
766	602305605	2	CABLE LUG AEHNL.DIN 46237 6,5/6-10MM² V	KABELSCHUH
801	602330508	6	SINGLE STRAND SEALING 2,2-3,0MM	EINZELADERABDICHTUNG
802	602330808	6	SINGLE STRAND SEALING 1,2-2,1MM BLAU	EINZELADERABDICHTUNG
806	602331108	41	STOPPER PLUG 3,6MM SILIKON WEIS	BLINDSTOPFEN
807	602329208	2	STOPPER PLUG AMP JPT-SERIE NA	BLINDSTOPFEN
811	692404908	2	STOPPER PLUG	BLINDSTOPFEN
813	605619708	4	SINGLE STRAND SEALING 2	EINZELADERABDICHTUNG
823	7368253	3	STOPPER PLUG DEUTSCH GROESSE	BLINDSTOPFEN
830	10014387	71	SINGEL SEAL 1,0-1,5MM2	EINZELDICHTUNG
842	10800046	6	STOPPER PLUG DEUTSCH-STECKER	BLINDSTOPFEN
996	965622108	125	LETTERING WIRE	BESCHRIFTUNG ADER
998	965622208	1	LETTERING WIRING HARNESS	BESCHRIFTUNG KABELBAUM
2223	11622890	2	FLAT PLUG 0,5-1,0MM2	FLACHSTECKER
2807	12102630	3.9	ELECTR.CABLE 10	KFZ-LEITUNG
2809	12102632	3.9	ELECTR.CABLE 16	KFZ-LEITUNG
2812	12102635	6.6	ELECTR.CABLE 25	KFZ-LEITUNG

Pos.	Item	Quantity	Description	Bezeichnung
5	11840113	5.23	BUS LINE 2 X 0,5	BUSLEITUNG
7	11840113	0.17	BUS LINE 2 X 0,5	BUSLEITUNG
8	11840113	5.86	BUS LINE 2 X 0,5	BUSLEITUNG
9	11840113	0.17	BUS LINE 2 X 0,5	BUSLEITUNG
10	11840113	5.86	BUS LINE 2 X 0,5	BUSLEITUNG
11	11840113	0.17	BUS LINE 2 X 0,5	BUSLEITUNG
12	11840113	3.86	BUS LINE 2 X 0,5	BUSLEITUNG
13	11840113	0.17	BUS LINE 2 X 0,5	BUSLEITUNG
14	11840113	0.33	BUS LINE 2 X 0,5	BUSLEITUNG
15	12100216	5.3	DATA LINE 2 X 1,5 FEP SPF	DATENLEITUNG
16	12100217	5.3	DATA LINE 2 X 1 FEP SPF	DATENLEITUNG
17	12100215	5.4	DATA LINE 3 X 1 FEP SPF	DATENLEITUNG
18	12100217	5.4	DATA LINE 2 X 1 FEP SPF	DATENLEITUNG
19	12100217	5.4	DATA LINE 2 X 1 FEP SPF	DATENLEITUNG
121	602300108	7	CONTACT 1-2,5MM2	KONTAKT
125	602300308	29	CONTACT 0,5-1MM2	KONTAKT
202	11082602	1.95	INSULATING HOSE DN6X0,5 PUR SPF	ISOLIERSCHLAUCH
203	11082603	5.52	INSULATING HOSE DN8X0,65 PUR SPF	ISOLIERSCHLAUCH
206	11082606	0.33	INSULATING HOSE DN14X0,65 PUR SPF	ISOLIERSCHLAUCH
211	11118396	1	PROTECTIVE HOSE 30MM AL-PET FOLIE	SCHUTZSCHLAUCH
225	11124208	1.93	CABLE CONDUIT DN25X0,6 PUR SPF	KABELSCHLAUCH
226	11124209	4.36	CABLE CONDUIT DN30X0,6 PUR SPF	KABELSCHLAUCH
232	603012608	4.39	INSULATING HOSE DN14X0,8 -60°C+250°C	ISOLIERSCHLAUCH
298	10441166	0.4	HEATSHRINK SLEEVING 11,6/2,5X2,29 POLY	SCHRUMPFSCHLAUCH
305	10870540	75.4	ELECTR.CABLE 1,0	KFZ-LEITUNG
345	10870539	24.6	ELECTR.CABLE 0,75	KFZ-LEITUNG
370	12100217	4.65	DATA LINE 2 X 1 FEP SPF	DATENLEITUNG
371	12100217	5.15	DATA LINE 2 X 1 FEP SPF	DATENLEITUNG
372	12100217	4.65	DATA LINE 2 X 1 FEP SPF	DATENLEITUNG
373	12100215	6	DATA LINE 3 X 1 FEP SPF	DATENLEITUNG
500	923512208	20	CABLE MARKER	KABELMARKER
501	602300208	2	PLUG SHELL 18-POL	STECKERGEHAEUSE
502	10342517	2	PLUG SHELL 2 13A TH.PLAST SW	STECKERGEHAEUSE
503	6003248	1	PLUG 4-POL 13A	STECKER
504	7368246	1	CONTACT LOCK DT-STECKDOSE 4-P	KONTAKTVERRIEGELUNG
505	11060619	2	BUSHING HOUSING 2-POL 20A	BUCHSENGEHAEUSE
506	10813633	2	PLUG SHELL MCON MCP1,2 PA 66-GF30	STECKERGEHAEUSE
507	692406308	1	PLUG DIN 72585 4-POL POLYBUTOLEN SPF	STECKER
508	11341840	1	BUSHING HOUSING 4-POL PBT SCHWARZ	BUCHSENGEHAEUSE
509	11342208	1	BUSHING HOUSING 2-POL BL	BUCHSENGEHAEUSE
510	11342255	1	PLUG 2-POL SW	STECKER
511	10342518	3	SOCKET 2-POL	STECKDOSE
512	11342257	1	PLUG 4-POL SW	STECKER
513	11342259	1	PLUG 4-POL VIOLETT	STECKER
514	11000394	1	PLUG SHELL HP PBT-GF15	STECKERGEHAEUSE
515	6003168	1	PLUG 3-POL	STECKER
516	11060618	3	PROTECTING CAP 180°	SCHUTZKAPPE
517	10342519	2	CONTACT LOCK DT 2 POLIG	KONTAKTVERRIEGELUNG
518	7368241	2	CONTACT LOCK 2-POL	KONTAKTVERRIEGELUNG
519	11491349	1	PROTECTING CAP 180°	SCHUTZKAPPE
520	12693951	1	CONTACT LOCK 2-POL PBT GF30	KONTAKTVERRIEGELUNG
521	6205239	1	SOCKET 3-POL	STECKDOSE
522	6205242	1	CONTACT LOCK DT-STECKER 3-POL	KONTAKTVERRIEGELUNG
523	692406008	1	TERMINAL HOUSING DIN 72585 APD POLY	ENDGEHAEUSE
643	602339408	2	SLEEVE CONTACT DIN 72585 0,5-1MM2 SP	BUCHSENKONTAKT
669	10100062	2	CONNECTOR PIN 0,75-2,0MM2 CuNi	STECKERSTIFT
670	10100063	6	PLUG BUSHING 0,75-2,0MM2 Cu	STECKERBUCHSE
717	10300946	4	SLEEVE CONTACT 0,50-1MM2MM2 Cu	BUCHSENKONTAKT
726	10493495	4	SLEEVE CONTACT 0,5-1,0MM2 CuNiSi	BUCHSENKONTAKT
727	10493496	2	SLEEVE CONTACT 1,0-1,5MM2 CuNiSi	BUCHSENKONTAKT

Pos.	Item	Quantity	Description	Bezeichnung
740	7369458	4	PIN CONTACT 0,5-1,0MM2 CU	STIFTKONTAKT
754	10813644	9	SLEEVE CONTACT 0,5-0,75MM2 CuNiSi	BUCHSENKONTAKT
788	11342253	9	SLEEVE CONTACT 0,75-1,0MM2 SILBER	BUCHSENKONTAKT
789	11622989	4	SLEEVE CONTACT 0,5-1,0MM2 CuNiSi	BUCHSENKONTAKT
802	602330808	4	SINGLE STRAND SEALING 1,2-2,1MM BLAU	EINZELADERABDICHTUNG
816	605619808	2	SINGLE STRAND SEALING DIN 72585 15BL	EINZELADERABDICHTUNG
817	692405808	2	STOPPER PLUG DIN 72585 4 SPF	BLINDSTOPFEN
823	7368253	1	STOPPER PLUG DEUTSCH GROESSE	BLINDSTOPFEN
828	10424625	9	SINGLE STRAND SEALING 1,4-2,1MM VMQ	EINZELADERABDICHTUNG
830	10014387	6	SINGEL SEAL 1,0-1,5MM2	EINZELDICHTUNG
836	10813642	1	STOPPER PLUG MCON 1,23,55MM VMQ 60	BLINDSTOPFEN
844	10870403	1	STOPPER PLUG 3,9-4,1MM SILIKON-KAUT	BLINDSTOPFEN
845	10870402	9	SINGEL SEAL MLK 1,2 ELA SILIKON-KAUT	EINZELDICHTUNG
996	965622108	52	LETTERING WIRE	BESCHRIFTUNG ADER
998	965622208	1	LETTERING WIRING HARNESS	BESCHRIFTUNG KABELBAUM
2253	11000401	3	PLUG BUSHING 0,75-1,0MM2 CuNuSi	STECKERBUCHSE
2998	96014807	8	MACHINING CAN- STUETZP	BEARBEITUNG

Pos. 30

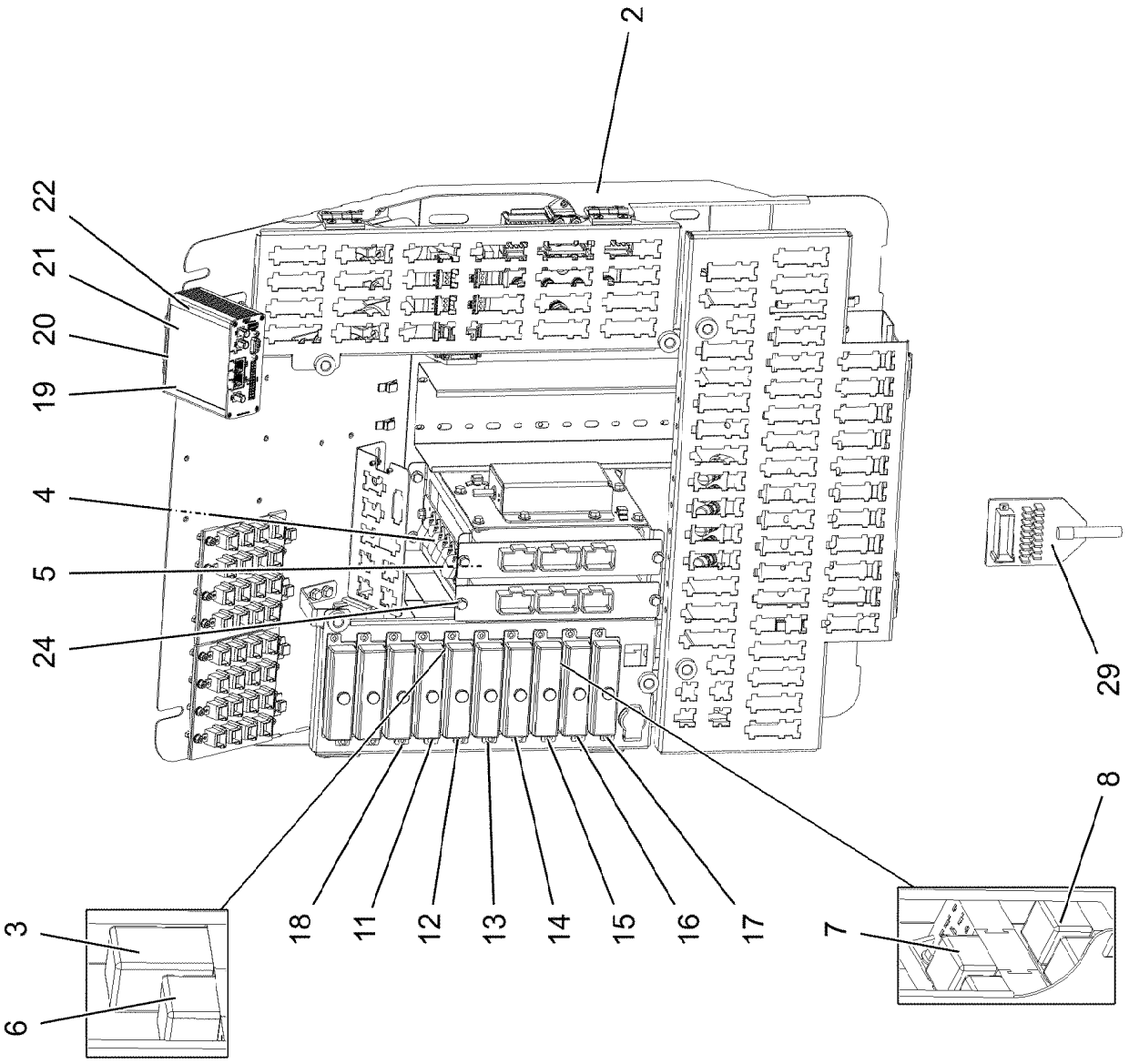

Pos.	Item	Quantity	Description	Bezeichnung
2	96059658	1	BASE ASSEMBLY CPL. ⇨ ❑ 499	GRUNDAUFBAU KPL.
3	10877999	1	TIME RELAY 60S 24V	ZEITRELAIS
4	968015808	1	PRE-ASSEMBLY MOUNTING UNIT ⇨ ❑ 507	MONTAGEEINHEIT VORM.
5	96069052	2	UNIVERSAL INPUT-OUTPUT MODULE LSB- ⇨ ❑ 509	UNIVERSAL EIN-AUSGANGSMO
6	630121508	1	CENTER-ZERO RELAY 24V 10A SPF	WECHSLERRELAIS
7	630105108	5	RELAY 24V/1S 26X26X24MM SPF	RELAIS
8	630105408	1	RELAY 24V/1W 26X26X24MM SPF	RELAIS
11	604007708	3	FLAT FUSE LINK 3A	FLACHSICHERUNGSEINSATZ
12	604006908	9	FLAT FUSE LINK 5A 32	FLACHSICHERUNGSEINSATZ
13	604007008	14	FLAT FUSE LINK 7,5A	FLACHSICHERUNGSEINSATZ
14	604007108	14	FLAT FUSE LINK 10A 32	FLACHSICHERUNGSEINSATZ
15	604007208	6	FLAT FUSE LINK 15A	FLACHSICHERUNGSEINSATZ
16	604007308	9	FLAT FUSE LINK 20A	FLACHSICHERUNGSEINSATZ
17	604007608	1	FLAT FUSE LINK 25A	FLACHSICHERUNGSEINSATZ
18	602735508	42	INSERTION BRIDGE	EINLEGEBRUECKE
19	12104397	1	MODEM TELEMETRIEMODUL SPF	MODEM
20	12105779	1	ADAPTER CABLE AWG22+CAN-0,2M	ADAPTERKABEL
21	408311208	4	PAN-HEAD SCREW ISO 7045 M2,5X12 4.8 A2	FLACHKOPFSCHRAUBE
22	425100408	4	TOOTH LOCK WASHER DIN 6797 A 2,7	ZAHNSCHEIBE
24	10875503	8	HEX SCREW EN 1665 M5X10 10.9 480H SPF	SECHSKANTSCHRAUBE
29	660024508	1	ADAPTOR 18-POL SPF	ADAPTER
30	10472995	1	CONNECTING LINE 7X0,25-10,068M PUR	VERBINDUNGSLEITUNG

Pos.	Item	Quantity	Description	Bezeichnung
1	96059659	1	CABLES, BASIC CONSTRUCTION CPL S400 ⇨ ❑ 500	DRAEHTE GRUNDAUFBAU KPL.
2	96025348	1	BASE ASSEMBLY ⇨ ❑ 501	GRUNDAUFBAU
3	602093514	2	LOCKING SET SUB-D 4-40UNC 8m	VERRIEGELUNGSSATZ

Pos.	Item	Quantity	Description	Bezeichnung
2	96059660	1	BASIC WIRING CONST.PRE-ASSEMB. S400	DRAEHTE GRUNDAUFBAU VO
228	11124211	0.55	CABLE CONDUIT DN40X0,6 PUR SPF	KABELSCHLAUCH
229	11124212	0.5	CABLE CONDUIT DN50X0,6 PUR SPF	KABELSCHLAUCH
261	12104809	50	CABLE TIE 3,6X142-SCHWARZ PA66 SPF	KABELBINDER
268	12104811	50	CABLE TIE 2,5X99-SCHWARZ PA66 SPF	KABELBINDER
269	12104810	50	CABLE TIE 3,6X203-SCHWARZ PA66 SPF	KABELBINDER
501	10047000	10	PLUG 8-POL	STECKER
502	602323308	52	FLAT PLUG HOUSING 18-POL	FLACHSTECKERGEHAEUSE
503	602325608	6	FLAT PLUG HOUSING JPT	FLACHSTECKERGEHAEUSE
504	630122908	13	PLUG BASE	RELAISSTECKSOCKEL
505	602336008	6	PLUG SHELL 14-POL	STECKERGEHAEUSE
506	602325508	1	HOUSING 6-POL	GEHAEUSE
507	602300208	8	PLUG SHELL 18-POL	STECKERGEHAEUSE
508	11067930	2	PLUG SHELL 18-POL	STECKERGEHAEUSE
509	11067932	9	FLAT PLUG HOUSING 18-POL	FLACHSTECKERGEHAEUSE
510	10047001	9	PLUG 8-POL	STECKER
511	10046999	10	PLUG 8-POL	STECKER
512	10099863	2	HOUSING 15-POLE	GEHAEUSE
513	10099867	2	CONTACT RETAINING PIN JPT 15 POLE	KONTAKTSICHERUNGSSTIFT
514	96008399	1	COTTER PIN 36POL	STECKER VORM.
515	602331308	26	HOUSING 4-POL	GEHAEUSE
516	602337608	1	RETAINER HOUSING 4-POL 19A	AUFNAHMEGEHAEUSE
517	10099856	2	HOUSING 21-POLE	GEHAEUSE
518	10099868	2	CONTACT RETAINING PIN JPT 21 POL	KONTAKTSICHERUNGSSTIFT
519	602301408	2	HOUSING 8-POL	GEHAEUSE
520	602209708	2	ATTACHABLE SLEEVE HOUSING 2-POL	STECKHUELSENGEHAEUSE
521	10099864	2	HOUSING 18-POL	GEHAEUSE
522	602338208	2	SECURING PIN FOR JPT PLUG	SICHERUNGSSTIFT
523	602335908	4	PLUG SHELL 4-POL	STECKERGEHAEUSE
524	602208608	1	ATTACHABLE SLEEVE HOUSING FASTIN-F	STECKHUELSENGEHAEUSE
525	602208708	1	FLAT PLUG HOUSING FASTIN-FASTON	FLACHSTECKERGEHAEUSE
526	5603876	1	LINE CONNECTOR	LEITUNGSVERBINDER
527	602338608	1	FEMALE PLUG 9-POLE	BUCHSENSTECKER
528	10021571	1	PLUG SHELL 8-POL	STECKERGEHAEUSE

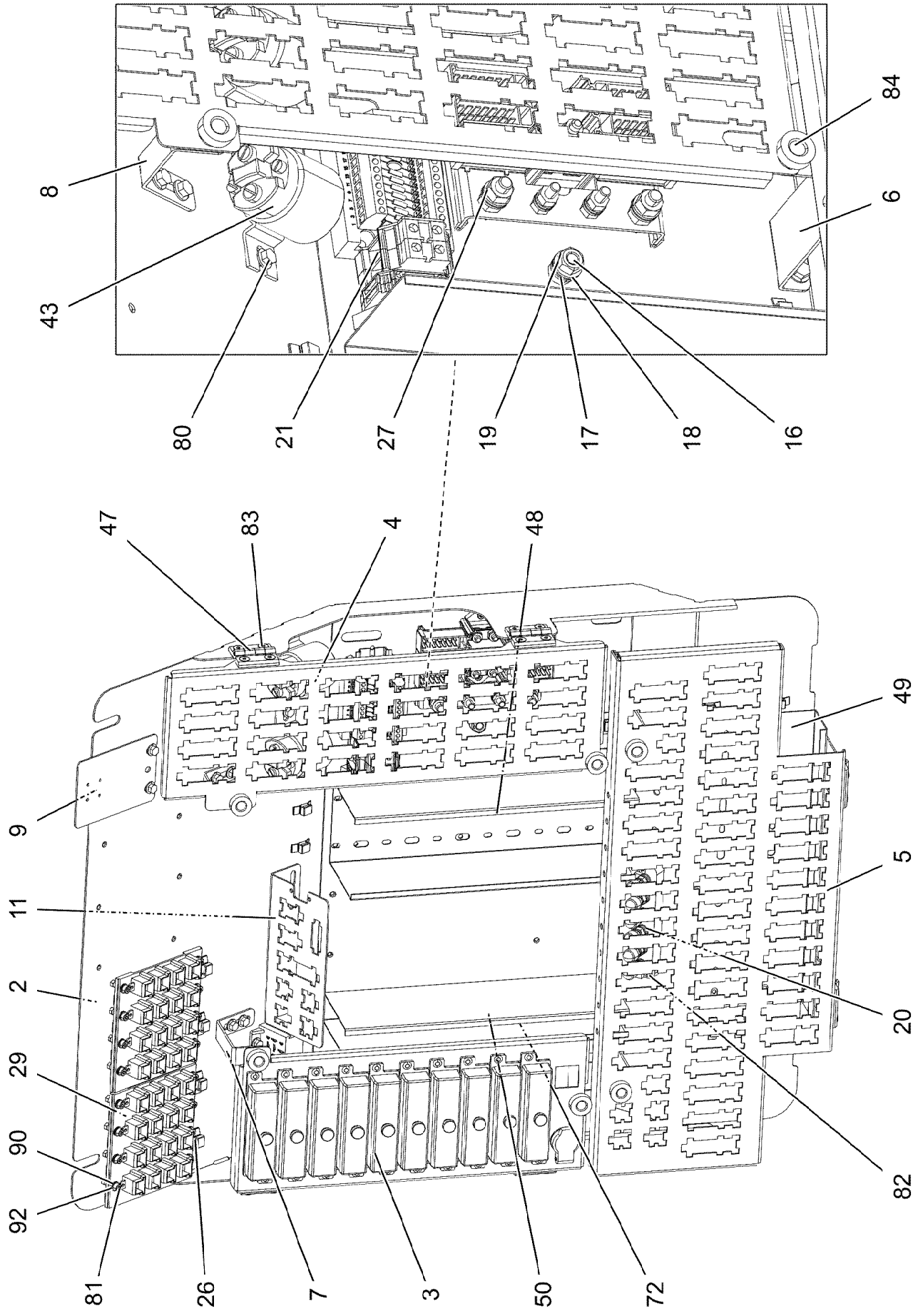
8
43
80
21
27
19
17
18
16
84
6
47
83
4
48
49
9
11
2
29
90
92
81
26
7
3
50
72
5
20
82

Pos.	Item	Quantity	Description	Bezeichnung
2	967608708	1	ASSEMBLY PLATE PRE-ASS.	MONTAGEBLECH VORM.
3	96004143	1	CONNECTION PLAN	SICHERUNGSBELEGUNG
4	97010811	1	PLUG PLATE 1.5X449X175 DC01	STECKERBLECH
5	97010812	1	PLUG PLATE 1.5X594X283 DC01	STECKERBLECH
6	97010814	2	RETAINER PLATE 2X192X41 DC01 FE//ZNNI	HALTERBLECH
7	97015049	1	RETAINER PLATE 2X138X18 DC01 FE//ZNNI	HALTERBLECH
8	97010815	1	RETAINER PLATE 2X121X18 DC01	HALTERBLECH
9	97175640	1	HOLDER 2X194X119 DC01 FE//ZNNI8//CN//T	HALTER
11	97016796	1	PLATE 1.5X156X117 DC01	BLECH
16	11651767	1	HEX SCREW ISO 4017 M8X20 8.8 480H SPF	SECHSKANTSCHRAUBE
17	12103465	2	WASHER ISO 7089 8 300HV ZNNI-480H SPF	SCHEIBE
18	425221108	1	SERRATED LOCK WASHER DIN 6798 J 8.4	FAECHERSCHEIBE
19	11693875	2	HEX NUT ISO 4032 M8 8 480H SPF	SECHSKANTMUTTER
20	922648308	1	TERMINAL BOARD PRE-ASS. ⇨ ❑ 503	KLEMMBRETT VORM.
21	968077108	1	TERMINAL STRIP ⇨ ❑ 504	KLEMMENLEISTE
26	11492315	11	CABLE CLIP HOLDER 8,1X-SCHWARZ PA66	KABELBINDERHALTER
27	926891108	1	GROUND RAIL ⇨ ❑ 506	VERTEILER MASSE
29	10027448	2	CURRENT SOURCE LSB SPF	STROMQUELLE
43	11656191	2	PERFORMANCE RELAY 75A	LEISTUNGSRELAIS
47	704258208	6	HINGE 20X20X40/180° GD-ZN SW GEPULV	SCHARNIER
48	601413908	0.28	CABLE CHANNEL 80X80/2000	KABELKANAL
49	601407008	0.308	CABLE CHANNEL 40X120/2000	KABELKANAL
50	260020702	0.28	WIRING DUCT 80X25/2000 HARD-PVC	VERDRAHTUNGSKANAL
72	704232308	18	BLIND RIVET 4,0X10,5	BLINDNIET
80	10875503	25	HEX SCREW EN 1665 M5X10 10.9 480H SPF	SECHSKANTSCHRAUBE
81	10876395	18	SOCKET HEAD SCREW ISO 4762 M4X12 8.8	ZYLINDERSCHRAUBE
82	10876384	2	PAN-HEAD SCREW ISO 7045 M5X16 4.8 480	FLACHKOPFSCHRAUBE
83	10875550	24	COUNTERSUNK SCREW DIN 7991 M5X12 8	SENKSCHRAUBE
84	10449664	6	KNURLED SCREW M5X10 PA6	RAENDELSCHRAUBE
90	10875645	16	WASHER ISO 7089 4 200HV 480H SPF	SCHEIBE
92	425220708	16	SERRATED LOCK WASHER DIN 6798 J 4.3	FAECHERSCHEIBE

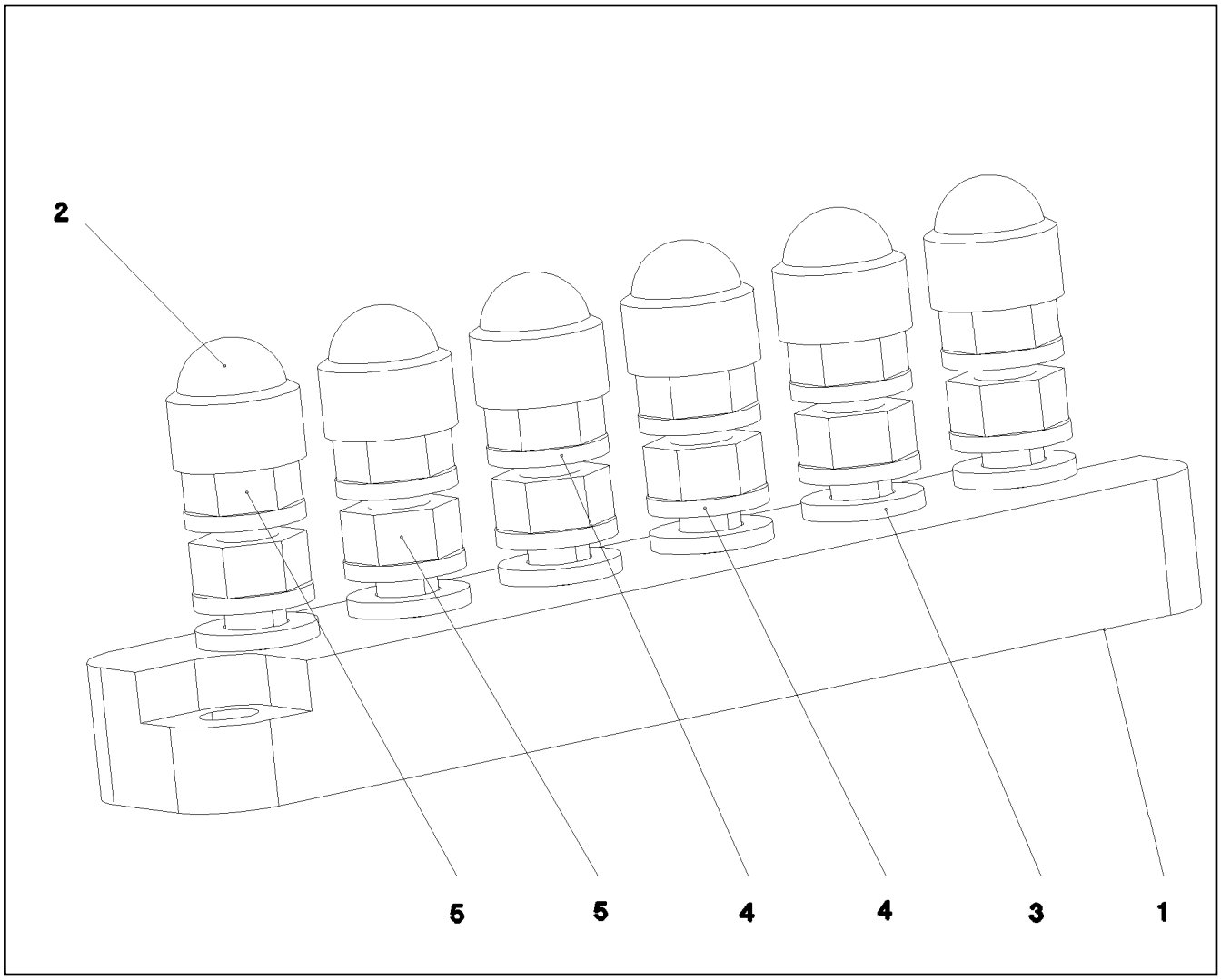

Pos.	Item	Quantity	Description	Bezeichnung
1	604412408	1	CLAMPING BOARD 6XM6	KLEMMBRETT
2	779020108	6	PROTECTING CAP SW10	SCHUTZKAPPE
3	10197771	6	WASHER ISO 7089 6 200HV ZNNI-480H SPF	SCHEIBE
4	12102694	12	SERRATED LOCK WASHER DIN 6798 A 6.4	FAECHERSCHEIBE
5	10197764	12	HEX NUT ISO 4032 M6 10 ZNNI-480H SPF	SECHSKANTMUTTER

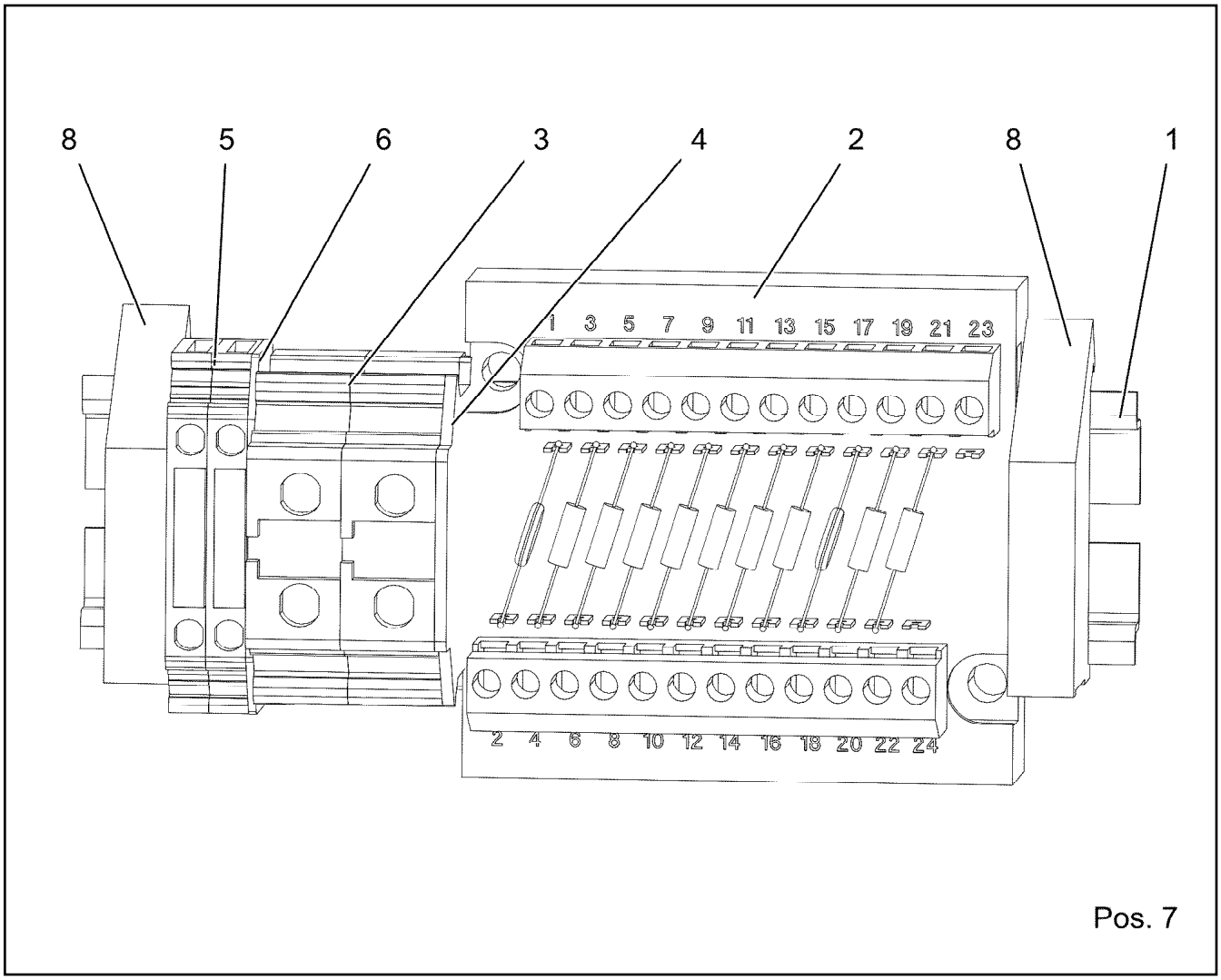

Pos.	Item	Quantity	Description	Bezeichnung
1	602106708	0.135	TOP HAT RAIL 35X27X7,3X1	HUTSCHIENE
2	966157408	1	INSERTION MODULE 12POLIG ⇨ ❑ 505	BESTUECKUNGSMODUL
3	636107901	2	TERMINAL/CLAMP	KLEMME
4	636109301	1	COVER	DECKEL
5	602761608	2	TERMINAL MARKER 0,2-2,5MM²	MESSERTRENNKLEMME
6	602761708	1	COVER	DECKEL
7	602762908	1	IDENTIFICATION STRIPS	BEZEICHNUNGSSTREIFEN
8	602794608	2	END ANGLE	ENDWINKEL

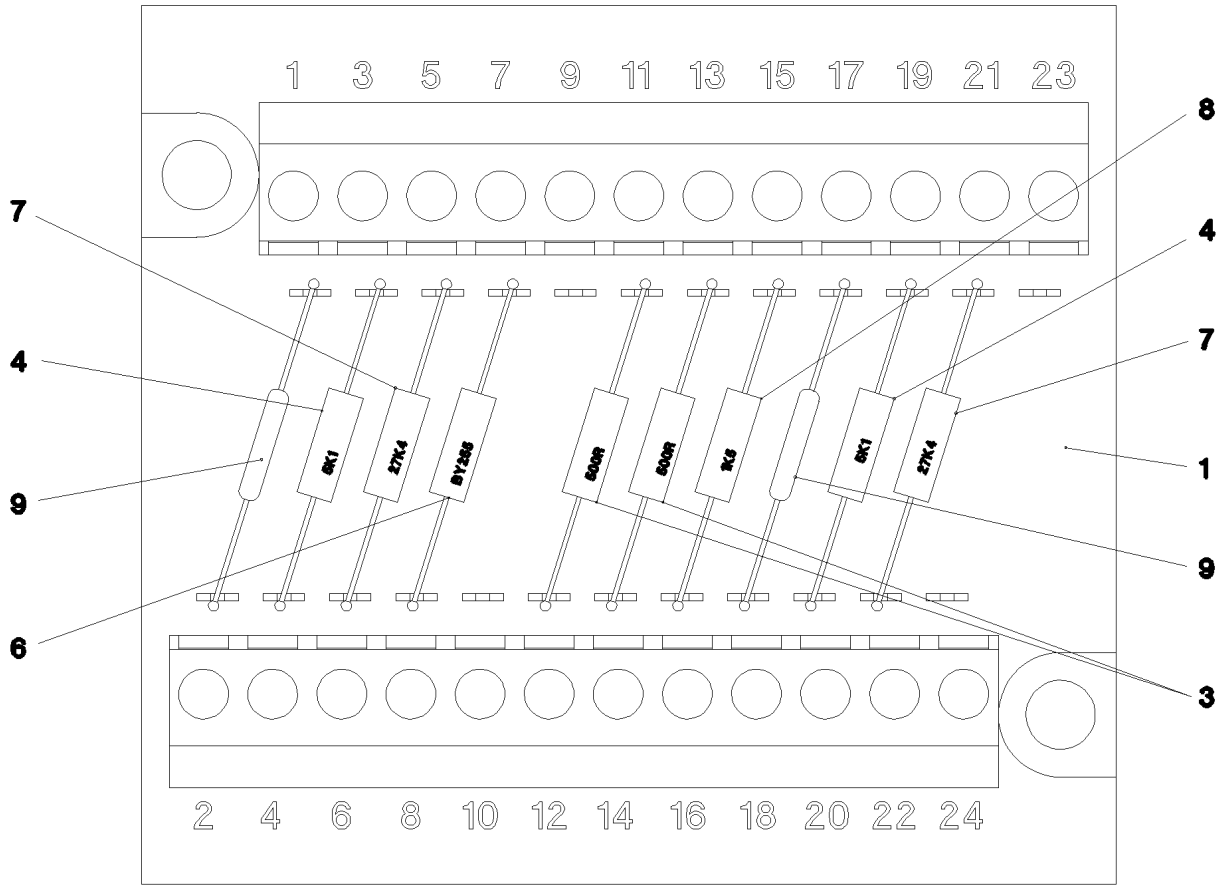

Pos.	Item	Quantity	Description	Bezeichnung
1	660008108	1	VARIATIONAL COMPONENT 12POL	VARIATIONSBAUSTEIN
3	635051508	2	RESISTOR 500R 0.1% 3W SPF	WIDERSTAND
4	10489549	3	RESISTOR 5K1 1% 0.25W	WIDERSTAND
6	660014308	1	DIODE BY255P DO-13	DIODE
7	635042608	2	RESISTOR 27K4 1% 0.25W	WIDERSTAND MS
8	635058508	1	RESISTOR 1K 5% 3W SPF	WIDERSTAND
9	660011408	2	VARISTOR 19X4,4 RM7,5	VARISTOR
262	820000208	0.01	SOLDERING WIRE	LOETDRAHT

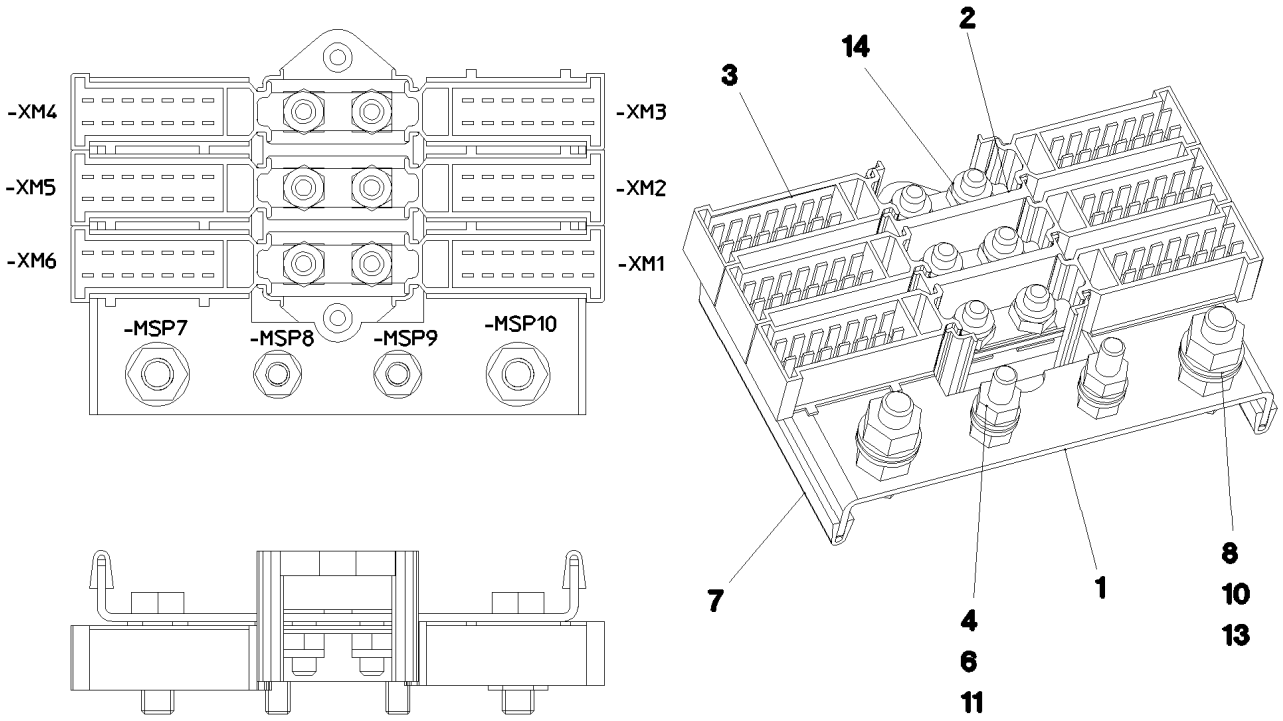

Pos. 12

Pos.	Item	Quantity	Description	Bezeichnung
1	97083880	1	PLATE 2X143X88 DC01 FE//ZNNI8//CN//T0	BLECH
2	602336408	1	CABLE CONNECTOR	KABELVERBINDER
3	602336508	6	PLUG SHELL 14-POL	STECKERGEHAEUSE
4	10197771	4	WASHER ISO 7089 6 200HV ZNNI-480H SPF	SCHEIBE
6	10197764	4	HEX NUT ISO 4032 M6 10 ZNNI-480H SPF	SECHSKANTMUTTER
7	262103908	0.16	EDGE PROTECTION 1-2X9,5X6,5	KANTENSCHUTZ
8	10197831	2	HEX SCREW ISO 4017 M8X25 8.8 ZNNI-480	SECHSKANTSCHRAUBE
10	10197760	4	HEX NUT ISO 4032 M8 10 ZNNI-480H SPF	SECHSKANTMUTTER
11	10197836	2	HEX SCREW ISO 4017 M6X25 8.8 ZNNI-480	SECHSKANTSCHRAUBE
12	602761408	10	NAME PLATE 20X8	BEZEICHNUNGSSCHILD
13	12103465	4	WASHER ISO 7089 8 300HV ZNNI-480H SPF	SCHEIBE
14	12102692	6	HEX NUT DIN 985 M6 8 ZNNI-480H SPF	SECHSKANTMUTTER

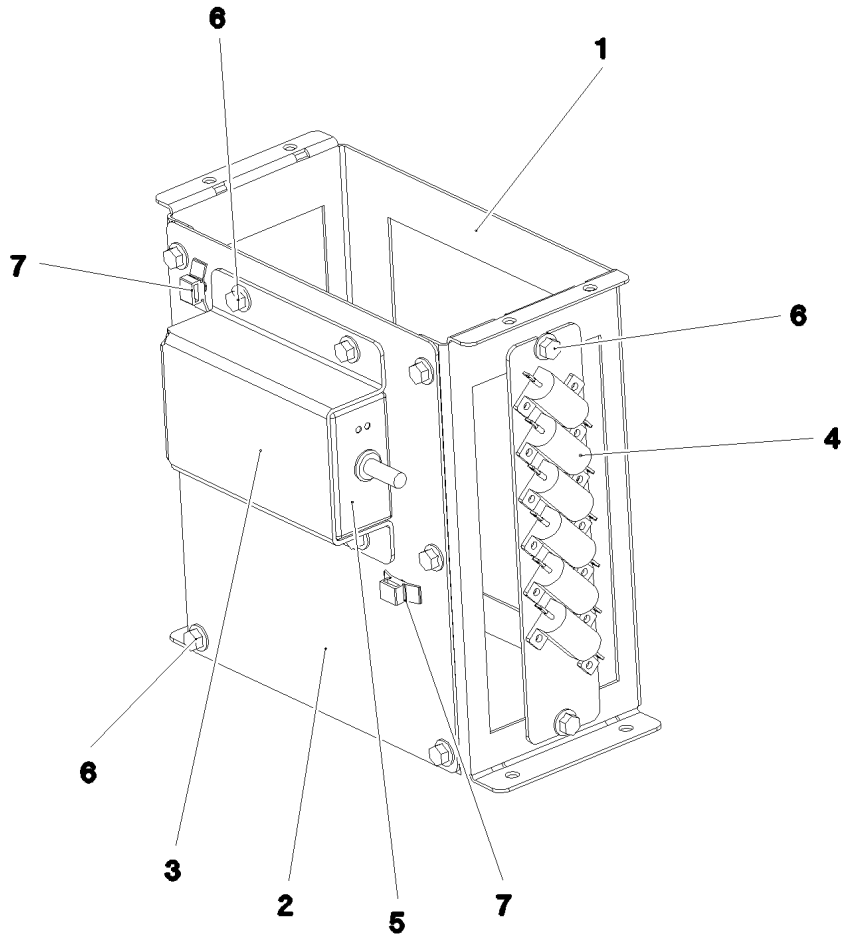

Pos.	Item	Quantity	Description	Bezeichnung
1	97015051	1	HOLDER 1.5X414X239 DC01 FE//ZNNI8//CN/	HALTER
2	97015052	1	PLATE 1.5X204X178 DC01 FE//ZNNI8//CN//T	BLECH
3	976536208	1	PLATE 2X162X142 ALMG3 H111	BLECH
4	966193108	1	RESISTANCE MODULE PRE-ASS. ⇨ ❑ 508	WIDERSTANDSMODUL VORM.
5	10340438	1	DATALOGGER LDL2 DIGITAL SPF	DATENLOGGER
6	10875503	12	HEX SCREW EN 1665 M5X10 10.9 480H SPF	SECHSKANTSCHRAUBE
7	11492315	2	CABLE CLIP HOLDER 8,1X-SCHWARZ PA66	KABELBINDERHALTER

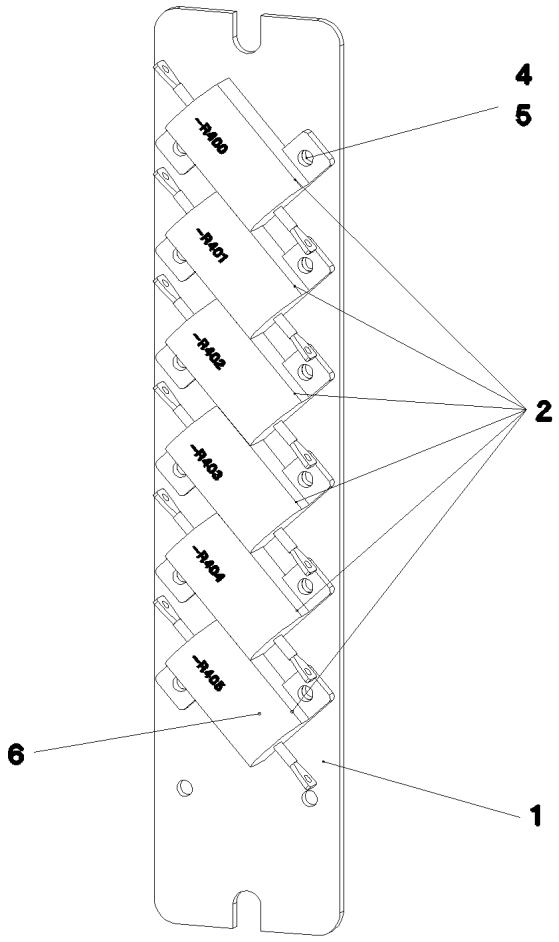

Pos. 3

Pos.	Item	Quantity	Description	Bezeichnung
1	978661408	1	PLATE 2X188X40 DC01 FE//ZNNI8//CN//T0	BLECH
2	635052808	6	RESISTOR 20R 1% 25W	WIDERSTAND
3	968986608	1	WIRING HARNESS W491	KABELSTRANG
4	704212108	12	BLIND RIVET 3,0X3,2-5,0	BLINDNIET
5	10875644	12	WASHER ISO 7089 3,5 200HV 480H SPF	SCHEIBE

Pos.	Item	Quantity	Description	Bezeichnung
100	12780040	1	INPUT/OUTPUT MODULE	EIN-/AUSGANGSMODUL
300	10288121	1	NAME PLATE 70X40 POLYESTER SPF	BEZEICHNUNGSSCHILD
301	11007853	1	LABELS 10X90 POLYESTER	ETIKETTEN

Pos.	Item	Quantity	Description	Bezeichnung
4	96045552	1	HYDRAULICS UPPER CARRIAGE LTR1100 ⇨ ❑ 511	HYDRAULIK OBERWAGEN

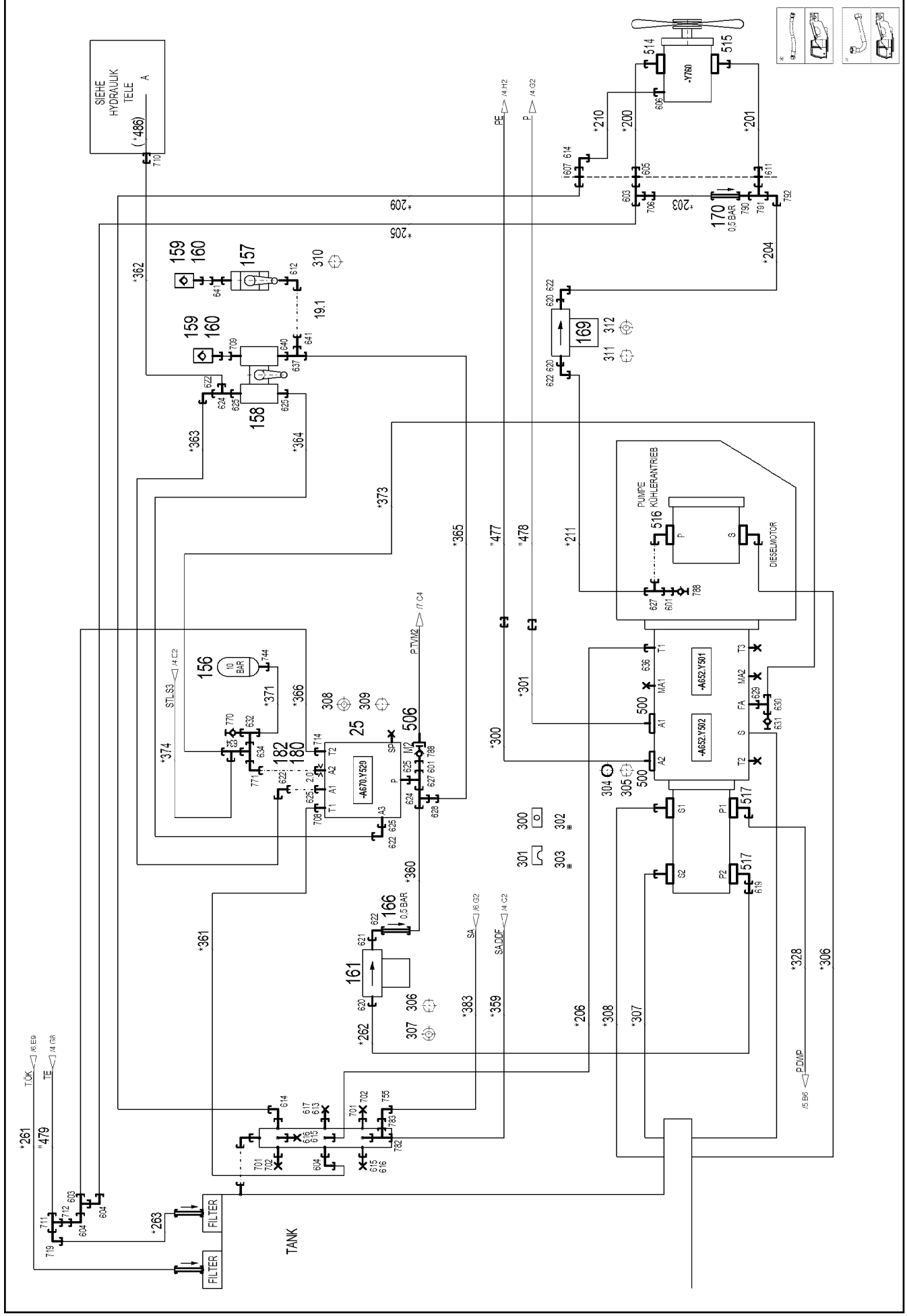

16.11.2023 006613	**etk_en_de_078966 LTR 1100**	511 (1/10)
LIEBHERR	**HYDRAULICS UPPER CARRIAGE** **HYDRAULIK OBERWAGEN**	**96045552**

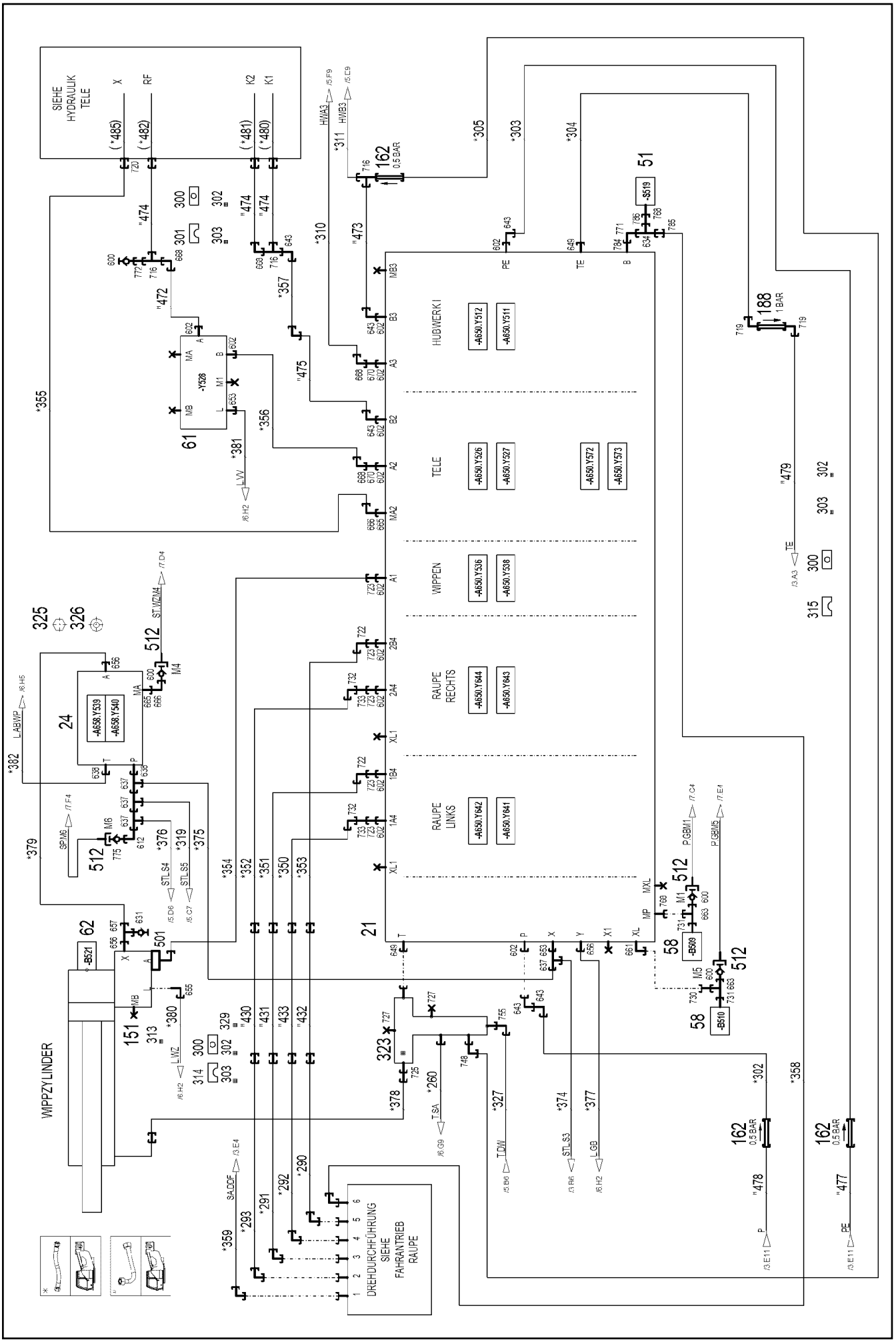

16.11.2023 006614	**etk_en_de_078966 LTR 1100**	512 (2/10)
LIEBHERR	**HYDRAULICS UPPER CARRIAGE** **HYDRAULIK OBERWAGEN**	**96045552**

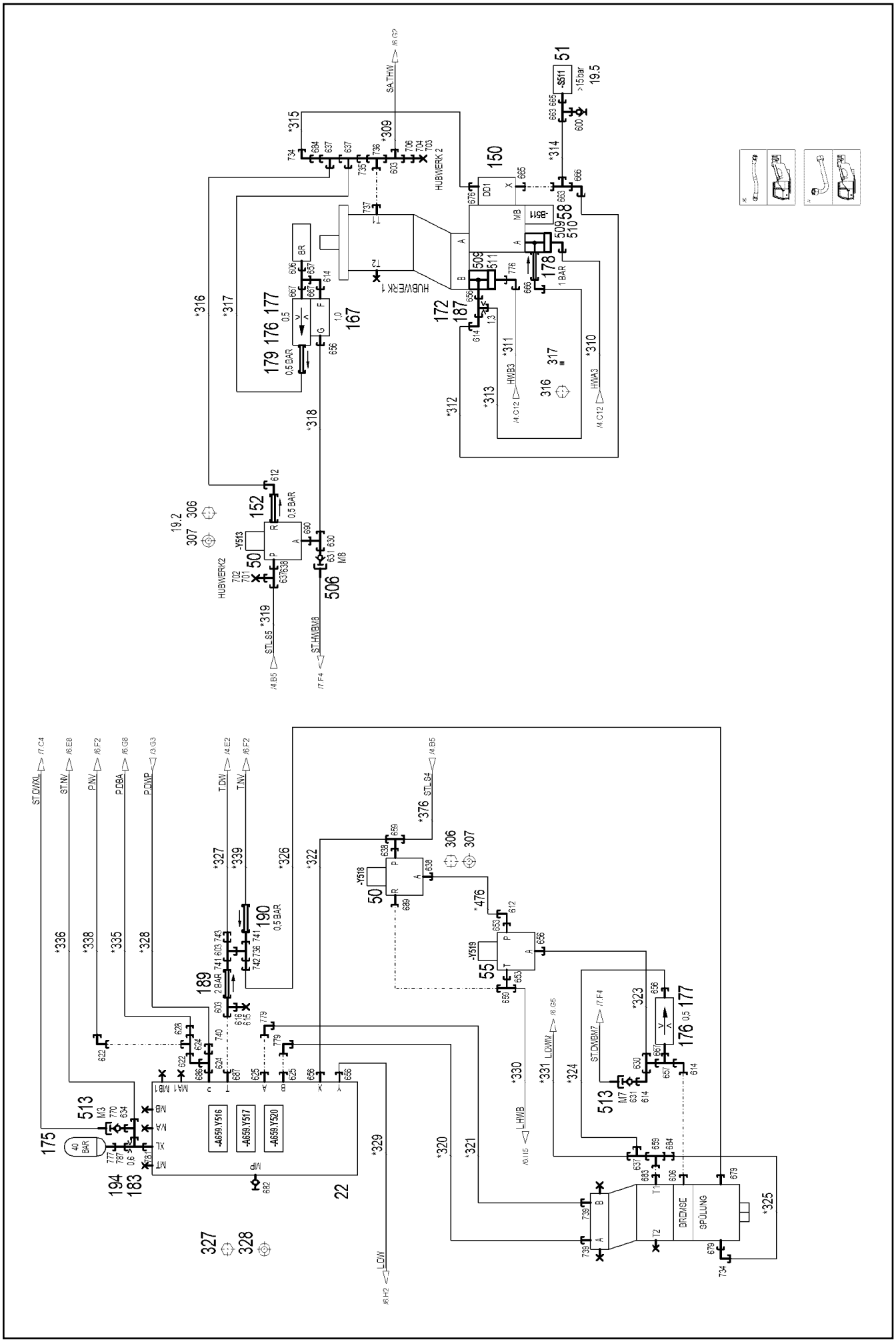

16.11.2023 006615 LIEBHERR	**etk_en_de_078966 LTR 1100** **HYDRAULICS UPPER CARRIAGE** **HYDRAULIK OBERWAGEN**	❑ 513 (3/10) **96045552**

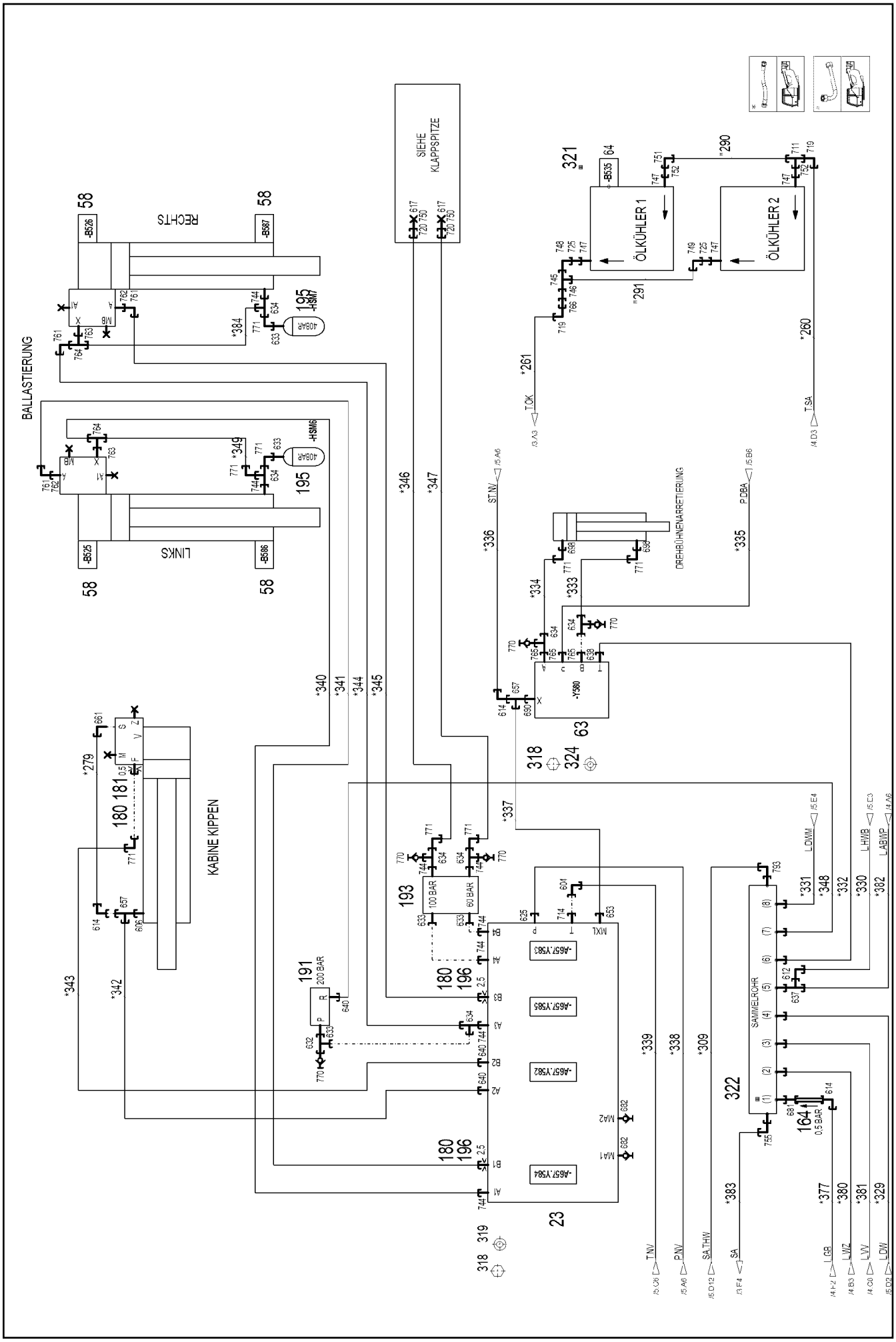

16.11.2023 006616 LIEBHERR	**etk_en_de_078966 LTR 1100** **HYDRAULICS UPPER CARRIAGE** **HYDRAULIK OBERWAGEN**	❑ 514 (4/10) **96045552**

19.3

185

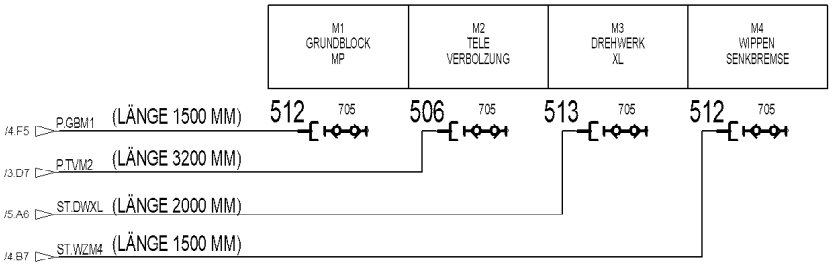
M1 GRUNDBLOCK MP
M2 TELE VERBOLZUNG
M3 DREHWERK XL
M4 WIPPEN SENKBREMSE
512
705
506
705
513
705
512
705
/4.F5
P.GBM1
(LÄNGE 1500 MM)
/3.D7
P.TVM2
(LÄNGE 3200 MM)
/5.A6
ST.DWXL
(LÄNGE 2000 MM)
/4.B7
ST.WZM4
(LÄNGE 1500 MM)

186

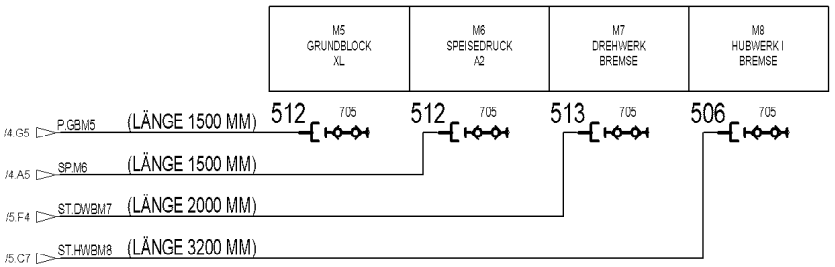
M5 GRUNDBLOCK XL
M6 SPEISEDRUCK A2
M7 DREHWERK BREMSE
M8 HUBWERK I BREMSE
512
705
512
705
513
705
506
705
/4.G5
P.GBM5
(LÄNGE 1500 MM)
/4.A5
SP.M6
(LÄNGE 1500 MM)
/5.F4
ST.DWBM7
(LÄNGE 2000 MM)
/5.C7
ST.HWBM8
(LÄNGE 3200 MM)

Pos.	Item	Quantity	Description	Bezeichnung
19	96023050	1	MECHANICAL AUXILIARIES	MECH.BEFESTIGUNGSTEILE
21	10665174	1	CONTROL BLOCK 385BAR 450L/MIN SPF ⇨ ❑ 521	STEUERBLOCK
22	10802090	1	CONTROL BLOCK 300BAR 56L/MIN SPF ⇨ ❑ 533	STEUERBLOCK
23	511307808	1	CONTROL PLATE ⇨ ❑ 538	STEUERLEISTE
24	511486908	1	CONTROL PLATE 60BAR ⇨ ❑ 540	STEUERLEISTE
25	10333672	1	CONTROL BLOCK 120BAR NG12 SPF ⇨ ❑ 543	STEUERBLOCK
50	511444408	2	DIRECTIONAL CONTROL VALVE 3/2 350BA ⇨ ❑ 546	WEGEVENTIL
51	510676908	2	PRESSURE SWITCH 10-100/400 BAR	DRUCKSCHALTER
55	511306608	1	CONTROL BLOCK ⇨ ❑ 547	STEUERBLOCK
58	10813738	7	PRESSURE SENSOR 0-400/400 BAR LSB PL:	DRUCKAUFNEHMER
61	10877219	1	CONTROL BLOCK pmax=320BAR SPF ⇨ ❑ 549	STEUERBLOCK
62	10816185	1	PRESSURE SENSOR 0-400/400 BAR LSB PL:	DRUCKAUFNEHMER
63	10663060	1	CONTROL BLOCK 250BAR SPF ⇨ ❑ 550	STEUERBLOCK
64	691183108	1	TEMPERATURE SENSOR -30/+130°C SPF	TEMPERATURGEBER
150	10355774	1	LOWERING BRAKE VALVE 420BAR 320L/MIN ⇨ ❑ 551	SENKBREMSVENTIL
151	10292670	1	LOWERING BRAKE VALVE 420BAR ZNNI SP ⇨ ❑ 552	SENKBREMSVENTIL
152	511460608	1	NON-RETURN VALVE 400BAR 0.5BAR CR6-F	RUECKSCHLAGVENTIL
156	510642008	1	DIAPHRAGM ACCUMULATOR 0,32L 10BAR	MEMBRANSPEICHER
(1)	10042323	1	PROTECTING CAP	SCHUTZKAPPE
(998)	10650501	1	REPAIR KIT	REPARATURSATZ
157	510697608	1	BALL VALVE BKH12-L-10 A3C ⇨ ❑ 554	KUGELHAHN
158	10333686	1	BALL VALVE COMBINATION DN13-G1/2 A3C	KUGELHAHNKOMBINATION
(7)	502933208	2	O-RING 10X2,2 NBR70	O-RING
(8)	726418408	4	O-RING 22X2 NBR90	O-RING
159	511505808	2	COUPLING SLEEVE B2 12-L	KUPPLUNGSMUFFE
(1)	571082508	1	SHEET GASKET 7,6X15,8X1 VITON	DICHTSCHEIBE
(2)	571082608	1	O-RING 17X2 FPM70	O-RING
(3)	571082708	1	O-RING 22X1,5 FPM70	O-RING
(4)	571082808	1	SUPPORTING RING 17,5X20,9X1 PTFE	STUETZRING
160	10466914	2	HEX CAP NUT RD32X3 SPF	VERSCHLUSSMUTTER
161	510670808	1	LINE FILTER ⇨ ❑ 555	LEITUNGSFILTER
162	511491708	3	NON-RETURN VALVE 420BAR 0.5BAR CR6-F	RUECKSCHLAGVENTIL
164	510412408	1	NON-RETURN VALVE 400BAR 0.5BAR CR6-F	RUECKSCHLAGVENTIL
166	510412008	1	NON-RETURN VALVE 420BAR 0.5BAR CR6-F	RUECKSCHLAGVENTIL
167	511497208	1	ONE-WAY RESTRICTOR	DROSSELRUECKSCHLAGVENTI
169	510674508	1	LINE FILTER	LEITUNGSFILTER
(1)	10037616	1	FILTER INSERT OEL 10µm ⇨ ❑ 556	FILTEREINSATZ
(2)	10035534	1	REPAIR KIT -E DF/LF	REPARATURSATZ
170	510413508	1	NON-RETURN VALVE 400BAR 0.5BAR CR6-F	RUECKSCHLAGVENTIL
172	953600608	1	CONNECTING LUG EL 10LX51	VERBINDUNGSSTUTZEN
175	510645108	1	DIAPHRAGM ACCUMULATOR 0,075L 40BAR	MEMBRANSPEICHER
176	510671108	2	FILTER CARTRIDGE 0,005m³/min 25µm	FILTERPATRONE
177	511062708	2	NOZZLE 0,5 M5X9 MS	DUESE
178	511432408	1	NON-RETURN VALVE 420BAR 1BAR CR6-F	RUECKSCHLAGVENTIL
179	511311808	1	NON-RETURN VALVE 400BAR 0.5BAR CR6-F	RUECKSCHLAGVENTIL
180	955919508	4	FITTING	VERSCHRAUBUNG

Pos.	Item	Quantity	Description	Bezeichnung
181	511062908	1	NOZZLE 0,5 M10X10 MS	DUESE
182	511062608	1	NOZZLE 2,0 M10X10 ST	DUESE
183	511062208	1	NOZZLE DIN 913 0,6 M10X10 MS	DUESE
185	979806608	1	SIGN 180X40X1 KLEBEFOLIE SPF	SCHILD
186	978461908	1	SIGN SPF	SCHILD
187	10101092	1	NOZZLE 1,3 M10X10 MS SPF	DUESE
188	511458608	1	NON-RETURN VALVE 250BAR 1BAR CR6-F	RUECKSCHLAGVENTIL
189	510410408	1	NON-RETURN VALVE 400BAR 2BAR CR6-F	RUECKSCHLAGVENTIL
190	511446908	1	NON-RETURN VALVE 400BAR 0.5BAR CR6-F	RUECKSCHLAGVENTIL
191	511417708	1	PRESSURE LIMITING VALVE pmax=700BAR ⇨ ❑ 558	DRUCKBEGRENZUNGSVENTIL
193	511450208	1	PRESSURE LIMITING VALVE pmax=350BAR	DRUCKBEGRENZUNGSVENTIL
(23)	710104008	2	SEALING RING DIN 7603 A18X22X1,5 CU	DICHTRING
194	971434408	1	CONNECTING LUG 472331408	VERBINDUNGSSTUTZEN
195	510643408	2	DIAPHRAGM ACCUMULATOR 0,32L 40BAR	MEMBRANSPEICHER
(998)	10650501	1	REPAIR KIT	REPARATURSATZ
196	511064108	2	NOZZLE 2,5 M10X10 ST	DUESE
300	5005219	18	LID PLATE DIN 3015-1 L-DP 5 W1-ZN	DECKPLATTE
301	602009208	26	CLAMP-HALF DIN 3015-1 L 5 R 38 PP SW	KLEMMHAELFTE
302	10876360	34	SOCKET HEAD SCREW ISO 4762 M6X65 8.8	ZYLINDERSCHRAUBE
303	602018008	36	CARRIER RAIL NUT DIN 3015-1 L TM M6 W1	TRAGSCHIENENMUTTER
304	510586708	2	O-RING ARP 568 37,69X3,53 NBR90	O-RING
305	10878799	8	HEX SCREW ISO 4017 M14X45 8.8 FLZN SP	SECHSKANTSCHRAUBE
306	11657360	8	HEX SCREW ISO 4017 M6X16 8.8 480H SPF	SECHSKANTSCHRAUBE
307	10875648	8	WASHER ISO 7093-1 6 200HV 480H SPF	SCHEIBE
308	11491889	4	WASHER ISO 7093-1 10 300HV FLZN SPF	SCHEIBE
309	10197730	4	HEX SCREW ISO 4017 M10X20 8.8 ZNNI-480	SECHSKANTSCHRAUBE
310	12102696	2	BUTTON HEAD SCREW AEHNL.ISO 7380-2	HALBRUNDKOPFSCHRAUBE
311	11140402	4	HEX SCREW ISO 4017 M5X12 8.8 480H SPF	SECHSKANTSCHRAUBE
312	10875643	4	WASHER ISO 7093-1 5 200HV 480H SPF	SCHEIBE
313	10875565	4	SOCKET HEAD SCREW ISO 4762 M12X40 8	ZYLINDERSCHRAUBE
314	7412067	6	CLAMP-HALF DIN 3015-1 L 5 R 40 PP SW	KLEMMHAELFTE
315	602009408	6	CLAMP-HALF DIN 3015-1 L 5 R 42 PP SW	KLEMMHAELFTE
316	12225301	4	HEX SCREW ISO 4014 M14X70 8.8 FLZN SP	SECHSKANTSCHRAUBE
317	10878822	4	SOCKET HEAD SCREW ISO 4762 M14X70 8	ZYLINDERSCHRAUBE
318	11651767	6	HEX SCREW ISO 4017 M8X20 8.8 480H SPF	SECHSKANTSCHRAUBE
319	12103465	4	WASHER ISO 7089 8 300HV ZNNI-480H SPF	SCHEIBE
321	570116908	1	FLAT SEALING RING 14X19,5X1,5	FLACHDICHTRING
322	927892208	1	COLLECTING PIPE	SAMMELROHR
323	10033109	1	COLLECTING PIPE VERZ SPF	SAMMELROHR
324	11140469	2	WASHER ISO 7093-1 8 200HV 480H SPF	SCHEIBE
325	11652470	2	HEX SCREW ISO 4017 M10X16 8.8 FLZN SP	SECHSKANTSCHRAUBE
326	10289795	2	WASHER ISO 7089 10 300HV FLZN SPF	SCHEIBE
327	11651612	3	HEX SCREW ISO 4017 M8X16 8.8 480H SPF	SECHSKANTSCHRAUBE
328	420060705	3	WASHER ISO 7089 8 200HV-A2	SCHEIBE
329	10181389	2	SOCKET HEAD SCREW ISO 4762 M6X120 8	ZYLINDERSCHRAUBE
500	510586608	4	FLANGE HALF SAE1 1/4-C62-M14 CR6-FREI	FLANSCHHAELFTE
501	474906908	1	SAE FLANGE CONNECTION WFS64/30-S C	SAE-FLANSCHVERBINDUNG
(1)	510587008	1	O-RING ARP 568 32,92X3,53 NBR90	O-RING
506	510501308	2	HIGH PRESSURE HOSE 2X3200	HOCHDRUCKSCHLAUCH
509	511519208	2	SAE INTERMEDIATE FLANGE 1 1/4" CR6-F	SAE-ZWISCHENFLANSCH
510	474906708	1	SAE FLANGE CONNECTION WFS 38S 1 1/4	SAE-FLANSCHVERBINDUNG
511	510702408	1	SAE FLANGE CONNECTION GFS65/38-PS C	SAE-FLANSCHVERBINDUNG
(1)	510586708	1	O-RING ARP 568 37,69X3,53 NBR90	O-RING
512	10014847	4	HIGH PRESSURE HOSE 2X1500	HOCHDRUCKSCHLAUCH
513	470901908	2	HIGH PRESSURE HOSE 2X2000	HOCHDRUCKSCHLAUCH
514	510146208	1	SUCTION FLANGE CR6-FREI	SAUGFLANSCH
515	511518808	1	FLANGE FITTING CR6-FREI	FLANSCHVERSCHRAUBUNG
516	510133208	1	FLANGE FITTING CR6-FREI	FLANSCHVERSCHRAUBUNG
(1)	726406908	1	O-RING 18X2,5 NBR70	O-RING

Pos.	Item	Quantity	Description	Bezeichnung
517	510033408	2	FLANGE FITTING CR6-FREI	FLANSCHVERSCHRAUBUNG
(1)	515706008	1	O-RING ARP 568 31,42X2,62 NBR70	O-RING
600	475601508	5	TEST POINT FITTING BMA3 6S CR6-FREI	MESSANSCHLUSS
601	475433508	2	FITTING REDSD16/10-S CR6-FREI	VERSCHRAUBUNG
602	471034408	13	FITTING XGEV38-SR-WD CR6-FREI	VERSCHRAUBUNG
603	247128502	5	L NECK EL 18L CR6-FREI	L-STUTZEN
604	247108302	4	SWIVEL ELBOW EW 18L M26X1,5 CR6-FREI	WINKELSTUTZEN
605	474030708	1	FITTING SV 18L CR6-FREI	VERSCHRAUBUNG
606	471039708	4	FITTING ISO 8434-1 GE 10L M12X1,5 CR6-F	VERSCHRAUBUNG
607	474030308	1	FITTING XSV10-L CR6-FREI	VERSCHRAUBUNG
611	474030508	1	FITTING XSV15-L CR6-FREI	VERSCHRAUBUNG
612	247117702	5	SWIVEL ELBOW EW 12L M18X1,5 CR6-FREI	WINKELSTUTZEN
613	477401508	1	BOX NUT DIN 3870 AL10 A3P	UEBERWURFMUTTER
614	7403569	9	FITTING EW 10L M16X1,5 CR6-FREI	VERSCHRAUBUNG
615	477700108	3	BLANKING PLUG ISO 8434-1 PL 18L CR6-F	VERSCHLUSSSTOPFEN
616	477402408	3	BOX NUT DIN 3870 AL18 A3P	UEBERWURFMUTTER
617	477700408	3	BLANKING PLUG ISO 8434-1 PL 10L/S CR6-F	VERSCHLUSSSTOPFEN
619	475432108	1	FITTING REDSDN20/16-S CR6-FREI	VERSCHRAUBUNG
620	471033108	3	FITTING XGE16-SR-ED3/4" CR6-FREI	VERSCHRAUBUNG
621	471901908	1	FITTING EGE 16S G3/4 CR6-FREI	VERSCHRAUBUNG
622	7617460	8	FITTING EW 16S CR6-FREI	VERSCHRAUBUNG
624	7407098	4	FITTING EL 16S CR6-FREI	VERSCHRAUBUNG
625	471033208	8	FITTING XGE16-SR-ED CR6-FREI	VERSCHRAUBUNG
627	482431514	2	FITTING ISO 8434 ET 16S CR6-FREI	VERSCHRAUBUNG
628	475433308	2	FITTING REDSD16/12-S CR6-FREI	VERSCHRAUBUNG
629	471030508	1	FITTING GE 10L M14X1,5 CR6-FREI	VERSCHRAUBUNG
630	482430314	3	FITTING ISO 8434 ET 10L M16X1,5 CR6-FRE	VERSCHRAUBUNG
631	510629008	4	TEST POINT FITTING VKA3 10LM16X1,5 CR6	MESSANSCHLUSS
632	482431414	2	FITTING ISO 8434 ET 12S CR6-FREI	VERSCHRAUBUNG
633	471901808	5	FITTING EGE 12S G1/2A CR6-FREI	VERSCHRAUBUNG
634	7617461	11	FITTING EL 12S CR6-FREI	VERSCHRAUBUNG
636	471031508	1	FITTING XGE28-LM-ED CR6-FREI	VERSCHRAUBUNG
637	247128602	10	L NECK EL 12L M18X1,5 CR6-FREI	L-STUTZEN
638	471030808	6	FITTING XGE12-LR-ED CR6-FREI	VERSCHRAUBUNG
640	471034808	4	FITTING GE 12L G1/2 CR6-FREI	VERSCHRAUBUNG
641	470011308	2	FITTING SNV12-L CR6-FREI	VERSCHRAUBUNG
643	472531808	6	FITTING EWSD38-S CR6-FREI	VERSCHRAUBUNG
649	471034708	2	FITTING GE 42L G1 1/2 CR6-FREI	VERSCHRAUBUNG
653	471035308	5	FITTING XGE12-LR-ED1/4" CR6-FREI	VERSCHRAUBUNG
655	473230508	1	FITTING RSWS10-LR-WD CR6-FREI	VERSCHRAUBUNG
656	7362091	9	FITTING ISO 8434-1 GE 10L G1/4A CR6-FREI	VERSCHRAUBUNG
657	472330208	5	FITTING EL 10L CR6-FREI	VERSCHRAUBUNG
659	247105602	3	T CONNECTION PIECE ET 12L CR6-FREI	T-STUTZEN
661	473230608	2	FITTING RSWS6-SR-WD CR6-FREI	VERSCHRAUBUNG
663	472331208	4	FITTING EL 6S CR6-FREI	VERSCHRAUBUNG
665	471032108	4	FITTING GE 6S G1/4A CR6-FREI	VERSCHRAUBUNG
666	472531508	4	FITTING EW 6S M14X1,5 CR6-FREI	VERSCHRAUBUNG
667	471901108	3	FITTING EGESD10-LR-WD CR6-FREI	VERSCHRAUBUNG
668	470233408	4	FITTING XW38-S CR6-FREI	VERSCHRAUBUNG
670	470010708	2	FITTING SNV38-S CR6-FREI	VERSCHRAUBUNG
676	471030008	1	FITTING XGE6-LR-ED CR6-FREI	VERSCHRAUBUNG
679	471030108	2	FITTING XGE6-LM-ED CR6-FREI	VERSCHRAUBUNG
681	470010108	1	FITTING SNV10-L CR6-FREI	VERSCHRAUBUNG
682	475602608	3	TEST POINT FITTING EMA3 G1/4 CR6-FREI	MESSANSCHLUSS
683	471030708	1	FITTING ISO 8434-1 GE 12L M16X1,5 CR6-F ⇨ ❑ 559	VERSCHRAUBUNG
684	475430208	2	FITTING REDSDN12/6-L CR6-FREI	VERSCHRAUBUNG
686	471900608	1	FITTING EGESD16-SR-WD CR6-FREI	VERSCHRAUBUNG
687	471901308	1	FITTING EGE 18L G1/2A CR6-FREI	VERSCHRAUBUNG
689	471901208	1	FITTING EGESD12-LR-WD CR6-FREI	VERSCHRAUBUNG

Pos.	Item	Quantity	Description	Bezeichnung
690	471039608	2	FITTING XGE10-LR-ED3/8" CR6-FREI	VERSCHRAUBUNG
698	471032908	2	FITTING GE 12S M18X1,5 CR6-FREI	VERSCHRAUBUNG
701	477401608	3	BOX NUT DIN 3870 AL12 A3C	UEBERWURFMUTTER
702	477700508	3	BLANKING PLUG ISO 8434-1 PL 12L/S CR6-F	VERSCHLUSSSTOPFEN
703	477700608	1	BLANKING PLUG ISO 8434-1 PL 15L CR6-F	VERSCHLUSSSTOPFEN
704	477401208	1	BOX NUT DIN 3870 AL15 A3P	UEBERWURFMUTTER
705	475603308	8	MEASURING COUPLING SPF	MESSKUPPLUNG
706	475435608	2	FITTING RED 18/15L CR6-FREI SPF	VERSCHRAUBUNG
708	471037508	1	FITTING XGE18-LR-ED3/4" CR6-FREI	VERSCHRAUBUNG
709	471903808	1	FITTING EGE 12L G1/2 CR6-FREI	VERSCHRAUBUNG
710	470032708	1	FITTING XG16-S CR6-FREI	VERSCHRAUBUNG
711	470431408	2	FITTING T 42L CR6-FREI	VERSCHRAUBUNG
712	475431708	1	FITTING RED 42/18L CR6-FREI	VERSCHRAUBUNG
714	471031208	2	FITTING XGE18-LR-ED CR6-FREI	VERSCHRAUBUNG
716	472331908	3	FITTING ELSD38-S CR6-FREI	VERSCHRAUBUNG
719	482530814	5	FITTING ISO 8434 EW 42L CR6-FREI	VERSCHRAUBUNG
720	470032408	3	FITTING XG10-S CR6-FREI	VERSCHRAUBUNG
722	482531614	2	FITTING ISO 8434 EW 30S CR6-FREI	VERSCHRAUBUNG
723	475435308	5	FITTING REDSDN38/30-S CR6-FREI	VERSCHRAUBUNG
725	475430408	3	FITTING REDSD35/28-L CR6-FREI	VERSCHRAUBUNG
727	477704908	2	STOP PLUG VSTIM14X1,5ED CR6-FREI	STOPFEN
730	470011508	1	FITTING SNV6-S CR6-FREI	VERSCHRAUBUNG
731	470700208	2	FITTING XGAI6-SR CR6-FREI	VERSCHRAUBUNG
732	470233008	2	FITTING XW30-S CR6-FREI	VERSCHRAUBUNG
733	470011108	2	FITTING SNV30-S CR6-FREI	VERSCHRAUBUNG
734	247021702	2	SWIVEL ELBOW EW 6L CR6-FREI	WINKELSTUTZEN
735	475436308	1	FITTING REDSD18/12-L CR6-FREI	VERSCHRAUBUNG
736	247108402	2	T CONNECTION PIECE ET 18L CR6-FREI	T-STUTZEN
737	471031108	1	FITTING GE 18L M22X1,5 CR6-FREI	VERSCHRAUBUNG
739	7018370	2	FITTING GE 16S M27X2 CR6-FREI	VERSCHRAUBUNG
740	475033608	1	FITTING GR 20/16S CR6-FREI	VERSCHRAUBUNG
741	470010408	2	FITTING GZ 18L CR6-FREI	VERSCHRAUBUNG
742	475430708	1	FITTING RED 18/6L CR6-FREI	VERSCHRAUBUNG
743	475030708	1	FITTING GR 22/18L CR6-FREI	VERSCHRAUBUNG
744	471032608	9	FITTING GE 12S G1/2A CR6-FREI	VERSCHRAUBUNG
745	482330814	1	FITTING ISO 8434 EL 35L CR6-FREI	VERSCHRAUBUNG
746	475436708	1	FITTING RED 42/35L CR6-FREI	VERSCHRAUBUNG
747	471901508	4	FITTING EGESD28-LR-WD CR6-FREI	VERSCHRAUBUNG
748	482530914	2	FITTING ISO 8434 EW 35L M45X2 CR6-FREI	VERSCHRAUBUNG
749	470231108	1	FITTING W 35L CR6-FREI	VERSCHRAUBUNG
750	477400308	2	BOX NUT DIN 3870 AS10 A3P	UEBERWURFMUTTER
751	470231408	1	FITTING W 42L CR6-FREI	VERSCHRAUBUNG
752	475431308	2	FITTING RED 42/28L CR6-FREI	VERSCHRAUBUNG
755	472530608	3	FITTING EWSD22-L CR6-FREI	VERSCHRAUBUNG
761	7617268	3	FITTING EW 10S CR6-FREI	VERSCHRAUBUNG
762	471032808	2	FITTING ISO 8434-1 GE 10S G3/8A CR6-FRE	VERSCHRAUBUNG
763	471004514	2	FITTING ISO 8434 GE 10S G1/4 CR6-FREI	VERSCHRAUBUNG
764	482431314	2	FITTING ISO 8434 ET 10S CR6-FREI	VERSCHRAUBUNG
765	471032708	3	FITTING GE 12S G3/8A CR6-FREI	VERSCHRAUBUNG
766	470030908	1	FITTING XG42-L CR6-FREI	VERSCHRAUBUNG
768	471900308	2	FITTING EGESD6-SR-WD CR6-FREI	VERSCHRAUBUNG
770	7409922	7	GAUGE CONNECTION 12S M20X1,5 CR6-F	MESSSTUTZEN
771	7617354	10	FITTING EW 12S CR6-FREI	VERSCHRAUBUNG
772	475408108	1	FITTING REDSD38/6-S CR6-FREI	VERSCHRAUBUNG
775	7409918	1	GAUGE CONNECTION VKA3 12LM18X1,5 C	MESSSTUTZEN
776	10467292	1	FITTING EV38S M52X2 CR6-FREI	VERSCHRAUBUNG
777	470730308	1	FITTING GAI 12S G3/8 CR6-FREI	VERSCHRAUBUNG
779	10410770	2	FITTING EV16S CR6-FREI	VERSCHRAUBUNG
781	7617784	1	FITTING GE 12S G1/4A CR6-FREI	VERSCHRAUBUNG
782	7407120	1	FITTING EL 28L CR6-FREI	VERSCHRAUBUNG

Pos.	Item	Quantity	Description	Bezeichnung
783	475430508	1	FITTING REDSD28/22-L CR6-FREI	VERSCHRAUBUNG
784	471900508	1	FITTING EGE 12S G3/8A CR6-FREI	VERSCHRAUBUNG
785	475032508	1	FITTING XGR16/12-S CR6-FREI	VERSCHRAUBUNG
786	475432908	1	FITTING REDSD12/6-S CR6-FREI	VERSCHRAUBUNG
787	470010308	1	FITTING SNV12-S CR6-FREI	VERSCHRAUBUNG
788	5607617	2	GAUGE CONNECTION DKO 10S M18X1,5 C	MESSSTUTZEN
790	470011208	1	FITTING GZ 15L CR6-FREI	VERSCHRAUBUNG
791	472430408	1	FITTING ET 15L M22X1,5 CR6-FREI	VERSCHRAUBUNG
792	7615379	1	FITTING ISO 8434-1 EW 15L CR6-FREI	VERSCHRAUBUNG
793	10035314	1	FITTING EV 18L CR6-FREI	VERSCHRAUBUNG

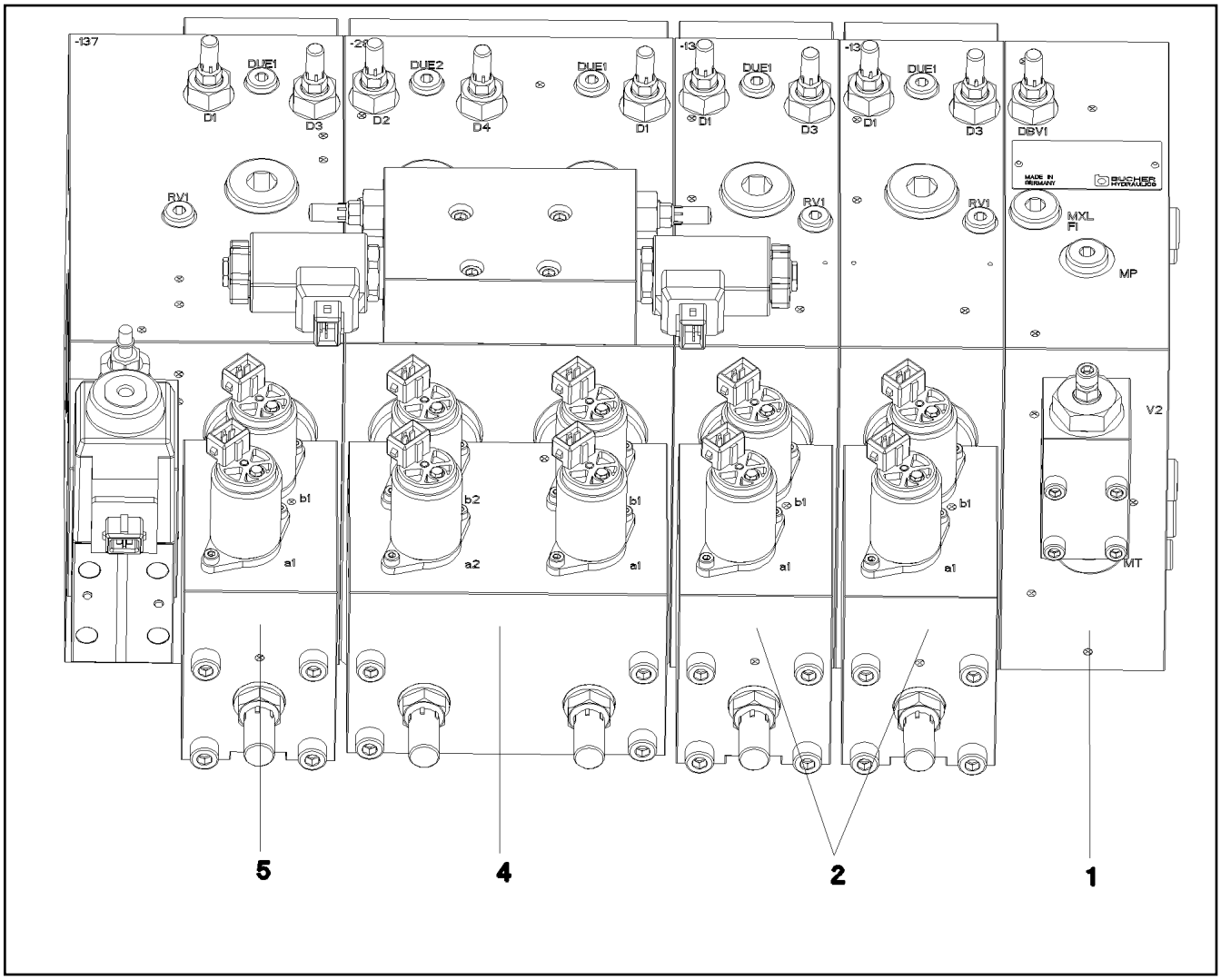

Pos.	Item	Quantity	Description	Bezeichnung
1	11170514	1	VALVE BLOCK ⇨ ❑ 522	VENTILBLOCK
2	11170515	1	VALVE BLOCK ⇨ ❑ 528	VENTILBLOCK
4	11170518	1	VALVE BLOCK ⇨ ❑ 529	VENTILBLOCK
5	11170519	1	VALVE BLOCK ⇨ ❑ 531	VENTILBLOCK

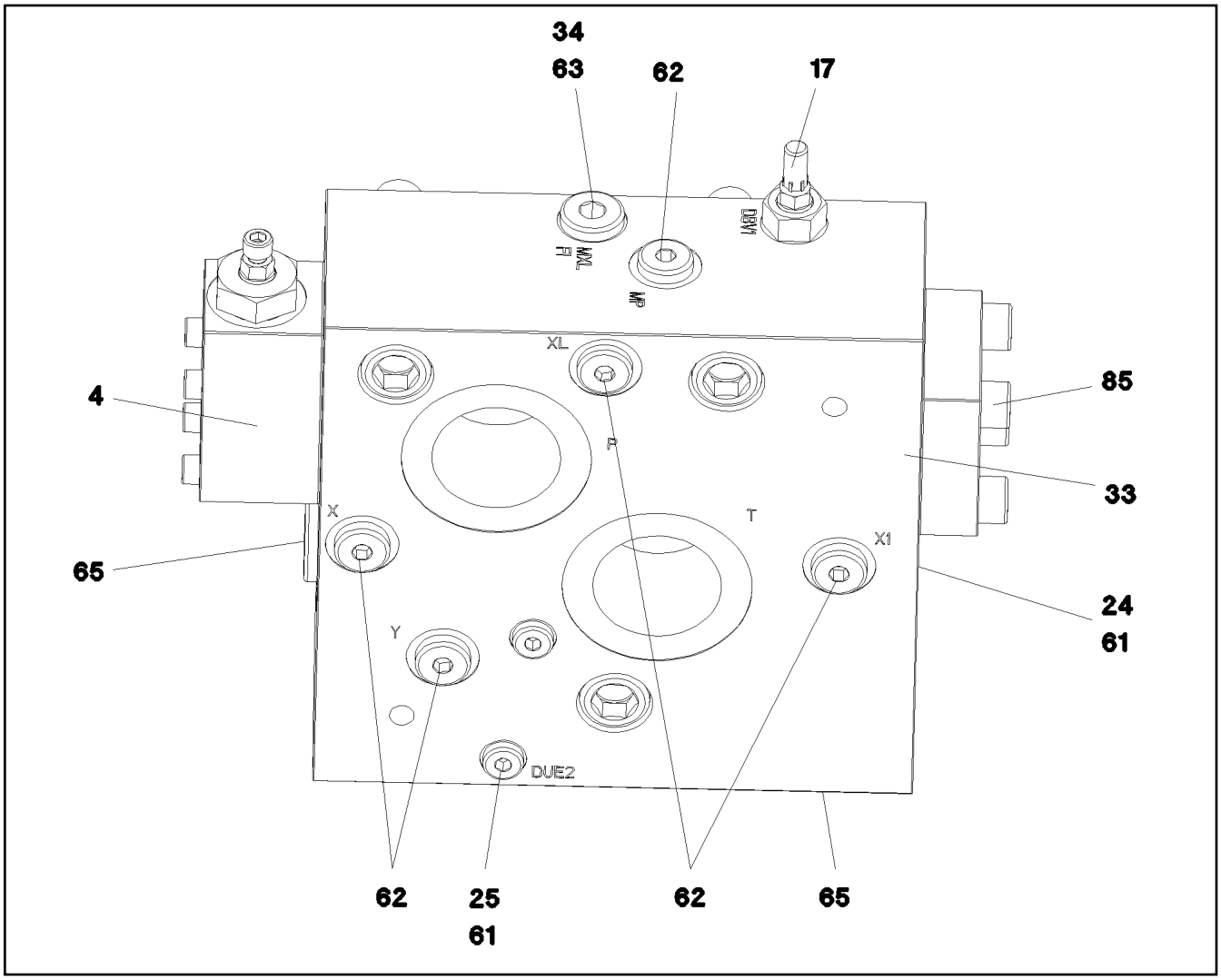

Pos.	Item	Quantity	Description	Bezeichnung
4	11065879	1	PRESSURE VALVE ⇨ ❑ 523	DRUCKVENTIL
17	571130108	1	PRESSURE LIMITING VALVE ⇨ ❑ 524	DRUCKBEGRENZUNGSVENTIL
24	571362208	1	NOZZLE DIN 913 1,2 M5X5 MS	DUESE
25	510754308	2	NOZZLE 0,4 M5X6 MS	DUESE
33	10032696	1	CARTRIDGE ⇨ ❑ 525	PATRONE
34	571528008	1	FILTER	FILTER
61	510741508	4	STOP PLUG VSTI1/8"ED ST CR6-FREI	STOPFEN
62	477704008	5	STOPPER PLUG VSTI1/4"ED CR6-FREI	BLINDSTOPFEN
63	477704108	1	STOP PLUG VSTI3/8"ED CR6-FREI	STOPFEN
65	477704708	2	STOP PLUG VSTI G3/4A CR6-FREI	STOPFEN
85	404362408	4	SOCKET HEAD SCREW ISO 4762 M10X35 12	ZYLINDERSCHRAUBE

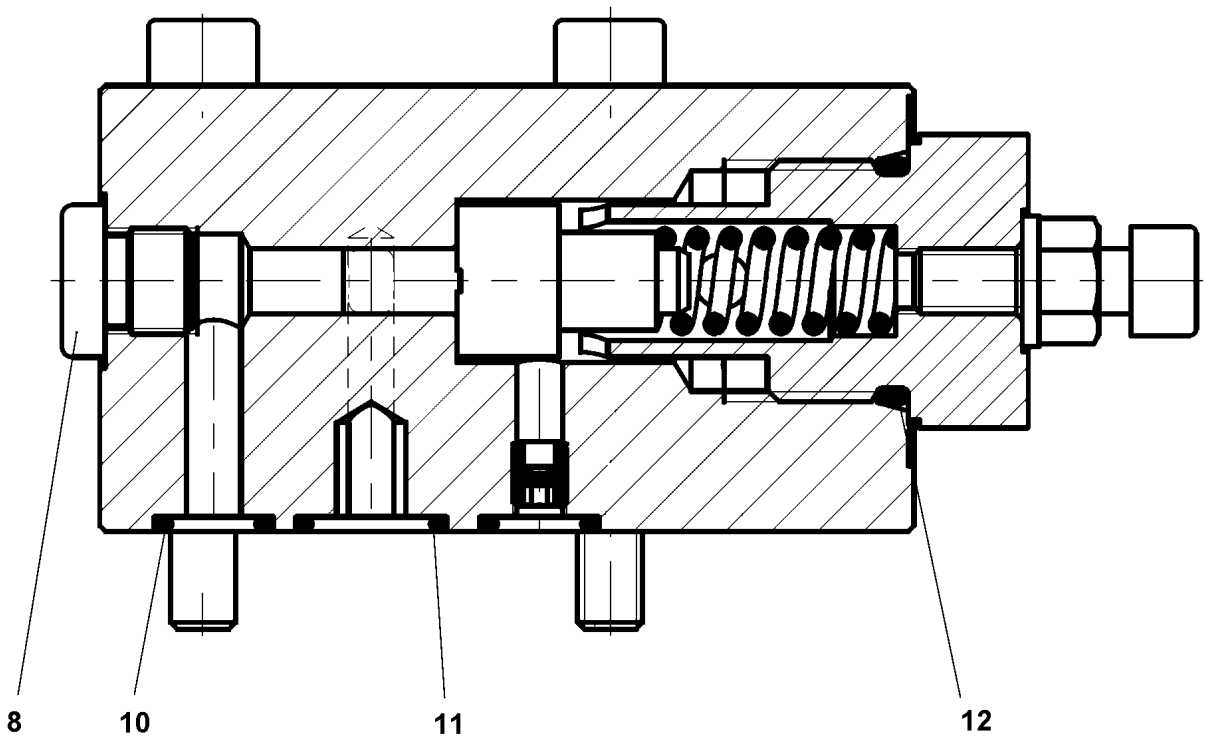

Pos.	Item	Quantity	Description	Bezeichnung
8	510741508	1	STOP PLUG VSTI1/8"ED ST CR6-FREI	STOPFEN
10	726419408	2	O-RING ARP 568 7,65X1,78 NBR90	O-RING
11	510760408	1	O-RING ARP 568 10,82X1,78 NBR90	O-RING
12	571068108	1	O-RING ARP 568 19,18X2,46 NBR70	O-RING

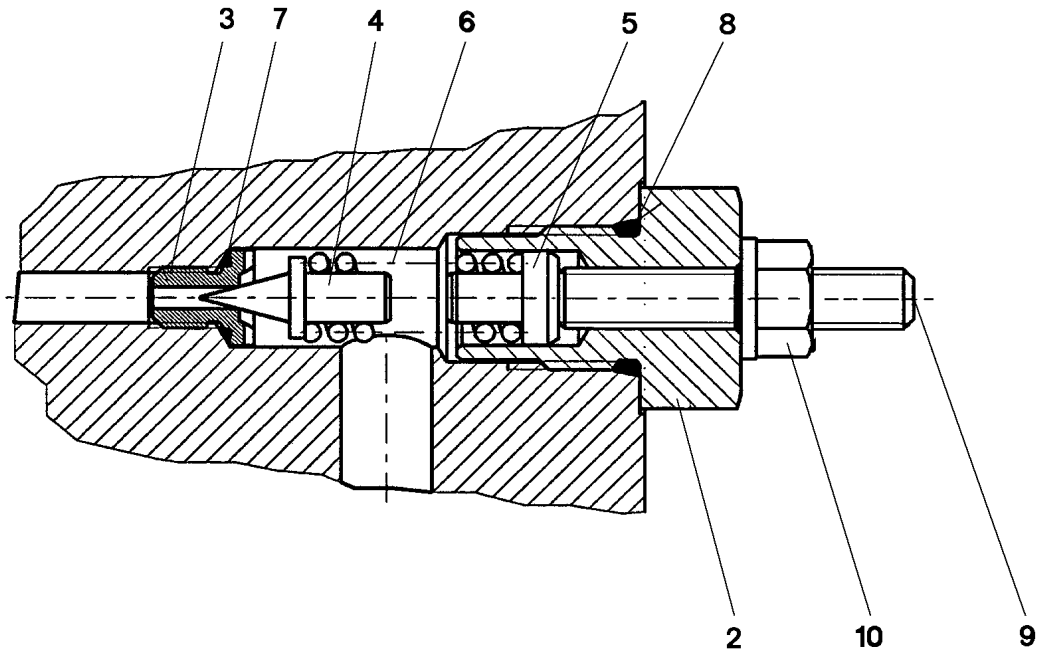

Pos.	Item	Quantity	Description	Bezeichnung
2	571130308	1	SLEEVE	HUELSE
3	570647508	1	VALVE SEAT	VENTILSITZ
4	11244462	1	TAPER	KEGEL
5	571130408	1	SPACER PIECE	DISTANZSTUECK
6	510735908	1	COMPRESSION SPRING 1,9X6,9X21,5	DRUCKFEDER
7	570690608	1	O-RING 6X1 NBR90	O-RING
8	571130508	1	O-RING ARP 568 11,89X1,98 N903890SHOR	O-RING
9	12106077	1	GRUB SCREW ISO 4026 M6X35 45H 480H SP	GEWINDESTIFT
10	510753408	1	SEALING NUT M6	DICHTMUTTER

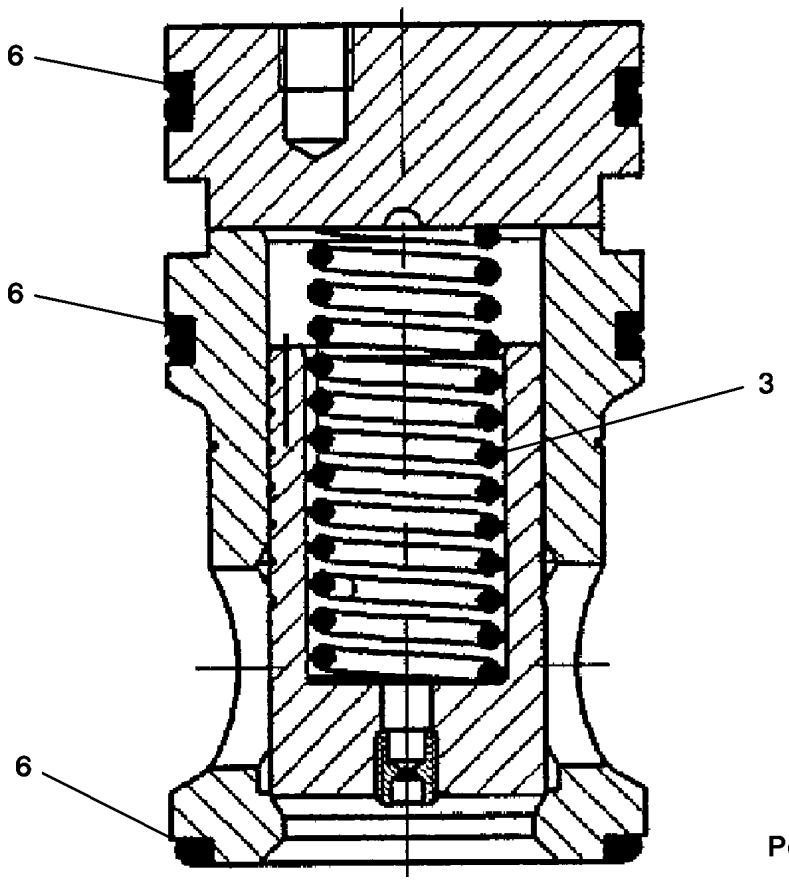

Pos. 5

Pos.	Item	Quantity	Description	Bezeichnung
3	570631008	1	COMPRESSION SPRING	DRUCKFEDER
5	510761708	3	O-RING ARP 568 32,99X2,62 NBR90	O-RING
6	10280184	1	SEAL KIT ⇨ ❑ 526	DICHTSATZ

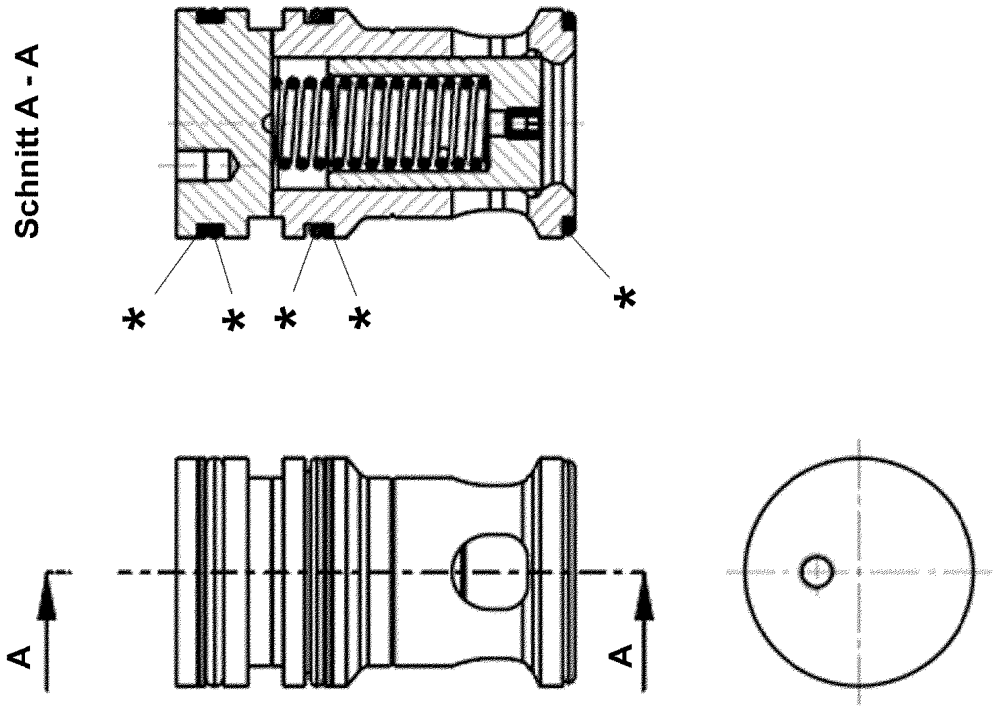

*= im Set enthalten
*= included in the set
*= inclus dans lénsemble

Pos.	Item	Quantity	Description	Bezeichnung
1000	980288008	1	DOCUMENTATION	DOKUMENTATION

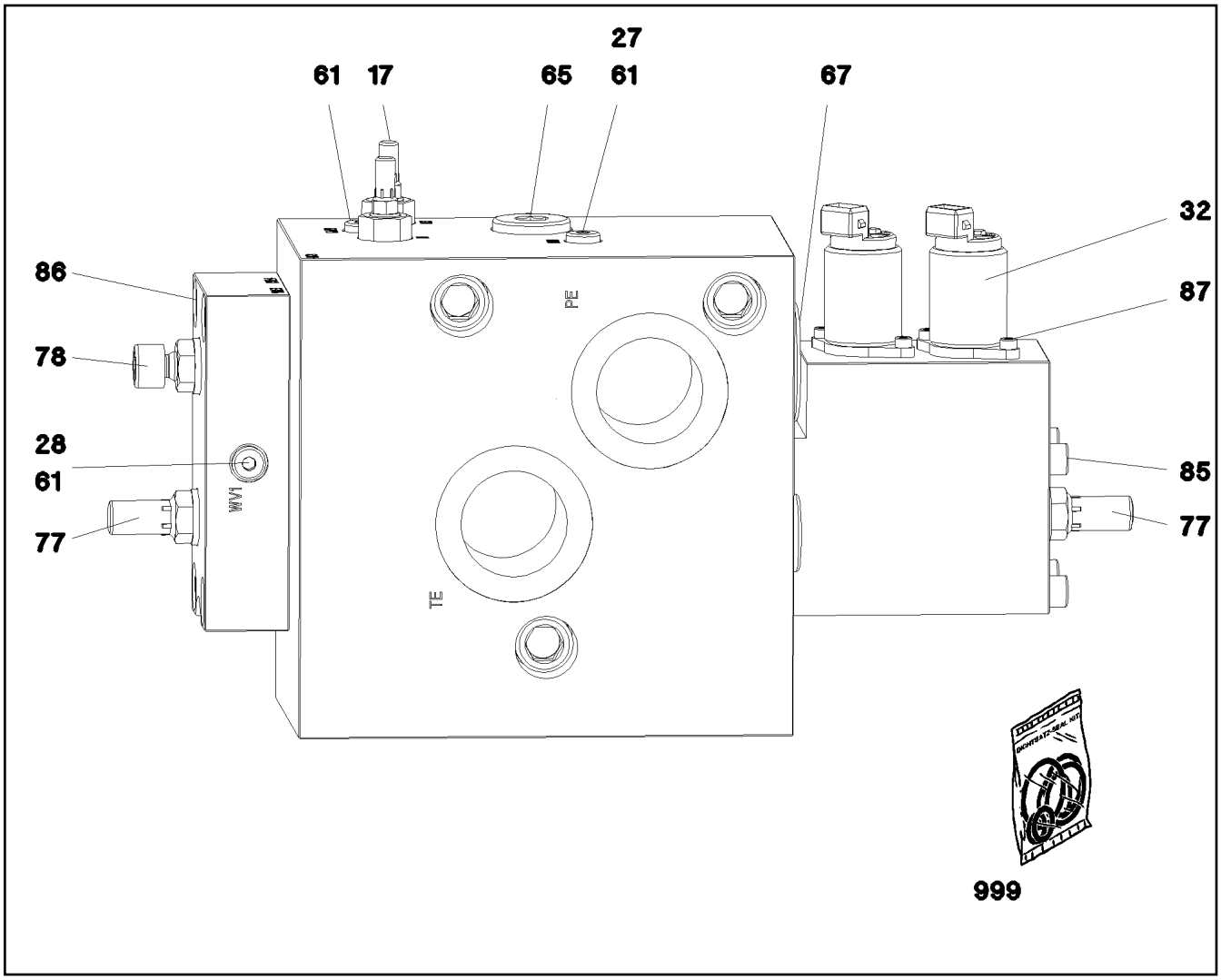

Pos.	Item	Quantity	Description	Bezeichnung
17	571130108	2	PRESSURE LIMITING VALVE ⇨ ❑ 524	DRUCKBEGRENZUNGSVENTIL
27	570651408	1	NON-RETURN VALVE	RUECKSCHLAGVENTIL
28	571529508	1	SHUTTLE VALVE 350BAR	WECHSELVENTIL
32	10815029	2	VALVE	VENTIL
(999)	10875274	1	SEALING SET VALVE	DS VENTIL
61	510741508	3	STOP PLUG VSTI1/8"ED ST CR6-FREI	STOPFEN
62	477704008	1	STOPPER PLUG VSTI1/4"ED CR6-FREI	BLINDSTOPFEN
65	477704708	1	STOP PLUG VSTI G3/4A CR6-FREI	STOPFEN
67	11002696	1	STOP PLUG VSTI 1 1/4"	STOPFEN
77	571529708	2	CHECK SCREW	STELLSCHRAUBE
78	10423817	1	CHECK SCREW	STELLSCHRAUBE
85	10875596	4	SOCKET HEAD SCREW ISO 4762 M8X120 8	ZYLINDERSCHRAUBE
86	404361977	4	SCREW DIN 912 M12X40 12.9	SCHRAUBE
87	10228541	4	SOCKET HEAD SCREW ISO 4762 M4X10 10.	ZYLINDERSCHRAUBE
999	10412632	1	SEAL KIT VALVE BLOCK	DS VENTILBLOCK

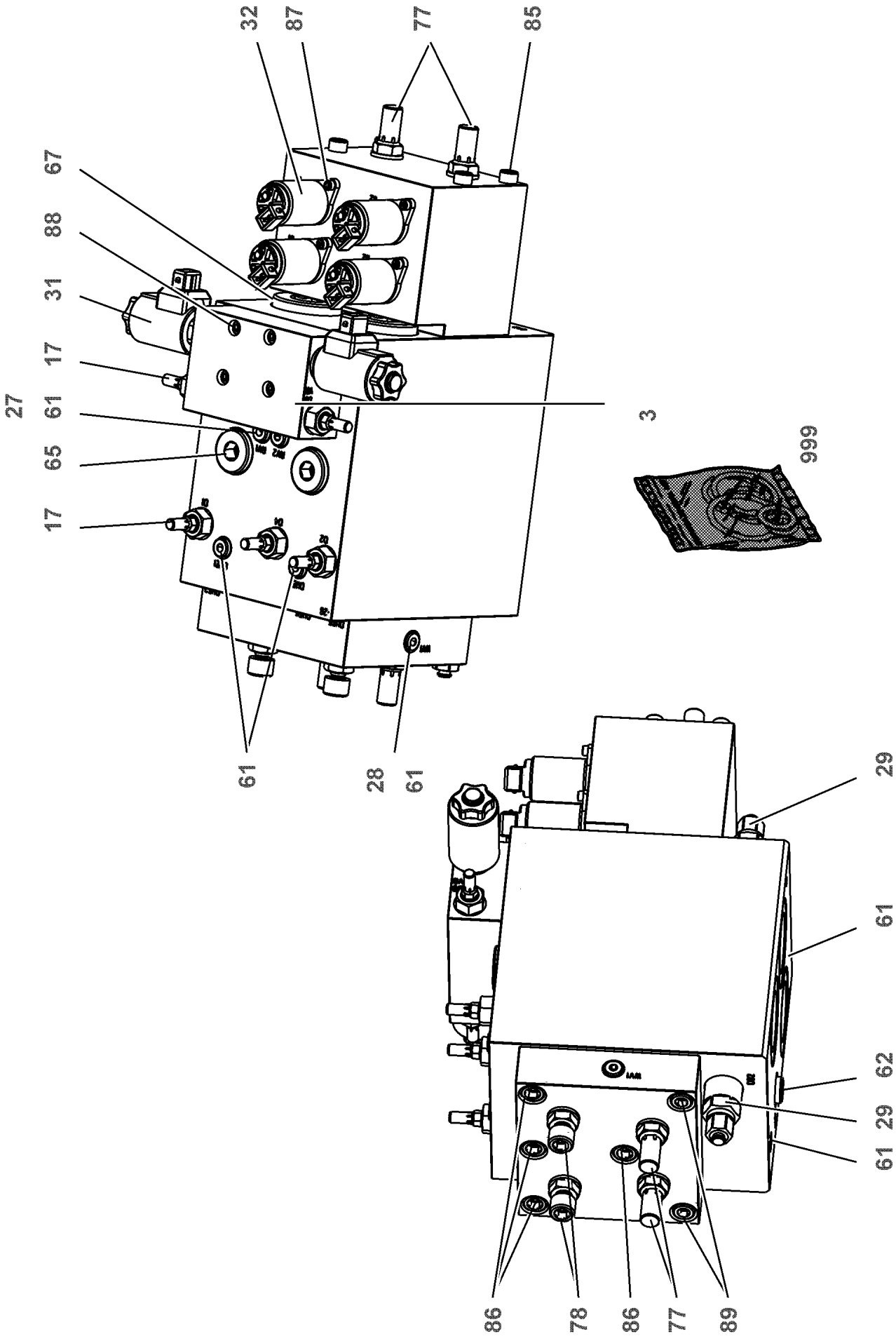

16.11.2023 079236 LIEBHERR	**etk_en_de_078966 LTR 1100** **VALVE BLOCK** **VENTILBLOCK**	❑ 529 (1/2) **11170518**

Pos.	Item	Quantity	Description	Bezeichnung
3	10874831	1	SHEET	PLATTE
17	571130108	5	PRESSURE LIMITING VALVE ⇨ ❑ 524	DRUCKBEGRENZUNGSVENTIL
27	570651408	1	NON-RETURN VALVE	RUECKSCHLAGVENTIL
28	571529508	1	SHUTTLE VALVE 350BAR	WECHSELVENTIL
29	11009440	1	PRESSURE VALVE	DRUCKVENTIL
31	10412605	2	DIRECTIONAL CONTROL VALVE 350BAR 2/	WEGEVENTIL
32	10815029	4	VALVE	VENTIL
61	510741508	11	STOP PLUG VSTI1/8"ED ST CR6-FREI	STOPFEN
62	477704008	1	STOPPER PLUG VSTI1/4"ED CR6-FREI	BLINDSTOPFEN
65	477704708	2	STOP PLUG VSTI G3/4A CR6-FREI	STOPFEN
67	11002696	2	STOP PLUG VSTI 1 1/4"	STOPFEN
77	571529708	4	CHECK SCREW	STELLSCHRAUBE
78	10423817	2	CHECK SCREW	STELLSCHRAUBE
85	10875596	4	SOCKET HEAD SCREW ISO 4762 M8X120 8	ZYLINDERSCHRAUBE
86	404361977	4	SCREW DIN 912 M12X40 12.9	SCHRAUBE
87	10228541	4	SOCKET HEAD SCREW ISO 4762 M4X10 10.	ZYLINDERSCHRAUBE
88	12223035	4	SOCKET HEAD SCREW ISO 4762 M6X40 10	ZYLINDERSCHRAUBE
89	240206302	2	SOCKET HEAD SCREW ISO 4762 M10X40 1	ZYLINDERSCHRAUBE
90	12223034	2	SOCKET HEAD SCREW ISO 4762 M10X90 8	ZYLINDERSCHRAUBE
999	10412609	1	SEAL KIT VALVE BLOCK	DS VENTILBLOCK

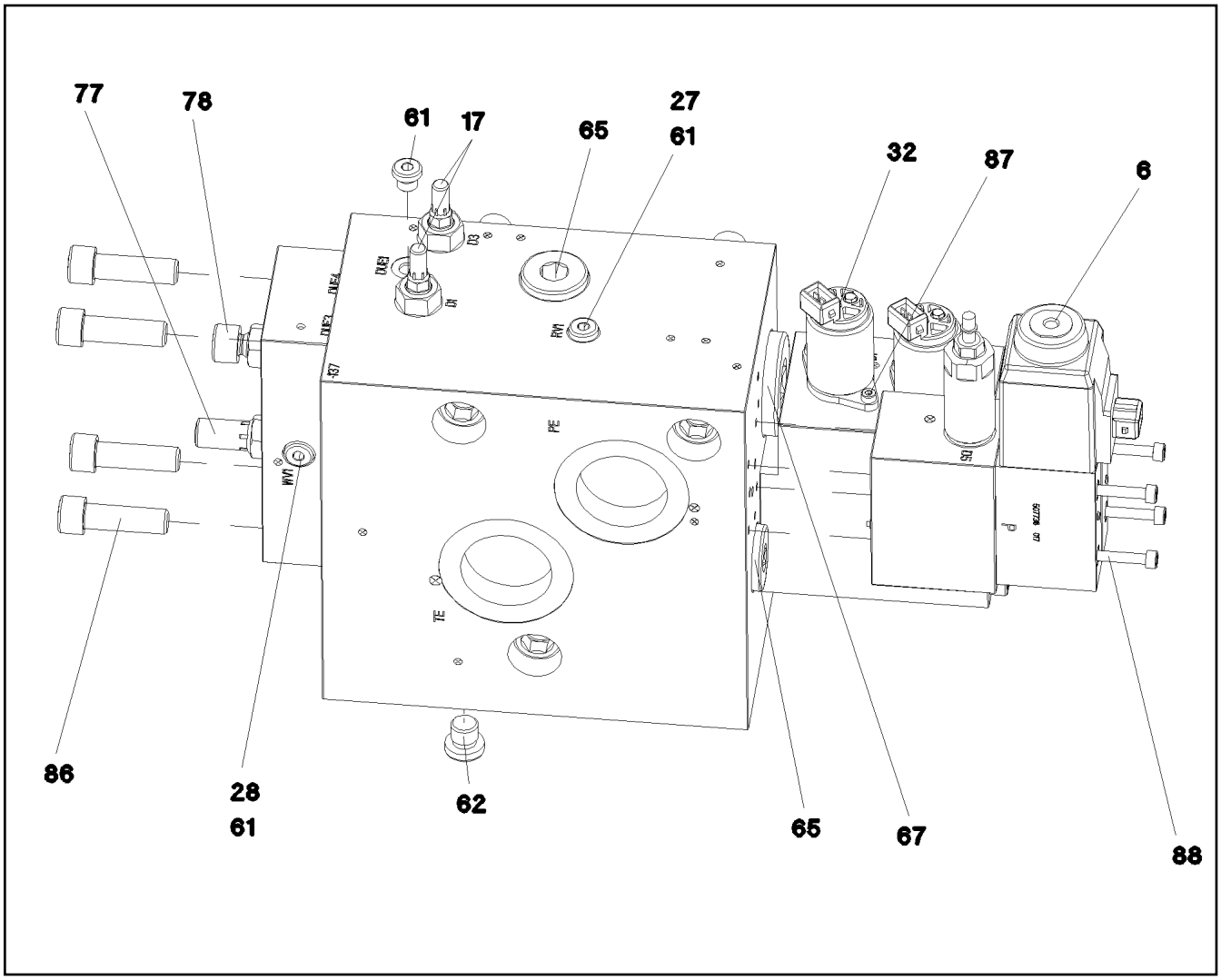

Pos.	Item	Quantity	Description	Bezeichnung
5	10663242	1	COVER	DECKEL
6	11002717	1	DIRECTIONAL CONTROL VALVE ⇨ ❑ 532	WEGEVENTIL
17	571130108	2	PRESSURE LIMITING VALVE ⇨ ❑ 524	DRUCKBEGRENZUNGSVENTIL
27	10475300	1	DIRECTIONAL CONTROL VALVE	WEGEVENTIL
(1)	7381448	1	O-RING AEHNL.ISO 3601-1 6,2X1,5 FKM 80	O-RING
28	571529508	1	SHUTTLE VALVE 350BAR	WECHSELVENTIL
32	10815029	2	VALVE	VENTIL
61	510741508	3	STOP PLUG VSTI1/8"ED ST CR6-FREI	STOPFEN
62	477704008	1	STOPPER PLUG VSTI1/4"ED CR6-FREI	BLINDSTOPFEN
65	477704708	2	STOP PLUG VSTI G3/4A CR6-FREI	STOPFEN
67	11002696	1	STOP PLUG VSTI 1 1/4"	STOPFEN
77	571529708	2	CHECK SCREW	STELLSCHRAUBE
78	10423817	1	CHECK SCREW	STELLSCHRAUBE
85	10875596	4	SOCKET HEAD SCREW ISO 4762 M8X120 8	ZYLINDERSCHRAUBE
86	404361977	4	SCREW DIN 912 M12X40 12.9	SCHRAUBE
87	10228541	4	SOCKET HEAD SCREW ISO 4762 M4X10 10.	ZYLINDERSCHRAUBE
88	404302914	4	SOCKET HEAD SCREW ISO 4762 M5X90 10.	ZYLINDERSCHRAUBE
999	10412632	1	SEAL KIT VALVE BLOCK	DS VENTILBLOCK

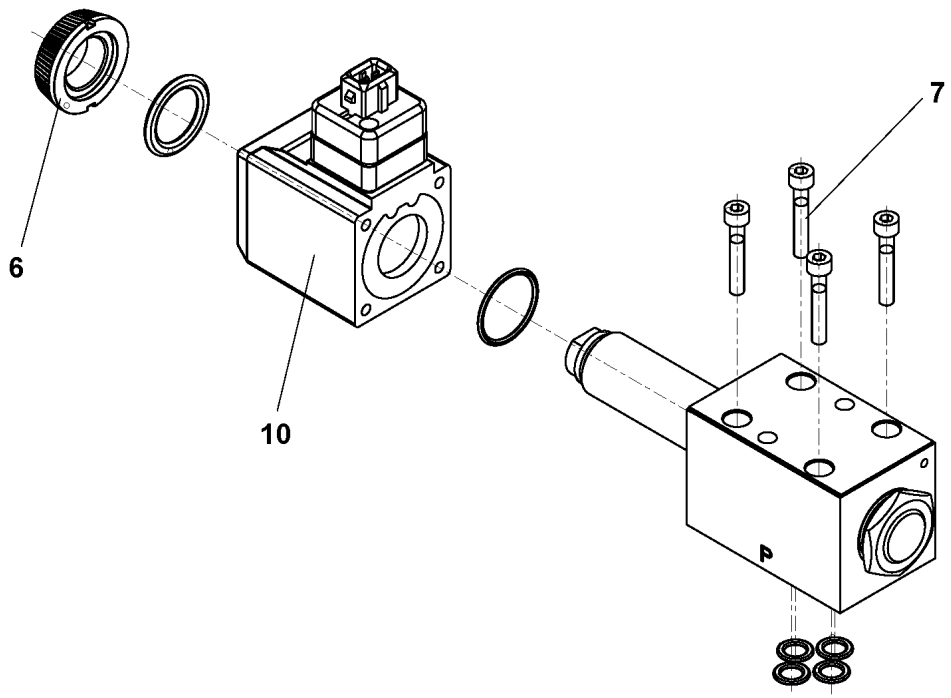

Pos. 999

Pos.	Item	Quantity	Description	Bezeichnung
6	10488102	1	NUT	RAENDELMUTTER
7	12207210	4	SOCKET HEAD SCREW ISO 4762 M5X30 8.8	ZYLINDERSCHRAUBE
10	10488103	1	MAGNET COIL 24V	MAGNETSPULE
999	10489208	1	SEAL KIT	DICHTSATZ

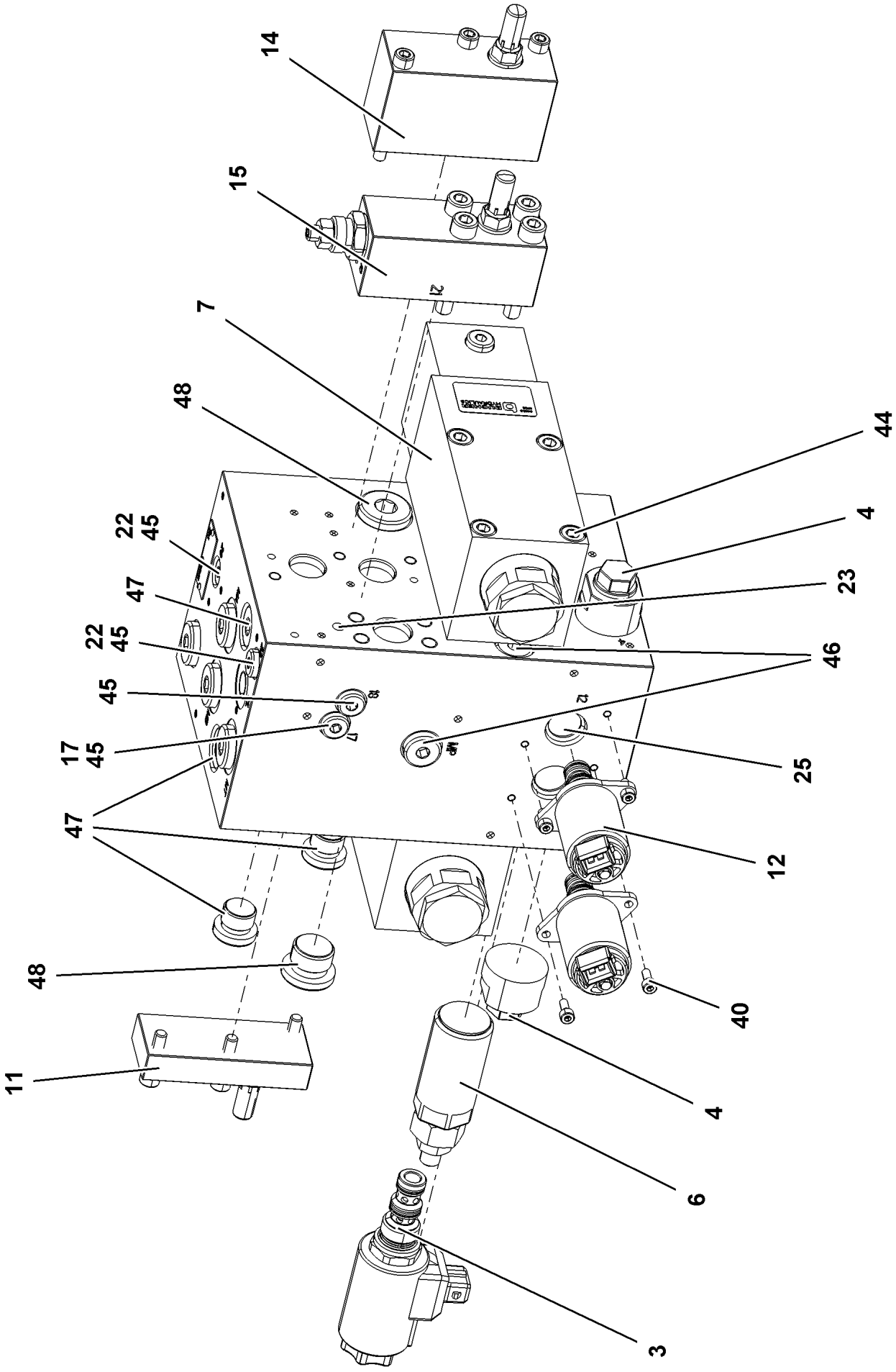
14
15
7
48
44
4
22
45
23
47
22
45
46
45
17
45
25
47
12
48
40
11
4
6
3

Pos.	Item	Quantity	Description	Bezeichnung
3	10217127	1	SOLENOID VALVE	MAGNETVENTIL
(1)	6204416	1	MAGNET COIL	MAGNETSPULE
(999)	5009562	1	SEAL KIT DIRECTIONAL VALVE	DS WEGEVENTIL
4	571889008	2	NON-RETURN VALVE	RUECKSCHLAGVENTIL
6	571889108	1	PRESSURE VALVE	DRUCKVENTIL
7	10665124	2	LOWERING BRAKE VALVE	SENKBREMSVENTIL
(1)	570926808	1	SINTERING FILTER	SINTERFILTER
(2)	11320421	1	SEAL LOCK NUT M1414X1,5	SEAL-LOCK-MUTTER
(999)	11114202	1	DS LOWERING BRAKE VALVE	DS SENKBREMSVENTIL
11	10665126	1	COVER	DECKEL
(41)	240196202	3	SOCKET HEAD SCREW ISO 4762 M6X25 12.	ZYLINDERSCHRAUBE
(52)	571814108	1	CHECK SCREW	STELLSCHRAUBE
(66)	510747808	2	O-RING ARP 568 29,87X1,78 NBR90	O-RING
12	571889308	2	DIRECTIONAL CONTROL VALVE	WEGEVENTIL
(1)	10279914	1	O-RING 15,5X2,5 NBR70	O-RING
14	10665127	1	COVER ⇨ ❑ 535	DECKEL
15	10665128	1	COVER ⇨ ❑ 537	DECKEL
17	10475300	2	DIRECTIONAL CONTROL VALVE	WEGEVENTIL
22	510754408	4	NOZZLE 0,6 M5X5 MS	DUESE
23	571704608	1	NOZZLE 1,6 M5	DUESE
25	571527308	2	NOZZLE 0,8 M5	DUESE
40	10228541	4	SOCKET HEAD SCREW ISO 4762 M4X10 10.	ZYLINDERSCHRAUBE
44	240188502	8	SOCKET HEAD SCREW ISO 4762 M8X70 12.	ZYLINDERSCHRAUBE
45	510741508	4	STOP PLUG VSTI1/8"ED ST CR6-FREI	STOPFEN
46	477704008	3	STOPPER PLUG VSTI1/4"ED CR6-FREI	BLINDSTOPFEN
47	477704108	14	STOP PLUG VSTI3/8"ED CR6-FREI	STOPFEN
48	477704208	2	STOP PLUG VSTI G1/2A CR6-FREI	STOPFEN

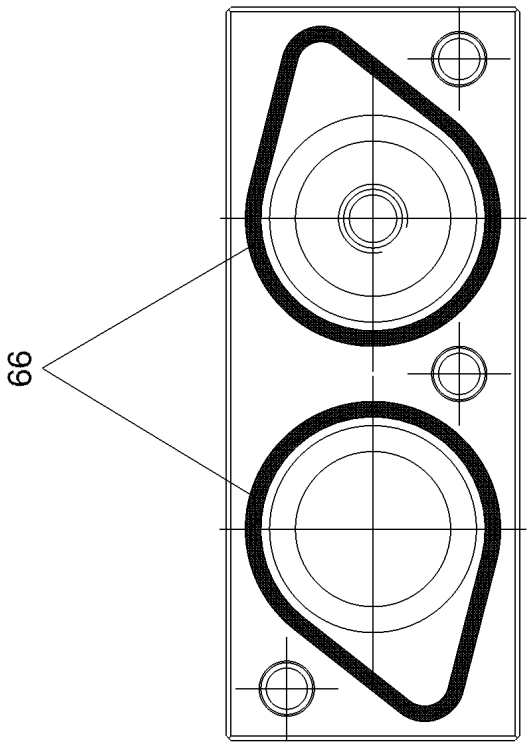
66

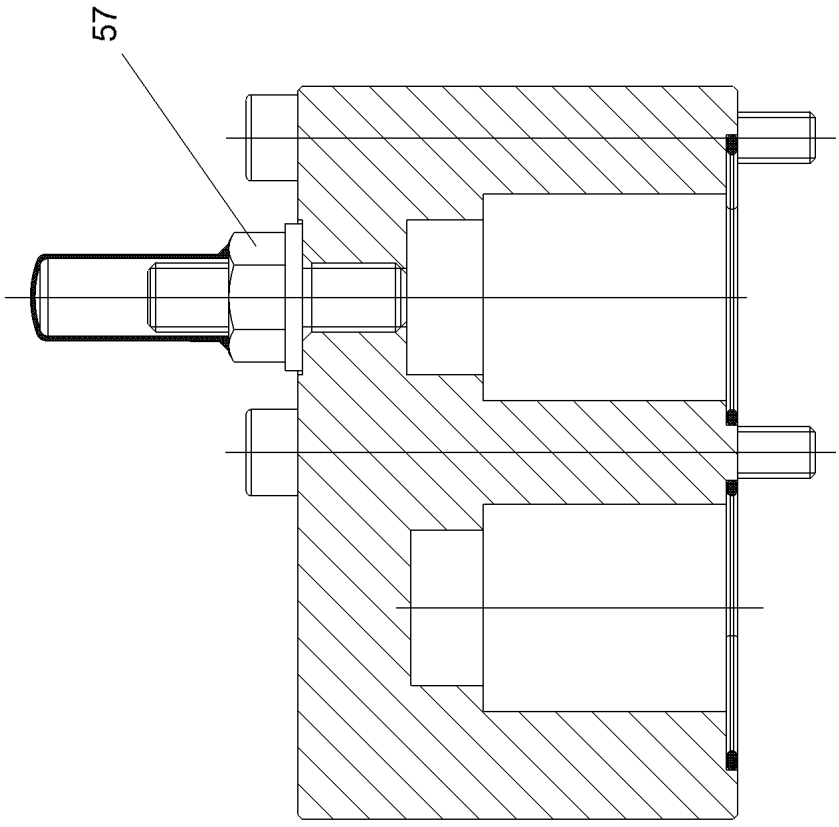
57

Pos.	Item	Quantity	Description	Bezeichnung
42	511011808	3	SOCKET HEAD SCREW ISO 4762 M6X60 10.	ZYLINDERSCHRAUBE
52	571814108	1	CHECK SCREW	STELLSCHRAUBE
57	510741708	1	SEALING NUT M8	DICHTMUTTER
66	510747808	2	O-RING ARP 568 29,87X1,78 NBR90	O-RING

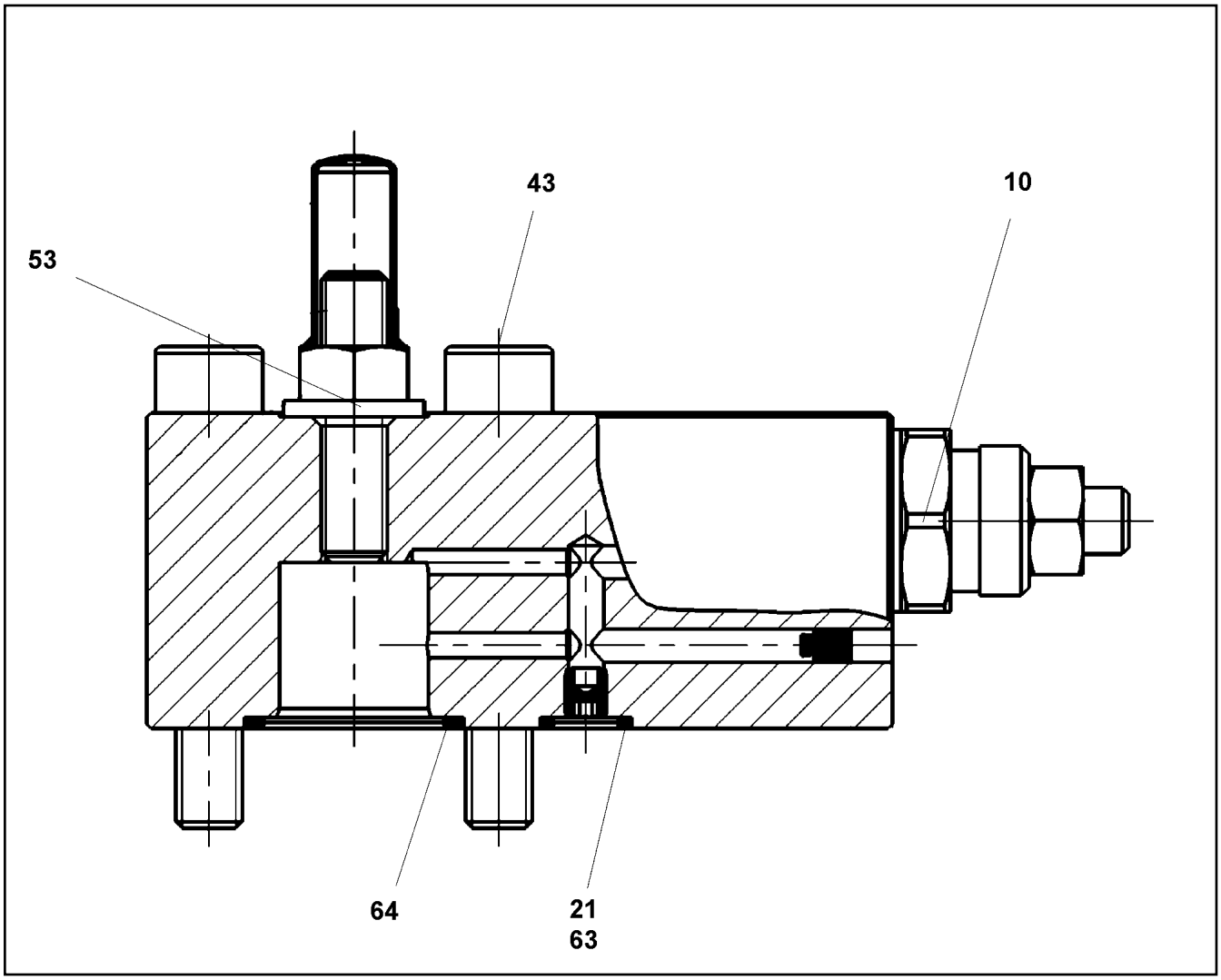

Pos.	Item	Quantity	Description	Bezeichnung
10	10491574	1	PRESSURE LIMITING VALVE	DRUCKBEGRENZUNGSVENTIL
21	510754408	1	NOZZLE 0,6 M5X5 MS	DUESE
43	404350701	1	SOCKET HEAD SCREW ISO 4762 M8X50 12.	ZYLINDERSCHRAUBE
53	571889608	1	CHECK SCREW	STELLSCHRAUBE
63	726419408	2	O-RING ARP 568 7,65X1,78 NBR90	O-RING
64	570652308	1	O-RING ARP 568 23,52X1,78 N903890SHOR	O-RING

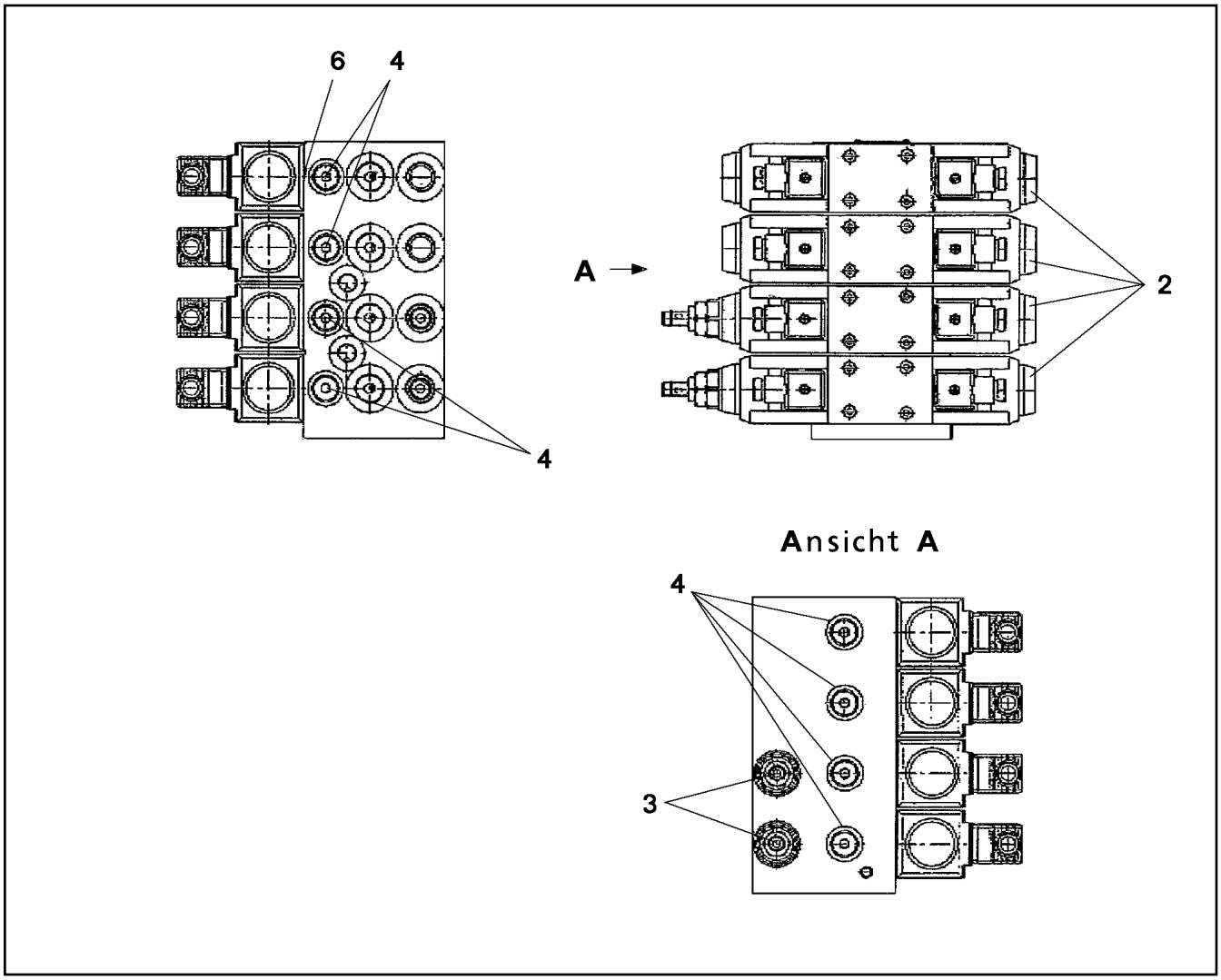

Pos.	Item	Quantity	Description	Bezeichnung
2	571817608	4	DIRECTIONAL CONTROL VALVE ⇨ ❑ 539	WEGEVENTIL
3	571877008	2	PRESSURE LIMITING VALVE	DRUCKBEGRENZUNGSVENTIL
4	510741308	8	NON-RETURN VALVE	RUECKSCHLAGVENTIL
6	571877108	1	NOZZLE 1,5 M6	DUESE
70	404361208	16	SOCKET HEAD SCREW ISO 4762 M5X45 12.	ZYLINDERSCHRAUBE

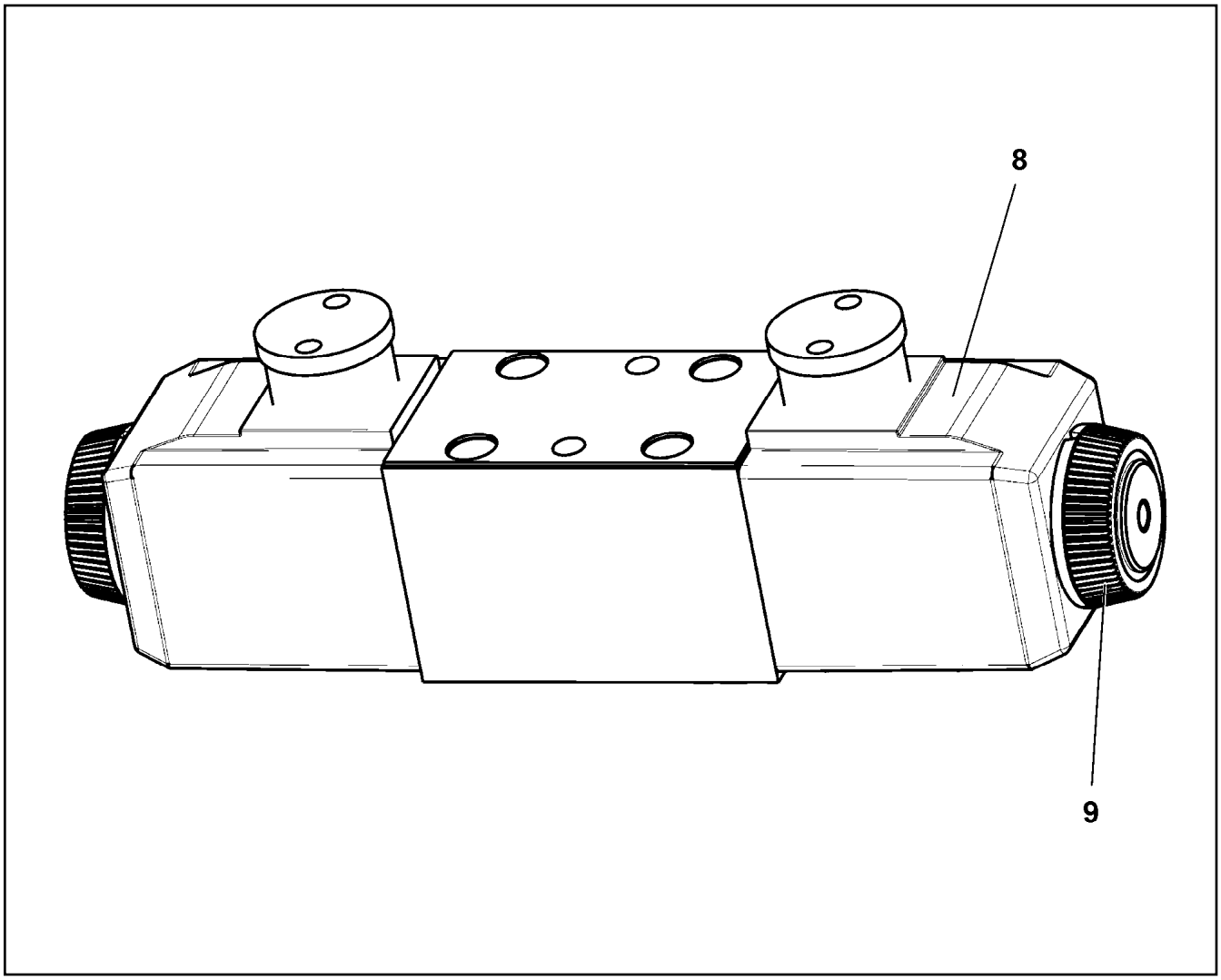

Pos.	Item	Quantity	Description	Bezeichnung
8	571817708	2	MAGNET COIL	MAGNETSPULE
9	10217383	2	NUT	RAENDELMUTTER

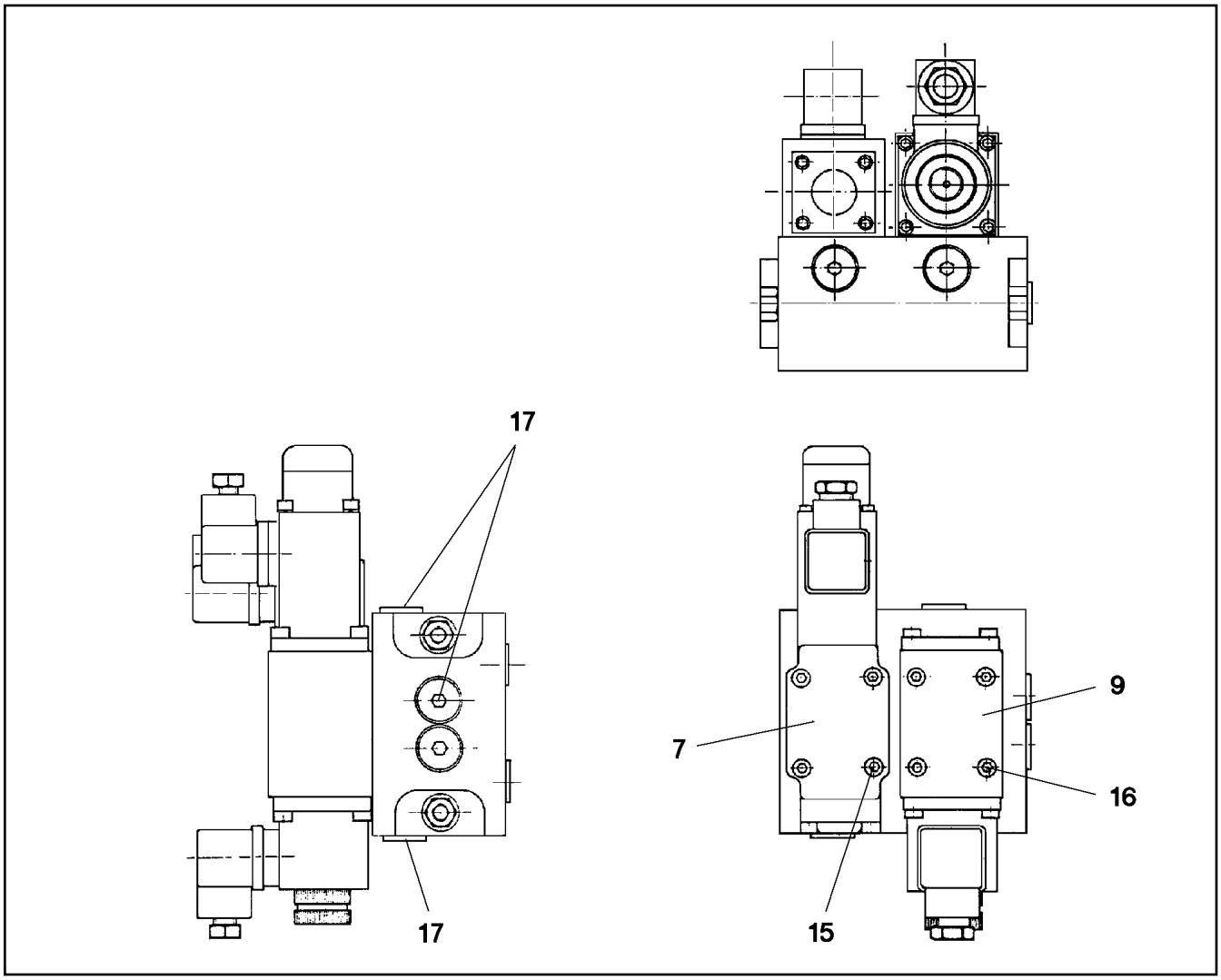

Pos.	Item	Quantity	Description	Bezeichnung
7	571453708	1	PRESSURE VALVE ⇨ ❑ 541	DRUCKVENTIL
9	570527908	1	DIRECTIONAL CONTROL VALVE 4/2 NG6-3 ⇨ ❑ 542	WEGEVENTIL
9	11691258	1	DIRECTIONAL CONTROL VALVE 4/2 NG6-3	WEGEVENTIL
(4)	510738608	4	O-RING ARP 568 9,25X1,78 NBR90	O-RING
15	404363708	4	SOCKET HEAD SCREW ISO 4762 M5X35 12.	ZYLINDERSCHRAUBE
16	404361208	4	SOCKET HEAD SCREW ISO 4762 M5X45 12.	ZYLINDERSCHRAUBE
17	477704008	6	STOPPER PLUG VSTI1/4"ED CR6-FREI	BLINDSTOPFEN

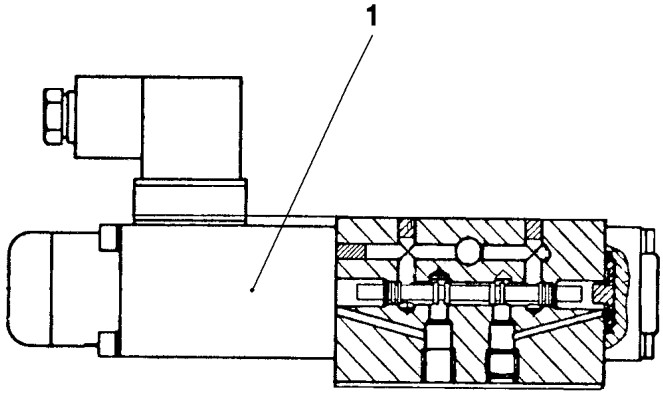

Pos.	Item	Quantity	Description	Bezeichnung
1	571910108	1	MAGNET COIL 24V	MAGNETSPULE

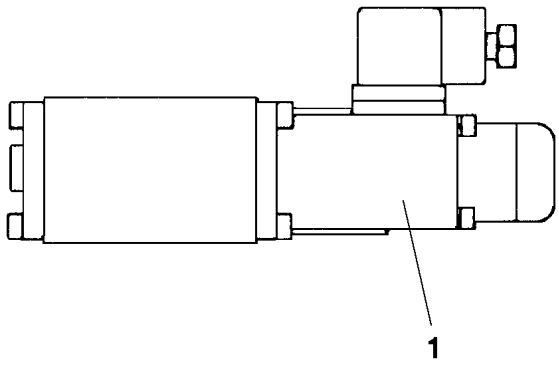

Pos.	Item	Quantity	Description	Bezeichnung
1	570817908	1	MAGNET COIL 28V	MAGNETSPULE
(1)	571455308	1	NUT	RAENDELMUTTER
999	11450691	1	SEALING SET VALVE	DS VENTIL

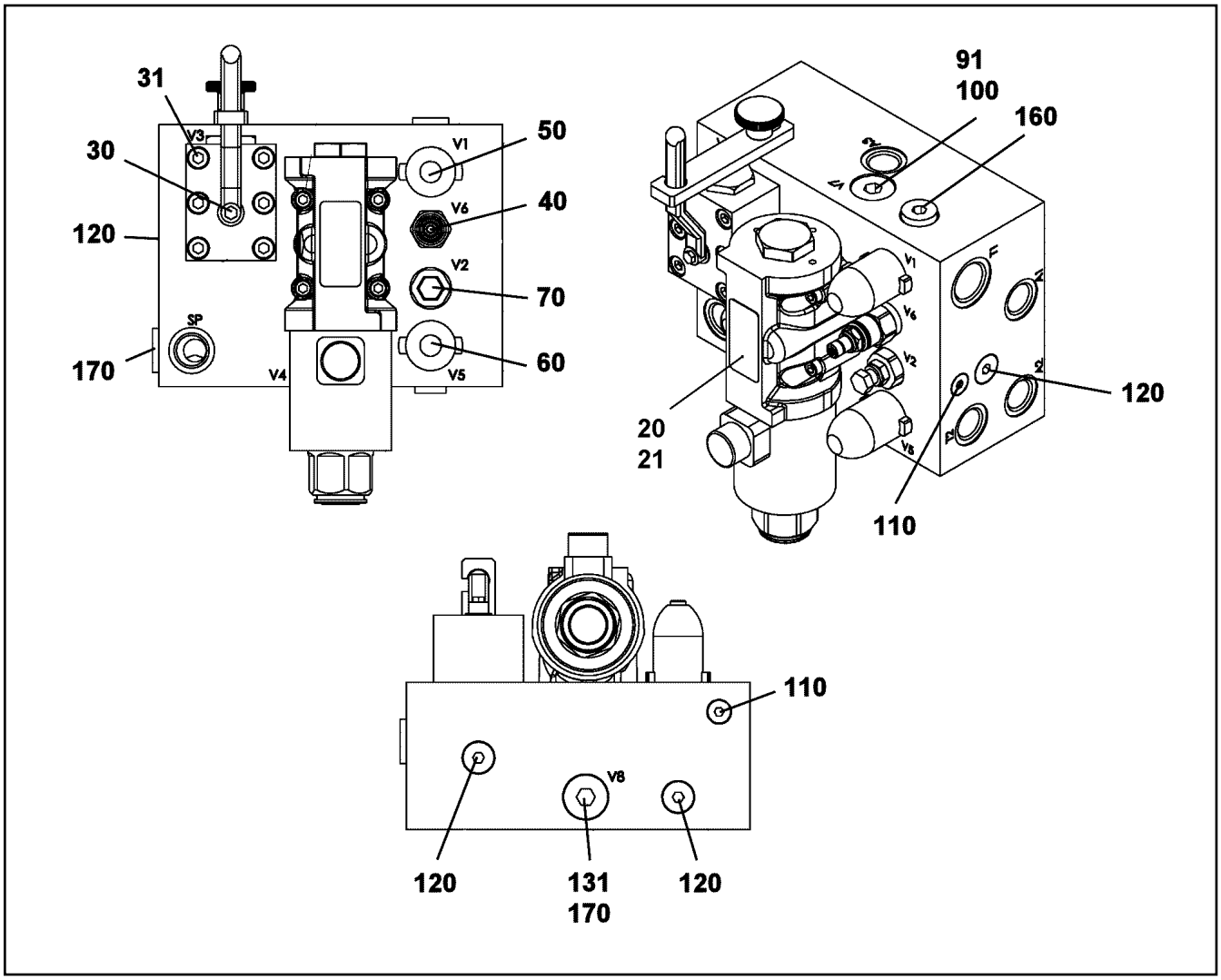

Pos.	Item	Quantity	Description	Bezeichnung
10	571915108	1	RECTANGULAR SECTION RING 12,42X1,68	RECHTECKRING
20	571737808	1	DIRECTIONAL CONTROL VALVE 4/2 NG10-3 ⇨ ❑ 544	WEGEVENTIL
21	10875591	4	SOCKET HEAD SCREW ISO 4762 M6X40 8.8	ZYLINDERSCHRAUBE
30	571723608	1	BALL VALVE BKHU DN 10	KUGELHAHN
(1)	10337381	2	O-RING 10,00X2,5 NBR90	O-RING
31	12206699	6	SOCKET HEAD SCREW ISO 4762 M8X45 8.8	ZYLINDERSCHRAUBE
40	571539808	1	PRESSURE LIMITING VALVE	DRUCKBEGRENZUNGSVENTIL
(999)	10872101	1	SEAL KIT LIMIT VALVE	DS DRUCKBEGRENZUNGSVEN
50	570427108	1	PRESSURE LIMITING VALVE pmax=380BAR ⇨ ❑ 545	DRUCKBEGRENZUNGSVENTIL
60	571400108	1	PRESSURE LIMITING VALVE pmax=350BAR	DRUCKBEGRENZUNGSVENTIL
(999)	511043308	1	SEAL KIT	DICHTSATZ
70	571534908	1	PRESSURE LIMITING VALVE	DRUCKBEGRENZUNGSVENTIL
(999)	10872100	1	SEAL KIT LIMIT VALVE	DS DRUCKBEGRENZUNGSVEN
91	10430042	1	NON-RETURN VALVE	RUECKSCHLAGVENTIL
100	477704208	1	STOP PLUG VSTI G1/2A CR6-FREI	STOPFEN
110	510741508	2	STOP PLUG VSTI1/8"ED ST CR6-FREI	STOPFEN
120	477704008	4	STOPPER PLUG VSTI1/4"ED CR6-FREI	BLINDSTOPFEN
131	10430042	1	NON-RETURN VALVE	RUECKSCHLAGVENTIL
160	477704108	1	STOP PLUG VSTI3/8"ED CR6-FREI	STOPFEN
170	477704208	2	STOP PLUG VSTI G1/2A CR6-FREI	STOPFEN

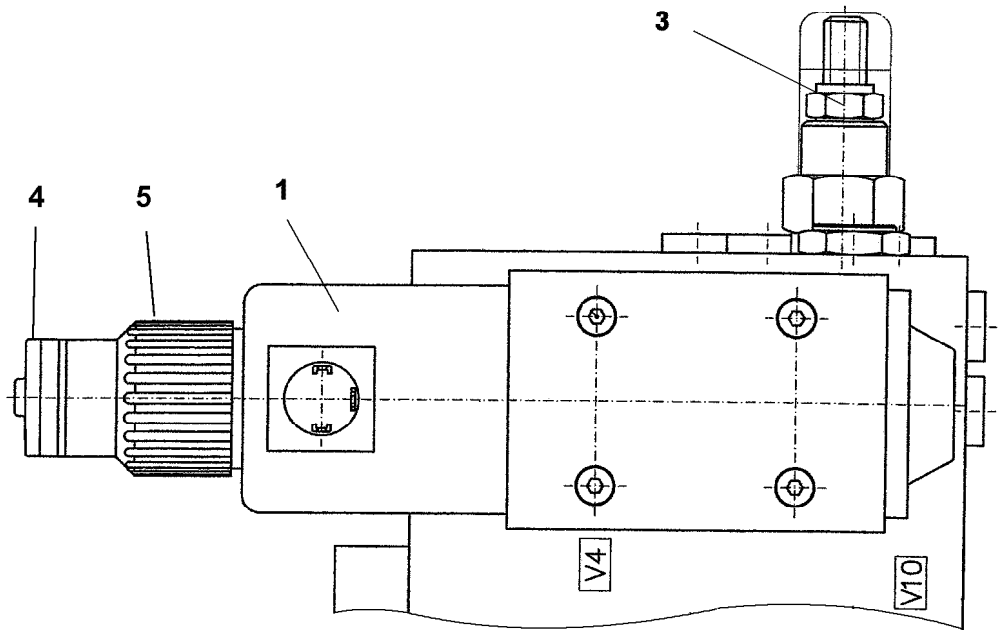

Pos. 999

Pos.	Item	Quantity	Description	Bezeichnung
1	12102117	1	MAGNET COIL 27V	MAGNETSPULE
4	11007817	1	EMERGENCY HAND OPERATION	NOTHANDBETAETIGUNG
5	10872448	1	NUT	RAENDELMUTTER
999	11006275	1	SEAL KIT DIRECTIONAL VALVE	DS WEGEVENTIL

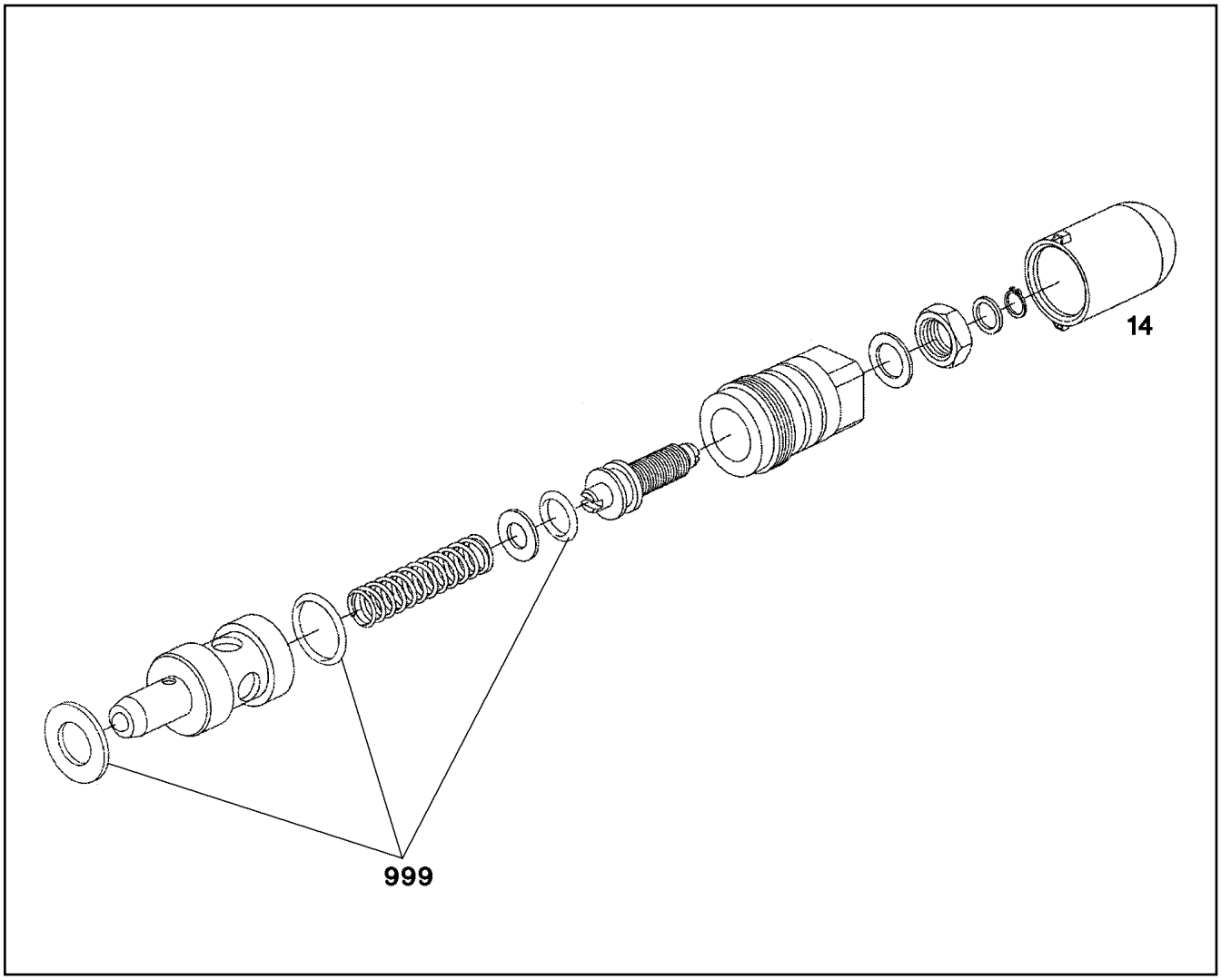

Pos.	Item	Quantity	Description	Bezeichnung
14	571511808	1	SEALING PLUG	VERSCHLUSSKAPPE
999	511043308	1	SEAL KIT	DICHTSATZ

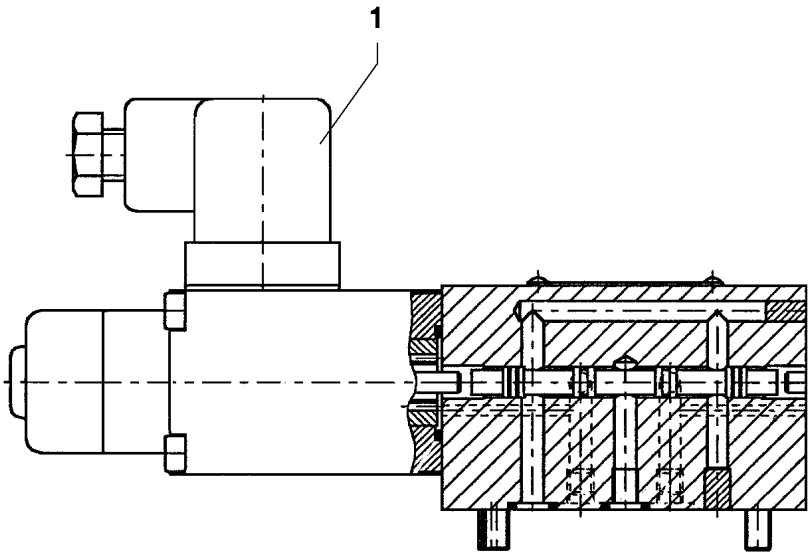

Pos.	Item	Quantity	Description	Bezeichnung
1	570827808	1	MAGNET 24V	MAGNET

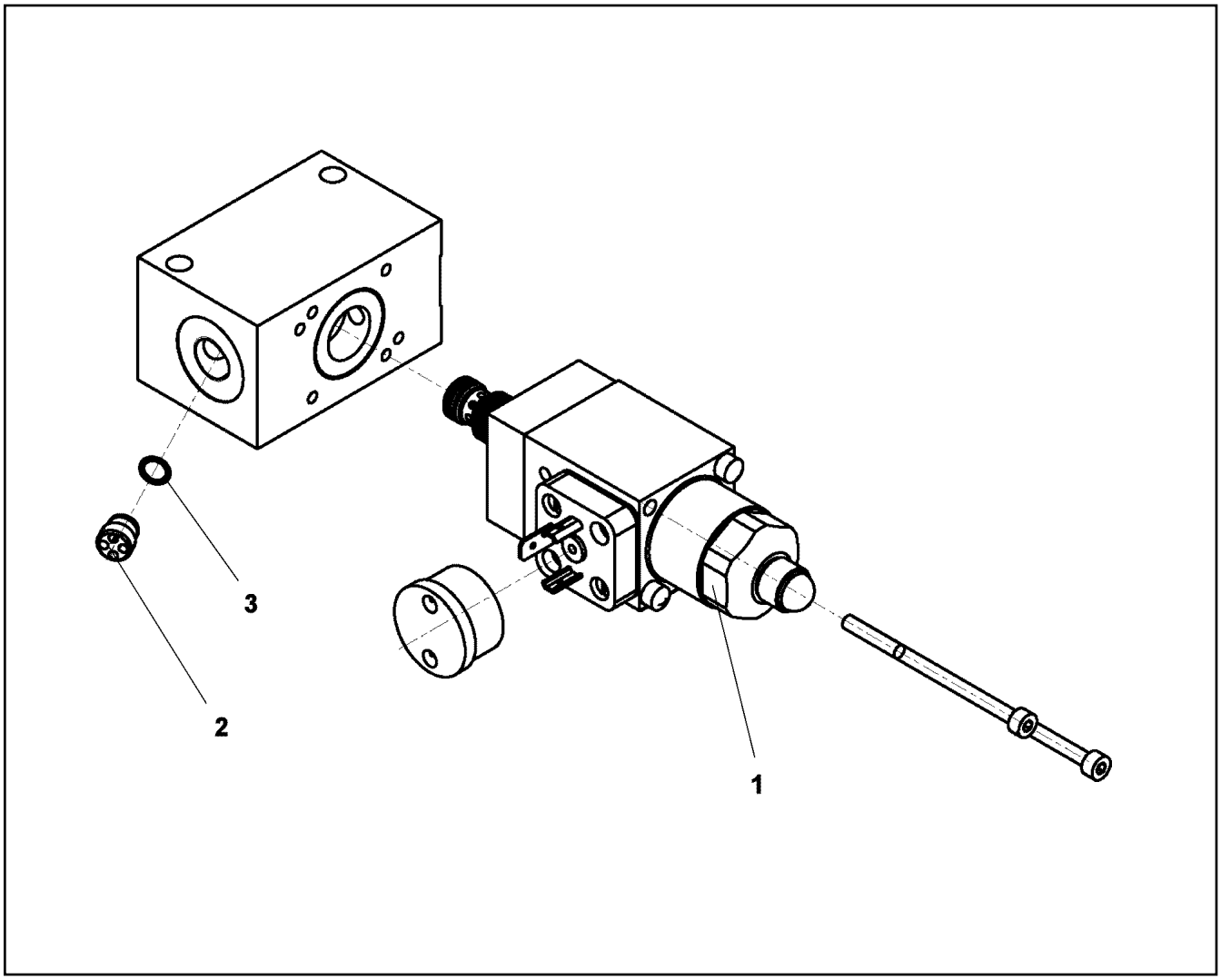

Pos.	Item	Quantity	Description	Bezeichnung
1	11170276	1	PRESSURE REDUCTION VALVE ⇨ ❑ 548	DRUCKREDUZIERVENTIL
2	11170277	1	NON-RETURN VALVE	RUECKSCHLAGVENTIL
3	570690608	1	O-RING 6X1 NBR90	O-RING

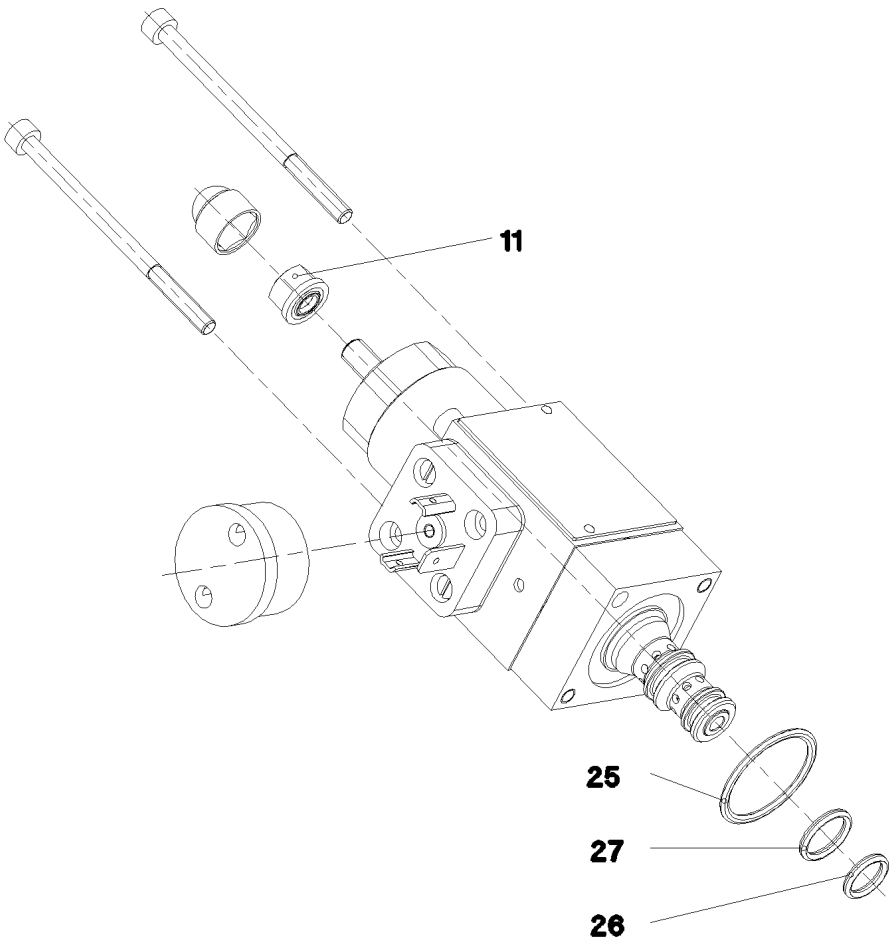

Pos.	Item	Quantity	Description	Bezeichnung
11	510753408	1	SEALING NUT M6	DICHTMUTTER
25	570652308	1	O-RING ARP 568 23,52X1,78 N903890SHOR	O-RING
26	510719008	1	O-RING ARP 568 9,25X1,78 NBR75	O-RING
27	510718108	1	O-RING ARP 568 10,82X1,78 NBR75	O-RING

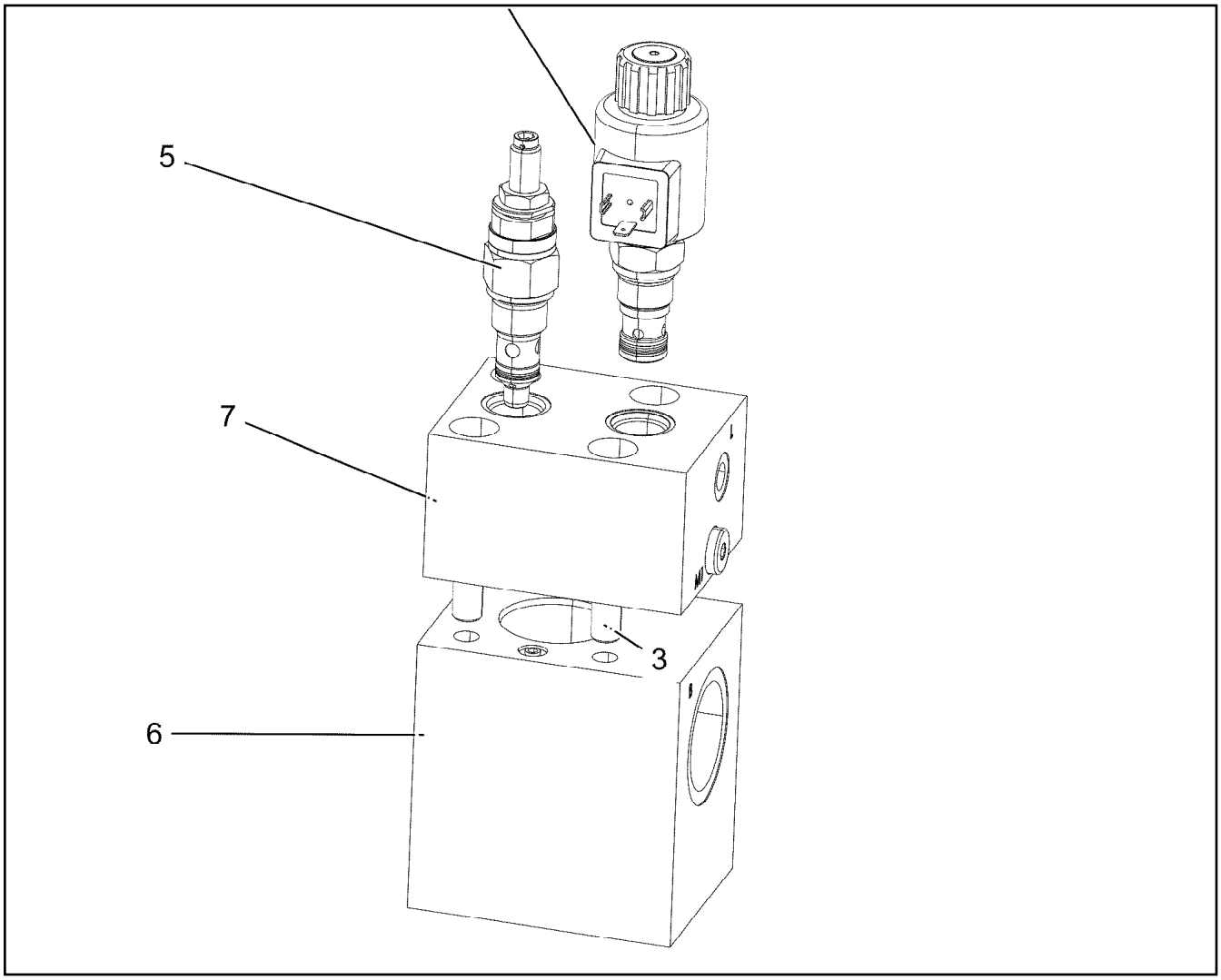

Pos.	Item	Quantity	Description	Bezeichnung
3	12101147	1	BUILT-IN VALVE	EINBAUVENTIL
4	12101146	1	DIRECTIONAL CONTROL VALVE 2/2	WEGEVENTIL
5	571691108	1	PRESSURE LIMITING VALVE	DRUCKBEGRENZUNGSVENTIL
(21)	726424108	2	O-RING 19X2,5 NBR70	O-RING
(22)	726406508	1	O-RING 10X2 NBR70	O-RING
6	10800672	1	SCREW-IN BLIND	EINSCHRAUBBLENDE
7	5610372	1	SCREW-IN BLIND	EINSCHRAUBBLENDE

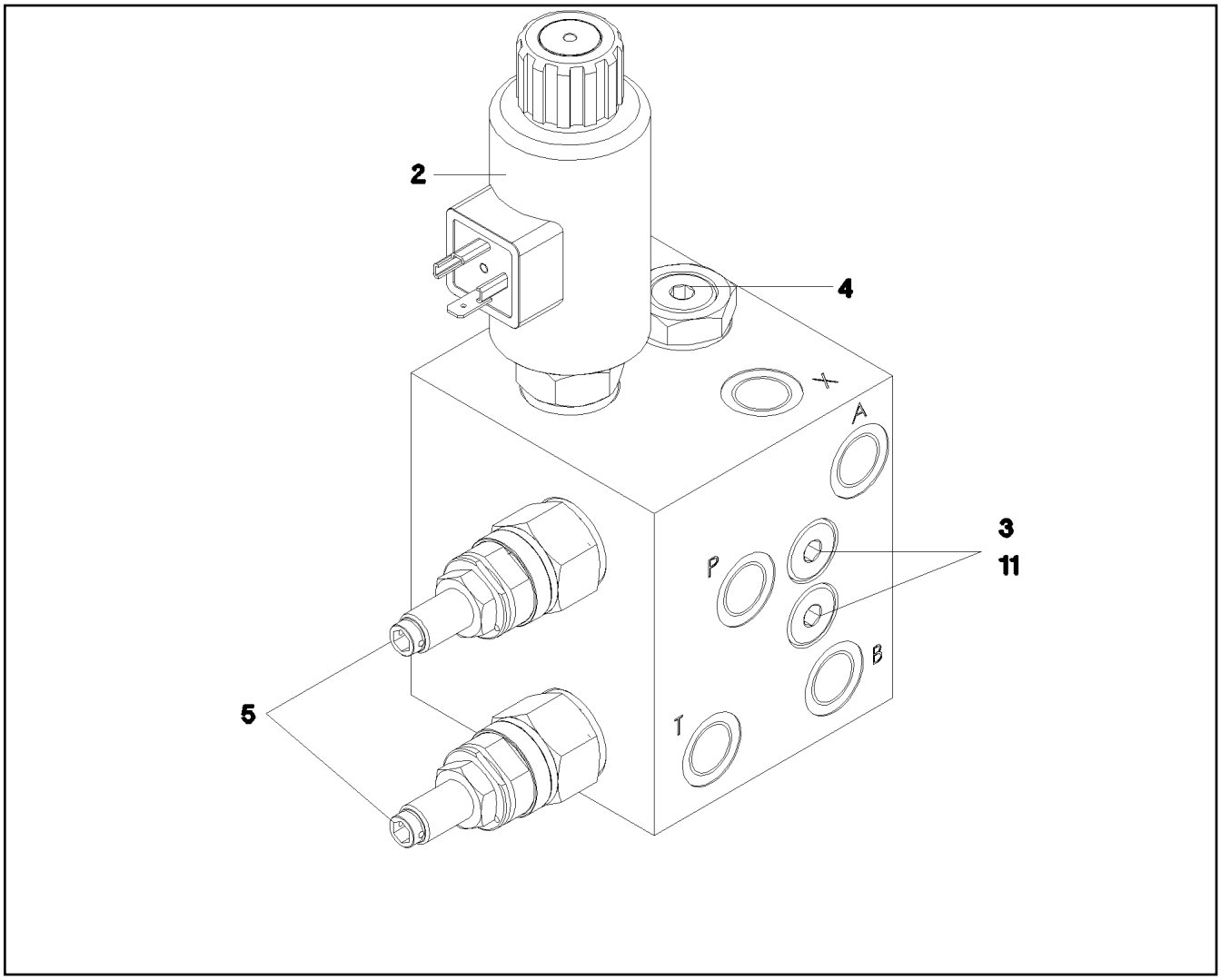

Pos.	Item	Quantity	Description	Bezeichnung
2	11009411	1	DIRECTIONAL CONTROL VALVE 4/3	WEGEVENTIL
(11)	11003699	1	MAGNET COIL	MAGNETSPULE
3	10012943	1	NON-RETURN VALVE	RUECKSCHLAGVENTIL
4	11006543	1	DOUBLE NON-RETURN VALVE	DOPPELRUECKSCHLAGVENTIL
5	10451060	2	PRESSURE LIMITING VALVE 100BAR	DRUCKBEGRENZUNGSVENTIL
11	477704008	2	STOPPER PLUG VSTI1/4"ED CR6-FREI	BLINDSTOPFEN

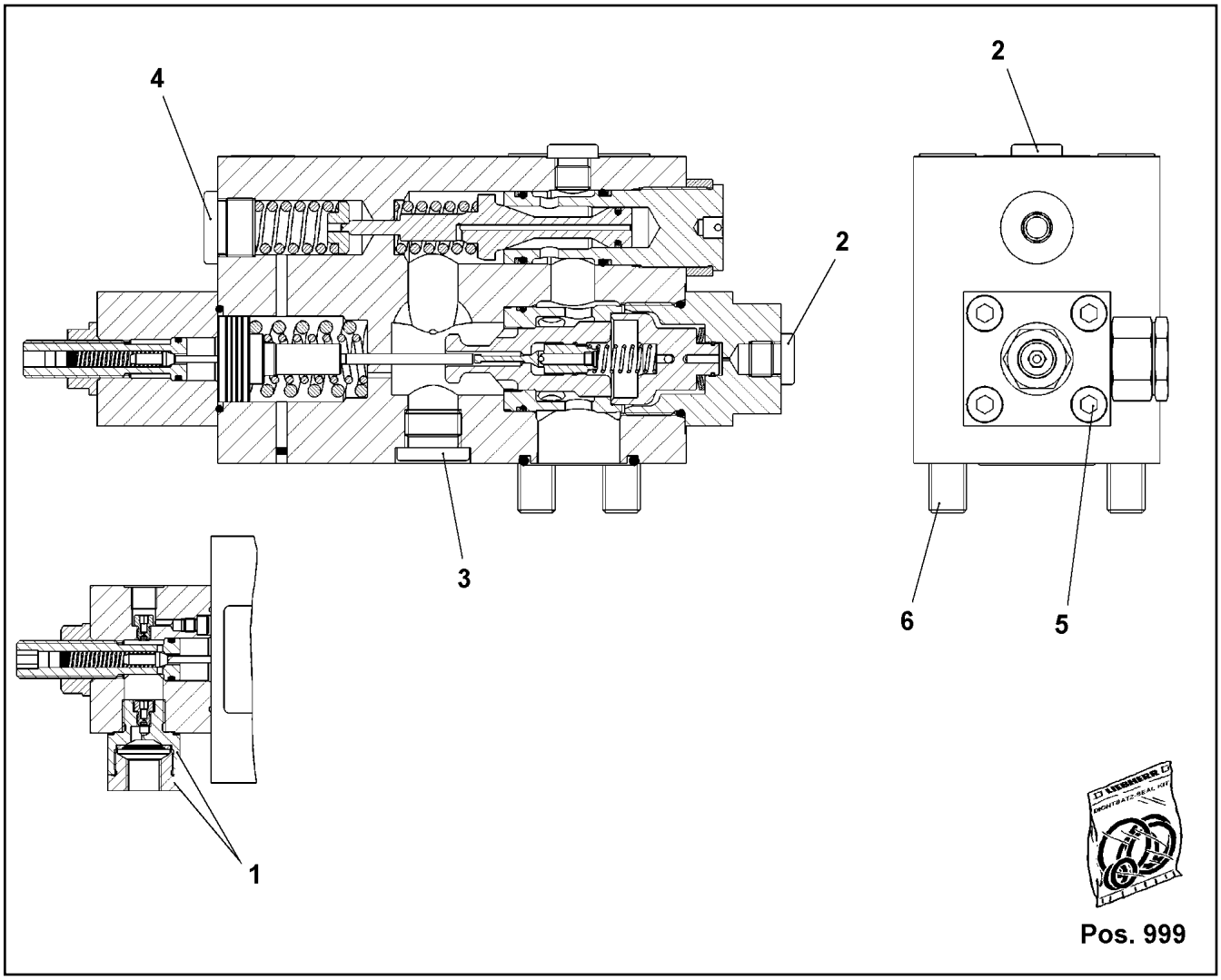

Pos.	Item	Quantity	Description	Bezeichnung
1	10346599	1	STRAINER FILTER	SIEBFILTER
2	477704008	2	STOPPER PLUG VSTI1/4"ED CR6-FREI	BLINDSTOPFEN
3	477704208	1	STOP PLUG VSTI G1/2A CR6-FREI	STOPFEN
4	477704508	1	STOP PLUG VSTIM22X1,5ED CR6-FREI	STOPFEN
5	404350701	4	SOCKET HEAD SCREW ISO 4762 M8X50 12.	ZYLINDERSCHRAUBE
6	4900973	4	SOCKET HEAD SCREW ISO 4762 M14X120	ZYLINDERSCHRAUBE
999	10650953	1	DS LOWERING BRAKE VALVE	DS SENKBREMSVENTIL

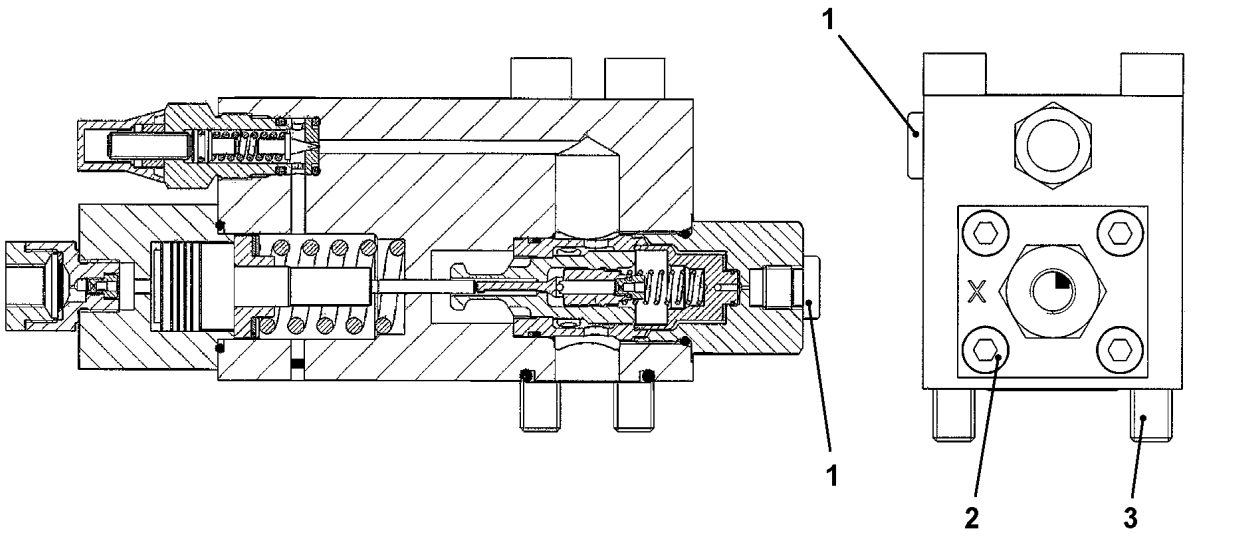

Pos. 999

Pos.	Item	Quantity	Description	Bezeichnung
1	477704008	2	STOPPER PLUG VSTI1/4"ED CR6-FREI	BLINDSTOPFEN
2	4980840	4	SOCKET HEAD SCREW ISO 4762 M8X45 12.	ZYLINDERSCHRAUBE
3	514802308	4	SOCKET HEAD SCREW ISO 4762 M12X100 1	ZYLINDERSCHRAUBE
999	12108313	1	SEALING SET VALVE ⇨ ❑ 553	DS VENTIL

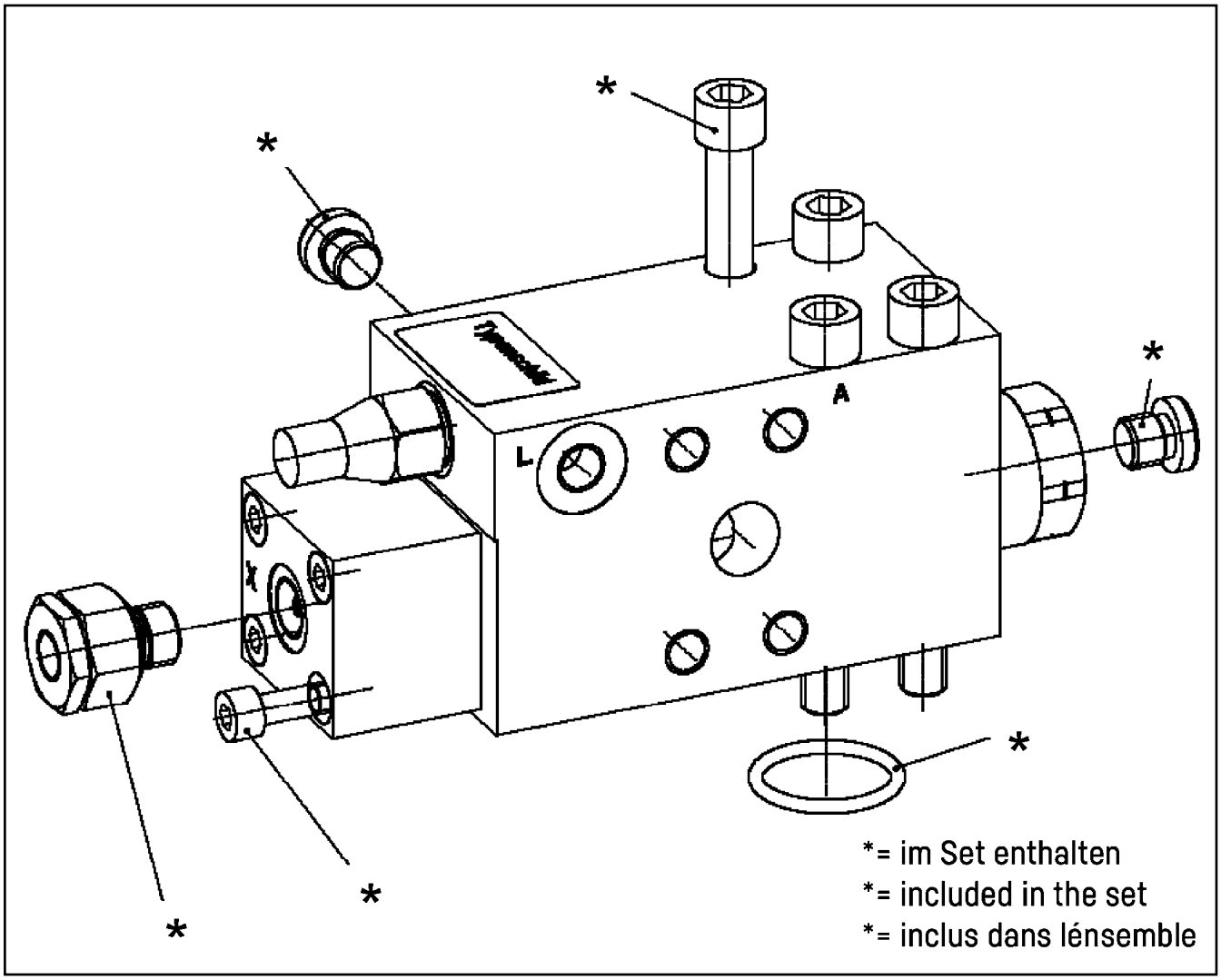

Pos.	Item	Quantity	Description	Bezeichnung
1000	980288008	1	DOCUMENTATION	DOKUMENTATION

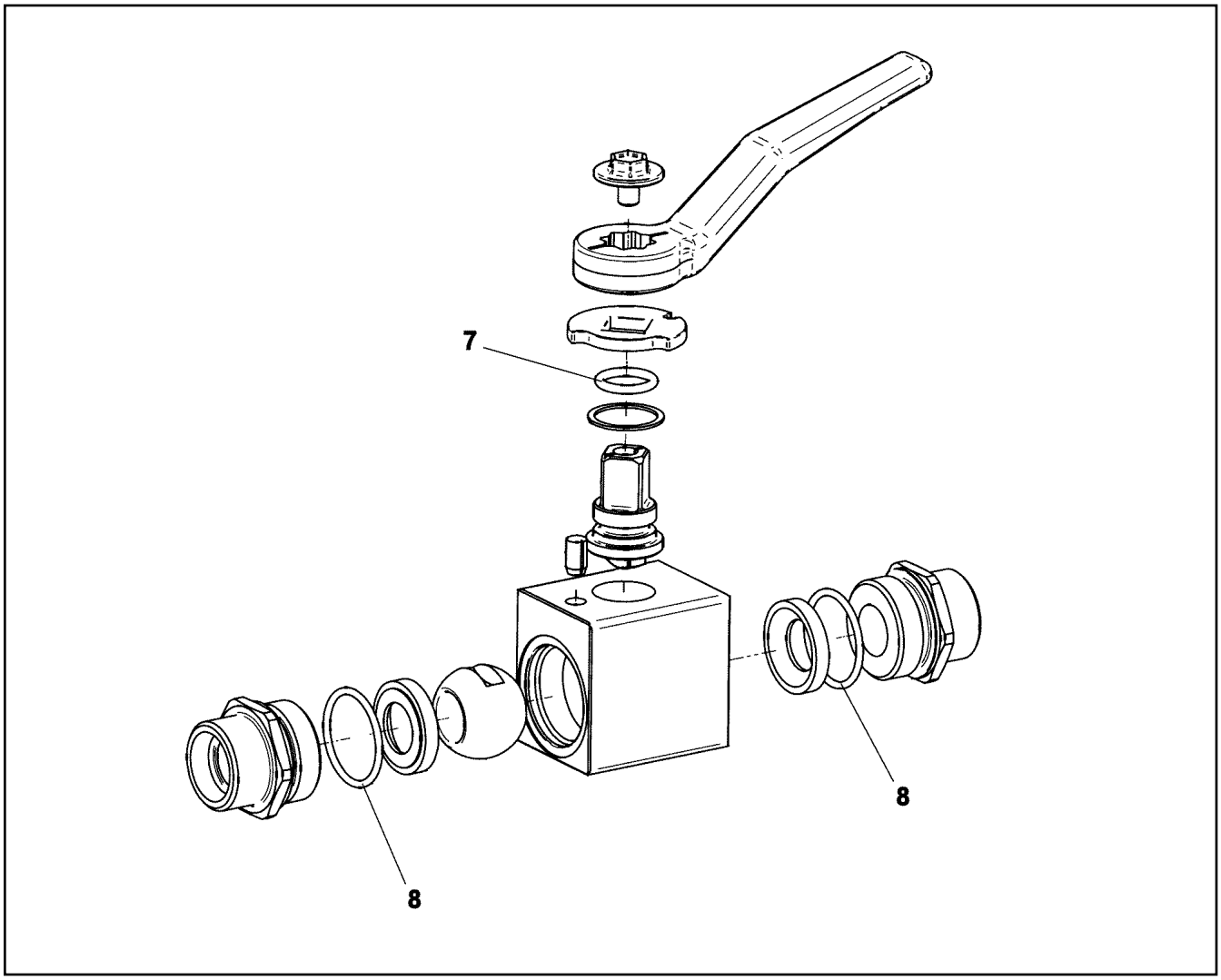

Pos.	Item	Quantity	Description	Bezeichnung
7	10337381	1	O-RING 10,00X2,5 NBR90	O-RING
8	510792708	2	O-RING 20X2 NBR90	O-RING

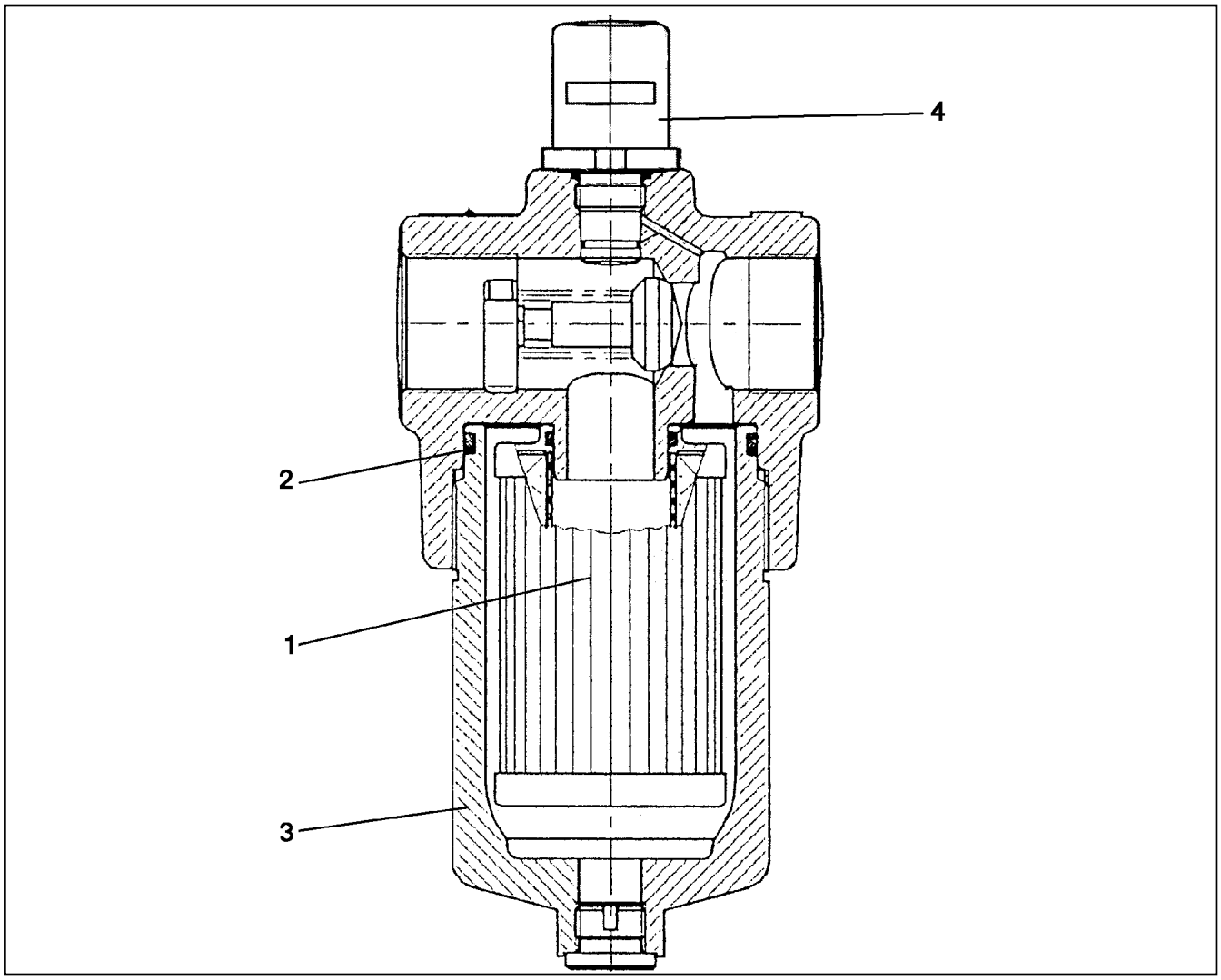

Pos.	Item	Quantity	Description	Bezeichnung
1	10037616	1	FILTER INSERT OEL 10µm ⇨ ❑ 556	FILTEREINSATZ
2	726407608	1	O-RING 59X3 NBR70	O-RING
3	571021308	1	FILTER BOWL	FILTERTOPF
4	571356108	1	CLOGGING INDICATOR	VERSCHMUTZUNGSANZEIGE

Pos. 148

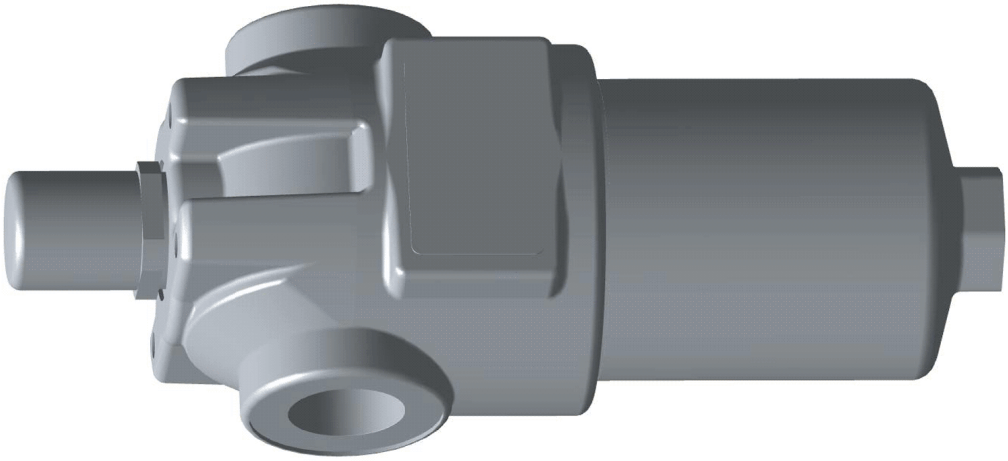

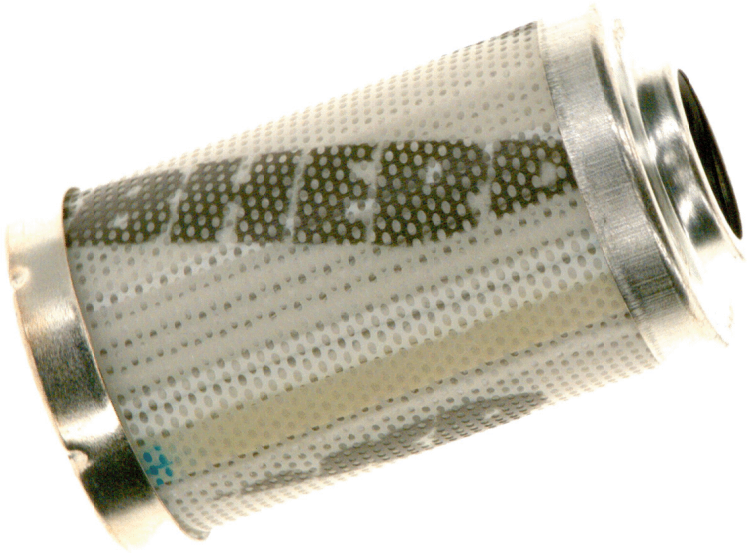

Abbildung ähnlich
Illustration similar
Illustration similaire

Pos.	Item	Quantity	Description	Bezeichnung
1	980288008	1	DOCUMENTATION	DOKUMENTATION

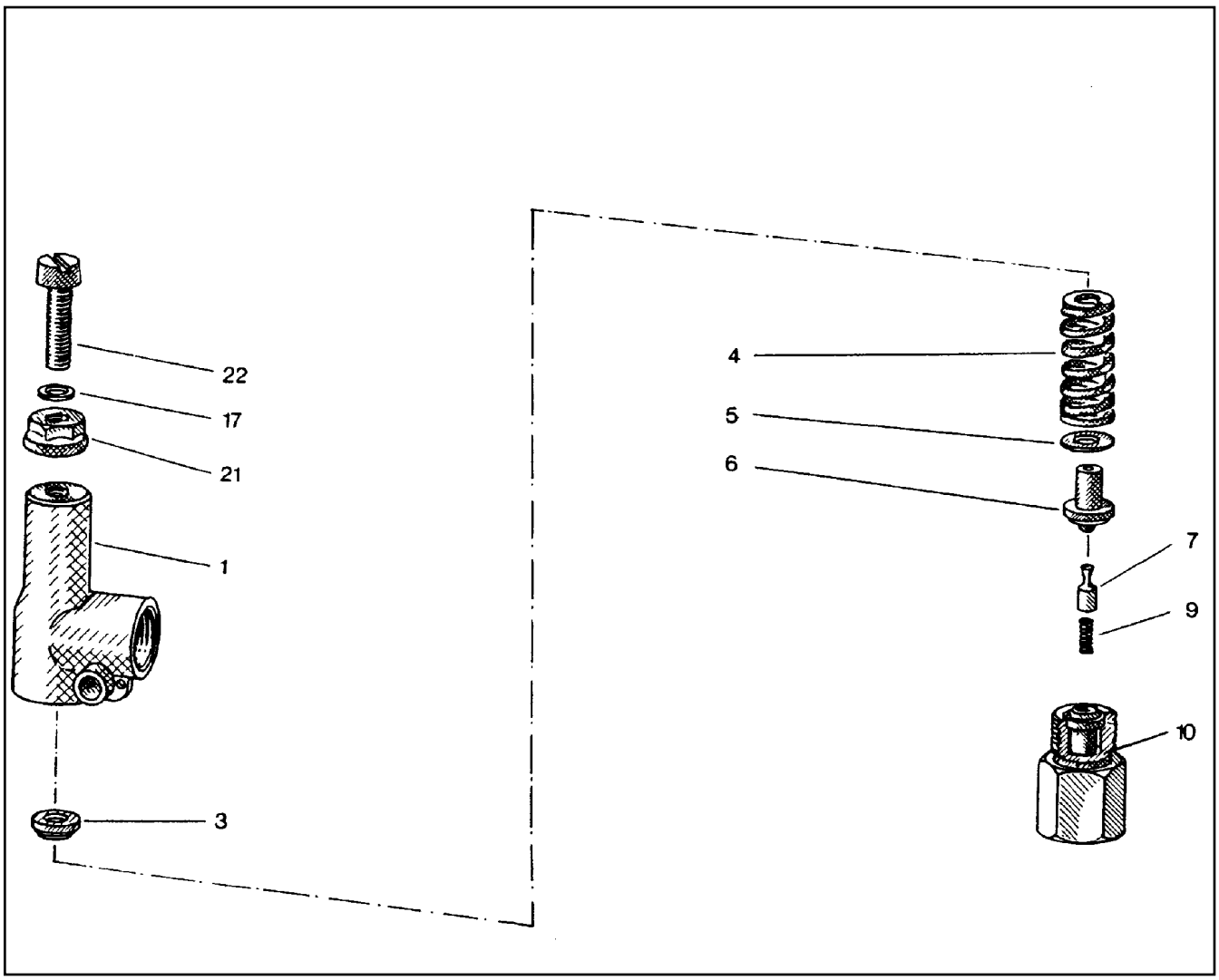

Pos.	Item	Quantity	Description	Bezeichnung
1	510796908	1	HOUSING	GEHAEUSE
3	510797008	1	SPRING SUPPORT	FEDERTELLER
4	511015108	1	COMPRESSION SPRING	DRUCKFEDER
5	510797208	1	WASHER	SCHEIBE
6	510797308	1	SPRING-LOADED PIN	FEDERBOLZEN
7	510797408	1	DAMPING PISTON	DAEMPFUNGSKOLBEN
9	510797508	1	COMPRESSION SPRING 0,5X3X12,4	DRUCKFEDER
10	510797608	1	VALVE SEAT	VENTILSITZ
17	510783208	1	SHIM	AUSGLEICHSCHEIBE
21	510741708	1	SEALING NUT M8	DICHTMUTTER
22	510797708	1	SOCKET HEAD SCREW DIN 84 M8X35 5.8	ZYLINDERSCHRAUBE

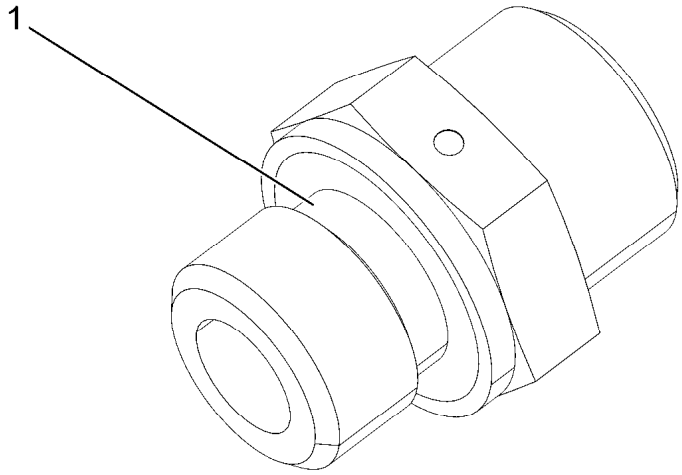

Pos.	Item	Quantity	Description	Bezeichnung
1	501243708	1	O-RING ARP 568 10,52X1,83 NBR90	O-RING

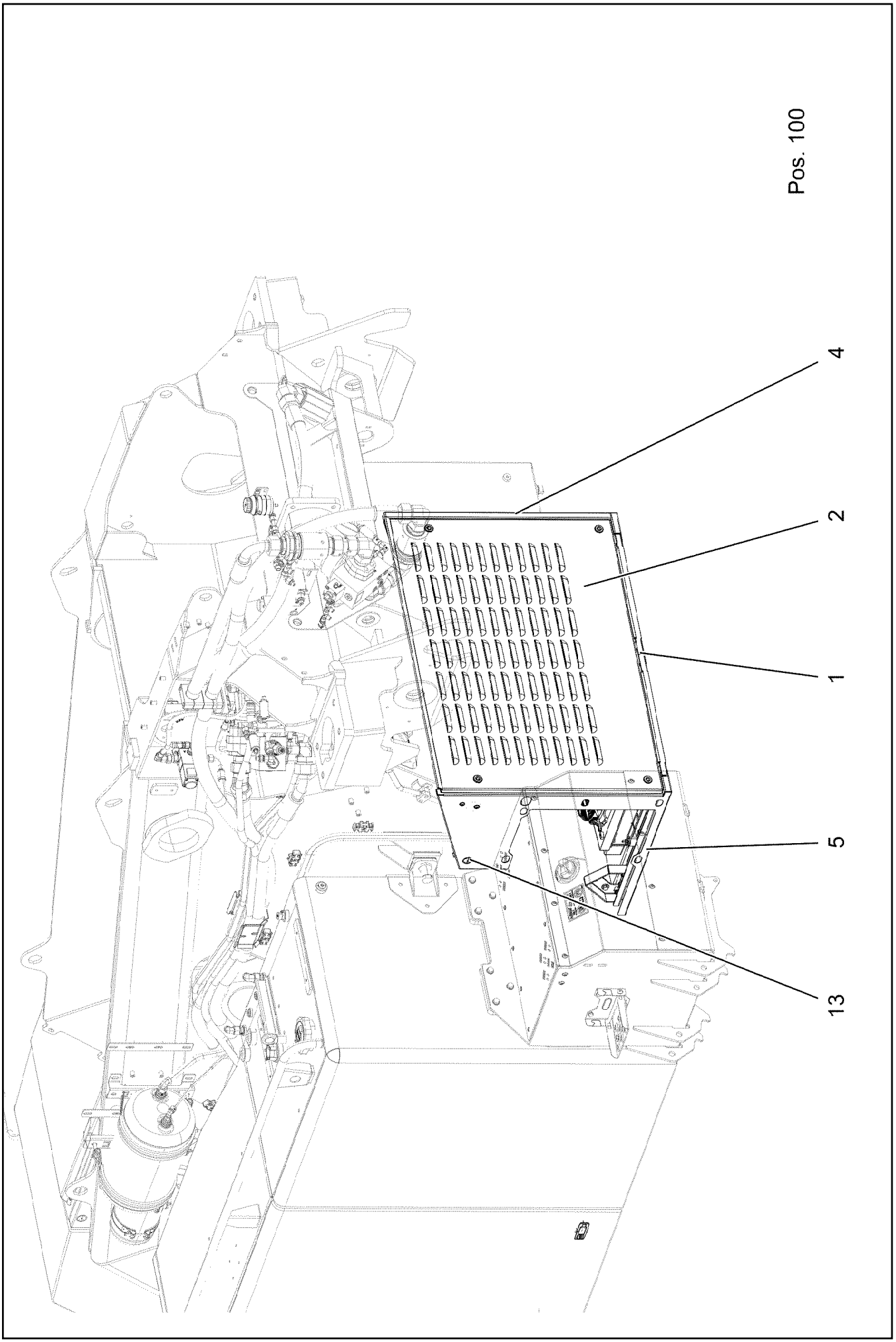
Pos. 100
4
2
1
5
13

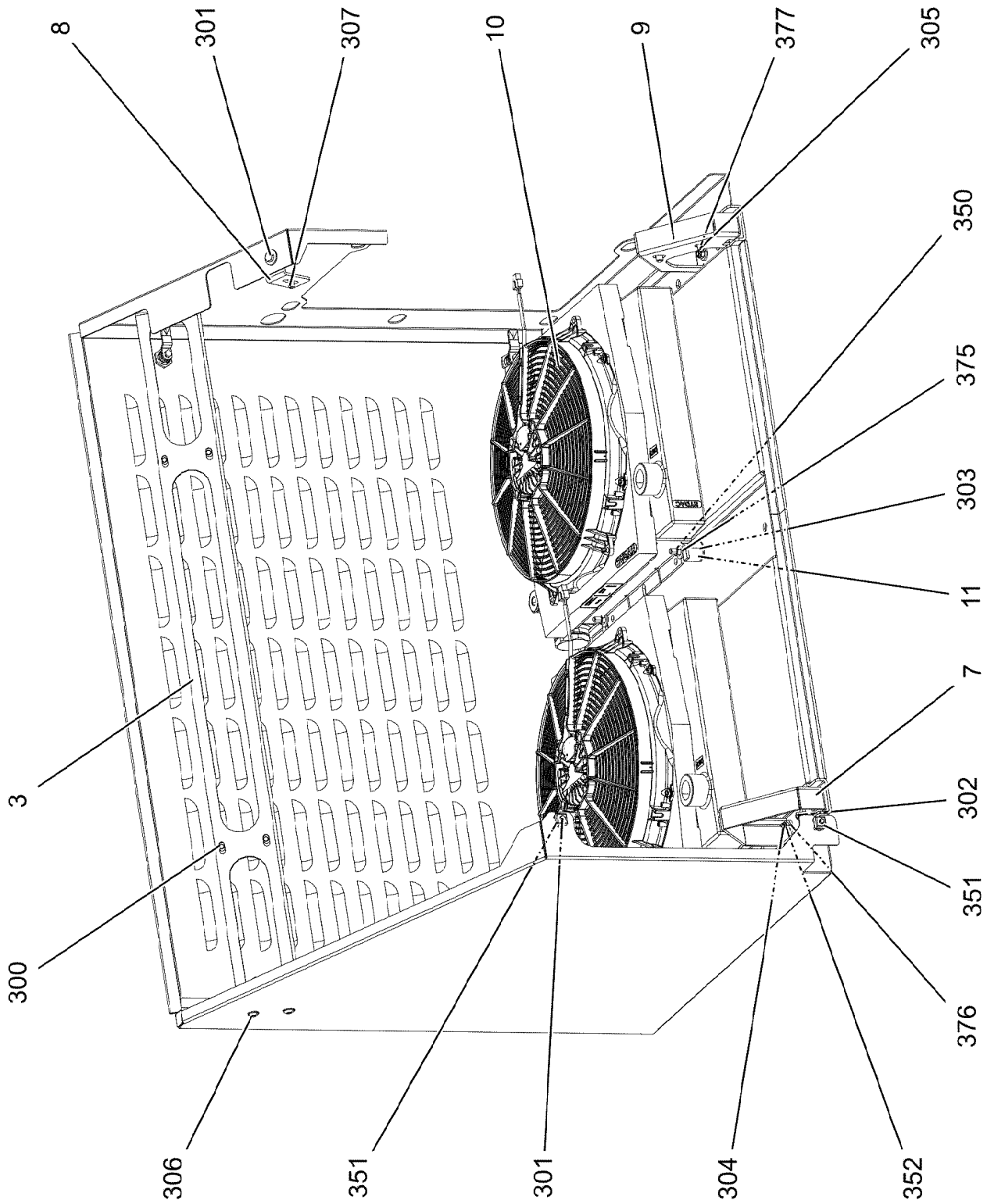

16.11.2023 006398	**etk_en_de_078966 LTR 1100**	❑ 561 (2/3)
LIEBHERR	**OIL COOLER INSTALLATION** **OELKUEHLER EINBAU**	**919528608**

Pos.	Item	Quantity	Description	Bezeichnung
1	96000683	1	FLOOR SHEET	BODENBLECH
2	96000686	1	REAR SHUTTER	HECKBLENDE
3	97134347	1	BEAM 3X1247X142 S355MC FE//ZNNI8//CN//T	TRAEGER
4	97058579	1	PLATE 2X895X965 DC01	BLECH
5	97139571	1	PLATE 2X748X942 DC01	BLECH
7	97066655	1	PLATE 4X228X191 S315MC FE//ZNNI8//CN//T	BLECH
8	973720808	1	ANGLE 4X113X40 S315MC FE//ZNNI8//CN//T	WINKEL
9	97066656	1	PLATE 4X228X191 S315MC FE//ZNNI8//CN//T	BLECH
10	10097345	2	OIL AIR COOLER ⇨ ❑ 563	OEL-LUFTKUEHLER
11	726906508	8	CIRCULAR BEARING B30X30XM8	RUNDLAGER
13	591570908	1	COVER LID POLYSTIC27-33 ABS	ABDECKKAPPE
100	96030354	1	ELECTRICS OIL COOLER 2	ELEKTRIK OELKUEHLER 2
(1)	630105108	1	RELAY 24V/1S 26X26X24MM SPF	RELAIS
300	11690048	4	HEX SCREW ISO 4017 M8X12 8.8 480H SPF	SECHSKANTSCHRAUBE
301	11651767	3	HEX SCREW ISO 4017 M8X20 8.8 480H SPF	SECHSKANTSCHRAUBE
302	10875471	6	BUTTON HEAD SCREW AEHNL.ISO 7380-2	HALBRUNDKOPFSCHRAUBE
303	10876082	8	BUTTON HEAD SCREW AEHNL.ISO 7380-2	HALBRUNDKOPFSCHRAUBE
304	10197831	4	HEX SCREW ISO 4017 M8X25 8.8 ZNNI-480	SECHSKANTSCHRAUBE
305	11652470	4	HEX SCREW ISO 4017 M10X16 8.8 FLZN SP	SECHSKANTSCHRAUBE
306	10875485	4	BUTTON HEAD SCREW AEHNL.ISO 7380-2	HALBRUNDKOPFSCHRAUBE
307	11651612	1	HEX SCREW ISO 4017 M8X16 8.8 480H SPF	SECHSKANTSCHRAUBE
350	11693875	8	HEX NUT ISO 4032 M8 8 480H SPF	SECHSKANTMUTTER
351	10875858	3	CAGE NUT M8 A2/ST A2K	KAEFIGMUTTER
352	10875614	4	HEX NUT DIN 985 M8 8 480H SPF	SECHSKANTMUTTER
375	11140469	16	WASHER ISO 7093-1 8 200HV 480H SPF	SCHEIBE
376	11840501	8	WASHER DIN 7349 8,4 200HV 480H SPF	SCHEIBE
377	11658580	4	WASHER DIN 7349 10,5 200HV-St FLZN SPF	SCHEIBE

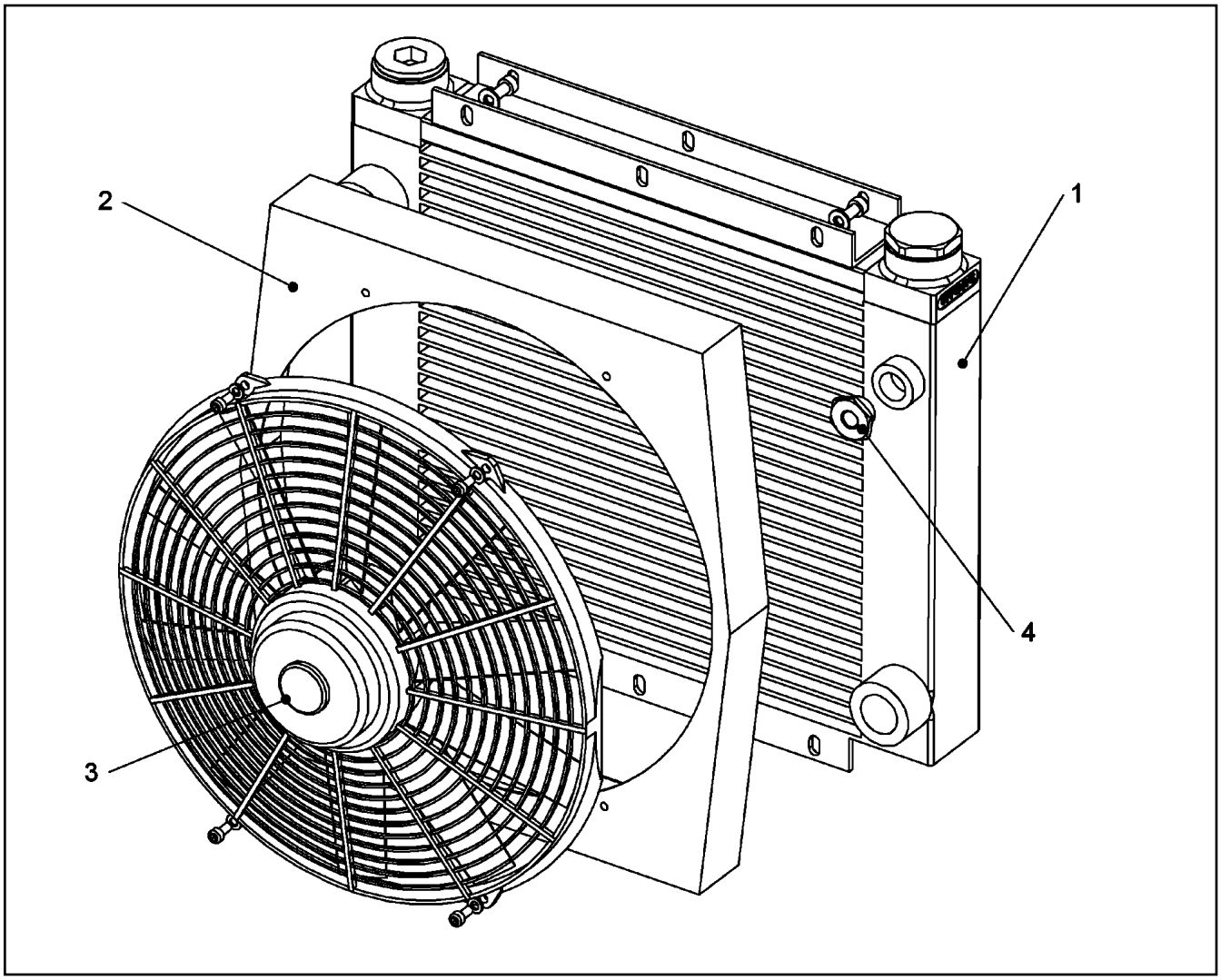

Pos.	Item	Quantity	Description	Bezeichnung
1	10354835	1	OIL COOLER	OELKUEHLER
2	10354836	1	FAN HOUSING	LUEFTERGEHAEUSE
3	10354837	1	FAN 24V	LUEFTER
4	10354839	1	REDUCER M22/M14X1,5	REDUZIERUNG

Pos.	Item	Quantity	Description	Bezeichnung
4	969767908	1	PIPEWORK AIR INSTALLATION ⇨ ❑ 565	VERROHRUNG DRUCKLUFTANL

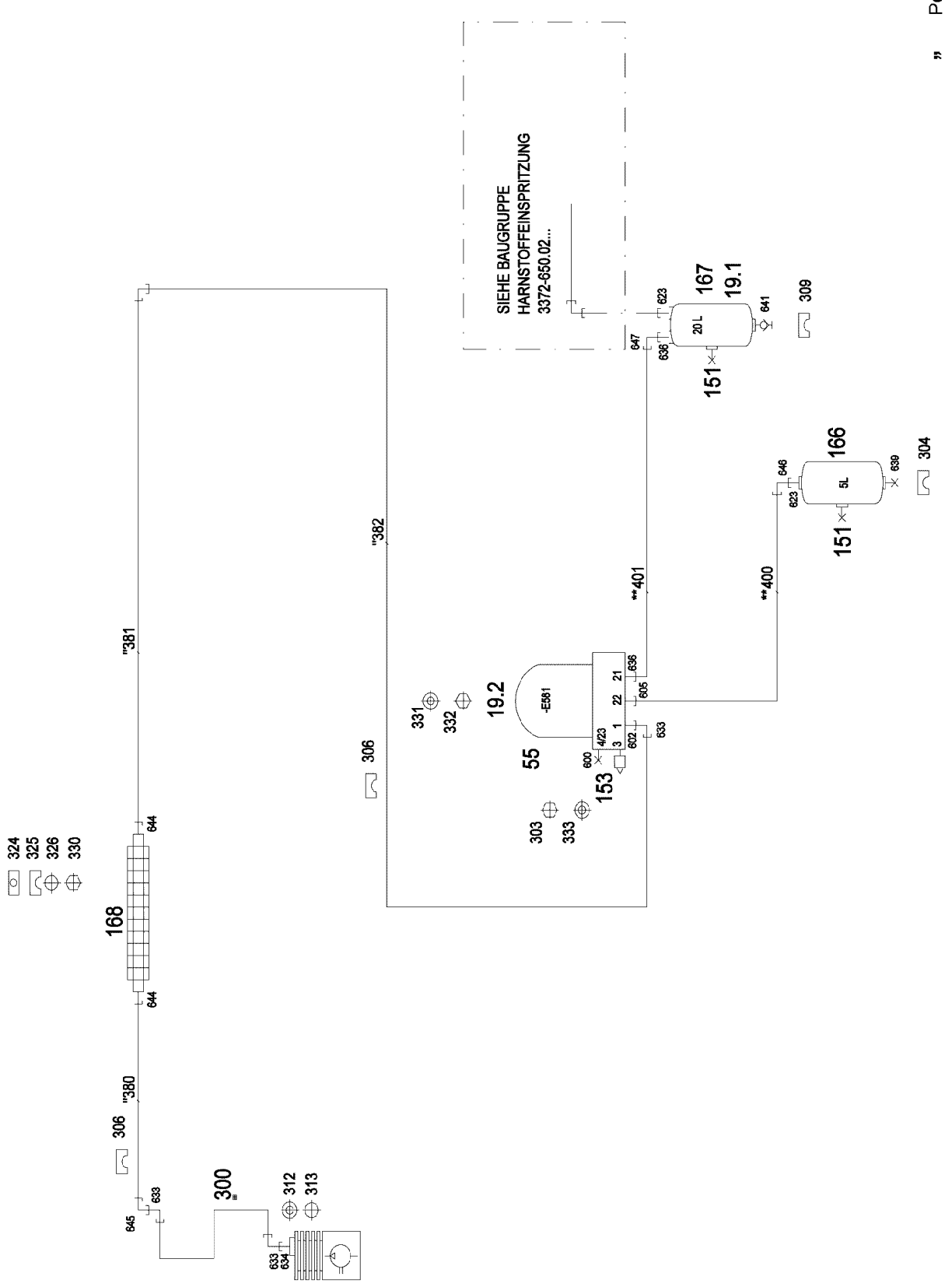

Pos. 11

16.11.2023 085938 LIEBHERR	**etk_en_de_078966 LTR 1100** **PIPEWORK AIR INSTALLATION** **VERROHRUNG DRUCKLUFTANLAGE**	❑ 565 (1/2) **969767908**

Pos.	Item	Quantity	Description	Bezeichnung
10	969849208	1	PNEUMATIC LINES UPPER CARRIAGE STUF	PNEUMATIKLEITUNGEN OW
11	969849308	1	PIPELINE ADDITIONAL PARTS DRUCKLUF	ROHRLEITUNGEN ZUSATZTEIL
(380)	969865508	1	PIPE COMPL. 18X1,5X1636	ROHR KPL.
(381)	969865608	1	PIPE COMPL. 18X1,5X1312	ROHR KPL.
(382)	969865708	1	PIPE COMPL. 18X1,5X1291	ROHR KPL.
19	969849608	1	MECHANICAL AUXILIARIES	MECH.BEFESTIGUNGSTEILE
(1)	953781608	2	PLATE 3X40X300 DC01 FE//ZNNI8//CN//T0	BLECH
(2)	97063866	1	CONSOLE 339X239 S315MC FE//ZNNI8//CN/	KONSOLE
(3)	978787708	10	SLEEVE 33X19 11SMNPB37 FE//ZNNI8//CN/	HUELSE
(4)	953873408	8	SLEEVE 25X20 11SMNPB37 FE//ZNNI8//CN/	HUELSE
(5)	11651612	8	HEX SCREW ISO 4017 M8X16 8.8 480H SPF	SECHSKANTSCHRAUBE
(6)	11140469	16	WASHER ISO 7093-1 8 200HV 480H SPF	SCHEIBE
(7)	11693875	4	HEX NUT ISO 4032 M8 8 480H SPF	SECHSKANTMUTTER
(8)	11651767	4	HEX SCREW ISO 4017 M8X20 8.8 480H SPF	SECHSKANTSCHRAUBE
55	502657308	1	AIR DRYER ⇨ ❑ 567	LUFTTROCKNER
151	502921908	2	WATER DRAIN VALVE 22BAR M22X1,5	ENTWAESSERUNGSVENTIL
153	502661608	1	SILENCER	GERAEUSCHDAEMPFER
166	11491896	1	AIR TANK EN 286-2 5L 15.5BAR ALMG2.7 RA	LUFTBEHAELTER
167	502657708	1	AIR TANK EN 286-2 20L 15.5BAR ALMG2.7 R	LUFTBEHAELTER
168	10493045	1	RIBBED TUBE ALU	RIPPENROHR
300	510501008	1	HOSE DN16 500	SCHLAUCH
303	11658892	3	HEX SCREW ISO 4017 M12X25 8.8 FLZN SP	SECHSKANTSCHRAUBE
304	10871001	2	SWIVEL BOLT BRACKET CLAMP 149-161/15	GELENKBANDKONSOLENSCHE
306	602002208	8	CLAMP-HALF DIN 3015-1 L 2 R 18 AL	KLEMMHAELFTE
309	774210508	2	TIGHTENING STRAP 240-280/260/30 ST	SPANNBAND
312	502932808	1	COMPRESSION RING DR/R26X31	DRUCKRING
313	726422308	1	O-RING DIN 3770 25X2,5 FPM70	O-RING
324	5005525	2	LID PLATE DIN 3015-2 S-DP-A 4 W1-ZN P2E	DECKPLATTE
325	10492888	4	CLAMP-HALF S 4 E 64 PP	KLEMMHAELFTE
326	7363897	2	ELASTOMER INSERT DIN 3015 51X64X45XS	ELASTOMEREINSATZ
330	10875504	4	HEX SCREW ISO 4014 M12X100 8.8 FLZN SP	SECHSKANTSCHRAUBE
331	11840501	2	WASHER DIN 7349 8,4 200HV 480H SPF	SCHEIBE
332	11651767	2	HEX SCREW ISO 4017 M8X20 8.8 480H SPF	SECHSKANTSCHRAUBE
333	10289804	3	WASHER ISO 7089 12 300HV FLZN SPF	SCHEIBE
600	477704308	1	STOP PLUG VSTI M12X1,5 CR6-FREI	STOPFEN
602	471031108	1	FITTING GE 18L M22X1,5 CR6-FREI	VERSCHRAUBUNG
605	471039708	1	FITTING ISO 8434-1 GE 10L M12X1,5 CR6-F	VERSCHRAUBUNG
623	471039808	2	FITTING GE 10L M22X1,5 CR6-FREI	VERSCHRAUBUNG
633	10815664	3	FITTING EW 18L ST CR6-FREI	VERSCHRAUBUNG
634	476607608	1	FITTING XGE18-LM M26X1,5 CR6-FREI	VERSCHRAUBUNG
636	471035508	2	FITTING GE 15L M22X1,5 CR6-FREI	VERSCHRAUBUNG
639	477704508	1	STOP PLUG VSTIM22X1,5ED CR6-FREI	STOPFEN
641	502921408	1	TEST CONNECTION M22X1,5 A3P	PRUEFANSCHLUSS
644	10815662	2	FITTING GE 18L M22X1,5 ST CR6-FREI	VERSCHRAUBUNG
645	470230608	1	FITTING XW18-L CR6-FREI	VERSCHRAUBUNG
646	7403569	1	FITTING EW 10L M16X1,5 CR6-FREI	VERSCHRAUBUNG
647	7615379	1	FITTING ISO 8434-1 EW 15L CR6-FREI	VERSCHRAUBUNG

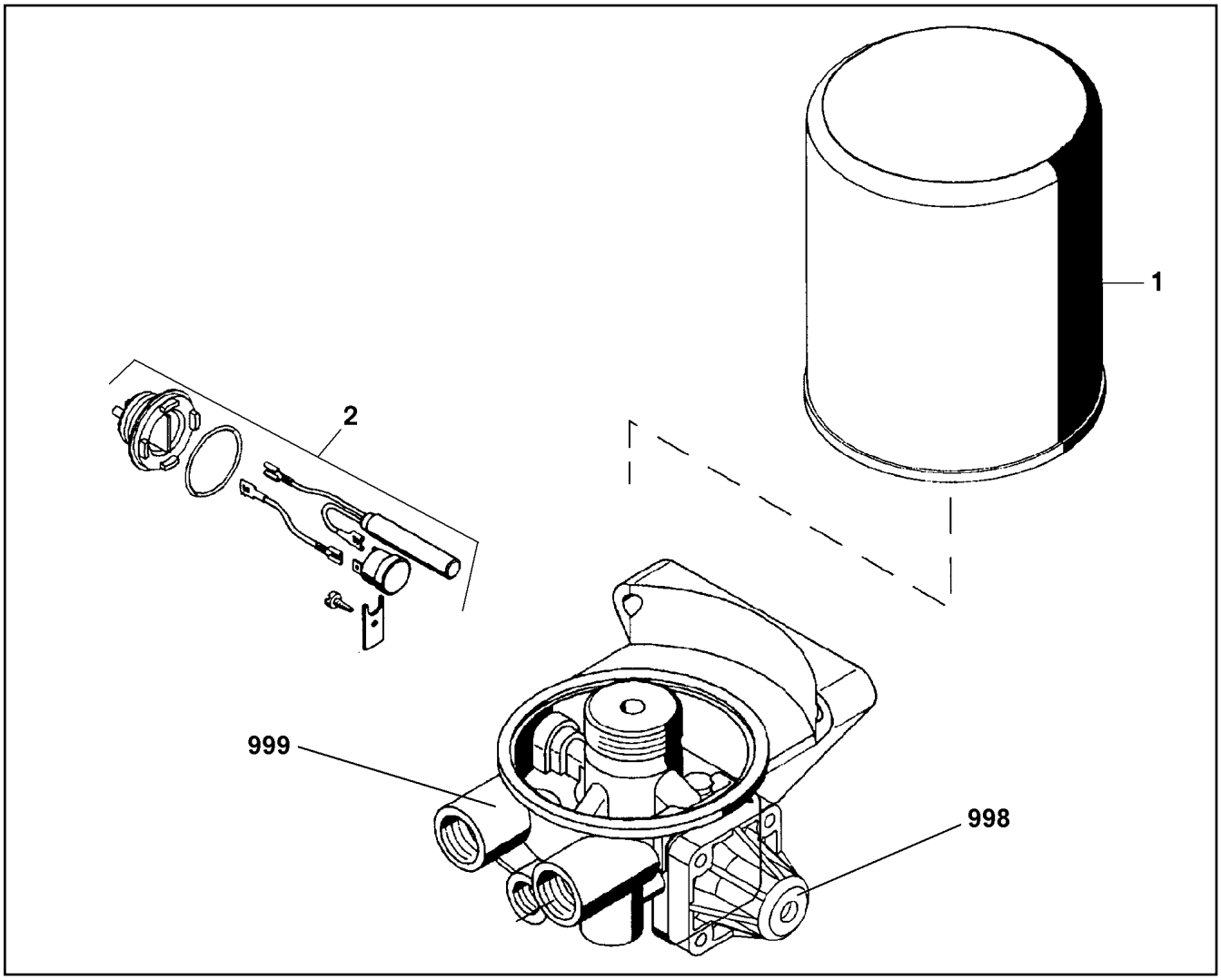

Pos.	Item	Quantity	Description	Bezeichnung
1	571352308	1	CARTRIDGE ⇨ ❑ 568	KARTUSCHE
2	502651408	1	HEATING	HEIZUNG
998	11003089	1	REPAIR SET PRESSURE GOVERNOR	RS DRUCKREGLER
999	11003094	1	REPAIR KIT	REPARATURSATZ

Abbildung ähnlich
Illustration similar
Illustration similaire

Pos. 201

Pos.	Item	Quantity	Description	Bezeichnung
1000	980288008	1	DOCUMENTATION	DOKUMENTATION

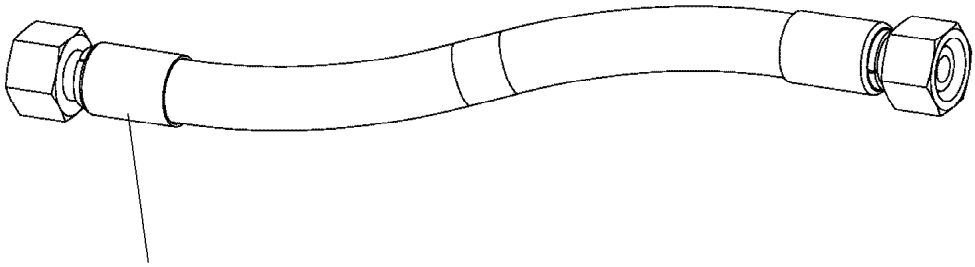

Schlauchnummer
Hose number
Numéro de flexible
Número de flexible
Номера шланга

Die Schlauchnummern auf den Schläuchen entsprechen den Positionen in der Schlauchliste.

The hose numbers from the hoses are in accordance with the items in the hose list.

Les numéros indiqués sur les flexibles correspondent aux repères de la nomenclature des flexibles.

Los números indicados en los flexibles corresponden a las posiciones de la lista de flexibles.

Нанесенные на шлангах номера соответствуют позициям в перечне.

Pos.	Item	Quantity	Description	Bezeichnung
200	927248808	1	HOSE CPL. 2TE 16X400	SCHLAUCH KPL.
201	927605908	1	HOSE CPL. 2SN 12X400	SCHLAUCH KPL.
203	96046763	1	HOSE CPL. 2TE 12X160	SCHLAUCH KPL.
204	96024263	1	HOSE CPL. 2SN 12X350	SCHLAUCH KPL.
205	928714208	1	HOSE CPL. 2TE 16X3500	SCHLAUCH KPL.
206	926868308	1	HOSE CPL. 1SN 25X560	SCHLAUCH KPL.
209	926094708	1	HOSE CPL. 1SC 8X2550	SCHLAUCH KPL.
210	964196608	1	HOSE CPL.	SCHLAUCH KPL.
211	927632108	1	HOSE CPL. 2SN 12X1750	SCHLAUCH KPL.
260	966051308	1	HOSE CPL. SC117 38X2200	SCHLAUCH KPL.
261	966683308	1	HOSE CPL. SC117 38X1200	SCHLAUCH KPL.
262	927611508	1	HOSE CPL. 2SN 12X300	SCHLAUCH KPL.
263	968602508	1	HOSE CPL. SC117 38X900	SCHLAUCH KPL.
279	965946208	1	HOSE CPL. 2SN 6X170	SCHLAUCH KPL.
290	96027797	1	HOSE CPL. GH506 25X290	SCHLAUCH KPL.
291	963698808	1	HOSE CPL. GH506 25X1380	SCHLAUCH KPL.
292	963698908	1	HOSE CPL. GH506 25X1180	SCHLAUCH KPL.
293	96027796	1	HOSE CPL. GH506 25X760	SCHLAUCH KPL.
300	968602608	1	HOSE CPL. 4ST+ 31X460	SCHLAUCH KPL.
301	968602708	1	HOSE CPL. 4ST+ 31X540	SCHLAUCH KPL.
302	968602808	1	HOSE CPL. 4ST+ 31X680	SCHLAUCH KPL.
303	968602908	1	HOSE CPL. 4ST+ 31X440	SCHLAUCH KPL.
304	967616708	1	HOSE CPL. SC117 38X380	SCHLAUCH KPL.
305	968603008	1	HOSE CPL. 1SN 32X800	SCHLAUCH KPL.
306	96014738	1	HOSE CPL. 304 35X370	SCHLAUCH KPL.
307	96014736	1	HOSE CPL. 304 35X760	SCHLAUCH KPL.
308	96014955	1	HOSE CPL. 304 42X760	SCHLAUCH KPL.
309	927641608	1	HOSE CPL. 2TE 16X2700	SCHLAUCH KPL.
310	968603108	1	HOSE CPL. 4ST+ 31X2020	SCHLAUCH KPL.
311	968603208	1	HOSE CPL. GH506 31X1800	SCHLAUCH KPL.
312	963921808	1	HOSE CPL. 2SN 6X400	SCHLAUCH KPL.
313	963921808	1	HOSE CPL. 2SN 6X400	SCHLAUCH KPL.
314	920976308	1	HOSE CPL. 2SN 6X370	SCHLAUCH KPL.
315	961721508	1	HOSE CPL. 2TE 6X640	SCHLAUCH KPL.
316	926399508	1	HOSE CPL. 2TE 10X720	SCHLAUCH KPL.
317	927691408	1	HOSE CPL. 1SC 8X900	SCHLAUCH KPL.
318	926971408	1	HOSE CPL. 1SC 8X420	SCHLAUCH KPL.
319	928046808	1	HOSE CPL. 2TE 10X3700	SCHLAUCH KPL.
320	926850208	1	HOSE CPL. GH425 12X470	SCHLAUCH KPL.
321	926850208	1	HOSE CPL. GH425 12X470	SCHLAUCH KPL.
322	965202408	1	HOSE CPL. 1SC 8X360	SCHLAUCH KPL.
323	962439208	1	HOSE CPL. 2SN 8X1600	SCHLAUCH KPL.
324	926497508	1	HOSE CPL. 1SC 8X300	SCHLAUCH KPL.
325	920991708	1	HOSE CPL. 2TE 6X350	SCHLAUCH KPL.
326	96026098	1	HOSE CPL. 2TE 6X780	SCHLAUCH KPL.
327	966860408	1	HOSE CPL. 2TE 20X960	SCHLAUCH KPL.
328	922124408	1	HOSE CPL. GH425 16X3100	SCHLAUCH KPL.
329	926968008	1	HOSE CPL. 1SC 8X1600	SCHLAUCH KPL.
330	927679208	1	HOSE CPL.	SCHLAUCH KPL.
331	929392308	1	HOSE CPL. 2TE 10X1600	SCHLAUCH KPL.
332	926121108	1	HOSE CPL. 2TE 10X1700	SCHLAUCH KPL.
333	927611908	1	HOSE CPL. 2SN 10X3400	SCHLAUCH KPL.
334	929750408	1	HOSE CPL. 2SN 10X3500	SCHLAUCH KPL.
335	928870708	1	HOSE CPL. 2SN 10X600	SCHLAUCH KPL.
336	968600208	1	HOSE CPL. 2SN 8X900	SCHLAUCH KPL.
337	929966908	1	HOSE CPL. 2SN 8X1000	SCHLAUCH KPL.
338	965569108	1	HOSE CPL. 2SN 12X1040	SCHLAUCH KPL.
339	966601008	1	HOSE CPL. 2TE 16X800	SCHLAUCH KPL.
340	968603308	1	HOSE CPL. 2SN 8X3800	SCHLAUCH KPL.
341	968603408	1	HOSE CPL. 2SN 8X3900	SCHLAUCH KPL.

Pos.	Item	Quantity	Description	Bezeichnung
342	965434208	1	HOSE CPL. 2SN 8X1100	SCHLAUCH KPL.
343	921002708	1	HOSE CPL. 2SN 8X1000	SCHLAUCH KPL.
344	968845608	1	HOSE CPL. 2SN 8X5100	SCHLAUCH KPL.
345	969746208	1	HOSE CPL. 2SN 8X5300	SCHLAUCH KPL.
346	969450708	1	HOSE CPL. 2SN 8X1900	SCHLAUCH KPL.
347	969450708	1	HOSE CPL. 2SN 8X1900	SCHLAUCH KPL.
348	96026092	1	HOSE CPL. 2TE 10X1900	SCHLAUCH KPL.
349	968604508	1	HOSE CPL. 2SN 8X280	SCHLAUCH KPL.
350	969041908	1	HOSE CPL.	SCHLAUCH KPL.
351	96026091	1	HOSE CPL. GH506 25X590	SCHLAUCH KPL.
352	966185908	1	HOSE CPL. GH506 25X820	SCHLAUCH KPL.
353	966184608	1	HOSE CPL. GH506 25X680	SCHLAUCH KPL.
354	968604008	1	HOSE CPL. GH506 25X2700	SCHLAUCH KPL.
355	927064908	1	HOSE CPL. 2SN 6X1500	SCHLAUCH KPL.
356	968604108	1	HOSE CPL. GH506 31X560	SCHLAUCH KPL.
357	929920508	1	HOSE CPL. GH506 31X2850	SCHLAUCH KPL.
358	967769908	1	HOSE CPL. GH425 12X2600	SCHLAUCH KPL.
359	927670408	1	HOSE CPL. 1SN 25X2700	SCHLAUCH KPL.
360	969629508	1	HOSE CPL. 2SN 12X450	SCHLAUCH KPL.
361	969042608	1	HOSE CPL. 2TE 16X460	SCHLAUCH KPL.
362	927632208	1	HOSE CPL. 2SN 12X2000	SCHLAUCH KPL.
363	927632108	1	HOSE CPL. 2SN 12X1750	SCHLAUCH KPL.
364	967687008	1	HOSE CPL. 2SN 12X1180	SCHLAUCH KPL.
365	969746308	1	HOSE CPL. 2SN 10X1360	SCHLAUCH KPL.
366	969385408	1	HOSE CPL. 2TE 16X2400	SCHLAUCH KPL.
371	923013608	1	HOSE CPL. 2TE 10X540	SCHLAUCH KPL.
373	96013144	1	HOSE CPL. 1SC 8X1100	SCHLAUCH KPL.
374	96026097	1	HOSE CPL. 2TE 10X3300	SCHLAUCH KPL.
375	927044108	1	HOSE CPL. 2TE 10X250	SCHLAUCH KPL.
376	966570608	1	HOSE CPL. 1SC 8X620	SCHLAUCH KPL.
377	926122108	1	HOSE CPL. 1SC 8X300	SCHLAUCH KPL.
378	926385708	1	HOSE CPL. 1SN 25X1900	SCHLAUCH KPL.
379	926466108	1	HOSE CPL. 1SC 8X2150	SCHLAUCH KPL.
380	927604908	1	HOSE CPL. 1SC 8X3100	SCHLAUCH KPL.
381	964483408	1	HOSE CPL. 1SC 8X940	SCHLAUCH KPL.
382	966965108	1	HOSE CPL. 2TE 10X1120	SCHLAUCH KPL.
383	962535408	1	HOSE CPL. 2TE 20X2900	SCHLAUCH KPL.
384	963700008	1	HOSE CPL. 2SN 8X280	SCHLAUCH KPL.
410	962335508	1	HOSE CPL. HPC 4X450	SCHLAUCH KPL.
411	968604608	1	HOSE CPL. HPC 4X4800	SCHLAUCH KPL.

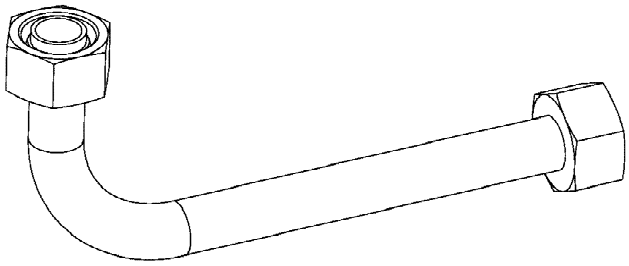

Die Positionsnummern der Rohre auf den Bildtafeln entsprechen den Positionen in der Rohrliste.

The pipe numbers from the illustrations are in accordance with the items in the pipe list.

Les numéros des tuyaux sur les illustrations correspondent aux repères de la nomenclature des tuyaux.

Los números de tubos en las ilustraciones corresponden a las posiciones de la lista de tubos.

Номера позиций труб на изображениях соответствуют позициям в перечне труб.

Pos.	Item	Quantity	Description	Bezeichnung
290	963533608	1	PIPE COMPL. 42X3X440	ROHR KPL.
291	963533708	1	PIPE COMPL. 35X2X473	ROHR KPL.
430	96025927	1	PIPE COMPL. 30X4X1081,4	ROHR KPL.
431	96025928	1	PIPE COMPL. 30X4X1033,9	ROHR KPL.
432	96025929	1	PIPE COMPL. 30X4X1018,5	ROHR KPL.
433	96025930	1	PIPE COMPL. 30X4X1079,7	ROHR KPL.
472	968613408	1	PIPE COMPL. 38X5X380	ROHR KPL.
473	968613508	1	PIPE COMPL. 38X5X260	ROHR KPL.
474	968613608	3	PIPE COMPL. 38X5X356	ROHR KPL.
475	968613708	1	PIPE COMPL. 38X5X615	ROHR KPL.
476	926894508	1	PIPE COMPL. 12X1,5X165	ROHR KPL.
477	968613808	1	PIPE COMPL. 38X5X1532	ROHR KPL.
478	968613908	1	PIPE COMPL. 38X5X1410	ROHR KPL.
479	968614008	1	PIPE COMPL. 42X3X1970	ROHR KPL.

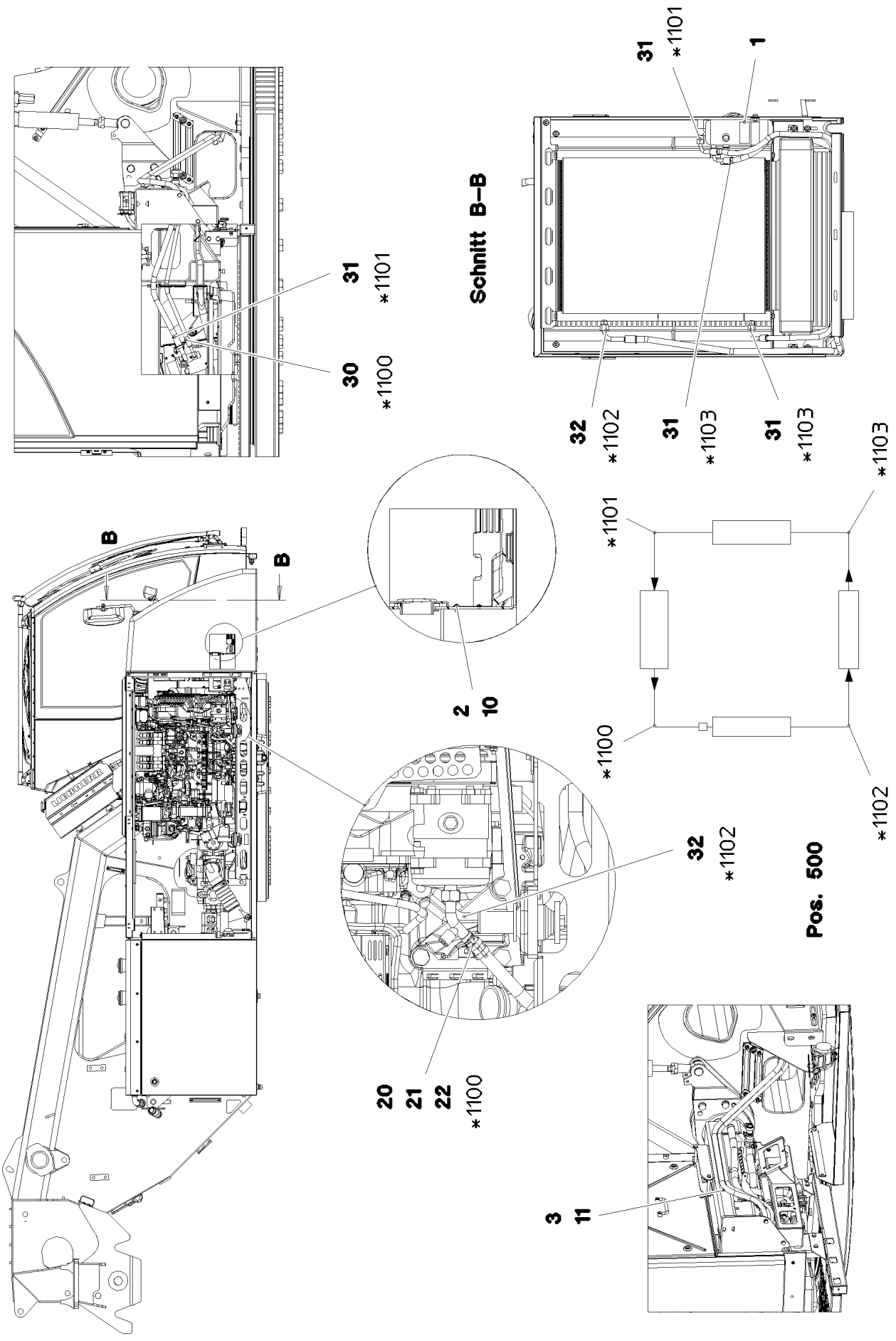
31 *1101
30 *1100
Schnitt B–B
31 *1101
1
32 *1102
31 *1103
31 *1103
B
B
2
10
*1101
*1103
*1100
*1102
32 *1102
Pos. 500
20
21
22
*1100
3
11

Pos.	Item	Quantity	Description	Bezeichnung
1	553031008	1	SIGN	SCHILD
2	976955508	1	SIGN 75X45 ALUMINIUM	SCHILD
3	953650008	2	CABLE CLAMP DC01 FE//ZNNI8//CN//T0	KABELHALTER
10	10875793	2	SHEET-METAL SCREW ISO 7049 ST4,2X9,5	BLECHSCHRAUBE
11	12102696	2	BUTTON HEAD SCREW AEHNL.ISO 7380-2	HALBRUNDKOPFSCHRAUBE
20	97057512	1	NIPPLE GA10-45°H32	NIPPEL
21	10216529	1	BRACKET 10 ST	BUEGEL
22	10216534	2	CLIP 23 ST	CLIP
30	7411823	1	O-RING NEOPRENE (W)	O-RING
31	10216678	4	O-RING 7,6X1,78 NEOPREN	O-RING
32	5610999	2	O-RING 10,8X1, 78 NEOPREN	O-RING
100	7020440	1.6	REFRIGERANT 12KG FLASCHE R134A	KAELTEMITTEL
101	11211803	0.18	COLD MACHINE OIL WAECO PAG 46 0,25L D	KAELTEMASCHINENOEL
500	96018574	1	HOSE LINES AIR CONDITIONING	SCHLAUCHLEITUNGEN KLIMA O
(1100)	969040908	1	HOSE CPL. GH001 13X5500	SCHLAUCH KPL.
(1101)	969041008	1	HOSE CPL. GH001 8X6900	SCHLAUCH KPL.
(1102)	969041408	1	HOSE CPL. GH001 10X1800	SCHLAUCH KPL.
(1103)	969636808	1	HOSE CPL. GH001 8X1100	SCHLAUCH KPL.

Pos.	Item	Quantity	Description	Bezeichnung
10	96033759	1	ADD-ON PARTS WORK FLOODLIGHT ⇨ ❑ 577	ANBAUTEILE ARBEITSSCHEIN
20	96028878	4	ELECTR. FOR WORK AREA LIGHT	ELEKTRIK ARBEITSSCHEINWER
(10)	10877828	1	WORK LIGHT 20W 12-24V ALUMINIUM	ARBEITSSCHEINWERFER

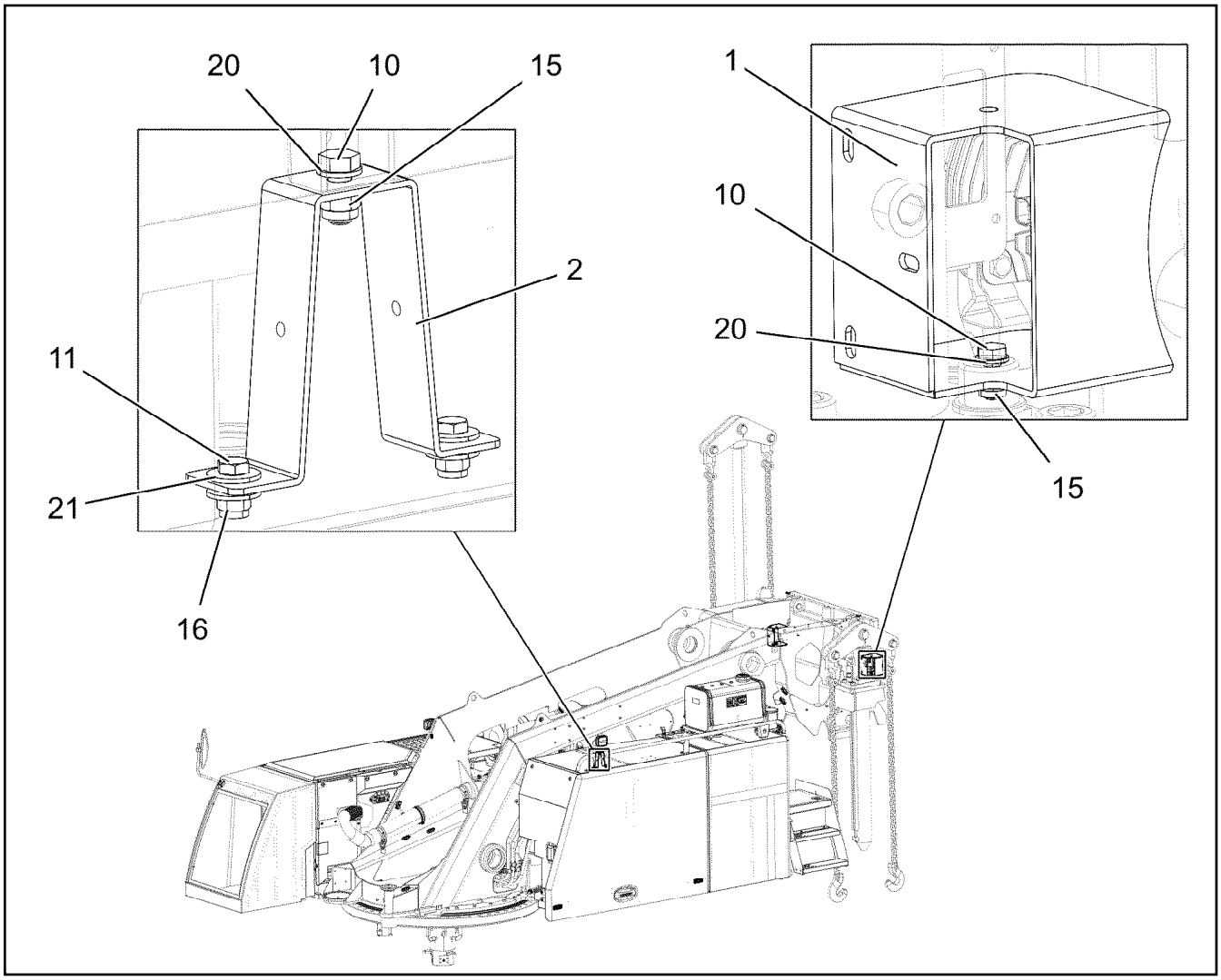

Pos.	Item	Quantity	Description	Bezeichnung
1	97092340	2	PLATE 4X416X298 S315MC FE//ZNNI8//CN//T	BLECH
2	97117720	1	PLATE 3X40X373 S355MC FE//ZNNI8//CN//T	BLECH
10	11631816	4	HEX SCREW ISO 4017 M10X25 8.8 FLZN SP	SECHSKANTSCHRAUBE
11	10299666	2	HEX SCREW ISO 4017 M8X20 10.9 480H SP	SECHSKANTSCHRAUBE
15	10875629	4	HEX NUT ISO 7040 M10 8 FLZN SPF	SECHSKANTMUTTER
16	11656731	2	HEX NUT ISO 7040 M8 8 480H SPF	SECHSKANTMUTTER
20	10289795	8	WASHER ISO 7089 10 300HV FLZN SPF	SCHEIBE
21	11140469	4	WASHER ISO 7093-1 8 200HV 480H SPF	SCHEIBE

Pos.	Item	Quantity	Description	Bezeichnung
1	96062734	1	AUXILIARY HOISTING GEAR ⇨ ❑ 579	HILFSHUBWERK
2	96055197	1	ELECTRIC FOR WINCH 2 ⇨ ❑ 588	ELEKTRIK WINDE 2
3	96064697	1	HYDR.AUXILIARY HOISTING ⇨ ❑ 590	HYDRAULIK HILFSHUBWERK
4	96062735	1	SIGNS ⇨ ❑ 594	BESCHILDERUNG

Pos. 300

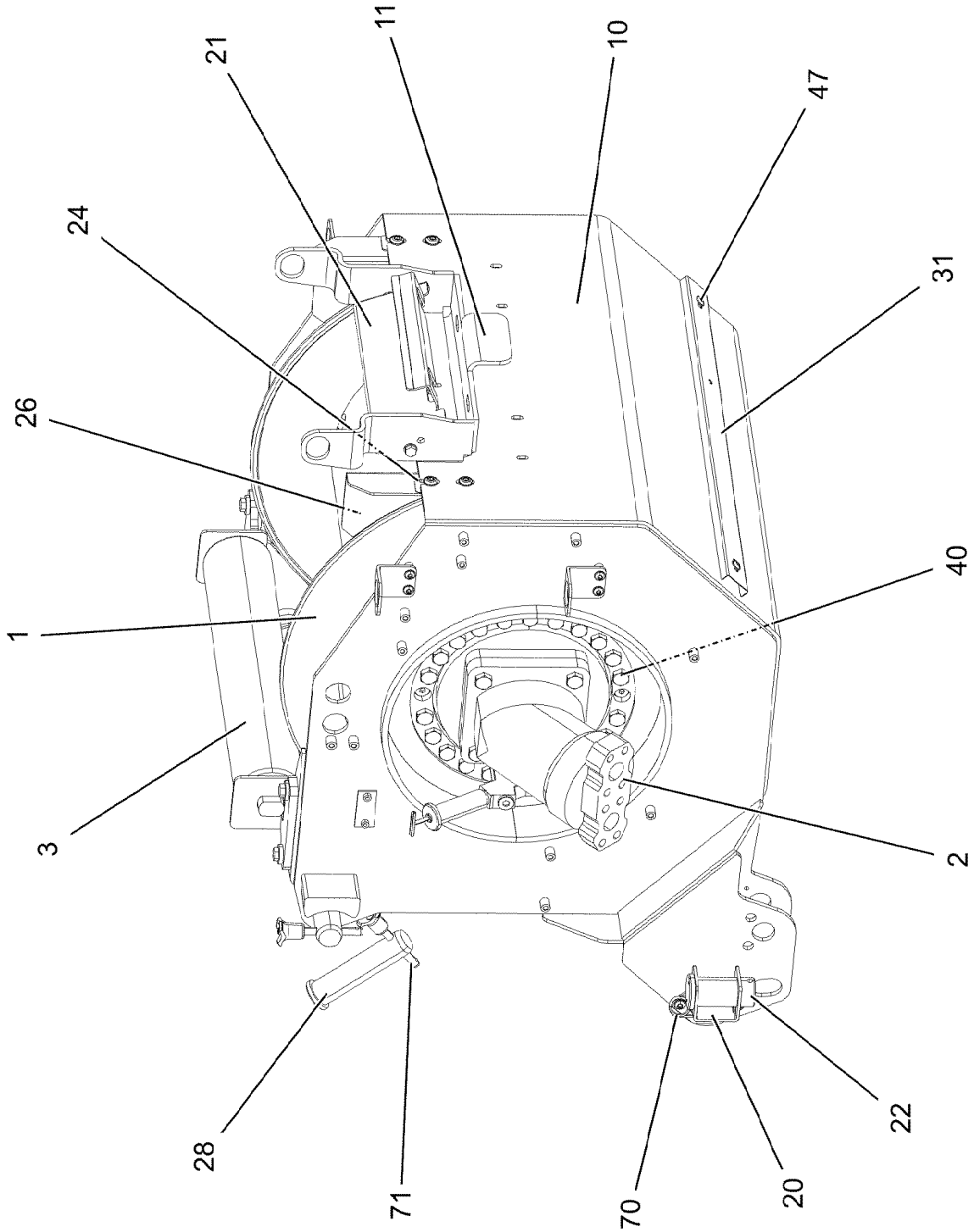

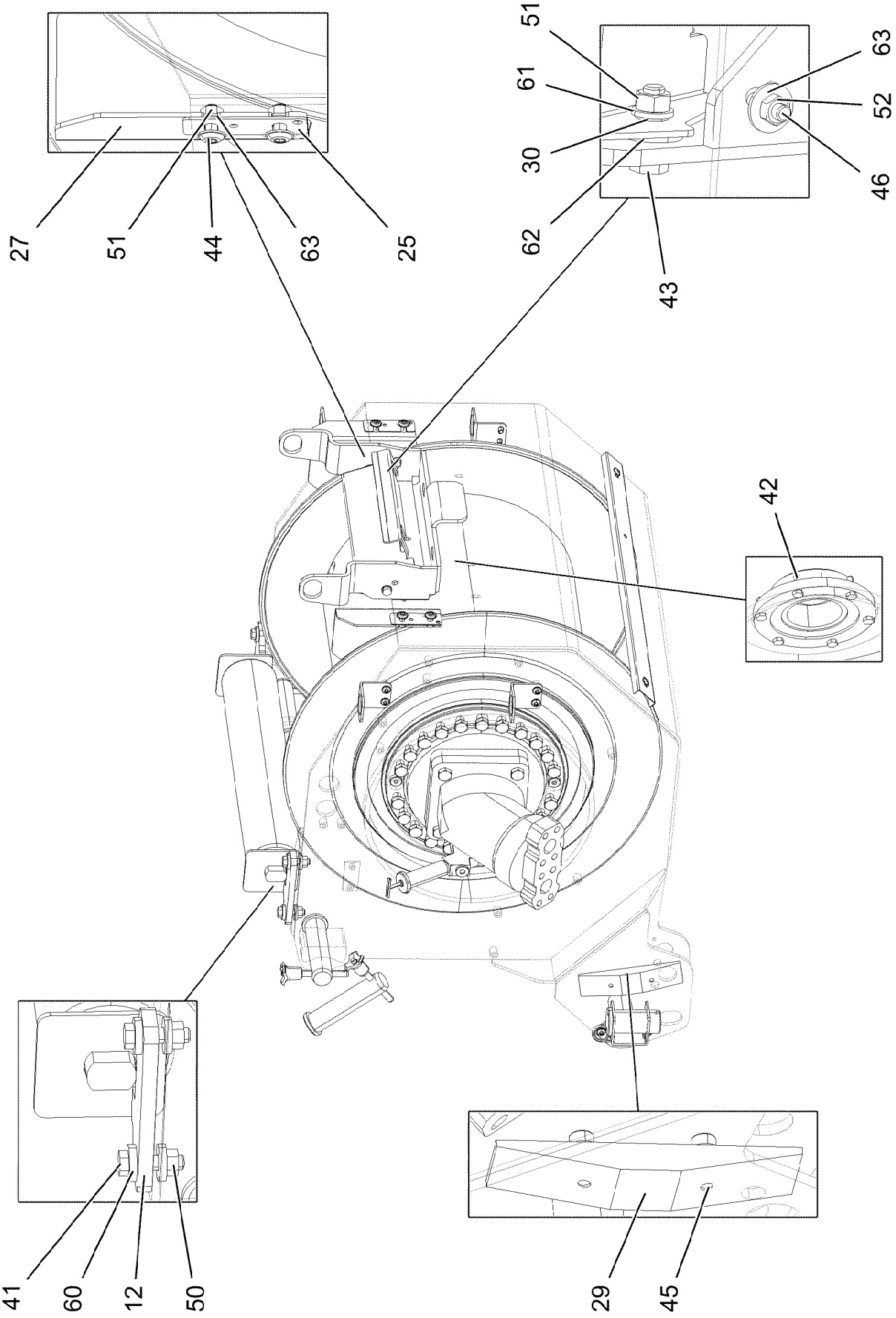
27
51
44
63
25
51
61
30
62
43
63
52
46
42
41
60
12
50
29
45

Pos.	Item	Quantity	Description	Bezeichnung
1	938707001	1	COMPACT ROPE WINCH KSW 400S741 LIEB ⇨ ❑ 582	KOMPAKTSEILWINDE
2	510240708	1	HYDRO MOTOR A2FM 125CM³/U SPF ⇨ ❑ 377	HYDROMOTOR
3	749014508	1	CARRYING ROLLER 107/8/40X590 GASN. SP	TRAGROLLE
10	962046508	1	WINCH	WINDE 2 SCHWK.
11	963383408	1	CONSOLE	KONSOLE
12	962051508	2	ROLLER CLAMP WELDED	ROLLENHALTER SCHWK.
20	974730008	2	PLATE 4X188X172 S315MC FE//ZNNI8//CN//T	BLECH
21	974497908	1	PLATE 3X439X212 X5CRNI18-10	BLECH
22	953766408	2	PIN 55.0X10 3 35NICRMOV125 GASN. SPF	BOLZEN
24	957068708	3	PLATE 1X35X100 DC01 FE//ZNNI8//CN//T0	BLECH
25	957068808	3	PLATE 2X35X100 DC01 FE//ZNNI8//CN//T0	BLECH
26	971812308	1	ROPE GUARD LEFT 4X205X173 S315MC FE//	SEILSCHUTZ LI.
27	971812408	1	ROPE GUARD RIGHT 4X205X173 S315MC	SEILSCHUTZ RE.
28	971799808	2	PIN 50.0X175 35NICRMOV125 GASN. SPF	BOLZEN
29	971799908	2	PLATE 50X200X20 S355J2+N FE//ZNNI8//CN/	BLECH
30	974501208	2	BUSHING 16.0X11 E235+N GALV.VERZ	BUCHSE
31	953714008	1	U-PROFILE 1X750X74 DC01 FE//ZNNI8//CN/	U-PROFIL
40	406603108	26	HEX SCREW ISO 4017 M16X45 10.9 FLZN SP	SECHSKANTSCHRAUBE
41	11645386	4	HEX SCREW ISO 4017 M12X45 8.8 FLZN SP	SECHSKANTSCHRAUBE
42	406601008	6	HEX SCREW ISO 4017 M10X35 10.9 FLZN SP	SECHSKANTSCHRAUBE
43	11691328	2	HEX SCREW ISO 4017 M10X35 8.8 FLZN SP	SECHSKANTSCHRAUBE
44	10875448	4	BUTTON HEAD SCREW ISO 7380-2 M10X25	HALBRUNDKOPFSCHRAUBE
45	10415162	4	SOCKET HEAD SCREW ISO 4762 M10X25 8	ZYLINDERSCHRAUBE
46	11826527	2	HEX SCREW ISO 4017 M8X30 8.8 480H SPF	SECHSKANTSCHRAUBE
47	12102696	14	BUTTON HEAD SCREW AEHNL.ISO 7380-2	HALBRUNDKOPFSCHRAUBE
50	10875616	4	HEX NUT ISO 4032 M12 8 FLZN SPF	SECHSKANTMUTTER
51	12102695	6	HEX NUT ISO 4032 M10 8 ZNNI-480H SPF	SECHSKANTMUTTER
52	11693875	2	HEX NUT ISO 4032 M8 8 480H SPF	SECHSKANTMUTTER
60	10006370	8	WASHER DIN 7349 13 200HV FLZN SPF	SCHEIBE
61	421100808	8	WASHER DIN 1440 10 ST VERZ	SCHEIBE
62	10289806	2	WASHER ISO 7089 16 300HV FLZN SPF	SCHEIBE
63	11140469	8	WASHER ISO 7093-1 8 200HV 480H SPF	SCHEIBE
70	433101208	2	RETAINING SPRING 4X68 ISO 2081 FE/ZN8/	SICHERUNGSFEDER
71	704008508	2	QUICK RELEASE PIN NIROSTA	KUGELSPERRBOLZEN
300	921444108	1	CENTRAL LUBRICATING SYSTEM ⇨ ❑ 587	ZENTRALSCHMIERANLAGE

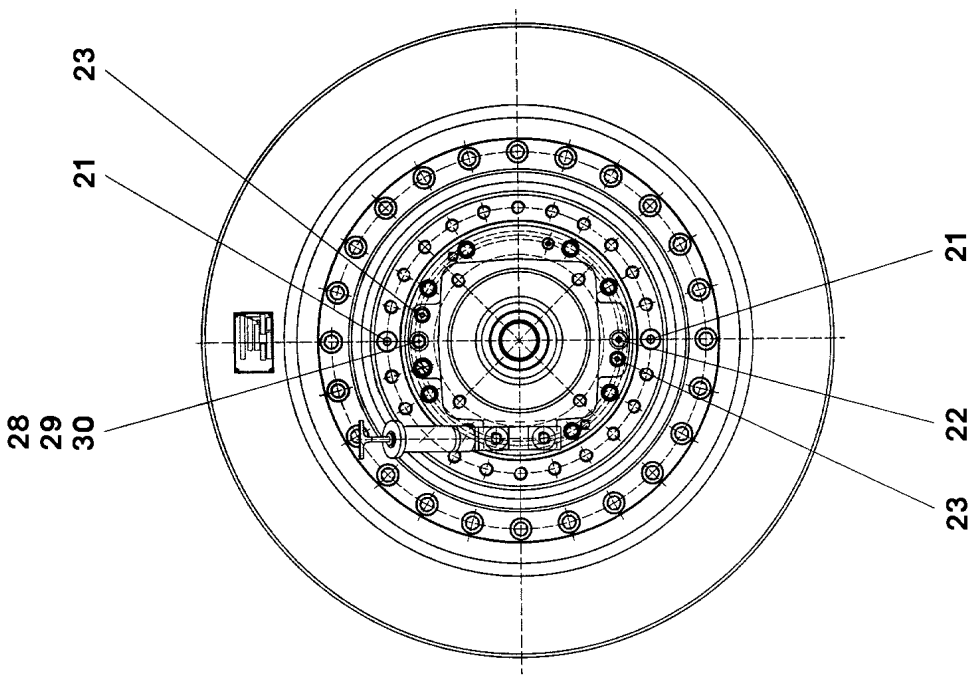
23
21
28
29
30
21
22
23

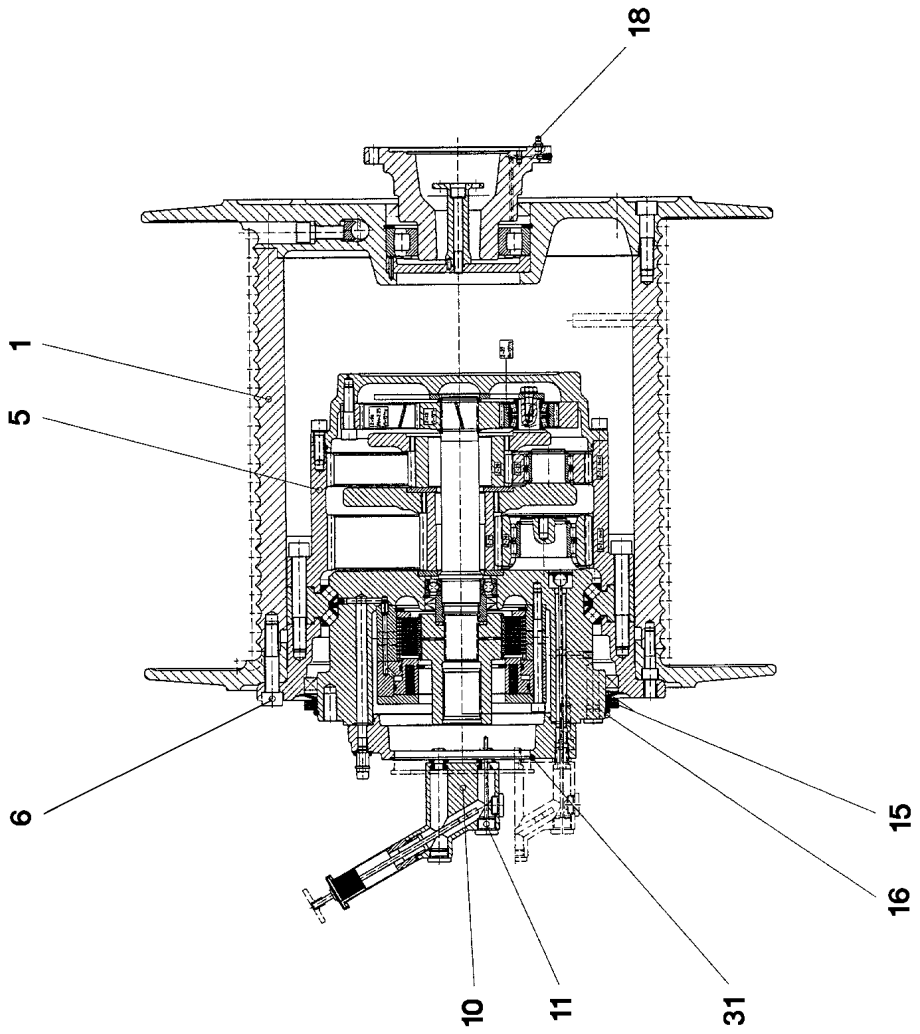
18
1
5
6
15
16
10
11
31

Pos.	Item	Quantity	Description	Bezeichnung
1	938759601	1	ROPE DRUM ⇨ ❑ 381	SEILTROMMEL
5	938759801	1	PLANETARY GEARBOX PEG 400 ⇨ ❑ 584	PLANETENGETRIEBE
6	4000521	16	SOCKET HEAD SCREW ISO 4762 M16X80 10	ZYLINDERSCHRAUBE
10	927521201	1	OIL-LEVEL GAUGE INSTALLATION ⇨ ❑ 586	OELMESSSTABEINRICHTUNG
11	927758701	1	VALVE OPERATION	VENTILBETAETIGUNG
15	710908701	1	V-RING 350 NBR,60 SHORE	V-RING
16	726428408	1	O-RING 290X6 NBR70	O-RING
18	774301101	1	HYDRAULIC-TYPE LUBRICAT.NIPPLE DIN 7	KEGELSCHMIERNIPPEL
21	477704408	2	STOP PLUG VSTIM16X1,5ED CR6-FREI	STOPFEN
22	477704308	1	STOP PLUG VSTI M12X1,5 CR6-FREI	STOPFEN
23	477705508	2	STOPPER PLUG VSTIM10X1ED CR6-FREI	BLINDSTOPFEN
28	470730008	1	FITTING XGAI6-LM CR6-FREI	VERSCHRAUBUNG
29	710101708	1	SEALING RING DIN 7603 A12X16X1,5 CU	DICHTRING
30	721114701	1	VENTILATION VALVE	ENTLUEFTUNGSVENTIL
31	726426601	1	O-RING 155X3 NBR 70 SPF	O-RING

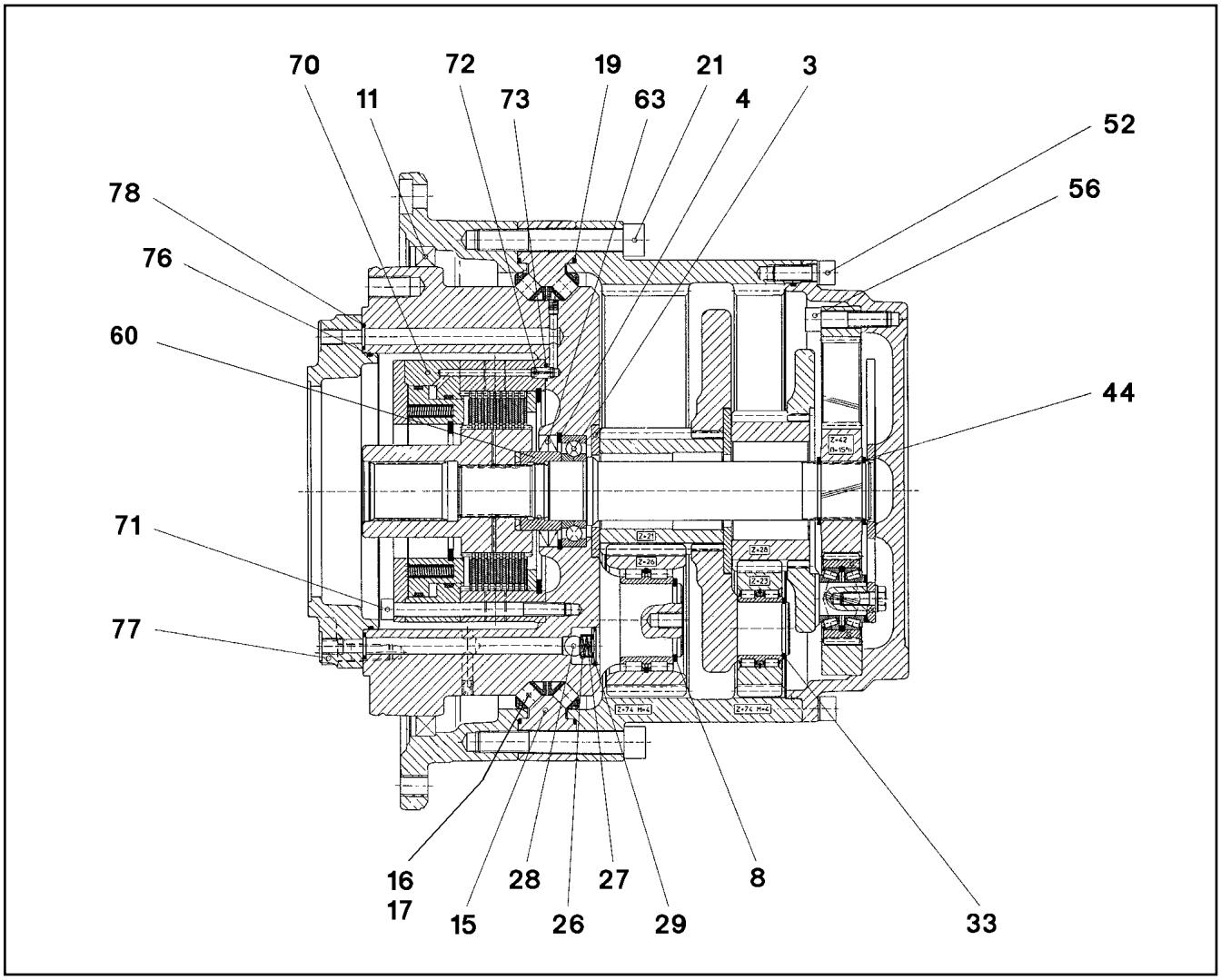

Pos.	Item	Quantity	Description	Bezeichnung
3	10013601	1	STEEP-ANGLE BEARING DIN 628 QJ-209-N2	SCHRAEGKUGELLAGER
4	428102708	1	RETAINING RINGS DIN 472 85X3	SICHERUNGSRING
8	530133308	5	RETAINING RINGS DIN 471 55X3	SICHERUNGSRING
10	927639801	1	POWER TAKE-OFF FLANGE	ABTRIEBSFLANSCH
11	710054601	1	ROTARY SHAFT LIP SEAL DIN 3760 AS 340X	RADIALWELLENDICHTRING
15	927601701	1	BEARING RING 42CrMo4+QT	LAGERRING
16	927514301	38	ROLLER CAGE	ROLLENKAEFIG
17	747006101	114	CYL.ROLLER 14X14	ZYLINDERROLLE
19	726429901	2	O-RING 330X3 NBR 70	O-RING
21	10001471	24	SOCKET HEAD SCREW ISO 4762 M16X110	ZYLINDERSCHRAUBE
26	927520701	1	BUSHING 15,1X27,8X10	BUCHSE
27	927520801	1	COMPRESSION SPRING	DRUCKFEDER
28	747003801	1	STEEL BALL DIN 5401 15	STAHLKUGEL
29	428110001	1	RETAINING RINGS DIN 472 28X1,5	SICHERUNGSRING
33	428003308	3	RETAINING RINGS DIN 471 40X2,5	SICHERUNGSRING
44	428004008	2	RETAINING RINGS DIN 471 45X2,5	SICHERUNGSRING
52	10875578	8	SOCKET HEAD SCREW ISO 4762 M12X35 8	ZYLINDERSCHRAUBE
56	10012659	8	SOCKET HEAD SCREW ISO 4762 M12X50 10	ZYLINDERSCHRAUBE
60	938760801	1	SLOTTED NUT M42X1,5 42CrMo4+QT	NUTMUTTER
63	710062601	2	ROTARY SHAFT LIP SEAL BAB 60X85X7 N	RADIALWELLENDICHTRING
65	938760901	1	MULTI-DISC CARRIER 100	LAMELLENTRAEGER
70	502037201	1	SPRING LOADED MULTI-DISC BRAKE	FEDERDRUCKLAMELLENBREMS
71	11320344	12	SOCKET HEAD SCREW ISO 4762 M10X130	ZYLINDERSCHRAUBE
72	432007908	1	DOWEL PIN ISO 8752 A 8X16	SPANNSTIFT
73	502652908	1	O-RING 8X2 NBR70	O-RING
76	761021703	1	O-RING 195X3 NBR 70	O-RING

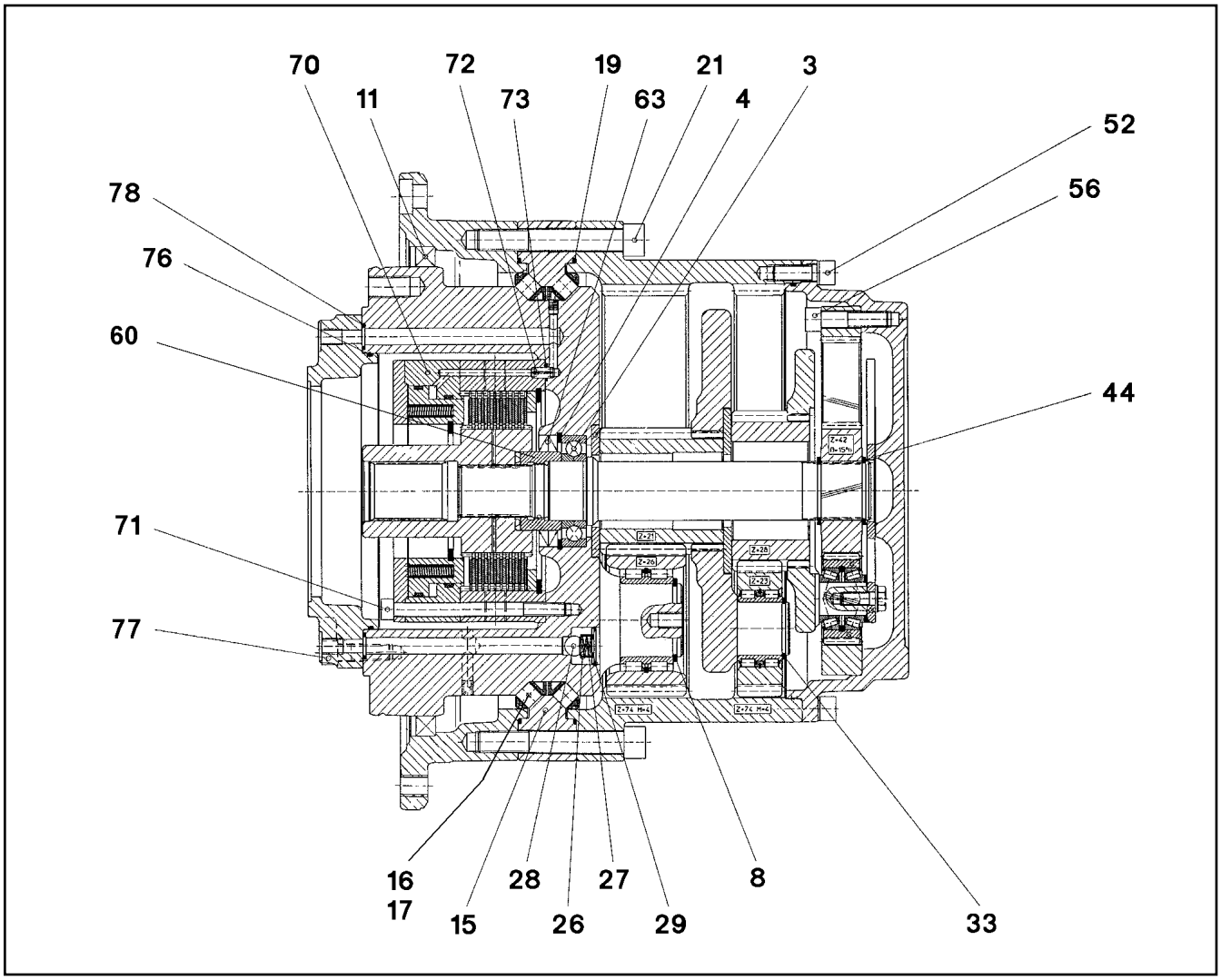

Pos.	Item	Quantity	Description	Bezeichnung
77	404312008	8	SOCKET HEAD SCREW ISO 4762 M12X40 10	ZYLINDERSCHRAUBE
78	726405608	8	O-RING 14X3 NBR70	O-RING

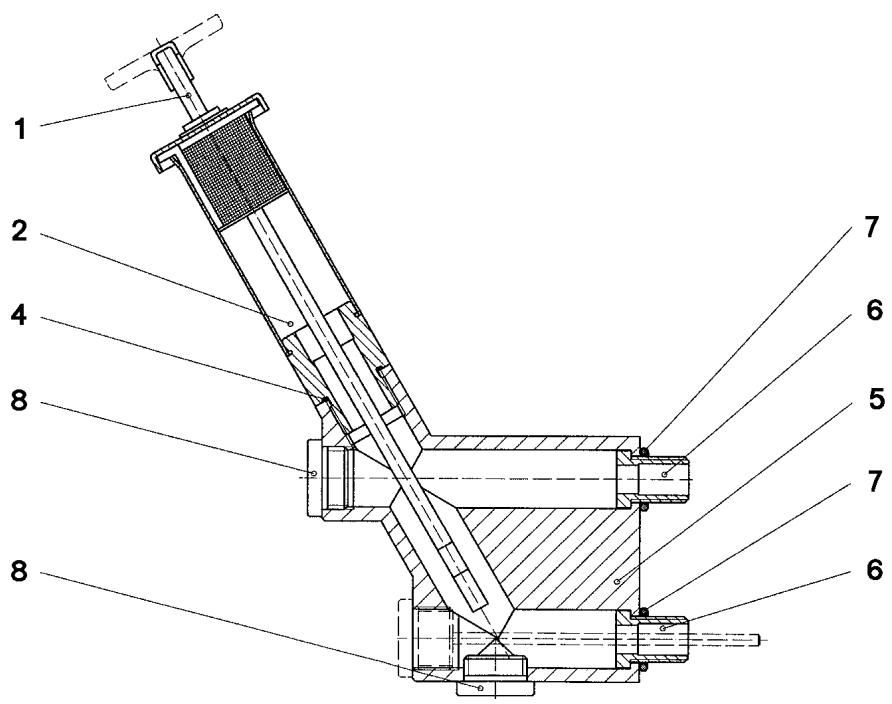

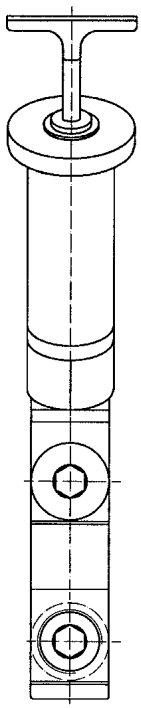

Pos.	Item	Quantity	Description	Bezeichnung
1	500131501	1	OIL DIPSTICK 1 1/8" MIT LUEFT	OELMESSSTAB
2	927501901	1	VENTILATION CONNECTING PIECE	ENTLUEFTUNGSSTUTZEN
4	761022503	1	SEALING RING 19,6X24,3X1,5 NBR 85 Shore	DICHTRING
5	927521301	1	STAND PIPE 27X111X113,5 EN AW-Al Zn5	STEIGROHR
6	927515201	2	FLANGED BOLT	BUNDSCHRAUBE
7	571326108	2	EDGE SEALING RING	DICHTKANTENRING
8	477500301	2	SCREW PLUG M22X1,5 VERZ	VERSCHLUSSSCHRAUBE

Pos.	Item	Quantity	Description	Bezeichnung
1	774372608	1	COUPLING SLEEVE	KUPPLUNGSMUFFE
2	774372708	2	COUPLING PLUG	KUPPLUNGSSTECKER
3	471032108	3	FITTING GE 6S G1/4A CR6-FREI	VERSCHRAUBUNG
4	12101847	1	PLUG-IN CONNECTOR GE M8X1K MESSING	STECKVERBINDER
5	10873149	5	POLYAMID PIPE DIN 73378 6X1,5 PA 12-HL	POLYAMIDROHR

Pos.	Item	Quantity	Description	Bezeichnung
5	12102805	1	WINCH REVOLUTION TRANSDUCER 655360	WINDENDREHGEBER
6	606012608	1	DRIVE FLANGE EDELSTAHL	ANTRIEBSFLANSCH
10	11690044	3	SOCKET HEAD SCREW ISO 4762 M6X12 8.8	ZYLINDERSCHRAUBE
20	96055198	1	WIRING HARNESS W522 ⇨ ❑ 589	KABELSTRANG

Pos.	Item	Quantity	Description	Bezeichnung
5	12106616	1	COUPLING SOCKET 14-POL GERADE	KUPPLUNGSDOSE
6	680000008	1	COUPLING SOCKET 4-POLE SPF	KUPPLUNGSDOSE
86	602307708	4	WIRED END FERRULE DIN 46228-1 A1X5 V	ADERENDHUELSE
130	605601701	4	CONTACT PIN 1MM2	KONTAKTSTIFT
139	605619814	2	PIN CONTACT 0.5QMM2	STIFTKONTAKT
202	11082602	0.71	INSULATING HOSE DN6X0,5 PUR SPF	ISOLIERSCHLAUCH
207	11082607	0.68	INSULATING HOSE DN16X0,85 PUR SPF	ISOLIERSCHLAUCH
305	10870540	4.42	ELECTR.CABLE 1,0	KFZ-LEITUNG
500	923512208	5	CABLE MARKER	KABELMARKER
501	605007908	1	APPLIANCE SOCKET 2POL+PE	GERAETESTECKDOSE
502	637005201	1	PLUG INSERT 16-POL+PE 16A	STECKEREINSATZ
503	605618308	1	BS HOUSING HAN 16B	SOCKELGEHAEUSE
504	605006608	1	DEVICE PLUG 3POL+PE	GERAETESTECKER
505	10871288	2	GUIDE PIN CODIERUNG HAN E/ STAINLESS	FUEHRUNGSSTIFT
506	602441008	1	HOSE UNION JOINT 0 MS	SCHLAUCHVERSCHRAUBUNG
507	10871289	2	GUIDE BUSHING CODIERUNG HAN E/ STAIN	FUEHRUNGSBUCHSE
508	602606408	1	REDUCTION M25X1,5/M20X1,5 MS	REDUKTION
509	602424208	1	CABLE GLAND M20X1,5X5-14 MS	KABELVERSCHRAUBUNG
762	11100228	9	PIN CONTACT 0,14-0,37MM2	STIFTKONTAKT
813	605619708	2	SINGLE STRAND SEALING 2	EINZELADERABDICHTUNG
998	965622208	1	LETTERING WIRING HARNESS	BESCHRIFTUNG KABELBAUM

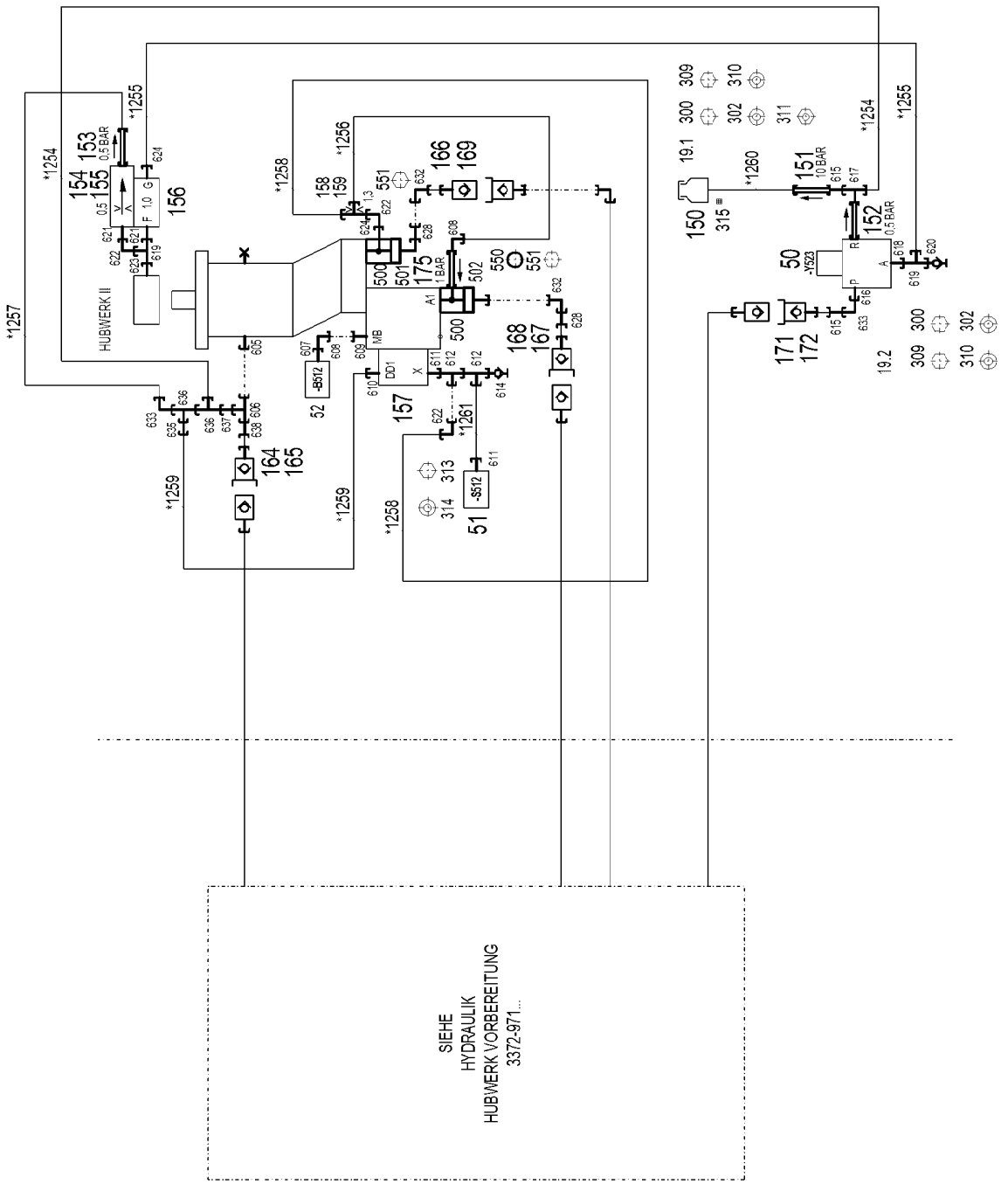
* Pos. 10
HUBWERK II
SIEHE
HYDRAULIK
HUBWERK VORBEREITUNG
3372-971...

Pos.	Item	Quantity	Description	Bezeichnung
10	96064698	1	HOSE LINES HOISTING GEAR ⇨ ❑ 593	SCHLAUCHLEITUNGEN HUBW
19	96064701	1	MECHANICAL AUXILIARIES	MECH.BEFESTIGUNGSTEILE
(1)	953760908	1	PLATE 3X45X120 DC01 FE//ZNNI8//CN//T0	BLECH
(2)	953649008	1	PLATE 4X140X113 S315MC FE//ZNNI8//CN//T	BLECH
50	511444408	1	DIRECTIONAL CONTROL VALVE 3/2 350BA ⇨ ❑ 546	WEGEVENTIL
51	510676908	1	PRESSURE SWITCH 10-100/400 BAR	DRUCKSCHALTER
52	10813738	1	PRESSURE SENSOR 0-400/400 BAR LSB PL:	DRUCKAUFNEHMER
150	96028331	1	EXPANSION TANK CPL.	AUSGLEICHSBEHAELTER KPL.
(1)	502807308	1	EQUALIZING RESERVOIR 0,2L POLYETHY	AUSGLEICHSBEHAELTER
(2)	10878281	1	CONTAINER SCREW JOINT	BEHAELTERVERSCHRAUBUNG
151	511481508	1	NON-RETURN VALVE 250BAR 10BAR CR6-F	RUECKSCHLAGVENTIL
152	511460608	1	NON-RETURN VALVE 400BAR 0.5BAR CR6-F	RUECKSCHLAGVENTIL
153	511311808	1	NON-RETURN VALVE 400BAR 0.5BAR CR6-F	RUECKSCHLAGVENTIL
154	511062708	1	NOZZLE 0,5 M5X9 MS	DUESE
155	510671108	1	FILTER CARTRIDGE 0,005m³/min 25µm	FILTERPATRONE
156	511497208	1	ONE-WAY RESTRICTOR	DROSSELRUECKSCHLAGVENTI
157	10355776	1	LOWERING BRAKE VALVE 420BAR 320L/MIN	SENKBREMSVENTIL
(999)	11114206	1	DS LOWERING BRAKE VALVE	DS SENKBREMSVENTIL
158	953600608	1	CONNECTING LUG EL 10LX51	VERBINDUNGSSTUTZEN
159	10101092	1	NOZZLE 1,3 M10X10 MS SPF	DUESE
164	10466911	1	SCREW PLUG RD36X3 SPF	VERSCHLUSSSCHRAUBE
165	511500408	1	COUPLING PLUG B3 15-L	KUPPLUNGSSTECKER
166	12102190	1	HEX CAP NUT BGR.8 M 79X4 PA 6 SPF	VERSCHLUSSMUTTER
167	12102189	1	SCREW PLUG BGR.8 M 79X4 PA 6 SPF	VERSCHLUSSSCHRAUBE
168	511512308	1	COUPLING PLUG B8 38-S	KUPPLUNGSSTECKER
169	511512208	1	COUPLING SLEEVE B8 38-S	KUPPLUNGSMUFFE
171	511509608	1	COUPLING PLUG B2 12-L	KUPPLUNGSSTECKER
(1)	571083008	1	SHEET GASKET VITON	DICHTSCHEIBE
(2)	571082608	1	O-RING 17X2 FPM70	O-RING
(3)	571082808	1	SUPPORTING RING 17,5X20,9X1 PTFE	STUETZRING
172	10466910	1	SCREW PLUG RD32X3 SPF	VERSCHLUSSSCHRAUBE
175	511432408	1	NON-RETURN VALVE 420BAR 1BAR CR6-F	RUECKSCHLAGVENTIL
300	11692824	4	HEX SCREW ISO 4017 M6X12 8.8 480H SPF	SECHSKANTSCHRAUBE
302	10875648	4	WASHER ISO 7093-1 6 200HV 480H SPF	SCHEIBE
309	11651612	4	HEX SCREW ISO 4017 M8X16 8.8 480H SPF	SECHSKANTSCHRAUBE
310	11140469	4	WASHER ISO 7093-1 8 200HV 480H SPF	SCHEIBE
311	12102692	2	HEX NUT DIN 985 M6 8 ZNNI-480H SPF	SECHSKANTMUTTER
313	11140402	2	HEX SCREW ISO 4017 M5X12 8.8 480H SPF	SECHSKANTSCHRAUBE
314	10875643	2	WASHER ISO 7093-1 5 200HV 480H SPF	SCHEIBE
315	10872022	1	HOSE CLAMP DIN 3017-1 17/12-22/9 W3	SCHLAUCHSCHELLE
500	511519208	2	SAE INTERMEDIATE FLANGE 1 1/4" CR6-F	SAE-ZWISCHENFLANSCH
501	474906708	1	SAE FLANGE CONNECTION WFS 38S 1 1/4	SAE-FLANSCHVERBINDUNG
502	511517808	1	FLANGE STUB PIPE AFG 38S G1 1/4 CR6-F	FLANSCHSTUTZEN
550	510587008	1	O-RING ARP 568 32,92X3,53 NBR90	O-RING
551	12225301	8	HEX SCREW ISO 4014 M14X70 8.8 FLZN SP	SECHSKANTSCHRAUBE
605	471030908	1	FITTING GE 15L M18X1,5 CR6-FREI	VERSCHRAUBUNG
606	472300414	1	FITTING EL 15L CR6-FREI	VERSCHRAUBUNG
607	470700208	1	FITTING XGAI6-SR CR6-FREI	VERSCHRAUBUNG
608	472531508	2	FITTING EW 6S M14X1,5 CR6-FREI	VERSCHRAUBUNG
609	471900308	1	FITTING EGESD6-SR-WD CR6-FREI	VERSCHRAUBUNG
610	471030008	1	FITTING XGE6-LR-ED CR6-FREI	VERSCHRAUBUNG
611	471032108	2	FITTING GE 6S G1/4A CR6-FREI	VERSCHRAUBUNG
612	472331208	2	FITTING EL 6S CR6-FREI	VERSCHRAUBUNG
614	475601508	1	TEST POINT FITTING BMA3 6S CR6-FREI	MESSANSCHLUSS
615	470011308	2	FITTING SNV12-L CR6-FREI	VERSCHRAUBUNG
616	471030808	1	FITTING XGE12-LR-ED CR6-FREI	VERSCHRAUBUNG
617	247105602	1	T CONNECTION PIECE ET 12L CR6-FREI	T-STUTZEN
618	471039608	1	FITTING XGE10-LR-ED3/8" CR6-FREI	VERSCHRAUBUNG

Pos.	Item	Quantity	Description	Bezeichnung
619	472330208	2	FITTING EL 10L CR6-FREI	VERSCHRAUBUNG
620	510629008	1	TEST POINT FITTING VKA3 10LM16X1,5 CR6	MESSANSCHLUSS
621	471901108	2	FITTING EGESD10-LR-WD CR6-FREI	VERSCHRAUBUNG
622	7403569	3	FITTING EW 10L M16X1,5 CR6-FREI	VERSCHRAUBUNG
623	471039708	1	FITTING ISO 8434-1 GE 10L M12X1,5 CR6-F	VERSCHRAUBUNG
624	7362091	2	FITTING ISO 8434-1 GE 10L G1/4A CR6-FREI	VERSCHRAUBUNG
628	470010708	2	FITTING SNV38-S CR6-FREI	VERSCHRAUBUNG
632	472531808	2	FITTING EWSD38-S CR6-FREI	VERSCHRAUBUNG
633	247117702	2	SWIVEL ELBOW EW 12L M18X1,5 CR6-FREI	WINKELSTUTZEN
635	475430208	1	FITTING REDSDN12/6-L CR6-FREI	VERSCHRAUBUNG
636	247128602	2	L NECK EL 12L M18X1,5 CR6-FREI	L-STUTZEN
637	475431808	1	FITTING RED 15/12L CR6-FREI	VERSCHRAUBUNG
638	470011208	1	FITTING GZ 15L CR6-FREI	VERSCHRAUBUNG

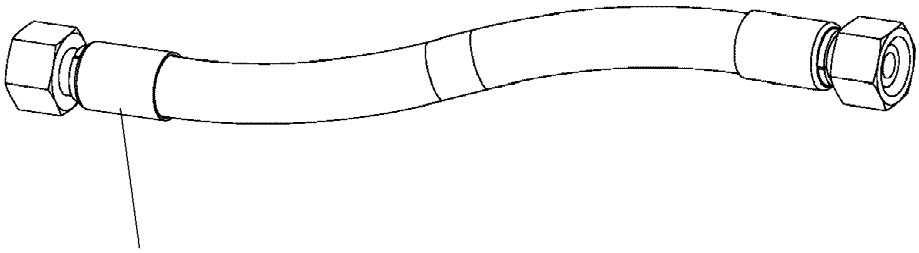

Schlauchnummer
Hose number
Numéro de flexible
Número de flexible
Номера шланга

Die Schlauchnummern auf den Schläuchen entsprechen den Positionen in der Schlauchliste.

The hose numbers from the hoses are in accordance with the items in the hose list.

Les numéros indiqués sur les flexibles correspondent aux repères de la nomenclature des flexibles.

Los números indicados en los flexibles corresponden a las posiciones de la lista de flexibles.

Нанесенные на шлангах номера соответствуют позициям в перечне.

Pos.	Item	Quantity	Description	Bezeichnung
1254	965479408	1	HOSE CPL. 2TE 10X420	SCHLAUCH KPL.
1255	962857908	1	HOSE CPL. 1SC 8X240	SCHLAUCH KPL.
1256	968601708	1	HOSE CPL. 2SN 6X390	SCHLAUCH KPL.
1257	928761808	1	HOSE CPL. 1SC 8X700	SCHLAUCH KPL.
1258	963562308	1	HOSE CPL. 2SN 6X250	SCHLAUCH KPL.
1259	968601808	1	HOSE CPL. 2TE 6X160	SCHLAUCH KPL.
1260	968601908	1	HOSE CPL. 2TE 10X580	SCHLAUCH KPL.
1261	961920208	1	HOSE CPL. 2SN 6X340	SCHLAUCH KPL.

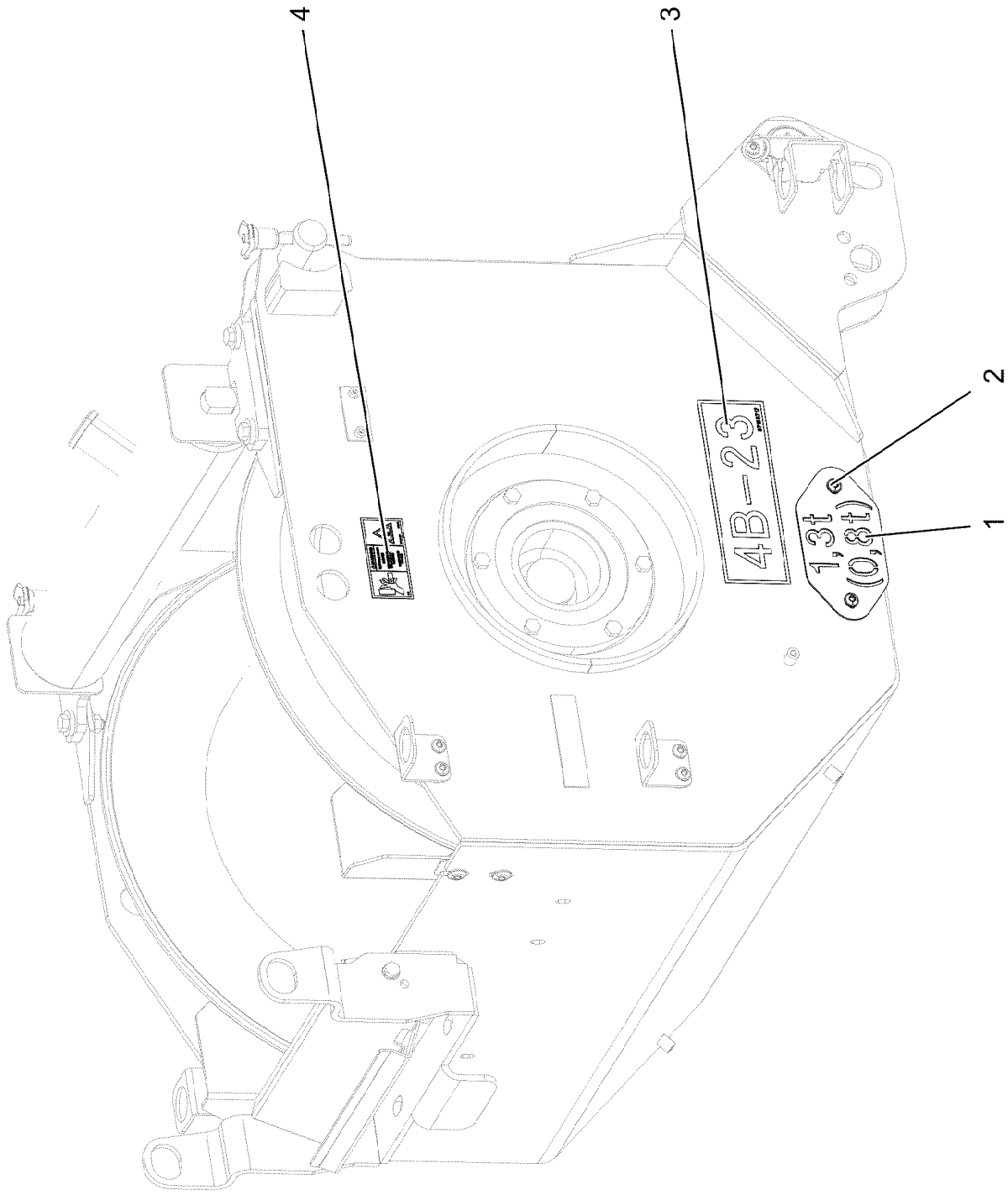
4
3
2
1
4B-25
1,3t
(0,3t)

Pos.	Item	Quantity	Description	Bezeichnung
1	975352908	1	PLATE 2X200X100 X5CRNI18-10	BLECH
2	12102696	2	BUTTON HEAD SCREW AEHNL.ISO 7380-2	HALBRUNDKOPFSCHRAUBE
3	97158717	1	SIGN 240X80 KLEBEFOLIE SPF	SCHILD
4	97151431	1	INFORMATION SIGN 105X50 KLEBEFOLIE	HINWEISSCHILD

Pos.	Item	Quantity	Description	Bezeichnung
4	96075086	1	HYD.AUX.LIFT GEAR UPPER CARRIA ⇨ ❑ 597	HYDRAULIK HILFSHUBWERK D

16.11.2023
176285

LIEBHERR

etk_en_de_078966 LTR 1100

HYD.AUX.LIFT GEAR UPPER CARRIA
HYDRAULIK HILFSHUBWERK DREHB.

597 (1/2)

96075086

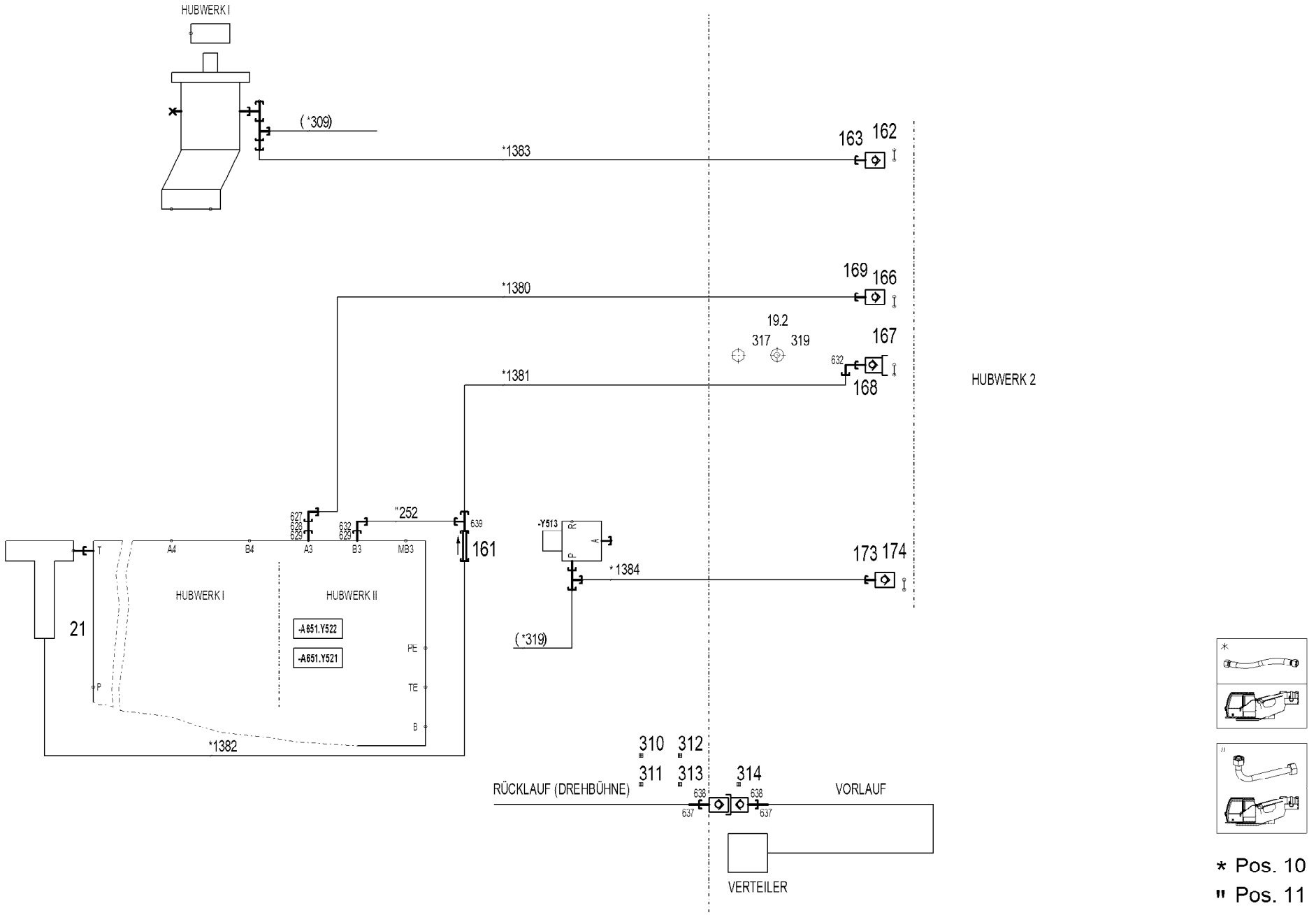

* Pos. 10
" Pos. 11

Pos.	Item	Quantity	Description	Bezeichnung
9	96075102	1	FASTENING PIECES HYDRAULICS ⇨ ❑ 599	BEFESTIGUNGSTEILE HYDRAU
10	967498008	1	HOSE LINES HW 2 PRE-ASS. SCR ⇨ ❑ 600	SCHLAUCHLEITUNGEN HW 2 VO
11	968543908	1	PIPELINES HOISTING GEAR 2 SCR ⇨ ❑ 601	ROHRLEITUNGEN HUBWERK 2
18	968551908	1	ELECTRIC FOR WINCH 2	ELEKTRIK VORBEREITUNG WI
(6)	968552008	1	WIRING HARNESS W512	KABELSTRANG
19	96075100	1	MECHANICAL AUXILIARIES	MECH.BEFESTIGUNGSTEILE
(2)	976822308	1	PLATE 4X324X189 S315MC FE//ZNNI8//CN//T	BLECH
21	10665173	1	CONTROL BLOCK 385BAR 380L/MIN SPF ⇨ ❑ 602	STEUERBLOCK
161	511491708	1	NON-RETURN VALVE 420BAR 0.5BAR CR6-F	RUECKSCHLAGVENTIL
162	10466915	1	HEX CAP NUT RD36X3 SPF	VERSCHLUSSMUTTER
163	511500508	1	COUPLING SLEEVE B3 15-L	KUPPLUNGSMUFFE
166	12102190	1	HEX CAP NUT BGR.8 M 79X4 PA 6 SPF	VERSCHLUSSMUTTER
167	12102189	1	SCREW PLUG BGR.8 M 79X4 PA 6 SPF	VERSCHLUSSSCHRAUBE
168	511512308	1	COUPLING PLUG B8 38-S	KUPPLUNGSSTECKER
169	511512208	1	COUPLING SLEEVE B8 38-S	KUPPLUNGSMUFFE
173	511505808	1	COUPLING SLEEVE B2 12-L	KUPPLUNGSMUFFE
174	10466914	1	HEX CAP NUT RD32X3 SPF	VERSCHLUSSMUTTER
310	774372708	1	COUPLING PLUG	KUPPLUNGSSTECKER
311	774372608	1	COUPLING SLEEVE	KUPPLUNGSMUFFE
312	710103008	1	SEALING RING DIN 7603 A14X20X1,5 CU	DICHTRING
313	10873149	2	POLYAMID PIPE DIN 73378 6X1,5 PA 12-HL	POLYAMIDROHR
314	477101408	2	PROFILE RING PR6-S/L A3P	PROFILRING
317	11651612	2	HEX SCREW ISO 4017 M8X16 8.8 480H SPF	SECHSKANTSCHRAUBE
319	11140469	2	WASHER ISO 7093-1 8 200HV 480H SPF	SCHEIBE
627	470233408	1	FITTING XW38-S CR6-FREI	VERSCHRAUBUNG
628	470010708	1	FITTING SNV38-S CR6-FREI	VERSCHRAUBUNG
629	471034408	2	FITTING XGEV38-SR-WD CR6-FREI	VERSCHRAUBUNG
632	472531808	2	FITTING EWSD38-S CR6-FREI	VERSCHRAUBUNG
637	477400108	2	BOX NUT DIN 3870 AS6 A3P	UEBERWURFMUTTER
638	471032108	2	FITTING GE 6S G1/4A CR6-FREI	VERSCHRAUBUNG
639	472331908	1	FITTING ELSD38-S CR6-FREI	VERSCHRAUBUNG

Pos.	Item	Quantity	Description	Bezeichnung
44	602010908	4	CLAMP-HALF 6 R R 44,5 SANTOPREN	KLEMMHAELFTE
60	12102692	2	HEX NUT DIN 985 M6 8 ZNNI-480H SPF	SECHSKANTMUTTER
61	10875648	2	WASHER ISO 7093-1 6 200HV 480H SPF	SCHEIBE
245	12100498	2	SOCKET HEAD SCREW ISO 4762 M6X145 8	ZYLINDERSCHRAUBE

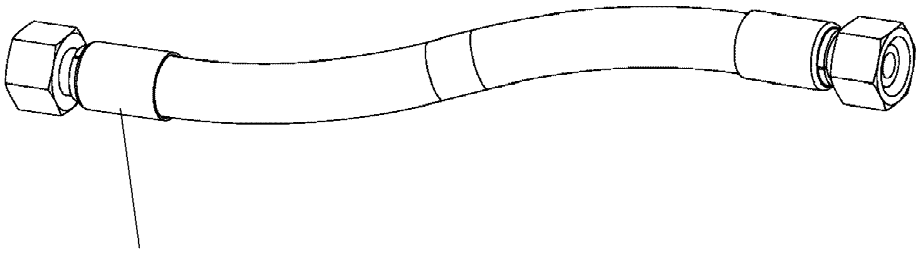

Schlauchnummer
Hose number
Numéro de flexible
Número de flexible
Номера шланга

Die Schlauchnummern auf den Schläuchen entsprechen den Positionen in der Schlauchliste.

The hose numbers from the hoses are in accordance with the items in the hose list.

Les numéros indiqués sur les flexibles correspondent aux repères de la nomenclature des flexibles.

Los números indicados en los flexibles corresponden a las posiciones de la lista de flexibles.

Нанесенные на шлангах номера соответствуют позициям в перечне.

Pos.	Item	Quantity	Description	Bezeichnung
1380	968602008	1	HOSE CPL. 4ST+ 31X3280	SCHLAUCH KPL.
1381	968602108	1	HOSE CPL. GH506 31X3500	SCHLAUCH KPL.
1382	968602208	1	HOSE CPL. 1SN 32X900	SCHLAUCH KPL.
1383	964273808	1	HOSE CPL. 2TE 12X940	SCHLAUCH KPL.
1384	928013108	1	HOSE CPL. 2SN 10X1200	SCHLAUCH KPL.

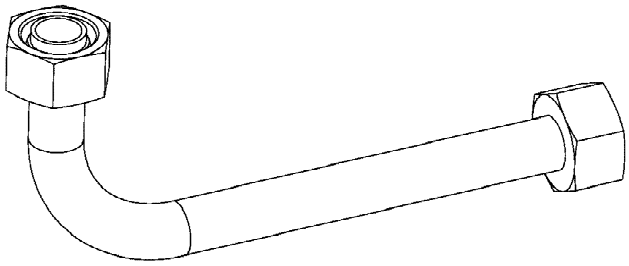

Die Positionsnummern der Rohre auf den Bildtafeln entsprechen den Positionen in der Rohrliste.

The pipe numbers from the illustrations are in accordance with the items in the pipe list.

Les numéros des tuyaux sur les illustrations correspondent aux repères de la nomenclature des tuyaux.

Los números de tubos en las ilustraciones corresponden a las posiciones de la lista de tubos.

Номера позиций труб на изображениях соответствуют позициям в перечне труб.

Pos.	Item	Quantity	Description	Bezeichnung
252	968612908	1	PIPE COMPL. 38X5X260	ROHR KPL.

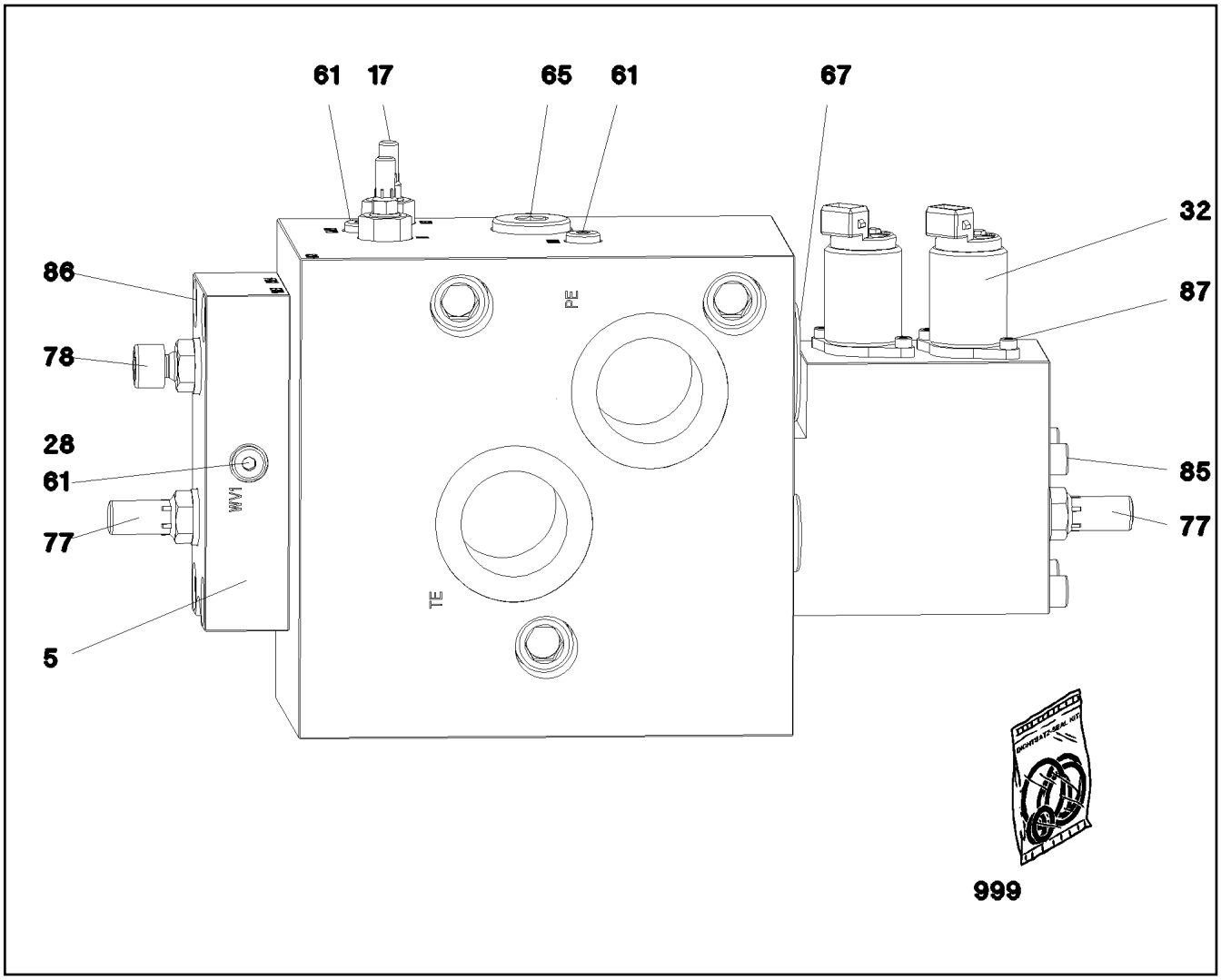

Pos.	Item	Quantity	Description	Bezeichnung
5	10663242	1	COVER	DECKEL
17	571130108	2	PRESSURE LIMITING VALVE ⇨ ❑ 524	DRUCKBEGRENZUNGSVENTIL
27	570651408	1	NON-RETURN VALVE	RUECKSCHLAGVENTIL
28	571529508	1	SHUTTLE VALVE 350BAR	WECHSELVENTIL
32	10815029	2	VALVE	VENTIL
61	510741508	3	STOP PLUG VSTI1/8"ED ST CR6-FREI	STOPFEN
65	477704708	1	STOP PLUG VSTI G3/4A CR6-FREI	STOPFEN
67	11002696	1	STOP PLUG VSTI 1 1/4"	STOPFEN
77	571529708	2	CHECK SCREW	STELLSCHRAUBE
78	10423817	1	CHECK SCREW	STELLSCHRAUBE
85	10875596	4	SOCKET HEAD SCREW ISO 4762 M8X120 8	ZYLINDERSCHRAUBE
86	404361977	4	SCREW DIN 912 M12X40 12.9	SCHRAUBE
87	10228541	4	SOCKET HEAD SCREW ISO 4762 M4X10 10.	ZYLINDERSCHRAUBE
999	10412632	1	SEAL KIT VALVE BLOCK	DS VENTILBLOCK

Pos.	Item	Quantity	Description	Bezeichnung
1	12103327	1	SOCKET COMBINATION 2 X 3-POL	STECKDOSENKOMBINATION
14	96071003	1	LEAD W694	LEITUNG
100	96066401	1	MECHANICAL AUXILIARIES ⇨ ❑ 604	MECHANISCHE ANBAUTEILE

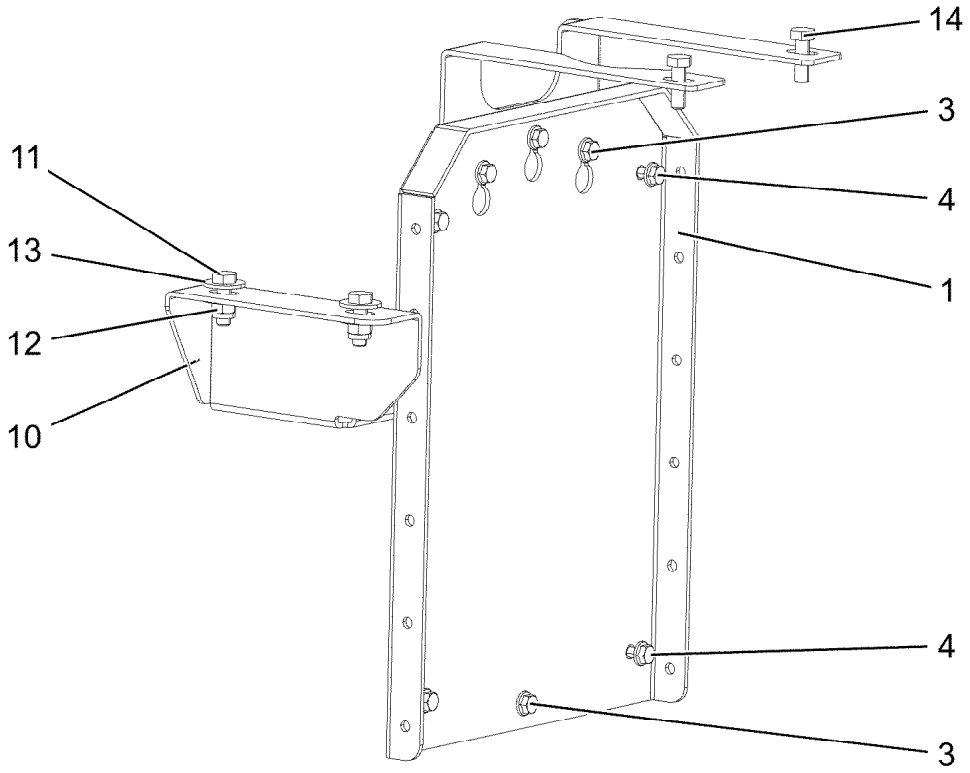

Pos.	Item	Quantity	Description	Bezeichnung
1	97138345	1	PLATE 3X302X386 DC01 FE//ZNNI8//CN//T0	BLECH
3	11692607	4	HEX SCREW EN 1665 M6X12 8.8 480H SPF	SECHSKANTSCHRAUBE
4	11840297	4	HEX SCREW EN 1665 M6X16 8.8 480H SPF	SECHSKANTSCHRAUBE
10	97162206	1	CONSOLE 3X378X545 DC01 FE//ZNNI8//CN/	KONSOLE
11	10197831	2	HEX SCREW ISO 4017 M8X25 8.8 ZNNI-480	SECHSKANTSCHRAUBE
12	11656731	2	HEX NUT ISO 7040 M8 8 480H SPF	SECHSKANTMUTTER
13	11140469	4	WASHER ISO 7093-1 8 200HV 480H SPF	SCHEIBE
14	10299581	2	HEX SCREW ISO 4017 M8X25 10.9 480H SP	SECHSKANTSCHRAUBE

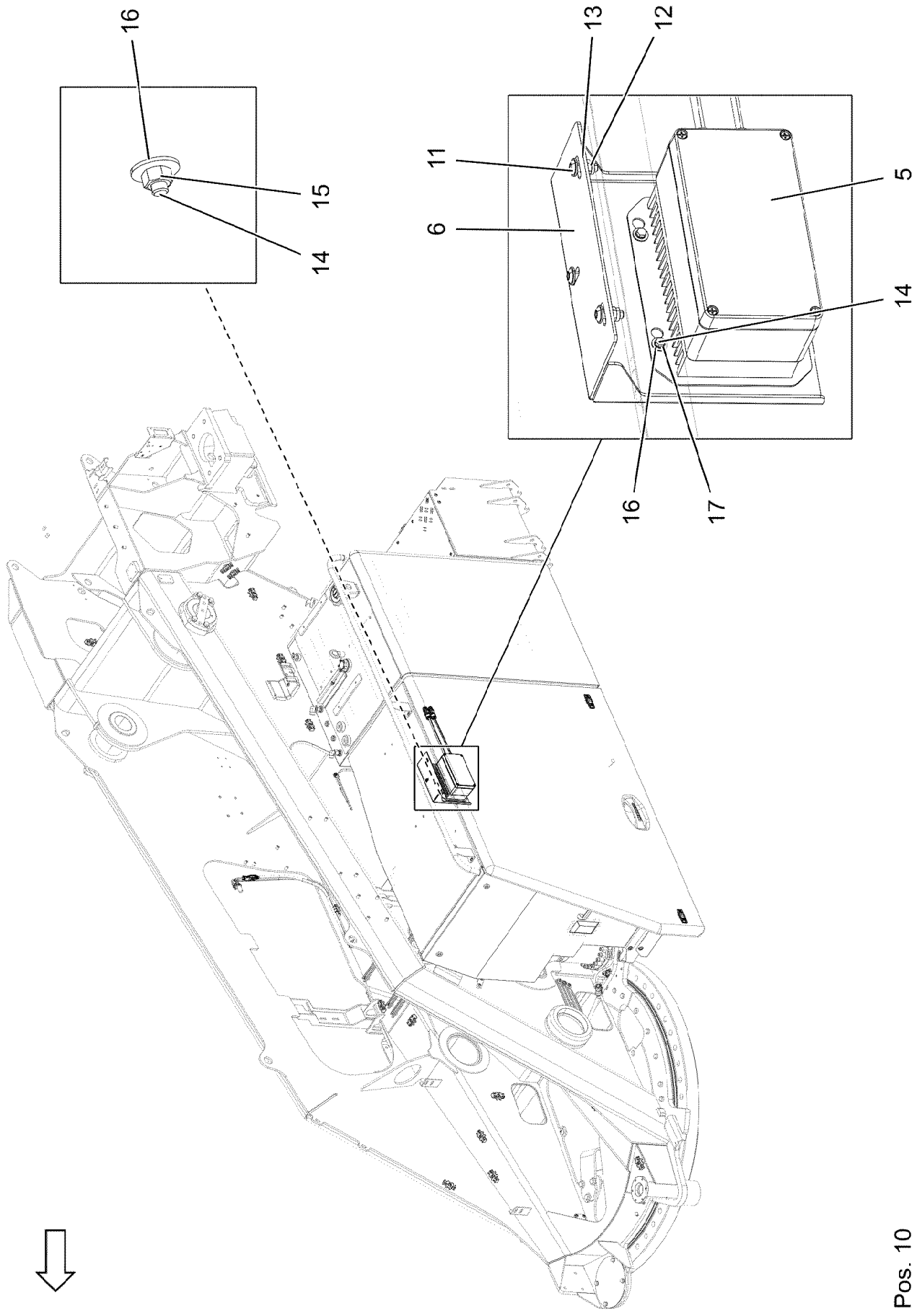
16
15
14
13
12
11
6
5
14
16
17
Pos. 10

Pos.	Item	Quantity	Description	Bezeichnung
5	12104889	1	CHARGER 110/230V/24V/16A SPF	LADEGERAET
6	97162173	1	PLATE 3X390X340 DC01 FE//ZNNI8//CN//T0	BLECH
10	96060392	1	LEAD W621	LEITUNG
11	10875471	3	BUTTON HEAD SCREW AEHNL.ISO 7380-2	HALBRUNDKOPFSCHRAUBE
12	10875614	3	HEX NUT DIN 985 M8 8 480H SPF	SECHSKANTMUTTER
13	11140469	3	WASHER ISO 7093-1 8 200HV 480H SPF	SCHEIBE
14	11140402	4	HEX SCREW ISO 4017 M5X12 8.8 480H SPF	SECHSKANTSCHRAUBE
16	10875643	4	WASHER ISO 7093-1 5 200HV 480H SPF	SCHEIBE

Pos.	Item	Quantity	Description	Bezeichnung
20	96060353	1	LEAD W582 ⇨ ❑ 608	LEITUNG

Pos.	Item	Quantity	Description	Bezeichnung
5	600265101	1.7	LEAD 3 G 1,5	LEITUNG
6	600265101	2.63	LEAD 3 G 1,5	LEITUNG
297	10441165	0.06	HEATSHRINK SLEEVING 9,0/2,3X1,52 POLY	SCHRUMPFSCHLAUCH
500	923512208	3	CABLE MARKER	KABELMARKER
501	12104874	1	PIN CARRIER 6-POL 28A	STIFTTRAEGER
502	12104875	2	BUSHING SUPPORT 6-POL 28A	BUCHSENTRAEGER
503	12104884	1	CABLE PLUG M23 MESSING VERN	KABELSTECKVERBINDER
504	12106223	2	CABLE PLUG M23 MESSING VERN	KABELSTECKVERBINDER
998	965622208	2	LETTERING WIRING HARNESS	BESCHRIFTUNG KABELBAUM
2337	12104876	6	SLEEVE CONTACT 0,75-2,5MM2	BUCHSENKONTAKT
2338	12104872	6	PIN CONTACT 0,75-2,5MM2	STIFTKONTAKT

Pos.	Item	Quantity	Description	Bezeichnung
10	96050762	1	ELECTRIC ADD-ON PARTS ⇨ ❑ 610	ELEKTRIK ANBAUTEILE
20	96057250	1	LEAD W398 ⇨ ❑ 611	LEITUNG

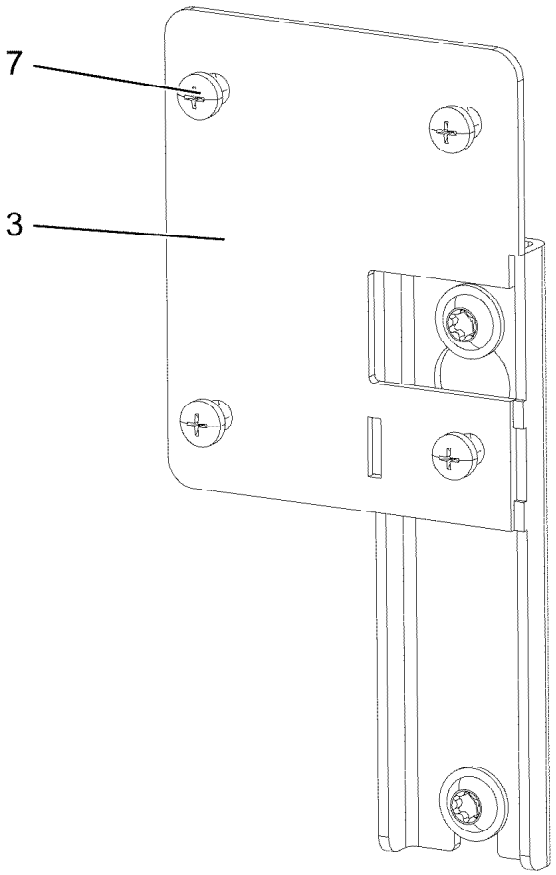

Pos.	Item	Quantity	Description	Bezeichnung
3	96048684	1	PLATE WELDED RAL 9005,M,GT SPF	BLECH SCHWK.
7	12212474	4	PAN-HEAD SCREW ISO 7045 M4X10 4.8 480	FLACHKOPFSCHRAUBE

Pos.	Item	Quantity	Description	Bezeichnung
5	10346773	4.51	CABLE	KABEL
232	603012608	4.32	INSULATING HOSE DN14X0,8 -60°C+250°C	ISOLIERSCHLAUCH
500	923512208	2	CABLE MARKER	KABELMARKER
501	12104874	1	PIN CARRIER 6-POL 28A	STIFTTRAEGER
502	605201508	1	SOCKET 3-POL	STECKDOSE
503	12104883	1	CABLE PLUG M23 MESSING VERN	KABELSTECKVERBINDER
658	10101686	3	WIRED END FERRULE DIN 46228-T4 1,5X8 P	ADERENDHUELSE
998	965622208	2	LETTERING WIRING HARNESS	BESCHRIFTUNG KABELBAUM
2338	12104872	3	PIN CONTACT 0,75-2,5MM2	STIFTKONTAKT

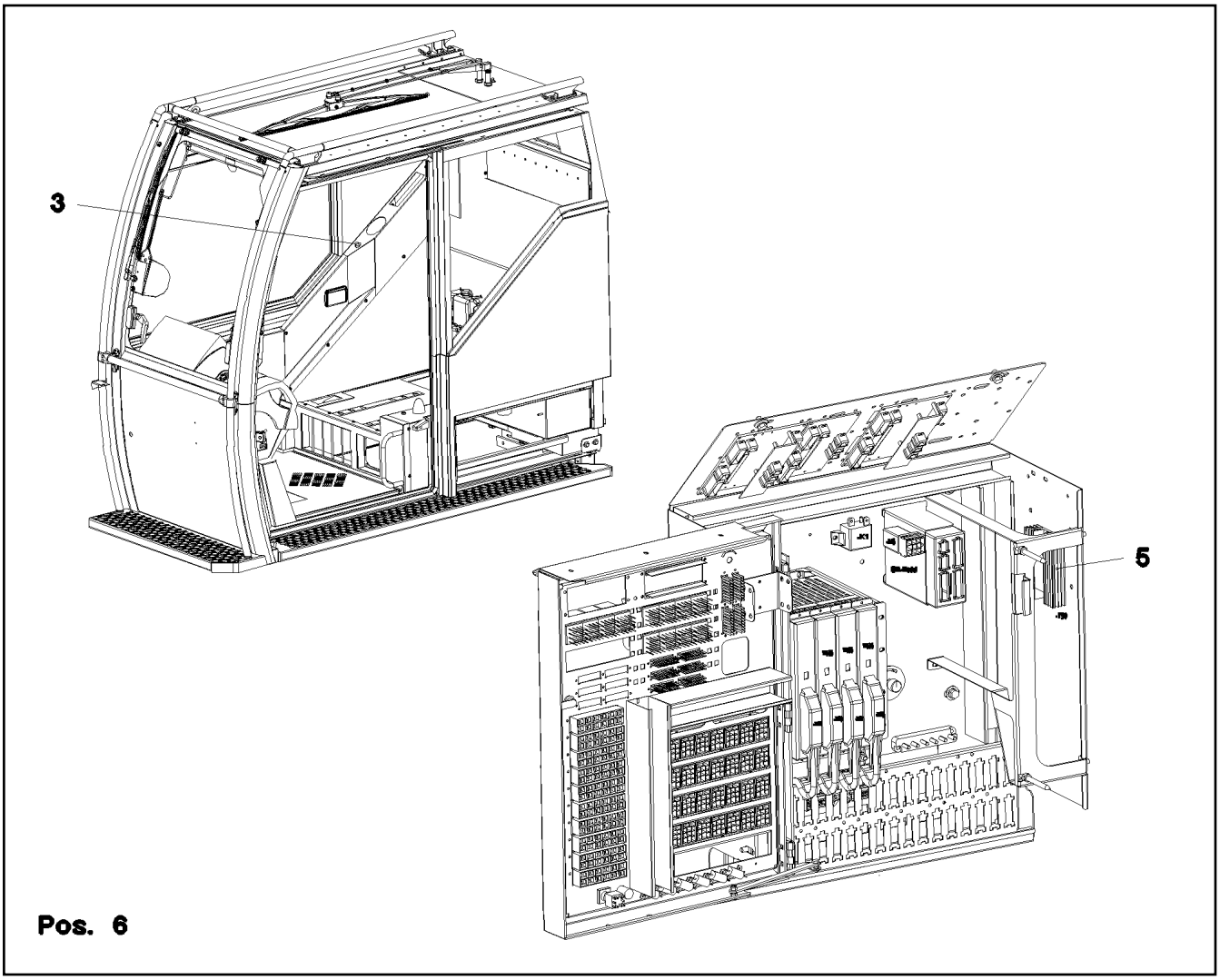

Pos.	Item	Quantity	Description	Bezeichnung
2	772614008	1	SIGN 12V	SCHILD
3	605407608	1	CIGARETTE LIGHTER 24V 23,2X37,5	ZIGARETTENANZUENDER
5	614020508	1	VOLTAGE REGULATOR 24V 12V 320W 24A	SPANNUNGSREGLER
6	604007108	1	FLAT FUSE LINK 10A 32	FLACHSICHERUNGSEINSATZ
7	10875614	2	HEX NUT DIN 985 M8 8 480H SPF	SECHSKANTMUTTER
8	11140469	2	WASHER ISO 7093-1 8 200HV 480H SPF	SCHEIBE
9	413002608	4	CAGE NUT M5	KAEFIGMUTTER
11	11658059	4	PAN-HEAD SCREW ISO 7045 M5X12 4.8 480	FLACHKOPFSCHRAUBE
13	10197808	4	WASHER ISO 7089 5 200HV ZNNI-480H	SCHEIBE
15	602305908	1	FLAT PLUG HOUSING FASTIN-FASTON	FLACHSTECKERGEHAEUSE
16	602209708	1	ATTACHABLE SLEEVE HOUSING 2-POL	STECKHUELSENGEHAEUSE
17	602208608	1	ATTACHABLE SLEEVE HOUSING FASTIN-F	STECKHUELSENGEHAEUSE
72	602203408	4	RECEPTACLE 6,3X1-2,5 MESSING VERZINN	STECKHUELSE
74	602304808	2	FLAT PLUG	FLACHSTECKER
305	10870540	8	ELECTR.CABLE 1,0	KFZ-LEITUNG

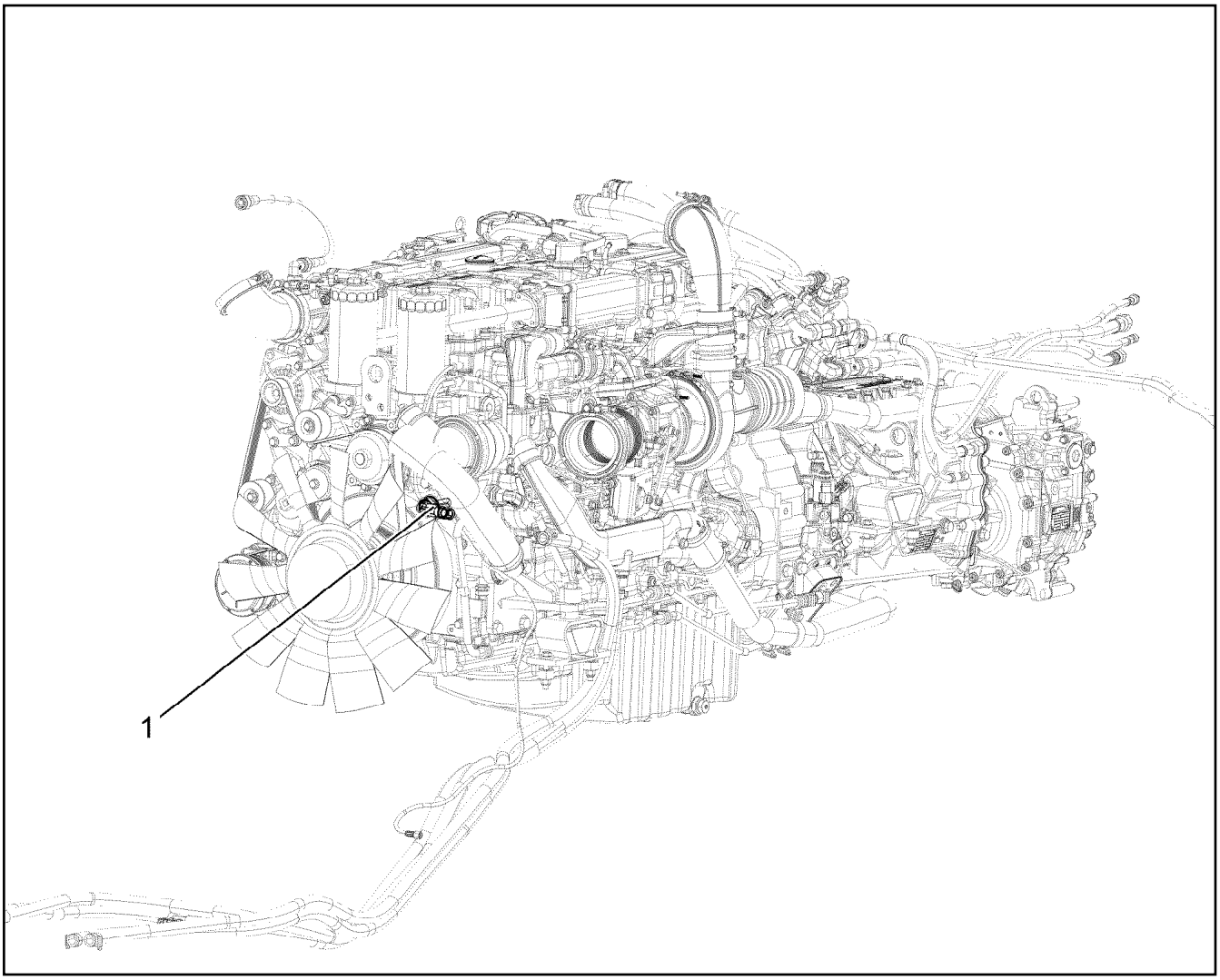

Pos.	Item	Quantity	Description	Bezeichnung
1	12103149	1	PRE-HEATING INSTALLATION 115V 1KW	VORWAERMGERAET
2	811201314	0.1	SEALING COMPOUND TUBE 50ML -55/150°	DICHTUNGSMASSE

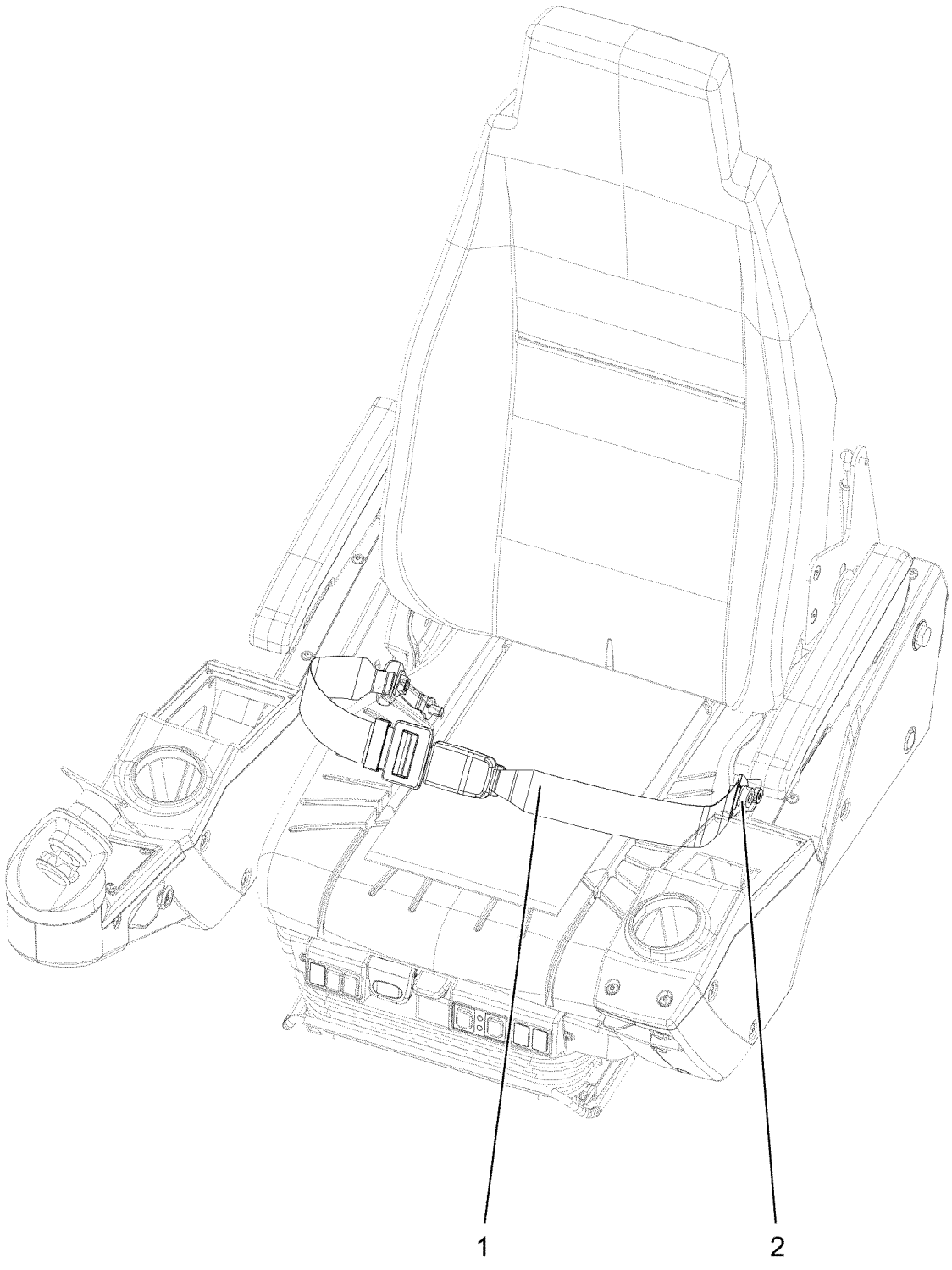
1
2

Pos.	Item	Quantity	Description	Bezeichnung
1	12102677	1	HIP BELT	BECKENGURT
2	97155739	2	SLEEVE 22X13 X5CRNI18-10	HUELSE

Pos.	Item	Quantity	Description	Bezeichnung
10	96060380	1	LEAD W682	LEITUNG

Pos.	Item	Quantity	Description	Bezeichnung
1	969856508	1	ADDITIONAL HYDRAULICS ⇨ ❑ 618	ZUSATZHYDRAULIK OELVORWA

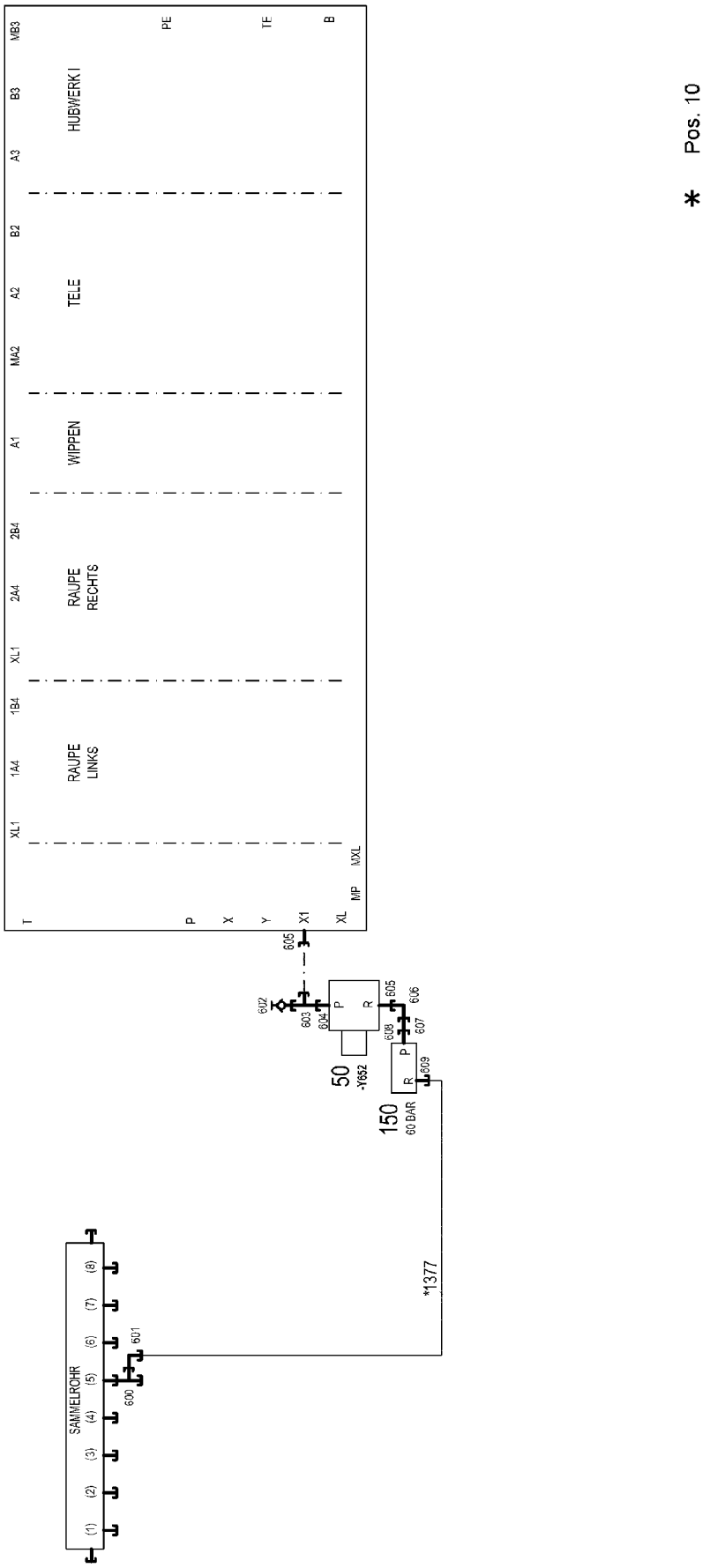
T
P
X
Y
X1
XL
MP
MXL
XL1
1A4
RAUPE LINKS
1B4
XL1
2A4
RAUPE RECHTS
2B4
A1
WIPPEN
MA2
A2
TELE
B2
A3
HUBWERK I
B3
MB3
PE
TF
B
605
602
603
604
P
R
605
606
608
607
P
R
609
50
-Y602
150
60 BAR
*1377
SAMMELROHR
(1)
(2)
(3)
(4)
(5)
(6)
(7)
(8)
600
601
* Pos. 10

Pos.	Item	Quantity	Description	Bezeichnung
10	969856608	1	HOSE LINES OIL PREHEATING STUFE 4	SCHLAUCHLEITUNGEN OELVOR
(1377)	926711908	1	HOSE CPL. 2TE 10X1200	SCHLAUCH KPL.
17	913978308	1	ADDITIONAL ELECTRICS ⇨ ❑ 620	ZUSATZELEKTRIK VORWAERM
50	511320108	1	DIRECTIONAL CONTROL VALVE 2/2 350BA	WEGEVENTIL
(1)	570633808	1	MAGNET 24V	MAGNET
(999)	10802253	1	SEAL KIT DIRECTIONAL VALVE	DS WEGEVENTIL
150	511417608	1	PRESSURE LIMITING VALVE pmax=700BAR ⇨ ❑ 621	DRUCKBEGRENZUNGSVENTIL
600	247128602	1	L NECK EL 12L M18X1,5 CR6-FREI	L-STUTZEN
601	247117702	1	SWIVEL ELBOW EW 12L M18X1,5 CR6-FREI	WINKELSTUTZEN
602	475601508	1	TEST POINT FITTING BMA3 6S CR6-FREI	MESSANSCHLUSS
603	472331208	1	FITTING EL 6S CR6-FREI	VERSCHRAUBUNG
604	471032108	1	FITTING GE 6S G1/4A CR6-FREI	VERSCHRAUBUNG
605	471900308	2	FITTING EGESD6-SR-WD CR6-FREI	VERSCHRAUBUNG
606	472531508	1	FITTING EW 6S M14X1,5 CR6-FREI	VERSCHRAUBUNG
607	475432908	1	FITTING REDSD12/6-S CR6-FREI	VERSCHRAUBUNG
608	471032608	1	FITTING GE 12S G1/2A CR6-FREI	VERSCHRAUBUNG
609	471034808	1	FITTING GE 12L G1/2 CR6-FREI	VERSCHRAUBUNG

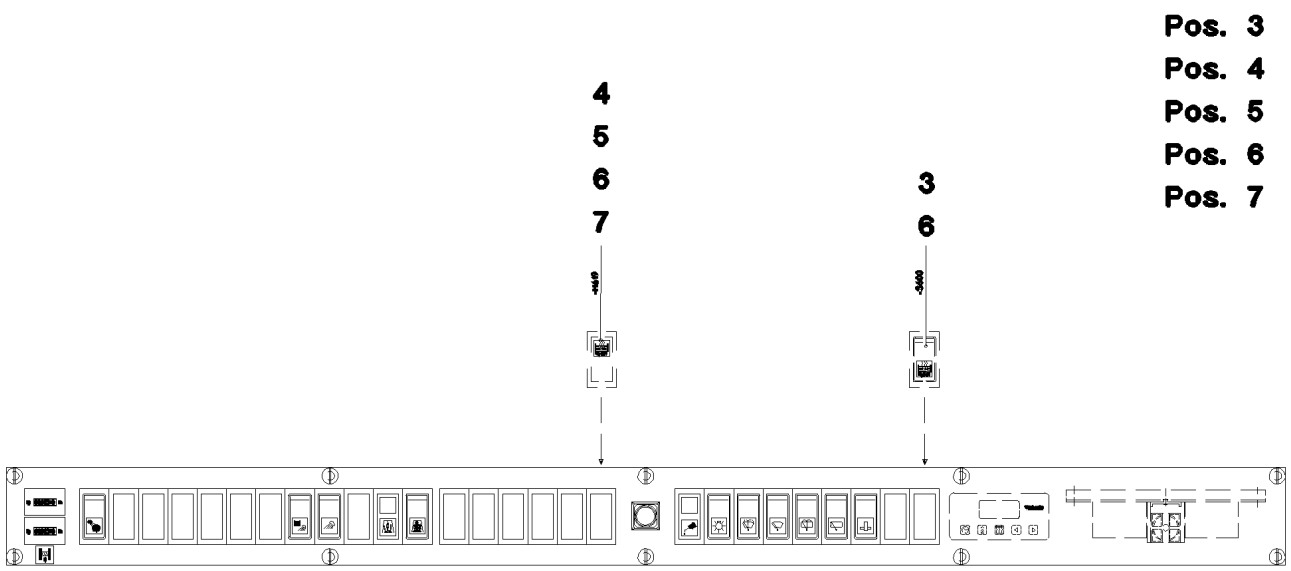

Pos.	Item	Quantity	Description	Bezeichnung
3	606023008	1	ROCKER SWITCH	KIPPSCHALTER
4	607135408	1	CONTROL LIGHT 24V	KONTROLLLEUCHTE
(1)	607009708	2	LIGHT BULB 1,3W 24V	GLUEHLAMPE
5	607225008	1	REFLECTOR	REFLEKTOR
6	606782008	2	SYMBOL INSERT 14X14X1,5 GRUEN	SYMBOLEINSATZ
7	606763308	1	SYMBOL INSERT SCHWARZ	SYMBOLEINSATZ

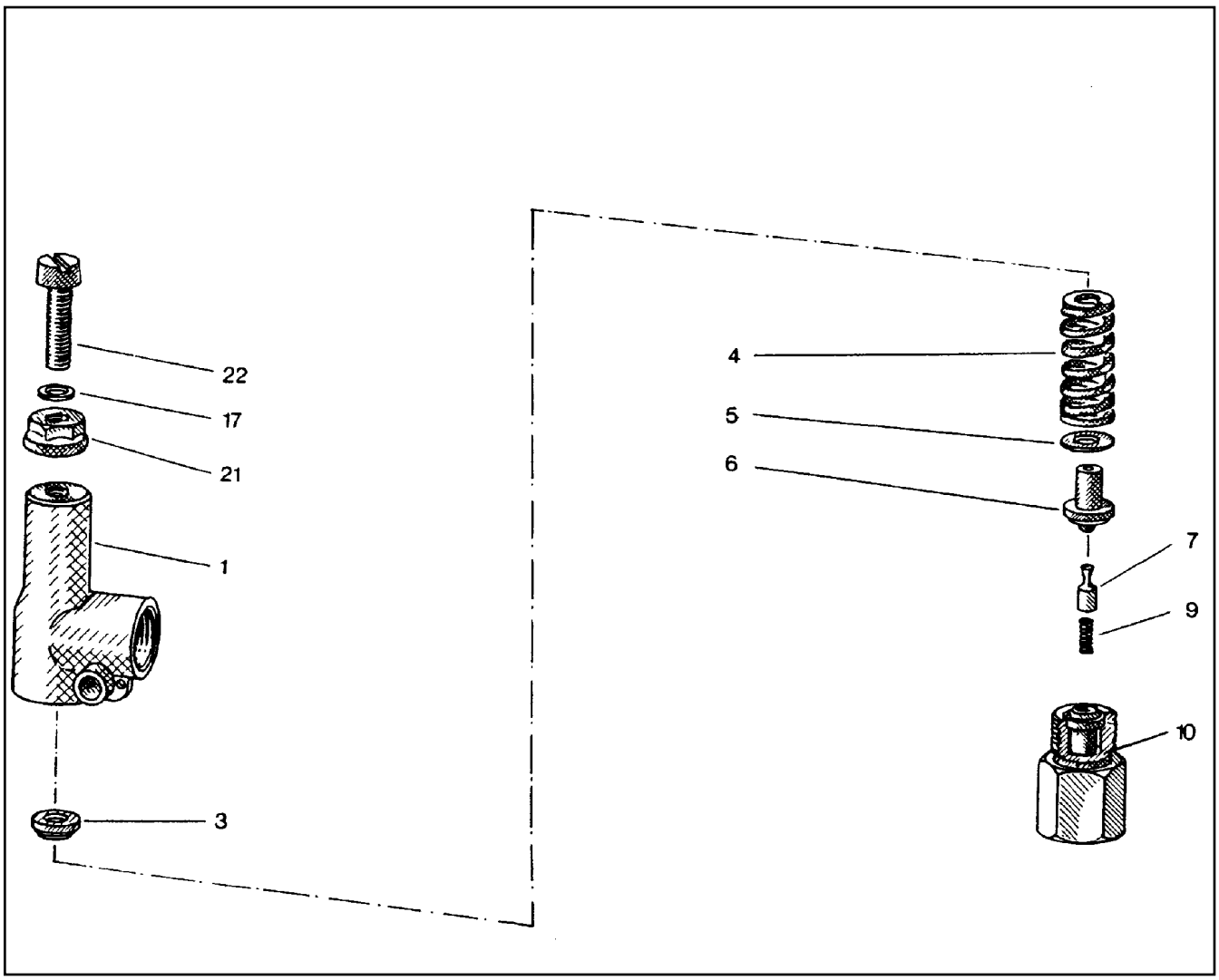

Pos.	Item	Quantity	Description	Bezeichnung
1	510796908	1	HOUSING	GEHAEUSE
3	510797008	1	SPRING SUPPORT	FEDERTELLER
4	510797108	1	COMPRESSION SPRING 2,2X11X38	DRUCKFEDER
5	510797208	1	WASHER	SCHEIBE
6	510797308	1	SPRING-LOADED PIN	FEDERBOLZEN
7	510797408	1	DAMPING PISTON	DAEMPFUNGSKOLBEN
9	510797508	1	COMPRESSION SPRING 0,5X3X12,4	DRUCKFEDER
10	510797608	1	VALVE SEAT	VENTILSITZ
17	510783208	1	SHIM	AUSGLEICHSCHEIBE
21	510741708	1	SEALING NUT M8	DICHTMUTTER
22	510797708	1	SOCKET HEAD SCREW DIN 84 M8X35 5.8	ZYLINDERSCHRAUBE

Pos.	Item	Quantity	Description	Bezeichnung
1	915403108	1	ADD-ON PARTS CAMERA DB-HECK ⇨ ❑ 623	ANBAUTEILE KAMERA
3	96036820	1	EQUIPMENT CAMERA CAB ⇨ ❑ 624	AUSRUESTUNG KAMERA KABIN
4	96036821	1	REAR END TURNT. CAMERA EQUIP. ⇨ ❑ 625	AUSRUESTUNG KAMERA DRE

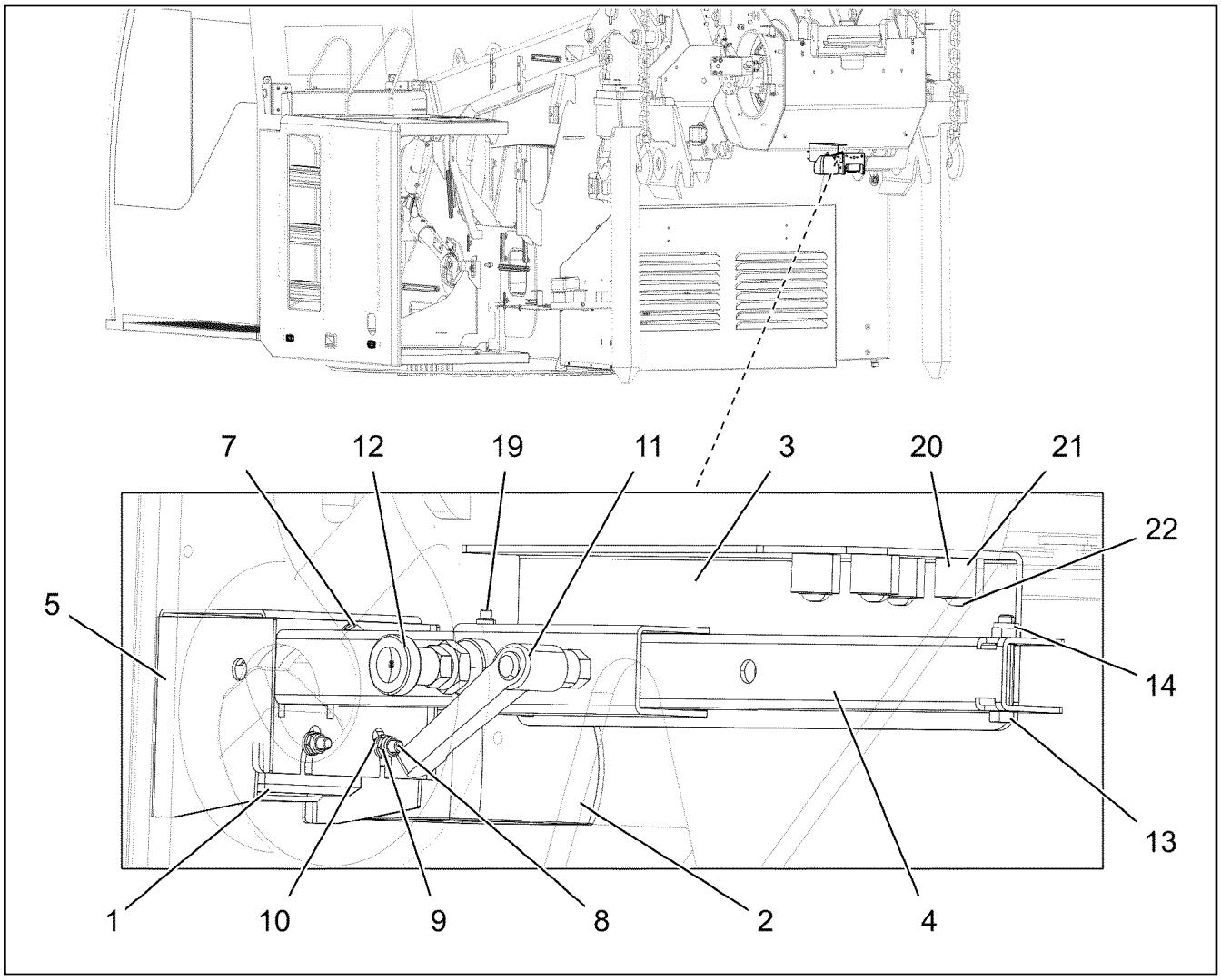

Pos.	Item	Quantity	Description	Bezeichnung
3	964502708	1	GUIDE WELDED	FUEHRUNG SCHWK.
4	963772608	1	STAND	STATIV
5	973272208	1	PLATE 2X291X205 X5CRNI18-10	BLECH
7	11657360	1	HEX SCREW ISO 4017 M6X16 8.8 480H SPF	SECHSKANTSCHRAUBE
8	10412852	2	BUTTON HEAD SCREW AEHNL.ISO 7380-2	HALBRUNDKOPFSCHRAUBE
9	411903008	3	HEX NUT DIN 985 M6 A2-70	SECHSKANTMUTTER
10	10197771	4	WASHER ISO 7089 6 200HV ZNNI-480H SPF	SCHEIBE
11	10024803	1	CLAMPING LEVER NIROSTA	KLEMMHEBEL
12	704231608	1	STOP BOLT NIROSTA	RASTBOLZEN
13	10875538	1	HEX SCREW ISO 4017 M8X50 8.8 480H SPF	SECHSKANTSCHRAUBE
14	10875614	1	HEX NUT DIN 985 M8 8 480H SPF	SECHSKANTMUTTER
19	10875512	1	HEX SCREW ISO 4014 M6X50 8.8 480H SPF	SECHSKANTSCHRAUBE
21	953873408	4	SLEEVE 25X20 11SMNPB37 FE//ZNNI8//CN/	HUELSE
22	10875485	4	BUTTON HEAD SCREW AEHNL.ISO 7380-2	HALBRUNDKOPFSCHRAUBE

Pos.	Item	Quantity	Description	Bezeichnung
10	10876638	1	MONITOR TFT 7 800X480	MONITOR
13	96020554	1	WIRING HARNESS W321	KABELSTRANG
15	10097087	2	CABLE	KABEL
20	10874763	1	HOLDER MONITOR	HALTER MONITOR
21	10875640	1	WASHER DIN 440 6,6 -ST 480H SPF	SCHEIBE
22	10415159	1	HEX NUT ISO 7040 M6 10 480H SPF	SECHSKANTMUTTER
24	97025080	1	PLATE 2X231X192 DC01 RAL 9005,M,GT SP	BLECH
25	10875474	4	BUTTON HEAD SCREW ISO 7380-2 M5X16 0	HALBRUNDKOPFSCHRAUBE

Pos.	Item	Quantity	Description	Bezeichnung
10	10097079	1	CAMERA SPF	KAMERA
11	10870643	1	CABLE 2X0,14+2X0,22-9M	KABEL
15	10870635	1	PROTECTIVE HOSE DN20 NORMAL PP	SCHUTZSCHLAUCH
17	11631816	1	HEX SCREW ISO 4017 M10X25 8.8 FLZN SP	SECHSKANTSCHRAUBE
18	10289795	2	WASHER ISO 7089 10 300HV FLZN SPF	SCHEIBE
19	10875629	1	HEX NUT ISO 7040 M10 8 FLZN SPF	SECHSKANTMUTTER
20	10877828	1	WORK LIGHT 20W 12-24V ALUMINIUM	ARBEITSSCHEINWERFER
23	96037273	1	LEAD W563	LEITUNG
24	10412851	2	BUTTON HEAD SCREW AEHNL.ISO 7380-2	HALBRUNDKOPFSCHRAUBE
25	411903008	2	HEX NUT DIN 985 M6 A2-70	SECHSKANTMUTTER
26	421801708	2	WASHER ISO 7093-1 6 200HV-A2	SCHEIBE
27	7005052	4	CLAMP-HALF DIN 3015-1 L 3 R 25 PP SW	KLEMMHAELFTE
28	10876361	2	SOCKET HEAD SCREW ISO 4762 M6X70 8.8	ZYLINDERSCHRAUBE
29	10197771	2	WASHER ISO 7089 6 200HV ZNNI-480H SPF	SCHEIBE
30	421861405	4	WASHER ISO 7093-1 8 200HV-A2	SCHEIBE

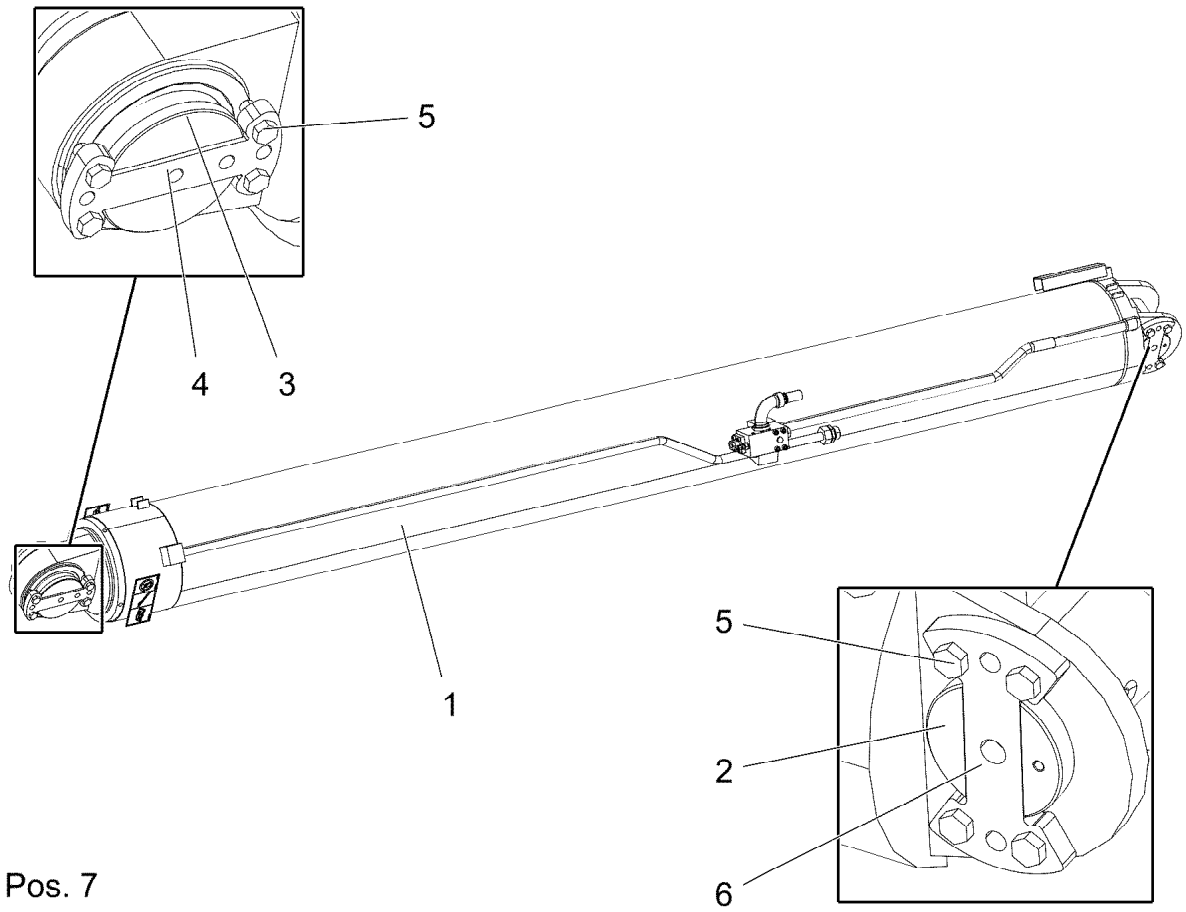

Pos.	Item	Quantity	Description	Bezeichnung
1	12102922	1	LUFFING CYLINDER 320/290-3345 SPF ⇨ ❑ 627	WIPPZYLINDER
2	972608108	1	PIN 120.0X225 35NICRMOV125	BOLZEN
3	956164808	1	PIN 160.0x195 35NICRMOV125	BOLZEN
4	951913908	1	AXLE HOLDER 20x250x119 S690QL	ACHSHALTER
5	406603008	8	HEX SCREW ISO 4017 M16X40 10.9 FLZN SP	SECHSKANTSCHRAUBE
6	972608208	1	AXLE HOLDER 20X118X220 S690QL	ACHSHALTER
7	10875877	4	DOWEL PIN ISO 8752 18X36 480H SPF	SPANNSTIFT

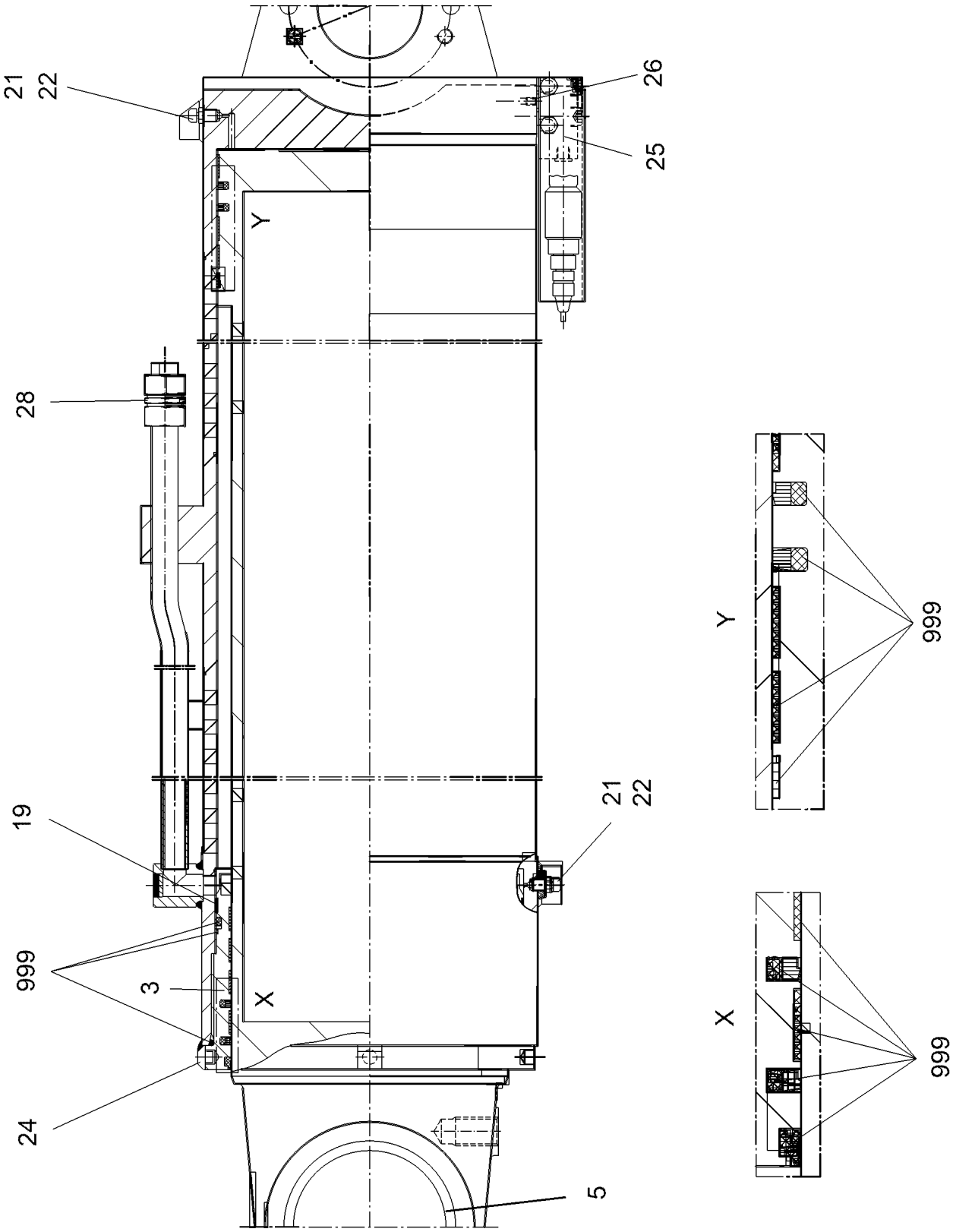
21
22
26
25
Y
28
19
21
22
999
3
X
24
5
Y
999
X
999

Pos.	Item	Quantity	Description	Bezeichnung
3	11341829	1	GUIDE BUSHING 290,7X345X205	FUEHRUNGSBUCHSE
5	11004996	1	BUSHING 160X180X100	BUCHSE
19	11490453	1	GUIDE RING 323X318X15	FUEHRUNGSRING
21	10424983	2	VENTILATION VALVE	ENTLUEFTUNGSVENTIL
22	747000277	2	BALL DIN 5401 6	KUGEL
24	11341708	2	CAM	NOCKE
25	11692099	1	NON-RETURN VALVE	RUECKSCHLAGVENTIL
26	12100620	1	GRUB SCREW DIN 914 M8X10 45H 480H SP	GEWINDESTIFT
28	470000814	1	FITTING G 28L A3C	VERSCHRAUBUNG
999	12104384	1	SEAL KIT TOGGLE CYLINDER	DS WIPPZYLINDER

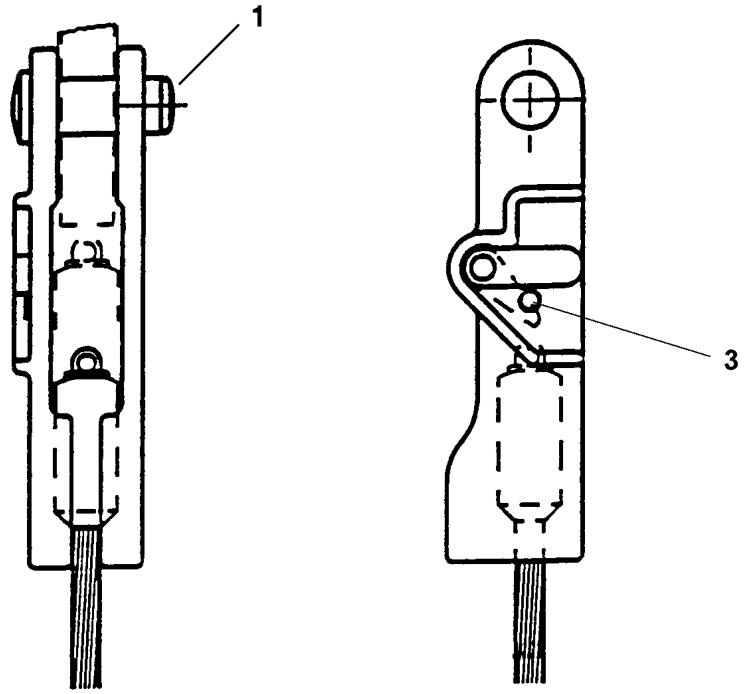

Pos. 2

Pos.	Item	Quantity	Description	Bezeichnung
1	571712308	1	COLLER BOLT 20-22MM	BUNDBOLZEN
2	571530608	1	SAFETY PLUG W HINGE-LID 9,5X45	SICHERHEITSKLAPPSTECKER
3	967361508	1	REPAIR KIT SICHERUNGSKNOPF ⇨ ❑ 630	REPARATURSATZ

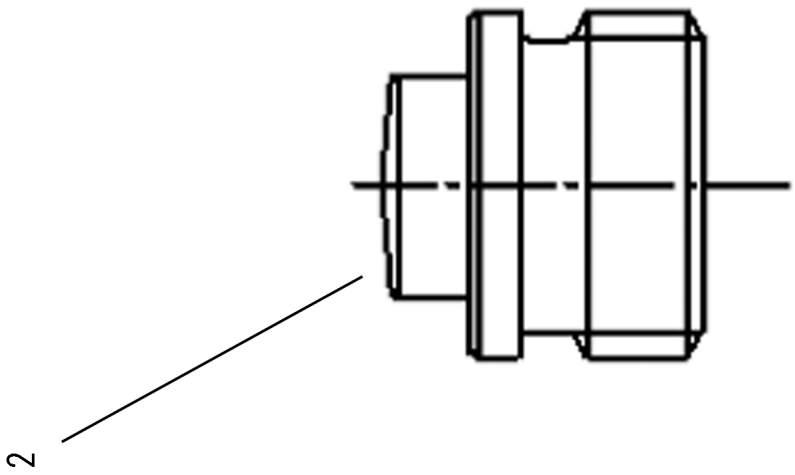
2

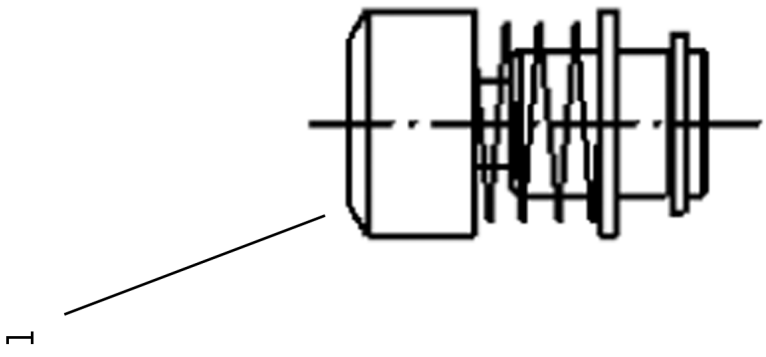
1

Pos.	Item	Quantity	Description	Bezeichnung
1	10424601	1	SAFETY BUTTON	SICHERUNGSKNOPF
2	10470667	1	SAFETY BUTTON	SICHERUNGSKNOPF

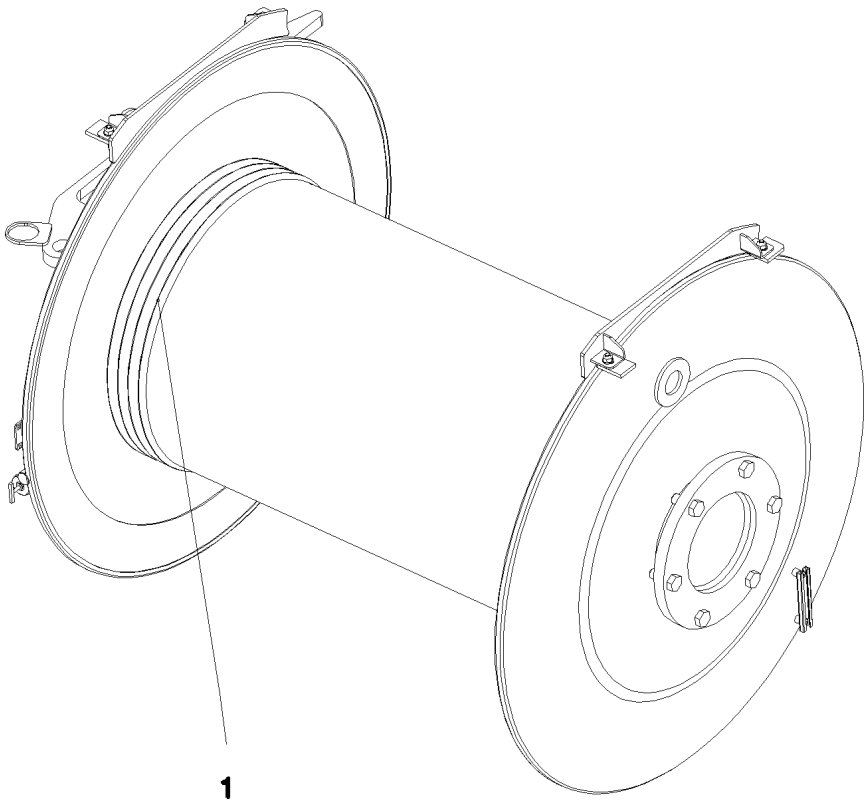

Pos.	Item	Quantity	Description	Bezeichnung
1	10871170	1	HOIST ROPE 21X205M -40°C SPF	HUBSEIL

Pos.	Item	Quantity	Description	Bezeichnung
10	10354584	1	INDUCTIVE SENSOR BERUEHRUNGSLOS	INDUKTIVSENSOR

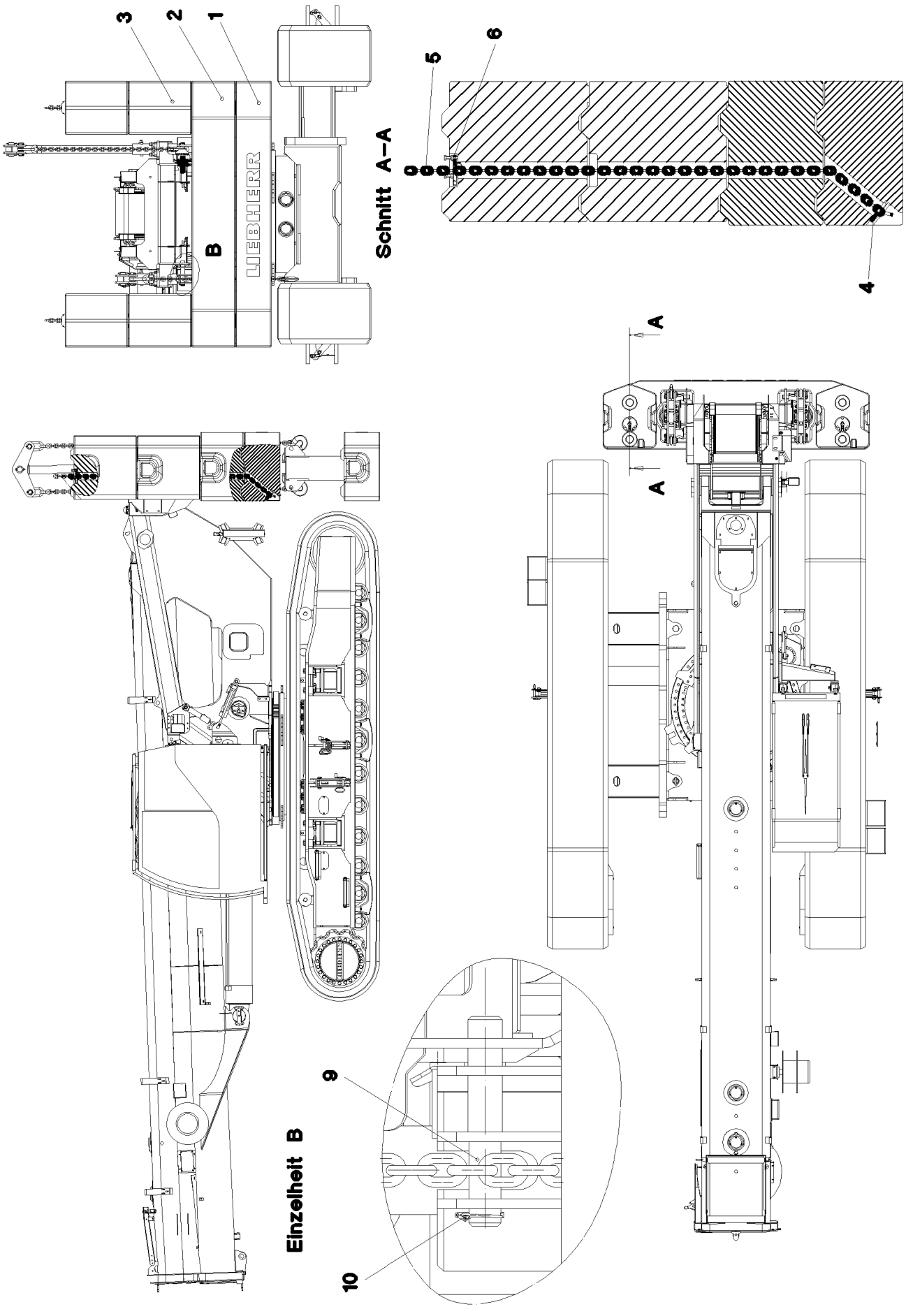

16.11.2023 046550	**etk_en_de_078966 LTR 1100**	❑ 634 (1/2)
LIEBHERR	**COUNTERWEIGHT WITH CLAMP** **GEGENGEWICHT M.BEFESTIGUNG**	**915090008**

Pos.	Item	Quantity	Description	Bezeichnung
1	963733208	1	COUNTERWEIGHT CPL. SPF	GEGENGEWICHT KPL.
2	380061708	1	COUNTERWEIGHT EN-GJL-200 SPF	GEGENGEWICHT
3	380061908	2	COUNTERWEIGHT EN-GJL-200 SPF	GEGENGEWICHT
4	964424908	2	CHAIN MOUNT WELDED CONSTR.	KETTENAUFNAHME SCHWK.
5	10326803	2	CHAIN DIN EN 818-2 10T-2.976M GK 8W DA	KETTE
6	964060608	2	CHAIN HOLDER CPL. ⇨ ❑ 636	KETTENHALTER KPL.
9	975762108	4	LOCATING BOLT 65.0X330 35NICRMOV125	AUFNAHMEBOLZEN
10	10180884	4	SAFETY PLUG W HINGE-LID 8X62X7,5X53	SICHERHEITSKLAPPSTECKER

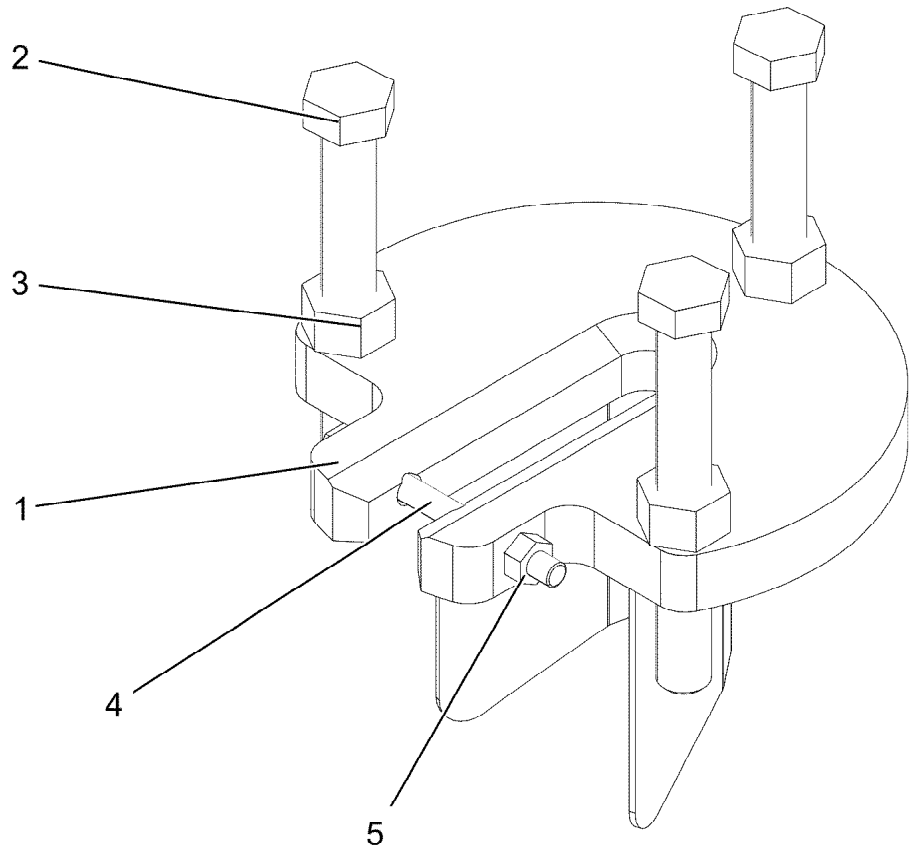

Pos.	Item	Quantity	Description	Bezeichnung
1	964765308	1	CHAIN MOUNTING	KETTENHALTER
2	12224044	3	HEX SCREW ISO 4017 M16X130 8.8 FLZN SP	SECHSKANTSCHRAUBE
3	10875617	3	HEX NUT ISO 4032 M16 8 FLZN SPF	SECHSKANTMUTTER
4	10875514	1	HEX SCREW ISO 4014 M8X85 8.8 480H SPF	SECHSKANTSCHRAUBE
5	11693875	1	HEX NUT ISO 4032 M8 8 480H SPF	SECHSKANTMUTTER

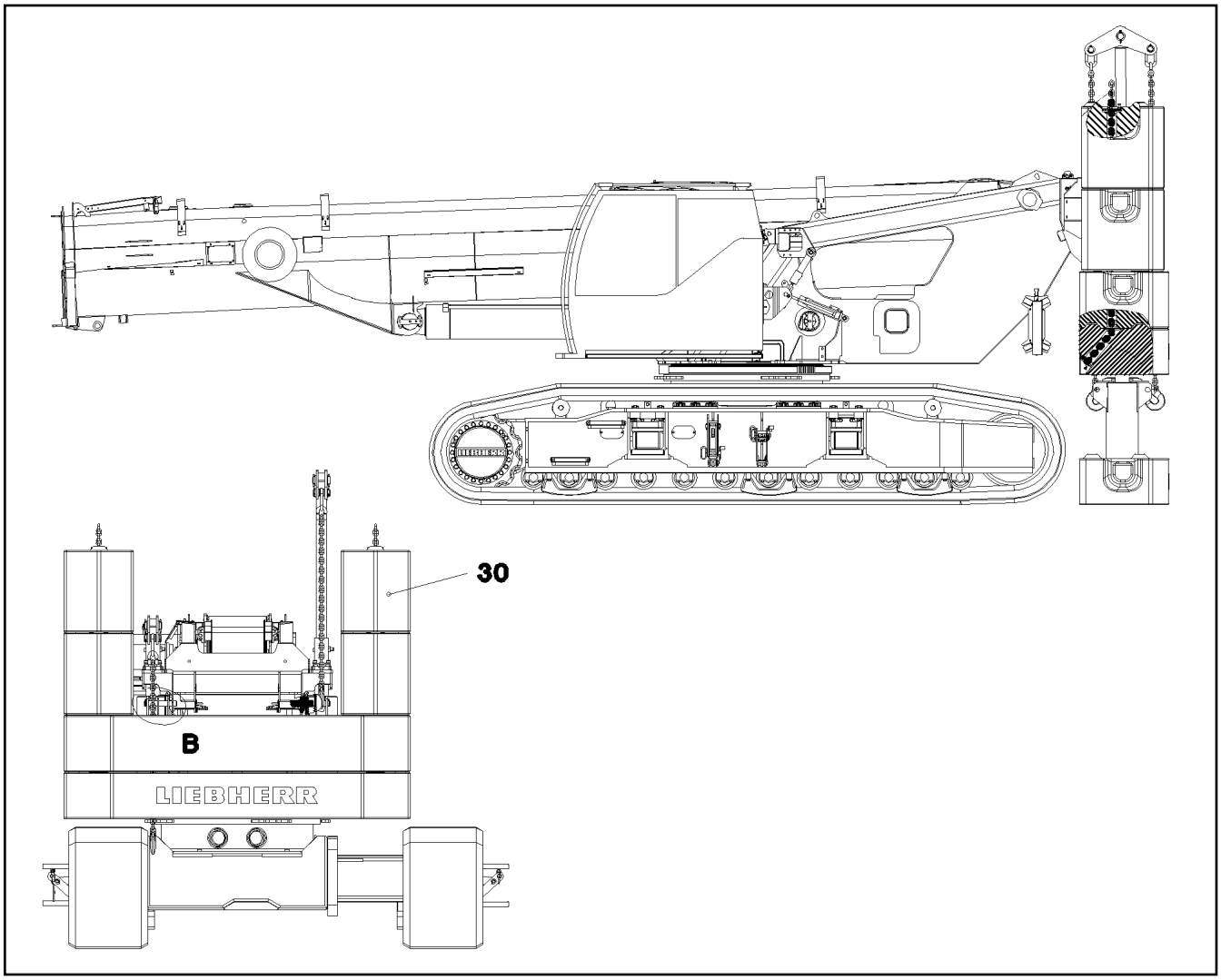

Pos.	Item	Quantity	Description	Bezeichnung
30	380061908	2	COUNTERWEIGHT EN-GJL-200 SPF	GEGENGEWICHT

Pos.	Item	Quantity	Description	Bezeichnung
10	96045218	1	CABLE LIST ⇨ ❑ 639	KABELLISTE
30	96045219	1	MECHANICAL AUXILIARIES ⇨ ❑ 641	MECHANISCHE ANBAUTEILE

Pos.	Item	Quantity	Description	Bezeichnung
30	96045220	1	WIRING HARNESS W661 ⇨ ❑ 640	KABELSTRANG

Pos.	Item	Quantity	Description	Bezeichnung
5	680000008	1	COUPLING SOCKET 4-POLE SPF	KUPPLUNGSDOSE
6	680000008	1	COUPLING SOCKET 4-POLE SPF	KUPPLUNGSDOSE
500	923512208	3	CABLE MARKER	KABELMARKER
501	11644347	1	FLAT PLUG HOUSING 18-POL PBT-GF30/V-	FLACHSTECKERGEHAEUSE
502	11697580	1	PROTECTING CAP HDSCS GROUP E 18	SCHUTZKAPPE
806	602331108	12	STOPPER PLUG 3,6MM SILIKON WEIS	BLINDSTOPFEN
849	10678471	6	SINGLE STRAND SEALING 1,2-1,6MM VMQ	EINZELADERABDICHTUNG
996	965622108	6	LETTERING WIRE	BESCHRIFTUNG ADER
998	965622208	1	LETTERING WIRING HARNESS	BESCHRIFTUNG KABELBAUM
2222	10874243	6	FLAT PLUG 0,2-0,5MM2	FLACHSTECKER

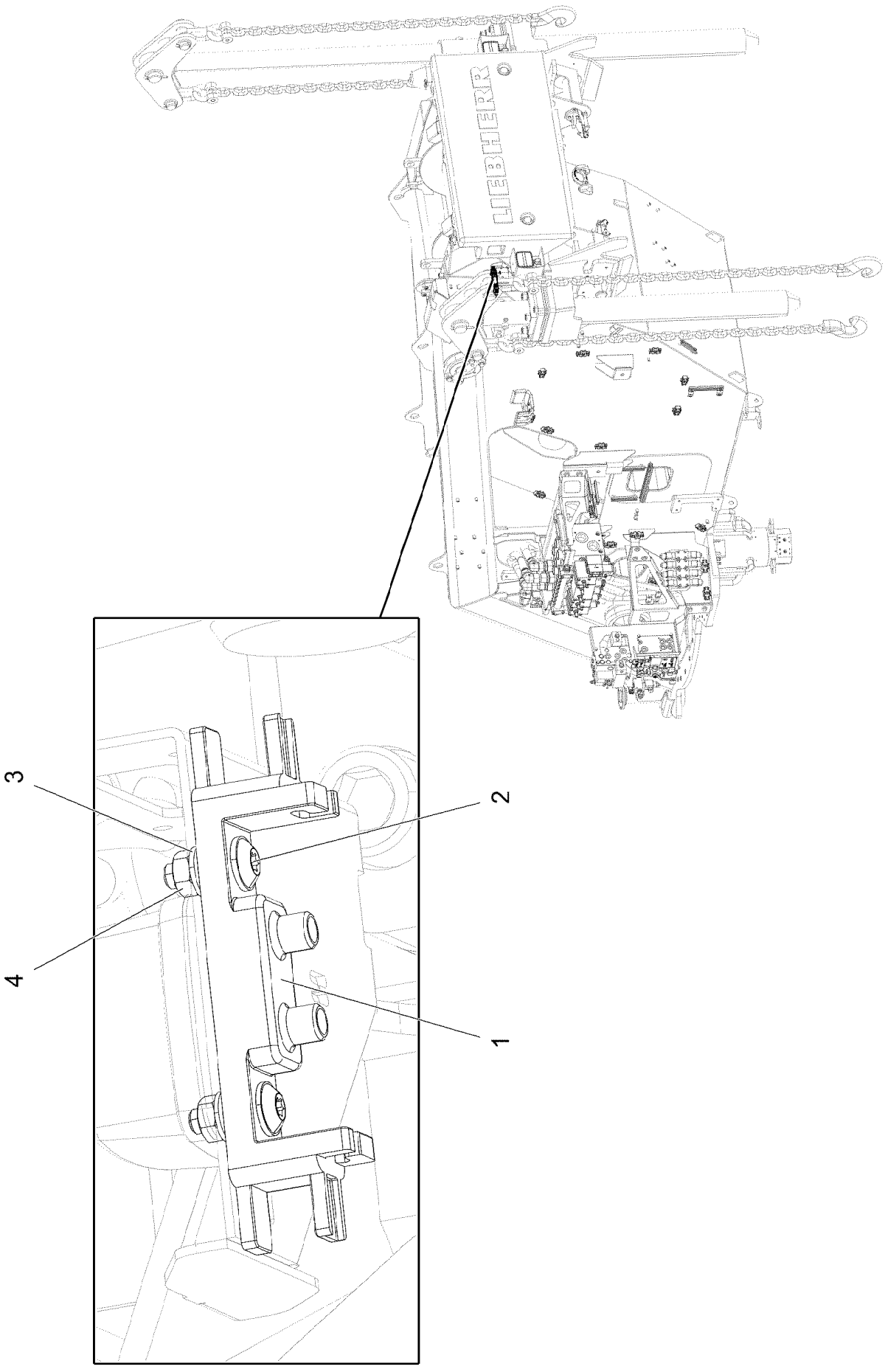
3
2
4
1

Pos.	Item	Quantity	Description	Bezeichnung
1	97098446	1	HOLDER PA6MDGF30 SPF	HALTER
2	10875486	2	BUTTON HEAD SCREW AEHNL.ISO 7380-2	HALBRUNDKOPFSCHRAUBE
3	12103465	2	WASHER ISO 7089 8 300HV ZNNI-480H SPF	SCHEIBE
4	11693875	2	HEX NUT ISO 4032 M8 8 480H SPF	SECHSKANTMUTTER

Pos.	Item	Quantity	Description	Bezeichnung
10	10876368	1	SENSOR SPF	GEBER

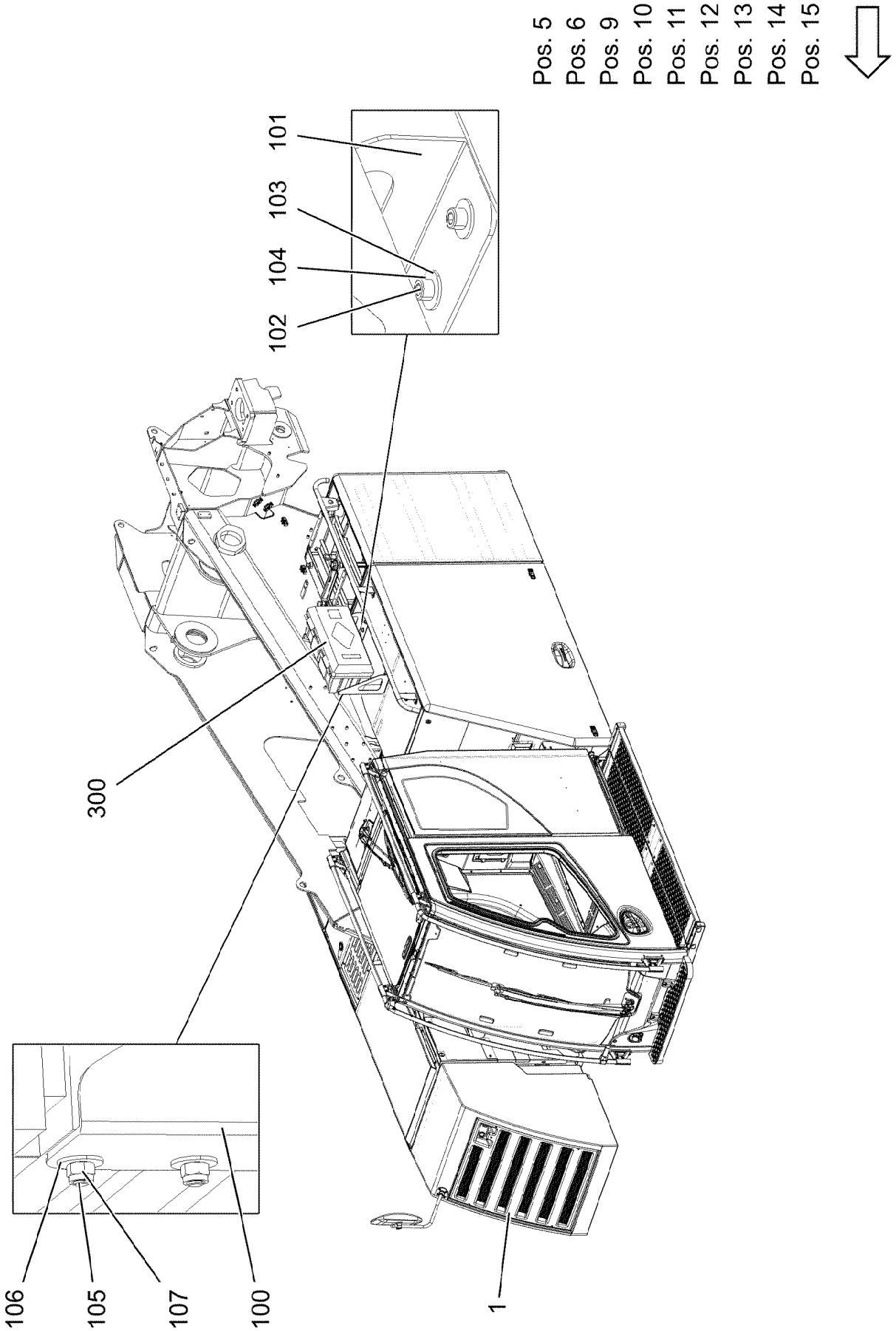
Pos. 5
Pos. 6
Pos. 9
Pos. 10
Pos. 11
Pos. 12
Pos. 13
Pos. 14
Pos. 15
101
103
104
102
300
106
105
107
100
1

Pos.	Item	Quantity	Description	Bezeichnung
1	96007145	1	COOLER GRILL 820X730X80 ABS	KUEHLERGRILL
5	12100037	1	WEDGE SOCKET 21-23 GR.23/21 -40°C FE	KEILENDKLEMME
6	773913308	1	ROPE CLAMP DIN 1142 22 VERZ	SEILKLEMME
9	925141508	1	HOSE GUIDE PRE-ASS. ⇨ ❑ 646	SCHLAUCHFUEHRUNG VORM.
10	925185208	1	HOSE CPL.	SCHLAUCH KPL.
11	925185308	1	HOSE CPL.	SCHLAUCH KPL.
12	12100624	5	GRUB SCREW ISO 4028 M12X70 45H FLZN	GEWINDESTIFT
13	773924708	1	OVAL LOAD RING 26X140X260 EDELBAUST	OVALRING
14	12100291	4	COUNTERSUNK SCREW ISO 7047 M6X30 4	SENKSCHRAUBE
15	96010020	1	GREASE SPRAY SYSTEM ⇨ ❑ 647	FETTSPRUEHSYSTEM
100	97131661	1	RETAINER PLATE 4X253X398 S315MC FE//	HALTERBLECH
101	97131662	1	RETAINER PLATE 4X253X398 S315MC FE//	HALTERBLECH
102	10415162	4	SOCKET HEAD SCREW ISO 4762 M10X25 8	ZYLINDERSCHRAUBE
103	11491889	8	WASHER ISO 7093-1 10 300HV FLZN SPF	SCHEIBE
104	10875605	4	HEX NUT DIN 985 M10 10 FLZN SPF	SECHSKANTMUTTER
105	12100574	4	BUTTON HEAD SCREW ISO 7380-2 M8X30 0	HALBRUNDKOPFSCHRAUBE
106	11140469	4	WASHER ISO 7093-1 8 200HV 480H SPF	SCHEIBE
107	11656731	4	HEX NUT ISO 7040 M8 8 480H SPF	SECHSKANTMUTTER
300	10874802	1	FIRE EXTINGUISHER HOLDER 310X611X25	FEUERLOESCHERHALTERUNG

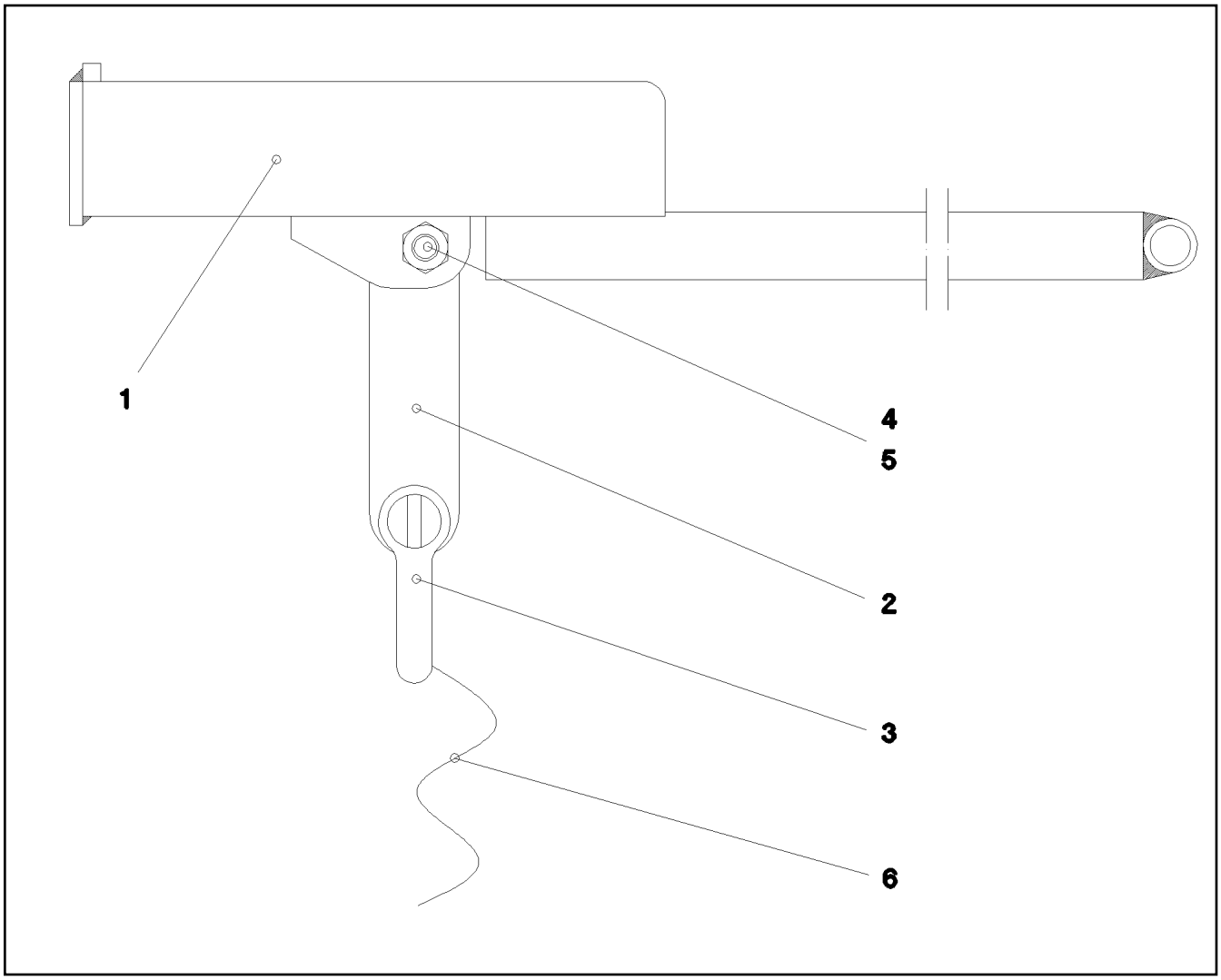

Pos.	Item	Quantity	Description	Bezeichnung
1	925143708	1	HOSE GUIDE WELDED FE//ZNNI8//CN//T0	SCHLAUCHFUEHRUNG SCHWK.
3	773933508	1	SHACKLE DIN 82101 0,25T NG0,25 ST VERZ	SCHAEKEL
4	10875586	1	SOCKET HEAD SCREW ISO 4762 M6X16 8.8	ZYLINDERSCHRAUBE
5	12102692	1	HEX NUT DIN 985 M6 8 ZNNI-480H SPF	SECHSKANTMUTTER
6	773404508	1.6	ROPE 6 0,59KN PERLON	SEIL

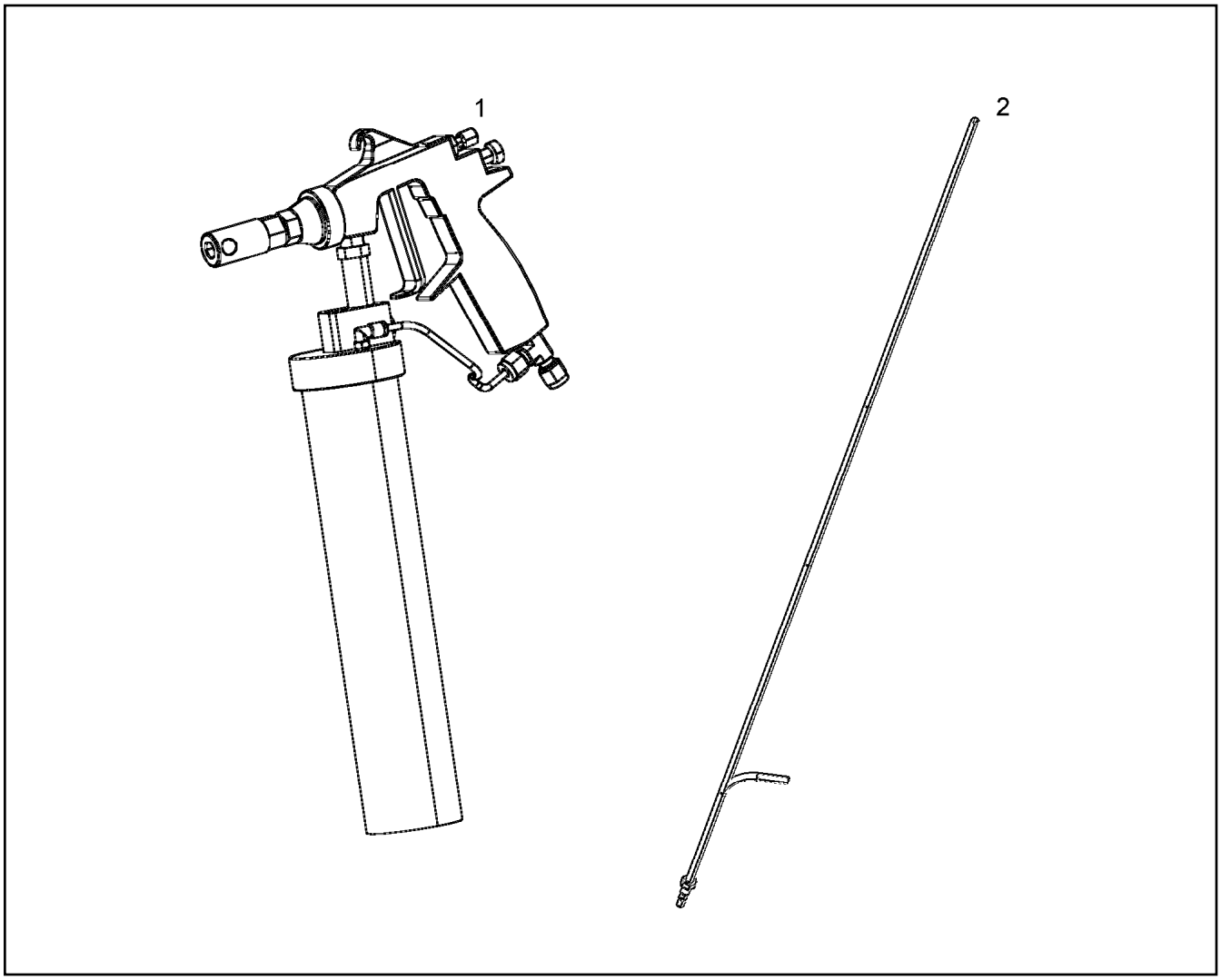

Pos.	Item	Quantity	Description	Bezeichnung
1	10876885	1	GREASE SPRAYER ALUMINIUM VERNICKEL ⇨ ❑ 648	FETTSPRUEHGERAET
2	10876890	1	SPRAY LANCE SET 4-TEILIG	SPRUEHLANZENSET

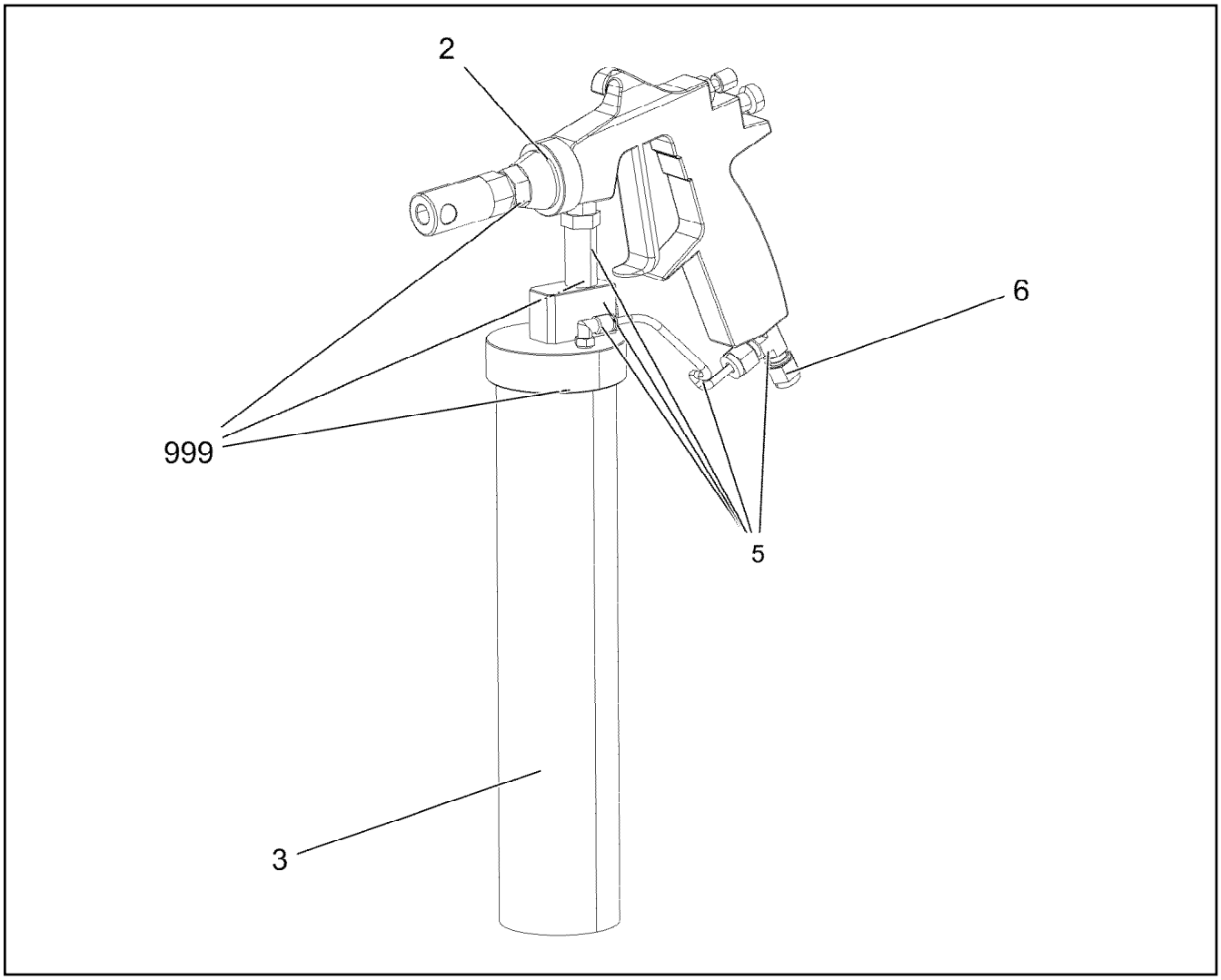

Pos.	Item	Quantity	Description	Bezeichnung
1	12107074	1	ATOMIZER PISTOL	SPRUEHPISTOLE
2	12101218	1	NOZZLE	DUESE
3	12101219	1	CONTAINER	BEHAELTER
5	12109108	1	SMALL-PARTS	KLEINTEILESATZ
6	12101221	1	COUPLING	KUPPLUNG
999	12101220	1	SEAL KIT	DICHTSATZ

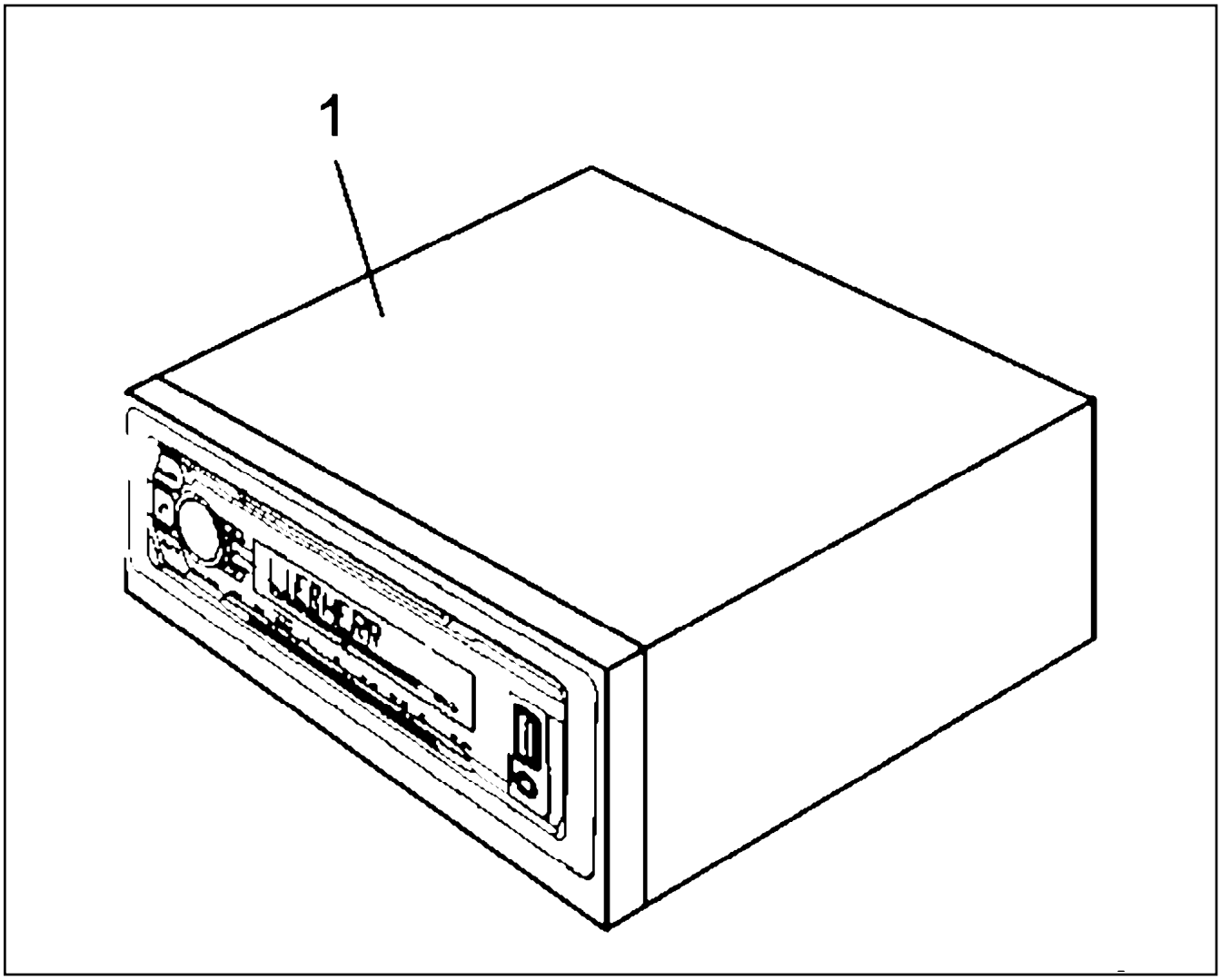

Pos.	Item	Quantity	Description	Bezeichnung
1	12257818	1	CAR RADIO ⇨ ❑ 650	AUTORADIO

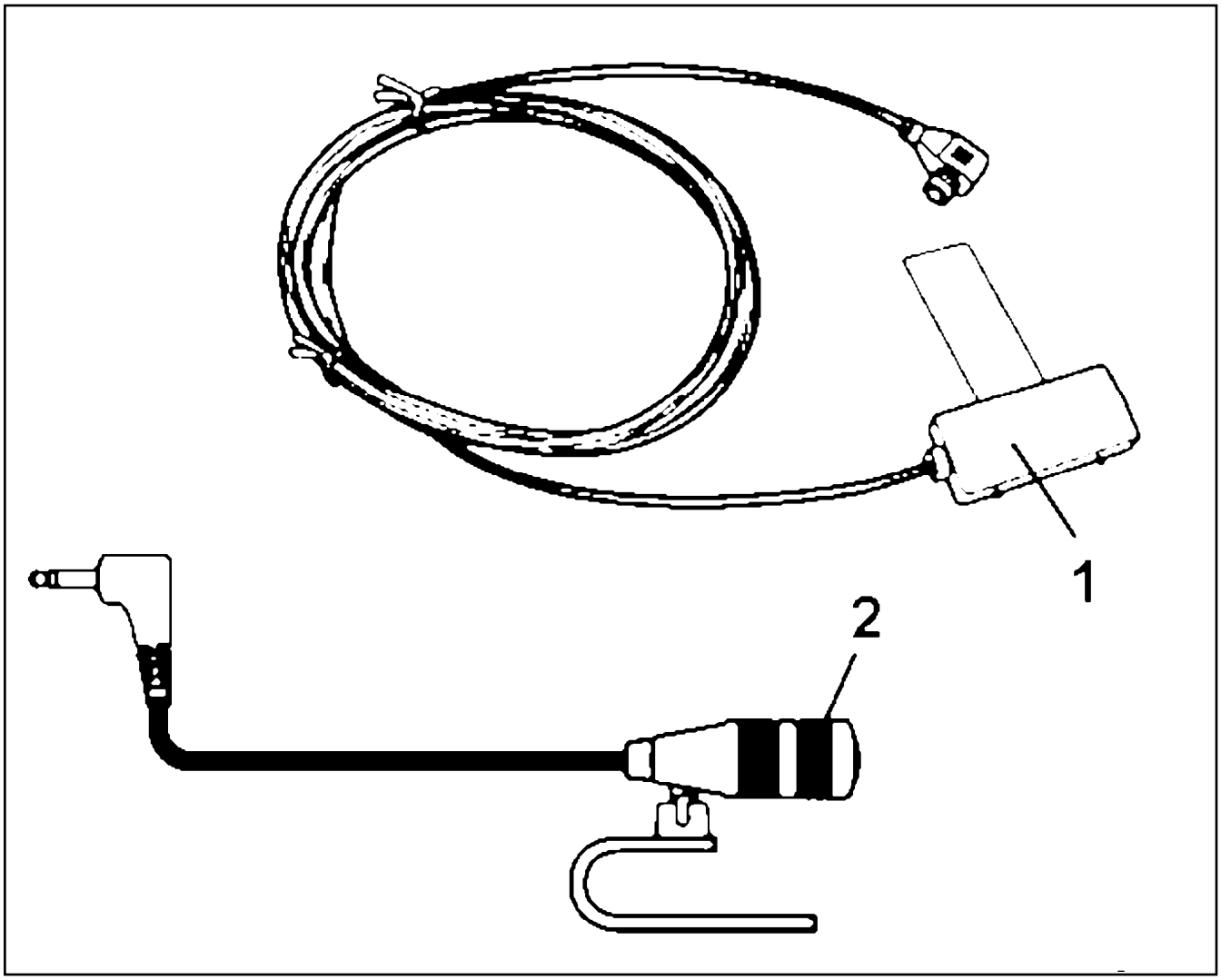

Pos.	Item	Quantity	Description	Bezeichnung
1	10878172	1	ANTENNA	ANTENNE
2	11826513	1	MICROPHONE	MIKROPHON
3	12108687	1	BUILT-IN FRAME	EINBAURAHMEN
4	12108688	1	PULLER	AUSZIEHBUEGEL

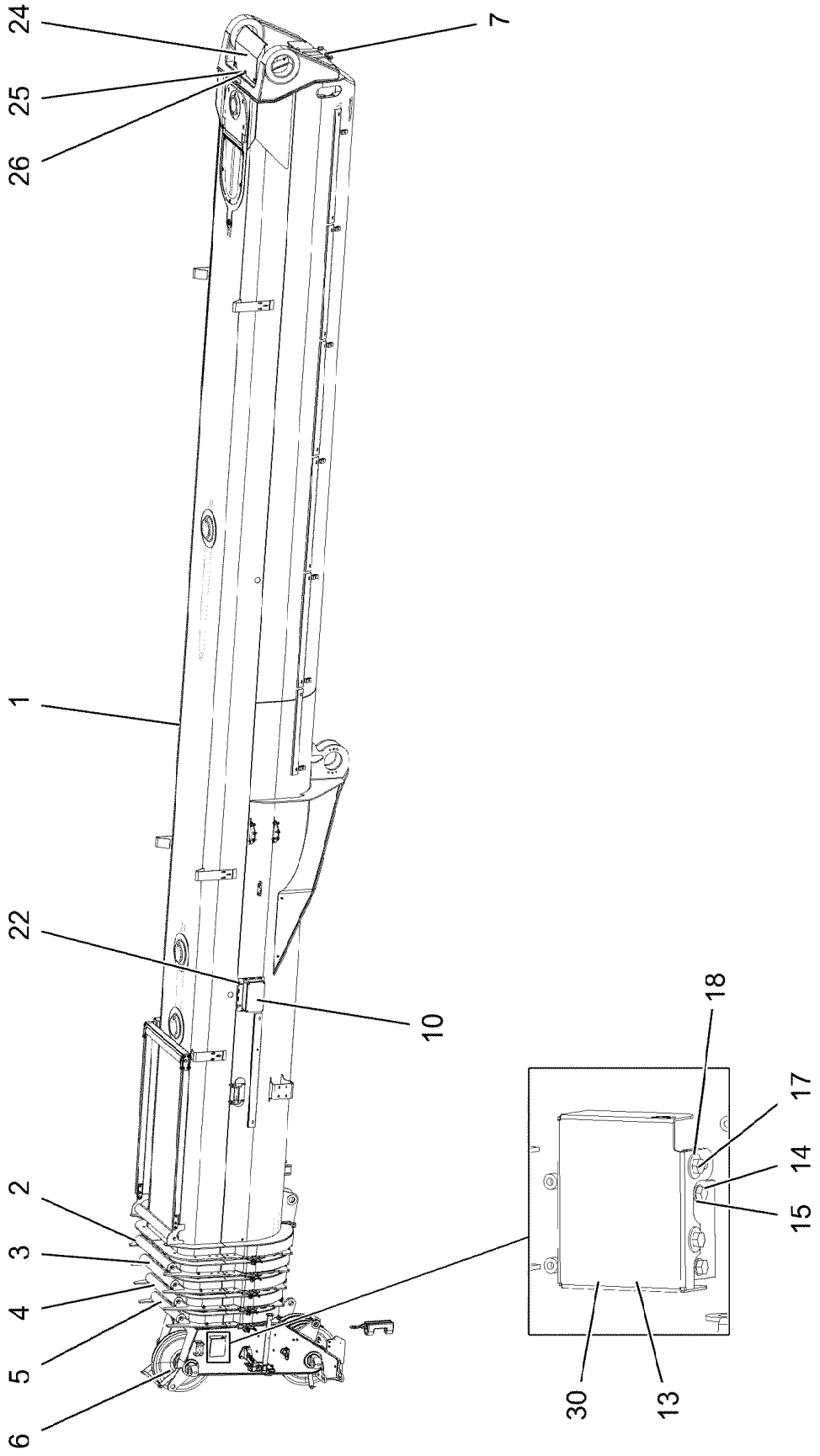
24
25
26
7
1
22
10
18
17
14
15
2
3
4
5
6
30
13

Pos.	Item	Quantity	Description	Bezeichnung
1	91000049	1	PIVOT SECTION, PRE-ASSEMBLED ⇨ ❑ 653	ANLENKSTUECK VORM.
2	91000050	1	TELESCOPIC SECTION 1 PRE-ASSEM ⇨ ❑ 659	TELESKOP 1 VORM.
3	91000051	1	TELESCOPIC SECT.2 PRE-ASSEMBL ⇨ ❑ 662	TELESKOP 2 VORM.
4	91000052	1	TELESCOPIC SECT.3 PRE-ASSEMB ⇨ ❑ 665	TELESKOP 3 VORM.
5	91000053	1	TELESCOPIC SECT.IV PRE-ASSEMBL ⇨ ❑ 668	TELESKOP 4 VORM.
6	91000054	1	TELESCOPIC SECT.5 PRE-ASSEMBLE ⇨ ❑ 671	TELESKOP 5 VORM.
7	91000055	1	MECHANICAL EXTENSION SYSTEM ⇨ ❑ 678	AUSSCHUBMECHANIK
10	96047742	1	ENCODER BASE SECTION	GEBER ANLENKSTUECK
(1)	12102801	1	ROPE LENGTH INDICATOR 10M LSB PL:E	SEILLAENGENGEBER
(2)	12102806	1	ANGLE TRANSMITTER 360° LSB PL:D SPF	WINKELGEBER
13	97140373	2	PLATE 2X278X250 DC01 FE//ZNNI8//CN//T0	BLECH
14	10197831	4	HEX SCREW ISO 4017 M8X25 8.8 ZNNI-480	SECHSKANTSCHRAUBE
15	12103465	7	WASHER ISO 7089 8 300HV ZNNI-480H SPF	SCHEIBE
17	10197831	4	HEX SCREW ISO 4017 M8X25 8.8 ZNNI-480	SECHSKANTSCHRAUBE
18	12103465	4	WASHER ISO 7089 8 300HV ZNNI-480H SPF	SCHEIBE
22	10197831	8	HEX SCREW ISO 4017 M8X25 8.8 ZNNI-480	SECHSKANTSCHRAUBE
24	956470108	1	PLATE 2X680X420 DC01	BLECH
25	10875471	3	BUTTON HEAD SCREW AEHNL.ISO 7380-2	HALBRUNDKOPFSCHRAUBE
26	413003208	3	CAGE NUT M8 A2/ST A2K	KAEFIGMUTTER
30	96047743	1	ENCODER HEAD PIECE	GEBER KOPFSTUECK
(1)	12102806	1	ANGLE TRANSMITTER 360° LSB PL:D SPF	WINKELGEBER
(2)	10678395	1	LIMIT SWITCH TQ200-RFID SPF	ENDSCHALTER
880	96072367	1	SIGNS ⇨ ❑ 687	BESCHILDERUNG

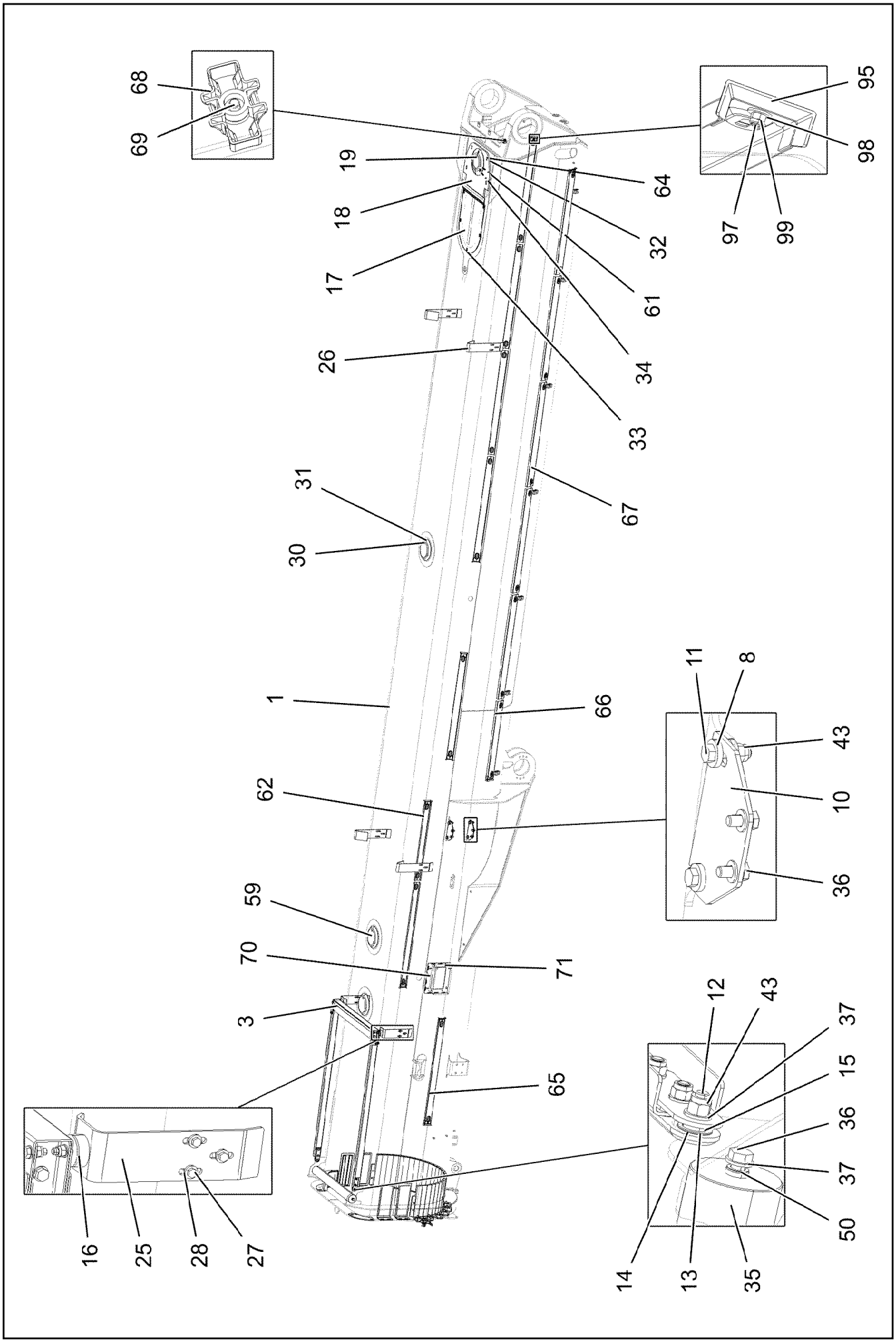
68
69
19
18
17
26
64
32
61
34
33
67
95
98
97
99
31
30
1
66
11
8
43
10
36
62
59
70
71
3
65
12
43
37
15
36
37
50
16
25
28
27
14
13
35

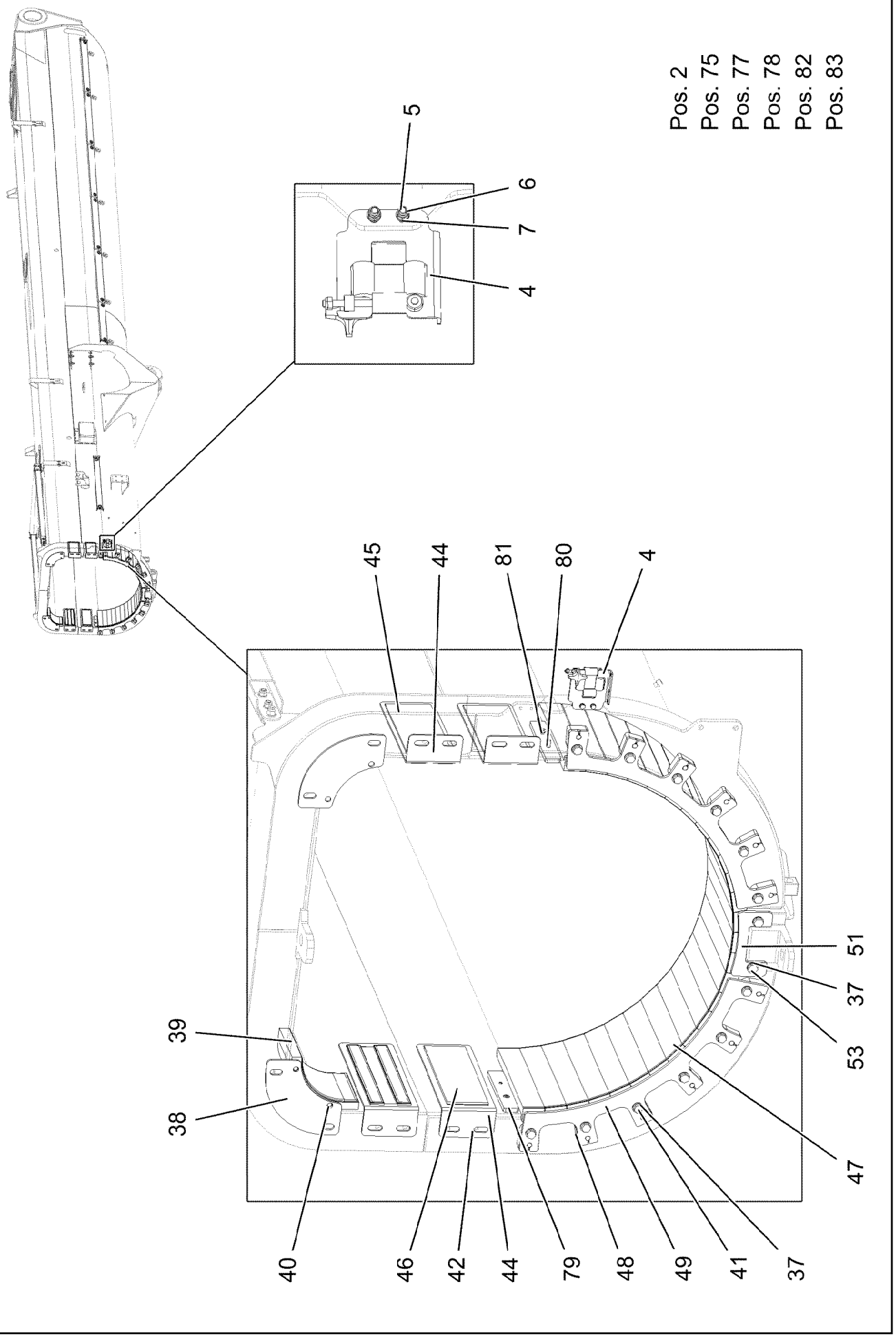

16.11.2023 174052	**etk_en_de_078966 LTR 1100**	654 (2/4)
LIEBHERR	**PIVOT SECTION, PRE-ASSEMBLED** **ANLENKSTUECK VORM.**	**91000049**

Pos.	Item	Quantity	Description	Bezeichnung
1	91000079	1	PIVOT PIECE ST. CONST. SPF	ANLENKSTUECK SCHWK.
2	704338808	2	BEARING BUSH 195X117 GZ-CUZN25AL5	LAGERBUCHSE
3	96014777	1	LIFTING ROPE GUIDE PREASSEMBLY ⇨ ❑ 657	HUBSEILFUEHRUNG VORM.
4	749013808	1	ROLLER ORIFICE	ROLLENMUNDSTUECK
5	12217223	2	HEX SCREW ISO 4017 M6X30 8.8 480H SPF	SECHSKANTSCHRAUBE
6	11656734	2	HEX NUT ISO 7040 M6 8 480H SPF	SECHSKANTMUTTER
7	10197771	4	WASHER ISO 7089 6 200HV ZNNI-480H SPF	SCHEIBE
8	10006370	8	WASHER DIN 7349 13 200HV FLZN SPF	SCHEIBE
10	97126551	2	PLATE 5X180X141 S355MC T ZN O	BLECH
11	11645386	4	HEX SCREW ISO 4017 M12X45 8.8 FLZN SP	SECHSKANTSCHRAUBE
12	10875808	2	COUNTERSUNK SCREW DIN 7991 M12X40 8	SENKSCHRAUBE
13	10876087	4	SHIM RING DIN 988 22X30X1 A2	PASSSCHEIBE
14	10876086	2	SHIM RING DIN 988 22X30X0,5 A2	PASSSCHEIBE
15	950306608	2	RING RD20X8 S355J2C+C FE//ZNNI8//CN//T	RING
16	726613008	2	RUBBER METAL STOP BUFFER 50X20-M10	GUMMI-METALLANSCHLAGPUF
17	921368608	1	COVER WELDED	DECKEL SCHWK.
18	96016196	1	COVER WELDED	DECKEL SCHWK.
19	288184008	1	COVER RD245X17 PA6G	DECKEL
25	97145502	2	PLATE 5X80X381 S355MC FE//ZNNI8//CN//T	BLECH
26	955523908	4	PLATE 5X80X488 S355MC FE//ZNNI8//CN//T	BLECH
27	11651612	21	HEX SCREW ISO 4017 M8X16 8.8 480H SPF	SECHSKANTSCHRAUBE
28	11840501	18	WASHER DIN 7349 8,4 200HV 480H SPF	SCHEIBE
30	10875598	9	SOCKET HEAD SCREW ISO 4762 M8X20 8.8	ZYLINDERSCHRAUBE
31	12103465	9	WASHER ISO 7089 8 300HV ZNNI-480H SPF	SCHEIBE
32	11658580	9	WASHER DIN 7349 10,5 200HV-St FLZN SPF	SCHEIBE
33	10197730	5	HEX SCREW ISO 4017 M10X20 8.8 ZNNI-480	SECHSKANTSCHRAUBE
34	12220375	3	COUNTERSUNK SCREW ISO 10642 M8X20	SENKSCHRAUBE
35	749010808	1	CARRYING ROLLER 80/5/20X795 GALV.VER	TRAGROLLE
36	11658892	6	HEX SCREW ISO 4017 M12X25 8.8 FLZN SP	SECHSKANTSCHRAUBE
37	10289804	34	WASHER ISO 7089 12 300HV FLZN SPF	SCHEIBE
38	955450608	2	PLATE 5X184X184 S960QL	BLECH
39	283083308	2	SLIDER 130X150X167 PA6G+OEL SPF	GLEITSTUECK
40	11840140	4	SOCKET HEAD SCREW ISO 4762 M12X50 8	ZYLINDERSCHRAUBE
41	11840136	12	HEX SCREW ISO 4017 M12X50 8.8 FLZN	SECHSKANTSCHRAUBE
42	10179356	36	WASHER DIN 6340 13 FLZN SPF	SCHEIBE
43	11840127	20	HEX NUT ISO 7040 M12 8 FLZN SPF	SECHSKANTMUTTER
44	957032508	4	PLATE 4x383x125 S315MC FE//ZNNI8//CN//T	BLECH
45	283094308	2	BEARING PLATE 14X105X290 PA6G+OEL SP	LAGERPLATTE
46	283094408	2	BEARING PLATE 12X105X290 PA6G+OEL SP	LAGERPLATTE
47	283082508	27	SLIDE PLATE 33X50X310 PA6G+OEL SPF	GLEITPLATTE
48	97167074	12	SPACER PIECE PA6G SPF	DISTANZSTUECK
49	97154297	2	PLATE 8X452X512 S960 RAL 7037 SPF	BLECH
50	10876085	2	SHIM RING DIN 988 13X19X0,5 A2	PASSSCHEIBE
51	970298308	1	PLATE 8x160x79 S700MC	BLECH
53	406608708	2	HEX SCREW ISO 4017 M12X25 10.9 FLZN SP	SECHSKANTSCHRAUBE
59	283095408	3	COVER RD200X25 PA6G	DECKEL
61	953744908	2	PLATE 2X245X245 DC01 FE//ZNNI8//CN//T0	BLECH
62	97156837	1	U-PROFILE 1X750X60 FE//ZNNI8//CN//T0	U-PROFIL
64	11642358	4	HEX SCREW ISO 4017 M10X30 8.8 FLZN SP	SECHSKANTSCHRAUBE
65	97156836	7	U-PROFILE 1X1000X60 FE//ZNNI8//CN//T0	U-PROFIL
66	97156840	1	U-PROFILE 1X750X78 FE//ZNNI8//CN//T0	U-PROFIL
67	97156839	5	U-PROFILE 1X1000X78 FE//ZNNI8//CN//T0	U-PROFIL
68	10872676	15	CABLE CLIP HOLDER 46X70-SCHWARZ PA	KABELBINDERHALTER
69	12102696	45	BUTTON HEAD SCREW AEHNL.ISO 7380-2	HALBRUNDKOPFSCHRAUBE
70	972335908	1	PLATE 4X290X230 S315MC FE//ZNNI8//CN//T	BLECH
71	10875857	4	CAGE NUT M6 NIROSTA	KAEFIGMUTTER
75	7413103	2	CLAMP-HALF DIN 3015-1 L 6 R 50,8 PP SW	KLEMMHAELFTE
77	12202784	2	SOCKET HEAD SCREW ISO 4762 M6X60 8.8	ZYLINDERSCHRAUBE
78	602018008	2	CARRIER RAIL NUT DIN 3015-1 L TM M6 W1	TRAGSCHIENENMUTTER

Pos.	Item	Quantity	Description	Bezeichnung
79	97154023	2	PLATE 10X194X35 S355MC FE//ZNNI8//CN//T	BLECH
80	12216054	2	SOCKET HEAD SCREW DIN 7984 M8X20 08	ZYLINDERSCHRAUBE
81	10875552	2	COUNTERSUNK SCREW DIN 7991 M8X16 8	SENKSCHRAUBE
82	11658891	12	HEX SCREW ISO 4014 M12X55 8.8 FLZN SP	SECHSKANTSCHRAUBE
83	11182717	12	WASHER ISO 7093-1 12 300HV FLZN SPF	SCHEIBE
95	97160916	8	EDGE PROTECTION 73X43X28 PA6GK30	KANTENSCHUTZ
96	97160917	2	EDGE PROTECTION 90X43X28 PA6GK30	KANTENSCHUTZ
97	10475893	10	BUTTON HEAD SCREW AEHNL.ISO 7380-2	HALBRUNDKOPFSCHRAUBE
98	10875648	10	WASHER ISO 7093-1 6 200HV 480H SPF	SCHEIBE
99	11004444	10	HEX NUT AEHNL.ISO 7040 M6 A2-70	SECHSKANTMUTTER

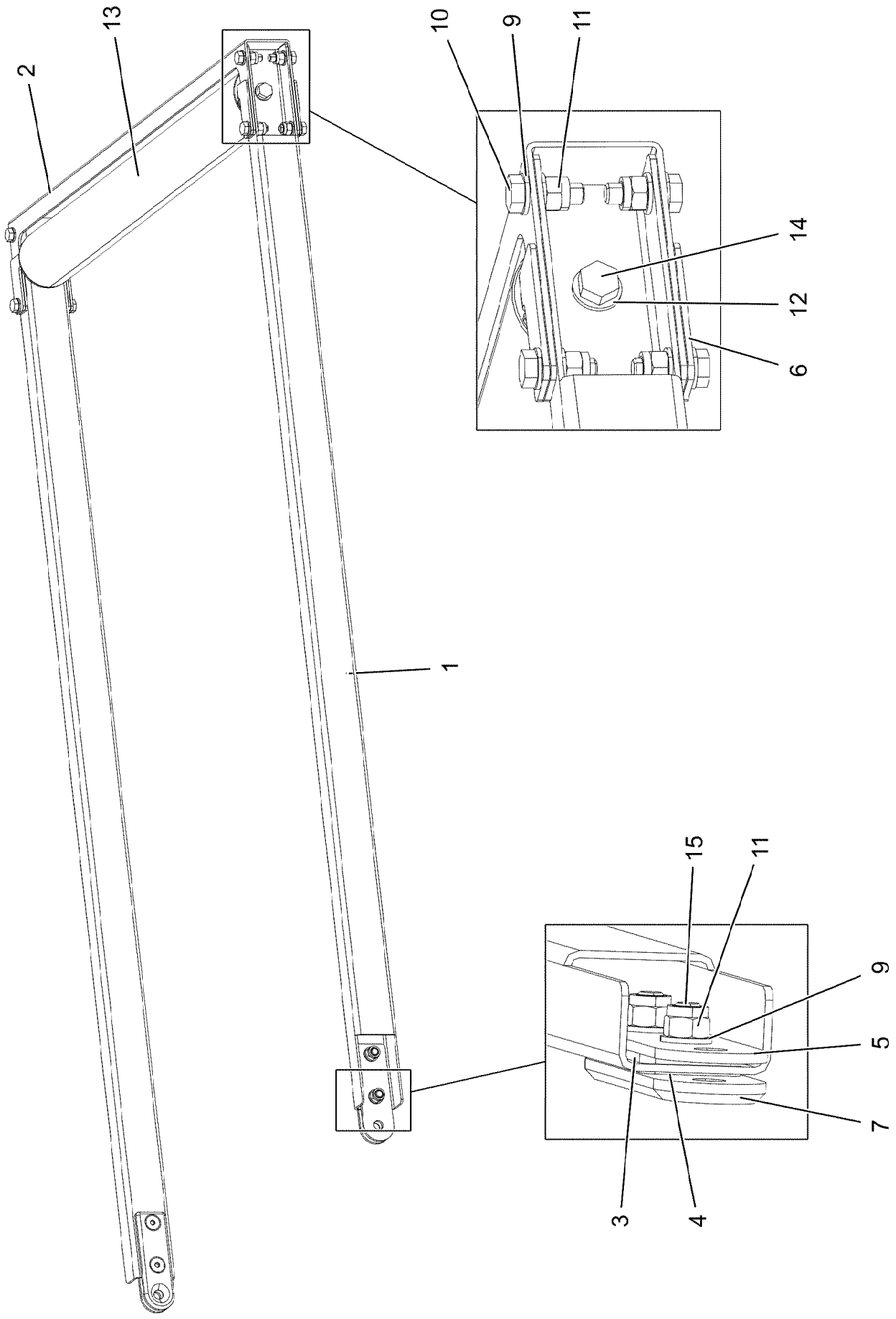

16.11.2023 172797	**etk_en_de_078966 LTR 1100**	657 (1/2)
LIEBHERR	**LIFTING ROPE GUIDE PREASSEMBLY** **HUBSEILFUEHRUNG VORM.**	**96014777**

Pos.	Item	Quantity	Description	Bezeichnung
1	97084140	2	HOLLOW PROFILE 40.0X60X1500 S355J2H T	HOHLPROFIL
2	97087617	1	PLATE 3X873X323 S355MC FE//ZNNI8//CN//T	BLECH
3	97084142	2	PLATE 4X86X40 S315MC FE//ZNNI8//CN//T0	BLECH
4	97084143	2	PLATE 1X86X40 DC01 FE//ZNNI8//CN//T0	BLECH
5	97084144	2	PLATE 4X137X44 S315MC FE//ZNNI8//CN//T	BLECH
6	97150626	2	PLATE 3X138X77 DC01 FE//ZNNI8//CN//T0	BLECH
7	97087497	2	PLATE 8X138X44 S355MC FE//ZNNI8//CN//T	BLECH
9	10289795	20	WASHER ISO 7089 10 300HV FLZN SPF	SCHEIBE
10	11642358	8	HEX SCREW ISO 4017 M10X30 8.8 FLZN SP	SECHSKANTSCHRAUBE
11	10875629	12	HEX NUT ISO 7040 M10 8 FLZN SPF	SECHSKANTMUTTER
12	10289804	2	WASHER ISO 7089 12 300HV FLZN SPF	SCHEIBE
13	749010808	1	CARRYING ROLLER 80/5/20X795 GALV.VER	TRAGROLLE
14	11651006	2	HEX SCREW ISO 4017 M12X20 8.8 FLZN SP	SECHSKANTSCHRAUBE
15	10875807	4	COUNTERSUNK SCREW DIN 7991 M10X35 8	SENKSCHRAUBE

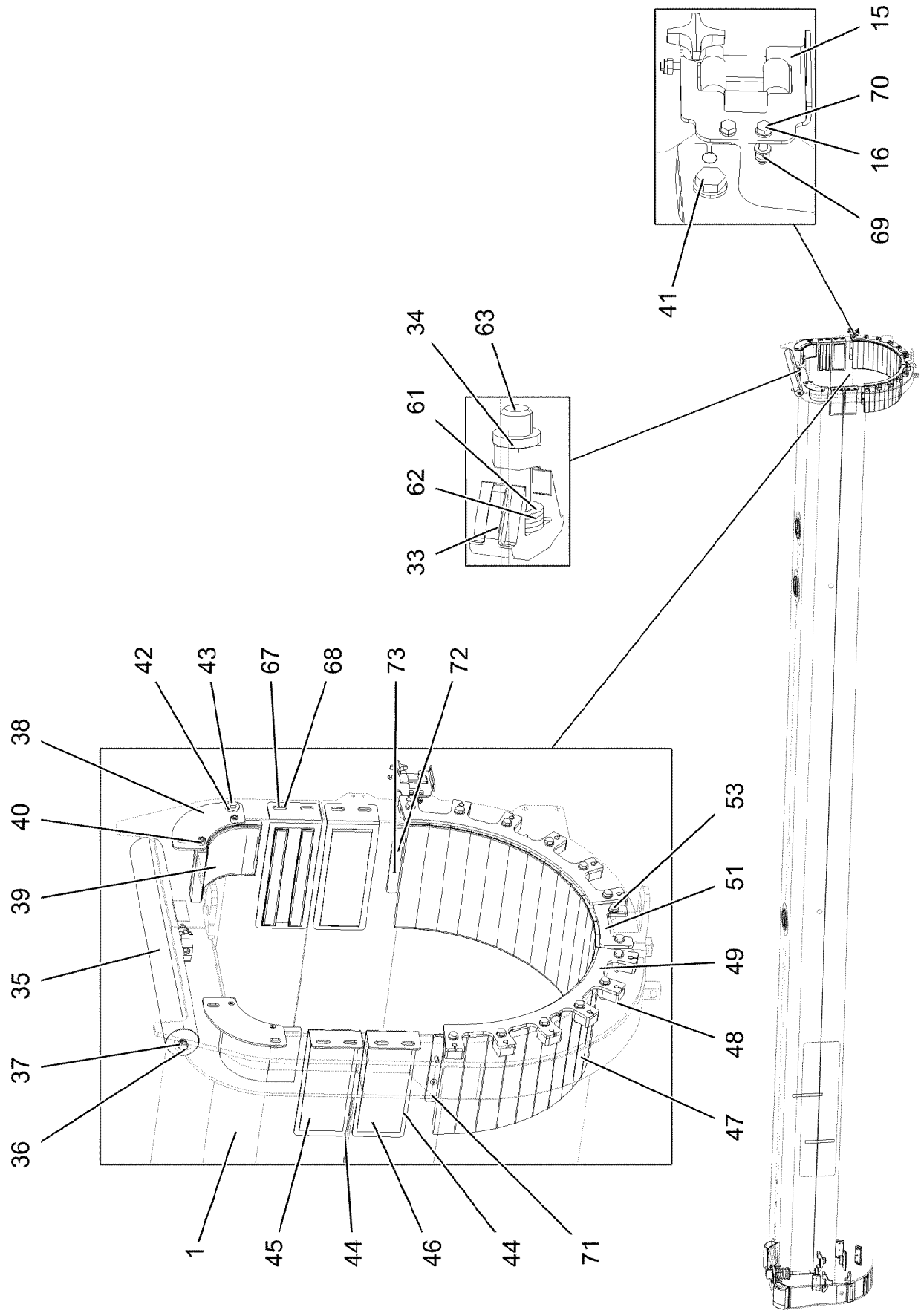

16.11.2023 173983 LIEBHERR	**etk_en_de_078966 LTR 1100** **TELESCOPIC SECTION 1 PRE-ASSEM** **TELESKOP 1 VORM.**	❑ 659 (1/3) **91000050**

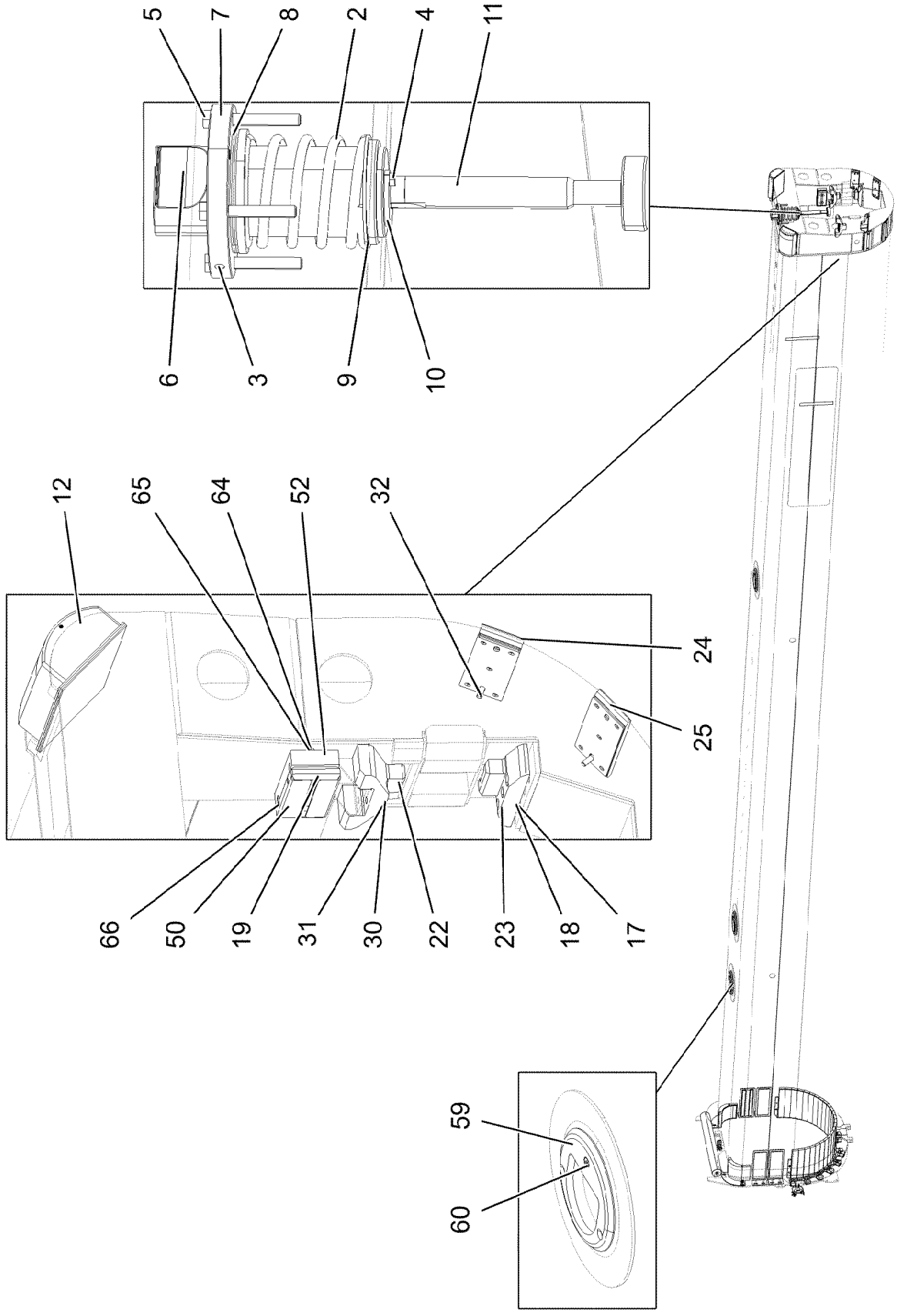
5
7
8
2
4
11
6
3
9
10
12
65
64
52
32
24
25
66
50
19
31
30
22
23
18
17
59
60

Pos.	Item	Quantity	Description	Bezeichnung
1	91000080	1	TELESCOPIC SECTION 1 WELD.CONS RAL	TELESKOP 1 SCHWK.
2	720009608	1	COMPRESSION SPRING 10X105X150 SPF	DRUCKFEDER
3	430670808	1	PARALLEL PIN ISO 2338 10H11X50 30CRNI	ZYLINDERSTIFT
4	11651612	2	HEX SCREW ISO 4017 M8X16 8.8 480H SPF	SECHSKANTSCHRAUBE
5	11834813	4	HEX SCREW ISO 4017 M12X90 8.8 FLZN SP	SECHSKANTSCHRAUBE
6	957011008	1	PIN 125.0X233 35NICRMOV125	BOLZEN
7	957011108	1	COVER RD175X22 S960QL	DECKEL
8	957011208	4	PLATE 2X124X124 DC01 FE//ZNNI8//CN//T0	BLECH
9	957011308	1	BUSHING RD115X13 S960QL	BUCHSE
10	970148308	1	PLATE 5x69x44 S960QL FE/FLZN10/NC	BLECH
11	957011408	1	MUSHROOM-SHAPED DRAWING BOLT 75x3	ZIEHPILZ
12	97145319	2	BEARING PLATE 75X140X230 PA6G+OEL SP	LAGERPLATTE
15	749013808	1	ROLLER ORIFICE	ROLLENMUNDSTUECK
16	12217223	2	HEX SCREW ISO 4017 M6X30 8.8 480H SPF	SECHSKANTSCHRAUBE
17	12103465	5	WASHER ISO 7089 8 300HV ZNNI-480H SPF	SCHEIBE
18	12208098	4	SOCKET HEAD SCREW ISO 4762 M8X30 8.8	ZYLINDERSCHRAUBE
19	972392108	1	SWITCH PANEL 21X75X160 PA6G	SCHALTLEISTE
22	283093608	2	BEARING PLATE 53X87X200 PA6G+OEL SP	LAGERPLATTE
23	283093708	2	BEARING PLATE 53X57X192 PA6G+OEL SP	LAGERPLATTE
24	283093808	2	BEARING PLATE 14x70x202 PA6G+OEL SPF	LAGERPLATTE
25	283093908	2	BEARING PLATE 12X70X202 PA6G+OEL SP	LAGERPLATTE
30	11690628	8	SOCKET HEAD SCREW ISO 4762 M10X40 8	ZYLINDERSCHRAUBE
31	10875629	4	HEX NUT ISO 7040 M10 8 FLZN SPF	SECHSKANTMUTTER
32	10875561	8	SOCKET HEAD SCREW DIN 6912 M8X25 08	ZYLINDERSCHRAUBE
33	972426708	4	GUIDE ISO 8062-3DCTG6 30X50X78 G18NI	EINWEISER
34	10875618	4	HEX NUT ISO 4032 M20 8 FLZN SPF	SECHSKANTMUTTER
35	749009308	1	CARRYING ROLLER 80/5/20X750 GALV.VER	TRAGROLLE
36	11631742	2	HEX SCREW ISO 4017 M12X30 8.8 FLZN SP	SECHSKANTSCHRAUBE
37	10289804	28	WASHER ISO 7089 12 300HV FLZN SPF	SCHEIBE
38	955450608	2	PLATE 5X184X184 S960QL	BLECH
39	283083308	2	SLIDER 130X150X167 PA6G+OEL SPF	GLEITSTUECK
40	11840140	4	SOCKET HEAD SCREW ISO 4762 M12X50 8	ZYLINDERSCHRAUBE
41	11840136	12	HEX SCREW ISO 4017 M12X50 8.8 FLZN	SECHSKANTSCHRAUBE
42	10179356	36	WASHER DIN 6340 13 FLZN SPF	SCHEIBE
43	11840127	12	HEX NUT ISO 7040 M12 8 FLZN SPF	SECHSKANTMUTTER
44	957032508	4	PLATE 4x383x125 S315MC FE//ZNNI8//CN//T	BLECH
45	283094308	2	BEARING PLATE 14X105X290 PA6G+OEL SP	LAGERPLATTE
46	283094408	2	BEARING PLATE 12X105X290 PA6G+OEL SP	LAGERPLATTE
47	283082508	25	SLIDE PLATE 33X50X310 PA6G+OEL SPF	GLEITPLATTE
48	97167074	12	SPACER PIECE PA6G SPF	DISTANZSTUECK
49	97154298	2	PLATE 8X428X484 S960 RAL 7037 SPF	BLECH
50	972373808	2	SWITCH PLATE 2X139X46 DC01 FE//ZNNI8/	SCHALTBLECH
51	970298308	1	PLATE 8x160x79 S700MC	BLECH
52	979009508	1	SPACER PIECE 160X75X25 PA6G SPF	DISTANZSTUECK
53	11658892	2	HEX SCREW ISO 4017 M12X25 8.8 FLZN SP	SECHSKANTSCHRAUBE
59	283094508	3	COVER RD200X12 PA6G	DECKEL
60	12220375	9	COUNTERSUNK SCREW ISO 10642 M8X20	SENKSCHRAUBE
61	11691327	12	WASHER ISO 7092 20 300HV FLZN SPF	SCHEIBE
62	12100333	8	SPRING WASHER DIN 137 B 20 FLZN SPF	FEDERSCHEIBE
63	10875481	4	GRUB SCREW ISO 4026 M20X90 8.8 FLZN	GEWINDESTIFT
64	10875599	4	SOCKET HEAD SCREW ISO 4762 M8X25 8.8	ZYLINDERSCHRAUBE
65	10299679	4	WASHER ISO 7092 8 200HV 480H SPF	SCHEIBE
66	11642497	4	HEX SCREW ISO 4017 M6X10 8.8 480H SPF	SECHSKANTSCHRAUBE
67	11658891	12	HEX SCREW ISO 4014 M12X55 8.8 FLZN SP	SECHSKANTSCHRAUBE
68	11182717	12	WASHER ISO 7093-1 12 300HV FLZN SPF	SCHEIBE
69	11656734	2	HEX NUT ISO 7040 M6 8 480H SPF	SECHSKANTMUTTER
70	10197771	4	WASHER ISO 7089 6 200HV ZNNI-480H SPF	SCHEIBE
71	97165309	2	PLATE 10X194X25 S355MC FE//ZNNI8//CN//T	BLECH
72	12216054	2	SOCKET HEAD SCREW DIN 7984 M8X20 08	ZYLINDERSCHRAUBE
73	10875552	2	COUNTERSUNK SCREW DIN 7991 M8X16 8	SENKSCHRAUBE

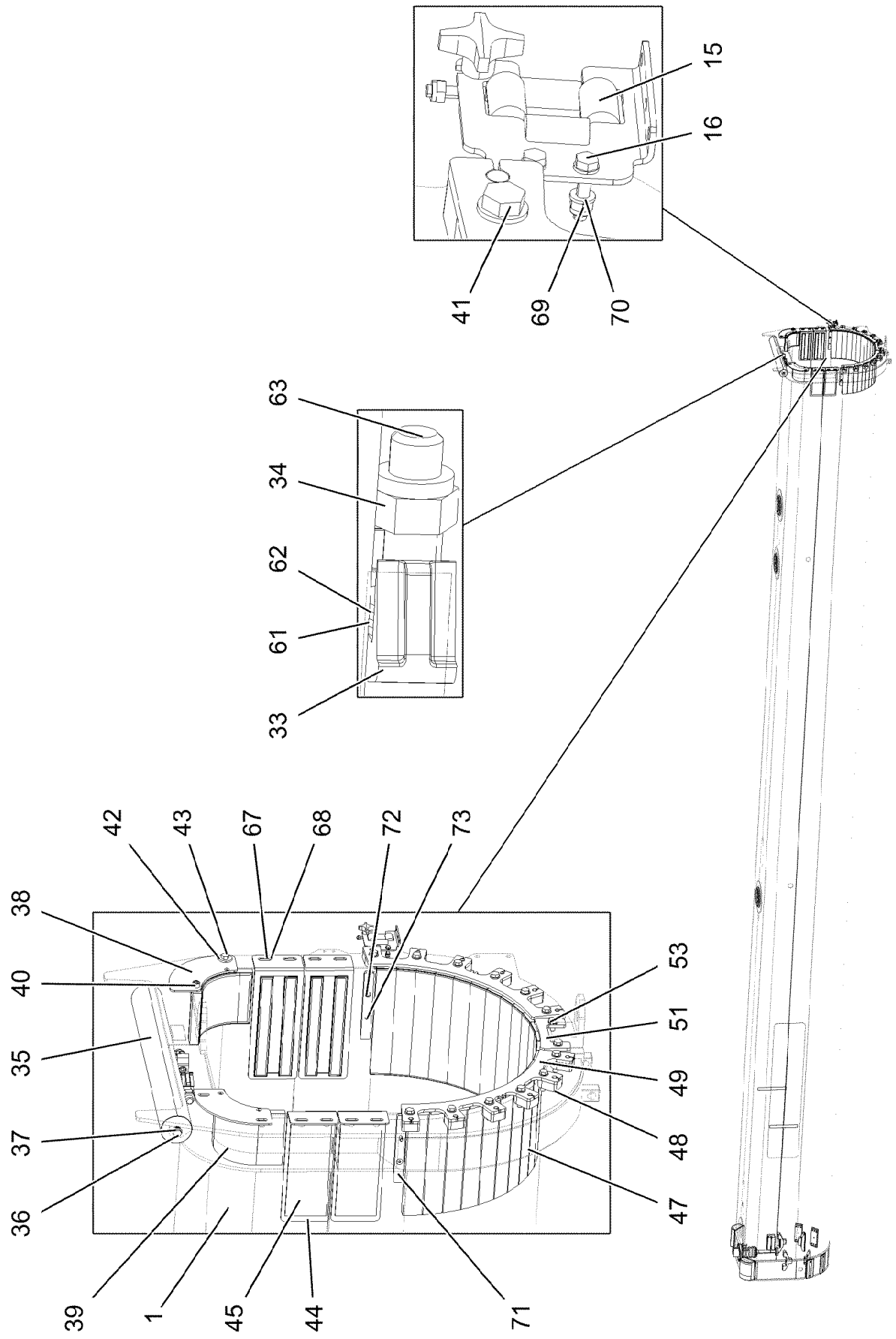
15
16
41
69
70
63
34
62
61
33
42
43
67
68
72
73
38
40
35
37
36
53
51
49
48
47
39
1
45
44
71

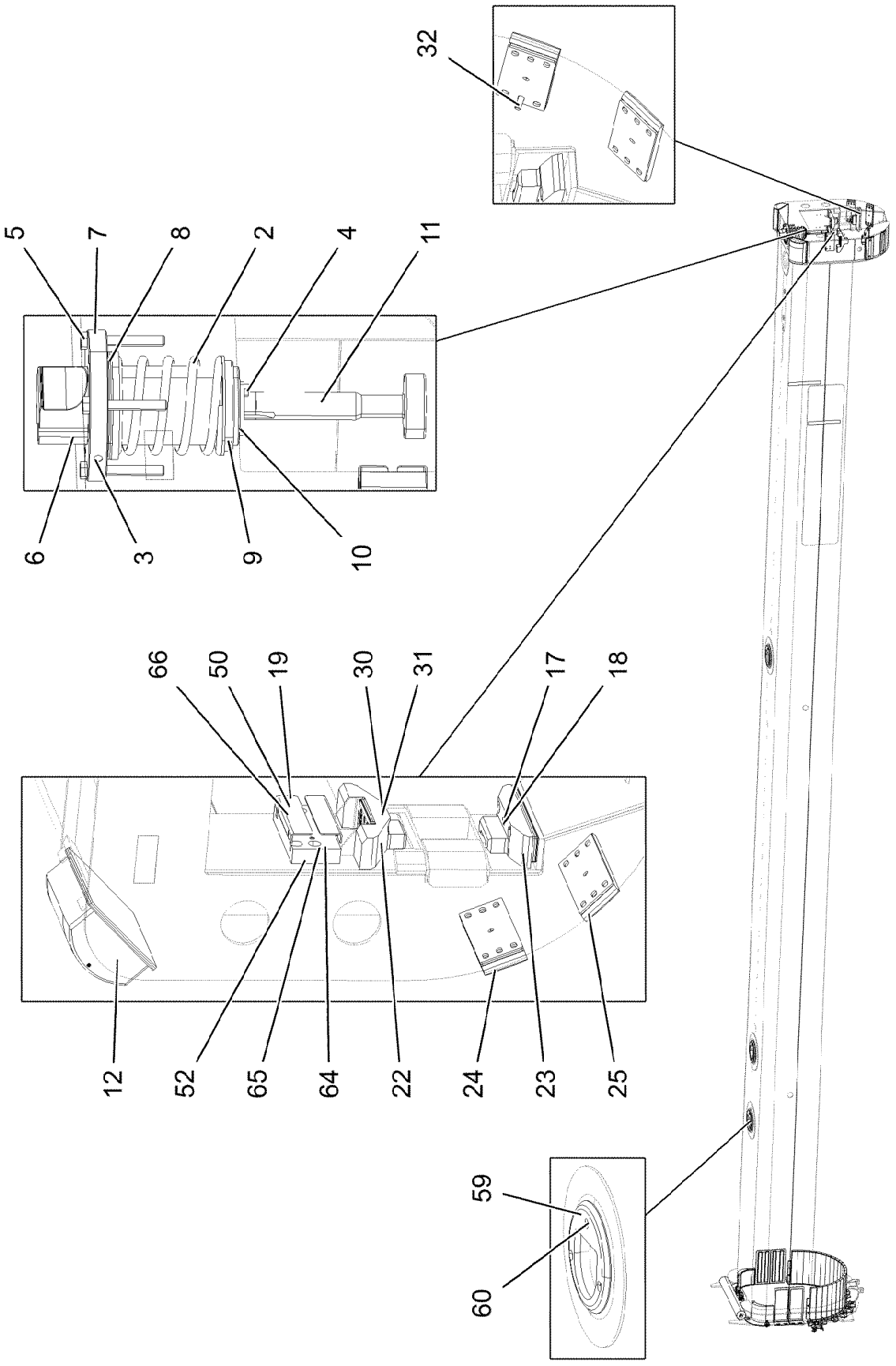
32
5
7
8
2
4
11
6
3
9
10
66
50
19
30
31
17
18
12
52
65
64
22
24
23
25
59
60

Pos.	Item	Quantity	Description	Bezeichnung
1	91000081	1	TELESCOPIC SECT.2 WELD.CONSTR RAL 7	TELESKOP 2 SCHWK.
2	720009608	1	COMPRESSION SPRING 10X105X150 SPF	DRUCKFEDER
3	430670808	1	PARALLEL PIN ISO 2338 10H11X50 30CRNI	ZYLINDERSTIFT
4	11651612	2	HEX SCREW ISO 4017 M8X16 8.8 480H SPF	SECHSKANTSCHRAUBE
5	11834813	4	HEX SCREW ISO 4017 M12X90 8.8 FLZN SP	SECHSKANTSCHRAUBE
6	957011008	1	PIN 125.0X233 35NICRMOV125	BOLZEN
7	957011108	1	COVER RD175X22 S960QL	DECKEL
8	957011208	4	PLATE 2X124X124 DC01 FE//ZNNI8//CN//T0	BLECH
9	957011308	1	BUSHING RD115X13 S960QL	BUCHSE
10	970148308	1	PLATE 5x69x44 S960QL FE/FLZN10/NC	BLECH
11	957037908	1	MUSHROOM-SHAPED DRAWING BOLT 75x2	ZIEHPILZ
12	97153781	2	BEARING PLATE 75X200X140 PA6G+OEL SP	LAGERPLATTE
15	749013808	1	ROLLER ORIFICE	ROLLENMUNDSTUECK
16	12217223	2	HEX SCREW ISO 4017 M6X30 8.8 480H SPF	SECHSKANTSCHRAUBE
17	12103465	4	WASHER ISO 7089 8 300HV ZNNI-480H SPF	SCHEIBE
18	12208098	4	SOCKET HEAD SCREW ISO 4762 M8X30 8.8	ZYLINDERSCHRAUBE
19	972392108	1	SWITCH PANEL 21X75X160 PA6G	SCHALTLEISTE
22	283093608	2	BEARING PLATE 53X87X200 PA6G+OEL SP	LAGERPLATTE
23	283093708	2	BEARING PLATE 53X57X192 PA6G+OEL SP	LAGERPLATTE
24	283093808	2	BEARING PLATE 14x70x202 PA6G+OEL SPF	LAGERPLATTE
25	283093908	2	BEARING PLATE 12X70X202 PA6G+OEL SP	LAGERPLATTE
30	11690628	8	SOCKET HEAD SCREW ISO 4762 M10X40 8	ZYLINDERSCHRAUBE
31	10875629	4	HEX NUT ISO 7040 M10 8 FLZN SPF	SECHSKANTMUTTER
32	10875561	8	SOCKET HEAD SCREW DIN 6912 M8X25 08	ZYLINDERSCHRAUBE
33	972426708	4	GUIDE ISO 8062-3DCTG6 30X50X78 G18NI	EINWEISER
34	10875618	4	HEX NUT ISO 4032 M20 8 FLZN SPF	SECHSKANTMUTTER
35	749011408	1	CARRYING ROLLER 80/5/20X700 GALV.VER	TRAGROLLE
36	11631742	2	HEX SCREW ISO 4017 M12X30 8.8 FLZN SP	SECHSKANTSCHRAUBE
37	10289804	28	WASHER ISO 7089 12 300HV FLZN SPF	SCHEIBE
38	955450608	2	PLATE 5X184X184 S960QL	BLECH
39	283083308	2	SLIDER 130X150X167 PA6G+OEL SPF	GLEITSTUECK
40	11840140	4	SOCKET HEAD SCREW ISO 4762 M12X50 8	ZYLINDERSCHRAUBE
41	11840136	12	HEX SCREW ISO 4017 M12X50 8.8 FLZN	SECHSKANTSCHRAUBE
42	10179356	36	WASHER DIN 6340 13 FLZN SPF	SCHEIBE
43	11840127	12	HEX NUT ISO 7040 M12 8 FLZN SPF	SECHSKANTMUTTER
44	957032508	4	PLATE 4x383x125 S315MC FE//ZNNI8//CN//T	BLECH
45	283094308	4	BEARING PLATE 14X105X290 PA6G+OEL SP	LAGERPLATTE
47	283082508	23	SLIDE PLATE 33X50X310 PA6G+OEL SPF	GLEITPLATTE
48	97167074	12	SPACER PIECE PA6G SPF	DISTANZSTUECK
49	97154299	2	PLATE 8X404X456 S960 RAL 7037 SPF	BLECH
50	972373808	2	SWITCH PLATE 2X139X46 DC01 FE//ZNNI8/	SCHALTBLECH
51	970298308	1	PLATE 8x160x79 S700MC	BLECH
52	979009508	1	SPACER PIECE 160X75X25 PA6G SPF	DISTANZSTUECK
53	11658892	2	HEX SCREW ISO 4017 M12X25 8.8 FLZN SP	SECHSKANTSCHRAUBE
59	283094508	3	COVER RD200X12 PA6G	DECKEL
60	12220375	9	COUNTERSUNK SCREW ISO 10642 M8X20	SENKSCHRAUBE
61	11691327	12	WASHER ISO 7092 20 300HV FLZN SPF	SCHEIBE
62	12100333	8	SPRING WASHER DIN 137 B 20 FLZN SPF	FEDERSCHEIBE
63	10875481	4	GRUB SCREW ISO 4026 M20X90 8.8 FLZN	GEWINDESTIFT
64	10875599	4	SOCKET HEAD SCREW ISO 4762 M8X25 8.8	ZYLINDERSCHRAUBE
65	10299679	4	WASHER ISO 7092 8 200HV 480H SPF	SCHEIBE
66	11642497	4	HEX SCREW ISO 4017 M6X10 8.8 480H SPF	SECHSKANTSCHRAUBE
67	11658891	12	HEX SCREW ISO 4014 M12X55 8.8 FLZN SP	SECHSKANTSCHRAUBE
68	11182717	12	WASHER ISO 7093-1 12 300HV FLZN SPF	SCHEIBE
69	11656734	2	HEX NUT ISO 7040 M6 8 480H SPF	SECHSKANTMUTTER
70	10197771	4	WASHER ISO 7089 6 200HV ZNNI-480H SPF	SCHEIBE
71	97165309	2	PLATE 10X194X25 S355MC FE//ZNNI8//CN//T	BLECH
72	12216054	2	SOCKET HEAD SCREW DIN 7984 M8X20 08	ZYLINDERSCHRAUBE
73	10875552	2	COUNTERSUNK SCREW DIN 7991 M8X16 8	SENKSCHRAUBE

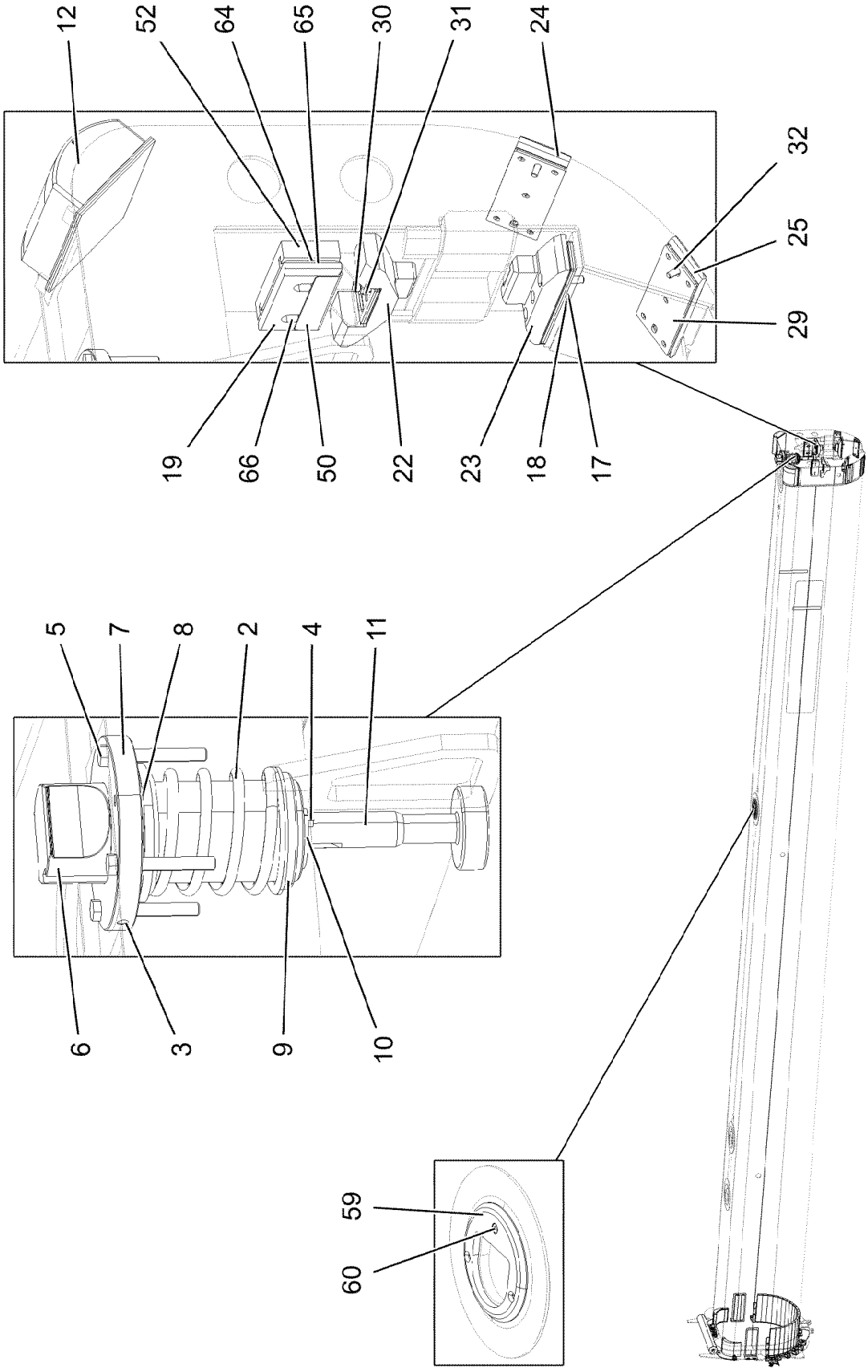

16.11.2023 173987	**etk_en_de_078966 LTR 1100**	665 (1/3)
LIEBHERR	**TELESCOPIC SECT.3 PRE-ASSEMB** **TELESKOP 3 VORM.**	**91000052**

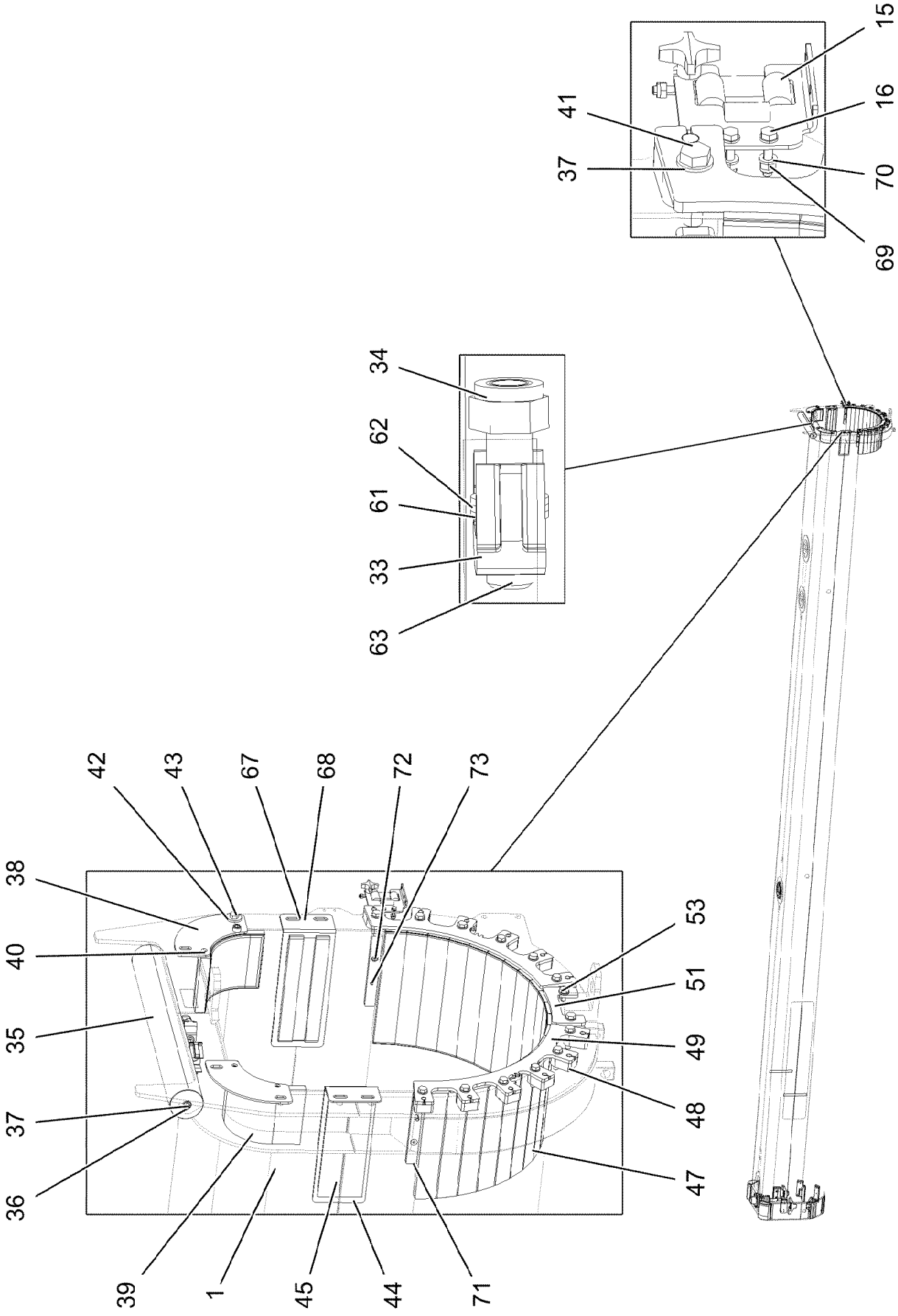

16.11.2023 173988 LIEBHERR	**etk_en_de_078966 LTR 1100** **TELESCOPIC SECT.3 PRE-ASSEMB** **TELESKOP 3 VORM.**	666 (2/3) **91000052**

Pos.	Item	Quantity	Description	Bezeichnung
1	91000082	1	TELESCOPIC SECT.3 WELD.CONST RAL 701	TELESKOP 3 SCHWK.
2	720009608	1	COMPRESSION SPRING 10X105X150 SPF	DRUCKFEDER
3	430670808	1	PARALLEL PIN ISO 2338 10H11X50 30CRNI	ZYLINDERSTIFT
4	11651612	2	HEX SCREW ISO 4017 M8X16 8.8 480H SPF	SECHSKANTSCHRAUBE
5	11834813	4	HEX SCREW ISO 4017 M12X90 8.8 FLZN SP	SECHSKANTSCHRAUBE
6	957011008	1	PIN 125.0X233 35NICRMOV125	BOLZEN
7	957011108	1	COVER RD175X22 S960QL	DECKEL
8	957011208	4	PLATE 2X124X124 DC01 FE//ZNNI8//CN//T0	BLECH
9	957011308	1	BUSHING RD115X13 S960QL	BUCHSE
10	970148308	1	PLATE 5x69x44 S960QL FE/FLZN10/NC	BLECH
11	957056308	1	MUSHROOM-SHAPED DRAWING BOLT 75x2	ZIEHPILZ
12	97153781	2	BEARING PLATE 75X200X140 PA6G+OEL SP	LAGERPLATTE
15	749013808	1	ROLLER ORIFICE	ROLLENMUNDSTUECK
16	12217223	2	HEX SCREW ISO 4017 M6X30 8.8 480H SPF	SECHSKANTSCHRAUBE
17	12103465	4	WASHER ISO 7089 8 300HV ZNNI-480H SPF	SCHEIBE
18	12208098	4	SOCKET HEAD SCREW ISO 4762 M8X30 8.8	ZYLINDERSCHRAUBE
19	972373708	2	SWITCH PANEL 21X75X160 PA6G	SCHALTLEISTE
22	283093608	2	BEARING PLATE 53X87X200 PA6G+OEL SP	LAGERPLATTE
23	283093708	2	BEARING PLATE 53X57X192 PA6G+OEL SP	LAGERPLATTE
24	283093808	2	BEARING PLATE 14x70x202 PA6G+OEL SPF	LAGERPLATTE
25	283093908	2	BEARING PLATE 12X70X202 PA6G+OEL SP	LAGERPLATTE
29	957025808	2	PLATE 3X180X70 DC01 FE//ZNNI8//CN//T0	BLECH
30	11690628	8	SOCKET HEAD SCREW ISO 4762 M10X40 8	ZYLINDERSCHRAUBE
31	10875629	4	HEX NUT ISO 7040 M10 8 FLZN SPF	SECHSKANTMUTTER
32	10875561	8	SOCKET HEAD SCREW DIN 6912 M8X25 08	ZYLINDERSCHRAUBE
33	972426708	4	GUIDE ISO 8062-3DCTG6 30X50X78 G18NI	EINWEISER
34	10875618	4	HEX NUT ISO 4032 M20 8 FLZN SPF	SECHSKANTMUTTER
35	749009208	1	CARRYING ROLLER 80/5/20X650 GALV.VER	TRAGROLLE
36	11631742	2	HEX SCREW ISO 4017 M12X30 8.8 FLZN SP	SECHSKANTSCHRAUBE
37	10289804	24	WASHER ISO 7089 12 300HV FLZN SPF	SCHEIBE
38	955450608	2	PLATE 5X184X184 S960QL	BLECH
39	283083308	2	SLIDER 130X150X167 PA6G+OEL SPF	GLEITSTUECK
40	11840140	4	SOCKET HEAD SCREW ISO 4762 M12X50 8	ZYLINDERSCHRAUBE
41	11840136	12	HEX SCREW ISO 4017 M12X50 8.8 FLZN	SECHSKANTSCHRAUBE
42	10179356	24	WASHER DIN 6340 13 FLZN SPF	SCHEIBE
43	11840127	8	HEX NUT ISO 7040 M12 8 FLZN SPF	SECHSKANTMUTTER
44	957032508	2	PLATE 4x383x125 S315MC FE//ZNNI8//CN//T	BLECH
45	283094708	2	BEARING PLATE 18X105X290 PA6G+OEL SP	LAGERPLATTE
47	283082508	21	SLIDE PLATE 33X50X310 PA6G+OEL SPF	GLEITPLATTE
48	97167074	12	SPACER PIECE PA6G SPF	DISTANZSTUECK
49	97154300	2	PLATE 8X383X431 S960 RAL 7037 SPF	BLECH
50	972373808	2	SWITCH PLATE 2X139X46 DC01 FE//ZNNI8/	SCHALTBLECH
51	970298308	1	PLATE 8x160x79 S700MC	BLECH
52	979009508	2	SPACER PIECE 160X75X25 PA6G SPF	DISTANZSTUECK
53	11658892	2	HEX SCREW ISO 4017 M12X25 8.8 FLZN SP	SECHSKANTSCHRAUBE
59	283094508	3	COVER RD200X12 PA6G	DECKEL
60	12220375	9	COUNTERSUNK SCREW ISO 10642 M8X20	SENKSCHRAUBE
61	11691327	12	WASHER ISO 7092 20 300HV FLZN SPF	SCHEIBE
62	12100333	8	SPRING WASHER DIN 137 B 20 FLZN SPF	FEDERSCHEIBE
63	10875481	4	GRUB SCREW ISO 4026 M20X90 8.8 FLZN	GEWINDESTIFT
64	10875599	8	SOCKET HEAD SCREW ISO 4762 M8X25 8.8	ZYLINDERSCHRAUBE
65	10299679	8	WASHER ISO 7092 8 200HV 480H SPF	SCHEIBE
66	11642497	4	HEX SCREW ISO 4017 M6X10 8.8 480H SPF	SECHSKANTSCHRAUBE
67	11658891	8	HEX SCREW ISO 4014 M12X55 8.8 FLZN SP	SECHSKANTSCHRAUBE
68	11182717	8	WASHER ISO 7093-1 12 300HV FLZN SPF	SCHEIBE
69	11656734	2	HEX NUT ISO 7040 M6 8 480H SPF	SECHSKANTMUTTER
70	10197771	4	WASHER ISO 7089 6 200HV ZNNI-480H SPF	SCHEIBE
71	97165309	2	PLATE 10X194X25 S355MC FE//ZNNI8//CN//T	BLECH
72	12216054	2	SOCKET HEAD SCREW DIN 7984 M8X20 08	ZYLINDERSCHRAUBE
73	10875552	2	COUNTERSUNK SCREW DIN 7991 M8X16 8	SENKSCHRAUBE

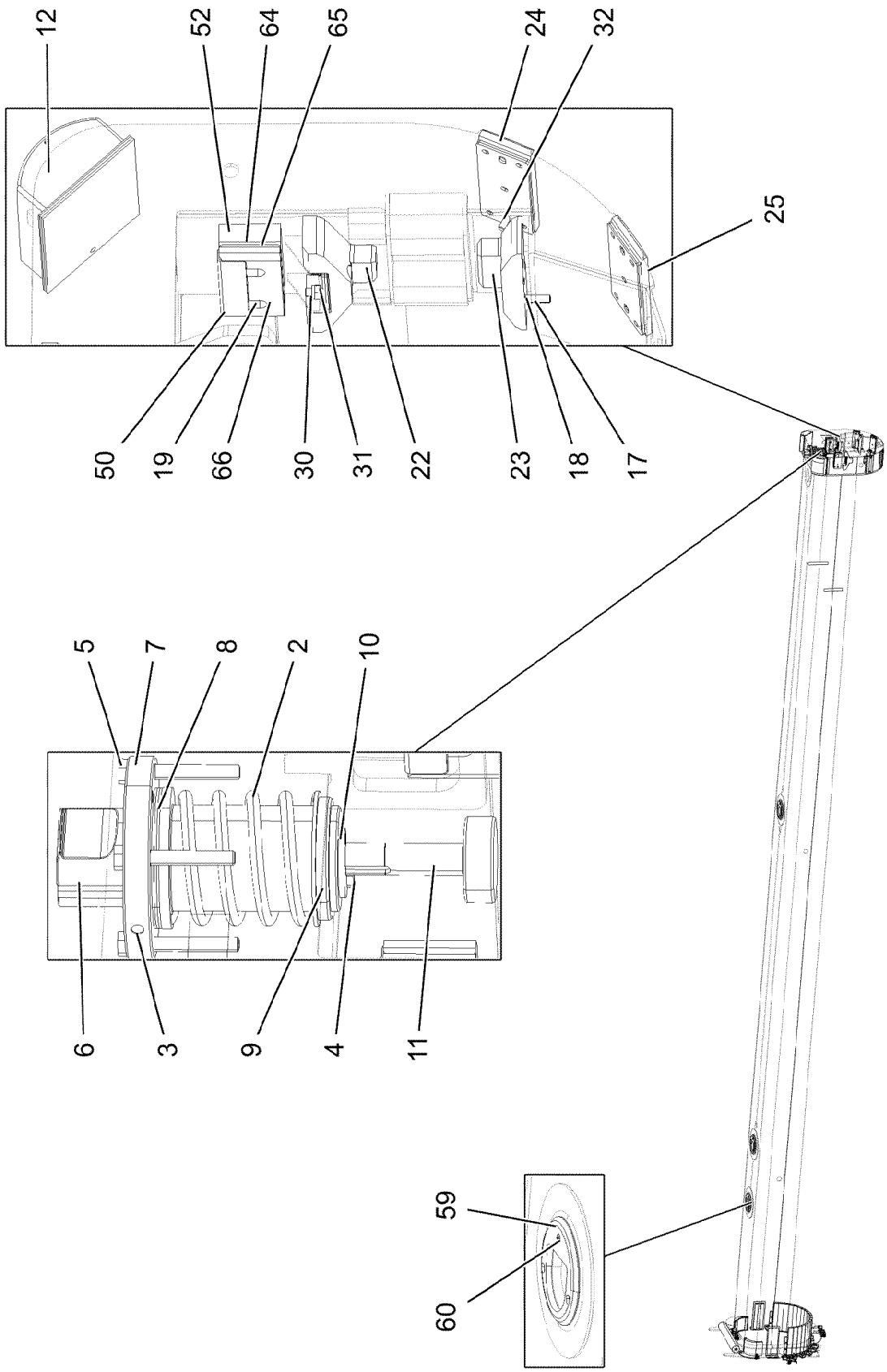
12
52
64
65
24
32
25
50
19
66
30
31
22
23
18
17
5
7
8
2
10
6
3
9
4
11
59
60

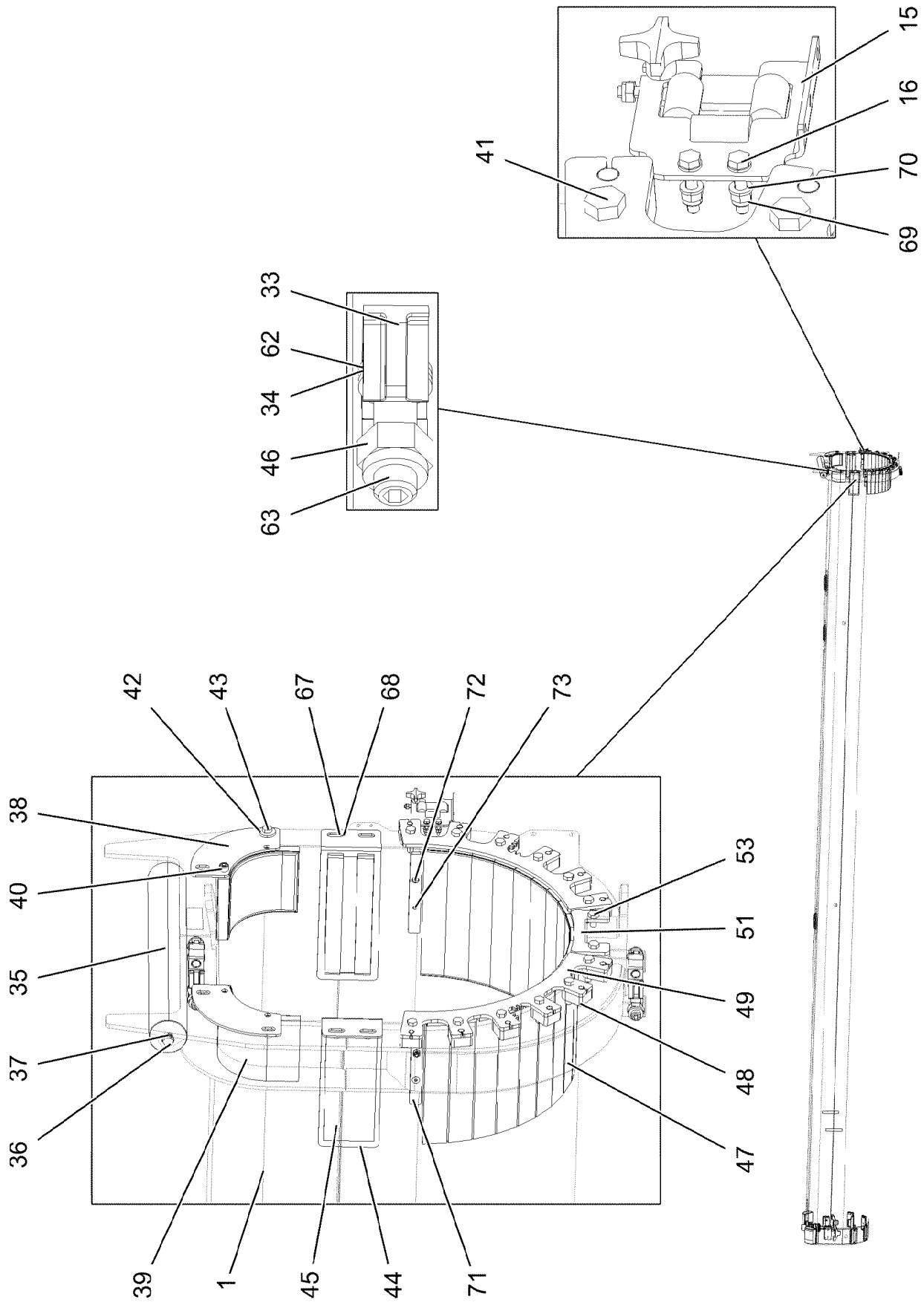

16.11.2023 173990 LIEBHERR	**etk_en_de_078966 LTR 1100** **TELESCOPIC SECT.IV PRE-ASSEMBL** **TELESKOP 4 VORM.**	669 (2/3) **91000053**

Pos.	Item	Quantity	Description	Bezeichnung
1	91000083	1	TELESCOPIC SECT.4 WELD.CONSTR RAL 7	TELESKOP 4 SCHWK.
2	720009308	1	COMPRESSION SPRING 10X100X150 X10CR	DRUCKFEDER
3	430670808	1	PARALLEL PIN ISO 2338 10H11X50 30CRNI	ZYLINDERSTIFT
4	11651612	2	HEX SCREW ISO 4017 M8X16 8.8 480H SPF	SECHSKANTSCHRAUBE
5	11834813	4	HEX SCREW ISO 4017 M12X90 8.8 FLZN SP	SECHSKANTSCHRAUBE
6	957017608	1	PIN 115.0X228 35NICRMOV125	BOLZEN
7	957017708	1	COVER RD165X22 S960QL	DECKEL
8	957018808	4	PLATE 2X114X114 DC01 FE//ZNNI8//CN//T0	BLECH
9	953726108	1	BUSHING RD110X13 S960QL GASN.	BUCHSE
10	954762708	1	PLATE 5X41X63 S960QL	BLECH
11	954766608	1	SCREW RD70X164 35NICRMOV125	SCHRAUBE
12	97153784	2	BEARING PLATE 75X190X140 PA6G+OEL SP	LAGERPLATTE
15	749013808	1	ROLLER ORIFICE	ROLLENMUNDSTUECK
16	12217223	2	HEX SCREW ISO 4017 M6X30 8.8 480H SPF	SECHSKANTSCHRAUBE
17	12103465	4	WASHER ISO 7089 8 300HV ZNNI-480H SPF	SCHEIBE
18	12208098	4	SOCKET HEAD SCREW ISO 4762 M8X30 8.8	ZYLINDERSCHRAUBE
19	972373708	2	SWITCH PANEL 21X75X160 PA6G	SCHALTLEISTE
22	283093608	2	BEARING PLATE 53X87X200 PA6G+OEL SP	LAGERPLATTE
23	283093708	2	BEARING PLATE 53X57X192 PA6G+OEL SP	LAGERPLATTE
24	283094108	2	BEARING PLATE 14X70X192 PA6G+OEL SP	LAGERPLATTE
25	283094208	2	BEARING PLATE 12X70X192 PA6G+OEL SP	LAGERPLATTE
30	11690628	8	SOCKET HEAD SCREW ISO 4762 M10X40 8	ZYLINDERSCHRAUBE
31	10875629	4	HEX NUT ISO 7040 M10 8 FLZN SPF	SECHSKANTMUTTER
32	10875561	8	SOCKET HEAD SCREW DIN 6912 M8X25 08	ZYLINDERSCHRAUBE
33	972426708	4	GUIDE ISO 8062-3DCTG6 30X50X78 G18NI	EINWEISER
34	11691327	12	WASHER ISO 7092 20 300HV FLZN SPF	SCHEIBE
35	749010708	1	CARRYING ROLLER 80/5/20X600 GALV.VER	TRAGROLLE
36	11631742	2	HEX SCREW ISO 4017 M12X30 8.8 FLZN SP	SECHSKANTSCHRAUBE
37	10289804	10	WASHER ISO 7089 12 300HV FLZN SPF	SCHEIBE
38	955450608	2	PLATE 5X184X184 S960QL	BLECH
39	283083308	2	SLIDER 130X150X167 PA6G+OEL SPF	GLEITSTUECK
40	11840140	4	SOCKET HEAD SCREW ISO 4762 M12X50 8	ZYLINDERSCHRAUBE
41	11840136	12	HEX SCREW ISO 4017 M12X50 8.8 FLZN	SECHSKANTSCHRAUBE
42	10179356	24	WASHER DIN 6340 13 FLZN SPF	SCHEIBE
43	11840127	8	HEX NUT ISO 7040 M12 8 FLZN SPF	SECHSKANTMUTTER
44	957032508	2	PLATE 4x383x125 S315MC FE//ZNNI8//CN//T	BLECH
45	283094708	2	BEARING PLATE 18X105X290 PA6G+OEL SP	LAGERPLATTE
46	10875618	4	HEX NUT ISO 4032 M20 8 FLZN SPF	SECHSKANTMUTTER
47	283082508	19	SLIDE PLATE 33X50X310 PA6G+OEL SPF	GLEITPLATTE
48	283095108	2	DISTANCE PLATE 22X306X425 PA6G	DISTANZPLATTE
49	957039908	2	PLATE 8X315X425 S960	BLECH
50	972373808	2	SWITCH PLATE 2X139X46 DC01 FE//ZNNI8/	SCHALTBLECH
51	970298308	1	PLATE 8x160x79 S700MC	BLECH
52	979009508	2	SPACER PIECE 160X75X25 PA6G SPF	DISTANZSTUECK
53	11658892	2	HEX SCREW ISO 4017 M12X25 8.8 FLZN SP	SECHSKANTSCHRAUBE
59	283094508	3	COVER RD200X12 PA6G	DECKEL
60	12220375	9	COUNTERSUNK SCREW ISO 10642 M8X20	SENKSCHRAUBE
62	12100333	8	SPRING WASHER DIN 137 B 20 FLZN SPF	FEDERSCHEIBE
63	10875481	4	GRUB SCREW ISO 4026 M20X90 8.8 FLZN	GEWINDESTIFT
64	10875599	8	SOCKET HEAD SCREW ISO 4762 M8X25 8.8	ZYLINDERSCHRAUBE
65	10299679	8	WASHER ISO 7092 8 200HV 480H SPF	SCHEIBE
66	11642497	4	HEX SCREW ISO 4017 M6X10 8.8 480H SPF	SECHSKANTSCHRAUBE
67	11658891	8	HEX SCREW ISO 4014 M12X55 8.8 FLZN SP	SECHSKANTSCHRAUBE
68	11182717	8	WASHER ISO 7093-1 12 300HV FLZN SPF	SCHEIBE
69	11656734	2	HEX NUT ISO 7040 M6 8 480H SPF	SECHSKANTMUTTER
70	10197771	4	WASHER ISO 7089 6 200HV ZNNI-480H SPF	SCHEIBE
71	97165309	2	PLATE 10X194X25 S355MC FE//ZNNI8//CN//T	BLECH
72	12216054	2	SOCKET HEAD SCREW DIN 7984 M8X20 08	ZYLINDERSCHRAUBE
73	10875552	2	COUNTERSUNK SCREW DIN 7991 M8X16 8	SENKSCHRAUBE

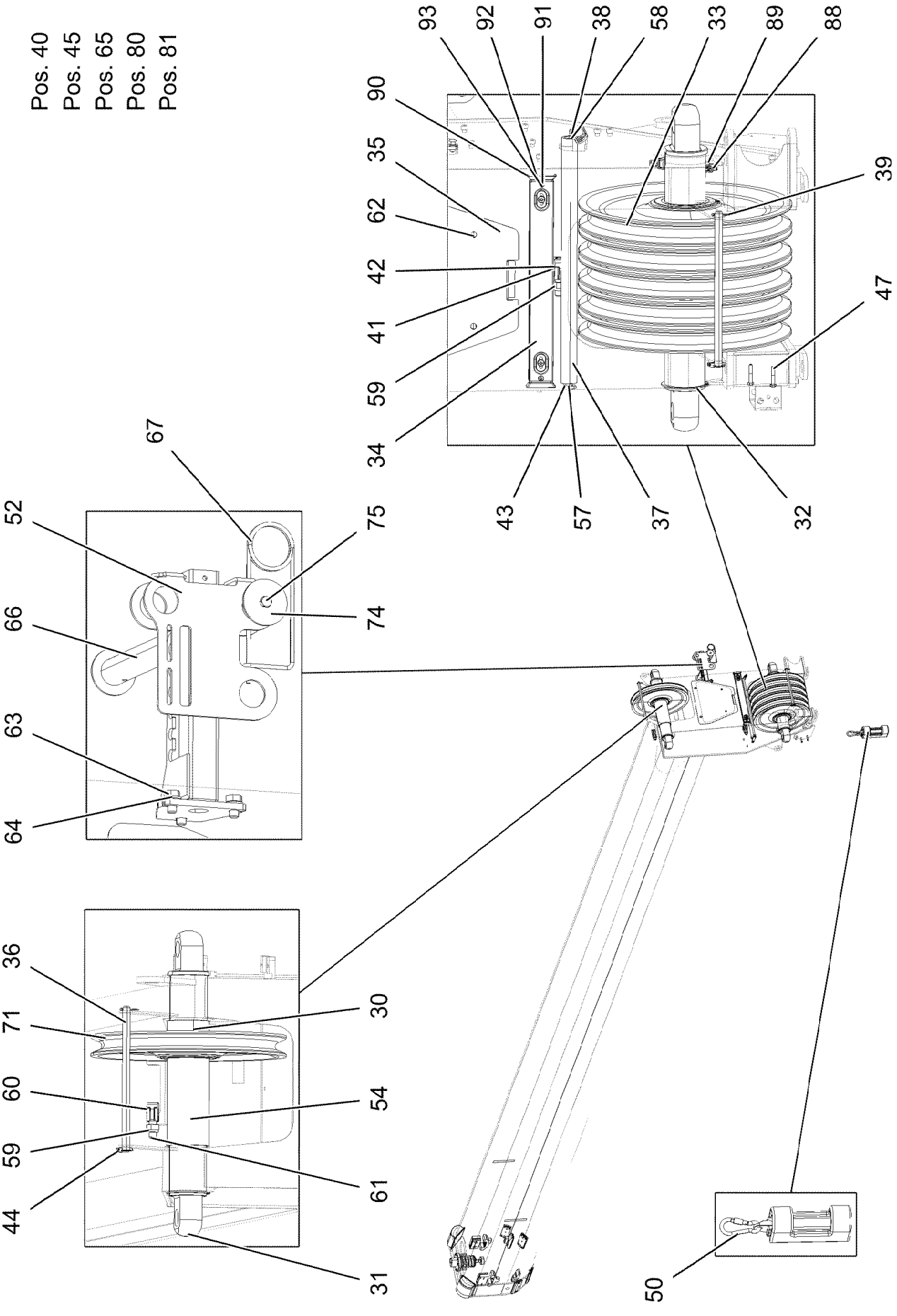

16.11.2023 173991	**etk_en_de_078966 LTR 1100**	671 (1/4)
LIEBHERR	**TELESCOPIC SECT.5 PRE-ASSEMBLE** **TELESKOP 5 VORM.**	**91000054**

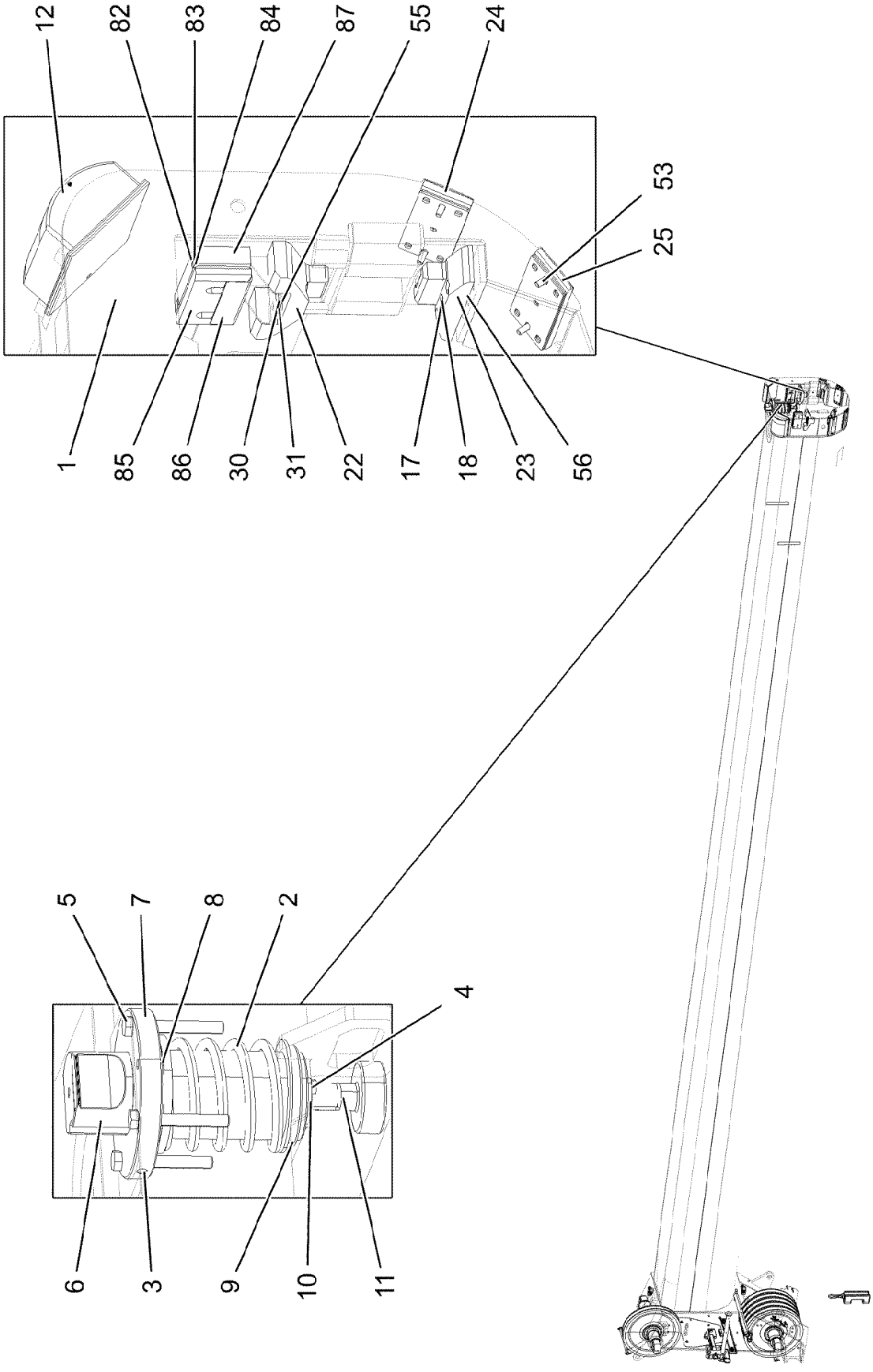

16.11.2023 173992	**etk_en_de_078966 LTR 1100**	672 (2/4)
LIEBHERR	**TELESCOPIC SECT.5 PRE-ASSEMBLE** **TELESKOP 5 VORM.**	**91000054**

Pos.	Item	Quantity	Description	Bezeichnung
1	91000085	1	TELESCOPIC SECT.5 WELD.CONSTR. RAL 7	TELESKOP 5 SCHWK.
2	720009308	1	COMPRESSION SPRING 10X100X150 X10CR	DRUCKFEDER
3	430670808	1	PARALLEL PIN ISO 2338 10H11X50 30CRNI	ZYLINDERSTIFT
4	11651612	4	HEX SCREW ISO 4017 M8X16 8.8 480H SPF	SECHSKANTSCHRAUBE
5	11834813	4	HEX SCREW ISO 4017 M12X90 8.8 FLZN SP	SECHSKANTSCHRAUBE
6	957017608	1	PIN 115.0X228 35NICRMOV125	BOLZEN
7	957017708	1	COVER RD165X22 S960QL	DECKEL
8	957018808	4	PLATE 2X114X114 DC01 FE//ZNNI8//CN//T0	BLECH
9	953726108	1	BUSHING RD110X13 S960QL GASN.	BUCHSE
10	954762708	1	PLATE 5X41X63 S960QL	BLECH
11	954766708	1	SCREW RD70X120 35NICRMOV125	SCHRAUBE
12	97153784	2	BEARING PLATE 75X190X140 PA6G+OEL SP	LAGERPLATTE
17	12103465	4	WASHER ISO 7089 8 300HV ZNNI-480H SPF	SCHEIBE
18	11690628	4	SOCKET HEAD SCREW ISO 4762 M10X40 8	ZYLINDERSCHRAUBE
22	283093608	2	BEARING PLATE 53X87X200 PA6G+OEL SP	LAGERPLATTE
23	283093708	2	BEARING PLATE 53X57X192 PA6G+OEL SP	LAGERPLATTE
24	283094108	2	BEARING PLATE 14X70X192 PA6G+OEL SP	LAGERPLATTE
25	283094208	2	BEARING PLATE 12X70X192 PA6G+OEL SP	LAGERPLATTE
30	940380008	1	DISTANCE TUBE RD114,3X6,3X33 S355J2H	DISTANZROHR
31	953656108	2	AXLE RD110X818 35NICRMOV125 GASN.	ACHSE
32	10875652	2	RETAINING RINGS DIN 471 100X3 480H SPF	SICHERUNGSRING
33	964283508	5	ROPE PULLEY CPL. SPF ⇨ ❑ 675	SEILROLLE KPL.
34	97156838	1	U-PROFILE 1X500X60 FE//ZNNI8//CN//T0	U-PROFIL
35	951892408	1	COVER 1.5X450X381 DC01 FE//ZNNI8//CN//T	DECKEL
36	452549108	2	PIN DIN EN 22340 B20X390X374 S355J2C+C	BOLZEN
37	97153021	1	TUBE 38.0X615 S355J2H FE//ZNNI8//CN//T0	ROHR
38	433101208	1	RETAINING SPRING 4X68 ISO 2081 FE/ZN8/	SICHERUNGSFEDER
39	10180354	2	SPLIT PIN ISO 1234 4X40 St 480H SPF	SPLINT
40	720014408	2	CABLE CLAMP 4X40X67 1.4310	KABELHALTER
41	12100333	4	SPRING WASHER DIN 137 B 20 FLZN SPF	FEDERSCHEIBE
42	11691327	16	WASHER ISO 7092 20 300HV FLZN SPF	SCHEIBE
43	12102696	27	BUTTON HEAD SCREW AEHNL.ISO 7380-2	HALBRUNDKOPFSCHRAUBE
44	10875869	2	SAFETY PLUG W HINGE-LID 5X29X4,7X25 4	SICHERHEITSKLAPPSTECKER
45	10872676	14	CABLE CLIP HOLDER 46X70-SCHWARZ PA	KABELBINDERHALTER
47	11651580	2	HEX SCREW ISO 4014 M8X45 8.8 480H SPF	SECHSKANTSCHRAUBE
50	96013575	1	HOIST LIM.SWITCH PLUMMET CPL ⇨ ❑ 676	HUBENDSCHALTER GEWICHT K
52	963556008	1	MOUNTING WELDED T ZN O	HALTERUNG SCHWK.
53	10875561	8	SOCKET HEAD SCREW DIN 6912 M8X25 08	ZYLINDERSCHRAUBE
54	951892308	1	DISTANCE TUBE 114.3X234 S355J2H FE//ZN	DISTANZROHR
55	10197769	4	HEX NUT DIN 985 M10 8 ZNNI-480H SPF	SECHSKANTMUTTER
56	12208098	4	SOCKET HEAD SCREW ISO 4762 M8X30 8.8	ZYLINDERSCHRAUBE
57	97133214	1	PLATE 5X120X20 S355MC T ZN O	BLECH
58	12102696	2	BUTTON HEAD SCREW AEHNL.ISO 7380-2	HALBRUNDKOPFSCHRAUBE
59	10875610	4	HEX NUT DIN 985 M20 10 FLZN SPF	SECHSKANTMUTTER
60	972426708	4	GUIDE ISO 8062-3DCTG6 30X50X78 G18NI	EINWEISER
61	10875481	4	GRUB SCREW ISO 4026 M20X90 8.8 FLZN	GEWINDESTIFT
62	591572208	2	COVER LID 12,7	ABDECKKAPPE
63	11651006	3	HEX SCREW ISO 4017 M12X20 8.8 FLZN SP	SECHSKANTSCHRAUBE
64	10289804	3	WASHER ISO 7089 12 300HV FLZN SPF	SCHEIBE
65	953749408	1	PLATE 4X250X190 S315MC FE//ZNNI8//CN//T	BLECH
66	96055524	1	PIPE WELDED	ROHR SCHWK.
67	433102508	1	RETAINING SPRING 5X122 ISO 2081 FE/ZN8/	SICHERUNGSFEDER
71	927310008	1	ROPE PULLEY CPL. SPF ⇨ ❑ 677	SEILROLLE KPL.
74	97147778	1	WASHER 3X60X60 X5CRNI18-10	SCHEIBE
75	406527808	1	HEX SCREW ISO 4017 M8X16 A2-70	SECHSKANTSCHRAUBE
80	979132008	1	PLATE 110X34 S315MC FE//ZNNI8//CN//T0	BLECH
81	10875869	3	SAFETY PLUG W HINGE-LID 5X29X4,7X25 4	SICHERHEITSKLAPPSTECKER

Pos.	Item	Quantity	Description	Bezeichnung
82	10875597	8	SOCKET HEAD SCREW ISO 4762 M8X16 8.8	ZYLINDERSCHRAUBE
83	10299679	8	WASHER ISO 7092 8 200HV 480H SPF	SCHEIBE
84	11642497	4	HEX SCREW ISO 4017 M6X10 8.8 480H SPF	SECHSKANTSCHRAUBE
85	972373708	2	SWITCH PANEL 21X75X160 PA6G	SCHALTLEISTE
86	972373808	2	SWITCH PLATE 2X139X46 DC01 FE//ZNNI8/	SCHALTBLECH
87	979009508	2	SPACER PIECE 160X75X25 PA6G SPF	DISTANZSTUECK
88	97098446	1	HOLDER PA6MDGF30 SPF	HALTER
89	10875485	2	BUTTON HEAD SCREW AEHNL.ISO 7380-2	HALBRUNDKOPFSCHRAUBE
90	97160916	2	EDGE PROTECTION 73X43X28 PA6GK30	KANTENSCHUTZ
91	10475893	2	BUTTON HEAD SCREW AEHNL.ISO 7380-2	HALBRUNDKOPFSCHRAUBE
92	10875648	2	WASHER ISO 7093-1 6 200HV 480H SPF	SCHEIBE
93	11004444	2	HEX NUT AEHNL.ISO 7040 M6 A2-70	SECHSKANTMUTTER

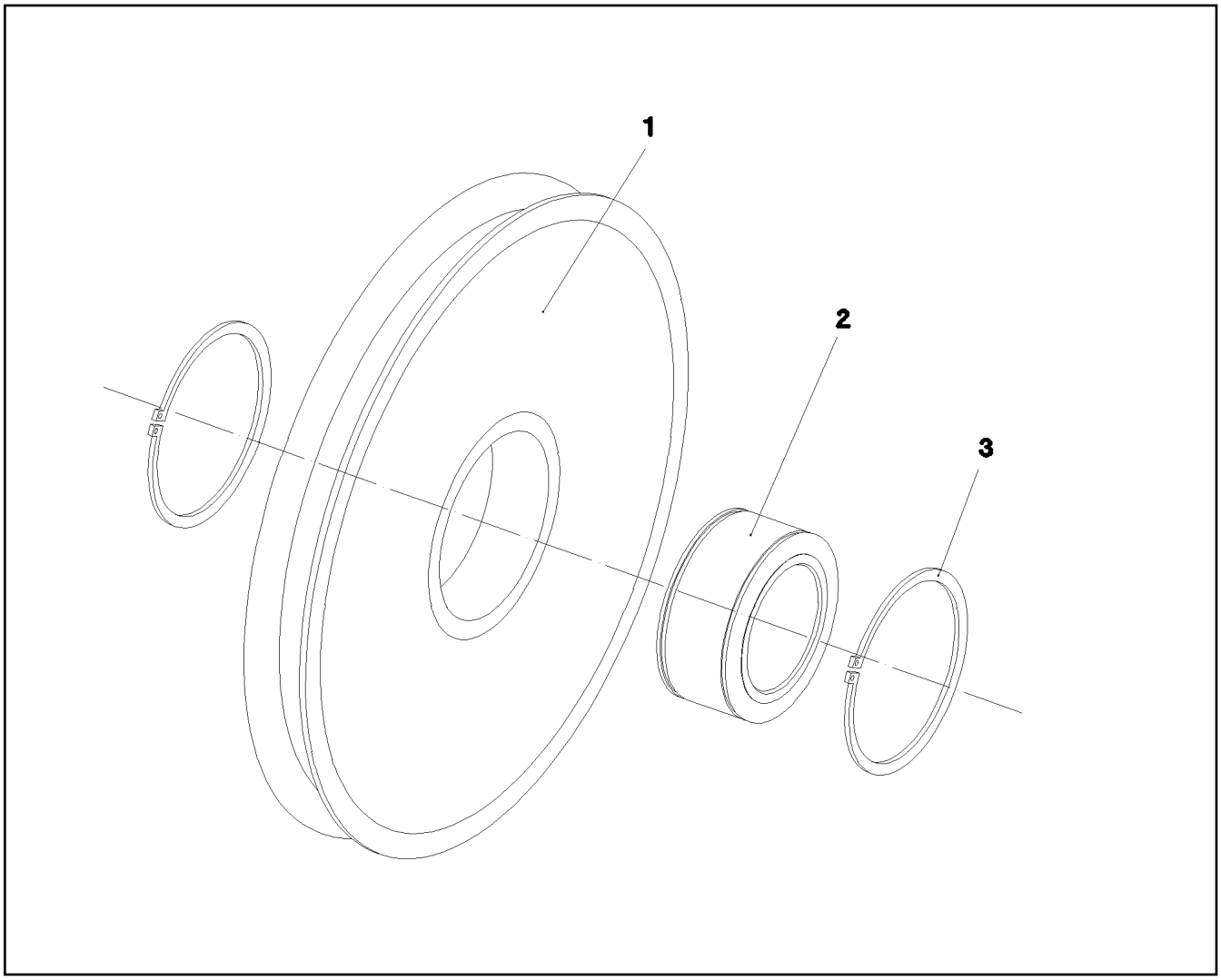

Pos.	Item	Quantity	Description	Bezeichnung
1	976249108	1	ROPE PULLEY 525X56 S355J2G3 SPF	SEILROLLE
2	745902508	1	ROLLER BEARING 100X150X67	WAELZLAGER
3	10875654	2	RETAINING RINGS DIN 471 150X4 480H SPF	SICHERUNGSRING

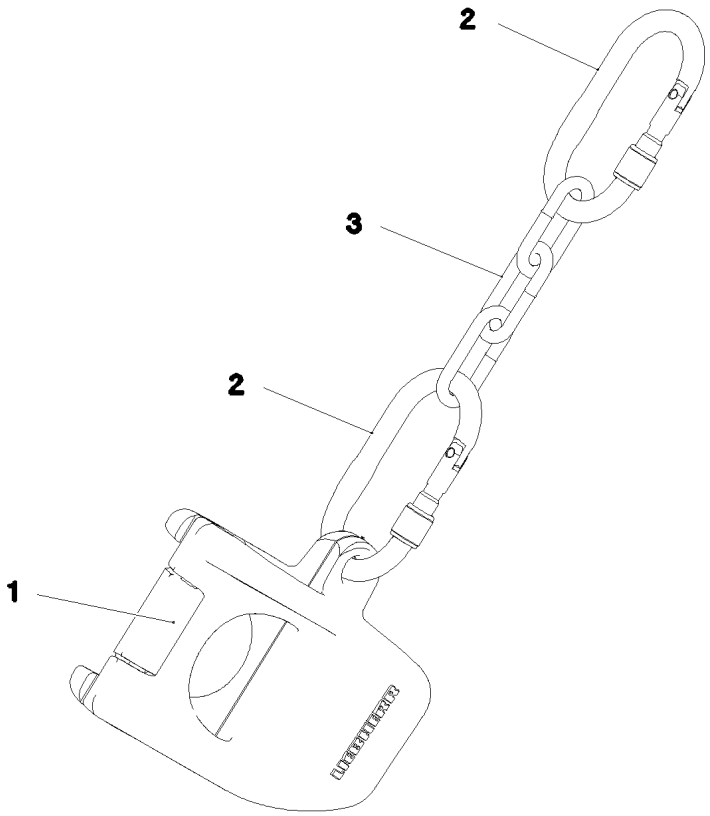

Pos.	Item	Quantity	Description	Bezeichnung
1	10873379	1	WEIGHT EN-GJS400-18 FE//ZN20//B	HUBENDSCHALTERGEWICHT
2	10877382	2	SCREW CARABINER OVAL M.PRAEGUNG S	SCHRAUBKARABINER
3	10663970	2	CHAIN DIN 763 7X49 0.3t ST35 VERZ	KETTE

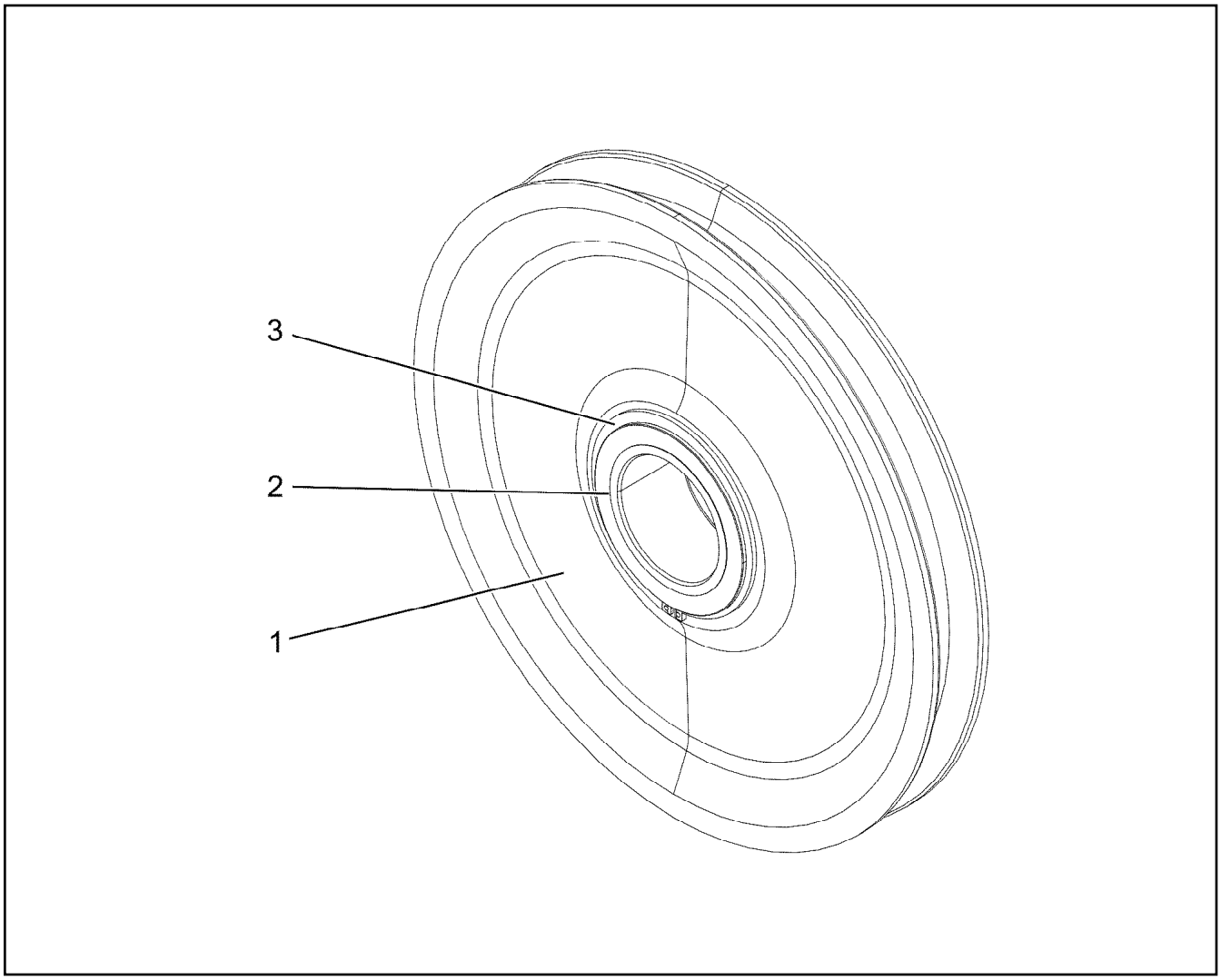

Pos.	Item	Quantity	Description	Bezeichnung
1	288157708	1	ROPE PULLEY RD525X56 PA6G SPF	SEILROLLE
2	745902508	1	ROLLER BEARING 100X150X67	WAELZLAGER
3	10874537	2	RETAINING RINGS DIN 471 150X4 FLZN	SICHERUNGSRING

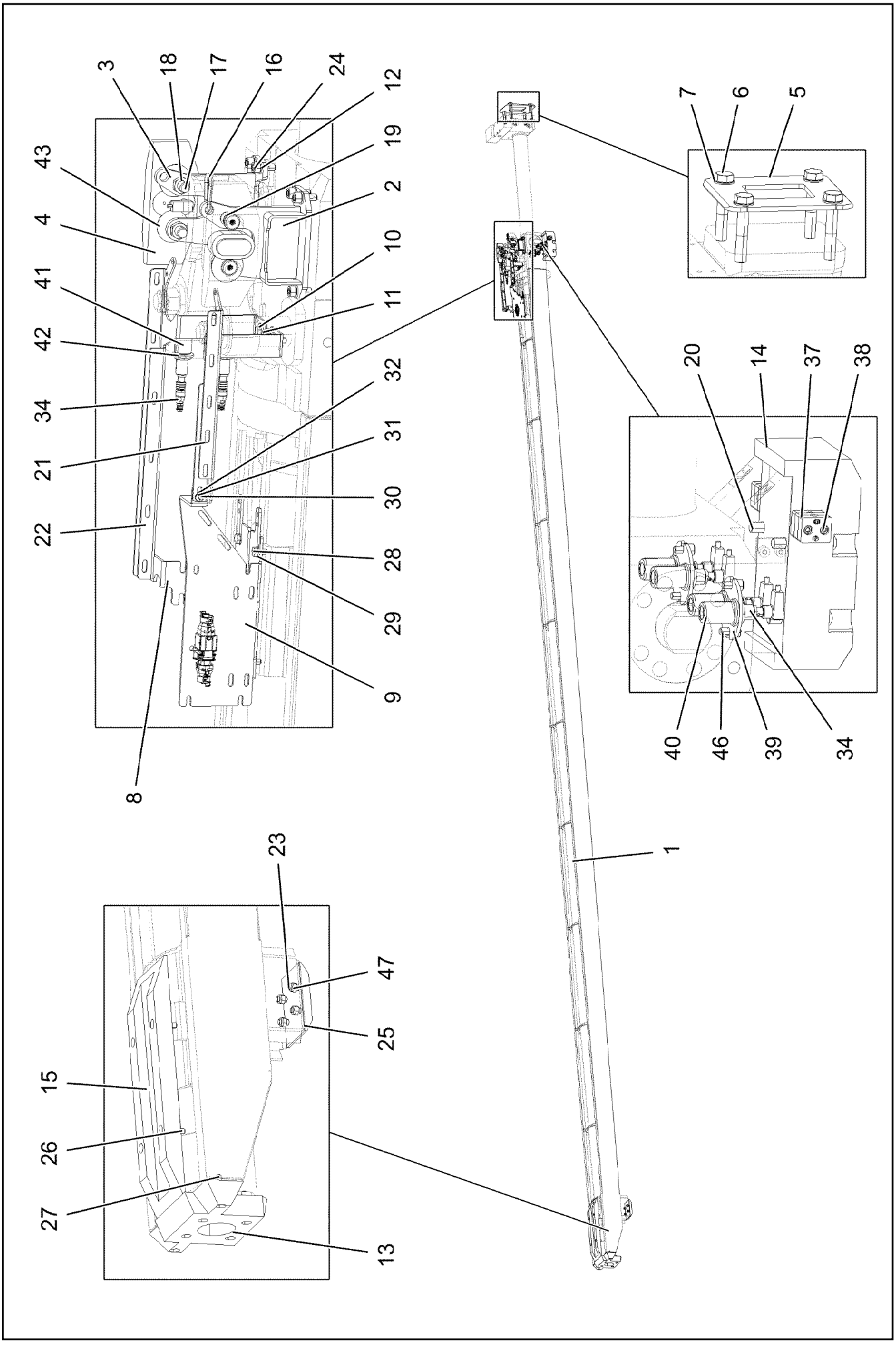
3
18
17
16
24
12
19
2
10
11
32
31
30
28
29
9
8
43
4
41
42
34
21
22
7
6
5
20
14
37
38
40
46
39
34
1
23
47
25
15
26
27
13

Pos.	Item	Quantity	Description	Bezeichnung
1	12105406	1	TELESCOPIC CYLINDER 180/135-9275 SPF ⇨ ❑ 680	TELESKOPIERZYLINDER
2	925721308	1	BRACKET,LEFT WELDED FE//ZNNI8//CN//T0	KONSOLE SCHWK.LI.
3	925721408	1	BRACKET,RIGHT WELDED FE//ZNNI8//CN//T	KONSOLE SCHWK.RE.
4	972261508	2	SENSOR HOLDER 30X75X190 PA6G+OEL	SENSORHALTER
5	956758608	1	PLATE 10X220X290 S960QL	BLECH
6	12104785	4	HEX SCREW ISO 4014 M24X135 8.8 FLZN SP	SECHSKANTSCHRAUBE
7	4600146	4	WASHER EN 14399-6 24 300-370HV FLZN SP	SCHEIBE
8	954180008	1	CONSOLE 4X260X239 S315MC FE//ZNNI8//C	KONSOLE
9	953843608	1	HOLDER 4X408X186 S315MC FE//ZNNI8//CN/	HALTER
10	11651767	2	HEX SCREW ISO 4017 M8X20 8.8 480H SPF	SECHSKANTSCHRAUBE
11	11140469	2	WASHER ISO 7093-1 8 200HV 480H SPF	SCHEIBE
12	10289795	6	WASHER ISO 7089 10 300HV FLZN SPF	SCHEIBE
13	283092408	1	SLIDER 50.0X372X207 PA6G+OEL SPF	GLEITSTUECK
14	283092508	1	SLIDER 100X115X250 PA6G+OEL SPF	GLEITSTUECK
15	283083908	1	SLIDER 40X170X575 PA6G+OEL SPF	GLEITSTUECK
16	744010208	1	SNAP HOOK DIN 5299 C 60X6-120KG ST V	KARABINERHAKEN
17	956414208	4	SCREW 25X25X65 8.8 FE//ZNNI8//CN//T0	SCHRAUBE
18	4600037	4	HEX NUT ISO 4035 M16 05 FLZN SPF	SECHSKANTMUTTER
19	720009408	4	COMPRESSION SPRING 1,6X18,2X44	DRUCKFEDER
20	12103123	4	BUTTON HEAD SCREW DIN 34805-2 M12X7	HALBRUNDKOPFSCHRAUBE
21	955044808	1	HOLDER 3X272X326 DC01 FE//ZNNI8//CN//T	HALTER
22	955044908	1	HOLDER 3X272X501 DC01 FE//ZNNI8//CN//T	HALTER
23	10178203	4	BUTTON HEAD SCREW ISO 7380-2 M12X30	HALBRUNDKOPFSCHRAUBE
24	10415162	6	SOCKET HEAD SCREW ISO 4762 M10X25 8	ZYLINDERSCHRAUBE
25	283092608	1	SLIDER 30X115X165 PA6G+OEL SPF	GLEITSTUECK
26	10875578	4	SOCKET HEAD SCREW ISO 4762 M12X35 8	ZYLINDERSCHRAUBE
27	12213814	6	SOCKET HEAD SCREW ISO 4762 M12X55 8	ZYLINDERSCHRAUBE
28	11651612	4	HEX SCREW ISO 4017 M8X16 8.8 480H SPF	SECHSKANTSCHRAUBE
29	12103465	8	WASHER ISO 7089 8 300HV ZNNI-480H SPF	SCHEIBE
30	10412852	2	BUTTON HEAD SCREW AEHNL.ISO 7380-2	HALBRUNDKOPFSCHRAUBE
31	11656734	2	HEX NUT ISO 7040 M6 8 480H SPF	SECHSKANTMUTTER
32	10197771	2	WASHER ISO 7089 6 200HV ZNNI-480H SPF	SCHEIBE
34	965264808	1	SENSOR INSTALL.TELESCOP.MECHAN ⇨ ❑ 686	GEBERANBAU AUSSCHUBMEC
37	602007108	6	CLAMP-HALF DIN 3015-1 L 1 R 10 PP SW	KLEMMHAELFTE
38	10875592	4	SOCKET HEAD SCREW ISO 4762 M6X45 8.8	ZYLINDERSCHRAUBE
39	955917808	2	COVER RD74X4 S315MC FE//ZNNI8//CN//T0	DECKEL
40	955917908	4	SLEEVE RD.32X41 X12CRNIS188	HUELSE
41	955918008	2	SLEEVE 32X30	HUELSE
42	10289807	2	WASHER ISO 7089 18 300HV FLZN SPF	SCHEIBE
43	972260808	4	WASHER 1X50X50 DC01 FE//ZNNI8//CN//T0	SCHEIBE
46	10875597	4	SOCKET HEAD SCREW ISO 4762 M8X16 8.8	ZYLINDERSCHRAUBE
47	12218127	4	HEX NUT DIN 985 M12 10 FLZN SPF	SECHSKANTMUTTER

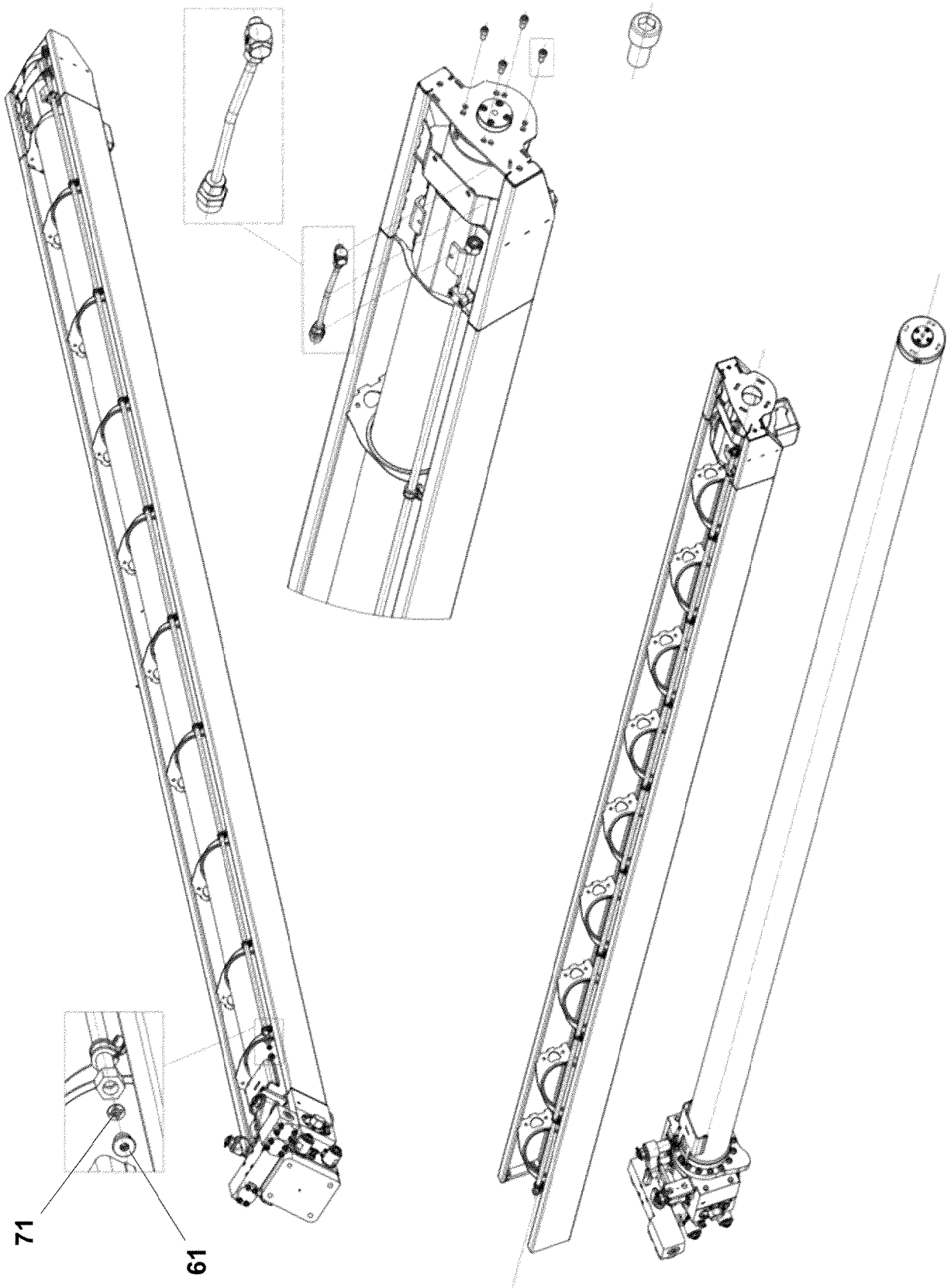
71
61

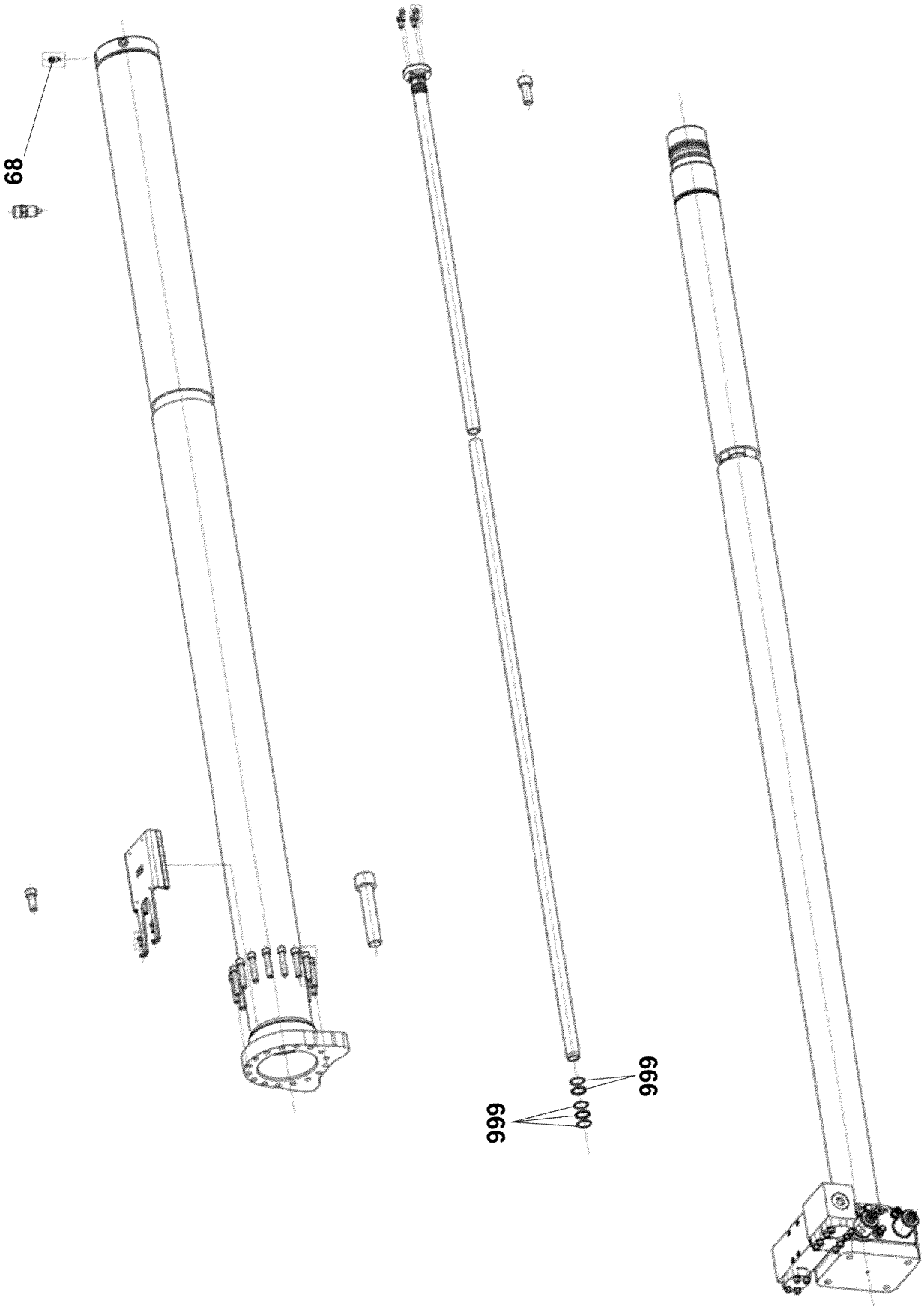
68
999
999

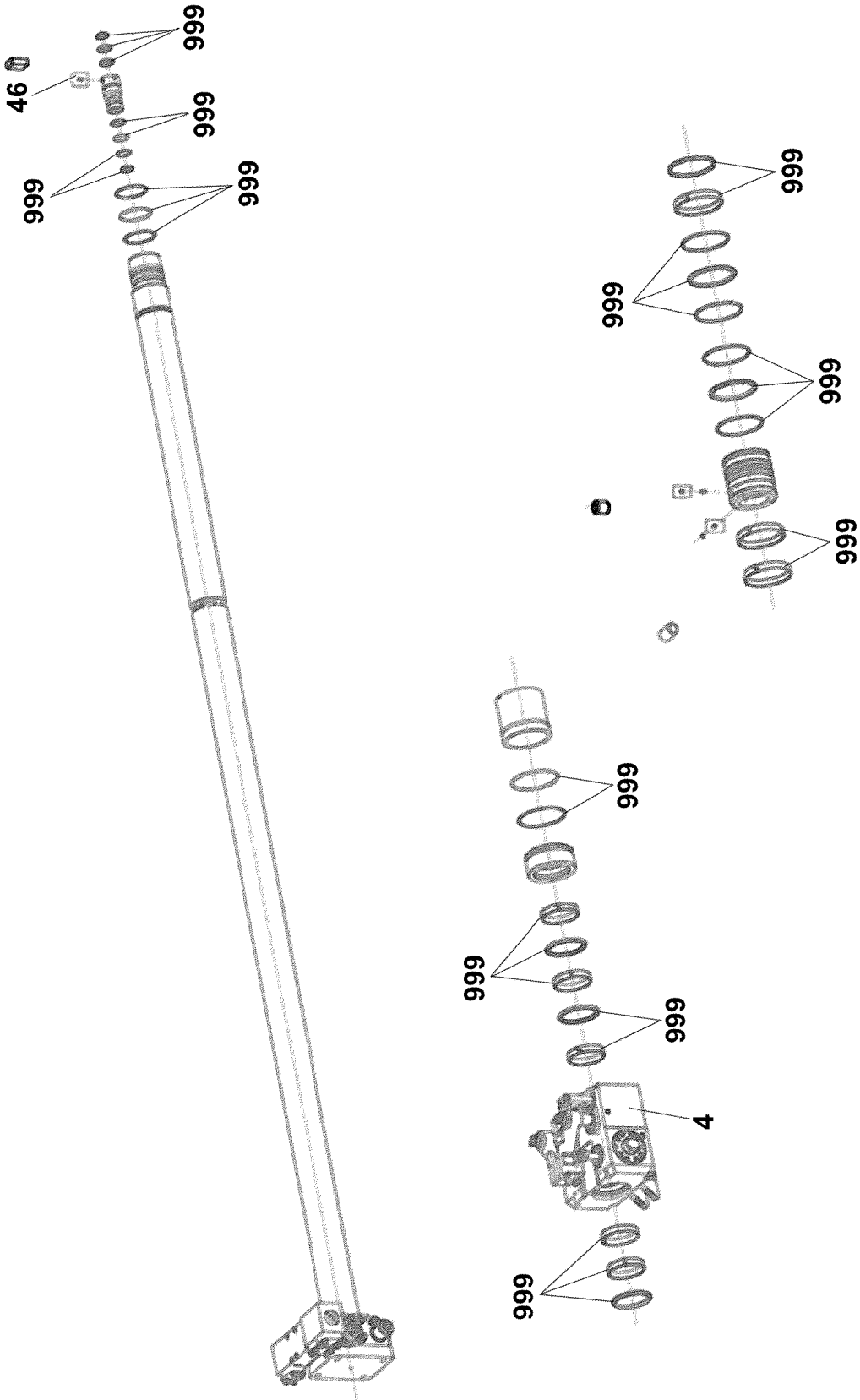
999
46
999
999
999
999
999
999
999
999
999
4
999

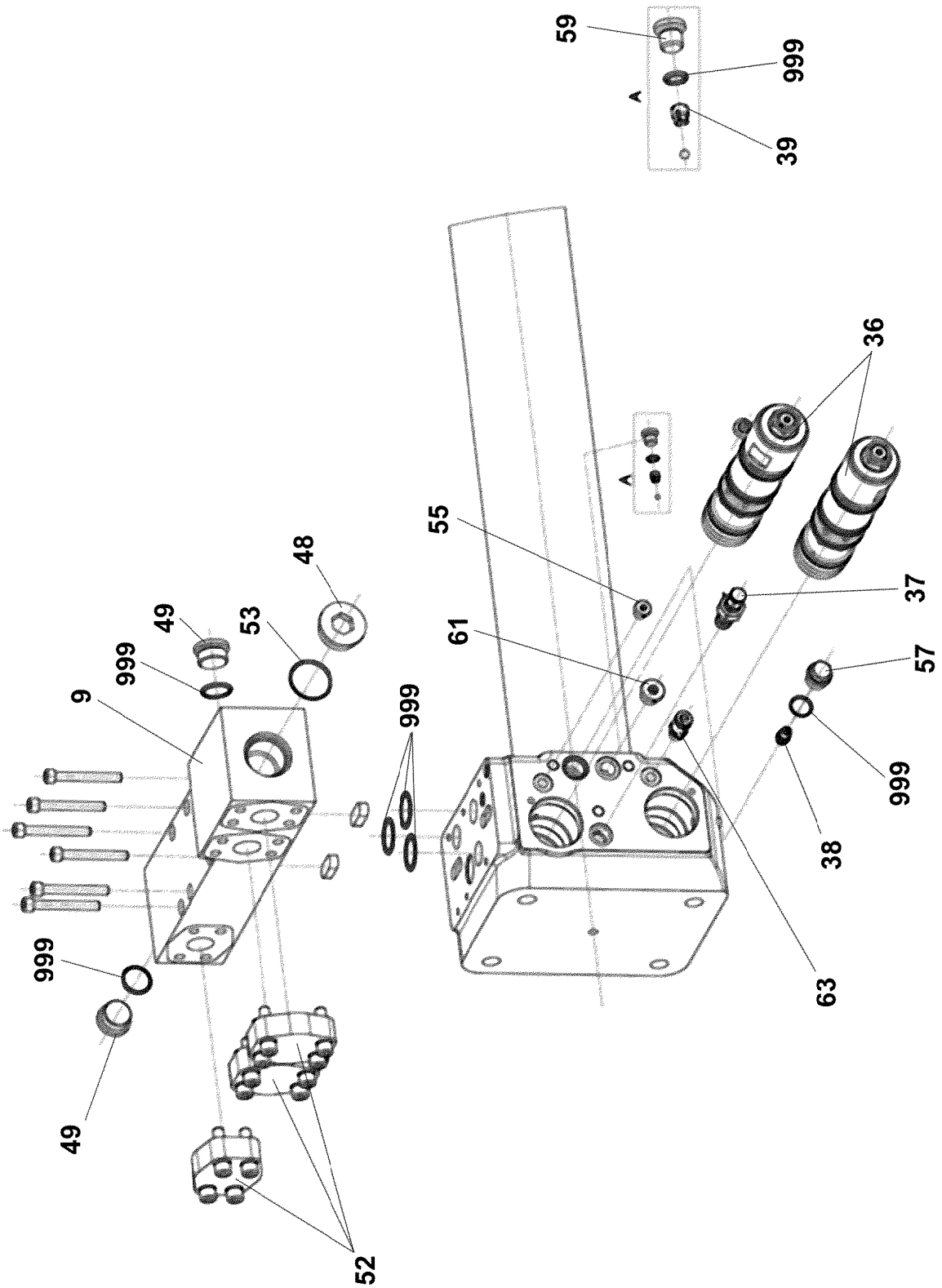
59
999
39
A
36
A
55
37
61
57
48
49
53
999
9
999
999
38
63
999
49
52

Pos.	Item	Quantity	Description	Bezeichnung
4	12107427	1	CYLINDER HEAD	ZYLINDERKOPF
(999)	12107426	1	SEAL KIT CYLINDER HEAD	DS ZYLINDERKOPF
9	11211226	1	CONNECTION BLOCK	ANSCHLUSSBLOCK
36	570960608	2	LOWERING BRAKE VALVE ⇨ ❑ 685	SENKBREMSVENTIL
37	571928308	1	PRESSURE LIMITING VALVE	DRUCKBEGRENZUNGSVENTIL
38	571689508	1	PRESSURE RELIEF VALVE 187BAR	UEBERDRUCKVENTIL
39	570435308	1	GRUB SCREW	GEWINDESTIFT
46	518565008	1	PLATE	BLECH
48	10650014	1	SCREW PLUG	VERSCHLUSSSCHRAUBE
49	10814445	2	SCREW PLUG M33X2	VERSCHLUSSSCHRAUBE
52	12107041	3	SAE FLANGE	SAE-FLANSCH
55	7361553	1	FITTING VSTI G1/4 CR6-FREI	VERSCHRAUBUNG
57	10493479	1	FITTING GEF.A M24X1,5	VERSCHRAUBUNG
59	10470377	1	SCREW PLUG G1/4X19	VERSCHLUSSSCHRAUBE
61	477704208	2	STOP PLUG VSTI G1/2A CR6-FREI	STOPFEN
63	10430230	1	TEST POINT FITTING G1/4"	MESSANSCHLUSS
68	10493944	1	VENTILATION VALVE	ENTLUEFTUNGSVENTIL
71	10877167	1	OIL FILTER INSERT OEL	OELFILTEREINSATZ
999	12107425	1	DS TELESCOPIC CYLINDER	DS TELESKOPZYLINDER

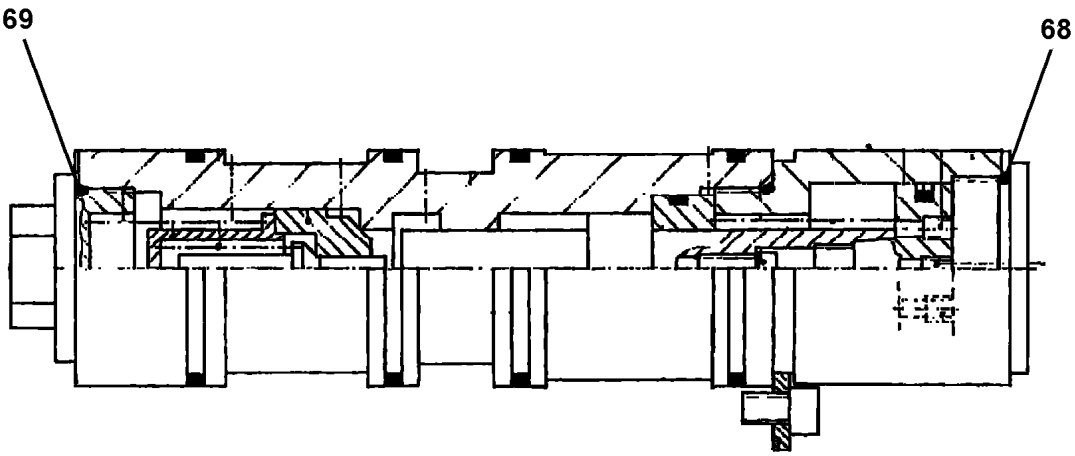

Pos.	Item	Quantity	Description	Bezeichnung
68	514618308	1	O-RING ARP 568 44,12X2,62 NBR90	O-RING
69	570242808	1	O-RING ARP 568 36,17X2,62 NBR80	O-RING
999	571561908	1	SEALING SET VALVE	DS VENTIL

Pos.	Item	Quantity	Description	Bezeichnung
6	10354584	6	INDUCTIVE SENSOR BERUEHRUNGSLOS	INDUKTIVSENSOR
7	692312708	2	INDUCTIVE SENSOR BERUEHRUNGSLOS	INDUKTIVSENSOR

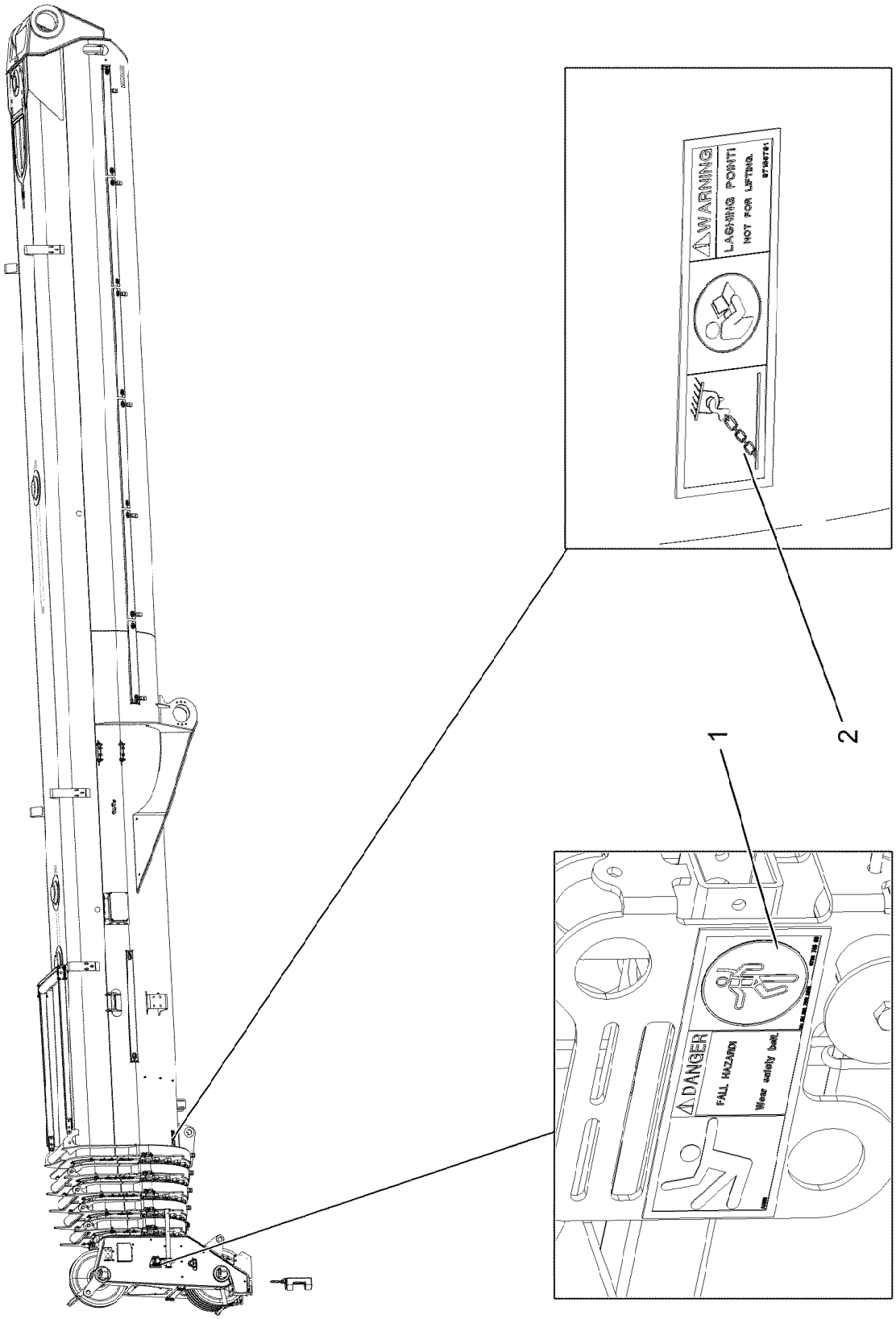
WARNING
LASHING POINT!
NOT FOR LIFTING.
DANGER
FALL HAZARD!
Wear safety belt.
1
2

Pos.	Item	Quantity	Description	Bezeichnung
1	978674808	1	SIGN 168X62 KLEBEFOLIE SPF	SCHILD
2	97155791	2	SIGN 158X50 KLEBEFOLIE SPF	SCHILD

Pos.	Item	Quantity	Description	Bezeichnung
1	96063954	1	ELECTRIC F.BASE SECTION ⇨ ❑ 690	ELEKTRIK ANLENKSTUECK
2	96063454	1	ELECTR. FOR HEAD SECTION ⇨ ❑ 701	ELEKTRIK KOPFSTUECK
3	96063455	1	ELECTR. F.EXTENDING MECHANISM ⇨ ❑ 705	ELEKTRIK AUSSCHUBMECHANI

Pos.	Item	Quantity	Description	Bezeichnung
1	96063456	1	TERMINAL BOX S900 ⇨ ❑ 691	KLEMMKASTEN
2	96063212	1	CABLE DRUM COMPL. ⇨ ❑ 695	LEITUNGSTROMMEL KPL.
10	966591408	1	LIMIT SWITCH ADD-ON AUSLEGERSTEIL ⇨ ❑ 700	ENDSCHALTER ANBAU

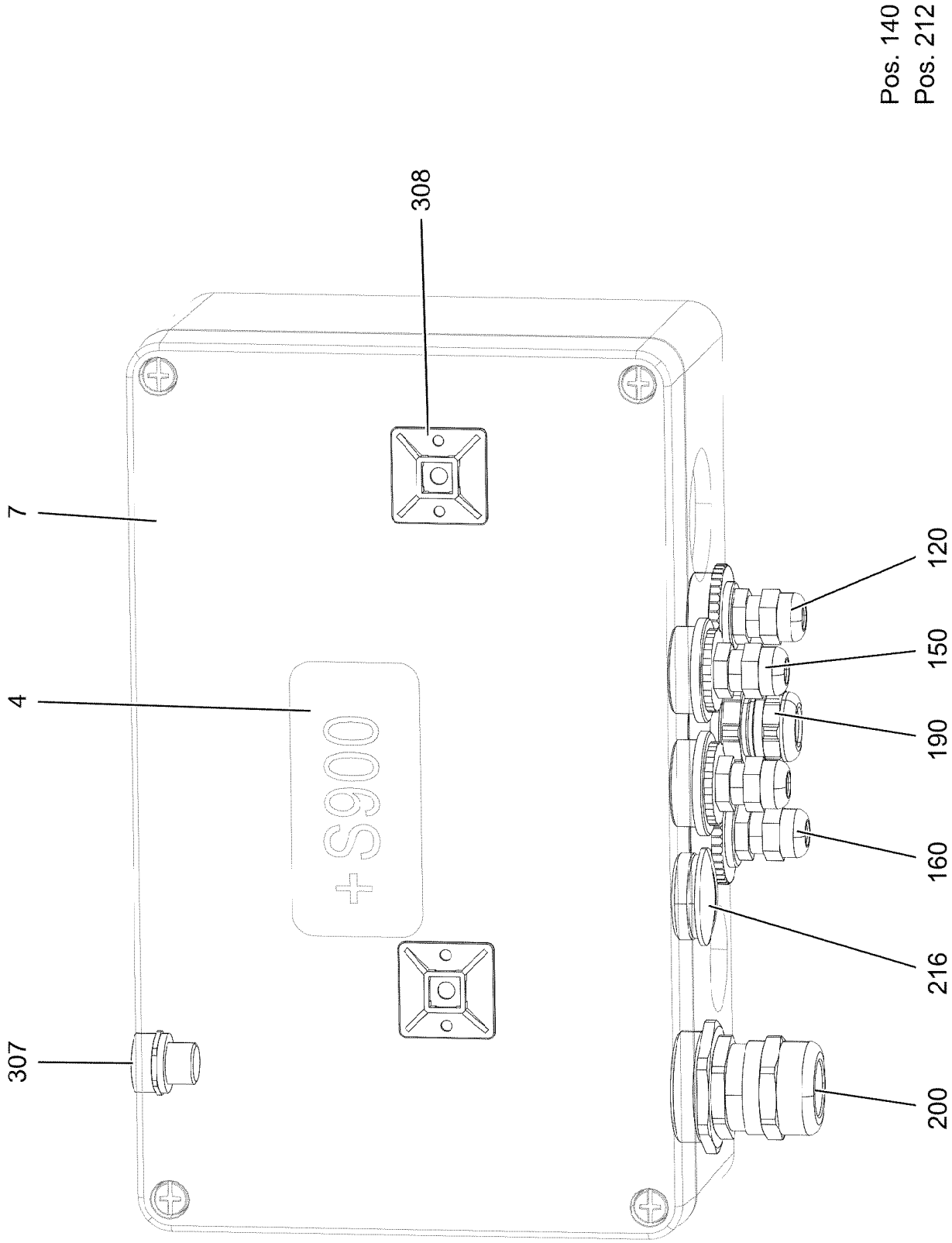
Pos. 140
Pos. 212
308
7
4
307
120
150
190
160
216
200
+S900

Pos.	Item	Quantity	Description	Bezeichnung
4	976917008	1	SIGN 80-38X0 LEXAN	SCHILD
7	97156873	1	EMPTY CASING 160X260X90X0 AL	LEERGEHAEUSE
120	96063843	1	LEAD W900	LEITUNG
140	96063849	1	LEAD W906	LEITUNG
150	96063864	1	WIRING HARNESS W917 ⇨ ❑ 693	KABELSTRANG
160	96063872	1	LEAD W921	LEITUNG
190	96063676	1	LEAD W911	LEITUNG
200	96063583	1	LEAD W912 ⇨ ❑ 694	LEITUNG
212	602425208	1	SCREW PLUG M32X1,5 MS	VERSCHLUSSSCHRAUBE
216	602425108	1	SCREW PLUG M25X1,5 MS	VERSCHLUSSSCHRAUBE
265	870002808	0.1	SEALANT A80MR HYLOMAR	DICHTMITTEL
307	11921782	1	PRESSURE COMPENSATION ELEMENT PA	DRUCKAUSGLEICHSELEMENT
308	10870511	2	CABLE CLIP HOLDER 28X28-NATUR PA6.6	KABELBINDERHALTER

Pos.	Item	Quantity	Description	Bezeichnung
5	680001708	1	COUPLING SOCKET 4-POL GERADE PVC SP	KUPPLUNGSDOSE
500	923512208	2	CABLE MARKER	KABELMARKER
501	602331308	1	HOUSING 4-POL	GEHAEUSE
502	602424008	1	CABLE GLAND M12X1,5X2-8 MS	KABELVERSCHRAUBUNG
503	602606108	1	REDUCTION M20X1,5/M12X1,5 MS	REDUKTION
504	602606408	1	REDUCTION M25X1,5/M20X1,5 MS	REDUKTION
690	10335820	4	SLEEVE CONTACT 0,2-0,5MM2	BUCHSENKONTAKT
998	965622208	2	LETTERING WIRING HARNESS	BESCHRIFTUNG KABELBAUM

Pos.	Item	Quantity	Description	Bezeichnung
5	12103084	2.67	CONTROL LEAD 19 X 1 SPF	STEUERLEITUNG
125	602300308	16	CONTACT 0,5-1MM2	KONTAKT
203	11082603	0.3	INSULATING HOSE DN8X0,65 PUR SPF	ISOLIERSCHLAUCH
204	11082604	0.22	INSULATING HOSE DN10X0,65 PUR SPF	ISOLIERSCHLAUCH
500	923512208	3	CABLE MARKER	KABELMARKER
501	12102916	1	BUSHING HOUSING 15-POL 20A	BUCHSENGEHAEUSE
502	602300208	1	PLUG SHELL 18-POL	STECKERGEHAEUSE
503	10874996	1	BUSHING HOUSING 15-POL 20A	BUCHSENGEHAEUSE
504	11697580	2	PROTECTING CAP HDSCS GROUP E 18	SCHUTZKAPPE
505	602606608	1	REDUCTION M32X1,5/M25X1,5 MS	REDUKTION
506	602424308	1	CABLE GLAND M25X1,5X11-20 MS	KABELVERSCHRAUBUNG
726	10493495	6	SLEEVE CONTACT 0,5-1,0MM2 CuNiSi	BUCHSENKONTAKT
753	10800631	10	SLEEVE CONTACT 0,5-1,0MM2 CuNiSi	BUCHSENKONTAKT
802	602330808	10	SINGLE STRAND SEALING 1,2-2,1MM BLAU	EINZELADERABDICHTUNG
806	602331108	12	STOPPER PLUG 3,6MM SILIKON WEIS	BLINDSTOPFEN
807	602329208	2	STOPPER PLUG AMP JPT-SERIE NA	BLINDSTOPFEN
830	10014387	6	SINGEL SEAL 1,0-1,5MM2	EINZELDICHTUNG
998	965622208	2	LETTERING WIRING HARNESS	BESCHRIFTUNG KABELBAUM

Pos.	Item	Quantity	Description	Bezeichnung
5	12104731	1	CABLE REEL 11+PE SPF ⇨ ❑ 696	LEITUNGSTROMMEL
6	96063213	1	LEAD W912A ⇨ ❑ 698	LEITUNG
7	96051215	1	CABLES, PRE-ASSEMBLED S902 ⇨ ❑ 699	DRAEHTE
10	12106335	1	SIGN SPF	SCHILD

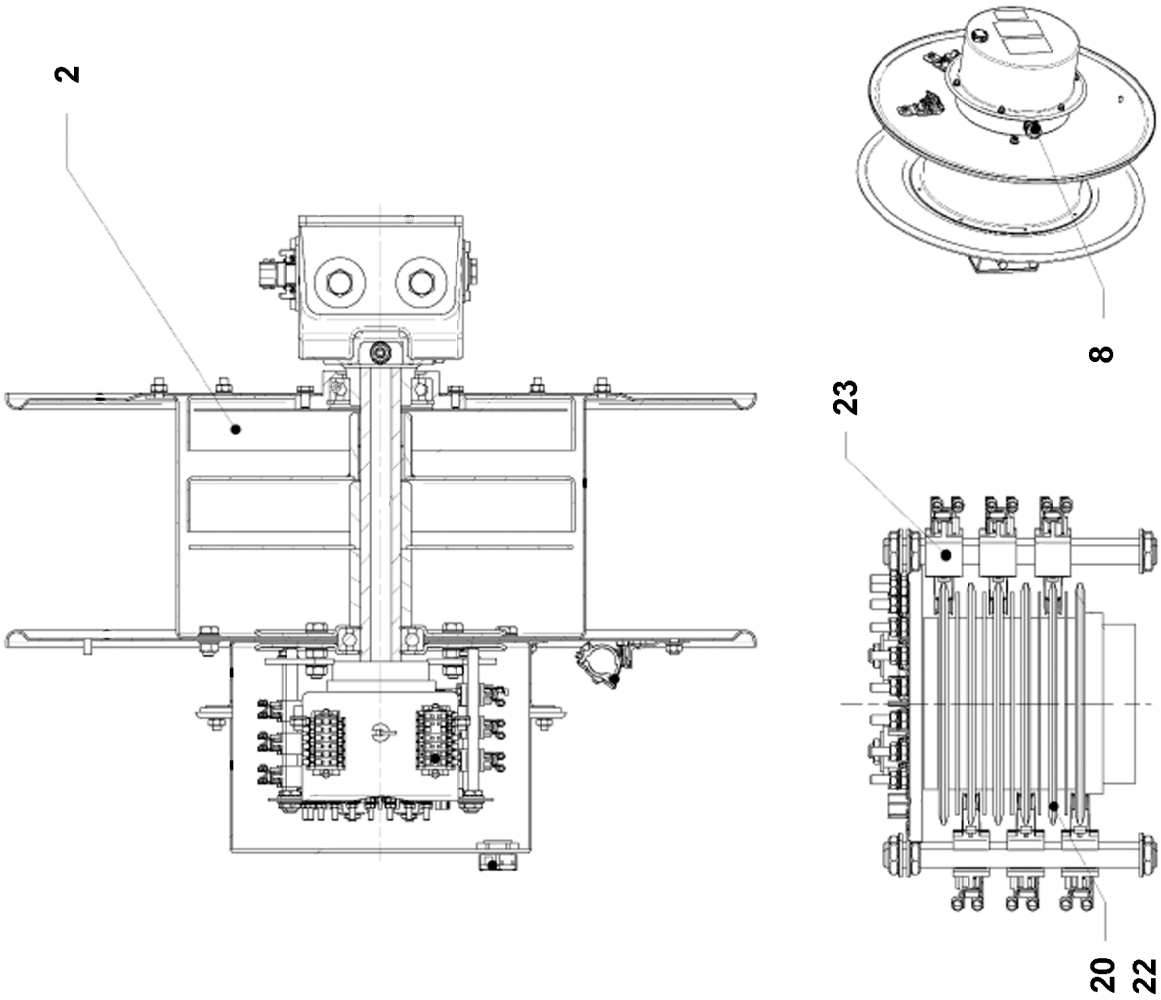
2
8
23
20
22

Pos.	Item	Quantity	Description	Bezeichnung
2	616200808	2	FLAT SPIRAL SPRING 552	SPIRALBLATTFEDER
8	12106198	1	FITTING M25X1,5	VERSCHRAUBUNG
20	12106200	6	SLIP RING 16A	SCHLEIFRING
22	12106201	6	SLIP RING 16A	SCHLEIFRING
23	10491892	6	CURRENT COLLECTOR	STROMABNEHMER

Pos.	Item	Quantity	Description	Bezeichnung
5	12104034	49.51	CONTROL LEAD 3+12 X 1,5X0,75 SPF	STEUERLEITUNG
63	602203708	10	RECEPTACLE FOR TABS 0,3-1,5MM2	FLACHSTECKHUELSE
64	602303208	3	RECEPTACLE 6,3X1,5-2,5	STECKHUELSE
205	11082605	0.1	INSULATING HOSE DN12X0,65 PUR SPF	ISOLIERSCHLAUCH
243	603016908	0.25	HEATSHRINK SLEEVING 27 - 8	SCHRUMPFSCHLAUCH
269	12104810	5	CABLE TIE 3,6X203-SCHWARZ PA66 SPF	KABELBINDER
352	600415208	0.23	ELECTR.CABLE 0,75	KFZ-LEITUNG
500	923512208	1	CABLE MARKER	KABELMARKER
501	602425608	1	CABLE GLAND M20X1,5 MS	KABELVERSCHRAUBUNG
502	602606408	1	REDUCTION M25X1,5/M20X1,5 MS	REDUKTION
503	602707308	1	CABLE SOCK 8-15 700	KABELSTRUMPF
504	773947708	1	CHAIN LOCK GALV.VERZ	KETTENVERSCHLUSS
505	602425208	1	SCREW PLUG M32X1,5 MS	VERSCHLUSSSCHRAUBE
658	10101686	3	WIRED END FERRULE DIN 46228-T4 1,5X8 P	ADERENDHUELSE
707	10473047	1	CABLE SLEEVE 1,9-2,5/1,75/0,5 SILIKON	KABELTUELLE
995	965617208	1	SHIELDING TIED BACK	ABSCHIRMUNG ZURUECKGEB
996	965622108	27	LETTERING WIRE	BESCHRIFTUNG ADER
998	965622208	2	LETTERING WIRING HARNESS	BESCHRIFTUNG KABELBAUM
2276	11520456	9	WIRED END FERRULE 0,75X8	ADERENDHUELSE
2312	602342101	1	WIRED END FERRULE 2X0,75mm²X8	ADERENDHUELSE

Pos.	Item	Quantity	Description	Bezeichnung
31	602306108	3	CABLE LUG M4/2,5mm² VERZ	KABELSCHUH
112	602218408	9	CABLE LUG M4/0,25-1,5MM² VERZINNT	KABELSCHUH
205	11082605	0.45	INSULATING HOSE DN12X0,65 PUR SPF	ISOLIERSCHLAUCH
305	10870540	9.75	ELECTR.CABLE 1,0	KFZ-LEITUNG
500	923512208	3	CABLE MARKER	KABELMARKER
501	10874995	1	FLAT PLUG HOUSING 15-POL 20A	FLACHSTECKERGEHAEUSE
502	12102915	1	FLAT PLUG HOUSING 15-POL 20A	FLACHSTECKERGEHAEUSE
503	10874992	2	DAMPERS HDSCS GROUP E	SCHIEBER
752	11008403	6	FLAT PLUG 0,5-1,0MM2 CUSN4	FLACHSTECKER
802	602330808	9	SINGLE STRAND SEALING 1,2-2,1MM BLAU	EINZELADERABDICHTUNG
806	602331108	12	STOPPER PLUG 3,6MM SILIKON WEIS	BLINDSTOPFEN
807	602329208	3	STOPPER PLUG AMP JPT-SERIE NA	BLINDSTOPFEN
830	10014387	6	SINGEL SEAL 1,0-1,5MM2	EINZELDICHTUNG
998	965622208	1	LETTERING WIRING HARNESS	BESCHRIFTUNG KABELBAUM
2223	11622890	9	FLAT PLUG 0,5-1,0MM2	FLACHSTECKER

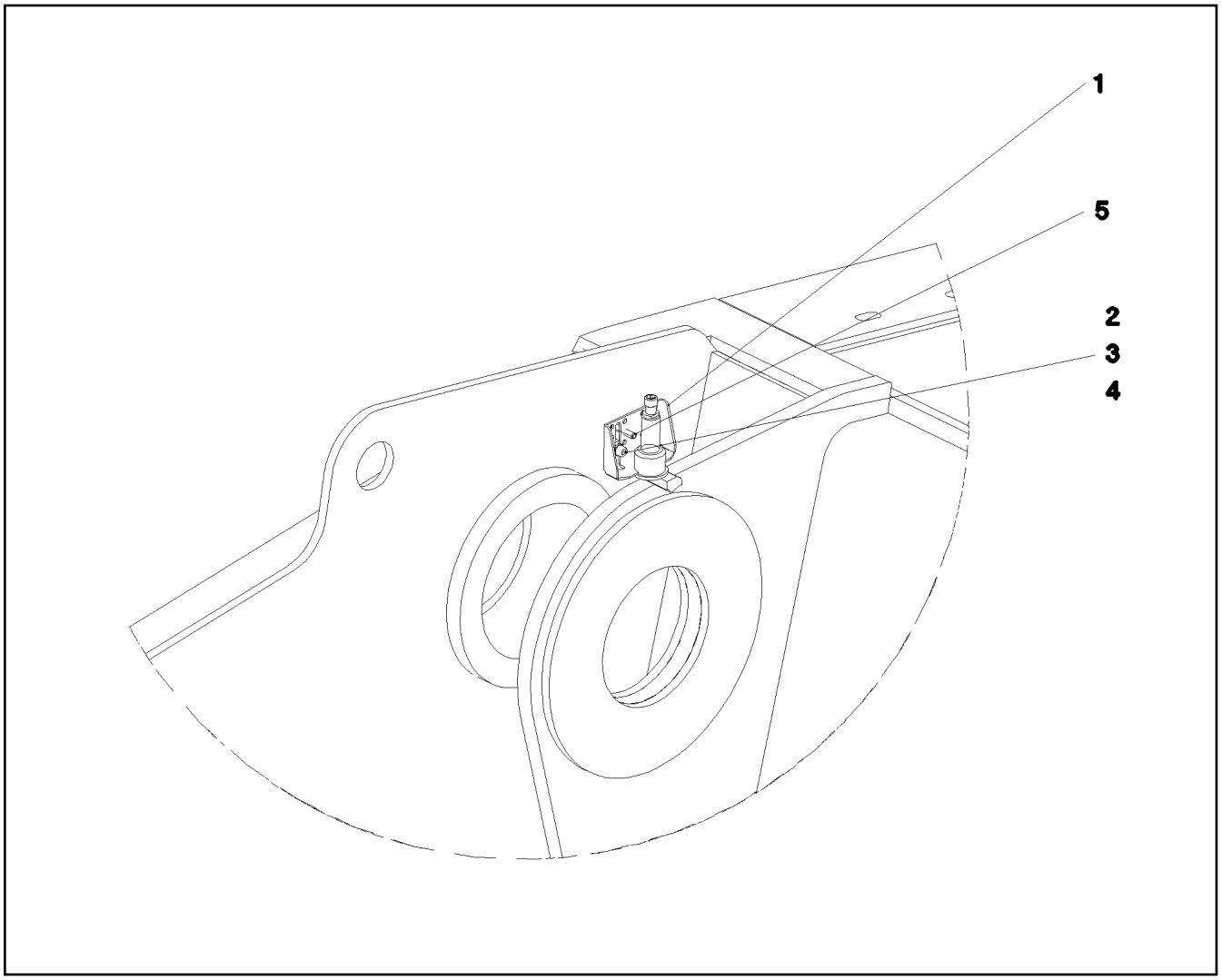

Pos.	Item	Quantity	Description	Bezeichnung
1	965371708	1	HOLDER X12CRNIS188	HALTER
2	10875857	2	CAGE NUT M6 NIROSTA	KAEFIGMUTTER
3	10197771	2	WASHER ISO 7089 6 200HV ZNNI-480H SPF	SCHEIBE
4	10875586	2	SOCKET HEAD SCREW ISO 4762 M6X16 8.8	ZYLINDERSCHRAUBE
6	966563508	1	LIMIT SWITCH AUSLEGERSTEIL	ENDSCHALTER AUSLEGER STEI
(5)	10354584	1	INDUCTIVE SENSOR BERUEHRUNGSLOS	INDUKTIVSENSOR

Pos.	Item	Quantity	Description	Bezeichnung
1	96063458	1	TERMINAL BOX CPL. S930 ⇨ ❑ 702	KLEMMKASTEN KPL.

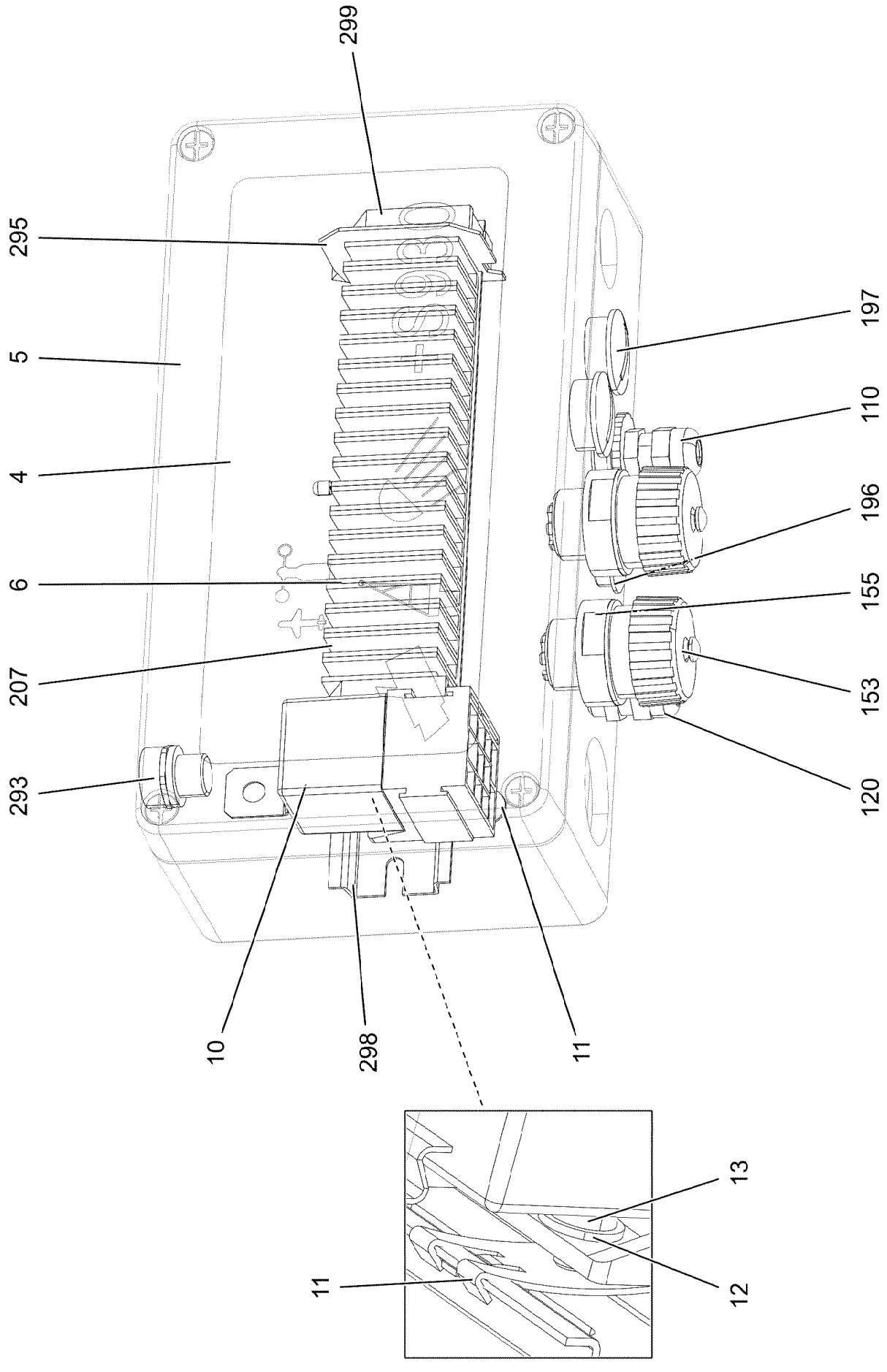
299
295
5
4
6
207
293
197
110
196
155
153
120
10
298
11
13
12
11

Pos.	Item	Quantity	Description	Bezeichnung
4	97128523	1	SIGN +S930 LEXAN	SCHILD
5	97153848	1	EMPTY CASING 120X220X80X0 AL	LEERGEHAEUSE
6	96062034	1	WIRES TERMINAL BOX CPL. S930 ⇨ ❑ 704	DRAEHTE KLEMMKASTEN KPL.
10	10878159	1	LSB MODULE	LSB-MODUL
11	10492256	1	SNAP FOOT	SCHNAPPFUSS
12	10197808	1	WASHER ISO 7089 5 200HV ZNNI-480H	SCHEIBE
13	10875472	1	PAN-HEAD SCREW ISO 7045 M4X6 4.8 480H	FLACHKOPFSCHRAUBE
110	96063559	1	LEAD W932	LEITUNG
120	96063561	1	LEAD W930	LEITUNG
153	604512108	2	SEALING PLUG M1-D	VERSCHLUSSKAPPE
155	10872381	2	TIN M1	DOSE
196	602425508	1	SCREW PLUG M12X1,5 MS	VERSCHLUSSSCHRAUBE
197	602425008	2	SCREW PLUG 15 M20X 1,5 MS	VERSCHLUSSSCHRAUBE
207	636184001	1	INDENTED TAPE PA	ZACKBAND
293	11921782	1	PRESSURE COMPENSATION ELEMENT PA	DRUCKAUSGLEICHSELEMENT
295	10286353	1	COVER	DECKEL
298	602106708	0.205	TOP HAT RAIL 35X27X7,3X1	HUTSCHIENE
299	602794608	2	END ANGLE	ENDWINKEL

Pos.	Item	Quantity	Description	Bezeichnung
2	96062040	1	WIRES PRE-ASS. S930	DRAEHTE VORM.
501	604526508	2	BUSHING SUPPORT 6-POL 16A	BUCHSENTRAEGER
502	10286354	18	TERMINAL/CLAMP 6,3/2,8X0,8MM²	KLEMME
503	630122908	1	PLUG BASE	RELAISSTECKSOCKEL
812	604518908	5	STOPPER PLUG BAUREIHE_M1	BLINDSTOPFEN

Pos.	Item	Quantity	Description	Bezeichnung
1	96063415	1	WIRING HARNESS W916 ⇨ ❑ 706	KABELSTRANG

Pos.	Item	Quantity	Description	Bezeichnung
5	680000008	1	COUPLING SOCKET 4-POLE SPF	KUPPLUNGSDOSE
6	680000008	1	COUPLING SOCKET 4-POLE SPF	KUPPLUNGSDOSE
7	680000308	1	COUPLING SOCKET 4-POLE 90° SPF	KUPPLUNGSDOSE
8	680000308	1	COUPLING SOCKET 4-POLE 90° SPF	KUPPLUNGSDOSE
9	680000308	1	COUPLING SOCKET 4-POLE 90° SPF	KUPPLUNGSDOSE
10	680000308	1	COUPLING SOCKET 4-POLE 90° SPF	KUPPLUNGSDOSE
11	680000308	1	COUPLING SOCKET 4-POLE 90° SPF	KUPPLUNGSDOSE
12	680000308	1	COUPLING SOCKET 4-POLE 90° SPF	KUPPLUNGSDOSE
85	602307908	2	WIRED END FERRULE DIN 46228-1 A0,75X5	ADERENDHUELSE
87	602308008	1	WIRED END FERRULE DIN 46228 1,5X7 TIN	ADERENDHUELSE
89	602308308	1	WIRED END FERRULE DIN 46228-1 A6X9 V	ADERENDHUELSE
201	11082601	0.37	INSULATING HOSE DN4X0,5 PUR SPF	ISOLIERSCHLAUCH
202	11082602	0.94	INSULATING HOSE DN6X0,5 PUR SPF	ISOLIERSCHLAUCH
203	11082603	0.83	INSULATING HOSE DN8X0,65 PUR SPF	ISOLIERSCHLAUCH
204	11082604	0.4	INSULATING HOSE DN10X0,65 PUR SPF	ISOLIERSCHLAUCH
227	11124210	0.35	CABLE CONDUIT DN35X0,6 PUR SPF	KABELSCHLAUCH
288	10429652	0.12	HEATSHRINK SLEEVING 12/2,5X2,0 POLYO	SCHRUMPFSCHLAUCH
345	10870539	5.21	ELECTR.CABLE 0,75	KFZ-LEITUNG
500	923512208	11	CABLE MARKER	KABELMARKER
501	12697283	1	PIN HOUSING 6-POL PBT GF SCHWARZ	STIFTGEHAEUSE
502	605210608	1	APPLIANCE SOCKET 2-POL+PE SPF	GERAETESTECKDOSE
503	11491349	1	PROTECTING CAP 180°	SCHUTZKAPPE
698	602308208	2	WIRED END FERRULE DIN 46228-1 A4X8	ADERENDHUELSE
752	11008403	6	FLAT PLUG 0,5-1,0MM2 CUSN4	FLACHSTECKER
813	605619708	1	SINGLE STRAND SEALING 2	EINZELADERABDICHTUNG
829	10007388	6	SINGEL SEAL 0,5-0,75MM2	EINZELDICHTUNG
998	965622208	2	LETTERING WIRING HARNESS	BESCHRIFTUNG KABELBAUM
2281	6002637	1	CABLE LUG aehnlich DIN 46237 8,4/0,5-1,5M	KABELSCHUH

Pos.	Item	Quantity	Description	Bezeichnung
4	965994108	1	HYDR.F.TELESCOPIC BOOM ⇨ ❑ 708	HYDRAULIK TELE

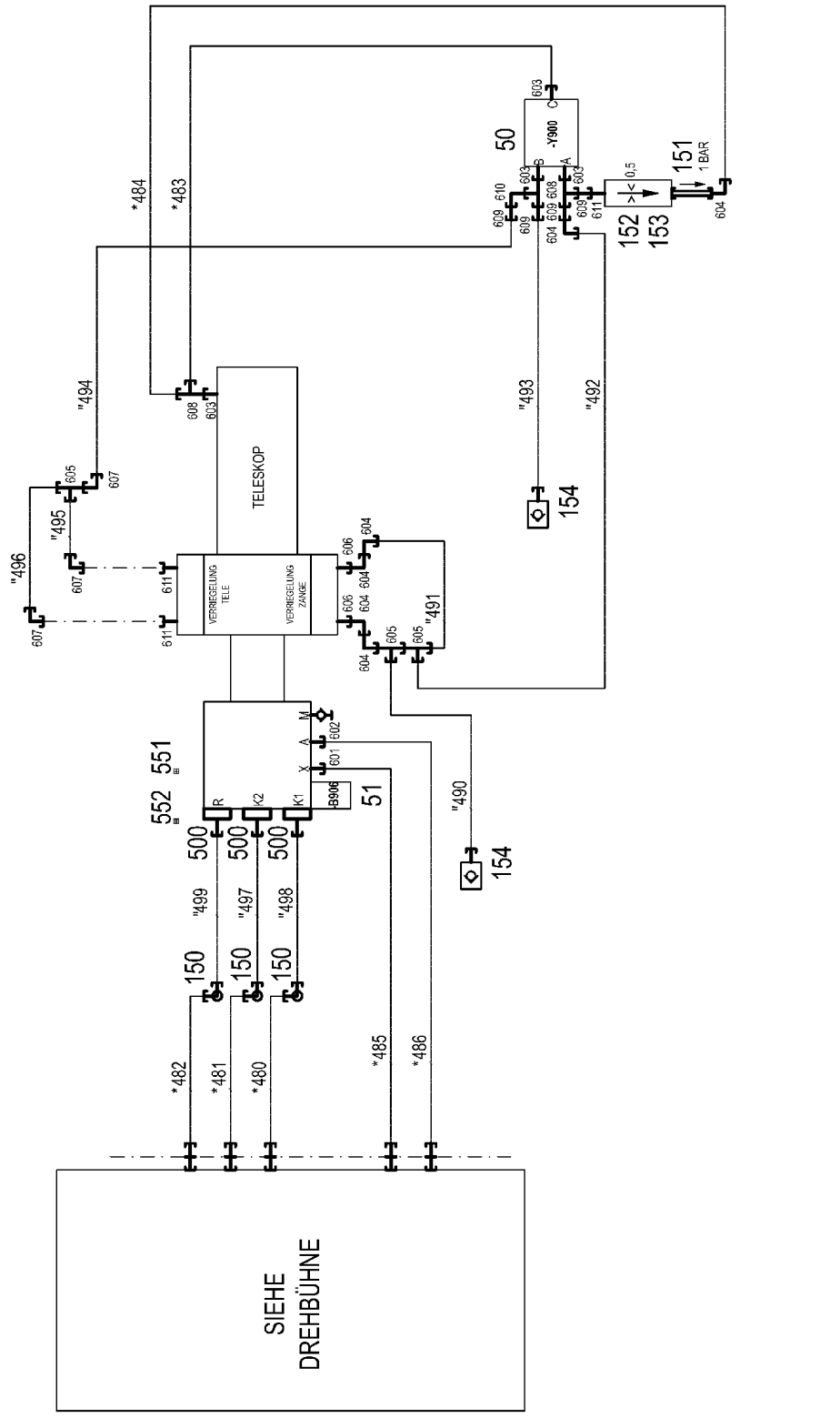
* Pos. 10
" Pos. 11
50
-Y900
151
1 BAR
152
153
154
TELESKOP
VERRIEGELUNG TELE
VERRIEGELUNG ZANGE
551
552
51
154
SIEHE DREHBÜHNE

Pos.	Item	Quantity	Description	Bezeichnung
10	967498108	1	HOSE LINES TELESCOPIC SCR ⇨ ❑ 710	SCHLAUCHLEITUNGEN TELE
11	967498308	1	PIPELINES TELESCOPIC SCR ⇨ ❑ 711	ROHRLEITUNGEN TELE
50	511493608	1	DIRECTIONAL CONTROL VALVE 3/2-320BA ⇨ ❑ 712	WEGEVENTIL
51	10813738	1	PRESSURE SENSOR 0-400/400 BAR LSB PL:	DRUCKAUFNEHMER
150	474234008	3	SWIVEL SCREW JOINT DG105 38S CF	DREHVERSCHRAUBUNG
151	511493708	1	NON-RETURN VALVE 400BAR 1BAR CR6-F	RUECKSCHLAGVENTIL
152	511062708	1	NOZZLE 0,5 M5X9 MS	DUESE
153	510671108	1	FILTER CARTRIDGE 0,005m³/min 25µm	FILTERPATRONE
154	511515008	2	COUPLING PLUG B2 10-L	KUPPLUNGSSTECKER
500	511517808	3	FLANGE STUB PIPE AFG 38S G1 1/4 CR6-F	FLANSCHSTUTZEN
551	510586708	3	O-RING ARP 568 37,69X3,53 NBR90	O-RING
552	12691448	12	SOCKET HEAD SCREW ISO 4762 M14X40 8	ZYLINDERSCHRAUBE
601	471032108	1	FITTING GE 6S G1/4A CR6-FREI	VERSCHRAUBUNG
602	471033208	1	FITTING XGE16-SR-ED CR6-FREI	VERSCHRAUBUNG
603	471034808	4	FITTING GE 12L G1/2 CR6-FREI	VERSCHRAUBUNG
604	7403569	6	FITTING EW 10L M16X1,5 CR6-FREI	VERSCHRAUBUNG
605	472330208	3	FITTING EL 10L CR6-FREI	VERSCHRAUBUNG
606	7362091	2	FITTING ISO 8434-1 GE 10L G1/4A CR6-FREI	VERSCHRAUBUNG
607	470230308	3	FITTING XW10-L CR6-FREI	VERSCHRAUBUNG
608	247128602	3	L NECK EL 12L M18X1,5 CR6-FREI	L-STUTZEN
609	475431408	4	FITTING REDSD12/10-L CR6-FREI	VERSCHRAUBUNG
610	247117702	1	SWIVEL ELBOW EW 12L M18X1,5 CR6-FREI	WINKELSTUTZEN
611	471901108	3	FITTING EGESD10-LR-WD CR6-FREI	VERSCHRAUBUNG

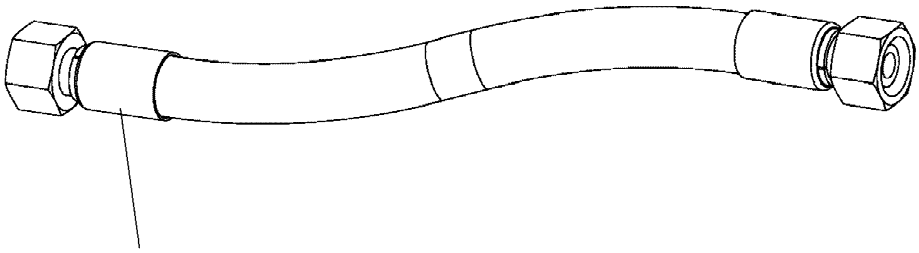

Schlauchnummer
Hose number
Numéro de flexible
Número de flexible
Номера шланга

Die Schlauchnummern auf den Schläuchen entsprechen den Positionen in der Schlauchliste.

The hose numbers from the hoses are in accordance with the items in the hose list.

Les numéros indiqués sur les flexibles correspondent aux repères de la nomenclature des flexibles.

Los números indicados en los flexibles corresponden a las posiciones de la lista de flexibles.

Нанесенные на шлангах номера соответствуют позициям в перечне.

Pos.	Item	Quantity	Description	Bezeichnung
480	928753308	1	HOSE CPL. GH506 31X2000	SCHLAUCH KPL.
481	925519008	1	HOSE CPL. GH506 31X1900	SCHLAUCH KPL.
482	925519008	1	HOSE CPL. GH506 31X1900	SCHLAUCH KPL.
483	929361408	1	HOSE CPL. 2SN 8X330	SCHLAUCH KPL.
484	921536708	1	HOSE CPL. 2SN 8X260	SCHLAUCH KPL.
485	962257308	1	HOSE CPL. 2SN 6X2900	SCHLAUCH KPL.
486	924505508	1	HOSE CPL. 2SN 12X3000	SCHLAUCH KPL.

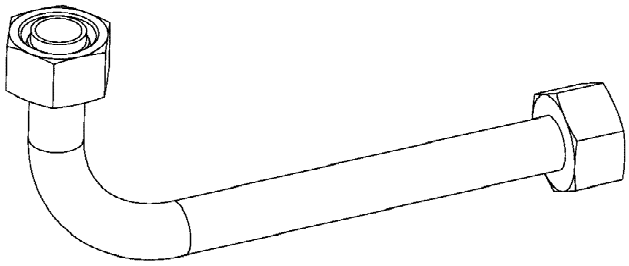

Die Positionsnummern der Rohre auf den Bildtafeln entsprechen den Positionen in der Rohrliste.

The pipe numbers from the illustrations are in accordance with the items in the pipe list.

Les numéros des tuyaux sur les illustrations correspondent aux repères de la nomenclature des tuyaux.

Los números de tubos en las ilustraciones corresponden a las posiciones de la lista de tubos.

Номера позиций труб на изображениях соответствуют позициям в перечне труб.

Pos.	Item	Quantity	Description	Bezeichnung
490	921512608	1	PIPE COMPL. 10X1,5X214	ROHR KPL.
491	921512708	1	PIPE COMPL. 10X1,5X134	ROHR KPL.
492	921512808	1	PIPE COMPL. 10X1,5X679	ROHR KPL.
493	921512908	1	PIPE COMPL. 10X1,5X992	ROHR KPL.
494	921513008	1	PIPE COMPL. 10X1,5X167	ROHR KPL.
495	921513108	1	PIPE COMPL. 10X1,5X174	ROHR KPL.
496	921513208	1	PIPE COMPL. 10X1,5X278	ROHR KPL.
497	921297408	1	PIPE COMPL. 38X5X203	ROHR KPL.
498	921297508	1	PIPE COMPL. 38X5X258	ROHR KPL.
499	921297608	1	PIPE COMPL. 38X5X206	ROHR KPL.

Ausführung NEU (Rund)
ab 2023

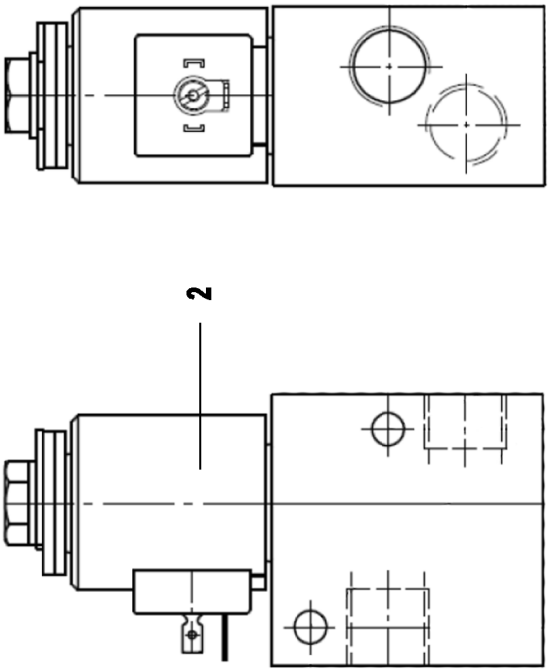

Ausführung ALT (Eckig)
bis 2023

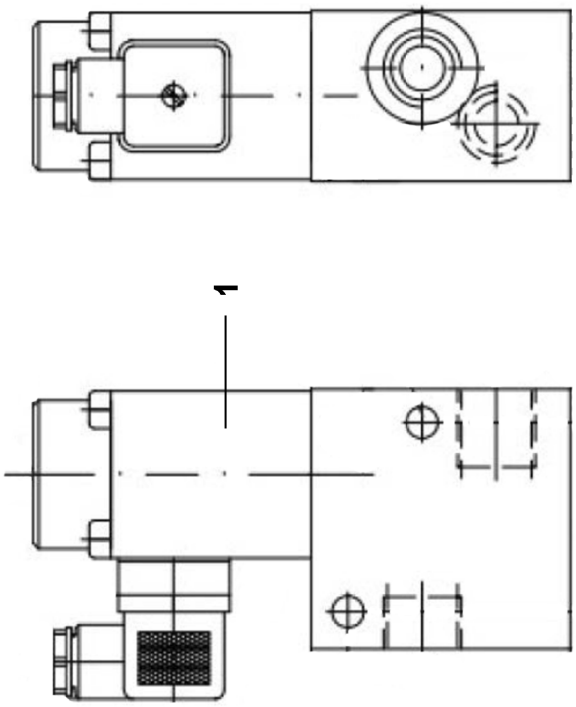

Ausführung NEU (Rund)
ab 2023

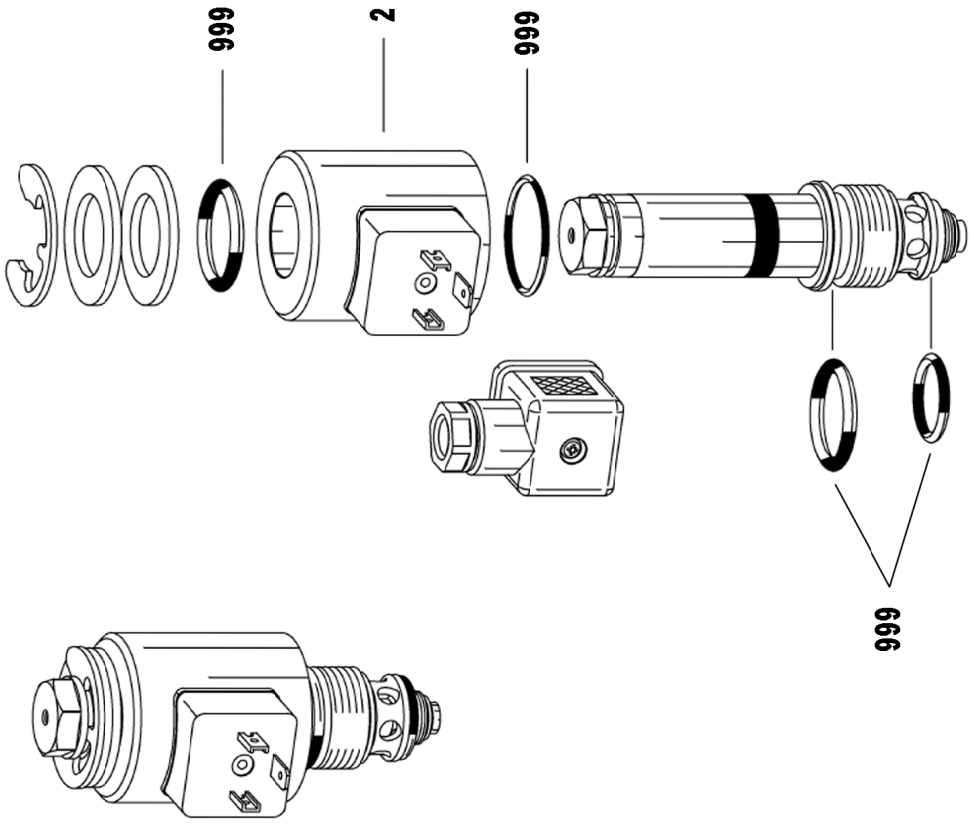

Pos.	Item	Quantity	Description	Bezeichnung
1	571135508	1	MAGNET 24V	MAGNET
2	12109319	1	MAGNET	MAGNET
999	12105942	1	SEAL KIT	DICHTSATZ

Pos.	Item	Quantity	Description	Bezeichnung
4	966004808	1	ADDNL.HYDR. FOLDING JIB ⇨ ❑ 716	ZUSATZHYDRAULIK KLAPPSPI

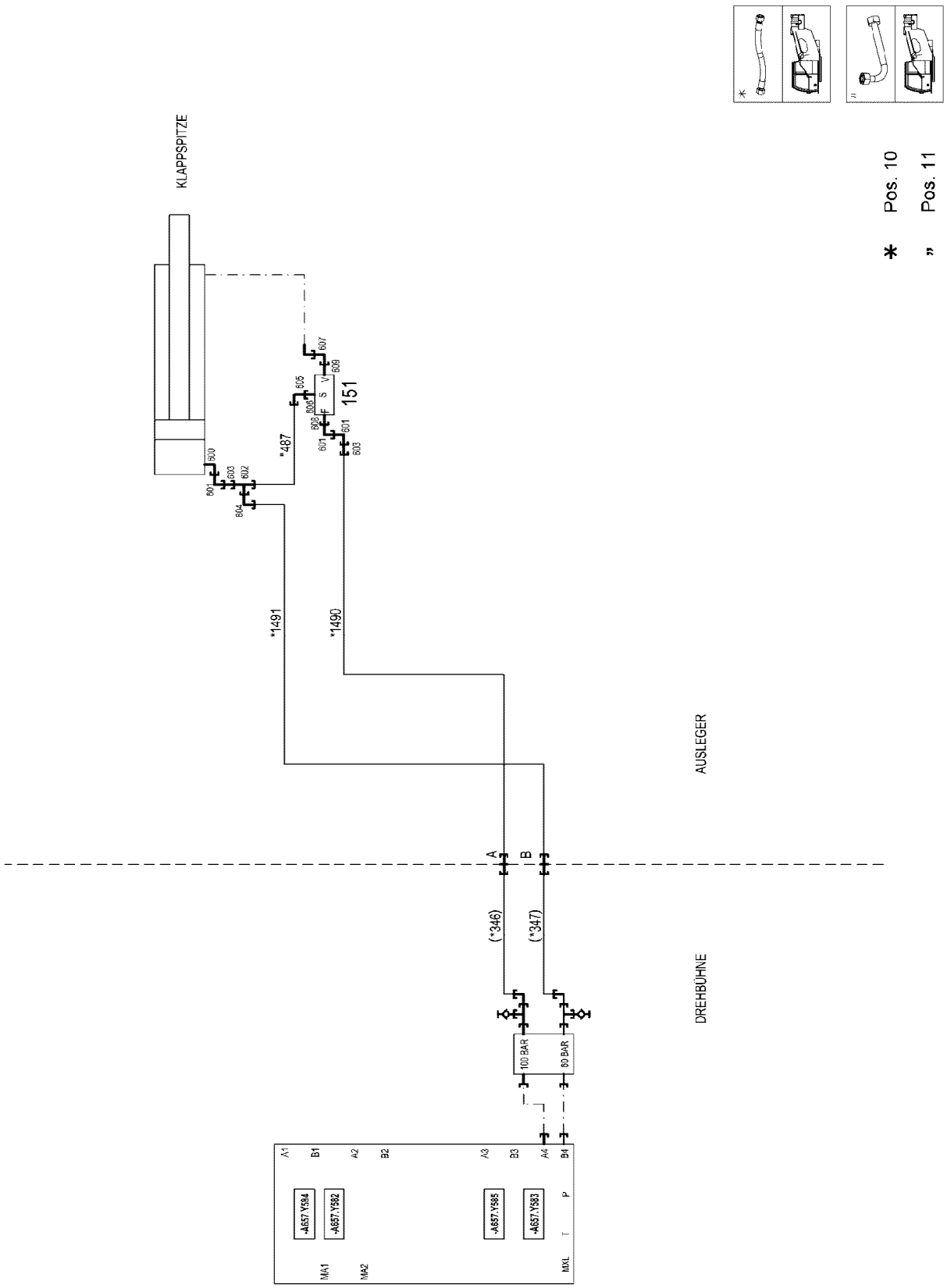
KLAPPSPITZE
AUSLEGER
DREHBÜHNE
151
*487
*1491
*1490
(*346)
(*347)
100 BAR
60 BAR
-A657.Y584
-A657.Y582
-A657.Y585
-A657.Y583
A1
B1
A2
B2
A3
B3
A4
B4
MA1
MA2
MXL
T
P
A
B
* Pos. 10
" Pos. 11

Pos.	Item	Quantity	Description	Bezeichnung
10	967498508	1	HOSE LINES FOLDING JIB SCR ⇨ ❑ 718	SCHLAUCHLEITUNGEN KLAPPS
11	967498608	1	PIPE COND. FOLDING SEAT SCR	ROHRLEITUNGEN KLAPPSPITZ
(487)	962261308	1	PIPE COMPL. 6X1X210	ROHR KPL.
151	511479408	1	LOAD HOLDING VALVE ⇨ ❑ 719	LASTHALTEVENTIL
600	473210508	1	FITTING RSWS10-SM-WD CR6-FREI	VERSCHRAUBUNG
601	7617268	3	FITTING EW 10S CR6-FREI	VERSCHRAUBUNG
602	472331208	1	FITTING EL 6S CR6-FREI	VERSCHRAUBUNG
603	475432008	2	FITTING REDSDN10/6-S CR6-FREI	VERSCHRAUBUNG
604	472531508	1	FITTING EW 6S M14X1,5 CR6-FREI	VERSCHRAUBUNG
605	247021702	1	SWIVEL ELBOW EW 6L CR6-FREI	WINKELSTUTZEN
606	471030008	1	FITTING XGE6-LR-ED CR6-FREI	VERSCHRAUBUNG
607	7617354	1	FITTING EW 12S CR6-FREI	VERSCHRAUBUNG
608	471032808	1	FITTING ISO 8434-1 GE 10S G3/8A CR6-FRE	VERSCHRAUBUNG
609	471900508	1	FITTING EGE 12S G3/8A CR6-FREI	VERSCHRAUBUNG

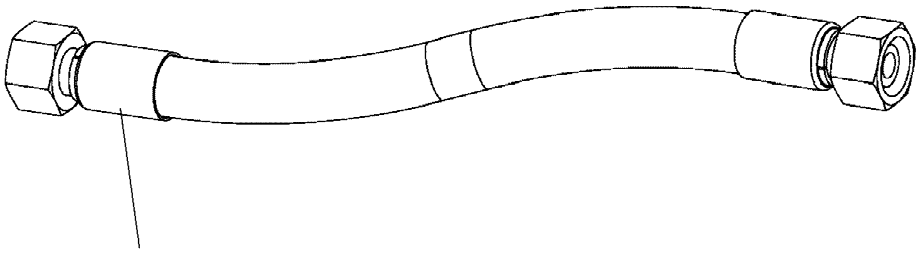

Schlauchnummer
Hose number
Numéro de flexible
Número de flexible
Номера шланга

Die Schlauchnummern auf den Schläuchen entsprechen den Positionen in der Schlauchliste.

The hose numbers from the hoses are in accordance with the items in the hose list.

Les numéros indiqués sur les flexibles correspondent aux repères de la nomenclature des flexibles.

Los números indicados en los flexibles corresponden a las posiciones de la lista de flexibles.

Нанесенные на шлангах номера соответствуют позициям в перечне.

Pos.	Item	Quantity	Description	Bezeichnung
1490	962258008	1	HOSE CPL. 2SN 6X11750	SCHLAUCH KPL.
1491	962258008	1	HOSE CPL. 2SN 6X11750	SCHLAUCH KPL.

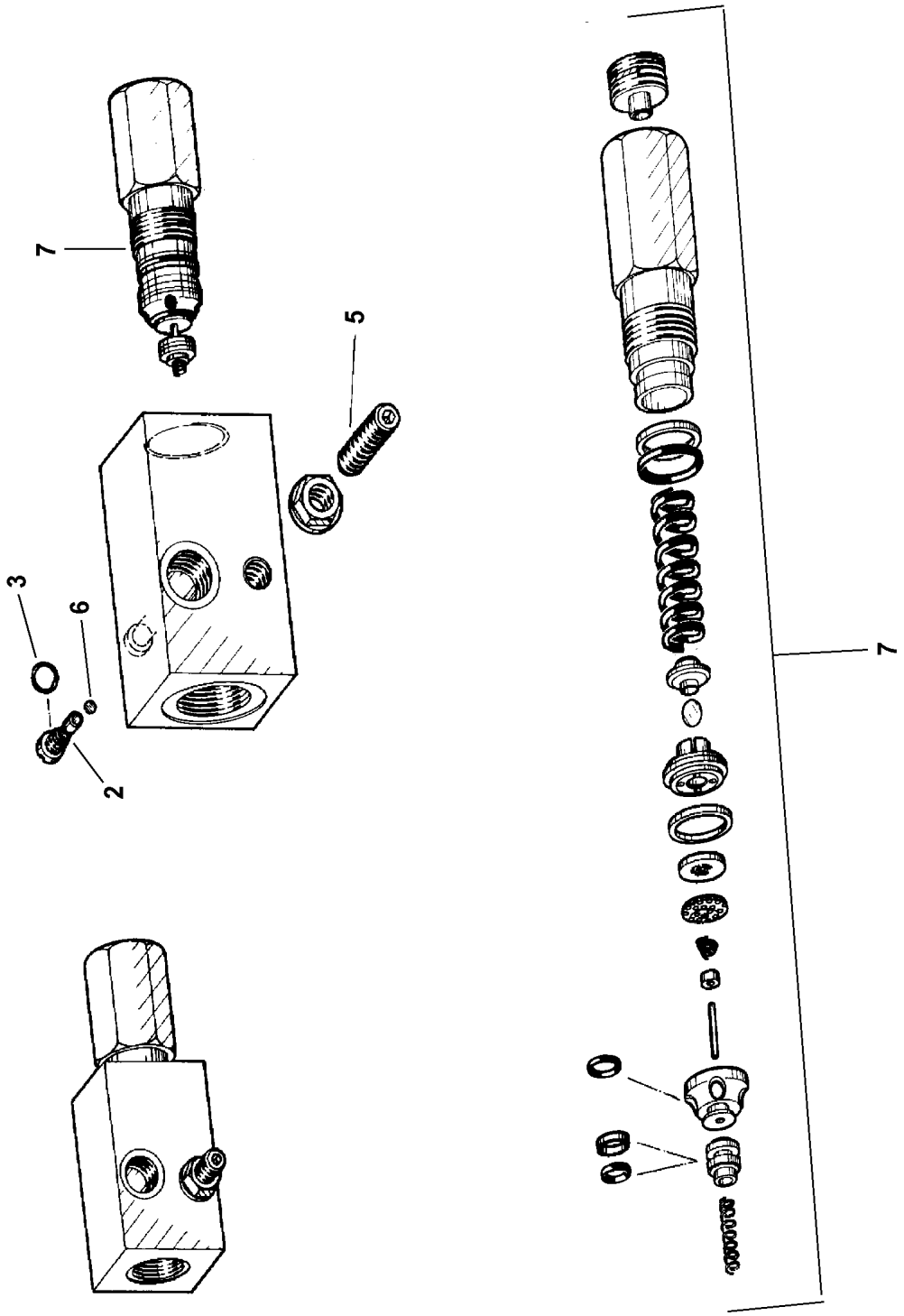
7
5
3
6
2
7

Pos.	Item	Quantity	Description	Bezeichnung
2	570941408	1	SCREW	SCHRAUBE
3	510712308	1	O-RING 4X1 NBR90	O-RING
5	404400508	1	GRUB SCREW DIN 913 M6X25 45H VERZ	GEWINDESTIFT
6	610706308	1	BALL DIN 5401 3	KUGEL
7	11002678	1	LOAD RETAINING VLV ELEMENT,CPL	LASTHALTEVENTILEINSATZ

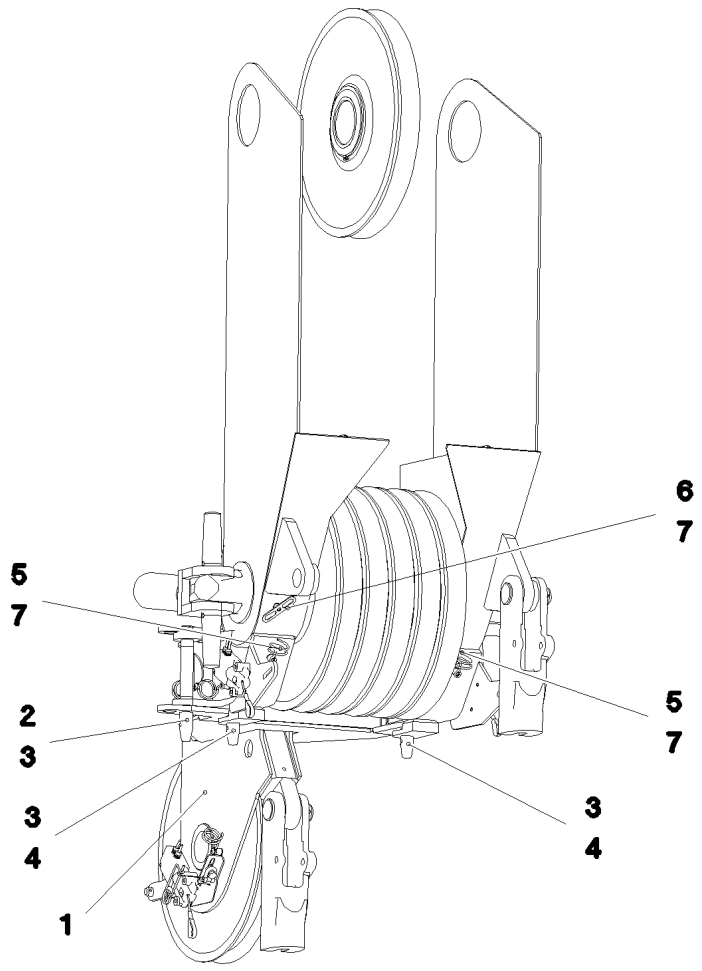

Pos.	Item	Quantity	Description	Bezeichnung
1	964502908	1	BOOM NOSE PRE-ASS. ⇨ ❑ 722	MASTNASE VORM.
2	10875873	1	SPLIT PIN ISO 1234 8X63 ST 480H SPF	SPLINT
3	973635308	3	PIN 35.0X264 35NICRMOV125 GASN. SPF	BOLZEN
4	433100908	2	RETAINING SPRING 4,5X98 ISO 2081 FE/ZN	SICHERUNGSFEDER
5	720014408	4	CABLE CLAMP 4X40X67 1.4310	KABELHALTER
6	953650008	1	CABLE CLAMP DC01 FE//ZNNI8//CN//T0	KABELHALTER
7	12102696	5	BUTTON HEAD SCREW AEHNL.ISO 7380-2	HALBRUNDKOPFSCHRAUBE
8	967695508	1	SIGNS MASTNASE ⇨ ❑ 724	BESCHILDERUNG

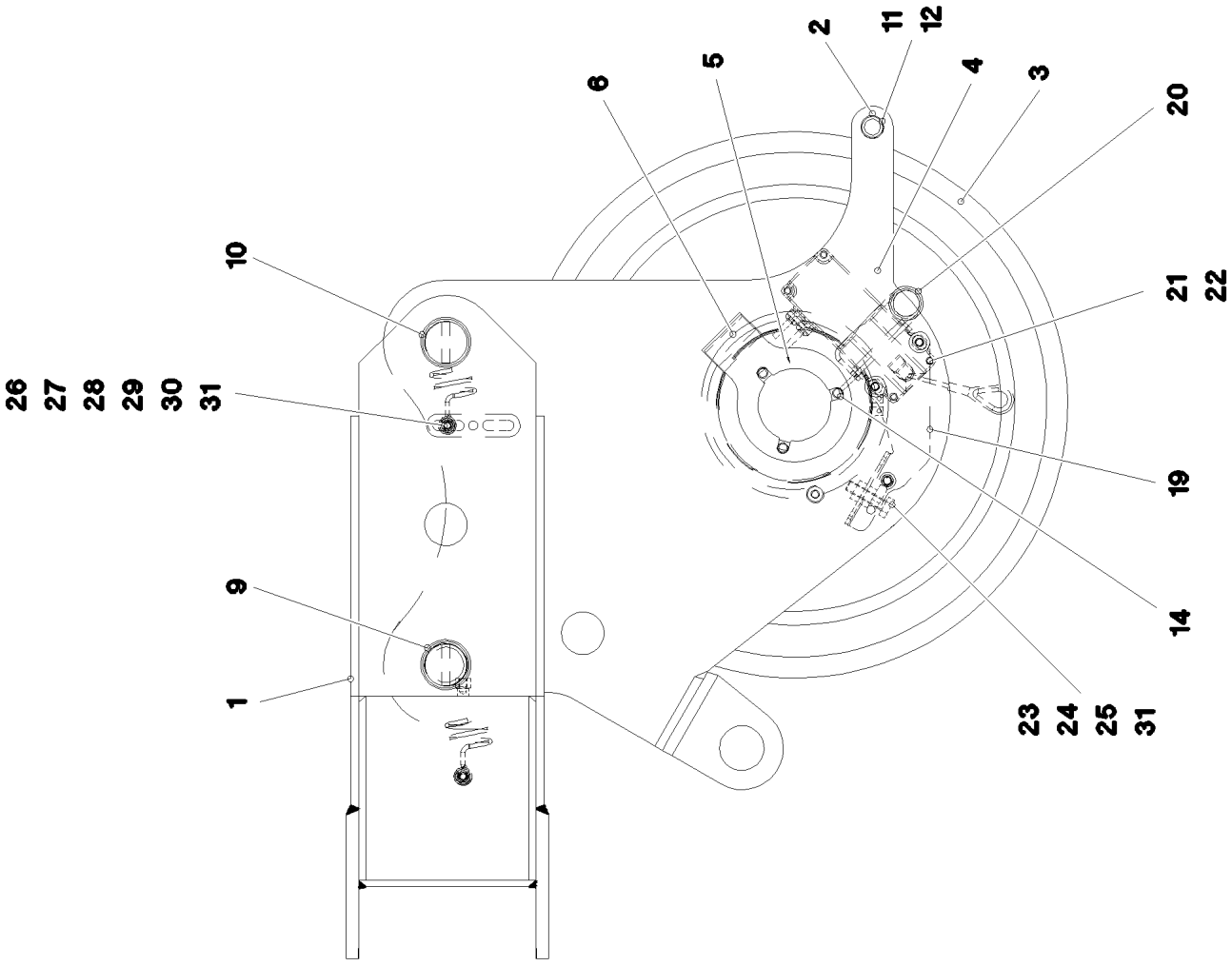

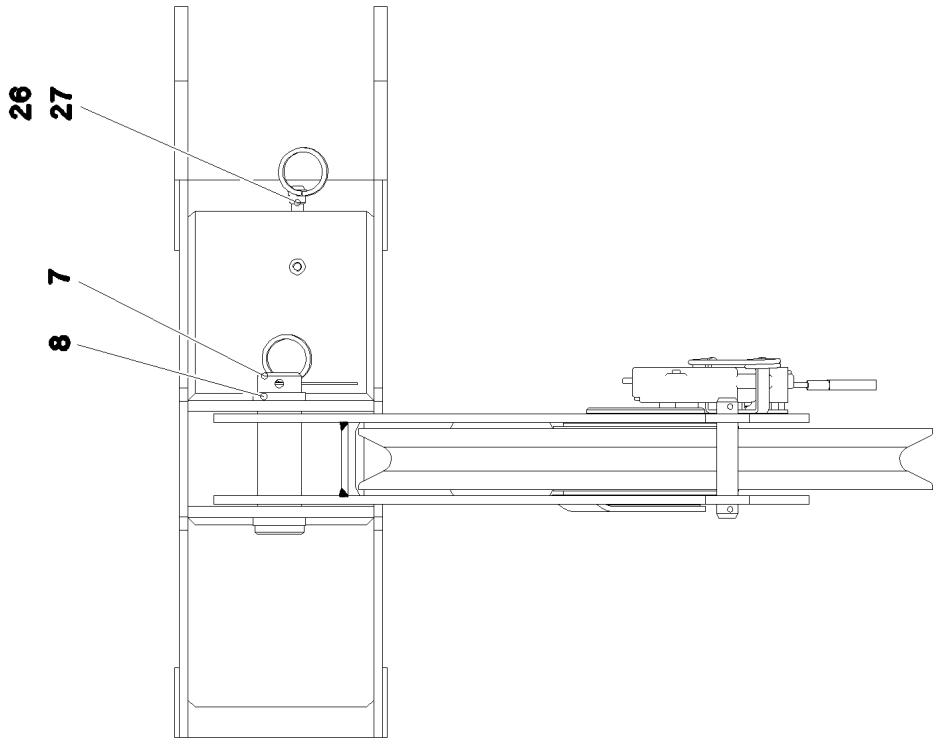

16.11.2023 047322 LIEBHERR	**etk_en_de_078966 LTR 1100** **BOOM NOSE PRE-ASS.** **MASTNASE VORM.**	❑ 722 (1/2) **964502908**

Pos.	Item	Quantity	Description	Bezeichnung
1	928659608	1	BOOM NOSE WELDED CONSTRUCTION	MASTNASE SCHWK.
2	452540908	1	PIN ISO 2340 B20X110X94 ST.50-2K FE//ZN	BOLZEN
3	964283508	1	ROPE PULLEY CPL. SPF ⇨ ❑ 675	SEILROLLE KPL.
4	967708808	1	ROLLER CLAMP WELDED	ROLLENHALTER SCHWK.
5	955560208	1	AXLE 108.0X92 S355J2H FE//ZNNI8//CN//T0	ACHSE
6	955560308	1	PLATE 5X110X154 S355MC FE//ZNNI8//CN//T	BLECH
7	940315108	2	PIN RD40X140 35NICRMOV125 GASN. SPF	BOLZEN
8	970501108	4	DISTANCE RING 48.3 X0 S235JRH FE//ZNNI	DISTANZRING
9	10875873	1	SPLIT PIN ISO 1234 8X63 ST 480H SPF	SPLINT
10	433102508	1	RETAINING SPRING 5X122 ISO 2081 FE/ZN8/	SICHERUNGSFEDER
11	10180354	1	SPLIT PIN ISO 1234 4X40 St 480H SPF	SPLINT
12	433101208	1	RETAINING SPRING 4X68 ISO 2081 FE/ZN8/	SICHERUNGSFEDER
14	11652470	3	HEX SCREW ISO 4017 M10X16 8.8 FLZN SP	SECHSKANTSCHRAUBE
19	971135808	1	PLATE 3X111X222 DC01 FE//ZNNI8//CN//T0	BLECH
20	433101208	1	RETAINING SPRING 4X68 ISO 2081 FE/ZN8/	SICHERUNGSFEDER
21	12100292	2	GRUB SCREW ISO 4026 M8X50 8.8 480H SP	GEWINDESTIFT
22	11693875	2	HEX NUT ISO 4032 M8 8 480H SPF	SECHSKANTMUTTER
23	773933508	1	SHACKLE DIN 82101 0,25T NG0,25 ST VERZ	SCHAEKEL
24	11626706	1	HEX SCREW ISO 4017 M10X40 8.8 FLZN SP	SECHSKANTSCHRAUBE
25	12102695	2	HEX NUT ISO 4032 M10 8 ZNNI-480H SPF	SECHSKANTMUTTER
26	720014408	2	CABLE CLAMP 4X40X67 1.4310	KABELHALTER
27	12102696	3	BUTTON HEAD SCREW AEHNL.ISO 7380-2	HALBRUNDKOPFSCHRAUBE
28	953650008	1	CABLE CLAMP DC01 FE//ZNNI8//CN//T0	KABELHALTER
29	410120308	1	HEX NUT ISO 4035 M8 04 A2C	SECHSKANTMUTTER
30	12215977	1	WING SCREW DIN 316 M8X16 4.6 480H SPF	FLUEGELSCHRAUBE
31	11140469	3	WASHER ISO 7093-1 8 200HV 480H SPF	SCHEIBE

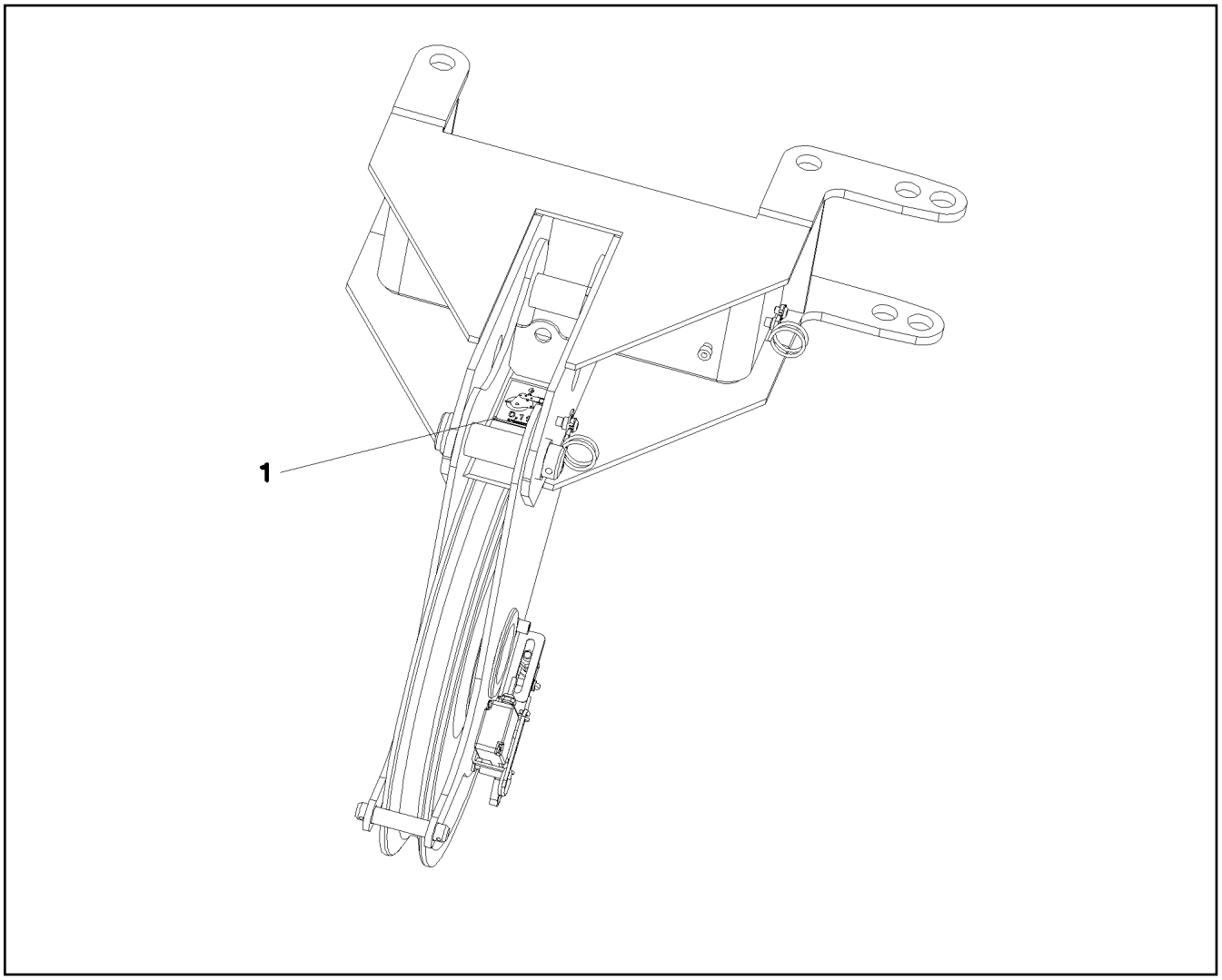

Pos.	Item	Quantity	Description	Bezeichnung
1	97025520	1	SIGN 85X55 SPF	SCHILD

Pos.	Item	Quantity	Description	Bezeichnung
6	965965108	1	LEAD W931	LEITUNG
10	10678395	1	LIMIT SWITCH TQ200-RFID SPF	ENDSCHALTER
11	967321308	1	FIXING DEVICE 2.LIFT TOP ⇨ ❑ 726	HALTERUNG 2.HUB OBEN
500	927234408	1	ADD-ON PARTS	ANBAUTEILE
(10)	602008108	4	CLAMP-HALF DIN 3015-1 L 2 G 15 PP SW	KLEMMHAELFTE
(12)	10875588	2	SOCKET HEAD SCREW ISO 4762 M6X25 8.8	ZYLINDERSCHRAUBE
(15)	602018008	2	CARRIER RAIL NUT DIN 3015-1 L TM M6 W1	TRAGSCHIENENMUTTER

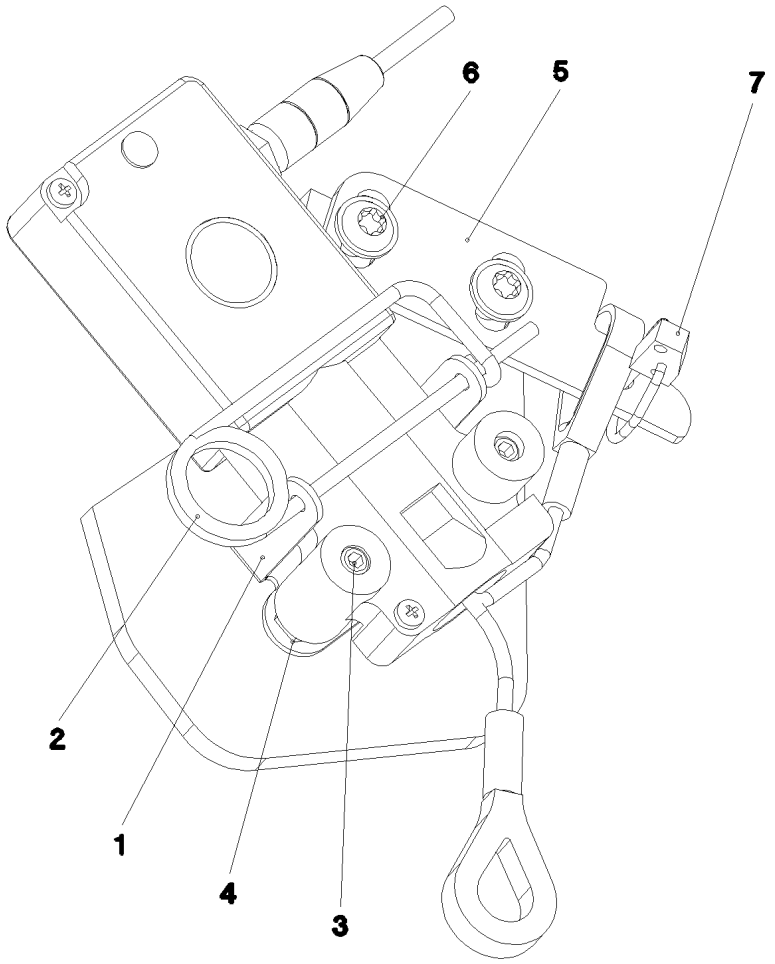

Pos.	Item	Quantity	Description	Bezeichnung
1	971067708	1	PLATE 2X155X38 DC01 FE//ZNNI8//CN//T0	BLECH
2	433101208	1	RETAINING SPRING 4X68 ISO 2081 FE/ZN8/	SICHERUNGSFEDER
3	12100292	2	GRUB SCREW ISO 4026 M8X50 8.8 480H SP	GEWINDESTIFT
4	11693875	2	HEX NUT ISO 4032 M8 8 480H SPF	SECHSKANTMUTTER
5	979132008	1	PLATE 110X34 S315MC FE//ZNNI8//CN//T0	BLECH
6	12102696	2	BUTTON HEAD SCREW AEHNL.ISO 7380-2	HALBRUNDKOPFSCHRAUBE
7	10875869	1	SAFETY PLUG W HINGE-LID 5X29X4,7X25 4	SICHERHEITSKLAPPSTECKER

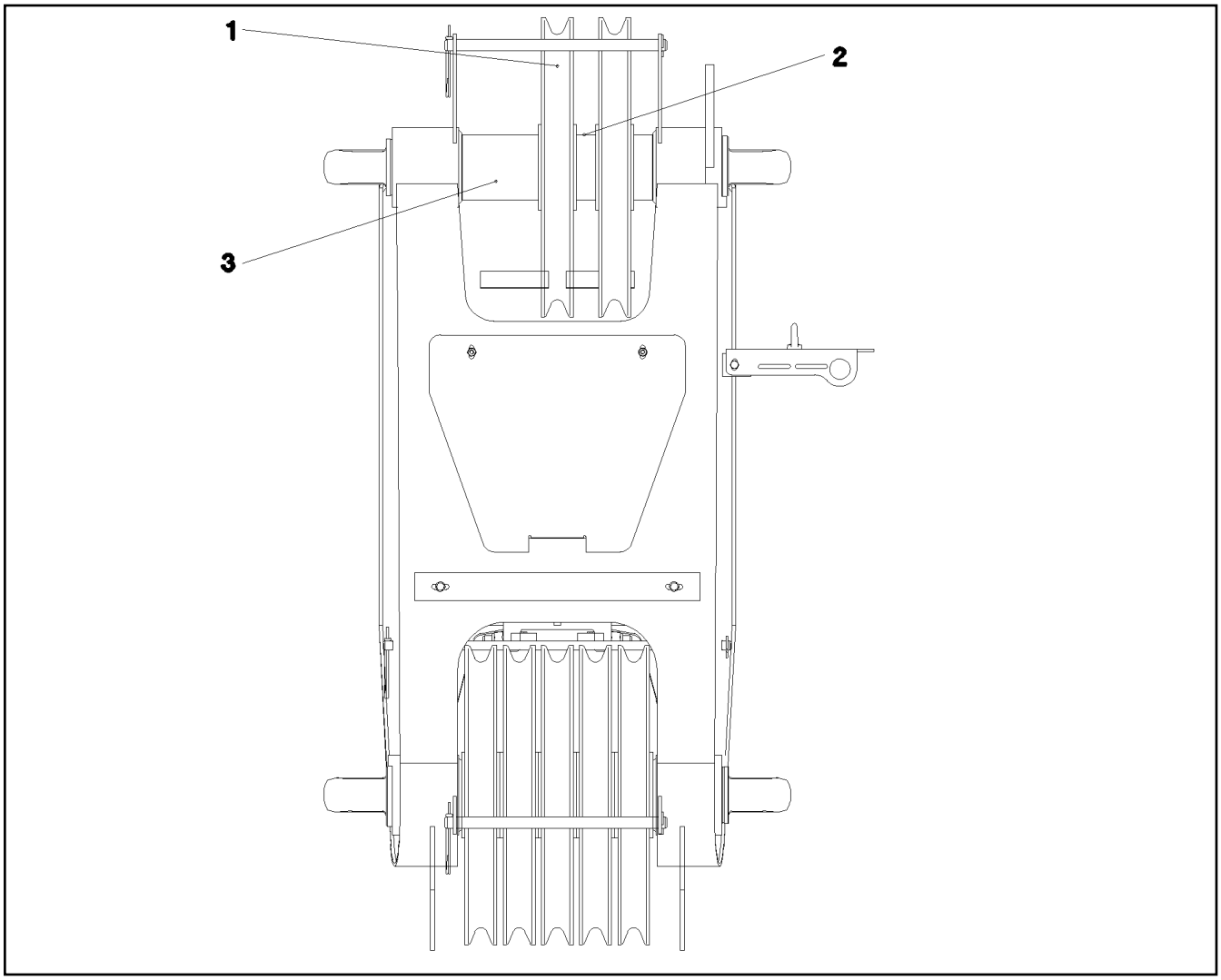

Pos.	Item	Quantity	Description	Bezeichnung
1	927310008	1	ROPE PULLEY CPL. SPF ⇨ ❑ 677	SEILROLLE KPL.
2	940380008	1	DISTANCE TUBE RD114,3X6,3X33 S355J2H	DISTANZROHR
3	953162308	1	TUBE 114,3X6,3X132 S355J2H FE//ZNNI8//C	ROHR

Pos.	Item	Quantity	Description	Bezeichnung
1	96058737	1	ELECTRIC MEASURING & WARN DEV WW+ ⇨ ❑ 729	ELEKTRIK MESS-U.WARNEINRIC
2	96056273	1	MECH MEAS AND WARNING DEVICE WW+F ⇨ ❑ 732	MECHANIK MESS-U.WARNEINR

Pos.	Item	Quantity	Description	Bezeichnung
1	96058738	1	WIRING HARNESS W933Y ⇨ ❑ 730	KABELSTRANG
2	12102807	1	WIND VELOCITY TRANSMITTER 0-50M/S SP ⇨ ❑ 731	WINDGESCHWINDIGKEITSGEBE
3	7621780	1	LASHING STRAP 0,35MX18MM	ZURRGURT

Pos.	Item	Quantity	Description	Bezeichnung
5	10871285	2.46	LEAD 7 G 1	LEITUNG
6	11481973	1	COUPLING SOCKET 5-POL GERADE SPF	KUPPLUNGSDOSE
213	10871063	2	PROTECTIVE HOSE DN16XNORMAL PP	SCHUTZSCHLAUCH
500	923512208	3	CABLE MARKER	KABELMARKER
501	604526608	1	PIN CARRIER 6-POL 16A	STIFTTRAEGER
502	604526508	1	BUSHING SUPPORT 6-POL 16A	BUCHSENTRAEGER
503	604508508	1	SEALING PLUG M 1-K	VERSCHLUSSKAPPE
504	10476383	1	PLUG M1	STECKER
505	12105979	1	CABLE GLAND M20X1,5 MS	KABELVERSCHRAUBUNG
506	604509408	1	CABLE SLEEVE 8-10	KABELTUELLE
507	604505508	1	CABLE SOCKET M11-Z	KABELDOSE
508	604512108	1	SEALING PLUG M1-D	VERSCHLUSSKAPPE
628	604519208	3	PIN CONTACT 0,75-1MM2	STIFTKONTAKT
629	604519308	7	SLEEVE CONTACT 0,75-1,0MM2	BUCHSENKONTAKT
637	604519108	4	PIN CONTACT 1,5MM2	STIFTKONTAKT
998	965622208	2	LETTERING WIRING HARNESS	BESCHRIFTUNG KABELBAUM

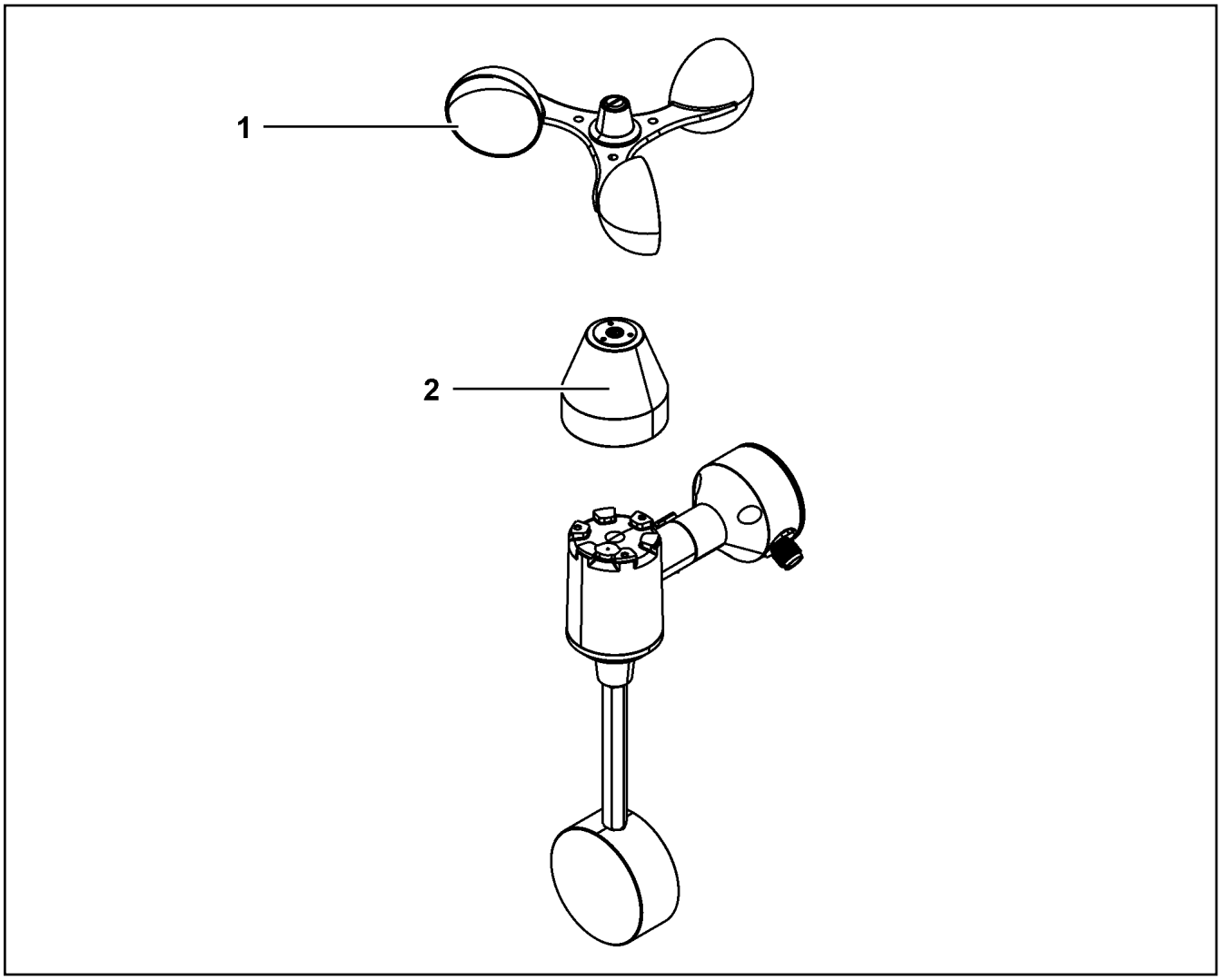

Pos.	Item	Quantity	Description	Bezeichnung
1	11171311	1	ROTOR	ROTOR
2	11171306	1	COVER LID	ABDECKKAPPE

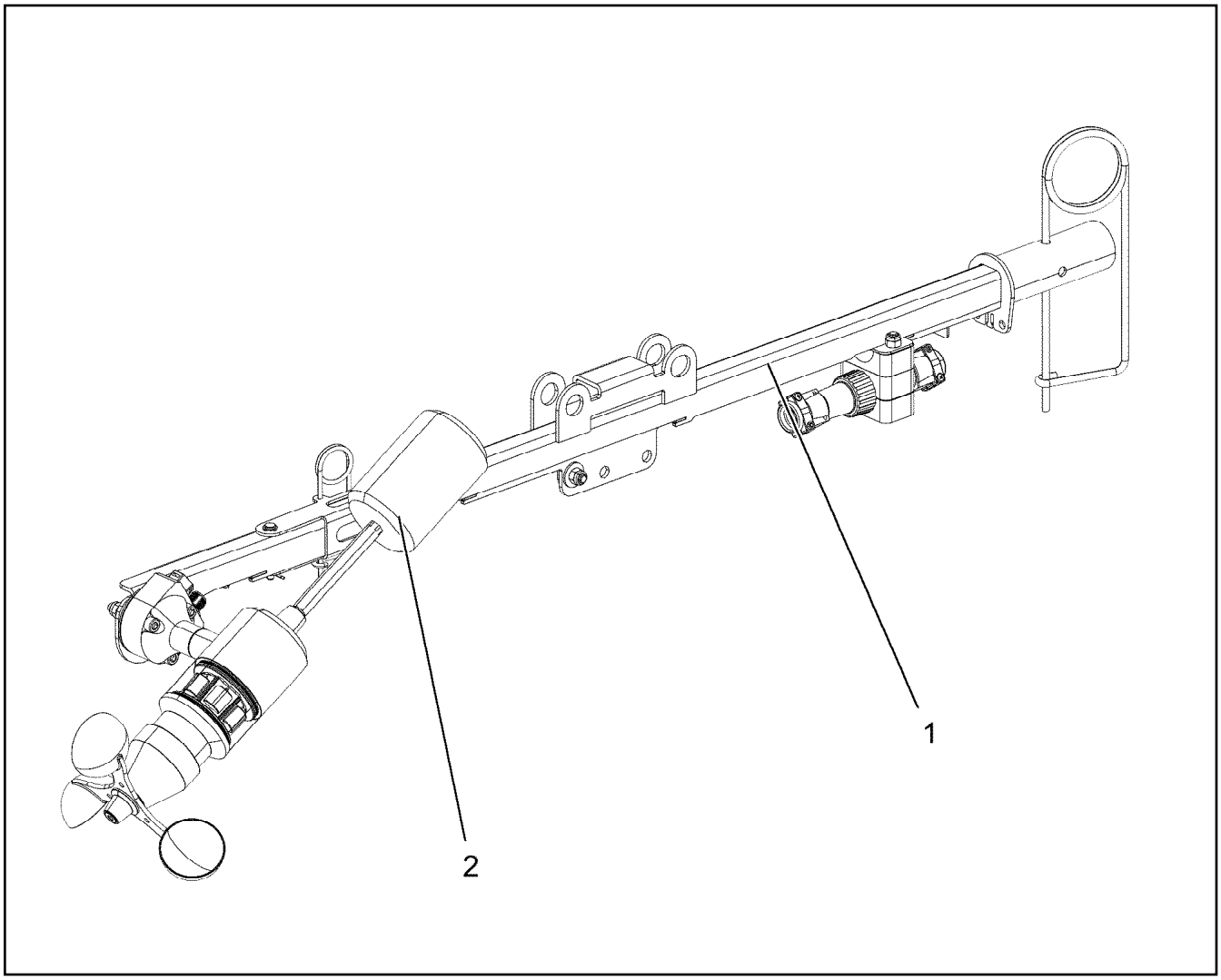

Pos.	Item	Quantity	Description	Bezeichnung
1	96056553	1	LOCATION FIXTURE PRE-ASS. ⇨ ❑ 733	GRUNDHALTER VORM.
2	96056560	1	WIND WARNING PREASSEMBLED ⇨ ❑ 735	WINDWARNUNG VORM.

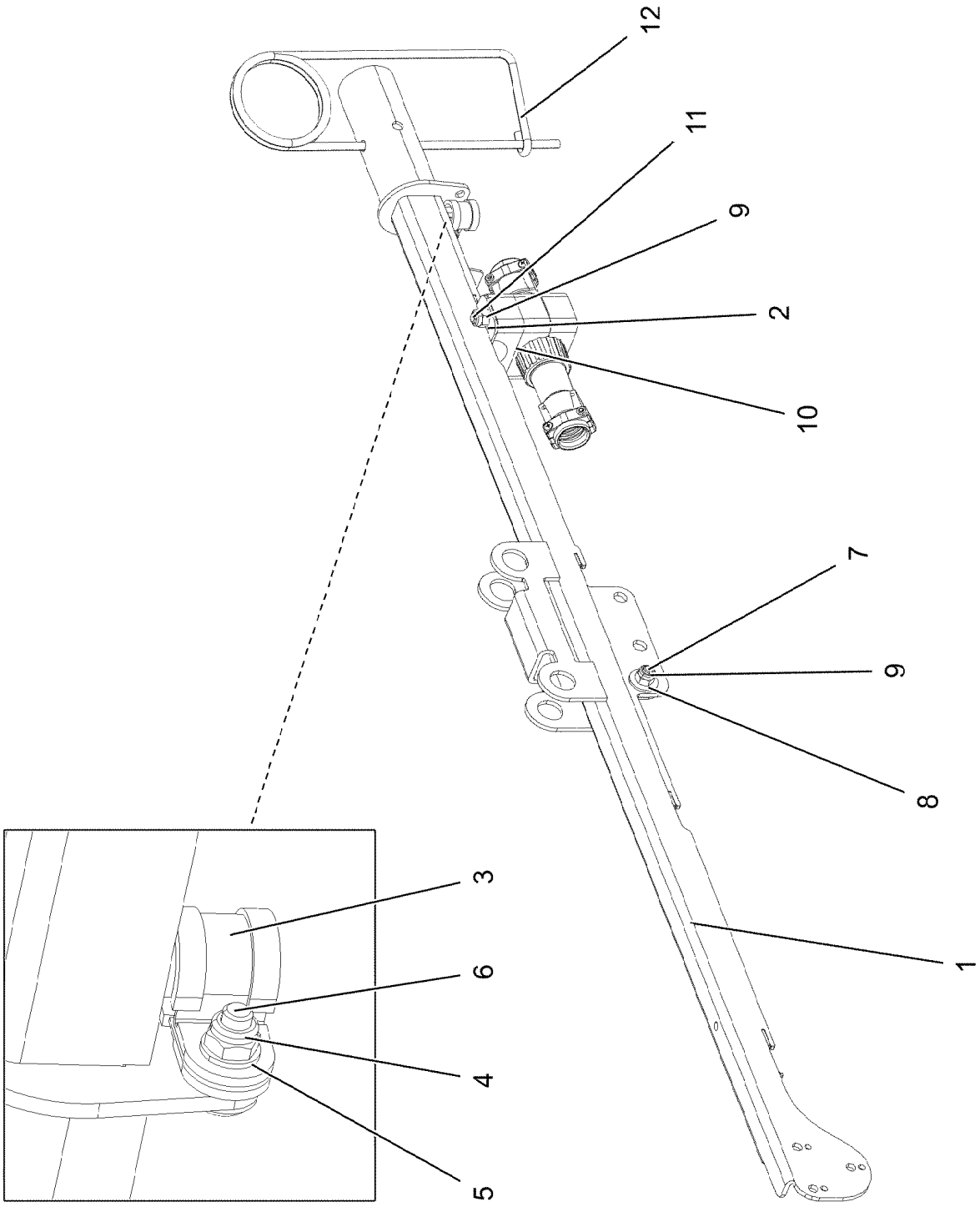
12
11
9
2
10
7
9
8
3
6
4
5
1

Pos.	Item	Quantity	Description	Bezeichnung
1	96051503	1	LOCATION FIXTURE WELDED	GRUNDHALTER SCHWK.
2	97030182	1	PLATE 1.5X682X49 X5CRNI18-10	BLECH
3	774221408	1	PIPE CLAMP 12/15	ROHRSCHELLE
4	10301317	1	HEX NUT DIN 985 M5 A2-70	SECHSKANTMUTTER
5	10197808	1	WASHER ISO 7089 5 200HV ZNNI-480H	SCHEIBE
6	10028237	1	BUTTON HEAD SCREW AEHNL.ISO 7380-2	HALBRUNDKOPFSCHRAUBE
7	10412851	1	BUTTON HEAD SCREW AEHNL.ISO 7380-2	HALBRUNDKOPFSCHRAUBE
8	10540500	1	WASHER ISO 7093-1 6 200HV-A4	SCHEIBE
9	11004444	3	HEX NUT AEHNL.ISO 7040 M6 A2-70	SECHSKANTMUTTER
10	7005052	3	CLAMP-HALF DIN 3015-1 L 3 R 25 PP SW	KLEMMHAELFTE
11	11088382	2	SOCKET HEAD SCREW ISO 4762 M6X55 A2	ZYLINDERSCHRAUBE
12	433102508	1	RETAINING SPRING 5X122 ISO 2081 FE/ZN8/	SICHERUNGSFEDER

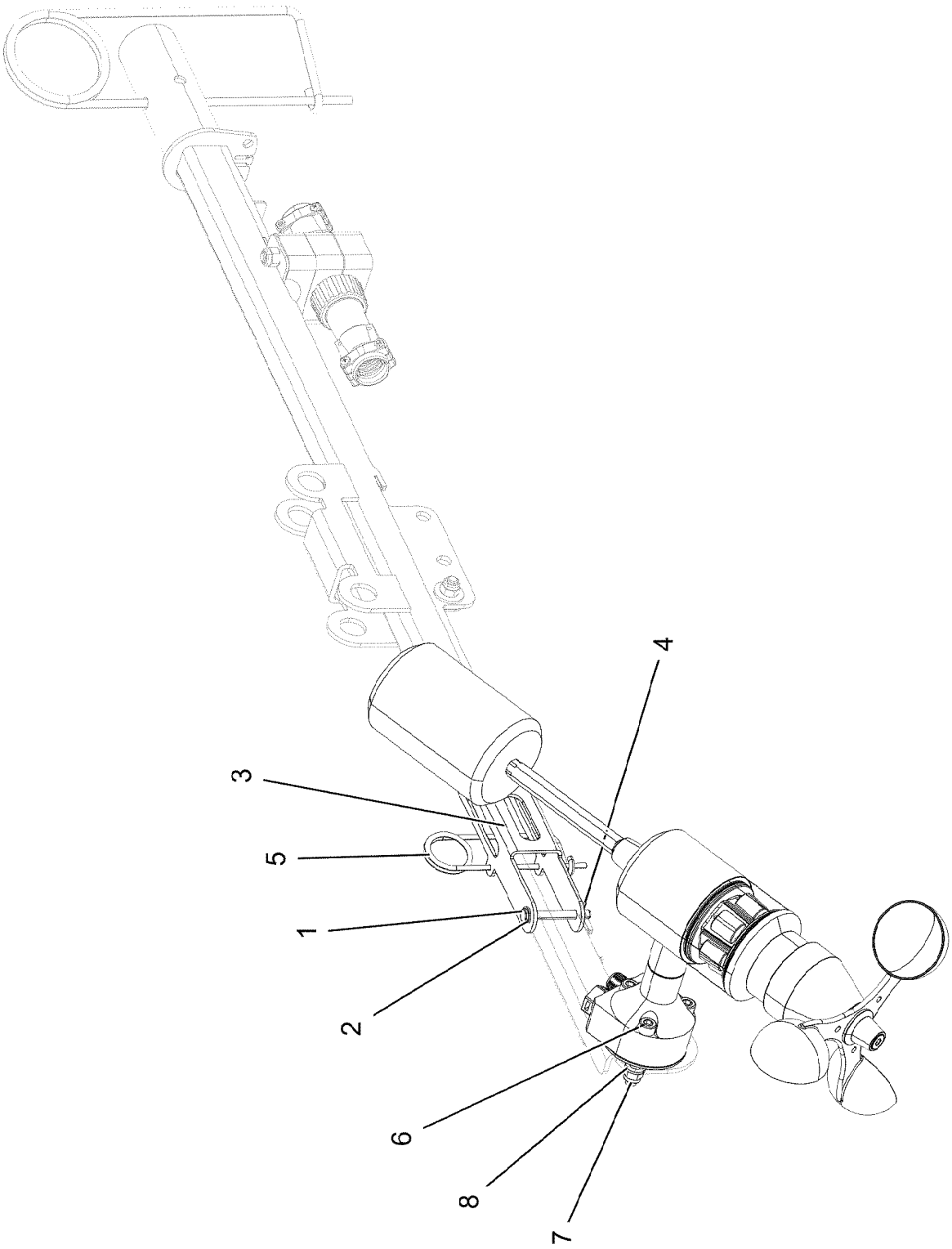
4
3
5
1
2
6
8
7

Pos.	Item	Quantity	Description	Bezeichnung
1	451000208	1	PIN DIN 1434 5X40X35 X5CRNI1810	BOLZEN
2	10410193	2	WASHER ISO 7089 5 -A2	SCHEIBE
3	97030562	1	PLATE 2X143X92 X5CRNI18-10	BLECH
4	10180340	1	SPLIT PIN ISO 1234 1,6X14 A2	SPLINT
5	433102808	1	RETAINING SPRING 3X55 VERZ	SICHERUNGSFEDER
6	10875591	3	SOCKET HEAD SCREW ISO 4762 M6X40 8.8	ZYLINDERSCHRAUBE
7	11656734	3	HEX NUT ISO 7040 M6 8 480H SPF	SECHSKANTMUTTER
8	10278585	3	WASHER ISO 7089 6 200HV 480H-B SPF	SCHEIBE
9	97176134	1	HOOD D180X420 PU-TEX-0701	HAUBE

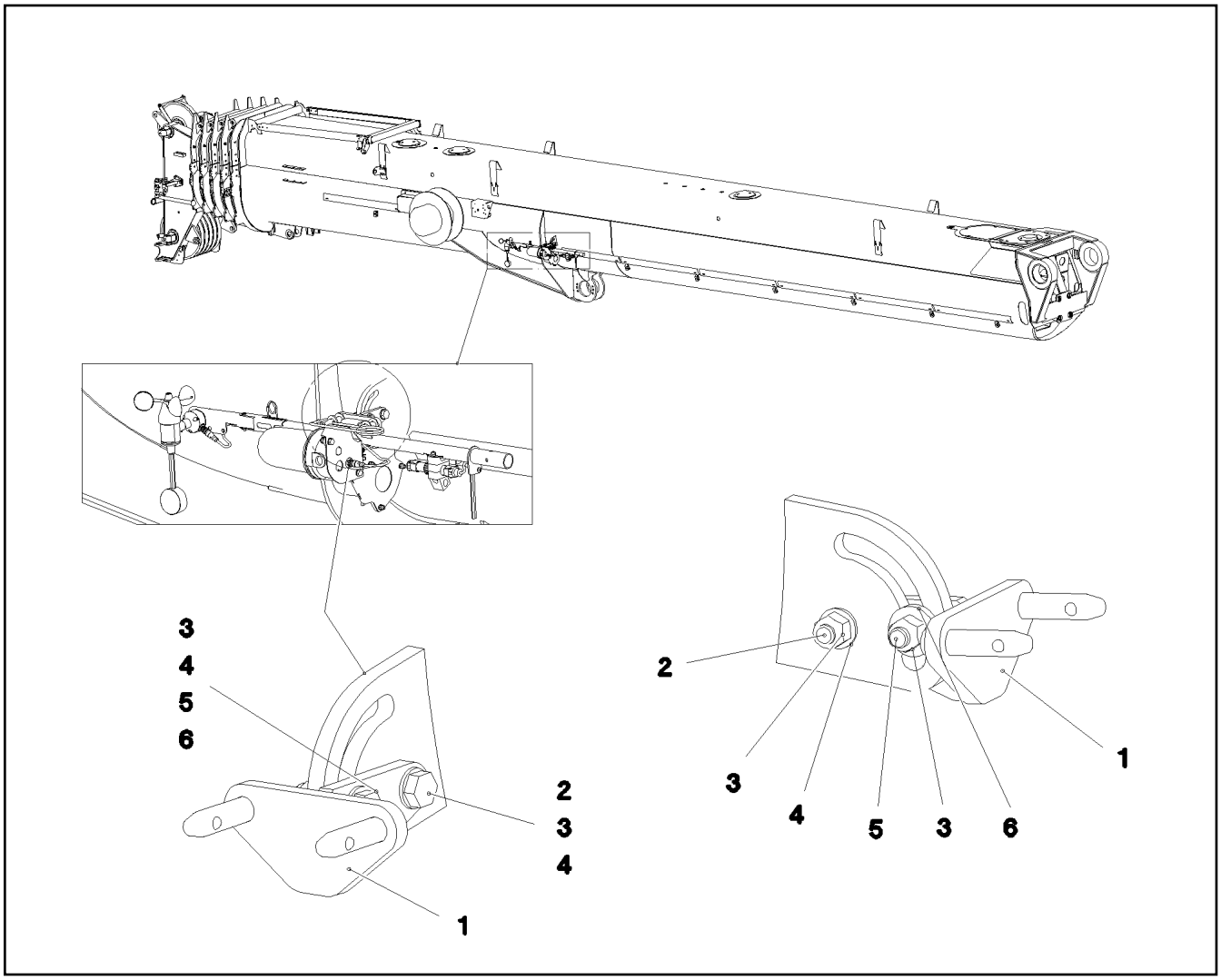

Pos.	Item	Quantity	Description	Bezeichnung
1	968410408	1	MOUNTING WELDED WARNEINRICHTUNG	AUFNAHME SCHWK.
2	11645386	1	HEX SCREW ISO 4017 M12X45 8.8 FLZN SP	SECHSKANTSCHRAUBE
3	11840127	2	HEX NUT ISO 7040 M12 8 FLZN SPF	SECHSKANTMUTTER
4	10289804	3	WASHER ISO 7089 12 300HV FLZN SPF	SCHEIBE
5	11651578	1	HEX SCREW ISO 4014 M12X50 8.8 FLZN SP	SECHSKANTSCHRAUBE
6	10006370	1	WASHER DIN 7349 13 200HV FLZN SPF	SCHEIBE

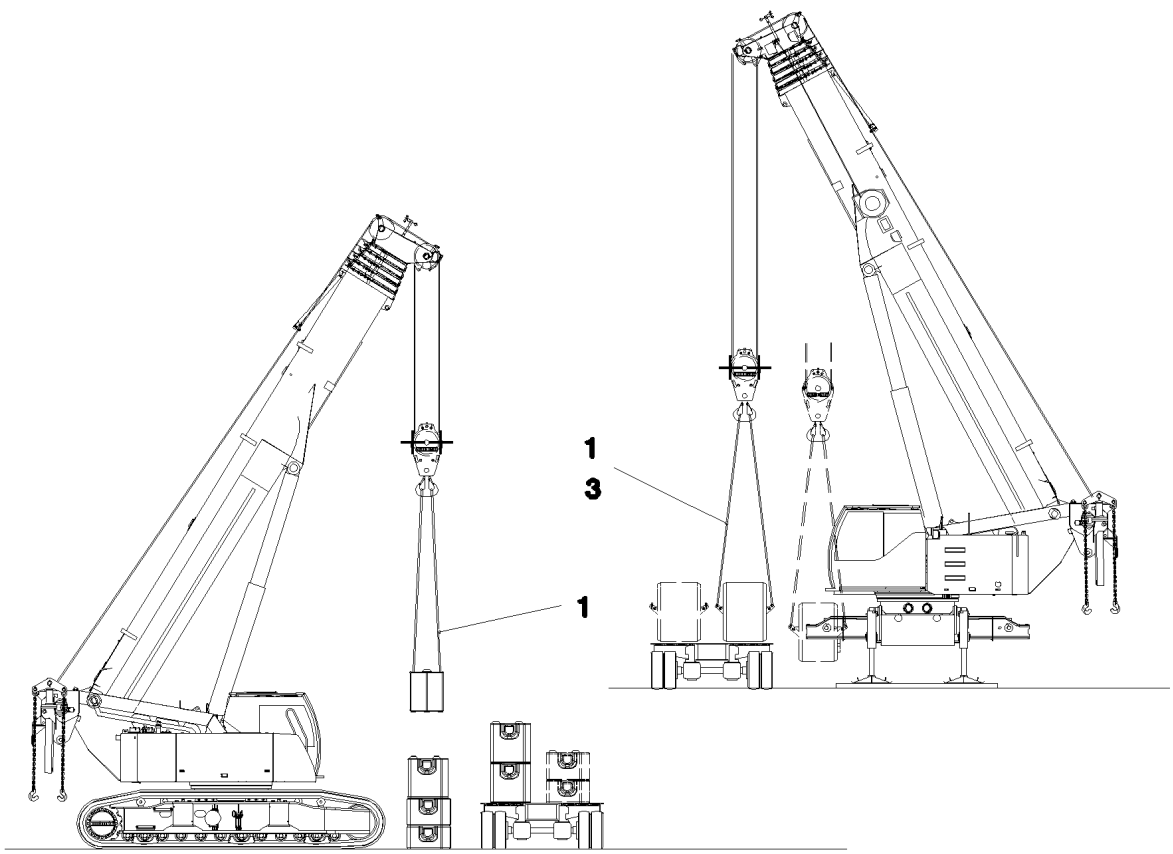

Pos.	Item	Quantity	Description	Bezeichnung
1	773315108	3	ROPE SLING DIN EN 13414-3 9.7T-8M SPF	ANSCHLAGSEIL
3	773930308	4	SHACKLE 17T SPF	SCHAEKEL

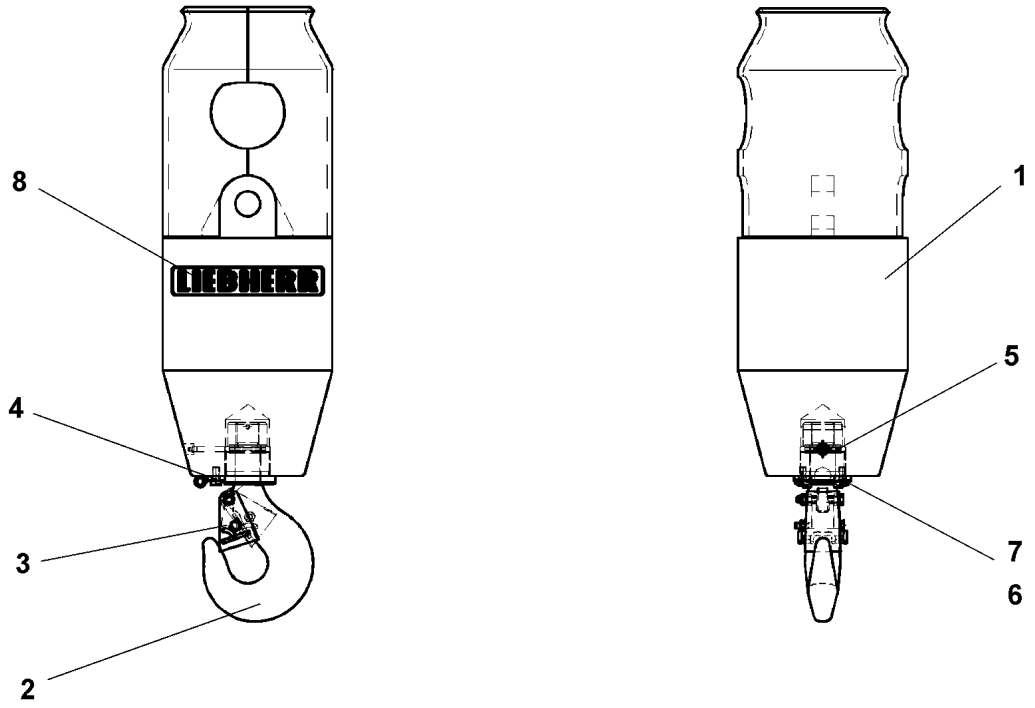

Pos.	Item	Quantity	Description	Bezeichnung
1	11492017	1	WEIGHT	GEWICHT
2	11492232	1	SINGLE HOOK	EINFACHHAKEN
3	10331874	1	PL LATCH	PL FALLE
4	11492018	1	FLANGED BOLT	BUNDSCHRAUBE
5	746604908	1	CYLINDRICAL ROLLER BEARING DIN 722 81	AXIALZYLINDERROLLENLAGER
6	11492235	1	AXLE HOLDER	ACHSHALTER
7	11658892	2	HEX SCREW ISO 4017 M12X25 8.8 FLZN SP	SECHSKANTSCHRAUBE
8	10684156	1	SIGN 70X360X0,1 FOLIE	SCHILD

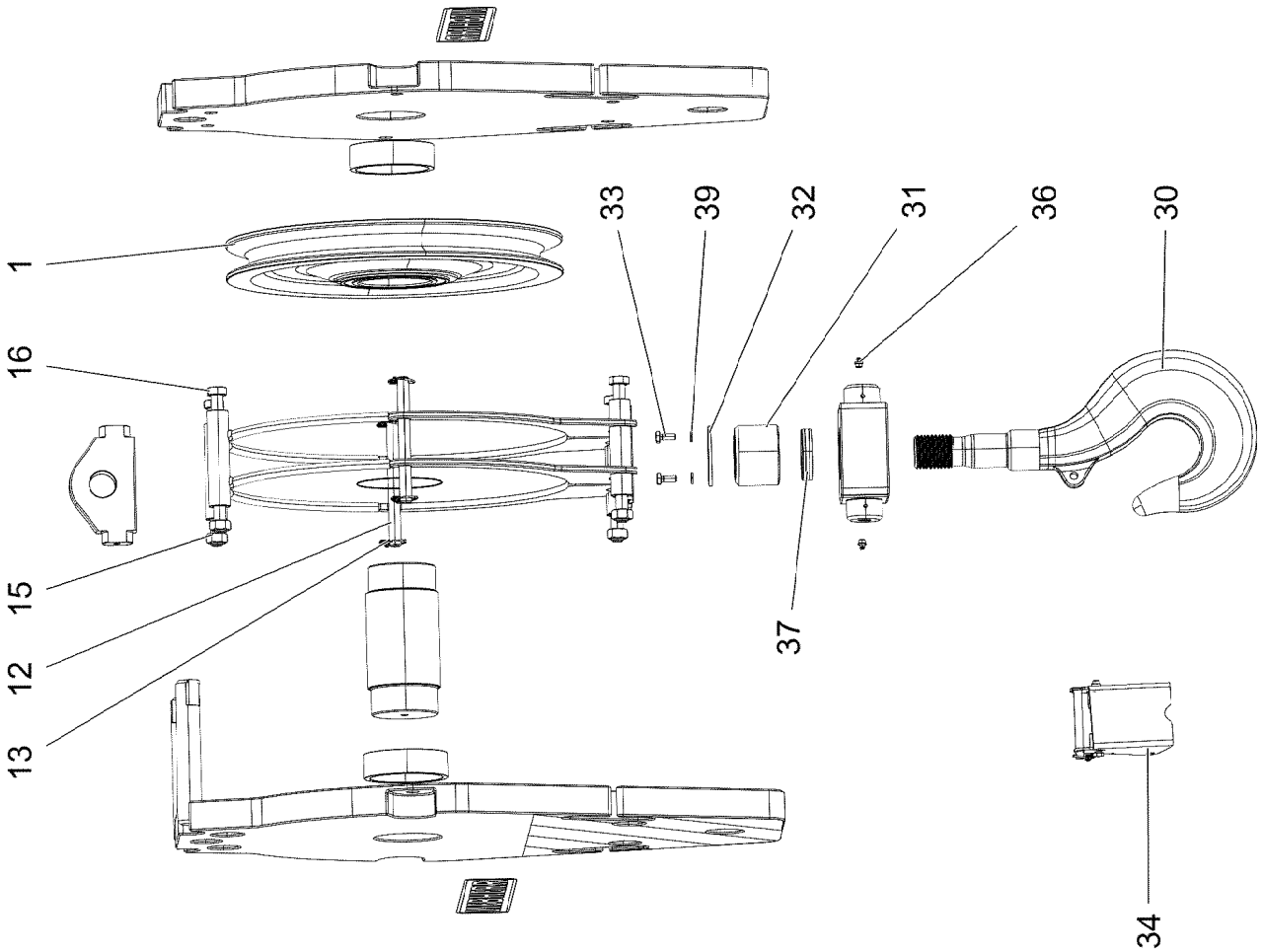

16.11.2023 129049 LIEBHERR	**etk_en_de_078966 LTR 1100** **HOOK BLOCK** **HAKENFLASCHE**	740 (1/2) **919421708**

Pos.	Item	Quantity	Description	Bezeichnung
1	924073908	1	ROPE PULLEY SPF ⇨ ❑ 742	SEILROLLE
12	10801473	2	ROPE PROTECTION ROD	SEILSCHUTZSTANGE
13	10875869	4	SAFETY PLUG W HINGE-LID 5X29X4,7X25 4	SICHERHEITSKLAPPSTECKER
15	10875618	4	HEX NUT ISO 4032 M20 8 FLZN SPF	SECHSKANTMUTTER
16	10878574	4	HEX SCREW ISO 4014 M20X230 8.8 FLZN SP	SECHSKANTSCHRAUBE
30	12104666	1	SUSPENSION CPL.	AUFHAENGUNG KPL.
31	12104472	1	NUT DIN 15413 M100	MUTTER
32	12104585	1	KEEPER	SICHERUNGSSTUECK
33	10197730	2	HEX SCREW ISO 4017 M10X20 8.8 ZNNI-480	SECHSKANTSCHRAUBE
34	12104667	1	SAFETY TRAP	SICHERUNGSFALLE
36	7743242	3	HYDRAULIC-TYPE LUBRICAT.NIPPLE DIN 71	KEGELSCHMIERNIPPEL
37	746604101	1	CYLINDRICAL ROLLER BEARING DIN 722 8	AXIALZYLINDERROLLENLAGER
39	12214461	2	WASHER SPRING DIN 127 B 10 FSt FLZN SP	FEDERRING

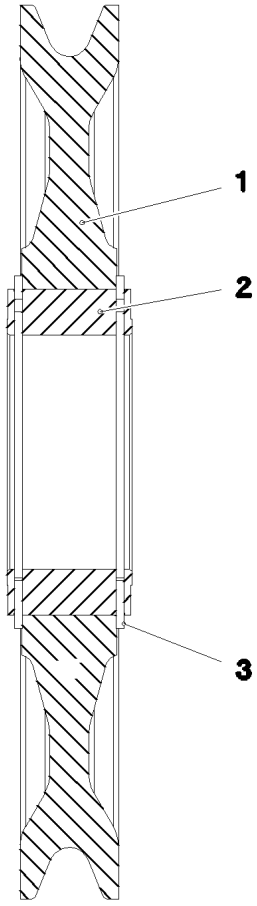

Pos.	Item	Quantity	Description	Bezeichnung
1	773952208	1	ROPE PULLEY RD485X63 PA6G SPF	SEILROLLE
2	745902708	1	ROLLER BEARING 120X180X80	WAELZLAGER
3	428009408	2	RETAINING RINGS DIN 471 180X4	SICHERUNGSRING

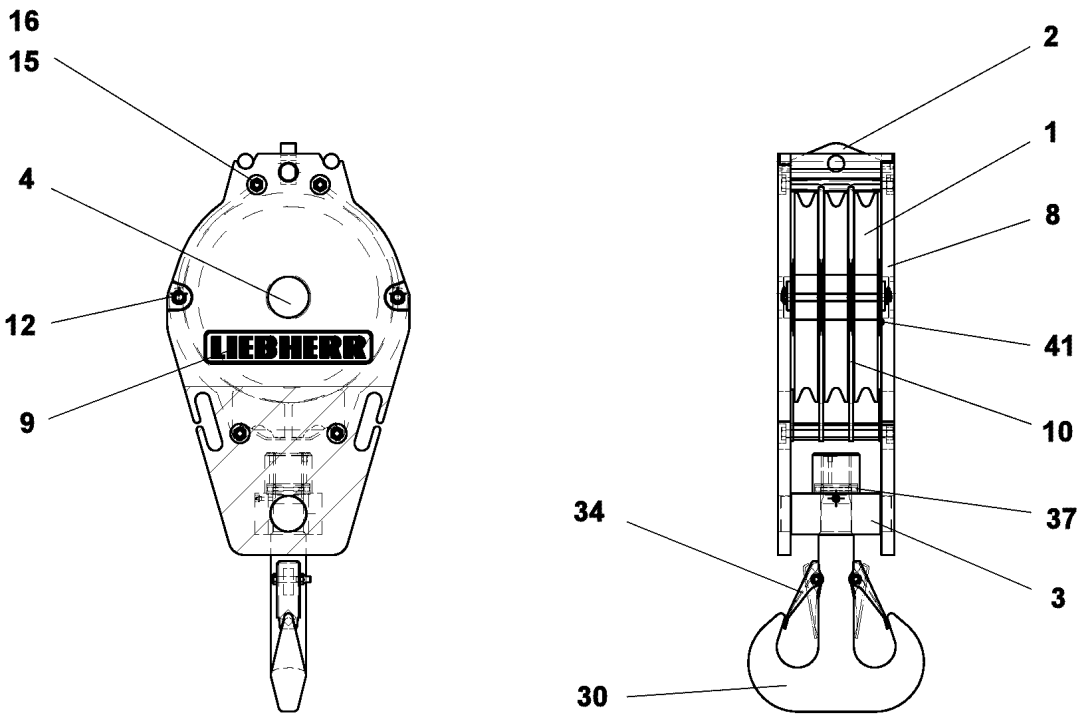

Pos.	Item	Quantity	Description	Bezeichnung
1	924073908	3	ROPE PULLEY SPF ⇨ ❑ 742	SEILROLLE
2	11494297	1	ROPE FIXING POINT	SEILFESTPUNKT
3	11494298	1	TRAVERSE	TRAVERSE
4	11494299	1	DISK PIN	SCHEIBENBOLZEN
8	11621964	2	SIDE PLATE	SEITENBLECH
9	10663718	2	SIGN 88X450X0,1 FOLIE	SCHILD
10	571926008	1	ROPE GUARD CPL	SEILSCHUTZ KPL.
12	571926108	2	ROPE PROTECTION ROD	SEILSCHUTZSTANGE
(1)	10875869	2	SAFETY PLUG W HINGE-LID 5X29X4,7X25 4	SICHERHEITSKLAPPSTECKER
15	10875618	4	HEX NUT ISO 4032 M20 8 FLZN SPF	SECHSKANTMUTTER
16	406214708	4	HEX SCREW ISO 4014 M20X290 10.9 FLZN	SECHSKANTSCHRAUBE
30	11341375	1	TWIN HOOK NR. 016-T 63t GS-34CRMO4 V	DOPPELHAKEN
34	571714308	2	SAFETY TRAP	SICHERUNGSFALLE
37	746607108	1	CYLINDRICAL ROLLER BEARING DIN 722 81	AXIALZYLINDERROLLENLAGER
41	11494116	2	COVER PLATE	ABDECKBLECH

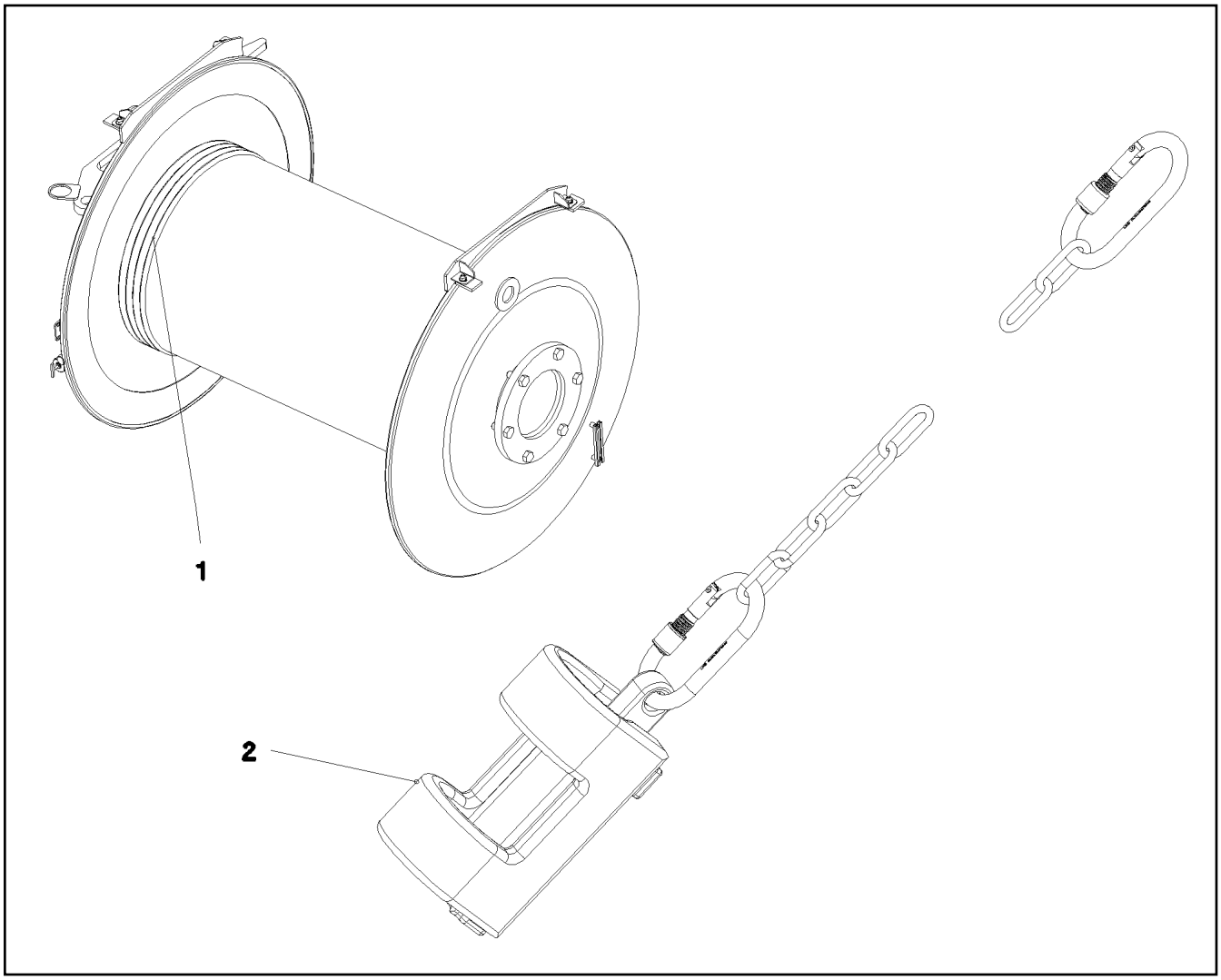

Pos.	Item	Quantity	Description	Bezeichnung
1	10871170	1	HOIST ROPE 21X205M -40°C SPF	HUBSEIL
2	96013575	1	HOIST LIM.SWITCH PLUMMET CPL ⇨ ❑ 676	HUBENDSCHALTER GEWICHT K

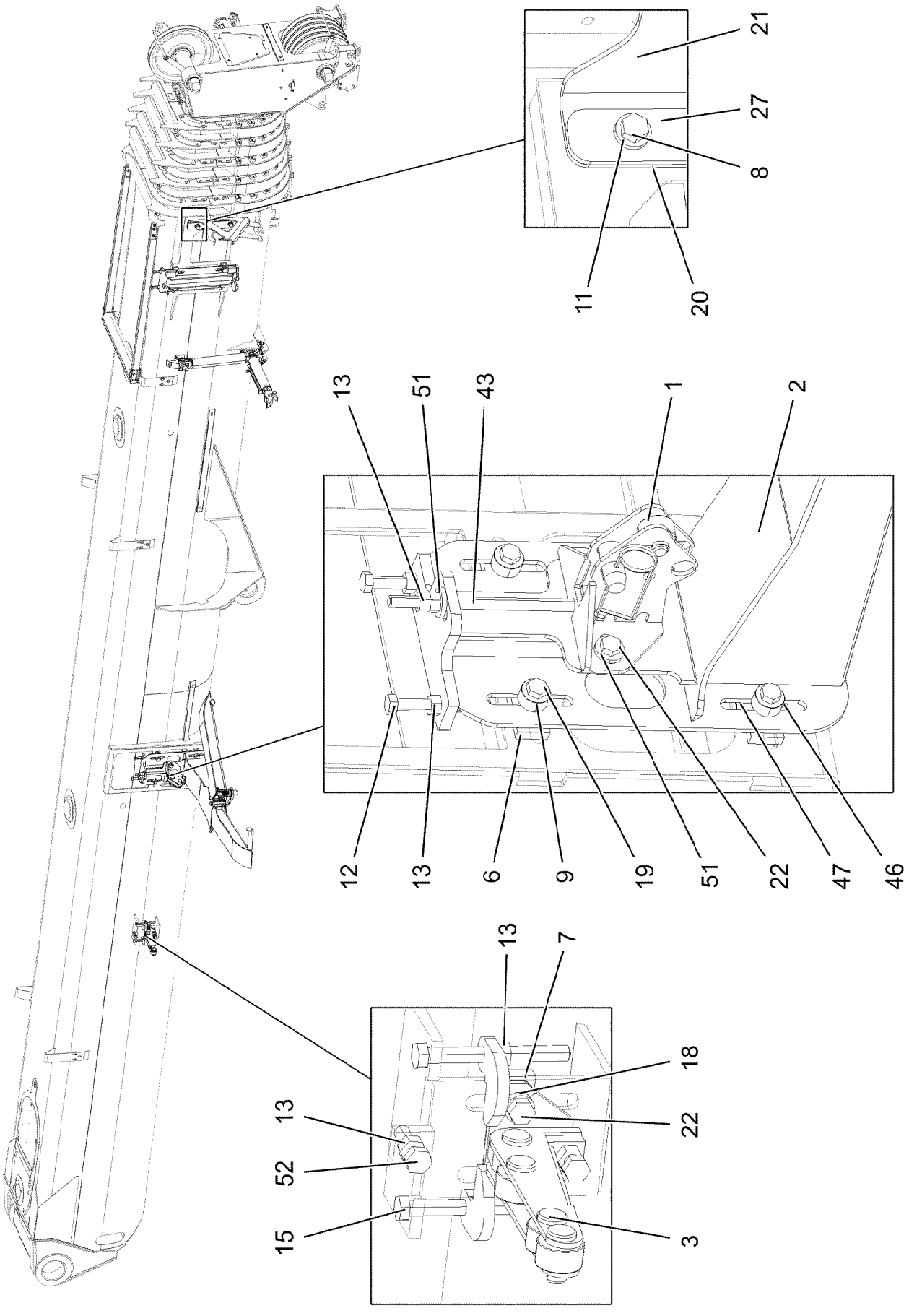

16.11.2023 174223	**etk_en_de_078966 LTR 1100**	❑ 745 (1/3)
LIEBHERR	**TRANSPORT MOUNTING** **TRANSPORTHALTERUNG DKS**	**919933308**

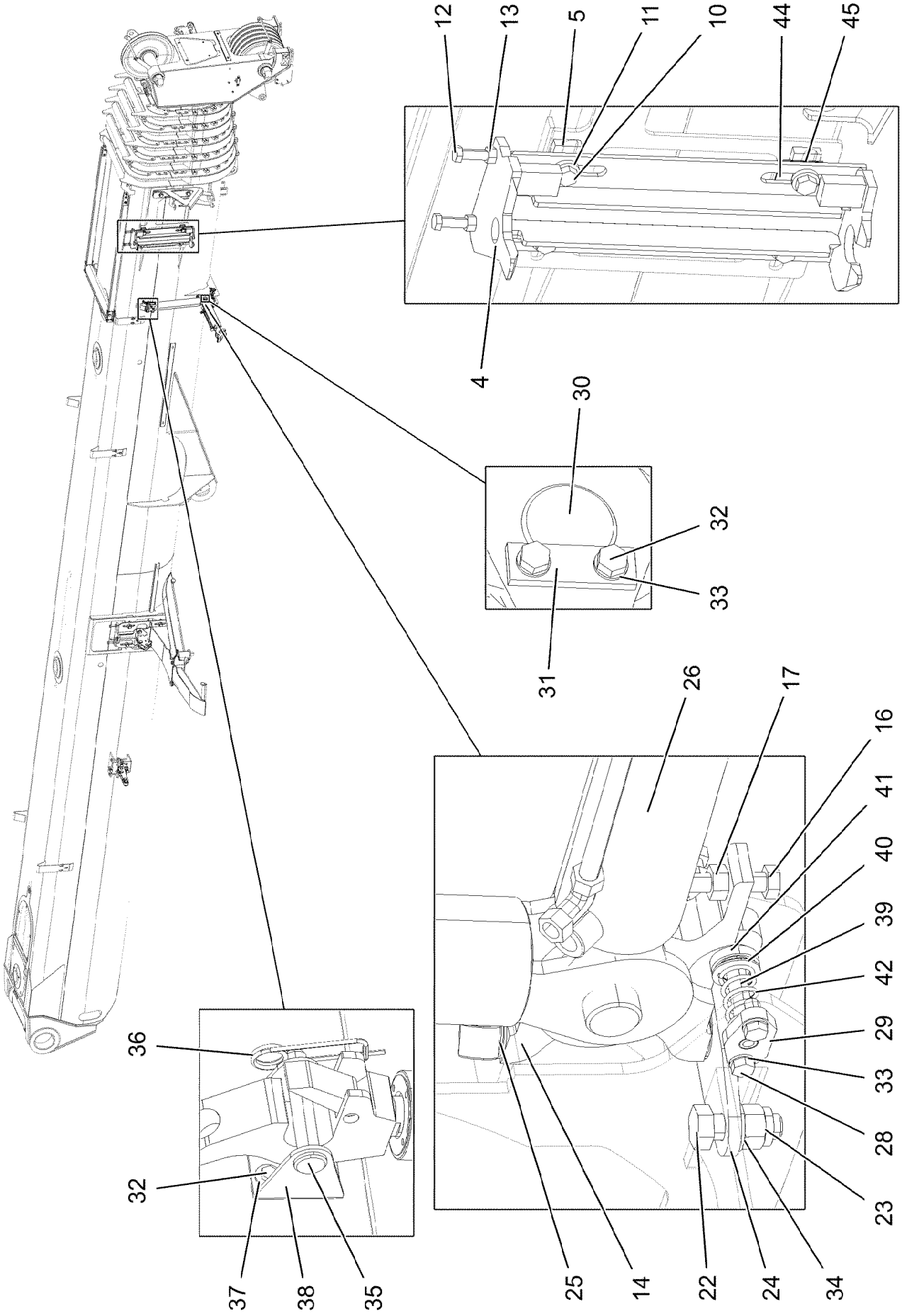

16.11.2023 174224	**etk_en_de_078966 LTR 1100**	❑ 746 (2/3)
LIEBHERR	**TRANSPORT MOUNTING** **TRANSPORTHALTERUNG DKS**	**919933308**

Pos.	Item	Quantity	Description	Bezeichnung
1	925280008	1	CONSOLE PRE-ASS. ⇨ ❑ 748	KONSOLE VORM.
2	96062062	1	FOLDING BRACKET PRE-ASS. ⇨ ❑ 749	KLAPPKONSOLE VORM.
3	929582108	1	MOUNTING PRE-ASS. ⇨ ❑ 751	HALTERUNG VORM.
4	925042108	1	BRACKET WELDED CONST.	KONSOLE SCHWK.
5	953608508	2	PLATE 20X45X230 S690QL	BLECH
6	949380808	2	THREADED PLATE 15X45X300 S690QL	GEWINDEPLATTE
7	953147708	1	THREADED PLATE 15X40X130 S690QL	GEWINDEPLATTE
8	406604208	2	HEX SCREW ISO 4017 M20X60 10.9 FLZN SP	SECHSKANTSCHRAUBE
9	97146006	4	SLEEVE 40.0X20 35NICRMOV125 FLZN SPF	HUELSE
10	10875806	4	HEX SCREW ISO 4017 M20X60 8.8 FLZN SP	SECHSKANTSCHRAUBE
11	4600604	6	WASHER DIN 7349 21 100HV FLZN SPF	SCHEIBE
12	12224044	4	HEX SCREW ISO 4017 M16X130 8.8 FLZN SP	SECHSKANTSCHRAUBE
13	10875617	11	HEX NUT ISO 4032 M16 8 FLZN SPF	SECHSKANTMUTTER
14	955552508	1	TRAVERSE 30X161X190 S690QL	TRAVERSE
15	10875801	2	HEX SCREW ISO 4017 M16X150 8.8 FLZN SP	SECHSKANTSCHRAUBE
16	11840136	2	HEX SCREW ISO 4017 M12X50 8.8 FLZN	SECHSKANTSCHRAUBE
17	10875616	2	HEX NUT ISO 4032 M12 8 FLZN SPF	SECHSKANTMUTTER
18	10875866	2	WASHER DIN 7989-2 16 -ST FLZN SPF	SCHEIBE
19	406603408	4	HEX SCREW ISO 4017 M16X60 10.9 FLZN SP	SECHSKANTSCHRAUBE
20	974911108	1	THREADED PLATE 20X40X315 S690QL	GEWINDEPLATTE
21	974911208	1	PLATE 8X965X516 S700MC	BLECH
22	10875803	6	HEX SCREW ISO 4017 M16X45 8.8 FLZN SP	SECHSKANTSCHRAUBE
23	10875859	2	HEX NUT ISO 7040 M16 8 FLZN SPF	SECHSKANTMUTTER
24	955552608	1	PLATE 8X70X182 S960 FE//FLZN10//NC	BLECH
25	708011608	2	DU BUSHING 25X28X12	DU-BUCHSE
26	512353708	1	HYDRO CYLINDER 65/36-367 SPF ⇨ ❑ 752	HYDROZYLINDER
27	97070023	1	PLATE 10X434X69 S700MC	BLECH
28	11651767	2	HEX SCREW ISO 4017 M8X20 8.8 480H SPF	SECHSKANTSCHRAUBE
29	955974308	1	PLATE 8X30X58 S355MC FE//ZNNI8//CN//T0	BLECH
30	944029908	1	PIN RD35X71 35NICRMOV125 GASN. SPF	BOLZEN
31	997040101	1	AXLE HOLDER LN 4/1 S235JR+AR ZNNI	ACHSHALTER
32	11651612	5	HEX SCREW ISO 4017 M8X16 8.8 480H SPF	SECHSKANTSCHRAUBE
33	12103465	4	WASHER ISO 7089 8 300HV ZNNI-480H SPF	SCHEIBE
34	10289806	2	WASHER ISO 7089 16 300HV FLZN SPF	SCHEIBE
35	453020908	1	PIN ISO 2341 B20X115X107 ST.50-2K VERZ	BOLZEN
36	433101208	1	RETAINING SPRING 4X68 ISO 2081 FE/ZN8/	SICHERUNGSFEDER
37	11140469	3	WASHER ISO 7093-1 8 200HV 480H SPF	SCHEIBE
38	957102808	1	PLATE 4X80X254 S315MC FE//ZNNI8//CN//T	BLECH
39	10875876	1	DOWEL PIN ISO 8752 12X85 480H SPF	SPANNSTIFT
40	10875863	1	SPHERICAL WASHER DIN 6319 17 480H SP	KUGELSCHEIBE
41	10875862	1	TAPERED SOCKET DIN 6319 19 480H SPF	KEGELPFANNE
42	720012608	1	COMPRESSION SPRING EN10270-3	DRUCKFEDER
43	10878575	1	HEX SCREW ISO 4017 M16X260 8.8 FLZN SP	SECHSKANTSCHRAUBE
44	949361408	1	BASE 1X200X70 DC01 FE//ZNNI8//CN//T0	UNTERLAGE
45	949362208	1	BASE 2X200X70 DC01 FE//ZNNI8//CN//T0	UNTERLAGE
46	949380908	1	BASE 1X280X70 DC01 FE//ZNNI8//CN//T0	UNTERLAGE
47	949381008	1	BASE 2X280X70 DC01 FE//ZNNI8//CN//T0	UNTERLAGE
51	4600021	5	WASHER DIN 7349 17 200HV FLZN SPF	SCHEIBE
52	10875521	1	HEX SCREW ISO 4017 M16X60 8.8 FLZN SP	SECHSKANTSCHRAUBE

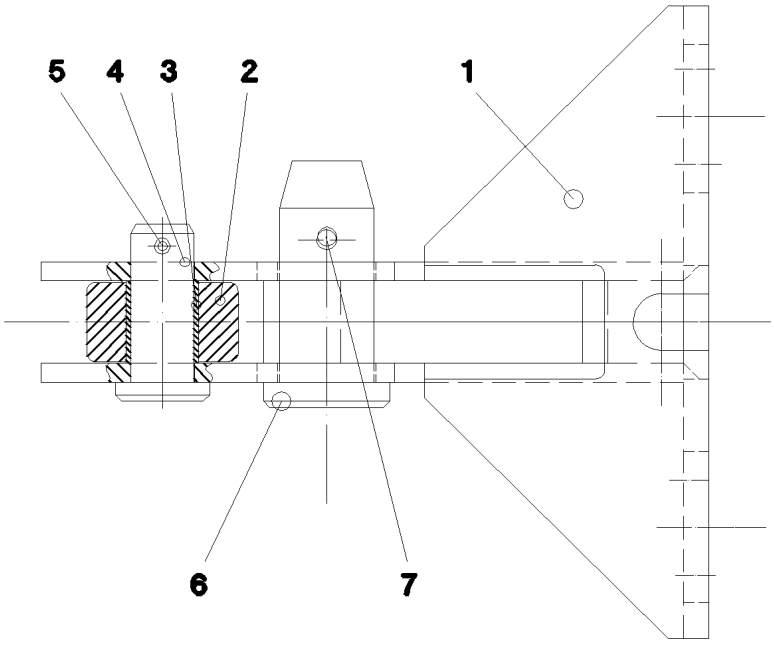

Pos.	Item	Quantity	Description	Bezeichnung
1	925275608	1	BRACKET WELDED CONST.	KONSOLE SCHWK.
2	947868208	1	ROLLER 50.0X25 S355J2+AR FE//ZNNI8//CN/	ROLLE
3	708010008	1	CYLINDER BUSHING 20X23X25	ZYLINDERBUCHSE
4	10875669	1	PIN DIN 1435 20X50X43 42CRMO4 GASN. SP	BOLZEN
5	10180359	1	SPLIT PIN ISO 1234 5X40 St 480H SPF	SPLINT
6	931913308	1	PIN 35x81 42CRMO4+QT GASN.	BOLZEN
7	433100908	1	RETAINING SPRING 4,5X98 ISO 2081 FE/ZN	SICHERUNGSFEDER

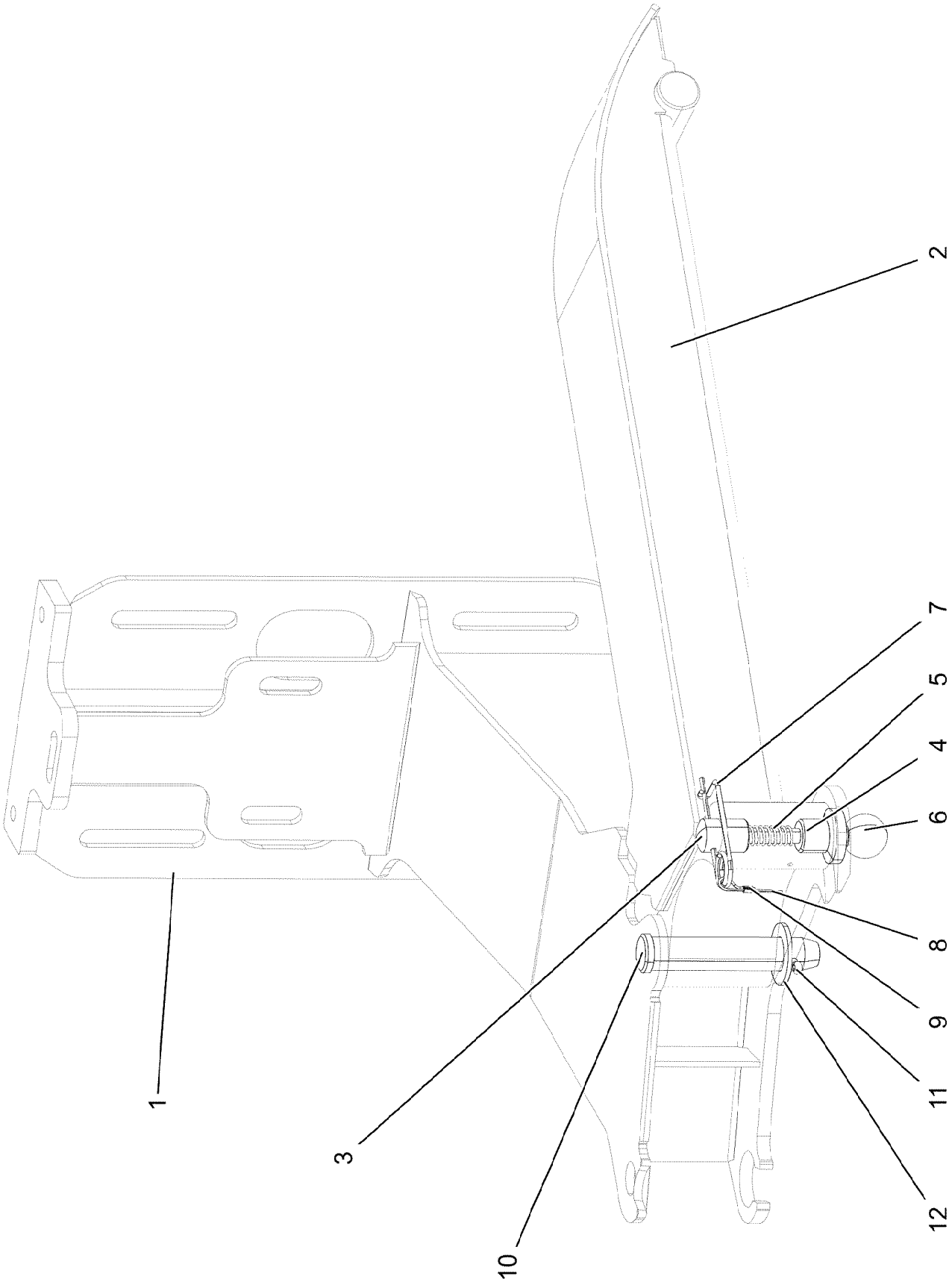

16.11.2023 172796 LIEBHERR	**etk_en_de_078966 LTR 1100** **FOLDING BRACKET PRE-ASS.** **KLAPPKONSOLE VORM.**	749 (1/2) **96062062**

Pos.	Item	Quantity	Description	Bezeichnung
1	96022932	1	FOLDING BRACKET ST.CONST.	KLAPPKONSOLE SCHWK.
2	96062063	1	FOLDING PART WELDED SPF	KLAPPTEIL SCHWK.
3	956349008	1	PIN RD30X107 42CRMO4+QT	BOLZEN
4	956349108	1	PIN RD49.5X58 42CRMO4+QT	BOLZEN
5	720008508	1	COMPRESSION SPRING DIN 2098 2X16X68	DRUCKFEDER
6	704004208	1	SPHERICAL KNOB DIN 319 C40XM10 FS	KUGELKNOPF
7	433101208	1	RETAINING SPRING 4X68 ISO 2081 FE/ZN8/	SICHERUNGSFEDER
8	11160431	0.3	ROPE 2 2,3KN EDELSTAHL	SEIL
9	11170565	2	FERRULE 2 CU	PRESSKLEMME
10	938865908	1	PIN 35.0X165 35NICRMOV125 SPF	BOLZEN
11	10180364	1	SPLIT PIN ISO 1234 6,3X50 St 480H SPF	SPLINT
12	10289811	1	WASHER ISO 7089 30 300HV FLZN SPF	SCHEIBE

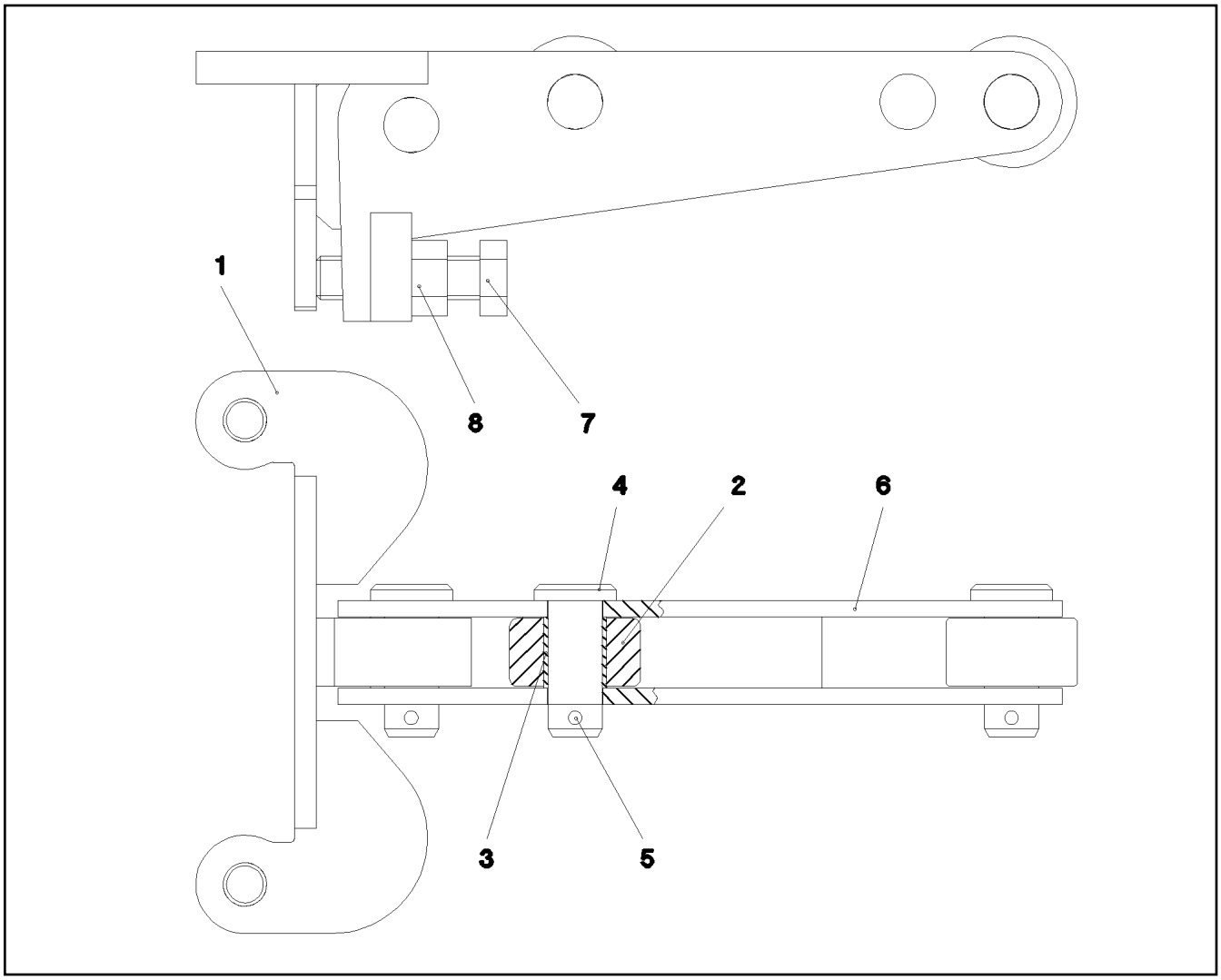

Pos.	Item	Quantity	Description	Bezeichnung
1	929582208	1	MOUNTING WELDED	HALTERUNG SCHWK.
2	947868208	2	ROLLER 50.0X25 S355J2+AR FE//ZNNI8//CN/	ROLLE
3	708010008	2	CYLINDER BUSHING 20X23X25	ZYLINDERBUCHSE
4	10875669	3	PIN DIN 1435 20X50X43 42CRMO4 GASN. SP	BOLZEN
5	10180359	3	SPLIT PIN ISO 1234 5X40 St 480H SPF	SPLINT
6	929591608	1	ROLLER CARRIER WELDED	ROLLENTRAEGER SCHWK.
7	406603408	1	HEX SCREW ISO 4017 M16X60 10.9 FLZN SP	SECHSKANTSCHRAUBE
8	411514608	1	HEX NUT ISO 4032 M16 8 BLANK	SECHSKANTMUTTER

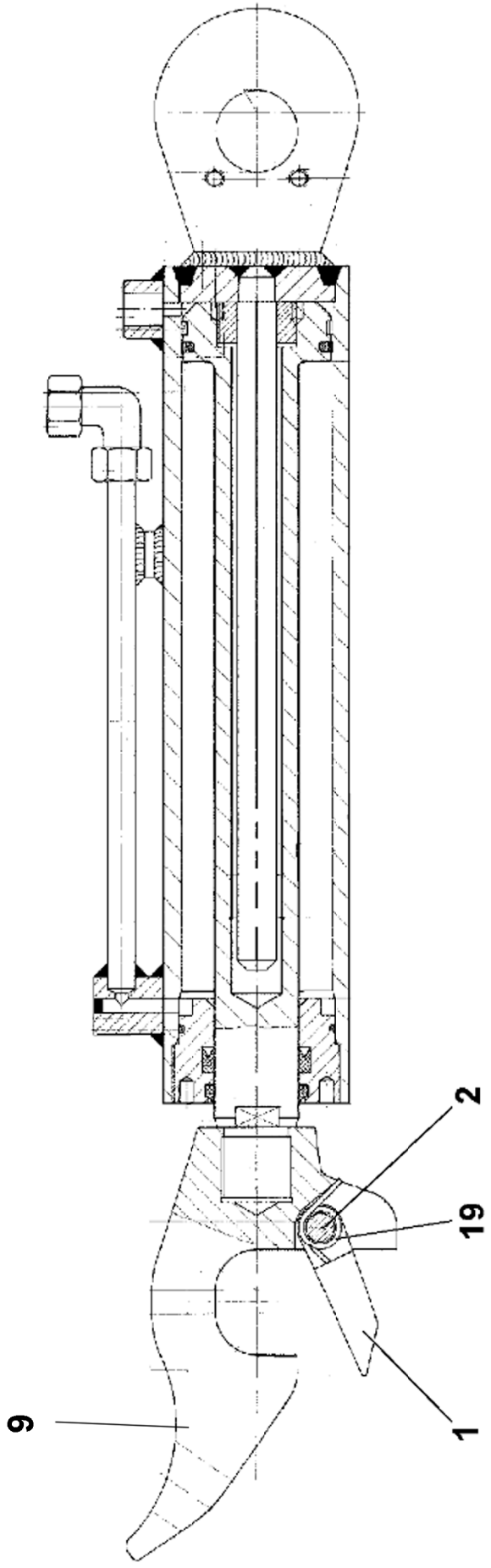

Pos. 999

Pos.	Item	Quantity	Description	Bezeichnung
1	11490010	1	LATCH	KLINKE
2	430709608	1	PARALLEL PIN DIN 6325 12M6X50	ZYLINDERSTIFT
9	11004031	1	CLAW	KLAUE
19	571741908	1	LEG SPRING 2,5X13,5	SCHENKELFEDER
999	571491208	1	SEAL KIT	DICHTSATZ

Pos.	Item	Quantity	Description	Bezeichnung
1	91001037	1	DOUBLE FOLDING JIB MECH. ASS. ⇨ ❑ 755	DOPPELKLAPPSPITZE MECH.
880	96062033	1	SIGNAGE DOUBLE FOLDING TIP MECH ⇨ ❑ 777	BESCHILDERUNG DKS
881	96017737	1	SIGNS TRACTION STRAP	BESCHILDERUNG ZUGLASCHE
(1)	97078977	2	SIGN 58X58 KLEBEFOLIE SPF	SCHILD
(2)	97078979	2	SIGN 58X93 KLEBEFOLIE SPF	SCHILD
(3)	97078980	2	SIGN 58X93 KLEBEFOLIE SPF	SCHILD

Pos.	Item	Quantity	Description	Bezeichnung
1	91001038	1	MECH. DOUBLE FOLD JIB PREMOUNT ⇨ ❑ 756	DOPPELKLAPPSPITZE MECH.VO
500	96055854	1	ELEC MECH FOLDING JIB BOOM FT ⇨ ❑ 774	EL.ANLENKST.MECH.KLAPPSPI
501	966636808	1	ELECTR. FOR HEAD SECTION	ELEKTRIK KOPFSTUECK
(7)	965262808	1	LEAD W943	LEITUNG
(8)	965096608	1	LEAD W945	LEITUNG
(10)	966479308	1	SENSOR LIFT TOP LIMIT SWITCH MIT M12 ⇨ ❑ 776	GEBER HUB OBEN ENDSCHAL
(30)	96041469	1	FIXING PARTS ELECTRIC	BEFESTIGUNGSTEILE ELEKTRI

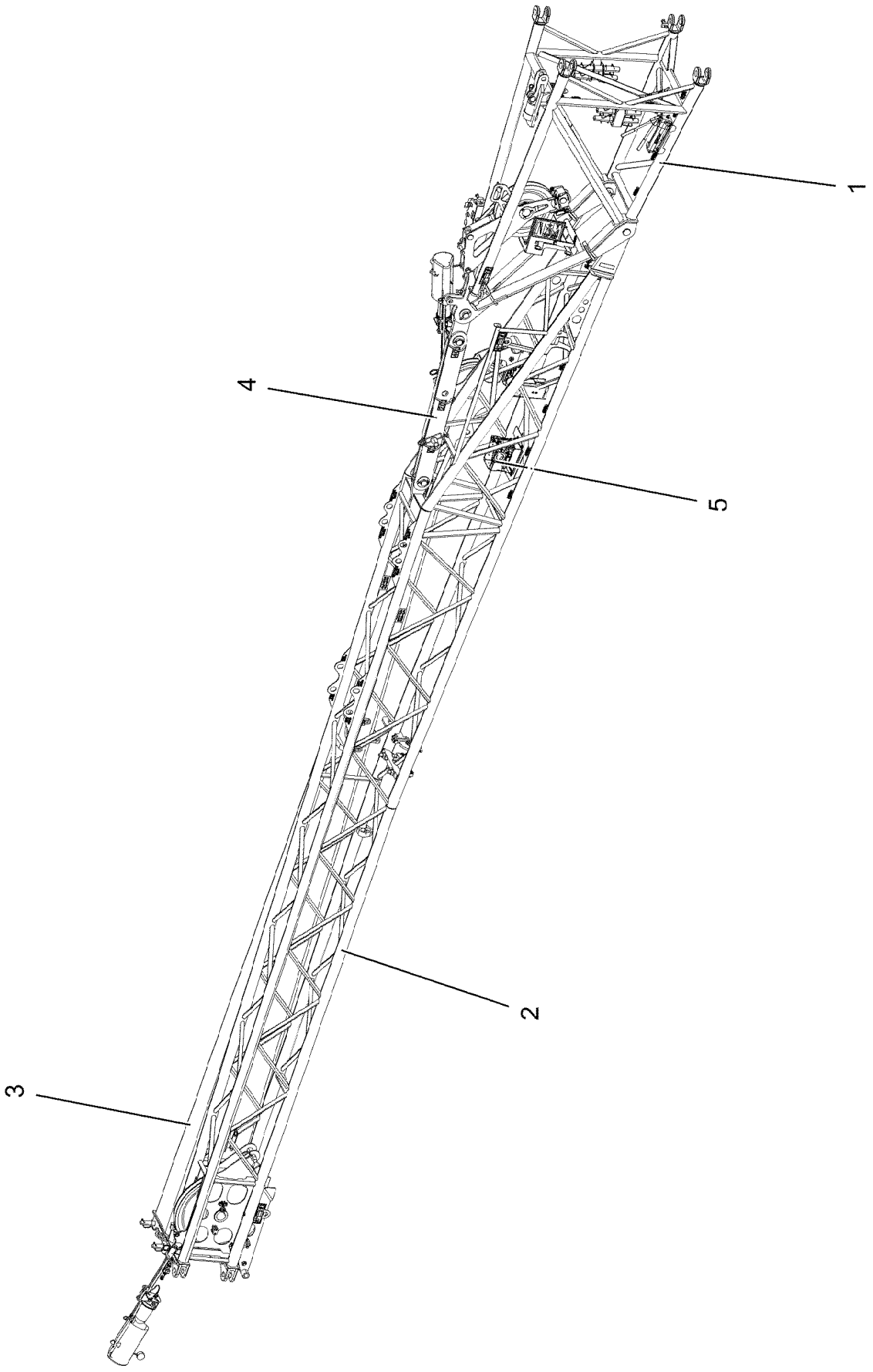

16.11.2023 174221 LIEBHERR	**etk_en_de_078966 LTR 1100** **MECH. DOUBLE FOLD JIB PREMOUNT** **DOPPELKLAPPSPITZE MECH.VORM.**	❑ 756 (1/2) **91001038**

Pos.	Item	Quantity	Description	Bezeichnung
1	918533508	1	ADAPTER PRE-ASS. ⇨ ❑ 758	ADAPTER VORM.
2	91001040	1	PIVOT SECTION, PRE-ASSEMBLED ⇨ ❑ 767	ANLENKSTUECK VORM.
3	918596708	1	HEAD SECTION PRE-ASS. ⇨ ❑ 770	KOPFSTUECK VORM.
4	918221408	1	TENSION PLATE PRE-ASS. ⇨ ❑ 772	ZUGLASCHE VORM.
5	96037297	1	ANGULAR TRANSMITTER ATTACHMENT ⇨ ❑ 773	WINKELGEBER ANBAU

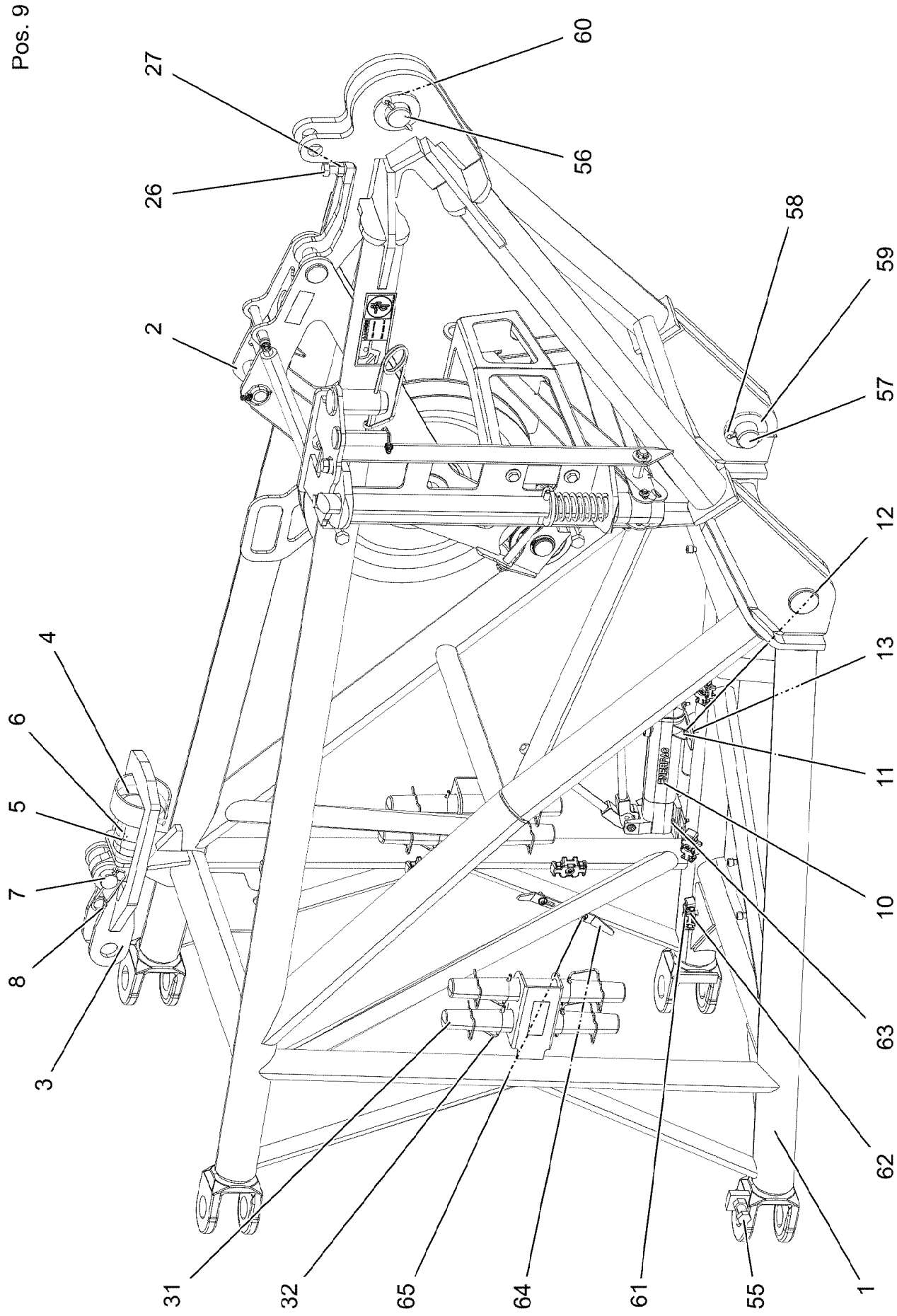

16.11.2023 094515 LIEBHERR	**etk_en_de_078966 LTR 1100** **ADAPTER PRE-ASS.** **ADAPTER VORM.**	❑ 758 (1/4) **918533508**

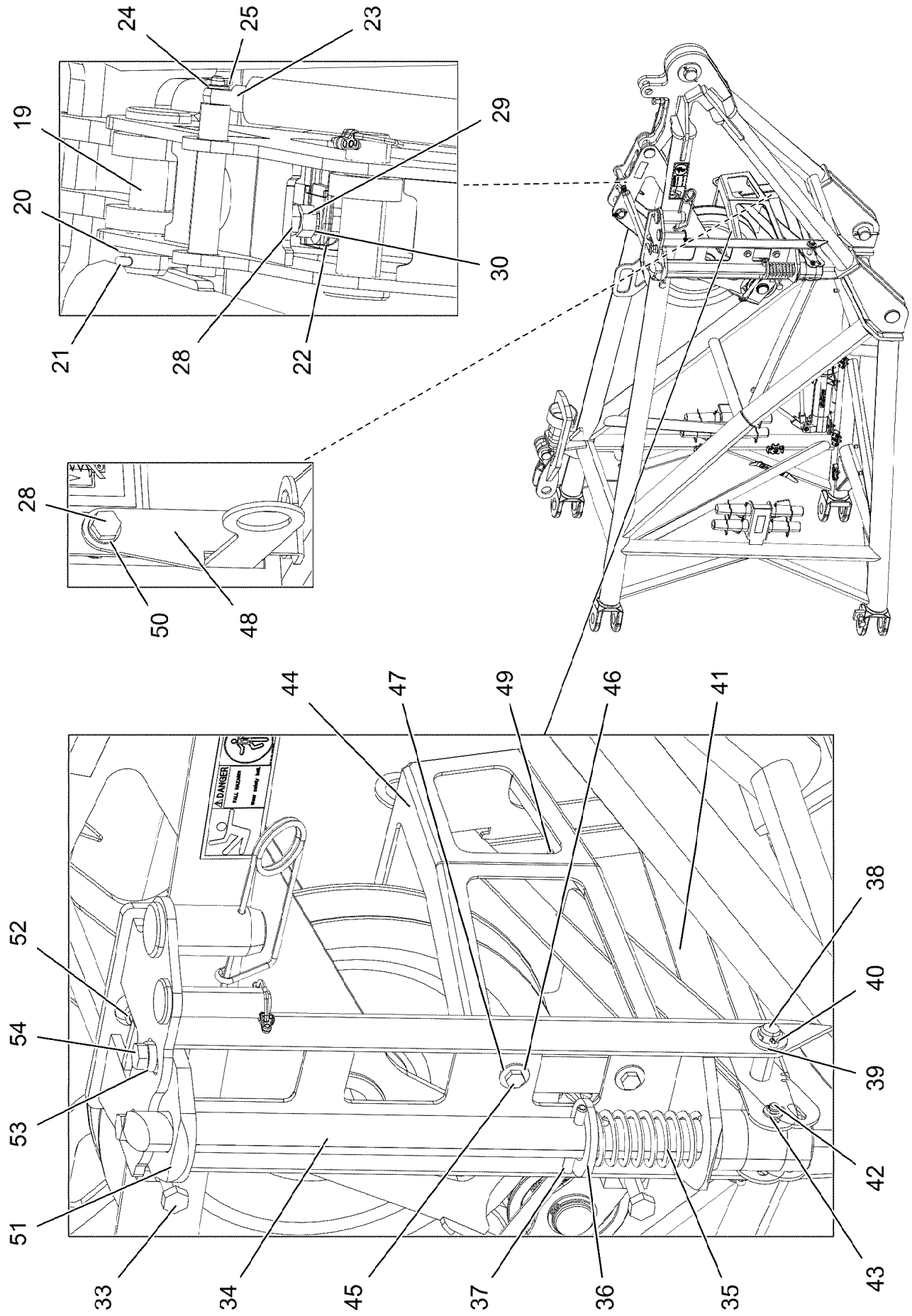

16.11.2023 094516	**etk_en_de_078966 LTR 1100**	❑ 759 (2/4)
LIEBHERR	**ADAPTER PRE-ASS.** **ADAPTER VORM.**	**918533508**

Pos.	Item	Quantity	Description	Bezeichnung
1	96013744	1	ADAPTER WELDED CONSTRUCTION	ADAPTER SCHWK.
2	917695308	1	GUIDE PULLEY COMPL. ⇨ ❑ 762	UMLENKROLLE VORM.
3	925074608	1	CROSS CONNECTING LINK WELDED	KREUZLASCHE SCHWK.
4	790038808	1	HOIST CYLINDERS 73,15/66,55-61,7	HUBZYLINDER
(999)	12107162	1	REPAIR KIT	REPARATURSATZ
5	10197808	2	WASHER ISO 7089 5 200HV ZNNI-480H	SCHEIBE
6	10875524	2	HEX SCREW ISO 4017 M5X20 8.8 480H SPF	SECHSKANTSCHRAUBE
7	942439808	1	PIN RD35X88 35NICRMOV125 GASN. SPF	BOLZEN
8	433101208	1	RETAINING SPRING 4X68 ISO 2081 FE/ZN8/	SICHERUNGSFEDER
9	929315508	1	HOSE CPL. 2SN 6X1650	SCHLAUCH KPL.
10	10801932	1	HAND PUMP ⇨ ❑ 765	HANDPUMPE
11	10197836	2	HEX SCREW ISO 4017 M6X25 8.8 ZNNI-480	SECHSKANTSCHRAUBE
12	10197771	8	WASHER ISO 7089 6 200HV ZNNI-480H SPF	SCHEIBE
13	11656734	4	HEX NUT ISO 7040 M6 8 480H SPF	SECHSKANTMUTTER
19	451430808	1	PIN DIN 1436 30X105X97 35NICRMOV125 GA	BOLZEN
20	10875638	1	WASHER DIN 1441 31 ST FLZN SPF	SCHEIBE
21	10180364	1	SPLIT PIN ISO 1234 6,3X50 St 480H SPF	SPLINT
22	97096913	1	PLATE 3X125X48 DC01 FE//ZNNI8//CN//T0	BLECH
23	591514408	1	GAS SPRING 28X350-900N	GASFEDER
24	12103465	2	WASHER ISO 7089 8 300HV ZNNI-480H SPF	SCHEIBE
25	51152	4	SPLIT PIN ISO 1234 3,2X20 A2	SPLINT
26	10875521	1	HEX SCREW ISO 4017 M16X60 8.8 FLZN SP	SECHSKANTSCHRAUBE
27	10875617	4	HEX NUT ISO 4032 M16 8 FLZN SPF	SECHSKANTMUTTER
28	11645386	2	HEX SCREW ISO 4017 M12X45 8.8 FLZN SP	SECHSKANTSCHRAUBE
29	10875616	4	HEX NUT ISO 4032 M12 8 FLZN SPF	SECHSKANTMUTTER
30	11840127	2	HEX NUT ISO 7040 M12 8 FLZN SPF	SECHSKANTMUTTER
31	950477508	4	PIN 50.0X360 35NICRMOV125 GASN. SPF	BOLZEN
32	929819308	8	CIRCLIP 45-50	SICHERUNGSCLIP
33	10875518	2	HEX SCREW ISO 4017 M16X100 8.8 FLZN SP	SECHSKANTSCHRAUBE
34	952228108	1	PIN 60.0X675 S355J2C+C FE//ZNNI8//CN//T0	BOLZEN
35	720001108	1	COMPRESSION SPRING DIN 2098 6,3X50X	DRUCKFEDER
36	10289847	1	WASHER ISO 7089 42 300HV FLZN SPF	SCHEIBE
37	10875874	1	DOWEL PIN ISO 8752 10X80 480H SPF	SPANNSTIFT
38	450023508	1	PIN ISO 2340 B20X190X175 42CRMO4+QT	BOLZEN
39	10289808	2	WASHER ISO 7089 20 300HV FLZN SPF	SCHEIBE
40	10180359	2	SPLIT PIN ISO 1234 5X40 St 480H SPF	SPLINT
41	955560708	1	PLATE 4X182X695 S315MC FE//ZNNI8//CN//T	BLECH
42	452552708	1	PIN ISO 2340 B10X90X81 ST.50-2K FE//ZN20	BOLZEN
43	10289795	2	WASHER ISO 7089 10 300HV FLZN SPF	SCHEIBE
44	97088601	1	PLATE 4X811X527 S315MC FE//ZNNI8//CN//T	BLECH
45	11691328	2	HEX SCREW ISO 4017 M10X35 8.8 FLZN SP	SECHSKANTSCHRAUBE
46	11491889	4	WASHER ISO 7093-1 10 300HV FLZN SPF	SCHEIBE
47	10875629	2	HEX NUT ISO 7040 M10 8 FLZN SPF	SECHSKANTMUTTER
48	97088602	1	PLATE 4X89X233 S315MC FE//ZNNI8//CN//T	BLECH
49	425301208	1	CONICAL SPRING WASHER DIN 6796 12 F	SPANNSCHEIBE
50	10289804	2	WASHER ISO 7089 12 300HV FLZN SPF	SCHEIBE
51	953856308	1	PLATE 15X135X128 S690QL FLZN	BLECH
52	10178898	1	HEX SCREW ISO 4017 M12X120 8.8 FLZN SP	SECHSKANTSCHRAUBE
53	10875866	2	WASHER DIN 7989-2 16 -ST FLZN SPF	SCHEIBE
54	12214938	2	HEX SCREW ISO 4017 M16X35 8.8 FLZN SP	SECHSKANTSCHRAUBE
55	12223051	1	HEX SCREW ISO 4017 M16X70 8.8 FLZN SP	SECHSKANTSCHRAUBE
56	452550508	1	PIN ISO 2340 B50X120X96 35NICRMOV125	BOLZEN
57	453041108	2	PIN ISO 2341 B45X102X85 35NICRMOV125	BOLZEN
58	10180375	4	SPLIT PIN ISO 1234 10X80 St 480H SPF	SPLINT
59	10289850	2	WASHER ISO 7089 45 300HV FLZN SPF	SCHEIBE
60	10289852	2	WASHER ISO 7089 48 300HV FLZN SPF	SCHEIBE
61	12102696	7	BUTTON HEAD SCREW AEHNL.ISO 7380-2	HALBRUNDKOPFSCHRAUBE
62	10872676	7	CABLE CLIP HOLDER 46X70-SCHWARZ PA	KABELBINDERHALTER

Pos.	Item	Quantity	Description	Bezeichnung
63	10875511	2	HEX SCREW ISO 4014 M6X30 8.8 480H SPF	SECHSKANTSCHRAUBE
64	955002908	1	PLATE 4X246X20 S315MC FE//ZNNI8//CN//T	BLECH
65	12102696	2	BUTTON HEAD SCREW AEHNL.ISO 7380-2	HALBRUNDKOPFSCHRAUBE

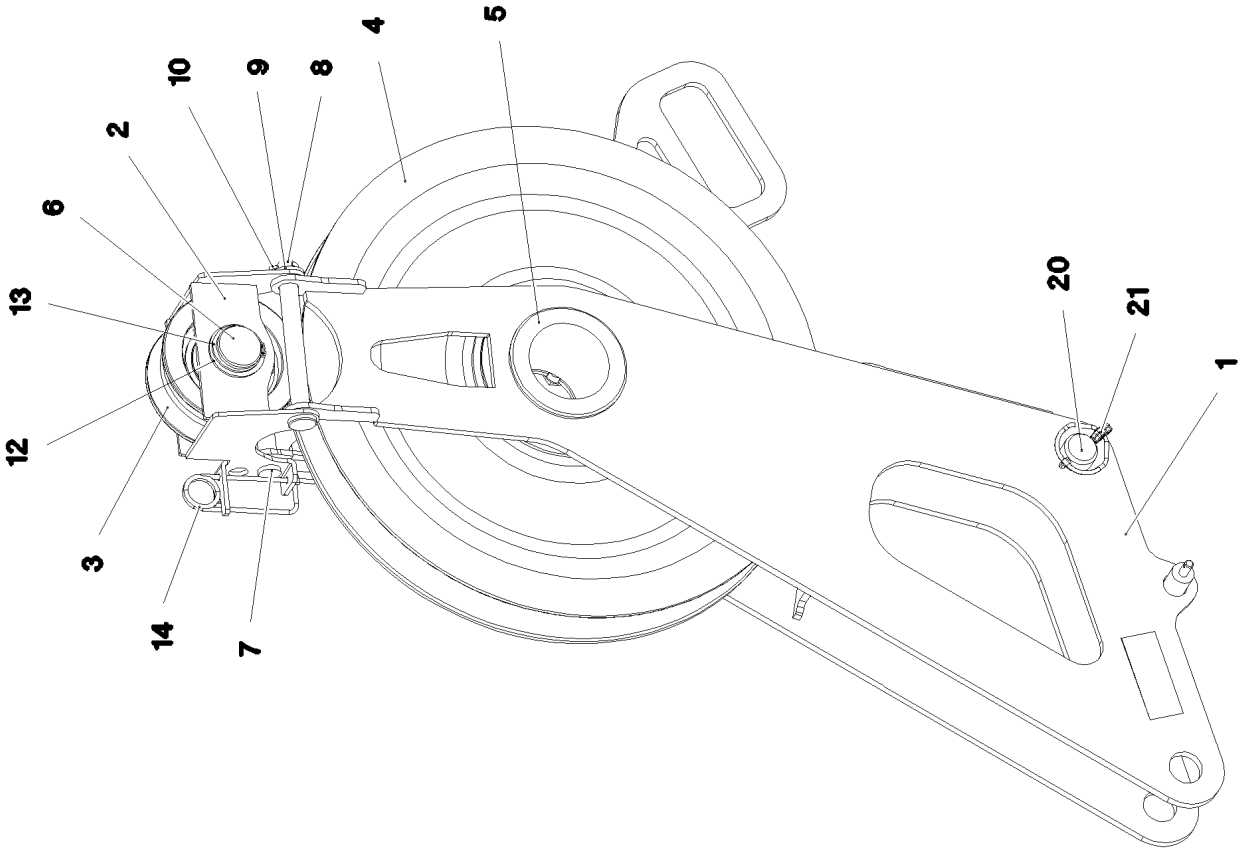
4
5
10
9
8
2
6
13
12
3
14
7
20
21
1

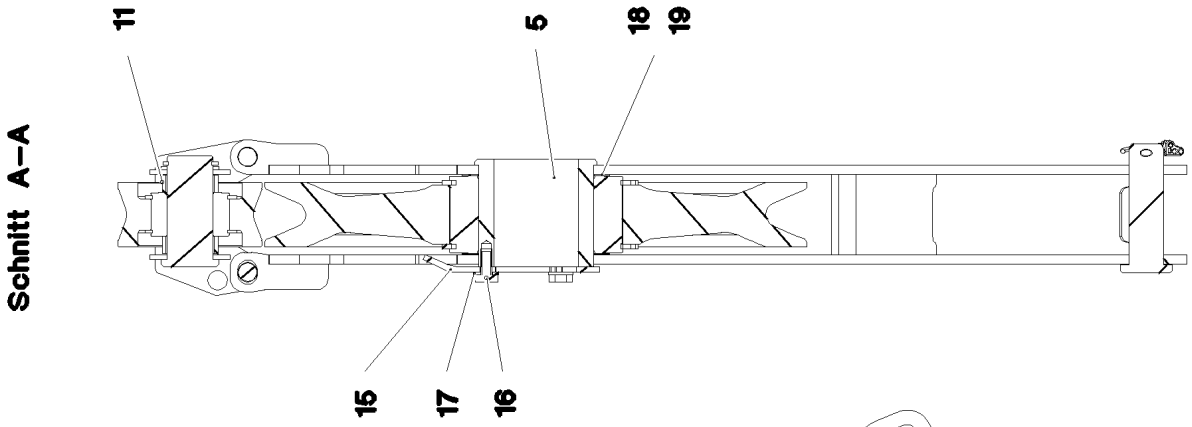
Schnitt A–A
11
5
18
19
15
17
16

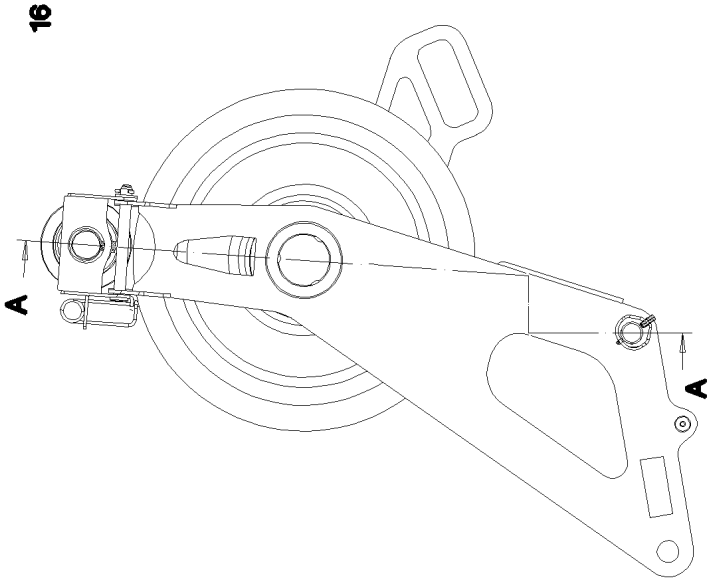
A
A

Pos.	Item	Quantity	Description	Bezeichnung
1	968714508	1	CHANGE OVER PULLEY WC.	UMLENKROLLE SCHWK.
2	969142508	1	ROLLER CLAMP WELDED FE//ZNNI8//CN//T	ROLLENHALTER SCHWK.
3	969174808	1	ROLLER CPL.	ROLLE KPL.
(1)	97053660	1	ROLLER 130.0X56 35NICRMOV125 SPF	ROLLE
(2)	745900808	1	ROLLER BEARING 68X40X38	WAELZLAGER
(3)	10875662	2	RETAINING RINGS DIN 471 68X2,5 480H SP	SICHERUNGSRING
4	963904108	1	ROPE PULLEY CPL. SPF ⇨ ❑ 764	SEILROLLE KPL.
5	97053673	1	AXLE 108.0X99 S355J2H FE//ZNNI8//CN//T0	ACHSE
6	97053674	1	PIN 50.0 X96 S355J2+AR FE//ZNNI8//CN//T0	BOLZEN
7	97053675	1	PIN 20.0 X160 S355J2+AR FE//ZNNI8//CN//T0	BOLZEN
8	453009308	1	PIN ISO 2341 B16X152X146 ST.50-2K A3C	BOLZEN
9	10289806	1	WASHER ISO 7089 16 300HV FLZN SPF	SCHEIBE
10	10180351	1	SPLIT PIN ISO 1234 4X25 St 480H SPF	SPLINT
11	938545908	2	TUBE 48.3 X0 S235JRH FE//ZNNI8//CN//T0	ROHR
12	422002308	1	SUPPORTING WASHER DIN 988 S 40X50X2,	STUETZSCHEIBE
13	428003308	1	RETAINING RINGS DIN 471 40X2,5	SICHERUNGSRING
14	433101208	1	RETAINING SPRING 4X68 ISO 2081 FE/ZN8/	SICHERUNGSFEDER
15	955560308	1	PLATE 5X110X154 S355MC FE//ZNNI8//CN//T	BLECH
16	10197730	3	HEX SCREW ISO 4017 M10X20 8.8 ZNNI-480	SECHSKANTSCHRAUBE
17	10289795	3	WASHER ISO 7089 10 300HV FLZN SPF	SCHEIBE
18	97045516	2	PLATE 1X128X128 DC01 FE//ZNNI8//CN//T0	BLECH
20	451430808	1	PIN DIN 1436 30X105X97 35NICRMOV125 GA	BOLZEN
21	10875870	1	SAFETY PLUG W HINGE-LID 6X42X5,5X32 4	SICHERHEITSKLAPPSTECKER

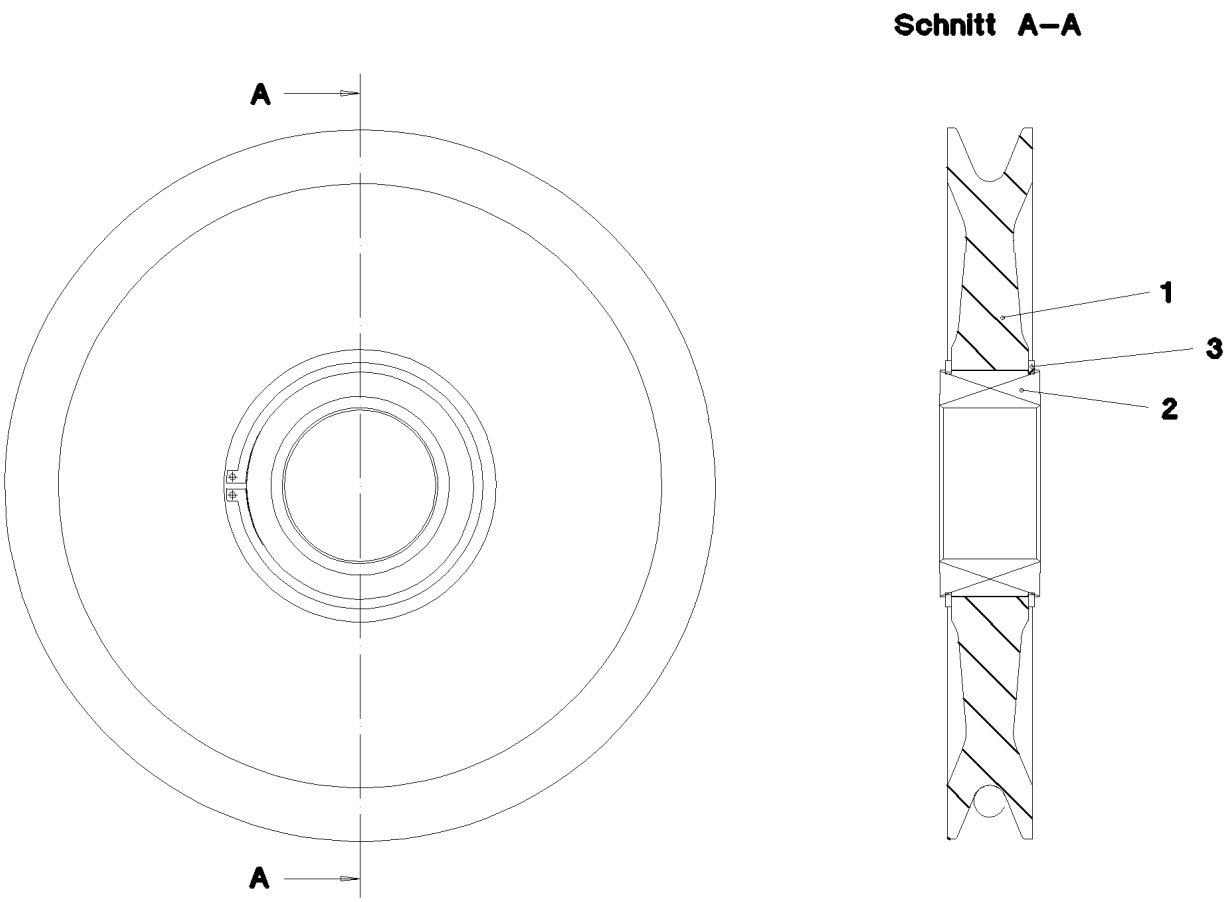

Pos.	Item	Quantity	Description	Bezeichnung
1	975555308	1	ROPE PULLEY 56X470X470 PA6G SPF	SEILROLLE
2	745902508	1	ROLLER BEARING 100X150X67	WAELZLAGER
3	10874537	2	RETAINING RINGS DIN 471 150X4 FLZN	SICHERUNGSRING

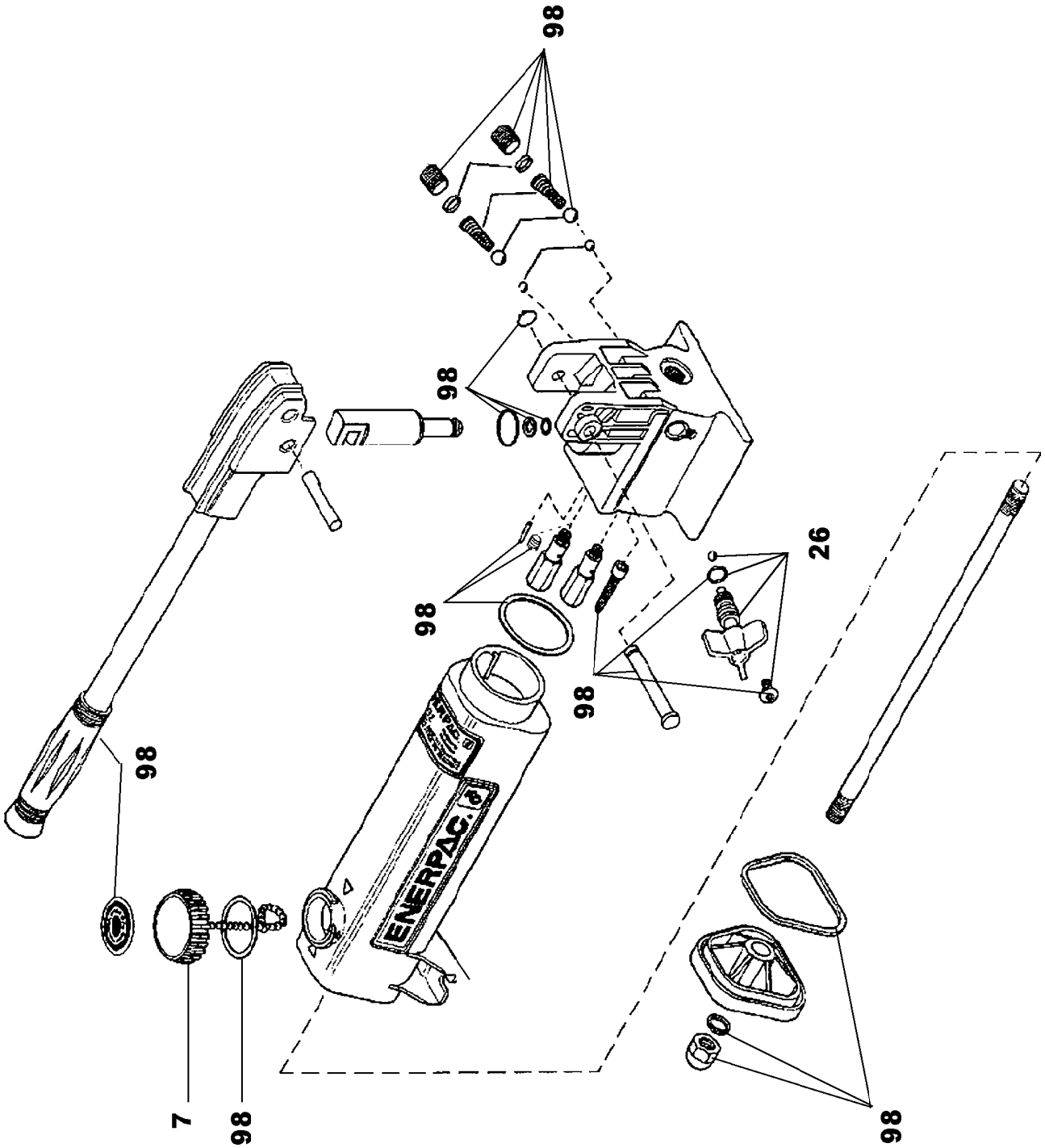

16.11.2023 001490 LIEBHERR	**etk_en_de_078966 LTR 1100** **HAND PUMP** **HANDPUMPE**	❑ 765 (1/2) **10801932**

Pos.	Item	Quantity	Description	Bezeichnung
7	10873239	1	COVER	DECKEL
26	12106640	1	DRAIN SCREW	ABLASSSCHRAUBE
98	571838008	1	REPAIR KIT	REPARATURSATZ

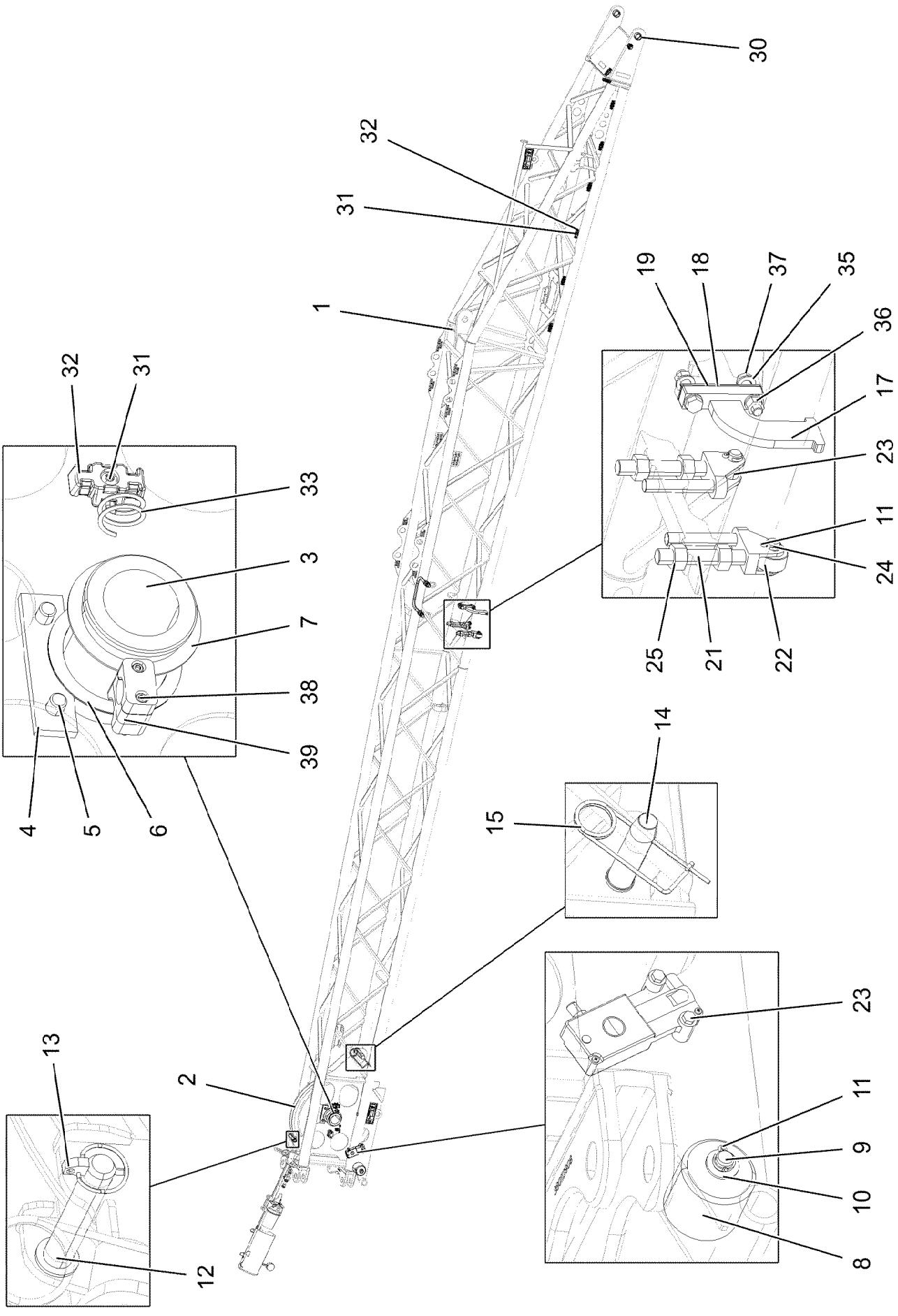

16.11.2023 174222 LIEBHERR	**etk_en_de_078966 LTR 1100** **PIVOT SECTION, PRE-ASSEMBLED** **ANLENKSTUECK VORM.**	❑ 767 (1/2) **91001040**

Pos.	Item	Quantity	Description	Bezeichnung
1	96062032	1	PIVOT PIECE ST. CONST.	ANLENKSTUECK SCHWK.
2	927311708	1	ROPE PULLEY CPL. RD640 SPF ⇨ ❑ 769	SEILROLLE KPL.
3	949347508	1	AXLE RD100X125 S355J2H FE//ZNNI8//CN//T	ACHSE
4	997040401	1	AXLE HOLDER LN 4/4 ZNNI	ACHSHALTER
5	10877796	2	HEX SCREW ISO 4017 M16X25 8.8 FLZN SP	SECHSKANTSCHRAUBE
6	97045516	2	PLATE 1X128X128 DC01 FE//ZNNI8//CN//T0	BLECH
7	97045517	1	PLATE 2X128X128 DC01 FE//ZNNI8//CN//T0	BLECH
8	749001008	1	TRACK ROLLER RD85X84 PA6G	LAUFROLLE
9	450023108	1	PIN ISO 2340 B20X135X120 ST.50-2K FE//ZN	BOLZEN
10	10289808	2	WASHER ISO 7089 20 300HV FLZN SPF	SCHEIBE
11	10180359	4	SPLIT PIN ISO 1234 5X40 St 480H SPF	SPLINT
12	453020908	1	PIN ISO 2341 B20X115X107 ST.50-2K VERZ	BOLZEN
13	10875869	1	SAFETY PLUG W HINGE-LID 5X29X4,7X25 4	SICHERHEITSKLAPPSTECKER
14	939048708	1	PIN RD40X160 42CRMO4+QT	BOLZEN
15	433105008	1	RETAINING SPRING DIN 2194 6 A3C	SICHERUNGSFEDER
16	10875537	2	HEX SCREW ISO 4017 M8X40 8.8 480H SPF	SECHSKANTSCHRAUBE
17	96062303	1	PLATE WELDED	BLECH SCHWK.
18	97062383	1	PLATE 2X30X130 DC01 FE//ZNNI8//CN//T0	BLECH
19	97062384	1	PLATE 3X30X130 DC01 FE//ZNNI8//CN//T0	BLECH
21	927493908	2	ROLLER MOUNTING FE//ZNNI8//CN//T0	ROLLENHALTERUNG
22	947868208	2	ROLLER 50.0X25 S355J2+AR FE//ZNNI8//CN/	ROLLE
23	708010008	2	CYLINDER BUSHING 20X23X25	ZYLINDERBUCHSE
24	10875669	2	PIN DIN 1435 20X50X43 42CRMO4 GASN. SP	BOLZEN
25	10425688	4	HEX NUT ISO 4032 M24 10 FLZN SPF	SECHSKANTMUTTER
30	704339608	2	CLAMPING SLEEVE DIN 1498 45X55X30 55 S	EINSPANNBUCHSE
31	12102696	11	BUTTON HEAD SCREW AEHNL.ISO 7380-2	HALBRUNDKOPFSCHRAUBE
32	10872676	10	CABLE CLIP HOLDER 46X70-SCHWARZ PA	KABELBINDERHALTER
33	720014408	2	CABLE CLAMP 4X40X67 1.4310	KABELHALTER
35	10289806	4	WASHER ISO 7089 16 300HV FLZN SPF	SCHEIBE
36	10875617	2	HEX NUT ISO 4032 M16 8 FLZN SPF	SECHSKANTMUTTER
37	10875798	2	HEX SCREW ISO 4014 M16X75 8.8 FLZN SP	SECHSKANTSCHRAUBE
38	10876359	2	SOCKET HEAD SCREW ISO 4762 M6X55 8.8	ZYLINDERSCHRAUBE
39	7005052	3	CLAMP-HALF DIN 3015-1 L 3 R 25 PP SW	KLEMMHAELFTE

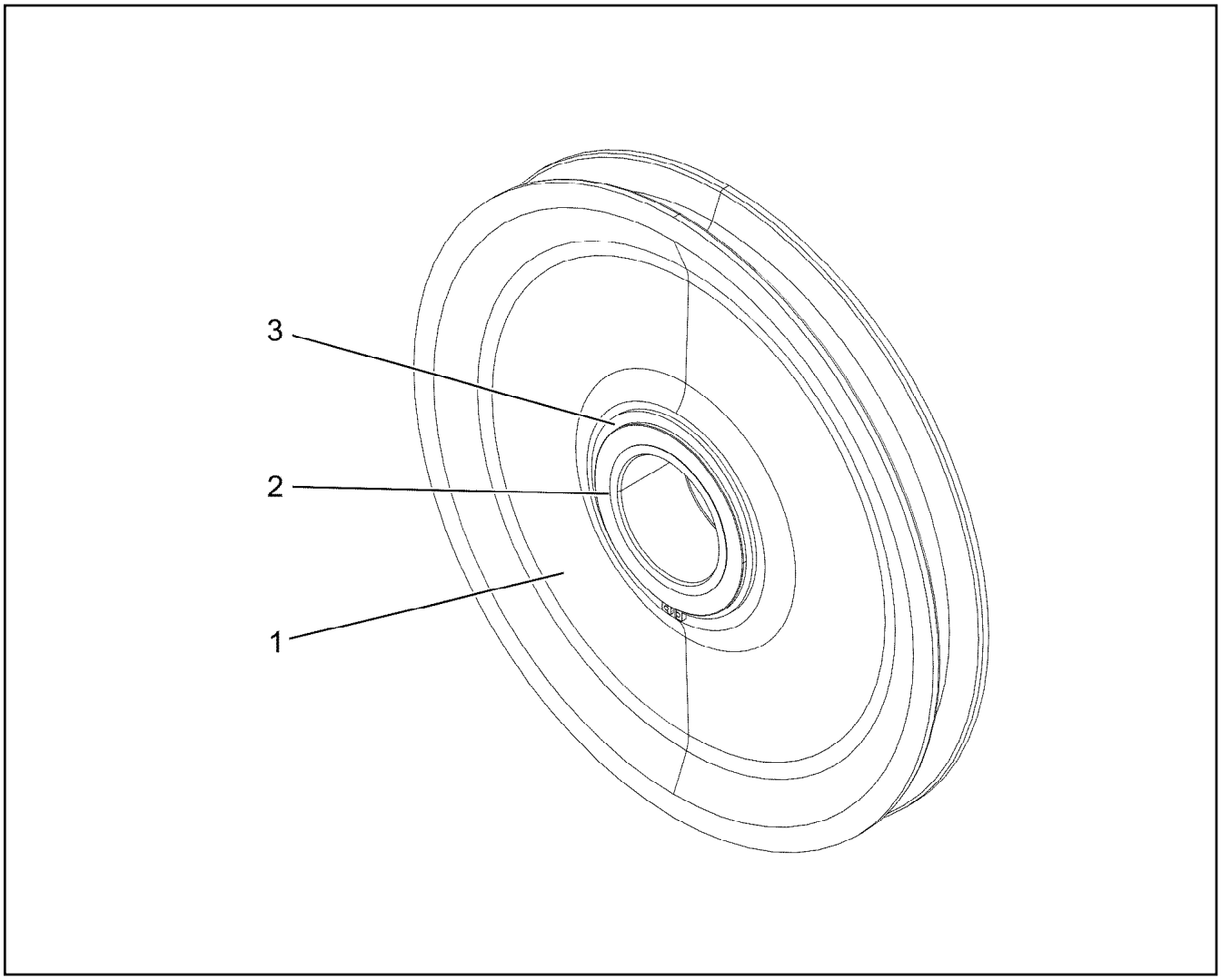

Pos.	Item	Quantity	Description	Bezeichnung
1	288158408	1	ROPE PULLEY RD700X56 PA6G SPF	SEILROLLE
2	745902508	1	ROLLER BEARING 100X150X67	WAELZLAGER
3	10874537	2	RETAINING RINGS DIN 471 150X4 FLZN	SICHERUNGSRING

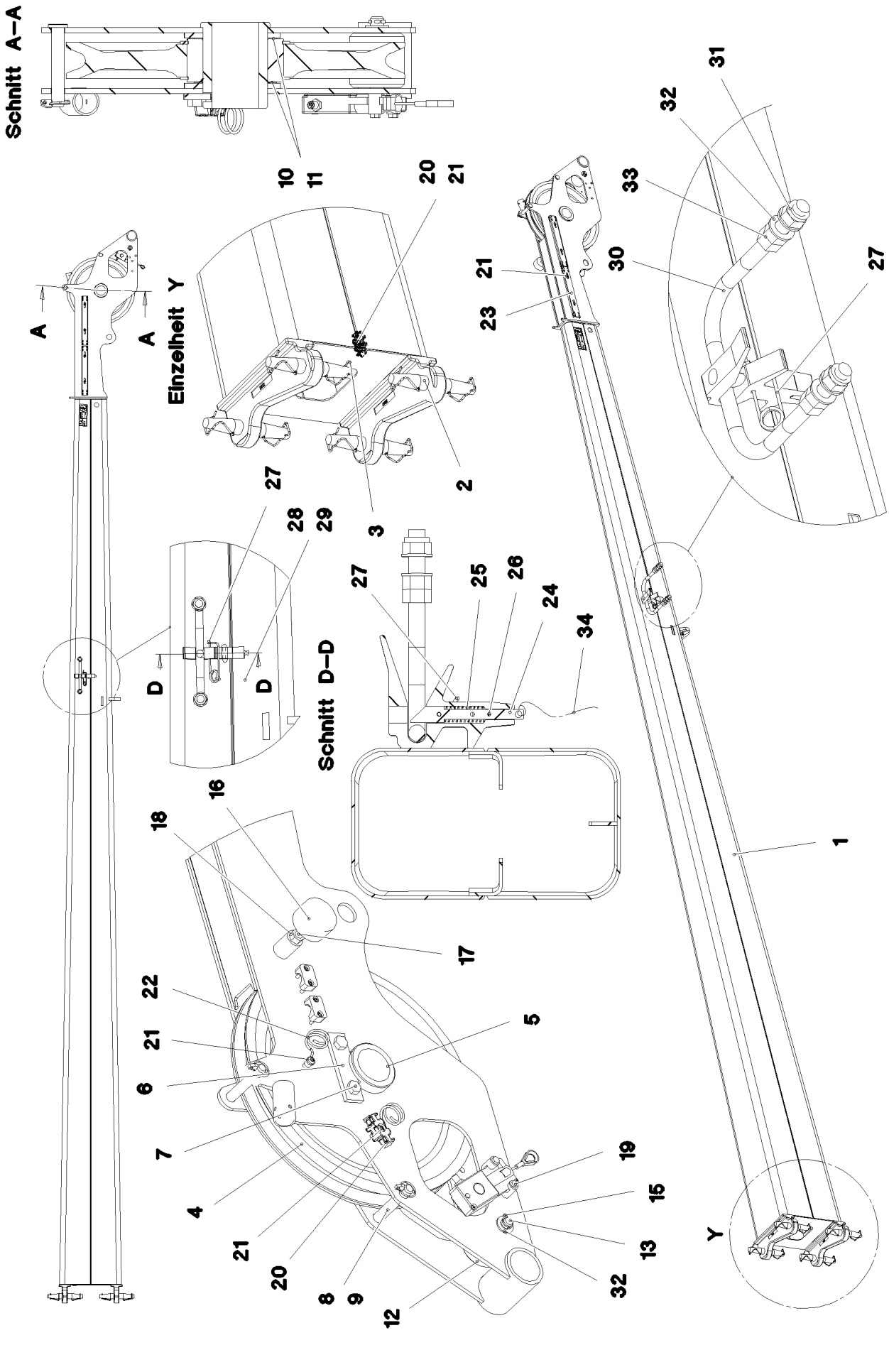
Schnitt A–A
Einzelheit Y
Schnitt D–D
A
A
D
D
Y
1
2
3
4
5
6
7
8
9
10
11
12
13
15
16
17
18
19
20
21
22
23
24
25
26
27
28
29
30
31
32
33
34

Pos.	Item	Quantity	Description	Bezeichnung
1	962049408	1	HEAD SECTION, WELDED CONSTR.	KOPFSTUECK SCHWK.
2	950477408	4	PIN RD40X270 35NICRMOV125 GASN. SPF	BOLZEN
3	929818008	8	CIRCLIP 35-40	SICHERUNGSCLIP
4	927310008	1	ROPE PULLEY CPL. SPF ⇨ ❑ 677	SEILROLLE KPL.
5	949347508	1	AXLE RD100X125 S355J2H FE//ZNNI8//CN//T	ACHSE
6	997040401	1	AXLE HOLDER LN 4/4 ZNNI	ACHSHALTER
7	10877796	2	HEX SCREW ISO 4017 M16X25 8.8 FLZN SP	SECHSKANTSCHRAUBE
8	453020908	2	PIN ISO 2341 B20X115X107 ST.50-2K VERZ	BOLZEN
9	10875869	2	SAFETY PLUG W HINGE-LID 5X29X4,7X25 4	SICHERHEITSKLAPPSTECKER
10	97045516	1	PLATE 1X128X128 DC01 FE//ZNNI8//CN//T0	BLECH
11	97045517	1	PLATE 2X128X128 DC01 FE//ZNNI8//CN//T0	BLECH
12	749001008	1	TRACK ROLLER RD85X84 PA6G	LAUFROLLE
13	450023108	1	PIN ISO 2340 B20X135X120 ST.50-2K FE//ZN	BOLZEN
15	10180359	2	SPLIT PIN ISO 1234 5X40 St 480H SPF	SPLINT
16	726617908	1	RUBBER METAL STOP BUFFER E75-40-5M1	GUMMI-METALLANSCHLAGPUF
17	12100611	1	GRUB SCREW ISO 4026 M16X95 8.8 FLZN	GEWINDESTIFT
18	10875617	1	HEX NUT ISO 4032 M16 8 FLZN SPF	SECHSKANTMUTTER
19	10875537	2	HEX SCREW ISO 4017 M8X40 8.8 480H SPF	SECHSKANTSCHRAUBE
20	10872676	2	CABLE CLIP HOLDER 46X70-SCHWARZ PA	KABELBINDERHALTER
21	12102696	7	BUTTON HEAD SCREW AEHNL.ISO 7380-2	HALBRUNDKOPFSCHRAUBE
22	720014408	2	CABLE CLAMP 4X40X67 1.4310	KABELHALTER
23	97045515	2	PLATE 2X73X380 DC01 FE//ZNNI8//CN//T0	BLECH
24	955112308	1	PIN 20.0X13 5 S355J2C+C FE//ZNNI8//CN//T0	BOLZEN
25	720011508	1	COMPRESSION SPRING	DRUCKFEDER
26	10875878	1	DOWEL PIN ISO 8752 4X28 480H SPF	SPANNSTIFT
27	433101208	1	RETAINING SPRING 4X68 ISO 2081 FE/ZN8/	SICHERUNGSFEDER
28	11160431	1	ROPE 2 2,3KN EDELSTAHL	SEIL
29	11170565	2	FERRULE 2 CU	PRESSKLEMME
30	951665708	1	BRACKET 20.0X728 S355J2C+C 480H SPF	BUEGEL
31	10875630	2	HEX NUT ISO 7040 M20 10 FE//ZnNi8//Cn//T0	SECHSKANTMUTTER
32	10289808	6	WASHER ISO 7089 20 300HV FLZN SPF	SCHEIBE
33	10875618	4	HEX NUT ISO 4032 M20 8 FLZN SPF	SECHSKANTMUTTER
34	773404508	1.2	ROPE 6 0,59KN PERLON	SEIL

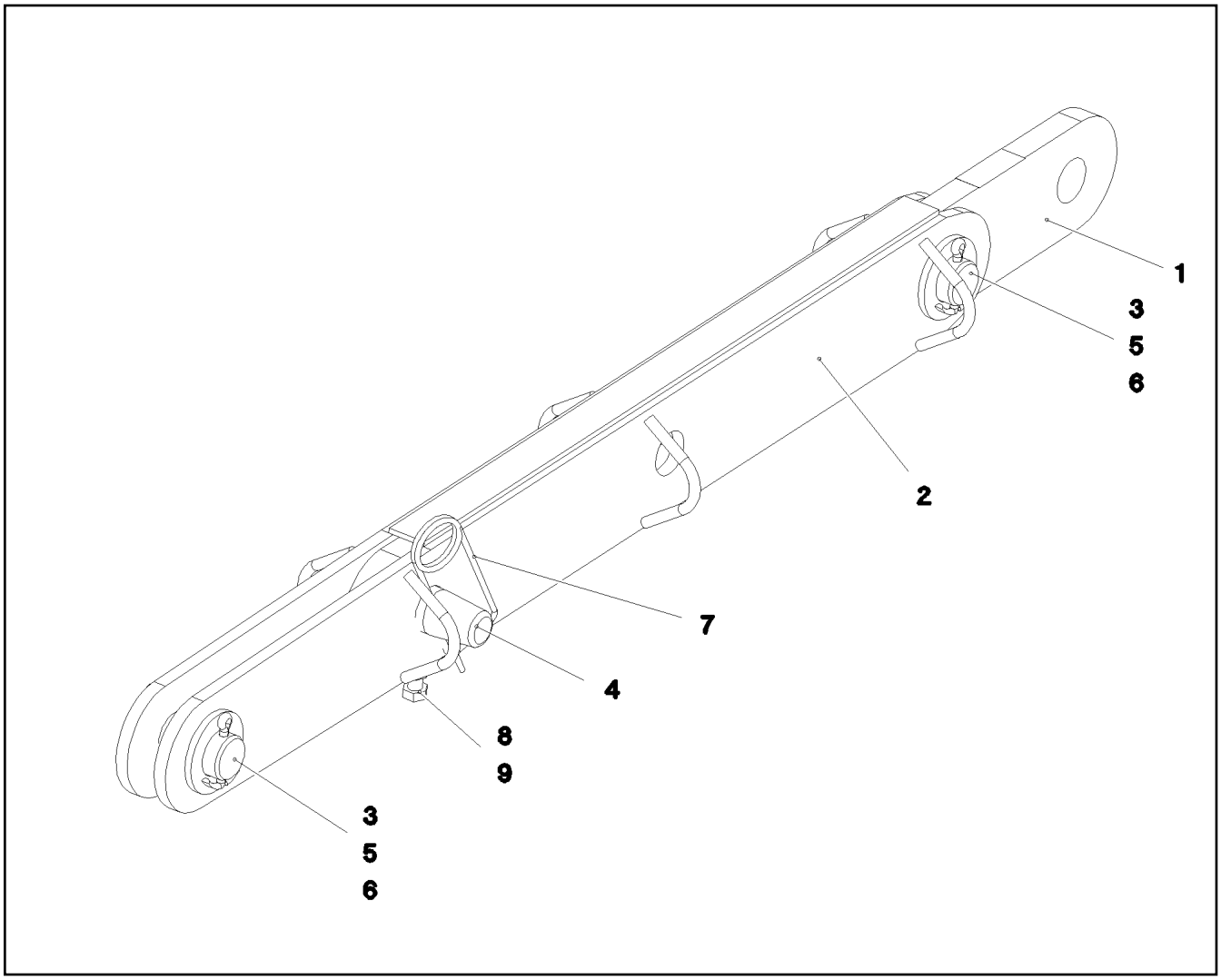

Pos.	Item	Quantity	Description	Bezeichnung
1	927159108	1	DRAW CONNECTING LINK	ZUGLASCHE SCHWK.
2	927159208	1	DRAW CONNECTING LINK	ZUGLASCHE SCHWK.
3	452550508	2	PIN ISO 2340 B50X120X96 35NICRMOV125	BOLZEN
4	953620108	1	PIN 55.0X147 35NICRMOV125 GASN. SPF	BOLZEN
5	10289852	4	WASHER ISO 7089 48 300HV FLZN SPF	SCHEIBE
6	10180375	4	SPLIT PIN ISO 1234 10X80 St 480H SPF	SPLINT
7	433105008	1	RETAINING SPRING DIN 2194 6 A3C	SICHERUNGSFEDER
8	10875520	1	HEX SCREW ISO 4017 M16X50 8.8 FLZN SP	SECHSKANTSCHRAUBE
9	10875617	1	HEX NUT ISO 4032 M16 8 FLZN SPF	SECHSKANTMUTTER

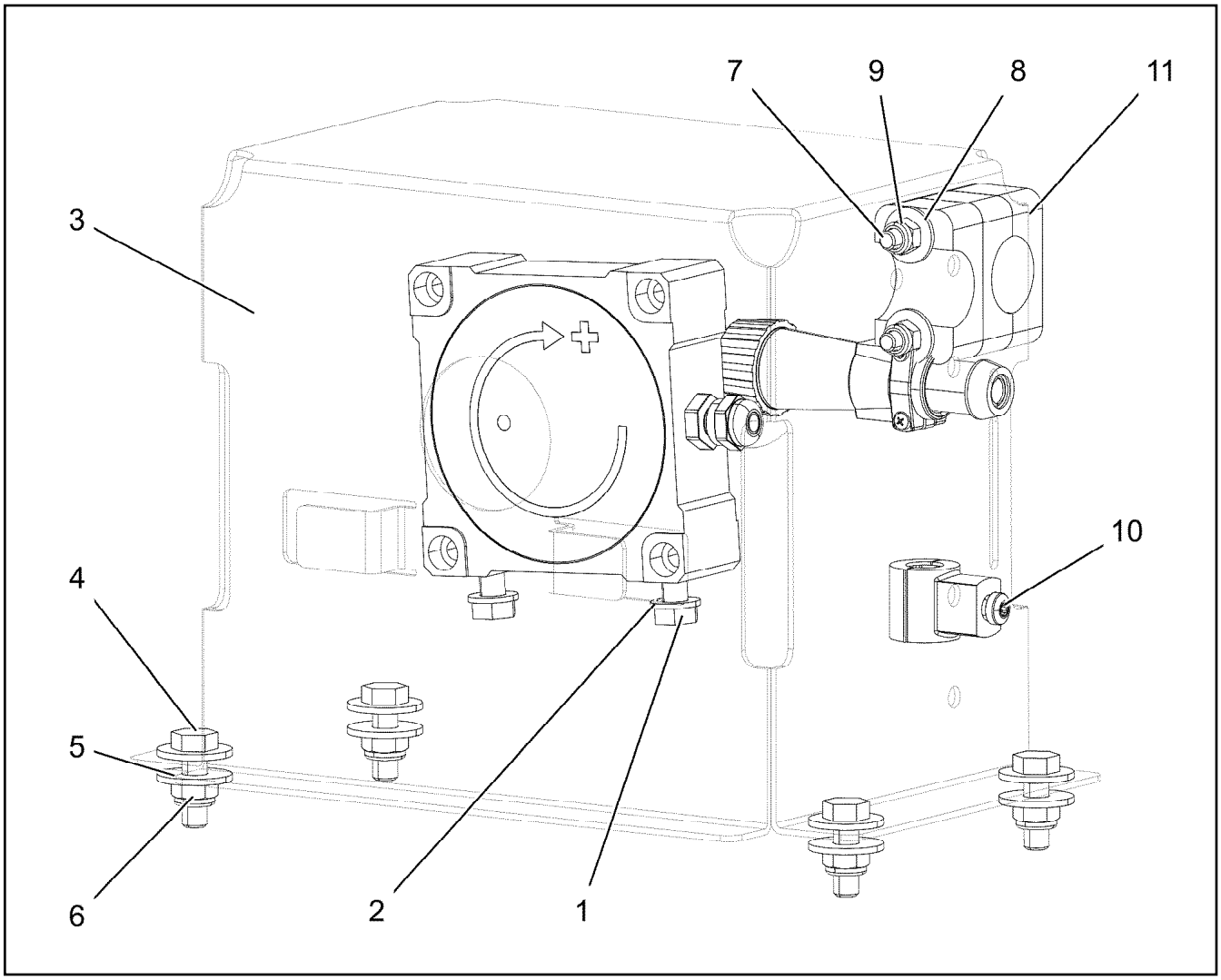

Pos.	Item	Quantity	Description	Bezeichnung
1	11651767	2	HEX SCREW ISO 4017 M8X20 8.8 480H SPF	SECHSKANTSCHRAUBE
2	12103465	2	WASHER ISO 7089 8 300HV ZNNI-480H SPF	SCHEIBE
3	971907008	1	HOOD 2X669X579 DC01 FE//ZNNI8//CN//T0	HAUBE
4	10197831	4	HEX SCREW ISO 4017 M8X25 8.8 ZNNI-480	SECHSKANTSCHRAUBE
5	11140469	8	WASHER ISO 7093-1 8 200HV 480H SPF	SCHEIBE
6	10875614	4	HEX NUT DIN 985 M8 8 480H SPF	SECHSKANTMUTTER
7	12202784	2	SOCKET HEAD SCREW ISO 4762 M6X60 8.8	ZYLINDERSCHRAUBE
8	10875648	2	WASHER ISO 7093-1 6 200HV 480H SPF	SCHEIBE
9	11656734	2	HEX NUT ISO 7040 M6 8 480H SPF	SECHSKANTMUTTER
10	407500508	1	THREAD FORM SCREW DIN 7500 M5X10 ST	GEWINDEFORMSCHRAUBE
11	7005052	3	CLAMP-HALF DIN 3015-1 L 3 R 25 PP SW	KLEMMHAELFTE

Pos.	Item	Quantity	Description	Bezeichnung
11	96035674	1	LEAD W942A ⇨ ❑ 775	LEITUNG
12	965096408	1	LEAD W940	LEITUNG
13	96054467	1	LEAD W942B	LEITUNG
20	96049700	1	ANGLE TRANSMITTER 360GRAD M12	WINKELGEBER
(151)	12102806	1	ANGLE TRANSMITTER 360° LSB PL:D SPF	WINKELGEBER
21	966479308	1	SENSOR LIFT TOP LIMIT SWITCH MIT M12 ⇨ ❑ 776	GEBER HUB OBEN ENDSCHAL

Pos.	Item	Quantity	Description	Bezeichnung
5	10871285	13.59	LEAD 7 G 1	LEITUNG
6	10870332	6.06	LEAD 4 X 0,5	LEITUNG
223	11124205	5.5	CABLE CONDUIT DN16X0,6 PUR SPF	KABELSCHLAUCH
500	923512208	3	CABLE MARKER	KABELMARKER
501	604526608	1	PIN CARRIER 6-POL 16A	STIFTTRAEGER
502	604526508	2	BUSHING SUPPORT 6-POL 16A	BUCHSENTRAEGER
503	604508508	2	SEALING PLUG M 1-K	VERSCHLUSSKAPPE
504	10476383	1	PLUG M1	STECKER
505	602613208	1	EXTENSION M20X1,5/M25X1,5 MS	ERWEITERUNG
506	10873447	1	CABLE GLAND M25X1,5 MS	KABELVERSCHRAUBUNG
507	602424208	2	CABLE GLAND M20X1,5X5-14 MS	KABELVERSCHRAUBUNG
508	604508608	1	PLUG 6-POL	STECKER
509	602704808	1	CABLE SLEEVE 4-6	KABELTUELLE
510	604512108	1	SEALING PLUG M1-D	VERSCHLUSSKAPPE
511	604505508	1	CABLE SOCKET M11-Z	KABELDOSE
512	604508708	1	CABLE SLEEVE 6-8	KABELTUELLE
628	604519208	3	PIN CONTACT 0,75-1MM2	STIFTKONTAKT
629	604519308	5	SLEEVE CONTACT 0,75-1,0MM2	BUCHSENKONTAKT
637	604519108	2	PIN CONTACT 1,5MM2	STIFTKONTAKT
721	10493970	4	SLEEVE CONTACT 0,5MM2 SILBER	BUCHSENKONTAKT
812	604518908	7	STOPPER PLUG BAUREIHE_M1	BLINDSTOPFEN
998	965622208	2	LETTERING WIRING HARNESS	BESCHRIFTUNG KABELBAUM

OHNE BILD

WITHOUT ILLUSTRATION

SANS ILLUSTRATION

SIN ILUSTRACION

БЕЗ ИЭОБРАЖЕНИЯ

Pos.	Item	Quantity	Description	Bezeichnung
7	10678395	1	LIMIT SWITCH TQ200-RFID SPF	ENDSCHALTER

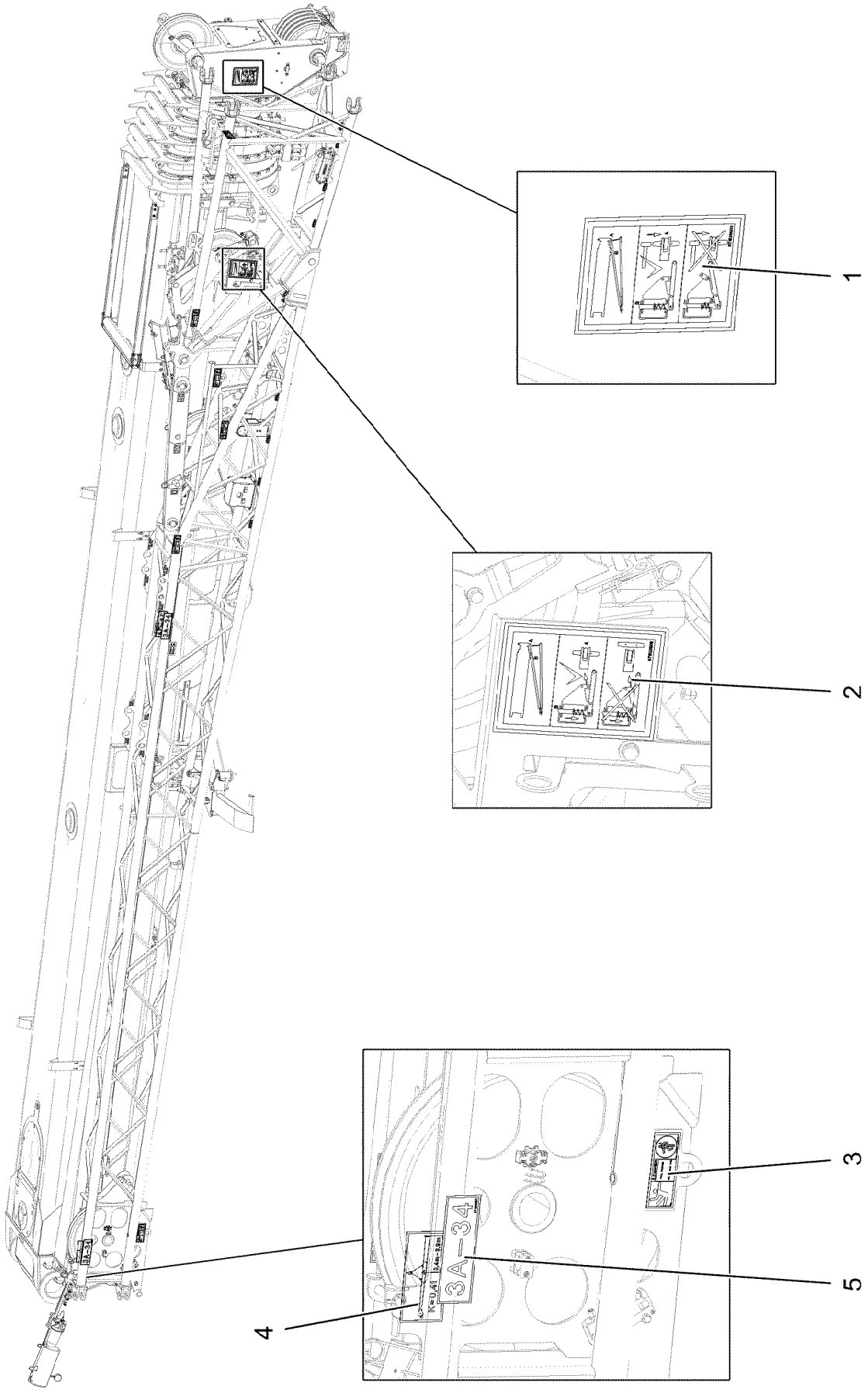

16.11.2023 174226 LIEBHERR	**etk_en_de_078966 LTR 1100** **SIGNAGE DOUBLE FOLDING TIP** **BESCHILDERUNG DKS**	❑ 777 (1/2) **96062033**

Pos.	Item	Quantity	Description	Bezeichnung
1	971539808	1	SIGN 225X165 KLEBEFOLIE SPF	SCHILD
2	971539908	1	SIGN 225X165 KLEBEFOLIE SPF	SCHILD
3	978674808	6	SIGN 168X62 KLEBEFOLIE SPF	SCHILD
4	97087173	2	SIGN 200X100 KLEBEFOLIE SPF	SCHILD
5	97158453	4	SIGN 240X80 3A-34 KLEBEFOLIE SPF	SCHILD

Pos.	Item	Quantity	Description	Bezeichnung
1	917508508	1	LADDER ATTACHMENT ⇨ ❑ 780	LEITER ANBAU
2	968952708	1	MOUNTING HOOK ROD ⇨ ❑ 783	HAKENSTANGE ANBAU
3	773326508	1	ROPE SLING -5M PP SPF	ANSCHLAGSEIL

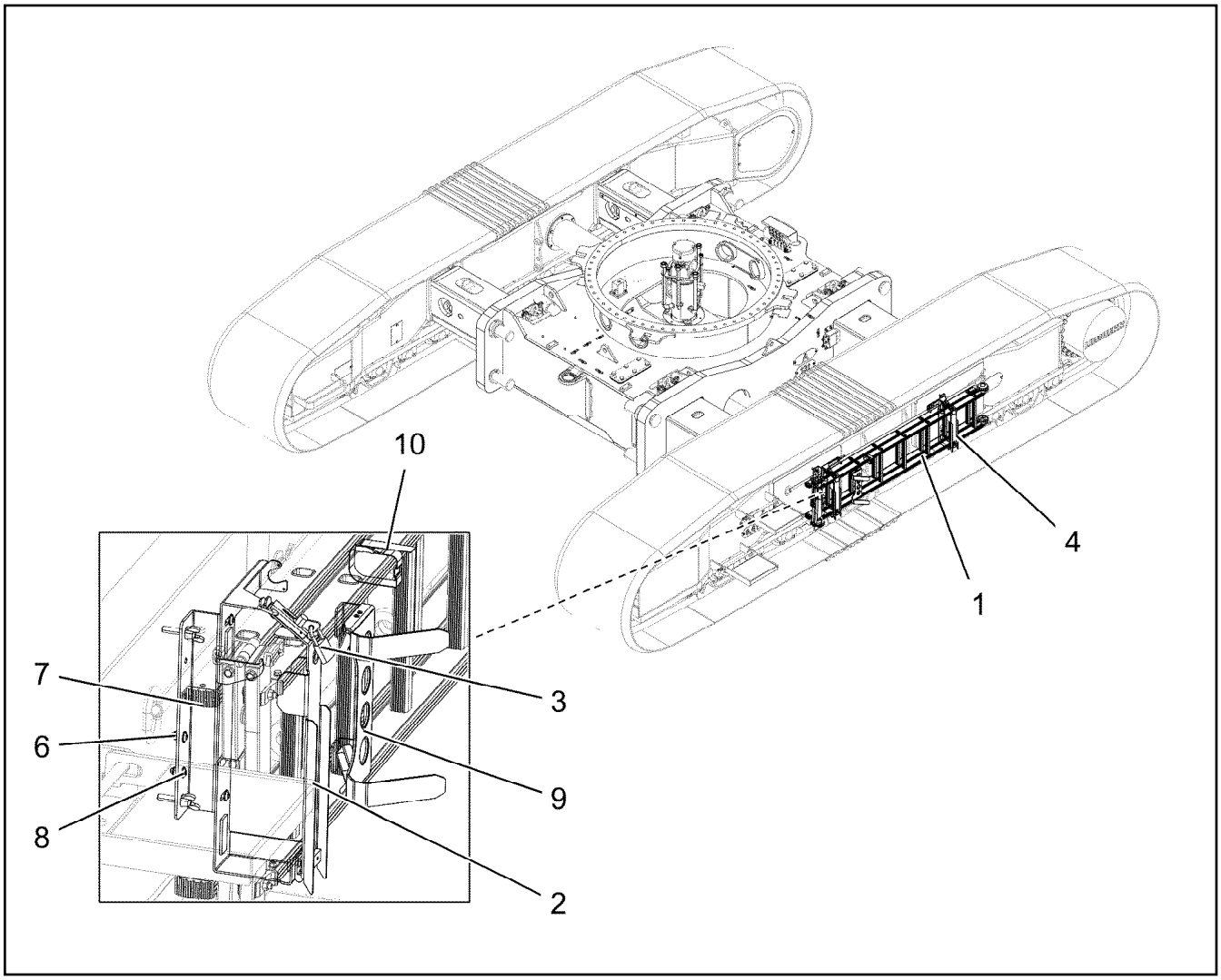

Pos.	Item	Quantity	Description	Bezeichnung
1	10877696	1	DOUBLE LADDER 2X7-485X2,116M AL SPF	STEHLEITER
(1)	12104653	4	RUBBER CAP	GUMMIKAPPE
(2)	12103790	1	TRAVERSE AL	TRAVERSE
2	968940708	1	HOLDER LEFT ⇨ ❑ 781	HALTER LINKS
3	885251508	2	PADLOCK ABUS-64TI/40 TITALIUM	VORHAENGESCHLOSS
4	968940808	1	HOLDER RIGHT ⇨ ❑ 782	HALTER RECHTS
6	10875614	8	HEX NUT DIN 985 M8 8 480H SPF	SECHSKANTMUTTER
7	975230508	2	PLATE 4X336X157 S315MC FE//ZNNI8//CN//T	BLECH
8	10875471	8	BUTTON HEAD SCREW AEHNL.ISO 7380-2	HALBRUNDKOPFSCHRAUBE
9	10326792	1	LADDER BRACKET	LEITERHALTERUNG
10	11492423	1	LASHING STRAP 1,25MX25MM POLYTEX	ZURRGURT

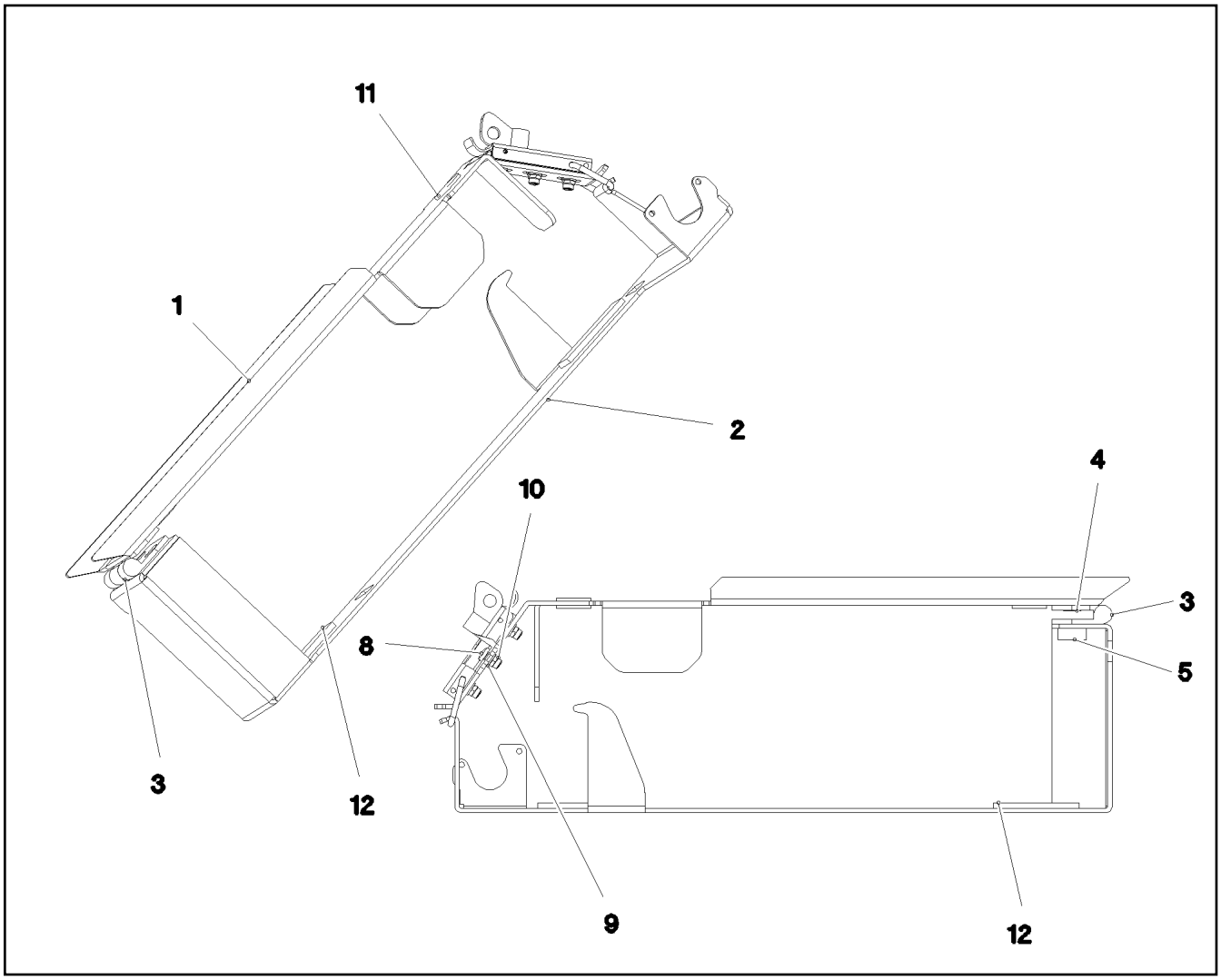

Pos.	Item	Quantity	Description	Bezeichnung
1	97050040	1	PLATE 3X160X522 X5CRNI18-10	BLECH
2	97050041	1	PLATE 3X318X697 X5CRNI18-10	BLECH
3	704228108	1	HINGE 35X35X50/180° ST FE//ZN12//B	SCHARNIER
4	10875551	4	COUNTERSUNK SCREW DIN 7991 M6X16 8	SENKSCHRAUBE
5	953695308	2	THREADED PLATE 8.0 X0 S235JR FE//ZNNI8/	GEWINDEPLATTE
7	704227608	1	LOCK PIECE FEDERBUEGEL SCHWARZ P	VERSCHLUSS
8	11658059	3	PAN-HEAD SCREW ISO 7045 M5X12 4.8 480	FLACHKOPFSCHRAUBE
9	10197808	3	WASHER ISO 7089 5 200HV ZNNI-480H	SCHEIBE
10	10875612	3	HEX NUT DIN 985 M5 8 480H SPF	SECHSKANTMUTTER
11	602701808	2	GROMMET 14/18/24 PVC BK	DURCHFUEHRUNGSTUELLE
12	262107814	0.12	CELL RUBBER 25X4 NEOPRENE	ZELLGUMMI

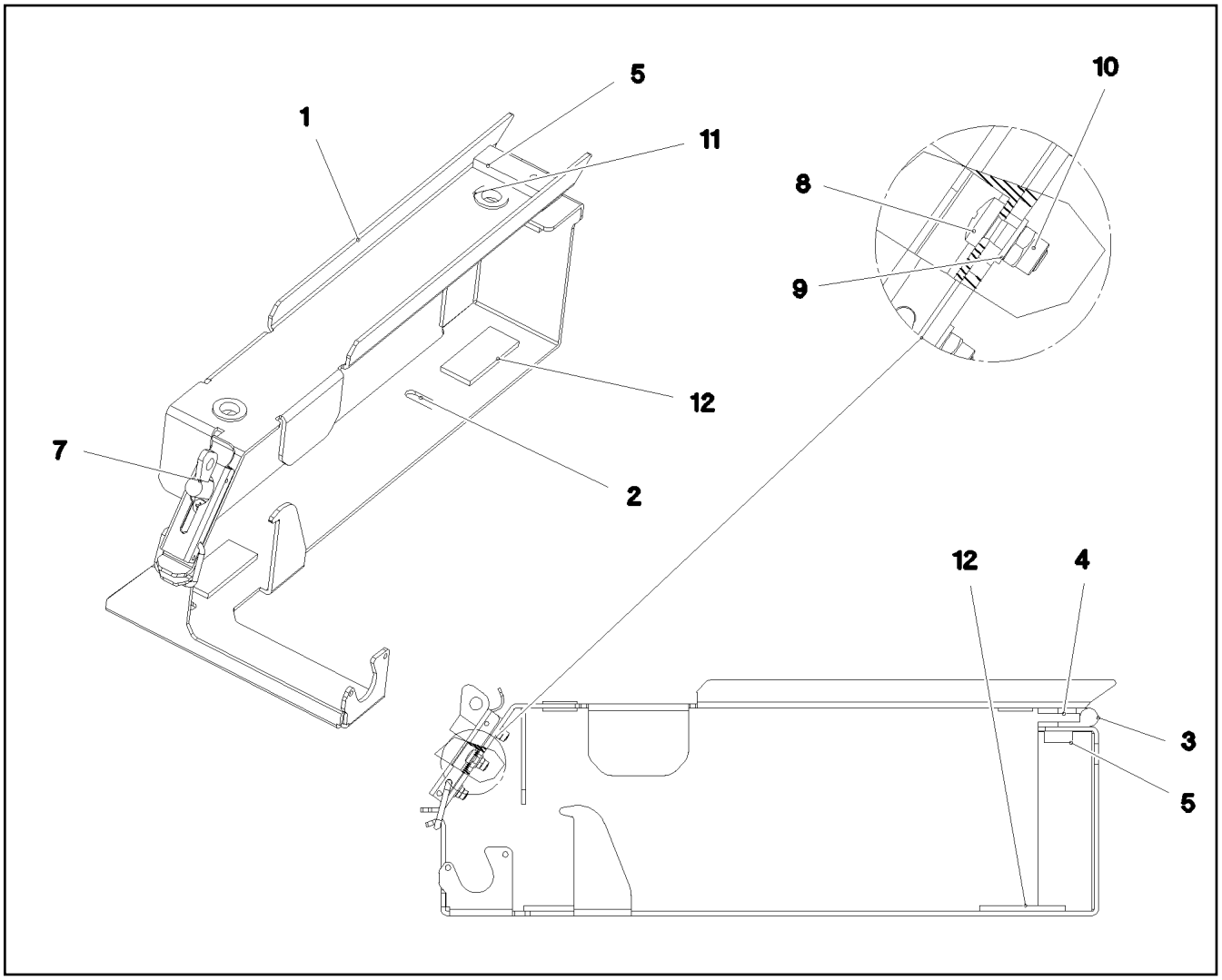

Pos.	Item	Quantity	Description	Bezeichnung
1	97050040	1	PLATE 3X160X522 X5CRNI18-10	BLECH
2	97050043	1	PLATE 3X292X697 X5CRNI18-10	BLECH
3	704228108	1	HINGE 35X35X50/180° ST FE//ZN12//B	SCHARNIER
4	10875551	4	COUNTERSUNK SCREW DIN 7991 M6X16 8	SENKSCHRAUBE
5	953695308	2	THREADED PLATE 8.0 X0 S235JR FE//ZNNI8/	GEWINDEPLATTE
7	704227608	1	LOCK PIECE FEDERBUEGEL SCHWARZ P	VERSCHLUSS
8	11658059	3	PAN-HEAD SCREW ISO 7045 M5X12 4.8 480	FLACHKOPFSCHRAUBE
9	10197808	3	WASHER ISO 7089 5 200HV ZNNI-480H	SCHEIBE
10	10875612	3	HEX NUT DIN 985 M5 8 480H SPF	SECHSKANTMUTTER
11	602701808	2	GROMMET 14/18/24 PVC BK	DURCHFUEHRUNGSTUELLE
12	262107814	0.12	CELL RUBBER 25X4 NEOPRENE	ZELLGUMMI

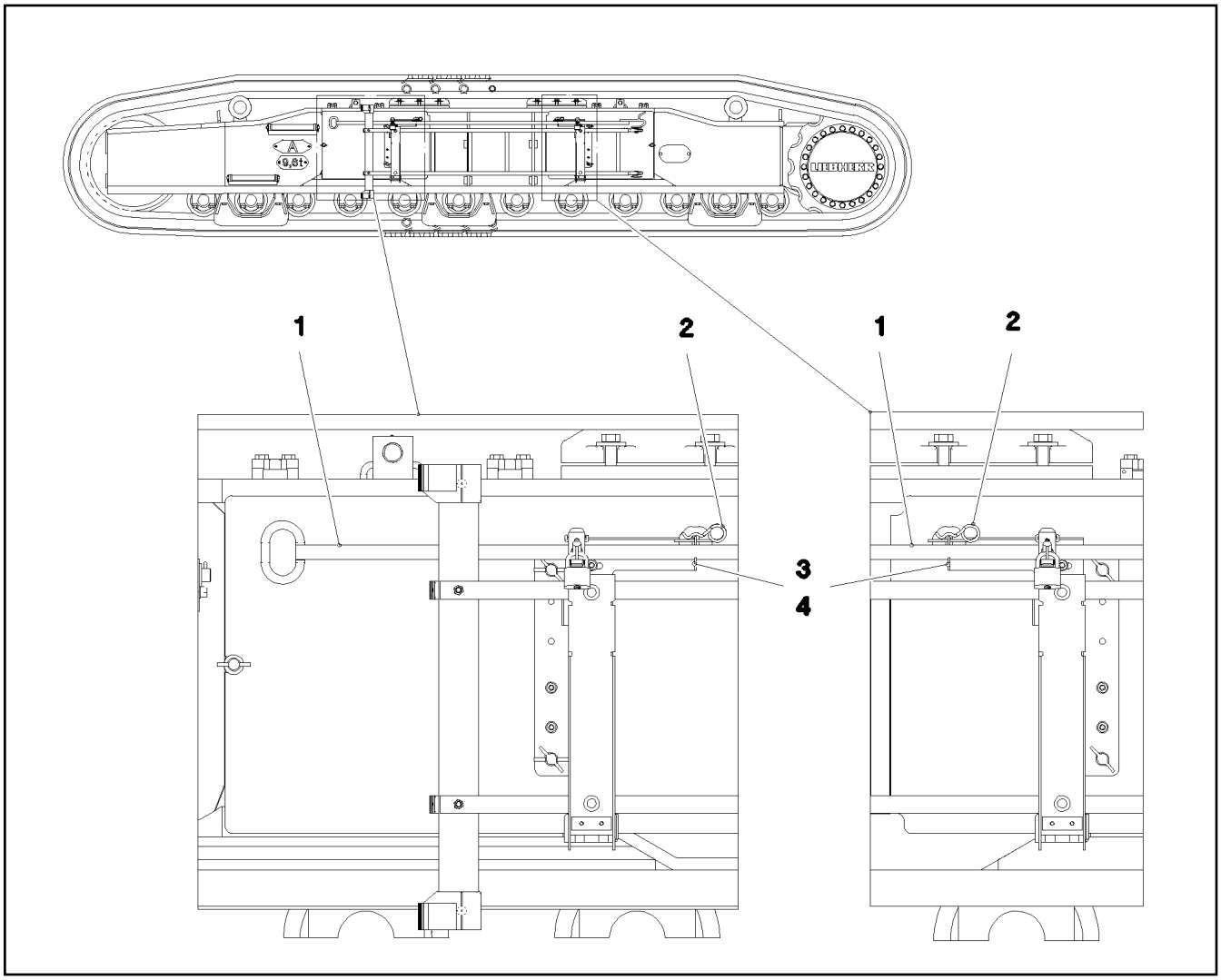

Pos.	Item	Quantity	Description	Bezeichnung
1	929529908	1	HOOK ROD FE//ZNNI8//CN//T0	HAKENSTANGE
2	433206208	2	SPRING PLUG 4,5X4X78 A2K	FEDERSTECKER
3	11160431	0.4	ROPE 2 2,3KN EDELSTAHL	SEIL
4	11170565	4	FERRULE 2 CU	PRESSKLEMME

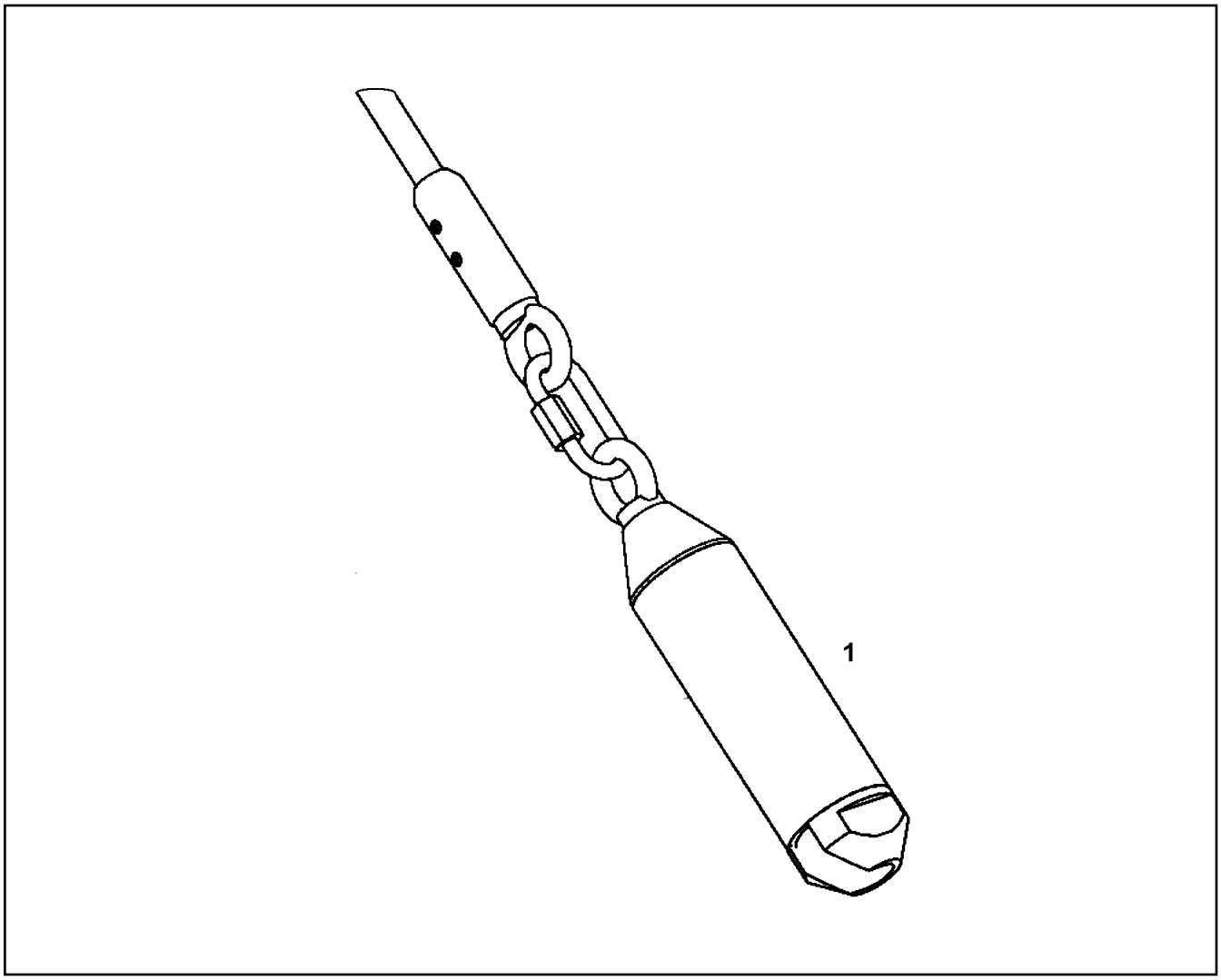

Pos.	Item	Quantity	Description	Bezeichnung
1	11493793	1	SLEEVE	HUELSE

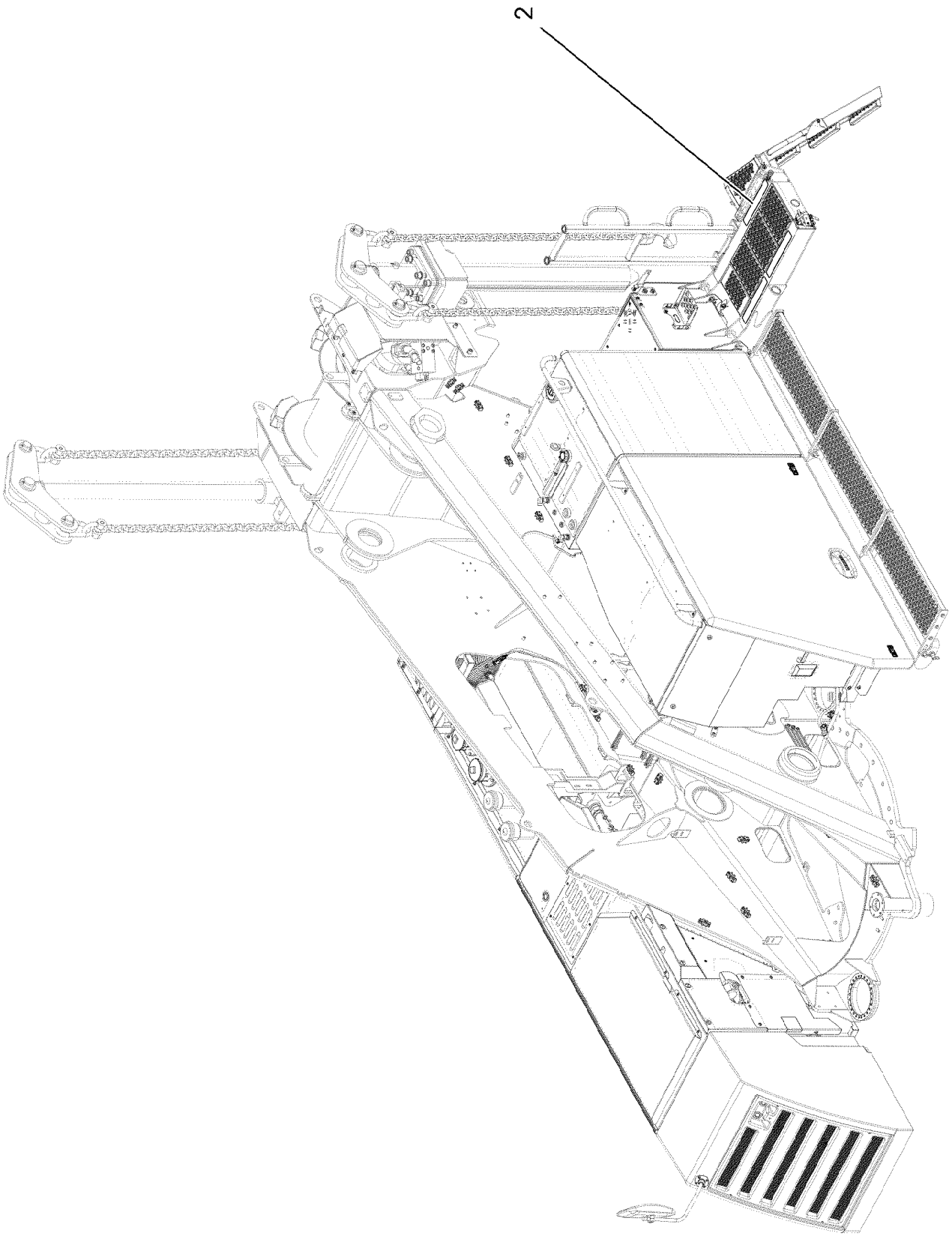
2

Pos.	Item	Quantity	Description	Bezeichnung
2	97108842	3	ANTI-SLIP SURFACE 1.6X51X330 3M TYP4	ANTIRUTSCHBELAG

Item	Page	Assembly	Pos.	Quantity	Item	Page	Assembly	Pos.	Quantity
10001075	381	938759601	31	4	10012659	383	968607101	56	8
10001470	454	919501608	6	8	10012659	584	938759801	56	8
10001471	383	968607101	21	24	10012943	550	10663060	3	1
10001471	584	938759801	21	24	10013601	383	968607101	3	1
10001739	361	917304708	46	1	10013601	584	938759801	3	1
10001739	470	919674308	310	1	10014387	90	96062920	830	6
10002167	216	10148215	4	2	10014387	491	96063649	830	6
10002310	206	10127566	3	1	10014387	494	96023971	830	71
10002552	222	10140729	132	1	10014387	496	96049294	830	6
10003366	204	9078314	3	1	10014387	694	96063583	830	6
10003366	223	12512627	25	2	10014387	699	96051215	830	6
10004261	139	10147687	9	1	10014692	480	10327065	3	1
10004261	173	10129475	4	1	10014693	480	10327065	4	1
10005511	274	97095949	1	20	10014697	480	10327065	10	3
10005713	177	10148432	2	1	10014698	483	774375108	1	1
10006370	124	918728408	383	8	10014701	480	10327065	16	1
10006370	415	96024809	379	5	10014712	480	10327065	27	1
10006370	581	96062734	60	8	10014729	480	10327065	7	1
10006370	655	91000049	8	8	10014730	480	10327065	8	1
10006370	737	917825608	6	1	10014847	517	96045552	512	4
10006550	156	10153583	1	1	10015404	272	96020819	(1)	1
10007205	331	916162808	5	12	10016907	237	10144227	5	4
10007388	706	96063415	829	6	10019040	395	918810308	29	8
10007677	331	916162808	4	12	10020519	421	96044787	3	1
10009007	215	10142733	2	5	10020520	268	918811108	120	1
10009007	237	10144227	3	4	10021245	473	96051762	303	2
10009700	388	11083498	57	1	10021410	183	12489819	3	2
10010025	420	919484908	35	2	10021571	91	96062921	504	1
10011658	431	96056347	24	1	10021571	492	96063650	502	1
10011832	139	10147687	13	1	10021571	500	96059659	528	1
10011832	175	9078233	1	1	10022183	470	919674308	308	2
10011832	223	12512627	31	1	10023751	288	96023914	(20)	1
10011864	198	10143342	5	15	10024744	426	96023891	502	2
10011864	212	10145278	8	2	10024803	623	915403108	11	1
10011864	224	11420633	5	2	10027448	502	96025348	29	2
10011865	198	10143342	7	2	10028235	478	915300208	3	1
10011865	223	12512627	27	2	10028237	734	96056553	6	1
10011866	198	10143342	11	3	10030440	361	917304708	9	1
10011866	217	10148216	2	7	10030837	136	11389608	14	14
10011866	219	10142744	6	1	10030837	250	10148366	101	14
10011866	223	12512627	28	2	10032297	104	928569808	68	1
10011866	251	10148366	3872	1	10032696	522	11170514	33	1
10011866	254	10141217	10	4	10033109	517	96045552	323	1
10011867	196	10143341	9	2	10035314	520	96045552	793	1
10011867	212	10145278	4	8	10035534	516	96045552	(2)	1
10011867	223	12512627	26	1	10035694	332	968462608	10	2
10011867	254	10141217	5	2	10035694	349	966497908	36	8
10011868	150	10130406	2	1	10036325	165	11448005	8	1
10011868	196	10143341	15	10	10036325	166	12549825	8	1
10011868	250	10148366	221	1	10036325	250	10148366	811	4
10011868	254	10141217	3	14	10037616	516	96045552	(1)	1
10011869	207	9080294	3	2	10037616	555	510670808	1	1
10011870	201	10145173	5	2	10038271	480	10327065	29	1
10011870	222	10140729	27	1	10040984	243	12583633	(2)	1
10011870	250	10148366	222	1	10041876	494	96023971	532	2
10011871	198	10143342	22	2	10041903	140	13782803	2	5
10012225	165	11448005	5	2	10042323	516	96045552	(1)	1
10012225	166	12549825	5	2	10042593	334	917304508	11	19
10012557	165	11448005	3	2	10042593	361	917304708	35	13
10012557	166	12549825	3	2	10043002	104	928569808	41	1

Item	Page	Assembly	Pos.	Quantity	Item	Page	Assembly	Pos.	Quantity
10043136	223	12512627	8	1	10116934	158	11348072	50	1
10043610	209	5700161	2	1	10116939	154	9076457	1	1
10044661	306	96066239	101	1	10117094	233	10116110	10	1
10044762	105	928620108	1	1	10117709	173	10129475	2	1
10045101	91	96062921	507	1	10118148	232	10115829	1	1
10046999	500	96059659	511	10	10118526	157	10141974	8	1
10047000	500	96059659	501	10	10118556	200	10147365	2	4
10047001	500	96059659	510	9	10118695	203	10149677	9	3
10097079	625	96036821	10	1	10118838	151	10118839	1	1
10097087	624	96036820	15	2	10118839	130	13455311	23	1
10097345	562	919528608	10	2	10118910	236	9077238	4	10
10097470	90	96062920	671	2	10118912	157	10141974	10	6
10097621	482	12101719	1	1	10119695	164	10148438	2	2
10097910	291	969543308	408	1	10119927	155	10116939	3	2
10099161	60	991456314	1	1	10119928	155	10116939	4	2
10099208	480	10327065	32	1	10119971	152	10139112	4	1
10099209	480	10327065	28	4	10120066	223	12512627	19	1
10099856	91	96062921	501	2	10120186	131	13455311	90	1
10099856	500	96059659	517	2	10120334	160	10149580	(5)	4
10099860	91	96062921	506	1	10120334	162	10149579	5	4
10099861	91	96062921	508	1	10120639	222	10140729	6	3
10099861	494	96023971	509	1	10121335	156	10153583	2	1
10099863	91	96062921	510	1	10121666	148	10121667	1	1
10099863	500	96059659	512	2	10121667	144	10132560	4	1
10099864	428	96022870	502	3	10121667	253	10141167	1	1
10099864	500	96059659	521	2	10122841	218	10142742	2	1
10099866	91	96062921	509	1	10123304	238	10144098	1	1
10099866	494	96023971	510	1	10123876	240	10151328	103	1
10099867	91	96062921	511	1	10123878	484	919940408	33	2
10099867	500	96059659	513	2	10124116	229	10115664	1	1
10099868	91	96062921	502	2	10124798	203	10149677	5	2
10099868	500	96059659	518	2	10125148	470	919674308	122	1
10100062	427	96023891	669	4	10125439	160	10149580	3	6
10100062	494	96023971	669	4	10125702	221	10144756	3	2
10100062	495	96049294	669	2	10125739	222	10140729	7	1
10100063	427	96023891	670	2	10125742	170	10147787	1	1
10100063	494	96023971	670	11	10126119	224	11420633	16	1
10100063	495	96049294	670	6	10126317	152	10139112	5	1
10101092	517	96045552	187	1	10126317	250	10148366	(2)	1
10101092	591	96064697	159	1	10126417	143	10126713	4	1
10101686	611	96057250	658	3	10126713	130	13455311	16	1
10101686	698	96063213	658	3	10126738	139	10147687	2	1
10113731	176	10152592	3	1	10127114	474	96041566	155	1
10113975	243	12583633	(2)	1	10127139	223	12512627	23	2
10114838	95	10878097	10	1	10127566	132	13455311	330	1
10114839	95	10878097	4	1	10127689	237	10144227	2	1
10114843	95	10878097	7	21	10127967	235	10127979	1	1
10114850	95	10878097	8	15	10127979	134	13455311	526	1
10115155	95	10878097	18	4	10127984	202	10147364	2	1
10115233	44	10801751	14	1	10128228	224	11420633	7	3
10115539	134	13455311	450	1	10128439	134	13455311	524	1
10115664	134	13455311	452	1	10128440	234	10128439	1	1
10115780	129	13471292	2	1	10128516	144	10132560	2	1
10115829	134	13455311	520	1	10128516	253	10141167	2	1
10115832	146	10155227	7	1	10128671	251	10148366	1801	2
10116110	134	13455311	521	1	10128680	163	10149578	7	2
10116255	205	13701882	(1)	1	10129193	188	13703082	2	1
10116255	251	10148366	2601	1	10129392	183	12489819	2	2
10116274	237	10144227	4	8	10129394	183	12489819	7	1
10116310	222	10140729	24	1	10129474	173	10129475	1	1

Item	Page	Assembly	Pos.	Quantity	Item	Page	Assembly	Pos.	Quantity
10129475	131	13455311	130	1	10141216	190	10135080	210	1
10129501	176	10152592	4	1	10141216	191	13757616	210	1
10129904	203	10149677	4	1	10141217	251	10148366	2120	1
10130104	196	10143341	6	1	10141549	202	10147364	1	1
10130406	130	13455311	22	1	10141846	198	10143342	8	1
10130816	137	10154379	5	10	10141974	131	13455311	53	1
10130906	223	12512627	21	1	10142170	157	10141974	2	1
10131177	153	10147438	1	1	10142668	219	10142744	1	1
10132170	198	10143342	3	1	10142671	218	10142742	1	1
10132180	198	10143342	19	1	10142733	133	13455311	370	1
10132560	130	13455311	20	1	10142742	133	13455311	382	1
10132935	198	10143342	16	1	10142744	133	13455311	387	1
10133607	198	10143342	13	1	10142747	135	13455311	630	1
10133667	160	10149580	2	1	10142749	130	13455311	15	4
10133693	170	10147787	6	2	10142763	219	10142744	2	1
10133837	144	10132560	1	1	10142863	134	13455311	440	1
10133991	240	10151328	102	1	10142864	134	13455311	481	1
10134348	139	10147687	3	2	10142942	131	13455311	150	1
10134348	232	10115829	3	2	10143240	196	10143341	7	1
10134750	167	11358036	1	3	10143251	198	10143342	1	1
10135080	189	10153151	1	1	10143341	132	13455311	212	1
10135434	185	13743036	5	1	10143342	132	13455311	214	1
10135434	186	10141140	3	1	10143454	237	10144227	1	1
10135434	191	13757616	3	1	10143542	196	10143341	4	1
10135885	220	10140087	3	4	10143543	196	10143341	3	1
10136751	160	10149580	(4)	2	10143612	203	10149677	1	1
10136751	162	10149579	4	2	10143614	203	10149677	2	1
10137121	140	13782803	3	1	10143707	239	10151328	10	1
10137602	170	10147787	(2)	1	10143825	132	13455311	215	1
10137721	232	10115829	5	1	10143826	199	10143825	1	1
10137918	141	10138450	2	1	10143827	199	10143825	2	3
10138447	170	10147787	3	1	10144027	135	13455311	652	1
10138450	130	13455311	14	1	10144038	474	96041566	153	1
10138656	220	10140087	4	14	10144039	474	96041566	154	1
10138657	220	10140087	7	14	10144098	237	10144227	6	2
10138820	216	10148215	3	1	10144227	134	13455311	571	1
10138826	223	12512627	6	1	10144270	461	96074081	18	1
10139111	152	10139112	1	1	10144297	458	91003833	19	1
10139112	130	13455311	25	1	10144311	157	10141974	11	1
10139578	168	10120186	6	2	10144556	160	10149580	(2)	2
10139626	222	10140729	1	1	10144556	162	10149579	2	2
10139744	261	12487540	84	2	10144755	221	10144756	1	1
10139764	168	10120186	4	1	10144756	133	13455311	415	1
10139765	168	10120186	5	1	10144861	458	91003833	13	1
10140087	133	13455311	410	1	10145049	170	10147787	(1)	1
10140729	133	13455311	430	1	10145069	223	12512627	17	1
10140732	201	10145173	9	1	10145070	223	12512627	18	1
10140757	222	10140729	3	1	10145173	132	13455311	221	1
10140969	219	10142744	5	1	10145175	211	10145176	1	1
10141140	185	13743036	2	1	10145176	133	13455311	333	1
10141140	191	13757616	1	1	10145177	212	10145278	1	1
10141157	250	10148366	120	1	10145178	212	10145278	2	1
10141165	250	10148366	160	1	10145278	133	13455311	334	1
10141167	250	10148366	200	1	10145371	242	10143707	2	1
10141169	250	10148366	250	1	10145373	224	11420633	15	1
10141178	250	10148366	520	1	10145395	225	10142863	6	1
10141181	250	10148366	800	4	10145524	220	10140087	1	1
10141182	250	10148366	1300	1	10145815	170	10147787	8	1
10141216	186	10141140	12	1	10145862	163	10149578	1	1
10141216	189	10153151	210	1	10146185	157	10141974	1	1

Item	Page	Assembly	Pos.	Quantity	Item	Page	Assembly	Pos.	Quantity
10146367	131	13455311	70	4	10153973	138	10154458	1	1
10146658	181	10150741	1	1	10153987	239	10151328	1	1
10146722	174	10129474	1	1	10154379	136	11389608	1	1
10146789	192	10146791	2	1	10154458	136	11389608	80	4
10146791	132	13455311	201	1	10154459	138	10154458	2	1
10147364	132	13455311	224	1	10154798	216	10148215	2	1
10147365	132	13455311	220	1	10155227	145	10133837	1	1
10147409	246	9078249	1	1	10166157	383	968607101	73	1
10147438	130	13455311	50	1	10167462	369	933074801	64	2
10147687	130	13455311	12	1	10171632	43	592326914	9	1
10147787	131	13455311	100	1	10178203	679	91000055	23	4
10148088	225	10142863	1	1	10178345	52	968374908	14	4
10148215	133	13455311	380	1	10178898	760	918533508	52	1
10148216	133	13455311	381	1	10179032	31	992078314	50	8
10148366	135	13455311	939	1	10179115	361	917304708	53	1
10148432	131	13455311	140	1	10179356	473	96051762	375	8
10148438	131	13455311	81	4	10179356	655	91000049	42	36
10149144	223	12512627	2	1	10179356	661	91000050	42	36
10149191	224	11420633	1	1	10179356	664	91000051	42	36
10149360	213	12418347	3	2	10179356	667	91000052	42	24
10149476	225	10142863	2	1	10179356	670	91000053	42	24
10149578	160	10149580	(1)	1	10179376	272	96020819	378	1
10149578	162	10149579	1	1	10179377	70	915447908	5	8
10149579	160	10149580	1	1	10179377	315	917357108	13	1
10149580	131	13455311	80	4	10179404	119	96045222	10	8
10149655	141	10138450	1	1	10179409	454	919501608	23	8
10149677	132	13455311	230	1	10179459	226	10115539	4	3
10149679	203	10149677	3	1	10179470	399	962282208	4	1
10149739	163	10149578	6	2	10179470	401	962282308	4	1
10149977	308	12106874	1	1	10179932	291	969543308	310	1
10150081	239	10151328	(1)	1	10179932	295	969219208	310	1
10150144	187	10135434	1	1	10180340	326	968483708	13	1
10150144	189	10153151	2	1	10180340	736	96056560	4	1
10150204	163	10149578	4	4	10180351	422	96044789	14	2
10150252	241	10151329	10	1	10180351	763	917695308	10	1
10150386	215	10142733	1	1	10180352	422	96044789	15	2
10150741	131	13455311	171	1	10180354	673	91000054	39	2
10150838	241	10151329	13	1	10180354	723	964502908	11	1
10150934	130	13455311	21	1	10180357	60	991456314	4	2
10150935	149	10150934	1	1	10180357	119	96045222	11	8
10151164	241	10151329	1	1	10180357	420	919484908	36	6
10151328	135	13455311	580	1	10180359	748	925280008	5	1
10151329	239	10151328	2	1	10180359	751	929582108	5	3
10151390	239	10151328	8	1	10180359	760	918533508	40	2
10151634	142	10142749	1	1	10180359	768	91001040	11	4
10152036	243	12583633	40	1	10180359	771	918596708	15	2
10152168	163	10149578	2	1	10180360	77	990618314	8	3
10152441	168	10120186	1	2	10180364	315	917357108	17	2
10152592	174	10129474	12	1	10180364	750	96062062	11	1
10152593	176	10152592	1	1	10180364	760	918533508	21	1
10152594	176	10152592	2	1	10180365	70	915447908	4	8
10152867	132	13455311	190	4	10180365	315	917357108	14	1
10152974	156	10153583	3	1	10180375	454	919501608	24	8
10153116	223	12512627	3	1	10180375	760	918533508	58	4
10153151	132	13455311	191	4	10180375	772	918221408	6	4
10153374	213	12418347	4	1	10180377	454	919501608	20	4
10153536	172	9079870	1	2	10180381	47	968374708	13	4
10153538	172	9079870	2	2	10180884	635	915090008	10	4
10153583	130	13455311	52	1	10181375	269	918811108	315	2
10153666	223	12512627	1	1	10181382	33	967304508	312	8

Item	Page	Assembly	Pos.	Quantity	Item	Page	Assembly	Pos.	Quantity
10181389	517	96045552	329	2	10197808	395	918810308	35	28
10181421	70	915447908	30	32	10197808	431	96056347	30	8
10181487	70	915447908	106	2	10197808	478	915300208	6	4
10182032	84	96075205	26	1	10197808	612	913753108	13	4
10197730	30	992078314	30	8	10197808	703	96063458	12	1
10197730	48	96046146	6	2	10197808	734	96056553	5	1
10197730	320	916164208	7	16	10197808	760	918533508	5	2
10197730	431	96056347	23	1	10197808	781	968940708	9	3
10197730	470	919674308	301	2	10197808	782	968940808	9	3
10197730	517	96045552	309	4	10197831	124	918728408	301	4
10197730	655	91000049	33	5	10197831	125	963260408	5	2
10197730	741	919421708	33	2	10197831	126	96049764	5	2
10197730	763	917695308	16	3	10197831	269	918811108	313	4
10197760	506	926891108	10	4	10197831	295	969219208	301	8
10197764	85	966167808	13	2	10197831	407	96022627	318	8
10197764	87	96062922	16	2	10197831	444	918759708	24	4
10197764	124	918728408	354	2	10197831	446	96019783	25	1
10197764	269	918811108	350	12	10197831	478	915300208	23	2
10197764	272	96020819	351	4	10197831	506	926891108	8	2
10197764	287	96024716	27	4	10197831	562	919528608	304	4
10197764	338	917305408	51	2	10197831	604	96066401	11	2
10197764	408	96022627	350	4	10197831	652	919935408	14	4
10197764	415	96024809	350	6	10197831	652	919935408	17	4
10197764	417	969392008	350	2	10197831	652	919935408	22	8
10197764	420	919484908	97	4	10197831	773	96037297	4	4
10197764	461	96074081	71	4	10197836	506	926891108	11	2
10197764	503	922648308	5	12	10197836	760	918533508	11	2
10197764	506	926891108	6	4	10215892	441	966707708	9	1
10197769	52	968374908	9	4	10215893	441	966707708	4	1
10197769	355	916163008	12	1	10216340	480	10327065	13	1
10197769	673	91000054	55	4	10216529	575	918627208	21	1
10197771	85	966167808	14	2	10216534	575	918627208	22	2
10197771	87	96062922	17	2	10216678	575	918627208	31	4
10197771	124	918728408	382	2	10216772	494	96023971	514	1
10197771	269	918811108	379	6	10217127	534	10802090	3	1
10197771	272	96020819	380	8	10217383	539	571817608	9	2
10197771	287	96024716	26	4	10217777	234	10128439	2	1
10197771	338	917305408	50	3	10217777	252	10148366	5241	1
10197771	352	916168308	18	4	10218310	316	10650940	3	1
10197771	395	918810308	42	4	10218370	228	11386644	2	1
10197771	415	96024809	375	10	10218370	251	10148366	4501	1
10197771	417	969392008	375	2	10219361	350	965784408	12	4
10197771	421	96044787	10	6	10219462	425	96068695	6	1
10197771	461	96074081	62	4	10219618	276	10492431	1	1
10197771	503	922648308	3	6	10219619	276	10492431	2	1
10197771	506	926891108	4	4	10219620	276	10492431	999	1
10197771	623	915403108	10	4	10222682	438	963398008	1	1
10197771	625	96036821	29	2	10222999	30	992078314	1	1
10197771	655	91000049	7	4	10224278	30	992078314	2	2
10197771	661	91000050	70	4	10224279	30	992078314	3	2
10197771	664	91000051	70	4	10225967	27	96062228	1	1
10197771	667	91000052	70	4	10225969	22	96062226	1	1
10197771	670	91000053	70	4	10228100	255	10115780	1	1
10197771	679	91000055	32	2	10228541	528	11170515	87	4
10197771	700	966591408	3	2	10228541	530	11170518	87	4
10197771	760	918533508	12	8	10228541	531	11170519	87	4
10197808	61	917155308	24	18	10228541	534	10802090	40	4
10197808	78	964765008	4	2	10228541	602	10665173	87	4
10197808	287	96024716	20	6	10278585	736	96056560	8	3
10197808	291	969543308	375	5	10279914	534	10802090	(1)	1

Item	Page	Assembly	Pos.	Quantity
10280184	525	10032696	6	1
10282622	138	10154458	(10)	1
10282622	229	10115664	100	1
10282774	138	10154458	4	2
10282928	42	96048348	3	1
10285016	420	919484908	470	2
10285701	319	919010108	21	1
10285708	138	10154458	100	1
10285708	139	10147687	100	1
10285708	148	10121667	100	1
10285708	163	10149578	100	1
10285708	168	10120186	100	1
10285708	170	10147787	100	1
10285708	177	10148432	100	1
10285708	201	10145173	100	1
10285708	203	10149677	100	1
10285708	206	10127566	100	1
10285708	215	10142733	100	1
10285708	216	10148215	100	1
10285708	218	10142742	100	1
10285708	223	12512627	100	1
10285708	232	10115829	100	1
10285708	235	10127979	100	1
10285708	243	12583633	(100)	1
10285708	244	12544505	100	1
10285708	246	9078249	100	1
10285708	247	10144027	100	1
10285708	249	9078962	100	1
10285724	178	10142942	3	1
10286353	703	96063458	295	1
10286354	704	96062034	502	18
10286840	402	916049908	(1)	1
10287301	388	11083498	13	2
10287383	268	918811108	103	4
10288121	89	968252908	300	1
10288121	431	96056347	(980)	1
10288121	431	96056347	(980)	1
10288121	435	96022872	(2)	1
10288121	509	96069052	300	1
10289549	377	510240708	1	1
10289795	30	992078314	44	8
10289795	52	968374908	11	12
10289795	60	991456314	7	2
10289795	124	918728408	377	8
10289795	263	918728708	375	2
10289795	269	918811108	380	13
10289795	272	96020819	377	2
10289795	315	917357108	11	4
10289795	374	916109208	302	6
10289795	408	96022627	381	10
10289795	473	96051762	377	10
10289795	517	96045552	326	2
10289795	577	96033759	20	8
10289795	625	96036821	18	2
10289795	658	96014777	9	20
10289795	679	91000055	12	6
10289795	760	918533508	43	2
10289795	763	917695308	17	3
10289804	22	96062226	27	3
10289804	28	96062228	27	3
10289804	30	992078314	42	24
10289804	61	917155308	28	8
10289804	70	915447908	33	16
10289804	124	918728408	378	4
10289804	232	10115829	8	17
10289804	255	10115780	3	8
10289804	269	918811108	378	5
10289804	295	969219208	376	8
10289804	367	919235408	7	2
10289804	566	969767908	333	3
10289804	655	91000049	37	34
10289804	658	96014777	12	2
10289804	661	91000050	37	28
10289804	664	91000051	37	28
10289804	667	91000052	37	24
10289804	670	91000053	37	10
10289804	673	91000054	64	3
10289804	737	917825608	4	3
10289804	760	918533508	50	2
10289805	272	96020819	382	1
10289805	422	96044789	13	6
10289806	30	992078314	41	3
10289806	124	918728408	385	3
10289806	315	917357108	21	4
10289806	581	96062734	62	2
10289806	747	919933308	34	2
10289806	763	917695308	9	1
10289806	768	91001040	35	4
10289807	679	91000055	42	2
10289808	22	96062226	(395)	2
10289808	420	919484908	250	10
10289808	760	918533508	39	2
10289808	768	91001040	10	2
10289808	771	918596708	32	6
10289810	272	96020819	376	1
10289810	315	917357108	19	6
10289811	750	96062062	12	1
10289847	760	918533508	36	1
10289850	760	918533508	59	2
10289852	760	918533508	60	2
10289852	772	918221408	5	4
10290126	448	10876576	23	1
10290126	448	10876576	(5)	1
10290127	448	10876576	24	1
10290127	448	10876576	(6)	1
10291989	320	916164208	5	4
10291997	338	917305408	33	1
10292000	338	917305408	35	2
10292008	326	968483708	4	1
10292013	338	917305408	28	8
10292014	355	916163008	3	1
10292015	349	966497908	22	1
10292016	355	916163008	5	1
10292017	349	966497908	23	1
10292018	355	916163008	7	1
10292021	355	916163008	2	2
10292670	516	96045552	151	1
10293775	372	570109008	10	1
10293786	372	570109008	5	1
10294494	326	968483708	3	6

Item	Page	Assembly	Pos.	Quantity	Item	Page	Assembly	Pos.	Quantity
10294938	476	918729308	(1)	1	10335960	280	96035595	450	1
10294939	476	918729308	(2)	1	10337349	268	918811108	251	1
10296157	407	96022627	(2)	3	10337381	543	10333672	(1)	2
10297295	178	10142942	1	2	10337381	554	510697608	7	1
10297310	431	96056347	54	2	10340105	431	96056347	5	1
10297691	321	96015921	5	1	10340438	507	968015808	5	1
10299560	239	10151328	(46)	1	10342517	426	96023891	509	1
10299564	230	9079823	2	4	10342517	493	96023971	505	3
10299581	604	96066401	14	2	10342517	495	96049294	502	2
10299585	139	10147687	6	1	10342518	427	96023891	525	1
10299589	139	10147687	5	9	10342518	494	96023971	523	3
10299604	173	10129475	3	14	10342518	495	96049294	511	3
10299649	63	967301408	300	4	10342519	494	96023971	525	3
10299666	577	96033759	11	2	10342519	495	96049294	517	2
10299679	127	968305308	10	2	10342770	163	10149578	3	1
10299679	661	91000050	65	4	10342854	431	96056347	8	2
10299679	664	91000051	65	4	10343003	392	969300008	2	1
10299679	667	91000052	65	8	10343003	446	96019783	15	1
10299679	670	91000053	65	8	10343484	432	96056347	55	2
10299679	674	91000054	83	8	10343693	431	96056347	4	2
10300552	349	966497908	31	2	10346599	551	10355774	1	1
10300600	361	917304708	11	4.2	10346773	611	96057250	5	4.51
10300944	427	96023891	715	2	10346938	291	969543308	(5)	1
10300946	495	96049294	717	4	10353004	494	96023971	530	1
10301148	426	96023891	520	1	10353713	473	96051762	304	4
10301317	81	96062917	26	8	10353737	287	96024716	21	4
10301317	734	96056553	4	1	10354375	338	917305408	56	1
10301319	269	918811108	326	1	10354584	52	968374908	1	2
10301319	321	96015921	11	5	10354584	432	96056347	58	1
10301319	326	968483708	(5)	21	10354584	633	919284308	10	1
10301319	326	968483708	33	8	10354584	686	965264808	6	6
10301409	338	917305408	30	2	10354584	700	966591408	(5)	1
10324830	490	96063649	514	1	10354595	144	10132560	100	1
10325001	174	10129474	3	1	10354595	253	10141167	10	1
10326792	780	917508508	9	1	10354670	338	917305408	25	2
10326803	635	915090008	5	2	10354835	563	10097345	1	1
10326816	454	919501608	17	4	10354836	563	10097345	2	1
10327065	478	915300208	1	1	10354837	563	10097345	3	1
10331026	432	96056347	61	1	10354839	563	10097345	4	1
10331637	274	97095949	6	6	10354922	52	968374908	2	6
10331874	739	910543708	3	1	10355140	480	10327065	2	1
10331946	276	10492431	998	1	10355170	426	96023891	505	1
10331947	275	10429930	800	1	10355182	426	96023891	503	2
10332987	386	917894308	7	4	10355774	516	96045552	150	1
10333672	516	96045552	25	1	10355776	591	96064697	157	1
10333686	516	96045552	158	1	10356288	70	915447908	1	4
10334488	407	96022627	100	1	10359124	95	10878097	20	2
10334488	415	96024809	100	1	10359128	95	10878097	21	2
10335557	431	96056347	50	1	10410178	473	96051762	376	8
10335596	436	10343693	3	4	10410193	458	91003833	14	2
10335629	151	10118839	3	1	10410193	736	96056560	2	2
10335629	250	10148366	231	1	10410198	329	916170808	13	2
10335819	427	96023891	689	3	10410770	519	96045552	779	2
10335819	428	96022870	689	4	10411092	228	11386644	4	1
10335820	90	96062920	690	14	10411093	228	11386644	6	2
10335820	427	96023891	690	52	10411094	228	11386644	3	1
10335820	428	96022870	690	6	10411095	228	11386644	5	2
10335820	491	96063649	690	51	10412105	287	96024716	23	4
10335820	693	96063864	690	4	10412433	494	96023971	513	1
10335855	275	10429930	3	1	10412605	530	11170518	31	2

Item	Page	Assembly	Pos.	Quantity	Item	Page	Assembly	Pos.	Quantity
10412609	530	11170518	999	1	10430280	35	10675161	2	2
10412632	528	11170515	999	1	10441165	608	96060353	297	0.06
10412632	531	11170519	999	1	10441166	426	96023891	298	0.1
10412632	602	10665173	999	1	10441166	495	96049294	298	0.4
10412777	435	96022872	10	1	10441664	338	917305408	55	1
10412851	287	96024716	11	12	10443309	339	917305408	59	1
10412851	329	916170808	10	6	10443625	395	918810308	24	2
10412851	332	968462608	8	1	10443748	374	916109208	1	1
10412851	361	917304708	12	4	10447539	480	10327065	99	1
10412851	407	96022627	301	12	10449516	431	96056347	9	3
10412851	415	96024809	301	4	10449664	502	96025348	84	6
10412851	458	91003833	51	10	10450051	44	10801751	49	1
10412851	470	919674308	305	6	10450160	364	966253908	7	1
10412851	625	96036821	24	2	10450694	349	966497908	25	1
10412851	734	96056553	7	1	10450694	361	917304708	22	1
10412852	349	966497908	15	6	10451060	550	10663060	5	2
10412852	415	96024809	303	4	10455144	397	10877138	15	1
10412852	470	919674308	306	2	10455281	395	918810308	27	6
10412852	623	915403108	8	2	10465711	139	10147687	15	2
10412852	679	91000055	30	2	10466910	591	96064697	172	1
10412853	326	968483708	18	8	10466911	591	96064697	164	1
10412853	361	917304708	41	1	10466914	516	96045552	160	2
10415159	624	96036820	22	1	10466914	598	96075086	174	1
10415162	60	991456314	5	2	10466915	598	96075086	162	1
10415162	248	9078961	2	3	10467292	519	96045552	776	1
10415162	269	918811108	321	1	10468234	261	12487540	(20)	4
10415162	581	96062734	45	4	10468820	367	919235408	5	4
10415162	645	919950308	102	4	10470032	106	915731908	1	1
10415162	679	91000055	24	6	10470377	684	12105406	59	1
10423817	528	11170515	78	1	10470667	631	967361508	2	1
10423817	530	11170518	78	2	10471363	104	928569808	40	1
10423817	531	11170519	78	1	10472203	425	96068695	5	1
10423817	602	10665173	78	1	10472890	361	917304708	8	1
10424210	431	96056347	37	2	10472995	498	919940108	30	1
10424276	431	96056347	7	1	10473047	698	96063213	707	1
10424489	364	966253908	2	2	10473048	427	96023891	708	2
10424601	631	967361508	1	1	10473048	428	96022870	708	3
10424622	426	96023891	511	2	10473048	491	96063649	708	2
10424622	490	96063649	509	1	10475262	295	969219208	105	1
10424625	427	96023891	828	4	10475300	531	11170519	27	1
10424625	491	96063649	828	2	10475300	534	10802090	17	2
10424625	496	96049294	828	9	10475426	92	96060493	160	3.8
10424983	628	12102922	21	2	10475893	361	917304708	14	10
10425409	411	96022943	20	1	10475893	656	91000049	97	10
10425688	768	91001040	25	4	10475893	674	91000054	91	2
10425689	22	96062226	33	2	10476211	346	916162508	6	2
10425689	28	96062228	33	2	10476383	730	96058738	504	1
10428532	431	96056347	48	2	10476383	775	96035674	504	1
10428544	426	96023891	10	4.367	10488102	532	11002717	6	1
10428544	426	96023891	11	4.367	10488103	532	11002717	10	1
10428545	426	96023891	7	4.375	10488363	268	918811108	102	1
10429635	319	919010108	7	1	10489011	431	96056347	10	2
10429638	494	96023971	531	1	10489208	532	11002717	999	1
10429652	706	96063415	288	0.12	10489549	505	966157408	4	3
10429930	272	96020819	102	1	10490781	33	967304508	302	2
10429952	480	10327065	9	1	10490901	374	916109208	(999)	1
10430042	543	10333672	91	1	10491574	537	10665128	10	1
10430042	543	10333672	131	1	10491613	316	10650940	1	1
10430230	684	12105406	63	1	10491694	316	10650940	4	1
10430241	53	915562508	1	2	10491695	316	10650940	999	1

Item	Page	Assembly	Pos.	Quantity	Item	Page	Assembly	Pos.	Quantity
10491808	489	96063648	(2)	1	10663060	516	96045552	63	1
10491892	697	12104731	23	6	10663242	531	11170519	5	1
10492113	489	96063648	(1)	1	10663242	602	10665173	5	1
10492256	703	96063458	11	1	10663388	367	919235408	4	24
10492347	397	10877138	19	1	10663466	397	10877138	1	1
10492431	275	10429930	11	1	10663523	222	10140729	14	2
10492566	42	96048348	(31)	8	10663718	743	910445708	9	2
10492710	279	10488363	999	1	10663909	480	10327065	(1)	1
10492888	566	969767908	325	4	10663970	676	96013575	3	2
10493045	566	969767908	168	1	10664204	288	96023914	5	2
10493479	684	12105406	57	1	10665124	534	10802090	7	2
10493493	494	96023971	724	6	10665126	534	10802090	11	1
10493495	90	96062920	726	6	10665127	534	10802090	14	1
10493495	491	96063649	726	6	10665128	534	10802090	15	1
10493495	494	96023971	726	67	10665173	598	96075086	21	1
10493495	495	96049294	726	4	10665174	516	96045552	21	1
10493495	694	96063583	726	6	10675116	440	916870808	(1)	1
10493496	494	96023971	727	4	10675161	33	967304508	21	1
10493496	495	96049294	727	2	10678375	331	916162808	7	2
10493625	243	12583633	(1)	1	10678375	338	917305408	47	1
10493920	480	10327065	1	1	10678377	331	916162808	8	2
10493944	684	12105406	68	1	10678395	652	919935408	(2)	1
10493970	775	96035674	721	4	10678395	725	918258408	10	1
10494115	470	919674308	182	3	10678395	776	966479308	7	1
10494115	473	96051762	181	2	10678452	493	96023971	506	1
10494116	470	919674308	183	2	10678453	493	96023971	502	1
10494116	473	96051762	182	1	10678458	493	96023971	503	2
10515048	55	10430241	30	248	10678471	98	96045216	849	6
10515048	57	965336308	2	4	10678471	640	96045220	849	6
10515048	58	965359808	2	8	10678491	90	96062920	7	1
10515048	59	965359908	2	12	10678491	90	96062920	8	1
10539468	473	96051762	305	4	10678491	490	96063649	8	1
10540500	306	96066239	375	3	10678491	490	96063649	14	1
10540500	361	917304708	40	4	10678491	490	96063649	18	1
10540500	415	96024809	378	4	10678491	490	96063649	373	1
10540500	734	96056553	8	1	10678491	490	96063649	374	1
10540510	361	917304708	21	4	10678848	436	10343693	4	2
10540510	408	96022627	379	3	10684156	739	910543708	8	1
10544163	30	992078314	36	4	10800046	494	96023971	842	6
10560807	47	968374708	23	8	10800266	484	919940408	(150)	1
10564740	33	967304508	(1)	1	10800631	494	96023971	753	4
10564740	36	511302008	157	2	10800631	694	96063583	753	10
10583974	461	96074081	40	2	10800672	549	10877219	6	1
10650014	684	12105406	48	1	10800916	338	917305408	49	4
10650295	332	968462608	4	4	10801399	223	12512627	29	2
10650386	397	10877138	(11)	1	10801473	741	919421708	12	2
10650387	397	10877138	(13)	1	10801609	461	96074081	22	2
10650399	397	10877138	35	1	10801751	43	592326914	2	1
10650403	397	10877138	49	1	10801852	71	10356288	39	1
10650488	397	10877138	66	1	10801853	71	10356288	40	1
10650489	397	10877138	70	1	10801854	71	10356288	999	1
10650490	397	10877138	85	1	10801858	388	11083498	14	1
10650501	516	96045552	(998)	1	10801932	760	918533508	10	1
10650501	517	96045552	(998)	1	10802090	516	96045552	22	1
10650507	402	916049908	(2)	1	10802253	619	969856508	(999)	1
10650940	315	917357108	2	1	10802681	470	919674308	120	2
10650953	551	10355774	999	1	10802682	470	919674308	121	2
10652206	346	916162508	8	2	10802682	473	96051762	120	1
10652724	33	967304508	22	1	10803065	371	510229408	14	1
10652772	104	928569808	14	1	10813359	119	96045222	20	8

Item	Page	Assembly	Pos.	Quantity
10813359	268	918811108	(300)	2
10813359	361	917304708	43	7
10813359	444	918759708	19	4
10813633	495	96049294	506	2
10813642	496	96049294	836	1
10813644	496	96049294	754	9
10813738	516	96045552	58	7
10813738	591	96064697	52	1
10813738	709	965994108	51	1
10813933	197	13472510	7	1
10813935	197	13472510	2	2
10813942	197	13472510	5	1
10814445	684	12105406	49	2
10814497	57	965336308	1	1
10814800	473	96051762	353	2
10814801	420	919484908	270	4
10815029	528	11170515	32	2
10815029	530	11170518	32	4
10815029	531	11170519	32	2
10815029	602	10665173	32	2
10815283	346	916162508	14	1
10815368	272	96020819	104	1
10815416	355	916163008	19	1
10815496	355	916163008	16	1
10815662	566	969767908	644	2
10815664	291	969543308	404	1
10815664	566	969767908	633	3
10815777	444	918759708	5	1
10815777	446	96019783	19	1
10816185	516	96045552	62	1
10816194	58	965359808	1	1
10816195	59	965359908	1	1
10816196	434	96030724	2	1
10816943	150	10130406	1	1
10816958	473	96051762	400	6
10870226	462	96071742	4	1
10870332	775	96035674	6	6.06
10870333	484	919940408	(30)	100
10870376	332	968462608	3	2
10870402	496	96049294	845	9
10870403	496	96049294	844	1
10870472	432	96056347	69	1
10870511	692	96063456	308	2
10870512	458	91003833	60	8
10870538	426	96023891	344	17
10870539	426	96023891	345	8.76
10870539	428	96022870	345	8.55
10870539	490	96063649	345	10.2
10870539	495	96049294	345	24.6
10870539	706	96063415	345	5.21
10870540	90	96062920	305	59.66
10870540	91	96062921	305	29.82
10870540	426	96023891	305	282.78
10870540	428	96022870	305	152.56
10870540	490	96063649	305	435.76
10870540	492	96063650	305	9.6
10870540	493	96023971	305	189.51
10870540	495	96049294	305	75.4
10870540	589	96055198	305	4.42
10870540	612	913753108	305	8
10870540	699	96051215	305	9.75
10870541	91	96062921	307	0.7
10870541	493	96023971	307	11.18
10870542	426	96023891	309	39.7
10870542	428	96022870	309	18.4
10870542	490	96063649	309	23
10870542	493	96023971	309	19.5
10870544	420	919484908	32	1
10870635	625	96036821	15	1
10870643	625	96036821	11	1
10870968	355	916163008	8	1
10871001	566	969767908	304	2
10871063	730	96058738	213	2
10871126	490	96063649	11	1
10871170	632	917910508	1	1
10871170	744	917910708	1	1
10871177	349	966497908	12	4
10871177	350	965784408	9	2
10871285	730	96058738	5	2.46
10871285	775	96035674	5	13.59
10871288	589	96055198	505	2
10871289	589	96055198	507	2
10871354	295	969219208	100	2
10871759	458	91003833	34	1
10872022	591	96064697	315	1
10872032	490	96063649	98	1
10872033	494	96023971	709	2
10872100	543	10333672	(999)	1
10872101	543	10333672	(999)	1
10872307	465	969904608	1	1
10872381	703	96063458	155	2
10872448	544	571737808	5	1
10872521	388	11083498	80	1
10872598	465	969904608	3	1
10872612	392	969300008	4	1
10872612	446	96019783	21	1
10872672	342	11002447	998	1
10872676	268	918811108	121	1
10872676	655	91000049	68	15
10872676	673	91000054	45	14
10872676	760	918533508	62	7
10872676	768	91001040	32	10
10872676	771	918596708	20	2
10873081	124	918728408	353	8
10873149	478	915300208	14	40
10873149	587	921444108	5	5
10873149	598	96075086	313	2
10873194	427	96023891	700	4
10873194	491	96063649	793	2
10873239	766	10801932	7	1
10873379	676	96013575	1	1
10873447	775	96035674	506	1
10873517	436	10343693	5	1
10873979	462	96071742	6	1
10873980	462	96071742	5	1
10874057	91	96062921	2211	7
10874243	98	96045216	2222	6
10874243	640	96045220	2222	6
10874331	427	96023891	528	1
10874331	494	96023971	524	1

Item	Page	Assembly	Pos.	Quantity	Item	Page	Assembly	Pos.	Quantity
10874537	677	927310008	3	2	10875475	376	919935508	41	4
10874537	764	963904108	3	2	10875481	661	91000050	63	4
10874537	769	927311708	3	2	10875481	664	91000051	63	4
10874587	484	919940408	(20)	50	10875481	667	91000052	63	4
10874588	240	10151328	99	3	10875481	670	91000053	63	4
10874588	241	10151329	100	8	10875481	673	91000054	61	4
10874588	484	919940408	(10)	50	10875482	431	96056347	20	8
10874655	22	96062226	8	12	10875483	287	96024716	17	6
10874655	27	96062228	8	12	10875483	322	96057226	3	2
10874763	624	96036820	20	1	10875483	352	916168308	16	14
10874785	431	96056347	31	1	10875483	355	916163008	26	2
10874802	645	919950308	300	1	10875483	431	96056347	21	8
10874825	388	11083498	15	1	10875485	100	96045217	10	4
10874831	530	11170518	3	1	10875485	124	918728408	315	4
10874884	338	917305408	39	13	10875485	272	96020819	302	9
10874992	699	96051215	503	2	10875485	334	917304508	15	6
10874995	699	96051215	501	1	10875485	376	919935508	40	5
10874996	694	96063583	503	1	10875485	407	96022627	310	5
10875017	339	917305408	70	2	10875485	444	918759708	25	3
10875017	431	96056347	32	4	10875485	458	91003833	52	2
10875121	426	96023891	16	1	10875485	461	96074081	52	4
10875274	528	11170515	(999)	1	10875485	476	918729308	301	4
10875279	90	96062920	514	1	10875485	478	915300208	26	2
10875279	491	96063649	518	1	10875485	562	919528608	306	4
10875280	426	96023891	516	1	10875485	623	915403108	22	4
10875281	427	96023891	2238	6	10875485	674	91000054	89	2
10875423	225	10142863	4	1	10875486	124	918728408	313	4
10875447	338	917305408	58	2	10875486	407	96022627	316	1
10875448	327	96025887	7	3	10875486	415	96024809	314	2
10875448	376	919935508	43	8	10875486	642	96045219	2	2
10875448	378	963564908	5	4	10875488	268	918811108	300	1
10875448	416	969399608	8	2	10875488	329	916170808	17	3
10875448	581	96062734	44	4	10875488	349	966497908	33	4
10875468	280	96035595	302	1	10875503	84	96075205	13	6
10875468	327	96025887	10	3	10875503	87	96062922	13	8
10875468	334	917304508	14	12	10875503	498	919940108	24	8
10875468	338	917305408	40	73	10875503	502	96025348	80	25
10875468	355	916163008	23	6	10875503	507	968015808	6	12
10875468	361	917304708	19	5	10875504	566	969767908	330	4
10875468	407	96022627	303	1	10875507	295	969219208	303	4
10875468	431	96056347	22	7	10875511	761	918533508	63	2
10875469	338	917305408	41	10	10875512	623	915403108	19	1
10875469	361	917304708	36	7	10875514	636	964060608	4	1
10875470	338	917305408	42	2	10875518	760	918533508	33	2
10875471	70	915447908	104	2	10875519	269	918811108	308	4
10875471	350	965784408	13	2	10875520	22	96062226	15	12
10875471	407	96022627	317	12	10875520	27	96062228	15	12
10875471	415	96024809	313	4	10875520	269	918811108	304	6
10875471	461	96074081	54	12	10875520	772	918221408	8	1
10875471	562	919528608	302	6	10875521	124	918728408	312	8
10875471	606	91002360	11	3	10875521	747	919933308	52	1
10875471	652	919935408	25	3	10875521	760	918533508	26	1
10875471	780	917508508	8	8	10875524	760	918533508	6	2
10875472	703	96063458	13	1	10875537	768	91001040	16	2
10875474	338	917305408	38	16	10875537	771	918596708	19	2
10875474	352	916168308	15	5	10875538	338	917305408	44	2
10875474	395	918810308	28	6	10875538	623	915403108	13	1
10875474	431	96056347	18	18	10875549	352	916168308	20	2
10875474	624	96036820	25	4	10875549	395	918810308	33	4
10875475	327	96025887	9	2	10875550	502	96025348	83	24

Item	Page	Assembly	Pos.	Quantity
10875551	346	916162508	12	8
10875551	349	966497908	13	8
10875551	361	917304708	18	4
10875551	407	96022627	302	6
10875551	781	968940708	4	4
10875551	782	968940808	4	4
10875552	70	915447908	29	16
10875552	656	91000049	81	2
10875552	661	91000050	73	2
10875552	664	91000051	73	2
10875552	667	91000052	73	2
10875552	670	91000053	73	2
10875557	470	919674308	185	4
10875559	395	918810308	38	6
10875561	661	91000050	32	8
10875561	664	91000051	32	8
10875561	667	91000052	32	8
10875561	670	91000053	32	8
10875561	673	91000054	53	8
10875565	295	969219208	302	4
10875565	517	96045552	313	4
10875570	339	917305408	61	2
10875571	52	968374908	10	8
10875571	374	916109208	301	6
10875573	22	96062226	30	6
10875573	28	96062228	30	6
10875577	367	919235408	6	2
10875578	383	968607101	52	8
10875578	584	938759801	52	8
10875578	679	91000055	26	4
10875582	339	917305408	62	2
10875583	326	968483708	20	11
10875584	81	96062917	25	8
10875584	339	917305408	63	1
10875586	235	10127979	3	1
10875586	243	12583633	(2)	1
10875586	244	12544505	3	1
10875586	350	965784408	14	2
10875586	421	96044787	7	4
10875586	646	925141508	4	1
10875586	700	966591408	4	2
10875588	319	919010108	(1)	2
10875588	480	10327065	6	3
10875588	725	918258408	(12)	2
10875590	329	916170808	9	2
10875591	33	967304508	318	2
10875591	269	918811108	305	10
10875591	543	10333672	21	4
10875591	736	96056560	6	3
10875592	461	96074081	51	4
10875592	679	91000055	38	4
10875593	363	966230508	6	1
10875596	528	11170515	85	4
10875596	530	11170518	85	4
10875596	531	11170519	85	4
10875596	602	10665173	85	4
10875597	674	91000054	82	8
10875597	679	91000055	46	4
10875598	326	968483708	22	5
10875598	371	510229408	7	2
10875598	655	91000049	30	9
10875599	124	918728408	302	8
10875599	269	918811108	314	8
10875599	369	933074801	26	8
10875599	407	96022627	315	3
10875599	440	916870808	3	4
10875599	661	91000050	64	4
10875599	664	91000051	64	4
10875599	667	91000052	64	8
10875599	670	91000053	64	8
10875601	371	510229408	10	4
10875601	402	916049908	4	1
10875605	645	919950308	104	4
10875607	47	968374708	11	4
10875607	70	915447908	34	4
10875609	315	917357108	22	2
10875609	320	916164208	8	4
10875610	290	917962508	350	1
10875610	293	918008908	350	1
10875610	673	91000054	59	4
10875612	781	968940708	10	3
10875612	782	968940808	10	3
10875614	47	968374708	4	8
10875614	127	968305308	9	2
10875614	326	968483708	26	2
10875614	338	917305408	46	1
10875614	386	917894308	5	4
10875614	402	916049908	5	1
10875614	408	96022627	351	8
10875614	440	916870808	4	4
10875614	444	918759708	22	2
10875614	446	96019783	26	1
10875614	562	919528608	352	4
10875614	606	91002360	12	3
10875614	612	913753108	7	2
10875614	623	915403108	14	1
10875614	773	96037297	6	4
10875614	780	917508508	6	8
10875616	473	96051762	351	4
10875616	581	96062734	50	4
10875616	747	919933308	17	2
10875616	760	918533508	29	4
10875617	22	96062226	21	4
10875617	27	96062228	21	4
10875617	636	964060608	3	3
10875617	747	919933308	13	11
10875617	760	918533508	27	4
10875617	768	91001040	36	2
10875617	771	918596708	18	1
10875617	772	918221408	9	1
10875618	661	91000050	34	4
10875618	664	91000051	34	4
10875618	667	91000052	34	4
10875618	670	91000053	46	4
10875618	741	919421708	15	4
10875618	743	910445708	15	4
10875618	771	918596708	33	4
10875619	346	916162508	10	2
10875620	70	915447908	108	2
10875620	287	96024716	18	6

Item	Page	Assembly	Pos.	Quantity	Item	Page	Assembly	Pos.	Quantity
10875620	478	915300208	5	4	10875863	747	919933308	40	1
10875629	577	96033759	15	4	10875866	269	918811108	382	4
10875629	625	96036821	19	1	10875866	747	919933308	18	2
10875629	658	96014777	11	12	10875866	760	918533508	53	2
10875629	661	91000050	31	4	10875869	673	91000054	44	2
10875629	664	91000051	31	4	10875869	673	91000054	81	3
10875629	667	91000052	31	4	10875869	726	967321308	7	1
10875629	670	91000053	31	4	10875869	741	919421708	13	4
10875629	760	918533508	47	2	10875869	743	910445708	(1)	2
10875630	771	918596708	31	2	10875869	768	91001040	13	1
10875633	431	96056347	25	1	10875869	771	918596708	9	2
10875638	422	96044789	3	4	10875870	70	915447908	12	8
10875638	760	918533508	20	1	10875870	763	917695308	21	1
10875640	624	96036820	21	1	10875872	326	968483708	12	1
10875643	517	96045552	312	4	10875873	721	915415908	2	1
10875643	591	96064697	314	2	10875873	723	964502908	9	1
10875643	606	91002360	16	4	10875874	760	918533508	37	1
10875644	508	966193108	5	12	10875876	747	919933308	39	1
10875645	346	916162508	9	2	10875877	315	917357108	23	2
10875645	431	96056347	(2)	4	10875877	626	919616808	7	4
10875645	431	96056347	42	4	10875878	771	918596708	26	1
10875645	502	96025348	90	16	10875881	346	916162508	25	2
10875648	33	967304508	315	8	10875905	320	916164208	6	4
10875648	269	918811108	381	10	10876030	431	96056347	34	1
10875648	350	965784408	11	4	10876056	361	917304708	55	3.4
10875648	410	969425608	9	2	10876067	269	918811108	325	2
10875648	517	96045552	307	8	10876069	22	96062226	9	48
10875648	591	96064697	302	4	10876069	27	96062228	9	48
10875648	599	96075102	61	2	10876082	100	96045217	11	2
10875648	656	91000049	98	10	10876082	124	918728408	300	6
10875648	674	91000054	92	2	10876082	562	919528608	303	8
10875648	773	96037297	8	2	10876084	349	966497908	34	14
10875652	673	91000054	32	2	10876085	655	91000049	50	2
10875654	675	964283508	3	2	10876086	655	91000049	14	2
10875657	369	933074801	72	1	10876087	655	91000049	13	4
10875662	763	917695308	(3)	2	10876108	374	916109208	3	1
10875669	748	925280008	4	1	10876238	476	918729308	100	1
10875669	751	929582108	4	3	10876359	127	968305308	11	2
10875669	768	91001040	24	2	10876359	768	91001040	38	2
10875678	326	968483708	16	1	10876360	517	96045552	302	34
10875793	575	918627208	10	2	10876361	421	96044787	6	2
10875795	392	969300008	29	4	10876361	625	96036821	28	2
10875795	446	96019783	17	4	10876368	643	918802108	10	1
10875797	320	916164208	10	4	10876373	33	967304508	308	24
10875798	768	91001040	37	2	10876374	422	96044789	5	1
10875801	747	919933308	15	2	10876382	338	917305408	43	16
10875803	124	918728408	310	8	10876384	502	96025348	82	2
10875803	376	919935508	42	4	10876385	167	11358036	4	20
10875803	747	919933308	22	6	10876386	33	967304508	304	2
10875804	315	917357108	20	2	10876395	502	96025348	81	18
10875806	293	918008908	300	2	10876399	431	96056347	26	4
10875806	747	919933308	10	4	10876576	446	96019783	1	1
10875807	658	96014777	15	4	10876636	470	919674308	180	1
10875808	655	91000049	12	2	10876638	624	96036820	10	1
10875809	346	916162508	11	4	10876885	647	96010020	1	1
10875857	655	91000049	71	4	10876890	647	96010020	2	1
10875857	700	966591408	2	2	10877138	395	918810308	1	1
10875858	562	919528608	351	3	10877167	684	12105406	71	1
10875859	747	919933308	23	2	10877219	516	96045552	61	1
10875862	747	919933308	41	1	10877343	427	96023891	2258	25

Item	Page	Assembly	Pos.	Quantity	Item	Page	Assembly	Pos.	Quantity
10877344	427	96023891	2259	5	11002696	602	10665173	67	1
10877382	676	96013575	2	2	11002717	531	11170519	6	1
10877437	105	928620108	8	1	11002718	315	917357108	10	4
10877696	780	917508508	1	1	11002807	129	13471292	14	12
10877796	768	91001040	5	2	11002988	196	10143341	5	1
10877796	771	918596708	7	2	11002988	251	10148366	1711	1
10877798	426	96023891	18	1	11002995	196	10143341	2	1
10877801	490	96063649	15	1	11003089	567	502657308	998	1
10877801	490	96063649	16	1	11003094	567	502657308	999	1
10877801	490	96063649	17	1	11003193	487	966720708	10	2
10877801	493	96023971	383	1	11003426	441	966707708	5	1
10877801	493	96023971	384	1	11003699	550	10663060	(11)	1
10877828	431	96056347	6	1	11003837	346	916162508	17	2
10877828	576	918988908	(10)	1	11004031	753	512353708	9	1
10877828	625	96036821	20	1	11004117	349	966497908	28	2
10877999	498	919940108	3	1	11004444	656	91000049	99	10
10878097	81	96062917	5	1	11004444	674	91000054	93	2
10878117	458	91003833	15	2	11004444	734	96056553	9	3
10878142	288	96023914	(21)	1	11004996	628	12102922	5	1
10878143	288	96023914	(22)	1	11005170	397	10877138	17	1
10878159	703	96063458	10	1	11005983	362	966230408	3	1
10878172	650	12257818	1	1	11005984	362	966230408	2	1
10878281	591	96064697	(2)	1	11005985	362	966230408	1	1
10878394	306	96066239	400	1	11005987	362	966230408	4	1
10878445	355	916163008	20	2	11006275	544	571737808	999	1
10878574	741	919421708	16	4	11006543	550	10663060	4	1
10878575	747	919933308	43	1	11006584	272	96020819	120	4
10878578	209	5700161	27	1	11006584	411	96022943	40	3.4
10878614	420	919484908	471	2	11007009	361	917304708	7	1
10878680	288	96023914	(10)	1	11007305	120	916959808	1	1
10878793	22	96062226	32	2	11007589	326	968483708	5	1
10878793	28	96062228	32	2	11007817	544	571737808	4	1
10878799	33	967304508	307	24	11007853	89	968252908	301	1
10878799	517	96045552	305	8	11007853	435	96022872	(3)	1
10878822	517	96045552	317	4	11007853	509	96069052	301	1
10878835	454	919501608	3	8	11008024	427	96023891	526	4
10878922	287	96024716	16	4	11008055	201	10145173	2	1
10878951	398	96032222	2	1	11008297	181	10150741	2	4
10878951	399	962282208	5	1	11008403	699	96051215	752	6
10878951	400	96032223	2	1	11008403	706	96063415	752	6
10886525	431	96056347	(80)	1	11008529	439	966979108	1	1
11000394	495	96049294	514	1	11008530	439	966979108	2	1
11000401	496	96049294	2253	3	11009411	550	10663060	2	1
11000593	224	11420633	10	2	11009440	530	11170518	29	1
11000700	263	918728708	101	2	11060128	432	96056347	57	2
11000700	392	969300008	5	3	11060618	495	96049294	516	3
11000710	355	916163008	17	1.3	11060619	495	96049294	505	2
11000710	355	916163008	18	2.8	11065879	522	11170514	4	1
11000901	352	916168308	11	2.15	11066168	177	10148432	4	1
11000902	352	916168308	14	2	11066521	209	5700161	24	4
11000903	352	916168308	13	6	11066908	33	967304508	311	8
11001115	349	966497908	16	1	11067611	113	917026008	2	0.173
11001955	338	917305408	57	3	11067611	113	917026008	3	0.404
11002218	386	917894308	3	2.22	11067611	113	917026008	4	0.498
11002446	338	917305408	27	1	11067611	113	917026008	5	1.485
11002447	338	917305408	26	1	11067612	113	917026008	1	0.254
11002678	720	511479408	7	1	11067833	90	96062920	508	1
11002696	528	11170515	67	1	11067833	490	96063649	513	1
11002696	530	11170518	67	2	11067867	361	917304708	38	1
11002696	531	11170519	67	1	11067930	91	96062921	514	1

Item	Page	Assembly	Pos.	Quantity	Item	Page	Assembly	Pos.	Quantity
11067930	500	96059659	508	2	11113917	473	96051762	350	4
11067932	91	96062921	519	1	11113931	470	919674308	378	10
11067932	500	96059659	509	9	11114202	534	10802090	(999)	1
11068050	296	10871354	1	1	11114206	591	96064697	(999)	1
11068222	295	969219208	101	1	11118077	392	969300008	21	21
11080088	432	96056347	62	1	11118077	446	96019783	14	8
11080392	480	10327065	15	1	11118160	141	10138450	6	1
11080881	91	96062921	758	9	11118242	428	96022870	504	1
11080881	427	96023891	758	16	11118396	495	96049294	211	1
11080881	428	96022870	758	3	11124205	90	96062920	223	1.43
11080881	494	96023971	758	4	11124205	93	96060494	160	1.3
11081053	483	774375108	3	1	11124205	490	96063649	223	3.86
11081453	444	918759708	6	1	11124205	493	96023971	223	3.66
11082158	461	96074081	17	2	11124205	775	96035674	223	5.5
11082601	428	96022870	201	1.03	11124207	426	96023891	224	0.83
11082601	438	963398008	4	0.28	11124207	428	96022870	224	0.53
11082601	706	96063415	201	0.37	11124207	490	96063649	224	3.11
11082602	90	96062920	202	6.14	11124208	90	96062920	225	1.66
11082602	350	965784408	15	0.04	11124208	426	96023891	225	0.33
11082602	426	96023891	202	6.8	11124208	428	96022870	225	0.43
11082602	428	96022870	202	6.72	11124208	490	96063649	225	1.21
11082602	490	96063649	202	17.75	11124208	493	96023971	225	3.03
11082602	493	96023971	202	7.51	11124208	495	96049294	225	1.93
11082602	495	96049294	202	1.95	11124209	490	96063649	226	2.84
11082602	589	96055198	202	0.71	11124209	493	96023971	226	0.6
11082602	706	96063415	202	0.94	11124209	495	96049294	226	4.36
11082603	90	96062920	203	0.83	11124210	426	96023891	227	1.36
11082603	426	96023891	203	3.61	11124210	428	96022870	227	0.88
11082603	428	96022870	203	2.26	11124210	490	96063649	227	3.09
11082603	490	96063649	203	12.61	11124210	706	96063415	227	0.35
11082603	493	96023971	203	6.16	11124211	426	96023891	228	0.9
11082603	495	96049294	203	5.52	11124211	493	96023971	228	4.36
11082603	694	96063583	203	0.3	11124211	500	96059659	228	0.55
11082603	706	96063415	203	0.83	11124212	490	96063649	229	0.9
11082604	90	96062920	204	1.16	11124212	500	96059659	229	0.5
11082604	426	96023891	204	3.4	11140402	61	917155308	25	4
11082604	428	96022870	204	0.73	11140402	395	918810308	37	8
11082604	490	96063649	204	1.87	11140402	517	96045552	311	4
11082604	493	96023971	204	1.96	11140402	591	96064697	313	2
11082604	694	96063583	204	0.22	11140402	606	91002360	14	4
11082604	706	96063415	204	0.4	11140465	30	992078314	33	7
11082605	426	96023891	205	1.78	11140465	33	967304508	313	4
11082605	490	96063649	205	0.53	11140469	33	967304508	317	7
11082605	698	96063213	205	0.1	11140469	124	918728408	375	14
11082605	699	96051215	205	0.45	11140469	263	918728708	378	2
11082606	495	96049294	206	0.33	11140469	269	918811108	376	4
11082607	589	96055198	207	0.68	11140469	285	918955208	7	4
11082608	493	96023971	208	0.28	11140469	315	917357108	29	2
11083215	388	11083498	7	1	11140469	326	968483708	36	2
11083438	388	11083498	2	1	11140469	346	916162508	22	2
11083445	388	11083498	45	1	11140469	408	96022627	377	6
11083453	388	11083498	1	1	11140469	415	96024809	376	17
11083498	386	917894308	1	1	11140469	420	919484908	150	42
11088382	734	96056553	11	2	11140469	431	96056347	40	6
11100197	434	96030724	(3)	1	11140469	476	918729308	375	12
11100228	589	96055198	762	9	11140469	478	915300208	21	5
11100949	95	10878097	13	1	11140469	517	96045552	324	2
11101017	476	918729308	101	1	11140469	562	919528608	375	16
11110051	444	918759708	2	1	11140469	566	969767908	(6)	16
11110060	480	10327065	39	1	11140469	577	96033759	21	4

Item	Page	Assembly	Pos.	Quantity	Item	Page	Assembly	Pos.	Quantity
11140469	581	96062734	63	8	11220418	66	11481975	999	1
11140469	591	96064697	310	4	11232679	66	11481975	9	1
11140469	598	96075086	319	2	11232679	66	11481975	2004	4
11140469	604	96066401	13	4	11244462	524	571130108	4	1
11140469	606	91002360	13	3	11306946	22	96062226	6	1
11140469	612	913753108	8	2	11306946	27	96062228	6	1
11140469	645	919950308	106	4	11311955	303	10475262	2	2
11140469	679	91000055	11	2	11320193	125	963260408	4	1
11140469	723	964502908	31	3	11320193	126	96049764	4	1
11140469	747	919933308	37	3	11320344	383	968607101	71	12
11140469	773	96037297	5	8	11320344	584	938759801	71	12
11160431	47	968374708	6	2	11320360	52	968374908	8	4
11160431	50	96070203	2	0.6	11320421	534	10802090	(2)	1
11160431	70	915447908	14	3	11320720	120	916959808	(1)	1
11160431	125	963260408	6	0.75	11321144	232	10115829	7	15
11160431	126	96049764	6	0.75	11341375	743	910445708	30	1
11160431	750	96062062	8	0.3	11341599	493	96023971	5	4.28
11160431	771	918596708	28	1	11341599	493	96023971	6	4.28
11160431	783	968952708	3	0.4	11341708	628	12102922	24	2
11160668	269	918811108	450	4	11341829	628	12102922	3	1
11160744	280	96035595	301	2	11341840	495	96049294	508	1
11160744	361	917304708	13	3	11341871	296	10871354	999	1
11160970	435	96022872	(1)	1	11342208	495	96049294	509	1
11161944	55	10430241	40	62	11342253	496	96049294	788	9
11162002	458	91003833	24	2	11342255	495	96049294	510	1
11162002	461	96074081	24	6	11342257	495	96049294	512	1
11170276	547	511306608	1	1	11342259	495	96049294	513	1
11170277	547	511306608	2	1	11342308	486	968365908	(2)	1
11170514	521	10665174	1	1	11342313	486	968365908	(1)	1
11170515	521	10665174	2	1	11342414	35	10675161	(1)	2
11170518	521	10665174	4	1	11342417	35	10675161	(2)	1
11170519	521	10665174	5	1	11342418	35	10675161	(999)	1
11170565	47	968374708	7	16	11346616	106	915731908	(1)	1
11170565	50	96070203	3	4	11348054	158	11348072	1	1
11170565	70	915447908	13	16	11348072	131	13455311	60	4
11170565	125	963260408	7	2	11348100	170	10147787	6	1
11170565	126	96049764	7	2	11348100	171	10145815	2	2
11170565	750	96062062	9	2	11348648	170	10147787	8	1
11170565	771	918596708	29	2	11348648	171	10145815	1	1
11170565	783	968952708	4	4	11349182	474	96041566	151	2
11170727	274	97095949	5	1	11351303	159	10146367	3	1
11171270	397	10877138	32	1	11351313	251	10148366	4300	1
11171271	397	10877138	33	1	11351425	251	10148366	2300	1
11171274	397	10877138	60	1	11351426	251	10148366	4320	1
11171275	397	10877138	65	1	11351427	251	10148366	4360	1
11171276	397	10877138	(71)	1	11351428	251	10148366	5200	1
11171306	731	12102807	2	1	11351429	251	10148366	2210	1
11171311	731	12102807	1	1	11351430	251	10148366	2240	1
11181884	95	10878097	5	1	11351432	251	10148366	3820	1
11181886	95	10878097	12	1	11351500	251	10148366	2140	1
11181887	95	10878097	33	1	11351503	251	10148366	3800	1
11182242	339	917305408	66	1	11351510	250	10148366	1400	1
11182717	656	91000049	83	12	11357514	162	10149579	8	8
11182717	661	91000050	68	12	11358036	131	13455311	82	1
11182717	664	91000051	68	12	11368890	308	12106874	4	1
11182717	667	91000052	68	8	11370365	308	12106874	5	1
11182717	670	91000053	68	8	11373478	461	96074081	11	1
11211226	684	12105406	9	1	11381100	308	12106874	2	1
11211803	575	918627208	101	0.18	11382888	203	10149677	10	1
11212256	89	968252908	100	1	11386644	226	10115539	1	1

Item	Page	Assembly	Pos.	Quantity	Item	Page	Assembly	Pos.	Quantity
11389287	199	10143825	3	1	11600977	296	10871354	2	1
11389287	251	10148366	2151	1	11620017	426	96023891	9	3
11389608	130	13455311	10	1	11620017	426	96023891	15	0.48
11403994	184	10152867	2	1	11621770	386	917894308	20	3.5
11407917	132	13455311	180	1	11621770	386	917894308	21	3.5
11415774	200	10147365	1	1	11621770	392	969300008	12	0.06
11420632	224	11420633	3	1	11621770	392	969300008	14	0.7
11420633	134	13455311	436	1	11621770	446	96019783	16	0.08
11428887	475	11429845	10	1	11621964	743	910445708	8	2
11429845	473	96051762	101	1	11622218	392	969300008	3	1
11429849	475	11429845	20	1	11622218	446	96019783	13	1
11429877	475	11429845	30	1	11622224	392	969300008	20	1
11444999	201	10145173	1	1	11622224	448	10876576	26	1
11448000	165	11448005	2	2	11622224	448	10876576	(7)	1
11448002	165	11448005	1	1	11622278	184	10152867	4	1
11448002	166	12549825	1	1	11622278	185	13743036	4	2
11448005	164	10148438	1	1	11622278	186	10141140	2	1
11450420	410	969425608	5	2	11622278	187	10135434	2	1
11450420	416	969399608	5	2	11622278	189	10153151	3	1
11450691	542	570527908	999	1	11622278	191	13757616	2	1
11481080	392	969300008	22	4	11622890	494	96023971	2223	2
11481080	446	96019783	22	1	11622890	699	96051215	2223	9
11481973	730	96058738	6	1	11622989	496	96049294	789	4
11481975	63	967301408	21	1	11626068	213	12418347	5	6
11482426	213	12418347	1	1	11626108	444	918759708	3	1.75
11490010	753	512353708	1	1	11626108	444	918759708	4	4
11490453	628	12102922	19	1	11626393	473	96051762	352	4
11491349	495	96049294	519	1	11626529	458	91003833	21	2
11491349	706	96063415	503	1	11626706	22	96062226	38	16
11491889	30	992078314	43	8	11626706	28	96062228	38	16
11491889	40	990840414	6	20	11626706	63	967301408	302	1
11491889	124	918728408	376	8	11626706	263	918728708	300	2
11491889	263	918728708	376	2	11626706	473	96051762	302	4
11491889	415	96024809	377	4	11626706	723	964502908	24	1
11491889	461	96074081	60	4	11631742	26	749065314	50	5
11491889	470	919674308	377	2	11631742	70	915447908	32	12
11491889	517	96045552	308	4	11631742	124	918728408	308	9
11491889	645	919950308	103	8	11631742	661	91000050	36	2
11491889	760	918533508	46	4	11631742	664	91000051	36	2
11491896	566	969767908	166	1	11631742	667	91000052	36	2
11492017	739	910543708	1	1	11631742	670	91000053	36	2
11492018	739	910543708	4	1	11631816	48	96046146	8	2
11492232	739	910543708	2	1	11631816	124	918728408	305	3
11492235	739	910543708	6	1	11631816	263	918728708	301	2
11492315	502	96025348	26	11	11631816	269	918811108	322	8
11492315	507	968015808	7	2	11631816	285	918955208	3	4
11492423	780	917508508	10	1	11631816	577	96033759	10	4
11493793	784	915037208	1	1	11631816	625	96036821	17	1
11494008	274	97095949	4	12	11632102	461	96074081	53	2
11494116	743	910445708	41	2	11642349	269	918811108	316	2
11494297	743	910445708	2	1	11642355	395	918810308	31	2
11494298	743	910445708	3	1	11642358	48	96046146	7	2
11494299	743	910445708	4	1	11642358	408	96022627	322	10
11494432	480	10327065	(2)	1	11642358	415	96024809	315	2
11494581	480	10327065	(3)	1	11642358	473	96051762	301	6
11520456	698	96063213	2276	9	11642358	655	91000049	64	4
11600193	278	512142508	1	1	11642358	658	96014777	10	8
11600879	187	10135434	3	1	11642377	22	96062226	12	4
11600879	189	10153151	4	1	11642377	27	96062228	12	4
11600960	170	10147787	(4)	6	11642497	268	918811108	(302)	1

Item	Page	Assembly	Pos.	Quantity	Item	Page	Assembly	Pos.	Quantity
11642497	338	917305408	54	1	11651767	263	918728708	303	6
11642497	410	969425608	13	2	11651767	269	918811108	312	6
11642497	661	91000050	66	4	11651767	285	918955208	6	4
11642497	664	91000051	66	4	11651767	305	91002857	300	4
11642497	667	91000052	66	4	11651767	326	968483708	31	2
11642497	670	91000053	66	4	11651767	327	96025887	13	3
11642497	674	91000054	84	4	11651767	355	916163008	15	4
11643686	206	10127566	2	3	11651767	407	96022627	312	12
11644347	98	96045216	501	1	11651767	410	969425608	14	4
11644347	640	96045220	501	1	11651767	415	96024809	311	5
11644899	87	96062922	15	1	11651767	420	919484908	102	15
11644899	407	96022627	304	5	11651767	476	918729308	300	4
11644899	415	96024809	302	2	11651767	502	96025348	16	1
11645138	177	10148432	3	2	11651767	517	96045552	318	6
11645384	33	967304508	303	8	11651767	562	919528608	301	3
11645384	124	918728408	307	2	11651767	566	969767908	(8)	4
11645384	415	96024809	321	3	11651767	566	969767908	332	2
11645386	268	918811108	301	1	11651767	679	91000055	10	2
11645386	473	96051762	300	4	11651767	747	919933308	28	2
11645386	581	96062734	41	4	11651767	773	96037297	1	2
11645386	655	91000049	11	4	11652470	22	96062226	23	8
11645386	737	917825608	2	1	11652470	27	96062228	23	6
11645386	760	918533508	28	2	11652470	30	992078314	31	8
11646255	274	97095949	2	4	11652470	124	918728408	306	10
11651006	22	96062226	26	3	11652470	269	918811108	318	1
11651006	28	96062228	26	3	11652470	517	96045552	325	2
11651006	658	96014777	14	2	11652470	562	919528608	305	4
11651006	673	91000054	63	3	11652470	723	964502908	14	3
11651349	274	97095949	17	1	11656153	152	10139112	3	2
11651578	30	992078314	28	16	11656153	239	10151328	68	3
11651578	737	917825608	5	1	11656153	241	10151329	58	2
11651580	673	91000054	47	2	11656153	246	9078249	6	2
11651612	124	918728408	304	18	11656153	247	10144027	3	2
11651612	269	918811108	311	3	11656153	249	9078962	6	2
11651612	272	96020819	300	12	11656154	223	12512627	10	3
11651612	326	968483708	30	2	11656155	225	10142863	3	2
11651612	346	916162508	21	2	11656155	229	10115664	3	3
11651612	386	917894308	11	4	11656155	239	10151328	69	1
11651612	392	969300008	26	3	11656158	192	10146791	4	2
11651612	407	96022627	311	2	11656158	200	10147365	3	4
11651612	415	96024809	312	2	11656158	213	12418347	7	2
11651612	444	918759708	28	1	11656160	213	12418347	6	1
11651612	446	96019783	7	6	11656191	502	96025348	43	2
11651612	476	918729308	303	4	11656452	146	10155227	9	1
11651612	478	915300208	20	3	11656731	269	918811108	352	2
11651612	517	96045552	327	3	11656731	272	96020819	352	4
11651612	562	919528608	307	1	11656731	577	96033759	16	2
11651612	566	969767908	(5)	8	11656731	604	96066401	12	2
11651612	591	96064697	309	4	11656731	645	919950308	107	4
11651612	598	96075086	317	2	11656734	127	968305308	12	2
11651612	655	91000049	27	21	11656734	655	91000049	6	2
11651612	661	91000050	4	2	11656734	661	91000050	69	2
11651612	664	91000051	4	2	11656734	664	91000051	69	2
11651612	667	91000052	4	2	11656734	667	91000052	69	2
11651612	670	91000053	4	2	11656734	670	91000053	69	2
11651612	673	91000054	4	4	11656734	679	91000055	31	2
11651612	679	91000055	28	4	11656734	736	96056560	7	3
11651612	747	919933308	32	5	11656734	760	918533508	13	4
11651767	33	967304508	316	7	11656734	773	96037297	9	2
11651767	61	917155308	20	4	11656991	81	96062917	20	4

Item	Page	Assembly	Pos.	Quantity	Item	Page	Assembly	Pos.	Quantity
11656991	431	96056347	39	6	11690628	664	91000051	30	8
11656992	198	10143342	15	1	11690628	667	91000052	30	8
11656992	224	11420633	14	1	11690628	670	91000053	30	8
11656992	233	10116110	11	4	11690628	673	91000054	18	4
11656992	239	10151328	60	2	11690637	196	10143341	14	2
11656992	242	10143707	3	3	11690637	407	96022627	313	2
11656999	293	918008908	301	1	11690641	47	968374708	17	2
11657219	196	10143341	12	1	11691013	240	10151328	97	2
11657219	201	10145173	14	1	11691035	484	919940408	(40)	10
11657219	224	11420633	11	2	11691258	540	511486908	9	1
11657219	234	10128439	3	1	11691327	661	91000050	61	12
11657219	239	10151328	61	14	11691327	664	91000051	61	12
11657219	241	10151329	51	2	11691327	667	91000052	61	12
11657219	242	10143707	4	1	11691327	670	91000053	34	12
11657360	272	96020819	305	4	11691327	673	91000054	42	16
11657360	517	96045552	306	8	11691328	33	967304508	301	12
11657360	623	915403108	7	1	11691328	581	96062734	43	2
11658059	321	96015921	9	4	11691328	760	918533508	45	2
11658059	612	913753108	11	4	11691424	37	510438508	17	2
11658059	781	968940708	8	3	11691424	119	96045222	21	4
11658059	782	968940808	8	3	11691424	369	933074801	74	8
11658580	52	968374908	12	4	11691539	319	919010108	15	4
11658580	241	10151329	77	1	11691539	395	918810308	36	8
11658580	285	918955208	4	4	11691686	174	10129474	5	4
11658580	408	96022627	380	10	11691686	192	10146791	5	1
11658580	420	919484908	251	4	11692099	628	12102922	25	1
11658580	562	919528608	377	4	11692607	604	96066401	3	4
11658580	655	91000049	32	9	11692824	352	916168308	17	4
11658660	203	10149677	8	2	11692824	415	96024809	300	2
11658890	210	9072906	4	1	11692824	417	969392008	300	2
11658891	656	91000049	82	12	11692824	591	96064697	300	4
11658891	661	91000050	67	12	11692827	315	917357108	28	2
11658891	664	91000051	67	12	11692827	326	968483708	32	2
11658891	667	91000052	67	8	11693875	70	915447908	107	2
11658891	670	91000053	67	8	11693875	124	918728408	350	10
11658892	30	992078314	29	18	11693875	269	918811108	351	13
11658892	61	917155308	27	8	11693875	272	96020819	350	11
11658892	269	918811108	317	3	11693875	305	91002857	350	4
11658892	415	96024809	320	2	11693875	355	916163008	27	2
11658892	458	91003833	50	8	11693875	386	917894308	8	4
11658892	566	969767908	303	3	11693875	408	96022627	353	13
11658892	655	91000049	36	6	11693875	415	96024809	351	3
11658892	661	91000050	53	2	11693875	416	969399608	11	1
11658892	664	91000051	53	2	11693875	420	919484908	170	15
11658892	667	91000052	53	2	11693875	461	96074081	70	9
11658892	670	91000053	53	2	11693875	476	918729308	350	4
11658892	739	910543708	7	2	11693875	478	915300208	24	2
11659025	37	510438508	16	2	11693875	502	96025348	19	2
11690042	386	917894308	10	2	11693875	562	919528608	350	8
11690042	395	918810308	34	24	11693875	566	969767908	(7)	4
11690044	476	918729308	302	2	11693875	581	96062734	52	2
11690044	484	919940408	(10)	3	11693875	636	964060608	5	1
11690044	588	96055197	10	3	11693875	642	96045219	4	2
11690047	431	96056347	(3)	2	11693875	723	964502908	22	2
11690048	319	919010108	8	1	11693875	726	967321308	4	2
11690048	326	968483708	14	2	11693878	408	96022627	375	9
11690048	392	969300008	27	2	11693878	420	919484908	95	4
11690048	562	919528608	300	4	11696245	274	97095949	3	2
11690628	63	967301408	303	1	11697580	90	96062920	513	1
11690628	661	91000050	30	8	11697580	98	96045216	502	1

Item	Page	Assembly	Pos.	Quantity
11697580	491	96063649	519	1
11697580	640	96045220	502	1
11697580	694	96063583	504	2
11697855	321	96015921	12	4
11697855	346	916162508	27	7
11698481	183	12489819	5	1
11820284	329	916170808	11	4
11820285	203	10149677	11	2
11820285	239	10151328	78	1
11822050	426	96023891	517	1
11822051	431	96056347	33	1
11826513	650	12257818	2	1
11826527	47	968374708	2	8
11826527	124	918728408	309	4
11826527	269	918811108	319	2
11826527	272	96020819	303	4
11826527	338	917305408	45	1
11826527	407	96022627	314	3
11826527	420	919484908	100	12
11826527	581	96062734	46	2
11826563	143	10126713	2	2
11826563	192	10146791	6	4
11826563	201	10145173	12	1
11826563	239	10151328	63	1
11826563	241	10151329	53	2
11826647	448	10876576	28	1
11826647	448	10876576	(8)	1
11826648	448	10876576	39	1
11826648	448	10876576	(9)	1
11826649	448	10876576	40	1
11826649	448	10876576	(10)	1
11826650	448	10876576	21	1
11826650	448	10876576	(4)	1
11826653	448	10876576	12	1
11826653	448	10876576	(3)	1
11826654	448	10876576	27	1
11834813	661	91000050	5	4
11834813	664	91000051	5	4
11834813	667	91000052	5	4
11834813	670	91000053	5	4
11834813	673	91000054	5	4
11835043	395	918810308	43	2
11835061	183	12489819	6	2
11839607	263	918728708	100	1
11840113	90	96062920	6	4.28
11840113	91	96062921	7	0.3
11840113	91	96062921	8	0.4
11840113	91	96062921	9	0.45
11840113	91	96062921	10	0.45
11840113	426	96023891	12	4.08
11840113	426	96023891	13	4.08
11840113	426	96023891	14	0.17
11840113	426	96023891	17	4.46
11840113	493	96023971	10	5.59
11840113	493	96023971	11	5.59
11840113	493	96023971	18	5.59
11840113	493	96023971	371	5.59
11840113	495	96049294	5	5.23
11840113	495	96049294	7	0.17
11840113	495	96049294	8	5.86
11840113	495	96049294	9	0.17
11840113	495	96049294	10	5.86
11840113	495	96049294	11	0.17
11840113	495	96049294	12	3.86
11840113	495	96049294	13	0.17
11840113	495	96049294	14	0.33
11840127	422	96044789	6	1
11840127	655	91000049	43	20
11840127	661	91000050	43	12
11840127	664	91000051	43	12
11840127	667	91000052	43	8
11840127	670	91000053	43	8
11840127	737	917825608	3	2
11840127	760	918533508	30	2
11840136	655	91000049	41	12
11840136	661	91000050	41	12
11840136	664	91000051	41	12
11840136	667	91000052	41	12
11840136	670	91000053	41	12
11840136	747	919933308	16	2
11840139	269	918811108	309	4
11840140	655	91000049	40	4
11840140	661	91000050	40	4
11840140	664	91000051	40	4
11840140	667	91000052	40	4
11840140	670	91000053	40	4
11840297	81	96062917	22	3
11840297	167	11358036	5	4
11840297	198	10143342	21	1
11840297	224	11420633	13	7
11840297	239	10151328	54	7
11840297	269	918811108	324	4
11840297	352	916168308	19	2
11840297	355	916163008	24	4
11840297	407	96022627	300	3
11840297	604	96066401	4	4
11840501	263	918728708	377	4
11840501	408	96022627	378	17
11840501	440	916870808	5	4
11840501	562	919528608	376	8
11840501	566	969767908	331	2
11840501	655	91000049	28	18
11921782	692	96063456	307	1
11921782	703	96063458	293	1
11951828	56	790258414	3	60
11951831	56	790258414	5	60
11951833	56	790258414	7	2
11952500	115	919553608	1	2
11963742	470	919674308	184	1
11963742	473	96051762	183	1
11964262	454	919501608	21	4
11968244	30	992078314	26	4
11968421	24	749013714	8	4
11968422	315	917357108	34	2
11968431	40	990840414	7	10
11979975	397	10877138	24	1
11979976	397	10877138	29	1
11979998	397	10877138	31	1
12001446	458	91003833	90	1
12100037	645	919950308	5	1

Item	Page	Assembly	Pos.	Quantity
12100105	470	919674308	106	1
12100177	397	10877138	(59)	1
12100214	493	96023971	7	5.59
12100214	493	96023971	8	5.59
12100214	493	96023971	9	5.59
12100215	493	96023971	12	5.59
12100215	493	96023971	13	5.59
12100215	493	96023971	14	3.39
12100215	493	96023971	374	5.59
12100215	493	96023971	381	5.59
12100215	493	96023971	382	5.59
12100215	495	96049294	17	5.4
12100215	495	96049294	373	6
12100216	493	96023971	372	5.59
12100216	495	96049294	15	5.3
12100217	91	96062921	5	0.4
12100217	91	96062921	6	0.4
12100217	428	96022870	8	3
12100217	428	96022870	9	3
12100217	493	96023971	15	5.59
12100217	493	96023971	16	6.69
12100217	493	96023971	17	3.54
12100217	493	96023971	19	1.89
12100217	493	96023971	370	1
12100217	493	96023971	373	5.59
12100217	493	96023971	375	5.59
12100217	493	96023971	376	5.59
12100217	493	96023971	377	5.59
12100217	493	96023971	378	5.59
12100217	493	96023971	379	5.59
12100217	493	96023971	380	5.59
12100217	495	96049294	16	5.3
12100217	495	96049294	18	5.4
12100217	495	96049294	19	5.4
12100217	495	96049294	370	4.65
12100217	495	96049294	371	5.15
12100217	495	96049294	372	4.65
12100265	334	917304508	13	1
12100279	350	965784408	10	4
12100289	334	917304508	12	9
12100289	423	96045536	2	2
12100291	645	919950308	14	4
12100292	723	964502908	21	2
12100292	726	967321308	3	2
12100332	263	918728708	350	2
12100332	285	918955208	5	4
12100332	408	96022627	352	2
12100332	415	96024809	352	4
12100332	461	96074081	73	12
12100333	661	91000050	62	8
12100333	664	91000051	62	8
12100333	667	91000052	62	8
12100333	670	91000053	62	8
12100333	673	91000054	41	4
12100338	326	968483708	21	6
12100498	599	96075102	245	2
12100540	61	917155308	22	6
12100570	397	10877138	55	1
12100574	420	919484908	101	2
12100574	645	919950308	105	4
12100589	395	918810308	45	4
12100589	410	969425608	3	6
12100589	416	969399608	3	12
12100600	272	96020819	353	1
12100611	771	918596708	17	1
12100613	398	96032222	3	1
12100613	399	962282208	6	1
12100613	400	96032223	3	1
12100617	397	10877138	(1)	1
12100619	397	10877138	(1)	1
12100620	456	12102342	18	1
12100620	628	12102922	26	1
12100622	342	11002447	1	1
12100624	645	919950308	12	5
12100631	60	991456314	3	2
12100669	441	966707708	6	1
12100674	485	965371508	5	2
12100707	401	962282308	100	1
12101064	280	96035595	5	1
12101064	282	96035743	5	1
12101146	549	10877219	4	1
12101147	549	10877219	3	1
12101159	105	928620108	4	1
12101218	648	10876885	2	1
12101219	648	10876885	3	1
12101220	648	10876885	999	1
12101221	648	10876885	6	1
12101681	482	12101719	3	4
12101719	478	915300208	2	1
12101831	478	915300208	8	1
12101847	478	915300208	9	1
12101847	587	921444108	4	1
12101886	308	12106874	999	1
12101942	431	96056347	(80)	1
12101984	308	12106874	13	1
12102051	395	918810308	20	4
12102116	397	10877138	28	1
12102117	544	571737808	1	1
12102189	591	96064697	167	1
12102189	598	96075086	167	1
12102190	591	96064697	166	1
12102190	598	96075086	166	1
12102280	420	919484908	4	3
12102325	420	919484908	2	1
12102326	420	919484908	3	1
12102327	420	919484908	1	1
12102342	454	919501608	1	2
12102343	478	915300208	7	7
12102477	480	10327065	34	1
12102524	66	11481975	1011	4
12102528	470	919674308	181	3
12102630	494	96023971	2807	3.9
12102632	494	96023971	2809	3.9
12102634	491	96063649	2811	7.8
12102635	494	96023971	2812	6.6
12102677	615	919392208	1	1
12102692	33	967304508	314	6
12102692	421	96044787	12	6
12102692	506	926891108	14	6
12102692	591	96064697	311	2

Item	Page	Assembly	Pos.	Quantity
12102692	599	96075102	60	2
12102692	646	925141508	5	1
12102694	30	992078314	46	7
12102694	87	96062922	18	1
12102694	332	968462608	12	1
12102694	503	922648308	4	12
12102695	124	918728408	351	3
12102695	395	918810308	32	2
12102695	408	96022627	354	9
12102695	415	96024809	353	2
12102695	581	96062734	51	6
12102695	723	964502908	25	2
12102696	47	968374708	25	47
12102696	70	915447908	103	4
12102696	269	918811108	310	2
12102696	327	96025887	8	10
12102696	374	916109208	300	2
12102696	407	96022627	320	1
12102696	517	96045552	310	2
12102696	575	918627208	11	2
12102696	581	96062734	47	14
12102696	595	96062735	2	2
12102696	655	91000049	69	45
12102696	673	91000054	43	27
12102696	673	91000054	58	2
12102696	721	915415908	7	5
12102696	723	964502908	27	3
12102696	726	967321308	6	2
12102696	760	918533508	61	7
12102696	761	918533508	65	2
12102696	768	91001040	31	11
12102696	771	918596708	21	7
12102738	441	966707708	7	1
12102772	93	96060494	4	1
12102773	92	96060493	4	1
12102799	81	96062917	10	1
12102801	652	919935408	(1)	1
12102805	484	919940408	(5)	1
12102805	588	96055197	5	1
12102806	652	919935408	(2)	1
12102806	652	919935408	(1)	1
12102806	774	96055854	(151)	1
12102807	729	96058737	2	1
12102869	120	916959808	3	1
12102895	490	96063649	7	1
12102915	699	96051215	502	1
12102916	694	96063583	501	1
12102922	626	919616808	1	1
12102924	42	96048348	4	2
12102925	473	96051762	180	2
12103084	694	96063583	5	2.67
12103123	679	91000055	20	4
12103149	613	919386708	1	1
12103227	420	919484908	5	3
12103327	603	91003677	1	1
12103434	397	10877138	(2)	1
12103465	33	967304508	305	2
12103465	47	968374708	3	24
12103465	124	918728408	380	22
12103465	125	963260408	10	2
12103465	126	96049764	10	2
12103465	269	918811108	375	26
12103465	272	96020819	375	21
12103465	305	91002857	375	8
12103465	319	919010108	9	1
12103465	326	968483708	28	8
12103465	327	96025887	12	3
12103465	339	917305408	64	4
12103465	355	916163008	13	4
12103465	386	917894308	6	12
12103465	392	969300008	28	6
12103465	408	96022627	376	24
12103465	410	969425608	11	4
12103465	416	969399608	12	2
12103465	444	918759708	23	7
12103465	446	96019783	8	8
12103465	461	96074081	61	9
12103465	502	96025348	17	2
12103465	506	926891108	13	4
12103465	517	96045552	319	4
12103465	642	96045219	3	2
12103465	652	919935408	15	7
12103465	652	919935408	18	4
12103465	655	91000049	31	9
12103465	661	91000050	17	5
12103465	664	91000051	17	4
12103465	667	91000052	17	4
12103465	670	91000053	17	4
12103465	673	91000054	17	4
12103465	679	91000055	29	8
12103465	747	919933308	33	4
12103465	760	918533508	24	2
12103465	773	96037297	2	2
12103474	23	790256114	(999)	1
12103790	780	917508508	(2)	1
12104034	698	96063213	5	49.51
12104384	628	12102922	999	1
12104397	87	96062922	8	1
12104397	498	919940108	19	1
12104472	741	919421708	31	1
12104544	102	914860608	(1)	1
12104585	741	919421708	32	1
12104638	92	96060493	6	1
12104638	93	96060494	6	1
12104640	93	96060494	7	1
12104642	93	96060494	8	1
12104642	432	96056347	60	1
12104653	780	917508508	(1)	4
12104660	456	12102342	999	1
12104666	741	919421708	30	1
12104667	741	919421708	34	1
12104694	84	96075205	21	1
12104694	92	96060493	154	2
12104695	84	96075205	20	1
12104695	92	96060493	153	1
12104695	93	96060494	153	1
12104731	695	96063212	5	1
12104785	679	91000055	6	4
12104809	90	96062920	261	1
12104809	91	96062921	261	15

Item	Page	Assembly	Pos.	Quantity	Item	Page	Assembly	Pos.	Quantity
12104809	426	96023891	261	1	12108687	650	12257818	3	1
12104809	428	96022870	261	20	12108688	650	12257818	4	1
12104809	493	96023971	261	1	12108716	228	11386644	7	1
12104809	500	96059659	261	50	12108844	462	96071742	1	1
12104810	490	96063649	269	20	12109108	648	10876885	5	1
12104810	493	96023971	269	1	12109319	714	511493608	2	1
12104810	500	96059659	269	50	12109804	52	968374908	(1)	2
12104810	698	96063213	269	5	12156873	66	11481975	1102	4
12104811	500	96059659	268	50	12202784	33	967304508	309	2
12104872	608	96060353	2338	6	12202784	655	91000049	77	2
12104872	611	96057250	2338	3	12202784	773	96037297	7	2
12104874	608	96060353	501	1	12202901	127	968305308	8	2
12104874	611	96057250	501	1	12203070	388	11083498	37	2
12104875	608	96060353	502	2	12203634	388	11083498	38	3
12104876	608	96060353	2337	6	12204614	478	915300208	4	4
12104883	611	96057250	503	1	12206699	543	10333672	31	6
12104884	608	96060353	503	1	12207210	532	11002717	7	4
12104889	606	91002360	5	1	12207546	224	11420633	12	2
12105406	679	91000055	1	1	12207546	239	10151328	52	1
12105779	87	96062922	9	1	12207546	241	10151329	42	1
12105779	498	919940108	20	1	12207548	204	9078314	2	4
12105785	66	11481975	1	1	12207549	223	12512627	24	2
12105786	66	11481975	3	1	12207559	225	10142863	5	1
12105789	66	11481975	7	1	12207562	139	10147687	4	8
12105791	66	11481975	16	1	12207570	231	10142864	2	2
12105795	66	11481975	1006	8	12207587	201	10145173	3	1
12105803	66	11481975	1017	4	12208088	200	10147365	4	4
12105806	66	11481975	1100	4	12208088	223	12512627	9	1
12105807	66	11481975	1101	8	12208098	661	91000050	18	4
12105942	714	511493608	999	1	12208098	664	91000051	18	4
12105979	730	96058738	505	1	12208098	667	91000052	18	4
12106077	326	968483708	27	6	12208098	670	91000053	18	4
12106077	524	571130108	9	1	12208098	673	91000054	56	4
12106136	339	917305408	69	1	12208101	269	918811108	302	2
12106198	697	12104731	8	1	12209779	136	11389608	2	4
12106200	697	12104731	20	6	12209781	163	10149578	10	3
12106201	697	12104731	22	6	12209783	136	11389608	3	7
12106223	608	96060353	504	2	12210009	198	10143342	23	1
12106335	695	96063212	10	1	12210010	198	10143342	6	6
12106454	35	10675161	5	1	12210010	212	10145278	7	1
12106616	589	96055198	5	1	12210010	224	11420633	6	1
12106640	766	10801932	26	1	12210013	198	10143342	17	1
12106874	306	96066239	100	1	12210015	196	10143341	16	3
12107041	684	12105406	52	3	12210024	198	10143342	2	1
12107074	648	10876885	1	1	12210024	223	12512627	20	1
12107162	760	918533508	(999)	1	12210025	212	10145278	3	4
12107190	308	12106874	11	1	12210029	198	10143342	12	1
12107191	308	12106874	12	1	12210035	202	10147364	3	3
12107425	684	12105406	999	1	12210037	238	10144098	3	1
12107426	684	12105406	(999)	1	12210040	156	10153583	4	3
12107427	684	12105406	4	1	12210060	144	10132560	3	28
12107776	120	916959808	2	1	12211223	462	96071742	(1)	1
12107816	431	96056347	11	1	12211232	462	96071742	3	1
12107824	432	96056347	59	1	12211444	78	964765008	3	2
12108313	552	10292670	999	1	12211782	129	13471292	11	12
12108364	492	96063650	5	16.4	12212022	223	12512627	16	2
12108533	274	97095949	16	1	12212474	610	96050762	7	4
12108590	431	96056347	(1)	1	12213814	679	91000055	27	6
12108598	42	96048348	(999)	1	12213825	369	933074801	86	10
12108602	274	97095949	18	1	12214461	741	919421708	39	2

Item	Page	Assembly	Pos.	Quantity	Item	Page	Assembly	Pos.	Quantity
12214938	19	96062225	13	6	12226910	263	918728708	302	8
12214938	30	992078314	27	3	12226910	269	918811108	303	6
12214938	760	918533508	54	2	12227697	70	915447908	111	2
12215460	202	10147364	4	3	12229337	327	96025887	11	14
12215460	225	10142863	7	1	12237851	274	97095949	19	1
12215460	226	10115539	3	3	12257818	649	916166208	1	1
12215977	315	917357108	32	2	12400857	168	10120186	3	1
12215977	723	964502908	30	1	12408221	168	10120186	2	1
12215999	219	10142744	3	1	12414685	464	11373478	739	1
12216054	656	91000049	80	2	12417001	182	10146658	210	1
12216054	661	91000050	72	2	12418347	133	13455311	340	1
12216054	664	91000051	72	2	12424993	182	10146658	215	1
12216054	667	91000052	72	2	12424993	251	10148366	1719	1
12216054	670	91000053	72	2	12428325	203	10149677	10	1
12216183	269	918811108	306	2	12429351	224	11420633	2	1
12216186	269	918811108	307	2	12429430	224	11420633	4	1
12216201	415	96024809	305	1	12436701	223	12512627	32	1
12216202	124	918728408	303	2	12438990	177	10148432	1	1
12216217	395	918810308	40	4	12445245	458	91003833	12	1
12216233	295	969219208	300	12	12462476	475	11429845	50	2
12217223	415	96024809	304	1	12466377	464	11373478	738	1
12217223	655	91000049	5	2	12475399	222	10140729	4	1
12217223	661	91000050	16	2	12476138	159	10146367	4	1
12217223	664	91000051	16	2	12478647	159	10146367	5	1
12217223	667	91000052	16	2	12485523	190	10135080	220	1
12217223	670	91000053	16	2	12487540	129	13471292	10	1
12217239	461	96074081	50	3	12489819	182	10146658	300	1
12218127	124	918728408	352	2	12490199	182	10146658	230	1
12218127	679	91000055	47	4	12511916	197	13472510	1	1
12218194	480	10327065	12	1	12512627	133	13455311	432	1
12218490	269	918811108	323	2	12542812	140	13782803	1	1
12219296	19	96062225	12	6	12544505	243	12583633	20	2
12219309	290	917962508	301	2	12549824	166	12549825	2	2
12219312	290	917962508	300	1	12549825	164	10148438	1	1
12219491	184	10152867	3	1	12554272	416	969399608	6	1
12219491	185	13743036	3	1	12560584	475	11429845	60	2
12219804	388	11083498	39	4	12572663	369	933074801	950	1
12219810	306	96066239	300	3	12583633	135	13455311	581	1
12220375	655	91000049	34	3	12691274	22	96062226	4	24
12220375	661	91000050	60	9	12691274	27	96062228	4	24
12220375	664	91000051	60	9	12691448	709	965994108	552	12
12220375	667	91000052	60	9	12692417	383	968607101	43	3
12220375	670	91000053	60	9	12693951	495	96049294	520	1
12220684	291	969543308	300	5	12696398	224	11420633	8	7
12222407	269	918811108	320	2	12697283	706	96063415	501	1
12222407	272	96020819	304	2	12697335	177	10148432	2	1
12222896	448	10876576	22	1	12780040	509	96069052	100	1
12223034	381	938759601	25	1	12809567	236	9077238	1	1
12223034	530	11170518	90	2	12820742	193	13512036	2	1
12223035	530	11170518	88	4	12826252	204	9078314	4	1
12223051	760	918533508	55	1	12843150	184	10152867	5	1
12224018	22	96062226	36	2	12843150	185	13743036	6	1
12224018	28	96062228	36	2	12847441	222	10140729	2	1
12224027	47	968374708	10	4	12856186	205	13701882	1	1
12224035	22	96062226	(391)	2	12863021	215	10142733	1	1
12224044	636	964060608	2	3	12874086	167	11358036	2	1
12224044	747	919933308	12	4	12881001	182	10146658	260	1
12225301	517	96045552	316	4	12886223	143	10126713	1	1
12225301	591	96064697	551	8	12886224	143	10126713	(1)	1
12225935	395	918810308	41	4	12888562	470	919674308	101	1

Item	Page	Assembly	Pos.	Quantity	Item	Page	Assembly	Pos.	Quantity
12889334	474	96041566	156	1	243034002	168	10120186	10	2
12894049	250	10148366	103	8	247021702	519	96045552	734	2
12898375	138	10154458	1	1	247021702	717	966004808	605	1
12898856	473	96051762	102	1	247021802	461	96074081	34	1
12907001	243	12583633	(1)	1	247105602	34	967304508	645	2
12907020	243	12583633	(1)	1	247105602	518	96045552	659	3
12917604	182	10146658	250	1	247105602	591	96064697	617	1
12921811	217	10148216	1	1	247108302	306	96066239	401	2
12922849	214	13719288	1	1	247108302	518	96045552	604	4
12923599	182	10146658	220	1	247108402	519	96045552	736	2
12931997	188	13703082	1	1	247117702	34	967304508	646	6
12932487	182	10146658	270	1	247117702	518	96045552	612	5
12932488	182	10146658	275	1	247117702	592	96064697	633	2
12937883	182	10146658	211	1	247117702	619	969856508	601	1
12937883	251	10148366	1710	1	247117702	709	965994108	610	1
12966286	182	10146658	240	1	247126202	211	10145176	2	1
12978423	242	10143707	1	1	247128502	34	967304508	638	1
12983604	223	12512627	3	1	247128502	518	96045552	603	5
12984315	474	96041566	152	2	247128602	34	967304508	648	6
12987460	196	10143341	17	2	247128602	518	96045552	637	10
12993450	138	10154458	2	1	247128602	592	96064697	636	2
13187353	115	919553608	2	1	247128602	619	969856508	600	1
13366890	388	11083498	45	1	247128602	709	965994108	608	3
13402640	473	96051762	104	1	260020702	502	96025348	50	0.28
13410342	243	12583633	30	2	261101108	388	11083498	50	0.3
13455311	129	13471292	1	1	262001308	461	96074081	42	1.95
13470818	134	13455311	570	1	262101308	339	917305408	68	0.04
13471292	128	919832408	1	1	262103108	395	918810308	30	0.064
13472510	196	10143341	1	1	262103908	272	96020819	115	0.3
13472766	193	13512036	1	1	262103908	287	96024716	8	1.55
13475475	462	96071742	2	1	262103908	407	96022627	(3)	0.6
13476764	160	10149580	1	1	262103908	506	926891108	7	0.16
13484584	167	11358036	3	4	262104308	85	966167808	5	1.08
13486106	160	10149580	(998)	1	262107814	781	968940708	12	0.12
13512036	192	10146791	1	1	262107814	782	968940808	12	0.12
13541106	238	10144098	2	1	262109108	87	96062922	10	0.15
13562648	463	13475475	1	1	262181001	366	931696301	315	4.83
13566415	177	10148432	6	1	262181001	366	931696301	316	4.78
13569467	223	12512627	11	13	262183501	366	931696301	314	4.8
13574085	185	13743036	1	1	283082508	655	91000049	47	27
13587399	22	96062226	3	1	283082508	661	91000050	47	25
13587399	27	96062228	3	1	283082508	664	91000051	47	23
13687089	139	10147687	15	1	283082508	667	91000052	47	21
13701882	204	9078314	1	1	283082508	670	91000053	47	19
13703082	184	10152867	210	1	283083308	655	91000049	39	2
13710427	22	96062226	(1)	1	283083308	661	91000050	39	2
13711602	205	13701882	2	1	283083308	664	91000051	39	2
13719288	213	12418347	2	1	283083308	667	91000052	39	2
13730923	174	10129474	8	1	283083308	670	91000053	39	2
13736146	244	12544505	1	1	283083908	679	91000055	15	1
13743036	184	10152867	200	1	283092408	679	91000055	13	1
13757616	189	10153151	200	1	283092508	679	91000055	14	1
13782803	139	10147687	1	1	283092608	679	91000055	25	1
240049702	168	10120186	7	5	283093608	661	91000050	22	2
240049802	169	12408221	5	2	283093608	664	91000051	22	2
240122602	171	10145815	3	3	283093608	667	91000052	22	2
240188502	534	10802090	44	8	283093608	670	91000053	22	2
240196202	534	10802090	(41)	3	283093608	673	91000054	22	2
240206302	530	11170518	89	2	283093708	661	91000050	23	2
241047802	321	96015921	7	1	283093708	664	91000051	23	2

Item	Page	Assembly	Pos.	Quantity	Item	Page	Assembly	Pos.	Quantity
283093708	667	91000052	23	2	404361977	531	11170519	86	4
283093708	670	91000053	23	2	404361977	602	10665173	86	4
283093708	673	91000054	23	2	404362408	522	11170514	85	4
283093808	661	91000050	24	2	404363708	540	511486908	15	4
283093808	664	91000051	24	2	404364108	261	12487540	(74)	4
283093808	667	91000052	24	2	404400508	361	917304708	16	1
283093908	661	91000050	25	2	404400508	720	511479408	5	1
283093908	664	91000051	25	2	406207208	22	96062226	18	12
283093908	667	91000052	25	2	406207208	27	96062228	18	12
283094108	670	91000053	24	2	406212901	24	749013714	7	4
283094108	673	91000054	24	2	4062144	22	96062226	7	24
283094208	670	91000053	25	2	4062144	27	96062228	7	24
283094208	673	91000054	25	2	406214708	743	910445708	16	4
283094308	655	91000049	45	2	406509808	407	96022627	321	1
283094308	661	91000050	45	2	406518814	470	919674308	304	8
283094308	664	91000051	45	4	406518814	473	96051762	306	4
283094408	655	91000049	46	2	406527808	361	917304708	24	4
283094408	661	91000050	46	2	406527808	470	919674308	303	2
283094508	661	91000050	59	3	406527808	673	91000054	75	1
283094508	664	91000051	59	3	406590105	326	968483708	35	4
283094508	667	91000052	59	3	406590805	470	919674308	302	6
283094508	670	91000053	59	3	406601008	378	963564908	4	6
283094708	667	91000052	45	2	406601008	420	919484908	200	2
283094708	670	91000053	45	2	406601008	581	96062734	42	6
283095108	670	91000053	48	2	406603008	626	919616808	5	8
283095408	655	91000049	59	3	406603108	378	963564908	3	22
288157708	677	927310008	1	1	406603108	581	96062734	40	26
288158408	769	927311708	1	1	406603408	747	919933308	19	4
288176208	124	918728408	101	1	406603408	751	929582108	7	1
288182508	444	918759708	9	1	406604208	747	919933308	8	2
288184008	655	91000049	19	1	406608708	655	91000049	53	2
288190908	420	919484908	22	2	406609008	255	10115780	2	8
308115114	22	96062226	14	2	407500508	773	96037297	10	1
308115114	27	96062228	14	2	408311208	87	96062922	19	4
380057108	269	918811108	451	6	408311208	498	919940108	21	4
380061708	635	915090008	2	1	408401901	431	96056347	41	4
380061908	635	915090008	3	2	408606008	420	919484908	103	3
380061908	637	915090108	30	2	408650508	470	919674308	309	2
4000521	380	968558601	6	16	408650608	470	919674308	307	2
4000521	583	938707001	6	16	409817708	101	914860508	1	56
4000809	320	916164208	9	4	409817708	365	917472008	2	44
400100703	61	917155308	23	18	410120308	723	964502908	29	1
4002886	480	10327065	25	4	411503103	60	991456314	6	2
402600508	71	10356288	46	1	411514608	751	929582108	8	1
404202701	35	10675161	3	8	411514614	470	919674308	350	6
404230208	326	968483708	24	2	411517114	470	919674308	351	11
404230308	361	917304708	45	1	411530301	420	919484908	98	2
404250914	361	917304708	51	1	411703308	316	10650940	2	1
404293213	319	919010108	17	1	411903008	332	968462608	11	1
404294613	326	968483708	17	4	411903008	361	917304708	23	4
4043006	164	10148438	5	2	411903008	363	966230508	5	2
404302914	531	11170519	88	4	411903008	415	96024809	354	4
404312008	383	968607101	77	8	411903008	623	915403108	9	3
404312008	585	938759801	77	8	411903008	625	96036821	25	2
404350701	537	10665128	43	1	411903108	326	968483708	(6)	21
404350701	551	10355774	5	4	411903108	326	968483708	23	20
404361208	538	511307808	70	16	411903108	331	916162808	6	12
404361208	540	511486908	16	4	413002608	612	913753108	9	4
404361977	528	11170515	86	4	413002708	395	918810308	44	4
404361977	530	11170518	86	4	413002808	338	917305408	53	1

Item	Page	Assembly	Pos.	Quantity	Item	Page	Assembly	Pos.	Quantity
413003208	408	96022627	355	1	428011301	166	12549825	7	2
413003208	652	919935408	26	3	428100708	275	10429930	5	1
413006208	319	919010108	13	4	428102108	369	933074801	67	1
420000414	420	919484908	96	2	428102508	372	570109008	12	1
420001014	61	917155308	21	4	428102708	383	968607101	4	1
420001014	295	969219208	375	8	428102708	584	938759801	4	1
420001114	63	967301408	304	2	428103808	377	510240708	12	1
420001114	319	919010108	18	1	428105908	381	938759601	21	1
420060201	361	917304708	39	2	428110001	584	938759801	29	1
420060705	63	967301408	301	4	430670808	661	91000050	3	1
420060705	326	968483708	(7)	8	430670808	664	91000051	3	1
420060705	326	968483708	34	16	430670808	667	91000052	3	1
420060705	517	96045552	328	3	430670808	670	91000053	3	1
420604208	70	915447908	109	2	430670808	673	91000054	3	1
421000408	372	570109008	17	2	430709608	753	512353708	2	1
421000508	372	570109008	18	1	431100201	381	938759601	24	1
421100808	581	96062734	61	8	431200501	369	933074801	91	3
421102608	77	990618314	6	3	431202401	381	938759601	18	1
421801708	349	966497908	14	2	432007908	383	968607101	72	1
421801708	361	917304708	58	2	432007908	584	938759801	72	1
421801708	363	966230508	4	2	432013108	24	749013714	5	2
421801708	470	919674308	379	11	433100908	721	915415908	4	2
421801708	473	96051762	378	8	433100908	748	925280008	7	1
421801708	625	96036821	26	2	433101208	22	96062226	39	4
421801908	420	919484908	151	8	433101208	28	96062228	39	4
421802108	355	916163008	14	1	433101208	77	990618314	7	2
421802108	363	966230508	7	1	433101208	581	96062734	70	2
421861405	326	968483708	29	6	433101208	673	91000054	38	1
421861405	473	96051762	379	4	433101208	723	964502908	12	1
421861405	625	96036821	30	4	433101208	723	964502908	20	1
422002308	763	917695308	12	1	433101208	726	967321308	2	1
422061401	383	968607101	48	9	433101208	747	919933308	36	1
422061501	383	968607101	49	6	433101208	750	96062062	7	1
422062101	383	968607101	47	3	433101208	760	918533508	8	1
4229913	129	13471292	12	12	433101208	763	917695308	14	1
4239009	261	12487540	24	8	433101208	771	918596708	27	1
423901408	369	933074801	27	16	433102508	673	91000054	67	1
423901508	381	938759601	26	1	433102508	723	964502908	10	1
423901708	383	968607101	53	8	433102508	734	96056553	12	1
424100708	371	510229408	8	6	433102808	407	96022627	140	1
425100408	87	96062922	20	4	433102808	415	96024809	101	1
425100408	498	919940108	22	4	433102808	736	96056560	5	1
425220708	431	96056347	43	4	433105008	768	91001040	15	1
425220708	502	96025348	92	16	433105008	772	918221408	7	1
425221108	502	96025348	18	1	433200908	47	968374708	5	8
425221208	22	96062226	24	8	433206114	119	96045222	13	4
425221208	27	96062228	24	6	433206208	783	968952708	2	2
425221608	19	96062225	14	6	450022014	119	96045222	9	4
425221608	22	96062226	13	20	450023108	768	91001040	9	1
425221608	27	96062228	13	20	450023108	771	918596708	13	1
425221908	30	992078314	40	12	450023508	760	918533508	38	1
425301208	760	918533508	49	1	450044814	454	919501608	22	4
428002908	369	933074801	92	1	451000208	736	96056560	1	1
428003308	383	968607101	33	3	451000508	315	917357108	33	2
428003308	584	938759801	33	3	451210308	326	968483708	11	1
428003308	763	917695308	13	1	451226408	315	917357108	18	1
428004008	383	968607101	44	2	451430808	77	990618314	4	1
428004008	584	938759801	44	2	451430808	760	918533508	19	1
428009408	742	924073908	3	2	451430808	763	917695308	20	1
428011301	165	11448005	7	2	452540908	723	964502908	2	1

Item	Page	Assembly	Pos.	Quantity	Item	Page	Assembly	Pos.	Quantity
452549108	673	91000054	36	2	470231108	519	96045552	749	1
452550508	760	918533508	56	1	470231408	519	96045552	751	1
452550508	772	918221408	3	2	470232708	34	967304508	664	1
452550908	60	991456314	2	1	470233008	34	967304508	661	4
452552708	760	918533508	42	1	470233008	519	96045552	732	2
453009308	763	917695308	8	1	470233408	518	96045552	668	4
453020908	747	919933308	35	1	470233408	598	96075086	627	1
453020908	768	91001040	12	1	470431408	519	96045552	711	2
453020908	771	918596708	8	2	470700208	519	96045552	731	2
453041108	760	918533508	57	2	470700208	591	96064697	607	1
4600021	124	918728408	381	12	470730008	583	938707001	28	1
4600021	470	919674308	375	4	470730308	519	96045552	777	1
4600021	747	919933308	51	5	470901908	517	96045552	513	2
4600037	31	992078314	51	40	471004514	519	96045552	763	2
4600037	679	91000055	18	4	471008214	34	967304508	613	4
4600146	22	96062226	5	48	471030008	518	96045552	676	1
4600146	27	96062228	5	48	471030008	591	96064697	610	1
4600146	454	919501608	4	8	471030008	717	966004808	606	1
4600146	679	91000055	7	4	471030108	518	96045552	679	2
4600167	33	967304508	306	4	471030508	518	96045552	629	1
4600180	22	96062226	16	12	471030708	518	96045552	683	1
4600180	27	96062228	16	12	471030808	34	967304508	651	6
4600199	30	992078314	25	12	471030808	518	96045552	638	6
460022203	22	96062226	10	14	471030808	591	96064697	616	1
460022203	27	96062228	10	14	471030908	591	96064697	605	1
4600232	209	5700161	29	3	471031108	34	967304508	637	1
4600242	31	992078314	52	24	471031108	291	969543308	402	1
4600242	124	918728408	379	8	471031108	519	96045552	737	1
4600242	272	96020819	379	1	471031108	566	969767908	602	1
4600370	26	749065314	80	1	471031208	519	96045552	714	2
4600604	290	917962508	375	4	471031508	518	96045552	636	1
4600604	293	918008908	375	4	471032108	518	96045552	665	4
4600604	747	919933308	11	6	471032108	587	921444108	3	3
4601105	152	10139112	6	1	471032108	591	96064697	611	2
4601105	250	10148366	(3)	4	471032108	598	96075086	638	2
463000003	369	933074801	41	6	471032108	619	969856508	604	1
463000103	369	933074801	21	5	471032108	709	965994108	601	1
470000814	628	12102922	28	1	471032608	34	967304508	620	2
470010108	518	96045552	681	1	471032608	63	967301408	605	1
470010208	34	967304508	610	3	471032608	74	967314108	600	8
470010308	34	967304508	611	12	471032608	519	96045552	744	9
470010308	67	917155408	(600)	8	471032608	619	969856508	608	1
470010308	520	96045552	787	1	471032708	63	967301408	603	8
470010408	519	96045552	741	2	471032708	519	96045552	765	3
470010708	518	96045552	670	2	471032808	34	967304508	617	4
470010708	592	96064697	628	2	471032808	519	96045552	762	2
470010708	598	96075086	628	1	471032808	717	966004808	608	1
470011108	34	967304508	606	4	471032908	519	96045552	698	2
470011108	519	96045552	733	2	471033008	34	967304508	636	3
470011208	520	96045552	790	1	471033108	34	967304508	615	2
470011208	592	96064697	638	1	471033108	518	96045552	620	3
470011308	518	96045552	641	2	471033208	34	967304508	603	3
470011308	591	96064697	615	2	471033208	518	96045552	625	8
470011508	519	96045552	730	1	471033208	709	965994108	602	1
470030908	519	96045552	766	1	471033308	34	967304508	631	1
470032408	519	96045552	720	3	471033508	34	967304508	635	1
470032708	519	96045552	710	1	471034308	269	918811108	400	2
470230308	709	965994108	607	3	471034408	518	96045552	602	13
470230608	566	969767908	645	1	471034408	598	96075086	629	2
470230808	34	967304508	662	1	471034708	518	96045552	649	2

Item	Page	Assembly	Pos.	Quantity	Item	Page	Assembly	Pos.	Quantity
471034808	34	967304508	647	1	474030308	518	96045552	607	1
471034808	518	96045552	640	4	474030508	518	96045552	611	1
471034808	619	969856508	609	1	474030708	518	96045552	605	1
471034808	709	965994108	603	4	474032408	34	967304508	612	8
471035308	34	967304508	644	1	474032408	63	967301408	602	8
471035308	518	96045552	653	5	474032608	34	967304508	608	2
471035508	291	969543308	400	1	474032908	34	967304508	607	4
471035508	566	969767908	636	2	474232408	34	967304508	618	4
471037508	306	96066239	402	3	474234008	709	965994108	150	3
471037508	519	96045552	708	1	474906608	33	967304508	500	4
471039308	444	918759708	10	1	474906708	517	96045552	510	1
471039608	519	96045552	690	2	474906708	591	96064697	501	1
471039608	591	96064697	618	1	474906908	517	96045552	501	1
471039708	518	96045552	606	4	475030708	519	96045552	743	1
471039708	566	969767908	605	1	475032508	520	96045552	785	1
471039708	592	96064697	623	1	475033608	519	96045552	740	1
471039808	566	969767908	623	2	475408108	519	96045552	772	1
471900308	34	967304508	640	1	475430208	518	96045552	684	2
471900308	519	96045552	768	2	475430208	592	96064697	635	1
471900308	591	96064697	609	1	475430408	519	96045552	725	3
471900308	619	969856508	605	2	475430508	520	96045552	783	1
471900508	520	96045552	784	1	475430708	519	96045552	742	1
471900508	717	966004808	609	1	475431308	519	96045552	752	2
471900608	34	967304508	605	2	475431408	34	967304508	650	3
471900608	518	96045552	686	1	475431408	709	965994108	609	4
471901108	518	96045552	667	3	475431708	519	96045552	712	1
471901108	592	96064697	621	2	475431808	592	96064697	637	1
471901108	709	965994108	611	3	475432008	34	967304508	659	2
471901208	518	96045552	689	1	475432008	717	966004808	603	2
471901308	518	96045552	687	1	475432108	34	967304508	663	1
471901508	519	96045552	747	4	475432108	518	96045552	619	1
471901808	518	96045552	633	5	475432308	34	967304508	654	1
471901908	518	96045552	621	1	475432908	34	967304508	642	1
471903608	295	969219208	400	1	475432908	520	96045552	786	1
471903808	519	96045552	709	1	475432908	619	969856508	607	1
472300414	591	96064697	606	1	475433308	34	967304508	619	4
472330208	518	96045552	657	5	475433308	518	96045552	628	2
472330208	592	96064697	619	2	475433408	34	967304508	658	1
472330208	709	965994108	605	3	475433508	518	96045552	601	2
472331208	34	967304508	643	1	475433908	33	967304508	601	4
472331208	518	96045552	663	4	475434808	34	967304508	623	1
472331208	591	96064697	612	2	475435308	519	96045552	723	5
472331208	619	969856508	603	1	475435608	519	96045552	706	2
472331208	717	966004808	602	1	475436308	34	967304508	639	1
472331908	519	96045552	716	3	475436308	519	96045552	735	1
472331908	598	96075086	639	1	475436708	519	96045552	746	1
472430408	520	96045552	791	1	475500708	34	967304508	604	4
472530608	519	96045552	755	3	475601508	34	967304508	641	3
472531508	518	96045552	666	4	475601508	63	967301408	607	1
472531508	591	96064697	608	2	475601508	518	96045552	600	5
472531508	619	969856508	606	1	475601508	591	96064697	614	1
472531508	717	966004808	604	1	475601508	619	969856508	602	1
472531808	518	96045552	643	6	475602608	518	96045552	682	3
472531808	592	96064697	632	2	475603308	519	96045552	705	8
472531808	598	96075086	632	2	476607608	566	969767908	634	1
473210508	717	966004808	600	1	477100208	283	96038054	3	1
473230508	518	96045552	655	1	477100308	458	91003833	32	1
473230608	63	967301408	606	1	477101408	598	96075086	314	2
473230608	518	96045552	661	2	4772028	146	10155227	12	2
473231208	33	967304508	600	4	477400108	598	96075086	637	2

Item	Page	Assembly	Pos.	Quantity	Item	Page	Assembly	Pos.	Quantity
477400308	519	96045552	750	2	477704908	369	933074801	2	4
477400408	63	967301408	601	8	477704908	519	96045552	727	2
477400608	34	967304508	655	2	477705108	291	969543308	401	2
477400908	34	967304508	626	4	477705208	295	969219208	404	1
477401208	519	96045552	704	1	477705508	380	968558601	23	3
477401408	283	96038054	4	1	477705508	583	938707001	23	2
477401408	444	918759708	8	1	477705608	369	933074801	87	2
477401508	458	91003833	33	1	482330814	519	96045552	745	1
477401508	518	96045552	613	1	482331814	34	967304508	602	4
477401608	519	96045552	701	3	482430314	518	96045552	630	3
477401708	34	967304508	628	1	482431314	519	96045552	764	2
477402408	518	96045552	616	3	482431414	518	96045552	632	2
477500301	586	927521201	8	2	482431514	518	96045552	627	2
477700108	518	96045552	615	3	482530814	519	96045552	719	5
477700408	518	96045552	617	3	482530914	519	96045552	748	2
477700508	63	967301408	600	8	482531614	519	96045552	722	2
477700508	519	96045552	702	3	485501014	454	919501608	19	2
477700608	519	96045552	703	1	485507414	55	10430241	20	248
477700808	34	967304508	627	1	485507414	57	965336308	3	4
477701108	34	967304508	657	2	485507414	58	965359808	3	8
477701608	34	967304508	625	4	485507414	59	965359908	3	12
477704008	63	967301408	604	2	4900973	551	10355774	6	4
477704008	522	11170514	62	5	4902326	124	918728408	311	3
477704008	528	11170515	62	1	4902326	470	919674308	300	4
477704008	530	11170518	62	1	4980000	168	10120186	9	1
477704008	531	11170519	62	1	4980000	170	10147787	(5)	1
477704008	534	10802090	46	3	4980007	261	12487540	35	18
477704008	540	511486908	17	6	4980012	232	10115829	6	2
477704008	543	10333672	120	4	4980013	261	12487540	25	16
477704008	550	10663060	11	2	4980257	170	10147787	12	6
477704008	551	10355774	2	2	4980359	174	10129474	4	2
477704008	552	10292670	1	2	4980376	153	10147438	5	1
477704108	34	967304508	652	2	4980434	261	12487540	23	8
477704108	522	11170514	63	1	4980482	159	10146367	7	2
477704108	534	10802090	47	14	4980736	170	10147787	5	1
477704108	543	10333672	160	1	4980840	552	10292670	2	4
477704208	71	10356288	45	2	4980927	170	10147787	9	3
477704208	291	969543308	410	1	4980947	261	12487540	21	8
477704208	534	10802090	48	2	4981029	152	10139112	6	4
477704208	543	10333672	100	1	4981172	222	10140729	5	3
477704208	543	10333672	170	2	4981232	197	13472510	6	2
477704208	551	10355774	3	1	4981233	212	10145278	6	1
477704208	684	12105406	61	2	4981233	248	9078961	3	2
477704308	71	10356288	41	2	4981235	149	10150934	3	1
477704308	380	968558601	22	1	4981235	222	10140729	19	2
477704308	566	969767908	600	1	5000569	23	790256114	8	1
477704308	583	938707001	22	1	500131501	586	927521201	1	1
477704408	280	96035595	402	2	5004624	146	10155227	6	1
477704408	282	96035743	6	1	5004929	203	10149677	6	2
477704408	583	938707001	21	2	5005219	517	96045552	300	18
477704508	369	933074801	78	1	5005525	566	969767908	324	2
477704508	384	939368401	28	1	5009001	43	592326914	11	1
477704508	551	10355774	4	1	500917508	470	919674308	376	12
477704508	566	969767908	639	1	5009562	534	10802090	(999)	1
477704608	291	969543308	409	2	501243708	559	471030708	1	1
477704708	522	11170514	65	2	502036301	369	933074801	80	1
477704708	528	11170515	65	1	502037201	383	968607101	70	1
477704708	530	11170518	65	2	502037201	584	938759801	70	1
477704708	531	11170519	65	2	502643508	269	918811108	433	1
477704708	602	10665173	65	1	502651408	567	502657308	2	1

Item	Page	Assembly	Pos.	Quantity	Item	Page	Assembly	Pos.	Quantity
502652908	584	938759801	73	1	510671108	591	96064697	155	1
502657308	566	969767908	55	1	510671108	709	965994108	153	1
502657708	566	969767908	167	1	510671808	295	969219208	(1)	1
502661608	566	969767908	153	1	510674508	516	96045552	169	1
502807308	591	96064697	(1)	1	510676908	33	967304508	50	1
502807501	383	968607101	(1)	1	510676908	516	96045552	51	2
502921408	566	969767908	641	1	510676908	591	96064697	51	1
502921908	566	969767908	151	2	510697608	516	96045552	157	1
502923708	431	96056347	46	2	510702408	517	96045552	511	1
502932508	291	969543308	406	1	510710108	37	510438508	3	2
502932808	566	969767908	312	1	510710108	37	510438508	15	1
502932908	291	969543308	407	1	510710408	37	510438508	20	1
502933208	476	918729308	430	1	510710608	37	510438508	30	1
502933208	516	96045552	(7)	2	510712308	720	511479408	3	1
502940108	291	969543308	405	1	510713708	37	510438508	4	1
510033408	518	96045552	517	2	510713808	37	510438508	1	1
510133208	517	96045552	516	1	510713908	37	510438508	2	1
510146208	272	96020819	400	1	510714008	37	510438508	6	1
510146208	517	96045552	514	1	510714108	37	510438508	12	1
510184001	454	919501608	(999)	1	510714208	37	510438508	13	2
510229408	367	919235408	2	1	510714308	37	510438508	14	1
510240708	376	919935508	1	1	510714408	37	510438508	18	1
510240708	581	96062734	2	1	510714508	37	510438508	19	1
510410408	517	96045552	189	1	510718108	548	11170276	27	1
510412008	516	96045552	166	1	510719008	548	11170276	26	1
510412408	516	96045552	164	1	510735908	524	571130108	6	1
510413508	516	96045552	170	1	510737408	326	968483708	19	2
510438508	33	967304508	160	1	510738608	540	511486908	(4)	4
510501008	566	969767908	300	1	510741308	538	511307808	4	8
510501308	517	96045552	506	2	510741508	522	11170514	61	4
510540808	33	967304508	154	4	510741508	523	11065879	8	1
510540908	33	967304508	153	4	510741508	528	11170515	61	3
510541008	33	967304508	152	4	510741508	530	11170518	61	11
510541108	33	967304508	151	4	510741508	531	11170519	61	3
510541908	33	967304508	159	12	510741508	534	10802090	45	4
510541908	67	917155408	(152)	8	510741508	543	10333672	110	2
510548108	33	967304508	157	12	510741508	602	10665173	61	3
510548108	67	917155408	(150)	8	510741708	536	10665127	57	1
510548208	33	967304508	158	12	510741708	558	511417708	21	1
510548208	67	917155408	(151)	8	510741708	621	511417608	21	1
510586608	33	967304508	501	16	510746108	317	10218310	1	1
510586608	517	96045552	500	4	510747808	534	10802090	(66)	2
510586708	517	96045552	304	2	510747808	536	10665127	66	2
510586708	517	96045552	(1)	1	510753408	524	571130108	10	1
510586708	709	965994108	551	3	510753408	548	11170276	11	1
510586908	33	967304508	502	4	510754308	522	11170514	25	2
510587008	269	918811108	432	2	510754408	534	10802090	22	4
510587008	517	96045552	(1)	1	510754408	537	10665128	21	1
510587008	591	96064697	550	1	510760408	388	11083498	32	1
510587508	33	967304508	503	6	510760408	523	11065879	11	1
510629008	34	967304508	649	3	510761708	525	10032696	5	3
510629008	518	96045552	631	4	510762108	268	918811108	(301)	3
510629008	592	96064697	620	1	510779808	37	510438508	28	1
510629508	33	967304508	161	2	510779908	37	510438508	29	1
510642008	516	96045552	156	1	510783208	558	511417708	17	1
510643408	517	96045552	195	2	510783208	621	511417608	17	1
510645108	516	96045552	175	1	510792708	554	510697608	8	2
510667308	295	969219208	102	2	510796908	558	511417708	1	1
510670808	516	96045552	161	1	510796908	621	511417608	1	1
510671108	516	96045552	176	2	510797008	558	511417708	3	1

Item	Page	Assembly	Pos.	Quantity	Item	Page	Assembly	Pos.	Quantity
510797008	621	511417608	3	1	511509608	591	96064697	171	1
510797108	621	511417608	4	1	511512208	591	96064697	169	1
510797208	558	511417708	5	1	511512208	598	96075086	169	1
510797208	621	511417608	5	1	511512308	591	96064697	168	1
510797308	558	511417708	6	1	511512308	598	96075086	168	1
510797308	621	511417608	6	1	511515008	709	965994108	154	2
510797408	558	511417708	7	1	511517808	591	96064697	502	1
510797408	621	511417608	7	1	511517808	709	965994108	500	3
510797508	558	511417708	9	1	511518808	272	96020819	401	1
510797508	621	511417608	9	1	511518808	517	96045552	515	1
510797608	558	511417708	10	1	511519208	517	96045552	509	2
510797608	621	511417608	10	1	511519208	591	96064697	500	2
510797708	558	511417708	22	1	51152	760	918533508	25	4
510797708	621	511417608	22	1	511636314	454	919501608	16	2
511001708	386	917894308	9	2	511655114	44	10801751	50	2
511011808	536	10665127	42	3	511708314	33	967304508	155	2
511015108	558	511417708	4	1	511708414	33	967304508	156	2
511043308	543	10333672	(999)	1	512142508	268	918811108	101	1
511043308	545	570427108	999	1	512353708	747	919933308	26	1
511062208	517	96045552	183	1	514525208	372	570109008	20	7
511062608	517	96045552	182	1	514530408	372	570109008	15	1
511062708	516	96045552	177	2	514604208	43	592326914	12	1
511062708	591	96064697	154	1	514611808	261	12487540	(70)	1
511062708	709	965994108	152	1	514613208	269	918811108	431	1
511062908	517	96045552	181	1	514613208	377	510240708	6	1
511064108	517	96045552	196	2	514614108	377	510240708	15	1
511302008	33	967304508	51	1	514615408	298	11600977	1	1
511306608	516	96045552	55	1	514618308	685	570960608	68	1
511307808	516	96045552	23	1	514802308	552	10292670	3	4
511311808	516	96045552	179	1	515706008	518	96045552	(1)	1
511311808	591	96064697	153	1	515710608	388	11083498	31	1
511320108	619	969856508	50	1	518565008	684	12105406	46	1
511417608	619	969856508	150	1	518620508	71	10356288	42	2
511417708	517	96045552	191	1	518620608	71	10356288	44	2
511431514	63	967301408	150	1	518629608	338	917305408	31	2
511432408	516	96045552	178	1	518648508	371	510229408	6	1
511432408	591	96064697	175	1	5200017	24	749013714	3	1
511444408	516	96045552	50	2	520190408	104	928569808	67	1
511444408	591	96064697	50	1	520303308	209	5700161	10	1
511446908	517	96045552	190	1	520402808	102	914860608	3	1
511450208	517	96045552	193	1	5209131	56	790258414	4	1
511457808	295	969219208	401	2	530032508	383	968607101	51	1
511458608	517	96045552	188	1	530133308	383	968607101	8	5
511460608	516	96045552	152	1	530133308	584	938759801	8	5
511460608	591	96064697	152	1	530151508	369	933074801	68	1
511475314	33	967304508	350	1	530609208	432	96056347	65	1
511479408	717	966004808	151	1	550628308	272	96020819	103	1
511481508	591	96064697	151	1	550639508	272	96020819	101	1
511486908	516	96045552	24	1	550838008	268	918811108	183	2
511491708	516	96045552	162	3	550849408	476	918729308	180	3
511491708	598	96075086	161	1	550849508	268	918811108	184	2
511491914	33	967304508	150	3	551719708	268	918811108	250	1
511493608	709	965994108	50	1	553027808	272	96020819	116	1
511493708	709	965994108	151	1	553027808	329	916170808	4	7
511497208	516	96045552	167	1	553031008	575	918627208	1	1
511497208	591	96064697	156	1	553054108	444	918759708	15	2.25
511500408	591	96064697	165	1	553054108	446	96019783	5	0.35
511500508	598	96075086	163	1	553054208	444	918759708	16	1
511505808	516	96045552	159	2	553054208	446	96019783	4	3
511505808	598	96075086	173	1	553102308	444	918759708	7	5

Item	Page	Assembly	Pos.	Quantity	Item	Page	Assembly	Pos.	Quantity
553102308	446	96019783	20	1	570926808	534	10802090	(1)	1
553159408	446	96019783	6	0.67	570941408	720	511479408	2	1
553174008	450	11110051	1	1	570960608	684	12105406	36	2
553174108	444	918759708	17	1	570979708	209	5700161	7	1
553181108	446	96019783	3	1	571021308	555	510670808	3	1
553181208	352	916168308	12	0.25	571068108	523	11065879	12	1
553186908	489	96063648	29	1	571082508	516	96045552	(1)	1
553187208	446	96019783	2	1	571082608	516	96045552	(2)	1
553193208	338	917305408	29	6	571082608	591	96064697	(2)	1
5603876	426	96023891	515	1	571082708	516	96045552	(3)	1
5603876	428	96022870	507	1	571082808	516	96045552	(4)	1
5603876	500	96059659	526	1	571082808	591	96064697	(3)	1
5607617	520	96045552	788	2	571083008	591	96064697	(1)	1
5610372	549	10877219	7	1	571130108	522	11170514	17	1
5610999	575	918627208	32	2	571130108	528	11170515	17	2
5700161	207	9080294	1	1	571130108	530	11170518	17	5
570109008	371	510229408	1	1	571130108	531	11170519	17	2
570109108	371	510229408	3	1	571130108	602	10665173	17	2
570109208	371	510229408	4	1	571130308	524	571130108	2	1
570109308	371	510229408	5	1	571130408	524	571130108	5	1
570109408	371	510229408	11	2	571130508	524	571130108	8	1
570109508	372	570109008	1	1	571135508	714	511493608	1	1
570109608	372	570109008	2	1	571326108	586	927521201	7	2
570109708	372	570109008	3	1	571328408	480	10327065	14	1
570109808	372	570109008	4	1	571352308	567	502657308	1	1
570110008	372	570109008	7	1	571356108	555	510670808	4	1
570110108	372	570109008	9	1	571362208	522	11170514	24	1
570110308	373	570109508	1	1	571400108	543	10333672	60	1
570110408	373	570109508	2	1	571426108	33	967304508	(1)	1
570110508	373	570109508	3	1	571426108	33	967304508	(1)	1
570110608	373	570109508	4	7	571453708	540	511486908	7	1
570110708	373	570109508	5	14	571455308	542	570527908	(1)	1
570110808	373	570109508	6	1	571486808	95	10878097	28	1
570110908	373	570109508	7	4	571489008	272	96020819	105	1
570116908	280	96035595	403	1	571489108	272	96020819	106	1
570116908	517	96045552	321	1	571491208	753	512353708	999	1
570163708	480	10327065	5	1	571511808	545	570427108	14	1
570242808	685	570960608	69	1	571527308	534	10802090	25	2
570296608	297	11068050	2	1	571528008	522	11170514	34	1
570322408	272	96020819	(1)	1	571529508	528	11170515	28	1
570338308	95	10878097	26	1	571529508	530	11170518	28	1
570340077	332	968462608	5	4	571529508	531	11170519	28	1
570427108	543	10333672	50	1	571529508	602	10665173	28	1
570435308	684	12105406	39	1	571529708	528	11170515	77	2
570435508	275	10429930	18	1	571529708	530	11170518	77	4
570527908	540	511486908	9	1	571529708	531	11170519	77	2
570613877	209	5700161	9	4	571529708	602	10665173	77	2
570631008	525	10032696	3	1	571530608	629	773941308	2	1
570633808	619	969856508	(1)	1	571534908	543	10333672	70	1
570647508	524	571130108	3	1	571539808	543	10333672	40	1
570651408	528	11170515	27	1	571541208	43	592326914	1	1
570651408	530	11170518	27	1	571561908	685	570960608	999	1
570651408	602	10665173	27	1	571578608	483	774375108	2	1
570652308	537	10665128	64	1	571582108	209	5700161	1	1
570652308	548	11170276	25	1	571582308	209	5700161	4	1
570690608	480	10327065	33	1	571582408	209	5700161	6	1
570690608	524	571130108	7	1	571582508	209	5700161	11	1
570690608	547	511306608	3	1	571582608	209	5700161	13	1
570817908	542	570527908	1	1	571582708	209	5700161	15	1
570827808	546	511444408	1	1	571582808	209	5700161	30	1

Item	Page	Assembly	Pos.	Quantity	Item	Page	Assembly	Pos.	Quantity
571689508	684	12105406	38	1	600415208	698	96063213	352	0.23
571691108	549	10877219	5	1	6004195	90	96062920	512	1
571704608	534	10802090	23	1	6004195	494	96023971	520	1
571712308	629	773941308	1	1	601407008	502	96025348	49	0.308
571714308	743	910445708	34	2	601413908	502	96025348	48	0.28
571723608	543	10333672	30	1	602002208	566	969767908	306	8
571737808	543	10333672	20	1	602007108	679	91000055	37	6
571741908	753	512353708	19	1	602008108	725	918258408	(10)	4
571814108	534	10802090	(52)	1	602008508	269	918811108	453	2
571814108	536	10665127	52	1	602009208	517	96045552	301	26
571817308	487	966720708	(1)	1	602009408	517	96045552	315	6
571817608	538	511307808	2	4	602010908	599	96075102	44	4
571817708	539	571817608	8	2	602018008	517	96045552	303	36
571824708	436	10343693	1	1	602018008	655	91000049	78	2
571838008	766	10801932	98	1	602018008	725	918258408	(15)	2
571840008	33	967304508	(999)	1	602042808	431	96056347	38	2
571840008	36	511302008	999	1	602093514	499	96059658	3	2
571867708	388	11083498	44	1	602106708	504	968077108	1	0.135
571877008	538	511307808	3	2	602106708	703	96063458	298	0.205
571877108	538	511307808	6	1	602116008	319	919010108	14	4
571889008	534	10802090	4	2	602203108	428	96022870	67	2
571889108	534	10802090	6	1	602203408	91	96062921	72	1
571889308	534	10802090	12	2	602203408	426	96023891	72	3
571889608	537	10665128	53	1	602203408	428	96022870	72	5
571910108	541	571453708	1	1	602203408	490	96063649	72	4
571912308	436	10343693	2	1	602203408	612	913753108	72	4
571915108	543	10333672	10	1	602203708	698	96063213	63	10
571926008	743	910445708	10	1	602203908	91	96062921	75	2
571926108	743	910445708	12	2	602203908	426	96023891	75	2
571928308	684	12105406	37	1	602203908	493	96023971	75	3
571935508	369	933074801	(1)	1	602205808	493	96023971	111	1
591051008	355	916163008	22	2	602207508	490	96063649	48	2
591055408	356	966408908	2	2	602207608	428	96022870	140	3
591055508	356	966408908	3	2	602207608	490	96063649	140	2
591055608	355	916163008	10	2	602208408	426	96023891	143	2
591061908	410	969425608	10	2	602208608	494	96023971	511	2
591063508	432	96056347	63	1	602208608	500	96059659	524	1
591064408	441	966707708	8	1	602208608	612	913753108	17	1
591064508	416	969399608	9	1	602208708	500	96059659	525	1
591064708	339	917305408	71	1	602208908	494	96023971	512	1
591066808	349	966497908	10	2	602209708	91	96062921	518	1
591066808	350	965784408	5	1	602209708	426	96023891	508	3
591067008	395	918810308	23	1	602209708	428	96022870	506	2
591069508	402	916049908	2	1	602209708	490	96063649	508	2
591070908	440	916870808	1	1	602209708	500	96059659	520	2
591080608	355	916163008	28	0.25	602209708	612	913753108	16	1
591514408	760	918533508	23	1	602213308	91	96062921	39	2
591570908	407	96022627	111	7	602217008	490	96063649	49	3
591570908	431	96056347	51	1	602217008	493	96023971	49	2
591570908	435	96022872	6	1	602217308	490	96063649	50	1
591570908	562	919528608	13	1	602217908	91	96062921	34	3
591572208	673	91000054	62	2	602217908	426	96023891	34	1
592326914	42	96048348	1	2	602218408	699	96051215	112	9
6001703	91	96062921	2267	2	602225508	426	96023891	518	1
6001790	426	96023891	524	1	602225608	426	96023891	519	1
6002637	706	96063415	2281	1	602225914	428	96022870	703	2
600265101	608	96060353	5	1.7	602300108	90	96062920	121	3
600265101	608	96060353	6	2.63	602300108	91	96062921	121	9
6003168	495	96049294	515	1	602300108	426	96023891	121	16
6003248	495	96049294	503	1	602300108	428	96022870	121	25

Item	Page	Assembly	Pos.	Quantity	Item	Page	Assembly	Pos.	Quantity
602300108	490	96063649	121	9	602323508	426	96023891	124	6
602300108	492	96063650	121	4	602323508	492	96063650	124	22
602300108	493	96023971	121	22	602325508	426	96023891	506	4
602300108	495	96049294	121	7	602325508	428	96022870	509	1
602300208	90	96062920	503	2	602325508	490	96063649	506	3
602300208	426	96023891	501	9	602325508	492	96063650	505	1
602300208	428	96022870	501	6	602325508	500	96059659	506	1
602300208	490	96063649	501	12	602325608	492	96063650	504	2
602300208	492	96063650	501	1	602325608	500	96059659	503	6
602300208	493	96023971	501	5	602329108	90	96062920	617	4
602300208	495	96049294	501	2	602329208	494	96023971	807	2
602300208	500	96059659	507	8	602329208	694	96063583	807	2
602300208	694	96063583	502	1	602329208	699	96051215	807	3
602300308	90	96062920	125	22	602330508	494	96023971	801	6
602300308	91	96062921	125	47	602330808	90	96062920	802	6
602300308	426	96023891	125	106	602330808	427	96023891	802	2
602300308	428	96022870	125	117	602330808	494	96023971	802	6
602300308	490	96063649	125	93	602330808	496	96049294	802	4
602300308	492	96063650	125	16	602330808	694	96063583	802	10
602300308	493	96023971	125	70	602330808	699	96051215	802	9
602300308	495	96049294	125	29	602331108	90	96062920	806	12
602300308	694	96063583	125	16	602331108	98	96045216	806	12
602300508	426	96023891	513	1	602331108	491	96063649	806	12
602300608	426	96023891	514	1	602331108	494	96023971	806	41
602301408	90	96062920	501	1	602331108	640	96045220	806	12
602301408	500	96059659	519	2	602331108	694	96063583	806	12
602301708	493	96023971	106	1	602331108	699	96051215	806	12
602303208	698	96063213	64	3	602331308	426	96023891	507	4
602303308	90	96062920	134	2	602331308	428	96022870	505	2
602303308	426	96023891	134	2	602331308	490	96063649	511	1
602303308	490	96063649	134	2	602331308	493	96023971	507	2
602304808	438	963398008	2	2	602331308	500	96059659	515	26
602304808	612	913753108	74	2	602331308	693	96063864	501	1
602305605	91	96062921	766	1	602331808	428	96022870	510	2
602305605	494	96023971	766	2	602332108	428	96022870	611	4
602305908	91	96062921	512	1	602335908	91	96062921	515	1
602305908	426	96023891	523	1	602335908	426	96023891	522	3
602305908	438	963398008	3	1	602335908	428	96022870	511	1
602305908	612	913753108	15	1	602335908	492	96063650	506	3
602306108	699	96051215	31	3	602335908	500	96059659	523	4
602307708	90	96062920	86	14	602336008	426	96023891	510	4
602307708	490	96063649	86	39	602336008	500	96059659	505	6
602307708	493	96023971	86	4	602336408	506	926891108	2	1
602307708	589	96055198	86	4	602336508	506	926891108	3	6
602307808	490	96063649	114	3	602337008	428	96022870	508	2
602307908	706	96063415	85	2	602337608	500	96059659	516	1
602308008	706	96063415	87	1	602338208	428	96022870	503	3
602308208	706	96063415	698	2	602338208	500	96059659	522	2
602308308	706	96063415	89	1	602338608	500	96059659	527	1
602308508	490	96063649	104	1	602339108	91	96062921	642	4
602319808	426	96023891	521	1	602339308	90	96062920	504	1
602320508	428	96022870	62	9	602339408	491	96063649	643	3
602322708	426	96023891	504	1	602339408	495	96049294	643	2
602322808	427	96023891	615	55	602339508	491	96063649	647	4
602323208	91	96062921	120	18	602339608	90	96062920	515	1
602323208	492	96063650	120	17	602342101	698	96063213	2312	1
602323308	91	96062921	503	4	602424008	432	96056347	67	2
602323308	492	96063650	503	1	602424008	693	96063864	502	1
602323308	500	96059659	502	52	602424108	84	96075205	14	1
602323508	91	96062921	124	45	602424208	589	96055198	509	1

Item	Page	Assembly	Pos.	Quantity	Item	Page	Assembly	Pos.	Quantity
602424208	775	96035674	507	2	604412408	503	922648308	1	1
602424308	492	96063650	508	1	604501708	91	96062921	516	2
602424308	694	96063583	506	1	604505508	730	96058738	507	1
602424908	319	919010108	10	2	604505508	775	96035674	511	1
602424908	334	917304508	17	1	604508508	730	96058738	503	1
602425008	703	96063458	197	2	604508508	775	96035674	503	2
602425108	692	96063456	216	1	604508608	775	96035674	508	1
602425208	84	96075205	16	1	604508708	775	96035674	512	1
602425208	692	96063456	212	1	604509408	730	96058738	506	1
602425208	698	96063213	505	1	604512108	703	96063458	153	2
602425508	703	96063458	196	1	604512108	730	96058738	508	1
602425608	698	96063213	501	1	604512108	775	96035674	510	1
602441008	589	96055198	506	1	604518908	704	96062034	812	5
602441508	90	96062920	510	1	604518908	775	96035674	812	7
602501208	84	96075205	10	2	604519108	730	96058738	637	4
602501308	85	966167808	11	1	604519108	775	96035674	637	2
602504108	84	96075205	15	1	604519208	730	96058738	628	3
602504208	84	96075205	18	1	604519208	775	96035674	628	3
602504408	84	96075205	17	1	604519308	730	96058738	629	7
602504508	90	96062920	509	1	604519308	775	96035674	629	5
602600808	329	916170808	12	2	604526508	704	96062034	501	2
602606108	693	96063864	503	1	604526508	730	96058738	502	1
602606408	589	96055198	508	1	604526508	775	96035674	502	2
602606408	693	96063864	504	1	604526608	730	96058738	501	1
602606408	698	96063213	502	1	604526608	775	96035674	501	1
602606608	694	96063583	505	1	605006608	90	96062920	507	1
602606708	492	96063650	507	1	605006608	490	96063649	505	3
602606808	90	96062920	511	1	605006608	589	96055198	504	1
602613208	84	96075205	19	1	605007908	90	96062920	505	5
602613208	775	96035674	505	1	605007908	490	96063649	503	16
602701308	329	916170808	1	1	605007908	494	96023971	508	1
602701808	781	968940708	11	2	605007908	589	96055198	501	1
602701808	782	968940808	11	2	605201508	611	96057250	502	1
602704808	775	96035674	509	1	605203908	435	96022872	5	1
602707308	698	96063213	503	1	605210608	90	96062920	506	1
602717308	407	96022627	112	1	605210608	494	96023971	515	1
602717308	415	96024809	107	1	605210608	706	96063415	502	1
602735508	498	919940108	18	42	605212708	494	96023971	521	1
602761408	506	926891108	12	10	605212808	491	96063649	515	1
602761608	504	968077108	5	2	605212808	494	96023971	528	2
602761708	504	968077108	6	1	605215508	491	96063649	516	1
602762908	504	968077108	7	1	605215508	494	96023971	526	2
602794608	504	968077108	8	2	605251608	490	96063649	512	1
602794608	703	96063458	299	2	605407608	612	913753108	3	1
603012608	495	96049294	232	4.39	605601701	589	96055198	130	4
603012608	611	96057250	232	4.32	605613908	493	96023971	504	1
603016908	698	96063213	243	0.25	605618308	589	96055198	503	1
603020508	494	96023971	518	2	605619708	90	96062920	813	7
603032214	33	967304508	319	0.3	605619708	491	96063649	813	19
603032314	33	967304508	321	0.6	605619708	494	96023971	813	4
603032614	33	967304508	320	0.3	605619708	589	96055198	813	2
604006908	498	919940108	12	9	605619708	706	96063415	813	1
604007008	91	96062921	517	2	605619808	491	96063649	816	3
604007008	498	919940108	13	14	605619808	496	96049294	816	2
604007108	498	919940108	14	14	605619814	589	96055198	139	2
604007108	612	913753108	6	1	605619908	491	96063649	821	4
604007208	498	919940108	15	6	606012608	484	919940408	(6)	1
604007308	498	919940108	16	9	606012608	588	96055197	6	1
604007608	498	919940108	17	1	606020708	431	96056347	12	1
604007708	498	919940108	11	3	606023008	620	913978308	3	1

Item	Page	Assembly	Pos.	Quantity	Item	Page	Assembly	Pos.	Quantity
606053108	488	928828008	5	2	680000008	426	96023891	6	1
606143008	435	96022872	18	1	680000008	428	96022870	5	1
606143208	435	96022872	16	1	680000008	428	96022870	7	1
606143508	435	96022872	11	2	680000008	589	96055198	6	1
606144008	435	96022872	15	2	680000008	640	96045220	5	1
606144108	434	96030724	(2)	1	680000008	640	96045220	6	1
606144408	435	96022872	17	1	680000008	706	96063415	5	1
606763308	620	913978308	7	1	680000008	706	96063415	6	1
606782008	620	913978308	6	2	680000308	428	96022870	6	1
607008708	435	96022872	13	1	680000308	706	96063415	7	1
607009708	620	913978308	(1)	2	680000308	706	96063415	8	1
607011108	105	928620108	(1)	2	680000308	706	96063415	9	1
607023708	106	915731908	2	1	680000308	706	96063415	10	1
607106208	105	928620108	2	2	680000308	706	96063415	11	1
607135408	620	913978308	4	1	680000308	706	96063415	12	1
607225008	620	913978308	5	1	680000708	426	96023891	5	1
607226808	484	919940408	21	1	680001408	90	96062920	5	1
610701108	494	96023971	527	1	680001408	98	96045216	5	1
610706308	720	511479408	6	1	680001408	490	96063649	5	1
613200608	105	928620108	3	10	680001408	490	96063649	6	1
613206508	288	96023914	22	2	680001408	490	96063649	9	1
613206608	288	96023914	21	2	680001408	490	96063649	10	1
614003108	84	96075205	24	1	680001408	490	96063649	12	1
614003108	484	919940408	32	1	680001408	490	96063649	13	1
614009908	84	96075205	11	1	680001708	490	96063649	19	1
614020508	612	913753108	5	1	680001708	693	96063864	5	1
616200808	697	12104731	2	2	6905877	241	10151329	(1)	1
617000608	427	96023891	527	1	691041608	95	10878097	19	21
617000608	428	96022870	512	1	691041708	95	10878097	6	37
6202434	490	96063649	96	2	691041808	95	10878097	9	1
6202434	493	96023971	96	2	691043108	95	10878097	17	35
6202444	490	96063649	95	1	691183108	516	96045552	64	1
6202444	493	96023971	95	3	691798508	435	96022872	3	1
6202637	494	96023971	517	2	692312708	686	965264808	7	2
6202909	280	96035595	100	1	692404908	491	96063649	811	1
6204416	534	10802090	(1)	1	692404908	494	96023971	811	2
6205239	495	96049294	521	1	692405708	491	96063649	822	3
6205242	495	96049294	522	1	692405808	491	96063649	817	1
630105108	498	919940108	7	5	692405808	496	96049294	817	2
630105108	562	919528608	(1)	1	692406008	491	96063649	517	2
630105408	498	919940108	8	1	692406008	495	96049294	523	1
630121508	87	96062922	6	2	692406308	490	96063649	504	1
630121508	498	919940108	6	1	692406308	495	96049294	507	1
630122908	91	96062921	505	2	692406708	490	96063649	510	1
630122908	500	96059659	504	13	7003478	377	510240708	14	1
630122908	704	96062034	503	1	7003652	183	12489819	4	1
635042608	505	966157408	7	2	7005052	269	918811108	452	4
635051508	505	966157408	3	2	7005052	625	96036821	27	4
635052808	508	966193108	2	6	7005052	734	96056553	10	3
635058508	505	966157408	8	1	7005052	768	91001040	39	3
636107901	504	968077108	3	2	7005052	773	96037297	11	3
636109301	504	968077108	4	1	7008986	43	592326914	10	1
636184001	703	96063458	207	1	7009080	216	10148215	5	1
637005201	589	96055198	502	1	7011131	147	5004624	2	1
660008108	505	966157408	1	1	7011745	183	12489819	1	1
660011408	505	966157408	9	2	7013456	147	5004624	3	1
660014308	505	966157408	6	1	7015814	361	917304708	50	2
660024508	498	919940108	29	1	7016016	215	10142733	(1)	1
680000008	90	96062920	9	1	7016016	215	10142733	(7)	1
680000008	98	96045216	6	1	7016016	215	10142733	7	1

Item	Page	Assembly	Pos.	Quantity	Item	Page	Assembly	Pos.	Quantity
7016016	251	10148366	3701	1	710062601	584	938759801	63	2
7018370	519	96045552	739	2	710100408	332	968462608	9	1
7020440	575	918627208	100	1.6	710100708	331	916162808	9	8
7021521	465	969904608	2	1	7101012	250	10148366	223	1
7022315	371	510229408	(14)	1	710101408	332	968462608	7	4
7022315	372	570109008	14	1	710101708	583	938707001	29	1
7025732	209	5700161	23	1	710102508	146	10155227	11	1
7027459	33	967304508	(2)	1	710103008	392	969300008	7	1
7027459	36	511302008	160	2	710103008	598	96075086	312	1
704004208	750	96062062	6	1	710104008	517	96045552	(23)	2
704008508	581	96062734	71	2	710106508	141	10138450	3	1
704207608	87	96062922	7	4	710106508	146	10155227	5	3
704207708	111	919933708	200	4	710106508	250	10148366	141	1
704212108	508	966193108	4	12	710121114	23	790256114	7	1
704227608	781	968940708	7	1	710207408	432	96056347	64	1
704227608	782	968940808	7	1	710908701	380	968558601	15	1
704228108	119	96045222	22	2	710908701	383	968607101	(2)	1
704228108	287	96024716	12	2	710908701	583	938707001	15	1
704228108	410	969425608	2	3	714000808	61	917155308	10	2
704228108	416	969399608	2	3	720001108	760	918533508	35	1
704228108	781	968940708	3	1	720007108	52	968374908	7	4
704228108	782	968940808	3	1	720008308	422	96044789	2	2
704229908	417	969392008	105	4	720008508	750	96062062	5	1
704230208	287	96024716	25	2	720009308	670	91000053	2	1
704231608	623	915403108	12	1	720009308	673	91000054	2	1
704232208	349	966497908	9	1	720009408	127	968305308	7	2
704232308	502	96025348	72	18	720009408	679	91000055	19	4
704232408	290	917962508	100	0.6	720009608	661	91000050	2	1
704253308	85	966167808	6	4	720009608	664	91000051	2	1
704253308	287	96024716	13	1	720009608	667	91000052	2	1
704253408	85	966167808	(1)	1	720011508	771	918596708	25	1
704253408	85	966167808	7	4	720012608	747	919933308	42	1
704253408	287	96024716	14	1	720014408	673	91000054	40	2
704253408	417	969392008	101	2	720014408	721	915415908	5	4
704254508	417	969392008	110	1	720014408	723	964502908	26	2
704254808	85	966167808	12	4	720014408	768	91001040	33	2
704255808	417	969392008	103	2	720014408	771	918596708	22	2
704256608	417	969392008	100	2	720801908	395	918810308	25	4
704256708	85	966167808	8	4	721108801	384	939368401	7	1
704258208	502	96025348	47	6	721114701	380	968558601	30	1
704259008	287	96024716	15	1	721114701	583	938707001	30	1
704259608	361	917304708	57	1	725111808	410	969425608	12	2
704262608	287	96024716	22	2	725111808	416	969399608	10	1
704271108	105	928620108	7	2	726401808	42	96048348	2	2
704271208	346	916162508	29	1	726403401	383	968607101	78	6
704274808	85	966167808	9	4	726404508	295	969219208	410	1
704274808	303	10475262	8	2	726405608	331	916162808	10	12
704274808	417	969392008	102	2	726405608	585	938759801	78	8
704274908	85	966167808	10	4	726405708	369	933074801	97	1
704338808	655	91000049	2	2	726405908	48	96046146	5	1
704339608	768	91001040	30	2	726406508	549	10877219	(22)	1
708010008	748	925280008	3	1	726406908	517	96045552	(1)	1
708010008	751	929582108	3	2	726407608	555	510670808	2	1
708010008	768	91001040	23	2	726407908	280	96035595	401	2
708011608	747	919933308	25	2	726407908	303	10475262	7	2
710032508	381	938759601	22	1	726407908	306	96066239	(1)	1
710054601	383	968607101	(1)	1	726411508	431	96056347	47	2
710054601	584	938759801	11	1	726414901	369	933074801	69	1
710059301	369	933074801	11	1	726418408	516	96045552	(8)	4
710062601	383	968607101	63	2	726419408	523	11065879	10	2

Item	Page	Assembly	Pos.	Quantity	Item	Page	Assembly	Pos.	Quantity
726419408	537	10665128	63	2	7380605	269	918811108	430	1
726421508	380	968558601	16	1	7380653	139	10147687	8	2
726422308	566	969767908	313	1	7380653	232	10115829	9	1
726424108	549	10877219	(21)	2	7380935	205	13701882	(2)	1
726424708	280	96035595	400	1	7380935	205	13701882	3	1
726426601	380	968558601	31	1	7380935	251	10148366	2602	1
726426601	583	938707001	31	1	7380970	203	10149677	7	1
726428408	583	938707001	16	1	7380970	269	918811108	434	1
726429901	383	968607101	19	2	7381103	235	10127979	2	1
726429901	584	938759801	19	2	7381103	244	12544505	2	1
726431114	24	749013714	6	2	7381103	252	10148366	5261	1
726440001	369	933074801	73	1	7381225	139	10147687	14	1
726453601	369	933074801	24	1	7381225	223	12512627	30	1
726458401	383	968607101	(3)	1	738122523	175	9078233	2	1
726613008	420	919484908	31	2	7381286	201	10145173	11	1
726613008	655	91000049	16	2	7381292	198	10143342	20	1
726616708	420	919484908	30	4	7381292	224	11420633	9	6
726617008	124	918728408	100	2	7381361	246	9078249	2	2
726617408	349	966497908	24	1	7381363	207	9080294	4	2
726617908	771	918596708	16	1	7381448	531	11170519	(1)	1
726905008	272	96020819	121	2	7381457	136	11389608	7	2
726906508	407	96022627	101	1	7381457	222	10140729	21	1
726906508	562	919528608	11	8	7381526	219	10142744	4	1
726907308	407	96022627	120	2	7381526	251	10148366	3871	1
726907308	415	96024809	105	2	7381566	148	10121667	2	2
7361553	684	12105406	55	1	7381628	239	10151328	38	2
7361649	102	914860608	10	1	7381628	250	10148366	211	1
7362091	518	96045552	656	9	7381629	239	10151328	39	5
7362091	592	96064697	624	2	7381630	201	10145173	13	1
7362091	709	965994108	606	2	7381630	239	10151328	42	3
7362515	211	10145176	3	1	7381638	203	10149677	12	1
7363427	26	749065314	60	1	7381638	212	10145278	9	2
7363897	566	969767908	326	2	7381638	232	10115829	10	2
7364491	33	967304508	(1)	1	7381685	168	10120186	8	1
7365034	274	97095949	11	1	7381685	170	10147787	14	1
7367238	47	968374708	22	8	7381685	250	10148366	901	1
7367610	33	967304508	300	3	7381685	250	10148366	1001	1
7367612	33	967304508	310	8	7381770	239	10151328	32	6
7367776	34	967304508	660	2	7381771	239	10151328	31	1
7368241	494	96023971	529	2	7381779	139	10147687	7	2
7368241	495	96049294	518	2	7381995	229	10115664	4	1
7368246	495	96049294	504	1	7381995	251	10148366	4521	1
7368253	427	96023891	823	5	7382059	177	10148432	5	1
7368253	494	96023971	823	3	7382085	196	10143341	13	1
7368253	496	96049294	823	1	7382085	251	10148366	2121	1
7368257	25	749065414	6	1	7382086	241	10151329	39	1
7369458	496	96049294	740	4	7382088	198	10143342	14	1
7371064	23	790256114	9	1	7382090	239	10151328	37	4
7371745	25	749065414	5	1	7382092	152	10139112	2	2
7380083	218	10142742	3	1	7382092	239	10151328	47	4
7380123	169	12408221	2	1	7382158	247	10144027	2	1
7380123	250	10148366	902	1	7382158	249	9078962	7	1
7380123	250	10148366	1002	1	7382202	245	10142747	1	1
7380177	136	11389608	10	3	7382203	247	10144027	5	2
7380177	233	10116110	14	1	7382204	174	10129474	11	1
7380177	247	10144027	4	1	740300008	338	917305408	22	1
7380566	136	11389608	6	3	7403569	518	96045552	614	9
7380566	201	10145173	4	1	7403569	566	969767908	646	1
7380566	222	10140729	20	1	7403569	592	96064697	622	3
7380605	202	10147364	5	1	7403569	709	965994108	604	6

Item	Page	Assembly	Pos.	Quantity	Item	Page	Assembly	Pos.	Quantity
7405494	33	967304508	(1)	1	761021703	383	968607101	76	1
7405495	33	967304508	(1)	1	761021703	584	938759801	76	1
7407098	34	967304508	656	1	761022503	370	927554301	6	1
7407098	518	96045552	624	4	761022503	384	939368401	14	1
7407108	34	967304508	624	1	761022503	586	927521201	4	1
7407119	34	967304508	653	1	7615379	269	918811108	403	2
7407120	519	96045552	782	1	7615379	291	969543308	403	1
7409918	519	96045552	775	1	7615379	520	96045552	792	1
7409922	519	96045552	770	7	7615379	566	969767908	647	1
7411823	575	918627208	30	1	7617268	34	967304508	609	4
7412067	517	96045552	314	6	7617268	519	96045552	761	3
7413103	655	91000049	75	2	7617268	717	966004808	601	3
744010208	679	91000055	16	1	7617354	34	967304508	621	1
745129501	364	966253908	4	1	7617354	63	967301408	608	2
745139101	369	933074801	66	1	7617354	519	96045552	771	10
745900808	763	917695308	(2)	1	7617354	717	966004808	607	1
745902508	675	964283508	2	1	7617460	34	967304508	616	3
745902508	677	927310008	2	1	7617460	518	96045552	622	8
745902508	764	963904108	2	1	7617461	34	967304508	622	2
745902508	769	927311708	2	1	7617461	518	96045552	634	11
745902708	742	924073908	2	1	7617784	519	96045552	781	1
746001601	381	938759601	20	1	7621780	729	96058737	3	1
746201408	369	933074801	12	1	7622478	388	11083498	16	1
746221908	372	570109008	11	1	7624176	482	12101719	4	1
746246001	369	933074801	3	1	7624353	427	96023891	761	2
746604101	741	919421708	37	1	772002708	458	91003833	31	1
746604908	739	910543708	5	1	772614008	612	913753108	2	1
746607108	743	910445708	37	1	772637308	111	919933708	17	1
747000208	71	10356288	43	6	773315108	738	917893008	1	3
747000277	628	12102922	22	2	773326508	779	917508408	3	1
747003801	584	938759801	28	1	773404508	646	925141508	6	1.6
747006101	383	968607101	17	114	773404508	771	918596708	34	1.2
747006101	584	938759801	17	114	773913308	645	919950308	6	1
747258401	369	933074801	4	1	773924708	645	919950308	13	1
747272501	381	938759601	19	1	773930008	50	96070203	1	2
747404001	369	933074801	71	1	773930308	738	917893008	3	4
749001008	768	91001040	8	1	773933508	646	925141508	3	1
749001008	771	918596708	12	1	773933508	723	964502908	23	1
749009208	667	91000052	35	1	773941308	13		123	2
749009308	661	91000050	35	1	773947708	698	96063213	504	1
749010708	670	91000053	35	1	773952208	742	924073908	1	1
749010808	655	91000049	35	1	774119708	399	962282208	1	1
749010808	658	96014777	13	1	774119808	401	962282308	1	1
749011408	664	91000051	35	1	774206408	268	918811108	180	4
749013714	23	790256114	1	1	774208008	268	918811108	182	2
749013808	655	91000049	4	1	774208508	263	918728708	181	4
749013808	661	91000050	15	1	774208508	446	96019783	9	1
749013808	664	91000051	15	1	774208508	458	91003833	23	4
749013808	667	91000052	15	1	774209708	272	96020819	180	1
749013808	670	91000053	15	1	774209908	476	918729308	181	1
749014508	376	919935508	2	1	774210508	566	969767908	309	2
749014508	581	96062734	3	1	774214308	268	918811108	181	2
749015614	26	749065314	40	1	774215008	143	10126713	3	1
749057314	26	749065314	20	1	774215008	201	10145173	8	4
749063614	24	749013714	1	1	774215008	222	10140729	25	2
749063714	24	749013714	2	2	774215008	268	918811108	185	2
749065314	22	96062226	11	2	774215008	386	917894308	19	4
749065314	27	96062228	11	2	774215008	444	918759708	14	1
749065414	23	790256114	3	1	774221408	734	96056553	3	1
749068514	24	749013714	4	2	774221708	444	918759708	21	3

Item	Page	Assembly	Pos.	Quantity	Item	Page	Assembly	Pos.	Quantity
774223808	263	918728708	180	2	790032008	104	928569808	50	1
774225008	446	96019783	10	2	790032308	104	928569808	51	1
774301101	380	968558601	18	1	790032508	104	928569808	52	1
774301101	583	938707001	18	1	790033208	104	928569808	53	1
774320108	295	969219208	402	1	790038808	760	918533508	4	1
7743242	48	96046146	4	1	790042008	104	928569808	70	1
7743242	741	919421708	36	3	790042214	102	914860608	7	1
774351714	23	790256114	6	1	790042708	102	914860608	9	1
774372608	587	921444108	1	1	790042908	104	928569808	71	1
774372608	598	96075086	311	1	790042914	102	914860608	8	1
774372708	587	921444108	2	2	790045408	104	928569808	1	1
774372708	598	96075086	310	1	790065608	102	914860608	4	1
774372808	478	915300208	13	1	790256114	22	96062226	2	1
774373408	478	915300208	10	4	790256114	27	96062228	2	1
774374208	478	915300208	11	1	790258414	55	10430241	10	1
774375108	478	915300208	12	2	790272214	25	749065414	1	1
774378108	478	915300208	(1)	1	790272314	25	749065414	2	1
774378208	482	12101719	2	4	790272414	25	749065414	3	1
774387508	480	10327065	11	1	790272514	25	749065414	4	1
779006901	22	96062226	(393)	1	790336014	23	790256114	2	1
779016501	334	917304508	10	10	790533908	102	914860608	5	2
779016501	361	917304708	42	2	802102008	409	96017568	150	13.5
779020108	503	922648308	2	6	802102008	411	96022943	30	15
779020508	319	919010108	11	1	811201314	613	919386708	2	0.1
779020508	415	96024809	106	2	811203108	346	916162508	16	1
779040801	334	917304508	18	2	811203108	361	917304708	49	1
786511414	57	965336308	3	4	811203308	346	916162508	15	1
786511414	58	965359808	3	8	811203308	361	917304708	48	1
786511414	59	965359908	3	12	811205108	361	917304708	47	1
786525214	56	790258414	6	1	811205708	168	10120186	105	1
786526614	56	790258414	1	62	811205708	169	12408221	109	1
786526714	56	790258414	2	62	811205708	178	10142942	105	1
786528114	56	790258414	99	1	811205708	213	12418347	105	1
789000308	105	928620108	5	1	811205708	226	10115539	109	1
789011908	295	969219208	403	2	811205708	230	9079823	109	1
789015608	291	969543308	100	1	811205708	237	10144227	109	1
790001708	104	928569808	10	1	811205708	248	9078961	105	1
790002208	104	928569808	12	1	811208001	146	10155227	102	1
790002408	104	928569808	13	1	820000208	505	966157408	262	0.01
790002508	104	928569808	16	1	8627609	146	10155227	112	1
790002608	104	928569808	17	1	8655032	136	11389608	104	1
790002808	104	928569808	18	1	8655032	163	10149578	104	1
790002908	104	928569808	19	1	870002808	692	96063456	265	0.1
790003308	104	928569808	11	1	870004108	346	916162508	23	1
790003608	104	928569808	15	1	872101908	105	928620108	6	1
790003908	104	928569808	20	1	885132208	104	928569808	21	1
790004608	104	928569808	22	1	885166108	104	928569808	29	1
790020008	104	928569808	31	1	885182208	102	914860608	12	1
790020108	104	928569808	32	1	885182808	102	914860608	11	1
790021008	104	928569808	33	1	885251508	104	928569808	2	1
790021208	104	928569808	34	1	885251508	780	917508508	3	2
790021308	104	928569808	35	1	885602114	102	914860608	6	1
790021608	104	928569808	30	1	9072633	169	12408221	3	1
790026208	104	928569808	63	1	9072834	153	10147438	3	1
790026308	104	928569808	64	1	9072904	210	9072906	1	1
790026408	104	928569808	65	1	9072906	133	13455311	331	1
790028508	104	928569808	66	1	9072907	210	9072906	2	1
790030008	104	928569808	60	1	9072908	210	9072906	3	1
790031108	104	928569808	61	1	9073343	207	9080294	2	1
790031508	104	928569808	62	1	9073389	261	12487540	78	2

Item	Page	Assembly	Pos.	Quantity	Item	Page	Assembly	Pos.	Quantity
9073393	261	12487540	77	2	91000083	670	91000053	1	1
9073484	261	12487540	79	1	91000085	673	91000054	1	1
9073486	261	12487540	94	1	91000484	14		384	1
9073528	261	12487540	93	1	91000497	15		404	1
9073734	155	10116939	1	5	91001037	754	919932208	1	1
9073915	261	12487540	95	1	91001038	755	91001037	1	1
9073916	261	12487540	92	1	91001040	757	91001038	2	1
9073918	261	12487540	81	1	91002360	14		383	1
9074480	160	10149580	(7)	4	91002857	12		110	1
9074480	162	10149579	7	4	91003677	14		381	1
9074481	160	10149580	(9)	4	91003809	12		72	1
9074481	162	10149579	9	4	91003833	13		162	1
9074716	261	12487540	4	1	91004922	14		333	1
9074798	160	10149580	4	2	910445708	14		312	1
9075606	155	10116939	2	5	910543708	14		310	1
9076457	130	13455311	51	1	9132281	137	10154379	11	2
9076531	243	12583633	10	2	9132577	239	10151328	93	1
9076550	243	12583633	11	1	913753108	15		391	1
9076588	239	10151328	90	1	913978308	619	969856508	17	1
9076638	222	10140729	17	4	9140351	201	10145173	6	2
9077238	134	13455311	530	1	9140351	222	10140729	26	1
9078233	174	10129474	6	1	9144757	151	10118839	2	1
9078249	135	13455311	650	1	9144762	151	10118839	(3)	1
9078314	132	13455311	260	1	9144762	250	10148366	232	1
9078522	165	11448005	6	2	914557108	14		363	1
9078522	166	12549825	6	2	914860508	12		29	1
9078849	230	9079823	1	1	914860608	12		55	1
9078881	247	10144027	1	1	914950208	12		60	1
9078935	198	10143342	4	1	914950308	12		62	1
9078961	135	13455311	654	1	915037208	15		440	1
9078962	248	9078961	1	1	915090008	13		147	1
9078963	249	9078962	1	1	915090108	13		149	1
9078964	249	9078962	2	1	915300208	13		169	1
9078984	248	9078961	4	1	915403108	622	918805408	1	1
9079001	249	9078962	3	1	915415908	14		356	1
9079078	163	10149578	9	1	915447908	12		58	1
9079130	192	10146791	3	1	915562508	12		30	1
9079130	251	10148366	2011	1	915731908	12		71	1
9079131	172	9079870	3	2	915927808	15		488	1
9079532	149	10150934	2	1	915928608	14		217	1
9079603	152	10139112	7	1	915928808	14		229	1
9079603	250	10148366	(4)	1	916049908	13		132	1
9079823	134	13455311	480	1	916109208	13		121	1
9079870	131	13455311	110	4	916162508	334	917304508	2	1
9080294	206	10127566	1	1	916162808	319	919010108	19	1
9080310	212	10145278	5	1	916163008	334	917304508	5	1
9080377	146	10155227	8	1	916164208	319	919010108	1	1
9080466	217	10148216	3	3	916165808	357	917304608	1	1
9080660	146	10155227	10	1	916166208	14		199	1
91000049	652	919935408	1	1	916168308	334	917304508	3	1
91000050	652	919935408	2	1	916170808	319	919010108	5	1
91000051	652	919935408	3	1	916870808	13		144	1
91000052	652	919935408	4	1	916959808	12		98	1
91000053	652	919935408	5	1	917026008	12		75	1
91000054	652	919935408	6	1	917028508	15		891	1
91000055	652	919935408	7	1	917155308	12		40	1
91000079	655	91000049	1	1	917155408	12		50	1
91000080	661	91000050	1	1	917155508	12		59	1
91000081	664	91000051	1	1	917304508	12		114	1
91000082	667	91000052	1	1	917304608	13		115	1

Item	Page	Assembly	Pos.	Quantity	Item	Page	Assembly	Pos.	Quantity
917304708	13		116	1	919812608	13		143	1
917305408	334	917304508	1	1	919832408	12		104	1
917357108	12		112	1	919868808	14		285	1
917472008	13		117	1	919926114	75	914950208	1	1
9174981	158	11348072	1	2	919932208	14		351	1
917508408	14		352	1	919933308	14		350	1
917508508	779	917508408	1	1	919933708	12		74	1
917598608	19	96062225	7	1	919935408	14		201	1
917695308	760	918533508	2	1	919935508	13		125	1
9177636	137	10154379	6	10	919935608	14		330	1
9177776	201	10145173	10	1	919938608	14		213	1
9177776	221	10144756	2	2	919938908	12		66	1
917825608	14		287	1	919940108	13		181	1
9178294	249	9078962	5	1	919940408	13		179	1
917893008	14		299	1	919950108	12		2	1
917894308	13		128	1	919950308	13		175	1
917910508	13		127	1	920381108	90	96062920	502	1
917910708	14		332	1	920381108	426	96023891	512	1
917962508	12		108	1	920381108	490	96063649	502	18
918008908	12		109	1	920381108	494	96023971	519	1
918118408	14		189	1	920976308	571	918730808	314	1
918221408	757	91001038	4	1	920991708	571	918730808	325	1
918258408	14		362	1	921002708	572	918730808	343	1
918533508	757	91001038	1	1	921297408	711	967498308	497	1
918578614	454	919501608	18	2	921297508	711	967498308	498	1
918596708	757	91001038	3	1	921297608	711	967498308	499	1
918627208	14		301	1	921368608	655	91000049	17	1
918728408	12		103	1	921444108	581	96062734	300	1
918728708	12		105	1	921512608	711	967498308	490	1
918728908	13		135	1	921512708	711	967498308	491	1
918729308	13		165	1	921512808	711	967498308	492	1
918730608	13		185	1	921512908	711	967498308	493	1
918730808	14		191	1	921513008	711	967498308	494	1
918759708	13		145	1	921513108	711	967498308	495	1
918802108	13		161	2	921513208	711	967498308	496	1
918805408	15		494	1	921536708	710	967498108	484	1
918810308	13		131	1	922099408	39	917598608	115	1
918811108	263	918728708	1	1	922124408	571	918730808	328	1
918955208	12		107	1	922298008	39	917598608	114	1
918988908	14		327	1	922417208	39	917598608	140	1
918998614	19	96062225	10	2	922648308	502	96025348	20	1
919010108	12		113	1	923013608	572	918730808	371	1
919028108	14		193	1	923015008	39	917598608	95	1
919032814	77	990618314	2	1	923512208	90	96062920	500	18
919235408	13		119	1	923512208	91	96062921	500	22
919284308	13		142	1	923512208	98	96045216	500	3
919386708	15		401	1	923512208	426	96023891	500	53
919392208	15		403	1	923512208	428	96022870	500	28
919418714	117	96045221	1	1	923512208	490	96063649	500	85
919421708	14		311	1	923512208	492	96063650	500	9
919484908	13		136	1	923512208	493	96023971	500	34
919498808	12		80	1	923512208	495	96049294	500	20
919499008	12		82	1	923512208	589	96055198	500	5
919501608	13		153	1	923512208	608	96060353	500	3
919502708	13		160	1	923512208	611	96057250	500	2
919528608	14		187	1	923512208	640	96045220	500	3
919553608	12		78	1	923512208	693	96063864	500	2
919584608	14		385	1	923512208	694	96063583	500	3
919616808	12		111	1	923512208	698	96063213	500	1
919674308	13		163	1	923512208	699	96051215	500	3

Item	Page	Assembly	Pos.	Quantity	Item	Page	Assembly	Pos.	Quantity
923512208	706	96063415	500	11	927501901	384	939368401	13	1
923512208	730	96058738	500	3	927501901	586	927521201	2	1
923512208	775	96035674	500	3	927504601	381	938759601	17	1
924028408	39	917598608	101	1	927504701	381	938759601	23	1
924073908	741	919421708	1	1	927504801	381	938759601	15	1
924073908	743	910445708	1	3	927514301	383	968607101	16	38
924505508	710	967498108	486	1	927514301	584	938759801	16	38
925042108	747	919933308	4	1	927515201	586	927521201	6	2
925074608	760	918533508	3	1	9275178	239	10151328	91	1
925141508	645	919950308	9	1	927520701	584	938759801	26	1
925143708	646	925141508	1	1	927520801	584	938759801	27	1
925185208	645	919950308	10	1	927521201	583	938707001	10	1
925185308	645	919950308	11	1	927521301	586	927521201	5	1
925275608	748	925280008	1	1	927530201	369	933074801	13	1
925280008	747	919933308	1	1	927530301	369	933074801	14	1
925519008	710	967498108	481	1	927530801	369	933074801	40	6
925519008	710	967498108	482	1	927531901	369	933074801	16	1
925721308	679	91000055	2	1	9275443	261	12487540	85	2
925721408	679	91000055	3	1	927554301	369	933074801	77	1
925933208	295	969219208	2	1	927554401	370	927554301	1	1
926094708	571	918730808	209	1	9275826	233	10116110	16	1
926121108	571	918730808	332	1	927601301	383	968607101	6	1
926122108	572	918730808	377	1	927601401	383	968607101	7	5
926385708	572	918730808	378	1	927601701	383	968607101	15	1
926399508	571	918730808	316	1	927601701	584	938759801	15	1
926466108	572	918730808	379	1	927601801	383	968607101	20	1
926495008	305	91002857	(2390)	1	927601901	383	968607101	25	1
926497508	571	918730808	324	1	927602001	383	968607101	30	1
926711908	619	969856508	(1377)	1	927602101	383	968607101	32	3
9267273	169	12408221	4	1	927602801	383	968607101	31	1
9268016	261	12487540	96	1	927602901	383	968607101	35	1
9268131	222	10140729	18	1	927604908	572	918730808	380	1
926850208	571	918730808	320	1	927605908	571	918730808	201	1
926850208	571	918730808	321	1	927610201	384	939368401	15	1
926868308	571	918730808	206	1	927611508	571	918730808	262	1
926872208	39	917598608	121	1	927611908	571	918730808	333	1
926891108	502	96025348	27	1	927612108	39	917598608	131	1
926894508	573	919028108	476	1	927612108	39	917598608	133	1
926968008	571	918730808	329	1	927632108	571	918730808	211	1
926971408	571	918730808	318	1	927632108	572	918730808	363	1
9270147	261	12487540	(90)	1	927632208	572	918730808	362	1
9270147	261	12487540	88	2	927638801	381	938759601	30	1
927044108	572	918730808	375	1	927639801	383	968607101	10	1
927064908	572	918730808	355	1	927639801	584	938759801	10	1
9271340	143	10126713	5	1	927641608	571	918730808	309	1
927159108	772	918221408	1	1	9276423	261	12487540	11	1
927159208	772	918221408	2	1	9276426	261	12487540	98	1
927234408	725	918258408	500	1	927670408	572	918730808	359	1
927248808	571	918730808	200	1	927679208	571	918730808	330	1
927310008	673	91000054	71	1	927691408	571	918730808	317	1
927310008	727	914557108	1	1	927716701	369	933074801	70	1
927310008	771	918596708	4	1	927758701	583	938707001	11	1
927311708	768	91001040	2	1	927892208	517	96045552	322	1
9273161	201	10145173	7	2	927996308	490	96063649	507	1
9273187	261	12487540	97	2	927996308	494	96023971	522	1
9273271	178	10142942	2	2	928006908	39	917598608	128	1
9274731	261	12487540	91	1	928006908	39	917598608	129	1
9274859	137	10154379	10	5	928013108	600	967498008	1384	1
927493908	768	91001040	21	2	928037508	39	917598608	100	1
927501901	370	927554301	2	1	928046808	571	918730808	319	1

Item	Page	Assembly	Pos.	Quantity	Item	Page	Assembly	Pos.	Quantity
928469408	74	967314108	(798)	4	939589701	383	968607101	(999)	1
928569808	102	914860608	1	1	940315108	723	964502908	7	2
928620108	102	914860608	2	1	940380008	673	91000054	30	1
928659608	723	964502908	1	1	940380008	727	914557108	2	1
928714208	571	918730808	205	1	9412158	111	919933708	35	1
928753308	710	967498108	480	1	942053708	119	96045222	12	4
928756608	74	967314108	(799)	4	942439808	760	918533508	7	1
928761808	593	96064698	1257	1	942875408	476	918729308	251	1
928828008	486	968365908	17	1	943122808	127	968305308	3	2
928870708	571	918730808	335	1	944029908	747	919933308	30	1
929315508	760	918533508	9	1	944134103	369	933074801	36	2
929361408	710	967498108	483	1	944214403	22	96062226	(94)	1
929392308	571	918730808	331	1	946104608	268	918811108	11	2
929529908	783	968952708	1	1	947868208	748	925280008	2	1
929582108	747	919933308	3	1	947868208	751	929582108	2	2
929582208	751	929582108	1	1	947868208	768	91001040	22	2
929591608	751	929582108	6	1	948996914	22	96062226	20	4
929614008	39	917598608	103	1	948996914	27	96062228	20	4
929630508	39	917598608	120	1	949347508	768	91001040	3	1
929630508	39	917598608	123	1	949347508	771	918596708	5	1
929750408	571	918730808	334	1	949361408	747	919933308	44	1
929818008	771	918596708	3	8	949362208	747	919933308	45	1
929819308	760	918533508	32	8	949380808	747	919933308	6	2
929920508	572	918730808	357	1	949380908	747	919933308	46	1
929966908	571	918730808	337	1	949381008	747	919933308	47	1
931696301	365	917472008	1	1	950306608	655	91000049	15	2
931807501	369	933074801	5	1	950477408	771	918596708	2	4
931913308	748	925280008	6	1	950477508	760	918533508	31	4
933074801	367	919235408	1	1	951493908	374	916109208	2	1
933074901	369	933074801	10	1	951665708	771	918596708	30	1
938545908	763	917695308	11	2	951892308	673	91000054	54	1
938707001	581	96062734	1	1	951892408	673	91000054	35	1
938759601	380	968558601	1	1	951913908	124	918728408	12	2
938759601	583	938707001	1	1	951913908	626	919616808	4	1
938759801	583	938707001	5	1	952177008	263	918728708	11	8
938760001	383	968607101	5	1	952177008	268	918811108	14	8
938760101	383	968607101	40	1	952228108	760	918533508	34	1
938760201	383	968607101	42	3	952859808	272	96020819	9	1
938760401	383	968607101	45	1	952940908	410	969425608	15	2
938760501	383	968607101	46	1	953147708	747	919933308	7	1
938760601	383	968607101	50	1	953162308	727	914557108	3	1
938760701	383	968607101	55	1	953515408	290	917962508	5	5
938760801	383	968607101	60	1	953515408	293	918008908	3	7
938760801	584	938759801	60	1	953515508	290	917962508	6	3
938760901	383	968607101	65	1	953515508	293	918008908	4	3
938760901	584	938759801	65	1	953600608	516	96045552	172	1
938865908	750	96062062	10	1	953600608	591	96064697	158	1
938996401	369	933074801	85	1	953608508	747	919933308	5	2
938996501	369	933074801	90	1	953620108	772	918221408	4	1
939048708	768	91001040	14	1	953641308	269	918811108	401	1
939250301	369	933074801	15	1	953641408	269	918811108	404	1
939251101	369	933074801	20	5	953649008	591	96064697	(2)	1
939251401	369	933074801	30	1	953650008	47	968374708	24	27
939251501	369	933074801	35	1	953650008	268	918811108	15	2
939251601	369	933074801	45	1	953650008	575	918627208	3	2
939251701	369	933074801	60	1	953650008	721	915415908	6	1
939257301	369	933074801	50	1	953650008	723	964502908	28	1
939368401	380	968558601	10	1	953656108	673	91000054	31	2
939589501	383	968607101	(997)	1	953676308	290	917962508	7	2
939589601	383	968607101	(998)	1	953676308	293	918008908	2	4

Item	Page	Assembly	Pos.	Quantity	Item	Page	Assembly	Pos.	Quantity
953695308	287	96024716	9	4	955918008	679	91000055	41	2
953695308	361	917304708	6	2	955919508	516	96045552	180	4
953695308	407	96022627	50	3	955974308	747	919933308	29	1
953695308	410	969425608	4	3	956164808	626	919616808	3	1
953695308	415	96024809	21	2	956210114	30	992078314	9	2
953695308	416	969399608	4	6	956211014	30	992078314	18	2
953695308	781	968940708	5	2	956214014	22	96062226	29	2
953695308	782	968940808	5	2	956214014	28	96062228	29	2
953696908	478	915300208	15	1	956349008	750	96062062	3	1
953714008	581	96062734	31	1	956349108	750	96062062	4	1
953726108	670	91000053	9	1	956414208	679	91000055	17	4
953726108	673	91000054	9	1	956442614	33	967304508	351	2
953744908	655	91000049	61	2	956470108	652	919935408	24	1
953749408	673	91000054	65	1	956657414	47	968374708	8	8
953760908	591	96064697	(1)	1	956657514	47	968374708	9	4
953766408	581	96062734	22	2	956758608	679	91000055	5	1
953781608	566	969767908	(1)	2	957011008	661	91000050	6	1
953843608	679	91000055	9	1	957011008	664	91000051	6	1
953856308	760	918533508	51	1	957011008	667	91000052	6	1
953873408	84	96075205	25	1	957011108	661	91000050	7	1
953873408	100	96045217	3	2	957011108	664	91000051	7	1
953873408	119	96045222	23	4	957011108	667	91000052	7	1
953873408	124	918728408	103	4	957011208	661	91000050	8	4
953873408	315	917357108	31	2	957011208	664	91000051	8	4
953873408	376	919935508	23	5	957011208	667	91000052	8	4
953873408	478	915300208	22	5	957011308	661	91000050	9	1
953873408	566	969767908	(4)	8	957011308	664	91000051	9	1
953873408	623	915403108	21	4	957011308	667	91000052	9	1
954113708	407	96022627	26	1	957011408	661	91000050	11	1
954117308	287	96024716	24	1	957017608	670	91000053	6	1
954141508	478	915300208	17	1	957017608	673	91000054	6	1
954180008	679	91000055	8	1	957017708	670	91000053	7	1
954762708	670	91000053	10	1	957017708	673	91000054	7	1
954762708	673	91000054	10	1	957018808	670	91000053	8	4
954766608	670	91000053	11	1	957018808	673	91000054	8	4
954766708	673	91000054	11	1	957025808	667	91000052	29	2
955002908	761	918533508	64	1	957032508	655	91000049	44	4
955044808	679	91000055	21	1	957032508	661	91000050	44	4
955044908	679	91000055	22	1	957032508	664	91000051	44	4
955112308	771	918596708	24	1	957032508	667	91000052	44	2
955450608	655	91000049	38	2	957032508	670	91000053	44	2
955450608	661	91000050	38	2	957037908	664	91000051	11	1
955450608	664	91000051	38	2	957039908	670	91000053	49	2
955450608	667	91000052	38	2	957056308	667	91000052	11	1
955450608	670	91000053	38	2	957068708	581	96062734	24	3
955500008	410	969425608	6	1	957068808	581	96062734	25	3
955523908	655	91000049	26	4	957095714	22	96062226	42	4
955532403	30	992078314	16	1	957095714	28	96062228	42	4
955552508	747	919933308	14	1	957095814	22	96062226	43	4
955552608	747	919933308	24	1	957095814	28	96062228	43	4
955560208	723	964502908	5	1	957095914	22	96062226	40	4
955560308	723	964502908	6	1	957095914	28	96062228	40	4
955560308	763	917695308	15	1	957100008	124	918728408	11	2
955560708	760	918533508	41	1	957102808	747	919933308	38	1
955600008	127	968305308	6	1	958340414	40	990840414	5	2
955668108	124	918728408	13	2	958346414	40	990840414	4	2
955746303	30	992078314	12	2	959552614	22	96062226	45	48
955747203	30	992078314	13	10	959552614	28	96062228	45	48
955917808	679	91000055	39	2	96000683	562	919528608	1	1
955917908	679	91000055	40	4	96000686	562	919528608	2	1

Item	Page	Assembly	Pos.	Quantity	Item	Page	Assembly	Pos.	Quantity
96002103	268	918811108	7	1	96024263	571	918730808	204	1
96004143	502	96025348	3	1	96024716	285	918955208	1	1
96004318	268	918811108	29	1	96024809	403	918728908	2	1
96004475	448	10876576	999	1	96024811	415	96024809	4	1
96007145	645	919950308	1	1	96024977	287	96024716	2	1
96008399	91	96062921	513	1	96025348	499	96059658	2	1
96008399	500	96059659	514	1	96025887	319	919010108	4	1
96010020	645	919950308	15	1	96025927	573	919028108	430	1
96013144	572	918730808	373	1	96025928	573	919028108	431	1
96013575	673	91000054	50	1	96025929	573	919028108	432	1
96013575	744	917910708	2	1	96025930	573	919028108	433	1
96013744	760	918533508	1	1	96026091	572	918730808	351	1
96013921	466	96074082	2333	1	96026092	572	918730808	348	1
96014023	284	96021213	2456	1	96026097	572	918730808	374	1
96014042	466	96074082	2316	1	96026098	571	918730808	326	1
96014315	466	96074082	2334	1	96026635	284	96021213	2463	1
96014736	571	918730808	307	1	96027796	571	918730808	293	1
96014738	571	918730808	306	1	96027797	571	918730808	290	1
96014777	655	91000049	3	1	96028331	591	96064697	150	1
96014807	427	96023891	2998	2	96028878	576	918988908	20	4
96014807	496	96049294	2998	8	96030352	125	963260408	9	1
96014955	571	918730808	308	1	96030354	562	919528608	100	1
96015921	319	919010108	2	1	96030724	431	96056347	1	1
96015926	321	96015921	1	1	96031888	284	96021213	2450	1
96016097	466	96074082	2323	1	96032222	395	918810308	5	1
96016196	655	91000049	18	1	96032223	395	918810308	6	1
96017568	407	96022627	1	1	96032715	284	96021213	2466	1
96017737	754	919932208	881	1	96033140	431	96056347	19	1
96018574	575	918627208	500	1	96033227	435	96022872	9	1
96019783	444	918759708	1	1	96033235	305	91002857	(2395)	1
96020554	624	96036820	13	1	96033380	305	91002857	1	1
96020707	268	918811108	50	1	96033759	576	918988908	10	1
96020819	268	918811108	2	1	96033765	305	91002857	(2391)	1
96021213	263	918728708	290	1	96035326	280	96035595	1	1
96021231	284	96021213	2451	1	96035595	263	918728708	2	1
96021238	284	96021213	2455	1	96035597	280	96035595	3	2
96021241	284	96021213	2457	1	96035674	774	96055854	11	1
96021362	395	918810308	7	1	96035739	282	96035743	1	1
96021363	395	918810308	8	1	96035743	263	918728708	3	1
96021365	395	918810308	9	1	96036820	622	918805408	3	1
96022400	473	96051762	1	1	96036821	622	918805408	4	1
96022401	473	96051762	2	1	96037273	625	96036821	23	1
96022627	403	918728908	1	1	96037297	757	91001038	5	1
96022870	425	96068695	7	1	96038054	282	96035743	2	1
96022872	431	96056347	2	1	96039477	284	96021213	2453	1
96022873	435	96022872	1	1	96041469	755	91001037	(30)	1
96022920	407	96022627	3	1	96041566	473	96051762	100	1
96022932	750	96062062	1	1	96044379	420	919484908	10	1
96022943	407	96022627	15	1	96044527	290	917962508	(2412)	1
96022970	489	96063648	15	1	96044787	420	919484908	11	1
96022971	489	96063648	22	1	96044789	420	919484908	12	2
96023028	287	96024716	1	1	96045215	96	919499008	10	1
96023050	516	96045552	19	1	96045216	97	96045215	30	1
96023891	425	96068695	2	1	96045217	96	919499008	30	1
96023914	285	918955208	100	1	96045218	638	919502708	10	1
96023930	288	96023914	10	1	96045219	638	919502708	30	1
96023931	288	96023914	11	1	96045220	639	96045218	30	1
96023932	288	96023914	14	1	96045221	116	919498808	1	2
96023960	288	96023914	19	1	96045222	116	919498808	2	1
96023971	489	96063648	16	1	96045307	461	96074081	1	1

Item	Page	Assembly	Pos.	Quantity	Item	Page	Assembly	Pos.	Quantity
96045536	420	919484908	13	1	96062918	81	96062917	2	1
96045552	510	918730608	4	1	96062920	82	96062918	3	1
96046146	47	968374708	100	8	96062921	82	96062918	4	1
96046407	470	919674308	250	2	96062922	84	96075205	3	1
96046763	571	918730808	203	1	96063212	690	96063954	2	1
96046807	290	917962508	290	1	96063213	695	96063212	6	1
96047707	484	919940408	10	1	96063415	705	96063455	1	1
96047742	652	919935408	10	1	96063454	689	919938608	2	1
96047743	652	919935408	30	1	96063455	689	919938608	3	1
96047747	470	919674308	(1)	1	96063456	690	96063954	1	1
96048348	19	96062225	30	1	96063458	701	96063454	1	1
96048684	610	96050762	3	1	96063559	703	96063458	110	1
96048757	322	96057226	1	1	96063561	703	96063458	120	1
96049294	489	96063648	17	1	96063583	692	96063456	200	1
96049700	774	96055854	20	1	96063648	484	919940408	12	1
96049764	124	918728408	4	1	96063649	489	96063648	1	1
96049765	126	96049764	9	1	96063650	489	96063648	2	1
96049767	124	918728408	23	1	96063676	692	96063456	190	1
96050762	609	919584608	10	1	96063843	692	96063456	120	1
96051215	695	96063212	7	1	96063849	692	96063456	140	1
96051451	470	919674308	90	1	96063864	692	96063456	150	1
96051456	470	919674308	(2)	1	96063872	692	96063456	160	1
96051503	734	96056553	1	1	96063954	689	919938608	1	1
96051762	470	919674308	1	1	96064697	578	919935608	3	1
96052297	431	96056347	3	2	96064698	591	96064697	10	1
96054467	774	96055854	13	1	96064701	591	96064697	19	1
96055197	578	919935608	2	1	96066239	305	91002857	2	1
96055198	588	96055197	20	1	96066401	603	91003677	100	1
96055524	673	91000054	66	1	96068695	424	919812608	5	1
96055854	755	91001037	500	1	96069052	498	919940108	5	2
96056273	728	919868808	2	1	96070203	47	968374708	200	1
96056347	424	919812608	6	1	96071003	603	91003677	14	1
96056553	732	96056273	1	1	96071742	461	96074081	10	1
96056560	732	96056273	2	1	96072367	652	919935408	880	1
96057226	321	96015921	8	1	96072660	84	96075205	1	1
96057250	609	919584608	20	1	96074081	458	91003833	1	1
96058737	728	919868808	1	1	96074082	461	96074081	20	1
96058738	729	96058737	1	1	96074083	461	96074081	30	1
96059658	498	919940108	2	1	96075086	596	91004922	4	1
96059659	499	96059658	1	1	96075100	598	96075086	19	1
96059660	500	96059659	2	1	96075102	598	96075086	9	1
96060353	607	91000484	20	1	96075205	82	96062918	2	1
96060380	616	91000497	10	1	96082028	369	933074801	(999)	1
96060392	606	91002360	10	1	961721508	571	918730808	315	1
96060493	82	96062918	5	1	961920208	593	96064698	1261	1
96060494	82	96062918	6	1	962046508	581	96062734	10	1
96062032	768	91001040	1	1	962049408	771	918596708	1	1
96062033	754	919932208	880	1	962051508	581	96062734	12	2
96062034	703	96063458	6	1	962196208	494	96023971	516	1
96062040	704	96062034	2	1	962207008	124	918728408	21	1
96062062	747	919933308	2	1	962257308	710	967498108	485	1
96062063	750	96062062	2	1	962258008	718	967498508	1490	1
96062225	17	919950108	1	1	962258008	718	967498508	1491	1
96062226	19	96062225	2	1	962261308	717	966004808	(487)	1
96062228	19	96062225	3	1	962282208	398	96032222	1	1
96062303	768	91001040	17	1	962282308	400	96032223	1	1
96062526	420	919484908	17	1	962335508	572	918730808	410	1
96062734	578	919935608	1	1	962439008	39	917598608	122	1
96062735	578	919935608	4	1	962439208	571	918730808	323	1
96062917	79	919938908	1	1	962535408	572	918730808	383	1

Item	Page	Assembly	Pos.	Quantity	Item	Page	Assembly	Pos.	Quantity
962573308	378	963564908	1	1	964327408	64	967499008	180	1
962760208	39	917598608	96	1	964327508	64	967499008	181	1
962760208	39	917598608	124	1	964327608	64	967499008	182	1
962857908	593	96064698	1255	1	964327608	64	967499008	189	1
963257908	321	96015921	2	1	964327708	64	967499008	183	1
963260408	124	918728408	3	1	964327808	64	967499008	184	1
963383408	581	96062734	11	1	964327808	64	967499008	188	1
963398008	431	96056347	35	1	964327908	64	967499008	185	1
963533608	573	919028108	290	1	964327908	64	967499008	186	1
963533708	573	919028108	291	1	964328008	64	967499008	187	1
963544508	407	96022627	110	1	964424908	635	915090008	4	2
963556008	673	91000054	52	1	964483408	572	918730808	381	1
963557408	78	964765008	2	1	964502708	623	915403108	3	1
963562308	593	96064698	1258	1	964502908	721	915415908	1	1
963564908	376	919935508	10	1	964536408	70	915447908	15	4
963593008	39	917598608	104	1	964541408	70	915447908	31	4
963672408	124	918728408	5	1	964650808	22	96062226	17	3
963698808	571	918730808	291	1	964650808	27	96062228	17	3
963698908	571	918730808	292	1	964764908	77	990618314	1	1
963700008	572	918730808	384	1	964765008	77	990618314	3	2
963733208	635	915090008	1	1	964765308	636	964060608	1	1
963772608	623	915403108	4	1	964843708	395	918810308	12	2
963904108	763	917695308	4	1	964843808	395	918810308	13	1
963921808	571	918730808	312	1	964843908	395	918810308	14	1
963921808	571	918730808	313	1	964984108	395	918810308	26	2
963930408	407	96022627	5	1	965010008	30	992078314	15	2
963991608	407	96022627	17	1	965010008	30	992078314	19	2
964003208	70	915447908	2	4	965021508	395	918810308	46	2
964060608	635	915090008	6	2	965080808	70	915447908	21	2
964193608	305	91002857	(2394)	1	965080908	70	915447908	22	1
964196608	571	918730808	210	1	965096408	774	96055854	12	1
964273808	600	967498008	1383	1	965096608	755	91001037	(8)	1
964274408	39	917598608	143	1	965202408	571	918730808	322	1
964275408	39	917598608	99	1	965225808	124	918728408	19	1
964275408	39	917598608	118	1	965255408	315	917357108	26	1
964283508	673	91000054	33	5	965256808	87	96062922	3	1
964283508	723	964502908	3	1	965262808	755	91001037	(7)	1
964307108	407	96022627	16	1	965264808	679	91000055	34	1
964324708	39	917598608	102	1	965335608	383	968607101	11	1
964324808	39	917598608	105	1	965336308	55	10430241	990	1
964324908	39	917598608	106	1	965356108	288	96023914	30	1
964325008	39	917598608	107	1	965359808	55	10430241	991	1
964325108	39	917598608	108	1	965359908	55	10430241	992	1
964325208	39	917598608	109	1	965371508	484	919940408	9	1
964325308	39	917598608	110	1	965371708	700	966591408	1	1
964325308	39	917598608	111	1	965417108	431	96056347	17	1
964325308	39	917598608	112	1	965434208	572	918730808	342	1
964325308	39	917598608	113	1	965479408	593	96064698	1254	1
964325408	39	917598608	116	1	965569108	571	918730808	338	1
964325508	39	917598608	119	1	965617208	427	96023891	995	6
964325608	39	917598608	126	1	965617208	698	96063213	995	1
964325608	39	917598608	127	1	965622108	90	96062920	996	8
964325708	39	917598608	130	1	965622108	91	96062921	996	24
964325708	39	917598608	132	1	965622108	98	96045216	996	6
964325808	39	917598608	134	1	965622108	427	96023891	996	8
964325908	39	917598608	135	1	965622108	428	96022870	996	8
964326008	39	917598608	136	1	965622108	491	96063649	996	62
964326108	39	917598608	137	1	965622108	494	96023971	996	125
964326308	39	917598608	139	1	965622108	496	96049294	996	52
964326408	39	917598608	141	1	965622108	640	96045220	996	6

Item	Page	Assembly	Pos.	Quantity	Item	Page	Assembly	Pos.	Quantity
965622108	698	96063213	996	27	966621108	338	917305408	12	1
965622208	90	96062920	998	1	966629308	327	96025887	1	1
965622208	91	96062921	998	1	966636808	755	91001037	501	1
965622208	98	96045216	998	2	966662508	319	919010108	6	1
965622208	427	96023891	998	1	966683308	571	918730808	261	1
965622208	428	96022870	998	1	966707708	440	916870808	2	1
965622208	491	96063649	998	1	966720708	486	968365908	15	1
965622208	492	96063650	998	2	966825408	361	917304708	10	1
965622208	494	96023971	998	1	966860408	571	918730808	327	1
965622208	496	96049294	998	1	966965108	572	918730808	382	1
965622208	589	96055198	998	1	966979108	431	96056347	52	1
965622208	608	96060353	998	2	966980708	431	96056347	36	2
965622208	611	96057250	998	2	967230603	30	992078314	10	4
965622208	640	96045220	998	1	967232803	30	992078314	14	2
965622208	693	96063864	998	2	967257808	395	918810308	39	2
965622208	694	96063583	998	2	967260908	434	96030724	4	1
965622208	698	96063213	998	2	967292708	67	917155408	4	1
965622208	699	96051215	998	1	967301408	61	917155308	2	1
965622208	706	96063415	998	2	967304508	19	96062225	5	1
965622208	730	96058738	998	2	967314108	72	917155508	4	1
965622208	775	96035674	998	2	967321308	725	918258408	11	1
965763608	338	917305408	9	1	967361508	629	773941308	3	1
965784408	346	916162508	4	1	967363808	437	10340105	999	1
965946208	571	918730808	279	1	967421808	480	10327065	30	1
965965108	725	918258408	6	1	967498008	598	96075086	10	1
965994108	707	915928608	4	1	967498108	709	965994108	10	1
966004808	715	915928808	4	1	967498308	709	965994108	11	1
966051308	571	918730808	260	1	967498508	717	966004808	10	1
966157408	504	968077108	2	1	967498608	717	966004808	11	1
966167808	84	96075205	2	1	967499008	63	967301408	10	1
966181208	484	919940408	8	1	967499208	74	967314108	10	1
966184608	572	918730808	353	1	967541908	425	96068695	3	1
966185908	572	918730808	352	1	967542008	425	96068695	4	1
966189708	85	966167808	1	1	967569908	30	992078314	(1)	1
966193108	507	968015808	4	1	967576308	30	992078314	17	8
966230408	361	917304708	25	1	967588308	395	918810308	3	1
966230508	361	917304708	27	1	967588408	395	918810308	4	1
966230608	361	917304708	28	1	967608708	502	96025348	2	1
966230708	361	917304708	29	1	967616708	571	918730808	304	1
966230808	361	917304708	30	1	967650208	305	91002857	(2393)	1
966241008	329	916170808	14	1	967687008	572	918730808	364	1
966253708	363	966230508	1	1	967695508	721	915415908	8	1
966253908	363	966230508	2	2	967695808	407	96022627	7	2
966270808	326	968483708	1	1	967708808	723	964502908	4	1
966282308	338	917305408	1	1	967709108	90	96062920	516	1
966282408	338	917305408	2	1	967769908	572	918730808	358	1
966351608	39	917598608	142	1	967775308	338	917305408	34	1
966363808	361	917304708	37	1	968015808	498	919940108	4	1
966408908	355	916163008	1	1	968077108	502	96025348	21	1
966479308	755	91001037	(10)	1	968248508	486	968365908	30	1
966479308	774	96055854	21	1	968252908	87	96062922	5	1
966497808	349	966497908	2	1	968300908	124	918728408	1	1
966497908	346	916162508	1	1	968301008	124	918728408	2	1
966513708	349	966497908	17	1	968305308	124	918728408	22	1
966553108	320	916164208	1	1	968321608	415	96024809	5	1
966563508	700	966591408	6	1	968321708	415	96024809	6	2
966570608	572	918730808	376	1	968365908	484	919940408	11	1
966591408	690	96063954	10	1	968374708	17	919950108	3	1
966601008	571	918730808	339	1	968374908	17	919950108	5	1
966620008	338	917305408	13	1	968376808	52	968374908	100	2

Item	Page	Assembly	Pos.	Quantity	Item	Page	Assembly	Pos.	Quantity
968410408	737	917825608	1	1	968845608	572	918730808	344	1
968462608	319	919010108	20	1	968940708	780	917508508	2	1
968481208	272	96020819	1	1	968940808	780	917508508	4	1
968481308	272	96020819	2	1	968952708	779	917508408	2	1
968483708	319	919010108	3	1	968986608	508	966193108	3	1
968485308	326	968483708	2	1	969040908	575	918627208	(1100)	1
968485508	326	968483708	6	1	969041008	575	918627208	(1101)	1
968485608	326	968483708	7	1	969041408	575	918627208	(1102)	1
968493408	326	968483708	(1)	1	969041908	572	918730808	350	1
968510608	124	918728408	7	1	969042608	572	918730808	361	1
968510708	124	918728408	8	1	969142508	763	917695308	2	1
968521308	33	967304508	19	1	969174808	763	917695308	3	1
968522208	63	967301408	19	1	969219208	293	918008908	1	1
968543908	598	96075086	11	1	969269308	268	918811108	1	1
968551908	598	96075086	18	1	969300008	386	917894308	4	1
968552008	598	96075086	(6)	1	969304708	392	969300008	1	1
968558601	378	963564908	2	1	969383908	461	96074081	(2331)	1
968588908	407	96022627	8	1	969384108	466	96074082	2321	1
968600208	571	918730808	336	1	969385408	572	918730808	366	1
968600508	39	917598608	98	1	969392008	415	96024809	3	1
968600508	39	917598608	117	1	969392108	417	969392008	1	1
968600608	39	917598608	97	1	969392608	295	969219208	1	1
968600708	39	917598608	138	1	969399508	416	969399608	1	1
968601708	593	96064698	1256	1	969399608	415	96024809	1	1
968601808	593	96064698	1259	1	969425608	407	96022627	2	1
968601908	593	96064698	1260	1	969425708	410	969425608	1	1
968602008	600	967498008	1380	1	969426008	407	96022627	4	1
968602108	600	967498008	1381	1	969431908	407	96022627	6	1
968602208	600	967498008	1382	1	969450308	466	96074082	2310	1
968602508	571	918730808	263	1	969450708	572	918730808	346	1
968602608	571	918730808	300	1	969450708	572	918730808	347	1
968602708	571	918730808	301	1	969456008	466	96074082	2322	2
968602808	571	918730808	302	1	969543308	290	917962508	1	1
968602908	571	918730808	303	1	969543408	291	969543308	1	1
968603008	571	918730808	305	1	969572308	466	96074082	2324	1
968603108	571	918730808	310	1	969619708	415	96024809	2	1
968603208	571	918730808	311	1	969629508	572	918730808	360	1
968603308	571	918730808	340	1	969636808	575	918627208	(1103)	1
968603408	571	918730808	341	1	969699108	407	96022627	14	1
968604008	572	918730808	354	1	969746208	572	918730808	345	1
968604108	572	918730808	356	1	969746308	572	918730808	365	1
968604508	572	918730808	349	1	969767908	564	918118408	4	1
968604608	572	918730808	411	1	969849208	566	969767908	10	1
968607101	380	968558601	5	1	969849308	566	969767908	11	1
968607201	383	968607101	1	1	969849608	566	969767908	19	1
968607301	383	968607101	75	1	969856308	415	96024809	8	1
968612908	601	968543908	252	1	969856508	617	915927808	1	1
968613408	573	919028108	472	1	969856608	619	969856508	10	1
968613508	573	919028108	473	1	969865508	566	969767908	(380)	1
968613608	573	919028108	474	3	969865608	566	969767908	(381)	1
968613708	573	919028108	475	1	969865708	566	969767908	(382)	1
968613808	573	919028108	477	1	969904608	461	96074081	16	1
968613908	573	919028108	478	1	969962808	466	96074082	2325	1
968614008	573	919028108	479	1	97000274	361	917304708	2	1
968661408	269	918811108	405	2	97000275	361	917304708	3	1
968693208	484	919940408	30	1	97000276	361	917304708	4	1
968700608	409	96017568	10	1	97000277	361	917304708	5	1
968714508	763	917695308	1	1	97000279	346	916162508	5	1
968764008	268	918811108	5	1	970003708	272	96020819	7	1
968764108	268	918811108	6	1	97000389	355	916163008	6	1

Item	Page	Assembly	Pos.	Quantity	Item	Page	Assembly	Pos.	Quantity
97000436	352	916168308	1	1	97006057	349	966497908	19	1
97000437	352	916168308	2	1	97006461	355	916163008	9	1
97000438	352	916168308	3	1	97006624	355	916163008	4	1
97000440	352	916168308	4	1	97006863	338	917305408	16	1
97000442	352	916168308	5	1	97006874	338	917305408	32	6
97000466	338	917305408	10	1	97006875	338	917305408	36	1
97000467	338	917305408	11	1	97006876	338	917305408	37	1
97000469	338	917305408	15	1	97007030	386	917894308	2	1
97000470	338	917305408	14	1	97007043	364	966253908	8	1
97000492	361	917304708	26	1	97007597	339	917305408	60	4
97000516	361	917304708	31	1	97007649	332	968462608	2	1
97000517	361	917304708	32	1	97008171	364	966253908	5	1
97000735	329	916170808	2	1	97008548	441	966707708	2	1
97001013	340	966282308	1	1	97008549	441	966707708	1	1
97001014	341	966282408	1	1	97008572	346	916162508	13	1
97001015	338	917305408	3	1	97009160	334	917304508	7	2
97001048	338	917305408	6	1	97009799	111	919933708	101	1
97001095	363	966230508	3	2	97010811	502	96025348	4	1
97001102	364	966253908	1	1	97010812	502	96025348	5	1
97001103	364	966253908	3	2	97010814	502	96025348	6	2
97001109	364	966253908	6	2	97010815	502	96025348	8	1
97001248	352	916168308	6	1	97011246	319	919010108	22	1
97001249	352	916168308	7	1	97011478	47	968374708	27	2
97001250	352	916168308	8	2	97011689	111	919933708	95	1
97001317	326	968483708	25	1	97011690	111	919933708	96	1
97001404	338	917305408	5	1	97012017	349	966497908	29	2
97001553	338	917305408	17	1	97012184	361	917304708	44	1
97001589	338	917305408	4	1	97012288	329	916170808	6	1
97001665	124	918728408	20	1	97013089	268	918811108	20	1
97001699	340	966282308	2	1	97013718	431	96056347	(1)	1
97001700	341	966282408	2	1	970148308	661	91000050	10	1
97001711	361	917304708	33	1	970148308	664	91000051	10	1
97001760	361	917304708	34	1	970148308	667	91000052	10	1
97002207	338	917305408	18	1	97015049	502	96025348	7	1
97002209	338	917305408	19	1	97015051	507	968015808	1	1
97002609	338	917305408	23	1	97015052	507	968015808	2	1
97002645	329	916170808	3	1	97015722	319	919010108	16	1
97002990	361	917304708	15	1	97016304	111	919933708	49	1
97002990	395	918810308	47	4	97016796	502	96025348	11	1
97003164	356	966408908	1	1	97016807	47	968374708	12	4
97003298	338	917305408	24	1	97017044	111	919933708	90	4
97003558	349	966497908	1	1	97017045	111	919933708	91	4
97003560	346	916162508	2	1	97017046	111	919933708	92	4
97003561	346	916162508	3	1	97019129	361	917304708	52	1
97003792	47	968374708	31	2	97020761	315	917357108	3	1
97003805	321	96015921	10	1	97020762	315	917357108	4	1
97003985	444	918759708	18	4	97020763	315	917357108	30	1
97003990	444	918759708	20	1	97022452	431	96056347	53	1
97004696	340	966282308	3	1	97024781	346	916162508	19	1
97005040	352	916168308	9	1	97024783	346	916162508	24	1
97005042	352	916168308	10	2	97025080	624	96036820	24	1
97005143	340	966282308	4	1	97025127	349	966497908	35	3
97005144	341	966282408	3	1	97025484	268	918811108	10	4
97005272	349	966497908	3	1	97025520	724	967695508	1	1
97005273	349	966497908	4	1	97025690	334	917304508	8	1
97005289	349	966497908	5	1	97026779	361	917304708	54	1
97005290	349	966497908	6	1	97027312	407	96022627	18	3
97005291	349	966497908	7	1	97027494	339	917305408	65	1
97005309	349	966497908	11	9	97028159	338	917305408	48	4
97006055	349	966497908	18	1	970298308	655	91000049	51	1

Item	Page	Assembly	Pos.	Quantity	Item	Page	Assembly	Pos.	Quantity
970298308	661	91000050	51	1	97042788	124	918728408	14	1
970298308	664	91000051	51	1	97043211	268	918811108	22	1
970298308	667	91000052	51	1	97043680	407	96022627	31	1
970298308	670	91000053	51	1	97044861	47	968374708	32	2
97030182	734	96056553	2	1	97044948	272	96020819	5	1
97030183	268	918811108	12	1	97044949	272	96020819	6	1
97030562	736	96056560	3	1	97045050	268	918811108	25	1
97032616	52	968374908	5	2	97045111	268	918811108	19	1
97032617	52	968374908	4	4	97045170	268	918811108	(297)	1
97033487	346	916162508	7	1	97045292	340	966282308	5	1
97035300	315	917357108	12	1	97045515	771	918596708	23	2
970365108	263	918728708	10	2	97045516	763	917695308	18	2
97036732	111	919933708	68	1	97045516	768	91001040	6	2
97037383	461	96074081	82	1	97045516	771	918596708	10	1
97037477	339	917305408	67	2	97045517	768	91001040	7	1
97037626	47	968374708	26	2	97045517	771	918596708	11	1
97037945	47	968374708	28	2	97045610	268	918811108	200	1
97037952	111	919933708	18	1	97045637	407	96022627	20	1
97038431	268	918811108	13	4	97045987	476	918729308	1	2
97038433	334	917304508	16	1	97045991	411	96022943	2	1
97038824	127	968305308	1	1	97046043	346	916162508	18	1
97038825	127	968305308	2	1	97046324	392	969300008	10	1
97038827	127	968305308	4	2	97046326	392	969300008	13	1
97038833	386	917894308	12	1	97046328	392	969300008	16	1
97038834	386	917894308	13	1	97046567	446	96019783	12	1
97038835	386	917894308	14	1	97046568	446	96019783	11	1
97038836	386	917894308	15	1	97047025	272	96020819	8	1
97038837	386	917894308	16	1	97047056	407	96022627	25	1
97038838	386	917894308	17	1	97047477	473	96051762	4	2
97039169	415	96024809	10	1	97047984	268	918811108	16	1
97039558	332	968462608	1	1	97048294	407	96022627	24	1
97039859	473	96051762	7	5	97048362	407	96022627	9	1
97040100	52	968374908	6	2	97049599	407	96022627	36	1
97040356	315	917357108	16	3	97049613	407	96022627	37	1
97041747	268	918811108	23	1	97050040	781	968940708	1	1
97041782	272	96020819	4	1	97050040	782	968940808	1	1
97041914	326	968483708	8	1	97050041	781	968940708	2	1
97041915	326	968483708	9	1	97050043	782	968940808	2	1
97041916	326	968483708	10	1	970501108	723	964502908	8	4
97042014	326	968483708	(2)	1	97050857	392	969300008	11	1
97042015	326	968483708	(3)	1	97051324	432	96056347	66	1
97042016	326	968483708	(4)	1	97051989	315	917357108	35	1
97042029	272	96020819	3	1	97052119	349	966497908	8	1
97042031	268	918811108	252	1	97053105	411	96022943	5	1
97042032	268	918811108	253	1	97053106	411	96022943	7	1
97042067	444	918759708	13	2	97053107	411	96022943	8	1
97042067	446	96019783	18	1	97053660	763	917695308	(1)	1
97042068	263	918728708	251	1	97053673	763	917695308	5	1
97042069	392	969300008	8	1	97053674	763	917695308	6	1
97042070	392	969300008	19	1	97053675	763	917695308	7	1
97042071	263	918728708	252	1	97054040	52	968374908	3	2
97042071	392	969300008	9	1	97055365	392	969300008	15	1
97042155	392	969300008	6	1	97055366	268	918811108	201	1
97042185	476	918729308	250	1	97055658	470	919674308	103	1
97042207	124	918728408	6	1	97055661	470	919674308	3	3
97042444	47	968374708	16	1	97055891	470	919674308	2	1
97042444	63	967301408	(1)	1	97055896	470	919674308	4	1
97042667	19	96062225	11	2	97056627	415	96024809	11	1
97042701	124	918728408	9	1	97057024	476	918729308	5	1
97042787	124	918728408	18	1	97057135	444	918759708	31	1

Item	Page	Assembly	Pos.	Quantity	Item	Page	Assembly	Pos.	Quantity
97057512	575	918627208	20	1	97085847	461	96074081	3	2
97058579	562	919528608	4	1	97086973	421	96044787	2	2
97058580	407	96022627	35	1	97087173	778	96062033	4	2
97058602	411	96022943	6	1	97087497	658	96014777	7	2
97058663	411	96022943	1	1	97087617	658	96014777	2	1
97059260	461	96074081	2	1	97087964	476	918729308	6	1
970596208	367	919235408	3	1	97088496	361	917304708	56	1
97060224	470	919674308	5	1	97088601	760	918533508	44	1
97060689	111	919933708	100	1	97088602	760	918533508	48	1
97061151	268	918811108	3	1	97089358	327	96025887	4	1
97061277	420	919484908	20	2	97091350	280	96035595	8	1
97061306	268	918811108	4	1	97092340	577	96033759	1	2
97061320	268	918811108	8	1	97092558	47	968374708	15	1
97062383	768	91001040	18	1	97093827	473	96051762	5	4
97062384	768	91001040	19	1	97094637	349	966497908	20	10
97063866	566	969767908	(2)	1	97094940	111	919933708	107	1
97063985	407	96022627	32	1	97095079	446	96019783	24	1
97064219	461	96074081	80	1	97095949	272	96020819	100	1
97064220	461	96074081	81	1	97096913	760	918533508	22	1
97066655	562	919528608	7	1	97096918	395	918810308	2	2
97066656	562	919528608	9	1	97098446	100	96045217	2	2
97066840	268	918811108	(299)	1	97098446	642	96045219	1	1
97067161	476	918729308	2	1	97098446	674	91000054	88	1
97067162	476	918729308	3	1	97098868	473	96051762	3	1
97067163	476	918729308	4	1	97098871	470	919674308	7	3
97067253	407	96022627	23	1	97098872	470	919674308	8	1
97068500	458	91003833	5	1	97098876	470	919674308	102	1
97070023	747	919933308	27	1	97098877	470	919674308	104	1
97071587	268	918811108	28	1	97098878	473	96051762	103	1
97071962	329	916170808	15	1	97098879	470	919674308	105	1
97071963	329	916170808	16	1	97100175	407	96022627	22	1
97072035	346	916162508	26	4	97100178	407	96022627	34	1
97072740	268	918811108	27	1	97100184	407	96022627	30	1
97072923	268	918811108	(1)	1	97100393	411	96022943	4	1
97072959	268	918811108	30	1	97100598	287	96024716	3	1
97075057	268	918811108	26	1	97100731	287	96024716	4	1
970759803	30	992078314	4	1	97103234	285	918955208	10	1
970760103	30	992078314	7	1	97105652	327	96025887	3	1
970760403	30	992078314	5	1	971067708	726	967321308	1	1
970760703	30	992078314	6	1	97108842	786	917028508	2	3
970762808	33	967304508	(1)	2	97111977	125	963260408	8	1
970762808	47	968374708	30	1	97111977	126	96049764	8	1
970771908	33	967304508	(2)	1	971135808	723	964502908	19	1
970771908	47	968374708	29	1	97114100	367	919235408	9	24
97077297	268	918811108	9	1	97116341	306	96066239	1	1
97077309	268	918811108	(2)	3	97116895	367	919235408	8	3
970780908	290	917962508	9	2	97117576	263	918728708	4	1
97078977	754	919932208	(1)	2	97117720	577	96033759	2	1
97078979	754	919932208	(2)	2	97118866	473	96051762	9	2
97078980	754	919932208	(3)	2	97119563	280	96035595	4	1
97080775	52	968374908	13	4	97122611	283	96038054	2	1
97081862	327	96025887	6	2	97123127	283	96038054	1	1
97081905	446	96019783	23	1	97124340	454	919501608	5	4
970836008	444	918759708	30	1	97126551	655	91000049	10	2
97083880	506	926891108	1	1	97127072	102	914860608	13	1
97084140	658	96014777	1	2	97127896	473	96051762	8	2
97084142	658	96014777	3	2	97128523	703	96063458	4	1
97084143	658	96014777	4	2	97130445	420	919484908	16	4
97084144	658	96014777	5	2	97130460	420	919484908	21	2
97084676	415	96024809	19	1	97131530	111	919933708	110	1

Item	Page	Assembly	Pos.	Quantity	Item	Page	Assembly	Pos.	Quantity
97131533	421	96044787	1	1	97156840	655	91000049	66	1
97131534	422	96044789	1	1	97156873	692	96063456	7	1
97131535	422	96044789	4	1	97158453	778	96062033	5	4
97131537	422	96044789	11	2	97158717	595	96062735	3	1
97131538	422	96044789	12	2	97160609	107	91003809	1	1
97131661	645	919950308	100	1	97160916	656	91000049	95	8
97131662	645	919950308	101	1	97160916	674	91000054	90	2
97132168	119	96045222	24	2	97160917	656	91000049	96	2
97132169	119	96045222	25	2	97162173	606	91002360	6	1
97132207	100	96045217	1	1	97162206	604	96066401	10	1
97132325	461	96074081	4	1	971636608	399	962282208	2	1
97132326	461	96074081	5	1	971636608	401	962282308	2	1
97132471	458	91003833	3	1	97165309	661	91000050	71	2
97132679	423	96045536	1	1	97165309	664	91000051	71	2
97133214	673	91000054	57	1	97165309	667	91000052	71	2
97133540	48	96046146	1	1	97165309	670	91000053	71	2
97133541	48	96046146	2	1	97167074	655	91000049	48	12
97133542	48	96046146	3	1	97167074	661	91000050	48	12
97134347	562	919528608	3	1	97167074	664	91000051	48	12
97134816	422	96044789	10	2	97167074	667	91000052	48	12
97134822	322	96057226	2	1	97170279	346	916162508	28	1
97136698	323	96048757	1	1	97170326	349	966497908	30	1
97136699	323	96048757	2	1	97172678	420	919484908	15	4
97136700	323	96048757	3	1	971749908	111	919933708	2	2
97138345	604	96066401	1	1	97175640	502	96025348	9	1
97138958	338	917305408	21	1	97176134	736	96056560	9	1
97139571	562	919528608	5	1	971799808	581	96062734	28	2
97139849	420	919484908	18	1	971799908	581	96062734	29	2
97140373	652	919935408	13	2	971805708	395	918810308	19	4
971434408	517	96045552	194	1	971812308	581	96062734	26	1
97145319	661	91000050	12	2	971812408	581	96062734	27	1
97145502	655	91000049	25	2	971907008	773	96037297	3	1
97146006	747	919933308	9	4	971973608	399	962282208	3	1
97147778	673	91000054	74	1	971973608	401	962282308	3	1
97148691	92	96060493	5	1	971974108	395	918810308	21	4
97148691	93	96060494	5	1	971974208	395	918810308	22	2
97150626	658	96014777	6	2	972140108	374	916109208	5	1
97151431	595	96062735	4	1	972260808	679	91000055	43	4
97153021	673	91000054	37	1	972261508	679	91000055	4	2
97153781	664	91000051	12	2	972335908	655	91000049	70	1
97153781	667	91000052	12	2	972373708	667	91000052	19	2
97153784	670	91000053	12	2	972373708	670	91000053	19	2
97153784	673	91000054	12	2	972373708	674	91000054	85	2
97153848	703	96063458	5	1	972373808	661	91000050	50	2
971539808	778	96062033	1	1	972373808	664	91000051	50	2
971539908	778	96062033	2	1	972373808	667	91000052	50	2
97154023	656	91000049	79	2	972373808	670	91000053	50	2
97154297	655	91000049	49	2	972373808	674	91000054	86	2
97154298	661	91000050	49	2	972392108	661	91000050	19	1
97154299	664	91000051	49	2	972392108	664	91000051	19	1
97154300	667	91000052	49	2	972426708	661	91000050	33	4
97154530	87	96062922	2	1	972426708	664	91000051	33	4
97155739	615	919392208	2	2	972426708	667	91000052	33	4
97155791	688	96072367	2	2	972426708	670	91000053	33	4
97155801	349	966497908	37	10	972426708	673	91000054	60	4
971565208	334	917304508	9	1	972503408	124	918728408	15	1
97156836	655	91000049	65	7	972608108	626	919616808	2	1
97156837	655	91000049	62	1	972608208	626	919616808	6	1
97156838	673	91000054	34	1	972965408	263	918728708	250	1
97156839	655	91000049	67	5	973021008	295	969219208	5	1

Item	Page	Assembly	Pos.	Quantity	Item	Page	Assembly	Pos.	Quantity
973073208	409	96017568	100	1	976249108	675	964283508	1	1
973073308	409	96017568	101	1	976514408	70	915447908	25	2
973105408	376	919935508	26	2	976514908	70	915447908	26	2
973106708	376	919935508	20	4	976515008	70	915447908	27	2
973114708	376	919935508	21	4	976515108	70	915447908	28	2
973116808	378	963564908	6	2	976536208	507	968015808	3	1
973272208	623	915403108	5	1	976540508	22	96062226	25	1
973536508	378	963564908	8	6	976540508	28	96062228	25	1
973567608	19	96062225	20	1	976540808	22	96062226	31	2
973618208	269	918811108	377	2	976540808	28	96062228	31	1
973635308	721	915415908	3	3	976541108	119	96045222	8	4
973717208	268	918811108	18	2	976541308	61	917155308	12	4
973717308	268	918811108	17	1	976541508	61	917155308	11	1
973720808	407	96022627	27	1	976638108	376	919935508	24	1
973720808	562	919528608	8	1	976641108	315	917357108	5	1
973733508	268	918811108	21	1	976641208	315	917357108	6	1
973767608	409	96017568	102	1	976641308	315	917357108	7	1
973861408	268	918811108	202	1	976641408	315	917357108	8	1
973998708	441	966707708	3	1	976673908	315	917357108	27	6
974150408	111	919933708	84	1	976822308	598	96075086	(2)	1
974150508	111	919933708	85	1	976917008	692	96063456	4	1
974150608	111	919933708	86	1	976955508	575	918627208	2	1
974150708	111	919933708	87	1	976986008	315	917357108	9	4
974497908	581	96062734	21	1	976993208	47	968374708	1	4
974501208	581	96062734	30	2	977240008	30	992078314	(2)	2
974558708	269	918811108	402	1	977240208	22	96062226	19	1
974656608	416	969399608	7	1	977240208	27	96062228	19	1
974657908	415	96024809	17	1	977240308	30	992078314	8	2
974680008	327	96025887	2	2	977242408	77	990618314	5	2
974730008	581	96062734	20	2	977252108	78	964765008	1	1
974742308	410	969425608	7	1	977253208	34	967304508	614	2
974792608	407	96022627	(1)	1	977267208	30	992078314	11	4
974911108	747	919933308	20	1	977430408	395	918810308	10	2
974911208	747	919933308	21	1	977441008	22	96062226	22	2
974922808	326	968483708	15	6	977441008	27	96062228	22	2
975040308	321	96015921	4	1	977444008	395	918810308	15	1
975170608	415	96024809	18	1	977444108	395	918810308	16	1
975208408	321	96015921	6	1	977444308	395	918810308	17	1
975218508	331	916162808	1	2	977444408	395	918810308	18	1
975218608	331	916162808	2	6	977753708	61	917155308	13	1
975230508	780	917508508	7	2	977905308	61	917155308	14	1
975257708	374	916109208	6	4	978068708	22	96062226	44	8
975352908	595	96062735	1	1	978068708	28	96062228	44	8
975384508	331	916162808	3	6	978172508	431	96056347	13	1
975529708	407	96022627	150	2	978461908	517	96045552	186	1
975555308	764	963904108	1	1	978661408	508	966193108	1	1
975686908	70	915447908	6	4	978673908	111	919933708	11	2
975758508	70	915447908	3	4	978674008	111	919933708	12	3
975761808	454	919501608	2	2	978674108	111	919933708	14	13
975762108	635	915090008	9	4	978674308	111	919933708	28	2
975766808	125	963260408	3	1	978674408	111	919933708	29	5
975766808	126	96049764	3	1	978674508	111	919933708	31	1
975778508	124	918728408	16	2	978674608	111	919933708	32	1
975809508	111	919933708	76	1	978674808	111	919933708	63	4
975850708	338	917305408	7	1	978674808	688	96072367	1	1
975874208	290	917962508	8	1	978674808	778	96062033	3	6
976094108	329	916170808	5	1	978674908	111	919933708	64	1
976094308	329	916170808	7	1	978675008	111	919933708	66	3
976167908	431	96056347	16	1	978787708	81	96062917	21	4
976193208	329	916170808	8	1	978787708	263	918728708	12	4

Item	Page	Assembly	Pos.	Quantity	Item	Page	Assembly	Pos.	Quantity
978787708	470	919674308	6	10					
978787708	566	969767908	(3)	10					
978867108	111	919933708	33	2					
979009508	661	91000050	52	1					
979009508	664	91000051	52	1					
979009508	667	91000052	52	2					
979009508	670	91000053	52	2					
979009508	674	91000054	87	2					
979022508	350	965784408	6	1					
979022608	350	965784408	7	2					
979132008	673	91000054	80	1					
979132008	726	967321308	5	1					
979142208	350	965784408	8	4					
979206708	338	917305408	8	1					
979206908	338	917305408	20	1					
979207008	321	96015921	3	1					
979240608	350	965784408	1	1					
979243408	350	965784408	2	1					
979243508	350	965784408	3	1					
979243608	350	965784408	4	2					
979320608	402	916049908	1	1					
979326008	315	917357108	15	1					
979383308	111	919933708	62	1					
979489508	402	916049908	3	1					
979537108	415	96024809	16	1					
979589208	127	968305308	5	1					
979620608	473	96051762	6	4					
979673208	374	916109208	4	1					
979717908	410	969425608	16	2					
979719508	407	96022627	21	1					
979806608	517	96045552	185	1					
979896308	85	966167808	2	1					
979896608	87	96062922	1	1					
980288008	180	10297295	1000	1					
980288008	195	12820742	1	1					
980288008	297	11068050	1000	1					
980288008	300	514615408	1	1					
980288008	302	11341871	1	1					
980288008	310	10149977	1	1					
980288008	313	12101886	1	1					
980288008	344	11182242	1	1					
980288008	390	11083438	1	1					
980288008	452	553174008	1000	1					
980288008	527	10280184	1000	1					
980288008	553	12108313	1000	1					
980288008	557	10037616	1	1					
980288008	569	571352308	1000	1					
9885529	249	9078962	4	1					
9886756	174	10129474	9	1					
9888259	137	10154379	12	6					
9889290	210	9072906	(2)	2					
9889837	261	12487540	90	1					
990618314	76	914950308	1	6					
990840414	19	96062225	15	1					
991456314	53	915562508	2	4					
992078314	19	96062225	4	1					
997040101	747	919933308	31	1					
997040401	768	91001040	4	1					
997040401	771	918596708	6	1					

Description	Item	Pos.	Quantity	Page	Assembly	Description
	96044789	12	2	420	919484908	FALL PROTECTION
12-SIDED SCREW M10X25 X5N	12475399	4	1	222	10140729	EXHAUST TC MOUNTING
A COLUMN CLADDING LEFT 1	97002207	18	1	338	917305408	INTERNAL PANELLING INSTA
A COLUMN CLADDING RIGHT 1	97002209	19	1	338	917305408	INTERNAL PANELLING INSTA
A-HEADLIGHT SLEWING PLA	918988908	327	1	14		LIEBHERR LTR 1100
ABSORBER	10650488	66	1	397	10877138	OPERATOR SEAT
ACCESS COMPL	991456314	2	4	53	915562508	CRAWLER OUTFIT
ACCESSORIES	928620108	2	1	102	914860608	TOOLS AND ACCESSORIES
ACCESSORIES AIR COMPRES	10145278	334	1	133	13455311	DIESEL ENGINE
ACTIVATOR 1000ML	870004108	23	1	346	916162508	WINDOW ASSEMBLY
ACTIVATOR 250ML DOSE	10815283	14	1	346	916162508	WINDOW ASSEMBLY
ACTUATING UNIT	571935508	(1)	1	369	933074801	SLEWING GEAR DRIVE
ACTUATION SPIKE GD-ZN SW	704253408	(1)	1	85	966167808	COVER COMPL.
ACTUATION SPIKE GD-ZN SW	704253408	7	4	85	966167808	COVER COMPL.
ACTUATION SPIKE GD-ZN SW	704253408	14	1	287	96024716	BATTERY BOX, PRE-ASSEMB
ACTUATION SPIKE GD-ZN SW	704253408	101	2	417	969392008	FRONT LEFT-HAND HOOD
ADAPTER CABLE AWG22+CAN	12105779	9	1	87	96062922	MOUNTING PLATE PRE-ASS.
ADAPTER CABLE AWG22+CAN	12105779	20	1	498	919940108	SWITCHBOX MOUNTING PART
ADAPTER PRE-ASS.	918533508	1	1	757	91001038	MECH. DOUBLE FOLD JIB PR
ADAPTER WELDED CONSTRU	96013744	1	1	760	918533508	ADAPTER PRE-ASS.
ADAPTOR 18-POL SPF	660024508	29	1	498	919940108	SWITCHBOX MOUNTING PART
ADAPTOR 19.0X17 S235JRC+C	97051324	66	1	432	96056347	ELECTRIC ADD-ON PARTS CA
ADAPTOR 32X185X45 PAGF30	979243408	2	1	350	965784408	ROOF WINDOW PRE-ASS.
ADD HEATING SUPERSTRUCT	918759708	145	1	13		LIEBHERR LTR 1100
ADD-ON PARTS	927234408	500	1	725	918258408	EL.2 HOISTING LIMIT SWITCH
ADD-ON PARTS CAMERA DB-H	915403108	1	1	622	918805408	CAMERA MONITOR OW
ADD-ON PARTS TELE	917825608	287	1	14		LIEBHERR LTR 1100
ADD-ON PARTS WORK FLOOD	96033759	10	1	576	918988908	A-HEADLIGHT SLEWING PLA
ADD.HYDR.UNIT SUPPORT C	917155508	59	1	12		LIEBHERR LTR 1100
ADD.HYDR.UNIT SUPPORT C	967314108	4	1	72	917155508	ADD.HYDR.UNIT SUPPORT CY
ADDITIONAL BALLAST	915090108	149	1	13		LIEBHERR LTR 1100
ADDITIONAL ELECTRICS	913978308	17	1	619	969856508	ADDITIONAL HYDRAULICS
ADDITIONAL HYDRAULICS	915927808	488	1	15		LIEBHERR LTR 1100
ADDITIONAL HYDRAULICS	969856508	1	1	617	915927808	ADDITIONAL HYDRAULICS
ADDITIONAL KIT	965356108	30	1	288	96023914	ELECTRIC FOR BATTERY BOX
ADDITIONAL LABEL.FACTORY	91003809	72	1	12		LIEBHERR LTR 1100
ADDITIONAL SIGNAGE CALIF	919553608	78	1	12		LIEBHERR LTR 1100
ADDNL.HEATING, PRE-ASSE	96019783	1	1	444	918759708	ADD HEATING SUPERSTRUCT
ADDNL.HYDR. FOLDING JIB	915928808	229	1	14		LIEBHERR LTR 1100
ADDNL.HYDR. FOLDING JIB	966004808	4	1	715	915928808	ADDNL.HYDR. FOLDING JIB
ADHESIVE 600ML FC-BEUTEL	811203308	15	1	346	916162508	WINDOW ASSEMBLY
ADHESIVE 600ML FC-BEUTEL	811203308	48	1	361	917304708	SLIDING DOOR INSTALLATION
ADHESIVE CLEANER 250ML	811205108	47	1	361	917304708	SLIDING DOOR INSTALLATION
ADHESIVE FOIL OUTSIDE HA	97088496	56	1	361	917304708	SLIDING DOOR INSTALLATION
ADHESIVE INSULATING STRIP	802102008	150	13.5	409	96017568	RADIATOR HOOD CPL.
ADHESIVE INSULATING STRIP	802102008	30	15	411	96022943	SOUND PROOFING/SOUND I
ADJUSTING SCREW	510779808	28	1	37	510438508	PRESSURE RELIEF VALVE
ADJUSTING SCREW M10X1	10012225	5	2	165	11448005	ROCKER ARM BRACKET PRE
ADJUSTING SCREW M10X1	10012225	5	2	166	12549825	ROCKER ARM BRACKET PRE
ADJUSTMENT	10801751	2	1	43	592326914	VARIABLE DISPLACEMENT MO
AERATION FILTER	510667308	102	2	295	969219208	OIL TANK PRE-ASS.
AGGREGATE SUPPORT PRE-	12542812	1	1	140	13782803	AGGREGATE SUPPORT PRE-A
AGGREGATE SUPPORT PRE-	13782803	1	1	139	10147687	POWER UNIT SUPPORT ATT
AGITATOR PADDLE	10014712	27	1	480	10327065	ELECTRIC PUMP
AIR COMPRESSOR	10650490	85	1	397	10877138	OPERATOR SEAT
AIR COMPRESSOR 293CM3	5700161	1	1	207	9080294	AIR COMPRESSOR PRE-ASSY
AIR COMPRESSOR PRE-ASSY.	9080294	1	1	206	10127566	INSTALLATION BRAKE COMPR
AIR COND. COMPRESSOR A	12418347	340	1	133	13455311	DIESEL ENGINE
AIR COND. UNIT SUPERSTRU	918627208	301	1	14		LIEBHERR LTR 1100
AIR CONDITIONING COMPRES	12922849	1	1	214	13719288	COMPRESSOR FOR AIR CON

Description	Item	Pos.	Quantity	Page	Assembly	Description
AIR CONDITIONING UNIT	11083498	1	1	386	917894308	HEATING CRANE DRIVER'S CA
AIR DRYER	502657308	55	1	566	969767908	PIPEWORK AIR INSTALLATIO
AIR DUCT	916168308	3	1	334	917304508	CRANE OPERATOR CABIN P
AIR DUCT 128X523X170 PP SP	97000437	2	1	352	916168308	AIR DUCT
AIR DUCT 152X627X339 PP SP	97000438	3	1	352	916168308	AIR DUCT
AIR DUCT 81X233X419 PP SPF	97000436	1	1	352	916168308	AIR DUCT
AIR FILTER 12,7M³/MIN	10876238	100	1	476	918729308	AIR FILTER UNIT
AIR FILTER UNIT	918729308	165	1	13		LIEBHERR LTR 1100
AIR GUIDE CHANNEL 39X75X	97004696	3	1	340	966282308	PANELLING,LEFT
AIR GUIDE L 107X394X947 PP	97000440	4	1	352	916168308	AIR DUCT
AIR GUIDE L 113X705X1091 AB	97001699	2	1	340	966282308	PANELLING,LEFT
AIR GUIDE L 144X143X275 PV	97001248	6	1	352	916168308	AIR DUCT
AIR GUIDE R 100X714X953 AB	97001700	2	1	341	966282408	PANELLING
AIR GUIDE R 109X391X941 PP	97000442	5	1	352	916168308	AIR DUCT
AIR GUIDE R 143X150X273 PV	97001249	7	1	352	916168308	AIR DUCT
AIR GUIDING HOSE 100/127 X	97042185	250	1	476	918729308	AIR FILTER UNIT
AIR INTAKE ASSEMBLY R-MOT	10147364	224	1	132	13455311	DIESEL ENGINE
AIR INTAKE PIPE ASS. R-MOT	10147365	220	1	132	13455311	DIESEL ENGINE
AIR SUCTION PIPE R-MOTOR	11415774	1	1	200	10147365	AIR INTAKE PIPE ASS.
AIR TANK EN 286-2 20L 15.5B	502657708	167	1	566	969767908	PIPEWORK AIR INSTALLATIO
AIR TANK EN 286-2 5L 15.5BA	11491896	166	1	566	969767908	PIPEWORK AIR INSTALLATIO
ALLEN KEY GR.3	885166108	29	1	104	928569808	MAIN TOOLS
ANGLE 4X113X40 S315MC FE//	973720808	27	1	407	96022627	SLEWING PLATFORM PANELLI
ANGLE 4X113X40 S315MC FE//	973720808	8	1	562	919528608	OIL COOLER INSTALLATION
ANGLE SCREW DRIVER TX 40	10043002	41	1	104	928569808	MAIN TOOLS
ANGLE SCREW DRIVER TX30	10471363	40	1	104	928569808	MAIN TOOLS
ANGLE TRANSMITTER 360GRA	96049700	20	1	774	96055854	ELEC MECH FOLDING JIB BO
ANGLE TRANSMITTER 360° L	12102806	(2)	1	652	919935408	TELESCOPIC BOOM CPL.
ANGLE TRANSMITTER 360° L	12102806	(1)	1	652	919935408	TELESCOPIC BOOM CPL.
ANGLE TRANSMITTER 360° L	12102806	(151)	1	774	96055854	ELEC MECH FOLDING JIB BO
ANGULAR TRANSMITTER ATT	96037297	5	1	757	91001038	MECH. DOUBLE FOLD JIB PR
ANTENNA	10878172	1	1	650	12257818	CAR RADIO
ANTENNA	12102772	4	1	93	96060494	ANTENNA CPL.
ANTENNA	12102773	4	1	92	96060493	ANTENNA CPL.
ANTENNA AKTIV	12107816	11	1	431	96056347	ELECTRIC ADD-ON PARTS CA
ANTENNA CABLE 1X0,34-2M	12104642	8	1	93	96060494	ANTENNA CPL.
ANTENNA CABLE 1X0,34-2M	12104642	60	1	432	96056347	ELECTRIC ADD-ON PARTS CA
ANTENNA CABLE 1X0,34-4M	12104638	6	1	92	96060493	ANTENNA CPL.
ANTENNA CABLE 1X0,34-4M	12104638	6	1	93	96060494	ANTENNA CPL.
ANTENNA CABLE 1X0,34-5M	12104640	7	1	93	96060494	ANTENNA CPL.
ANTENNA CABLE 1X0,34-5M	12107824	59	1	432	96056347	ELECTRIC ADD-ON PARTS CA
ANTENNA CPL.	96060493	5	1	82	96062918	SWITCH BOX CPL.
ANTENNA CPL.	96060494	6	1	82	96062918	SWITCH BOX CPL.
ANTENNA ROD AKTIV	12108590	(1)	1	431	96056347	ELECTRIC ADD-ON PARTS CA
ANTI-SLIP COATING LTR 1100	917028508	891	1	15		LIEBHERR LTR 1100
ANTI-SLIP SURFACE 1.6X25X	97037477	67	2	339	917305408	INTERNAL PANELLING INSTA
ANTI-SLIP SURFACE 1.6X51X	97108842	2	3	786	917028508	ANTI-SLIP COATING
APPLIANCE SOCKET 2-POL+P	605210608	506	1	90	96062920	WIRING HARNESS
APPLIANCE SOCKET 2-POL+P	605210608	515	1	494	96023971	WIRING HARNESS
APPLIANCE SOCKET 2-POL+P	605210608	502	1	706	96063415	WIRING HARNESS
APPLIANCE SOCKET 2POL+P	605007908	505	5	90	96062920	WIRING HARNESS
APPLIANCE SOCKET 2POL+P	605007908	503	16	490	96063649	WIRING HARNESS
APPLIANCE SOCKET 2POL+P	605007908	508	1	494	96023971	WIRING HARNESS
APPLIANCE SOCKET 2POL+P	605007908	501	1	589	96055198	WIRING HARNESS
ARM REST 310ERGO	774119708	1	1	399	962282208	ARM REST LEFT
ARM REST 310ERGO	774119808	1	1	401	962282308	ARM REST RIGHT
ARM REST LEFT	962282208	1	1	398	96032222	REWORK ARMREST LEFT
ARM REST RIGHT	962282308	1	1	400	96032223	REWORK ARMREST RIGHT
ARM REST SUPPORT 45X65X	971636608	2	1	399	962282208	ARM REST LEFT
ARM REST SUPPORT 45X65X	971636608	2	1	401	962282308	ARM REST RIGHT

Description	Item	Pos.	Quantity	Page	Assembly	Description
ARTICULATED HOOK WRENC	885182808	11	1	102	914860608	TOOLS AND ACCESSORIES
ARTICULATED HOOK WRENCH	885182208	12	1	102	914860608	TOOLS AND ACCESSORIES
ASH TRAY KUNSTSTOFF	10291997	33	1	338	917305408	INTERNAL PANELLING INSTA
ASSEMBLY PARTS F.SLEWIN	918728408	103	1	12		LIEBHERR LTR 1100
ASSEMBLY PLATE PRE-ASS.	967608708	2	1	502	96025348	BASE ASSEMBLY
ASSEMBLY TOOL BOX	790045408	1	1	104	928569808	MAIN TOOLS
ASSORTMENT BOX FLACHSI	10877437	8	1	105	928620108	ACCESSORIES
ATOMIZER PISTOL	12107074	1	1	648	10876885	GREASE SPRAYER
ATTACHABLE SLEEVE HOUSIN	604501708	516	2	91	96062921	WIRING HARNESS
ATTACHABLE SLEEVE HOUSIN	602209708	518	1	91	96062921	WIRING HARNESS
ATTACHABLE SLEEVE HOUSIN	602209708	508	3	426	96023891	WIRING HARNESS
ATTACHABLE SLEEVE HOUSIN	602209708	506	2	428	96022870	WIRING HARNESS
ATTACHABLE SLEEVE HOUSIN	602209708	508	2	490	96063649	WIRING HARNESS
ATTACHABLE SLEEVE HOUSIN	602209708	520	2	500	96059659	CABLES, BASIC CONSTRUCTI
ATTACHABLE SLEEVE HOUSIN	602209708	16	1	612	913753108	RADIO PREPARATION UPPER
ATTACHABLE SLEEVE HOUSIN	602208608	511	2	494	96023971	WIRING HARNESS
ATTACHABLE SLEEVE HOUSIN	602208608	524	1	500	96059659	CABLES, BASIC CONSTRUCTI
ATTACHABLE SLEEVE HOUSIN	602208608	17	1	612	913753108	RADIO PREPARATION UPPER
ATTACHABLE SLEEVE HOUSIN	602319808	521	1	426	96023891	WIRING HARNESS
AUXILIARY DRIVE PRE-ASS.	9078962	1	1	248	9078961	POWER TAKE-OFF ADD-ON
AUXILIARY HOIST.ROPE W.AC	917910708	332	1	14		LIEBHERR LTR 1100
AUXILIARY HOISTING GEAR	96062734	1	1	578	919935608	AUXILIARY HOISTING GEAR C
AUXILIARY HOISTING GEAR C	919935608	330	1	14		LIEBHERR LTR 1100
AUXILIARY REEVING CABLE, C	915037208	440	1	15		LIEBHERR LTR 1100
AXIAL FACE SEAL	749057314	20	1	26	749065314	CARRYING ROLLER CPL
AXIAL FACE SEAL CPL	749068514	4	2	24	749013714	GUIDE WHEEL CPL
AXIAL FAN 24V	10222682	1	1	438	963398008	PREMOUNT.AXIAL FLOW FAN
AXLE	5200017	3	1	24	749013714	GUIDE WHEEL CPL
AXLE 108.0X92 S355J2H FE//ZN	955560208	5	1	723	964502908	BOOM NOSE PRE-ASS.
AXLE 108.0X99 S355J2H FE//ZN	97053673	5	1	763	917695308	GUIDE PULLEY COMPL.
AXLE 170X310 35NICRMOV125	957100008	11	2	124	918728408	ASSEMBLY PARTS F.SLEWING
AXLE 30.0X95 S355J2C+C FE//	97011246	22	1	319	919010108	CRANE OPERATOR CABIN P
AXLE HOLDER	11492235	6	1	739	910543708	LOAD HOOK
AXLE HOLDER 12X108X84 S69	973105408	26	2	376	919935508	MAIN HOIST GEAR
AXLE HOLDER 20X118X220 S	972608208	6	1	626	919616808	LUFFING RAM W. PIVOT
AXLE HOLDER 20x250x119 S69	951913908	12	2	124	918728408	ASSEMBLY PARTS F.SLEWING
AXLE HOLDER 20x250x119 S69	951913908	4	1	626	919616808	LUFFING RAM W. PIVOT
AXLE HOLDER 8X29X100 S23	967230603	10	4	30	992078314	CENTRE PIECE
AXLE HOLDER LN 4/1 S235JR+	997040101	31	1	747	919933308	TRANSPORT MOUNTING
AXLE HOLDER LN 4/4 ZNNI	997040401	4	1	768	91001040	PIVOT SECTION, PRE-ASSEMB
AXLE HOLDER LN 4/4 ZNNI	997040401	6	1	771	918596708	HEAD SECTION PRE-ASS.
AXLE RD100X125 S355J2H FE//	949347508	3	1	768	91001040	PIVOT SECTION, PRE-ASSEMB
AXLE RD100X125 S355J2H FE//	949347508	5	1	771	918596708	HEAD SECTION PRE-ASS.
AXLE RD110X818 35NICRMOV	953656108	31	2	673	91000054	TELESCOPIC SECT.5 PRE-AS
BACK PART	10663466	1	1	397	10877138	OPERATOR SEAT
BALANCER ASSEMBLY	10120186	90	1	131	13455311	DIESEL ENGINE
BALANCER SHAFT PRE-ASS.	10152441	1	2	168	10120186	BALANCER ASSEMBLY
BALL DIN 5401 3	610706308	6	1	720	511479408	LOAD HOLDING VALVE
BALL DIN 5401 6	747000277	22	2	628	12102922	LUFFING CYLINDER
BALL DIN 5401 6 G20	747000208	43	6	71	10356288	SUPPORT CYLINDER
BALL ELEMENT 145X43 PLIXX	975040308	4	1	321	96015921	OPERATING ELEMENT INSTAL
BALL VALVE BKH12-L-10 A3C	510697608	157	1	516	96045552	HYDRAULICS UPPER CARRI
BALL VALVE BKHU DN 10	571723608	30	1	543	10333672	CONTROL BLOCK
BALL VALVE COMBINATION	10333686	158	1	516	96045552	HYDRAULICS UPPER CARRI
BALL VALVE DN20-G 3/4	10044661	101	1	306	96066239	PREMOUNTED FUEL FILTER
BALLAST EXTENSION RAM 110	12102342	1	2	454	919501608	HYDRAULIC BALLASTING
BALLAST MONITORING	919499008	82	1	12		LIEBHERR LTR 1100
BALLAST MONITORING	919502708	160	1	13		LIEBHERR LTR 1100
BALLAST MONITORING ENCO	918802108	161	2	13		LIEBHERR LTR 1100
BALLAST MONITORING ENCO	919284308	142	1	13		LIEBHERR LTR 1100

Description	Item	Pos.	Quantity	Page	Assembly	Description
BANJO COUPLING SWVE 6LLM	7624176	4	1	482	12101719	DISTRIBUTION BLOCK
BASE 1X200X70 DC01 FE//ZNNI	949361408	44	1	747	919933308	TRANSPORT MOUNTING
BASE 1X280X70 DC01 FE//ZNNI	949380908	46	1	747	919933308	TRANSPORT MOUNTING
BASE 2X200X70 DC01 FE//ZNNI	949362208	45	1	747	919933308	TRANSPORT MOUNTING
BASE 2X280X70 DC01 FE//ZNNI	949381008	47	1	747	919933308	TRANSPORT MOUNTING
BASE ASSEMBLY	96025348	2	1	499	96059658	BASE ASSEMBLY CPL.
BASE ASSEMBLY CPL.	96059658	2	1	498	919940108	SWITCHBOX MOUNTING PART
BASE PLATE 108X30X 10 PA6	97086973	2	2	421	96044787	HOLDER PRE-ASSEMBLY
BASIC WIRING CONST.PRE-A	96059660	2	1	500	96059659	CABLES, BASIC CONSTRUCTI
BATTERY 1.5V 16.5AH	613200608	3	10	105	928620108	ACCESSORIES
BATTERY 12V 180AH	10664204	5	2	288	96023914	ELECTRIC FOR BATTERY BOX
BATTERY BOX CPL.	918955208	107	1	12		LIEBHERR LTR 1100
BATTERY BOX ST.CONST. SP	96023028	1	1	287	96024716	BATTERY BOX, PRE-ASSEMB
BATTERY BOX, PRE-ASSEMB	96024716	1	1	285	918955208	BATTERY BOX CPL.
BATTERY MAIN SWITCH	96023960	19	1	288	96023914	ELECTRIC FOR BATTERY BOX
BATTERY TERMINAL CLAMP 1	613206608	21	2	288	96023914	ELECTRIC FOR BATTERY BOX
BATTERY TERMINAL CLAMP 1	613206508	22	2	288	96023914	ELECTRIC FOR BATTERY BOX
BEAM 3X1247X142 S355MC FE	97134347	3	1	562	919528608	OIL COOLER INSTALLATION
BEARING BLOCK 40x115x42	970365108	10	2	263	918728708	DRIVE ASSEMBLY CPL.
BEARING BUSH 195X117 GZ-	704338808	2	2	655	91000049	PIVOT SECTION, PRE-ASSEMB
BEARING BUSH 60X65X28 GLY	9888259	12	6	137	10154379	CRANKCASE PRE-ASSY.
BEARING COVER 31CrMoV9	9072908	3	1	210	9072906	INTERMEDIATE GEAR CPL.
BEARING COVER RING 33117	747258401	4	1	369	933074801	SLEWING GEAR DRIVE
BEARING COVER RING 6219 J	747272501	19	1	381	938759601	ROPE DRUM
BEARING HOUSING, PRE-AS	9078963	1	1	249	9078962	AUXILIARY DRIVE PRE-ASS.
BEARING INSTALLATION BLK	916164208	1	1	319	919010108	CRANE OPERATOR CABIN P
BEARING MOUNT	11100949	13	1	95	10878097	SLIP RING TRANSMITTER
BEARING PA6	976641108	5	1	315	917357108	CRANE DRIVER CAB ADDITIO
BEARING PA6	976641208	6	1	315	917357108	CRANE DRIVER CAB ADDITIO
BEARING PA6	976641308	7	1	315	917357108	CRANE DRIVER CAB ADDITIO
BEARING PLATE 12X105X290 P	283094408	46	2	655	91000049	PIVOT SECTION, PRE-ASSEMB
BEARING PLATE 12X105X290 P	283094408	46	2	661	91000050	TELESCOPIC SECTION 1 PRE
BEARING PLATE 12X70X192 P	283094208	25	2	670	91000053	TELESCOPIC SECT.IV PRE-A
BEARING PLATE 12X70X192 P	283094208	25	2	673	91000054	TELESCOPIC SECT.5 PRE-AS
BEARING PLATE 12X70X202 P	283093908	25	2	661	91000050	TELESCOPIC SECTION 1 PRE
BEARING PLATE 12X70X202 P	283093908	25	2	664	91000051	TELESCOPIC SECT.2 PRE-AS
BEARING PLATE 12X70X202 P	283093908	25	2	667	91000052	TELESCOPIC SECT.3 PRE-ASS
BEARING PLATE 14X105X290 P	283094308	45	2	655	91000049	PIVOT SECTION, PRE-ASSEMB
BEARING PLATE 14X105X290 P	283094308	45	2	661	91000050	TELESCOPIC SECTION 1 PRE
BEARING PLATE 14X105X290 P	283094308	45	4	664	91000051	TELESCOPIC SECT.2 PRE-AS
BEARING PLATE 14X70X192 P	283094108	24	2	670	91000053	TELESCOPIC SECT.IV PRE-A
BEARING PLATE 14X70X192 P	283094108	24	2	673	91000054	TELESCOPIC SECT.5 PRE-AS
BEARING PLATE 14x70x202 P	283093808	24	2	661	91000050	TELESCOPIC SECTION 1 PRE
BEARING PLATE 14x70x202 P	283093808	24	2	664	91000051	TELESCOPIC SECT.2 PRE-AS
BEARING PLATE 14x70x202 P	283093808	24	2	667	91000052	TELESCOPIC SECT.3 PRE-ASS
BEARING PLATE 18X105X290 P	283094708	45	2	667	91000052	TELESCOPIC SECT.3 PRE-ASS
BEARING PLATE 18X105X290 P	283094708	45	2	670	91000053	TELESCOPIC SECT.IV PRE-A
BEARING PLATE 53X57X192 P	283093708	23	2	661	91000050	TELESCOPIC SECTION 1 PRE
BEARING PLATE 53X57X192 P	283093708	23	2	664	91000051	TELESCOPIC SECT.2 PRE-AS
BEARING PLATE 53X57X192 P	283093708	23	2	667	91000052	TELESCOPIC SECT.3 PRE-ASS
BEARING PLATE 53X57X192 P	283093708	23	2	670	91000053	TELESCOPIC SECT.IV PRE-A
BEARING PLATE 53X57X192 P	283093708	23	2	673	91000054	TELESCOPIC SECT.5 PRE-AS
BEARING PLATE 53X87X200 P	283093608	22	2	661	91000050	TELESCOPIC SECTION 1 PRE
BEARING PLATE 53X87X200 P	283093608	22	2	664	91000051	TELESCOPIC SECT.2 PRE-AS
BEARING PLATE 53X87X200 P	283093608	22	2	667	91000052	TELESCOPIC SECT.3 PRE-ASS
BEARING PLATE 53X87X200 P	283093608	22	2	670	91000053	TELESCOPIC SECT.IV PRE-A
BEARING PLATE 53X87X200 P	283093608	22	2	673	91000054	TELESCOPIC SECT.5 PRE-AS
BEARING PLATE 75X140X230 P	97145319	12	2	661	91000050	TELESCOPIC SECTION 1 PRE
BEARING PLATE 75X190X140 P	97153784	12	2	670	91000053	TELESCOPIC SECT.IV PRE-A
BEARING PLATE 75X190X140 P	97153784	12	2	673	91000054	TELESCOPIC SECT.5 PRE-AS

Description	Item	Pos.	Quantity	Page	Assembly	Description
BEARING PLATE 75X200X140 P	97153781	12	2	664	91000051	TELESCOPIC SECT.2 PRE-AS
BEARING PLATE 75X200X140 P	97153781	12	2	667	91000052	TELESCOPIC SECT.3 PRE-ASS
BEARING RING	570109708	3	1	372	570109008	DRIVING GEAR
BEARING RING 42CrMo4+QT	927601701	15	1	383	968607101	PLANETARY GEARBOX
BEARING RING 42CrMo4+QT	927601701	15	1	584	938759801	PLANETARY GEARBOX
BEARING WIPERS UNIT 50X1	97052119	8	1	349	966497908	FRONT WINDOW CPL.
BELT PULLEY 31.5X8PKX215	10146185	1	1	157	10141974	CRANKSHAFT ADD-ON PARTS
BLANK COVER	11822051	33	1	431	96056347	ELECTRIC ADD-ON PARTS CA
BLANKING PLUG	10015404	(1)	1	272	96020819	RADIATOR, PRE-ASSEMBLED
BLANKING PLUG GPN 300 F7	779016501	10	10	334	917304508	CRANE OPERATOR CABIN P
BLANKING PLUG GPN 300 F7	779016501	42	2	361	917304708	SLIDING DOOR INSTALLATION
BLANKING PLUG GPN 360 FO	11698481	5	1	183	12489819	COVERING CAPS - KIT
BLANKING PLUG GPN 360 PE-	11835061	6	2	183	12489819	COVERING CAPS - KIT
BLANKING PLUG ISO 8434-1 PL	477700408	617	3	518	96045552	HYDRAULICS UPPER CARRI
BLANKING PLUG ISO 8434-1 PL	477700508	600	8	63	967301408	PREPARATION HYDR
BLANKING PLUG ISO 8434-1 PL	477700508	702	3	519	96045552	HYDRAULICS UPPER CARRI
BLANKING PLUG ISO 8434-1 PL	477700608	703	1	519	96045552	HYDRAULICS UPPER CARRI
BLANKING PLUG ISO 8434-1 PL	477700108	615	3	518	96045552	HYDRAULICS UPPER CARRI
BLANKING PLUG PE-LD	11066908	311	8	33	967304508	UNDERCARRIAGE HYDRAULIC
BLIND	11002446	27	1	338	917305408	INTERNAL PANELLING INSTA
BLIND	11002447	26	1	338	917305408	INTERNAL PANELLING INSTA
BLIND RIVET 3,0X3,2-5,0	704212108	4	12	508	966193108	RESISTANCE MODULE PRE-A
BLIND RIVET 4,0X10,5	704232308	72	18	502	96025348	BASE ASSEMBLY
BLIND RIVET NUT M10 K=2,0-5	12100265	13	1	334	917304508	CRANE OPERATOR CABIN P
BLIND RIVET NUT M4 K=1,0-3,	413006208	13	4	319	919010108	CRANE OPERATOR CABIN P
BLIND RIVET NUT M6 K=1,5-3,	10042593	11	19	334	917304508	CRANE OPERATOR CABIN P
BLIND RIVET NUT M6 K=1,5-3,	10042593	35	13	361	917304708	SLIDING DOOR INSTALLATION
BLIND RIVET NUT M8 K=3,0-5,0	12100289	12	9	334	917304508	CRANE OPERATOR CABIN P
BLIND RIVET NUT M8 K=3,0-5,0	12100289	2	2	423	96045536	PLATE PRE-ASS.
BLOCK	510713808	1	1	37	510438508	PRESSURE RELIEF VALVE
BLOCK	510714308	14	1	37	510438508	PRESSURE RELIEF VALVE
BLOCK GR.12	511475314	350	1	33	967304508	UNDERCARRIAGE HYDRAULIC
BOLT HANDLE FE//ZNNI8//CN/	96030352	9	1	125	963260408	LOCKING
BOLT HANDLE FE//ZNNI8//CN/	96049765	9	1	126	96049764	LOCKING
BOOM NOSE	915415908	356	1	14		LIEBHERR LTR 1100
BOOM NOSE PRE-ASS.	964502908	1	1	721	915415908	BOOM NOSE
BOOM NOSE WELDED CONST	928659608	1	1	723	964502908	BOOM NOSE PRE-ASS.
BOW-TYPE CLAMP 132 X5CRNI	11963742	184	1	470	919674308	EXHAUST SYSTEM
BOW-TYPE CLAMP 132 X5CRNI	11963742	183	1	473	96051762	EXHAUST SYSTEM PRE-ASSE
BOX NUT AL8 CR6-FREI	477401408	4	1	283	96038054	CONNECTION PIECE
BOX NUT AL8 CR6-FREI	477401408	8	1	444	918759708	ADD HEATING SUPERSTRUCT
BOX NUT DIN 3870 AL10 A3P	477401508	33	1	458	91003833	UREA PLANT
BOX NUT DIN 3870 AL10 A3P	477401508	613	1	518	96045552	HYDRAULICS UPPER CARRI
BOX NUT DIN 3870 AL12 A3C	477401608	701	3	519	96045552	HYDRAULICS UPPER CARRI
BOX NUT DIN 3870 AL15 A3P	477401208	704	1	519	96045552	HYDRAULICS UPPER CARRI
BOX NUT DIN 3870 AL18 A3P	477402408	616	3	518	96045552	HYDRAULICS UPPER CARRI
BOX NUT DIN 3870 AL28 A3P	477401708	628	1	34	967304508	UNDERCARRIAGE HYDRAULIC
BOX NUT DIN 3870 AS10 A3P	477400308	750	2	519	96045552	HYDRAULICS UPPER CARRI
BOX NUT DIN 3870 AS12 A3C	477400408	601	8	63	967301408	PREPARATION HYDR
BOX NUT DIN 3870 AS16 A3P	477400608	655	2	34	967304508	UNDERCARRIAGE HYDRAULIC
BOX NUT DIN 3870 AS30 A3C	477400908	626	4	34	967304508	UNDERCARRIAGE HYDRAULIC
BOX NUT DIN 3870 AS6 A3P	477400108	637	2	598	96075086	HYD.AUX.LIFT GEAR UPPER
BRACE PLATE	964536408	15	4	70	915447908	HYDRAULIC SUPPORT
BRACKET	11171276	(71)	1	397	10877138	OPERATOR SEAT
BRACKET 10 ST	10216529	21	1	575	918627208	AIR COND. UNIT SUPERSTRU
BRACKET 20.0X728 S355J2C+C	951665708	30	1	771	918596708	HEAD SECTION PRE-ASS.
BRACKET LEFT SPF	967588308	3	1	395	918810308	CONTROL STAND
BRACKET RIGHT SPF	967588408	4	1	395	918810308	CONTROL STAND
BRACKET WELDED CONST.	925042108	4	1	747	919933308	TRANSPORT MOUNTING
BRACKET WELDED CONST.	925275608	1	1	748	925280008	CONSOLE PRE-ASS.

Description	Item	Pos.	Quantity	Page	Assembly	Description
BRACKET WELDED CONST.	96045307	1	1	461	96074081	UREA TANK, PRE-MOUNTING
BRACKET WELDED CONST.	963672408	5	1	124	918728408	ASSEMBLY PARTS F.SLEWING
BRACKET WELDED CONST.	964003208	2	4	70	915447908	HYDRAULIC SUPPORT
BRACKET WELDED CONST.	968300908	1	1	124	918728408	ASSEMBLY PARTS F.SLEWING
BRACKET WELDED CONST.	968301008	2	1	124	918728408	ASSEMBLY PARTS F.SLEWING
BRACKET WELDED CONST.	968510608	7	1	124	918728408	ASSEMBLY PARTS F.SLEWING
BRACKET WELDED CONST.	969856308	8	1	415	96024809	SLEWING PLATFORM PANELLI
BRACKET WELDED CONST. FE	96021362	7	1	395	918810308	CONTROL STAND
BRACKET WELDED CONST. FE	96062526	17	1	420	919484908	FALL PROTECTION
BRACKET WELDED CONST. FE	968376808	100	2	52	968374908	LIMIT SWITCH ADD-ON
BRACKET WELDED CONST. R	969304708	1	1	392	969300008	HEATING, PRE-ASSEMBLED
BRACKET WELDED CONST. R	964843708	12	2	395	918810308	CONTROL STAND
BRACKET,LEFT WELDED FE//	925721308	2	1	679	91000055	MECHANICAL EXTENSION SYS
BRACKET,LEFT WELDED FE//	96021363	8	1	395	918810308	CONTROL STAND
BRACKET,LEFT WELDED RAL	964843808	13	1	395	918810308	CONTROL STAND
BRACKET,RIGHT WELDED FE//	925721408	3	1	679	91000055	MECHANICAL EXTENSION SYS
BRACKET,RIGHT WELDED FE//	96021365	9	1	395	918810308	CONTROL STAND
BRACKET,RIGHT WELDED RAL	964843908	14	1	395	918810308	CONTROL STAND
BRAKE ACTUATING UNIT	502807501	(1)	1	383	968607101	PLANETARY GEARBOX
BRAKE MULTI-DISC SET	939589501	(997)	1	383	968607101	PLANETARY GEARBOX
BRAKE PACKING SET	939589601	(998)	1	383	968607101	PLANETARY GEARBOX
BRAKE SPRING SET	939589701	(999)	1	383	968607101	PLANETARY GEARBOX
BS HOUSING HAN 16B	605618308	503	1	589	96055198	WIRING HARNESS
BTB PROGRAMMED	968252908	5	1	87	96062922	MOUNTING PLATE PRE-ASS.
BTT PROGRAMMED BTTC	96033227	9	1	435	96022872	CONTROL PANEL ROOF
BUFFER 30X20 GUMMI 50SH	97025484	10	4	268	918811108	DRIVE ASSEMBLY, PRE-ASSE
BUILT-IN FRAME	12108687	3	1	650	12257818	CAR RADIO
BUILT-IN SOCKET 2-POL	605203908	5	1	435	96022872	CONTROL PANEL ROOF
BUILT-IN VALVE	12101147	3	1	549	10877219	CONTROL BLOCK
BURNER 24V	11826648	39	1	448	10876576	WATER HEATING SYSTEM
BURNER 24V	11826648	(9)	1	448	10876576	WATER HEATING SYSTEM
BUS LINE 2 X 0,5	11840113	6	4.28	90	96062920	WIRING HARNESS
BUS LINE 2 X 0,5	11840113	7	0.3	91	96062921	WIRING HARNESS
BUS LINE 2 X 0,5	11840113	8	0.4	91	96062921	WIRING HARNESS
BUS LINE 2 X 0,5	11840113	9	0.45	91	96062921	WIRING HARNESS
BUS LINE 2 X 0,5	11840113	10	0.45	91	96062921	WIRING HARNESS
BUS LINE 2 X 0,5	11840113	12	4.08	426	96023891	WIRING HARNESS
BUS LINE 2 X 0,5	11840113	13	4.08	426	96023891	WIRING HARNESS
BUS LINE 2 X 0,5	11840113	14	0.17	426	96023891	WIRING HARNESS
BUS LINE 2 X 0,5	11840113	17	4.46	426	96023891	WIRING HARNESS
BUS LINE 2 X 0,5	11840113	10	5.59	493	96023971	WIRING HARNESS
BUS LINE 2 X 0,5	11840113	11	5.59	493	96023971	WIRING HARNESS
BUS LINE 2 X 0,5	11840113	18	5.59	493	96023971	WIRING HARNESS
BUS LINE 2 X 0,5	11840113	371	5.59	493	96023971	WIRING HARNESS
BUS LINE 2 X 0,5	11840113	5	5.23	495	96049294	WIRING HARNESS
BUS LINE 2 X 0,5	11840113	7	0.17	495	96049294	WIRING HARNESS
BUS LINE 2 X 0,5	11840113	8	5.86	495	96049294	WIRING HARNESS
BUS LINE 2 X 0,5	11840113	9	0.17	495	96049294	WIRING HARNESS
BUS LINE 2 X 0,5	11840113	10	5.86	495	96049294	WIRING HARNESS
BUS LINE 2 X 0,5	11840113	11	0.17	495	96049294	WIRING HARNESS
BUS LINE 2 X 0,5	11840113	12	3.86	495	96049294	WIRING HARNESS
BUS LINE 2 X 0,5	11840113	13	0.17	495	96049294	WIRING HARNESS
BUS LINE 2 X 0,5	11840113	14	0.33	495	96049294	WIRING HARNESS
BUSHING	10043610	2	1	209	5700161	AIR COMPRESSOR
BUSHING 10,5X16X19 11SMnP	10145395	6	1	225	10142863	GENERATOR, PRE-ASSEMBLE
BUSHING 14X14X5 PA6 SCHW	97094637	20	10	349	966497908	FRONT WINDOW CPL.
BUSHING 15,1X27,8X10	927520701	26	1	584	938759801	PLANETARY GEARBOX
BUSHING 16.0X11 E235+N GA	974501208	30	2	581	96062734	AUXILIARY HOISTING GEAR
BUSHING 160X180X100	11004996	5	1	628	12102922	LUFFING CYLINDER
BUSHING 16X12 1.4301	97002990	15	1	361	917304708	SLIDING DOOR INSTALLATION

Description	Item	Pos.	Quantity	Page	Assembly	Description
BUSHING 16X12 1.4301	97002990	47	4	395	918810308	CONTROL STAND
BUSHING 35.0X30 42CRMO4+Q	973998708	3	1	441	966707708	MIRROR RETAINER PRE-ASS.
BUSHING 8X6 PA6	97155801	37	10	349	966497908	FRONT WINDOW CPL.
BUSHING HOUSING 1-POL	11118242	504	1	428	96022870	WIRING HARNESS
BUSHING HOUSING 15-POL 20	10874996	503	1	694	96063583	LEAD
BUSHING HOUSING 15-POL 20	12102916	501	1	694	96063583	LEAD
BUSHING HOUSING 18-POL 20	11067833	508	1	90	96062920	WIRING HARNESS
BUSHING HOUSING 18-POL 20	11067833	513	1	490	96063649	WIRING HARNESS
BUSHING HOUSING 2-POL 20	11060619	505	2	495	96049294	WIRING HARNESS
BUSHING HOUSING 2-POL 5A	10424622	511	2	426	96023891	WIRING HARNESS
BUSHING HOUSING 2-POL 5A	10424622	509	1	490	96063649	WIRING HARNESS
BUSHING HOUSING 2-POL BL	11342208	509	1	495	96049294	WIRING HARNESS
BUSHING HOUSING 4-POL PB	11341840	508	1	495	96049294	WIRING HARNESS
BUSHING HOUSING 8-POL 5A	10875280	516	1	426	96023891	WIRING HARNESS
BUSHING RD110X13 S960QL	953726108	9	1	670	91000053	TELESCOPIC SECT.IV PRE-A
BUSHING RD110X13 S960QL	953726108	9	1	673	91000054	TELESCOPIC SECT.5 PRE-AS
BUSHING RD115X13 S960QL	957011308	9	1	661	91000050	TELESCOPIC SECTION 1 PRE
BUSHING RD115X13 S960QL	957011308	9	1	664	91000051	TELESCOPIC SECT.2 PRE-AS
BUSHING RD115X13 S960QL	957011308	9	1	667	91000052	TELESCOPIC SECT.3 PRE-ASS
BUSHING RD150X130 GZ-CU	972503408	15	1	124	918728408	ASSEMBLY PARTS F.SLEWING
BUSHING RD20X7.5 X5CRNI18	97072035	26	4	346	916162508	WINDOW ASSEMBLY
BUSHING SUPPORT 6-POL 16	604526508	501	2	704	96062034	WIRES TERMINAL BOX CPL.
BUSHING SUPPORT 6-POL 16	604526508	502	1	730	96058738	WIRING HARNESS
BUSHING SUPPORT 6-POL 16	604526508	502	2	775	96035674	LEAD
BUSHING SUPPORT 6-POL 28	12104875	502	2	608	96060353	LEAD
BUTTON HEAD SCREW AEHNL	10875475	9	2	327	96025887	PEDAL CANTILEVER INSTALL
BUTTON HEAD SCREW AEHNL	10875475	41	4	376	919935508	MAIN HOIST GEAR
BUTTON HEAD SCREW AEHN	11160744	301	2	280	96035595	EXPANSION TANK PRE-ASS.
BUTTON HEAD SCREW AEHN	11160744	13	3	361	917304708	SLIDING DOOR INSTALLATION
BUTTON HEAD SCREW AEHN	10028237	6	1	734	96056553	LOCATION FIXTURE PRE-ASS.
BUTTON HEAD SCREW AEHN	10813359	20	8	119	96045222	MOUNTING PARTS
BUTTON HEAD SCREW AEHN	10813359	(300)	2	268	918811108	DRIVE ASSEMBLY, PRE-ASSE
BUTTON HEAD SCREW AEHN	10813359	43	7	361	917304708	SLIDING DOOR INSTALLATION
BUTTON HEAD SCREW AEHN	10813359	19	4	444	918759708	ADD HEATING SUPERSTRUCT
BUTTON HEAD SCREW AEHN	10475893	14	10	361	917304708	SLIDING DOOR INSTALLATION
BUTTON HEAD SCREW AEHN	10475893	97	10	656	91000049	PIVOT SECTION, PRE-ASSEMB
BUTTON HEAD SCREW AEHN	10475893	91	2	674	91000054	TELESCOPIC SECT.5 PRE-AS
BUTTON HEAD SCREW AEHN	10875468	302	1	280	96035595	EXPANSION TANK PRE-ASS.
BUTTON HEAD SCREW AEHN	10875468	10	3	327	96025887	PEDAL CANTILEVER INSTALL
BUTTON HEAD SCREW AEHN	10875468	14	12	334	917304508	CRANE OPERATOR CABIN P
BUTTON HEAD SCREW AEHN	10875468	40	73	338	917305408	INTERNAL PANELLING INSTA
BUTTON HEAD SCREW AEHN	10875468	23	6	355	916163008	WIPERS INSTALLATION
BUTTON HEAD SCREW AEHN	10875468	19	5	361	917304708	SLIDING DOOR INSTALLATION
BUTTON HEAD SCREW AEHN	10875468	303	1	407	96022627	SLEWING PLATFORM PANELLI
BUTTON HEAD SCREW AEHN	10875468	22	7	431	96056347	ELECTRIC ADD-ON PARTS CA
BUTTON HEAD SCREW AEHN	10412851	11	12	287	96024716	BATTERY BOX, PRE-ASSEMB
BUTTON HEAD SCREW AEHN	10412851	10	6	329	916170808	CABLE INLET
BUTTON HEAD SCREW AEHN	10412851	8	1	332	968462608	INSTALLATION SWITCH CAB. C
BUTTON HEAD SCREW AEHN	10412851	12	4	361	917304708	SLIDING DOOR INSTALLATION
BUTTON HEAD SCREW AEHN	10412851	301	12	407	96022627	SLEWING PLATFORM PANELLI
BUTTON HEAD SCREW AEHN	10412851	301	4	415	96024809	SLEWING PLATFORM PANELLI
BUTTON HEAD SCREW AEHN	10412851	51	10	458	91003833	UREA PLANT
BUTTON HEAD SCREW AEHN	10412851	305	6	470	919674308	EXHAUST SYSTEM
BUTTON HEAD SCREW AEHN	10412851	24	2	625	96036821	REAR END TURNT. CAMERA E
BUTTON HEAD SCREW AEHN	10412851	7	1	734	96056553	LOCATION FIXTURE PRE-ASS.
BUTTON HEAD SCREW AEHN	10412852	15	6	349	966497908	FRONT WINDOW CPL.
BUTTON HEAD SCREW AEHN	10412852	303	4	415	96024809	SLEWING PLATFORM PANELLI
BUTTON HEAD SCREW AEHN	10412852	306	2	470	919674308	EXHAUST SYSTEM
BUTTON HEAD SCREW AEHN	10412852	8	2	623	915403108	ADD-ON PARTS CAMERA
BUTTON HEAD SCREW AEHN	10412852	30	2	679	91000055	MECHANICAL EXTENSION SYS

Description	Item	Pos.	Quantity	Page	Assembly	Description
BUTTON HEAD SCREW AEHN	10412853	18	8	326	968483708	STEP CPL.
BUTTON HEAD SCREW AEHN	10412853	41	1	361	917304708	SLIDING DOOR INSTALLATION
BUTTON HEAD SCREW AEHN	12102696	25	47	47	968374708	MOUNTING PARTS
BUTTON HEAD SCREW AEHN	12102696	103	4	70	915447908	HYDRAULIC SUPPORT
BUTTON HEAD SCREW AEHN	12102696	310	2	269	918811108	DRIVE ASSEMBLY, PRE-ASSE
BUTTON HEAD SCREW AEHN	12102696	8	10	327	96025887	PEDAL CANTILEVER INSTALL
BUTTON HEAD SCREW AEHN	12102696	300	2	374	916109208	ROTATING PLATFORM LOCK
BUTTON HEAD SCREW AEHN	12102696	320	1	407	96022627	SLEWING PLATFORM PANELLI
BUTTON HEAD SCREW AEHN	12102696	310	2	517	96045552	HYDRAULICS UPPER CARRI
BUTTON HEAD SCREW AEHN	12102696	11	2	575	918627208	AIR COND. UNIT SUPERSTRU
BUTTON HEAD SCREW AEHN	12102696	47	14	581	96062734	AUXILIARY HOISTING GEAR
BUTTON HEAD SCREW AEHN	12102696	2	2	595	96062735	SIGNS
BUTTON HEAD SCREW AEHN	12102696	69	45	655	91000049	PIVOT SECTION, PRE-ASSEMB
BUTTON HEAD SCREW AEHN	12102696	43	27	673	91000054	TELESCOPIC SECT.5 PRE-AS
BUTTON HEAD SCREW AEHN	12102696	58	2	673	91000054	TELESCOPIC SECT.5 PRE-AS
BUTTON HEAD SCREW AEHN	12102696	7	5	721	915415908	BOOM NOSE
BUTTON HEAD SCREW AEHN	12102696	27	3	723	964502908	BOOM NOSE PRE-ASS.
BUTTON HEAD SCREW AEHN	12102696	6	2	726	967321308	FIXING DEVICE 2.LIFT TOP
BUTTON HEAD SCREW AEHN	12102696	61	7	760	918533508	ADAPTER PRE-ASS.
BUTTON HEAD SCREW AEHN	12102696	65	2	761	918533508	ADAPTER PRE-ASS.
BUTTON HEAD SCREW AEHN	12102696	31	11	768	91001040	PIVOT SECTION, PRE-ASSEMB
BUTTON HEAD SCREW AEHN	12102696	21	7	771	918596708	HEAD SECTION PRE-ASS.
BUTTON HEAD SCREW AEHNL	10876082	11	2	100	96045217	MECHANICAL AUXILIARIES
BUTTON HEAD SCREW AEHNL	10876082	300	6	124	918728408	ASSEMBLY PARTS F.SLEWING
BUTTON HEAD SCREW AEHNL	10876082	303	8	562	919528608	OIL COOLER INSTALLATION
BUTTON HEAD SCREW AEHN	10875485	10	4	100	96045217	MECHANICAL AUXILIARIES
BUTTON HEAD SCREW AEHN	10875485	315	4	124	918728408	ASSEMBLY PARTS F.SLEWING
BUTTON HEAD SCREW AEHN	10875485	302	9	272	96020819	RADIATOR, PRE-ASSEMBLED
BUTTON HEAD SCREW AEHN	10875485	15	6	334	917304508	CRANE OPERATOR CABIN P
BUTTON HEAD SCREW AEHN	10875485	40	5	376	919935508	MAIN HOIST GEAR
BUTTON HEAD SCREW AEHN	10875485	310	5	407	96022627	SLEWING PLATFORM PANELLI
BUTTON HEAD SCREW AEHN	10875485	25	3	444	918759708	ADD HEATING SUPERSTRUCT
BUTTON HEAD SCREW AEHN	10875485	52	2	458	91003833	UREA PLANT
BUTTON HEAD SCREW AEHN	10875485	52	4	461	96074081	UREA TANK, PRE-MOUNTING
BUTTON HEAD SCREW AEHN	10875485	301	4	476	918729308	AIR FILTER UNIT
BUTTON HEAD SCREW AEHN	10875485	26	2	478	915300208	CENT. LUBRIC. SYSTEM SUP
BUTTON HEAD SCREW AEHN	10875485	306	4	562	919528608	OIL COOLER INSTALLATION
BUTTON HEAD SCREW AEHN	10875485	22	4	623	915403108	ADD-ON PARTS CAMERA
BUTTON HEAD SCREW AEHN	10875485	89	2	674	91000054	TELESCOPIC SECT.5 PRE-AS
BUTTON HEAD SCREW AEHN	10875471	104	2	70	915447908	HYDRAULIC SUPPORT
BUTTON HEAD SCREW AEHN	10875471	13	2	350	965784408	ROOF WINDOW PRE-ASS.
BUTTON HEAD SCREW AEHN	10875471	317	12	407	96022627	SLEWING PLATFORM PANELLI
BUTTON HEAD SCREW AEHN	10875471	313	4	415	96024809	SLEWING PLATFORM PANELLI
BUTTON HEAD SCREW AEHN	10875471	54	12	461	96074081	UREA TANK, PRE-MOUNTING
BUTTON HEAD SCREW AEHN	10875471	302	6	562	919528608	OIL COOLER INSTALLATION
BUTTON HEAD SCREW AEHN	10875471	11	3	606	91002360	CHARGER
BUTTON HEAD SCREW AEHN	10875471	25	3	652	919935408	TELESCOPIC BOOM CPL.
BUTTON HEAD SCREW AEHN	10875471	8	8	780	917508508	LADDER ATTACHMENT
BUTTON HEAD SCREW AEHN	10876067	325	2	269	918811108	DRIVE ASSEMBLY, PRE-ASSE
BUTTON HEAD SCREW AEHN	10875486	313	4	124	918728408	ASSEMBLY PARTS F.SLEWING
BUTTON HEAD SCREW AEHN	10875486	316	1	407	96022627	SLEWING PLATFORM PANELLI
BUTTON HEAD SCREW AEHN	10875486	314	2	415	96024809	SLEWING PLATFORM PANELLI
BUTTON HEAD SCREW AEHN	10875486	2	2	642	96045219	MECHANICAL AUXILIARIES
BUTTON HEAD SCREW DIN 3	12103123	20	4	679	91000055	MECHANICAL EXTENSION SYS
BUTTON HEAD SCREW ISO 73	10875017	70	2	339	917305408	INTERNAL PANELLING INSTA
BUTTON HEAD SCREW ISO 73	10875017	32	4	431	96056347	ELECTRIC ADD-ON PARTS CA
BUTTON HEAD SCREW ISO 7	10875448	7	3	327	96025887	PEDAL CANTILEVER INSTALL
BUTTON HEAD SCREW ISO 7	10875448	43	8	376	919935508	MAIN HOIST GEAR
BUTTON HEAD SCREW ISO 7	10875448	5	4	378	963564908	MAIN HOISTING GEAR PRE-A
BUTTON HEAD SCREW ISO 7	10875448	8	2	416	969399608	FLAP PRE-ASS.

Description	Item	Pos.	Quantity	Page	Assembly	Description
BUTTON HEAD SCREW ISO 7	10875448	44	4	581	96062734	AUXILIARY HOISTING GEAR
BUTTON HEAD SCREW ISO 7	10178203	23	4	679	91000055	MECHANICAL EXTENSION SYS
BUTTON HEAD SCREW ISO 73	10875482	20	8	431	96056347	ELECTRIC ADD-ON PARTS CA
BUTTON HEAD SCREW ISO 73	11835043	43	2	395	918810308	CONTROL STAND
BUTTON HEAD SCREW ISO 73	10875483	17	6	287	96024716	BATTERY BOX, PRE-ASSEMB
BUTTON HEAD SCREW ISO 73	10875483	3	2	322	96057226	CUP HOLDER INSTALLATION
BUTTON HEAD SCREW ISO 73	10875483	16	14	352	916168308	AIR DUCT
BUTTON HEAD SCREW ISO 73	10875483	26	2	355	916163008	WIPERS INSTALLATION
BUTTON HEAD SCREW ISO 73	10875483	21	8	431	96056347	ELECTRIC ADD-ON PARTS CA
BUTTON HEAD SCREW ISO 7	12229337	11	14	327	96025887	PEDAL CANTILEVER INSTALL
BUTTON HEAD SCREW ISO 73	10875474	38	16	338	917305408	INTERNAL PANELLING INSTA
BUTTON HEAD SCREW ISO 73	10875474	15	5	352	916168308	AIR DUCT
BUTTON HEAD SCREW ISO 73	10875474	28	6	395	918810308	CONTROL STAND
BUTTON HEAD SCREW ISO 73	10875474	18	18	431	96056347	ELECTRIC ADD-ON PARTS CA
BUTTON HEAD SCREW ISO 73	10875474	25	4	624	96036820	EQUIPMENT CAMERA CAB
BUTTON HEAD SCREW ISO 7	11697855	12	4	321	96015921	OPERATING ELEMENT INSTAL
BUTTON HEAD SCREW ISO 7	11697855	27	7	346	916162508	WINDOW ASSEMBLY
BUTTON HEAD SCREW ISO 73	10875488	300	1	268	918811108	DRIVE ASSEMBLY, PRE-ASSE
BUTTON HEAD SCREW ISO 73	10875488	17	3	329	916170808	CABLE INLET
BUTTON HEAD SCREW ISO 73	10875488	33	4	349	966497908	FRONT WINDOW CPL.
BUTTON HEAD SCREW ISO 73	10874884	39	13	338	917305408	INTERNAL PANELLING INSTA
BUTTON HEAD SCREW ISO 73	10875469	41	10	338	917305408	INTERNAL PANELLING INSTA
BUTTON HEAD SCREW ISO 73	10875469	36	7	361	917304708	SLIDING DOOR INSTALLATION
BUTTON HEAD SCREW ISO 73	10410198	13	2	329	916170808	CABLE INLET
BUTTON HEAD SCREW ISO 73	10875470	42	2	338	917305408	INTERNAL PANELLING INSTA
BUTTON HEAD SCREW ISO 73	10353737	21	4	287	96024716	BATTERY BOX, PRE-ASSEMB
BUTTON HEAD SCREW ISO 7	10429635	7	1	319	919010108	CRANE OPERATOR CABIN P
BUTTON HEAD SCREW ISO 73	408650508	309	2	470	919674308	EXHAUST SYSTEM
BUTTON HEAD SCREW ISO 73	408650608	307	2	470	919674308	EXHAUST SYSTEM
BUTTON HEAD SCREW ISO 73	10301319	326	1	269	918811108	DRIVE ASSEMBLY, PRE-ASSE
BUTTON HEAD SCREW ISO 73	10301319	11	5	321	96015921	OPERATING ELEMENT INSTAL
BUTTON HEAD SCREW ISO 73	10301319	(5)	21	326	968483708	STEP CPL.
BUTTON HEAD SCREW ISO 73	10301319	33	8	326	968483708	STEP CPL.
BUTTON HEAD SCREW ISO 73	12100574	101	2	420	919484908	FALL PROTECTION
BUTTON HEAD SCREW ISO 73	12100574	105	4	645	919950308	DISPATCH ASSY.MECH.PART
BUTTON HEAD SCREW ISO 73	10182032	26	1	84	96075205	SWITCH BOX COMPL.
CABIN PROTECTION 4X302X18	97020763	30	1	315	917357108	CRANE DRIVER CAB ADDITIO
CABLE	10097087	15	2	624	96036820	EQUIPMENT CAMERA CAB
CABLE	10346773	5	4.51	611	96057250	LEAD
CABLE 2X0,14+2X0,22-9M	10870643	11	1	625	96036821	REAR END TURNT. CAMERA E
CABLE CHANNEL 40X120/2000	601407008	49	0.308	502	96025348	BASE ASSEMBLY
CABLE CHANNEL 80X80/2000	601413908	48	0.28	502	96025348	BASE ASSEMBLY
CABLE CLAMP 4X40X67 1.431	720014408	40	2	673	91000054	TELESCOPIC SECT.5 PRE-AS
CABLE CLAMP 4X40X67 1.431	720014408	5	4	721	915415908	BOOM NOSE
CABLE CLAMP 4X40X67 1.431	720014408	26	2	723	964502908	BOOM NOSE PRE-ASS.
CABLE CLAMP 4X40X67 1.431	720014408	33	2	768	91001040	PIVOT SECTION, PRE-ASSEMB
CABLE CLAMP 4X40X67 1.431	720014408	22	2	771	918596708	HEAD SECTION PRE-ASS.
CABLE CLAMP DC01 FE//ZNNI	953650008	24	27	47	968374708	MOUNTING PARTS
CABLE CLAMP DC01 FE//ZNNI	953650008	15	2	268	918811108	DRIVE ASSEMBLY, PRE-ASSE
CABLE CLAMP DC01 FE//ZNNI	953650008	3	2	575	918627208	AIR COND. UNIT SUPERSTRU
CABLE CLAMP DC01 FE//ZNNI	953650008	6	1	721	915415908	BOOM NOSE
CABLE CLAMP DC01 FE//ZNNI	953650008	28	1	723	964502908	BOOM NOSE PRE-ASS.
CABLE CLIP HOLDER 28X28-	10870511	308	2	692	96063456	TERMINAL BOX
CABLE CLIP HOLDER 46X70-	10872676	121	1	268	918811108	DRIVE ASSEMBLY, PRE-ASSE
CABLE CLIP HOLDER 46X70-	10872676	68	15	655	91000049	PIVOT SECTION, PRE-ASSEMB
CABLE CLIP HOLDER 46X70-	10872676	45	14	673	91000054	TELESCOPIC SECT.5 PRE-AS
CABLE CLIP HOLDER 46X70-	10872676	62	7	760	918533508	ADAPTER PRE-ASS.
CABLE CLIP HOLDER 46X70-	10872676	32	10	768	91001040	PIVOT SECTION, PRE-ASSEMB
CABLE CLIP HOLDER 46X70-	10872676	20	2	771	918596708	HEAD SECTION PRE-ASS.
CABLE CLIP HOLDER 8,1X-S	11492315	26	11	502	96025348	BASE ASSEMBLY

Description	Item	Pos.	Quantity	Page	Assembly	Description
CABLE CLIP HOLDER 8,1X-S	11492315	7	2	507	968015808	PRE-ASSEMBLY MOUNTING U
CABLE CONDUIT DN16X0,6 PU	11124205	223	1.43	90	96062920	WIRING HARNESS
CABLE CONDUIT DN16X0,6 PU	11124205	160	1.3	93	96060494	ANTENNA CPL.
CABLE CONDUIT DN16X0,6 PU	11124205	223	3.86	490	96063649	WIRING HARNESS
CABLE CONDUIT DN16X0,6 PU	11124205	223	3.66	493	96023971	WIRING HARNESS
CABLE CONDUIT DN16X0,6 PU	11124205	223	5.5	775	96035674	LEAD
CABLE CONDUIT DN20X0,6 PU	11124207	224	0.83	426	96023891	WIRING HARNESS
CABLE CONDUIT DN20X0,6 PU	11124207	224	0.53	428	96022870	WIRING HARNESS
CABLE CONDUIT DN20X0,6 PU	11124207	224	3.11	490	96063649	WIRING HARNESS
CABLE CONDUIT DN25X0,6 PU	11124208	225	1.66	90	96062920	WIRING HARNESS
CABLE CONDUIT DN25X0,6 PU	11124208	225	0.33	426	96023891	WIRING HARNESS
CABLE CONDUIT DN25X0,6 PU	11124208	225	0.43	428	96022870	WIRING HARNESS
CABLE CONDUIT DN25X0,6 PU	11124208	225	1.21	490	96063649	WIRING HARNESS
CABLE CONDUIT DN25X0,6 PU	11124208	225	3.03	493	96023971	WIRING HARNESS
CABLE CONDUIT DN25X0,6 PU	11124208	225	1.93	495	96049294	WIRING HARNESS
CABLE CONDUIT DN30X0,6 PU	11124209	226	2.84	490	96063649	WIRING HARNESS
CABLE CONDUIT DN30X0,6 PU	11124209	226	0.6	493	96023971	WIRING HARNESS
CABLE CONDUIT DN30X0,6 PU	11124209	226	4.36	495	96049294	WIRING HARNESS
CABLE CONDUIT DN35X0,6 PU	11124210	227	1.36	426	96023891	WIRING HARNESS
CABLE CONDUIT DN35X0,6 PU	11124210	227	0.88	428	96022870	WIRING HARNESS
CABLE CONDUIT DN35X0,6 PU	11124210	227	3.09	490	96063649	WIRING HARNESS
CABLE CONDUIT DN35X0,6 PU	11124210	227	0.35	706	96063415	WIRING HARNESS
CABLE CONDUIT DN40X0,6 PU	11124211	228	0.9	426	96023891	WIRING HARNESS
CABLE CONDUIT DN40X0,6 PU	11124211	228	4.36	493	96023971	WIRING HARNESS
CABLE CONDUIT DN40X0,6 PU	11124211	228	0.55	500	96059659	CABLES, BASIC CONSTRUCTI
CABLE CONDUIT DN50X0,6 PU	11124212	229	0.9	490	96063649	WIRING HARNESS
CABLE CONDUIT DN50X0,6 PU	11124212	229	0.5	500	96059659	CABLES, BASIC CONSTRUCTI
CABLE CONNECTOR	602336408	2	1	506	926891108	GROUND RAIL
CABLE COUPLING BOX 12/21/	602600808	12	2	329	916170808	CABLE INLET
CABLE DRUM COMPL.	96063212	2	1	690	96063954	ELECTRIC F.BASE SECTION
CABLE GLAND M12X1,5X2-8 M	602424008	67	2	432	96056347	ELECTRIC ADD-ON PARTS CA
CABLE GLAND M12X1,5X2-8 M	602424008	502	1	693	96063864	WIRING HARNESS
CABLE GLAND M16X1,5X4-11	602424108	14	1	84	96075205	SWITCH BOX COMPL.
CABLE GLAND M16X1,5X4-11	10428532	48	2	431	96056347	ELECTRIC ADD-ON PARTS CA
CABLE GLAND M20X1,5 MS	12105979	505	1	730	96058738	WIRING HARNESS
CABLE GLAND M20X1,5 MS	602425608	501	1	698	96063213	LEAD
CABLE GLAND M20X1,5X5-14	602424208	509	1	589	96055198	WIRING HARNESS
CABLE GLAND M20X1,5X5-14	602424208	507	2	775	96035674	LEAD
CABLE GLAND M25X1,5	12104695	20	1	84	96075205	SWITCH BOX COMPL.
CABLE GLAND M25X1,5	12104695	153	1	92	96060493	ANTENNA CPL.
CABLE GLAND M25X1,5	12104695	153	1	93	96060494	ANTENNA CPL.
CABLE GLAND M25X1,5 MS	10873447	506	1	775	96035674	LEAD
CABLE GLAND M25X1,5X11-20	602424308	508	1	492	96063650	LEAD
CABLE GLAND M25X1,5X11-20	602424308	506	1	694	96063583	LEAD
CABLE HARNESS 3300MM	553186908	29	1	489	96063648	CABLE LIST SLEWING PLATF
CABLE HARNESS MOUNTING	10151328	580	1	135	13455311	DIESEL ENGINE
CABLE HARNESS W700	10153987	1	1	239	10151328	CABLE HARNESS MOUNTING
CABLE INLET	916170808	5	1	319	919010108	CRANE OPERATOR CABIN P
CABLE LIST	96045215	10	1	96	919499008	BALLAST MONITORING
CABLE LIST	96045218	10	1	638	919502708	BALLAST MONITORING
CABLE LIST DRIVER'S CABIN	96068695	5	1	424	919812608	EL.INSTRUMENTS F.CRANE D
CABLE LIST SLEWING PLATF	96063648	12	1	484	919940408	ELECTR. SYSTEM F.SLEWING
CABLE LOOM WL705	10151164	1	1	241	10151329	WIRING HARNESS ASSEMBLY
CABLE LOOM WL720	10150081	(1)	1	239	10151328	CABLE HARNESS MOUNTING
CABLE LUG AEHNL.DIN 46237	602305605	766	1	91	96062921	WIRING HARNESS
CABLE LUG AEHNL.DIN 46237	602305605	766	2	494	96023971	WIRING HARNESS
CABLE LUG DIN 46234 M12/16	602217308	50	1	490	96063649	WIRING HARNESS
CABLE LUG DIN 46234 M8/16-2	602301708	106	1	493	96023971	WIRING HARNESS
CABLE LUG DIN 46237 6/6mm²	602213308	39	2	91	96062921	WIRING HARNESS
CABLE LUG DIN 46237 M6/1-2,5	602217908	34	3	91	96062921	WIRING HARNESS

Description	Item	Pos.	Quantity	Page	Assembly	Description
CABLE LUG DIN 46237 M6/1-2,5	602217908	34	1	426	96023891	WIRING HARNESS
CABLE LUG M4/0,25-1,5MM² V	602218408	112	9	699	96051215	CABLES, PRE-ASSEMBLED
CABLE LUG M4/2,5mm² VERZ	602306108	31	3	699	96051215	CABLES, PRE-ASSEMBLED
CABLE LUG M6/16,8-26,7MM²	602205808	111	1	493	96023971	WIRING HARNESS
CABLE LUG M6/16MM²	602217008	49	3	490	96063649	WIRING HARNESS
CABLE LUG M6/16MM²	602217008	49	2	493	96023971	WIRING HARNESS
CABLE LUG M8/16MM²	602207508	48	2	490	96063649	WIRING HARNESS
CABLE LUG aehnlich DIN 46237	6002637	2281	1	706	96063415	WIRING HARNESS
CABLE MARKER	923512208	500	18	90	96062920	WIRING HARNESS
CABLE MARKER	923512208	500	22	91	96062921	WIRING HARNESS
CABLE MARKER	923512208	500	3	98	96045216	WIRING HARNESS
CABLE MARKER	923512208	500	53	426	96023891	WIRING HARNESS
CABLE MARKER	923512208	500	28	428	96022870	WIRING HARNESS
CABLE MARKER	923512208	500	85	490	96063649	WIRING HARNESS
CABLE MARKER	923512208	500	9	492	96063650	LEAD
CABLE MARKER	923512208	500	34	493	96023971	WIRING HARNESS
CABLE MARKER	923512208	500	20	495	96049294	WIRING HARNESS
CABLE MARKER	923512208	500	5	589	96055198	WIRING HARNESS
CABLE MARKER	923512208	500	3	608	96060353	LEAD
CABLE MARKER	923512208	500	2	611	96057250	LEAD
CABLE MARKER	923512208	500	3	640	96045220	WIRING HARNESS
CABLE MARKER	923512208	500	2	693	96063864	WIRING HARNESS
CABLE MARKER	923512208	500	3	694	96063583	LEAD
CABLE MARKER	923512208	500	1	698	96063213	LEAD
CABLE MARKER	923512208	500	3	699	96051215	CABLES, PRE-ASSEMBLED
CABLE MARKER	923512208	500	11	706	96063415	WIRING HARNESS
CABLE MARKER	923512208	500	3	730	96058738	WIRING HARNESS
CABLE MARKER	923512208	500	3	775	96035674	LEAD
CABLE PLUG 4-POL 90°	10324830	514	1	490	96063649	WIRING HARNESS
CABLE PLUG M23 MESSING V	12104883	503	1	611	96057250	LEAD
CABLE PLUG M23 MESSING V	12104884	503	1	608	96060353	LEAD
CABLE PLUG M23 MESSING V	12106223	504	2	608	96060353	LEAD
CABLE REEL 11+PE SPF	12104731	5	1	695	96063212	CABLE DRUM COMPL.
CABLE SLEEVE 1,9-2,5/1,75/0,	10473047	707	1	698	96063213	LEAD
CABLE SLEEVE 12,0-3,0/12/1,4	10872032	98	1	490	96063649	WIRING HARNESS
CABLE SLEEVE 16,0-4,0/16/1,7	10872033	709	2	494	96023971	WIRING HARNESS
CABLE SLEEVE 2,4-3,0/2,4/0,6	10473048	708	2	427	96023891	WIRING HARNESS
CABLE SLEEVE 2,4-3,0/2,4/0,6	10473048	708	3	428	96022870	WIRING HARNESS
CABLE SLEEVE 2,4-3,0/2,4/0,6	10473048	708	2	491	96063649	WIRING HARNESS
CABLE SLEEVE 4-6	602704808	509	1	775	96035674	LEAD
CABLE SLEEVE 6-8	604508708	512	1	775	96035674	LEAD
CABLE SLEEVE 8-10	604509408	506	1	730	96058738	WIRING HARNESS
CABLE SOCK 8-15 700	602707308	503	1	698	96063213	LEAD
CABLE SOCKET M11-Z	604505508	507	1	730	96058738	WIRING HARNESS
CABLE SOCKET M11-Z	604505508	511	1	775	96035674	LEAD
CABLE TIE 2,5X99-SCHWARZ P	12104811	268	50	500	96059659	CABLES, BASIC CONSTRUCTI
CABLE TIE 3,6X142-SCHWARZ	12104809	261	1	90	96062920	WIRING HARNESS
CABLE TIE 3,6X142-SCHWARZ	12104809	261	15	91	96062921	WIRING HARNESS
CABLE TIE 3,6X142-SCHWARZ	12104809	261	1	426	96023891	WIRING HARNESS
CABLE TIE 3,6X142-SCHWARZ	12104809	261	20	428	96022870	WIRING HARNESS
CABLE TIE 3,6X142-SCHWARZ	12104809	261	1	493	96023971	WIRING HARNESS
CABLE TIE 3,6X142-SCHWARZ	12104809	261	50	500	96059659	CABLES, BASIC CONSTRUCTI
CABLE TIE 3,6X203-SCHWARZ	12104810	269	20	490	96063649	WIRING HARNESS
CABLE TIE 3,6X203-SCHWARZ	12104810	269	1	493	96023971	WIRING HARNESS
CABLE TIE 3,6X203-SCHWARZ	12104810	269	50	500	96059659	CABLES, BASIC CONSTRUCTI
CABLE TIE 3,6X203-SCHWARZ	12104810	269	5	698	96063213	LEAD
CABLE TIE 4,6X200-SCHWARZ	11691035	(40)	10	484	919940408	ELECTR. SYSTEM F.SLEWING
CABLE TIE 4,6X202-SCHWARZ/	11691013	97	2	240	10151328	CABLE HARNESS MOUNTING
CABLE TIE 4,8X292-SCHWARZ	10874588	99	3	240	10151328	CABLE HARNESS MOUNTING
CABLE TIE 4,8X292-SCHWARZ	10874588	100	8	241	10151329	WIRING HARNESS ASSEMBLY

Description	Item	Pos.	Quantity	Page	Assembly	Description
CABLE TIE 4,8X292-SCHWARZ	10874588	(10)	50	484	919940408	ELECTR. SYSTEM F.SLEWING
CABLE TIE 7,6X368-SCHWARZ	10874587	(20)	50	484	919940408	ELECTR. SYSTEM F.SLEWING
CABLE TIE 7,6X380-SCHWARZ	10870333	(30)	100	484	919940408	ELECTR. SYSTEM F.SLEWING
CABLES, BASIC CONSTRUCTI	96059659	1	1	499	96059658	BASE ASSEMBLY CPL.
CABLES, PRE-ASSEMBLED S	96051215	7	1	695	96063212	CABLE DRUM COMPL.
CAGE NUT M5	413002608	9	4	612	913753108	RADIO PREPARATION UPPER
CAGE NUT M5 ST	10455281	27	6	395	918810308	CONTROL STAND
CAGE NUT M6	413002708	44	4	395	918810308	CONTROL STAND
CAGE NUT M6	413002808	53	1	338	917305408	INTERNAL PANELLING INSTA
CAGE NUT M6 NIROSTA	10875857	71	4	655	91000049	PIVOT SECTION, PRE-ASSEMB
CAGE NUT M6 NIROSTA	10875857	2	2	700	966591408	LIMIT SWITCH ADD-ON
CAGE NUT M8 A2/ST A2K	10875858	351	3	562	919528608	OIL COOLER INSTALLATION
CAGE NUT M8 A2/ST A2K	413003208	355	1	408	96022627	SLEWING PLATFORM PANELLI
CAGE NUT M8 A2/ST A2K	413003208	26	3	652	919935408	TELESCOPIC BOOM CPL.
CAM	11341708	24	2	628	12102922	LUFFING CYLINDER
CAMERA MONITOR OW	918805408	494	1	15		LIEBHERR LTR 1100
CAMERA SPF	10097079	10	1	625	96036821	REAR END TURNT. CAMERA E
CAMSHAFT BUSHING 60,897X	9132281	11	2	137	10154379	CRANKCASE PRE-ASSY.
CAMSHAFT BUSHING 70,912X	9274859	10	5	137	10154379	CRANKCASE PRE-ASSY.
CAMSHAFT CPL. R-MOTORXD	10147787	100	1	131	13455311	DIESEL ENGINE
CAMSHAFT R-MOTORXD934/	10125742	1	1	170	10147787	CAMSHAFT CPL.
CAP	571582808	30	1	209	5700161	AIR COMPRESSOR
CAP	591064408	8	1	441	966707708	MIRROR RETAINER PRE-ASS.
CAP NUT	510710608	30	1	37	510438508	PRESSURE RELIEF VALVE
CAP NUT DIN 1587 M6 A2-70	10219361	12	4	350	965784408	ROOF WINDOW PRE-ASS.
CAP NUT DIN 986 M4 A2-70	4002886	25	4	480	10327065	ELECTRIC PUMP
CAPACITOR	10815368	104	1	272	96020819	RADIATOR, PRE-ASSEMBLED
CAR RADIO	12257818	1	1	649	916166208	CAR RADIO
CAR RADIO	916166208	199	1	14		LIEBHERR LTR 1100
CARRIER RAIL NUT DIN 3015-	602018008	303	36	517	96045552	HYDRAULICS UPPER CARRI
CARRIER RAIL NUT DIN 3015-	602018008	78	2	655	91000049	PIVOT SECTION, PRE-ASSEMB
CARRIER RAIL NUT DIN 3015-	602018008	(15)	2	725	918258408	EL.2 HOISTING LIMIT SWITCH
CARRIER RAIL X0	954117308	24	1	287	96024716	BATTERY BOX, PRE-ASSEMB
CARRIER T ZN O	968485508	6	1	326	968483708	STEP CPL.
CARRIER T ZN O	968485608	7	1	326	968483708	STEP CPL.
CARRIER, MEAS. & WARN. D	919868808	285	1	14		LIEBHERR LTR 1100
CARRYING ROLLER 107/8/40X	749014508	2	1	376	919935508	MAIN HOIST GEAR
CARRYING ROLLER 107/8/40X	749014508	3	1	581	96062734	AUXILIARY HOISTING GEAR
CARRYING ROLLER 80/5/20X60	749010708	35	1	670	91000053	TELESCOPIC SECT.IV PRE-A
CARRYING ROLLER 80/5/20X65	749009208	35	1	667	91000052	TELESCOPIC SECT.3 PRE-ASS
CARRYING ROLLER 80/5/20X70	749011408	35	1	664	91000051	TELESCOPIC SECT.2 PRE-AS
CARRYING ROLLER 80/5/20X75	749009308	35	1	661	91000050	TELESCOPIC SECTION 1 PRE
CARRYING ROLLER 80/5/20X79	749010808	35	1	655	91000049	PIVOT SECTION, PRE-ASSEMB
CARRYING ROLLER 80/5/20X79	749010808	13	1	658	96014777	LIFTING ROPE GUIDE PREAS
CARRYING ROLLER CPL LH-G	749065314	11	2	22	96062226	CRAWLER CARRIER RIGHT CP
CARRYING ROLLER CPL LH-G	749065314	11	2	27	96062228	CRAWLER TRACK CARRIER LE
CARTRIDGE	10032696	33	1	522	11170514	VALVE BLOCK
CARTRIDGE	571352308	1	1	567	502657308	AIR DRYER
CAUTION DECAL ACCID.PREV	9412158	35	1	111	919933708	LABELLING GREAT BRITAIN
CELL RUBBER 10X8	262109108	10	0.15	87	96062922	MOUNTING PLATE PRE-ASS.
CELL RUBBER 20X12 CR SC	262104308	5	1.08	85	966167808	COVER COMPL.
CELL RUBBER 25X4 NEOPREN	262107814	12	0.12	781	968940708	HOLDER LEFT
CELL RUBBER 25X4 NEOPREN	262107814	12	0.12	782	968940808	HOLDER RIGHT
CENT. LUBRIC. SYSTEM SUP	915300208	169	1	13		LIEBHERR LTR 1100
CENTER STUD	570110508	3	1	373	570109508	DRIVING GEAR
CENTER-ZERO RELAY 24V 10	630121508	6	2	87	96062922	MOUNTING PLATE PRE-ASS.
CENTER-ZERO RELAY 24V 10	630121508	6	1	498	919940108	SWITCHBOX MOUNTING PART
CENTERING FLANGE 42CrMo	10142170	2	1	157	10141974	CRANKSHAFT ADD-ON PARTS
CENTRAL BALLAST	96045221	1	2	116	919498808	CENTRAL BALLAST
CENTRAL BALLAST 15T	919498808	80	1	12		LIEBHERR LTR 1100

Description	Item	Pos.	Quantity	Page	Assembly	Description
CENTRAL BALLAST LH355-40	919418714	1	1	117	96045221	CENTRAL BALLAST
CENTRAL LUBRICATING SYS	921444108	300	1	581	96062734	AUXILIARY HOISTING GEAR
CENTRE PART MACHINING 98	10222999	1	1	30	992078314	CENTRE PIECE
CENTRE PIECE KPL.	992078314	4	1	19	96062225	UNDERCARRIAGE CPL.
CHAIN BOLT 47,71	11951831	5	60	56	790258414	CRAWLER CHAIN CPL
CHAIN BUSHING 48,74X71,45X	11951828	3	60	56	790258414	CRAWLER CHAIN CPL
CHAIN DIN 763 7X49 0.3t ST35	10663970	3	2	676	96013575	HOIST LIM.SWITCH PLUMMET
CHAIN DIN EN 818-2 10T-2.976	10326803	5	2	635	915090008	COUNTERWEIGHT WITH CLAM
CHAIN END SEGMENT CPL	786528114	99	1	56	790258414	CRAWLER CHAIN CPL
CHAIN HOLDER CPL.	964060608	6	2	635	915090008	COUNTERWEIGHT WITH CLAM
CHAIN LINK	786526614	1	62	56	790258414	CRAWLER CHAIN CPL
CHAIN LINK	786526714	2	62	56	790258414	CRAWLER CHAIN CPL
CHAIN LOCK GALV.VERZ	773947708	504	1	698	96063213	LEAD
CHAIN MOUNT WELDED CONS	964424908	4	2	635	915090008	COUNTERWEIGHT WITH CLAM
CHAIN MOUNTING	964765308	1	1	636	964060608	CHAIN HOLDER CPL.
CHAIN PIN	786525214	6	1	56	790258414	CRAWLER CHAIN CPL
CHAIN SUSPENSION 10T-2132	10326816	17	4	454	919501608	HYDRAULIC BALLASTING
CHANGE OVER PULLEY WC.	968714508	1	1	763	917695308	GUIDE PULLEY COMPL.
CHARGE AIR COOLER	12108602	18	1	274	97095949	COMBINATED RADIATOR
CHARGE AIR CORRUGATED	10337349	251	1	268	918811108	DRIVE ASSEMBLY, PRE-ASSE
CHARGE AIR LINE	10143612	1	1	203	10149677	CONNECTING LINE ADD-ON
CHARGE AIR LINE	10143614	2	1	203	10149677	CONNECTING LINE ADD-ON
CHARGE AIR PIPE G-ALSI10M	97045610	200	1	268	918811108	DRIVE ASSEMBLY, PRE-ASSE
CHARGE AIR PIPE G-ALST10M	97055366	201	1	268	918811108	DRIVE ASSEMBLY, PRE-ASSE
CHARGER 110/230V/24V/16A	12104889	5	1	606	91002360	CHARGER
CHARGER 110V-230V	91002360	383	1	14		LIEBHERR LTR 1100
CHARGING UNIT BTT SPF	10412777	10	1	435	96022872	CONTROL PANEL ROOF
CHECK SCREW	10423817	78	1	528	11170515	VALVE BLOCK
CHECK SCREW	10423817	78	2	530	11170518	VALVE BLOCK
CHECK SCREW	10423817	78	1	531	11170519	VALVE BLOCK
CHECK SCREW	10423817	78	1	602	10665173	CONTROL BLOCK
CHECK SCREW	571529708	77	2	528	11170515	VALVE BLOCK
CHECK SCREW	571529708	77	4	530	11170518	VALVE BLOCK
CHECK SCREW	571529708	77	2	531	11170519	VALVE BLOCK
CHECK SCREW	571529708	77	2	602	10665173	CONTROL BLOCK
CHECK SCREW	571814108	(52)	1	534	10802090	CONTROL BLOCK
CHECK SCREW	571814108	52	1	536	10665127	COVER
CHECK SCREW	571889608	53	1	537	10665128	COVER
CIGARETTE LIGHTER 24V 23,2	605407608	3	1	612	913753108	RADIO PREPARATION UPPER
CIRCLIP 35-40	929818008	3	8	771	918596708	HEAD SECTION PRE-ASS.
CIRCLIP 45-50	929819308	32	8	760	918533508	ADAPTER PRE-ASS.
CIRCLIP FUER GRIFFKAPPE	10678848	4	2	436	10343693	JOYSTICK
CIRCULAR BEARING B30X30	726906508	101	1	407	96022627	SLEWING PLATFORM PANELLI
CIRCULAR BEARING B30X30	726906508	11	8	562	919528608	OIL COOLER INSTALLATION
CIRCULAR BEARING C50X30X	726905008	121	2	272	96020819	RADIATOR, PRE-ASSEMBLED
CIRCULATING PUMP	11622224	20	1	392	969300008	HEATING, PRE-ASSEMBLED
CIRCULATING PUMP	11622224	26	1	448	10876576	WATER HEATING SYSTEM
CIRCULATING PUMP	11622224	(7)	1	448	10876576	WATER HEATING SYSTEM
CLADDING REAR PANEL 193X	97001404	5	1	338	917305408	INTERNAL PANELLING INSTA
CLAMP	6202909	100	1	280	96035595	EXPANSION TANK PRE-ASS.
CLAMP - ADD-ON UNIT	10143707	10	1	239	10151328	CABLE HARNESS MOUNTING
CLAMP DIN 3016-1 10X15XD1	7381770	32	6	239	10151328	CABLE HARNESS MOUNTING
CLAMP DIN 3016-1 10X20XD1	7381628	38	2	239	10151328	CABLE HARNESS MOUNTING
CLAMP DIN 3016-1 10X20XD1	7381628	211	1	250	10148366	SEAL KIT DIESEL ENGINE
CLAMP DIN 3016-1 10X25XD1	7382092	2	2	152	10139112	OIL LINE PRE-ASSEMBLY
CLAMP DIN 3016-1 10X25XD1	7382092	47	4	239	10151328	CABLE HARNESS MOUNTING
CLAMP DIN 3016-1 12X20XD1	7381629	39	5	239	10151328	CABLE HARNESS MOUNTING
CLAMP DIN 3016-1 16X20XD1	7382085	13	1	196	10143341	FUEL LINES
CLAMP DIN 3016-1 16X20XD1	7382085	2121	1	251	10148366	SEAL KIT DIESEL ENGINE
CLAMP DIN 3016-1 18X25XD1	7382086	39	1	241	10151329	WIRING HARNESS ASSEMBLY

Description	Item	Pos.	Quantity	Page	Assembly	Description
CLAMP DIN 3016-1 22X20XA1	7381286	11	1	201	10145173	INTAKE STACK ASSEMBLY
CLAMP DIN 3016-1 22X20XD1	7381630	13	1	201	10145173	INTAKE STACK ASSEMBLY
CLAMP DIN 3016-1 22X20XD1	7381630	42	3	239	10151328	CABLE HARNESS MOUNTING
CLAMP DIN 3016-1 28X20XD1	11481080	22	4	392	969300008	HEATING, PRE-ASSEMBLED
CLAMP DIN 3016-1 28X20XD1	11481080	22	1	446	96019783	ADDNL.HEATING, PRE-ASSE
CLAMP DIN 3016-1 6X15XD1 W	7381292	20	1	198	10143342	LEAK OIL RETURN LINE
CLAMP DIN 3016-1 6X15XD1 W	7381292	9	6	224	11420633	CYCLE VALVE
CLAMP DIN 3016-1 6X20XA1 W	11000593	10	2	224	11420633	CYCLE VALVE
CLAMP DIN 3016-1 6X20XD1 W	7382088	14	1	198	10143342	LEAK OIL RETURN LINE
CLAMP DIN 3016-1 8X15XD1 W	7381771	31	1	239	10151328	CABLE HARNESS MOUNTING
CLAMP DIN 3016-1 8X20XD1 W	7382090	37	4	239	10151328	CABLE HARNESS MOUNTING
CLAMP DIN 3017-1 16/12-20/9	4601105	6	1	152	10139112	OIL LINE PRE-ASSEMBLY
CLAMP DIN 3017-1 16/12-20/9	4601105	(3)	4	250	10148366	SEAL KIT DIESEL ENGINE
CLAMP EMVFSK 1 FEDERST	10424210	37	2	431	96056347	ELECTRIC ADD-ON PARTS CA
CLAMP EMVSK 12	602042808	38	2	431	96056347	ELECTRIC ADD-ON PARTS CA
CLAMP FITTING 1-3X21X9,3 ZE	262101308	68	0.04	339	917305408	INTERNAL PANELLING INSTA
CLAMP G-ST-52 FE//ZN20//C	97039859	7	5	473	96051762	EXHAUST SYSTEM PRE-ASSE
CLAMP SURE-SEAL	605215508	516	1	491	96063649	WIRING HARNESS
CLAMP SURE-SEAL	605215508	526	2	494	96023971	WIRING HARNESS
CLAMP WELDED CONST.	966230708	29	1	361	917304708	SLIDING DOOR INSTALLATION
CLAMP WELDED CONST.	966230808	30	1	361	917304708	SLIDING DOOR INSTALLATION
CLAMP WELDED CONST. FE//	96022401	2	1	473	96051762	EXHAUST SYSTEM PRE-ASSE
CLAMP WELDED CONST. FE//	96049767	23	1	124	918728408	ASSEMBLY PARTS F.SLEWING
CLAMP WELDED CONST. FE//	968510708	8	1	124	918728408	ASSEMBLY PARTS F.SLEWING
CLAMP-HALF 6 R R 44,5 SANT	602010908	44	4	599	96075102	FASTENING PIECES HYDRAUL
CLAMP-HALF AEHNL.DIN 3015	7367238	22	8	47	968374708	MOUNTING PARTS
CLAMP-HALF DIN 3015-1 L 0 R	10875557	185	4	470	919674308	EXHAUST SYSTEM
CLAMP-HALF DIN 3015-1 L 1 R	602007108	37	6	679	91000055	MECHANICAL EXTENSION SYS
CLAMP-HALF DIN 3015-1 L 2 G	602008108	(10)	4	725	918258408	EL.2 HOISTING LIMIT SWITCH
CLAMP-HALF DIN 3015-1 L 2 R	602002208	306	8	566	969767908	PIPEWORK AIR INSTALLATIO
CLAMP-HALF DIN 3015-1 L 3 R	602008508	453	2	269	918811108	DRIVE ASSEMBLY, PRE-ASSE
CLAMP-HALF DIN 3015-1 L 3 R	7005052	452	4	269	918811108	DRIVE ASSEMBLY, PRE-ASSE
CLAMP-HALF DIN 3015-1 L 3 R	7005052	27	4	625	96036821	REAR END TURNT. CAMERA E
CLAMP-HALF DIN 3015-1 L 3 R	7005052	10	3	734	96056553	LOCATION FIXTURE PRE-ASS.
CLAMP-HALF DIN 3015-1 L 3 R	7005052	39	3	768	91001040	PIVOT SECTION, PRE-ASSEMB
CLAMP-HALF DIN 3015-1 L 3 R	7005052	11	3	773	96037297	ANGULAR TRANSMITTER AT
CLAMP-HALF DIN 3015-1 L 5 R	602009208	301	26	517	96045552	HYDRAULICS UPPER CARRI
CLAMP-HALF DIN 3015-1 L 5 R	7412067	314	6	517	96045552	HYDRAULICS UPPER CARRI
CLAMP-HALF DIN 3015-1 L 5 R	602009408	315	6	517	96045552	HYDRAULICS UPPER CARRI
CLAMP-HALF DIN 3015-1 L 6 R	7413103	75	2	655	91000049	PIVOT SECTION, PRE-ASSEMB
CLAMP-HALF L 3 R 22 AL	11160668	450	4	269	918811108	DRIVE ASSEMBLY, PRE-ASSE
CLAMP-HALF S 4 E 64 PP	10492888	325	4	566	969767908	PIPEWORK AIR INSTALLATIO
CLAMPING BOARD 6XM6	604412408	1	1	503	922648308	TERMINAL BOARD PRE-ASS.
CLAMPING LEVER NIROSTA	10024803	11	1	623	915403108	ADD-ON PARTS CAMERA
CLAMPING PIECE 12 G20MN5	380057108	451	6	269	918811108	DRIVE ASSEMBLY, PRE-ASSE
CLAMPING PIECE 22	927638801	30	1	381	938759601	ROPE DRUM
CLAMPING PROFILE 1,5-4X25X	11002218	3	2.22	386	917894308	HEATING CRANE DRIVER'S CA
CLAMPING PROFILE 25,7X21,5	10876056	55	3.4	361	917304708	SLIDING DOOR INSTALLATION
CLAMPING PROFILE 2X13,5X2	10300600	11	4.2	361	917304708	SLIDING DOOR INSTALLATION
CLAMPING RING RD10X12 PA6	288182508	9	1	444	918759708	ADD HEATING SUPERSTRUCT
CLAMPING SLEEVE DIN 1498 4	704339608	30	2	768	91001040	PIVOT SECTION, PRE-ASSEMB
CLAW	11004031	9	1	753	512353708	HYDRO CYLINDER
CLIP 23 ST	10216534	22	2	575	918627208	AIR COND. UNIT SUPERSTRU
CLOGGING INDICATOR	11068222	101	1	295	969219208	OIL TANK PRE-ASS.
CLOGGING INDICATOR	571356108	4	1	555	510670808	LINE FILTER
CLOSING DEVICE	966230408	25	1	361	917304708	SLIDING DOOR INSTALLATION
CLOSING PIN 1.4305	97019129	52	1	361	917304708	SLIDING DOOR INSTALLATION
CLOSING RING	10803065	14	1	371	510229408	HYDRO MOTOR
CLOSING RING	570109808	4	1	372	570109008	DRIVING GEAR
CLUTCH ASSEMBLY	10115780	2	1	129	13471292	DRIVE UNIT

Description	Item	Pos.	Quantity	Page	Assembly	Description
COAT HOOK SCHWARZ	12106136	69	1	339	917305408	INTERNAL PANELLING INSTA
COLD MACHINE OIL WAECO	11211803	101	0.18	575	918627208	AIR COND. UNIT SUPERSTRU
COLLAR WASHER	510714408	18	1	37	510438508	PRESSURE RELIEF VALVE
COLLECTING PIPE	927892208	322	1	517	96045552	HYDRAULICS UPPER CARRI
COLLECTING PIPE FE//ZNNI8/	925933208	2	1	295	969219208	OIL TANK PRE-ASS.
COLLECTING PIPE VERZ SPF	10033109	323	1	517	96045552	HYDRAULICS UPPER CARRI
COLLER BOLT 20-22MM	571712308	1	1	629	773941308	POUCH SOCKET
COMBI PLIERS DIN 5244 180	790031508	62	1	104	928569808	MAIN TOOLS
COMBINATED RADIATOR	97095949	100	1	272	96020819	RADIATOR, PRE-ASSEMBLED
COMPACT ROPE WINCH KSW	938707001	1	1	581	96062734	AUXILIARY HOISTING GEAR
COMPACT ROPE WINCH KSW	968558601	2	1	378	963564908	MAIN HOISTING GEAR PRE-A
COMPENSATOR	10149144	2	1	223	12512627	EXHAUST NOZZLE ATTACHM
COMPLETE CONNECTION BL	12105785	1	1	66	11481975	CONTROL BLOCK
COMPRESSED-AIR SYST.SU	918118408	189	1	14		LIEBHERR LTR 1100
COMPRESSION RING	502923708	46	2	431	96056347	ELECTRIC ADD-ON PARTS CA
COMPRESSION RING DR/R22	502932508	406	1	291	969543308	FUEL TANK, PRE-ASSEMBLED
COMPRESSION RING DR/R26	502932808	312	1	566	969767908	PIPEWORK AIR INSTALLATIO
COMPRESSION SPRING	12105786	3	1	66	11481975	CONTROL BLOCK
COMPRESSION SPRING	510714008	6	1	37	510438508	PRESSURE RELIEF VALVE
COMPRESSION SPRING	510714508	19	1	37	510438508	PRESSURE RELIEF VALVE
COMPRESSION SPRING	511015108	4	1	558	511417708	PRESSURE LIMITING VALVE
COMPRESSION SPRING	570631008	3	1	525	10032696	CARTRIDGE
COMPRESSION SPRING	720011508	25	1	771	918596708	HEAD SECTION PRE-ASS.
COMPRESSION SPRING	927520801	27	1	584	938759801	PLANETARY GEARBOX
COMPRESSION SPRING 0,5X3	510797508	9	1	558	511417708	PRESSURE LIMITING VALVE
COMPRESSION SPRING 0,5X3	510797508	9	1	621	511417608	PRESSURE LIMITING VALVE
COMPRESSION SPRING 1,6X	720009408	7	2	127	968305308	LIMIT SWITCH, PRE-ASSEMB
COMPRESSION SPRING 1,6X	720009408	19	4	679	91000055	MECHANICAL EXTENSION SYS
COMPRESSION SPRING 1,9X6	510735908	6	1	524	571130108	PRESSURE LIMITING VALVE
COMPRESSION SPRING 10X1	720009308	2	1	670	91000053	TELESCOPIC SECT.IV PRE-A
COMPRESSION SPRING 10X1	720009308	2	1	673	91000054	TELESCOPIC SECT.5 PRE-AS
COMPRESSION SPRING 10X10	720009608	2	1	661	91000050	TELESCOPIC SECTION 1 PRE
COMPRESSION SPRING 10X10	720009608	2	1	664	91000051	TELESCOPIC SECT.2 PRE-AS
COMPRESSION SPRING 10X10	720009608	2	1	667	91000052	TELESCOPIC SECT.3 PRE-ASS
COMPRESSION SPRING 2,10X	9886756	9	1	174	10129474	OIL COOLER, PRE-ASSEMBLE
COMPRESSION SPRING 2,2X	510797108	4	1	621	511417608	PRESSURE LIMITING VALVE
COMPRESSION SPRING 2X12X	11067867	38	1	361	917304708	SLIDING DOOR INSTALLATION
COMPRESSION SPRING 3,2X	10129501	4	1	176	10152592	PRESSURE RELIEF VALVE
COMPRESSION SPRING 3,6X	10876108	3	1	374	916109208	ROTATING PLATFORM LOCK
COMPRESSION SPRING 3X17	11118160	6	1	141	10138450	FINAL CONTROL VALVE
COMPRESSION SPRING 4,60X	9074481	(9)	4	160	10149580	CYLINDER HEAD ASSEMBLY
COMPRESSION SPRING 4,60X	9074481	9	4	162	10149579	CYLINDER HEAD PRE-ASSY.
COMPRESSION SPRING 4X25X	11003426	5	1	441	966707708	MIRROR RETAINER PRE-ASS.
COMPRESSION SPRING 5X40	720008308	2	2	422	96044789	
COMPRESSION SPRING 8X92X	10297691	5	1	321	96015921	OPERATING ELEMENT INSTAL
COMPRESSION SPRING DIN	720007108	7	4	52	968374908	LIMIT SWITCH ADD-ON
COMPRESSION SPRING DIN 2	720008508	5	1	750	96062062	FOLDING BRACKET PRE-ASS.
COMPRESSION SPRING DIN	720001108	35	1	760	918533508	ADAPTER PRE-ASS.
COMPRESSION SPRING EN10	720012608	42	1	747	919933308	TRANSPORT MOUNTING
COMPRESSOR FOR AIR COND	13719288	2	1	213	12418347	AIR COND. COMPRESSOR A
CONICAL MOUNT	10291989	5	4	320	916164208	BEARING INSTALLATION
CONICAL PLUG GPN 600 LD-P	779006901	(393)	1	22	96062226	CRAWLER CARRIER RIGHT CP
CONICAL SPRING WASHER D	425301208	49	1	760	918533508	ADAPTER PRE-ASS.
CONNECTING DEVICE EN 358	12102869	3	1	120	916959808	PERSONAL PROTECTION EQ
CONNECTING LINE 7X0,25-10,0	10472995	30	1	498	919940108	SWITCHBOX MOUNTING PART
CONNECTING LINE ADD-ON R-	10149677	230	1	132	13455311	DIESEL ENGINE
CONNECTING LINE R-MOTOR	10141549	1	1	202	10147364	AIR INTAKE ASSEMBLY
CONNECTING LINK PRE-ASS.	964541408	31	4	70	915447908	HYDRAULIC SUPPORT
CONNECTING LUG 472331408	971434408	194	1	517	96045552	HYDRAULICS UPPER CARRI
CONNECTING LUG EL 10LX51	953600608	172	1	516	96045552	HYDRAULICS UPPER CARRI

Description	Item	Pos.	Quantity	Page	Assembly	Description
CONNECTING LUG EL 10LX51	953600608	158	1	591	96064697	HYDR.AUXILIARY HOISTING
CONNECTING PIECE Al Rm>=	10121666	1	1	148	10121667	CONNECTING PIECE W.O-RIN
CONNECTING PIECE W.O-RIN	10121667	4	1	144	10132560	OIL SUMP WITH FASTENING
CONNECTING PIECE W.O-RIN	10121667	1	1	253	10141167	SEAL KIT OIL SUMP
CONNECTING PIPE 0	11000700	101	2	263	918728708	DRIVE ASSEMBLY CPL.
CONNECTING PIPE 0	11000700	5	3	392	969300008	HEATING, PRE-ASSEMBLED
CONNECTING PLATE	510629508	161	2	33	967304508	UNDERCARRIAGE HYDRAULIC
CONNECTING PLATE	570109208	4	1	371	510229408	HYDRO MOTOR
CONNECTION BLOCK	11211226	9	1	684	12105406	TELESCOPIC CYLINDER
CONNECTION CABLE 2X0,75-1	10877798	18	1	426	96023891	WIRING HARNESS
CONNECTION CABLE 2X0,75-	10877801	15	1	490	96063649	WIRING HARNESS
CONNECTION CABLE 2X0,75-	10877801	16	1	490	96063649	WIRING HARNESS
CONNECTION CABLE 2X0,75-	10877801	17	1	490	96063649	WIRING HARNESS
CONNECTION CABLE 2X0,75-	10877801	383	1	493	96023971	WIRING HARNESS
CONNECTION CABLE 2X0,75-	10877801	384	1	493	96023971	WIRING HARNESS
CONNECTION CARRIER 42Cr	968607201	1	1	383	968607101	PLANETARY GEARBOX
CONNECTION PIECE	96035597	3	2	280	96035595	EXPANSION TANK PRE-ASS.
CONNECTION PIECE	96038054	2	1	282	96035743	EQUALIZING RESERVOIR
CONNECTION PLAN	96004143	3	1	502	96025348	BASE ASSEMBLY
CONNECTOR FOR FUEL HEAT	962196208	516	1	494	96023971	WIRING HARNESS
CONNECTOR PIN 0,75-2,0MM2	10100062	669	4	427	96023891	WIRING HARNESS
CONNECTOR PIN 0,75-2,0MM2	10100062	669	4	494	96023971	WIRING HARNESS
CONNECTOR PIN 0,75-2,0MM2	10100062	669	2	495	96049294	WIRING HARNESS
CONNECTOR PLUG A	12102524	1011	4	66	11481975	CONTROL BLOCK
CONNECTOR PLUG A AX	602337008	508	2	428	96022870	WIRING HARNESS
CONROD	571582508	11	1	209	5700161	AIR COMPRESSOR
CONROD BOLT M14X1,5X65	9174981	1	2	158	11348072	CONROD
CONROD R-MOTORX88	11348054	1	1	158	11348072	CONROD
CONROD R-MOTORX88	11348072	60	4	131	13455311	DIESEL ENGINE
CONSOLE	963383408	11	1	581	96062734	AUXILIARY HOISTING GEAR
CONSOLE 339X239 S315MC FE	97063866	(2)	1	566	969767908	PIPEWORK AIR INSTALLATIO
CONSOLE 3X378X545 DC01 FE	97162206	10	1	604	96066401	MECHANICAL AUXILIARIES
CONSOLE 4X235X224 S315MC	97042207	6	1	124	918728408	ASSEMBLY PARTS F.SLEWING
CONSOLE 4X260X239 S315MC	954180008	8	1	679	91000055	MECHANICAL EXTENSION SYS
CONSOLE 4X893X546 S315MC	97103234	10	1	285	918955208	BATTERY BOX CPL.
CONSOLE FOR FILTER PRE-A	13512036	1	1	192	10146791	FUEL FINE-FILTER ASSEMBLY
CONSOLE PRE-ASS.	925280008	1	1	747	919933308	TRANSPORT MOUNTING
CONSOLE PRE-ASS. FE//ZNNI	963930408	5	1	407	96022627	SLEWING PLATFORM PANELLI
CONSOLE T ZN O	965080808	21	2	70	915447908	HYDRAULIC SUPPORT
CONSOLE T ZN O	965080908	22	1	70	915447908	HYDRAULIC SUPPORT
CONSOLE X5CrNi18-10	10149679	3	1	203	10149677	CONNECTING LINE ADD-ON
CONTACT 0,5-1MM2	602300308	125	22	90	96062920	WIRING HARNESS
CONTACT 0,5-1MM2	602300308	125	47	91	96062921	WIRING HARNESS
CONTACT 0,5-1MM2	602300308	125	106	426	96023891	WIRING HARNESS
CONTACT 0,5-1MM2	602300308	125	117	428	96022870	WIRING HARNESS
CONTACT 0,5-1MM2	602300308	125	93	490	96063649	WIRING HARNESS
CONTACT 0,5-1MM2	602300308	125	16	492	96063650	LEAD
CONTACT 0,5-1MM2	602300308	125	70	493	96023971	WIRING HARNESS
CONTACT 0,5-1MM2	602300308	125	29	495	96049294	WIRING HARNESS
CONTACT 0,5-1MM2	602300308	125	16	694	96063583	LEAD
CONTACT 0,5-1MM2	602329108	617	4	90	96062920	WIRING HARNESS
CONTACT 1,0-2,5MM2	10877344	2259	5	427	96023891	WIRING HARNESS
CONTACT 1-2,5MM2	602300108	121	3	90	96062920	WIRING HARNESS
CONTACT 1-2,5MM2	602300108	121	9	91	96062921	WIRING HARNESS
CONTACT 1-2,5MM2	602300108	121	16	426	96023891	WIRING HARNESS
CONTACT 1-2,5MM2	602300108	121	25	428	96022870	WIRING HARNESS
CONTACT 1-2,5MM2	602300108	121	9	490	96063649	WIRING HARNESS
CONTACT 1-2,5MM2	602300108	121	4	492	96063650	LEAD
CONTACT 1-2,5MM2	602300108	121	22	493	96023971	WIRING HARNESS
CONTACT 1-2,5MM2	602300108	121	7	495	96049294	WIRING HARNESS

Description	Item	Pos.	Quantity	Page	Assembly	Description
CONTACT BOW	691041608	19	21	95	10878097	SLIP RING TRANSMITTER
CONTACT BOW HOLDER	10359128	21	2	95	10878097	SLIP RING TRANSMITTER
CONTACT BOW HOLDER	691043108	17	35	95	10878097	SLIP RING TRANSMITTER
CONTACT LOCK 2-POL	7368241	529	2	494	96023971	WIRING HARNESS
CONTACT LOCK 2-POL	7368241	518	2	495	96049294	WIRING HARNESS
CONTACT LOCK 2-POL PBT G	12693951	520	1	495	96049294	WIRING HARNESS
CONTACT LOCK DT 12 POLIG	10216772	514	1	494	96023971	WIRING HARNESS
CONTACT LOCK DT 2 POLIG	10342519	525	3	494	96023971	WIRING HARNESS
CONTACT LOCK DT 2 POLIG	10342519	517	2	495	96049294	WIRING HARNESS
CONTACT LOCK DT-STECKD	7368246	504	1	495	96049294	WIRING HARNESS
CONTACT LOCK DT-STECKER	6205242	522	1	495	96049294	WIRING HARNESS
CONTACT PIN 1MM2	605601701	130	4	589	96055198	WIRING HARNESS
CONTACT RETAINING PIN 9P	10045101	507	1	91	96062921	WIRING HARNESS
CONTACT RETAINING PIN JPT	10099866	509	1	91	96062921	WIRING HARNESS
CONTACT RETAINING PIN JPT	10099866	510	1	494	96023971	WIRING HARNESS
CONTACT RETAINING PIN JPT	10099867	511	1	91	96062921	WIRING HARNESS
CONTACT RETAINING PIN JPT	10099867	513	2	500	96059659	CABLES, BASIC CONSTRUCTI
CONTACT RETAINING PIN JPT	10099868	502	2	91	96062921	WIRING HARNESS
CONTACT RETAINING PIN JPT	10099868	518	2	500	96059659	CABLES, BASIC CONSTRUCTI
CONTAINER	10038271	29	1	480	10327065	ELECTRIC PUMP
CONTAINER	12101219	3	1	648	10876885	GREASE SPRAYER
CONTAINER SCREW JOINT	10878281	(2)	1	591	96064697	HYDR.AUXILIARY HOISTING
CONTROL BLOCK	511306608	55	1	516	96045552	HYDRAULICS UPPER CARRI
CONTROL BLOCK 120BAR NG1	10333672	25	1	516	96045552	HYDRAULICS UPPER CARRI
CONTROL BLOCK 250BAR SP	10663060	63	1	516	96045552	HYDRAULICS UPPER CARRI
CONTROL BLOCK 300BAR 56L/	10802090	22	1	516	96045552	HYDRAULICS UPPER CARRI
CONTROL BLOCK 300BAR SP	10675161	21	1	33	967304508	UNDERCARRIAGE HYDRAULIC
CONTROL BLOCK 385BAR 380	10665173	21	1	598	96075086	HYD.AUX.LIFT GEAR UPPER
CONTROL BLOCK 385BAR 450	10665174	21	1	516	96045552	HYDRAULICS UPPER CARRI
CONTROL BLOCK 420BAR SP	11481975	21	1	63	967301408	PREPARATION HYDR
CONTROL BLOCK pmax=320BA	10877219	61	1	516	96045552	HYDRAULICS UPPER CARRI
CONTROL BOX ANNEXE	10144227	571	1	134	13455311	DIESEL ENGINE
CONTROL LEAD 19 X 1 SPF	12103084	5	2.67	694	96063583	LEAD
CONTROL LEAD 3+12 X 1,5X0,7	12104034	5	49.51	698	96063213	LEAD
CONTROL LIGHT 24V	607135408	4	1	620	913978308	ADDITIONAL ELECTRICS
CONTROL PANEL ROOF	96022872	2	1	431	96056347	ELECTRIC ADD-ON PARTS CA
CONTROL PANEL SUPPORT	10009700	57	1	388	11083498	AIR CONDITIONING UNIT
CONTROL PARTS	9079870	110	4	131	13455311	DIESEL ENGINE
CONTROL PLATE	511307808	23	1	516	96045552	HYDRAULICS UPPER CARRI
CONTROL PLATE	570110408	2	1	373	570109508	DRIVING GEAR
CONTROL PLATE 60BAR	511486908	24	1	516	96045552	HYDRAULICS UPPER CARRI
CONTROL STAND	918810308	131	1	13		LIEBHERR LTR 1100
COOLANT PIPE BEND ADD-ON	10142742	382	1	133	13455311	DIESEL ENGINE
COOLER GRILL 820X730X80	96007145	1	1	645	919950308	DISPATCH ASSY.MECH.PART
COOLING WATER AIR BLEED	10142744	387	1	133	13455311	DIESEL ENGINE
COOLING WATER HOSE DN20-	11621770	20	3.5	386	917894308	HEATING CRANE DRIVER'S CA
COOLING WATER HOSE DN20-	11621770	21	3.5	386	917894308	HEATING CRANE DRIVER'S CA
COOLING WATER HOSE DN20-	11621770	12	0.06	392	969300008	HEATING, PRE-ASSEMBLED
COOLING WATER HOSE DN20-	11621770	14	0.7	392	969300008	HEATING, PRE-ASSEMBLED
COOLING WATER HOSE DN20-	11621770	16	0.08	446	96019783	ADDNL.HEATING, PRE-ASSE
COOLING WATER LINE 12X1	10145177	1	1	212	10145278	ACCESSORIES AIR COMPRES
COOLING WATER LINE 12X1	10145178	2	1	212	10145278	ACCESSORIES AIR COMPRES
COOLING WATER PRE-HEATI	919386708	401	1	15		LIEBHERR LTR 1100
COPPER PASTE MOTOREX 14	10002552	132	1	222	10140729	EXHAUST TC MOUNTING
CORE PIN DIN 1472 4X12	431100201	24	1	381	938759601	ROPE DRUM
CORE PIN ISO 8740 3X20	431200501	91	3	369	933074801	SLEWING GEAR DRIVE
CORE PIN ISO 8740 4H11X24 S	431202401	18	1	381	938759601	ROPE DRUM
CORRUGATED PIPE DN10 PA	10475426	160	3.8	92	96060493	ANTENNA CPL.
COTTER PIN 36POL	96008399	513	1	91	96062921	WIRING HARNESS
COTTER PIN 36POL	96008399	514	1	500	96059659	CABLES, BASIC CONSTRUCTI

Description	Item	Pos.	Quantity	Page	Assembly	Description
COUNTERSUNK SCREW AEHN	12100589	45	4	395	918810308	CONTROL STAND
COUNTERSUNK SCREW AEHN	12100589	3	6	410	969425608	FLAP RIGHT PRE-ASS.
COUNTERSUNK SCREW AEHN	12100589	3	12	416	969399608	FLAP PRE-ASS.
COUNTERSUNK SCREW DIN 7	10875807	15	4	658	96014777	LIFTING ROPE GUIDE PREAS
COUNTERSUNK SCREW DIN 7	10875808	12	2	655	91000049	PIVOT SECTION, PRE-ASSEMB
COUNTERSUNK SCREW DIN	10875549	20	2	352	916168308	AIR DUCT
COUNTERSUNK SCREW DIN	10875549	33	4	395	918810308	CONTROL STAND
COUNTERSUNK SCREW DIN	10875550	83	24	502	96025348	BASE ASSEMBLY
COUNTERSUNK SCREW DIN	10875809	11	4	346	916162508	WINDOW ASSEMBLY
COUNTERSUNK SCREW DIN 7	408606008	103	3	420	919484908	FALL PROTECTION
COUNTERSUNK SCREW DIN	10875551	12	8	346	916162508	WINDOW ASSEMBLY
COUNTERSUNK SCREW DIN	10875551	13	8	349	966497908	FRONT WINDOW CPL.
COUNTERSUNK SCREW DIN	10875551	18	4	361	917304708	SLIDING DOOR INSTALLATION
COUNTERSUNK SCREW DIN	10875551	302	6	407	96022627	SLEWING PLATFORM PANELLI
COUNTERSUNK SCREW DIN	10875551	4	4	781	968940708	HOLDER LEFT
COUNTERSUNK SCREW DIN	10875551	4	4	782	968940808	HOLDER RIGHT
COUNTERSUNK SCREW DIN	10875552	29	16	70	915447908	HYDRAULIC SUPPORT
COUNTERSUNK SCREW DIN	10875552	81	2	656	91000049	PIVOT SECTION, PRE-ASSEMB
COUNTERSUNK SCREW DIN	10875552	73	2	661	91000050	TELESCOPIC SECTION 1 PRE
COUNTERSUNK SCREW DIN	10875552	73	2	664	91000051	TELESCOPIC SECT.2 PRE-AS
COUNTERSUNK SCREW DIN	10875552	73	2	667	91000052	TELESCOPIC SECT.3 PRE-ASS
COUNTERSUNK SCREW DIN	10875552	73	2	670	91000053	TELESCOPIC SECT.IV PRE-A
COUNTERSUNK SCREW ISO	12100279	10	4	350	965784408	ROOF WINDOW PRE-ASS.
COUNTERSUNK SCREW ISO	10181421	30	32	70	915447908	HYDRAULIC SUPPORT
COUNTERSUNK SCREW ISO	12220375	34	3	655	91000049	PIVOT SECTION, PRE-ASSEMB
COUNTERSUNK SCREW ISO	12220375	60	9	661	91000050	TELESCOPIC SECTION 1 PRE
COUNTERSUNK SCREW ISO	12220375	60	9	664	91000051	TELESCOPIC SECT.2 PRE-AS
COUNTERSUNK SCREW ISO	12220375	60	9	667	91000052	TELESCOPIC SECT.3 PRE-ASS
COUNTERSUNK SCREW ISO	12220375	60	9	670	91000053	TELESCOPIC SECT.IV PRE-A
COUNTERSUNK SCREW ISO 1	12210040	4	3	156	10153583	CRANKSHAFT SEALING
COUNTERSUNK SCREW ISO	10181487	106	2	70	915447908	HYDRAULIC SUPPORT
COUNTERSUNK SCREW ISO	12216233	300	12	295	969219208	OIL TANK PRE-ASS.
COUNTERSUNK SCREW ISO	12100291	14	4	645	919950308	DISPATCH ASSY.MECH.PART
COUNTERWEIGHT CPL. SPF	963733208	1	1	635	915090008	COUNTERWEIGHT WITH CLAM
COUNTERWEIGHT EN-GJL-20	380061708	2	1	635	915090008	COUNTERWEIGHT WITH CLAM
COUNTERWEIGHT EN-GJL-20	380061908	3	2	635	915090008	COUNTERWEIGHT WITH CLAM
COUNTERWEIGHT EN-GJL-20	380061908	30	2	637	915090108	ADDITIONAL BALLAST
COUNTERWEIGHT WITH CLAM	915090008	147	1	13		LIEBHERR LTR 1100
COUPLING	12101221	6	1	648	10876885	GREASE SPRAYER
COUPLING PLUG	774372708	2	2	587	921444108	CENTRAL LUBRICATING SYS
COUPLING PLUG	774372708	310	1	598	96075086	HYD.AUX.LIFT GEAR UPPER
COUPLING PLUG B2 10-L	511515008	154	2	709	965994108	HYDR.F.TELESCOPIC BOOM
COUPLING PLUG B2 12-L	511509608	171	1	591	96064697	HYDR.AUXILIARY HOISTING
COUPLING PLUG B3 15-L	511500408	165	1	591	96064697	HYDR.AUXILIARY HOISTING
COUPLING PLUG B8 38-S	511512308	168	1	591	96064697	HYDR.AUXILIARY HOISTING
COUPLING PLUG B8 38-S	511512308	168	1	598	96075086	HYD.AUX.LIFT GEAR UPPER
COUPLING PLUG DN8/GERAD	510541908	159	12	33	967304508	UNDERCARRIAGE HYDRAULIC
COUPLING PLUG DN8/GERAD	510541908	(152)	8	67	917155408	QUICK-FITTING UNION
COUPLING PLUG HDS-E1	510541008	152	4	33	967304508	UNDERCARRIAGE HYDRAULIC
COUPLING SLEEVE	510548108	157	12	33	967304508	UNDERCARRIAGE HYDRAULIC
COUPLING SLEEVE	510548108	(150)	8	67	917155408	QUICK-FITTING UNION
COUPLING SLEEVE	774372608	1	1	587	921444108	CENTRAL LUBRICATING SYS
COUPLING SLEEVE	774372608	311	1	598	96075086	HYD.AUX.LIFT GEAR UPPER
COUPLING SLEEVE B2 12-L	511505808	159	2	516	96045552	HYDRAULICS UPPER CARRI
COUPLING SLEEVE B2 12-L	511505808	173	1	598	96075086	HYD.AUX.LIFT GEAR UPPER
COUPLING SLEEVE B3 15-L	511500508	163	1	598	96075086	HYD.AUX.LIFT GEAR UPPER
COUPLING SLEEVE B8 38-S	511512208	169	1	591	96064697	HYDR.AUXILIARY HOISTING
COUPLING SLEEVE B8 38-S	511512208	169	1	598	96075086	HYD.AUX.LIFT GEAR UPPER
COUPLING SLEEVE HDM-E2	510540808	154	4	33	967304508	UNDERCARRIAGE HYDRAULIC
COUPLING SOCKET 14-POL G	12102895	7	1	490	96063649	WIRING HARNESS

Description	Item	Pos.	Quantity	Page	Assembly	Description
COUPLING SOCKET 14-POL G	12106616	5	1	589	96055198	WIRING HARNESS
COUPLING SOCKET 4-POL 90°	680000708	5	1	426	96023891	WIRING HARNESS
COUPLING SOCKET 4-POL G	680001708	19	1	490	96063649	WIRING HARNESS
COUPLING SOCKET 4-POL G	680001708	5	1	693	96063864	WIRING HARNESS
COUPLING SOCKET 4-POL SP	10678491	7	1	90	96062920	WIRING HARNESS
COUPLING SOCKET 4-POL SP	10678491	8	1	90	96062920	WIRING HARNESS
COUPLING SOCKET 4-POL SP	10678491	8	1	490	96063649	WIRING HARNESS
COUPLING SOCKET 4-POL SP	10678491	14	1	490	96063649	WIRING HARNESS
COUPLING SOCKET 4-POL SP	10678491	18	1	490	96063649	WIRING HARNESS
COUPLING SOCKET 4-POL SP	10678491	373	1	490	96063649	WIRING HARNESS
COUPLING SOCKET 4-POL SP	10678491	374	1	490	96063649	WIRING HARNESS
COUPLING SOCKET 4-POL SP	10871126	11	1	490	96063649	WIRING HARNESS
COUPLING SOCKET 4-POL SP	680001408	5	1	90	96062920	WIRING HARNESS
COUPLING SOCKET 4-POL SP	680001408	5	1	98	96045216	WIRING HARNESS
COUPLING SOCKET 4-POL SP	680001408	5	1	490	96063649	WIRING HARNESS
COUPLING SOCKET 4-POL SP	680001408	6	1	490	96063649	WIRING HARNESS
COUPLING SOCKET 4-POL SP	680001408	9	1	490	96063649	WIRING HARNESS
COUPLING SOCKET 4-POL SP	680001408	10	1	490	96063649	WIRING HARNESS
COUPLING SOCKET 4-POL SP	680001408	12	1	490	96063649	WIRING HARNESS
COUPLING SOCKET 4-POL SP	680001408	13	1	490	96063649	WIRING HARNESS
COUPLING SOCKET 4-POLE 90	680000308	6	1	428	96022870	WIRING HARNESS
COUPLING SOCKET 4-POLE 90	680000308	7	1	706	96063415	WIRING HARNESS
COUPLING SOCKET 4-POLE 90	680000308	8	1	706	96063415	WIRING HARNESS
COUPLING SOCKET 4-POLE 90	680000308	9	1	706	96063415	WIRING HARNESS
COUPLING SOCKET 4-POLE 90	680000308	10	1	706	96063415	WIRING HARNESS
COUPLING SOCKET 4-POLE 90	680000308	11	1	706	96063415	WIRING HARNESS
COUPLING SOCKET 4-POLE 90	680000308	12	1	706	96063415	WIRING HARNESS
COUPLING SOCKET 4-POLE	680000008	9	1	90	96062920	WIRING HARNESS
COUPLING SOCKET 4-POLE	680000008	6	1	98	96045216	WIRING HARNESS
COUPLING SOCKET 4-POLE	680000008	6	1	426	96023891	WIRING HARNESS
COUPLING SOCKET 4-POLE	680000008	5	1	428	96022870	WIRING HARNESS
COUPLING SOCKET 4-POLE	680000008	7	1	428	96022870	WIRING HARNESS
COUPLING SOCKET 4-POLE	680000008	6	1	589	96055198	WIRING HARNESS
COUPLING SOCKET 4-POLE	680000008	5	1	640	96045220	WIRING HARNESS
COUPLING SOCKET 4-POLE	680000008	6	1	640	96045220	WIRING HARNESS
COUPLING SOCKET 4-POLE	680000008	5	1	706	96063415	WIRING HARNESS
COUPLING SOCKET 4-POLE	680000008	6	1	706	96063415	WIRING HARNESS
COUPLING SOCKET 5-POL G	11481973	6	1	730	96058738	WIRING HARNESS
COVER	10147409	1	1	246	9078249	LOCKING PIECES
COVER	10286353	295	1	703	96063458	TERMINAL BOX CPL.
COVER	10331026	61	1	432	96056347	ELECTRIC ADD-ON PARTS CA
COVER	10650507	(2)	1	402	916049908	MIRROR ATTACHM.IN CRANE
COVER	10663242	5	1	531	11170519	VALVE BLOCK
COVER	10663242	5	1	602	10665173	CONTROL BLOCK
COVER	10665126	11	1	534	10802090	CONTROL BLOCK
COVER	10665127	14	1	534	10802090	CONTROL BLOCK
COVER	10665128	15	1	534	10802090	CONTROL BLOCK
COVER	10873239	7	1	766	10801932	HAND PUMP
COVER	11005170	17	1	397	10877138	OPERATOR SEAT
COVER	11171270	32	1	397	10877138	OPERATOR SEAT
COVER	11368890	4	1	308	12106874	FUEL FILTER
COVER	11600977	2	1	296	10871354	RETURN FILTER
COVER	11979998	31	1	397	10877138	OPERATOR SEAT
COVER	12102477	34	1	480	10327065	ELECTRIC PUMP
COVER	602761708	6	1	504	968077108	TERMINAL STRIP
COVER	636109301	4	1	504	968077108	TERMINAL STRIP
COVER	9178294	5	1	249	9078962	AUXILIARY DRIVE PRE-ASS.
COVER 1.5X450X381 DC01 FE//	951892408	35	1	673	91000054	TELESCOPIC SECT.5 PRE-AS
COVER 170X19,5	927504601	17	1	381	938759601	ROPE DRUM
COVER 18X205X205 S960QL	976641408	8	1	315	917357108	CRANE DRIVER CAB ADDITIO

Description	Item	Pos.	Quantity	Page	Assembly	Description
COVER 3X1269X789 ALMG3 H	97100175	22	1	407	96022627	SLEWING PLATFORM PANELLI
COVER 635X575X95 ABS	97007030	2	1	386	917894308	HEATING CRANE DRIVER'S CA
COVER 8X225X290	944214403	(94)	1	22	96062226	CRAWLER CARRIER RIGHT CP
COVER 8X735X83 PE SCHWAR	97008572	13	1	346	916162508	WINDOW ASSEMBLY
COVER Al Rm>200N/m	10127967	1	1	235	10127979	LOCKING PIECES
COVER COMPL.	963544508	110	1	407	96022627	SLEWING PLATFORM PANELLI
COVER COMPL.	966167808	2	1	84	96075205	SWITCH BOX COMPL.
COVER COMPL.	967576308	17	8	30	992078314	CENTRE PIECE
COVER COMPL.	969699108	14	1	407	96022627	SLEWING PLATFORM PANELLI
COVER DC01 LH-GRAU	955532403	16	1	30	992078314	CENTRE PIECE
COVER DISK 8X60	691041808	9	1	95	10878097	SLIP RING TRANSMITTER
COVER EN AC-Al Si1	10124116	1	1	229	10115664	LOCKING PIECES
COVER GLUED	966189708	1	1	85	966167808	COVER COMPL.
COVER LID	11171306	2	1	731	12102807	WIND VELOCITY TRANSMITTE
COVER LID 112,7 PPA	10115832	7	1	146	10155227	OIL SUMP PRE-ASS.
COVER LID 12,7	591572208	62	2	673	91000054	TELESCOPIC SECT.5 PRE-AS
COVER LID 36X22 PVC-SW	10215892	9	1	441	966707708	MIRROR RETAINER PRE-ASS.
COVER LID 700 M18X1,5 PA 6	10129392	2	2	183	12489819	COVERING CAPS - KIT
COVER LID 9,5X11 POLYACE	591064708	71	1	339	917305408	INTERNAL PANELLING INSTA
COVER LID POLYSTIC27-33 AB	591570908	111	7	407	96022627	SLEWING PLATFORM PANELLI
COVER LID POLYSTIC27-33 AB	591570908	51	1	431	96056347	ELECTRIC ADD-ON PARTS CA
COVER LID POLYSTIC27-33 AB	591570908	6	1	435	96022872	CONTROL PANEL ROOF
COVER LID POLYSTIC27-33 AB	591570908	13	1	562	919528608	OIL COOLER INSTALLATION
COVER LID PP	10129394	7	1	183	12489819	COVERING CAPS - KIT
COVER MOLERIT T59	11008024	526	4	427	96023891	WIRING HARNESS
COVER NRS	990840414	15	1	19	96062225	UNDERCARRIAGE CPL.
COVER PA 66	9078881	1	1	247	10144027	LOCKING PIECES
COVER PLATE	11494116	41	2	743	910445708	HOOK BLOCK
COVER PLATE 4X270X270 S31	97042701	9	1	124	918728408	ASSEMBLY PARTS F.SLEWING
COVER PLATE PRE-ASS.	965021508	46	2	395	918810308	CONTROL STAND
COVER PLATE ST.CONST. SP	96022920	3	1	407	96022627	SLEWING PLATFORM PANELLI
COVER PLATE ST.CONST. SP	969619708	2	1	415	96024809	SLEWING PLATFORM PANELLI
COVER RD165X22 S960QL	957017708	7	1	670	91000053	TELESCOPIC SECT.IV PRE-A
COVER RD165X22 S960QL	957017708	7	1	673	91000054	TELESCOPIC SECT.5 PRE-AS
COVER RD175X22 S960QL	957011108	7	1	661	91000050	TELESCOPIC SECTION 1 PRE
COVER RD175X22 S960QL	957011108	7	1	664	91000051	TELESCOPIC SECT.2 PRE-AS
COVER RD175X22 S960QL	957011108	7	1	667	91000052	TELESCOPIC SECT.3 PRE-ASS
COVER RD200X12 PA6G	283094508	59	3	661	91000050	TELESCOPIC SECTION 1 PRE
COVER RD200X12 PA6G	283094508	59	3	664	91000051	TELESCOPIC SECT.2 PRE-AS
COVER RD200X12 PA6G	283094508	59	3	667	91000052	TELESCOPIC SECT.3 PRE-ASS
COVER RD200X12 PA6G	283094508	59	3	670	91000053	TELESCOPIC SECT.IV PRE-A
COVER RD200X25 PA6G	283095408	59	3	655	91000049	PIVOT SECTION, PRE-ASSEMB
COVER RD245X17 PA6G	288184008	19	1	655	91000049	PIVOT SECTION, PRE-ASSEMB
COVER RD74X4 S315MC FE//	955917808	39	2	679	91000055	MECHANICAL EXTENSION SYS
COVER S235JR	10117094	10	1	233	10116110	LOCKING PIECES
COVER WELDED	921368608	17	1	655	91000049	PIVOT SECTION, PRE-ASSEMB
COVER WELDED	96016196	18	1	655	91000049	PIVOT SECTION, PRE-ASSEMB
COVER WELDED FE//ZNNI8//C	967569908	(1)	1	30	992078314	CENTRE PIECE
COVER/LID 1 WELDED RAL 703	96024977	2	1	287	96024716	BATTERY BOX, PRE-ASSEMB
COVERING	12100617	(1)	1	397	10877138	OPERATOR SEAT
COVERING	12100619	(1)	1	397	10877138	OPERATOR SEAT
COVERING CAPS - KIT	12485523	220	1	190	10135080	HIGH PRESSURE CONNECTO
COVERING CAPS - KIT	12489819	300	1	182	10146658	HIGH PRESSURE PUMP
CRANE DRIVER CAB ADDITIO	917357108	112	1	12		LIEBHERR LTR 1100
CRANE DRIVER CABIN, UNFIN	917304608	115	1	13		LIEBHERR LTR 1100
CRANE DRIVER'S CABIN PUR	916165808	1	1	357	917304608	CRANE DRIVER CABIN, UNFINI
CRANE OPERATOR CABIN P	917304508	114	1	12		LIEBHERR LTR 1100
CRANE OPERATOR CABIN P	919010108	113	1	12		LIEBHERR LTR 1100
CRANKCASE BREATHER	12886223	1	1	143	10126713	CRANKCASE BREATHER ASS
CRANKCASE BREATHER ASS	10126713	16	1	130	13455311	DIESEL ENGINE

Description	Item	Pos.	Quantity	Page	Assembly	Description
CRANKCASE CPL. WITH CYLI	11389608	10	1	130	13455311	DIESEL ENGINE
CRANKCASE PRE-ASSY. R-M	10154379	1	1	136	11389608	CRANKCASE CPL. WITH CYLIN
CRANKSHAFT ADD-ON PARTS	10141974	53	1	131	13455311	DIESEL ENGINE
CRANKSHAFT R-MOTORXD934	10131177	1	1	153	10147438	CRANKSHAFT WITH GEAR
CRANKSHAFT SEALING	10153583	52	1	130	13455311	DIESEL ENGINE
CRANKSHAFT WITH GEAR R-M	10147438	50	1	130	13455311	DIESEL ENGINE
CRAW.TRACK CARRIER QUIC	914950208	60	1	12		LIEBHERR LTR 1100
CRAWLER CARRIER RIGHT CP	96062226	2	1	19	96062225	UNDERCARRIAGE CPL.
CRAWLER CHAIN CPL 62GL.B7	790258414	10	1	55	10430241	CRAWLER CHAIN CPL.
CRAWLER CHAIN CPL. 62GL.	10430241	1	2	53	915562508	CRAWLER OUTFIT
CRAWLER OUTFIT 900 FLACH	915562508	30	1	12		LIEBHERR LTR 1100
CRAWLER TRACK CARRIER L	96062228	3	1	19	96062225	UNDERCARRIAGE CPL.
CRAWLER TRACK CARRIER, L	10225967	1	1	27	96062228	CRAWLER TRACK CARRIER LE
CRAWLER TRACK CARRIER,	10225969	1	1	22	96062226	CRAWLER CARRIER RIGHT CP
CRAWLER-TRACK CARRIER	914950308	62	1	12		LIEBHERR LTR 1100
CRIMPING CONTACT 0,2-0,56	602322808	615	55	427	96023891	WIRING HARNESS
CROSS CONNECTING LINK W	925074608	3	1	760	918533508	ADAPTER PRE-ASS.
CUP HEAD SQUARE NECK B	10181375	315	2	269	918811108	DRIVE ASSEMBLY, PRE-ASSE
CUP HOLDER	96048757	1	1	322	96057226	CUP HOLDER INSTALLATION
CUP HOLDER INSTALLATION	96057226	8	1	321	96015921	OPERATING ELEMENT INSTAL
CURRENT COLLECTOR	10491892	23	6	697	12104731	CABLE REEL
CURRENT SOURCE LSB SPF	10027448	29	2	502	96025348	BASE ASSEMBLY
CYCLE VALVE 3.4BAR 8L/MIN 6	10149191	1	1	224	11420633	CYCLE VALVE
CYCLE VALVE 3.4BAR 8L/MIN 6	11420633	436	1	134	13455311	DIESEL ENGINE
CYL CPL	790272314	2	1	25	749065414	TENSION JACK HYDR CPL
CYL.ROLLER 14X14	747006101	17	114	383	968607101	PLANETARY GEARBOX
CYL.ROLLER 14X14	747006101	17	114	584	938759801	PLANETARY GEARBOX
CYLINDER	570110308	1	1	373	570109508	DRIVING GEAR
CYLINDER BUSHING 20X23X2	708010008	3	1	748	925280008	CONSOLE PRE-ASS.
CYLINDER BUSHING 20X23X2	708010008	3	2	751	929582108	MOUNTING PRE-ASS.
CYLINDER BUSHING 20X23X2	708010008	23	2	768	91001040	PIVOT SECTION, PRE-ASSEMB
CYLINDER BUSHING R-MOTO	10153973	1	1	138	10154458	CYLINDER
CYLINDER BUSHING R-MOTO	12898375	1	1	138	10154458	CYLINDER
CYLINDER HEAD	12107427	4	1	684	12105406	TELESCOPIC CYLINDER
CYLINDER HEAD	7025732	23	1	209	5700161	AIR COMPRESSOR
CYLINDER HEAD ASSEMBLY	10149580	80	4	131	13455311	DIESEL ENGINE
CYLINDER HEAD COVER	10134750	1	3	167	11358036	CYLINDER HEAD COVER ASS
CYLINDER HEAD COVER	12874086	2	1	167	11358036	CYLINDER HEAD COVER ASS
CYLINDER HEAD COVER ASS	11358036	82	1	131	13455311	DIESEL ENGINE
CYLINDER HEAD GASKET	10133667	2	1	160	10149580	CYLINDER HEAD ASSEMBLY
CYLINDER HEAD PRE-ASSY.	10149579	1	1	160	10149580	CYLINDER HEAD ASSEMBLY
CYLINDER HEAD PRE-ASSY.	13476764	1	1	160	10149580	CYLINDER HEAD ASSEMBLY
CYLINDER HEAD R-MOTOR	10145862	1	1	163	10149578	CYLINDER HEAD
CYLINDER HEAD R-MOTOR	10149578	(1)	1	160	10149580	CYLINDER HEAD ASSEMBLY
CYLINDER HEAD R-MOTOR	10149578	1	1	162	10149579	CYLINDER HEAD PRE-ASSY.
CYLINDER R-MOTORXD944/D9	10154458	80	4	136	11389608	CRANKCASE CPL. WITH CYLIN
CYLINDRICAL ROLLER BEARI	746604101	37	1	741	919421708	HOOK BLOCK
CYLINDRICAL ROLLER BEARIN	746604908	5	1	739	910543708	LOAD HOOK
CYLINDRICAL ROLLER BEARIN	746607108	37	1	743	910445708	HOOK BLOCK
DAMPERS HDSCS GROUP E	10874992	503	2	699	96051215	CABLES, PRE-ASSEMBLED
DAMPING PISTON	510797408	7	1	558	511417708	PRESSURE LIMITING VALVE
DAMPING PISTON	510797408	7	1	621	511417608	PRESSURE LIMITING VALVE
DATA LINE 2 X 1 FEP SPF	12100217	5	0.4	91	96062921	WIRING HARNESS
DATA LINE 2 X 1 FEP SPF	12100217	6	0.4	91	96062921	WIRING HARNESS
DATA LINE 2 X 1 FEP SPF	12100217	8	3	428	96022870	WIRING HARNESS
DATA LINE 2 X 1 FEP SPF	12100217	9	3	428	96022870	WIRING HARNESS
DATA LINE 2 X 1 FEP SPF	12100217	15	5.59	493	96023971	WIRING HARNESS
DATA LINE 2 X 1 FEP SPF	12100217	16	6.69	493	96023971	WIRING HARNESS
DATA LINE 2 X 1 FEP SPF	12100217	17	3.54	493	96023971	WIRING HARNESS
DATA LINE 2 X 1 FEP SPF	12100217	19	1.89	493	96023971	WIRING HARNESS

Description	Item	Pos.	Quantity	Page	Assembly	Description
DATA LINE 2 X 1 FEP SPF	12100217	370	1	493	96023971	WIRING HARNESS
DATA LINE 2 X 1 FEP SPF	12100217	373	5.59	493	96023971	WIRING HARNESS
DATA LINE 2 X 1 FEP SPF	12100217	375	5.59	493	96023971	WIRING HARNESS
DATA LINE 2 X 1 FEP SPF	12100217	376	5.59	493	96023971	WIRING HARNESS
DATA LINE 2 X 1 FEP SPF	12100217	377	5.59	493	96023971	WIRING HARNESS
DATA LINE 2 X 1 FEP SPF	12100217	378	5.59	493	96023971	WIRING HARNESS
DATA LINE 2 X 1 FEP SPF	12100217	379	5.59	493	96023971	WIRING HARNESS
DATA LINE 2 X 1 FEP SPF	12100217	380	5.59	493	96023971	WIRING HARNESS
DATA LINE 2 X 1 FEP SPF	12100217	16	5.3	495	96049294	WIRING HARNESS
DATA LINE 2 X 1 FEP SPF	12100217	18	5.4	495	96049294	WIRING HARNESS
DATA LINE 2 X 1 FEP SPF	12100217	19	5.4	495	96049294	WIRING HARNESS
DATA LINE 2 X 1 FEP SPF	12100217	370	4.65	495	96049294	WIRING HARNESS
DATA LINE 2 X 1 FEP SPF	12100217	371	5.15	495	96049294	WIRING HARNESS
DATA LINE 2 X 1 FEP SPF	12100217	372	4.65	495	96049294	WIRING HARNESS
DATA LINE 2 X 1,5 FEP SPF	12100216	372	5.59	493	96023971	WIRING HARNESS
DATA LINE 2 X 1,5 FEP SPF	12100216	15	5.3	495	96049294	WIRING HARNESS
DATA LINE 2 X 2,5 FEP SPF	12100214	7	5.59	493	96023971	WIRING HARNESS
DATA LINE 2 X 2,5 FEP SPF	12100214	8	5.59	493	96023971	WIRING HARNESS
DATA LINE 2 X 2,5 FEP SPF	12100214	9	5.59	493	96023971	WIRING HARNESS
DATA LINE 3 X 1 FEP SPF	12100215	12	5.59	493	96023971	WIRING HARNESS
DATA LINE 3 X 1 FEP SPF	12100215	13	5.59	493	96023971	WIRING HARNESS
DATA LINE 3 X 1 FEP SPF	12100215	14	3.39	493	96023971	WIRING HARNESS
DATA LINE 3 X 1 FEP SPF	12100215	374	5.59	493	96023971	WIRING HARNESS
DATA LINE 3 X 1 FEP SPF	12100215	381	5.59	493	96023971	WIRING HARNESS
DATA LINE 3 X 1 FEP SPF	12100215	382	5.59	493	96023971	WIRING HARNESS
DATA LINE 3 X 1 FEP SPF	12100215	17	5.4	495	96049294	WIRING HARNESS
DATA LINE 3 X 1 FEP SPF	12100215	373	6	495	96049294	WIRING HARNESS
DATALOGGER LDL2 DIGITAL	10340438	5	1	507	968015808	PRE-ASSEMBLY MOUNTING U
DEEP GROOVE BALL BEARIN	10114839	4	1	95	10878097	SLIP RING TRANSMITTER
DEEP GROOVE BALL BEARIN	10114838	10	1	95	10878097	SLIP RING TRANSMITTER
DEEP GROOVE BALL BEARIN	745139101	66	1	369	933074801	SLEWING GEAR DRIVE
DEEP GROOVE BALL BEARIN	745129501	4	1	364	966253908	WAGON
DEEP GROOVE BALL BEARIN	10294494	3	6	326	968483708	STEP CPL.
DEF INJECTOR SCR ONLY	12445245	12	1	458	91003833	UREA PLANT
DEF PRESSURE LINE 2X4000 P	10144297	19	1	458	91003833	UREA PLANT
DEF PUMP ADBLUE STUFE 4	11373478	11	1	461	96074081	UREA TANK, PRE-MOUNTING
DEF SUCTION LINE 4X600 EPD	10144270	18	1	461	96074081	UREA TANK, PRE-MOUNTING
DEVICE PLUG 3POL+PE	605006608	507	1	90	96062920	WIRING HARNESS
DEVICE PLUG 3POL+PE	605006608	505	3	490	96063649	WIRING HARNESS
DEVICE PLUG 3POL+PE	605006608	504	1	589	96055198	WIRING HARNESS
DIAPHRAGM ACCUMULATOR 0	510645108	175	1	516	96045552	HYDRAULICS UPPER CARRI
DIAPHRAGM ACCUMULATOR	510642008	156	1	516	96045552	HYDRAULICS UPPER CARRI
DIAPHRAGM ACCUMULATOR	510643408	195	2	517	96045552	HYDRAULICS UPPER CARRI
DIAPHRAGM GROMMET 35,5/	602717308	112	1	407	96022627	SLEWING PLATFORM PANELLI
DIAPHRAGM GROMMET 35,5/	602717308	107	1	415	96024809	SLEWING PLATFORM PANELLI
DIAPHRAGM SOCKET 29/37/44	553027808	116	1	272	96020819	RADIATOR, PRE-ASSEMBLED
DIAPHRAGM SOCKET 29/37/44	553027808	4	7	329	916170808	CABLE INLET
DIESEL ENGINE D944 A7-05	13455311	1	1	129	13471292	DRIVE UNIT
DIESEL ENGINE PURCHASED	919832408	104	1	12		LIEBHERR LTR 1100
DIESEL OXIDATION CATALYS	12888562	101	1	470	919674308	EXHAUST SYSTEM
DIFFERENTIAL PRESSURE S	10127114	155	1	474	96041566	ELECTRIC ADD-ON PARTS
DIODE BY255P DO-13	660014308	6	1	505	966157408	INSERTION MODULE
DIRECTIONAL CONTROL VALV	10430280	2	2	35	10675161	CONTROL BLOCK
DIRECTIONAL CONTROL VALV	10475300	27	1	531	11170519	VALVE BLOCK
DIRECTIONAL CONTROL VALV	10475300	17	2	534	10802090	CONTROL BLOCK
DIRECTIONAL CONTROL VALV	11002717	6	1	531	11170519	VALVE BLOCK
DIRECTIONAL CONTROL VALV	571817608	2	4	538	511307808	CONTROL PLATE
DIRECTIONAL CONTROL VALV	571889308	12	2	534	10802090	CONTROL BLOCK
DIRECTIONAL CONTROL VALV	12101146	4	1	549	10877219	CONTROL BLOCK
DIRECTIONAL CONTROL VAL	511320108	50	1	619	969856508	ADDITIONAL HYDRAULICS

Description	Item	Pos.	Quantity	Page	Assembly	Description
DIRECTIONAL CONTROL VAL	511444408	50	2	516	96045552	HYDRAULICS UPPER CARRI
DIRECTIONAL CONTROL VAL	511444408	50	1	591	96064697	HYDR.AUXILIARY HOISTING
DIRECTIONAL CONTROL VAL	511493608	50	1	709	965994108	HYDR.F.TELESCOPIC BOOM
DIRECTIONAL CONTROL VAL	10412605	31	2	530	11170518	VALVE BLOCK
DIRECTIONAL CONTROL VALV	571737808	20	1	543	10333672	CONTROL BLOCK
DIRECTIONAL CONTROL VAL	11691258	9	1	540	511486908	CONTROL PLATE
DIRECTIONAL CONTROL VAL	511302008	51	1	33	967304508	UNDERCARRIAGE HYDRAULIC
DIRECTIONAL CONTROL VAL	570527908	9	1	540	511486908	CONTROL PLATE
DIRECTIONAL CONTROL VAL	10652724	22	1	33	967304508	UNDERCARRIAGE HYDRAULIC
DIRECTIONAL CONTROL VALV	11009411	2	1	550	10663060	CONTROL BLOCK
DISC SPRING	570110908	7	4	373	570109508	DRIVING GEAR
DISC SPRING DIN 2093 40X20,	720801908	25	4	395	918810308	CONTROL STAND
DISK PIN	11494299	4	1	743	910445708	HOOK BLOCK
DISPATCH ASSY.MECH.PART	919950308	175	1	13		LIEBHERR LTR 1100
DISTANCE PLATE 22X306X425	283095108	48	2	670	91000053	TELESCOPIC SECT.IV PRE-A
DISTANCE RING 152X25X50 ST	956657514	9	4	47	968374708	MOUNTING PARTS
DISTANCE RING 48.3 X0 S235	970501108	8	4	723	964502908	BOOM NOSE PRE-ASS.
DISTANCE SLEEVE 10X6,2X10	10354375	56	1	338	917305408	INTERNAL PANELLING INSTA
DISTANCE SLEEVE 11X20X25	10138657	7	14	220	10140087	EXHAUST PIPE ASSEMBLY
DISTANCE SLEEVE 11X24X10	9076588	90	1	239	10151328	CABLE HARNESS MOUNTING
DISTANCE SLEEVE 15X6,3X25	10441664	55	1	338	917305408	INTERNAL PANELLING INSTA
DISTANCE SLEEVE 18.0X26 E	97047984	16	1	268	918811108	DRIVE ASSEMBLY, PRE-ASSE
DISTANCE SLEEVE 30.0 X0 4	952177008	11	8	263	918728708	DRIVE ASSEMBLY CPL.
DISTANCE SLEEVE 30.0 X0 4	952177008	14	8	268	918811108	DRIVE ASSEMBLY, PRE-ASSE
DISTANCE SLEEVE 35.0X40 3	970780908	9	2	290	917962508	FUEL TANK ADD-ON UNIT
DISTANCE SLEEVE 8,5X18X10	9132577	93	1	239	10151328	CABLE HARNESS MOUNTING
DISTANCE SLEEVE 9X15X30	12843150	5	1	184	10152867	INJECTOR WITH FASTENING
DISTANCE SLEEVE 9X15X30	12843150	6	1	185	13743036	RK INJECTOR
DISTANCE STUD M5X30 11SM	97028159	48	4	338	917305408	INTERNAL PANELLING INSTA
DISTANCE STUD M6X30 ST V	11001955	57	3	338	917305408	INTERNAL PANELLING INSTA
DISTANCE STUD M6X50 STA	10875447	58	2	338	917305408	INTERNAL PANELLING INSTA
DISTANCE TUBE 114.3X234 S3	951892308	54	1	673	91000054	TELESCOPIC SECT.5 PRE-AS
DISTANCE TUBE RD114,3X6,3	940380008	30	1	673	91000054	TELESCOPIC SECT.5 PRE-AS
DISTANCE TUBE RD114,3X6,3	940380008	2	1	727	914557108	INST.BACK SHEAVE FOR BOO
DISTRIBUTION BLOCK MX-F 3/	10028235	3	1	478	915300208	CENT. LUBRIC. SYSTEM SUP
DISTRIBUTION BLOCK MX-F 4/	12101719	2	1	478	915300208	CENT. LUBRIC. SYSTEM SUP
DISTRIBUTOR BLOCK EN AC-A	12511916	1	1	197	13472510	DISTRIBUTOR BLOCK PRE-A
DISTRIBUTOR BLOCK PRE-A	13472510	1	1	196	10143341	FUEL LINES
DOCUMENTATION	980288008	1000	1	180	10297295	EASY-CHANGE FILTER
DOCUMENTATION	980288008	1	1	195	12820742	FUEL FINE FILTER
DOCUMENTATION	980288008	1000	1	297	11068050	FILTER ELEMENT
DOCUMENTATION	980288008	1	1	300	514615408	O-RING
DOCUMENTATION	980288008	1	1	302	11341871	SEAL KIT RETURN FILTER
DOCUMENTATION	980288008	1	1	310	10149977	FUEL FILTER ELEMENT
DOCUMENTATION	980288008	1	1	313	12101886	SEAL KIT
DOCUMENTATION	980288008	1	1	344	11182242	FILTER
DOCUMENTATION	980288008	1	1	390	11083438	FILTER
DOCUMENTATION	980288008	1000	1	452	553174008	FUEL FILTER
DOCUMENTATION	980288008	1000	1	527	10280184	SEAL KIT
DOCUMENTATION	980288008	1000	1	553	12108313	SEALING SET VALVE
DOCUMENTATION	980288008	1	1	557	10037616	FILTER INSERT
DOCUMENTATION	980288008	1000	1	569	571352308	CARTRIDGE
DOOR CONTACT SWITCH	606020708	12	1	431	96056347	ELECTRIC ADD-ON PARTS CA
DOOR COVERING 880X390X28	97000275	3	1	361	917304708	SLIDING DOOR INSTALLATION
DOOR PANE 4X1161X 950 ES	97000274	2	1	361	917304708	SLIDING DOOR INSTALLATION
DOSING PUMP DP42.4 HD	11110051	2	1	444	918759708	ADD HEATING SUPERSTRUCT
DOUBLE BANJO BOLT 6-M10X	12210029	12	1	198	10143342	LEAK OIL RETURN LINE
DOUBLE FOLDING JIB MECH.	91001037	1	1	754	919932208	DOUBLE FOLDING JIB MECH.
DOUBLE FOLDING JIB MECH.	919932208	351	1	14		LIEBHERR LTR 1100
DOUBLE LADDER 2X7-485X2,	10877696	1	1	780	917508508	LADDER ATTACHMENT

Description	Item	Pos.	Quantity	Page	Assembly	Description
DOUBLE NON-RETURN VALVE	11006543	4	1	550	10663060	CONTROL BLOCK
DOUBLE SOCKET 2-POL	10875121	16	1	426	96023891	WIRING HARNESS
DOUBLE SPRING CONTACT 0	6001703	2267	2	91	96062921	WIRING HARNESS
DOUBLE-ENDED STUD DIN 83	12210035	3	3	202	10147364	AIR INTAKE ASSEMBLY
DOUBLE-ENDED STUD DIN 83	10179459	4	3	226	10115539	STARTER ASSEMBLY
DOUBLE-ENDED STUD DIN 835	12211782	11	12	129	13471292	DRIVE UNIT
DOUBLE-ENDED STUD DIN 93	4981172	5	3	222	10140729	EXHAUST TC MOUNTING
DOUBLE-HEADED SPANNER D	790003908	20	1	104	928569808	MAIN TOOLS
DOUBLE-HEADED SPANNER D	790003308	11	1	104	928569808	MAIN TOOLS
DOUBLE-HEADED SPANNER D	790002208	12	1	104	928569808	MAIN TOOLS
DOUBLE-HEADED SPANNER D	790002408	13	1	104	928569808	MAIN TOOLS
DOUBLE-HEADED SPANNER D	790003608	15	1	104	928569808	MAIN TOOLS
DOUBLE-HEADED SPANNER D	790002508	16	1	104	928569808	MAIN TOOLS
DOUBLE-HEADED SPANNER D	790002608	17	1	104	928569808	MAIN TOOLS
DOUBLE-HEADED SPANNER D	790002808	18	1	104	928569808	MAIN TOOLS
DOUBLE-HEADED SPANNER D	790002908	19	1	104	928569808	MAIN TOOLS
DOUBLE-HEADED SPANNER	790001708	10	1	104	928569808	MAIN TOOLS
DOUBLE-HEADED SPANNER	10652772	14	1	104	928569808	MAIN TOOLS
DOWEL PIN ISO 8752 10X80 4	10875874	37	1	760	918533508	ADAPTER PRE-ASS.
DOWEL PIN ISO 8752 12X85 4	10875876	39	1	747	919933308	TRANSPORT MOUNTING
DOWEL PIN ISO 8752 18X36 4	10875877	23	2	315	917357108	CRANE DRIVER CAB ADDITIO
DOWEL PIN ISO 8752 18X36 4	10875877	7	4	626	919616808	LUFFING RAM W. PIVOT
DOWEL PIN ISO 8752 21X140	432013108	5	2	24	749013714	GUIDE WHEEL CPL
DOWEL PIN ISO 8752 4X28 480	10875878	26	1	771	918596708	HEAD SECTION PRE-ASS.
DOWEL PIN ISO 8752 5X28 480	12100669	6	1	441	966707708	MIRROR RETAINER PRE-ASS.
DOWEL PIN ISO 8752 5X36 A2	12102738	7	1	441	966707708	MIRROR RETAINER PRE-ASS.
DOWEL PIN ISO 8752 6X10 ST	10875881	25	2	346	916162508	WINDOW ASSEMBLY
DOWEL PIN ISO 8752 6X30 ST	243034002	10	2	168	10120186	BALANCER ASSEMBLY
DOWEL PIN ISO 8752 6X40 480	12100674	5	2	485	965371508	LIMIT SWITCH ADD-ON
DOWEL PIN ISO 8752 8X40 St	4980376	5	1	153	10147438	CRANKSHAFT WITH GEAR
DOWEL PIN ISO 8752 A 8X16	432007908	72	1	383	968607101	PLANETARY GEARBOX
DOWEL PIN ISO 8752 A 8X16	432007908	72	1	584	938759801	PLANETARY GEARBOX
DRAIN SCREW	12106640	26	1	766	10801932	HAND PUMP
DRAW CONNECTING LINK	927159108	1	1	772	918221408	TENSION PLATE PRE-ASS.
DRAW CONNECTING LINK	927159208	2	1	772	918221408	TENSION PLATE PRE-ASS.
DRIVE ASSEMBLY CPL.	918728708	105	1	12		LIEBHERR LTR 1100
DRIVE ASSEMBLY, PRE-ASSE	918811108	1	1	263	918728708	DRIVE ASSEMBLY CPL.
DRIVE FLANGE EDELSTAHL	606012608	(6)	1	484	919940408	ELECTR. SYSTEM F.SLEWING
DRIVE FLANGE EDELSTAHL	606012608	6	1	588	96055197	ELECTRIC FOR WINCH 2
DRIVE FOR HIGH PRESSURE P	11407917	180	1	132	13455311	DIESEL ENGINE
DRIVE SHAFT	938760001	5	1	383	968607101	PLANETARY GEARBOX
DRIVE SOCKET DIN 3124 SW1	7361649	10	1	102	914860608	TOOLS AND ACCESSORIES
DRIVE SOCKET DIN 3129 32X3/	790028508	66	1	104	928569808	MAIN TOOLS
DRIVE UNIT AG 944 P380	13471292	1	1	128	919832408	DIESEL ENGINE PURCHASED
DRIVE WHEEL 12XB7X215,9 98	11306946	6	1	22	96062226	CRAWLER CARRIER RIGHT CP
DRIVE WHEEL 12XB7X215,9 98	11306946	6	1	27	96062228	CRAWLER TRACK CARRIER LE
DRIVER	10014729	7	1	480	10327065	ELECTRIC PUMP
DRIVING GEAR	10289549	1	1	377	510240708	HYDRO MOTOR
DRIVING GEAR	570109008	1	1	371	510229408	HYDRO MOTOR
DRIVING GEAR	570109508	1	1	372	570109008	DRIVING GEAR
DRIVING GEAR	571541208	1	1	43	592326914	VARIABLE DISPLACEMENT MO
DRIVING SHAFT	570109608	2	1	372	570109008	DRIVING GEAR
DRYER	571489008	105	1	272	96020819	RADIATOR, PRE-ASSEMBLED
DS HYDRO CYLINDER	10490901	(999)	1	374	916109208	ROTATING PLATFORM LOCK
DS HYDRO CYLINDER	10491695	999	1	316	10650940	TILT CYLINDER
DS LOWERING BRAKE VALVE	10650953	999	1	551	10355774	LOWERING BRAKE VALVE
DS LOWERING BRAKE VALVE	11114202	(999)	1	534	10802090	CONTROL BLOCK
DS LOWERING BRAKE VALVE	11114206	(999)	1	591	96064697	HYDR.AUXILIARY HOISTING
DS SUPPORT CYLINDER	10801854	999	1	71	10356288	SUPPORT CYLINDER
DS TELESCOPIC CYLINDER	12107425	999	1	684	12105406	TELESCOPIC CYLINDER

Description	Item	Pos.	Quantity	Page	Assembly	Description
DSF RING 130X121,9X3,5	12478647	5	1	159	10146367	PISTON CPL.
DU BUSHING 25X28X12	708011608	25	2	747	919933308	TRANSPORT MOUNTING
DUMMY PLUG DT 2 POLIG PA	10353004	530	1	494	96023971	WIRING HARNESS
DUST CAP	518620608	44	2	71	10356288	SUPPORT CYLINDER
DUST CAP POLYETHYLEN SC	704254808	12	4	85	966167808	COVER COMPL.
DUST PLUG	510541108	151	4	33	967304508	UNDERCARRIAGE HYDRAULIC
DUST PLUG	7405495	(1)	1	33	967304508	UNDERCARRIAGE HYDRAULIC
DUST PLUG DN6	7364491	(1)	1	33	967304508	UNDERCARRIAGE HYDRAULIC
EARTH CONNECTION PLATE C	12826252	4	1	204	9078314	HEATING FLANGE ADD-ON
EASY-CHANGE FILTER OEL 9µ	10297295	1	2	178	10142942	LUBE OIL FILTER ASSEMBLY
EDGE PROTECTION 1-2X9,5X6,	262103908	115	0.3	272	96020819	RADIATOR, PRE-ASSEMBLED
EDGE PROTECTION 1-2X9,5X6,	262103908	8	1.55	287	96024716	BATTERY BOX, PRE-ASSEMB
EDGE PROTECTION 1-2X9,5X6,	262103908	(3)	0.6	407	96022627	SLEWING PLATFORM PANELLI
EDGE PROTECTION 1-2X9,5X6,	262103908	7	0.16	506	926891108	GROUND RAIL
EDGE PROTECTION 73X43X28	97160916	95	8	656	91000049	PIVOT SECTION, PRE-ASSEMB
EDGE PROTECTION 73X43X28	97160916	90	2	674	91000054	TELESCOPIC SECT.5 PRE-AS
EDGE PROTECTION 90X43X28	97160917	96	2	656	91000049	PIVOT SECTION, PRE-ASSEMB
EDGE SEALING RING	571326108	7	2	586	927521201	OIL-LEVEL GAUGE INSTALLAT
EL.2 HOISTING LIMIT SWITCH	918258408	362	1	14		LIEBHERR LTR 1100
EL.ADD-ON SET-LIMIT SWITC	968365908	11	1	484	919940408	ELECTR. SYSTEM F.SLEWING
EL.COMP. DISPATCH ASSEM	915731908	71	1	12		LIEBHERR LTR 1100
EL.COOLANT PREHEAT OW	91000497	404	1	15		LIEBHERR LTR 1100
EL.INSTRUMENTS F.CRANE	919812608	143	1	13		LIEBHERR LTR 1100
ELASTOMER INSERT DIN 3015	7363897	326	2	566	969767908	PIPEWORK AIR INSTALLATIO
ELBOW	10142671	1	1	218	10142742	COOLANT PIPE BEND ADD-ON
ELEC MECH FOLDING JIB BO	96055854	500	1	755	91001037	DOUBLE FOLDING JIB MECH.
ELECTR. F.EXTENDING MECH	96063455	3	1	689	919938608	ELECTR. SYSTEM F. BOOM
ELECTR. FOR HEAD SECTION	96063454	2	1	689	919938608	ELECTR. SYSTEM F. BOOM
ELECTR. FOR HEAD SECTION	966636808	501	1	755	91001037	DOUBLE FOLDING JIB MECH.
ELECTR. FOR WORK AREA LI	96028878	20	4	576	918988908	A-HEADLIGHT SLEWING PLA
ELECTR. SYSTEM F. BOOM	919938608	213	1	14		LIEBHERR LTR 1100
ELECTR. SYSTEM F.SLEWING	919940408	179	1	13		LIEBHERR LTR 1100
ELECTR.CABLE 0,5	10870538	344	17	426	96023891	WIRING HARNESS
ELECTR.CABLE 0,75	10870539	345	8.76	426	96023891	WIRING HARNESS
ELECTR.CABLE 0,75	10870539	345	8.55	428	96022870	WIRING HARNESS
ELECTR.CABLE 0,75	10870539	345	10.2	490	96063649	WIRING HARNESS
ELECTR.CABLE 0,75	10870539	345	24.6	495	96049294	WIRING HARNESS
ELECTR.CABLE 0,75	10870539	345	5.21	706	96063415	WIRING HARNESS
ELECTR.CABLE 0,75	600415208	352	0.23	698	96063213	LEAD
ELECTR.CABLE 1,0	10870540	305	59.66	90	96062920	WIRING HARNESS
ELECTR.CABLE 1,0	10870540	305	29.82	91	96062921	WIRING HARNESS
ELECTR.CABLE 1,0	10870540	305	282.78	426	96023891	WIRING HARNESS
ELECTR.CABLE 1,0	10870540	305	152.56	428	96022870	WIRING HARNESS
ELECTR.CABLE 1,0	10870540	305	435.76	490	96063649	WIRING HARNESS
ELECTR.CABLE 1,0	10870540	305	9.6	492	96063650	LEAD
ELECTR.CABLE 1,0	10870540	305	189.51	493	96023971	WIRING HARNESS
ELECTR.CABLE 1,0	10870540	305	75.4	495	96049294	WIRING HARNESS
ELECTR.CABLE 1,0	10870540	305	4.42	589	96055198	WIRING HARNESS
ELECTR.CABLE 1,0	10870540	305	8	612	913753108	RADIO PREPARATION UPPER
ELECTR.CABLE 1,0	10870540	305	9.75	699	96051215	CABLES, PRE-ASSEMBLED
ELECTR.CABLE 1,5	10870541	307	0.7	91	96062921	WIRING HARNESS
ELECTR.CABLE 1,5	10870541	307	11.18	493	96023971	WIRING HARNESS
ELECTR.CABLE 10	12102630	2807	3.9	494	96023971	WIRING HARNESS
ELECTR.CABLE 16	12102632	2809	3.9	494	96023971	WIRING HARNESS
ELECTR.CABLE 16	12102634	2811	7.8	491	96063649	WIRING HARNESS
ELECTR.CABLE 2,5	10870542	309	39.7	426	96023891	WIRING HARNESS
ELECTR.CABLE 2,5	10870542	309	18.4	428	96022870	WIRING HARNESS
ELECTR.CABLE 2,5	10870542	309	23	490	96063649	WIRING HARNESS
ELECTR.CABLE 2,5	10870542	309	19.5	493	96023971	WIRING HARNESS
ELECTR.CABLE 25	12102635	2812	6.6	494	96023971	WIRING HARNESS

Description	Item	Pos.	Quantity	Page	Assembly	Description
ELECTR.FOR CENTER SECTIO	96062917	1	1	79	919938908	ELECTR.FOR CRAWLER CARR
ELECTR.FOR CRAWLER CARR	919938908	66	1	12		LIEBHERR LTR 1100
ELECTR.FOR SLEWING GEAR	966720708	15	1	486	968365908	EL.ADD-ON SET-LIMIT SWITCH
ELECTRIC ADD-ON PARTS	96041566	100	1	473	96051762	EXHAUST SYSTEM PRE-ASSE
ELECTRIC ADD-ON PARTS	96050762	10	1	609	919584608	SOCKET
ELECTRIC ADD-ON PARTS CA	96056347	6	1	424	919812608	EL.INSTRUMENTS F.CRANE D
ELECTRIC CYLINDER 24V	10292008	4	1	326	968483708	STEP CPL.
ELECTRIC F.BASE SECTION	96063954	1	1	689	919938608	ELECTR. SYSTEM F. BOOM
ELECTRIC FOR BATTERY BOX	96023914	100	1	285	918955208	BATTERY BOX CPL.
ELECTRIC FOR WINCH 1	96047707	10	1	484	919940408	ELECTR. SYSTEM F.SLEWING
ELECTRIC FOR WINCH 2	96055197	2	1	578	919935608	AUXILIARY HOISTING GEAR C
ELECTRIC FOR WINCH 2	968551908	18	1	598	96075086	HYD.AUX.LIFT GEAR UPPER
ELECTRIC MEASURING & WA	96058737	1	1	728	919868808	CARRIER, MEAS. & WARN. D
ELECTRIC PUMP	10327065	1	1	478	915300208	CENT. LUBRIC. SYSTEM SUP
ELECTRICS OIL COOLER 2	96030354	100	1	562	919528608	OIL COOLER INSTALLATION
ELECTRONICS UNIT	10650399	35	1	397	10877138	OPERATOR SEAT
EMERGENCY CUT-OFF CRANE	967260908	4	1	434	96030724	INSTRUMENT CLUSTER ELEC
EMERGENCY HAND OPERAT	11007817	4	1	544	571737808	DIRECTIONAL CONTROL VALV
EMERGENCY STOP BUTTON	606144108	(2)	1	434	96030724	INSTRUMENT CLUSTER ELEC
EMPTY CASING 120X220X80X0	97153848	5	1	703	96063458	TERMINAL BOX CPL.
EMPTY CASING 160X260X90X0	97156873	7	1	692	96063456	TERMINAL BOX
EMPTY CASING 57X80X 125 A	97148691	5	1	92	96060493	ANTENNA CPL.
EMPTY CASING 57X80X 125 A	97148691	5	1	93	96060494	ANTENNA CPL.
ENCODER BASE SECTION	96047742	10	1	652	919935408	TELESCOPIC BOOM CPL.
ENCODER HEAD PIECE	96047743	30	1	652	919935408	TELESCOPIC BOOM CPL.
END ANGLE	602794608	8	2	504	968077108	TERMINAL STRIP
END ANGLE	602794608	299	2	703	96063458	TERMINAL BOX CPL.
END BUSHING 48,49X71,38X1	5209131	4	1	56	790258414	CRAWLER CHAIN CPL
END CAP 34	553181108	3	1	446	96019783	ADDNL.HEATING, PRE-ASSE
END CAP 42,3	553174108	17	1	444	918759708	ADD HEATING SUPERSTRUCT
END COVER 60	9144757	2	1	151	10118839	OIL FILLER INLET
END COVER DIN 443 B 480H	12209779	2	4	136	11389608	CRANKCASE CPL. WITH CYLIN
END COVER DIN 443 B 480H	12209781	10	3	163	10149578	CYLINDER HEAD
END COVER DIN 443 B 480H	12209783	3	7	136	11389608	CRANKCASE CPL. WITH CYLIN
END PIPE X5CRNI18-10	97098879	105	1	470	919674308	EXHAUST SYSTEM
ENGINE BRACKET LEFT G28M	97061306	4	1	268	918811108	DRIVE ASSEMBLY, PRE-ASSE
ENGINE BRACKET RIGHT G2	97061151	3	1	268	918811108	DRIVE ASSEMBLY, PRE-ASSE
ENGINE BRACKET WELD.RE	968764008	5	1	268	918811108	DRIVE ASSEMBLY, PRE-ASSE
ENGINE BRACKET WELD.REA	968764108	6	1	268	918811108	DRIVE ASSEMBLY, PRE-ASSE
ENGINE CONTROL SENSORS	12583633	581	1	135	13455311	DIESEL ENGINE
EQUALIZER PLATE	10115155	18	4	95	10878097	SLIP RING TRANSMITTER
EQUALIZER PLATE	10359124	20	2	95	10878097	SLIP RING TRANSMITTER
EQUALIZING RESERVOIR	96035743	3	1	263	918728708	DRIVE ASSEMBLY CPL.
EQUALIZING RESERVOIR 0,2L	502807308	(1)	1	591	96064697	HYDR.AUXILIARY HOISTING
EQUIPMENT CAMERA CAB	96036820	3	1	622	918805408	CAMERA MONITOR OW
EQUIPMENT CARRIER WELDE	969269308	1	1	268	918811108	DRIVE ASSEMBLY, PRE-ASSE
ES PIN 8X16 FE/ZN8/CN/T2	725111808	12	2	410	969425608	FLAP RIGHT PRE-ASS.
ES PIN 8X16 FE/ZN8/CN/T2	725111808	10	1	416	969399608	FLAP PRE-ASS.
EVAPORATOR	10874825	15	1	388	11083498	AIR CONDITIONING UNIT
EXHAUST FLAP	10153116	3	1	223	12512627	EXHAUST NOZZLE ATTACHM
EXHAUST FLAP	12983604	3	1	223	12512627	EXHAUST NOZZLE ATTACHM
EXHAUST MIXING PIPE SCRFIL	13402640	104	1	473	96051762	EXHAUST SYSTEM PRE-ASSE
EXHAUST MUFFLER 116/55X15	553187208	2	1	446	96019783	ADDNL.HEATING, PRE-ASSE
EXHAUST NOZZLE ATTACHME	12512627	432	1	133	13455311	DIESEL ENGINE
EXHAUST NOZZLE R-MOTOR	10153666	1	1	223	12512627	EXHAUST NOZZLE ATTACHM
EXHAUST PIPE 38/FLEXIBEL	553054108	15	2.25	444	918759708	ADD HEATING SUPERSTRUCT
EXHAUST PIPE 38/FLEXIBEL	553054108	5	0.35	446	96019783	ADDNL.HEATING, PRE-ASSE
EXHAUST PIPE ASSEMBLY R	10140087	410	1	133	13455311	DIESEL ENGINE
EXHAUST PIPE R-MOTOR D93	10145524	1	1	220	10140087	EXHAUST PIPE ASSEMBLY
EXHAUST PIPE X5CRNI18-10	97098878	103	1	473	96051762	EXHAUST SYSTEM PRE-ASSE

Description	Item	Pos.	Quantity	Page	Assembly	Description
EXHAUST PIPE X5CRNI18-10	97055658	103	1	470	919674308	EXHAUST SYSTEM
EXHAUST PIPE X5CRNI18-10	97098877	104	1	470	919674308	EXHAUST SYSTEM
EXHAUST SYSTEM	919674308	163	1	13		LIEBHERR LTR 1100
EXHAUST SYSTEM PIPELINES	96051451	90	1	470	919674308	EXHAUST SYSTEM
EXHAUST SYSTEM PRE-ASSE	96051762	1	1	470	919674308	EXHAUST SYSTEM
EXHAUST TC MOUNTING HE30	10140729	430	1	133	13455311	DIESEL ENGINE
EXHAUST VALVE SEAT INSE	10128680	7	2	163	10149578	CYLINDER HEAD
EXPANSION BOLT M27X145 30	409817708	1	56	101	914860508	FIXING PARTS SLEWING RING
EXPANSION BOLT M27X145 30	409817708	2	44	365	917472008	ROLLER SLEWING RING
EXPANSION TANK CPL.	96028331	150	1	591	96064697	HYDR.AUXILIARY HOISTING
EXPANSION TANK PRE-ASS.	96035595	2	1	263	918728708	DRIVE ASSEMBLY CPL.
EXPANSION TANK WELDED	96035739	1	1	282	96035743	EQUALIZING RESERVOIR
EXPANSION TANK WELDED AL	96035326	1	1	280	96035595	EXPANSION TANK PRE-ASS.
EXTENSION DIN 3123 200X3/4"	790026408	65	1	104	928569808	MAIN TOOLS
EXTENSION DIN 3123 400X3/4"	790026308	64	1	104	928569808	MAIN TOOLS
EXTENSION M10X1K/ M10X1	774373408	10	4	478	915300208	CENT. LUBRIC. SYSTEM SUP
EXTENSION M20X1,5/M25X1,5	602613208	19	1	84	96075205	SWITCH BOX COMPL.
EXTENSION M20X1,5/M25X1,5	602613208	505	1	775	96035674	LEAD
EXTERNAL FEED 110V	91003677	381	1	14		LIEBHERR LTR 1100
FALL PROTECTION	919484908	136	1	13		LIEBHERR LTR 1100
FALL-BACK GUARD 12-36V 82	614009908	11	1	84	96075205	SWITCH BOX COMPL.
FAN	10650386	(11)	1	397	10877138	OPERATOR SEAT
FAN	12100177	(59)	1	397	10877138	OPERATOR SEAT
FAN 24V	10354837	3	1	563	10097345	OIL AIR COOLER
FAN HOUSING	10354836	2	1	563	10097345	OIL AIR COOLER
FASTENER	965256808	3	1	87	96062922	MOUNTING PLATE PRE-ASS.
FASTENING CLAMP 34 EN AC	10123304	1	1	238	10144098	FASTENING CLAMP
FASTENING CLAMP 34X34	10144098	6	2	237	10144227	CONTROL BOX ANNEXE
FASTENING DEVICE	10153374	4	1	213	12418347	AIR COND. COMPRESSOR A
FASTENING PIECES HYDRAUL	96075102	9	1	598	96075086	HYD.AUX.LIFT GEAR UPPER
FAULT INDICATOR	10429952	9	1	480	10327065	ELECTRIC PUMP
FEMALE PLUG 15-POLE	10024744	502	2	426	96023891	WIRING HARNESS
FEMALE PLUG 25-POLE	602322708	504	1	426	96023891	WIRING HARNESS
FEMALE PLUG 9-POLE	602338608	527	1	500	96059659	CABLES, BASIC CONSTRUCTI
FERRITE KLAPPBAR	617000608	527	1	427	96023891	WIRING HARNESS
FERRITE KLAPPBAR	617000608	512	1	428	96022870	WIRING HARNESS
FERRULE 2 CU	11170565	7	16	47	968374708	MOUNTING PARTS
FERRULE 2 CU	11170565	3	4	50	96070203	TRANSPORT LASHING
FERRULE 2 CU	11170565	13	16	70	915447908	HYDRAULIC SUPPORT
FERRULE 2 CU	11170565	7	2	125	963260408	LOCKING
FERRULE 2 CU	11170565	7	2	126	96049764	LOCKING
FERRULE 2 CU	11170565	9	2	750	96062062	FOLDING BRACKET PRE-ASS.
FERRULE 2 CU	11170565	29	2	771	918596708	HEAD SECTION PRE-ASS.
FERRULE 2 CU	11170565	4	4	783	968952708	MOUNTING HOOK ROD
FILLER CAP 42 PA	10815416	19	1	355	916163008	WIPERS INSTALLATION
FILLER NECK CPL.	10118838	1	1	151	10118839	OIL FILLER INLET
FILTER	11083438	2	1	388	11083498	AIR CONDITIONING UNIT
FILTER	12211223	(1)	1	462	96071742	UREA TANK
FILTER	571528008	34	1	522	11170514	VALVE BLOCK
FILTER BOWL	571021308	3	1	555	510670808	LINE FILTER
FILTER CARTRIDGE 0,005m³/m	510671108	176	2	516	96045552	HYDRAULICS UPPER CARRI
FILTER CARTRIDGE 0,005m³/m	510671108	155	1	591	96064697	HYDR.AUXILIARY HOISTING
FILTER CARTRIDGE 0,005m³/m	510671108	153	1	709	965994108	HYDR.F.TELESCOPIC BOOM
FILTER ELEMENT OEL 8µm	11068050	1	1	296	10871354	RETURN FILTER
FILTER HEAD PRE-ASSY.	13472766	1	1	193	13512036	CONSOLE FOR FILTER PRE-A
FILTER INSERT 1m³/min 10µm	510671808	(1)	1	295	969219208	OIL TANK PRE-ASS.
FILTER INSERT OEL 10µm	10037616	(1)	1	516	96045552	HYDRAULICS UPPER CARRI
FILTER INSERT OEL 10µm	10037616	1	1	555	510670808	LINE FILTER
FILTER MODULE SCRFILTER G	11429849	20	1	475	11429845	SCRFILTER ASSEMBLY
FILTER SYNFASAN	11182242	66	1	339	917305408	INTERNAL PANELLING INSTA

Description	Item	Pos.	Quantity	Page	Assembly	Description
FINAL CONTROL VALVE pmax	10138450	14	1	130	13455311	DIESEL ENGINE
FINGER-HOLD X0 KUNSTSTOF	955500008	6	1	410	969425608	FLAP RIGHT PRE-ASS.
FIRE EXTINGUISHER DIN EN 3	12101159	4	1	105	928620108	ACCESSORIES
FIRE EXTINGUISHER HOLDER	10874802	300	1	645	919950308	DISPATCH ASSY.MECH.PART
FIRST AID KIST DIN 13164 260	789000308	5	1	105	928620108	ACCESSORIES
FITTING	11081053	3	1	483	774375108	PASSAGE NIPPLE BLOCK
FITTING	790065608	4	1	102	914860608	TOOLS AND ACCESSORIES
FITTING	790533908	5	2	102	914860608	TOOLS AND ACCESSORIES
FITTING	955919508	180	4	516	96045552	HYDRAULICS UPPER CARRI
FITTING 36.0X46 11SMN30+C	977253208	614	2	34	967304508	UNDERCARRIAGE HYDRAULIC
FITTING BUZ 16S CR6-FREI	477701108	657	2	34	967304508	UNDERCARRIAGE HYDRAULIC
FITTING BUZ 30S CR6-FREI	477701608	625	4	34	967304508	UNDERCARRIAGE HYDRAULIC
FITTING BUZ 8 M14X1,5 EDEL	10816958	400	6	473	96051762	EXHAUST SYSTEM PRE-ASSE
FITTING EGE 12L G1/2 CR6-F	471903808	709	1	519	96045552	HYDRAULICS UPPER CARRI
FITTING EGE 12S G1/2A CR6-F	471901808	633	5	518	96045552	HYDRAULICS UPPER CARRI
FITTING EGE 12S G3/8A CR6-F	471900508	784	1	520	96045552	HYDRAULICS UPPER CARRI
FITTING EGE 12S G3/8A CR6-F	471900508	609	1	717	966004808	ADDNL.HYDR. FOLDING JIB
FITTING EGE 16S G3/4 CR6-F	471901908	621	1	518	96045552	HYDRAULICS UPPER CARRI
FITTING EGE 18L G1/2A CR6-F	471901308	687	1	518	96045552	HYDRAULICS UPPER CARRI
FITTING EGE 18L G3/4 CR6-F	10878394	400	1	306	96066239	PREMOUNTED FUEL FILTER
FITTING EGE 42L G1 1/2 CR6-F	471903608	400	1	295	969219208	OIL TANK PRE-ASS.
FITTING EGESD10-LR-WD CR6	471901108	667	3	518	96045552	HYDRAULICS UPPER CARRI
FITTING EGESD10-LR-WD CR6	471901108	621	2	592	96064697	HYDR.AUXILIARY HOISTING
FITTING EGESD10-LR-WD CR6	471901108	611	3	709	965994108	HYDR.F.TELESCOPIC BOOM
FITTING EGESD12-LR-WD CR6	471901208	689	1	518	96045552	HYDRAULICS UPPER CARRI
FITTING EGESD16-SR-WD CR6	471900608	605	2	34	967304508	UNDERCARRIAGE HYDRAULIC
FITTING EGESD16-SR-WD CR6	471900608	686	1	518	96045552	HYDRAULICS UPPER CARRI
FITTING EGESD28-LR-WD CR6	471901508	747	4	519	96045552	HYDRAULICS UPPER CARRI
FITTING EGESD6-SR-WD CR6	471900308	640	1	34	967304508	UNDERCARRIAGE HYDRAULIC
FITTING EGESD6-SR-WD CR6	471900308	768	2	519	96045552	HYDRAULICS UPPER CARRI
FITTING EGESD6-SR-WD CR6	471900308	609	1	591	96064697	HYDR.AUXILIARY HOISTING
FITTING EGESD6-SR-WD CR6	471900308	605	2	619	969856508	ADDITIONAL HYDRAULICS
FITTING EL 10L CR6-FREI	472330208	657	5	518	96045552	HYDRAULICS UPPER CARRI
FITTING EL 10L CR6-FREI	472330208	619	2	592	96064697	HYDR.AUXILIARY HOISTING
FITTING EL 10L CR6-FREI	472330208	605	3	709	965994108	HYDR.F.TELESCOPIC BOOM
FITTING EL 10S CR6-FREI	7367776	660	2	34	967304508	UNDERCARRIAGE HYDRAULIC
FITTING EL 12S CR6-FREI	7617461	622	2	34	967304508	UNDERCARRIAGE HYDRAULIC
FITTING EL 12S CR6-FREI	7617461	634	11	518	96045552	HYDRAULICS UPPER CARRI
FITTING EL 15L CR6-FREI	472300414	606	1	591	96064697	HYDR.AUXILIARY HOISTING
FITTING EL 16S CR6-FREI	7407098	656	1	34	967304508	UNDERCARRIAGE HYDRAULIC
FITTING EL 16S CR6-FREI	7407098	624	4	518	96045552	HYDRAULICS UPPER CARRI
FITTING EL 28L CR6-FREI	7407120	782	1	519	96045552	HYDRAULICS UPPER CARRI
FITTING EL 6S CR6-FREI	472331208	643	1	34	967304508	UNDERCARRIAGE HYDRAULIC
FITTING EL 6S CR6-FREI	472331208	663	4	518	96045552	HYDRAULICS UPPER CARRI
FITTING EL 6S CR6-FREI	472331208	612	2	591	96064697	HYDR.AUXILIARY HOISTING
FITTING EL 6S CR6-FREI	472331208	603	1	619	969856508	ADDITIONAL HYDRAULICS
FITTING EL 6S CR6-FREI	472331208	602	1	717	966004808	ADDNL.HYDR. FOLDING JIB
FITTING ELSD38-S CR6-FREI	472331908	716	3	519	96045552	HYDRAULICS UPPER CARRI
FITTING ELSD38-S CR6-FREI	472331908	639	1	598	96075086	HYD.AUX.LIFT GEAR UPPER
FITTING ET 15L M22X1,5 CR6-F	472430408	791	1	520	96045552	HYDRAULICS UPPER CARRI
FITTING EV 18L CR6-FREI	10035314	793	1	520	96045552	HYDRAULICS UPPER CARRI
FITTING EV16S CR6-FREI	10410770	779	2	519	96045552	HYDRAULICS UPPER CARRI
FITTING EV38S M52X2 CR6-F	10467292	776	1	519	96045552	HYDRAULICS UPPER CARRI
FITTING EW 10L M16X1,5 CR6	7403569	614	9	518	96045552	HYDRAULICS UPPER CARRI
FITTING EW 10L M16X1,5 CR6	7403569	646	1	566	969767908	PIPEWORK AIR INSTALLATIO
FITTING EW 10L M16X1,5 CR6	7403569	622	3	592	96064697	HYDR.AUXILIARY HOISTING
FITTING EW 10L M16X1,5 CR6	7403569	604	6	709	965994108	HYDR.F.TELESCOPIC BOOM
FITTING EW 10S CR6-FREI	7617268	609	4	34	967304508	UNDERCARRIAGE HYDRAULIC
FITTING EW 10S CR6-FREI	7617268	761	3	519	96045552	HYDRAULICS UPPER CARRI
FITTING EW 10S CR6-FREI	7617268	601	3	717	966004808	ADDNL.HYDR. FOLDING JIB

Description	Item	Pos.	Quantity	Page	Assembly	Description
FITTING EW 12S CR6-FREI	7617354	621	1	34	967304508	UNDERCARRIAGE HYDRAULIC
FITTING EW 12S CR6-FREI	7617354	608	2	63	967301408	PREPARATION HYDR
FITTING EW 12S CR6-FREI	7617354	771	10	519	96045552	HYDRAULICS UPPER CARRI
FITTING EW 12S CR6-FREI	7617354	607	1	717	966004808	ADDNL.HYDR. FOLDING JIB
FITTING EW 16S CR6-FREI	7617460	616	3	34	967304508	UNDERCARRIAGE HYDRAULIC
FITTING EW 16S CR6-FREI	7617460	622	8	518	96045552	HYDRAULICS UPPER CARRI
FITTING EW 18L ST CR6-FREI	10815664	404	1	291	969543308	FUEL TANK, PRE-ASSEMBLED
FITTING EW 18L ST CR6-FREI	10815664	633	3	566	969767908	PIPEWORK AIR INSTALLATIO
FITTING EW 20S M30X2 CR6-F	7407108	624	1	34	967304508	UNDERCARRIAGE HYDRAULIC
FITTING EW 25S CR6-FREI	7407119	653	1	34	967304508	UNDERCARRIAGE HYDRAULIC
FITTING EW 6S M14X1,5 CR6-F	472531508	666	4	518	96045552	HYDRAULICS UPPER CARRI
FITTING EW 6S M14X1,5 CR6-F	472531508	608	2	591	96064697	HYDR.AUXILIARY HOISTING
FITTING EW 6S M14X1,5 CR6-F	472531508	606	1	619	969856508	ADDITIONAL HYDRAULICS
FITTING EW 6S M14X1,5 CR6-F	472531508	604	1	717	966004808	ADDNL.HYDR. FOLDING JIB
FITTING EWSD22-L CR6-FREI	472530608	755	3	519	96045552	HYDRAULICS UPPER CARRI
FITTING EWSD38-S CR6-FREI	472531808	643	6	518	96045552	HYDRAULICS UPPER CARRI
FITTING EWSD38-S CR6-FREI	472531808	632	2	592	96064697	HYDR.AUXILIARY HOISTING
FITTING EWSD38-S CR6-FREI	472531808	632	2	598	96075086	HYD.AUX.LIFT GEAR UPPER
FITTING G 24 M30x2 11SMnPb3	9273271	2	2	178	10142942	LUBE OIL FILTER ASSEMBLY
FITTING G 28L A3C	470000814	28	1	628	12102922	LUFFING CYLINDER
FITTING G 6LL	774374208	11	1	478	915300208	CENT. LUBRIC. SYSTEM SUP
FITTING GAI 12S G3/8 CR6-F	470730308	777	1	519	96045552	HYDRAULICS UPPER CARRI
FITTING GE 10L M14X1,5 CR6	471030508	629	1	518	96045552	HYDRAULICS UPPER CARRI
FITTING GE 10L M16X1,5 CR6	7021521	2	1	465	969904608	PRESSURE RELIEF VALVE PR
FITTING GE 10L M22X1,5 CR6	471039808	623	2	566	969767908	PIPEWORK AIR INSTALLATIO
FITTING GE 12 M14X1,5/3/ ED	11002988	5	1	196	10143341	FUEL LINES
FITTING GE 12 M14X1,5/3/ ED	11002988	1711	1	251	10148366	SEAL KIT DIESEL ENGINE
FITTING GE 12L G1/2 CR6-FRE	471034808	647	1	34	967304508	UNDERCARRIAGE HYDRAULIC
FITTING GE 12L G1/2 CR6-FRE	471034808	640	4	518	96045552	HYDRAULICS UPPER CARRI
FITTING GE 12L G1/2 CR6-FRE	471034808	609	1	619	969856508	ADDITIONAL HYDRAULICS
FITTING GE 12L G1/2 CR6-FRE	471034808	603	4	709	965994108	HYDR.F.TELESCOPIC BOOM
FITTING GE 12S G1/2A CR6-F	471032608	620	2	34	967304508	UNDERCARRIAGE HYDRAULIC
FITTING GE 12S G1/2A CR6-F	471032608	605	1	63	967301408	PREPARATION HYDR
FITTING GE 12S G1/2A CR6-F	471032608	600	8	74	967314108	ADD.HYDR.UNIT SUPPORT CY
FITTING GE 12S G1/2A CR6-F	471032608	744	9	519	96045552	HYDRAULICS UPPER CARRI
FITTING GE 12S G1/2A CR6-F	471032608	608	1	619	969856508	ADDITIONAL HYDRAULICS
FITTING GE 12S G1/4A CR6-F	7617784	781	1	519	96045552	HYDRAULICS UPPER CARRI
FITTING GE 12S G3/8A CR6-F	471032708	603	8	63	967301408	PREPARATION HYDR
FITTING GE 12S G3/8A CR6-F	471032708	765	3	519	96045552	HYDRAULICS UPPER CARRI
FITTING GE 12S M18X1,5 CR6	471032908	698	2	519	96045552	HYDRAULICS UPPER CARRI
FITTING GE 14,15,16 M18X CR6	10813942	5	1	197	13472510	DISTRIBUTOR BLOCK PRE-A
FITTING GE 15L M18X1,5 CR6	471030908	605	1	591	96064697	HYDR.AUXILIARY HOISTING
FITTING GE 15L M22X1,5 CR6	471035508	400	1	291	969543308	FUEL TANK, PRE-ASSEMBLED
FITTING GE 15L M22X1,5 CR6	471035508	636	2	566	969767908	PIPEWORK AIR INSTALLATIO
FITTING GE 16S M27X2 CR6-F	7018370	739	2	519	96045552	HYDRAULICS UPPER CARRI
FITTING GE 18L M22X1,5 CR6	471031108	637	1	34	967304508	UNDERCARRIAGE HYDRAULIC
FITTING GE 18L M22X1,5 CR6	471031108	402	1	291	969543308	FUEL TANK, PRE-ASSEMBLED
FITTING GE 18L M22X1,5 CR6	471031108	737	1	519	96045552	HYDRAULICS UPPER CARRI
FITTING GE 18L M22X1,5 CR6	471031108	602	1	566	969767908	PIPEWORK AIR INSTALLATIO
FITTING GE 18L M22X1,5 ST C	10815662	644	2	566	969767908	PIPEWORK AIR INSTALLATIO
FITTING GE 42L G1 1/2 CR6-F	471034708	649	2	518	96045552	HYDRAULICS UPPER CARRI
FITTING GE 6 M10X1,0/7/1 CR6	10813933	7	1	197	13472510	DISTRIBUTOR BLOCK PRE-A
FITTING GE 6S G1/4A CR6-FRE	471032108	665	4	518	96045552	HYDRAULICS UPPER CARRI
FITTING GE 6S G1/4A CR6-FRE	471032108	3	3	587	921444108	CENTRAL LUBRICATING SYS
FITTING GE 6S G1/4A CR6-FRE	471032108	611	2	591	96064697	HYDR.AUXILIARY HOISTING
FITTING GE 6S G1/4A CR6-FRE	471032108	638	2	598	96075086	HYD.AUX.LIFT GEAR UPPER
FITTING GE 6S G1/4A CR6-FRE	471032108	604	1	619	969856508	ADDITIONAL HYDRAULICS
FITTING GE 6S G1/4A CR6-FRE	471032108	601	1	709	965994108	HYDR.F.TELESCOPIC BOOM
FITTING GE 8 M12X1,5/1/2 CR6	10801399	29	2	223	12512627	EXHAUST NOZZLE ATTACHM
FITTING GE 8 M12X1,5/1/2 CR6	10813935	2	2	197	13472510	DISTRIBUTOR BLOCK PRE-A

Description	Item	Pos.	Quantity	Page	Assembly	Description
FITTING GE 8L M18X1,5 CR6-F	471039308	10	1	444	918759708	ADD HEATING SUPERSTRUCT
FITTING GE8L M16X1.5	97123127	1	1	283	96038054	CONNECTION PIECE
FITTING GEF.A M24X1,5	10493479	57	1	684	12105406	TELESCOPIC CYLINDER
FITTING GEO 8L M16X1,5 CR6	10872598	3	1	465	969904608	PRESSURE RELIEF VALVE PR
FITTING GR 20/16S CR6-FREI	475033608	740	1	519	96045552	HYDRAULICS UPPER CARRI
FITTING GR 22/18L CR6-FREI	475030708	743	1	519	96045552	HYDRAULICS UPPER CARRI
FITTING GZ 15L CR6-FREI	470011208	790	1	520	96045552	HYDRAULICS UPPER CARRI
FITTING GZ 15L CR6-FREI	470011208	638	1	592	96064697	HYDR.AUXILIARY HOISTING
FITTING GZ 18L CR6-FREI	470010408	741	2	519	96045552	HYDRAULICS UPPER CARRI
FITTING ISO 8434 EL 30S CR6	482331814	602	4	34	967304508	UNDERCARRIAGE HYDRAULIC
FITTING ISO 8434 EL 35L CR6	482330814	745	1	519	96045552	HYDRAULICS UPPER CARRI
FITTING ISO 8434 ET 10L M16	482430314	630	3	518	96045552	HYDRAULICS UPPER CARRI
FITTING ISO 8434 ET 10S CR6	482431314	764	2	519	96045552	HYDRAULICS UPPER CARRI
FITTING ISO 8434 ET 12S CR6	482431414	632	2	518	96045552	HYDRAULICS UPPER CARRI
FITTING ISO 8434 ET 16S CR6	482431514	627	2	518	96045552	HYDRAULICS UPPER CARRI
FITTING ISO 8434 EW 30S CR6	482531614	722	2	519	96045552	HYDRAULICS UPPER CARRI
FITTING ISO 8434 EW 35L M45	482530914	748	2	519	96045552	HYDRAULICS UPPER CARRI
FITTING ISO 8434 EW 42L CR6	482530814	719	5	519	96045552	HYDRAULICS UPPER CARRI
FITTING ISO 8434 GE 10S G1/4	471004514	763	2	519	96045552	HYDRAULICS UPPER CARRI
FITTING ISO 8434 GE 10S M14	471008214	613	4	34	967304508	UNDERCARRIAGE HYDRAULIC
FITTING ISO 8434-1 EW 15L C	7615379	403	2	269	918811108	DRIVE ASSEMBLY, PRE-ASSE
FITTING ISO 8434-1 EW 15L C	7615379	403	1	291	969543308	FUEL TANK, PRE-ASSEMBLED
FITTING ISO 8434-1 EW 15L C	7615379	792	1	520	96045552	HYDRAULICS UPPER CARRI
FITTING ISO 8434-1 EW 15L C	7615379	647	1	566	969767908	PIPEWORK AIR INSTALLATIO
FITTING ISO 8434-1 GE 10L G1/	7362091	656	9	518	96045552	HYDRAULICS UPPER CARRI
FITTING ISO 8434-1 GE 10L G1/	7362091	624	2	592	96064697	HYDR.AUXILIARY HOISTING
FITTING ISO 8434-1 GE 10L G1/	7362091	606	2	709	965994108	HYDR.F.TELESCOPIC BOOM
FITTING ISO 8434-1 GE 10L M	471039708	606	4	518	96045552	HYDRAULICS UPPER CARRI
FITTING ISO 8434-1 GE 10L M	471039708	605	1	566	969767908	PIPEWORK AIR INSTALLATIO
FITTING ISO 8434-1 GE 10L M	471039708	623	1	592	96064697	HYDR.AUXILIARY HOISTING
FITTING ISO 8434-1 GE 10L M	4981235	3	1	149	10150934	OIL DIPSTICK CPL.
FITTING ISO 8434-1 GE 10L M	4981235	19	2	222	10140729	EXHAUST TC MOUNTING
FITTING ISO 8434-1 GE 10S G3/	471032808	617	4	34	967304508	UNDERCARRIAGE HYDRAULIC
FITTING ISO 8434-1 GE 10S G3/	471032808	762	2	519	96045552	HYDRAULICS UPPER CARRI
FITTING ISO 8434-1 GE 10S G3/	471032808	608	1	717	966004808	ADDNL.HYDR. FOLDING JIB
FITTING ISO 8434-1 GE 12L M	471030708	683	1	518	96045552	HYDRAULICS UPPER CARRI
FITTING ISO 8434-1 GE 15L M	4981232	6	2	197	13472510	DISTRIBUTOR BLOCK PRE-A
FITTING ISO 8434-1 GE 22L M	7362515	3	1	211	10145176	PIPELINE INSTALLATION
FITTING ISO 8434-1 GE 6L M10	4981233	6	1	212	10145278	ACCESSORIES AIR COMPRES
FITTING ISO 8434-1 GE 6L M10	4981233	3	2	248	9078961	POWER TAKE-OFF ADD-ON
FITTING M25X1,5	12106198	8	1	697	12104731	CABLE REEL
FITTING RD70X70 S355J2C+C	953641408	404	1	269	918811108	DRIVE ASSEMBLY, PRE-ASSE
FITTING RED 15/12L CR6-FREI	475431808	637	1	592	96064697	HYDR.AUXILIARY HOISTING
FITTING RED 18/15L CR6-FREI	475435608	706	2	519	96045552	HYDRAULICS UPPER CARRI
FITTING RED 18/6L CR6-FREI	475430708	742	1	519	96045552	HYDRAULICS UPPER CARRI
FITTING RED 42/18L CR6-FREI	475431708	712	1	519	96045552	HYDRAULICS UPPER CARRI
FITTING RED 42/28L CR6-FREI	475431308	752	2	519	96045552	HYDRAULICS UPPER CARRI
FITTING RED 42/35L CR6-FREI	475436708	746	1	519	96045552	HYDRAULICS UPPER CARRI
FITTING REDSD12/10-L CR6-F	475431408	650	3	34	967304508	UNDERCARRIAGE HYDRAULIC
FITTING REDSD12/10-L CR6-F	475431408	609	4	709	965994108	HYDR.F.TELESCOPIC BOOM
FITTING REDSD12/10-S CR6-F	475433408	658	1	34	967304508	UNDERCARRIAGE HYDRAULIC
FITTING REDSD12/6-S CR6-F	475432908	642	1	34	967304508	UNDERCARRIAGE HYDRAULIC
FITTING REDSD12/6-S CR6-F	475432908	786	1	520	96045552	HYDRAULICS UPPER CARRI
FITTING REDSD12/6-S CR6-F	475432908	607	1	619	969856508	ADDITIONAL HYDRAULICS
FITTING REDSD16/10-S CR6-F	475433508	601	2	518	96045552	HYDRAULICS UPPER CARRI
FITTING REDSD16/12-S CR6-F	475433308	619	4	34	967304508	UNDERCARRIAGE HYDRAULIC
FITTING REDSD16/12-S CR6-F	475433308	628	2	518	96045552	HYDRAULICS UPPER CARRI
FITTING REDSD18/12-L CR6-F	475436308	639	1	34	967304508	UNDERCARRIAGE HYDRAULIC
FITTING REDSD18/12-L CR6-F	475436308	735	1	519	96045552	HYDRAULICS UPPER CARRI
FITTING REDSD20/12-S CR6-F	475434808	623	1	34	967304508	UNDERCARRIAGE HYDRAULIC

Description	Item	Pos.	Quantity	Page	Assembly	Description
FITTING REDSD28/22-L CR6-F	475430508	783	1	520	96045552	HYDRAULICS UPPER CARRI
FITTING REDSD30/10-S CR6-F	475433908	601	4	33	967304508	UNDERCARRIAGE HYDRAULIC
FITTING REDSD35/28-L CR6-F	475430408	725	3	519	96045552	HYDRAULICS UPPER CARRI
FITTING REDSD38/6-S CR6-F	475408108	772	1	519	96045552	HYDRAULICS UPPER CARRI
FITTING REDSDN10/6-S CR6-F	475432008	659	2	34	967304508	UNDERCARRIAGE HYDRAULIC
FITTING REDSDN10/6-S CR6-F	475432008	603	2	717	966004808	ADDNL.HYDR. FOLDING JIB
FITTING REDSDN12/6-L CR6-F	475430208	684	2	518	96045552	HYDRAULICS UPPER CARRI
FITTING REDSDN12/6-L CR6-F	475430208	635	1	592	96064697	HYDR.AUXILIARY HOISTING
FITTING REDSDN20/16-S CR6	475432108	663	1	34	967304508	UNDERCARRIAGE HYDRAULIC
FITTING REDSDN20/16-S CR6	475432108	619	1	518	96045552	HYDRAULICS UPPER CARRI
FITTING REDSDN25/20-S CR6	475432308	654	1	34	967304508	UNDERCARRIAGE HYDRAULIC
FITTING REDSDN38/30-S CR6	475435308	723	5	519	96045552	HYDRAULICS UPPER CARRI
FITTING RI G1AXG1/2 CR6-FRE	475500708	604	4	34	967304508	UNDERCARRIAGE HYDRAULIC
FITTING RI M22X1,5/M16X CR6	7381363	4	2	207	9080294	AIR COMPRESSOR PRE-ASSY
FITTING RSWS10-LR-WD CR6	473230508	655	1	518	96045552	HYDRAULICS UPPER CARRI
FITTING RSWS10-SM-WD CR6	473210508	600	1	717	966004808	ADDNL.HYDR. FOLDING JIB
FITTING RSWS16-SR-WD CR6	473231208	600	4	33	967304508	UNDERCARRIAGE HYDRAULIC
FITTING RSWS6-SR-WD CR6-F	473230608	606	1	63	967301408	PREPARATION HYDR
FITTING RSWS6-SR-WD CR6-F	473230608	661	2	518	96045552	HYDRAULICS UPPER CARRI
FITTING SNV10-L CR6-FREI	470010108	681	1	518	96045552	HYDRAULICS UPPER CARRI
FITTING SNV10-S CR6-FREI	470010208	610	3	34	967304508	UNDERCARRIAGE HYDRAULIC
FITTING SNV12-L CR6-FREI	470011308	641	2	518	96045552	HYDRAULICS UPPER CARRI
FITTING SNV12-L CR6-FREI	470011308	615	2	591	96064697	HYDR.AUXILIARY HOISTING
FITTING SNV12-S CR6-FREI	470010308	611	12	34	967304508	UNDERCARRIAGE HYDRAULIC
FITTING SNV12-S CR6-FREI	470010308	(600)	8	67	917155408	QUICK-FITTING UNION
FITTING SNV12-S CR6-FREI	470010308	787	1	520	96045552	HYDRAULICS UPPER CARRI
FITTING SNV30-S CR6-FREI	470011108	606	4	34	967304508	UNDERCARRIAGE HYDRAULIC
FITTING SNV30-S CR6-FREI	470011108	733	2	519	96045552	HYDRAULICS UPPER CARRI
FITTING SNV38-S CR6-FREI	470010708	670	2	518	96045552	HYDRAULICS UPPER CARRI
FITTING SNV38-S CR6-FREI	470010708	628	2	592	96064697	HYDR.AUXILIARY HOISTING
FITTING SNV38-S CR6-FREI	470010708	628	1	598	96075086	HYD.AUX.LIFT GEAR UPPER
FITTING SNV6-S CR6-FREI	470011508	730	1	519	96045552	HYDRAULICS UPPER CARRI
FITTING SV 18L CR6-FREI	474030708	605	1	518	96045552	HYDRAULICS UPPER CARRI
FITTING T 42L CR6-FREI	470431408	711	2	519	96045552	HYDRAULICS UPPER CARRI
FITTING VSTI G1/4 CR6-FREI	7361553	55	1	684	12105406	TELESCOPIC CYLINDER
FITTING W 20S CR6-FREI	470232708	664	1	34	967304508	UNDERCARRIAGE HYDRAULIC
FITTING W 28L CR6-FREI	470230808	662	1	34	967304508	UNDERCARRIAGE HYDRAULIC
FITTING W 35L CR6-FREI	470231108	749	1	519	96045552	HYDRAULICS UPPER CARRI
FITTING W 42L CR6-FREI	470231408	751	1	519	96045552	HYDRAULICS UPPER CARRI
FITTING WSV 12S CR6-FREI	474232408	618	4	34	967304508	UNDERCARRIAGE HYDRAULIC
FITTING XG10-S CR6-FREI	470032408	720	3	519	96045552	HYDRAULICS UPPER CARRI
FITTING XG16-S CR6-FREI	470032708	710	1	519	96045552	HYDRAULICS UPPER CARRI
FITTING XG42-L CR6-FREI	470030908	766	1	519	96045552	HYDRAULICS UPPER CARRI
FITTING XGAI6-LM CR6-FREI	470730008	28	1	583	938707001	COMPACT ROPE WINCH
FITTING XGAI6-SR CR6-FREI	470700208	731	2	519	96045552	HYDRAULICS UPPER CARRI
FITTING XGAI6-SR CR6-FREI	470700208	607	1	591	96064697	HYDR.AUXILIARY HOISTING
FITTING XGE10-LR-ED3/8" CR6	471039608	690	2	519	96045552	HYDRAULICS UPPER CARRI
FITTING XGE10-LR-ED3/8" CR6	471039608	618	1	591	96064697	HYDR.AUXILIARY HOISTING
FITTING XGE12-LR-ED CR6-F	471030808	651	6	34	967304508	UNDERCARRIAGE HYDRAULIC
FITTING XGE12-LR-ED CR6-F	471030808	638	6	518	96045552	HYDRAULICS UPPER CARRI
FITTING XGE12-LR-ED CR6-F	471030808	616	1	591	96064697	HYDR.AUXILIARY HOISTING
FITTING XGE12-LR-ED1/4" CR6	471035308	644	1	34	967304508	UNDERCARRIAGE HYDRAULIC
FITTING XGE12-LR-ED1/4" CR6	471035308	653	5	518	96045552	HYDRAULICS UPPER CARRI
FITTING XGE16-SM-ED CR6-F	471033008	636	3	34	967304508	UNDERCARRIAGE HYDRAULIC
FITTING XGE16-SR-ED CR6-F	471033208	603	3	34	967304508	UNDERCARRIAGE HYDRAULIC
FITTING XGE16-SR-ED CR6-F	471033208	625	8	518	96045552	HYDRAULICS UPPER CARRI
FITTING XGE16-SR-ED CR6-F	471033208	602	1	709	965994108	HYDR.F.TELESCOPIC BOOM
FITTING XGE16-SR-ED3/4" CR6	471033108	615	2	34	967304508	UNDERCARRIAGE HYDRAULIC
FITTING XGE16-SR-ED3/4" CR6	471033108	620	3	518	96045552	HYDRAULICS UPPER CARRI
FITTING XGE18-LM M26X1,5 C	476607608	634	1	566	969767908	PIPEWORK AIR INSTALLATIO

Description	Item	Pos.	Quantity	Page	Assembly	Description
FITTING XGE18-LR-ED CR6-F	471031208	714	2	519	96045552	HYDRAULICS UPPER CARRI
FITTING XGE18-LR-ED3/4" CR6	471037508	402	3	306	96066239	PREMOUNTED FUEL FILTER
FITTING XGE18-LR-ED3/4" CR6	471037508	708	1	519	96045552	HYDRAULICS UPPER CARRI
FITTING XGE20-SM-ED CR6-F	471033308	631	1	34	967304508	UNDERCARRIAGE HYDRAULIC
FITTING XGE20-SM-ED M33X2	471034308	400	2	269	918811108	DRIVE ASSEMBLY, PRE-ASSE
FITTING XGE25-SM-ED CR6-F	471033508	635	1	34	967304508	UNDERCARRIAGE HYDRAULIC
FITTING XGE28-LM-ED CR6-F	471031508	636	1	518	96045552	HYDRAULICS UPPER CARRI
FITTING XGE6-LM-ED CR6-FRE	471030108	679	2	518	96045552	HYDRAULICS UPPER CARRI
FITTING XGE6-LR-ED CR6-FRE	471030008	676	1	518	96045552	HYDRAULICS UPPER CARRI
FITTING XGE6-LR-ED CR6-FRE	471030008	610	1	591	96064697	HYDR.AUXILIARY HOISTING
FITTING XGE6-LR-ED CR6-FRE	471030008	606	1	717	966004808	ADDNL.HYDR. FOLDING JIB
FITTING XGEV38-SR-WD CR6	471034408	602	13	518	96045552	HYDRAULICS UPPER CARRI
FITTING XGEV38-SR-WD CR6	471034408	629	2	598	96075086	HYD.AUX.LIFT GEAR UPPER
FITTING XGR16/12-S CR6-FRE	475032508	785	1	520	96045552	HYDRAULICS UPPER CARRI
FITTING XSV10-L CR6-FREI	474030308	607	1	518	96045552	HYDRAULICS UPPER CARRI
FITTING XSV12-S CR6-FREI	474032408	612	8	34	967304508	UNDERCARRIAGE HYDRAULIC
FITTING XSV12-S CR6-FREI	474032408	602	8	63	967301408	PREPARATION HYDR
FITTING XSV15-L CR6-FREI	474030508	611	1	518	96045552	HYDRAULICS UPPER CARRI
FITTING XSV16-S CR6-FREI	474032608	608	2	34	967304508	UNDERCARRIAGE HYDRAULIC
FITTING XSV30-S CR6-FREI	474032908	607	4	34	967304508	UNDERCARRIAGE HYDRAULIC
FITTING XW10-L CR6-FREI	470230308	607	3	709	965994108	HYDR.F.TELESCOPIC BOOM
FITTING XW18-L CR6-FREI	470230608	645	1	566	969767908	PIPEWORK AIR INSTALLATIO
FITTING XW30-S CR6-FREI	470233008	661	4	34	967304508	UNDERCARRIAGE HYDRAULIC
FITTING XW30-S CR6-FREI	470233008	732	2	519	96045552	HYDRAULICS UPPER CARRI
FITTING XW38-S CR6-FREI	470233408	668	4	518	96045552	HYDRAULICS UPPER CARRI
FITTING XW38-S CR6-FREI	470233408	627	1	598	96075086	HYD.AUX.LIFT GEAR UPPER
FITTINGS 11SMnPb30+C	10130906	21	1	223	12512627	EXHAUST NOZZLE ATTACHM
FITTINGS X5CRNI18-10	97119563	4	1	280	96035595	EXPANSION TANK PRE-ASS.
FIXED BOOM RAISING DEVICE	12102116	28	1	397	10877138	OPERATOR SEAT
FIXING DEVICE 2.LIFT TOP	967321308	11	1	725	918258408	EL.2 HOISTING LIMIT SWITCH
FIXING PARTS ELECTRIC	96041469	(30)	1	755	91001037	DOUBLE FOLDING JIB MECH.
FIXING PARTS SLEWING RING	914860508	29	1	12		LIEBHERR LTR 1100
FLANGE	12400857	3	1	168	10120186	BALANCER ASSEMBLY
FLANGE	927504701	23	1	381	938759601	ROPE DRUM
FLANGE	927504801	15	1	381	938759601	ROPE DRUM
FLANGE 10X65X37 ALMG3 H11	97057024	5	1	476	918729308	AIR FILTER UNIT
FLANGE 120X150X217 S355J2+	956442614	351	2	33	967304508	UNDERCARRIAGE HYDRAULIC
FLANGE 25.0X16 9 42CRMO4	970003708	7	1	272	96020819	RADIATOR, PRE-ASSEMBLED
FLANGE FITTING 70.0X80 S355	953641308	401	1	269	918811108	DRIVE ASSEMBLY, PRE-ASSE
FLANGE FITTING CR6-FREI	510033408	517	2	518	96045552	HYDRAULICS UPPER CARRI
FLANGE FITTING CR6-FREI	510133208	516	1	517	96045552	HYDRAULICS UPPER CARRI
FLANGE FITTING CR6-FREI	511518808	401	1	272	96020819	RADIATOR, PRE-ASSEMBLED
FLANGE FITTING CR6-FREI	511518808	515	1	517	96045552	HYDRAULICS UPPER CARRI
FLANGE HALF SAE1 1/4-C62-M	510586608	501	16	33	967304508	UNDERCARRIAGE HYDRAULIC
FLANGE HALF SAE1 1/4-C62-M	510586608	500	4	517	96045552	HYDRAULICS UPPER CARRI
FLANGE HALF SAE1-C62-M12	510586908	502	4	33	967304508	UNDERCARRIAGE HYDRAULIC
FLANGE HALF SAE3/4-C62-M10	510587508	503	6	33	967304508	UNDERCARRIAGE HYDRAULIC
FLANGE PRE-ASS.	11348648	8	1	170	10147787	CAMSHAFT CPL.
FLANGE PRE-ASS.	11348648	1	1	171	10145815	RS FLANGE
FLANGE PRE-ASS.	12408221	2	1	168	10120186	BALANCER ASSEMBLY
FLANGE SEAL	10346938	(5)	1	291	969543308	FUEL TANK, PRE-ASSEMBLED
FLANGE SLEEVE DIN 1850 / I	10424489	2	2	364	966253908	WAGON
FLANGE STUB PIPE AFG 38S	511517808	502	1	591	96064697	HYDR.AUXILIARY HOISTING
FLANGE STUB PIPE AFG 38S	511517808	500	3	709	965994108	HYDR.F.TELESCOPIC BOOM
FLANGED BOLT	11492018	4	1	739	910543708	LOAD HOOK
FLANGED BOLT	927515201	6	2	586	927521201	OIL-LEVEL GAUGE INSTALLAT
FLAP COMPL.	969399508	1	1	416	969399608	FLAP PRE-ASS.
FLAP PRE-ASS.	969399608	1	1	415	96024809	SLEWING PLATFORM PANELLI
FLAP PRE-ASS. SPF	969425708	1	1	410	969425608	FLAP RIGHT PRE-ASS.
FLAP RIGHT PRE-ASS. SPF	969425608	2	1	407	96022627	SLEWING PLATFORM PANELLI

Description	Item	Pos.	Quantity	Page	Assembly	Description
FLASHING LIGHT GLASS	11346616	(1)	1	106	915731908	EL.COMP. DISPATCH ASSEM
FLAT BOTTOM PLATE B7B BPL	11161944	40	62	55	10430241	CRAWLER CHAIN CPL.
FLAT FUSE LINK 10A 32	604007108	14	14	498	919940108	SWITCHBOX MOUNTING PART
FLAT FUSE LINK 10A 32	604007108	6	1	612	913753108	RADIO PREPARATION UPPER
FLAT FUSE LINK 15A	604007208	15	6	498	919940108	SWITCHBOX MOUNTING PART
FLAT FUSE LINK 20A	604007308	16	9	498	919940108	SWITCHBOX MOUNTING PART
FLAT FUSE LINK 25A	604007608	17	1	498	919940108	SWITCHBOX MOUNTING PART
FLAT FUSE LINK 3A	604007708	11	3	498	919940108	SWITCHBOX MOUNTING PART
FLAT FUSE LINK 5A 32	604006908	12	9	498	919940108	SWITCHBOX MOUNTING PART
FLAT FUSE LINK 7,5A	604007008	517	2	91	96062921	WIRING HARNESS
FLAT FUSE LINK 7,5A	604007008	13	14	498	919940108	SWITCHBOX MOUNTING PART
FLAT GASKET	704274908	10	4	85	966167808	COVER COMPL.
FLAT PLUG	602304808	2	2	438	963398008	PREMOUNT.AXIAL FLOW FAN
FLAT PLUG	602304808	74	2	612	913753108	RADIO PREPARATION UPPER
FLAT PLUG 0,2-0,5MM2	10874243	2222	6	98	96045216	WIRING HARNESS
FLAT PLUG 0,2-0,5MM2	10874243	2222	6	640	96045220	WIRING HARNESS
FLAT PLUG 0,5-1,0MM2	11622890	2223	2	494	96023971	WIRING HARNESS
FLAT PLUG 0,5-1,0MM2	11622890	2223	9	699	96051215	CABLES, PRE-ASSEMBLED
FLAT PLUG 0,5-1,0MM2 CUSN	11008403	752	6	699	96051215	CABLES, PRE-ASSEMBLED
FLAT PLUG 0,5-1,0MM2 CUSN	11008403	752	6	706	96063415	WIRING HARNESS
FLAT PLUG 0,8X0,5-1 CuSn4	10097470	671	2	90	96062920	WIRING HARNESS
FLAT PLUG 1,0-2,5MM2	602323208	120	18	91	96062921	WIRING HARNESS
FLAT PLUG 1,0-2,5MM2	602323208	120	17	492	96063650	LEAD
FLAT PLUG 2,8X0,5-1 SN	602323508	124	45	91	96062921	WIRING HARNESS
FLAT PLUG 2,8X0,5-1 SN	602323508	124	6	426	96023891	WIRING HARNESS
FLAT PLUG 2,8X0,5-1 SN	602323508	124	22	492	96063650	LEAD
FLAT PLUG 6,3X1-2,5 SN	602203908	75	2	91	96062921	WIRING HARNESS
FLAT PLUG 6,3X1-2,5 SN	602203908	75	2	426	96023891	WIRING HARNESS
FLAT PLUG 6,3X1-2,5 SN	602203908	75	3	493	96023971	WIRING HARNESS
FLAT PLUG HOUSING 15-POL	10874995	501	1	699	96051215	CABLES, PRE-ASSEMBLED
FLAT PLUG HOUSING 15-POL	12102915	502	1	699	96051215	CABLES, PRE-ASSEMBLED
FLAT PLUG HOUSING 18-POL	11067932	519	1	91	96062921	WIRING HARNESS
FLAT PLUG HOUSING 18-POL	11067932	509	9	500	96059659	CABLES, BASIC CONSTRUCTI
FLAT PLUG HOUSING 18-POL	602323308	503	4	91	96062921	WIRING HARNESS
FLAT PLUG HOUSING 18-POL	602323308	503	1	492	96063650	LEAD
FLAT PLUG HOUSING 18-POL	602323308	502	52	500	96059659	CABLES, BASIC CONSTRUCTI
FLAT PLUG HOUSING 18-POL	11644347	501	1	98	96045216	WIRING HARNESS
FLAT PLUG HOUSING 18-POL	11644347	501	1	640	96045220	WIRING HARNESS
FLAT PLUG HOUSING FASTIN	602208708	525	1	500	96059659	CABLES, BASIC CONSTRUCTI
FLAT PLUG HOUSING FASTIN	602208908	512	1	494	96023971	WIRING HARNESS
FLAT PLUG HOUSING FASTIN	602305908	512	1	91	96062921	WIRING HARNESS
FLAT PLUG HOUSING FASTIN	602305908	523	1	426	96023891	WIRING HARNESS
FLAT PLUG HOUSING FASTIN	602305908	3	1	438	963398008	PREMOUNT.AXIAL FLOW FAN
FLAT PLUG HOUSING FASTIN	602305908	15	1	612	913753108	RADIO PREPARATION UPPER
FLAT PLUG HOUSING JPT	602325608	504	2	492	96063650	LEAD
FLAT PLUG HOUSING JPT	602325608	503	6	500	96059659	CABLES, BASIC CONSTRUCTI
FLAT SEALING RING 14X19,5X	570116908	403	1	280	96035595	EXPANSION TANK PRE-ASS.
FLAT SEALING RING 14X19,5X	570116908	321	1	517	96045552	HYDRAULICS UPPER CARRI
FLAT SEALING RING 17,4X24X	710121114	7	1	23	790256114	GUIDE WHEEL UNIT CPL
FLAT SPIRAL SPRING 552	616200808	2	2	697	12104731	CABLE REEL
FLEXIBLE WASHER X5CRNI18	97098876	102	1	470	919674308	EXHAUST SYSTEM
FLOOR MAT 227X798X849 PU	97000467	11	1	338	917305408	INTERNAL PANELLING INSTA
FLOOR MAT 61X753X552 PU-S	97000466	10	1	338	917305408	INTERNAL PANELLING INSTA
FLOOR SHEET	96000683	1	1	562	919528608	OIL COOLER INSTALLATION
FLOOR SHEET WELDED	969426008	4	1	407	96022627	SLEWING PLATFORM PANELLI
FLOOR SHEET WELDED SPF	96024811	4	1	415	96024809	SLEWING PLATFORM PANELLI
FLYWHEEL ASSEMBLY SAE 1	9077238	530	1	134	13455311	DIESEL ENGINE
FLYWHEEL HOUSING ASSEM	10115829	520	1	134	13455311	DIESEL ENGINE
FLYWHEEL HOUSING PRE-A	10118148	1	1	232	10115829	FLYWHEEL HOUSING ASSEM
FLYWHEEL PRE-ASS. SAE 1X1	12809567	1	1	236	9077238	FLYWHEEL ASSEMBLY

Description	Item	Pos.	Quantity	Page	Assembly	Description
FOLDING BRACKET PRE-ASS.	96062062	2	1	747	919933308	TRANSPORT MOUNTING
FOLDING BRACKET ST.CONST	96022932	1	1	750	96062062	FOLDING BRACKET PRE-ASS.
FOLDING PART WELDED SPF	96062063	2	1	750	96062062	FOLDING BRACKET PRE-ASS.
FOOT ROCKER SPF	10297310	54	2	431	96056347	ELECTRIC ADD-ON PARTS CA
FORM HOSE	551719708	250	1	268	918811108	DRIVE ASSEMBLY, PRE-ASSE
FORM HOSE	96046407	250	2	470	919674308	EXHAUST SYSTEM
FORM HOSE 4,5	11081453	6	1	444	918759708	ADD HEATING SUPERSTRUCT
FORM HOSE 55/65X504 B PER	97042032	253	1	268	918811108	DRIVE ASSEMBLY, PRE-ASSE
FORM HOSE 55/65X900 B PER	97042031	252	1	268	918811108	DRIVE ASSEMBLY, PRE-ASSE
FORM HOSE DN20 X3.5 B SPF	97042067	13	2	444	918759708	ADD HEATING SUPERSTRUCT
FORM HOSE DN20 X3.5 B SPF	97042067	18	1	446	96019783	ADDNL.HEATING, PRE-ASSE
FORM HOSE DN20 X3.5 B SPF	97042068	251	1	263	918728708	DRIVE ASSEMBLY CPL.
FORM HOSE DN20 X3.5 B SPF	97042069	8	1	392	969300008	HEATING, PRE-ASSEMBLED
FORM HOSE DN20 X3.5 B SPF	97042070	19	1	392	969300008	HEATING, PRE-ASSEMBLED
FORM HOSE DN20 X3.5 B SPF	97042071	252	1	263	918728708	DRIVE ASSEMBLY CPL.
FORM HOSE DN20 X3.5 B SPF	97042071	9	1	392	969300008	HEATING, PRE-ASSEMBLED
FORM HOSE DN20 X3.5 B SPF	97046324	10	1	392	969300008	HEATING, PRE-ASSEMBLED
FORM HOSE DN20 X3.5 B SPF	97046326	13	1	392	969300008	HEATING, PRE-ASSEMBLED
FORM HOSE DN20 X3.5 B SPF	97046328	16	1	392	969300008	HEATING, PRE-ASSEMBLED
FORM HOSE DN20 X3.5 B SPF	97046567	12	1	446	96019783	ADDNL.HEATING, PRE-ASSE
FORM HOSE DN20 X3.5 B SPF	97046568	11	1	446	96019783	ADDNL.HEATING, PRE-ASSE
FORM HOSE DN20 X3.5 B SPF	97050857	11	1	392	969300008	HEATING, PRE-ASSEMBLED
FORM HOSE DN20 X3.5 B SPF	97055365	15	1	392	969300008	HEATING, PRE-ASSEMBLED
FORMCLIP 10X55 VERZ	433200908	5	8	47	968374708	MOUNTING PARTS
FRAME RAL 9005 SPF	97136699	2	1	323	96048757	CUP HOLDER
FRICTION BEARING 30X20 K	10215893	4	1	441	966707708	MIRROR RETAINER PRE-ASS.
FRICTION DISK	975529708	150	2	407	96022627	SLEWING PLATFORM PANELLI
FRICTION PLATE 3M TYP35	97116895	8	3	367	919235408	SLEWING GEAR
FRONT LEFT-HAND HOOD	969392008	3	1	415	96024809	SLEWING PLATFORM PANELLI
FRONT PROFILE 803X122X44 1	97000516	31	1	361	917304708	SLIDING DOOR INSTALLATION
FRONT WINDOW 6X735X1506	97003558	1	1	349	966497908	FRONT WINDOW CPL.
FRONT WINDOW CPL.	966497908	1	1	346	916162508	WINDOW ASSEMBLY
FUEL FEED	91002857	110	1	12		LIEBHERR LTR 1100
FUEL FILTER	12106874	100	1	306	96066239	PREMOUNTED FUEL FILTER
FUEL FILTER	553174008	1	1	450	11110051	DOSING PUMP
FUEL FILTER ELEMENT KRAFT	10149977	1	1	308	12106874	FUEL FILTER
FUEL FINE FILTER	12820742	2	1	193	13512036	CONSOLE FOR FILTER PRE-A
FUEL FINE-FILTER ASSEMBLY	10146791	201	1	132	13455311	DIESEL ENGINE
FUEL HEATER 24V 0,25KW	11381100	2	1	308	12106874	FUEL FILTER
FUEL HOSE DN4,5	10815777	5	1	444	918759708	ADD HEATING SUPERSTRUCT
FUEL HOSE DN4,5	10815777	19	1	446	96019783	ADDNL.HEATING, PRE-ASSE
FUEL LINE	9078935	4	1	198	10143342	LEAK OIL RETURN LINE
FUEL LINE 12X1	10143240	7	1	196	10143341	FUEL LINES
FUEL LINES	10143341	212	1	132	13455311	DIESEL ENGINE
FUEL PIPING 5X1 PA12 ETFP	11626108	3	1.75	444	918759708	ADD HEATING SUPERSTRUCT
FUEL PIPING 5X1 PA12 ETFP	11626108	4	4	444	918759708	ADD HEATING SUPERSTRUCT
FUEL PUMP	12107190	11	1	308	12106874	FUEL FILTER
FUEL TANK ADD-ON UNIT	917962508	108	1	12		LIEBHERR LTR 1100
FUEL TANK WELDED CONSTR	969543408	1	1	291	969543308	FUEL TANK, PRE-ASSEMBLED
FUEL TANK, PRE-ASSEMBLED	969543308	1	1	290	917962508	FUEL TANK ADD-ON UNIT
FUSE 50A 32V SPF	10023751	(20)	1	288	96023914	ELECTRIC FOR BATTERY BOX
FUSE CARTRIDGE 100A DC32	10878143	(22)	1	288	96023914	ELECTRIC FOR BATTERY BOX
FUSE CARTRIDGE 80A DC32	10878142	(21)	1	288	96023914	ELECTRIC FOR BATTERY BOX
FUSE CARTRIDGE DIN 72581	6905877	(1)	1	241	10151329	WIRING HARNESS ASSEMBLY
GAS LINE NON-RETURN VALV	5000569	8	1	23	790256114	GUIDE WHEEL UNIT CPL
GAS SENSOR GEN 4.0 NICHT	12984315	152	2	474	96041566	ELECTRIC ADD-ON PARTS
GAS SENSOR NICHT LACKIE	10144038	153	1	474	96041566	ELECTRIC ADD-ON PARTS
GAS SPRING 12X80-100N ST	10476211	6	2	346	916162508	WINDOW ASSEMBLY
GAS SPRING 19X60-550N	591067008	23	1	395	918810308	CONTROL STAND
GAS SPRING 23X251-550N ST	11003837	17	2	346	916162508	WINDOW ASSEMBLY

Description	Item	Pos.	Quantity	Page	Assembly	Description
GAS SPRING 23X265-1000N	591064508	9	1	416	969399608	FLAP PRE-ASS.
GAS SPRING 23X265-500N	591061908	10	2	410	969425608	FLAP RIGHT PRE-ASS.
GAS SPRING 28X350-900N	591514408	23	1	760	918533508	ADAPTER PRE-ASS.
GAUGE 1.5X130X23 X5CRNI18	97127072	13	1	102	914860608	TOOLS AND ACCESSORIES
GAUGE CONNECTION 12S M20	7409922	770	7	519	96045552	HYDRAULICS UPPER CARRI
GAUGE CONNECTION DKO 1	5607617	788	2	520	96045552	HYDRAULICS UPPER CARRI
GAUGE CONNECTION VKA3 12	7409918	775	1	519	96045552	HYDRAULICS UPPER CARRI
GEAR PUMP WP9	10488363	102	1	268	918811108	DRIVE ASSEMBLY, PRE-ASSE
GEAR WHEEL	10872521	80	1	388	11083498	AIR CONDITIONING UNIT
GEAR WHEEL 2,5	10139764	4	1	168	10120186	BALANCER ASSEMBLY
GEAR WHEEL 2,5	10139765	5	1	168	10120186	BALANCER ASSEMBLY
GEAR WHEEL 2,5	9072834	3	1	153	10147438	CRANKSHAFT WITH GEAR
GEAR WHEEL 2,5	9073343	2	1	207	9080294	AIR COMPRESSOR PRE-ASSY
GEAR WHEEL 2,5 20MnCr5	9079001	3	1	249	9078962	AUXILIARY DRIVE PRE-ASS.
GEAR WHEEL 2,75	10137602	(2)	1	170	10147787	CAMSHAFT CPL.
GEAR WHEEL MOTOR AZMF	10429930	102	1	272	96020819	RADIATOR, PRE-ASSEMBLED
GEARWHEEL PRE-ASS.	10138447	3	1	170	10147787	CAMSHAFT CPL.
GEARWHEEL PRE-ASS.	10145049	(1)	1	170	10147787	CAMSHAFT CPL.
GENERATOR, PRE-ASSEMBL	10142863	440	1	134	13455311	DIESEL ENGINE
GENERATOR, PRE-ASSEMBL	10148088	1	1	225	10142863	GENERATOR, PRE-ASSEMBLE
GLUE 10ML FLASCHE -50/+175	8655032	104	1	136	11389608	CRANKCASE CPL. WITH CYLIN
GLUE 10ML FLASCHE -50/+175	8655032	104	1	163	10149578	CYLINDER HEAD
GREASE NBU 30 1KG DOSE	10285708	100	1	138	10154458	CYLINDER
GREASE NBU 30 1KG DOSE	10285708	100	1	139	10147687	POWER UNIT SUPPORT ATT
GREASE NBU 30 1KG DOSE	10285708	100	1	148	10121667	CONNECTING PIECE W.O-RIN
GREASE NBU 30 1KG DOSE	10285708	100	1	163	10149578	CYLINDER HEAD
GREASE NBU 30 1KG DOSE	10285708	100	1	168	10120186	BALANCER ASSEMBLY
GREASE NBU 30 1KG DOSE	10285708	100	1	170	10147787	CAMSHAFT CPL.
GREASE NBU 30 1KG DOSE	10285708	100	1	177	10148432	LUBE OIL PUMP WITH FASTEN
GREASE NBU 30 1KG DOSE	10285708	100	1	201	10145173	INTAKE STACK ASSEMBLY
GREASE NBU 30 1KG DOSE	10285708	100	1	203	10149677	CONNECTING LINE ADD-ON
GREASE NBU 30 1KG DOSE	10285708	100	1	206	10127566	INSTALLATION BRAKE COMPR
GREASE NBU 30 1KG DOSE	10285708	100	1	215	10142733	WATER PUMP WITH FASTENIN
GREASE NBU 30 1KG DOSE	10285708	100	1	216	10148215	THERMOSTAT HOUSING ASS
GREASE NBU 30 1KG DOSE	10285708	100	1	218	10142742	COOLANT PIPE BEND ADD-ON
GREASE NBU 30 1KG DOSE	10285708	100	1	223	12512627	EXHAUST NOZZLE ATTACHM
GREASE NBU 30 1KG DOSE	10285708	100	1	232	10115829	FLYWHEEL HOUSING ASSEM
GREASE NBU 30 1KG DOSE	10285708	100	1	235	10127979	LOCKING PIECES
GREASE NBU 30 1KG DOSE	10285708	(100)	1	243	12583633	ENGINE CONTROL SENSORS
GREASE NBU 30 1KG DOSE	10285708	100	1	244	12544505	ROTATIONAL SPEED SENSOR
GREASE NBU 30 1KG DOSE	10285708	100	1	246	9078249	LOCKING PIECES
GREASE NBU 30 1KG DOSE	10285708	100	1	247	10144027	LOCKING PIECES
GREASE NBU 30 1KG DOSE	10285708	100	1	249	9078962	AUXILIARY DRIVE PRE-ASS.
GREASE NIPPLE CAP	10014701	16	1	480	10327065	ELECTRIC PUMP
GREASE NIPPLE M16X1.5	774351714	6	1	23	790256114	GUIDE WHEEL UNIT CPL
GREASE SPRAY SYSTEM	96010020	15	1	645	919950308	DISPATCH ASSY.MECH.PART
GREASE SPRAYER ALUMINI	10876885	1	1	647	96010020	GREASE SPRAY SYSTEM
GREASE STABURAGS NBU 30	10282622	(10)	1	138	10154458	CYLINDER
GREASE STABURAGS NBU 30	10282622	100	1	229	10115664	LOCKING PIECES
GRIP	12103434	(2)	1	397	10877138	OPERATOR SEAT
GRIP DIN 3122 A 3/4"	790026208	63	1	104	928569808	MAIN TOOLS
GRIP KUNSTSTOFF	704254508	110	1	417	969392008	FRONT LEFT-HAND HOOD
GRIP PIPE WELDED	968321608	5	1	415	96024809	SLEWING PLATFORM PANELLI
GROMMET 10/12/17,5 PVC BK	602701308	1	1	329	916170808	CABLE INLET
GROMMET 14/18/24 PVC BK	602701808	11	2	781	968940708	HOLDER LEFT
GROMMET 14/18/24 PVC BK	602701808	11	2	782	968940808	HOLDER RIGHT
GROUND RAIL	926891108	27	1	502	96025348	BASE ASSEMBLY
GRUB SCREW	570435308	39	1	684	12105406	TELESCOPIC CYLINDER
GRUB SCREW DIN 913 M5X6 4	510762108	(301)	3	268	918811108	DRIVE ASSEMBLY, PRE-ASSE
GRUB SCREW DIN 913 M6X25	404400508	16	1	361	917304708	SLIDING DOOR INSTALLATION

Description	Item	Pos.	Quantity	Page	Assembly	Description
GRUB SCREW DIN 913 M6X25	404400508	5	1	720	511479408	LOAD HOLDING VALVE
GRUB SCREW DIN 914 M8X10	12100620	18	1	456	12102342	BALLAST EXTENSION RAM
GRUB SCREW DIN 914 M8X10	12100620	26	1	628	12102922	LUFFING CYLINDER
GRUB SCREW ISO 4026 M10X	10179470	4	1	399	962282208	ARM REST LEFT
GRUB SCREW ISO 4026 M10X	10179470	4	1	401	962282308	ARM REST RIGHT
GRUB SCREW ISO 4026 M16X	12100611	17	1	771	918596708	HEAD SECTION PRE-ASS.
GRUB SCREW ISO 4026 M20X	11968244	26	4	30	992078314	CENTRE PIECE
GRUB SCREW ISO 4026 M20X	10875481	63	4	661	91000050	TELESCOPIC SECTION 1 PRE
GRUB SCREW ISO 4026 M20X	10875481	63	4	664	91000051	TELESCOPIC SECT.2 PRE-AS
GRUB SCREW ISO 4026 M20X	10875481	63	4	667	91000052	TELESCOPIC SECT.3 PRE-ASS
GRUB SCREW ISO 4026 M20X	10875481	63	4	670	91000053	TELESCOPIC SECT.IV PRE-A
GRUB SCREW ISO 4026 M20X	10875481	61	4	673	91000054	TELESCOPIC SECT.5 PRE-AS
GRUB SCREW ISO 4026 M6X10	12100613	3	1	398	96032222	REWORK ARMREST LEFT
GRUB SCREW ISO 4026 M6X10	12100613	6	1	399	962282208	ARM REST LEFT
GRUB SCREW ISO 4026 M6X10	12100613	3	1	400	96032223	REWORK ARMREST RIGHT
GRUB SCREW ISO 4026 M6X35	12106077	27	6	326	968483708	STEP CPL.
GRUB SCREW ISO 4026 M6X35	12106077	9	1	524	571130108	PRESSURE LIMITING VALVE
GRUB SCREW ISO 4026 M8X50	12100292	21	2	723	964502908	BOOM NOSE PRE-ASS.
GRUB SCREW ISO 4026 M8X50	12100292	3	2	726	967321308	FIXING DEVICE 2.LIFT TOP
GRUB SCREW ISO 4028 M12X	12100624	12	5	645	919950308	DISPATCH ASSY.MECH.PART
GRUB SCREW M6X50 A2-70	10450694	25	1	349	966497908	FRONT WINDOW CPL.
GRUB SCREW M6X50 A2-70	10450694	22	1	361	917304708	SLIDING DOOR INSTALLATION
GUARD RAILING 50X250X1100	12102325	2	1	420	919484908	FALL PROTECTION
GUARD RING EN AC-Al Si1	10152974	3	1	156	10153583	CRANKSHAFT SEALING
GUIDE 306X48X37 ENAW6060-	977430408	10	2	395	918810308	CONTROL STAND
GUIDE 80.0X76 35NICRMOV12	97008548	2	1	441	966707708	MIRROR RETAINER PRE-ASS.
GUIDE BUSHING 290,7X345X20	11341829	3	1	628	12102922	LUFFING CYLINDER
GUIDE BUSHING CODIERUNG	10871289	507	2	589	96055198	WIRING HARNESS
GUIDE ISO 8062-3DCTG6 30X5	972426708	33	4	661	91000050	TELESCOPIC SECTION 1 PRE
GUIDE ISO 8062-3DCTG6 30X5	972426708	33	4	664	91000051	TELESCOPIC SECT.2 PRE-AS
GUIDE ISO 8062-3DCTG6 30X5	972426708	33	4	667	91000052	TELESCOPIC SECT.3 PRE-ASS
GUIDE ISO 8062-3DCTG6 30X5	972426708	33	4	670	91000053	TELESCOPIC SECT.IV PRE-A
GUIDE ISO 8062-3DCTG6 30X5	972426708	60	4	673	91000054	TELESCOPIC SECT.5 PRE-AS
GUIDE PA6G	975778508	16	2	124	918728408	ASSEMBLY PARTS F.SLEWING
GUIDE PIN CODIERUNG HAN	10871288	505	2	589	96055198	WIRING HARNESS
GUIDE PRE-ASS.	966230508	27	1	361	917304708	SLIDING DOOR INSTALLATION
GUIDE PULLEY COMPL.	10149360	3	2	213	12418347	AIR COND. COMPRESSOR A
GUIDE PULLEY COMPL.	917695308	2	1	760	918533508	ADAPTER PRE-ASS.
GUIDE RING 323X318X15	11490453	19	1	628	12102922	LUFFING CYLINDER
GUIDE WELDED	964502708	3	1	623	915403108	ADD-ON PARTS CAMERA
GUIDE WELDED GLASPERLEN	966230608	28	1	361	917304708	SLIDING DOOR INSTALLATION
GUIDE WHEEL	749063614	1	1	24	749013714	GUIDE WHEEL CPL
GUIDE WHEEL CPL B7X710 LH	749013714	1	1	23	790256114	GUIDE WHEEL UNIT CPL
GUIDE WHEEL UNIT CPL B7X	790256114	2	1	22	96062226	CRAWLER CARRIER RIGHT CP
GUIDE WHEEL UNIT CPL B7X	790256114	2	1	27	96062228	CRAWLER TRACK CARRIER LE
GUIDING PIPE 10X1X90	9079532	2	1	149	10150934	OIL DIPSTICK CPL.
HAND GRIP CPL. DREH KUNST	704232208	9	1	349	966497908	FRONT WINDOW CPL.
HAND HAMMER DIN 1041 800	790030008	60	1	104	928569808	MAIN TOOLS
HAND LEVER PRESS	885602114	6	1	102	914860608	TOOLS AND ACCESSORIES
HAND LEVER PRESS VERZ.	790042008	70	1	104	928569808	MAIN TOOLS
HAND PUMP	10801932	10	1	760	918533508	ADAPTER PRE-ASS.
HANDGRIP 215X25X59,2X169	10443309	59	1	339	917305408	INTERNAL PANELLING INSTA
HANDLE	591066808	10	2	349	966497908	FRONT WINDOW CPL.
HANDLE	591066808	5	1	350	965784408	ROOF WINDOW PRE-ASS.
HANDLE 212X53	12554272	6	1	416	969399608	FLAP PRE-ASS.
HANDLE CAP	571824708	1	1	436	10343693	JOYSTICK
HANDLE WELD.CONST. FE//ZN	963557408	2	1	78	964765008	PIN COMPL.
HANDLEADAPTER	11005983	3	1	362	966230408	CLOSING DEVICE
HATCHING PLAN SPF	917026008	75	1	12		LIEBHERR LTR 1100
HAZARD WARNING FLASHER 2	607106208	2	2	105	928620108	ACCESSORIES

Description	Item	Pos.	Quantity	Page	Assembly	Description
HEAD SECTION PRE-ASS.	918596708	3	1	757	91001038	MECH. DOUBLE FOLD JIB PR
HEAD SECTION, WELDED CO	962049408	1	1	771	918596708	HEAD SECTION PRE-ASS.
HEAT EXCHANGER ALU	10801858	14	1	388	11083498	AIR CONDITIONING UNIT
HEAT PROTECTION SHEET	10144755	1	1	221	10144756	HEAT PROTECTION W.FASTEN
HEAT PROTECTION SHEET S	11382888	10	1	203	10149677	CONNECTING LINE ADD-ON
HEAT PROTECTION SHEET S	12428325	10	1	203	10149677	CONNECTING LINE ADD-ON
HEAT PROTECTION W.FASTEN	10144756	415	1	133	13455311	DIESEL ENGINE
HEATING	502651408	2	1	567	502657308	AIR DRYER
HEATING CRANE DRIVER'S C	917894308	128	1	13		LIEBHERR LTR 1100
HEATING ELEMENT	10650387	(13)	1	397	10877138	OPERATOR SEAT
HEATING FLANGE 24V 1,9KW	12856186	1	1	205	13701882	HEATING FLANGE COMPLETE
HEATING FLANGE ADD-ON	9078314	260	1	132	13455311	DIESEL ENGINE
HEATING FLANGE COMPLETE	13701882	1	1	204	9078314	HEATING FLANGE ADD-ON
HEATING HOSE 70/PRIMAFLE	553181208	12	0.25	352	916168308	AIR DUCT
HEATING, PRE-ASSEMBLED LT	969300008	4	1	386	917894308	HEATING CRANE DRIVER'S CA
HEATSHRINK PIECE 24	603020508	518	2	494	96023971	WIRING HARNESS
HEATSHRINK SLEEVING 11,6/2	10441166	298	0.1	426	96023891	WIRING HARNESS
HEATSHRINK SLEEVING 11,6/2	10441166	298	0.4	495	96049294	WIRING HARNESS
HEATSHRINK SLEEVING 12/2,5	10429652	288	0.12	706	96063415	WIRING HARNESS
HEATSHRINK SLEEVING 27 - 8	603016908	243	0.25	698	96063213	LEAD
HEATSHRINK SLEEVING 38,1/	603032214	319	0.3	33	967304508	UNDERCARRIAGE HYDRAULIC
HEATSHRINK SLEEVING 38,1/	603032314	321	0.6	33	967304508	UNDERCARRIAGE HYDRAULIC
HEATSHRINK SLEEVING 38/1	603032614	320	0.3	33	967304508	UNDERCARRIAGE HYDRAULIC
HEATSHRINK SLEEVING 9,0/2	10441165	297	0.06	608	96060353	LEAD
HEX CAP NUT BGR.8 M 79X4 P	12102190	166	1	591	96064697	HYDR.AUXILIARY HOISTING
HEX CAP NUT BGR.8 M 79X4 P	12102190	166	1	598	96075086	HYD.AUX.LIFT GEAR UPPER
HEX CAP NUT RD32X3 SPF	10466914	160	2	516	96045552	HYDRAULICS UPPER CARRI
HEX CAP NUT RD32X3 SPF	10466914	174	1	598	96075086	HYD.AUX.LIFT GEAR UPPER
HEX CAP NUT RD36X3 SPF	10466915	162	1	598	96075086	HYD.AUX.LIFT GEAR UPPER
HEX NUT AEHNL.ISO 7040 M6	11004444	99	10	656	91000049	PIVOT SECTION, PRE-ASSEMB
HEX NUT AEHNL.ISO 7040 M6	11004444	93	2	674	91000054	TELESCOPIC SECT.5 PRE-AS
HEX NUT AEHNL.ISO 7040 M6	11004444	9	3	734	96056553	LOCATION FIXTURE PRE-ASS.
HEX NUT AEHNL.ISO 7042 M12	11626393	352	4	473	96051762	EXHAUST SYSTEM PRE-ASSE
HEX NUT AEHNL.ISO 7042 M6	11113917	350	4	473	96051762	EXHAUST SYSTEM PRE-ASSE
HEX NUT DIN 985 M10 10 FLZ	10875605	104	4	645	919950308	DISPATCH ASSY.MECH.PART
HEX NUT DIN 985 M10 8 ZNNI-4	10197769	9	4	52	968374908	LIMIT SWITCH ADD-ON
HEX NUT DIN 985 M10 8 ZNNI-4	10197769	12	1	355	916163008	WIPERS INSTALLATION
HEX NUT DIN 985 M10 8 ZNNI-4	10197769	55	4	673	91000054	TELESCOPIC SECT.5 PRE-AS
HEX NUT DIN 985 M12 10 FLZ	12218127	352	2	124	918728408	ASSEMBLY PARTS F.SLEWING
HEX NUT DIN 985 M12 10 FLZ	12218127	47	4	679	91000055	MECHANICAL EXTENSION SYS
HEX NUT DIN 985 M12 8 FLZN	10875607	11	4	47	968374708	MOUNTING PARTS
HEX NUT DIN 985 M12 8 FLZN	10875607	34	4	70	915447908	HYDRAULIC SUPPORT
HEX NUT DIN 985 M14X1,5 010	12100600	353	1	272	96020819	RADIATOR, PRE-ASSEMBLED
HEX NUT DIN 985 M16 8 FLZN	10875609	22	2	315	917357108	CRANE DRIVER CAB ADDITIO
HEX NUT DIN 985 M16 8 FLZN	10875609	8	4	320	916164208	BEARING INSTALLATION
HEX NUT DIN 985 M20 10 FLZ	10875610	350	1	290	917962508	FUEL TANK ADD-ON UNIT
HEX NUT DIN 985 M20 10 FLZ	10875610	350	1	293	918008908	OIL RESERVOIR, EXTENSION
HEX NUT DIN 985 M20 10 FLZ	10875610	59	4	673	91000054	TELESCOPIC SECT.5 PRE-AS
HEX NUT DIN 985 M3 8 480H	10876399	26	4	431	96056347	ELECTRIC ADD-ON PARTS CA
HEX NUT DIN 985 M5 8 480H	10875612	10	3	781	968940708	HOLDER LEFT
HEX NUT DIN 985 M5 8 480H	10875612	10	3	782	968940808	HOLDER RIGHT
HEX NUT DIN 985 M5 A2-70	10301317	26	8	81	96062917	ELECTR.FOR CENTER SECTIO
HEX NUT DIN 985 M5 A2-70	10301317	4	1	734	96056553	LOCATION FIXTURE PRE-ASS.
HEX NUT DIN 985 M6 8 ZNNI-4	12102692	314	6	33	967304508	UNDERCARRIAGE HYDRAULIC
HEX NUT DIN 985 M6 8 ZNNI-4	12102692	12	6	421	96044787	HOLDER PRE-ASSEMBLY
HEX NUT DIN 985 M6 8 ZNNI-4	12102692	14	6	506	926891108	GROUND RAIL
HEX NUT DIN 985 M6 8 ZNNI-4	12102692	311	2	591	96064697	HYDR.AUXILIARY HOISTING
HEX NUT DIN 985 M6 8 ZNNI-4	12102692	60	2	599	96075102	FASTENING PIECES HYDRAUL
HEX NUT DIN 985 M6 8 ZNNI-4	12102692	5	1	646	925141508	HOSE GUIDE PRE-ASS.
HEX NUT DIN 985 M6 A2-70	411903008	11	1	332	968462608	INSTALLATION SWITCH CAB. C

Description	Item	Pos.	Quantity	Page	Assembly	Description
HEX NUT DIN 985 M6 A2-70	411903008	23	4	361	917304708	SLIDING DOOR INSTALLATION
HEX NUT DIN 985 M6 A2-70	411903008	5	2	363	966230508	GUIDE PRE-ASS.
HEX NUT DIN 985 M6 A2-70	411903008	354	4	415	96024809	SLEWING PLATFORM PANELLI
HEX NUT DIN 985 M6 A2-70	411903008	9	3	623	915403108	ADD-ON PARTS CAMERA
HEX NUT DIN 985 M6 A2-70	411903008	25	2	625	96036821	REAR END TURNT. CAMERA E
HEX NUT DIN 985 M8 8 480H	10875614	4	8	47	968374708	MOUNTING PARTS
HEX NUT DIN 985 M8 8 480H	10875614	9	2	127	968305308	LIMIT SWITCH, PRE-ASSEMB
HEX NUT DIN 985 M8 8 480H	10875614	26	2	326	968483708	STEP CPL.
HEX NUT DIN 985 M8 8 480H	10875614	46	1	338	917305408	INTERNAL PANELLING INSTA
HEX NUT DIN 985 M8 8 480H	10875614	5	4	386	917894308	HEATING CRANE DRIVER'S CA
HEX NUT DIN 985 M8 8 480H	10875614	5	1	402	916049908	MIRROR ATTACHM.IN CRANE
HEX NUT DIN 985 M8 8 480H	10875614	351	8	408	96022627	SLEWING PLATFORM PANELLI
HEX NUT DIN 985 M8 8 480H	10875614	4	4	440	916870808	MIRROR ATTACHM.AT SLEW.P
HEX NUT DIN 985 M8 8 480H	10875614	22	2	444	918759708	ADD HEATING SUPERSTRUCT
HEX NUT DIN 985 M8 8 480H	10875614	26	1	446	96019783	ADDNL.HEATING, PRE-ASSE
HEX NUT DIN 985 M8 8 480H	10875614	352	4	562	919528608	OIL COOLER INSTALLATION
HEX NUT DIN 985 M8 8 480H	10875614	12	3	606	91002360	CHARGER
HEX NUT DIN 985 M8 8 480H	10875614	7	2	612	913753108	RADIO PREPARATION UPPER
HEX NUT DIN 985 M8 8 480H	10875614	14	1	623	915403108	ADD-ON PARTS CAMERA
HEX NUT DIN 985 M8 8 480H	10875614	6	4	773	96037297	ANGULAR TRANSMITTER AT
HEX NUT DIN 985 M8 8 480H	10875614	6	8	780	917508508	LADDER ATTACHMENT
HEX NUT DIN 985 M8 A2-70	411903108	(6)	21	326	968483708	STEP CPL.
HEX NUT DIN 985 M8 A2-70	411903108	23	20	326	968483708	STEP CPL.
HEX NUT DIN 985 M8 A2-70	411903108	6	12	331	916162808	RELING
HEX NUT EN 1661 M10 10 FLZ	12215460	4	3	202	10147364	AIR INTAKE ASSEMBLY
HEX NUT EN 1661 M10 10 FLZ	12215460	7	1	225	10142863	GENERATOR, PRE-ASSEMBLE
HEX NUT EN 1661 M10 10 FLZ	12215460	3	3	226	10115539	STARTER ASSEMBLY
HEX NUT EN 1661 M8 8 480H	11820285	11	2	203	10149677	CONNECTING LINE ADD-ON
HEX NUT EN 1661 M8 8 480H	11820285	78	1	239	10151328	CABLE HARNESS MOUNTING
HEX NUT ISO 4032 M10 10 FLZ	11002807	14	12	129	13471292	DRIVE UNIT
HEX NUT ISO 4032 M10 8 A2E	411503103	6	2	60	991456314	ACCESS COMPL
HEX NUT ISO 4032 M10 8 ZNNI	12102695	351	3	124	918728408	ASSEMBLY PARTS F.SLEWING
HEX NUT ISO 4032 M10 8 ZNNI	12102695	32	2	395	918810308	CONTROL STAND
HEX NUT ISO 4032 M10 8 ZNNI	12102695	354	9	408	96022627	SLEWING PLATFORM PANELLI
HEX NUT ISO 4032 M10 8 ZNNI	12102695	353	2	415	96024809	SLEWING PLATFORM PANELLI
HEX NUT ISO 4032 M10 8 ZNNI	12102695	51	6	581	96062734	AUXILIARY HOISTING GEAR
HEX NUT ISO 4032 M10 8 ZNNI	12102695	25	2	723	964502908	BOOM NOSE PRE-ASS.
HEX NUT ISO 4032 M10 A4-70	411514614	350	6	470	919674308	EXHAUST SYSTEM
HEX NUT ISO 4032 M12 8 FLZ	10875616	351	4	473	96051762	EXHAUST SYSTEM PRE-ASSE
HEX NUT ISO 4032 M12 8 FLZ	10875616	50	4	581	96062734	AUXILIARY HOISTING GEAR
HEX NUT ISO 4032 M12 8 FLZ	10875616	17	2	747	919933308	TRANSPORT MOUNTING
HEX NUT ISO 4032 M12 8 FLZ	10875616	29	4	760	918533508	ADAPTER PRE-ASS.
HEX NUT ISO 4032 M16 10 FLZ	10873081	353	8	124	918728408	ASSEMBLY PARTS F.SLEWING
HEX NUT ISO 4032 M16 8 BLAN	411514608	8	1	751	929582108	MOUNTING PRE-ASS.
HEX NUT ISO 4032 M16 8 FLZ	10875617	21	4	22	96062226	CRAWLER CARRIER RIGHT CP
HEX NUT ISO 4032 M16 8 FLZ	10875617	21	4	27	96062228	CRAWLER TRACK CARRIER LE
HEX NUT ISO 4032 M16 8 FLZ	10875617	3	3	636	964060608	CHAIN HOLDER CPL.
HEX NUT ISO 4032 M16 8 FLZ	10875617	13	11	747	919933308	TRANSPORT MOUNTING
HEX NUT ISO 4032 M16 8 FLZ	10875617	27	4	760	918533508	ADAPTER PRE-ASS.
HEX NUT ISO 4032 M16 8 FLZ	10875617	36	2	768	91001040	PIVOT SECTION, PRE-ASSEMB
HEX NUT ISO 4032 M16 8 FLZ	10875617	18	1	771	918596708	HEAD SECTION PRE-ASS.
HEX NUT ISO 4032 M16 8 FLZ	10875617	9	1	772	918221408	TENSION PLATE PRE-ASS.
HEX NUT ISO 4032 M20 8 FLZ	10875618	34	4	661	91000050	TELESCOPIC SECTION 1 PRE
HEX NUT ISO 4032 M20 8 FLZ	10875618	34	4	664	91000051	TELESCOPIC SECT.2 PRE-AS
HEX NUT ISO 4032 M20 8 FLZ	10875618	34	4	667	91000052	TELESCOPIC SECT.3 PRE-ASS
HEX NUT ISO 4032 M20 8 FLZ	10875618	46	4	670	91000053	TELESCOPIC SECT.IV PRE-A
HEX NUT ISO 4032 M20 8 FLZ	10875618	15	4	741	919421708	HOOK BLOCK
HEX NUT ISO 4032 M20 8 FLZ	10875618	15	4	743	910445708	HOOK BLOCK
HEX NUT ISO 4032 M20 8 FLZ	10875618	33	4	771	918596708	HEAD SECTION PRE-ASS.
HEX NUT ISO 4032 M24 10 FLZ	10425688	25	4	768	91001040	PIVOT SECTION, PRE-ASSEMB

Description	Item	Pos.	Quantity	Page	Assembly	Description
HEX NUT ISO 4032 M30 10 FLZ	10425689	33	2	22	96062226	CRAWLER CARRIER RIGHT CP
HEX NUT ISO 4032 M30 10 FLZ	10425689	33	2	28	96062228	CRAWLER TRACK CARRIER LE
HEX NUT ISO 4032 M4 8 480H	10875619	10	2	346	916162508	WINDOW ASSEMBLY
HEX NUT ISO 4032 M5 8 480H	10875620	108	2	70	915447908	HYDRAULIC SUPPORT
HEX NUT ISO 4032 M5 8 480H	10875620	18	6	287	96024716	BATTERY BOX, PRE-ASSEMB
HEX NUT ISO 4032 M5 8 480H	10875620	5	4	478	915300208	CENT. LUBRIC. SYSTEM SUP
HEX NUT ISO 4032 M5 8 A2E	400100703	23	18	61	917155308	PREPARATION HYDR
HEX NUT ISO 4032 M5 TI2-WS	10878117	15	2	458	91003833	UREA PLANT
HEX NUT ISO 4032 M6 10 ZNNI	10197764	13	2	85	966167808	COVER COMPL.
HEX NUT ISO 4032 M6 10 ZNNI	10197764	16	2	87	96062922	MOUNTING PLATE PRE-ASS.
HEX NUT ISO 4032 M6 10 ZNNI	10197764	354	2	124	918728408	ASSEMBLY PARTS F.SLEWING
HEX NUT ISO 4032 M6 10 ZNNI	10197764	350	12	269	918811108	DRIVE ASSEMBLY, PRE-ASSE
HEX NUT ISO 4032 M6 10 ZNNI	10197764	351	4	272	96020819	RADIATOR, PRE-ASSEMBLED
HEX NUT ISO 4032 M6 10 ZNNI	10197764	27	4	287	96024716	BATTERY BOX, PRE-ASSEMB
HEX NUT ISO 4032 M6 10 ZNNI	10197764	51	2	338	917305408	INTERNAL PANELLING INSTA
HEX NUT ISO 4032 M6 10 ZNNI	10197764	350	4	408	96022627	SLEWING PLATFORM PANELLI
HEX NUT ISO 4032 M6 10 ZNNI	10197764	350	6	415	96024809	SLEWING PLATFORM PANELLI
HEX NUT ISO 4032 M6 10 ZNNI	10197764	350	2	417	969392008	FRONT LEFT-HAND HOOD
HEX NUT ISO 4032 M6 10 ZNNI	10197764	97	4	420	919484908	FALL PROTECTION
HEX NUT ISO 4032 M6 10 ZNNI	10197764	71	4	461	96074081	UREA TANK, PRE-MOUNTING
HEX NUT ISO 4032 M6 10 ZNNI	10197764	5	12	503	922648308	TERMINAL BOARD PRE-ASS.
HEX NUT ISO 4032 M6 10 ZNNI	10197764	6	4	506	926891108	GROUND RAIL
HEX NUT ISO 4032 M6 A2-70	411530301	98	2	420	919484908	FALL PROTECTION
HEX NUT ISO 4032 M6 A4-70	411517114	351	11	470	919674308	EXHAUST SYSTEM
HEX NUT ISO 4032 M8 10 ZNNI	10197760	10	4	506	926891108	GROUND RAIL
HEX NUT ISO 4032 M8 8 480H	11693875	107	2	70	915447908	HYDRAULIC SUPPORT
HEX NUT ISO 4032 M8 8 480H	11693875	350	10	124	918728408	ASSEMBLY PARTS F.SLEWING
HEX NUT ISO 4032 M8 8 480H	11693875	351	13	269	918811108	DRIVE ASSEMBLY, PRE-ASSE
HEX NUT ISO 4032 M8 8 480H	11693875	350	11	272	96020819	RADIATOR, PRE-ASSEMBLED
HEX NUT ISO 4032 M8 8 480H	11693875	350	4	305	91002857	FUEL FEED
HEX NUT ISO 4032 M8 8 480H	11693875	27	2	355	916163008	WIPERS INSTALLATION
HEX NUT ISO 4032 M8 8 480H	11693875	8	4	386	917894308	HEATING CRANE DRIVER'S CA
HEX NUT ISO 4032 M8 8 480H	11693875	353	13	408	96022627	SLEWING PLATFORM PANELLI
HEX NUT ISO 4032 M8 8 480H	11693875	351	3	415	96024809	SLEWING PLATFORM PANELLI
HEX NUT ISO 4032 M8 8 480H	11693875	11	1	416	969399608	FLAP PRE-ASS.
HEX NUT ISO 4032 M8 8 480H	11693875	170	15	420	919484908	FALL PROTECTION
HEX NUT ISO 4032 M8 8 480H	11693875	70	9	461	96074081	UREA TANK, PRE-MOUNTING
HEX NUT ISO 4032 M8 8 480H	11693875	350	4	476	918729308	AIR FILTER UNIT
HEX NUT ISO 4032 M8 8 480H	11693875	24	2	478	915300208	CENT. LUBRIC. SYSTEM SUP
HEX NUT ISO 4032 M8 8 480H	11693875	19	2	502	96025348	BASE ASSEMBLY
HEX NUT ISO 4032 M8 8 480H	11693875	350	8	562	919528608	OIL COOLER INSTALLATION
HEX NUT ISO 4032 M8 8 480H	11693875	(7)	4	566	969767908	PIPEWORK AIR INSTALLATIO
HEX NUT ISO 4032 M8 8 480H	11693875	52	2	581	96062734	AUXILIARY HOISTING GEAR
HEX NUT ISO 4032 M8 8 480H	11693875	5	1	636	964060608	CHAIN HOLDER CPL.
HEX NUT ISO 4032 M8 8 480H	11693875	4	2	642	96045219	MECHANICAL AUXILIARIES
HEX NUT ISO 4032 M8 8 480H	11693875	22	2	723	964502908	BOOM NOSE PRE-ASS.
HEX NUT ISO 4032 M8 8 480H	11693875	4	2	726	967321308	FIXING DEVICE 2.LIFT TOP
HEX NUT ISO 4032 M8 A2-70	510737408	19	2	326	968483708	STEP CPL.
HEX NUT ISO 4035 M10X1,5 04	10411095	5	2	228	11386644	STARTER
HEX NUT ISO 4035 M16 05 FLZ	4600037	51	40	31	992078314	CENTRE PIECE
HEX NUT ISO 4035 M16 05 FLZ	4600037	18	4	679	91000055	MECHANICAL EXTENSION SYS
HEX NUT ISO 4035 M5 04	511001708	9	2	386	917894308	HEATING CRANE DRIVER'S CA
HEX NUT ISO 4035 M8 04 A2C	410120308	29	1	723	964502908	BOOM NOSE PRE-ASS.
HEX NUT ISO 4036 M20 ST FLZ	10544163	36	4	30	992078314	CENTRE PIECE
HEX NUT ISO 7040 M10 8 FLZ	10875629	15	4	577	96033759	ADD-ON PARTS WORK FLOOD
HEX NUT ISO 7040 M10 8 FLZ	10875629	19	1	625	96036821	REAR END TURNT. CAMERA E
HEX NUT ISO 7040 M10 8 FLZ	10875629	11	12	658	96014777	LIFTING ROPE GUIDE PREAS
HEX NUT ISO 7040 M10 8 FLZ	10875629	31	4	661	91000050	TELESCOPIC SECTION 1 PRE
HEX NUT ISO 7040 M10 8 FLZ	10875629	31	4	664	91000051	TELESCOPIC SECT.2 PRE-AS
HEX NUT ISO 7040 M10 8 FLZ	10875629	31	4	667	91000052	TELESCOPIC SECT.3 PRE-ASS

Description	Item	Pos.	Quantity	Page	Assembly	Description
HEX NUT ISO 7040 M10 8 FLZ	10875629	31	4	670	91000053	TELESCOPIC SECT.IV PRE-A
HEX NUT ISO 7040 M10 8 FLZ	10875629	47	2	760	918533508	ADAPTER PRE-ASS.
HEX NUT ISO 7040 M12 8 FLZ	11840127	6	1	422	96044789	
HEX NUT ISO 7040 M12 8 FLZ	11840127	43	20	655	91000049	PIVOT SECTION, PRE-ASSEMB
HEX NUT ISO 7040 M12 8 FLZ	11840127	43	12	661	91000050	TELESCOPIC SECTION 1 PRE
HEX NUT ISO 7040 M12 8 FLZ	11840127	43	12	664	91000051	TELESCOPIC SECT.2 PRE-AS
HEX NUT ISO 7040 M12 8 FLZ	11840127	43	8	667	91000052	TELESCOPIC SECT.3 PRE-ASS
HEX NUT ISO 7040 M12 8 FLZ	11840127	43	8	670	91000053	TELESCOPIC SECT.IV PRE-A
HEX NUT ISO 7040 M12 8 FLZ	11840127	3	2	737	917825608	ADD-ON PARTS
HEX NUT ISO 7040 M12 8 FLZ	11840127	30	2	760	918533508	ADAPTER PRE-ASS.
HEX NUT ISO 7040 M16 8 FLZ	10875859	23	2	747	919933308	TRANSPORT MOUNTING
HEX NUT ISO 7040 M20 10 FE//	10875630	31	2	771	918596708	HEAD SECTION PRE-ASS.
HEX NUT ISO 7040 M6 10 480H	10415159	22	1	624	96036820	EQUIPMENT CAMERA CAB
HEX NUT ISO 7040 M6 8 480H	11656734	12	2	127	968305308	LIMIT SWITCH, PRE-ASSEMB
HEX NUT ISO 7040 M6 8 480H	11656734	6	2	655	91000049	PIVOT SECTION, PRE-ASSEMB
HEX NUT ISO 7040 M6 8 480H	11656734	69	2	661	91000050	TELESCOPIC SECTION 1 PRE
HEX NUT ISO 7040 M6 8 480H	11656734	69	2	664	91000051	TELESCOPIC SECT.2 PRE-AS
HEX NUT ISO 7040 M6 8 480H	11656734	69	2	667	91000052	TELESCOPIC SECT.3 PRE-ASS
HEX NUT ISO 7040 M6 8 480H	11656734	69	2	670	91000053	TELESCOPIC SECT.IV PRE-A
HEX NUT ISO 7040 M6 8 480H	11656734	31	2	679	91000055	MECHANICAL EXTENSION SYS
HEX NUT ISO 7040 M6 8 480H	11656734	7	3	736	96056560	WIND WARNING PREASSEMB
HEX NUT ISO 7040 M6 8 480H	11656734	13	4	760	918533508	ADAPTER PRE-ASS.
HEX NUT ISO 7040 M6 8 480H	11656734	9	2	773	96037297	ANGULAR TRANSMITTER AT
HEX NUT ISO 7040 M8 8 480H	11656731	352	2	269	918811108	DRIVE ASSEMBLY, PRE-ASSE
HEX NUT ISO 7040 M8 8 480H	11656731	352	4	272	96020819	RADIATOR, PRE-ASSEMBLED
HEX NUT ISO 7040 M8 8 480H	11656731	16	2	577	96033759	ADD-ON PARTS WORK FLOOD
HEX NUT ISO 7040 M8 8 480H	11656731	12	2	604	96066401	MECHANICAL AUXILIARIES
HEX NUT ISO 7040 M8 8 480H	11656731	107	4	645	919950308	DISPATCH ASSY.MECH.PART
HEX NUT ISO 7042 M10 10 FLZ	10814801	270	4	420	919484908	FALL PROTECTION
HEX NUT ISO 7042 M8 10 480H	10814800	353	2	473	96051762	EXHAUST SYSTEM PRE-ASSE
HEX NUT ISO 8673 M10X1 8 F	10179115	53	1	361	917304708	SLIDING DOOR INSTALLATION
HEX NUT ISO 8675 M12X1,0 04	10875633	25	1	431	96056347	ELECTRIC ADD-ON PARTS CA
HEX NUT ISO 8675 M20X1,5 A	10285016	470	2	420	919484908	FALL PROTECTION
HEX NUT ISO 8675 M24X2 05	411703308	2	1	316	10650940	TILT CYLINDER
HEX NUT ISO 8675 M42X3 05 F	10878614	471	2	420	919484908	FALL PROTECTION
HEX NUT M10X1	10012557	3	2	165	11448005	ROCKER ARM BRACKET PRE
HEX NUT M10X1	10012557	3	2	166	12549825	ROCKER ARM BRACKET PRE
HEX NUT M16X1,5 MS	602504108	15	1	84	96075205	SWITCH BOX COMPL.
HEX NUT M20X1,5 MS	602504208	18	1	84	96075205	SWITCH BOX COMPL.
HEX NUT M32X1,5 MS	602504408	17	1	84	96075205	SWITCH BOX COMPL.
HEX NUT M40X1,50 MS	602504508	509	1	90	96062920	WIRING HARNESS
HEX NUT M6 8	10411094	3	1	228	11386644	STARTER
HEX SCREW DIN 6921 M8X16	10005511	1	20	274	97095949	COMBINATED RADIATOR
HEX SCREW DIN 6921 M8X25	10009007	2	5	215	10142733	WATER PUMP WITH FASTENIN
HEX SCREW DIN 6921 M8X25	10009007	3	4	237	10144227	CONTROL BOX ANNEXE
HEX SCREW DIN 6921 M8X40 1	11600960	(4)	6	170	10147787	CAMSHAFT CPL.
HEX SCREW DIN 6921 M8X45	10005713	2	1	177	10148432	LUBE OIL PUMP WITH FASTEN
HEX SCREW DIN 6921 M8X45	10016907	5	4	237	10144227	CONTROL BOX ANNEXE
HEX SCREW DIN 6921 M8X80	11645138	3	2	177	10148432	LUBE OIL PUMP WITH FASTEN
HEX SCREW EN 1665 M10X12	12207562	4	8	139	10147687	POWER UNIT SUPPORT ATT
HEX SCREW EN 1665 M10X120	12207559	5	1	225	10142863	GENERATOR, PRE-ASSEMBLE
HEX SCREW EN 1665 M10X20	10299560	(46)	1	239	10151328	CABLE HARNESS MOUNTING
HEX SCREW EN 1665 M10X20	11656153	3	2	152	10139112	OIL LINE PRE-ASSEMBLY
HEX SCREW EN 1665 M10X20	11656153	68	3	239	10151328	CABLE HARNESS MOUNTING
HEX SCREW EN 1665 M10X20	11656153	58	2	241	10151329	WIRING HARNESS ASSEMBLY
HEX SCREW EN 1665 M10X20	11656153	6	2	246	9078249	LOCKING PIECES
HEX SCREW EN 1665 M10X20	11656153	3	2	247	10144027	LOCKING PIECES
HEX SCREW EN 1665 M10X20	11656153	6	2	249	9078962	AUXILIARY DRIVE PRE-ASS.
HEX SCREW EN 1665 M10X25	11656154	10	3	223	12512627	EXHAUST NOZZLE ATTACHM
HEX SCREW EN 1665 M10X30	10299564	2	4	230	9079823	TRANSPORT DEVICE ATTACH

Description	Item	Pos.	Quantity	Page	Assembly	Description
HEX SCREW EN 1665 M10X30	11656155	3	2	225	10142863	GENERATOR, PRE-ASSEMBLE
HEX SCREW EN 1665 M10X30	11656155	3	3	229	10115664	LOCKING PIECES
HEX SCREW EN 1665 M10X30	11656155	69	1	239	10151328	CABLE HARNESS MOUNTING
HEX SCREW EN 1665 M10X35	11643686	2	3	206	10127566	INSTALLATION BRAKE COMPR
HEX SCREW EN 1665 M10X40	11626068	5	6	213	12418347	AIR COND. COMPRESSOR A
HEX SCREW EN 1665 M10X50	10299585	6	1	139	10147687	POWER UNIT SUPPORT ATT
HEX SCREW EN 1665 M10X60	11656158	4	2	192	10146791	FUEL FINE-FILTER ASSEMBLY
HEX SCREW EN 1665 M10X60	11656158	3	4	200	10147365	AIR INTAKE PIPE ASS.
HEX SCREW EN 1665 M10X60	11656158	7	2	213	12418347	AIR COND. COMPRESSOR A
HEX SCREW EN 1665 M10X70	10299589	5	9	139	10147687	POWER UNIT SUPPORT ATT
HEX SCREW EN 1665 M10X80	11656160	6	1	213	12418347	AIR COND. COMPRESSOR A
HEX SCREW EN 1665 M10X90	12208088	4	4	200	10147365	AIR INTAKE PIPE ASS.
HEX SCREW EN 1665 M10X90	12208088	9	1	223	12512627	EXHAUST NOZZLE ATTACHM
HEX SCREW EN 1665 M12X25	11690641	17	2	47	968374708	MOUNTING PARTS
HEX SCREW EN 1665 M12X40	10875423	4	1	225	10142863	GENERATOR, PRE-ASSEMBLE
HEX SCREW EN 1665 M12X45	11656452	9	1	146	10155227	OIL SUMP PRE-ASS.
HEX SCREW EN 1665 M16X50	12207570	2	2	231	10142864	TRANSPORT DEVICE ATTACH
HEX SCREW EN 1665 M5X10	10875503	13	6	84	96075205	SWITCH BOX COMPL.
HEX SCREW EN 1665 M5X10	10875503	13	8	87	96062922	MOUNTING PLATE PRE-ASS.
HEX SCREW EN 1665 M5X10	10875503	24	8	498	919940108	SWITCHBOX MOUNTING PART
HEX SCREW EN 1665 M5X10	10875503	80	25	502	96025348	BASE ASSEMBLY
HEX SCREW EN 1665 M5X10	10875503	6	12	507	968015808	PRE-ASSEMBLY MOUNTING U
HEX SCREW EN 1665 M5X10 8	12207546	12	2	224	11420633	CYCLE VALVE
HEX SCREW EN 1665 M5X10 8	12207546	52	1	239	10151328	CABLE HARNESS MOUNTING
HEX SCREW EN 1665 M5X10 8	12207546	42	1	241	10151329	WIRING HARNESS ASSEMBLY
HEX SCREW EN 1665 M6X12 8	11692607	3	4	604	96066401	MECHANICAL AUXILIARIES
HEX SCREW EN 1665 M6X16 8	11840297	22	3	81	96062917	ELECTR.FOR CENTER SECTIO
HEX SCREW EN 1665 M6X16 8	11840297	5	4	167	11358036	CYLINDER HEAD COVER ASS
HEX SCREW EN 1665 M6X16 8	11840297	21	1	198	10143342	LEAK OIL RETURN LINE
HEX SCREW EN 1665 M6X16 8	11840297	13	7	224	11420633	CYCLE VALVE
HEX SCREW EN 1665 M6X16 8	11840297	54	7	239	10151328	CABLE HARNESS MOUNTING
HEX SCREW EN 1665 M6X16 8	11840297	324	4	269	918811108	DRIVE ASSEMBLY, PRE-ASSE
HEX SCREW EN 1665 M6X16 8	11840297	19	2	352	916168308	AIR DUCT
HEX SCREW EN 1665 M6X16 8	11840297	24	4	355	916163008	WIPERS INSTALLATION
HEX SCREW EN 1665 M6X16 8	11840297	300	3	407	96022627	SLEWING PLATFORM PANELLI
HEX SCREW EN 1665 M6X16 8	11840297	4	4	604	96066401	MECHANICAL AUXILIARIES
HEX SCREW EN 1665 M6X20 8	12207548	2	4	204	9078314	HEATING FLANGE ADD-ON
HEX SCREW EN 1665 M6X30 8	12207549	24	2	223	12512627	EXHAUST NOZZLE ATTACHM
HEX SCREW EN 1665 M6X40 8	12207587	3	1	201	10145173	INTAKE STACK ASSEMBLY
HEX SCREW EN 1665 M8X12 8	11656991	20	4	81	96062917	ELECTR.FOR CENTER SECTIO
HEX SCREW EN 1665 M8X12 8	11656991	39	6	431	96056347	ELECTRIC ADD-ON PARTS CA
HEX SCREW EN 1665 M8X16 8	11656992	15	1	198	10143342	LEAK OIL RETURN LINE
HEX SCREW EN 1665 M8X16 8	11656992	14	1	224	11420633	CYCLE VALVE
HEX SCREW EN 1665 M8X16 8	11656992	11	4	233	10116110	LOCKING PIECES
HEX SCREW EN 1665 M8X16 8	11656992	60	2	239	10151328	CABLE HARNESS MOUNTING
HEX SCREW EN 1665 M8X16 8	11656992	3	3	242	10143707	CLAMP - ADD-ON UNIT
HEX SCREW EN 1665 M8X20 8	11657219	12	1	196	10143341	FUEL LINES
HEX SCREW EN 1665 M8X20 8	11657219	14	1	201	10145173	INTAKE STACK ASSEMBLY
HEX SCREW EN 1665 M8X20 8	11657219	11	2	224	11420633	CYCLE VALVE
HEX SCREW EN 1665 M8X20 8	11657219	3	1	234	10128439	LOCKING PIECES
HEX SCREW EN 1665 M8X20 8	11657219	61	14	239	10151328	CABLE HARNESS MOUNTING
HEX SCREW EN 1665 M8X20 8	11657219	51	2	241	10151329	WIRING HARNESS ASSEMBLY
HEX SCREW EN 1665 M8X20 8	11657219	4	1	242	10143707	CLAMP - ADD-ON UNIT
HEX SCREW EN 1665 M8X25	12215999	3	1	219	10142744	COOLING WATER AIR BLEED
HEX SCREW EN 1665 M8X25 8	11690637	14	2	196	10143341	FUEL LINES
HEX SCREW EN 1665 M8X25 8	11690637	313	2	407	96022627	SLEWING PLATFORM PANELLI
HEX SCREW EN 1665 M8X30 8	11826563	2	2	143	10126713	CRANKCASE BREATHER ASS
HEX SCREW EN 1665 M8X30 8	11826563	6	4	192	10146791	FUEL FINE-FILTER ASSEMBLY
HEX SCREW EN 1665 M8X30 8	11826563	12	1	201	10145173	INTAKE STACK ASSEMBLY
HEX SCREW EN 1665 M8X30 8	11826563	63	1	239	10151328	CABLE HARNESS MOUNTING

Description	Item	Pos.	Quantity	Page	Assembly	Description
HEX SCREW EN 1665 M8X30 8	11826563	53	2	241	10151329	WIRING HARNESS ASSEMBLY
HEX SCREW EN 1665 M8X40	10299604	3	14	173	10129475	OIL COOLER ASSEMBLY
HEX SCREW EN 1665 M8X40 8	11658660	8	2	203	10149677	CONNECTING LINE ADD-ON
HEX SCREW EN 1665 M8X50 8	11691686	5	4	174	10129474	OIL COOLER, PRE-ASSEMBLE
HEX SCREW EN 1665 M8X50 8	11691686	5	1	192	10146791	FUEL FINE-FILTER ASSEMBLY
HEX SCREW EN 1665 M8X55 8	12210060	3	28	144	10132560	OIL SUMP WITH FASTENING
HEX SCREW EN 1665 M8X60 8.	12697335	2	1	177	10148432	LUBE OIL PUMP WITH FASTEN
HEX SCREW EN 1665 M8X90 8	10876385	4	20	167	11358036	CYLINDER HEAD COVER ASS
HEX SCREW ISO 4014 M10X1	12218490	323	2	269	918811108	DRIVE ASSEMBLY, PRE-ASSE
HEX SCREW ISO 4014 M10X2	10878922	16	4	287	96024716	BATTERY BOX, PRE-ASSEMB
HEX SCREW ISO 4014 M12X1	10875504	330	4	566	969767908	PIPEWORK AIR INSTALLATIO
HEX SCREW ISO 4014 M12X1	12224027	10	4	47	968374708	MOUNTING PARTS
HEX SCREW ISO 4014 M12X50	11651578	28	16	30	992078314	CENTRE PIECE
HEX SCREW ISO 4014 M12X50	11651578	5	1	737	917825608	ADD-ON PARTS
HEX SCREW ISO 4014 M12X55	11658891	82	12	656	91000049	PIVOT SECTION, PRE-ASSEMB
HEX SCREW ISO 4014 M12X55	11658891	67	12	661	91000050	TELESCOPIC SECTION 1 PRE
HEX SCREW ISO 4014 M12X55	11658891	67	12	664	91000051	TELESCOPIC SECT.2 PRE-AS
HEX SCREW ISO 4014 M12X55	11658891	67	8	667	91000052	TELESCOPIC SECT.3 PRE-ASS
HEX SCREW ISO 4014 M12X55	11658891	67	8	670	91000053	TELESCOPIC SECT.IV PRE-A
HEX SCREW ISO 4014 M12X65	11658890	4	1	210	9072906	INTERMEDIATE GEAR CPL.
HEX SCREW ISO 4014 M12X75	10875507	303	4	295	969219208	OIL TANK PRE-ASS.
HEX SCREW ISO 4014 M12X90	11840139	309	4	269	918811108	DRIVE ASSEMBLY, PRE-ASSE
HEX SCREW ISO 4014 M14X70	12225301	316	4	517	96045552	HYDRAULICS UPPER CARRI
HEX SCREW ISO 4014 M14X70	12225301	551	8	591	96064697	HYDR.AUXILIARY HOISTING
HEX SCREW ISO 4014 M16X1	10875797	10	4	320	916164208	BEARING INSTALLATION
HEX SCREW ISO 4014 M16X70	11642377	12	4	22	96062226	CRAWLER CARRIER RIGHT CP
HEX SCREW ISO 4014 M16X70	11642377	12	4	27	96062228	CRAWLER TRACK CARRIER LE
HEX SCREW ISO 4014 M16X75	10875798	37	2	768	91001040	PIVOT SECTION, PRE-ASSEMB
HEX SCREW ISO 4014 M20X1	406212901	7	4	24	749013714	GUIDE WHEEL CPL
HEX SCREW ISO 4014 M20X2	10878574	16	4	741	919421708	HOOK BLOCK
HEX SCREW ISO 4014 M20X29	406214708	16	4	743	910445708	HOOK BLOCK
HEX SCREW ISO 4014 M20X75	11656999	301	1	293	918008908	OIL RESERVOIR, EXTENSION
HEX SCREW ISO 4014 M20X90	12219309	301	2	290	917962508	FUEL TANK ADD-ON UNIT
HEX SCREW ISO 4014 M24X12	12691274	4	24	22	96062226	CRAWLER CARRIER RIGHT CP
HEX SCREW ISO 4014 M24X12	12691274	4	24	27	96062228	CRAWLER TRACK CARRIER LE
HEX SCREW ISO 4014 M24X1	10876069	9	48	22	96062226	CRAWLER CARRIER RIGHT CP
HEX SCREW ISO 4014 M24X1	10876069	9	48	27	96062228	CRAWLER TRACK CARRIER LE
HEX SCREW ISO 4014 M24X1	12104785	6	4	679	91000055	MECHANICAL EXTENSION SYS
HEX SCREW ISO 4014 M6X30 8	10875511	63	2	761	918533508	ADAPTER PRE-ASS.
HEX SCREW ISO 4014 M6X40 8	12216183	306	2	269	918811108	DRIVE ASSEMBLY, PRE-ASSE
HEX SCREW ISO 4014 M6X50 8	10875512	19	1	623	915403108	ADD-ON PARTS CAMERA
HEX SCREW ISO 4014 M6X65 8	12216186	307	2	269	918811108	DRIVE ASSEMBLY, PRE-ASSE
HEX SCREW ISO 4014 M6X80 8	12219810	300	3	306	96066239	PREMOUNTED FUEL FILTER
HEX SCREW ISO 4014 M8X110	12217239	50	3	461	96074081	UREA TANK, PRE-MOUNTING
HEX SCREW ISO 4014 M8X45 8	11651580	47	2	673	91000054	TELESCOPIC SECT.5 PRE-AS
HEX SCREW ISO 4014 M8X80	10021245	303	2	473	96051762	EXHAUST SYSTEM PRE-ASSE
HEX SCREW ISO 4014 M8X80 8	11632102	53	2	461	96074081	UREA TANK, PRE-MOUNTING
HEX SCREW ISO 4014 M8X85 8	10875514	4	1	636	964060608	CHAIN HOLDER CPL.
HEX SCREW ISO 4017 M10X16	11652470	23	8	22	96062226	CRAWLER CARRIER RIGHT CP
HEX SCREW ISO 4017 M10X16	11652470	23	6	27	96062228	CRAWLER TRACK CARRIER LE
HEX SCREW ISO 4017 M10X16	11652470	31	8	30	992078314	CENTRE PIECE
HEX SCREW ISO 4017 M10X16	11652470	306	10	124	918728408	ASSEMBLY PARTS F.SLEWING
HEX SCREW ISO 4017 M10X16	11652470	318	1	269	918811108	DRIVE ASSEMBLY, PRE-ASSE
HEX SCREW ISO 4017 M10X16	11652470	325	2	517	96045552	HYDRAULICS UPPER CARRI
HEX SCREW ISO 4017 M10X16	11652470	305	4	562	919528608	OIL COOLER INSTALLATION
HEX SCREW ISO 4017 M10X16	11652470	14	3	723	964502908	BOOM NOSE PRE-ASS.
HEX SCREW ISO 4017 M10X20	406509808	321	1	407	96022627	SLEWING PLATFORM PANELLI
HEX SCREW ISO 4017 M10X20	10197730	30	8	30	992078314	CENTRE PIECE
HEX SCREW ISO 4017 M10X20	10197730	6	2	48	96046146	PROTECTION CPL.
HEX SCREW ISO 4017 M10X20	10197730	7	16	320	916164208	BEARING INSTALLATION

Description	Item	Pos.	Quantity	Page	Assembly	Description
HEX SCREW ISO 4017 M10X20	10197730	23	1	431	96056347	ELECTRIC ADD-ON PARTS CA
HEX SCREW ISO 4017 M10X20	10197730	301	2	470	919674308	EXHAUST SYSTEM
HEX SCREW ISO 4017 M10X20	10197730	309	4	517	96045552	HYDRAULICS UPPER CARRI
HEX SCREW ISO 4017 M10X20	10197730	33	5	655	91000049	PIVOT SECTION, PRE-ASSEMB
HEX SCREW ISO 4017 M10X20	10197730	33	2	741	919421708	HOOK BLOCK
HEX SCREW ISO 4017 M10X20	10197730	16	3	763	917695308	GUIDE PULLEY COMPL.
HEX SCREW ISO 4017 M10X20	406590805	302	6	470	919674308	EXHAUST SYSTEM
HEX SCREW ISO 4017 M10X25	11631816	8	2	48	96046146	PROTECTION CPL.
HEX SCREW ISO 4017 M10X25	11631816	305	3	124	918728408	ASSEMBLY PARTS F.SLEWING
HEX SCREW ISO 4017 M10X25	11631816	301	2	263	918728708	DRIVE ASSEMBLY CPL.
HEX SCREW ISO 4017 M10X25	11631816	322	8	269	918811108	DRIVE ASSEMBLY, PRE-ASSE
HEX SCREW ISO 4017 M10X25	11631816	3	4	285	918955208	BATTERY BOX CPL.
HEX SCREW ISO 4017 M10X25	11631816	10	4	577	96033759	ADD-ON PARTS WORK FLOOD
HEX SCREW ISO 4017 M10X25	11631816	17	1	625	96036821	REAR END TURNT. CAMERA E
HEX SCREW ISO 4017 M10X30	11642358	7	2	48	96046146	PROTECTION CPL.
HEX SCREW ISO 4017 M10X30	11642358	322	10	408	96022627	SLEWING PLATFORM PANELLI
HEX SCREW ISO 4017 M10X30	11642358	315	2	415	96024809	SLEWING PLATFORM PANELLI
HEX SCREW ISO 4017 M10X30	11642358	301	6	473	96051762	EXHAUST SYSTEM PRE-ASSE
HEX SCREW ISO 4017 M10X30	11642358	64	4	655	91000049	PIVOT SECTION, PRE-ASSEMB
HEX SCREW ISO 4017 M10X30	11642358	10	8	658	96014777	LIFTING ROPE GUIDE PREAS
HEX SCREW ISO 4017 M10X35	406601008	4	6	378	963564908	MAIN HOISTING GEAR PRE-A
HEX SCREW ISO 4017 M10X35	406601008	200	2	420	919484908	FALL PROTECTION
HEX SCREW ISO 4017 M10X35	406601008	42	6	581	96062734	AUXILIARY HOISTING GEAR
HEX SCREW ISO 4017 M10X35	11691328	301	12	33	967304508	UNDERCARRIAGE HYDRAULIC
HEX SCREW ISO 4017 M10X35	11691328	43	2	581	96062734	AUXILIARY HOISTING GEAR
HEX SCREW ISO 4017 M10X35	11691328	45	2	760	918533508	ADAPTER PRE-ASS.
HEX SCREW ISO 4017 M10X40	11626706	38	16	22	96062226	CRAWLER CARRIER RIGHT CP
HEX SCREW ISO 4017 M10X40	11626706	38	16	28	96062228	CRAWLER TRACK CARRIER LE
HEX SCREW ISO 4017 M10X40	11626706	302	1	63	967301408	PREPARATION HYDR
HEX SCREW ISO 4017 M10X40	11626706	300	2	263	918728708	DRIVE ASSEMBLY CPL.
HEX SCREW ISO 4017 M10X40	11626706	302	4	473	96051762	EXHAUST SYSTEM PRE-ASSE
HEX SCREW ISO 4017 M10X40	11626706	24	1	723	964502908	BOOM NOSE PRE-ASS.
HEX SCREW ISO 4017 M10X50	11002718	10	4	315	917357108	CRANE DRIVER CAB ADDITIO
HEX SCREW ISO 4017 M10X50	11642355	31	2	395	918810308	CONTROL STAND
HEX SCREW ISO 4017 M12X1	10178898	52	1	760	918533508	ADAPTER PRE-ASS.
HEX SCREW ISO 4017 M12X20	11651006	26	3	22	96062226	CRAWLER CARRIER RIGHT CP
HEX SCREW ISO 4017 M12X20	11651006	26	3	28	96062228	CRAWLER TRACK CARRIER LE
HEX SCREW ISO 4017 M12X20	11651006	14	2	658	96014777	LIFTING ROPE GUIDE PREAS
HEX SCREW ISO 4017 M12X20	11651006	63	3	673	91000054	TELESCOPIC SECT.5 PRE-AS
HEX SCREW ISO 4017 M12X25	406608708	53	2	655	91000049	PIVOT SECTION, PRE-ASSEMB
HEX SCREW ISO 4017 M12X25	406609008	2	8	255	10115780	CLUTCH ASSEMBLY
HEX SCREW ISO 4017 M12X25	11658892	29	18	30	992078314	CENTRE PIECE
HEX SCREW ISO 4017 M12X25	11658892	27	8	61	917155308	PREPARATION HYDR
HEX SCREW ISO 4017 M12X25	11658892	317	3	269	918811108	DRIVE ASSEMBLY, PRE-ASSE
HEX SCREW ISO 4017 M12X25	11658892	320	2	415	96024809	SLEWING PLATFORM PANELLI
HEX SCREW ISO 4017 M12X25	11658892	50	8	458	91003833	UREA PLANT
HEX SCREW ISO 4017 M12X25	11658892	303	3	566	969767908	PIPEWORK AIR INSTALLATIO
HEX SCREW ISO 4017 M12X25	11658892	36	6	655	91000049	PIVOT SECTION, PRE-ASSEMB
HEX SCREW ISO 4017 M12X25	11658892	53	2	661	91000050	TELESCOPIC SECTION 1 PRE
HEX SCREW ISO 4017 M12X25	11658892	53	2	664	91000051	TELESCOPIC SECT.2 PRE-AS
HEX SCREW ISO 4017 M12X25	11658892	53	2	667	91000052	TELESCOPIC SECT.3 PRE-ASS
HEX SCREW ISO 4017 M12X25	11658892	53	2	670	91000053	TELESCOPIC SECT.IV PRE-A
HEX SCREW ISO 4017 M12X25	11658892	7	2	739	910543708	LOAD HOOK
HEX SCREW ISO 4017 M12X30	11631742	50	5	26	749065314	CARRYING ROLLER CPL
HEX SCREW ISO 4017 M12X30	11631742	32	12	70	915447908	HYDRAULIC SUPPORT
HEX SCREW ISO 4017 M12X30	11631742	308	9	124	918728408	ASSEMBLY PARTS F.SLEWING
HEX SCREW ISO 4017 M12X30	11631742	36	2	661	91000050	TELESCOPIC SECTION 1 PRE
HEX SCREW ISO 4017 M12X30	11631742	36	2	664	91000051	TELESCOPIC SECT.2 PRE-AS
HEX SCREW ISO 4017 M12X30	11631742	36	2	667	91000052	TELESCOPIC SECT.3 PRE-ASS
HEX SCREW ISO 4017 M12X30	11631742	36	2	670	91000053	TELESCOPIC SECT.IV PRE-A

Description	Item	Pos.	Quantity	Page	Assembly	Description
HEX SCREW ISO 4017 M12X35	11642349	316	2	269	918811108	DRIVE ASSEMBLY, PRE-ASSE
HEX SCREW ISO 4017 M12X40	11645384	303	8	33	967304508	UNDERCARRIAGE HYDRAULIC
HEX SCREW ISO 4017 M12X40	11645384	307	2	124	918728408	ASSEMBLY PARTS F.SLEWING
HEX SCREW ISO 4017 M12X40	11645384	321	3	415	96024809	SLEWING PLATFORM PANELLI
HEX SCREW ISO 4017 M12X45	11645386	301	1	268	918811108	DRIVE ASSEMBLY, PRE-ASSE
HEX SCREW ISO 4017 M12X45	11645386	300	4	473	96051762	EXHAUST SYSTEM PRE-ASSE
HEX SCREW ISO 4017 M12X45	11645386	41	4	581	96062734	AUXILIARY HOISTING GEAR
HEX SCREW ISO 4017 M12X45	11645386	11	4	655	91000049	PIVOT SECTION, PRE-ASSEMB
HEX SCREW ISO 4017 M12X45	11645386	2	1	737	917825608	ADD-ON PARTS
HEX SCREW ISO 4017 M12X45	11645386	28	2	760	918533508	ADAPTER PRE-ASS.
HEX SCREW ISO 4017 M12X50	11840136	41	12	655	91000049	PIVOT SECTION, PRE-ASSEMB
HEX SCREW ISO 4017 M12X50	11840136	41	12	661	91000050	TELESCOPIC SECTION 1 PRE
HEX SCREW ISO 4017 M12X50	11840136	41	12	664	91000051	TELESCOPIC SECT.2 PRE-AS
HEX SCREW ISO 4017 M12X50	11840136	41	12	667	91000052	TELESCOPIC SECT.3 PRE-ASS
HEX SCREW ISO 4017 M12X50	11840136	41	12	670	91000053	TELESCOPIC SECT.IV PRE-A
HEX SCREW ISO 4017 M12X50	11840136	16	2	747	919933308	TRANSPORT MOUNTING
HEX SCREW ISO 4017 M12X90	11834813	5	4	661	91000050	TELESCOPIC SECTION 1 PRE
HEX SCREW ISO 4017 M12X90	11834813	5	4	664	91000051	TELESCOPIC SECT.2 PRE-AS
HEX SCREW ISO 4017 M12X90	11834813	5	4	667	91000052	TELESCOPIC SECT.3 PRE-ASS
HEX SCREW ISO 4017 M12X90	11834813	5	4	670	91000053	TELESCOPIC SECT.IV PRE-A
HEX SCREW ISO 4017 M12X90	11834813	5	4	673	91000054	TELESCOPIC SECT.5 PRE-AS
HEX SCREW ISO 4017 M14X45	10878799	307	24	33	967304508	UNDERCARRIAGE HYDRAULIC
HEX SCREW ISO 4017 M14X45	10878799	305	8	517	96045552	HYDRAULICS UPPER CARRI
HEX SCREW ISO 4017 M16X1	10875518	33	2	760	918533508	ADAPTER PRE-ASS.
HEX SCREW ISO 4017 M16X1	12224044	2	3	636	964060608	CHAIN HOLDER CPL.
HEX SCREW ISO 4017 M16X1	12224044	12	4	747	919933308	TRANSPORT MOUNTING
HEX SCREW ISO 4017 M16X1	10875801	15	2	747	919933308	TRANSPORT MOUNTING
HEX SCREW ISO 4017 M16X1	10179032	50	8	31	992078314	CENTRE PIECE
HEX SCREW ISO 4017 M16X25	10877796	5	2	768	91001040	PIVOT SECTION, PRE-ASSEMB
HEX SCREW ISO 4017 M16X25	10877796	7	2	771	918596708	HEAD SECTION PRE-ASS.
HEX SCREW ISO 4017 M16X2	10878575	43	1	747	919933308	TRANSPORT MOUNTING
HEX SCREW ISO 4017 M16X30	4902326	311	3	124	918728408	ASSEMBLY PARTS F.SLEWING
HEX SCREW ISO 4017 M16X30	4902326	300	4	470	919674308	EXHAUST SYSTEM
HEX SCREW ISO 4017 M16X35	12214938	13	6	19	96062225	UNDERCARRIAGE CPL.
HEX SCREW ISO 4017 M16X35	12214938	27	3	30	992078314	CENTRE PIECE
HEX SCREW ISO 4017 M16X35	12214938	54	2	760	918533508	ADAPTER PRE-ASS.
HEX SCREW ISO 4017 M16X40	406603008	5	8	626	919616808	LUFFING RAM W. PIVOT
HEX SCREW ISO 4017 M16X40	10875519	308	4	269	918811108	DRIVE ASSEMBLY, PRE-ASSE
HEX SCREW ISO 4017 M16X45	406603108	3	22	378	963564908	MAIN HOISTING GEAR PRE-A
HEX SCREW ISO 4017 M16X45	406603108	40	26	581	96062734	AUXILIARY HOISTING GEAR
HEX SCREW ISO 4017 M16X45	10875803	310	8	124	918728408	ASSEMBLY PARTS F.SLEWING
HEX SCREW ISO 4017 M16X45	10875803	42	4	376	919935508	MAIN HOIST GEAR
HEX SCREW ISO 4017 M16X45	10875803	22	6	747	919933308	TRANSPORT MOUNTING
HEX SCREW ISO 4017 M16X50	10875520	15	12	22	96062226	CRAWLER CARRIER RIGHT CP
HEX SCREW ISO 4017 M16X50	10875520	15	12	27	96062228	CRAWLER TRACK CARRIER LE
HEX SCREW ISO 4017 M16X50	10875520	304	6	269	918811108	DRIVE ASSEMBLY, PRE-ASSE
HEX SCREW ISO 4017 M16X50	10875520	8	1	772	918221408	TENSION PLATE PRE-ASS.
HEX SCREW ISO 4017 M16X55	10875804	20	2	315	917357108	CRANE DRIVER CAB ADDITIO
HEX SCREW ISO 4017 M16X60	406603408	19	4	747	919933308	TRANSPORT MOUNTING
HEX SCREW ISO 4017 M16X60	406603408	7	1	751	929582108	MOUNTING PRE-ASS.
HEX SCREW ISO 4017 M16X60	10875521	312	8	124	918728408	ASSEMBLY PARTS F.SLEWING
HEX SCREW ISO 4017 M16X60	10875521	52	1	747	919933308	TRANSPORT MOUNTING
HEX SCREW ISO 4017 M16X60	10875521	26	1	760	918533508	ADAPTER PRE-ASS.
HEX SCREW ISO 4017 M16X65	12226910	302	8	263	918728708	DRIVE ASSEMBLY CPL.
HEX SCREW ISO 4017 M16X65	12226910	303	6	269	918811108	DRIVE ASSEMBLY, PRE-ASSE
HEX SCREW ISO 4017 M16X70	12223051	55	1	760	918533508	ADAPTER PRE-ASS.
HEX SCREW ISO 4017 M20X10	406207208	18	12	22	96062226	CRAWLER CARRIER RIGHT CP
HEX SCREW ISO 4017 M20X10	406207208	18	12	27	96062228	CRAWLER TRACK CARRIER LE
HEX SCREW ISO 4017 M20X30	12224035	(391)	2	22	96062226	CRAWLER CARRIER RIGHT CP
HEX SCREW ISO 4017 M20X40	4600199	25	12	30	992078314	CENTRE PIECE

Description	Item	Pos.	Quantity	Page	Assembly	Description
HEX SCREW ISO 4017 M20X55	12224018	36	2	22	96062226	CRAWLER CARRIER RIGHT CP
HEX SCREW ISO 4017 M20X55	12224018	36	2	28	96062228	CRAWLER TRACK CARRIER LE
HEX SCREW ISO 4017 M20X60	406604208	8	2	747	919933308	TRANSPORT MOUNTING
HEX SCREW ISO 4017 M20X60	10875806	300	2	293	918008908	OIL RESERVOIR, EXTENSION
HEX SCREW ISO 4017 M20X60	10875806	10	4	747	919933308	TRANSPORT MOUNTING
HEX SCREW ISO 4017 M20X80	12219312	300	1	290	917962508	FUEL TANK ADD-ON UNIT
HEX SCREW ISO 4017 M24X70	4062144	7	24	22	96062226	CRAWLER CARRIER RIGHT CP
HEX SCREW ISO 4017 M24X70	4062144	7	24	27	96062228	CRAWLER TRACK CARRIER LE
HEX SCREW ISO 4017 M30X1	10878793	32	2	22	96062226	CRAWLER CARRIER RIGHT CP
HEX SCREW ISO 4017 M30X1	10878793	32	2	28	96062228	CRAWLER TRACK CARRIER LE
HEX SCREW ISO 4017 M4X10 8	11690047	(3)	2	431	96056347	ELECTRIC ADD-ON PARTS CA
HEX SCREW ISO 4017 M5X10 8	12211444	3	2	78	964765008	PIN COMPL.
HEX SCREW ISO 4017 M5X12 8	11140402	25	4	61	917155308	PREPARATION HYDR
HEX SCREW ISO 4017 M5X12 8	11140402	37	8	395	918810308	CONTROL STAND
HEX SCREW ISO 4017 M5X12 8	11140402	311	4	517	96045552	HYDRAULICS UPPER CARRI
HEX SCREW ISO 4017 M5X12 8	11140402	313	2	591	96064697	HYDR.AUXILIARY HOISTING
HEX SCREW ISO 4017 M5X12 8	11140402	14	4	606	91002360	CHARGER
HEX SCREW ISO 4017 M5X20 8	10875524	6	2	760	918533508	ADAPTER PRE-ASS.
HEX SCREW ISO 4017 M5X30 8	12220684	300	5	291	969543308	FUEL TANK, PRE-ASSEMBLED
HEX SCREW ISO 4017 M5X55 8	12100540	22	6	61	917155308	PREPARATION HYDR
HEX SCREW ISO 4017 M6X10 8	11642497	(302)	1	268	918811108	DRIVE ASSEMBLY, PRE-ASSE
HEX SCREW ISO 4017 M6X10 8	11642497	54	1	338	917305408	INTERNAL PANELLING INSTA
HEX SCREW ISO 4017 M6X10 8	11642497	13	2	410	969425608	FLAP RIGHT PRE-ASS.
HEX SCREW ISO 4017 M6X10 8	11642497	66	4	661	91000050	TELESCOPIC SECTION 1 PRE
HEX SCREW ISO 4017 M6X10 8	11642497	66	4	664	91000051	TELESCOPIC SECT.2 PRE-AS
HEX SCREW ISO 4017 M6X10 8	11642497	66	4	667	91000052	TELESCOPIC SECT.3 PRE-ASS
HEX SCREW ISO 4017 M6X10 8	11642497	66	4	670	91000053	TELESCOPIC SECT.IV PRE-A
HEX SCREW ISO 4017 M6X10 8	11642497	84	4	674	91000054	TELESCOPIC SECT.5 PRE-AS
HEX SCREW ISO 4017 M6X12 8	11692824	17	4	352	916168308	AIR DUCT
HEX SCREW ISO 4017 M6X12 8	11692824	300	2	415	96024809	SLEWING PLATFORM PANELLI
HEX SCREW ISO 4017 M6X12 8	11692824	300	2	417	969392008	FRONT LEFT-HAND HOOD
HEX SCREW ISO 4017 M6X12 8	11692824	300	4	591	96064697	HYDR.AUXILIARY HOISTING
HEX SCREW ISO 4017 M6X16 8	11657360	305	4	272	96020819	RADIATOR, PRE-ASSEMBLED
HEX SCREW ISO 4017 M6X16 8	11657360	306	8	517	96045552	HYDRAULICS UPPER CARRI
HEX SCREW ISO 4017 M6X16 8	11657360	7	1	623	915403108	ADD-ON PARTS CAMERA
HEX SCREW ISO 4017 M6X16	10001739	46	1	361	917304708	SLIDING DOOR INSTALLATION
HEX SCREW ISO 4017 M6X16	10001739	310	1	470	919674308	EXHAUST SYSTEM
HEX SCREW ISO 4017 M6X20 8	11644899	15	1	87	96062922	MOUNTING PLATE PRE-ASS.
HEX SCREW ISO 4017 M6X20 8	11644899	304	5	407	96022627	SLEWING PLATFORM PANELLI
HEX SCREW ISO 4017 M6X20 8	11644899	302	2	415	96024809	SLEWING PLATFORM PANELLI
HEX SCREW ISO 4017 M6X25	10197836	11	2	506	926891108	GROUND RAIL
HEX SCREW ISO 4017 M6X25	10197836	11	2	760	918533508	ADAPTER PRE-ASS.
HEX SCREW ISO 4017 M6X30 8	12217223	304	1	415	96024809	SLEWING PLATFORM PANELLI
HEX SCREW ISO 4017 M6X30 8	12217223	5	2	655	91000049	PIVOT SECTION, PRE-ASSEMB
HEX SCREW ISO 4017 M6X30 8	12217223	16	2	661	91000050	TELESCOPIC SECTION 1 PRE
HEX SCREW ISO 4017 M6X30 8	12217223	16	2	664	91000051	TELESCOPIC SECT.2 PRE-AS
HEX SCREW ISO 4017 M6X30 8	12217223	16	2	667	91000052	TELESCOPIC SECT.3 PRE-ASS
HEX SCREW ISO 4017 M6X30 8	12217223	16	2	670	91000053	TELESCOPIC SECT.IV PRE-A
HEX SCREW ISO 4017 M6X45 8	12216201	305	1	415	96024809	SLEWING PLATFORM PANELLI
HEX SCREW ISO 4017 M6X50 8	12216202	303	2	124	918728408	ASSEMBLY PARTS F.SLEWING
HEX SCREW ISO 4017 M6X85	11007009	7	1	361	917304708	SLIDING DOOR INSTALLATION
HEX SCREW ISO 4017 M8X12 8	11690048	8	1	319	919010108	CRANE OPERATOR CABIN P
HEX SCREW ISO 4017 M8X12 8	11690048	14	2	326	968483708	STEP CPL.
HEX SCREW ISO 4017 M8X12 8	11690048	27	2	392	969300008	HEATING, PRE-ASSEMBLED
HEX SCREW ISO 4017 M8X12 8	11690048	300	4	562	919528608	OIL COOLER INSTALLATION
HEX SCREW ISO 4017 M8X16	10299649	300	4	63	967301408	PREPARATION HYDR
HEX SCREW ISO 4017 M8X16 8	11651612	304	18	124	918728408	ASSEMBLY PARTS F.SLEWING
HEX SCREW ISO 4017 M8X16 8	11651612	311	3	269	918811108	DRIVE ASSEMBLY, PRE-ASSE
HEX SCREW ISO 4017 M8X16 8	11651612	300	12	272	96020819	RADIATOR, PRE-ASSEMBLED
HEX SCREW ISO 4017 M8X16 8	11651612	30	2	326	968483708	STEP CPL.

Description	Item	Pos.	Quantity	Page	Assembly	Description
HEX SCREW ISO 4017 M8X16 8	11651612	21	2	346	916162508	WINDOW ASSEMBLY
HEX SCREW ISO 4017 M8X16 8	11651612	11	4	386	917894308	HEATING CRANE DRIVER'S CA
HEX SCREW ISO 4017 M8X16 8	11651612	26	3	392	969300008	HEATING, PRE-ASSEMBLED
HEX SCREW ISO 4017 M8X16 8	11651612	311	2	407	96022627	SLEWING PLATFORM PANELLI
HEX SCREW ISO 4017 M8X16 8	11651612	312	2	415	96024809	SLEWING PLATFORM PANELLI
HEX SCREW ISO 4017 M8X16 8	11651612	28	1	444	918759708	ADD HEATING SUPERSTRUCT
HEX SCREW ISO 4017 M8X16 8	11651612	7	6	446	96019783	ADDNL.HEATING, PRE-ASSE
HEX SCREW ISO 4017 M8X16 8	11651612	303	4	476	918729308	AIR FILTER UNIT
HEX SCREW ISO 4017 M8X16 8	11651612	20	3	478	915300208	CENT. LUBRIC. SYSTEM SUP
HEX SCREW ISO 4017 M8X16 8	11651612	327	3	517	96045552	HYDRAULICS UPPER CARRI
HEX SCREW ISO 4017 M8X16 8	11651612	307	1	562	919528608	OIL COOLER INSTALLATION
HEX SCREW ISO 4017 M8X16 8	11651612	(5)	8	566	969767908	PIPEWORK AIR INSTALLATIO
HEX SCREW ISO 4017 M8X16 8	11651612	309	4	591	96064697	HYDR.AUXILIARY HOISTING
HEX SCREW ISO 4017 M8X16 8	11651612	317	2	598	96075086	HYD.AUX.LIFT GEAR UPPER
HEX SCREW ISO 4017 M8X16 8	11651612	27	21	655	91000049	PIVOT SECTION, PRE-ASSEMB
HEX SCREW ISO 4017 M8X16 8	11651612	4	2	661	91000050	TELESCOPIC SECTION 1 PRE
HEX SCREW ISO 4017 M8X16 8	11651612	4	2	664	91000051	TELESCOPIC SECT.2 PRE-AS
HEX SCREW ISO 4017 M8X16 8	11651612	4	2	667	91000052	TELESCOPIC SECT.3 PRE-ASS
HEX SCREW ISO 4017 M8X16 8	11651612	4	2	670	91000053	TELESCOPIC SECT.IV PRE-A
HEX SCREW ISO 4017 M8X16 8	11651612	4	4	673	91000054	TELESCOPIC SECT.5 PRE-AS
HEX SCREW ISO 4017 M8X16 8	11651612	28	4	679	91000055	MECHANICAL EXTENSION SYS
HEX SCREW ISO 4017 M8X16 8	11651612	32	5	747	919933308	TRANSPORT MOUNTING
HEX SCREW ISO 4017 M8X16	406527808	24	4	361	917304708	SLIDING DOOR INSTALLATION
HEX SCREW ISO 4017 M8X16	406527808	303	2	470	919674308	EXHAUST SYSTEM
HEX SCREW ISO 4017 M8X16	406527808	75	1	673	91000054	TELESCOPIC SECT.5 PRE-AS
HEX SCREW ISO 4017 M8X20	10299666	11	2	577	96033759	ADD-ON PARTS WORK FLOOD
HEX SCREW ISO 4017 M8X20 8	11651767	316	7	33	967304508	UNDERCARRIAGE HYDRAULIC
HEX SCREW ISO 4017 M8X20 8	11651767	20	4	61	917155308	PREPARATION HYDR
HEX SCREW ISO 4017 M8X20 8	11651767	303	6	263	918728708	DRIVE ASSEMBLY CPL.
HEX SCREW ISO 4017 M8X20 8	11651767	312	6	269	918811108	DRIVE ASSEMBLY, PRE-ASSE
HEX SCREW ISO 4017 M8X20 8	11651767	6	4	285	918955208	BATTERY BOX CPL.
HEX SCREW ISO 4017 M8X20 8	11651767	300	4	305	91002857	FUEL FEED
HEX SCREW ISO 4017 M8X20 8	11651767	31	2	326	968483708	STEP CPL.
HEX SCREW ISO 4017 M8X20 8	11651767	13	3	327	96025887	PEDAL CANTILEVER INSTALL
HEX SCREW ISO 4017 M8X20 8	11651767	15	4	355	916163008	WIPERS INSTALLATION
HEX SCREW ISO 4017 M8X20 8	11651767	312	12	407	96022627	SLEWING PLATFORM PANELLI
HEX SCREW ISO 4017 M8X20 8	11651767	14	4	410	969425608	FLAP RIGHT PRE-ASS.
HEX SCREW ISO 4017 M8X20 8	11651767	311	5	415	96024809	SLEWING PLATFORM PANELLI
HEX SCREW ISO 4017 M8X20 8	11651767	102	15	420	919484908	FALL PROTECTION
HEX SCREW ISO 4017 M8X20 8	11651767	300	4	476	918729308	AIR FILTER UNIT
HEX SCREW ISO 4017 M8X20 8	11651767	16	1	502	96025348	BASE ASSEMBLY
HEX SCREW ISO 4017 M8X20 8	11651767	318	6	517	96045552	HYDRAULICS UPPER CARRI
HEX SCREW ISO 4017 M8X20 8	11651767	301	3	562	919528608	OIL COOLER INSTALLATION
HEX SCREW ISO 4017 M8X20 8	11651767	(8)	4	566	969767908	PIPEWORK AIR INSTALLATIO
HEX SCREW ISO 4017 M8X20 8	11651767	332	2	566	969767908	PIPEWORK AIR INSTALLATIO
HEX SCREW ISO 4017 M8X20 8	11651767	10	2	679	91000055	MECHANICAL EXTENSION SYS
HEX SCREW ISO 4017 M8X20 8	11651767	28	2	747	919933308	TRANSPORT MOUNTING
HEX SCREW ISO 4017 M8X20 8	11651767	1	2	773	96037297	ANGULAR TRANSMITTER AT
HEX SCREW ISO 4017 M8X20	406518814	304	8	470	919674308	EXHAUST SYSTEM
HEX SCREW ISO 4017 M8X20	406518814	306	4	473	96051762	EXHAUST SYSTEM PRE-ASSE
HEX SCREW ISO 4017 M8X25	10299581	14	2	604	96066401	MECHANICAL AUXILIARIES
HEX SCREW ISO 4017 M8X25	10197831	301	4	124	918728408	ASSEMBLY PARTS F.SLEWING
HEX SCREW ISO 4017 M8X25	10197831	5	2	125	963260408	LOCKING
HEX SCREW ISO 4017 M8X25	10197831	5	2	126	96049764	LOCKING
HEX SCREW ISO 4017 M8X25	10197831	313	4	269	918811108	DRIVE ASSEMBLY, PRE-ASSE
HEX SCREW ISO 4017 M8X25	10197831	301	8	295	969219208	OIL TANK PRE-ASS.
HEX SCREW ISO 4017 M8X25	10197831	318	8	407	96022627	SLEWING PLATFORM PANELLI
HEX SCREW ISO 4017 M8X25	10197831	24	4	444	918759708	ADD HEATING SUPERSTRUCT
HEX SCREW ISO 4017 M8X25	10197831	25	1	446	96019783	ADDNL.HEATING, PRE-ASSE
HEX SCREW ISO 4017 M8X25	10197831	23	2	478	915300208	CENT. LUBRIC. SYSTEM SUP

Description	Item	Pos.	Quantity	Page	Assembly	Description
HEX SCREW ISO 4017 M8X25	10197831	8	2	506	926891108	GROUND RAIL
HEX SCREW ISO 4017 M8X25	10197831	304	4	562	919528608	OIL COOLER INSTALLATION
HEX SCREW ISO 4017 M8X25	10197831	11	2	604	96066401	MECHANICAL AUXILIARIES
HEX SCREW ISO 4017 M8X25	10197831	14	4	652	919935408	TELESCOPIC BOOM CPL.
HEX SCREW ISO 4017 M8X25	10197831	17	4	652	919935408	TELESCOPIC BOOM CPL.
HEX SCREW ISO 4017 M8X25	10197831	22	8	652	919935408	TELESCOPIC BOOM CPL.
HEX SCREW ISO 4017 M8X25	10197831	4	4	773	96037297	ANGULAR TRANSMITTER AT
HEX SCREW ISO 4017 M8X25	406590105	35	4	326	968483708	STEP CPL.
HEX SCREW ISO 4017 M8X30 8	11826527	2	8	47	968374708	MOUNTING PARTS
HEX SCREW ISO 4017 M8X30 8	11826527	309	4	124	918728408	ASSEMBLY PARTS F.SLEWING
HEX SCREW ISO 4017 M8X30 8	11826527	319	2	269	918811108	DRIVE ASSEMBLY, PRE-ASSE
HEX SCREW ISO 4017 M8X30 8	11826527	303	4	272	96020819	RADIATOR, PRE-ASSEMBLED
HEX SCREW ISO 4017 M8X30 8	11826527	45	1	338	917305408	INTERNAL PANELLING INSTA
HEX SCREW ISO 4017 M8X30 8	11826527	314	3	407	96022627	SLEWING PLATFORM PANELLI
HEX SCREW ISO 4017 M8X30 8	11826527	100	12	420	919484908	FALL PROTECTION
HEX SCREW ISO 4017 M8X30 8	11826527	46	2	581	96062734	AUXILIARY HOISTING GEAR
HEX SCREW ISO 4017 M8X35 8	11692827	28	2	315	917357108	CRANE DRIVER CAB ADDITIO
HEX SCREW ISO 4017 M8X35 8	11692827	32	2	326	968483708	STEP CPL.
HEX SCREW ISO 4017 M8X40 8	10875537	16	2	768	91001040	PIVOT SECTION, PRE-ASSEMB
HEX SCREW ISO 4017 M8X40 8	10875537	19	2	771	918596708	HEAD SECTION PRE-ASS.
HEX SCREW ISO 4017 M8X50 8	10875538	44	2	338	917305408	INTERNAL PANELLING INSTA
HEX SCREW ISO 4017 M8X50 8	10875538	13	1	623	915403108	ADD-ON PARTS CAMERA
HEX SCREW ISO 4017 M8X80 8	10876386	304	2	33	967304508	UNDERCARRIAGE HYDRAULIC
HEX SCREW M8X80 10.9 SC	11066521	24	4	209	5700161	AIR COMPRESSOR
HEXAGON KEY DIN 911 10 GLA	790021208	34	1	104	928569808	MAIN TOOLS
HEXAGON KEY DIN 911 12 GLA	790021308	35	1	104	928569808	MAIN TOOLS
HEXAGON KEY DIN 911 4 GLA	790021608	30	1	104	928569808	MAIN TOOLS
HEXAGON KEY DIN 911 5 GLA	790020008	31	1	104	928569808	MAIN TOOLS
HEXAGON KEY DIN 911 6 GLA	790020108	32	1	104	928569808	MAIN TOOLS
HEXAGON KEY DIN 911 GR.8 G	790021008	33	1	104	928569808	MAIN TOOLS
HEXALOBULAR HEAD SCREW	10138656	4	14	220	10140087	EXHAUST PIPE ASSEMBLY
HEXALOBULAR HEAD SCREW	10139578	6	2	168	10120186	BALANCER ASSEMBLY
HEXALOBULAR HEAD SCREW	10125439	3	6	160	10149580	CYLINDER HEAD ASSEMBLY
HEXALOBULAR HEAD SCREW	10118910	4	10	236	9077238	FLYWHEEL ASSEMBLY
HEXALOBULAR HEAD SCREW	10118912	10	6	157	10141974	CRANKSHAFT ADD-ON PARTS
HEXALOBULAR HEAD SCREW	10130816	5	10	137	10154379	CRANKCASE PRE-ASSY.
HEXALOBULAR HEAD SCREW	13569467	11	13	223	12512627	EXHAUST NOZZLE ATTACHM
HEXALOBULAR HEAD SCREW	10118695	9	3	203	10149677	CONNECTING LINE ADD-ON
HEXALOBULAR HEAD SCREW	10125702	3	2	221	10144756	HEAT PROTECTION W.FASTEN
HIGH CURRENT DISTRIBUTOR	10878680	(10)	1	288	96023914	ELECTRIC FOR BATTERY BOX
HIGH PRESS.CONNECTOR W.	10153151	191	4	132	13455311	DIESEL ENGINE
HIGH PRESSURE CONNECT	10135080	1	1	189	10153151	HIGH PRESS.CONNECTOR W
HIGH PRESSURE HOSE 2X150	10014847	512	4	517	96045552	HYDRAULICS UPPER CARRI
HIGH PRESSURE HOSE 2X200	470901908	513	2	517	96045552	HYDRAULICS UPPER CARRI
HIGH PRESSURE HOSE 2X320	510501308	506	2	517	96045552	HYDRAULICS UPPER CARRI
HIGH PRESSURE PUMP R-M	10146658	1	1	181	10150741	HIGH PRESSURE PUMP W.FAS
HIGH PRESSURE PUMP W.FAS	10150741	171	1	131	13455311	DIESEL ENGINE
HINGE 20X20X40/180° GD-ZN S	704258208	47	6	502	96025348	BASE ASSEMBLY
HINGE 35X35X50/180° ST FE//	704228108	22	2	119	96045222	MOUNTING PARTS
HINGE 35X35X50/180° ST FE//	704228108	12	2	287	96024716	BATTERY BOX, PRE-ASSEMB
HINGE 35X35X50/180° ST FE//	704228108	2	3	410	969425608	FLAP RIGHT PRE-ASS.
HINGE 35X35X50/180° ST FE//	704228108	2	3	416	969399608	FLAP PRE-ASS.
HINGE 35X35X50/180° ST FE//	704228108	3	1	781	968940708	HOLDER LEFT
HINGE 35X35X50/180° ST FE//	704228108	3	1	782	968940808	HOLDER RIGHT
HINGE PIN CLAMP 332X1022X3	12102925	180	2	473	96051762	EXHAUST SYSTEM PRE-ASSE
HIP BELT	12102677	1	1	615	919392208	LAP BELT INSTALLATION
HOIST CYLINDERS 73,15/66,55	790038808	4	1	760	918533508	ADAPTER PRE-ASS.
HOIST LIM.SWITCH PLUMMET	96013575	50	1	673	91000054	TELESCOPIC SECT.5 PRE-AS
HOIST LIM.SWITCH PLUMMET	96013575	2	1	744	917910708	AUXILIARY HOIST.ROPE W.A
HOIST ROPE 21X205M -40°C	10871170	1	1	632	917910508	ROPE WITH ACCESSORIES 1

Description	Item	Pos.	Quantity	Page	Assembly	Description
HOIST ROPE 21X205M -40°C	10871170	1	1	744	917910708	AUXILIARY HOIST.ROPE W.A
HOLDER	10145373	15	1	224	11420633	CYCLE VALVE
HOLDER	10146789	2	1	192	10146791	FUEL FINE-FILTER ASSEMBLY
HOLDER	919032814	2	1	77	990618314	TRANSPORT SUPPORT
HOLDER	964764908	1	1	77	990618314	TRANSPORT SUPPORT
HOLDER	966253708	1	1	363	966230508	GUIDE PRE-ASS.
HOLDER 1.4308	975218608	2	6	331	916162808	RELING
HOLDER 1.4308	975384508	3	6	331	916162808	RELING
HOLDER 1.5X414X239 DC01 FE	97015051	1	1	507	968015808	PRE-ASSEMBLY MOUNTING U
HOLDER 2X163X140 DC01 FE//	97134822	2	1	322	96057226	CUP HOLDER INSTALLATION
HOLDER 2X194X119 DC01 FE//	97175640	9	1	502	96025348	BASE ASSEMBLY
HOLDER 3X272X326 DC01 FE//	955044808	21	1	679	91000055	MECHANICAL EXTENSION SYS
HOLDER 3X272X501 DC01 FE//	955044908	22	1	679	91000055	MECHANICAL EXTENSION SYS
HOLDER 40X80X40 G-ALMG3	979489508	3	1	402	916049908	MIRROR ATTACHM.IN CRANE
HOLDER 44X88.5X40 G-ALSIM	97009160	7	2	334	917304508	CRANE OPERATOR CABIN P
HOLDER 4X408X186 S315MC	953843608	9	1	679	91000055	MECHANICAL EXTENSION SYS
HOLDER DT/DTM	10041876	532	2	494	96023971	WIRING HARNESS
HOLDER GX5CRNI19-10	97077297	9	1	268	918811108	DRIVE ASSEMBLY, PRE-ASSE
HOLDER GX5CRNI19-10	97077309	(2)	3	268	918811108	DRIVE ASSEMBLY, PRE-ASSE
HOLDER LEFT	968940708	2	1	780	917508508	LADDER ATTACHMENT
HOLDER MONITOR	10874763	20	1	624	96036820	EQUIPMENT CAMERA CAB
HOLDER PA6MDGF30 SPF	97098446	2	2	100	96045217	MECHANICAL AUXILIARIES
HOLDER PA6MDGF30 SPF	97098446	1	1	642	96045219	MECHANICAL AUXILIARIES
HOLDER PA6MDGF30 SPF	97098446	88	1	674	91000054	TELESCOPIC SECT.5 PRE-AS
HOLDER PRE-ASSEMBLY	96044787	11	1	420	919484908	FALL PROTECTION
HOLDER PRE-ASSEMBLY FE//	962207008	21	1	124	918728408	ASSEMBLY PARTS F.SLEWING
HOLDER RIGHT	968940808	4	1	780	917508508	LADDER ATTACHMENT
HOLDER S235JR	10150252	10	1	241	10151329	WIRING HARNESS ASSEMBLY
HOLDER S235JR	10150838	13	1	241	10151329	WIRING HARNESS ASSEMBLY
HOLDER S235JR	12429351	2	1	224	11420633	CYCLE VALVE
HOLDER S235JR	9275178	91	1	239	10151328	CABLE HARNESS MOUNTING
HOLDER X10CRNI18-8	97003985	18	4	444	918759708	ADD HEATING SUPERSTRUCT
HOLDER X12CRNIS188	965371708	1	1	700	966591408	LIMIT SWITCH ADD-ON
HOLDING BRACKET RAL 9005	97136700	3	1	323	96048757	CUP HOLDER
HOLLOW KEY	704271108	7	2	105	928620108	ACCESSORIES
HOLLOW PROFILE 40.0X60X15	97084140	1	2	658	96014777	LIFTING ROPE GUIDE PREAS
HOLLOW SCREW 10X1X27 11S	9080466	3	3	217	10148216	PIPELINE INSTALLATION
HOLLOW SCREW 15-3-M18X1.	12987460	17	2	196	10143341	FUEL LINES
HOLLOW SCREW DIN 74305 22	502940108	405	1	291	969543308	FUEL TANK, PRE-ASSEMBLED
HOLLOW SCREW DIN 7643 10	12210013	17	1	198	10143342	LEAK OIL RETURN LINE
HOLLOW SCREW DIN 7643 12	12210025	3	4	212	10145278	ACCESSORIES AIR COMPRES
HOLLOW SCREW DIN 7643 12-	11002995	2	1	196	10143341	FUEL LINES
HOLLOW SCREW DIN 7643 15	12210015	16	3	196	10143341	FUEL LINES
HOLLOW SCREW DIN 7643 4-3-	12210009	23	1	198	10143342	LEAK OIL RETURN LINE
HOLLOW SCREW DIN 7643 6-3	12210010	6	6	198	10143342	LEAK OIL RETURN LINE
HOLLOW SCREW DIN 7643 6-3	12210010	7	1	212	10145278	ACCESSORIES AIR COMPRES
HOLLOW SCREW DIN 7643 6-3	12210010	6	1	224	11420633	CYCLE VALVE
HOLLOW SCREW DIN 7643 8-3	12210024	2	1	198	10143342	LEAK OIL RETURN LINE
HOLLOW SCREW DIN 7643 8-3	12210024	20	1	223	12512627	EXHAUST NOZZLE ATTACHM
HOOD 2X669X579 DC01 FE//ZN	971907008	3	1	773	96037297	ANGULAR TRANSMITTER AT
HOOD COVER	11181887	33	1	95	10878097	SLIP RING TRANSMITTER
HOOD D180X420 PU-TEX-0701	97176134	9	1	736	96056560	WIND WARNING PREASSEMB
HOOD SUPPORT	704229908	105	4	417	969392008	FRONT LEFT-HAND HOOD
HOOD/BONNET WELDED LEF	969392108	1	1	417	969392008	FRONT LEFT-HAND HOOD
HOOK BLOCK 32 EM SPF	919421708	311	1	14		LIEBHERR LTR 1100
HOOK BLOCK 63DM SPF	910445708	312	1	14		LIEBHERR LTR 1100
HOOK ROD FE//ZNNI8//CN//T0	929529908	1	1	783	968952708	MOUNTING HOOK ROD
HORN 24V	614003108	24	1	84	96075205	SWITCH BOX COMPL.
HORN 24V	614003108	32	1	484	919940408	ELECTR. SYSTEM F.SLEWING
HOSE CLAMP 10/9,5-10,5/9 ED	553102308	7	5	444	918759708	ADD HEATING SUPERSTRUCT

Description	Item	Pos.	Quantity	Page	Assembly	Description
HOSE CLAMP 10/9,5-10,5/9 ED	553102308	20	1	446	96019783	ADDNL.HEATING, PRE-ASSE
HOSE CLAMP 110/100-120/12	550849408	180	3	476	918729308	AIR FILTER UNIT
HOSE CLAMP 115/113-121/25 A	12102528	181	3	470	919674308	EXHAUST SYSTEM
HOSE CLAMP 140/130-150/12	774209908	181	1	476	918729308	AIR FILTER UNIT
HOSE CLAMP 21/16-27/12 W3	11118077	21	21	392	969300008	HEATING, PRE-ASSEMBLED
HOSE CLAMP 21/16-27/12 W3	11118077	14	8	446	96019783	ADDNL.HEATING, PRE-ASSE
HOSE CLAMP 26/20-32/12 W3	774215008	3	1	143	10126713	CRANKCASE BREATHER ASS
HOSE CLAMP 26/20-32/12 W3	774215008	8	4	201	10145173	INTAKE STACK ASSEMBLY
HOSE CLAMP 26/20-32/12 W3	774215008	25	2	222	10140729	EXHAUST TC MOUNTING
HOSE CLAMP 26/20-32/12 W3	774215008	185	2	268	918811108	DRIVE ASSEMBLY, PRE-ASSE
HOSE CLAMP 26/20-32/12 W3	774215008	19	4	386	917894308	HEATING CRANE DRIVER'S CA
HOSE CLAMP 26/20-32/12 W3	774215008	14	1	444	918759708	ADD HEATING SUPERSTRUCT
HOSE CLAMP 32/25-40/12 W3	774208508	181	4	263	918728708	DRIVE ASSEMBLY CPL.
HOSE CLAMP 32/25-40/12 W3	774208508	9	1	446	96019783	ADDNL.HEATING, PRE-ASSE
HOSE CLAMP 32/25-40/12 W3	774208508	23	4	458	91003833	UREA PLANT
HOSE CLAMP 41/35-50/12 W3	550849508	184	2	268	918811108	DRIVE ASSEMBLY, PRE-ASSE
HOSE CLAMP 45/30-45/9 W3	10878445	20	2	355	916163008	WIPERS INSTALLATION
HOSE CLAMP 50/40-60/12 W3	550838008	183	2	268	918811108	DRIVE ASSEMBLY, PRE-ASSE
HOSE CLAMP 60/50-70/12 W3	774208008	182	2	268	918811108	DRIVE ASSEMBLY, PRE-ASSE
HOSE CLAMP 70/60-80/12 W3	774214308	181	2	268	918811108	DRIVE ASSEMBLY, PRE-ASSE
HOSE CLAMP 80/70-90/12 W3	774206408	180	4	268	918811108	DRIVE ASSEMBLY, PRE-ASSE
HOSE CLAMP DIN 3017-1 17/1	10872022	315	1	591	96064697	HYDR.AUXILIARY HOISTING
HOSE CLAMP DIN 3017-1 70/60	5004929	6	2	203	10149677	CONNECTING LINE ADD-ON
HOSE CLAMP DIN 3017-2 12/11	12696398	8	7	224	11420633	CYCLE VALVE
HOSE CLAMP DIN 3017-2 17/16	4981029	6	4	152	10139112	OIL LINE PRE-ASSEMBLY
HOSE CLAMP DIN 3017-3 108/	774223808	180	2	263	918728708	DRIVE ASSEMBLY CPL.
HOSE CLAMP DIN 3021 19/17,	11162002	24	2	458	91003833	UREA PLANT
HOSE CLAMP DIN 3021 19/17,	11162002	24	6	461	96074081	UREA TANK, PRE-MOUNTING
HOSE CONNECTION SOCKET	10801609	22	2	461	96074081	UREA TANK, PRE-MOUNTING
HOSE CPL.	925185208	10	1	645	919950308	DISPATCH ASSY.MECH.PART
HOSE CPL.	925185308	11	1	645	919950308	DISPATCH ASSY.MECH.PART
HOSE CPL.	927679208	330	1	571	918730808	HOSE LINES SUPERSTRUCT
HOSE CPL.	964196608	210	1	571	918730808	HOSE LINES SUPERSTRUCT
HOSE CPL.	969041908	350	1	572	918730808	HOSE LINES SUPERSTRUCT
HOSE CPL. 1SC 8X1100	96013144	373	1	572	918730808	HOSE LINES SUPERSTRUCT
HOSE CPL. 1SC 8X1600	926968008	329	1	571	918730808	HOSE LINES SUPERSTRUCT
HOSE CPL. 1SC 8X2150	926466108	379	1	572	918730808	HOSE LINES SUPERSTRUCT
HOSE CPL. 1SC 8X240	962857908	1255	1	593	96064698	HOSE LINES HOISTING GEAR
HOSE CPL. 1SC 8X2550	926094708	209	1	571	918730808	HOSE LINES SUPERSTRUCT
HOSE CPL. 1SC 8X300	926122108	377	1	572	918730808	HOSE LINES SUPERSTRUCT
HOSE CPL. 1SC 8X300	926497508	324	1	571	918730808	HOSE LINES SUPERSTRUCT
HOSE CPL. 1SC 8X3100	927604908	380	1	572	918730808	HOSE LINES SUPERSTRUCT
HOSE CPL. 1SC 8X360	965202408	322	1	571	918730808	HOSE LINES SUPERSTRUCT
HOSE CPL. 1SC 8X420	926971408	318	1	571	918730808	HOSE LINES SUPERSTRUCT
HOSE CPL. 1SC 8X620	966570608	376	1	572	918730808	HOSE LINES SUPERSTRUCT
HOSE CPL. 1SC 8X700	928761808	1257	1	593	96064698	HOSE LINES HOISTING GEAR
HOSE CPL. 1SC 8X900	927691408	317	1	571	918730808	HOSE LINES SUPERSTRUCT
HOSE CPL. 1SC 8X940	964483408	381	1	572	918730808	HOSE LINES SUPERSTRUCT
HOSE CPL. 1SN 25X1900	926385708	378	1	572	918730808	HOSE LINES SUPERSTRUCT
HOSE CPL. 1SN 25X2700	927670408	359	1	572	918730808	HOSE LINES SUPERSTRUCT
HOSE CPL. 1SN 25X560	926868308	206	1	571	918730808	HOSE LINES SUPERSTRUCT
HOSE CPL. 1SN 32X800	968603008	305	1	571	918730808	HOSE LINES SUPERSTRUCT
HOSE CPL. 1SN 32X900	968602208	1382	1	600	967498008	HOSE LINES HW 2 PRE-ASS.
HOSE CPL. 2SN 10X1160	928037508	100	1	39	917598608	HOSE LINES CRAWLER
HOSE CPL. 2SN 10X1200	928013108	1384	1	600	967498008	HOSE LINES HW 2 PRE-ASS.
HOSE CPL. 2SN 10X1360	969746308	365	1	572	918730808	HOSE LINES SUPERSTRUCT
HOSE CPL. 2SN 10X1480	964327508	181	1	64	967499008	HOSE LINES SUPPORT SYSTE
HOSE CPL. 2SN 10X1500	928469408	(798)	4	74	967314108	ADD.HYDR.UNIT SUPPORT CY
HOSE CPL. 2SN 10X1550	928006908	128	1	39	917598608	HOSE LINES CRAWLER
HOSE CPL. 2SN 10X1550	928006908	129	1	39	917598608	HOSE LINES CRAWLER

Description	Item	Pos.	Quantity	Page	Assembly	Description
HOSE CPL. 2SN 10X1550	928756608	(799)	4	74	967314108	ADD.HYDR.UNIT SUPPORT CY
HOSE CPL. 2SN 10X2190	964325708	130	1	39	917598608	HOSE LINES CRAWLER
HOSE CPL. 2SN 10X2190	964325708	132	1	39	917598608	HOSE LINES CRAWLER
HOSE CPL. 2SN 10X2700	962439008	122	1	39	917598608	HOSE LINES CRAWLER
HOSE CPL. 2SN 10X3300	964328008	187	1	64	967499008	HOSE LINES SUPPORT SYSTE
HOSE CPL. 2SN 10X3360	964327708	183	1	64	967499008	HOSE LINES SUPPORT SYSTE
HOSE CPL. 2SN 10X3400	927611908	333	1	571	918730808	HOSE LINES SUPERSTRUCT
HOSE CPL. 2SN 10X3500	929750408	334	1	571	918730808	HOSE LINES SUPERSTRUCT
HOSE CPL. 2SN 10X3830	964327908	185	1	64	967499008	HOSE LINES SUPPORT SYSTE
HOSE CPL. 2SN 10X3830	964327908	186	1	64	967499008	HOSE LINES SUPPORT SYSTE
HOSE CPL. 2SN 10X3920	968600508	98	1	39	917598608	HOSE LINES CRAWLER
HOSE CPL. 2SN 10X3920	968600508	117	1	39	917598608	HOSE LINES CRAWLER
HOSE CPL. 2SN 10X430	923015008	95	1	39	917598608	HOSE LINES CRAWLER
HOSE CPL. 2SN 10X460	968600608	97	1	39	917598608	HOSE LINES CRAWLER
HOSE CPL. 2SN 10X500	927612108	131	1	39	917598608	HOSE LINES CRAWLER
HOSE CPL. 2SN 10X500	927612108	133	1	39	917598608	HOSE LINES CRAWLER
HOSE CPL. 2SN 10X520	962760208	96	1	39	917598608	HOSE LINES CRAWLER
HOSE CPL. 2SN 10X520	962760208	124	1	39	917598608	HOSE LINES CRAWLER
HOSE CPL. 2SN 10X5300	964275408	99	1	39	917598608	HOSE LINES CRAWLER
HOSE CPL. 2SN 10X5300	964275408	118	1	39	917598608	HOSE LINES CRAWLER
HOSE CPL. 2SN 10X600	928870708	335	1	571	918730808	HOSE LINES SUPERSTRUCT
HOSE CPL. 2SN 10X730	964327808	184	1	64	967499008	HOSE LINES SUPPORT SYSTE
HOSE CPL. 2SN 10X730	964327808	188	1	64	967499008	HOSE LINES SUPPORT SYSTE
HOSE CPL. 2SN 10X790	964327608	182	1	64	967499008	HOSE LINES SUPPORT SYSTE
HOSE CPL. 2SN 10X790	964327608	189	1	64	967499008	HOSE LINES SUPPORT SYSTE
HOSE CPL. 2SN 10X850	964325608	126	1	39	917598608	HOSE LINES CRAWLER
HOSE CPL. 2SN 10X850	964325608	127	1	39	917598608	HOSE LINES CRAWLER
HOSE CPL. 2SN 12X1040	965569108	338	1	571	918730808	HOSE LINES SUPERSTRUCT
HOSE CPL. 2SN 12X1180	967687008	364	1	572	918730808	HOSE LINES SUPERSTRUCT
HOSE CPL. 2SN 12X1750	927632108	211	1	571	918730808	HOSE LINES SUPERSTRUCT
HOSE CPL. 2SN 12X1750	927632108	363	1	572	918730808	HOSE LINES SUPERSTRUCT
HOSE CPL. 2SN 12X2000	927632208	362	1	572	918730808	HOSE LINES SUPERSTRUCT
HOSE CPL. 2SN 12X300	927611508	262	1	571	918730808	HOSE LINES SUPERSTRUCT
HOSE CPL. 2SN 12X3000	924505508	486	1	710	967498108	HOSE LINES TELESCOPIC
HOSE CPL. 2SN 12X350	96024263	204	1	571	918730808	HOSE LINES SUPERSTRUCT
HOSE CPL. 2SN 12X400	927605908	201	1	571	918730808	HOSE LINES SUPERSTRUCT
HOSE CPL. 2SN 12X450	969629508	360	1	572	918730808	HOSE LINES SUPERSTRUCT
HOSE CPL. 2SN 16X1580	964327408	180	1	64	967499008	HOSE LINES SUPPORT SYSTE
HOSE CPL. 2SN 6X11750	962258008	1490	1	718	967498508	HOSE LINES FOLDING JIB
HOSE CPL. 2SN 6X11750	962258008	1491	1	718	967498508	HOSE LINES FOLDING JIB
HOSE CPL. 2SN 6X1500	927064908	355	1	572	918730808	HOSE LINES SUPERSTRUCT
HOSE CPL. 2SN 6X1650	929315508	9	1	760	918533508	ADAPTER PRE-ASS.
HOSE CPL. 2SN 6X170	965946208	279	1	571	918730808	HOSE LINES SUPERSTRUCT
HOSE CPL. 2SN 6X250	963562308	1258	1	593	96064698	HOSE LINES HOISTING GEAR
HOSE CPL. 2SN 6X2900	962257308	485	1	710	967498108	HOSE LINES TELESCOPIC
HOSE CPL. 2SN 6X340	961920208	1261	1	593	96064698	HOSE LINES HOISTING GEAR
HOSE CPL. 2SN 6X370	920976308	314	1	571	918730808	HOSE LINES SUPERSTRUCT
HOSE CPL. 2SN 6X390	968601708	1256	1	593	96064698	HOSE LINES HOISTING GEAR
HOSE CPL. 2SN 6X400	963921808	312	1	571	918730808	HOSE LINES SUPERSTRUCT
HOSE CPL. 2SN 6X400	963921808	313	1	571	918730808	HOSE LINES SUPERSTRUCT
HOSE CPL. 2SN 8X1000	921002708	343	1	572	918730808	HOSE LINES SUPERSTRUCT
HOSE CPL. 2SN 8X1000	929966908	337	1	571	918730808	HOSE LINES SUPERSTRUCT
HOSE CPL. 2SN 8X1100	965434208	342	1	572	918730808	HOSE LINES SUPERSTRUCT
HOSE CPL. 2SN 8X1200	926872208	121	1	39	917598608	HOSE LINES CRAWLER
HOSE CPL. 2SN 8X1600	962439208	323	1	571	918730808	HOSE LINES SUPERSTRUCT
HOSE CPL. 2SN 8X1900	969450708	346	1	572	918730808	HOSE LINES SUPERSTRUCT
HOSE CPL. 2SN 8X1900	969450708	347	1	572	918730808	HOSE LINES SUPERSTRUCT
HOSE CPL. 2SN 8X2250	963593008	104	1	39	917598608	HOSE LINES CRAWLER
HOSE CPL. 2SN 8X2280	964324708	102	1	39	917598608	HOSE LINES CRAWLER
HOSE CPL. 2SN 8X2300	964324808	105	1	39	917598608	HOSE LINES CRAWLER

Description	Item	Pos.	Quantity	Page	Assembly	Description
HOSE CPL. 2SN 8X2300	964325508	119	1	39	917598608	HOSE LINES CRAWLER
HOSE CPL. 2SN 8X2350	929614008	103	1	39	917598608	HOSE LINES CRAWLER
HOSE CPL. 2SN 8X260	921536708	484	1	710	967498108	HOSE LINES TELESCOPIC
HOSE CPL. 2SN 8X2650	964274408	143	1	39	917598608	HOSE LINES CRAWLER
HOSE CPL. 2SN 8X280	963700008	384	1	572	918730808	HOSE LINES SUPERSTRUCT
HOSE CPL. 2SN 8X280	968604508	349	1	572	918730808	HOSE LINES SUPERSTRUCT
HOSE CPL. 2SN 8X3200	966351608	142	1	39	917598608	HOSE LINES CRAWLER
HOSE CPL. 2SN 8X330	929361408	483	1	710	967498108	HOSE LINES TELESCOPIC
HOSE CPL. 2SN 8X3450	964326108	137	1	39	917598608	HOSE LINES CRAWLER
HOSE CPL. 2SN 8X3800	968603308	340	1	571	918730808	HOSE LINES SUPERSTRUCT
HOSE CPL. 2SN 8X3900	968603408	341	1	571	918730808	HOSE LINES SUPERSTRUCT
HOSE CPL. 2SN 8X4000	968600708	138	1	39	917598608	HOSE LINES CRAWLER
HOSE CPL. 2SN 8X5100	968845608	344	1	572	918730808	HOSE LINES SUPERSTRUCT
HOSE CPL. 2SN 8X5300	969746208	345	1	572	918730808	HOSE LINES SUPERSTRUCT
HOSE CPL. 2SN 8X600	929630508	120	1	39	917598608	HOSE LINES CRAWLER
HOSE CPL. 2SN 8X600	929630508	123	1	39	917598608	HOSE LINES CRAWLER
HOSE CPL. 2SN 8X900	968600208	336	1	571	918730808	HOSE LINES SUPERSTRUCT
HOSE CPL. 2TE 10X1120	966965108	382	1	572	918730808	HOSE LINES SUPERSTRUCT
HOSE CPL. 2TE 10X1200	926711908	(1377)	1	619	969856508	ADDITIONAL HYDRAULICS
HOSE CPL. 2TE 10X1600	929392308	331	1	571	918730808	HOSE LINES SUPERSTRUCT
HOSE CPL. 2TE 10X1700	926121108	332	1	571	918730808	HOSE LINES SUPERSTRUCT
HOSE CPL. 2TE 10X1900	96026092	348	1	572	918730808	HOSE LINES SUPERSTRUCT
HOSE CPL. 2TE 10X250	927044108	375	1	572	918730808	HOSE LINES SUPERSTRUCT
HOSE CPL. 2TE 10X3300	96026097	374	1	572	918730808	HOSE LINES SUPERSTRUCT
HOSE CPL. 2TE 10X3700	928046808	319	1	571	918730808	HOSE LINES SUPERSTRUCT
HOSE CPL. 2TE 10X420	965479408	1254	1	593	96064698	HOSE LINES HOISTING GEAR
HOSE CPL. 2TE 10X540	923013608	371	1	572	918730808	HOSE LINES SUPERSTRUCT
HOSE CPL. 2TE 10X580	968601908	1260	1	593	96064698	HOSE LINES HOISTING GEAR
HOSE CPL. 2TE 10X720	926399508	316	1	571	918730808	HOSE LINES SUPERSTRUCT
HOSE CPL. 2TE 12X160	96046763	203	1	571	918730808	HOSE LINES SUPERSTRUCT
HOSE CPL. 2TE 12X1750	967650208	(2393)	1	305	91002857	FUEL FEED
HOSE CPL. 2TE 12X5500	964193608	(2394)	1	305	91002857	FUEL FEED
HOSE CPL. 2TE 12X650	96033235	(2395)	1	305	91002857	FUEL FEED
HOSE CPL. 2TE 12X940	964273808	1383	1	600	967498008	HOSE LINES HW 2 PRE-ASS.
HOSE CPL. 2TE 16X2200	96033765	(2391)	1	305	91002857	FUEL FEED
HOSE CPL. 2TE 16X2400	969385408	366	1	572	918730808	HOSE LINES SUPERSTRUCT
HOSE CPL. 2TE 16X2700	927641608	309	1	571	918730808	HOSE LINES SUPERSTRUCT
HOSE CPL. 2TE 16X3500	928714208	205	1	571	918730808	HOSE LINES SUPERSTRUCT
HOSE CPL. 2TE 16X400	927248808	200	1	571	918730808	HOSE LINES SUPERSTRUCT
HOSE CPL. 2TE 16X4500	926495008	(2390)	1	305	91002857	FUEL FEED
HOSE CPL. 2TE 16X460	969042608	361	1	572	918730808	HOSE LINES SUPERSTRUCT
HOSE CPL. 2TE 16X800	966601008	339	1	571	918730808	HOSE LINES SUPERSTRUCT
HOSE CPL. 2TE 20X2900	962535408	383	1	572	918730808	HOSE LINES SUPERSTRUCT
HOSE CPL. 2TE 20X960	966860408	327	1	571	918730808	HOSE LINES SUPERSTRUCT
HOSE CPL. 2TE 6X160	968601808	1259	1	593	96064698	HOSE LINES HOISTING GEAR
HOSE CPL. 2TE 6X350	920991708	325	1	571	918730808	HOSE LINES SUPERSTRUCT
HOSE CPL. 2TE 6X640	961721508	315	1	571	918730808	HOSE LINES SUPERSTRUCT
HOSE CPL. 2TE 6X780	96026098	326	1	571	918730808	HOSE LINES SUPERSTRUCT
HOSE CPL. 2TE 8X350	96044527	(2412)	1	290	917962508	FUEL TANK ADD-ON UNIT
HOSE CPL. 304 35X370	96014738	306	1	571	918730808	HOSE LINES SUPERSTRUCT
HOSE CPL. 304 35X760	96014736	307	1	571	918730808	HOSE LINES SUPERSTRUCT
HOSE CPL. 304 42X760	96014955	308	1	571	918730808	HOSE LINES SUPERSTRUCT
HOSE CPL. 4ST+ 31X2020	968603108	310	1	571	918730808	HOSE LINES SUPERSTRUCT
HOSE CPL. 4ST+ 31X3280	968602008	1380	1	600	967498008	HOSE LINES HW 2 PRE-ASS.
HOSE CPL. 4ST+ 31X440	968602908	303	1	571	918730808	HOSE LINES SUPERSTRUCT
HOSE CPL. 4ST+ 31X460	968602608	300	1	571	918730808	HOSE LINES SUPERSTRUCT
HOSE CPL. 4ST+ 31X540	968602708	301	1	571	918730808	HOSE LINES SUPERSTRUCT
HOSE CPL. 4ST+ 31X680	968602808	302	1	571	918730808	HOSE LINES SUPERSTRUCT
HOSE CPL. CONTI-KWS 10X1	96014023	2456	1	284	96021213	HOSE LINES DRIVE UNIT
HOSE CPL. CONTI-KWS 10X15	969456008	2322	2	466	96074082	HOSE LINES

Description	Item	Pos.	Quantity	Page	Assembly	Description
HOSE CPL. CONTI-KWS 10X34	969962808	2325	1	466	96074082	HOSE LINES
HOSE CPL. CONTI-KWS 10X35	969384108	2321	1	466	96074082	HOSE LINES
HOSE CPL. CONTI-KWS 10X3	96014042	2316	1	466	96074082	HOSE LINES
HOSE CPL. CONTI-KWS 10X4	969450308	2310	1	466	96074082	HOSE LINES
HOSE CPL. CONTI-KWS 10X60	969572308	2324	1	466	96074082	HOSE LINES
HOSE CPL. CONTI-KWS 10X72	96021238	2455	1	284	96021213	HOSE LINES DRIVE UNIT
HOSE CPL. CONTI-KWS 10X78	96016097	2323	1	466	96074082	HOSE LINES
HOSE CPL. CONTI-KWS 10X82	96021241	2457	1	284	96021213	HOSE LINES DRIVE UNIT
HOSE CPL. CONTI-KWS 20X1	96032715	2466	1	284	96021213	HOSE LINES DRIVE UNIT
HOSE CPL. CONTI-KWS 20X2	96026635	2463	1	284	96021213	HOSE LINES DRIVE UNIT
HOSE CPL. CONTI-KWS 22X42	96021231	2451	1	284	96021213	HOSE LINES DRIVE UNIT
HOSE CPL. CONTI-KWS 8X300	96031888	2450	1	284	96021213	HOSE LINES DRIVE UNIT
HOSE CPL. CONTI-KWS 8X450	96039477	2453	1	284	96021213	HOSE LINES DRIVE UNIT
HOSE CPL. GH001 10X1800	969041408	(1102)	1	575	918627208	AIR COND. UNIT SUPERSTRU
HOSE CPL. GH001 13X5500	969040908	(1100)	1	575	918627208	AIR COND. UNIT SUPERSTRU
HOSE CPL. GH001 8X1100	969636808	(1103)	1	575	918627208	AIR COND. UNIT SUPERSTRU
HOSE CPL. GH001 8X6900	969041008	(1101)	1	575	918627208	AIR COND. UNIT SUPERSTRU
HOSE CPL. GH425 12X1700	924028408	101	1	39	917598608	HOSE LINES CRAWLER
HOSE CPL. GH425 12X2300	922099408	115	1	39	917598608	HOSE LINES CRAWLER
HOSE CPL. GH425 12X2600	967769908	358	1	572	918730808	HOSE LINES SUPERSTRUCT
HOSE CPL. GH425 12X2750	922417208	140	1	39	917598608	HOSE LINES CRAWLER
HOSE CPL. GH425 12X3500	922298008	114	1	39	917598608	HOSE LINES CRAWLER
HOSE CPL. GH425 12X3550	964326008	136	1	39	917598608	HOSE LINES CRAWLER
HOSE CPL. GH425 12X470	926850208	320	1	571	918730808	HOSE LINES SUPERSTRUCT
HOSE CPL. GH425 12X470	926850208	321	1	571	918730808	HOSE LINES SUPERSTRUCT
HOSE CPL. GH425 16X3100	922124408	328	1	571	918730808	HOSE LINES SUPERSTRUCT
HOSE CPL. GH425 16X450	964325408	116	1	39	917598608	HOSE LINES CRAWLER
HOSE CPL. GH425 25X1900	964324908	106	1	39	917598608	HOSE LINES CRAWLER
HOSE CPL. GH425 25X1950	964325108	108	1	39	917598608	HOSE LINES CRAWLER
HOSE CPL. GH425 25X2050	964325008	107	1	39	917598608	HOSE LINES CRAWLER
HOSE CPL. GH425 25X2100	964325308	110	1	39	917598608	HOSE LINES CRAWLER
HOSE CPL. GH425 25X2100	964325308	111	1	39	917598608	HOSE LINES CRAWLER
HOSE CPL. GH425 25X2100	964325308	112	1	39	917598608	HOSE LINES CRAWLER
HOSE CPL. GH425 25X2100	964325308	113	1	39	917598608	HOSE LINES CRAWLER
HOSE CPL. GH425 25X2150	964325208	109	1	39	917598608	HOSE LINES CRAWLER
HOSE CPL. GH425 25X2210	964326408	141	1	39	917598608	HOSE LINES CRAWLER
HOSE CPL. GH425 25X2350	964326308	139	1	39	917598608	HOSE LINES CRAWLER
HOSE CPL. GH425 25X2960	964325808	134	1	39	917598608	HOSE LINES CRAWLER
HOSE CPL. GH425 25X3040	964325908	135	1	39	917598608	HOSE LINES CRAWLER
HOSE CPL. GH506 25X1180	963698908	292	1	571	918730808	HOSE LINES SUPERSTRUCT
HOSE CPL. GH506 25X1380	963698808	291	1	571	918730808	HOSE LINES SUPERSTRUCT
HOSE CPL. GH506 25X2700	968604008	354	1	572	918730808	HOSE LINES SUPERSTRUCT
HOSE CPL. GH506 25X290	96027797	290	1	571	918730808	HOSE LINES SUPERSTRUCT
HOSE CPL. GH506 25X590	96026091	351	1	572	918730808	HOSE LINES SUPERSTRUCT
HOSE CPL. GH506 25X680	966184608	353	1	572	918730808	HOSE LINES SUPERSTRUCT
HOSE CPL. GH506 25X760	96027796	293	1	571	918730808	HOSE LINES SUPERSTRUCT
HOSE CPL. GH506 25X820	966185908	352	1	572	918730808	HOSE LINES SUPERSTRUCT
HOSE CPL. GH506 31X1800	968603208	311	1	571	918730808	HOSE LINES SUPERSTRUCT
HOSE CPL. GH506 31X1900	925519008	481	1	710	967498108	HOSE LINES TELESCOPIC
HOSE CPL. GH506 31X1900	925519008	482	1	710	967498108	HOSE LINES TELESCOPIC
HOSE CPL. GH506 31X2000	928753308	480	1	710	967498108	HOSE LINES TELESCOPIC
HOSE CPL. GH506 31X2850	929920508	357	1	572	918730808	HOSE LINES SUPERSTRUCT
HOSE CPL. GH506 31X3500	968602108	1381	1	600	967498008	HOSE LINES HW 2 PRE-ASS.
HOSE CPL. GH506 31X560	968604108	356	1	572	918730808	HOSE LINES SUPERSTRUCT
HOSE CPL. HPC 4X450	962335508	410	1	572	918730808	HOSE LINES SUPERSTRUCT
HOSE CPL. HPC 4X4800	968604608	411	1	572	918730808	HOSE LINES SUPERSTRUCT
HOSE CPL. KUNSTSTOFF 8X80	96013921	2333	1	466	96074082	HOSE LINES
HOSE CPL. S45 10X800	96014315	2334	1	466	96074082	HOSE LINES
HOSE CPL. SC117 38X1200	966683308	261	1	571	918730808	HOSE LINES SUPERSTRUCT
HOSE CPL. SC117 38X2200	966051308	260	1	571	918730808	HOSE LINES SUPERSTRUCT

Description	Item	Pos.	Quantity	Page	Assembly	Description
HOSE CPL. SC117 38X380	967616708	304	1	571	918730808	HOSE LINES SUPERSTRUCT
HOSE CPL. SC117 38X900	968602508	263	1	571	918730808	HOSE LINES SUPERSTRUCT
HOSE DIN1283 11X300	12104544	(1)	1	102	914860608	TOOLS AND ACCESSORIES
HOSE DN16 500	510501008	300	1	566	969767908	PIPEWORK AIR INSTALLATIO
HOSE DN3,5-GU23725 GUMMI	591080608	28	0.25	355	916163008	WIPERS INSTALLATION
HOSE DN82-UNIE13 SCHWAR	11000901	11	2.15	352	916168308	AIR DUCT
HOSE GUIDE PRE-ASS.	925141508	9	1	645	919950308	DISPATCH ASSY.MECH.PART
HOSE GUIDE WELDED FE//ZN	925143708	1	1	646	925141508	HOSE GUIDE PRE-ASS.
HOSE HOLDER FE//ZNNI8//CN/	965225808	19	1	124	918728408	ASSEMBLY PARTS F.SLEWING
HOSE LINE X300	790042214	7	1	102	914860608	TOOLS AND ACCESSORIES
HOSE LINE X300	790042914	8	1	102	914860608	TOOLS AND ACCESSORIES
HOSE LINES	96046807	290	1	290	917962508	FUEL TANK ADD-ON UNIT
HOSE LINES AIR CONDITIONIN	96018574	500	1	575	918627208	AIR COND. UNIT SUPERSTRU
HOSE LINES CRAWLER SCR	917598608	7	1	19	96062225	UNDERCARRIAGE CPL.
HOSE LINES DRIVE UNIT	96021213	290	1	263	918728708	DRIVE ASSEMBLY CPL.
HOSE LINES ENGINE PREASS	96020707	50	1	268	918811108	DRIVE ASSEMBLY, PRE-ASSE
HOSE LINES FOLDING JIB SC	967498508	10	1	717	966004808	ADDNL.HYDR. FOLDING JIB
HOSE LINES FUEL	96033380	1	1	305	91002857	FUEL FEED
HOSE LINES HOISTING GEAR	96064698	10	1	591	96064697	HYDR.AUXILIARY HOISTING
HOSE LINES HW 2 PRE-ASS.	967498008	10	1	598	96075086	HYD.AUX.LIFT GEAR UPPER
HOSE LINES OIL PREHEATING	969856608	10	1	619	969856508	ADDITIONAL HYDRAULICS
HOSE LINES STUFE 5 OW	96074082	20	1	461	96074081	UREA TANK, PRE-MOUNTING
HOSE LINES SUPERSTRUCT	918730808	191	1	14		LIEBHERR LTR 1100
HOSE LINES SUPPORT SYSTE	967499008	10	1	63	967301408	PREPARATION HYDR
HOSE LINES SUPPORT SYSTE	967499208	10	1	74	967314108	ADD.HYDR.UNIT SUPPORT CY
HOSE LINES TELESCOPIC SC	967498108	10	1	709	965994108	HYDR.F.TELESCOPIC BOOM
HOSE NIPPLE	10142668	1	1	219	10142744	COOLING WATER AIR BLEED
HOSE NIPPLE	11170727	5	1	274	97095949	COMBINATED RADIATOR
HOSE NIPPLE	9140351	6	2	201	10145173	INTAKE STACK ASSEMBLY
HOSE NIPPLE	9140351	26	1	222	10140729	EXHAUST TC MOUNTING
HOSE NIPPLE 11SMn30+C	10140969	5	1	219	10142744	COOLING WATER AIR BLEED
HOSE UNION JOINT 0 MS	602441008	506	1	589	96055198	WIRING HARNESS
HOSE UNION JOINT M32X1,5 M	602441508	510	1	90	96062920	WIRING HARNESS
HOUSING	510796908	1	1	558	511417708	PRESSURE LIMITING VALVE
HOUSING	510796908	1	1	621	511417608	PRESSURE LIMITING VALVE
HOUSING	570109108	3	1	371	510229408	HYDRO MOTOR
HOUSING 12-POL	10099861	508	1	91	96062921	WIRING HARNESS
HOUSING 12-POL	10099861	509	1	494	96023971	WIRING HARNESS
HOUSING 15-POLE	10099863	510	1	91	96062921	WIRING HARNESS
HOUSING 15-POLE	10099863	512	2	500	96059659	CABLES, BASIC CONSTRUCTI
HOUSING 18-POL	10099864	502	3	428	96022870	WIRING HARNESS
HOUSING 18-POL	10099864	521	2	500	96059659	CABLES, BASIC CONSTRUCTI
HOUSING 21-POLE	10099856	501	2	91	96062921	WIRING HARNESS
HOUSING 21-POLE	10099856	517	2	500	96059659	CABLES, BASIC CONSTRUCTI
HOUSING 4-POL	602331308	507	4	426	96023891	WIRING HARNESS
HOUSING 4-POL	602331308	505	2	428	96022870	WIRING HARNESS
HOUSING 4-POL	602331308	511	1	490	96063649	WIRING HARNESS
HOUSING 4-POL	602331308	507	2	493	96023971	WIRING HARNESS
HOUSING 4-POL	602331308	515	26	500	96059659	CABLES, BASIC CONSTRUCTI
HOUSING 4-POL	602331308	501	1	693	96063864	WIRING HARNESS
HOUSING 4-POL	602339308	504	1	90	96062920	WIRING HARNESS
HOUSING 6-POL	602325508	506	4	426	96023891	WIRING HARNESS
HOUSING 6-POL	602325508	509	1	428	96022870	WIRING HARNESS
HOUSING 6-POL	602325508	506	3	490	96063649	WIRING HARNESS
HOUSING 6-POL	602325508	505	1	492	96063650	LEAD
HOUSING 6-POL	602325508	506	1	500	96059659	CABLES, BASIC CONSTRUCTI
HOUSING 8-POL	602300508	513	1	426	96023891	WIRING HARNESS
HOUSING 8-POL	602300608	514	1	426	96023891	WIRING HARNESS
HOUSING 8-POL	602301408	501	1	90	96062920	WIRING HARNESS
HOUSING 8-POL	602301408	519	2	500	96059659	CABLES, BASIC CONSTRUCTI

Description	Item	Pos.	Quantity	Page	Assembly	Description
HOUSING 9-POL	10099860	506	1	91	96062921	WIRING HARNESS
HOUSING GD-ZN SW GEPULV	704253308	6	4	85	966167808	COVER COMPL.
HOUSING GD-ZN SW GEPULV	704253308	13	1	287	96024716	BATTERY BOX, PRE-ASSEMB
HOUSING GD-ZN SW GEPULV	704256608	100	2	417	969392008	FRONT LEFT-HAND HOOD
HOUSING PLIXXOPOL R* SPF	975850708	7	1	338	917305408	INTERNAL PANELLING INSTA
HOUSING RAL 9005 SPF	97136698	1	1	323	96048757	CUP HOLDER
HUB 42CrMo4+N+QT	9267273	4	1	169	12408221	FLANGE PRE-ASS.
HYD.AUX.LIFT GEAR UPPER C	91004922	333	1	14		LIEBHERR LTR 1100
HYD.AUX.LIFT GEAR UPPER C	96075086	4	1	596	91004922	HYD.AUX.LIFT GEAR UPPER
HYDR.AUXILIARY HOISTING	96064697	3	1	578	919935608	AUXILIARY HOISTING GEAR C
HYDR.DOUBLE PUMP LPVD	12487540	10	1	129	13471292	DRIVE UNIT
HYDR.F.TELESCOPIC BOOM	915928608	217	1	14		LIEBHERR LTR 1100
HYDR.F.TELESCOPIC BOOM	965994108	4	1	707	915928608	HYDR.F.TELESCOPIC BOOM
HYDRAULIC BALLASTING	919501608	153	1	13		LIEBHERR LTR 1100
HYDRAULIC SUPPORT	915447908	58	1	12		LIEBHERR LTR 1100
HYDRAULIC-TYPE LUBRICAT.N	11080392	15	1	480	10327065	ELECTRIC PUMP
HYDRAULIC-TYPE LUBRICAT.N	7743242	4	1	48	96046146	PROTECTION CPL.
HYDRAULIC-TYPE LUBRICAT.N	7743242	36	3	741	919421708	HOOK BLOCK
HYDRAULIC-TYPE LUBRICAT.N	571578608	2	1	483	774375108	PASSAGE NIPPLE BLOCK
HYDRAULIC-TYPE LUBRICAT.	774301101	18	1	380	968558601	COMPACT ROPE WINCH
HYDRAULIC-TYPE LUBRICAT.	774301101	18	1	583	938707001	COMPACT ROPE WINCH
HYDRAULICS	918730608	185	1	13		LIEBHERR LTR 1100
HYDRAULICS UPPER CARRI	96045552	4	1	510	918730608	HYDRAULICS
HYDRO CYLINDER 65/36-367	512353708	26	1	747	919933308	TRANSPORT MOUNTING
HYDRO CYLINDER 70/45-50 SP	10443748	1	1	374	916109208	ROTATING PLATFORM LOCK
HYDRO MOTOR A2FM 125CM³/	510240708	1	1	376	919935508	MAIN HOIST GEAR
HYDRO MOTOR A2FM 125CM³/	510240708	2	1	581	96062734	AUXILIARY HOISTING GEAR
HYDRO MOTOR A2FM 23CM³/	510229408	2	1	367	919235408	SLEWING GEAR
IDENTIFICATION STRIPS	602762908	7	1	504	968077108	TERMINAL STRIP
IGNITION STARTER SWITCH 3	10335557	50	1	431	96056347	ELECTRIC ADD-ON PARTS CA
IMPLEMENT BAG 300X600	11320720	(1)	1	120	916959808	PERSONAL PROTECTION EQ
INCLINATION SENSOR +/-5°X/	12102799	10	1	81	96062917	ELECTR.FOR CENTER SECTIO
INDENTED TAPE PA	636184001	207	1	703	96063458	TERMINAL BOX CPL.
INDICATOR LAMP	606143508	11	2	435	96022872	CONTROL PANEL ROOF
INDUCTIVE SENSOR BERUE	10354584	1	2	52	968374908	LIMIT SWITCH ADD-ON
INDUCTIVE SENSOR BERUE	10354584	58	1	432	96056347	ELECTRIC ADD-ON PARTS CA
INDUCTIVE SENSOR BERUE	10354584	10	1	633	919284308	BALLAST MONITORING ENCO
INDUCTIVE SENSOR BERUE	10354584	6	6	686	965264808	SENSOR INSTALL.TELESCOP.
INDUCTIVE SENSOR BERUE	10354584	(5)	1	700	966591408	LIMIT SWITCH ADD-ON
INDUCTIVE SENSOR BERUE	692312708	7	2	686	965264808	SENSOR INSTALL.TELESCOP.
INFORMATION SIGN 105X50 K	97151431	4	1	595	96062735	SIGNS
INFORMATION SIGN 120X80 K	97094940	107	1	111	919933708	LABELLING GREAT BRITAIN
INFORMATION SIGN 208X100 K	97131530	110	1	111	919933708	LABELLING GREAT BRITAIN
INJECTION LINE R-MOTORXD	10143826	1	1	199	10143825	INJECTION LINES
INJECTION LINE R-MOTORXD	10143827	2	3	199	10143825	INJECTION LINES
INJECTION LINES R-MOTORXD	10143825	215	1	132	13455311	DIESEL ENGINE
INJECTOR LI2.7-20-SF-950	13574085	1	1	185	13743036	RK INJECTOR
INJECTOR WITH FASTENING LI	10152867	190	4	132	13455311	DIESEL ENGINE
INLET MODULE SCRFILTER GE	11428887	10	1	475	11429845	SCRFILTER ASSEMBLY
INLET VALVE	10144556	(2)	2	160	10149580	CYLINDER HEAD ASSEMBLY
INLET VALVE	10144556	2	2	162	10149579	CYLINDER HEAD PRE-ASSY.
INLET VALVE SEAT INSERT PL	10149739	6	2	163	10149578	CYLINDER HEAD
INNER RING 40X45X20	747404001	71	1	369	933074801	SLEWING GEAR DRIVE
INNER WHEEL Z=-96 42CrMo4	938760701	55	1	383	968607101	PLANETARY GEARBOX
INNER WHEEL Z=74 42CrMo4	927601801	20	1	383	968607101	PLANETARY GEARBOX
INPUT/OUTPUT MODULE	12780040	100	1	509	96069052	UNIVERSAL INPUT-OUTPUT M
INSERTION BRIDGE	602735508	18	42	498	919940108	SWITCHBOX MOUNTING PART
INSERTION MODULE 12POLIG	966157408	2	1	504	968077108	TERMINAL STRIP
INSIDE HANDLE ZUG	11005984	2	1	362	966230408	CLOSING DEVICE
INST.BACK SHEAVE FOR BO	914557108	363	1	14		LIEBHERR LTR 1100

Description	Item	Pos.	Quantity	Page	Assembly	Description
INSTALLATION BRAKE COMP	10127566	330	1	132	13455311	DIESEL ENGINE
INSTALLATION PARTS F.HYDR	96048348	30	1	19	96062225	UNDERCARRIAGE CPL.
INSTALLATION SWITCH CAB.	968462608	20	1	319	919010108	CRANE OPERATOR CABIN P
INSTRUMENT CLUSTER ELEC	96030724	1	1	431	96056347	ELECTRIC ADD-ON PARTS CA
INSULATING HOSE DN10X0,65	11082604	204	1.16	90	96062920	WIRING HARNESS
INSULATING HOSE DN10X0,65	11082604	204	3.4	426	96023891	WIRING HARNESS
INSULATING HOSE DN10X0,65	11082604	204	0.73	428	96022870	WIRING HARNESS
INSULATING HOSE DN10X0,65	11082604	204	1.87	490	96063649	WIRING HARNESS
INSULATING HOSE DN10X0,65	11082604	204	1.96	493	96023971	WIRING HARNESS
INSULATING HOSE DN10X0,65	11082604	204	0.22	694	96063583	LEAD
INSULATING HOSE DN10X0,65	11082604	204	0.4	706	96063415	WIRING HARNESS
INSULATING HOSE DN12X0,65	11082605	205	1.78	426	96023891	WIRING HARNESS
INSULATING HOSE DN12X0,65	11082605	205	0.53	490	96063649	WIRING HARNESS
INSULATING HOSE DN12X0,65	11082605	205	0.1	698	96063213	LEAD
INSULATING HOSE DN12X0,65	11082605	205	0.45	699	96051215	CABLES, PRE-ASSEMBLED
INSULATING HOSE DN14X0,65	11082606	206	0.33	495	96049294	WIRING HARNESS
INSULATING HOSE DN14X0,8	603012608	232	4.39	495	96049294	WIRING HARNESS
INSULATING HOSE DN14X0,8	603012608	232	4.32	611	96057250	LEAD
INSULATING HOSE DN16X0,85	11082607	207	0.68	589	96055198	WIRING HARNESS
INSULATING HOSE DN18X0,85	11082608	208	0.28	493	96023971	WIRING HARNESS
INSULATING HOSE DN4X0,5	11082601	201	1.03	428	96022870	WIRING HARNESS
INSULATING HOSE DN4X0,5	11082601	4	0.28	438	963398008	PREMOUNT.AXIAL FLOW FAN
INSULATING HOSE DN4X0,5	11082601	201	0.37	706	96063415	WIRING HARNESS
INSULATING HOSE DN6X0,5	11082602	202	6.14	90	96062920	WIRING HARNESS
INSULATING HOSE DN6X0,5	11082602	15	0.04	350	965784408	ROOF WINDOW PRE-ASS.
INSULATING HOSE DN6X0,5	11082602	202	6.8	426	96023891	WIRING HARNESS
INSULATING HOSE DN6X0,5	11082602	202	6.72	428	96022870	WIRING HARNESS
INSULATING HOSE DN6X0,5	11082602	202	17.75	490	96063649	WIRING HARNESS
INSULATING HOSE DN6X0,5	11082602	202	7.51	493	96023971	WIRING HARNESS
INSULATING HOSE DN6X0,5	11082602	202	1.95	495	96049294	WIRING HARNESS
INSULATING HOSE DN6X0,5	11082602	202	0.71	589	96055198	WIRING HARNESS
INSULATING HOSE DN6X0,5	11082602	202	0.94	706	96063415	WIRING HARNESS
INSULATING HOSE DN8X0,65	11082603	203	0.83	90	96062920	WIRING HARNESS
INSULATING HOSE DN8X0,65	11082603	203	3.61	426	96023891	WIRING HARNESS
INSULATING HOSE DN8X0,65	11082603	203	2.26	428	96022870	WIRING HARNESS
INSULATING HOSE DN8X0,65	11082603	203	12.61	490	96063649	WIRING HARNESS
INSULATING HOSE DN8X0,65	11082603	203	6.16	493	96023971	WIRING HARNESS
INSULATING HOSE DN8X0,65	11082603	203	5.52	495	96049294	WIRING HARNESS
INSULATING HOSE DN8X0,65	11082603	203	0.3	694	96063583	LEAD
INSULATING HOSE DN8X0,65	11082603	203	0.83	706	96063415	WIRING HARNESS
INSULATING HOSE ISO 3302-1	11006584	120	4	272	96020819	RADIATOR, PRE-ASSEMBLED
INSULATING HOSE ISO 3302-1	11006584	40	3.4	411	96022943	SOUND PROOFING/SOUND I
INSULATING MAT 10X455X110	97038836	15	1	386	917894308	HEATING CRANE DRIVER'S CA
INSULATING MAT 13X115X179	97038834	13	1	386	917894308	HEATING CRANE DRIVER'S CA
INSULATING MAT 20X115X199	97038835	14	1	386	917894308	HEATING CRANE DRIVER'S CA
INSULATING MAT 20X1160X63	97058663	1	1	411	96022943	SOUND PROOFING/SOUND I
INSULATING MAT 20X376X326	97067162	3	1	476	918729308	AIR FILTER UNIT
INSULATING MAT 20X378X328	97067163	4	1	476	918729308	AIR FILTER UNIT
INSULATING MAT 40X334X385	97053106	7	1	411	96022943	SOUND PROOFING/SOUND I
INSULATING MAT 40X390X385	97053105	5	1	411	96022943	SOUND PROOFING/SOUND I
INSULATING MAT 40X422X93 E	97038833	12	1	386	917894308	HEATING CRANE DRIVER'S CA
INSULATING MAT 40X491X112	97058602	6	1	411	96022943	SOUND PROOFING/SOUND I
INSULATING MAT 40X540X407	97053107	8	1	411	96022943	SOUND PROOFING/SOUND I
INSULATING MAT 40X720X427	97045991	2	1	411	96022943	SOUND PROOFING/SOUND I
INSULATING MAT 40X726X368	97100393	4	1	411	96022943	SOUND PROOFING/SOUND I
INSULATING MAT 40X740X370	973767608	102	1	409	96017568	RADIATOR HOOD CPL.
INSULATING MAT 40X964X749	973073308	101	1	409	96017568	RADIATOR HOOD CPL.
INSULATING MAT 40X975X755	973073208	100	1	409	96017568	RADIATOR HOOD CPL.
INSULATING MAT 50X60X182 E	97038837	16	1	386	917894308	HEATING CRANE DRIVER'S CA
INSULATING MAT 50X78X235 E	97038838	17	1	386	917894308	HEATING CRANE DRIVER'S CA

Description	Item	Pos.	Quantity	Page	Assembly	Description
INSULATING MATERIAL 20X20	10425409	20	1	411	96022943	SOUND PROOFING/SOUND I
INSULATING RING	691041708	6	37	95	10878097	SLIP RING TRANSMITTER
INTAKE STACK ASSEMBLY R	10145173	221	1	132	13455311	DIESEL ENGINE
INTAKE STACK R-MOTORXD93	11444999	1	1	201	10145173	INTAKE STACK ASSEMBLY
INTERLOCK BOLT 70.0X342 3	975766808	3	1	125	963260408	LOCKING
INTERLOCK BOLT 70.0X342 3	975766808	3	1	126	96049764	LOCKING
INTERMEDIATE GEAR CPL.	9072906	331	1	133	13455311	DIESEL ENGINE
INTERMEDIATE GEAR PRE-AS	9072633	3	1	169	12408221	FLANGE PRE-ASS.
INTERMEDIATE GEAR PRE-AS	9072904	1	1	210	9072906	INTERMEDIATE GEAR CPL.
INTERMEDIATE PART 11SMnP	10132935	16	1	198	10143342	LEAK OIL RETURN LINE
INTERMEDIATE RING	10014730	8	1	480	10327065	ELECTRIC PUMP
INTERMEDIATE WHEEL AXLE 4	9072907	2	1	210	9072906	INTERMEDIATE GEAR CPL.
INTERNAL LIGHT 6W 24V WEIS	10342854	8	2	431	96056347	ELECTRIC ADD-ON PARTS CA
INTERNAL PANELLING INSTAL	917305408	1	1	334	917304508	CRANE OPERATOR CABIN P
JAW 42CrMoS4+QT	10150144	1	1	187	10135434	PRESSURE ADAPTER FASTEN
JAW 42CrMoS4+QT	10150144	2	1	189	10153151	HIGH PRESS.CONNECTOR W
JAW 42CrMoS4+QT	11403994	2	1	184	10152867	INJECTOR WITH FASTENING
JOYSTICK LSB-AMS SPF	10343693	4	2	431	96056347	ELECTRIC ADD-ON PARTS CA
KBA-RING 130X121,1X3,5	11351303	3	1	159	10146367	PISTON CPL.
KEEPER	12104585	32	1	741	919421708	HOOK BLOCK
KEY PLATE 40X310X200 S960Q	975761808	2	2	454	919501608	HYDRAULIC BALLASTING
KEYBOARD UNIT LSB-TE PR	96052297	3	2	431	96056347	ELECTRIC ADD-ON PARTS CA
KEYBOARD UNIT LSB-TE-B SP	12101942	(80)	1	431	96056347	ELECTRIC ADD-ON PARTS CA
KEYBOARD UNIT SPF	10816196	2	1	434	96030724	INSTRUMENT CLUSTER ELEC
KEYBOARD UNIT SPF	10874785	31	1	431	96056347	ELECTRIC ADD-ON PARTS CA
KEYPAD BUTTON	606144008	15	2	435	96022872	CONTROL PANEL ROOF
KNURLED BUTTON 21-M4 PA	10652206	8	2	346	916162508	WINDOW ASSEMBLY
KNURLED BUTTON PA	10800916	49	4	338	917305408	INTERNAL PANELLING INSTA
KNURLED SCREW M5X10 PA6	10449664	84	6	502	96025348	BASE ASSEMBLY
L NECK EL 12L M18X1,5 CR6-F	247128602	648	6	34	967304508	UNDERCARRIAGE HYDRAULIC
L NECK EL 12L M18X1,5 CR6-F	247128602	637	10	518	96045552	HYDRAULICS UPPER CARRI
L NECK EL 12L M18X1,5 CR6-F	247128602	636	2	592	96064697	HYDR.AUXILIARY HOISTING
L NECK EL 12L M18X1,5 CR6-F	247128602	600	1	619	969856508	ADDITIONAL HYDRAULICS
L NECK EL 12L M18X1,5 CR6-F	247128602	608	3	709	965994108	HYDR.F.TELESCOPIC BOOM
L NECK EL 18L CR6-FREI	247128502	638	1	34	967304508	UNDERCARRIAGE HYDRAULIC
L NECK EL 18L CR6-FREI	247128502	603	5	518	96045552	HYDRAULICS UPPER CARRI
LABELLING GREAT BRITAIN	919933708	74	1	12		LIEBHERR LTR 1100
LABELS 10X90 POLYESTER	11007853	301	1	89	968252908	BTB PROGRAMMED
LABELS 10X90 POLYESTER	11007853	(3)	1	435	96022872	CONTROL PANEL ROOF
LABELS 10X90 POLYESTER	11007853	301	1	509	96069052	UNIVERSAL INPUT-OUTPUT M
LADDER ATTACHMENT	917508508	1	1	779	917508408	TOOLS
LADDER BRACKET	10326792	9	1	780	917508508	LADDER ATTACHMENT
LAP BELT INSTALLATION	919392208	403	1	15		LIEBHERR LTR 1100
LASHING STRAP 0,35MX18MM	7621780	3	1	729	96058737	ELECTRIC MEASURING & WAR
LASHING STRAP 0,5MX18MM	10020519	3	1	421	96044787	HOLDER PRE-ASSEMBLY
LASHING STRAP 0,75MX18MM	10020520	120	1	268	918811108	DRIVE ASSEMBLY, PRE-ASSE
LASHING STRAP 1,25MX25MM	11492423	10	1	780	917508508	LADDER ATTACHMENT
LATCH	11490010	1	1	753	512353708	HYDRO CYLINDER
LATCH CLAMP	602116008	14	4	319	919010108	CRANE OPERATOR CABIN P
LEAD	12107191	12	1	308	12106874	FUEL FILTER
LEAD 15 X 0,34 TPE-U	10428544	10	4.367	426	96023891	WIRING HARNESS
LEAD 15 X 0,34 TPE-U	10428544	11	4.367	426	96023891	WIRING HARNESS
LEAD 2 X 1	11620017	9	3	426	96023891	WIRING HARNESS
LEAD 2 X 1	11620017	15	0.48	426	96023891	WIRING HARNESS
LEAD 2 X 1,5	11341599	5	4.28	493	96023971	WIRING HARNESS
LEAD 2 X 1,5	11341599	6	4.28	493	96023971	WIRING HARNESS
LEAD 25 X 0,34 TPE-U	10428545	7	4.375	426	96023891	WIRING HARNESS
LEAD 3 G 1,5	600265101	5	1.7	608	96060353	LEAD
LEAD 3 G 1,5	600265101	6	2.63	608	96060353	LEAD
LEAD 36 G 1	12108364	5	16.4	492	96063650	LEAD

Description	Item	Pos.	Quantity	Page	Assembly	Description
LEAD 4 X 0,5	10870332	6	6.06	775	96035674	LEAD
LEAD 7 G 1	10871285	5	2.46	730	96058738	WIRING HARNESS
LEAD 7 G 1	10871285	5	13.59	775	96035674	LEAD
LEAD W398	96057250	20	1	609	919584608	SOCKET
LEAD W510	96063650	2	1	489	96063648	CABLE LIST SLEWING PLATF
LEAD W563	96037273	23	1	625	96036821	REAR END TURNT. CAMERA E
LEAD W582	96060353	20	1	607	91000484	WIRING FAN HEATER ROTARY
LEAD W587	96022971	22	1	489	96063648	CABLE LIST SLEWING PLATF
LEAD W588	96022970	15	1	489	96063648	CABLE LIST SLEWING PLATF
LEAD W591	96023931	11	1	288	96023914	ELECTRIC FOR BATTERY BOX
LEAD W592	96023932	14	1	288	96023914	ELECTRIC FOR BATTERY BOX
LEAD W593	96023930	10	1	288	96023914	ELECTRIC FOR BATTERY BOX
LEAD W621	96060392	10	1	606	91002360	CHARGER
LEAD W682	96060380	10	1	616	91000497	EL.COOLANT PREHEAT
LEAD W694	96071003	14	1	603	91003677	EXTERNAL FEED
LEAD W900	96063843	120	1	692	96063456	TERMINAL BOX
LEAD W906	96063849	140	1	692	96063456	TERMINAL BOX
LEAD W911	96063676	190	1	692	96063456	TERMINAL BOX
LEAD W912	96063583	200	1	692	96063456	TERMINAL BOX
LEAD W912A	96063213	6	1	695	96063212	CABLE DRUM COMPL.
LEAD W921	96063872	160	1	692	96063456	TERMINAL BOX
LEAD W930	96063561	120	1	703	96063458	TERMINAL BOX CPL.
LEAD W931	965965108	6	1	725	918258408	EL.2 HOISTING LIMIT SWITCH
LEAD W932	96063559	110	1	703	96063458	TERMINAL BOX CPL.
LEAD W940	965096408	12	1	774	96055854	ELEC MECH FOLDING JIB BO
LEAD W942A	96035674	11	1	774	96055854	ELEC MECH FOLDING JIB BO
LEAD W942B	96054467	13	1	774	96055854	ELEC MECH FOLDING JIB BO
LEAD W943	965262808	(7)	1	755	91001037	DOUBLE FOLDING JIB MECH.
LEAD W945	965096608	(8)	1	755	91001037	DOUBLE FOLDING JIB MECH.
LEAK OIL RETURN LINE	10143342	214	1	132	13455311	DIESEL ENGINE
LEG SPRING 2,5X13,5	571741908	19	1	753	512353708	HYDRO CYLINDER
LETTERING WIRE	965622108	996	8	90	96062920	WIRING HARNESS
LETTERING WIRE	965622108	996	24	91	96062921	WIRING HARNESS
LETTERING WIRE	965622108	996	6	98	96045216	WIRING HARNESS
LETTERING WIRE	965622108	996	8	427	96023891	WIRING HARNESS
LETTERING WIRE	965622108	996	8	428	96022870	WIRING HARNESS
LETTERING WIRE	965622108	996	62	491	96063649	WIRING HARNESS
LETTERING WIRE	965622108	996	125	494	96023971	WIRING HARNESS
LETTERING WIRE	965622108	996	52	496	96049294	WIRING HARNESS
LETTERING WIRE	965622108	996	6	640	96045220	WIRING HARNESS
LETTERING WIRE	965622108	996	27	698	96063213	LEAD
LETTERING WIRING HARNES	965622208	998	1	90	96062920	WIRING HARNESS
LETTERING WIRING HARNES	965622208	998	1	91	96062921	WIRING HARNESS
LETTERING WIRING HARNES	965622208	998	2	98	96045216	WIRING HARNESS
LETTERING WIRING HARNES	965622208	998	1	427	96023891	WIRING HARNESS
LETTERING WIRING HARNES	965622208	998	1	428	96022870	WIRING HARNESS
LETTERING WIRING HARNES	965622208	998	1	491	96063649	WIRING HARNESS
LETTERING WIRING HARNES	965622208	998	2	492	96063650	LEAD
LETTERING WIRING HARNES	965622208	998	1	494	96023971	WIRING HARNESS
LETTERING WIRING HARNES	965622208	998	1	496	96049294	WIRING HARNESS
LETTERING WIRING HARNES	965622208	998	1	589	96055198	WIRING HARNESS
LETTERING WIRING HARNES	965622208	998	2	608	96060353	LEAD
LETTERING WIRING HARNES	965622208	998	2	611	96057250	LEAD
LETTERING WIRING HARNES	965622208	998	1	640	96045220	WIRING HARNESS
LETTERING WIRING HARNES	965622208	998	2	693	96063864	WIRING HARNESS
LETTERING WIRING HARNES	965622208	998	2	694	96063583	LEAD
LETTERING WIRING HARNES	965622208	998	2	698	96063213	LEAD
LETTERING WIRING HARNES	965622208	998	1	699	96051215	CABLES, PRE-ASSEMBLED
LETTERING WIRING HARNES	965622208	998	2	706	96063415	WIRING HARNESS
LETTERING WIRING HARNES	965622208	998	2	730	96058738	WIRING HARNESS

Description	Item	Pos.	Quantity	Page	Assembly	Description
LETTERING WIRING HARNES	965622208	998	2	775	96035674	LEAD
LEVEL SENSOR L=115 24V	10130406	22	1	130	13455311	DIESEL ENGINE
LEVEL SENSOR L=115 24V	10816943	1	1	150	10130406	LEVEL SENSOR
LEVER FASTENER	11450420	5	2	410	969425608	FLAP RIGHT PRE-ASS.
LEVER FASTENER	11450420	5	2	416	969399608	FLAP PRE-ASS.
LICCON CONSOLE LCD5C-A	10886525	(80)	1	431	96056347	ELECTRIC ADD-ON PARTS CA
LICCON CONSOLE LSB-BSE	96033140	19	1	431	96056347	ELECTRIC ADD-ON PARTS CA
LID PLATE DIN 3015-1 L-DP 5	5005219	300	18	517	96045552	HYDRAULICS UPPER CARRI
LID PLATE DIN 3015-2 S-DP-A	5005525	324	2	566	969767908	PIPEWORK AIR INSTALLATIO
LIFTING ROPE GUIDE PREASS	96014777	3	1	655	91000049	PIVOT SECTION, PRE-ASSEMB
LIGHT BULB 1,2W 30V	607008708	13	1	435	96022872	CONTROL PANEL ROOF
LIGHT BULB 1,3W 24V	607009708	(1)	2	620	913978308	ADDITIONAL ELECTRICS
LIGHT BULB DIN 49848 2,4W 6	607011108	(1)	2	105	928620108	ACCESSORIES
LIGHT BULB DIN 72601 70W 24	607023708	2	1	106	915731908	EL.COMP. DISPATCH ASSEM
LIMIT STOP CPL	955746303	12	2	30	992078314	CENTRE PIECE
LIMIT STOP RING 16,5X75X5	10875905	6	4	320	916164208	BEARING INSTALLATION
LIMIT SWITCH	928828008	17	1	486	968365908	EL.ADD-ON SET-LIMIT SWITCH
LIMIT SWITCH ADD-ON	968374908	5	1	17	919950108	UNDERCARRIAGE COMPLETE
LIMIT SWITCH ADD-ON AUSL	965371508	9	1	484	919940408	ELECTR. SYSTEM F.SLEWING
LIMIT SWITCH ADD-ON AUSL	966591408	10	1	690	96063954	ELECTRIC F.BASE SECTION
LIMIT SWITCH AUSLEGERSTEI	966563508	6	1	700	966591408	LIMIT SWITCH ADD-ON
LIMIT SWITCH TASTEND SPF	606053108	5	2	488	928828008	LIMIT SWITCH
LIMIT SWITCH TQ200-RFID SP	10678395	(2)	1	652	919935408	TELESCOPIC BOOM CPL.
LIMIT SWITCH TQ200-RFID SP	10678395	10	1	725	918258408	EL.2 HOISTING LIMIT SWITCH
LIMIT SWITCH TQ200-RFID SP	10678395	7	1	776	966479308	SENSOR LIFT TOP LIMIT SWI
LIMIT SWITCH, PRE-ASSEMB	968305308	22	1	124	918728408	ASSEMBLY PARTS F.SLEWING
LINE CONNECTOR	5603876	515	1	426	96023891	WIRING HARNESS
LINE CONNECTOR	5603876	507	1	428	96022870	WIRING HARNESS
LINE CONNECTOR	5603876	526	1	500	96059659	CABLES, BASIC CONSTRUCTI
LINE FILTER	510670808	161	1	516	96045552	HYDRAULICS UPPER CARRI
LINE FILTER	510674508	169	1	516	96045552	HYDRAULICS UPPER CARRI
LINEAR SLIDEWAY SYSTEM 2	11007589	5	1	326	968483708	STEP CPL.
LOAD HOLDING VALVE	511479408	151	1	717	966004808	ADDNL.HYDR. FOLDING JIB
LOAD HOLDING VALVE 400BA	10218310	3	1	316	10650940	TILT CYLINDER
LOAD HOOK 10 E SPF	910543708	310	1	14		LIEBHERR LTR 1100
LOAD RETAINING VLV ELEM	11002678	7	1	720	511479408	LOAD HOLDING VALVE
LOCATING BOLT 65.0X330 35N	975762108	9	4	635	915090008	COUNTERWEIGHT WITH CLAM
LOCATION FIXTURE PRE-ASS.	96056553	1	1	732	96056273	MECH MEAS AND WARNING D
LOCATION FIXTURE WELDED	96051503	1	1	734	96056553	LOCATION FIXTURE PRE-ASS.
LOCK NUT M8 GEOMET 500A	11646255	2	4	274	97095949	COMBINATED RADIATOR
LOCK PIECE FEDERBUEGEL S	704227608	7	1	781	968940708	HOLDER LEFT
LOCK PIECE FEDERBUEGEL S	704227608	7	1	782	968940808	HOLDER RIGHT
LOCK PIECE HAKEN	704230208	25	2	287	96024716	BATTERY BOX, PRE-ASSEMB
LOCK WASHER DIN 6799 7X0,9	12210037	3	1	238	10144098	FASTENING CLAMP
LOCK WASHER VS 10	423901508	26	1	381	938759601	ROPE DRUM
LOCK WASHER VS 10 ZN8M+P	4229913	12	12	129	13471292	DRIVE UNIT
LOCK WASHER VS 12	423901708	53	8	383	968607101	PLANETARY GEARBOX
LOCK WASHER VS 16 GESC	4239009	24	8	261	12487540	HYDR.DOUBLE PUMP
LOCK WASHER VS 8 ST	423901408	27	16	369	933074801	SLEWING GEAR DRIVE
LOCK WITH FALLING LATCH LI	11005985	1	1	362	966230408	CLOSING DEVICE
LOCKABLE TANK CAP 40	10870226	4	1	462	96071742	UREA TANK
LOCKING	96049764	4	1	124	918728408	ASSEMBLY PARTS F.SLEWING
LOCKING	963260408	3	1	124	918728408	ASSEMBLY PARTS F.SLEWING
LOCKING BAR WELDMENT	966825408	10	1	361	917304708	SLIDING DOOR INSTALLATION
LOCKING PIECE	10492347	19	1	397	10877138	OPERATOR SEAT
LOCKING PIECES	10115664	452	1	134	13455311	DIESEL ENGINE
LOCKING PIECES	10116110	521	1	134	13455311	DIESEL ENGINE
LOCKING PIECES	10127979	526	1	134	13455311	DIESEL ENGINE
LOCKING PIECES	10128439	524	1	134	13455311	DIESEL ENGINE
LOCKING PIECES	10142747	630	1	135	13455311	DIESEL ENGINE

Description	Item	Pos.	Quantity	Page	Assembly	Description
LOCKING PIECES	10144027	652	1	135	13455311	DIESEL ENGINE
LOCKING PIECES	9078249	650	1	135	13455311	DIESEL ENGINE
LOCKING PIECES Al Rm>150N/	10128440	1	1	234	10128439	LOCKING PIECES
LOCKING PIN 3X25 PVDF	12104694	21	1	84	96075205	SWITCH BOX COMPL.
LOCKING PIN 3X25 PVDF	12104694	154	2	92	96060493	ANTENNA CPL.
LOCKING PLATE 30X70X30 S35	978068708	44	8	22	96062226	CRAWLER CARRIER RIGHT CP
LOCKING PLATE 30X70X30 S35	978068708	44	8	28	96062228	CRAWLER TRACK CARRIER LE
LOCKING SCREW GEOMET 5	11494008	4	12	274	97095949	COMBINATED RADIATOR
LOCKING SCREW M10X19 10.	10153538	2	2	172	9079870	CONTROL PARTS
LOCKING SET SUB-D 4-40UNC	602093514	3	2	499	96059658	BASE ASSEMBLY CPL.
LOUDSPEAKER 2,77V 86DBA	10489011	10	2	431	96056347	ELECTRIC ADD-ON PARTS CA
LOWERING BRAKE VALVE	10665124	7	2	534	10802090	CONTROL BLOCK
LOWERING BRAKE VALVE	570960608	36	2	684	12105406	TELESCOPIC CYLINDER
LOWERING BRAKE VALVE 420	10355774	150	1	516	96045552	HYDRAULICS UPPER CARRI
LOWERING BRAKE VALVE 420	10355776	157	1	591	96064697	HYDR.AUXILIARY HOISTING
LOWERING BRAKE VALVE 42	511636314	16	2	454	919501608	HYDRAULIC BALLASTING
LOWERING BRAKE VALVE 42	10292670	151	1	516	96045552	HYDRAULICS UPPER CARRI
LSB MODULE	10878159	10	1	703	96063458	TERMINAL BOX CPL.
LUBE OIL FILTER ASSEMBLY	10142942	150	1	131	13455311	DIESEL ENGINE
LUBE OIL PUMP WITH FASTE	10148432	140	1	131	13455311	DIESEL ENGINE
LUBRICATING OIL LINE 10X1	10140757	3	1	222	10140729	EXHAUST TC MOUNTING
LUBRICATING OIL LINE 6X1	9080310	5	1	212	10145278	ACCESSORIES AIR COMPRES
LUBRICATING OIL PUMP B=41,	12438990	1	1	177	10148432	LUBE OIL PUMP WITH FASTEN
LUFFING CYLINDER 320/290-3	12102922	1	1	626	919616808	LUFFING RAM W. PIVOT
LUFFING RAM W. PIVOT	919616808	111	1	12		LIEBHERR LTR 1100
LUMP HAMMER DIN 6475 3000	790031108	61	1	104	928569808	MAIN TOOLS
MACHINING CAN- STUETZP	96014807	2998	2	427	96023891	WIRING HARNESS
MACHINING CAN- STUETZP	96014807	2998	8	496	96049294	WIRING HARNESS
MAGNET	12109319	2	1	714	511493608	DIRECTIONAL CONTROL VALV
MAGNET 24V	570633808	(1)	1	619	969856508	ADDITIONAL HYDRAULICS
MAGNET 24V	570827808	1	1	546	511444408	DIRECTIONAL CONTROL VALV
MAGNET 24V	571135508	1	1	714	511493608	DIRECTIONAL CONTROL VALV
MAGNET COIL	10564740	(1)	1	33	967304508	UNDERCARRIAGE HYDRAULIC
MAGNET COIL	10564740	157	2	36	511302008	DIRECTIONAL CONTROL VALV
MAGNET COIL	11003699	(11)	1	550	10663060	CONTROL BLOCK
MAGNET COIL	571817708	8	2	539	571817608	DIRECTIONAL CONTROL VALV
MAGNET COIL	6204416	(1)	1	534	10802090	CONTROL BLOCK
MAGNET COIL 24V	10488103	10	1	532	11002717	DIRECTIONAL CONTROL VALV
MAGNET COIL 24V	11342414	(1)	2	35	10675161	CONTROL BLOCK
MAGNET COIL 24V	571910108	1	1	541	571453708	PRESSURE VALVE
MAGNET COIL 27V	12102117	1	1	544	571737808	DIRECTIONAL CONTROL VALV
MAGNET COIL 28V	570817908	1	1	542	570527908	DIRECTIONAL CONTROL VALV
MAGNET SWITCH	12108716	7	1	228	11386644	STARTER
MAIN BEARING 104/111/32	9073734	1	5	155	10116939	RS CRANKSHAFT BEARING K
MAIN BEARING 104/111/32 MIB	9075606	2	5	155	10116939	RS CRANKSHAFT BEARING K
MAIN FILTER ELEMENT	10294938	(1)	1	476	918729308	AIR FILTER UNIT
MAIN HOIST GEAR	919935508	125	1	13		LIEBHERR LTR 1100
MAIN HOISTING GEAR PRE-A	963564908	10	1	376	919935508	MAIN HOIST GEAR
MAIN HOISTING GEAR WELDE	962573308	1	1	378	963564908	MAIN HOISTING GEAR PRE-A
MAIN TOOLS	928569808	1	1	102	914860608	TOOLS AND ACCESSORIES
MAINTENANCE SWITCH 0,05	11101017	101	1	476	918729308	AIR FILTER UNIT
MALE CONNECTOR WSV 6 M1	12102343	7	7	478	915300208	CENT. LUBRIC. SYSTEM SUP
MANDRIL RIVET 4X10,3	704207608	7	4	87	96062922	MOUNTING PLATE PRE-ASS.
MANDRIL RIVET 4X15	704207708	200	4	111	919933708	LABELLING GREAT BRITAIN
MASTER PLUG 4-POL	602225508	518	1	426	96023891	WIRING HARNESS
MASTER PLUG 6-POL	602225608	519	1	426	96023891	WIRING HARNESS
MEASURING COUPLING SPF	475603308	705	8	519	96045552	HYDRAULICS UPPER CARRI
MECH MEAS AND WARNING D	96056273	2	1	728	919868808	CARRIER, MEAS. & WARN. D
MECH. DOUBLE FOLD JIB PRE	91001038	1	1	755	91001037	DOUBLE FOLDING JIB MECH.
MECHANICAL AUXILIARIES	96023050	19	1	516	96045552	HYDRAULICS UPPER CARRI

Description	Item	Pos.	Quantity	Page	Assembly	Description
MECHANICAL AUXILIARIES	96045217	30	1	96	919499008	BALLAST MONITORING
MECHANICAL AUXILIARIES	96045219	30	1	638	919502708	BALLAST MONITORING
MECHANICAL AUXILIARIES	96064701	19	1	591	96064697	HYDR.AUXILIARY HOISTING
MECHANICAL AUXILIARIES	96066401	100	1	603	91003677	EXTERNAL FEED
MECHANICAL AUXILIARIES	96075100	19	1	598	96075086	HYD.AUX.LIFT GEAR UPPER
MECHANICAL AUXILIARIES	968521308	19	1	33	967304508	UNDERCARRIAGE HYDRAULIC
MECHANICAL AUXILIARIES	968522208	19	1	63	967301408	PREPARATION HYDR
MECHANICAL AUXILIARIES	969849608	19	1	566	969767908	PIPEWORK AIR INSTALLATIO
MECHANICAL EXTENSION SYS	91000055	7	1	652	919935408	TELESCOPIC BOOM CPL.
MICRO SWITCH	10335596	3	4	436	10343693	JOYSTICK
MICROPHONE	11826513	2	1	650	12257818	CAR RADIO
MIRROR ATTACHM.AT SLEW.	916870808	144	1	13		LIEBHERR LTR 1100
MIRROR ATTACHM.IN CRANE	916049908	132	1	13		LIEBHERR LTR 1100
MIRROR RETAINER PRE-ASS.	966707708	2	1	440	916870808	MIRROR ATTACHM.AT SLEW.P
MIRROR SUPPORT 28X2 ST.37	979320608	1	1	402	916049908	MIRROR ATTACHM.IN CRANE
MODEM TELEMETRIEMODUL	12104397	8	1	87	96062922	MOUNTING PLATE PRE-ASS.
MODEM TELEMETRIEMODUL	12104397	19	1	498	919940108	SWITCHBOX MOUNTING PART
MONITOR HOUSING GLUED	963257908	2	1	321	96015921	OPERATING ELEMENT INSTAL
MONITOR SUPPORT 162X765	96015926	1	1	321	96015921	OPERATING ELEMENT INSTAL
MONITOR TFT 7 800X480	10876638	10	1	624	96036820	EQUIPMENT CAMERA CAB
MOTOR CONTROL DEVICE E	13470818	570	1	134	13455311	DIESEL ENGINE
MOTOR FLANGE A2FM 125	968607301	75	1	383	968607101	PLANETARY GEARBOX
MOTOR FLANGE EN-GJL-250	938996401	85	1	369	933074801	SLEWING GEAR DRIVE
MOTOR HOUSING	10014692	3	1	480	10327065	ELECTRIC PUMP
MOTOR HOUSING	10493920	1	1	480	10327065	ELECTRIC PUMP
MOTOR SUSPENSION	12108533	16	1	274	97095949	COMBINATED RADIATOR
MOULDING 317-1397-000 SUR	605212808	515	1	491	96063649	WIRING HARNESS
MOULDING 317-1397-000 SUR	605212808	528	2	494	96023971	WIRING HARNESS
MOUNTING HOOK ROD	968952708	2	1	779	917508408	TOOLS
MOUNTING MATERIAL	968693208	30	1	484	919940408	ELECTR. SYSTEM F.SLEWING
MOUNTING PARTS	10650403	49	1	397	10877138	OPERATOR SEAT
MOUNTING PARTS	11171275	65	1	397	10877138	OPERATOR SEAT
MOUNTING PARTS	11826654	27	1	448	10876576	WATER HEATING SYSTEM
MOUNTING PARTS	96045222	2	1	116	919498808	CENTRAL BALLAST
MOUNTING PARTS LWE	968374708	3	1	17	919950108	UNDERCARRIAGE COMPLETE
MOUNTING PLATE PRE-ASS.	96062922	3	1	84	96075205	SWITCH BOX COMPL.
MOUNTING PRE-ASS.	929582108	3	1	747	919933308	TRANSPORT MOUNTING
MOUNTING SHEET 61,7 S235J	10149476	2	1	225	10142863	GENERATOR, PRE-ASSEMBLE
MOUNTING WELDED	929582208	1	1	751	929582108	MOUNTING PRE-ASS.
MOUNTING WELDED T ZN O	963556008	52	1	673	91000054	TELESCOPIC SECT.5 PRE-AS
MOUNTING WELDED WARNEI	968410408	1	1	737	917825608	ADD-ON PARTS
MULTI-DISC CARRIER 100	938760901	65	1	383	968607101	PLANETARY GEARBOX
MULTI-DISC CARRIER 100	938760901	65	1	584	938759801	PLANETARY GEARBOX
MULTI-DISC CARRIER 42CrMo4	927716701	70	1	369	933074801	SLEWING GEAR DRIVE
MULTI-PLATE PLUG 28MM PE-	10678377	8	2	331	916162808	RELING
MULTI-PLATE PLUG PE-LLD	779020508	11	1	319	919010108	CRANE OPERATOR CABIN P
MULTI-PLATE PLUG PE-LLD	779020508	106	2	415	96024809	SLEWING PLATFORM PANELLI
MUSHROOM-SHAPED DRAWI	957056308	11	1	667	91000052	TELESCOPIC SECT.3 PRE-ASS
MUSHROOM-SHAPED DRAWI	957037908	11	1	664	91000051	TELESCOPIC SECT.2 PRE-AS
MUSHROOM-SHAPED DRAWI	957011408	11	1	661	91000050	TELESCOPIC SECTION 1 PRE
NAME PLATE 20X8	602761408	12	10	506	926891108	GROUND RAIL
NAME PLATE 70X40 POLYES	10288121	300	1	89	968252908	BTB PROGRAMMED
NAME PLATE 70X40 POLYES	10288121	(980)	1	431	96056347	ELECTRIC ADD-ON PARTS CA
NAME PLATE 70X40 POLYES	10288121	(980)	1	431	96056347	ELECTRIC ADD-ON PARTS CA
NAME PLATE 70X40 POLYES	10288121	(2)	1	435	96022872	CONTROL PANEL ROOF
NAME PLATE 70X40 POLYES	10288121	300	1	509	96069052	UNIVERSAL INPUT-OUTPUT M
NIPPLE GA10-45°H32	97057512	20	1	575	918627208	AIR COND. UNIT SUPERSTRU
NITROGEN TENSIONER CPL	790336014	2	1	23	790256114	GUIDE WHEEL UNIT CPL
NON-RETURN VALVE	10012943	3	1	550	10663060	CONTROL BLOCK
NON-RETURN VALVE	10119971	4	1	152	10139112	OIL LINE PRE-ASSEMBLY

Description	Item	Pos.	Quantity	Page	Assembly	Description
NON-RETURN VALVE	10430042	91	1	543	10333672	CONTROL BLOCK
NON-RETURN VALVE	10430042	131	1	543	10333672	CONTROL BLOCK
NON-RETURN VALVE	10801853	40	1	71	10356288	SUPPORT CYLINDER
NON-RETURN VALVE	11170277	2	1	547	511306608	CONTROL BLOCK
NON-RETURN VALVE	11692099	25	1	628	12102922	LUFFING CYLINDER
NON-RETURN VALVE	12101681	3	4	482	12101719	DISTRIBUTION BLOCK
NON-RETURN VALVE	510741308	4	8	538	511307808	CONTROL PLATE
NON-RETURN VALVE	570651408	27	1	528	11170515	VALVE BLOCK
NON-RETURN VALVE	570651408	27	1	530	11170518	VALVE BLOCK
NON-RETURN VALVE	570651408	27	1	602	10665173	CONTROL BLOCK
NON-RETURN VALVE	571889008	4	2	534	10802090	CONTROL BLOCK
NON-RETURN VALVE	591055608	10	2	355	916163008	WIPERS INSTALLATION
NON-RETURN VALVE	774378108	(1)	1	478	915300208	CENT. LUBRIC. SYSTEM SUP
NON-RETURN VALVE 2.5BAR P	11839607	100	1	263	918728708	DRIVE ASSEMBLY CPL.
NON-RETURN VALVE 250BAR	511481508	151	1	591	96064697	HYDR.AUXILIARY HOISTING
NON-RETURN VALVE 250BAR	511458608	188	1	517	96045552	HYDRAULICS UPPER CARRI
NON-RETURN VALVE 250BAR	511457808	401	2	295	969219208	OIL TANK PRE-ASS.
NON-RETURN VALVE 400BAR	510412408	164	1	516	96045552	HYDRAULICS UPPER CARRI
NON-RETURN VALVE 400BAR	510413508	170	1	516	96045552	HYDRAULICS UPPER CARRI
NON-RETURN VALVE 400BAR	511311808	179	1	516	96045552	HYDRAULICS UPPER CARRI
NON-RETURN VALVE 400BAR	511311808	153	1	591	96064697	HYDR.AUXILIARY HOISTING
NON-RETURN VALVE 400BAR	511446908	190	1	517	96045552	HYDRAULICS UPPER CARRI
NON-RETURN VALVE 400BAR	511460608	152	1	516	96045552	HYDRAULICS UPPER CARRI
NON-RETURN VALVE 400BAR	511460608	152	1	591	96064697	HYDR.AUXILIARY HOISTING
NON-RETURN VALVE 400BAR	511493708	151	1	709	965994108	HYDR.F.TELESCOPIC BOOM
NON-RETURN VALVE 400BAR	510410408	189	1	517	96045552	HYDRAULICS UPPER CARRI
NON-RETURN VALVE 400BAR	511431514	150	1	63	967301408	PREPARATION HYDR
NON-RETURN VALVE 420BAR	510412008	166	1	516	96045552	HYDRAULICS UPPER CARRI
NON-RETURN VALVE 420BAR	511491708	162	3	516	96045552	HYDRAULICS UPPER CARRI
NON-RETURN VALVE 420BAR	511491708	161	1	598	96075086	HYD.AUX.LIFT GEAR UPPER
NON-RETURN VALVE 420BAR	511432408	178	1	516	96045552	HYDRAULICS UPPER CARRI
NON-RETURN VALVE 420BAR	511432408	175	1	591	96064697	HYDR.AUXILIARY HOISTING
NOZZLE	12101218	2	1	648	10876885	GREASE SPRAYER
NOZZLE 0,4 M5X6 MS	510754308	25	2	522	11170514	VALVE BLOCK
NOZZLE 0,5 M10X10 MS	511062908	181	1	517	96045552	HYDRAULICS UPPER CARRI
NOZZLE 0,5 M5X9 MS	511062708	177	2	516	96045552	HYDRAULICS UPPER CARRI
NOZZLE 0,5 M5X9 MS	511062708	154	1	591	96064697	HYDR.AUXILIARY HOISTING
NOZZLE 0,5 M5X9 MS	511062708	152	1	709	965994108	HYDR.F.TELESCOPIC BOOM
NOZZLE 0,6 M5X5 MS	510754408	22	4	534	10802090	CONTROL BLOCK
NOZZLE 0,6 M5X5 MS	510754408	21	1	537	10665128	COVER
NOZZLE 0,8 M5	571527308	25	2	534	10802090	CONTROL BLOCK
NOZZLE 1,3 M10X10 MS SPF	10101092	187	1	517	96045552	HYDRAULICS UPPER CARRI
NOZZLE 1,3 M10X10 MS SPF	10101092	159	1	591	96064697	HYDR.AUXILIARY HOISTING
NOZZLE 1,5 M6	571877108	6	1	538	511307808	CONTROL PLATE
NOZZLE 1,6 M5	571704608	23	1	534	10802090	CONTROL BLOCK
NOZZLE 2,0 M10X10 ST	511062608	182	1	517	96045552	HYDRAULICS UPPER CARRI
NOZZLE 2,5 M10X10 ST	511064108	196	2	517	96045552	HYDRAULICS UPPER CARRI
NOZZLE DIN 913 0,6 M10X10 M	511062208	183	1	517	96045552	HYDRAULICS UPPER CARRI
NOZZLE DIN 913 1,2 M5X5 MS	571362208	24	1	522	11170514	VALVE BLOCK
NOZZLE HOLDER	12105795	1006	8	66	11481975	CONTROL BLOCK
NOZZLE SET PA	10815496	16	1	355	916163008	WIPERS INSTALLATION
NUT	10217383	9	2	539	571817608	DIRECTIONAL CONTROL VALV
NUT	10219618	1	1	276	10492431	PRESSURE LIMITING VALVE
NUT	10488102	6	1	532	11002717	DIRECTIONAL CONTROL VALV
NUT	10872448	5	1	544	571737808	DIRECTIONAL CONTROL VALV
NUT	11342417	(2)	1	35	10675161	CONTROL BLOCK
NUT	12100707	100	1	401	962282308	ARM REST RIGHT
NUT	510779908	29	1	37	510438508	PRESSURE RELIEF VALVE
NUT	571455308	(1)	1	542	570527908	DIRECTIONAL CONTROL VALV
NUT	7027459	(2)	1	33	967304508	UNDERCARRIAGE HYDRAULIC

Description	Item	Pos.	Quantity	Page	Assembly	Description
NUT	7027459	160	2	36	511302008	DIRECTIONAL CONTROL VALV
NUT DIN 15413 M100	12104472	31	1	741	919421708	HOOK BLOCK
NUT M10X1,5 X6NiCrTiMoVB	10120639	6	3	222	10140729	EXHAUST TC MOUNTING
NUT M18X1	12109804	(1)	2	52	968374908	LIMIT SWITCH ADD-ON
NUT M6X8	10878951	2	1	398	96032222	REWORK ARMREST LEFT
NUT M6X8	10878951	5	1	399	962282208	ARM REST LEFT
NUT M6X8	10878951	2	1	400	96032223	REWORK ARMREST RIGHT
NUT UNF7/8X14 13.9	10515048	30	248	55	10430241	CRAWLER CHAIN CPL.
NUT UNF7/8X14 13.9	10515048	2	4	57	965336308	REPAIR KIT CRAWLER CHAIN
NUT UNF7/8X14 13.9	10515048	2	8	58	965359808	REPAIR KIT CRAWLER CHAIN
NUT UNF7/8X14 13.9	10515048	2	12	59	965359908	REPAIR KIT CRAWLER CHAIN
O-RING 10,00X2,5 NBR90	10337381	(1)	2	543	10333672	CONTROL BLOCK
O-RING 10,00X2,5 NBR90	10337381	7	1	554	510697608	BALL VALVE
O-RING 10,8X1, 78 NEOPREN	5610999	32	2	575	918627208	AIR COND. UNIT SUPERSTRU
O-RING 10X2 NBR70	726406508	(22)	1	549	10877219	CONTROL BLOCK
O-RING 10X2,2 NBR70	502933208	430	1	476	918729308	AIR FILTER UNIT
O-RING 10X2,2 NBR70	502933208	(7)	2	516	96045552	HYDRAULICS UPPER CARRI
O-RING 12,42X1,78 TPU 90 SH	12105807	1101	8	66	11481975	CONTROL BLOCK
O-RING 12X2 NBR70	704274808	9	4	85	966167808	COVER COMPL.
O-RING 12X2 NBR70	704274808	8	2	303	10475262	SHUT OFF DEVICE
O-RING 12X2 NBR70	704274808	102	2	417	969392008	FRONT LEFT-HAND HOOD
O-RING 133,07X1,78 NBR 70	10099208	32	1	480	10327065	ELECTRIC PUMP
O-RING 140X3 NBR70	570163708	5	1	480	10327065	ELECTRIC PUMP
O-RING 145 FKM 75-17939	10282774	4	2	138	10154458	CYLINDER
O-RING 145 FKM 75-606	12894049	103	8	250	10148366	SEAL KIT DIESEL ENGINE
O-RING 14X2 NBR70	726411508	47	2	431	96056347	ELECTRIC ADD-ON PARTS CA
O-RING 14X3 NBR70	726405608	10	12	331	916162808	RELING
O-RING 14X3 NBR70	726405608	78	8	585	938759801	PLANETARY GEARBOX
O-RING 15,5X2,5 NBR70	10279914	(1)	1	534	10802090	CONTROL BLOCK
O-RING 155X3 NBR 70 SPF	726426601	31	1	380	968558601	COMPACT ROPE WINCH
O-RING 155X3 NBR 70 SPF	726426601	31	1	583	938707001	COMPACT ROPE WINCH
O-RING 15X3 NBR 70	726403401	78	6	383	968607101	PLANETARY GEARBOX
O-RING 165X3 FKM 70	726440001	73	1	369	933074801	SLEWING GEAR DRIVE
O-RING 16X2 NBR70	726407908	401	2	280	96035595	EXPANSION TANK PRE-ASS.
O-RING 16X2 NBR70	726407908	7	2	303	10475262	SHUT OFF DEVICE
O-RING 16X2 NBR70	726407908	(1)	1	306	96066239	PREMOUNTED FUEL FILTER
O-RING 175X3 NBR 70	726453601	24	1	369	933074801	SLEWING GEAR DRIVE
O-RING 17X2 FPM70	571082608	(2)	1	516	96045552	HYDRAULICS UPPER CARRI
O-RING 17X2 FPM70	571082608	(2)	1	591	96064697	HYDR.AUXILIARY HOISTING
O-RING 180X4 NBR70	726401808	2	2	42	96048348	INSTALLATION PARTS F.HYD
O-RING 18X2,5 NBR70	726406908	(1)	1	517	96045552	HYDRAULICS UPPER CARRI
O-RING 195X3 NBR 70	761021703	76	1	383	968607101	PLANETARY GEARBOX
O-RING 195X3 NBR 70	761021703	76	1	584	938759801	PLANETARY GEARBOX
O-RING 19X2,5 FKM80	10219619	2	1	276	10492431	PRESSURE LIMITING VALVE
O-RING 19X2,5 NBR70	726424108	(21)	2	549	10877219	CONTROL BLOCK
O-RING 20,3X2,4 NBR70	502932908	407	1	291	969543308	FUEL TANK, PRE-ASSEMBLED
O-RING 20X2 NBR90	510792708	8	2	554	510697608	BALL VALVE
O-RING 20X4 NBR 70	726414901	69	1	369	933074801	SLEWING GEAR DRIVE
O-RING 22X1,5 FPM70	571082708	(3)	1	516	96045552	HYDRAULICS UPPER CARRI
O-RING 22X2 NBR90	726418408	(8)	4	516	96045552	HYDRAULICS UPPER CARRI
O-RING 23,47X2,95 FKM 70-M	10129193	2	1	188	13703082	SEAL KIT INJECTOR
O-RING 23,52X1,78 HNBR 610	12105791	16	1	66	11481975	CONTROL BLOCK
O-RING 23,52X1,78 NBR90	514611808	(70)	1	261	12487540	HYDR.DOUBLE PUMP
O-RING 24X3 FKM 70	10217777	2	1	234	10128439	LOCKING PIECES
O-RING 24X3 FKM 70	10217777	5241	1	252	10148366	SEAL KIT DIESEL ENGINE
O-RING 25,5X2,3 TPU 90 SH	12105806	1100	4	66	11481975	CONTROL BLOCK
O-RING 26,7X1,78	12156873	1102	4	66	11481975	CONTROL BLOCK
O-RING 26X2,5 NBR70	502643508	433	1	269	918811108	DRIVE ASSEMBLY, PRE-ASSE
O-RING 290X6 NBR70	726428408	16	1	583	938707001	COMPACT ROPE WINCH
O-RING 300X3 NBR70	530032508	51	1	383	968607101	PLANETARY GEARBOX

Description	Item	Pos.	Quantity	Page	Assembly	Description
O-RING 300X6 EPDM 70	726458401	(3)	1	383	968607101	PLANETARY GEARBOX
O-RING 300X6 NBR70	726421508	16	1	380	968558601	COMPACT ROPE WINCH
O-RING 330X3 NBR 70	726429901	19	2	383	968607101	PLANETARY GEARBOX
O-RING 330X3 NBR 70	726429901	19	2	584	938759801	PLANETARY GEARBOX
O-RING 33X2,5 NBR70	726424708	400	1	280	96035595	EXPANSION TANK PRE-ASS.
O-RING 40,64X5,33 FKM 70	7381566	2	2	148	10121667	CONNECTING PIECE W.O-RIN
O-RING 4X1 NBR90	510712308	3	1	720	511479408	LOAD HOLDING VALVE
O-RING 59,92X3,53 HNBR 70	7381779	7	2	139	10147687	POWER UNIT SUPPORT ATT
O-RING 59X3 NBR70	726407608	2	1	555	510670808	LINE FILTER
O-RING 6X1 NBR90	570690608	33	1	480	10327065	ELECTRIC PUMP
O-RING 6X1 NBR90	570690608	7	1	524	571130108	PRESSURE LIMITING VALVE
O-RING 6X1 NBR90	570690608	3	1	547	511306608	CONTROL BLOCK
O-RING 7,6X1,78 NEOPREN	10216678	31	4	575	918627208	AIR COND. UNIT SUPERSTRU
O-RING 85X2 HNBR 70	10218370	2	1	228	11386644	STARTER
O-RING 85X2 HNBR 70	10218370	4501	1	251	10148366	SEAL KIT DIESEL ENGINE
O-RING 88,49X3,53	726431114	6	2	24	749013714	GUIDE WHEEL CPL
O-RING 88X3 ACM70	570979708	7	1	209	5700161	AIR COMPRESSOR
O-RING 8X2 NBR70	502652908	73	1	584	938759801	PLANETARY GEARBOX
O-RING 8X2 NBR90	10166157	73	1	383	968607101	PLANETARY GEARBOX
O-RING 94,5X3 VMQ 70	13711602	2	1	205	13701882	HEATING FLANGE COMPLETE
O-RING 95X3 NBR70	726405708	97	1	369	933074801	SLEWING GEAR DRIVE
O-RING 98,02X3,53 FKM 70-M	10128671	1801	2	251	10148366	SEAL KIT DIESEL ENGINE
O-RING 98,02X3,53 HNBR 70	7381995	4	1	229	10115664	LOCKING PIECES
O-RING 98,02X3,53 HNBR 70	7381995	4521	1	251	10148366	SEAL KIT DIESEL ENGINE
O-RING AEHNL.ISO 3601-1 100	11008055	2	1	201	10145173	INTAKE STACK ASSEMBLY
O-RING AEHNL.ISO 3601-1 101	7382158	2	1	247	10144027	LOCKING PIECES
O-RING AEHNL.ISO 3601-1 101	7382158	7	1	249	9078962	AUXILIARY DRIVE PRE-ASS.
O-RING AEHNL.ISO 3601-1 125	10002310	3	1	206	10127566	INSTALLATION BRAKE COMPR
O-RING AEHNL.ISO 3601-1 15,5	10113975	(2)	1	243	12583633	ENGINE CONTROL SENSORS
O-RING AEHNL.ISO 3601-1 21,	7381526	4	1	219	10142744	COOLING WATER AIR BLEED
O-RING AEHNL.ISO 3601-1 21,	7381526	3871	1	251	10148366	SEAL KIT DIESEL ENGINE
O-RING AEHNL.ISO 3601-1 25	10342770	3	1	163	10149578	CYLINDER HEAD
O-RING AEHNL.ISO 3601-1 26X	10004261	9	1	139	10147687	POWER UNIT SUPPORT ATT
O-RING AEHNL.ISO 3601-1 26X	10004261	4	1	173	10129475	OIL COOLER ASSEMBLY
O-RING AEHNL.ISO 3601-1 43	11066168	4	1	177	10148432	LUBE OIL PUMP WITH FASTEN
O-RING AEHNL.ISO 3601-1 6,2	7381448	(1)	1	531	11170519	VALVE BLOCK
O-RING AEHNL.ISO 3601-1 60	12212022	16	2	223	12512627	EXHAUST NOZZLE ATTACHM
O-RING AEHNL.ISO 3601-1 63,	7380970	7	1	203	10149677	CONNECTING LINE ADD-ON
O-RING AEHNL.ISO 3601-1 63,	7380970	434	1	269	918811108	DRIVE ASSEMBLY, PRE-ASSE
O-RING AEHNL.ISO 3601-1 7X1,	7381685	8	1	168	10120186	BALANCER ASSEMBLY
O-RING AEHNL.ISO 3601-1 7X1,	7381685	14	1	170	10147787	CAMSHAFT CPL.
O-RING AEHNL.ISO 3601-1 7X1,	7381685	901	1	250	10148366	SEAL KIT DIESEL ENGINE
O-RING AEHNL.ISO 3601-1 7X1,	7381685	1001	1	250	10148366	SEAL KIT DIESEL ENGINE
O-RING AEHNL.ISO 3601-1 94,5	10116255	(1)	1	205	13701882	HEATING FLANGE COMPLETE
O-RING AEHNL.ISO 3601-1 94,5	10116255	2601	1	251	10148366	SEAL KIT DIESEL ENGINE
O-RING ARP 568 10,52X1,83 NB	501243708	1	1	559	471030708	FITTING
O-RING ARP 568 10,82X1,78 NB	510718108	27	1	548	11170276	PRESSURE REDUCTION VALV
O-RING ARP 568 10,82X1,78 NB	510760408	32	1	388	11083498	AIR CONDITIONING UNIT
O-RING ARP 568 10,82X1,78 NB	510760408	11	1	523	11065879	PRESSURE VALVE
O-RING ARP 568 11,89X1,98 N	571130508	8	1	524	571130108	PRESSURE LIMITING VALVE
O-RING ARP 568 110,72X3,53	514615408	1	1	298	11600977	COVER
O-RING ARP 568 117,07X3,53	514614108	15	1	377	510240708	HYDRO MOTOR
O-RING ARP 568 12,37X2,62 NB	510746108	1	1	317	10218310	LOAD HOLDING VALVE
O-RING ARP 568 14X1,78 NBR9	515710608	31	1	388	11083498	AIR CONDITIONING UNIT
O-RING ARP 568 17,12X2,62 NB	510710108	3	2	37	510438508	PRESSURE RELIEF VALVE
O-RING ARP 568 17,12X2,62 NB	510710108	15	1	37	510438508	PRESSURE RELIEF VALVE
O-RING ARP 568 19,18X2,46 NB	571068108	12	1	523	11065879	PRESSURE VALVE
O-RING ARP 568 190,09X3,53	514604208	12	1	43	592326914	VARIABLE DISPLACEMENT MO
O-RING ARP 568 23,47x2,62 NB	570322408	(1)	1	272	96020819	RADIATOR, PRE-ASSEMBLED
O-RING ARP 568 23,52X1,78 N	570652308	64	1	537	10665128	COVER

Description	Item	Pos.	Quantity	Page	Assembly	Description
O-RING ARP 568 23,52X1,78 N	570652308	25	1	548	11170276	PRESSURE REDUCTION VALV
O-RING ARP 568 29,87X1,78 NB	510747808	(66)	2	534	10802090	CONTROL BLOCK
O-RING ARP 568 29,87X1,78 NB	510747808	66	2	536	10665127	COVER
O-RING ARP 568 31,42X2,62 NB	515706008	(1)	1	518	96045552	HYDRAULICS UPPER CARRI
O-RING ARP 568 32,92X3,53 NB	510587008	432	2	269	918811108	DRIVE ASSEMBLY, PRE-ASSE
O-RING ARP 568 32,92X3,53 NB	510587008	(1)	1	517	96045552	HYDRAULICS UPPER CARRI
O-RING ARP 568 32,92X3,53 NB	510587008	550	1	591	96064697	HYDR.AUXILIARY HOISTING
O-RING ARP 568 32,99X2,62 NB	510761708	5	3	525	10032696	CARTRIDGE
O-RING ARP 568 36,17X2,62 NB	570242808	69	1	685	570960608	LOWERING BRAKE VALVE
O-RING ARP 568 37,69X3,53 NB	510586708	304	2	517	96045552	HYDRAULICS UPPER CARRI
O-RING ARP 568 37,69X3,53 NB	510586708	(1)	1	517	96045552	HYDRAULICS UPPER CARRI
O-RING ARP 568 37,69X3,53 NB	510586708	551	3	709	965994108	HYDR.F.TELESCOPIC BOOM
O-RING ARP 568 4,47X1,78 NB	510714208	13	2	37	510438508	PRESSURE RELIEF VALVE
O-RING ARP 568 44,04X3,53 NB	570296608	2	1	297	11068050	FILTER ELEMENT
O-RING ARP 568 44,12X2,62 NB	514618308	68	1	685	570960608	LOWERING BRAKE VALVE
O-RING ARP 568 66,27X3,53 NB	518648508	6	1	371	510229408	HYDRO MOTOR
O-RING ARP 568 7,65X1,78 NB	726419408	10	2	523	11065879	PRESSURE VALVE
O-RING ARP 568 7,65X1,78 NB	726419408	63	2	537	10665128	COVER
O-RING ARP 568 72,62X3,53 NB	518629608	31	2	338	917305408	INTERNAL PANELLING INSTA
O-RING ARP 568 75,87X2,62 NB	514530408	15	1	372	570109008	DRIVING GEAR
O-RING ARP 568 9,25X1,78 NB	510719008	26	1	548	11170276	PRESSURE REDUCTION VALV
O-RING ARP 568 9,25X1,78 NB	510738608	(4)	4	540	511486908	CONTROL PLATE
O-RING ARP 568 98,02X3,53 NB	514613208	431	1	269	918811108	DRIVE ASSEMBLY, PRE-ASSE
O-RING ARP 568 98,02X3,53 NB	514613208	6	1	377	510240708	HYDRO MOTOR
O-RING DIN 3770 25X2,5 FPM7	726422308	313	1	566	969767908	PIPEWORK AIR INSTALLATIO
O-RING DIN 3771 28X3,55 NB	726404508	410	1	295	969219208	OIL TANK PRE-ASS.
O-RING DIN 3771 35,00X2,00	530151508	68	1	369	933074801	SLEWING GEAR DRIVE
O-RING DIN 3771 44X3 NBR70	726405908	5	1	48	96046146	PROTECTION CPL.
O-RING ISO 3601 23,6X2,9 NBR	571817308	(1)	1	487	966720708	ELECTR.FOR SLEWING GEAR
O-RING ISO 3601-1 101,27X2,6	7380605	5	1	202	10147364	AIR INTAKE ASSEMBLY
O-RING ISO 3601-1 101,27X2,6	7380605	430	1	269	918811108	DRIVE ASSEMBLY, PRE-ASSE
O-RING ISO 3601-1 107,54X3,53	10002167	4	2	216	10148215	THERMOSTAT HOUSING ASS
O-RING ISO 3601-1 12,37X2,62	7380935	(2)	1	205	13701882	HEATING FLANGE COMPLETE
O-RING ISO 3601-1 12,37X2,62	7380935	3	1	205	13701882	HEATING FLANGE COMPLETE
O-RING ISO 3601-1 12,37X2,62	7380935	2602	1	251	10148366	SEAL KIT DIESEL ENGINE
O-RING ISO 3601-1 132,94X3,53	7016016	(1)	1	215	10142733	WATER PUMP WITH FASTENIN
O-RING ISO 3601-1 132,94X3,53	7016016	(7)	1	215	10142733	WATER PUMP WITH FASTENIN
O-RING ISO 3601-1 132,94X3,53	7016016	7	1	215	10142733	WATER PUMP WITH FASTENIN
O-RING ISO 3601-1 132,94X3,53	7016016	3701	1	251	10148366	SEAL KIT DIESEL ENGINE
O-RING ISO 3601-1 17,17X1,78	7381103	2	1	235	10127979	LOCKING PIECES
O-RING ISO 3601-1 17,17X1,78	7381103	2	1	244	12544505	ROTATIONAL SPEED SENSOR
O-RING ISO 3601-1 17,17X1,78	7381103	5261	1	252	10148366	SEAL KIT DIESEL ENGINE
O-RING ISO 3601-1 34,59X2,62	7382059	5	1	177	10148432	LUBE OIL PUMP WITH FASTEN
O-RING ISO 3601-1 34,59X2,62	7380653	8	2	139	10147687	POWER UNIT SUPPORT ATT
O-RING ISO 3601-1 34,59X2,62	7380653	9	1	232	10115829	FLYWHEEL HOUSING ASSEM
O-RING ISO 3601-1 55,25X2,62	7380083	3	1	218	10142742	COOLANT PIPE BEND ADD-ON
O-RING ISO 3601-1 75,79X3,53	7009080	5	1	216	10148215	THERMOSTAT HOUSING ASS
O-RING ISO 3601-1 85,32X3,53	7381361	2	2	246	9078249	LOCKING PIECES
O-RING NEOPRENE (W)	7411823	30	1	575	918627208	AIR COND. UNIT SUPERSTRU
OIL AIR COOLER	10097345	10	2	562	919528608	OIL COOLER INSTALLATION
OIL AIR COOLER	550628308	103	1	272	96020819	RADIATOR, PRE-ASSEMBLED
OIL COOLER	10325001	3	1	174	10129474	OIL COOLER, PRE-ASSEMBLE
OIL COOLER	10354835	1	1	563	10097345	OIL AIR COOLER
OIL COOLER ASSEMBLY	10129475	130	1	131	13455311	DIESEL ENGINE
OIL COOLER HOUSING	10146722	1	1	174	10129474	OIL COOLER, PRE-ASSEMBLE
OIL COOLER INSTALLATION	919528608	187	1	14		LIEBHERR LTR 1100
OIL COOLER, PRE-ASSEMBLE	10129474	1	1	173	10129475	OIL COOLER ASSEMBLY
OIL DIPSTICK	10150935	1	1	149	10150934	OIL DIPSTICK CPL.
OIL DIPSTICK 1 1/8"	927554401	1	1	370	927554301	VENTILATION CONNECTING PI
OIL DIPSTICK 1 1/8"	927610201	15	1	384	939368401	OIL-GAUGING INSTRUMENT

Description	Item	Pos.	Quantity	Page	Assembly	Description
OIL DIPSTICK 1 1/8" MIT LUEF	500131501	1	1	586	927521201	OIL-LEVEL GAUGE INSTALLAT
OIL DIPSTICK CPL.	10150934	21	1	130	13455311	DIESEL ENGINE
OIL DRAIN PLUG M 30 1,5	5004624	6	1	146	10155227	OIL SUMP PRE-ASS.
OIL DRAIN PLUG M26X1,5	7365034	11	1	274	97095949	COMBINATED RADIATOR
OIL DRAIN PLUG M26X1,5	789011908	403	2	295	969219208	OIL TANK PRE-ASS.
OIL DRAINING HOSE COMPL.	10032297	68	1	104	928569808	MAIN TOOLS
OIL FILLER INLET	10118839	23	1	130	13455311	DIESEL ENGINE
OIL FILTER INSERT OEL	10877167	71	1	684	12105406	TELESCOPIC CYLINDER
OIL FILTER SCREW	12105789	7	1	66	11481975	CONTROL BLOCK
OIL LINE PRE-ASSEMBLY 10X	10139112	25	1	130	13455311	DIESEL ENGINE
OIL RESERVOIR, EXTENSION	918008908	109	1	12		LIEBHERR LTR 1100
OIL RETURN PIPE 10X1	10139111	1	1	152	10139112	OIL LINE PRE-ASSEMBLY
OIL RETURN PIPE 22X1,5	12847441	2	1	222	10140729	EXHAUST TC MOUNTING
OIL SIGHT GLASS G1" ALU	774320108	402	1	295	969219208	OIL TANK PRE-ASS.
OIL SUMP PRE-ASS. R-MOTO	10155227	1	1	145	10133837	OIL SUMP PRE-ASS.
OIL SUMP PRE-ASS. R-MOTOR	10133837	1	1	144	10132560	OIL SUMP WITH FASTENING
OIL SUMP WITH FASTENING R	10132560	20	1	130	13455311	DIESEL ENGINE
OIL TANK PRE-ASS. SPF	969219208	1	1	293	918008908	OIL RESERVOIR, EXTENSION
OIL TANK ST.CONST. SPF	969392608	1	1	295	969219208	OIL TANK PRE-ASS.
OIL-GAUGING INSTRUMENT	939368401	10	1	380	968558601	COMPACT ROPE WINCH
OIL-LEVEL GAUGE INSTALLAT	927521201	10	1	583	938707001	COMPACT ROPE WINCH
ONE-WAY RESTRICTOR	511497208	167	1	516	96045552	HYDRAULICS UPPER CARRI
ONE-WAY RESTRICTOR	511497208	156	1	591	96064697	HYDR.AUXILIARY HOISTING
OPERATING ELEMENT INSTA	96015921	2	1	319	919010108	CRANE OPERATOR CABIN P
OPERATING HOURS COUNTE	691798508	3	1	435	96022872	CONTROL PANEL ROOF
OPERATOR SEAT 1030/880NT	10877138	1	1	395	918810308	CONTROL STAND
ORIFICE	10870472	69	1	432	96056347	ELECTRIC ADD-ON PARTS CA
ORIFICE 3X741X401 ALMG3 H	97132326	5	1	461	96074081	UREA TANK, PRE-MOUNTING
OUTLET JET D=63 ABS	10301409	30	2	338	917305408	INTERNAL PANELLING INSTA
OUTLET JET D=82 T=5 PA	553193208	29	6	338	917305408	INTERNAL PANELLING INSTA
OUTLET MANIFOLD NW=38 X5	97081905	23	1	446	96019783	ADDNL.HEATING, PRE-ASSE
OUTLET MODULE SCRFILTER	11429877	30	1	475	11429845	SCRFILTER ASSEMBLY
OUTLET VALVE	10136751	(4)	2	160	10149580	CYLINDER HEAD ASSEMBLY
OUTLET VALVE	10136751	4	2	162	10149579	CYLINDER HEAD PRE-ASSY.
OUTPUT SHAFT 143,8 18CrNi	933074901	10	1	369	933074801	SLEWING GEAR DRIVE
OUTSIDE HANDLE ZUG	11005987	4	1	362	966230408	CLOSING DEVICE
OVAL LOAD RING 26X140X260	773924708	13	1	645	919950308	DISPATCH ASSY.MECH.PART
OVAL SCREW M4X12 10.9	514525208	20	7	372	570109008	DRIVING GEAR
OVERHEAT PROTECTION	10290127	24	1	448	10876576	WATER HEATING SYSTEM
OVERHEAT PROTECTION	10290127	(6)	1	448	10876576	WATER HEATING SYSTEM
PADLOCK ABUS-64TI/40 TITAL	885251508	2	1	104	928569808	MAIN TOOLS
PADLOCK ABUS-64TI/40 TITAL	885251508	3	2	780	917508508	LADDER ATTACHMENT
PAN-HEAD SCREW ISO 7045	408311208	19	4	87	96062922	MOUNTING PLATE PRE-ASS.
PAN-HEAD SCREW ISO 7045	408311208	21	4	498	919940108	SWITCHBOX MOUNTING PART
PAN-HEAD SCREW ISO 7045 M	12212474	7	4	610	96050762	ELECTRIC ADD-ON PARTS
PAN-HEAD SCREW ISO 7045 M	12219804	39	4	388	11083498	AIR CONDITIONING UNIT
PAN-HEAD SCREW ISO 7045	408401901	41	4	431	96056347	ELECTRIC ADD-ON PARTS CA
PAN-HEAD SCREW ISO 7045	10875472	13	1	703	96063458	TERMINAL BOX CPL.
PAN-HEAD SCREW ISO 7045 M	11658059	9	4	321	96015921	OPERATING ELEMENT INSTAL
PAN-HEAD SCREW ISO 7045 M	11658059	11	4	612	913753108	RADIO PREPARATION UPPER
PAN-HEAD SCREW ISO 7045 M	11658059	8	3	781	968940708	HOLDER LEFT
PAN-HEAD SCREW ISO 7045 M	11658059	8	3	782	968940808	HOLDER RIGHT
PAN-HEAD SCREW ISO 7045 M	10876384	82	2	502	96025348	BASE ASSEMBLY
PANELLING	966282408	2	1	338	917305408	INTERNAL PANELLING INSTA
PANELLING 120X526X308 ABS	97138958	21	1	338	917305408	INTERNAL PANELLING INSTA
PANELLING 127X1598X1088 AB	97001014	1	1	341	966282408	PANELLING
PANELLING 201X846X165 ABS	97006863	16	1	338	917305408	INTERNAL PANELLING INSTA
PANELLING ABOVE RIGHT 18	97001589	4	1	338	917305408	INTERNAL PANELLING INSTA
PANELLING FORCED AERATI	979206908	20	1	338	917305408	INTERNAL PANELLING INSTA
PANELLING MONITOR HOUSIN	979207008	3	1	321	96015921	OPERATING ELEMENT INSTAL

Description	Item	Pos.	Quantity	Page	Assembly	Description
PANELLING PEDAL 258X599X	97105652	3	1	327	96025887	PEDAL CANTILEVER INSTALL
PANELLING PEDAL 315X118X	97089358	4	1	327	96025887	PEDAL CANTILEVER INSTALL
PANELLING REST 82X599X144	97001553	17	1	338	917305408	INTERNAL PANELLING INSTA
PANELLING ROLLER BLIND 9	97001048	6	1	338	917305408	INTERNAL PANELLING INSTA
PANELLING,LEFT	966282308	1	1	338	917305408	INTERNAL PANELLING INSTA
PANELLING,LEFT 130X832X126	97001013	1	1	340	966282308	PANELLING,LEFT
PANELLING,STRUT LEFT 84X1	97001015	3	1	338	917305408	INTERNAL PANELLING INSTA
PARALLEL PIN DIN 6325 12M6	430709608	2	1	753	512353708	HYDRO CYLINDER
PARALLEL PIN ISO 2338 10H11	430670808	3	1	661	91000050	TELESCOPIC SECTION 1 PRE
PARALLEL PIN ISO 2338 10H11	430670808	3	1	664	91000051	TELESCOPIC SECT.2 PRE-AS
PARALLEL PIN ISO 2338 10H11	430670808	3	1	667	91000052	TELESCOPIC SECT.3 PRE-ASS
PARALLEL PIN ISO 2338 10H11	430670808	3	1	670	91000053	TELESCOPIC SECT.IV PRE-A
PARALLEL PIN ISO 2338 10H11	430670808	3	1	673	91000054	TELESCOPIC SECT.5 PRE-AS
PARALLEL PIN ISO 2338 4M6X	570109308	5	1	371	510229408	HYDRO MOTOR
PARALLEL PIN ISO 8734 6m6X	4980000	9	1	168	10120186	BALANCER ASSEMBLY
PARALLEL PIN ISO 8734 6m6X	4980000	(5)	1	170	10147787	CAMSHAFT CPL.
PARALLEL PIN ISO 8734 6m6X	4980736	5	1	170	10147787	CAMSHAFT CPL.
PASSAGE NIPPLE BLOCK	774375108	12	2	478	915300208	CENT. LUBRIC. SYSTEM SUP
PATCH CABLE 1M	10472203	5	1	425	96068695	CABLE LIST DRIVER'S CABIN
PATCH CABLE 4X2 AWG 26/7-5	10219462	6	1	425	96068695	CABLE LIST DRIVER'S CABIN
PEDAL CANTILEVER INSTALL	96025887	4	1	319	919010108	CRANE OPERATOR CABIN P
PEDAL TRANSDUCER 20° SPF	10343484	55	2	432	96056347	ELECTRIC ADD-ON PARTS CA
PEDESTAL 120X460X907 ALM	12102326	3	1	420	919484908	FALL PROTECTION
PEDESTAL 40X103X720 ALMG3	12103227	5	3	420	919484908	FALL PROTECTION
PEDESTAL 40X240X800 ALMG3	12102280	4	3	420	919484908	FALL PROTECTION
PENCIL-TYPE GLOW PLUG	11826649	40	1	448	10876576	WATER HEATING SYSTEM
PENCIL-TYPE GLOW PLUG	11826649	(10)	1	448	10876576	WATER HEATING SYSTEM
PERFORATED PLATE 75X75	9080377	8	1	146	10155227	OIL SUMP PRE-ASS.
PERFORMANCE RELAY 75A	11656191	43	2	502	96025348	BASE ASSEMBLY
PERSONAL PROTECTION EQ	916959808	98	1	12		LIEBHERR LTR 1100
PILOT LAMP 24V	10876030	34	1	431	96056347	ELECTRIC ADD-ON PARTS CA
PIN 115.0X228 35NICRMOV125	957017608	6	1	670	91000053	TELESCOPIC SECT.IV PRE-A
PIN 115.0X228 35NICRMOV125	957017608	6	1	673	91000054	TELESCOPIC SECT.5 PRE-AS
PIN 118X340 35NICRMOV125	956657414	8	8	47	968374708	MOUNTING PARTS
PIN 12.0X140 S355J2C+C FE//	942053708	12	4	119	96045222	MOUNTING PARTS
PIN 120.0X225 35NICRMOV125	972608108	2	1	626	919616808	LUFFING RAM W. PIVOT
PIN 125.0X233 35NICRMOV125	957011008	6	1	661	91000050	TELESCOPIC SECTION 1 PRE
PIN 125.0X233 35NICRMOV125	957011008	6	1	664	91000051	TELESCOPIC SECT.2 PRE-AS
PIN 125.0X233 35NICRMOV125	957011008	6	1	667	91000052	TELESCOPIC SECT.3 PRE-ASS
PIN 12X49 X5CRNI18-10	97170279	28	1	346	916162508	WINDOW ASSEMBLY
PIN 160.0x195 35NICRMOV125	956164808	3	1	626	919616808	LUFFING RAM W. PIVOT
PIN 160X50 35NICRMOV125 GA	956214014	29	2	22	96062226	CRAWLER CARRIER RIGHT CP
PIN 160X50 35NICRMOV125 GA	956214014	29	2	28	96062228	CRAWLER TRACK CARRIER LE
PIN 20.0 X160 S355J2+AR FE//	97053675	7	1	763	917695308	GUIDE PULLEY COMPL.
PIN 20.0X13 5 S355J2C+C FE//	955112308	24	1	771	918596708	HEAD SECTION PRE-ASS.
PIN 22X11 1.4301	97001103	3	2	364	966253908	WAGON
PIN 22X57 1.4305	97001095	3	2	363	966230508	GUIDE PRE-ASS.
PIN 25.0 X152 S355J2G3C+C	97061277	20	2	420	919484908	FALL PROTECTION
PIN 25.0X150 35NICRMOV125	97134816	10	2	422	96044789	
PIN 25.0X50 42CRMO4+QT	974922808	15	6	326	968483708	STEP CPL.
PIN 25.0X52 S355J2G3C+C FE//	971973608	3	1	399	962282208	ARM REST LEFT
PIN 25.0X52 S355J2G3C+C FE//	971973608	3	1	401	962282308	ARM REST RIGHT
PIN 30X132X95 35NICRMOV12	977252108	1	1	78	964765008	PIN COMPL.
PIN 35.0X165 35NICRMOV125	938865908	10	1	750	96062062	FOLDING BRACKET PRE-ASS.
PIN 35.0X264 35NICRMOV125	973635308	3	3	721	915415908	BOOM NOSE
PIN 35x81 42CRMO4+QT GASN	931913308	6	1	748	925280008	CONSOLE PRE-ASS.
PIN 39X18 1.4301	97007043	8	1	364	966253908	WAGON
PIN 45.0X140 35NICRMOV125	975686908	6	4	70	915447908	HYDRAULIC SUPPORT
PIN 45.0X53 35NICRMOV125	977242408	5	2	77	990618314	TRANSPORT SUPPORT
PIN 45.0X545 35NICRMOV125	97131534	1	1	422	96044789	

Description	Item	Pos.	Quantity	Page	Assembly	Description
PIN 45.0X65 35NICRMOV125	975758508	3	4	70	915447908	HYDRAULIC SUPPORT
PIN 50.0 X96 S355J2+AR FE//	97053674	6	1	763	917695308	GUIDE PULLEY COMPL.
PIN 50.0X135 35NICRMOV125	973106708	20	4	376	919935508	MAIN HOIST GEAR
PIN 50.0X175 35NICRMOV125	971799808	28	2	581	96062734	AUXILIARY HOISTING GEAR
PIN 50.0X360 35NICRMOV125	950477508	31	4	760	918533508	ADAPTER PRE-ASS.
PIN 55.0X10 3 35NICRMOV125	953766408	22	2	581	96062734	AUXILIARY HOISTING GEAR
PIN 55.0X147 35NICRMOV125	953620108	4	1	772	918221408	TENSION PLATE PRE-ASS.
PIN 60.0X675 S355J2C+C FE//	952228108	34	1	760	918533508	ADAPTER PRE-ASS.
PIN 65.0 X340 35NICRMOV125	951493908	2	1	374	916109208	ROTATING PLATFORM LOCK
PIN 65.0X300 35NICRMOV125	977240308	8	2	30	992078314	CENTRE PIECE
PIN 75X370X325 35NICRMOV12	956210114	9	2	30	992078314	CENTRE PIECE
PIN CARRIER 6-POL 16A	604526608	501	1	730	96058738	WIRING HARNESS
PIN CARRIER 6-POL 16A	604526608	501	1	775	96035674	LEAD
PIN CARRIER 6-POL 28A	12104874	501	1	608	96060353	LEAD
PIN CARRIER 6-POL 28A	12104874	501	1	611	96057250	LEAD
PIN COMPL.	964765008	3	2	77	990618314	TRANSPORT SUPPORT
PIN COMPL.	965010008	15	2	30	992078314	CENTRE PIECE
PIN COMPL.	965010008	19	2	30	992078314	CENTRE PIECE
PIN CONTACT 0,14-0,37MM2	11100228	762	9	589	96055198	WIRING HARNESS
PIN CONTACT 0,2-0,5MM2	10335819	689	3	427	96023891	WIRING HARNESS
PIN CONTACT 0,2-0,5MM2	10335819	689	4	428	96022870	WIRING HARNESS
PIN CONTACT 0,5-1,0MM2 CU	7369458	740	4	496	96049294	WIRING HARNESS
PIN CONTACT 0,5-1MM2MM2 C	10300944	715	2	427	96023891	WIRING HARNESS
PIN CONTACT 0,75-1,5MM2	6202444	95	1	490	96063649	WIRING HARNESS
PIN CONTACT 0,75-1,5MM2	6202444	95	3	493	96023971	WIRING HARNESS
PIN CONTACT 0,75-1MM2	604519208	628	3	730	96058738	WIRING HARNESS
PIN CONTACT 0,75-1MM2	604519208	628	3	775	96035674	LEAD
PIN CONTACT 0,75-2,5MM2	12104872	2338	6	608	96060353	LEAD
PIN CONTACT 0,75-2,5MM2	12104872	2338	3	611	96057250	LEAD
PIN CONTACT 0.5QMM2	605619814	139	2	589	96055198	WIRING HARNESS
PIN CONTACT 1,5MM2	604519108	637	4	730	96058738	WIRING HARNESS
PIN CONTACT 1,5MM2	604519108	637	2	775	96035674	LEAD
PIN DIN 1434 10X90X85 ST.50-	451000508	33	2	315	917357108	CRANE DRIVER CAB ADDITIO
PIN DIN 1434 5X40X35 X5CRN	451000208	1	1	736	96056560	WIND WARNING PREASSEMB
PIN DIN 1435 20X50X43 42CR	10875669	4	1	748	925280008	CONSOLE PRE-ASS.
PIN DIN 1435 20X50X43 42CR	10875669	4	3	751	929582108	MOUNTING PRE-ASS.
PIN DIN 1435 20X50X43 42CR	10875669	24	2	768	91001040	PIVOT SECTION, PRE-ASSEMB
PIN DIN 1435 25X75X65 ST.50	451226408	18	1	315	917357108	CRANE DRIVER CAB ADDITIO
PIN DIN 1435 8X50X47 ST.50	451210308	11	1	326	968483708	STEP CPL.
PIN DIN 1436 30X105X97 35NIC	451430808	4	1	77	990618314	TRANSPORT SUPPORT
PIN DIN 1436 30X105X97 35NIC	451430808	19	1	760	918533508	ADAPTER PRE-ASS.
PIN DIN 1436 30X105X97 35NIC	451430808	20	1	763	917695308	GUIDE PULLEY COMPL.
PIN DIN EN 22340 B20X390X37	452549108	36	2	673	91000054	TELESCOPIC SECT.5 PRE-AS
PIN DIN EN 22340 B55X170 42C	450044814	22	4	454	919501608	HYDRAULIC BALLASTING
PIN HOUSING 6-POL PBT GF	12697283	501	1	706	96063415	WIRING HARNESS
PIN ISO 2340 B10X90X81 ST.50	452552708	42	1	760	918533508	ADAPTER PRE-ASS.
PIN ISO 2340 B20X110X94 ST.	452540908	2	1	723	964502908	BOOM NOSE PRE-ASS.
PIN ISO 2340 B20X135X120 ST.	450023108	9	1	768	91001040	PIVOT SECTION, PRE-ASSEMB
PIN ISO 2340 B20X135X120 ST.	450023108	13	1	771	918596708	HEAD SECTION PRE-ASS.
PIN ISO 2340 B20X190X175 4	450023508	38	1	760	918533508	ADAPTER PRE-ASS.
PIN ISO 2340 B20X400X387 ST	452550908	2	1	60	991456314	ACCESS COMPL
PIN ISO 2340 B50X120X96 35N	452550508	56	1	760	918533508	ADAPTER PRE-ASS.
PIN ISO 2340 B50X120X96 35N	452550508	3	2	772	918221408	TENSION PLATE PRE-ASS.
PIN ISO 2340-B B20X85X69 S3	450022014	9	4	119	96045222	MOUNTING PARTS
PIN ISO 2340-B B70X180X152 L	485501014	19	2	454	919501608	HYDRAULIC BALLASTING
PIN ISO 2341 B16X152X146 ST.	453009308	8	1	763	917695308	GUIDE PULLEY COMPL.
PIN ISO 2341 B20X115X107 ST	453020908	35	1	747	919933308	TRANSPORT MOUNTING
PIN ISO 2341 B20X115X107 ST	453020908	12	1	768	91001040	PIVOT SECTION, PRE-ASSEMB
PIN ISO 2341 B20X115X107 ST	453020908	8	2	771	918596708	HEAD SECTION PRE-ASS.
PIN ISO 2341 B45X102X85 35N	453041108	57	2	760	918533508	ADAPTER PRE-ASS.

Description	Item	Pos.	Quantity	Page	Assembly	Description
PIN ISO 2341 B6X25X22 ST 480	10875678	16	1	326	968483708	STEP CPL.
PIN RD30X107 42CRMO4+QT	956349008	3	1	750	96062062	FOLDING BRACKET PRE-ASS.
PIN RD35X71 35NICRMOV125	944029908	30	1	747	919933308	TRANSPORT MOUNTING
PIN RD35X88 35NICRMOV125	942439808	7	1	760	918533508	ADAPTER PRE-ASS.
PIN RD40X140 35NICRMOV125	940315108	7	2	723	964502908	BOOM NOSE PRE-ASS.
PIN RD40X160 42CRMO4+QT	939048708	14	1	768	91001040	PIVOT SECTION, PRE-ASSEMB
PIN RD40X270 35NICRMOV125	950477408	2	4	771	918596708	HEAD SECTION PRE-ASS.
PIN RD49.5X58 42CRMO4+QT	956349108	4	1	750	96062062	FOLDING BRACKET PRE-ASS.
PIN WITH HEAD 50.0X182 35N	97035300	12	1	315	917357108	CRANE DRIVER CAB ADDITIO
PIPE CLAMP 12/15	774221408	3	1	734	96056553	LOCATION FIXTURE PRE-ASS.
PIPE CLAMP 33/20	774225008	10	2	446	96019783	ADDNL.HEATING, PRE-ASSE
PIPE CLAMP 43/20	774221708	21	3	444	918759708	ADD HEATING SUPERSTRUCT
PIPE CLAMP 8 S235JR	10127139	23	2	223	12512627	EXHAUST NOZZLE ATTACHM
PIPE CLAMP DIN3016 8X15XR	10876636	180	1	470	919674308	EXHAUST SYSTEM
PIPE COMPL.	918998614	10	2	19	96062225	UNDERCARRIAGE CPL.
PIPE COMPL.	96047747	(1)	1	470	919674308	EXHAUST SYSTEM
PIPE COMPL.	96051456	(2)	1	470	919674308	EXHAUST SYSTEM
PIPE COMPL.	968661408	405	2	269	918811108	DRIVE ASSEMBLY, PRE-ASSE
PIPE COMPL. 10X1,5X134	921512708	491	1	711	967498308	PIPELINES TELESCOPIC
PIPE COMPL. 10X1,5X167	921513008	494	1	711	967498308	PIPELINES TELESCOPIC
PIPE COMPL. 10X1,5X174	921513108	495	1	711	967498308	PIPELINES TELESCOPIC
PIPE COMPL. 10X1,5X214	921512608	490	1	711	967498308	PIPELINES TELESCOPIC
PIPE COMPL. 10X1,5X278	921513208	496	1	711	967498308	PIPELINES TELESCOPIC
PIPE COMPL. 10X1,5X679	921512808	492	1	711	967498308	PIPELINES TELESCOPIC
PIPE COMPL. 10X1,5X992	921512908	493	1	711	967498308	PIPELINES TELESCOPIC
PIPE COMPL. 12X1,5X165	926894508	476	1	573	919028108	PIPELINES SUPERSTRUCTUR
PIPE COMPL. 18X1,5X1291	969865708	(382)	1	566	969767908	PIPEWORK AIR INSTALLATIO
PIPE COMPL. 18X1,5X1312	969865608	(381)	1	566	969767908	PIPEWORK AIR INSTALLATIO
PIPE COMPL. 18X1,5X1636	969865508	(380)	1	566	969767908	PIPEWORK AIR INSTALLATIO
PIPE COMPL. 30X4X1018,5	96025929	432	1	573	919028108	PIPELINES SUPERSTRUCTUR
PIPE COMPL. 30X4X1033,9	96025928	431	1	573	919028108	PIPELINES SUPERSTRUCTUR
PIPE COMPL. 30X4X1079,7	96025930	433	1	573	919028108	PIPELINES SUPERSTRUCTUR
PIPE COMPL. 30X4X1081,4	96025927	430	1	573	919028108	PIPELINES SUPERSTRUCTUR
PIPE COMPL. 35X2X473	963533708	291	1	573	919028108	PIPELINES SUPERSTRUCTUR
PIPE COMPL. 38X5X1410	968613908	478	1	573	919028108	PIPELINES SUPERSTRUCTUR
PIPE COMPL. 38X5X1532	968613808	477	1	573	919028108	PIPELINES SUPERSTRUCTUR
PIPE COMPL. 38X5X203	921297408	497	1	711	967498308	PIPELINES TELESCOPIC
PIPE COMPL. 38X5X206	921297608	499	1	711	967498308	PIPELINES TELESCOPIC
PIPE COMPL. 38X5X258	921297508	498	1	711	967498308	PIPELINES TELESCOPIC
PIPE COMPL. 38X5X260	968612908	252	1	601	968543908	PIPELINES HOISTING GEAR 2
PIPE COMPL. 38X5X260	968613508	473	1	573	919028108	PIPELINES SUPERSTRUCTUR
PIPE COMPL. 38X5X356	968613608	474	3	573	919028108	PIPELINES SUPERSTRUCTUR
PIPE COMPL. 38X5X380	968613408	472	1	573	919028108	PIPELINES SUPERSTRUCTUR
PIPE COMPL. 38X5X615	968613708	475	1	573	919028108	PIPELINES SUPERSTRUCTUR
PIPE COMPL. 42X3X1970	968614008	479	1	573	919028108	PIPELINES SUPERSTRUCTUR
PIPE COMPL. 42X3X440	963533608	290	1	573	919028108	PIPELINES SUPERSTRUCTUR
PIPE COMPL. 6X1X210	962261308	(487)	1	717	966004808	ADDNL.HYDR. FOLDING JIB
PIPE COND. FOLDING SEAT	967498608	11	1	717	966004808	ADDNL.HYDR. FOLDING JIB
PIPE SOCKET GSCK45	97042155	6	1	392	969300008	HEATING, PRE-ASSEMBLED
PIPE SOCKET R1/4"	10014698	1	1	483	774375108	PASSAGE NIPPLE BLOCK
PIPE WELDED	96055524	66	1	673	91000054	TELESCOPIC SECT.5 PRE-AS
PIPE WELDED RAL 9005,M,GT	966620008	13	1	338	917305408	INTERNAL PANELLING INSTA
PIPE WELDED RAL 9005,M,GT	966621108	12	1	338	917305408	INTERNAL PANELLING INSTA
PIPE WELDED SCHWARZ PUL	966513708	17	1	349	966497908	FRONT WINDOW CPL.
PIPE WELDED SCHWARZ PUL	966662508	6	1	319	919010108	CRANE OPERATOR CABIN P
PIPELINE	10143542	4	1	196	10143341	FUEL LINES
PIPELINE	10143543	3	1	196	10143341	FUEL LINES
PIPELINE 10X1	12921811	1	1	217	10148216	PIPELINE INSTALLATION
PIPELINE 15X1,5	10130104	6	1	196	10143341	FUEL LINES
PIPELINE 22X1,5	10140732	9	1	201	10145173	INTAKE STACK ASSEMBLY

Description	Item	Pos.	Quantity	Page	Assembly	Description
PIPELINE 22X1,5	10145175	1	1	211	10145176	PIPELINE INSTALLATION
PIPELINE 6X1	10132170	3	1	198	10143342	LEAK OIL RETURN LINE
PIPELINE 6X1	10133607	13	1	198	10143342	LEAK OIL RETURN LINE
PIPELINE 6X1	10141846	8	1	198	10143342	LEAK OIL RETURN LINE
PIPELINE 6X1	11420632	3	1	224	11420633	CYCLE VALVE
PIPELINE 6X1	12429430	4	1	224	11420633	CYCLE VALVE
PIPELINE 6X1	9078984	4	1	248	9078961	POWER TAKE-OFF ADD-ON
PIPELINE 8X1	10132180	19	1	198	10143342	LEAK OIL RETURN LINE
PIPELINE 8X1	10145069	17	1	223	12512627	EXHAUST NOZZLE ATTACHM
PIPELINE 8X1	10145070	18	1	223	12512627	EXHAUST NOZZLE ATTACHM
PIPELINE 8X2	10143251	1	1	198	10143342	LEAK OIL RETURN LINE
PIPELINE ADDITIONAL PARTS	969849308	11	1	566	969767908	PIPEWORK AIR INSTALLATIO
PIPELINE INSTALLATION	10145176	333	1	133	13455311	DIESEL ENGINE
PIPELINE INSTALLATION	10148216	381	1	133	13455311	DIESEL ENGINE
PIPELINES DRIVE ASSEMBLY	96002103	7	1	268	918811108	DRIVE ASSEMBLY, PRE-ASSE
PIPELINES HOISTING GEAR 2	968543908	11	1	598	96075086	HYD.AUX.LIFT GEAR UPPER
PIPELINES SUPERSTRUCTUR	919028108	193	1	14		LIEBHERR LTR 1100
PIPELINES TELESCOPIC SCR	967498308	11	1	709	965994108	HYDR.F.TELESCOPIC BOOM
PIPEWORK AIR INSTALLATIO	969767908	4	1	564	918118408	COMPRESSED-AIR SYST.SU
PISTON	10152593	1	1	176	10152592	PRESSURE RELIEF VALVE
PISTON	510713708	4	1	37	510438508	PRESSURE RELIEF VALVE
PISTON	570110608	4	7	373	570109508	DRIVING GEAR
PISTON	571582608	13	1	209	5700161	AIR COMPRESSOR
PISTON	790272214	1	1	25	749065414	TENSION JACK HYDR CPL
PISTON 16MnCrS5	13730923	8	1	174	10129474	OIL COOLER, PRE-ASSEMBLE
PISTON 31CrMoV9	10149655	1	1	141	10138450	FINAL CONTROL VALVE
PISTON COOLING	10142749	15	4	130	13455311	DIESEL ENGINE
PISTON COOLING PRE-ASS.	10151634	1	1	142	10142749	PISTON COOLING
PISTON CPL. R-MOTORX130	10146367	70	4	131	13455311	DIESEL ENGINE
PISTON RING MG 130X120,5X	12476138	4	1	159	10146367	PISTON CPL.
PIVOT HEAD	10491613	1	1	316	10650940	TILT CYLINDER
PIVOT PIECE ST. CONST.	96062032	1	1	768	91001040	PIVOT SECTION, PRE-ASSEMB
PIVOT PIECE ST. CONST. SPF	91000079	1	1	655	91000049	PIVOT SECTION, PRE-ASSEMB
PIVOT SECTION, PRE-ASSEMB	91000049	1	1	652	919935408	TELESCOPIC BOOM CPL.
PIVOT SECTION, PRE-ASSEMB	91001040	2	1	757	91001038	MECH. DOUBLE FOLD JIB PR
PL LATCH	10331874	3	1	739	910543708	LOAD HOOK
PLAIN BEARING BUSHING 30	9889290	(2)	2	210	9072906	INTERMEDIATE GEAR CPL.
PLANET WHEEL	927530801	40	6	369	933074801	SLEWING GEAR DRIVE
PLANET WHEEL	927601401	7	5	383	968607101	PLANETARY GEARBOX
PLANET WHEEL	927602101	32	3	383	968607101	PLANETARY GEARBOX
PLANET WHEEL Z=27	938760201	42	3	383	968607101	PLANETARY GEARBOX
PLANET WHEEL Z=28	939251101	20	5	369	933074801	SLEWING GEAR DRIVE
PLANETARY CARRIER 150 42C	939251501	35	1	369	933074801	SLEWING GEAR DRIVE
PLANETARY CARRIER 150 42C	939257301	50	1	369	933074801	SLEWING GEAR DRIVE
PLANETARY CARRIER 170 42	939250301	15	1	369	933074801	SLEWING GEAR DRIVE
PLANETARY CARRIER 215 42	938760101	40	1	383	968607101	PLANETARY GEARBOX
PLANETARY CARRIER 275 42C	927602001	30	1	383	968607101	PLANETARY GEARBOX
PLANETARY GEARBOX	968607101	5	1	380	968558601	COMPACT ROPE WINCH
PLANETARY GEARBOX PEG 40	938759801	5	1	583	938707001	COMPACT ROPE WINCH
PLASTIC PIPE COMPLETE	969383908	(2331)	1	461	96074081	UREA TANK, PRE-MOUNTING
PLATE	10142763	2	1	219	10142744	COOLING WATER AIR BLEED
PLATE	518565008	46	1	684	12105406	TELESCOPIC CYLINDER
PLATE 1.5X107X120 DC01 RAL	97006876	37	1	338	917305408	INTERNAL PANELLING INSTA
PLATE 1.5X110X178 DC01 FE//	97013718	(1)	1	431	96056347	ELECTRIC ADD-ON PARTS CA
PLATE 1.5X131X117 DC01 FE//	97002645	3	1	329	916170808	CABLE INLET
PLATE 1.5X156X117 DC01	97016796	11	1	502	96025348	BASE ASSEMBLY
PLATE 1.5X170X50 DC01 FE//	976673908	27	6	315	917357108	CRANE DRIVER CAB ADDITIO
PLATE 1.5X174X114 DC01 RAL	976094108	5	1	329	916170808	CABLE INLET
PLATE 1.5X204X178 DC01 FE//	97015052	2	1	507	968015808	PRE-ASSEMBLY MOUNTING U
PLATE 1.5X25X47 DC01 RAL 7	97006875	36	1	338	917305408	INTERNAL PANELLING INSTA

Description	Item	Pos.	Quantity	Page	Assembly	Description
PLATE 1.5X290X162 DC01 FE//	97000735	2	1	329	916170808	CABLE INLET
PLATE 1.5X349X152 DC01 FE//	97154530	2	1	87	96062922	MOUNTING PLATE PRE-ASS.
PLATE 1.5X436X90 DC01 RAL 7	97003298	24	1	338	917305408	INTERNAL PANELLING INSTA
PLATE 1.5X44X97 X5CRNI18-1	97015722	16	1	319	919010108	CRANE OPERATOR CABIN P
PLATE 1.5X551X299 DC01 RAL	97002609	23	1	338	917305408	INTERNAL PANELLING INSTA
PLATE 1.5X560X43 DC01 FE//	97091350	8	1	280	96035595	EXPANSION TANK PRE-ASS.
PLATE 1.5X682X49 X5CRNI18-1	97030182	2	1	734	96056553	LOCATION FIXTURE PRE-ASS.
PLATE 1.5X72X538 X5CRNI18-1	97000469	15	1	338	917305408	INTERNAL PANELLING INSTA
PLATE 1.5X832X41 DC01 RAL 7	97027494	65	1	339	917305408	INTERNAL PANELLING INSTA
PLATE 1.5X90X96 DC01 RAL 90	976167908	16	1	431	96056347	ELECTRIC ADD-ON PARTS CA
PLATE 1.5X95X40 DC01 RAL 90	97025127	35	3	349	966497908	FRONT WINDOW CPL.
PLATE 100X290 DC01 FE//ZNNI	97011478	27	2	47	968374708	MOUNTING PARTS
PLATE 103X20 S315MC FE//ZN	952859808	9	1	272	96020819	RADIATOR, PRE-ASSEMBLED
PLATE 10X194X25 S355MC FE//	97165309	71	2	661	91000050	TELESCOPIC SECTION 1 PRE
PLATE 10X194X25 S355MC FE//	97165309	71	2	664	91000051	TELESCOPIC SECT.2 PRE-AS
PLATE 10X194X25 S355MC FE//	97165309	71	2	667	91000052	TELESCOPIC SECT.3 PRE-ASS
PLATE 10X194X25 S355MC FE//	97165309	71	2	670	91000053	TELESCOPIC SECT.IV PRE-A
PLATE 10X194X35 S355MC FE//	97154023	79	2	656	91000049	PIVOT SECTION, PRE-ASSEMB
PLATE 10X220X290 S960QL	956758608	5	1	679	91000055	MECHANICAL EXTENSION SYS
PLATE 10X22X66 S355MC FE//	97133541	2	1	48	96046146	PROTECTION CPL.
PLATE 10X345X70 S355MC FE//	97172678	15	4	420	919484908	FALL PROTECTION
PLATE 10X434X69 S700MC	97070023	27	1	747	919933308	TRANSPORT MOUNTING
PLATE 110X34 S315MC FE//ZN	979132008	80	1	673	91000054	TELESCOPIC SECT.5 PRE-AS
PLATE 110X34 S315MC FE//ZN	979132008	5	1	726	967321308	FIXING DEVICE 2.LIFT TOP
PLATE 15X135X128 S690QL F	953856308	51	1	760	918533508	ADAPTER PRE-ASS.
PLATE 15X300X120 S355MC FE	976541108	8	4	119	96045222	MOUNTING PARTS
PLATE 15X95X220 S960QL	975257708	6	4	374	916109208	ROTATING PLATFORM LOCK
PLATE 18X66X117 S355J2+N	97133540	1	1	48	96046146	PROTECTION CPL.
PLATE 196X63 S315MC FE//ZN	955668108	13	2	124	918728408	ASSEMBLY PARTS F.SLEWING
PLATE 1X128X128 DC01 FE//ZN	97045516	18	2	763	917695308	GUIDE PULLEY COMPL.
PLATE 1X128X128 DC01 FE//ZN	97045516	6	2	768	91001040	PIVOT SECTION, PRE-ASSEMB
PLATE 1X128X128 DC01 FE//ZN	97045516	10	1	771	918596708	HEAD SECTION PRE-ASS.
PLATE 1X157X157 DC01 FE//ZN	976986008	9	4	315	917357108	CRANE DRIVER CAB ADDITIO
PLATE 1X176X176 X5CRNI18-1	974792608	(1)	1	407	96022627	SLEWING PLATFORM PANELLI
PLATE 1X285X126 DC01 RAL 9	977444308	17	1	395	918810308	CONTROL STAND
PLATE 1X285X126 DC01 RAL 9	977444408	18	1	395	918810308	CONTROL STAND
PLATE 1X35X100 DC01 FE//ZN	957068708	24	3	581	96062734	AUXILIARY HOISTING GEAR
PLATE 1X681X57 DC01 FE//ZN	97027312	18	3	407	96022627	SLEWING PLATFORM PANELLI
PLATE 1X70X80 DC01 FE//ZNNI	953515508	6	3	290	917962508	FUEL TANK ADD-ON UNIT
PLATE 1X70X80 DC01 FE//ZNNI	953515508	4	3	293	918008908	OIL RESERVOIR, EXTENSION
PLATE 1X86X40 DC01 FE//ZNNI	97084143	4	2	658	96014777	LIFTING ROPE GUIDE PREAS
PLATE 1X90X60 DC01 FE//ZNNI	97032616	5	2	52	968374908	LIMIT SWITCH ADD-ON
PLATE 2.5X130X28 DC01 RAL	979022608	7	2	350	965784408	ROOF WINDOW PRE-ASS.
PLATE 2.5X699X839 ALMG3 H1	97039558	1	1	332	968462608	INSTALLATION SWITCH CAB. C
PLATE 2.5X71X196 DC01 RAL	97022452	53	1	431	96056347	ELECTRIC ADD-ON PARTS CA
PLATE 20X126X40 S355J2+N	97118866	9	2	473	96051762	EXHAUST SYSTEM PRE-ASSE
PLATE 20X45X230 S690QL	953608508	5	2	747	919933308	TRANSPORT MOUNTING
PLATE 235X575 DC01 FE//ZNNI	97100731	4	1	287	96024716	BATTERY BOX, PRE-ASSEMB
PLATE 2X114X114 DC01 FE//ZN	957018808	8	4	670	91000053	TELESCOPIC SECT.IV PRE-A
PLATE 2X114X114 DC01 FE//ZN	957018808	8	4	673	91000054	TELESCOPIC SECT.5 PRE-AS
PLATE 2X124X124 DC01 FE//ZN	957011208	8	4	661	91000050	TELESCOPIC SECTION 1 PRE
PLATE 2X124X124 DC01 FE//ZN	957011208	8	4	664	91000051	TELESCOPIC SECT.2 PRE-AS
PLATE 2X124X124 DC01 FE//ZN	957011208	8	4	667	91000052	TELESCOPIC SECT.3 PRE-ASS
PLATE 2X128X128 DC01 FE//ZN	97045517	7	1	768	91001040	PIVOT SECTION, PRE-ASSEMB
PLATE 2X128X128 DC01 FE//ZN	97045517	11	1	771	918596708	HEAD SECTION PRE-ASS.
PLATE 2X140X265 X5CRNI18-1	97059260	2	1	461	96074081	UREA TANK, PRE-MOUNTING
PLATE 2X143X88 DC01 FE//ZN	97083880	1	1	506	926891108	GROUND RAIL
PLATE 2X143X92 X5CRNI18-10	97030562	3	1	736	96056560	WIND WARNING PREASSEMB
PLATE 2X155X38 DC01 FE//ZN	971067708	1	1	726	967321308	FIXING DEVICE 2.LIFT TOP
PLATE 2X156X137 DC01 RAL 7	97071962	15	1	329	916170808	CABLE INLET

Description	Item	Pos.	Quantity	Page	Assembly	Description
PLATE 2X158X79 DC01 FE//ZN	97061320	8	1	268	918811108	DRIVE ASSEMBLY, PRE-ASSE
PLATE 2X162X131 DC01 FE//ZN	97013089	20	1	268	918811108	DRIVE ASSEMBLY, PRE-ASSE
PLATE 2X162X142 ALMG3 H11	976536208	3	1	507	968015808	PRE-ASSEMBLY MOUNTING U
PLATE 2X165X115 DC01 FE//ZN	973733508	21	1	268	918811108	DRIVE ASSEMBLY, PRE-ASSE
PLATE 2X170X116 DC01 FE//ZN	97049613	37	1	407	96022627	SLEWING PLATFORM PANELLI
PLATE 2X170X51 DC01 FE//ZN	97024781	19	1	346	916162508	WINDOW ASSEMBLY
PLATE 2X177X240 DC01 FE//ZN	97006461	9	1	355	916163008	WIPERS INSTALLATION
PLATE 2X188X40 DC01 FE//ZN	978661408	1	1	508	966193108	RESISTANCE MODULE PRE-A
PLATE 2X195X66 X5CRNI18-10	974742308	7	1	410	969425608	FLAP RIGHT PRE-ASS.
PLATE 2X200X100 X5CRNI18-1	975352908	1	1	595	96062735	SIGNS
PLATE 2X227X109 DC01 FE//ZN	97005289	5	1	349	966497908	FRONT WINDOW CPL.
PLATE 2X231X192 DC01 RAL	97025080	24	1	624	96036820	EQUIPMENT CAMERA CAB
PLATE 2X236X50 X5CRNI18-10	974656608	7	1	416	969399608	FLAP PRE-ASS.
PLATE 2X245X245 DC01 FE//ZN	953744908	61	2	655	91000049	PIVOT SECTION, PRE-ASSEMB
PLATE 2X275X250 DC01 FE//ZN	979896608	1	1	87	96062922	MOUNTING PLATE PRE-ASS.
PLATE 2X278X250 DC01 FE//ZN	97140373	13	2	652	919935408	TELESCOPIC BOOM CPL.
PLATE 2X290X100 DC01 FE//ZN	97037945	28	2	47	968374708	MOUNTING PARTS
PLATE 2X291X205 X5CRNI18-1	973272208	5	1	623	915403108	ADD-ON PARTS CAMERA
PLATE 2X300X125 DC01 FE//ZN	97045050	25	1	268	918811108	DRIVE ASSEMBLY, PRE-ASSE
PLATE 2X300X27 DC01 FE//ZN	97048294	24	1	407	96022627	SLEWING PLATFORM PANELLI
PLATE 2X30X130 DC01 FE//ZN	97062383	18	1	768	91001040	PIVOT SECTION, PRE-ASSEMB
PLATE 2X310X22 DC01 FE//ZN	97047056	25	1	407	96022627	SLEWING PLATFORM PANELLI
PLATE 2X35X100 DC01 FE//ZN	957068808	25	3	581	96062734	AUXILIARY HOISTING GEAR
PLATE 2X361X79 DC01 FE//ZN	97072959	30	1	268	918811108	DRIVE ASSEMBLY, PRE-ASSE
PLATE 2X363X413 ALMG3 H11	97067161	2	1	476	918729308	AIR FILTER UNIT
PLATE 2X370X600 ALMG3 H11	97067253	23	1	407	96022627	SLEWING PLATFORM PANELLI
PLATE 2X377X579 X5CRNI18-1	97072923	(1)	1	268	918811108	DRIVE ASSEMBLY, PRE-ASSE
PLATE 2X381X148 DC01 FE//ZN	97003805	10	1	321	96015921	OPERATING ELEMENT INSTAL
PLATE 2X405X202 ALMG3 H11	97047025	8	1	272	96020819	RADIATOR, PRE-ASSEMBLED
PLATE 2X50X115 X5CRNI18-10	974657908	17	1	415	96024809	SLEWING PLATFORM PANELLI
PLATE 2X50X76 X5CRNI18-10	973536508	8	6	378	963564908	MAIN HOISTING GEAR PRE-A
PLATE 2X550X297 DC01	97100598	3	1	287	96024716	BATTERY BOX, PRE-ASSEMB
PLATE 2X597X541 ALMG3 H11	97100184	30	1	407	96022627	SLEWING PLATFORM PANELLI
PLATE 2X680X420 DC01	956470108	24	1	652	919935408	TELESCOPIC BOOM CPL.
PLATE 2X700X109 DC01 FE//ZN	97025690	8	1	334	917304508	CRANE OPERATOR CABIN P
PLATE 2X703X192 ALMG3 H11	97042029	3	1	272	96020819	RADIATOR, PRE-ASSEMBLED
PLATE 2X70X80 DC01 FE//ZNNI	953515408	5	5	290	917962508	FUEL TANK ADD-ON UNIT
PLATE 2X70X80 DC01 FE//ZNNI	953515408	3	7	293	918008908	OIL RESERVOIR, EXTENSION
PLATE 2X719X40 DC01 FE//ZN	97005273	4	1	349	966497908	FRONT WINDOW CPL.
PLATE 2X721X107 DC01 FE//ZN	97043680	31	1	407	96022627	SLEWING PLATFORM PANELLI
PLATE 2X737X46 DC01 FE//ZN	979022508	6	1	350	965784408	ROOF WINDOW PRE-ASS.
PLATE 2X73X380 DC01 FE//ZN	97045515	23	2	771	918596708	HEAD SECTION PRE-ASS.
PLATE 2X748X942 DC01	97139571	5	1	562	919528608	OIL COOLER INSTALLATION
PLATE 2X752X515 DC01	97063985	32	1	407	96022627	SLEWING PLATFORM PANELLI
PLATE 2X759X264 ALMG3 H11	97041782	4	1	272	96020819	RADIATOR, PRE-ASSEMBLED
PLATE 2X810X132 DC01 RAL 7	97000470	14	1	338	917305408	INTERNAL PANELLING INSTA
PLATE 2X895X965 DC01	97058579	4	1	562	919528608	OIL COOLER INSTALLATION
PLATE 2X90X60 DC01 FE//ZNNI	97032617	4	4	52	968374908	LIMIT SWITCH ADD-ON
PLATE 30X126X51 S355J2+N	97098868	3	1	473	96051762	EXHAUST SYSTEM PRE-ASSE
PLATE 3X111X222 DC01 FE//ZN	971135808	19	1	723	964502908	BOOM NOSE PRE-ASS.
PLATE 3X125X48 DC01 FE//ZN	97096913	22	1	760	918533508	ADAPTER PRE-ASS.
PLATE 3X127X139 X5CRNI18-1	97055661	3	3	470	919674308	EXHAUST SYSTEM
PLATE 3X128X30 DC01 FE//ZN	973114708	21	4	376	919935508	MAIN HOIST GEAR
PLATE 3X1293X146 ALMG3 H	97058580	35	1	407	96022627	SLEWING PLATFORM PANELLI
PLATE 3X130X140 X5CRNI18-1	97038824	1	1	127	968305308	LIMIT SWITCH, PRE-ASSEMB
PLATE 3X135X251 ALMG3 H1	97045292	5	1	340	966282308	PANELLING,LEFT
PLATE 3X138X77 DC01 FE//ZN	97150626	6	2	658	96014777	LIFTING ROPE GUIDE PREAS
PLATE 3X145X42 DC01 FE//ZN	97003990	20	1	444	918759708	ADD HEATING SUPERSTRUCT
PLATE 3X146X80 DC01 FE//ZN	970771908	(2)	1	33	967304508	UNDERCARRIAGE HYDRAULIC
PLATE 3X146X80 DC01 FE//ZN	970771908	29	1	47	968374708	MOUNTING PARTS

Description	Item	Pos.	Quantity	Page	Assembly	Description
PLATE 3X155X139 DC01 FE//ZN	97049599	36	1	407	96022627	SLEWING PLATFORM PANELLI
PLATE 3X155X210 X5CRNI18-1	97060224	5	1	470	919674308	EXHAUST SYSTEM
PLATE 3X157X121 DC01 FE//ZN	97131533	1	1	421	96044787	HOLDER PRE-ASSEMBLY
PLATE 3X160X522 X5CRNI18-1	97050040	1	1	781	968940708	HOLDER LEFT
PLATE 3X160X522 X5CRNI18-1	97050040	1	1	782	968940808	HOLDER RIGHT
PLATE 3X163X159 X5CRNI18-1	97098872	8	1	470	919674308	EXHAUST SYSTEM
PLATE 3X164X250 DC01 FE//ZN	97085847	3	2	461	96074081	UREA TANK, PRE-MOUNTING
PLATE 3X180X70 DC01 FE//ZN	957025808	29	2	667	91000052	TELESCOPIC SECT.3 PRE-ASS
PLATE 3X193X93 S355MC FE//	97081862	6	2	327	96025887	PEDAL CANTILEVER INSTALL
PLATE 3X206X85 X5CRNI18-10	97127896	8	2	473	96051762	EXHAUST SYSTEM PRE-ASSE
PLATE 3X212X271 DC01 FE//ZN	97057135	31	1	444	918759708	ADD HEATING SUPERSTRUCT
PLATE 3X229X285 DC01 FE//ZN	97075057	26	1	268	918811108	DRIVE ASSEMBLY, PRE-ASSE
PLATE 3X232X317 ALMG3 H11	97045987	1	2	476	918729308	AIR FILTER UNIT
PLATE 3X240X109 S355MC FE//	97132207	1	1	100	96045217	MECHANICAL AUXILIARIES
PLATE 3X240X98 X5CRNI18-10	97055896	4	1	470	919674308	EXHAUST SYSTEM
PLATE 3X255X133 DC01	975874208	8	1	290	917962508	FUEL TANK ADD-ON UNIT
PLATE 3X25X112 X5CRNI18-10	97132679	1	1	423	96045536	PLATE PRE-ASS.
PLATE 3X26X26 DC01 FE//ZNNI	971974208	22	2	395	918810308	CONTROL STAND
PLATE 3X274X221 S355MC FE//	97042788	14	1	124	918728408	ASSEMBLY PARTS F.SLEWING
PLATE 3X292X697 X5CRNI18-1	97050043	2	1	782	968940808	HOLDER RIGHT
PLATE 3X294X224 S355MC FE//	97042787	18	1	124	918728408	ASSEMBLY PARTS F.SLEWING
PLATE 3X295X159 S355MC FE//	974680008	2	2	327	96025887	PEDAL CANTILEVER INSTALL
PLATE 3X302X386 DC01 FE//ZN	97138345	1	1	604	96066401	MECHANICAL AUXILIARIES
PLATE 3X30X119 X5CRNI18-10	97026779	54	1	361	917304708	SLIDING DOOR INSTALLATION
PLATE 3X30X130 DC01 FE//ZN	97062384	19	1	768	91001040	PIVOT SECTION, PRE-ASSEMB
PLATE 3X30X60 S355MC RAL 7	97095079	24	1	446	96019783	ADDNL.HEATING, PRE-ASSE
PLATE 3X318X697 X5CRNI18-1	97050041	2	1	781	968940708	HOLDER LEFT
PLATE 3X342X268 DC01 FE//ZN	97072740	27	1	268	918811108	DRIVE ASSEMBLY, PRE-ASSE
PLATE 3X366X104 DC01 RAL 9	977444008	15	1	395	918810308	CONTROL STAND
PLATE 3X366X104 DC01 RAL 9	977444108	16	1	395	918810308	CONTROL STAND
PLATE 3X390X340 DC01 FE//ZN	97162173	6	1	606	91002360	CHARGER
PLATE 3X40X300 DC01 FE//ZN	953781608	(1)	2	566	969767908	PIPEWORK AIR INSTALLATIO
PLATE 3X40X373 S355MC FE//	97117720	2	1	577	96033759	ADD-ON PARTS WORK FLOOD
PLATE 3X430X104 DC01 FE//ZN	97084676	19	1	415	96024809	SLEWING PLATFORM PANELLI
PLATE 3X439X212 X5CRNI18-1	974497908	21	1	581	96062734	AUXILIARY HOISTING GEAR
PLATE 3X44X75 DC01 FE//ZNNI	97038825	2	1	127	968305308	LIMIT SWITCH, PRE-ASSEMB
PLATE 3X45X120 DC01 FE//ZN	953760908	(1)	1	591	96064697	HYDR.AUXILIARY HOISTING
PLATE 3X530X215 S355MC FE//	97092558	15	1	47	968374708	MOUNTING PARTS
PLATE 3X60X25 DC01 FE//ZNNI	97001250	8	2	352	916168308	AIR DUCT
PLATE 3X60X80 DC01 FE//ZNNI	973717208	18	2	268	918811108	DRIVE ASSEMBLY, PRE-ASSE
PLATE 3X630X160 DC01 FE//ZN	97100178	34	1	407	96022627	SLEWING PLATFORM PANELLI
PLATE 3X71X218 DC01 FE//ZN	97071587	28	1	268	918811108	DRIVE ASSEMBLY, PRE-ASSE
PLATE 3X74X98 X5CRNI18-10	97098871	7	3	470	919674308	EXHAUST SYSTEM
PLATE 3X75X61 X5CRNI18-10	97000492	26	1	361	917304708	SLIDING DOOR INSTALLATION
PLATE 3X80X68 DC01 FE//ZNNI	973717308	17	1	268	918811108	DRIVE ASSEMBLY, PRE-ASSE
PLATE 3X873X323 S355MC FE//	97087617	2	1	658	96014777	LIFTING ROPE GUIDE PREAS
PLATE 3X88X96 DC01 FE//ZNNI	97030183	12	1	268	918811108	DRIVE ASSEMBLY, PRE-ASSE
PLATE 40X40 DC01 FE//ZNNI8/	971974108	21	4	395	918810308	CONTROL STAND
PLATE 4X104X325 S315MC FE//	97040100	6	2	52	968374908	LIMIT SWITCH ADD-ON
PLATE 4X110X77 S315MC FE//	979717908	16	2	410	969425608	FLAP RIGHT PRE-ASS.
PLATE 4X113X87 S315MC FE//	97044949	6	1	272	96020819	RADIATOR, PRE-ASSEMBLED
PLATE 4X125X178 S315MC FE//	97037626	26	2	47	968374708	MOUNTING PARTS
PLATE 4X132X73 S315MC FE//	97041747	23	1	268	918811108	DRIVE ASSEMBLY, PRE-ASSE
PLATE 4X137X44 S315MC FE//	97084144	5	2	658	96014777	LIFTING ROPE GUIDE PREAS
PLATE 4X138X138 S315MC FE//	975208408	6	1	321	96015921	OPERATING ELEMENT INSTAL
PLATE 4X138X242 S315MC R	97041916	10	1	326	968483708	STEP CPL.
PLATE 4X140X113 S315MC FE//	953649008	(2)	1	591	96064697	HYDR.AUXILIARY HOISTING
PLATE 4X142X218 S315MC R	97041915	9	1	326	968483708	STEP CPL.
PLATE 4X173X230 S315MC FE//	97044948	5	1	272	96020819	RADIATOR, PRE-ASSEMBLED
PLATE 4X182X695 S315MC FE//	955560708	41	1	760	918533508	ADAPTER PRE-ASS.

Description	Item	Pos.	Quantity	Page	Assembly	Description
PLATE 4X188X172 S315MC FE//	974730008	20	2	581	96062734	AUXILIARY HOISTING GEAR
PLATE 4X190X158 S315MC FE//	97133542	3	1	48	96046146	PROTECTION CPL.
PLATE 4X206X342 S315MC FE//	97045637	20	1	407	96022627	SLEWING PLATFORM PANELLI
PLATE 4X222X213 S315MC FE//	97043211	22	1	268	918811108	DRIVE ASSEMBLY, PRE-ASSE
PLATE 4X224X146 S315MC FE//	97048362	9	1	407	96022627	SLEWING PLATFORM PANELLI
PLATE 4X228X191 S315MC FE//	97066655	7	1	562	919528608	OIL COOLER INSTALLATION
PLATE 4X228X191 S315MC FE//	97066656	9	1	562	919528608	OIL COOLER INSTALLATION
PLATE 4X246X20 S315MC FE//	955002908	64	1	761	918533508	ADAPTER PRE-ASS.
PLATE 4X246X213 S315MC FE//	97111977	8	1	125	963260408	LOCKING
PLATE 4X246X213 S315MC FE//	97111977	8	1	126	96049764	LOCKING
PLATE 4X250X190 S315MC FE//	953749408	65	1	673	91000054	TELESCOPIC SECT.5 PRE-AS
PLATE 4X255X278 X5CRNI18-1	97047477	4	2	473	96051762	EXHAUST SYSTEM PRE-ASSE
PLATE 4X270X157 S315MC FE//	954141508	17	1	478	915300208	CENT. LUBRIC. SYSTEM SUP
PLATE 4X290X230 S315MC FE//	972335908	70	1	655	91000049	PIVOT SECTION, PRE-ASSEMB
PLATE 4X293X157 X5CRNI18-1	97055891	2	1	470	919674308	EXHAUST SYSTEM
PLATE 4X30X128 S315MC FE//	970836008	30	1	444	918759708	ADD HEATING SUPERSTRUCT
PLATE 4X30X82 X5CRNI18-10	97093827	5	4	473	96051762	EXHAUST SYSTEM PRE-ASSE
PLATE 4X324X189 S315MC FE//	976822308	(2)	1	598	96075086	HYD.AUX.LIFT GEAR UPPER
PLATE 4X336X157 S315MC FE//	975230508	7	2	780	917508508	LADDER ATTACHMENT
PLATE 4X347X222 S315MC FE//	97000389	6	1	355	916163008	WIPERS INSTALLATION
PLATE 4X400X200 S315MC FE//	977753708	13	1	61	917155308	PREPARATION HYDR
PLATE 4X410X98 S315MC FE//	979537108	16	1	415	96024809	SLEWING PLATFORM PANELLI
PLATE 4X416X298 S315MC FE//	97092340	1	2	577	96033759	ADD-ON PARTS WORK FLOOD
PLATE 4X465X159 S315MC FE//	97056627	11	1	415	96024809	SLEWING PLATFORM PANELLI
PLATE 4X478X160 S315MC FE//	97116341	1	1	306	96066239	PREMOUNTED FUEL FILTER
PLATE 4X48X29 S315MC RAL	97007597	60	4	339	917305408	INTERNAL PANELLING INSTA
PLATE 4X50X80 S315MC FE//	979719508	21	1	407	96022627	SLEWING PLATFORM PANELLI
PLATE 4X510X850 S235JR	958346414	4	2	40	990840414	COVER
PLATE 4X528X266 S315MC R	97041914	8	1	326	968483708	STEP CPL.
PLATE 4X52X32 S315MC FE//	97024783	24	1	346	916162508	WINDOW ASSEMBLY
PLATE 4X564X493 S315MC FE//	97117576	4	1	263	918728708	DRIVE ASSEMBLY CPL.
PLATE 4X60X163 S315MC FE//	97045111	19	1	268	918811108	DRIVE ASSEMBLY, PRE-ASSE
PLATE 4X62X134 S315MC	97132169	25	2	119	96045222	MOUNTING PARTS
PLATE 4X65X65 S315MC FE//	979326008	15	1	315	917357108	CRANE DRIVER CAB ADDITIO
PLATE 4X74X219 S315MC FE//	97132168	24	2	119	96045222	MOUNTING PARTS
PLATE 4X80X254 S315MC FE//	957102808	38	1	747	919933308	TRANSPORT MOUNTING
PLATE 4X811X527 S315MC FE//	97088601	44	1	760	918533508	ADAPTER PRE-ASS.
PLATE 4X828X147 S315MC FE//	97132325	4	1	461	96074081	UREA TANK, PRE-MOUNTING
PLATE 4X86X40 S315MC FE//	97084142	3	2	658	96014777	LIFTING ROPE GUIDE PREAS
PLATE 4X879X259 S315MC FE//	97039169	10	1	415	96024809	SLEWING PLATFORM PANELLI
PLATE 4X89X233 S315MC FE//	97088602	48	1	760	918533508	ADAPTER PRE-ASS.
PLATE 4X90X67 S315MC FE//	954113708	26	1	407	96022627	SLEWING PLATFORM PANELLI
PLATE 4X90X70 S315MC FE//	975170608	18	1	415	96024809	SLEWING PLATFORM PANELLI
PLATE 4X927X220 X5CRNI18-1	97042014	(2)	1	326	968483708	STEP CPL.
PLATE 4X93X68 S315MC RAL	97006057	19	1	349	966497908	FRONT WINDOW CPL.
PLATE 4x383x125 S315MC FE//	957032508	44	4	655	91000049	PIVOT SECTION, PRE-ASSEMB
PLATE 4x383x125 S315MC FE//	957032508	44	4	661	91000050	TELESCOPIC SECTION 1 PRE
PLATE 4x383x125 S315MC FE//	957032508	44	4	664	91000051	TELESCOPIC SECT.2 PRE-AS
PLATE 4x383x125 S315MC FE//	957032508	44	2	667	91000052	TELESCOPIC SECT.3 PRE-ASS
PLATE 4x383x125 S315MC FE//	957032508	44	2	670	91000053	TELESCOPIC SECT.IV PRE-A
PLATE 50X200X20 S355J2+N	971799908	29	2	581	96062734	AUXILIARY HOISTING GEAR
PLATE 50X250X210 S355J2+N	977240208	19	1	22	96062226	CRAWLER CARRIER RIGHT CP
PLATE 50X250X210 S355J2+N	977240208	19	1	27	96062228	CRAWLER TRACK CARRIER LE
PLATE 5X1099X558 X5CRNI18	976638108	24	1	376	919935508	MAIN HOIST GEAR
PLATE 5X110X154 S355MC FE//	955560308	6	1	723	964502908	BOOM NOSE PRE-ASS.
PLATE 5X110X154 S355MC FE//	955560308	15	1	763	917695308	GUIDE PULLEY COMPL.
PLATE 5X110X210 S355MC FE//	977905308	14	1	61	917155308	PREPARATION HYDR
PLATE 5X120X20 S355MC T Z	97133214	57	1	673	91000054	TELESCOPIC SECT.5 PRE-AS
PLATE 5X140X380 S355MC	967232803	14	2	30	992078314	CENTRE PIECE
PLATE 5X180X141 S355MC T Z	97126551	10	2	655	91000049	PIVOT SECTION, PRE-ASSEMB

Description	Item	Pos.	Quantity	Page	Assembly	Description
PLATE 5X184X184 S960QL	955450608	38	2	655	91000049	PIVOT SECTION, PRE-ASSEMB
PLATE 5X184X184 S960QL	955450608	38	2	661	91000050	TELESCOPIC SECTION 1 PRE
PLATE 5X184X184 S960QL	955450608	38	2	664	91000051	TELESCOPIC SECT.2 PRE-AS
PLATE 5X184X184 S960QL	955450608	38	2	667	91000052	TELESCOPIC SECT.3 PRE-ASS
PLATE 5X184X184 S960QL	955450608	38	2	670	91000053	TELESCOPIC SECT.IV PRE-A
PLATE 5X200X130 S355MC	977441008	22	2	22	96062226	CRAWLER CARRIER RIGHT CP
PLATE 5X200X130 S355MC	977441008	22	2	27	96062228	CRAWLER TRACK CARRIER LE
PLATE 5X240X130 S355MC	976540808	31	2	22	96062226	CRAWLER CARRIER RIGHT CP
PLATE 5X240X130 S355MC	976540808	31	1	28	96062228	CRAWLER TRACK CARRIER LE
PLATE 5X349X30 S355MC FE//	976993208	1	4	47	968374708	MOUNTING PARTS
PLATE 5X366X288 X5CRNI18-1	976514908	26	2	70	915447908	HYDRAULIC SUPPORT
PLATE 5X366X288 X5CRNI18-1	976515008	27	2	70	915447908	HYDRAULIC SUPPORT
PLATE 5X409X288 X5CRNI18-1	976514408	25	2	70	915447908	HYDRAULIC SUPPORT
PLATE 5X409X288 X5CRNI18-1	976515108	28	2	70	915447908	HYDRAULIC SUPPORT
PLATE 5X41X63 S960QL	954762708	10	1	670	91000053	TELESCOPIC SECT.IV PRE-A
PLATE 5X41X63 S960QL	954762708	10	1	673	91000054	TELESCOPIC SECT.5 PRE-AS
PLATE 5X420X742 ALMG3 H11	97132471	3	1	458	91003833	UREA PLANT
PLATE 5X590X79 X5CRNI18-10	97042015	(3)	1	326	968483708	STEP CPL.
PLATE 5X590X79 X5CRNI18-10	97042016	(4)	1	326	968483708	STEP CPL.
PLATE 5X60X60 S355MC FE//	953676308	7	2	290	917962508	FUEL TANK ADD-ON UNIT
PLATE 5X60X60 S355MC FE//	953676308	2	4	293	918008908	OIL RESERVOIR, EXTENSION
PLATE 5X670X510 S355MC	976540508	25	1	22	96062226	CRAWLER CARRIER RIGHT CP
PLATE 5X670X510 S355MC	976540508	25	1	28	96062228	CRAWLER TRACK CARRIER LE
PLATE 5X80X381 S355MC FE//	97145502	25	2	655	91000049	PIVOT SECTION, PRE-ASSEMB
PLATE 5X80X488 S355MC FE//	955523908	26	4	655	91000049	PIVOT SECTION, PRE-ASSEMB
PLATE 5x69x44 S960QL FE/FL	970148308	10	1	661	91000050	TELESCOPIC SECTION 1 PRE
PLATE 5x69x44 S960QL FE/FL	970148308	10	1	664	91000051	TELESCOPIC SECT.2 PRE-AS
PLATE 5x69x44 S960QL FE/FL	970148308	10	1	667	91000052	TELESCOPIC SECT.3 PRE-ASS
PLATE 6X346X227 S355MC	976541508	11	1	61	917155308	PREPARATION HYDR
PLATE 6X363X312 S355MC	97042444	16	1	47	968374708	MOUNTING PARTS
PLATE 6X363X312 S355MC	97042444	(1)	1	63	967301408	PREPARATION HYDR
PLATE 8X100X166 S355MC FE//	976541308	12	4	61	917155308	PREPARATION HYDR
PLATE 8X138X44 S355MC FE//	97087497	7	2	658	96014777	LIFTING ROPE GUIDE PREAS
PLATE 8X195X15 S355MC FE//	97130445	16	4	420	919484908	FALL PROTECTION
PLATE 8X25X160 S355MC FE//	952940908	15	2	410	969425608	FLAP RIGHT PRE-ASS.
PLATE 8X270X228 S355MC	97020762	4	1	315	917357108	CRANE DRIVER CAB ADDITIO
PLATE 8X274X228 S355MC	97020761	3	1	315	917357108	CRANE DRIVER CAB ADDITIO
PLATE 8X30X58 S355MC FE//	955974308	29	1	747	919933308	TRANSPORT MOUNTING
PLATE 8X315X425 S960	957039908	49	2	670	91000053	TELESCOPIC SECT.IV PRE-A
PLATE 8X325X325 S355MC FE//	97042667	11	2	19	96062225	UNDERCARRIAGE CPL.
PLATE 8X383X431 S960 RAL 7	97154300	49	2	667	91000052	TELESCOPIC SECT.3 PRE-ASS
PLATE 8X404X456 S960 RAL 7	97154299	49	2	664	91000051	TELESCOPIC SECT.2 PRE-AS
PLATE 8X428X484 S960 RAL 7	97154298	49	2	661	91000050	TELESCOPIC SECTION 1 PRE
PLATE 8X452X512 S960 RAL 7	97154297	49	2	655	91000049	PIVOT SECTION, PRE-ASSEMB
PLATE 8X70X182 S960 FE//FLZ	955552608	24	1	747	919933308	TRANSPORT MOUNTING
PLATE 8X965X516 S700MC	974911208	21	1	747	919933308	TRANSPORT MOUNTING
PLATE 8x160x79 S700MC	970298308	51	1	655	91000049	PIVOT SECTION, PRE-ASSEMB
PLATE 8x160x79 S700MC	970298308	51	1	661	91000050	TELESCOPIC SECTION 1 PRE
PLATE 8x160x79 S700MC	970298308	51	1	664	91000051	TELESCOPIC SECT.2 PRE-AS
PLATE 8x160x79 S700MC	970298308	51	1	667	91000052	TELESCOPIC SECT.3 PRE-ASS
PLATE 8x160x79 S700MC	970298308	51	1	670	91000053	TELESCOPIC SECT.IV PRE-A
PLATE DC01	927530301	14	1	369	933074801	SLEWING GEAR DRIVE
PLATE GLAS 315X178	10675116	(1)	1	440	916870808	MIRROR ATTACHM.AT SLEW.P
PLATE IDENTIFICATION NUMB	973567608	20	1	19	96062225	UNDERCARRIAGE CPL.
PLATE PRE-ASS.	96045536	13	1	420	919484908	FALL PROTECTION
PLATE RST 37-2 LH-GRAU	958340414	5	2	40	990840414	COVER
PLATE S315MC FE//ZNNI8//CN/	953696908	15	1	478	915300208	CENT. LUBRIC. SYSTEM SUP
PLATE S315MC FE//ZNNI8//CN/	970762808	(1)	2	33	967304508	UNDERCARRIAGE HYDRAULIC
PLATE S315MC FE//ZNNI8//CN/	970762808	30	1	47	968374708	MOUNTING PARTS
PLATE STAHLBLECH	11083215	7	1	388	11083498	AIR CONDITIONING UNIT

Description	Item	Pos.	Quantity	Page	Assembly	Description
PLATE WELDED	96062303	17	1	768	91001040	PIVOT SECTION, PRE-ASSEMB
PLATE WELDED	966363808	37	1	361	917304708	SLIDING DOOR INSTALLATION
PLATE WELDED FE//ZNNI8//C	966629308	1	1	327	96025887	PEDAL CANTILEVER INSTALL
PLATE WELDED FE//ZNNI8//C	967257808	39	2	395	918810308	CONTROL STAND
PLATE WELDED FE//ZNNI8//C	967775308	34	1	338	917305408	INTERNAL PANELLING INSTA
PLATE WELDED FE//ZNNI8//FN/	966497808	2	1	349	966497908	FRONT WINDOW CPL.
PLATE WELDED RAL 9005,M,G	96022873	1	1	435	96022872	CONTROL PANEL ROOF
PLATE WELDED RAL 9005,M,G	96048684	3	1	610	96050762	ELECTRIC ADD-ON PARTS
PLATE WELDED RAL 9005,M,G	965417108	17	1	431	96056347	ELECTRIC ADD-ON PARTS CA
PLATE WELDED SPF	969431908	6	1	407	96022627	SLEWING PLATFORM PANELLI
PLATFORM ST.CONST. T ZN O	96044379	10	1	420	919484908	FALL PROTECTION
PLUG	920381108	502	1	90	96062920	WIRING HARNESS
PLUG	920381108	512	1	426	96023891	WIRING HARNESS
PLUG	920381108	502	18	490	96063649	WIRING HARNESS
PLUG	920381108	519	1	494	96023971	WIRING HARNESS
PLUG	927996308	507	1	490	96063649	WIRING HARNESS
PLUG	927996308	522	1	494	96023971	WIRING HARNESS
PLUG 12-POL	10491808	(2)	1	489	96063648	CABLE LIST SLEWING PLATF
PLUG 2	10492113	(1)	1	489	96063648	CABLE LIST SLEWING PLATF
PLUG 2-POL SW	11342255	510	1	495	96049294	WIRING HARNESS
PLUG 2POL	6202637	517	2	494	96023971	WIRING HARNESS
PLUG 3-POL	6003168	515	1	495	96049294	WIRING HARNESS
PLUG 4-POL 13A	6003248	503	1	495	96049294	WIRING HARNESS
PLUG 4-POL SW	11342257	512	1	495	96049294	WIRING HARNESS
PLUG 4-POL VIOLETT	11342259	513	1	495	96049294	WIRING HARNESS
PLUG 6-POL	604508608	508	1	775	96035674	LEAD
PLUG 8-POL	10046999	511	10	500	96059659	CABLES, BASIC CONSTRUCTI
PLUG 8-POL	10047000	501	10	500	96059659	CABLES, BASIC CONSTRUCTI
PLUG 8-POL	10047001	510	9	500	96059659	CABLES, BASIC CONSTRUCTI
PLUG 9-POL PVC	10301148	520	1	426	96023891	WIRING HARNESS
PLUG BASE	630122908	505	2	91	96062921	WIRING HARNESS
PLUG BASE	630122908	504	13	500	96059659	CABLES, BASIC CONSTRUCTI
PLUG BASE	630122908	503	1	704	96062034	WIRES TERMINAL BOX CPL.
PLUG BODY 4-POL	605613908	504	1	493	96023971	WIRING HARNESS
PLUG BUSHING 0,5-1,0MM2	7624353	761	2	427	96023891	WIRING HARNESS
PLUG BUSHING 0,75-1,0MM2 C	11000401	2253	3	496	96049294	WIRING HARNESS
PLUG BUSHING 0,75-2,0MM2 C	10100063	670	2	427	96023891	WIRING HARNESS
PLUG BUSHING 0,75-2,0MM2 C	10100063	670	11	494	96023971	WIRING HARNESS
PLUG BUSHING 0,75-2,0MM2 C	10100063	670	6	495	96049294	WIRING HARNESS
PLUG DIN 72585 4-POL POLY	692406308	504	1	490	96063649	WIRING HARNESS
PLUG DIN 72585 4-POL POLY	692406308	507	1	495	96049294	WIRING HARNESS
PLUG DIN 72585 7-POL POLY	692406708	510	1	490	96063649	WIRING HARNESS
PLUG INSERT 16-POL+PE 16A	637005201	502	1	589	96055198	WIRING HARNESS
PLUG M1	10476383	504	1	730	96058738	WIRING HARNESS
PLUG M1	10476383	504	1	775	96035674	LEAD
PLUG PLATE 1.5X449X175 DC0	97010811	4	1	502	96025348	BASE ASSEMBLY
PLUG PLATE 1.5X594X283 DC0	97010812	5	1	502	96025348	BASE ASSEMBLY
PLUG SHELL	11822050	517	1	426	96023891	WIRING HARNESS
PLUG SHELL 12-POL 13A TH.P	10412433	513	1	494	96023971	WIRING HARNESS
PLUG SHELL 14-POL	602336008	510	4	426	96023891	WIRING HARNESS
PLUG SHELL 14-POL	602336008	505	6	500	96059659	CABLES, BASIC CONSTRUCTI
PLUG SHELL 14-POL	602336508	3	6	506	926891108	GROUND RAIL
PLUG SHELL 18-POL	11067930	514	1	91	96062921	WIRING HARNESS
PLUG SHELL 18-POL	11067930	508	2	500	96059659	CABLES, BASIC CONSTRUCTI
PLUG SHELL 18-POL	602300208	503	2	90	96062920	WIRING HARNESS
PLUG SHELL 18-POL	602300208	501	9	426	96023891	WIRING HARNESS
PLUG SHELL 18-POL	602300208	501	6	428	96022870	WIRING HARNESS
PLUG SHELL 18-POL	602300208	501	12	490	96063649	WIRING HARNESS
PLUG SHELL 18-POL	602300208	501	1	492	96063650	LEAD
PLUG SHELL 18-POL	602300208	501	5	493	96023971	WIRING HARNESS

Description	Item	Pos.	Quantity	Page	Assembly	Description
PLUG SHELL 18-POL	602300208	501	2	495	96049294	WIRING HARNESS
PLUG SHELL 18-POL	602300208	507	8	500	96059659	CABLES, BASIC CONSTRUCTI
PLUG SHELL 18-POL	602300208	502	1	694	96063583	LEAD
PLUG SHELL 2 13A TH.PLAST	10342517	509	1	426	96023891	WIRING HARNESS
PLUG SHELL 2 13A TH.PLAST	10342517	505	3	493	96023971	WIRING HARNESS
PLUG SHELL 2 13A TH.PLAST	10342517	502	2	495	96049294	WIRING HARNESS
PLUG SHELL 2-POL	6004195	512	1	90	96062920	WIRING HARNESS
PLUG SHELL 2-POL	6004195	520	1	494	96023971	WIRING HARNESS
PLUG SHELL 2-POL 13A TH.P	10429638	531	1	494	96023971	WIRING HARNESS
PLUG SHELL 2-POLE 9,5A	602331808	510	2	428	96022870	WIRING HARNESS
PLUG SHELL 4-POL	602335908	515	1	91	96062921	WIRING HARNESS
PLUG SHELL 4-POL	602335908	522	3	426	96023891	WIRING HARNESS
PLUG SHELL 4-POL	602335908	511	1	428	96022870	WIRING HARNESS
PLUG SHELL 4-POL	602335908	506	3	492	96063650	LEAD
PLUG SHELL 4-POL	602335908	523	4	500	96059659	CABLES, BASIC CONSTRUCTI
PLUG SHELL 62-POL PBT-GF20	10678453	502	1	493	96023971	WIRING HARNESS
PLUG SHELL 62-POL PBT-GF2	10678452	506	1	493	96023971	WIRING HARNESS
PLUG SHELL 8-POL	10021571	504	1	91	96062921	WIRING HARNESS
PLUG SHELL 8-POL	10021571	502	1	492	96063650	LEAD
PLUG SHELL 8-POL	10021571	528	1	500	96059659	CABLES, BASIC CONSTRUCTI
PLUG SHELL D-SUB METALL	10355170	505	1	426	96023891	WIRING HARNESS
PLUG SHELL D-SUB METALL	10355182	503	2	426	96023891	WIRING HARNESS
PLUG SHELL HP PBT-GF15	11000394	514	1	495	96049294	WIRING HARNESS
PLUG SHELL MCON MCP1,2 P	10813633	506	2	495	96049294	WIRING HARNESS
PLUG SOCKET BODY 3-POL	605212708	521	1	494	96023971	WIRING HARNESS
PLUG SOCKET BODY 4-POLE	605251608	512	1	490	96063649	WIRING HARNESS
PLUG-IN CONNECTOR GE M1	12101831	8	1	478	915300208	CENT. LUBRIC. SYSTEM SUP
PLUG-IN CONNECTOR GE M8X	12101847	9	1	478	915300208	CENT. LUBRIC. SYSTEM SUP
PLUG-IN CONNECTOR GE M8X	12101847	4	1	587	921444108	CENTRAL LUBRICATING SYS
PLUG-IN SLEEVE E10-7	772002708	31	1	458	91003833	UREA PLANT
PLUG-IN SLEEVE E8-6 EDELST	10871759	34	1	458	91003833	UREA PLANT
PLUG-TYPE SCREW COUPLIN	12001446	90	1	458	91003833	UREA PLANT
PLUGS SET NICHT LACKIERE	12466377	738	1	464	11373478	DEF PUMP
PNEUMATIC LINES UPPER C	969849208	10	1	566	969767908	PIPEWORK AIR INSTALLATIO
POCKET KUNSTSTOFF	740300008	22	1	338	917305408	INTERNAL PANELLING INSTA
POIGNEE 118X18X43	10870376	3	2	332	968462608	INSTALLATION SWITCH CAB. C
POINTER 2X120X82 X5CRNI18	979673208	4	1	374	916109208	ROTATING PLATFORM LOCK
POLYAMID PIPE DIN 73378 6X1	10873149	14	40	478	915300208	CENT. LUBRIC. SYSTEM SUP
POLYAMID PIPE DIN 73378 6X1	10873149	5	5	587	921444108	CENTRAL LUBRICATING SYS
POLYAMID PIPE DIN 73378 6X1	10873149	313	2	598	96075086	HYD.AUX.LIFT GEAR UPPER
POUCH SOCKET 19-22 SPF	773941308	123	2	13		LIEBHERR LTR 1100
POWER TAKE-OFF ADD-ON	9078961	654	1	135	13455311	DIESEL ENGINE
POWER TAKE-OFF FLANGE	927639801	10	1	383	968607101	PLANETARY GEARBOX
POWER TAKE-OFF FLANGE	927639801	10	1	584	938759801	PLANETARY GEARBOX
POWER UNIT SUPPORT ATTA	10147687	12	1	130	13455311	DIESEL ENGINE
PRE-ASSEMBLY MOUNTING U	968015808	4	1	498	919940108	SWITCHBOX MOUNTING PART
PRE-HEATING INSTALLATION	12103149	1	1	613	919386708	COOLING WATER PRE-HEATIN
PRECISION RESISTOR -40/+12	10449516	9	3	431	96056347	ELECTRIC ADD-ON PARTS CA
PREMOUNT.AXIAL FLOW FAN	963398008	35	1	431	96056347	ELECTRIC ADD-ON PARTS CA
PREMOUNTED FUEL FILTER	96066239	2	1	305	91002857	FUEL FEED
PREPARATION HYDR JACK-U	967301408	2	1	61	917155308	PREPARATION HYDR
PREPARATION HYDR JACKUP	917155308	40	1	12		LIEBHERR LTR 1100
PRESSURE ADAPTER FASTEN	10135434	5	1	185	13743036	RK INJECTOR
PRESSURE ADAPTER FASTEN	10135434	3	1	186	10141140	RK HIGH PRESSURE CONNEC
PRESSURE ADAPTER FASTEN	10135434	3	1	191	13757616	RK HIGH PRESSURE CONNEC
PRESSURE COMPENSATION	11921782	307	1	692	96063456	TERMINAL BOX
PRESSURE COMPENSATION	11921782	293	1	703	96063458	TERMINAL BOX CPL.
PRESSURE CONTROL VALVE	10450051	49	1	44	10801751	ADJUSTMENT
PRESSURE LIMITING VALVE	10491574	10	1	537	10665128	COVER
PRESSURE LIMITING VALVE	10492431	11	1	275	10429930	GEAR WHEEL MOTOR

Description	Item	Pos.	Quantity	Page	Assembly	Description
PRESSURE LIMITING VALVE	10801852	39	1	71	10356288	SUPPORT CYLINDER
PRESSURE LIMITING VALVE	511655114	50	2	44	10801751	ADJUSTMENT
PRESSURE LIMITING VALVE	571130108	17	1	522	11170514	VALVE BLOCK
PRESSURE LIMITING VALVE	571130108	17	2	528	11170515	VALVE BLOCK
PRESSURE LIMITING VALVE	571130108	17	5	530	11170518	VALVE BLOCK
PRESSURE LIMITING VALVE	571130108	17	2	531	11170519	VALVE BLOCK
PRESSURE LIMITING VALVE	571130108	17	2	602	10665173	CONTROL BLOCK
PRESSURE LIMITING VALVE	571534908	70	1	543	10333672	CONTROL BLOCK
PRESSURE LIMITING VALVE	571539808	40	1	543	10333672	CONTROL BLOCK
PRESSURE LIMITING VALVE	571691108	5	1	549	10877219	CONTROL BLOCK
PRESSURE LIMITING VALVE	571877008	3	2	538	511307808	CONTROL PLATE
PRESSURE LIMITING VALVE	571928308	37	1	684	12105406	TELESCOPIC CYLINDER
PRESSURE LIMITING VALVE 1	10451060	5	2	550	10663060	CONTROL BLOCK
PRESSURE LIMITING VALVE	10872307	1	1	465	969904608	PRESSURE RELIEF VALVE PR
PRESSURE LIMITING VALVE	511450208	193	1	517	96045552	HYDRAULICS UPPER CARRI
PRESSURE LIMITING VALVE	571400108	60	1	543	10333672	CONTROL BLOCK
PRESSURE LIMITING VALVE	570427108	50	1	543	10333672	CONTROL BLOCK
PRESSURE LIMITING VALVE	511417608	150	1	619	969856508	ADDITIONAL HYDRAULICS
PRESSURE LIMITING VALVE	511417708	191	1	517	96045552	HYDRAULICS UPPER CARRI
PRESSURE LIMITING VALVE pv	12106454	5	1	35	10675161	CONTROL BLOCK
PRESSURE REDUCTION VALV	11170276	1	1	547	511306608	CONTROL BLOCK
PRESSURE RELIEF VALVE	571328408	14	1	480	10327065	ELECTRIC PUMP
PRESSURE RELIEF VALVE 187	571689508	38	1	684	12105406	TELESCOPIC CYLINDER
PRESSURE RELIEF VALVE P	969904608	16	1	461	96074081	UREA TANK, PRE-MOUNTING
PRESSURE RELIEF VALVE pm	10152592	12	1	174	10129474	OIL COOLER, PRE-ASSEMBLE
PRESSURE RELIEF VALVE pv=	510438508	160	1	33	967304508	UNDERCARRIAGE HYDRAULIC
PRESSURE SENSOR 0-400/400	10813738	58	7	516	96045552	HYDRAULICS UPPER CARRI
PRESSURE SENSOR 0-400/400	10813738	52	1	591	96064697	HYDR.AUXILIARY HOISTING
PRESSURE SENSOR 0-400/400	10813738	51	1	709	965994108	HYDR.F.TELESCOPIC BOOM
PRESSURE SENSOR 0-400/400	10816185	62	1	516	96045552	HYDRAULICS UPPER CARRI
PRESSURE SWITCH 1,5-26 BA	571489108	106	1	272	96020819	RADIATOR, PRE-ASSEMBLED
PRESSURE SWITCH 10-100/40	510676908	50	1	33	967304508	UNDERCARRIAGE HYDRAULIC
PRESSURE SWITCH 10-100/40	510676908	51	2	516	96045552	HYDRAULICS UPPER CARRI
PRESSURE SWITCH 10-100/40	510676908	51	1	591	96064697	HYDR.AUXILIARY HOISTING
PRESSURE TRANSMITTER 0,5-	12907020	(1)	1	243	12583633	ENGINE CONTROL SENSORS
PRESSURE TRANSMITTER 0-1	12907001	(1)	1	243	12583633	ENGINE CONTROL SENSORS
PRESSURE TRANSMITTER C	9076550	11	1	243	12583633	ENGINE CONTROL SENSORS
PRESSURE TRANSMITTER CP	9076531	10	2	243	12583633	ENGINE CONTROL SENSORS
PRESSURE VALVE	11009440	29	1	530	11170518	VALVE BLOCK
PRESSURE VALVE	11065879	4	1	522	11170514	VALVE BLOCK
PRESSURE VALVE	571453708	7	1	540	511486908	CONTROL PLATE
PRESSURE VALVE	571889108	6	1	534	10802090	CONTROL BLOCK
PRESSURE/TEMPERATURE S	12414685	739	1	464	11373478	DEF PUMP
PROFIL CLAMP 137,6/K1	10494115	182	3	470	919674308	EXHAUST SYSTEM
PROFIL CLAMP 137,6/K1	10494115	181	2	473	96051762	EXHAUST SYSTEM PRE-ASSE
PROFIL CLAMP 163,0/K1	10494116	183	2	470	919674308	EXHAUST SYSTEM
PROFIL CLAMP 163,0/K1	10494116	182	1	473	96051762	EXHAUST SYSTEM PRE-ASSE
PROFIL CLAMP 312/K1	12560584	60	2	475	11429845	SCRFILTER ASSEMBLY
PROFILE	10331637	6	6	274	97095949	COMBINATED RADIATOR
PROFILE 667X50X12 ALMGSI0.	97001317	25	1	326	968483708	STEP CPL.
PROFILE PACKING DIN 3869 1	10040984	(2)	1	243	12583633	ENGINE CONTROL SENSORS
PROFILE PACKING DIN 3869 33	10335629	3	1	151	10118839	OIL FILLER INLET
PROFILE PACKING DIN 3869 33	10335629	231	1	250	10148366	SEAL KIT DIESEL ENGINE
PROFILE RING P-R8-L/S A2GS	477100208	3	1	283	96038054	CONNECTION PIECE
PROFILE RING PR10-S/L A3P	477100308	32	1	458	91003833	UREA PLANT
PROFILE RING PR6-S/L A3P	477101408	314	2	598	96075086	HYD.AUX.LIFT GEAR UPPER
PROTECTING CAP	10042323	(1)	1	516	96045552	HYDRAULICS UPPER CARRI
PROTECTING CAP	610701108	527	1	494	96023971	WIRING HARNESS
PROTECTING CAP 180°	11060618	516	3	495	96049294	WIRING HARNESS
PROTECTING CAP 180°	11491349	519	1	495	96049294	WIRING HARNESS

Description	Item	Pos.	Quantity	Page	Assembly	Description
PROTECTING CAP 180°	11491349	503	1	706	96063415	WIRING HARNESS
PROTECTING CAP HDSCS GR	10875279	514	1	90	96062920	WIRING HARNESS
PROTECTING CAP HDSCS GR	10875279	518	1	491	96063649	WIRING HARNESS
PROTECTING CAP HDSCS G	11697580	513	1	90	96062920	WIRING HARNESS
PROTECTING CAP HDSCS G	11697580	502	1	98	96045216	WIRING HARNESS
PROTECTING CAP HDSCS G	11697580	519	1	491	96063649	WIRING HARNESS
PROTECTING CAP HDSCS G	11697580	502	1	640	96045220	WIRING HARNESS
PROTECTING CAP HDSCS G	11697580	504	2	694	96063583	LEAD
PROTECTING CAP JPT	10874331	528	1	427	96023891	WIRING HARNESS
PROTECTING CAP JPT	10874331	524	1	494	96023971	WIRING HARNESS
PROTECTING CAP M26X1,5	7013456	3	1	147	5004624	OIL DRAIN PLUG
PROTECTING CAP MCP BUC	10678458	503	2	493	96023971	WIRING HARNESS
PROTECTING CAP NETZW. R	11008530	2	1	439	966979108	SOCKET
PROTECTING CAP STECKER 4	602339608	515	1	90	96062920	WIRING HARNESS
PROTECTING CAP SW 24	779040801	18	2	334	917304508	CRANE OPERATOR CABIN P
PROTECTING CAP SW10	779020108	2	6	503	922648308	TERMINAL BOARD PRE-ASS.
PROTECTING SHEET CPL.	96004318	29	1	268	918811108	DRIVE ASSEMBLY, PRE-ASSE
PROTECTION CPL. LWE	96046146	100	8	47	968374708	MOUNTING PARTS
PROTECTION GUARD 3x146x4	970596208	3	1	367	919235408	SLEWING GEAR
PROTECTIVE HOSE 30MM AL-	11118396	211	1	495	96049294	WIRING HARNESS
PROTECTIVE HOSE DN16XNO	10871063	213	2	730	96058738	WIRING HARNESS
PROTECTIVE HOSE DN20 NO	10870635	15	1	625	96036821	REAR END TURNT. CAMERA E
PROTECTIVE MOTOR SWITCH	570338308	26	1	95	10878097	SLIP RING TRANSMITTER
PROTECTIVE PADDING	520402808	3	1	102	914860608	TOOLS AND ACCESSORIES
PROXIMITY SWITCH	10097621	1	1	482	12101719	DISTRIBUTION BLOCK
PROXIMITY SWITCH BERUEHR	11003193	10	2	487	966720708	ELECTR.FOR SLEWING GEAR
PULL ROD	10099209	28	4	480	10327065	ELECTRIC PUMP
PULL-BACK PLATE	570110008	7	1	372	570109008	DRIVING GEAR
PULLER	12108688	4	1	650	12257818	CAR RADIO
PUMP ELEMENT	10216340	13	1	480	10327065	ELECTRIC PUMP
PUMP ELEMENT	774387508	11	1	480	10327065	ELECTRIC PUMP
PUMP HOUSING	10014693	4	1	480	10327065	ELECTRIC PUMP
PUMP MP41 SPF	591055408	2	2	356	966408908	WATER CONTAINER CPL
PUMP RETURN FLOW	774372808	13	1	478	915300208	CENT. LUBRIC. SYSTEM SUP
PUMP SHAFT 31CrMoV9	9078964	2	1	249	9078962	AUXILIARY DRIVE PRE-ASS.
PUSH BUTTON	11171271	33	1	397	10877138	OPERATOR SEAT
PUSH BUTTON	606143008	18	1	435	96022872	CONTROL PANEL ROOF
PUSH-BUTTON CAP FLACH K	606144408	17	1	435	96022872	CONTROL PANEL ROOF
QUICK ACTING COUPLING	790042708	9	1	102	914860608	TOOLS AND ACCESSORIES
QUICK FITTING UNION RFK	919926114	1	1	75	914950208	CRAW.TRACK CARRIER QUICK
QUICK RELEASE PIN 12X130,3	11320193	4	1	125	963260408	LOCKING
QUICK RELEASE PIN 12X130,3	11320193	4	1	126	96049764	LOCKING
QUICK RELEASE PIN NIROST	704008508	71	2	581	96062734	AUXILIARY HOISTING GEAR
QUICK-FITTING THREAD COUP	511708314	155	2	33	967304508	UNDERCARRIAGE HYDRAULIC
QUICK-FITTING THREAD COUP	511708414	156	2	33	967304508	UNDERCARRIAGE HYDRAULIC
QUICK-FITTING UNION HYDR	967292708	4	1	67	917155408	QUICK-FITTING UNION
QUICK-FITTING UNION JACKU	917155408	50	1	12		LIEBHERR LTR 1100
RADIAL FAN	11083445	45	1	388	11083498	AIR CONDITIONING UNIT
RADIAL FAN D=170 26VDC	13366890	45	1	388	11083498	AIR CONDITIONING UNIT
RADIAL SEAL 70X90X7	7008986	10	1	43	592326914	VARIABLE DISPLACEMENT MO
RADIATOR HOOD	968700608	10	1	409	96017568	RADIATOR HOOD CPL.
RADIATOR HOOD CPL.	96017568	1	1	407	96022627	SLEWING PLATFORM PANELLI
RADIATOR, PRE-ASSEMBLED	96020819	2	1	268	918811108	DRIVE ASSEMBLY, PRE-ASSE
RADIO PREPARATION UPPER	913753108	391	1	15		LIEBHERR LTR 1100
RAIL PAIR	10650489	70	1	397	10877138	OPERATOR SEAT
RAPID FIXING	704259608	57	1	361	917304708	SLIDING DOOR INSTALLATION
REAR END TURNT. CAMERA E	96036821	4	1	622	918805408	CAMERA MONITOR OW
REAR PROFILE 820X125X72.6	97000517	32	1	361	917304708	SLIDING DOOR INSTALLATION
REAR SHUTTER	96000686	2	1	562	919528608	OIL COOLER INSTALLATION
REAR VISION MIRROR UNIT 20	10286840	(1)	1	402	916049908	MIRROR ATTACHM.IN CRANE

Description	Item	Pos.	Quantity	Page	Assembly	Description
REAR WINDOW ESG SPF	97000279	5	1	346	916162508	WINDOW ASSEMBLY
RECEPTACLE 2,8X0,3-1,5 VER	602203108	67	2	428	96022870	WIRING HARNESS
RECEPTACLE 4,8X1,5	602225914	703	2	428	96022870	WIRING HARNESS
RECEPTACLE 5X1,5-2,5	602339108	642	4	91	96062921	WIRING HARNESS
RECEPTACLE 6,3X0,5-1,0 VER	11080881	758	9	91	96062921	WIRING HARNESS
RECEPTACLE 6,3X0,5-1,0 VER	11080881	758	16	427	96023891	WIRING HARNESS
RECEPTACLE 6,3X0,5-1,0 VER	11080881	758	3	428	96022870	WIRING HARNESS
RECEPTACLE 6,3X0,5-1,0 VER	11080881	758	4	494	96023971	WIRING HARNESS
RECEPTACLE 6,3X0,5-1,5 SN	602207608	140	3	428	96022870	WIRING HARNESS
RECEPTACLE 6,3X0,5-1,5 SN	602207608	140	2	490	96063649	WIRING HARNESS
RECEPTACLE 6,3X1,5-2,5	602303208	64	3	698	96063213	LEAD
RECEPTACLE 6,3X1-2,5 MESSI	602203408	72	1	91	96062921	WIRING HARNESS
RECEPTACLE 6,3X1-2,5 MESSI	602203408	72	3	426	96023891	WIRING HARNESS
RECEPTACLE 6,3X1-2,5 MESSI	602203408	72	5	428	96022870	WIRING HARNESS
RECEPTACLE 6,3X1-2,5 MESSI	602203408	72	4	490	96063649	WIRING HARNESS
RECEPTACLE 6,3X1-2,5 MESSI	602203408	72	4	612	913753108	RADIO PREPARATION UPPER
RECEPTACLE 9,5X1-2,5 CUSN	602208408	143	2	426	96023891	WIRING HARNESS
RECEPTACLE FOR TABS 0,3-1	602203708	63	10	698	96063213	LEAD
RECEPTACLE FOR TABS 0,5-1	602320508	62	9	428	96022870	WIRING HARNESS
RECEPTACLE FOR TABS 6,3X	602303308	134	2	90	96062920	WIRING HARNESS
RECEPTACLE FOR TABS 6,3X	602303308	134	2	426	96023891	WIRING HARNESS
RECEPTACLE FOR TABS 6,3X	602303308	134	2	490	96063649	WIRING HARNESS
RECTANGULAR SECTION RI	571915108	10	1	543	10333672	CONTROL BLOCK
RECTANGULAR SECTION RI	7367610	300	3	33	967304508	UNDERCARRIAGE HYDRAULIC
RECTANGULAR SECTION RI	10490781	302	2	33	967304508	UNDERCARRIAGE HYDRAULIC
RECTANGULAR SECTION RI	7367612	310	8	33	967304508	UNDERCARRIAGE HYDRAULIC
REDUCER M22/M14X1,5	10354839	4	1	563	10097345	OIL AIR COOLER
REDUCING STUD RI 8 M16x1.5	10120066	19	1	223	12512627	EXHAUST NOZZLE ATTACHM
REDUCTION M20X1,5/M12X1,5	602606108	503	1	693	96063864	WIRING HARNESS
REDUCTION M25X1,5/M20X1,5	602606408	508	1	589	96055198	WIRING HARNESS
REDUCTION M25X1,5/M20X1,5	602606408	504	1	693	96063864	WIRING HARNESS
REDUCTION M25X1,5/M20X1,5	602606408	502	1	698	96063213	LEAD
REDUCTION M32X1,5/M25X1,5	602606608	505	1	694	96063583	LEAD
REDUCTION M40X1,5/M25X1,5	602606708	507	1	492	96063650	LEAD
REDUCTION M40X1,5/M32X1,5	602606808	511	1	90	96062920	WIRING HARNESS
REFLECTOR	607225008	5	1	620	913978308	ADDITIONAL ELECTRICS
REFRIGERANT 12KG FLASCH	7020440	100	1.6	575	918627208	AIR COND. UNIT SUPERSTRU
REGULATING VALVE EL-DA	9074716	4	1	261	12487540	HYDR.DOUBLE PUMP
REGULATION REPAIR KIT	10872672	998	1	342	11002447	BLIND
REINFORCED RUBBER HOSE	790042908	71	1	104	928569808	MAIN TOOLS
RELAY 24V/1S 26X26X24MM	630105108	7	5	498	919940108	SWITCHBOX MOUNTING PART
RELAY 24V/1S 26X26X24MM	630105108	(1)	1	562	919528608	OIL COOLER INSTALLATION
RELAY 24V/1W 26X26X24MM	630105408	8	1	498	919940108	SWITCHBOX MOUNTING PART
RELING	916162808	19	1	319	919010108	CRANE OPERATOR CABIN P
REMOTE CONTROL APPARA	11212256	100	1	89	968252908	BTB PROGRAMMED
REMOTE CONTROL TRANSMIT	11160970	(1)	1	435	96022872	CONTROL PANEL ROOF
REP-SHEET GASKET 151,6X15	12993450	2	1	138	10154458	CYLINDER
REPAIR KIT	10650501	(998)	1	516	96045552	HYDRAULICS UPPER CARRI
REPAIR KIT	10650501	(998)	1	517	96045552	HYDRAULICS UPPER CARRI
REPAIR KIT	11003094	999	1	567	502657308	AIR DRYER
REPAIR KIT	12107162	(999)	1	760	918533508	ADAPTER PRE-ASS.
REPAIR KIT	571582108	1	1	209	5700161	AIR COMPRESSOR
REPAIR KIT	571582708	15	1	209	5700161	AIR COMPRESSOR
REPAIR KIT	571838008	98	1	766	10801932	HAND PUMP
REPAIR KIT -E DF/LF	10035534	(2)	1	516	96045552	HYDRAULICS UPPER CARRI
REPAIR KIT BREMSE LIEBHE	12572663	950	1	369	933074801	SLEWING GEAR DRIVE
REPAIR KIT CONNECTION H	9889837	90	1	261	12487540	HYDR.DOUBLE PUMP
REPAIR KIT CRAWLER CHAIN	965336308	990	1	55	10430241	CRAWLER CHAIN CPL.
REPAIR KIT CRAWLER CHAIN	965359808	991	1	55	10430241	CRAWLER CHAIN CPL.
REPAIR KIT CRAWLER CHAIN	965359908	992	1	55	10430241	CRAWLER CHAIN CPL.

Description	Item	Pos.	Quantity	Page	Assembly	Description
REPAIR KIT DRIVING MECHANI	9073916	92	1	261	12487540	HYDR.DOUBLE PUMP
REPAIR KIT DRIVING MECHANI	9073486	94	1	261	12487540	HYDR.DOUBLE PUMP
REPAIR KIT HANDLE	12100622	1	1	342	11002447	BLIND
REPAIR KIT LOCK RING NG 12	9268016	96	1	261	12487540	HYDR.DOUBLE PUMP
REPAIR KIT MAGNET	9273187	97	2	261	12487540	HYDR.DOUBLE PUMP
REPAIR KIT SCREW PLUG	12932488	275	1	182	10146658	HIGH PRESSURE PUMP
REPAIR KIT SHAFT NG 125	9073528	93	1	261	12487540	HYDR.DOUBLE PUMP
REPAIR KIT SHAFT NG 125	9073915	95	1	261	12487540	HYDR.DOUBLE PUMP
REPAIR KIT SICHERUNGSKN	967361508	3	1	629	773941308	POUCH SOCKET
REPAIR KIT VALVE	12917604	250	1	182	10146658	HIGH PRESSURE PUMP
REPAIR KIT VALVE	12966286	240	1	182	10146658	HIGH PRESSURE PUMP
REPAIR KIT WATER HEATING	96004475	999	1	448	10876576	WATER HEATING SYSTEM
REPAIR SEGMENT 1-FACH	10814497	1	1	57	965336308	REPAIR KIT CRAWLER CHAIN
REPAIR SEGMENT 2-FACH	10816194	1	1	58	965359808	REPAIR KIT CRAWLER CHAIN
REPAIR SEGMENT 3-FACH	10816195	1	1	59	965359908	REPAIR KIT CRAWLER CHAIN
REPAIR SET LID NG 100	9275443	85	2	261	12487540	HYDR.DOUBLE PUMP
REPAIR SET PRESSURE GOV	11003089	998	1	567	502657308	AIR DRYER
REPAIR SET SWIVEL YOKE N	10139744	84	2	261	12487540	HYDR.DOUBLE PUMP
RESISTANCE MODULE PRE-A	966193108	4	1	507	968015808	PRE-ASSEMBLY MOUNTING U
RESISTOR 1K 5% 3W SPF	635058508	8	1	505	966157408	INSERTION MODULE
RESISTOR 20R 1% 25W	635052808	2	6	508	966193108	RESISTANCE MODULE PRE-A
RESISTOR 27K4 1% 0.25W	635042608	7	2	505	966157408	INSERTION MODULE
RESISTOR 500R 0.1% 3W SPF	635051508	3	2	505	966157408	INSERTION MODULE
RESISTOR 5K1 1% 0.25W	10489549	4	3	505	966157408	INSERTION MODULE
RETAINER	979589208	5	1	127	968305308	LIMIT SWITCH, PRE-ASSEMB
RETAINER CLIP 122,5/K1 St/Ino	10127984	2	1	202	10147364	AIR INTAKE ASSEMBLY
RETAINER CLIP 125/K1 Inox	10138826	6	1	223	12512627	EXHAUST NOZZLE ATTACHM
RETAINER CLIP 129	12222896	22	1	448	10876576	WATER HEATING SYSTEM
RETAINER CLIP 150/K1 Inox	10138820	3	1	216	10148215	THERMOSTAT HOUSING ASS
RETAINER CLIP 73/K1 St/Inox	10122841	2	1	218	10142742	COOLANT PIPE BEND ADD-ON
RETAINER CLIP 75/25	774209708	180	1	272	96020819	RADIATOR, PRE-ASSEMBLED
RETAINER CLIP 77/K1 St/Inox	10124798	5	2	203	10149677	CONNECTING LINE ADD-ON
RETAINER CPL.	10127689	2	1	237	10144227	CONTROL BOX ANNEXE
RETAINER CPL.	10143454	1	1	237	10144227	CONTROL BOX ANNEXE
RETAINER CPL. S235JR	10145371	2	1	242	10143707	CLAMP - ADD-ON UNIT
RETAINER CPL. S235JR	12978423	1	1	242	10143707	CLAMP - ADD-ON UNIT
RETAINER HOUSING 4-POL 19	602337608	516	1	500	96059659	CABLES, BASIC CONSTRUCTI
RETAINER PLATE 2X121X18 D	97010815	8	1	502	96025348	BASE ASSEMBLY
RETAINER PLATE 2X138X18 D	97015049	7	1	502	96025348	BASE ASSEMBLY
RETAINER PLATE 2X192X41 D	97010814	6	2	502	96025348	BASE ASSEMBLY
RETAINER PLATE 4X253X398 S	97131661	100	1	645	919950308	DISPATCH ASSY.MECH.PART
RETAINER PLATE 4X253X398 S	97131662	101	1	645	919950308	DISPATCH ASSY.MECH.PART
RETAINING DISK 100X55X6	927601301	6	1	383	968607101	PLANETARY GEARBOX
RETAINING DISK 4X60X4 -42Cr	944134103	36	2	369	933074801	SLEWING GEAR DRIVE
RETAINING DISK 4X70X4 -42Cr	927531901	16	1	369	933074801	SLEWING GEAR DRIVE
RETAINING DISK 55X125X6	927602801	31	1	383	968607101	PLANETARY GEARBOX
RETAINING RINGS DIN 471 100	10875652	32	2	673	91000054	TELESCOPIC SECT.5 PRE-AS
RETAINING RINGS DIN 471 150	10875654	3	2	675	964283508	ROPE PULLEY CPL.
RETAINING RINGS DIN 471 150	10874537	3	2	677	927310008	ROPE PULLEY CPL.
RETAINING RINGS DIN 471 150	10874537	3	2	764	963904108	ROPE PULLEY CPL.
RETAINING RINGS DIN 471 150	10874537	3	2	769	927311708	ROPE PULLEY CPL.
RETAINING RINGS DIN 471 18	428009408	3	2	742	924073908	ROPE PULLEY
RETAINING RINGS DIN 471 22	463000003	41	6	369	933074801	SLEWING GEAR DRIVE
RETAINING RINGS DIN 471 28X	463000103	21	5	369	933074801	SLEWING GEAR DRIVE
RETAINING RINGS DIN 471 34X	428011301	7	2	165	11448005	ROCKER ARM BRACKET PRE
RETAINING RINGS DIN 471 34X	428011301	7	2	166	12549825	ROCKER ARM BRACKET PRE
RETAINING RINGS DIN 471 35X	428002908	92	1	369	933074801	SLEWING GEAR DRIVE
RETAINING RINGS DIN 471 40X	10875657	72	1	369	933074801	SLEWING GEAR DRIVE
RETAINING RINGS DIN 471 40X	428003308	33	3	383	968607101	PLANETARY GEARBOX
RETAINING RINGS DIN 471 40X	428003308	33	3	584	938759801	PLANETARY GEARBOX

Description	Item	Pos.	Quantity	Page	Assembly	Description
RETAINING RINGS DIN 471 40X	428003308	13	1	763	917695308	GUIDE PULLEY COMPL.
RETAINING RINGS DIN 471 45X	428004008	44	2	383	968607101	PLANETARY GEARBOX
RETAINING RINGS DIN 471 45X	428004008	44	2	584	938759801	PLANETARY GEARBOX
RETAINING RINGS DIN 471 55X	530133308	8	5	383	968607101	PLANETARY GEARBOX
RETAINING RINGS DIN 471 55X	530133308	8	5	584	938759801	PLANETARY GEARBOX
RETAINING RINGS DIN 471 68	10875662	(3)	2	763	917695308	GUIDE PULLEY COMPL.
RETAINING RINGS DIN 471 8X	10450160	7	1	364	966253908	WAGON
RETAINING RINGS DIN 471 9X1	12100338	21	6	326	968483708	STEP CPL.
RETAINING RINGS DIN 472 12	428103808	12	1	377	510240708	HYDRO MOTOR
RETAINING RINGS DIN 472 17	428105908	21	1	381	938759601	ROPE DRUM
RETAINING RINGS DIN 472 28X	428110001	29	1	584	938759801	PLANETARY GEARBOX
RETAINING RINGS DIN 472 30X	428100708	5	1	275	10429930	GEAR WHEEL MOTOR
RETAINING RINGS DIN 472 68X	428102108	67	1	369	933074801	SLEWING GEAR DRIVE
RETAINING RINGS DIN 472 80X	428102508	12	1	372	570109008	DRIVING GEAR
RETAINING RINGS DIN 472 85X	428102708	4	1	383	968607101	PLANETARY GEARBOX
RETAINING RINGS DIN 472 85X	428102708	4	1	584	938759801	PLANETARY GEARBOX
RETAINING RINGS DIN 472 90X	10171632	9	1	43	592326914	VARIABLE DISPLACEMENT MO
RETAINING SPRING 3X55 VER	433102808	140	1	407	96022627	SLEWING PLATFORM PANELLI
RETAINING SPRING 3X55 VER	433102808	101	1	415	96024809	SLEWING PLATFORM PANELLI
RETAINING SPRING 3X55 VER	433102808	5	1	736	96056560	WIND WARNING PREASSEMB
RETAINING SPRING 4,5X98 IS	433100908	4	2	721	915415908	BOOM NOSE
RETAINING SPRING 4,5X98 IS	433100908	7	1	748	925280008	CONSOLE PRE-ASS.
RETAINING SPRING 4X68 ISO	433101208	39	4	22	96062226	CRAWLER CARRIER RIGHT CP
RETAINING SPRING 4X68 ISO	433101208	39	4	28	96062228	CRAWLER TRACK CARRIER LE
RETAINING SPRING 4X68 ISO	433101208	7	2	77	990618314	TRANSPORT SUPPORT
RETAINING SPRING 4X68 ISO	433101208	70	2	581	96062734	AUXILIARY HOISTING GEAR
RETAINING SPRING 4X68 ISO	433101208	38	1	673	91000054	TELESCOPIC SECT.5 PRE-AS
RETAINING SPRING 4X68 ISO	433101208	12	1	723	964502908	BOOM NOSE PRE-ASS.
RETAINING SPRING 4X68 ISO	433101208	20	1	723	964502908	BOOM NOSE PRE-ASS.
RETAINING SPRING 4X68 ISO	433101208	2	1	726	967321308	FIXING DEVICE 2.LIFT TOP
RETAINING SPRING 4X68 ISO	433101208	36	1	747	919933308	TRANSPORT MOUNTING
RETAINING SPRING 4X68 ISO	433101208	7	1	750	96062062	FOLDING BRACKET PRE-ASS.
RETAINING SPRING 4X68 ISO	433101208	8	1	760	918533508	ADAPTER PRE-ASS.
RETAINING SPRING 4X68 ISO	433101208	14	1	763	917695308	GUIDE PULLEY COMPL.
RETAINING SPRING 4X68 ISO	433101208	27	1	771	918596708	HEAD SECTION PRE-ASS.
RETAINING SPRING 5X122 IS	433102508	67	1	673	91000054	TELESCOPIC SECT.5 PRE-AS
RETAINING SPRING 5X122 IS	433102508	10	1	723	964502908	BOOM NOSE PRE-ASS.
RETAINING SPRING 5X122 IS	433102508	12	1	734	96056553	LOCATION FIXTURE PRE-ASS.
RETAINING SPRING DIN 2194	433105008	15	1	768	91001040	PIVOT SECTION, PRE-ASSEMB
RETAINING SPRING DIN 2194	433105008	7	1	772	918221408	TENSION PLATE PRE-ASS.
RETAINING STRAP 3X20X1295	97170326	30	1	349	966497908	FRONT WINDOW CPL.
RETRACTING LIFELINES EN 3	12107776	2	1	120	916959808	PERSONAL PROTECTION EQ
RETURN FILTER 400L/MIN	10871354	100	2	295	969219208	OIL TANK PRE-ASS.
REWORK ARMREST LEFT	96032222	5	1	395	918810308	CONTROL STAND
REWORK ARMREST RIGHT	96032223	6	1	395	918810308	CONTROL STAND
RIBBED HEX NUT M6 10	10003366	3	1	204	9078314	HEATING FLANGE ADD-ON
RIBBED HEX NUT M6 10	10003366	25	2	223	12512627	EXHAUST NOZZLE ATTACHM
RIBBED TUBE ALU	10493045	168	1	566	969767908	PIPEWORK AIR INSTALLATIO
RING	570110708	5	14	373	570109508	DRIVING GEAR
RING BOLT DIN 580 M12 C15E	10179932	310	1	291	969543308	FUEL TANK, PRE-ASSEMBLED
RING BOLT DIN 580 M12 C15E	10179932	310	1	295	969219208	OIL TANK PRE-ASS.
RING BOLT DIN 580 M16X27 C	402600508	46	1	71	10356288	SUPPORT CYLINDER
RING FAN D=654	550639508	101	1	272	96020819	RADIATOR, PRE-ASSEMBLED
RING RD20X8 S355J2C+C FE//	950306608	15	2	655	91000049	PIVOT SECTION, PRE-ASSEMB
RK BIG-END BEARING D930	10116934	50	1	158	11348072	CONROD
RK CABLE LOOM	967363808	999	1	437	10340105	WARNING LIGHT
RK CRANKSHAFT SEAL 115 H	10121335	2	1	156	10153583	CRANKSHAFT SEALING
RK CRANKSHAFT SEAL D934/	10141178	520	1	250	10148366	SEAL KIT DIESEL ENGINE
RK CYLINDER HEAD	13486106	(998)	1	160	10149580	CYLINDER HEAD ASSEMBLY
RK CYLINDER+CONTROL PLA	9073918	81	1	261	12487540	HYDR.DOUBLE PUMP

Description	Item	Pos.	Quantity	Page	Assembly	Description
RK CYLINDER+CONTROL PLA	9073484	79	1	261	12487540	HYDR.DOUBLE PUMP
RK HIGH PRESSURE CONNE	12932487	270	1	182	10146658	HIGH PRESSURE PUMP
RK HIGH PRESSURE CONNEC	10141140	2	1	185	13743036	RK INJECTOR
RK HIGH PRESSURE CONNEC	10141140	1	1	191	13757616	RK HIGH PRESSURE CONNEC
RK HIGH PRESSURE CONNEC	13757616	200	1	189	10153151	HIGH PRESS.CONNECTOR W
RK HIGH PRESSURE SENSOR	12881001	260	1	182	10146658	HIGH PRESSURE PUMP
RK INJECTOR LI2.7-20-SF-950	13743036	200	1	184	10152867	INJECTOR WITH FASTENING
RK PISTON WITH SLIPPER NG	9073393	77	2	261	12487540	HYDR.DOUBLE PUMP
RK PRE-FEED PUMP	12923599	220	1	182	10146658	HIGH PRESSURE PUMP
RK PULL-BACK BALL+PULL-B.P	9073389	78	2	261	12487540	HYDR.DOUBLE PUMP
RK VOLUME CONTROL VALVE	12490199	230	1	182	10146658	HIGH PRESSURE PUMP
ROCKER 983593114 LH-GRAU	918578614	18	2	454	919501608	HYDRAULIC BALLASTING
ROCKER ARM BRACKET CPL.	10148438	81	4	131	13455311	DIESEL ENGINE
ROCKER ARM BRACKET PRE	11448005	1	1	164	10148438	ROCKER ARM BRACKET CPL.
ROCKER ARM BRACKET PRE	12549825	1	1	164	10148438	ROCKER ARM BRACKET CPL.
ROCKER ARM PRE-ASSY.	11448000	2	2	165	11448005	ROCKER ARM BRACKET PRE
ROCKER ARM PRE-ASSY.	12549824	2	2	166	12549825	ROCKER ARM BRACKET PRE
ROCKER ARM SUPPORT	11448002	1	1	165	11448005	ROCKER ARM BRACKET PRE
ROCKER ARM SUPPORT	11448002	1	1	166	12549825	ROCKER ARM BRACKET PRE
ROCKER SWITCH	606023008	3	1	620	913978308	ADDITIONAL ELECTRICS
ROD 20.0X1140 S355J2+AR FE	97130460	21	2	420	919484908	FALL PROTECTION
ROD SEAL 125X133X11,5	7368257	6	1	25	749065414	TENSION JACK HYDR CPL
ROD SEAL 125X133X6	790272414	3	1	25	749065414	TENSION JACK HYDR CPL
ROLLER 130.0X56 35NICRMOV	97053660	(1)	1	763	917695308	GUIDE PULLEY COMPL.
ROLLER 22X13 PA 12	97001109	6	2	364	966253908	WAGON
ROLLER 30X11 PA 12	97008171	5	1	364	966253908	WAGON
ROLLER 50.0X25 S355J2+AR	947868208	2	1	748	925280008	CONSOLE PRE-ASS.
ROLLER 50.0X25 S355J2+AR	947868208	2	2	751	929582108	MOUNTING PRE-ASS.
ROLLER 50.0X25 S355J2+AR	947868208	22	2	768	91001040	PIVOT SECTION, PRE-ASSEMB
ROLLER BEARING 100X150X6	745902508	2	1	675	964283508	ROPE PULLEY CPL.
ROLLER BEARING 100X150X6	745902508	2	1	677	927310008	ROPE PULLEY CPL.
ROLLER BEARING 100X150X6	745902508	2	1	764	963904108	ROPE PULLEY CPL.
ROLLER BEARING 100X150X6	745902508	2	1	769	927311708	ROPE PULLEY CPL.
ROLLER BEARING 120X180X8	745902708	2	1	742	924073908	ROPE PULLEY
ROLLER BEARING 68X40X38	745900808	(2)	1	763	917695308	GUIDE PULLEY COMPL.
ROLLER CAGE	927514301	16	38	383	968607101	PLANETARY GEARBOX
ROLLER CAGE	927514301	16	38	584	938759801	PLANETARY GEARBOX
ROLLER CARRIER WELDED	929591608	6	1	751	929582108	MOUNTING PRE-ASS.
ROLLER CLAMP WELDED	962051508	12	2	581	96062734	AUXILIARY HOISTING GEAR
ROLLER CLAMP WELDED	967708808	4	1	723	964502908	BOOM NOSE PRE-ASS.
ROLLER CLAMP WELDED FE//	969142508	2	1	763	917695308	GUIDE PULLEY COMPL.
ROLLER CPL.	969174808	3	1	763	917695308	GUIDE PULLEY COMPL.
ROLLER MOUNTING FE//ZNNI	927493908	21	2	768	91001040	PIVOT SECTION, PRE-ASSEMB
ROLLER ORIFICE	749013808	4	1	655	91000049	PIVOT SECTION, PRE-ASSEMB
ROLLER ORIFICE	749013808	15	1	661	91000050	TELESCOPIC SECTION 1 PRE
ROLLER ORIFICE	749013808	15	1	664	91000051	TELESCOPIC SECT.2 PRE-AS
ROLLER ORIFICE	749013808	15	1	667	91000052	TELESCOPIC SECT.3 PRE-ASS
ROLLER ORIFICE	749013808	15	1	670	91000053	TELESCOPIC SECT.IV PRE-A
ROLLER SLEWING RING	917472008	117	1	13		LIEBHERR LTR 1100
ROLLER SLEWING RING 1340	931696301	1	1	365	917472008	ROLLER SLEWING RING
ROLLER TAPPET	10153536	1	2	172	9079870	CONTROL PARTS
ROLLING NOZZLE	10292013	28	8	338	917305408	INTERNAL PANELLING INSTA
ROOF COVERING COMPL.	965763608	9	1	338	917305408	INTERNAL PANELLING INSTA
ROOF WINDOW 10.28X941X74	979240608	1	1	350	965784408	ROOF WINDOW PRE-ASS.
ROOF WINDOW PRE-ASS.	965784408	4	1	346	916162508	WINDOW ASSEMBLY
ROPE 2 2,3KN EDELSTAHL	11160431	6	2	47	968374708	MOUNTING PARTS
ROPE 2 2,3KN EDELSTAHL	11160431	2	0.6	50	96070203	TRANSPORT LASHING
ROPE 2 2,3KN EDELSTAHL	11160431	14	3	70	915447908	HYDRAULIC SUPPORT
ROPE 2 2,3KN EDELSTAHL	11160431	6	0.75	125	963260408	LOCKING
ROPE 2 2,3KN EDELSTAHL	11160431	6	0.75	126	96049764	LOCKING

Description	Item	Pos.	Quantity	Page	Assembly	Description
ROPE 2 2,3KN EDELSTAHL	11160431	8	0.3	750	96062062	FOLDING BRACKET PRE-ASS.
ROPE 2 2,3KN EDELSTAHL	11160431	28	1	771	918596708	HEAD SECTION PRE-ASS.
ROPE 2 2,3KN EDELSTAHL	11160431	3	0.4	783	968952708	MOUNTING HOOK ROD
ROPE 6 0,59KN PERLON	773404508	6	1.6	646	925141508	HOSE GUIDE PRE-ASS.
ROPE 6 0,59KN PERLON	773404508	34	1.2	771	918596708	HEAD SECTION PRE-ASS.
ROPE CLAMP DIN 1142 22 VER	773913308	6	1	645	919950308	DISPATCH ASSY.MECH.PART
ROPE DRUM	938759601	1	1	380	968558601	COMPACT ROPE WINCH
ROPE DRUM	938759601	1	1	583	938707001	COMPACT ROPE WINCH
ROPE FIXING POINT	11494297	2	1	743	910445708	HOOK BLOCK
ROPE GUARD CPL	571926008	10	1	743	910445708	HOOK BLOCK
ROPE GUARD LEFT 4X205X173	971812308	26	1	581	96062734	AUXILIARY HOISTING GEAR
ROPE GUARD LEFT 4X311X318	973116808	6	2	378	963564908	MAIN HOISTING GEAR PRE-A
ROPE GUARD RIGHT 4X205X1	971812408	27	1	581	96062734	AUXILIARY HOISTING GEAR
ROPE LENGTH INDICATOR 1	12102801	(1)	1	652	919935408	TELESCOPIC BOOM CPL.
ROPE PROTECTION ROD	10801473	12	2	741	919421708	HOOK BLOCK
ROPE PROTECTION ROD	571926108	12	2	743	910445708	HOOK BLOCK
ROPE PULLEY 525X56 S355J	976249108	1	1	675	964283508	ROPE PULLEY CPL.
ROPE PULLEY 56X470X470 P	975555308	1	1	764	963904108	ROPE PULLEY CPL.
ROPE PULLEY CPL. RD640 SP	927311708	2	1	768	91001040	PIVOT SECTION, PRE-ASSEMB
ROPE PULLEY CPL. SPF	927310008	71	1	673	91000054	TELESCOPIC SECT.5 PRE-AS
ROPE PULLEY CPL. SPF	927310008	1	1	727	914557108	INST.BACK SHEAVE FOR BOO
ROPE PULLEY CPL. SPF	927310008	4	1	771	918596708	HEAD SECTION PRE-ASS.
ROPE PULLEY CPL. SPF	963904108	4	1	763	917695308	GUIDE PULLEY COMPL.
ROPE PULLEY CPL. SPF	964283508	33	5	673	91000054	TELESCOPIC SECT.5 PRE-AS
ROPE PULLEY CPL. SPF	964283508	3	1	723	964502908	BOOM NOSE PRE-ASS.
ROPE PULLEY RD485X63 PA6	773952208	1	1	742	924073908	ROPE PULLEY
ROPE PULLEY RD525X56 PA6	288157708	1	1	677	927310008	ROPE PULLEY CPL.
ROPE PULLEY RD700X56 PA6	288158408	1	1	769	927311708	ROPE PULLEY CPL.
ROPE PULLEY SPF	924073908	1	1	741	919421708	HOOK BLOCK
ROPE PULLEY SPF	924073908	1	3	743	910445708	HOOK BLOCK
ROPE SLING -5M PP SPF	773326508	3	1	779	917508408	TOOLS
ROPE SLING DIN EN 13414-3 9.	773315108	1	3	738	917893008	SLINGING MEAN
ROPE WITH ACCESSORIES 1	917910508	127	1	13		LIEBHERR LTR 1100
ROTARY ENCODER	968248508	30	1	486	968365908	EL.ADD-ON SET-LIMIT SWITCH
ROTARY ENCODER 360° LSB P	11342313	(1)	1	486	968365908	EL.ADD-ON SET-LIMIT SWITCH
ROTARY FEED THROUGH 6 KA	10282928	3	1	42	96048348	INSTALLATION PARTS F.HYD
ROTARY SHAFT LIP SEAL AS	10006550	1	1	156	10153583	CRANKSHAFT SEALING
ROTARY SHAFT LIP SEAL BAB	710062601	63	2	383	968607101	PLANETARY GEARBOX
ROTARY SHAFT LIP SEAL BAB	710062601	63	2	584	938759801	PLANETARY GEARBOX
ROTARY SHAFT LIP SEAL DIN	710032508	22	1	381	938759601	ROPE DRUM
ROTARY SHAFT LIP SEAL DIN	10167462	64	2	369	933074801	SLEWING GEAR DRIVE
ROTARY SHAFT LIP SEAL DIN	710059301	11	1	369	933074801	SLEWING GEAR DRIVE
ROTARY SHAFT LIP SEAL DIN	710054601	(1)	1	383	968607101	PLANETARY GEARBOX
ROTARY SHAFT LIP SEAL DIN	710054601	11	1	584	938759801	PLANETARY GEARBOX
ROTATING BEACON 55W 24V	10470032	1	1	106	915731908	EL.COMP. DISPATCH ASSEM
ROTATING PLATFORM LOCK	916109208	121	1	13		LIEBHERR LTR 1100
ROTATIONAL SPEED SENSOR	13736146	1	1	244	12544505	ROTATIONAL SPEED SENSOR
ROTATIONAL SPEED SENSOR	12544505	20	2	243	12583633	ENGINE CONTROL SENSORS
ROTOR	11171311	1	1	731	12102807	WIND VELOCITY TRANSMITTE
ROTOR GASKET 150X165,5X6,	10492566	(31)	8	42	96048348	INSTALLATION PARTS F.HYD
ROUND BUFFER 25X20-M6X38	10870544	32	1	420	919484908	FALL PROTECTION
RS CRANKSHAFT BEARING KP	10116939	1	1	154	9076457	SET MAIN BEARINGS
RS FLANGE	10145815	8	1	170	10147787	CAMSHAFT CPL.
RUBBER BELLOWS	571912308	2	1	436	10343693	JOYSTICK
RUBBER BUFFER 19X9,6 PU	10354670	25	2	338	917305408	INTERNAL PANELLING INSTA
RUBBER BUFFER 32X32XM6	10472890	8	1	361	917304708	SLIDING DOOR INSTALLATION
RUBBER BUFFER 8,3/26X7,2 3	10116274	4	8	237	10144227	CONTROL BOX ANNEXE
RUBBER CAP	12104653	(1)	4	780	917508508	LADDER ATTACHMENT
RUBBER CONNECTION	10116310	24	1	222	10140729	EXHAUST TC MOUNTING
RUBBER CONNECTION	10126317	5	1	152	10139112	OIL LINE PRE-ASSEMBLY

Description	Item	Pos.	Quantity	Page	Assembly	Description
RUBBER CONNECTION	10126317	(2)	1	250	10148366	SEAL KIT DIESEL ENGINE
RUBBER CONNECTION	10129904	4	1	203	10149677	CONNECTING LINE ADD-ON
RUBBER CONNECTION 06-12X	10126119	16	1	224	11420633	CYCLE VALVE
RUBBER CONNECTION 12X18	9079603	7	1	152	10139112	OIL LINE PRE-ASSEMBLY
RUBBER CONNECTION 12X18	9079603	(4)	1	250	10148366	SEAL KIT DIESEL ENGINE
RUBBER CONNECTION 22X30	9273161	7	2	201	10145173	INTAKE STACK ASSEMBLY
RUBBER CONNECTION 25X33	9271340	5	1	143	10126713	CRANKCASE BREATHER ASS
RUBBER CONNECTION Rubbe	10126417	4	1	143	10126713	CRANKCASE BREATHER ASS
RUBBER CONNECTION Silicon	10128228	7	3	224	11420633	CYCLE VALVE
RUBBER GASKET 16X10,9 NBR	10873980	5	1	462	96071742	UREA TANK
RUBBER HOSE 100X6X75 EPD	942875408	251	1	476	918729308	AIR FILTER UNIT
RUBBER METAL STOP BUFFE	726617408	24	1	349	966497908	FRONT WINDOW CPL.
RUBBER METAL STOP BUFF	726616708	30	4	420	919484908	FALL PROTECTION
RUBBER METAL STOP BUFFE	726907308	120	2	407	96022627	SLEWING PLATFORM PANELLI
RUBBER METAL STOP BUFFE	726907308	105	2	415	96024809	SLEWING PLATFORM PANELLI
RUBBER METAL STOP BUFFE	10030440	9	1	361	917304708	SLIDING DOOR INSTALLATION
RUBBER METAL STOP BUFF	726613008	31	2	420	919484908	FALL PROTECTION
RUBBER METAL STOP BUFF	726613008	16	2	655	91000049	PIVOT SECTION, PRE-ASSEMB
RUBBER METAL STOP BUFFE	726617908	16	1	771	918596708	HEAD SECTION PRE-ASS.
RUBBER PLATE 1.5X185X45 E	979243608	4	2	350	965784408	ROOF WINDOW PRE-ASS.
RUBBER PLATE 184X10X2 GU	977240008	(2)	2	30	992078314	CENTRE PIECE
RUBBER RING X12	10133991	102	1	240	10151328	CABLE HARNESS MOUNTING
RUBBER RING X16	10123876	103	1	240	10151328	CABLE HARNESS MOUNTING
RUBBER RING X22	10123878	33	2	484	919940408	ELECTR. SYSTEM F.SLEWING
RUBBER-METAL RAIL 170	726617008	100	2	124	918728408	ASSEMBLY PARTS F.SLEWING
SAE FLANGE	12107041	52	3	684	12105406	TELESCOPIC CYLINDER
SAE FLANGE CONNECTION G	510702408	511	1	517	96045552	HYDRAULICS UPPER CARRI
SAE FLANGE CONNECTION W	474906708	510	1	517	96045552	HYDRAULICS UPPER CARRI
SAE FLANGE CONNECTION W	474906708	501	1	591	96064697	HYDR.AUXILIARY HOISTING
SAE FLANGE CONNECTION	474906908	501	1	517	96045552	HYDRAULICS UPPER CARRI
SAE FLANGE CONNECTION	474906608	500	4	33	967304508	UNDERCARRIAGE HYDRAULIC
SAE INTERMEDIATE FLANGE	511519208	509	2	517	96045552	HYDRAULICS UPPER CARRI
SAE INTERMEDIATE FLANGE	511519208	500	2	591	96064697	HYDR.AUXILIARY HOISTING
SAFETY BUTTON	10424601	1	1	631	967361508	REPAIR KIT
SAFETY BUTTON	10470667	2	1	631	967361508	REPAIR KIT
SAFETY DEVICE 8X0,94	704271208	29	1	346	916162508	WINDOW ASSEMBLY
SAFETY ELEMENT	10294939	(2)	1	476	918729308	AIR FILTER UNIT
SAFETY HARNESS EN 361 IK	11007305	1	1	120	916959808	PERSONAL PROTECTION EQ
SAFETY JACKET EN ISO 2047	872101908	6	1	105	928620108	ACCESSORIES
SAFETY PLUG W HINGE-LID 5	10875869	44	2	673	91000054	TELESCOPIC SECT.5 PRE-AS
SAFETY PLUG W HINGE-LID 5	10875869	81	3	673	91000054	TELESCOPIC SECT.5 PRE-AS
SAFETY PLUG W HINGE-LID 5	10875869	7	1	726	967321308	FIXING DEVICE 2.LIFT TOP
SAFETY PLUG W HINGE-LID 5	10875869	13	4	741	919421708	HOOK BLOCK
SAFETY PLUG W HINGE-LID 5	10875869	(1)	2	743	910445708	HOOK BLOCK
SAFETY PLUG W HINGE-LID 5	10875869	13	1	768	91001040	PIVOT SECTION, PRE-ASSEMB
SAFETY PLUG W HINGE-LID 5	10875869	9	2	771	918596708	HEAD SECTION PRE-ASS.
SAFETY PLUG W HINGE-LID 6	10875870	12	8	70	915447908	HYDRAULIC SUPPORT
SAFETY PLUG W HINGE-LID 6	10875870	21	1	763	917695308	GUIDE PULLEY COMPL.
SAFETY PLUG W HINGE-LID 8X	10180884	10	4	635	915090008	COUNTERWEIGHT WITH CLAM
SAFETY PLUG W HINGE-LID 9	571530608	2	1	629	773941308	POUCH SOCKET
SAFETY TRAP	12104667	34	1	741	919421708	HOOK BLOCK
SAFETY TRAP	571714308	34	2	743	910445708	HOOK BLOCK
SASH LOCK	10650295	4	4	332	968462608	INSTALLATION SWITCH CAB. C
SCRAPER 125X140X9,5	7371745	5	1	25	749065414	TENSION JACK HYDR CPL
SCREENING	966980708	36	2	431	96056347	ELECTRIC ADD-ON PARTS CA
SCREW	570941408	2	1	720	511479408	LOAD HOLDING VALVE
SCREW 25X25X65 8.8 FE//ZNNI	956414208	17	4	679	91000055	MECHANICAL EXTENSION SYS
SCREW CAP GPN 800 M14X1,	10021410	3	2	183	12489819	COVERING CAPS - KIT
SCREW CARABINER OVAL M.	10877382	2	2	676	96013575	HOIST LIM.SWITCH PLUMMET
SCREW DIN 912 M12X40 12.9	404361977	86	4	528	11170515	VALVE BLOCK

Description	Item	Pos.	Quantity	Page	Assembly	Description
SCREW DIN 912 M12X40 12.9	404361977	86	4	530	11170518	VALVE BLOCK
SCREW DIN 912 M12X40 12.9	404361977	86	4	531	11170519	VALVE BLOCK
SCREW DIN 912 M12X40 12.9	404361977	86	4	602	10665173	CONTROL BLOCK
SCREW DIN 912 M8X25 12.9	570613877	9	4	209	5700161	AIR COMPRESSOR
SCREW LOCKING FLASCHE 5	811205708	105	1	168	10120186	BALANCER ASSEMBLY
SCREW LOCKING FLASCHE 5	811205708	109	1	169	12408221	FLANGE PRE-ASS.
SCREW LOCKING FLASCHE 5	811205708	105	1	178	10142942	LUBE OIL FILTER ASSEMBLY
SCREW LOCKING FLASCHE 5	811205708	105	1	213	12418347	AIR COND. COMPRESSOR A
SCREW LOCKING FLASCHE 5	811205708	109	1	226	10115539	STARTER ASSEMBLY
SCREW LOCKING FLASCHE 5	811205708	109	1	230	9079823	TRANSPORT DEVICE ATTACH
SCREW LOCKING FLASCHE 5	811205708	109	1	237	10144227	CONTROL BOX ANNEXE
SCREW LOCKING FLASCHE 5	811205708	105	1	248	9078961	POWER TAKE-OFF ADD-ON
SCREW M10X1,5X25 FLZN	12692417	43	3	383	968607101	PLANETARY GEARBOX
SCREW M8X30 St Rm>=800MP	13541106	2	1	238	10144098	FASTENING CLAMP
SCREW PLUG	10650014	48	1	684	12105406	TELESCOPIC CYLINDER
SCREW PLUG	774378208	2	4	482	12101719	DISTRIBUTION BLOCK
SCREW PLUG 15 M20X 1,5 MS	602425008	197	2	703	96063458	TERMINAL BOX CPL.
SCREW PLUG BGR.8 M 79X4 P	12102189	167	1	591	96064697	HYDR.AUXILIARY HOISTING
SCREW PLUG BGR.8 M 79X4 P	12102189	167	1	598	96075086	HYD.AUX.LIFT GEAR UPPER
SCREW PLUG DIN 906 M12X1,5	4600370	80	1	26	749065314	CARRYING ROLLER CPL
SCREW PLUG DIN 908 M20X1,	12218194	12	1	480	10327065	ELECTRIC PUMP
SCREW PLUG DIN 908 M22X1,5	10878578	27	1	209	5700161	AIR COMPRESSOR
SCREW PLUG DIN 908 M26X1,5	4600232	29	3	209	5700161	AIR COMPRESSOR
SCREW PLUG G1/4X19	10470377	59	1	684	12105406	TELESCOPIC CYLINDER
SCREW PLUG G1/8"A NBR	11232679	9	1	66	11481975	CONTROL BLOCK
SCREW PLUG G1/8"A NBR	11232679	2004	4	66	11481975	CONTROL BLOCK
SCREW PLUG M12X1,5 MS	602425508	196	1	703	96063458	TERMINAL BOX CPL.
SCREW PLUG M16X1,5 MS	602424908	10	2	319	919010108	CRANE OPERATOR CABIN P
SCREW PLUG M16X1,5 MS	602424908	17	1	334	917304508	CRANE OPERATOR CABIN P
SCREW PLUG M22X1,5 VERZ	477500301	8	2	586	927521201	OIL-LEVEL GAUGE INSTALLAT
SCREW PLUG M25X1,5 MS	602425108	216	1	692	96063456	TERMINAL BOX
SCREW PLUG M27X2	570109408	11	2	371	510229408	HYDRO MOTOR
SCREW PLUG M30X1,5 11SMn	10137918	2	1	141	10138450	FINAL CONTROL VALVE
SCREW PLUG M30X1,5 ETG 10	10152594	2	1	176	10152592	PRESSURE RELIEF VALVE
SCREW PLUG M32X1,5 MS	602425208	16	1	84	96075205	SWITCH BOX COMPL.
SCREW PLUG M32X1,5 MS	602425208	212	1	692	96063456	TERMINAL BOX
SCREW PLUG M32X1,5 MS	602425208	505	1	698	96063213	LEAD
SCREW PLUG M33X2	10814445	49	2	684	12105406	TELESCOPIC CYLINDER
SCREW PLUG RD32X3 SPF	10466910	172	1	591	96064697	HYDR.AUXILIARY HOISTING
SCREW PLUG RD36X3 SPF	10466911	164	1	591	96064697	HYDR.AUXILIARY HOISTING
SCREW PLUG VSTI M10X1	7381638	12	1	203	10149677	CONNECTING LINE ADD-ON
SCREW PLUG VSTI M10X1	7381638	9	2	212	10145278	ACCESSORIES AIR COMPRES
SCREW PLUG VSTI M10X1	7381638	10	2	232	10115829	FLYWHEEL HOUSING ASSEM
SCREW PLUG VSTI M14X1,5	7380566	6	3	136	11389608	CRANKCASE CPL. WITH CYLIN
SCREW PLUG VSTI M14X1,5	7380566	4	1	201	10145173	INTAKE STACK ASSEMBLY
SCREW PLUG VSTI M14X1,5	7380566	20	1	222	10140729	EXHAUST TC MOUNTING
SCREW PLUG VSTI M16X1,5	7382203	5	2	247	10144027	LOCKING PIECES
SCREW PLUG VSTI M22X1,5 C	7380177	10	3	136	11389608	CRANKCASE CPL. WITH CYLIN
SCREW PLUG VSTI M22X1,5 C	7380177	14	1	233	10116110	LOCKING PIECES
SCREW PLUG VSTI M22X1,5 C	7380177	4	1	247	10144027	LOCKING PIECES
SCREW PLUG VSTI M24X1,5	10041903	2	5	140	13782803	AGGREGATE SUPPORT PRE-A
SCREW PLUG VSTI M26X1,5 C	7381457	7	2	136	11389608	CRANKCASE CPL. WITH CYLIN
SCREW PLUG VSTI M26X1,5 C	7381457	21	1	222	10140729	EXHAUST TC MOUNTING
SCREW PLUG VSTI M30X1,5 S	7382204	11	1	174	10129474	OIL COOLER, PRE-ASSEMBLE
SCREW PLUG VSTI M33X2 11S	10137121	3	1	140	13782803	AGGREGATE SUPPORT PRE-A
SCREW PLUG VSTI M33X2 CR6	10043136	8	1	223	12512627	EXHAUST NOZZLE ATTACHM
SCREW PLUG VSTI M38X1,5 C	7382202	1	1	245	10142747	LOCKING PIECES
SCREW PLUG VSTI M42X2 CR6	10285724	3	1	178	10142942	LUBE OIL FILTER ASSEMBLY
SCREW RD70X120 35NICRM	954766708	11	1	673	91000054	TELESCOPIC SECT.5 PRE-AS
SCREW RD70X164 35NICRM	954766608	11	1	670	91000053	TELESCOPIC SECT.IV PRE-A

Description	Item	Pos.	Quantity	Page	Assembly	Description
SCREW SOCKET	12211232	3	1	462	96071742	UREA TANK
SCREW STOPPER GPN 700 M1	7003652	4	1	183	12489819	COVERING CAPS - KIT
SCREW STOPPER GPN 700 M1	7011745	1	1	183	12489819	COVERING CAPS - KIT
SCREW UNF7/8X14X3 12.9	786511414	3	4	57	965336308	REPAIR KIT CRAWLER CHAIN
SCREW UNF7/8X14X3 12.9	786511414	3	8	58	965359808	REPAIR KIT CRAWLER CHAIN
SCREW UNF7/8X14X3 12.9	786511414	3	12	59	965359908	REPAIR KIT CRAWLER CHAIN
SCREW UNF7/8X14X3 3/4 13.9	485507414	20	248	55	10430241	CRAWLER CHAIN CPL.
SCREW UNF7/8X14X3 3/4 13.9	485507414	3	4	57	965336308	REPAIR KIT CRAWLER CHAIN
SCREW UNF7/8X14X3 3/4 13.9	485507414	3	8	58	965359808	REPAIR KIT CRAWLER CHAIN
SCREW UNF7/8X14X3 3/4 13.9	485507414	3	12	59	965359908	REPAIR KIT CRAWLER CHAIN
SCREW-IN BLIND	10800672	6	1	549	10877219	CONTROL BLOCK
SCREW-IN BLIND	5610372	7	1	549	10877219	CONTROL BLOCK
SCREW-ON HINGE 25X25X50/	10871177	12	4	349	966497908	FRONT WINDOW CPL.
SCREW-ON HINGE 25X25X50/	10871177	9	2	350	965784408	ROOF WINDOW PRE-ASS.
SCREWDRIVER 10 CRV-VERNI	790032508	52	1	104	928569808	MAIN TOOLS
SCREWDRIVER 2 CRV-VERNI	790033208	53	1	104	928569808	MAIN TOOLS
SCREWDRIVER 3,5 CRV-VERNI	790032008	50	1	104	928569808	MAIN TOOLS
SCREWDRIVER 5,5 CRV-VERNI	790032308	51	1	104	928569808	MAIN TOOLS
SCRFILTER ASSEMBLY SCRF	11429845	101	1	473	96051762	EXHAUST SYSTEM PRE-ASSE
SEAL	10135885	3	4	220	10140087	EXHAUST PIPE ASSEMBLY
SEAL	10144861	13	1	458	91003833	UREA PLANT
SEAL	11826653	12	1	448	10876576	WATER HEATING SYSTEM
SEAL	11826653	(3)	1	448	10876576	WATER HEATING SYSTEM
SEAL	12462476	50	2	475	11429845	SCRFILTER ASSEMBLY
SEAL	13484584	3	4	167	11358036	CYLINDER HEAD COVER ASS
SEAL	7011131	2	1	147	5004624	OIL DRAIN PLUG
SEAL	7371064	9	1	23	790256114	GUIDE WHEEL UNIT CPL
SEAL	9144762	(3)	1	151	10118839	OIL FILLER INLET
SEAL	9144762	232	1	250	10148366	SEAL KIT DIESEL ENGINE
SEAL	9885529	4	1	249	9078962	AUXILIARY DRIVE PRE-ASS.
SEAL 0,33 METALOSEAL 1	10126738	2	1	139	10147687	POWER UNIT SUPPORT ATT
SEAL 0,33 METALOSEAL 1	10137721	5	1	232	10115829	FLYWHEEL HOUSING ASSEM
SEAL 1	9079130	3	1	192	10146791	FUEL FINE-FILTER ASSEMBLY
SEAL 1	9079130	2011	1	251	10148366	SEAL KIT DIESEL ENGINE
SEAL 1,5 AFM 32/2	9268131	18	1	222	10140729	EXHAUST TC MOUNTING
SEAL 1.5X721X86 EPDM	97005272	3	1	349	966497908	FRONT WINDOW CPL.
SEAL 120X60X 30 SCHWARZ	976094308	7	1	329	916170808	CABLE INLET
SEAL 25X14X4080 EPDM	97046043	18	1	346	916162508	WINDOW ASSEMBLY
SEAL 25X892X720 EPDM	97033487	7	1	346	916162508	WINDOW ASSEMBLY
SEAL 2X148X84 EPDM	97005291	7	1	349	966497908	FRONT WINDOW CPL.
SEAL 2X225X107 EPDM	97005290	6	1	349	966497908	FRONT WINDOW CPL.
SEAL 2X86X28 EPDM	97012017	29	2	349	966497908	FRONT WINDOW CPL.
SEAL 2X94X39 EPDM	97005309	11	9	349	966497908	FRONT WINDOW CPL.
SEAL 439X120X5 POLYALEFIN	97012288	6	1	329	916170808	CABLE INLET
SEAL 4X322X62 EPDM 20SHOR	97005040	9	1	352	916168308	AIR DUCT
SEAL 4X407X85 EPDM 20SHOR	97005042	10	2	352	916168308	AIR DUCT
SEAL 645X786 EPDM	97007649	2	1	332	968462608	INSTALLATION SWITCH CAB. C
SEAL 721X43X 1.5 EPDM	97006055	18	1	349	966497908	FRONT WINDOW CPL.
SEAL 78X64 30	976193208	8	1	329	916170808	CABLE INLET
SEAL 7X182X51 POLYOLEFIN	97006874	32	6	338	917305408	INTERNAL PANELLING INSTA
SEAL 85.5X89X30 ZP-30 S	97071963	16	1	329	916170808	CABLE INLET
SEAL 90X97X5 POLYALEFIN	978172508	13	1	431	96056347	ELECTRIC ADD-ON PARTS CA
SEAL AFM 30	10117709	2	1	173	10129475	OIL COOLER ASSEMBLY
SEAL AFM 30	10128516	2	1	144	10132560	OIL SUMP WITH FASTENING
SEAL AFM 30	10128516	2	1	253	10141167	SEAL KIT OIL SUMP
SEAL DIN 71511 1,5X25X48 A	4980359	4	2	174	10129474	OIL COOLER, PRE-ASSEMBLE
SEAL KIT	10219620	999	1	276	10492431	PRESSURE LIMITING VALVE
SEAL KIT	10280184	6	1	525	10032696	CARTRIDGE
SEAL KIT	10331946	998	1	276	10492431	PRESSURE LIMITING VALVE
SEAL KIT	10331947	800	1	275	10429930	GEAR WHEEL MOTOR

Description	Item	Pos.	Quantity	Page	Assembly	Description
SEAL KIT	10489208	999	1	532	11002717	DIRECTIONAL CONTROL VALV
SEAL KIT	12101220	999	1	648	10876885	GREASE SPRAYER
SEAL KIT	12101886	999	1	308	12106874	FUEL FILTER
SEAL KIT	12103474	(999)	1	23	790256114	GUIDE WHEEL UNIT CPL
SEAL KIT	12105942	999	1	714	511493608	DIRECTIONAL CONTROL VALV
SEAL KIT	12108598	(999)	1	42	96048348	INSTALLATION PARTS F.HYD
SEAL KIT	510184001	(999)	1	454	919501608	HYDRAULIC BALLASTING
SEAL KIT	511043308	(999)	1	543	10333672	CONTROL BLOCK
SEAL KIT	511043308	999	1	545	570427108	PRESSURE LIMITING VALVE
SEAL KIT	571426108	(1)	1	33	967304508	UNDERCARRIAGE HYDRAULIC
SEAL KIT	571426108	(1)	1	33	967304508	UNDERCARRIAGE HYDRAULIC
SEAL KIT	571491208	999	1	753	512353708	HYDRO CYLINDER
SEAL KIT	571840008	(999)	1	33	967304508	UNDERCARRIAGE HYDRAULIC
SEAL KIT	571840008	999	1	36	511302008	DIRECTIONAL CONTROL VALV
SEAL KIT	96082028	(999)	1	369	933074801	SLEWING GEAR DRIVE
SEAL KIT ABTRIEBSFLANSCH	965335608	11	1	383	968607101	PLANETARY GEARBOX
SEAL KIT AGGREGATE CARR	10141157	120	1	250	10148366	SEAL KIT DIESEL ENGINE
SEAL KIT AIR INTAKE	11351430	2240	1	251	10148366	SEAL KIT DIESEL ENGINE
SEAL KIT BALLASTING CYLIN	12104660	999	1	456	12102342	BALLAST EXTENSION RAM
SEAL KIT CONNECTING HOUS	9274731	91	1	261	12487540	HYDR.DOUBLE PUMP
SEAL KIT CONNECTING LINE	11351425	2300	1	251	10148366	SEAL KIT DIESEL ENGINE
SEAL KIT COOLANT PIPE BEN	11351432	3820	1	251	10148366	SEAL KIT DIESEL ENGINE
SEAL KIT CRANKCASE BREAT	10141165	160	1	250	10148366	SEAL KIT DIESEL ENGINE
SEAL KIT CYCLE VALVE	11351427	4360	1	251	10148366	SEAL KIT DIESEL ENGINE
SEAL KIT CYLINDER HEAD	12107426	(999)	1	684	12105406	TELESCOPIC CYLINDER
SEAL KIT DIESEL ENGINE D94	10148366	939	1	135	13455311	DIESEL ENGINE
SEAL KIT DIRECTIONAL VALV	10802253	(999)	1	619	969856508	ADDITIONAL HYDRAULICS
SEAL KIT DIRECTIONAL VALV	11006275	999	1	544	571737808	DIRECTIONAL CONTROL VALV
SEAL KIT DIRECTIONAL VALV	11342418	(999)	1	35	10675161	CONTROL BLOCK
SEAL KIT DIRECTIONAL VALV	5009562	(999)	1	534	10802090	CONTROL BLOCK
SEAL KIT DOUBLE PUMP	9276426	98	1	261	12487540	HYDR.DOUBLE PUMP
SEAL KIT EXHAUST ADAPTER	11351426	4320	1	251	10148366	SEAL KIT DIESEL ENGINE
SEAL KIT FLYWHEEL HOUSIN	11351428	5200	1	251	10148366	SEAL KIT DIESEL ENGINE
SEAL KIT FUEL LINE	10141217	2120	1	251	10148366	SEAL KIT DIESEL ENGINE
SEAL KIT GEAR PUMP	10492710	999	1	279	10488363	GEAR PUMP
SEAL KIT GEAR PUMP	11600193	1	1	278	512142508	TWO-STAGE PUMP
SEAL KIT HIGH PRESS.CONN	10141216	12	1	186	10141140	RK HIGH PRESSURE CONNEC
SEAL KIT HIGH PRESS.CONN	10141216	210	1	189	10153151	HIGH PRESS.CONNECTOR W
SEAL KIT HIGH PRESS.CONN	10141216	210	1	190	10135080	HIGH PRESSURE CONNECTO
SEAL KIT HIGH PRESS.CONN	10141216	210	1	191	13757616	RK HIGH PRESSURE CONNEC
SEAL KIT HIGH PRESSURE P	12417001	210	1	182	10146658	HIGH PRESSURE PUMP
SEAL KIT HIGH PRESSURE P	12937883	211	1	182	10146658	HIGH PRESSURE PUMP
SEAL KIT HIGH PRESSURE P	12937883	1710	1	251	10148366	SEAL KIT DIESEL ENGINE
SEAL KIT INJECTOR	13703082	210	1	184	10152867	INJECTOR WITH FASTENING
SEAL KIT INTAKE NOZZLE	11351429	2210	1	251	10148366	SEAL KIT DIESEL ENGINE
SEAL KIT LEAKAGE-OIL RET. L	11351500	2140	1	251	10148366	SEAL KIT DIESEL ENGINE
SEAL KIT LIMIT VALVE	10872100	(999)	1	543	10333672	CONTROL BLOCK
SEAL KIT LIMIT VALVE	10872101	(999)	1	543	10333672	CONTROL BLOCK
SEAL KIT LUBRICATING OIL P	11351510	1400	1	250	10148366	SEAL KIT DIESEL ENGINE
SEAL KIT OIL LINE	10141169	250	1	250	10148366	SEAL KIT DIESEL ENGINE
SEAL KIT OIL SUMP	10141167	200	1	250	10148366	SEAL KIT DIESEL ENGINE
SEAL KIT PREFEEDING PUMP	12424993	215	1	182	10146658	HIGH PRESSURE PUMP
SEAL KIT PREFEEDING PUMP	12424993	1719	1	251	10148366	SEAL KIT DIESEL ENGINE
SEAL KIT REGULATING VALVE	9270147	(90)	1	261	12487540	HYDR.DOUBLE PUMP
SEAL KIT REGULATING VALVE	9270147	88	2	261	12487540	HYDR.DOUBLE PUMP
SEAL KIT RETURN FILTER	11341871	999	1	296	10871354	RETURN FILTER
SEAL KIT THERMOSTAT HOUS	11351503	3800	1	251	10148366	SEAL KIT DIESEL ENGINE
SEAL KIT TOGGLE CYLINDER	12104384	999	1	628	12102922	LUFFING CYLINDER
SEAL KIT TURBOCHARGER M	11351313	4300	1	251	10148366	SEAL KIT DIESEL ENGINE
SEAL KIT VALVE BLOCK	10412609	999	1	530	11170518	VALVE BLOCK

Description	Item	Pos.	Quantity	Page	Assembly	Description
SEAL KIT VALVE BLOCK	10412632	999	1	528	11170515	VALVE BLOCK
SEAL KIT VALVE BLOCK	10412632	999	1	531	11170519	VALVE BLOCK
SEAL KIT VALVE BLOCK	10412632	999	1	602	10665173	CONTROL BLOCK
SEAL KIT ZYLINDER HEAD CPL	10141181	800	4	250	10148366	SEAL KIT DIESEL ENGINE
SEAL LOCK NUT M1414X1,5	11320421	(2)	1	534	10802090	CONTROL BLOCK
SEAL S235JR	10118556	2	4	200	10147365	AIR INTAKE PIPE ASS.
SEAL X15CrNiSi20-	10125739	7	1	222	10140729	EXHAUST TC MOUNTING
SEAL X5CrNi18-10	12436701	32	1	223	12512627	EXHAUST NOZZLE ATTACHM
SEAL XTREME PLUS	10125148	122	1	470	919674308	EXHAUST SYSTEM
SEALANT 90G TUBE	8627609	112	1	146	10155227	OIL SUMP PRE-ASS.
SEALANT A80MR HYLOMAR	870002808	265	0.1	692	96063456	TERMINAL BOX
SEALING COMPOUND	10447539	99	1	480	10327065	ELECTRIC PUMP
SEALING COMPOUND TUBE 5	811201314	2	0.1	613	919386708	COOLING WATER PRE-HEATIN
SEALING NUT M6	510753408	10	1	524	571130108	PRESSURE LIMITING VALVE
SEALING NUT M6	510753408	11	1	548	11170276	PRESSURE REDUCTION VALV
SEALING NUT M8	510741708	57	1	536	10665127	COVER
SEALING NUT M8	510741708	21	1	558	511417708	PRESSURE LIMITING VALVE
SEALING NUT M8	510741708	21	1	621	511417608	PRESSURE LIMITING VALVE
SEALING PLUG	571511808	14	1	545	570427108	PRESSURE LIMITING VALVE
SEALING PLUG GPN 735 M33	10465711	15	2	139	10147687	POWER UNIT SUPPORT ATT
SEALING PLUG GPN 738 M33	13687089	15	1	139	10147687	POWER UNIT SUPPORT ATT
SEALING PLUG LK 950	10030837	14	14	136	11389608	CRANKCASE CPL. WITH CYLIN
SEALING PLUG LK 950	10030837	101	14	250	10148366	SEAL KIT DIESEL ENGINE
SEALING PLUG LK 950	10036325	8	1	165	11448005	ROCKER ARM BRACKET PRE
SEALING PLUG LK 950	10036325	8	1	166	12549825	ROCKER ARM BRACKET PRE
SEALING PLUG LK 950	10036325	811	4	250	10148366	SEAL KIT DIESEL ENGINE
SEALING PLUG M 1-K	604508508	503	1	730	96058738	WIRING HARNESS
SEALING PLUG M 1-K	604508508	503	2	775	96035674	LEAD
SEALING PLUG M1-D	604512108	153	2	703	96063458	TERMINAL BOX CPL.
SEALING PLUG M1-D	604512108	508	1	730	96058738	WIRING HARNESS
SEALING PLUG M1-D	604512108	510	1	775	96035674	LEAD
SEALING PLUG M18X1.5	11389287	3	1	199	10143825	INJECTION LINES
SEALING PLUG M18X1.5	11389287	2151	1	251	10148366	SEAL KIT DIESEL ENGINE
SEALING PLUG MB 850 CR6-F	7380123	2	1	169	12408221	FLANGE PRE-ASS.
SEALING PLUG MB 850 CR6-F	7380123	902	1	250	10148366	SEAL KIT DIESEL ENGINE
SEALING PLUG MB 850 CR6-F	7380123	1002	1	250	10148366	SEAL KIT DIESEL ENGINE
SEALING PROFILE	262183501	314	4.8	366	931696301	ROLLER SLEWING RING
SEALING PROFILE	979896308	2	1	85	966167808	COVER COMPL.
SEALING PROFILE NBR 70-483	262181001	315	4.83	366	931696301	ROLLER SLEWING RING
SEALING PROFILE NBR 70-483	262181001	316	4.78	366	931696301	ROLLER SLEWING RING
SEALING RING 10,7X16X1,5 St/	10011864	5	15	198	10143342	LEAK OIL RETURN LINE
SEALING RING 10,7X16X1,5 St/	10011864	8	2	212	10145278	ACCESSORIES AIR COMPRES
SEALING RING 10,7X16X1,5 St/	10011864	5	2	224	11420633	CYCLE VALVE
SEALING RING 114,6X130,4X1	10802681	120	2	470	919674308	EXHAUST SYSTEM
SEALING RING 12,7X18,00X1,5	10011865	7	2	198	10143342	LEAK OIL RETURN LINE
SEALING RING 12,7X18,00X1,5	10011865	27	2	223	12512627	EXHAUST NOZZLE ATTACHM
SEALING RING 14,7X22,00X1,5	10011866	11	3	198	10143342	LEAK OIL RETURN LINE
SEALING RING 14,7X22,00X1,5	10011866	2	7	217	10148216	PIPELINE INSTALLATION
SEALING RING 14,7X22,00X1,5	10011866	6	1	219	10142744	COOLING WATER AIR BLEED
SEALING RING 14,7X22,00X1,5	10011866	28	2	223	12512627	EXHAUST NOZZLE ATTACHM
SEALING RING 14,7X22,00X1,5	10011866	3872	1	251	10148366	SEAL KIT DIESEL ENGINE
SEALING RING 14,7X22,00X1,5	10011866	10	4	254	10141217	SEAL KIT FUEL LINE
SEALING RING 140X155X13	10802682	121	2	470	919674308	EXHAUST SYSTEM
SEALING RING 140X155X13	10802682	120	1	473	96051762	EXHAUST SYSTEM PRE-ASSE
SEALING RING 16,7X24,00X1,5	10011867	9	2	196	10143341	FUEL LINES
SEALING RING 16,7X24,00X1,5	10011867	4	8	212	10145278	ACCESSORIES AIR COMPRES
SEALING RING 16,7X24,00X1,5	10011867	26	1	223	12512627	EXHAUST NOZZLE ATTACHM
SEALING RING 16,7X24,00X1,5	10011867	5	2	254	10141217	SEAL KIT FUEL LINE
SEALING RING 18,7X26X1,5 St/	10011868	2	1	150	10130406	LEVEL SENSOR
SEALING RING 18,7X26X1,5 St/	10011868	15	10	196	10143341	FUEL LINES

Description	Item	Pos.	Quantity	Page	Assembly	Description
SEALING RING 18,7X26X1,5 St/	10011868	221	1	250	10148366	SEAL KIT DIESEL ENGINE
SEALING RING 18,7X26X1,5 St/	10011868	3	14	254	10141217	SEAL KIT FUEL LINE
SEALING RING 19,6X24,3X1,5	761022503	6	1	370	927554301	VENTILATION CONNECTING PI
SEALING RING 19,6X24,3X1,5	761022503	14	1	384	939368401	OIL-GAUGING INSTRUMENT
SEALING RING 19,6X24,3X1,5	761022503	4	1	586	927521201	OIL-LEVEL GAUGE INSTALLAT
SEALING RING 22,7X30X2 St/	10011869	3	2	207	9080294	AIR COMPRESSOR PRE-ASSY
SEALING RING 26,7X34,93X2 S	10011870	5	2	201	10145173	INTAKE STACK ASSEMBLY
SEALING RING 26,7X34,93X2 S	10011870	27	1	222	10140729	EXHAUST TC MOUNTING
SEALING RING 26,7X34,93X2 S	10011870	222	1	250	10148366	SEAL KIT DIESEL ENGINE
SEALING RING 27X20X1,5 CU	10014697	10	3	480	10327065	ELECTRIC PUMP
SEALING RING 30,7X39X2 St/	10113731	3	1	176	10152592	PRESSURE RELIEF VALVE
SEALING RING 8,7X14X1 St/FP	10011871	22	2	198	10143342	LEAK OIL RETURN LINE
SEALING RING DIN 7603 A10X	710101408	7	4	332	968462608	INSTALLATION SWITCH CAB. C
SEALING RING DIN 7603 A12X	710101708	29	1	583	938707001	COMPACT ROPE WINCH
SEALING RING DIN 7603 A14X	710102508	11	1	146	10155227	OIL SUMP PRE-ASS.
SEALING RING DIN 7603 A14X	710103008	7	1	392	969300008	HEATING, PRE-ASSEMBLED
SEALING RING DIN 7603 A14X	710103008	312	1	598	96075086	HYD.AUX.LIFT GEAR UPPER
SEALING RING DIN 7603 A14X	738122523	2	1	175	9078233	VALVE
SEALING RING DIN 7603 A14X	7381225	14	1	139	10147687	POWER UNIT SUPPORT ATT
SEALING RING DIN 7603 A14X	7381225	30	1	223	12512627	EXHAUST NOZZLE ATTACHM
SEALING RING DIN 7603 A18X	7101012	223	1	250	10148366	SEAL KIT DIESEL ENGINE
SEALING RING DIN 7603 A18X	710104008	(23)	2	517	96045552	HYDRAULICS UPPER CARRI
SEALING RING DIN 7603 A30X	710106508	3	1	141	10138450	FINAL CONTROL VALVE
SEALING RING DIN 7603 A30X	710106508	5	3	146	10155227	OIL SUMP PRE-ASS.
SEALING RING DIN 7603 A30X	710106508	141	1	250	10148366	SEAL KIT DIESEL ENGINE
SEALING RING DIN 7603 A6,5	710100408	9	1	332	968462608	INSTALLATION SWITCH CAB. C
SEALING RING DIN 7603 A8X12	710100708	9	8	331	916162808	RELING
SEALING SET	11220418	999	1	66	11481975	CONTROL BLOCK
SEALING SET OIL COOLER	10141182	1300	1	250	10148366	SEAL KIT DIESEL ENGINE
SEALING SET VALVE	10875274	(999)	1	528	11170515	VALVE BLOCK
SEALING SET VALVE	11450691	999	1	542	570527908	DIRECTIONAL CONTROL VALV
SEALING SET VALVE	12108313	999	1	552	10292670	LOWERING BRAKE VALVE
SEALING SET VALVE	571561908	999	1	685	570960608	LOWERING BRAKE VALVE
SEALING STRIP 40X4 NBR/SBR	262001308	42	1.95	461	96074081	UREA TANK, PRE-MOUNTING
SEALING TAPE	261101108	50	0.3	388	11083498	AIR CONDITIONING UNIT
SEALS CPL NBR	11311955	2	2	303	10475262	SHUT OFF DEVICE
SEAT CPL.	12100570	55	1	397	10877138	OPERATOR SEAT
SECURING PIN FOR JPT PLUG	602338208	503	3	428	96022870	WIRING HARNESS
SECURING PIN FOR JPT PLUG	602338208	522	2	500	96059659	CABLES, BASIC CONSTRUCTI
SELF-ALIGNING ROLLER BEA	746001601	20	1	381	938759601	ROPE DRUM
SENSOR CONTROL DEVICE NI	10144039	154	1	474	96041566	ELECTRIC ADD-ON PARTS
SENSOR HOLDER 30X75X190	972261508	4	2	679	91000055	MECHANICAL EXTENSION SYS
SENSOR INSTALL.TELESCOP	965264808	34	1	679	91000055	MECHANICAL EXTENSION SYS
SENSOR LIFT TOP LIMIT SWI	966479308	(10)	1	755	91001037	DOUBLE FOLDING JIB MECH.
SENSOR LIFT TOP LIMIT SWI	966479308	21	1	774	96055854	ELEC MECH FOLDING JIB BO
SENSOR PIPE	12898856	102	1	473	96051762	EXHAUST SYSTEM PRE-ASSE
SENSOR SPF	10876368	10	1	643	918802108	BALLAST MONITORING ENCO
SEPARATING RING	10114850	8	15	95	10878097	SLIP RING TRANSMITTER
SERRATED LOCK WASHER D	12102694	46	7	30	992078314	CENTRE PIECE
SERRATED LOCK WASHER D	12102694	18	1	87	96062922	MOUNTING PLATE PRE-ASS.
SERRATED LOCK WASHER D	12102694	12	1	332	968462608	INSTALLATION SWITCH CAB. C
SERRATED LOCK WASHER D	12102694	4	12	503	922648308	TERMINAL BOARD PRE-ASS.
SERRATED LOCK WASHER DI	425221208	24	8	22	96062226	CRAWLER CARRIER RIGHT CP
SERRATED LOCK WASHER DI	425221208	24	6	27	96062228	CRAWLER TRACK CARRIER LE
SERRATED LOCK WASHER DI	425221608	14	6	19	96062225	UNDERCARRIAGE CPL.
SERRATED LOCK WASHER DI	425221608	13	20	22	96062226	CRAWLER CARRIER RIGHT CP
SERRATED LOCK WASHER DI	425221608	13	20	27	96062228	CRAWLER TRACK CARRIER LE
SERRATED LOCK WASHER DI	425221908	40	12	30	992078314	CENTRE PIECE
SERRATED LOCK WASHER D	425220708	43	4	431	96056347	ELECTRIC ADD-ON PARTS CA
SERRATED LOCK WASHER D	425220708	92	16	502	96025348	BASE ASSEMBLY

Description	Item	Pos.	Quantity	Page	Assembly	Description
SERRATED LOCK WASHER D	425221108	18	1	502	96025348	BASE ASSEMBLY
SERVOMOTOR 0,0024KW24V	10287301	13	2	388	11083498	AIR CONDITIONING UNIT
SET MAIN BEARINGS	9076457	51	1	130	13455311	DIESEL ENGINE
SHACKLE 0,08T NG4 STAINLE	10300552	31	2	349	966497908	FRONT WINDOW CPL.
SHACKLE 17T SPF	773930308	3	4	738	917893008	SLINGING MEAN
SHACKLE DIN 82101 0,25T NG0	773933508	3	1	646	925141508	HOSE GUIDE PRE-ASS.
SHACKLE DIN 82101 0,25T NG0	773933508	23	1	723	964502908	BOOM NOSE PRE-ASS.
SHACKLE DIN 82101 0,4T NG1	773930008	1	2	50	96070203	TRANSPORT LASHING
SHAFT SEAL	10335855	3	1	275	10429930	GEAR WHEEL MOTOR
SHAFT SEAL 35X52X6/5 FKM	7022315	(14)	1	371	510229408	HYDRO MOTOR
SHAFT SEAL 35X52X6/5 FKM	7022315	14	1	372	570109008	DRIVING GEAR
SHAFT SEAL 50X72X7	7003478	14	1	377	510240708	HYDRO MOTOR
SHEET	10874831	3	1	530	11170518	VALVE BLOCK
SHEET 10X310X200 S355MC	97124340	5	4	454	919501608	HYDRAULIC BALLASTING
SHEET 126X24X1.5 EPDM 80	979142208	8	4	350	965784408	ROOF WINDOW PRE-ASS.
SHEET 15X30X50 PA6G	288176208	101	1	124	918728408	ASSEMBLY PARTS F.SLEWING
SHEET GASKET	7363427	60	1	26	749065314	CARRYING ROLLER CPL
SHEET GASKET 150X158X0,10	10154459	2	1	138	10154458	CYLINDER
SHEET GASKET 7,6X15,8X1 VI	571082508	(1)	1	516	96045552	HYDRAULICS UPPER CARRI
SHEET GASKET A7X13,6X2 Cu	12931997	1	1	188	13703082	SEAL KIT INJECTOR
SHEET GASKET VITON	571083008	(1)	1	591	96064697	HYDR.AUXILIARY HOISTING
SHEET METAL NUT M8 480H	12100332	350	2	263	918728708	DRIVE ASSEMBLY CPL.
SHEET METAL NUT M8 480H	12100332	5	4	285	918955208	BATTERY BOX CPL.
SHEET METAL NUT M8 480H	12100332	352	2	408	96022627	SLEWING PLATFORM PANELLI
SHEET METAL NUT M8 480H	12100332	352	4	415	96024809	SLEWING PLATFORM PANELLI
SHEET METAL NUT M8 480H	12100332	73	12	461	96074081	UREA TANK, PRE-MOUNTING
SHEET S235JR	9275826	16	1	233	10116110	LOCKING PIECES
SHEET-METAL SCREW ISO 704	10875793	10	2	575	918627208	AIR COND. UNIT SUPERSTRU
SHEET-METAL SCREW ISO 705	10876382	43	16	338	917305408	INTERNAL PANELLING INSTA
SHIELDING TIED BACK	965617208	995	6	427	96023891	WIRING HARNESS
SHIELDING TIED BACK	965617208	995	1	698	96063213	LEAD
SHIM	510783208	17	1	558	511417708	PRESSURE LIMITING VALVE
SHIM	510783208	17	1	621	511417608	PRESSURE LIMITING VALVE
SHIM FE//ZNNI8//CN//T0	964984108	26	2	395	918810308	CONTROL STAND
SHIM RING DIN 988 13X19X0,5	10876085	50	2	655	91000049	PIVOT SECTION, PRE-ASSEMB
SHIM RING DIN 988 22X30X0,5	10876086	14	2	655	91000049	PIVOT SECTION, PRE-ASSEMB
SHIM RING DIN 988 22X30X1 A	10876087	13	4	655	91000049	PIVOT SECTION, PRE-ASSEMB
SHIM RING DIN 988 25X36X0,1	422061501	49	6	383	968607101	PLANETARY GEARBOX
SHIM RING DIN 988 25X36X0,	422061401	48	9	383	968607101	PLANETARY GEARBOX
SHIM RING DIN 988 25X36X1,5	422062101	47	3	383	968607101	PLANETARY GEARBOX
SHIM RING DIN 988 63X80X0,1	421000408	17	2	372	570109008	DRIVING GEAR
SHIM RING DIN 988 63X80X0,3	421000508	18	1	372	570109008	DRIVING GEAR
SHIM WASHER	10293786	5	1	372	570109008	DRIVING GEAR
SHUT OFF DEVICE DN125-FL	10475262	105	1	295	969219208	OIL TANK PRE-ASS.
SHUTTLE VALVE	10115233	14	1	44	10801751	ADJUSTMENT
SHUTTLE VALVE 350BAR	571529508	28	1	528	11170515	VALVE BLOCK
SHUTTLE VALVE 350BAR	571529508	28	1	530	11170518	VALVE BLOCK
SHUTTLE VALVE 350BAR	571529508	28	1	531	11170519	VALVE BLOCK
SHUTTLE VALVE 350BAR	571529508	28	1	602	10665173	CONTROL BLOCK
SHUTTLE VALVE 500BAR CR6	511491914	150	3	33	967304508	UNDERCARRIAGE HYDRAULIC
SIDE PANEL WELDED SPF	968481208	1	1	272	96020819	RADIATOR, PRE-ASSEMBLED
SIDE PANEL WELDED SPF	968481308	2	1	272	96020819	RADIATOR, PRE-ASSEMBLED
SIDE PLATE	11621964	8	2	743	910445708	HOOK BLOCK
SIDE STEP	968485308	2	1	326	968483708	STEP CPL.
SIDE WINDOW LEFT 646.2X94X	97003560	2	1	346	916162508	WINDOW ASSEMBLY
SIDE WINDOW RIGHT 1252X12	97003561	3	1	346	916162508	WINDOW ASSEMBLY
SIGN	11494432	(2)	1	480	10327065	ELECTRIC PUMP
SIGN	11494581	(3)	1	480	10327065	ELECTRIC PUMP
SIGN	11696245	3	2	274	97095949	COMBINATED RADIATOR
SIGN	12237851	19	1	274	97095949	COMBINATED RADIATOR

Description	Item	Pos.	Quantity	Page	Assembly	Description
SIGN	553031008	1	1	575	918627208	AIR COND. UNIT SUPERSTRU
SIGN	772637308	17	1	111	919933708	LABELLING GREAT BRITAIN
SIGN	971749908	2	2	111	919933708	LABELLING GREAT BRITAIN
SIGN +S930 LEXAN	97128523	4	1	703	96063458	TERMINAL BOX CPL.
SIGN 100X184X0,1 KLEBEFOLI	11952500	1	2	115	919553608	ADDITIONAL SIGNAGE CALIF
SIGN 105DBA/100X90 KLEBE	975809508	76	1	111	919933708	LABELLING GREAT BRITAIN
SIGN 120X80 KLEBEFOLIE SP	97037383	82	1	461	96074081	UREA TANK, PRE-MOUNTING
SIGN 12V	772614008	2	1	612	913753108	RADIO PREPARATION UPPER
SIGN 158X50 KLEBEFOLIE SP	97155791	2	2	688	96072367	SIGNS
SIGN 168X62 KLEBEFOLIE SP	978674808	63	4	111	919933708	LABELLING GREAT BRITAIN
SIGN 168X62 KLEBEFOLIE SP	978674808	1	1	688	96072367	SIGNS
SIGN 168X62 KLEBEFOLIE SP	978674808	3	6	778	96062033	SIGNAGE DOUBLE FOLDING TI
SIGN 168X88 KLEBEFOLIE SP	97009799	101	1	111	919933708	LABELLING GREAT BRITAIN
SIGN 168X88 KLEBEFOLIE SP	97011689	95	1	111	919933708	LABELLING GREAT BRITAIN
SIGN 168X88 KLEBEFOLIE SP	97011690	96	1	111	919933708	LABELLING GREAT BRITAIN
SIGN 168X88 KLEBEFOLIE SP	97036732	68	1	111	919933708	LABELLING GREAT BRITAIN
SIGN 168X88 KLEBEFOLIE SP	97037952	18	1	111	919933708	LABELLING GREAT BRITAIN
SIGN 168X88 KLEBEFOLIE SP	97060689	100	1	111	919933708	LABELLING GREAT BRITAIN
SIGN 168X88 KLEBEFOLIE SP	978674308	28	2	111	919933708	LABELLING GREAT BRITAIN
SIGN 168X88 KLEBEFOLIE SP	978867108	33	2	111	919933708	LABELLING GREAT BRITAIN
SIGN 168X88 KLEBEFOLIE SP	979383308	62	1	111	919933708	LABELLING GREAT BRITAIN
SIGN 168X88 KLEBESCHILD SP	97017044	90	4	111	919933708	LABELLING GREAT BRITAIN
SIGN 168X88 KLEBESCHILD SP	97017045	91	4	111	919933708	LABELLING GREAT BRITAIN
SIGN 168X88 KLEBESCHILD SP	97017046	92	4	111	919933708	LABELLING GREAT BRITAIN
SIGN 180X40X1 KLEBEFOLIE	979806608	185	1	517	96045552	HYDRAULICS UPPER CARRI
SIGN 1X75X45 ALUMINIUM	97038433	16	1	334	917304508	CRANE OPERATOR CABIN P
SIGN 1X80X80 KLEBEFOLIE SP	974150408	84	1	111	919933708	LABELLING GREAT BRITAIN
SIGN 1X80X80 KLEBEFOLIE SP	974150508	85	1	111	919933708	LABELLING GREAT BRITAIN
SIGN 1X80X80 KLEBEFOLIE SP	974150608	86	1	111	919933708	LABELLING GREAT BRITAIN
SIGN 1X80X80 KLEBEFOLIE SP	974150708	87	1	111	919933708	LABELLING GREAT BRITAIN
SIGN 200X100 KLEBEFOLIE SP	97087173	4	2	778	96062033	SIGNAGE DOUBLE FOLDING TI
SIGN 208X88 KLEBEFOLIE SP	97016304	49	1	111	919933708	LABELLING GREAT BRITAIN
SIGN 208X88 KLEBEFOLIE SP	978673908	11	2	111	919933708	LABELLING GREAT BRITAIN
SIGN 208X88 KLEBEFOLIE SP	978674008	12	3	111	919933708	LABELLING GREAT BRITAIN
SIGN 208X88 KLEBEFOLIE SP	978674108	14	13	111	919933708	LABELLING GREAT BRITAIN
SIGN 208X88 KLEBEFOLIE SP	978674408	29	5	111	919933708	LABELLING GREAT BRITAIN
SIGN 208X88 KLEBEFOLIE SP	978674508	31	1	111	919933708	LABELLING GREAT BRITAIN
SIGN 208X88 KLEBEFOLIE SP	978674608	32	1	111	919933708	LABELLING GREAT BRITAIN
SIGN 208X88 KLEBEFOLIE SP	978674908	64	1	111	919933708	LABELLING GREAT BRITAIN
SIGN 208X88 KLEBEFOLIE SP	978675008	66	3	111	919933708	LABELLING GREAT BRITAIN
SIGN 20X10 KLEBEFOLIE SPF	97064219	80	1	461	96074081	UREA TANK, PRE-MOUNTING
SIGN 20X10 KLEBEFOLIE SPF	97064220	81	1	461	96074081	UREA TANK, PRE-MOUNTING
SIGN 225X165 KLEBEFOLIE SP	971539808	1	1	778	96062033	SIGNAGE DOUBLE FOLDING TI
SIGN 225X165 KLEBEFOLIE SP	971539908	2	1	778	96062033	SIGNAGE DOUBLE FOLDING TI
SIGN 240X80 3A-34 KLEBEFOLI	97158453	5	4	778	96062033	SIGNAGE DOUBLE FOLDING TI
SIGN 240X80 KLEBEFOLIE SP	97158717	3	1	595	96062735	SIGNS
SIGN 2X100X240 DC01 FE//ZN	97003792	31	2	47	968374708	MOUNTING PARTS
SIGN 2X100X240 DC01 FE//ZN	97044861	32	2	47	968374708	MOUNTING PARTS
SIGN 58X58 KLEBEFOLIE SPF	97078977	(1)	2	754	919932208	DOUBLE FOLDING JIB MECH.
SIGN 58X93 KLEBEFOLIE SPF	97078979	(2)	2	754	919932208	DOUBLE FOLDING JIB MECH.
SIGN 58X93 KLEBEFOLIE SPF	97078980	(3)	2	754	919932208	DOUBLE FOLDING JIB MECH.
SIGN 6X107X237 G-ALSI12	97160609	1	1	107	91003809	ADDITIONAL LABEL.FACTORY
SIGN 70X184X0,1 KLEBEFOLIE	13187353	2	1	115	919553608	ADDITIONAL SIGNAGE CALIF
SIGN 70X360X0,1 FOLIE	10684156	8	1	739	910543708	LOAD HOOK
SIGN 75X45 ALUMINIUM	976955508	2	1	575	918627208	AIR COND. UNIT SUPERSTRU
SIGN 80-38X0 LEXAN	976917008	4	1	692	96063456	TERMINAL BOX
SIGN 85X55 SPF	97025520	1	1	724	967695508	SIGNS
SIGN 88X450X0,1 FOLIE	10663718	9	2	743	910445708	HOOK BLOCK
SIGN SPF	12106335	10	1	695	96063212	CABLE DRUM COMPL.
SIGN SPF	978461908	186	1	517	96045552	HYDRAULICS UPPER CARRI

Description	Item	Pos.	Quantity	Page	Assembly	Description
SIGNAGE DOUBLE FOLDING T	96062033	880	1	754	919932208	DOUBLE FOLDING JIB MECH.
SIGNS	96062735	4	1	578	919935608	AUXILIARY HOISTING GEAR C
SIGNS	96072367	880	1	652	919935408	TELESCOPIC BOOM CPL.
SIGNS MASTNASE	967695508	8	1	721	915415908	BOOM NOSE
SIGNS TRACTION STRAP	96017737	881	1	754	919932208	DOUBLE FOLDING JIB MECH.
SILENCER	502661608	153	1	566	969767908	PIPEWORK AIR INSTALLATIO
SINGEL SEAL 0,5-0,75MM2	10007388	829	6	706	96063415	WIRING HARNESS
SINGEL SEAL 1,0-1,5MM2	10014387	830	6	90	96062920	WIRING HARNESS
SINGEL SEAL 1,0-1,5MM2	10014387	830	6	491	96063649	WIRING HARNESS
SINGEL SEAL 1,0-1,5MM2	10014387	830	71	494	96023971	WIRING HARNESS
SINGEL SEAL 1,0-1,5MM2	10014387	830	6	496	96049294	WIRING HARNESS
SINGEL SEAL 1,0-1,5MM2	10014387	830	6	694	96063583	LEAD
SINGEL SEAL 1,0-1,5MM2	10014387	830	6	699	96051215	CABLES, PRE-ASSEMBLED
SINGEL SEAL MLK 1,2 ELA SIL	10870402	845	9	496	96049294	WIRING HARNESS
SINGLE HOOK	11492232	2	1	739	910543708	LOAD HOOK
SINGLE STRAND SEALING 1,2-	10678471	849	6	98	96045216	WIRING HARNESS
SINGLE STRAND SEALING 1,2-	10678471	849	6	640	96045220	WIRING HARNESS
SINGLE STRAND SEALING 1,2	602330808	802	6	90	96062920	WIRING HARNESS
SINGLE STRAND SEALING 1,2	602330808	802	2	427	96023891	WIRING HARNESS
SINGLE STRAND SEALING 1,2	602330808	802	6	494	96023971	WIRING HARNESS
SINGLE STRAND SEALING 1,2	602330808	802	4	496	96049294	WIRING HARNESS
SINGLE STRAND SEALING 1,2	602330808	802	10	694	96063583	LEAD
SINGLE STRAND SEALING 1,2	602330808	802	9	699	96051215	CABLES, PRE-ASSEMBLED
SINGLE STRAND SEALING 1,4-	10424625	828	4	427	96023891	WIRING HARNESS
SINGLE STRAND SEALING 1,4-	10424625	828	2	491	96063649	WIRING HARNESS
SINGLE STRAND SEALING 1,4-	10424625	828	9	496	96049294	WIRING HARNESS
SINGLE STRAND SEALING 2	605619708	813	7	90	96062920	WIRING HARNESS
SINGLE STRAND SEALING 2	605619708	813	19	491	96063649	WIRING HARNESS
SINGLE STRAND SEALING 2	605619708	813	4	494	96023971	WIRING HARNESS
SINGLE STRAND SEALING 2	605619708	813	2	589	96055198	WIRING HARNESS
SINGLE STRAND SEALING 2	605619708	813	1	706	96063415	WIRING HARNESS
SINGLE STRAND SEALING 2,2-	602330508	801	6	494	96023971	WIRING HARNESS
SINGLE STRAND SEALING DIN	605619908	821	4	491	96063649	WIRING HARNESS
SINGLE STRAND SEALING DIN	605619808	816	3	491	96063649	WIRING HARNESS
SINGLE STRAND SEALING DIN	605619808	816	2	496	96049294	WIRING HARNESS
SINGLE-END SPANNER DIN 8	885132208	21	1	104	928569808	MAIN TOOLS
SINGLE-END SPANNER DIN 8	790004608	22	1	104	928569808	MAIN TOOLS
SINTERING FILTER	570926808	(1)	1	534	10802090	CONTROL BLOCK
SLEEVE	11493793	1	1	784	915037208	AUXILIARY REEVING CABLE, C
SLEEVE	571130308	2	1	524	571130108	PRESSURE LIMITING VALVE
SLEEVE 140.0X25 35NICRMOV	972140108	5	1	374	916109208	ROTATING PLATFORM LOCK
SLEEVE 18.0X145 S355J2C+C	97080775	13	4	52	968374908	LIMIT SWITCH ADD-ON
SLEEVE 18X12 PA 12	97012184	44	1	361	917304708	SLIDING DOOR INSTALLATION
SLEEVE 18X24 PA12	97001760	34	1	361	917304708	SLIDING DOOR INSTALLATION
SLEEVE 20.0X32 S355J2C+C	97131538	12	2	422	96044789	
SLEEVE 22X13 X5CRNI18-10	97155739	2	2	615	919392208	LAP BELT INSTALLATION
SLEEVE 25.0X24 S355J2G3C+	97131537	11	2	422	96044789	
SLEEVE 25.0X30 35NICRMOV	97114100	9	24	367	919235408	SLEWING GEAR
SLEEVE 25X15 PA 12	97001711	33	1	361	917304708	SLIDING DOOR INSTALLATION
SLEEVE 25X20 11SMNPB37 FE	953873408	25	1	84	96075205	SWITCH BOX COMPL.
SLEEVE 25X20 11SMNPB37 FE	953873408	3	2	100	96045217	MECHANICAL AUXILIARIES
SLEEVE 25X20 11SMNPB37 FE	953873408	23	4	119	96045222	MOUNTING PARTS
SLEEVE 25X20 11SMNPB37 FE	953873408	103	4	124	918728408	ASSEMBLY PARTS F.SLEWING
SLEEVE 25X20 11SMNPB37 FE	953873408	31	2	315	917357108	CRANE DRIVER CAB ADDITIO
SLEEVE 25X20 11SMNPB37 FE	953873408	23	5	376	919935508	MAIN HOIST GEAR
SLEEVE 25X20 11SMNPB37 FE	953873408	22	5	478	915300208	CENT. LUBRIC. SYSTEM SUP
SLEEVE 25X20 11SMNPB37 FE	953873408	(4)	8	566	969767908	PIPEWORK AIR INSTALLATIO
SLEEVE 25X20 11SMNPB37 FE	953873408	21	4	623	915403108	ADD-ON PARTS CAMERA
SLEEVE 25X21 X12CRNIS188	955600008	6	1	127	968305308	LIMIT SWITCH, PRE-ASSEMB
SLEEVE 32X30	955918008	41	2	679	91000055	MECHANICAL EXTENSION SYS

Description	Item	Pos.	Quantity	Page	Assembly	Description
SLEEVE 33X19 11SMNPB37 FE	978787708	21	4	81	96062917	ELECTR.FOR CENTER SECTIO
SLEEVE 33X19 11SMNPB37 FE	978787708	12	4	263	918728708	DRIVE ASSEMBLY CPL.
SLEEVE 33X19 11SMNPB37 FE	978787708	6	10	470	919674308	EXHAUST SYSTEM
SLEEVE 33X19 11SMNPB37 FE	978787708	(3)	10	566	969767908	PIPEWORK AIR INSTALLATIO
SLEEVE 40.0X20 35NICRMOV1	97146006	9	4	747	919933308	TRANSPORT MOUNTING
SLEEVE 40.0X87 S355J2C+C	97131535	4	1	422	96044789	
SLEEVE 8X26X64,5 X46Cr13	10152168	2	1	163	10149578	CYLINDER HEAD
SLEEVE CONTACT 0,2-0,5MM2	10335820	690	14	90	96062920	WIRING HARNESS
SLEEVE CONTACT 0,2-0,5MM2	10335820	690	52	427	96023891	WIRING HARNESS
SLEEVE CONTACT 0,2-0,5MM2	10335820	690	6	428	96022870	WIRING HARNESS
SLEEVE CONTACT 0,2-0,5MM2	10335820	690	51	491	96063649	WIRING HARNESS
SLEEVE CONTACT 0,2-0,5MM2	10335820	690	4	693	96063864	WIRING HARNESS
SLEEVE CONTACT 0,3-0,89MM	602332108	611	4	428	96022870	WIRING HARNESS
SLEEVE CONTACT 0,5-0,75MM	10873194	700	4	427	96023891	WIRING HARNESS
SLEEVE CONTACT 0,5-0,75MM	10873194	793	2	491	96063649	WIRING HARNESS
SLEEVE CONTACT 0,5-0,75M	10813644	754	9	496	96049294	WIRING HARNESS
SLEEVE CONTACT 0,5-1,0MM2	10493495	726	6	90	96062920	WIRING HARNESS
SLEEVE CONTACT 0,5-1,0MM2	10493495	726	6	491	96063649	WIRING HARNESS
SLEEVE CONTACT 0,5-1,0MM2	10493495	726	67	494	96023971	WIRING HARNESS
SLEEVE CONTACT 0,5-1,0MM2	10493495	726	4	495	96049294	WIRING HARNESS
SLEEVE CONTACT 0,5-1,0MM2	10493495	726	6	694	96063583	LEAD
SLEEVE CONTACT 0,5-1,0MM2	10800631	753	4	494	96023971	WIRING HARNESS
SLEEVE CONTACT 0,5-1,0MM2	10800631	753	10	694	96063583	LEAD
SLEEVE CONTACT 0,5-1,0MM2	10874057	2211	7	91	96062921	WIRING HARNESS
SLEEVE CONTACT 0,5-1,0MM2	11622989	789	4	496	96049294	WIRING HARNESS
SLEEVE CONTACT 0,5-1MM2	10877343	2258	25	427	96023891	WIRING HARNESS
SLEEVE CONTACT 0,50-1MM	10300946	717	4	495	96049294	WIRING HARNESS
SLEEVE CONTACT 0,5MM2	10875281	2238	6	427	96023891	WIRING HARNESS
SLEEVE CONTACT 0,5MM2 SIL	10493970	721	4	775	96035674	LEAD
SLEEVE CONTACT 0,75-1,0MM	604519308	629	7	730	96058738	WIRING HARNESS
SLEEVE CONTACT 0,75-1,0MM	604519308	629	5	775	96035674	LEAD
SLEEVE CONTACT 0,75-1,0M	11342253	788	9	496	96049294	WIRING HARNESS
SLEEVE CONTACT 0,75-1,5MM	6202434	96	2	490	96063649	WIRING HARNESS
SLEEVE CONTACT 0,75-1,5MM	6202434	96	2	493	96023971	WIRING HARNESS
SLEEVE CONTACT 0,75-2,5MM	12104876	2337	6	608	96060353	LEAD
SLEEVE CONTACT 1,0-1,5MM2	10493496	727	4	494	96023971	WIRING HARNESS
SLEEVE CONTACT 1,0-1,5MM2	10493496	727	2	495	96049294	WIRING HARNESS
SLEEVE CONTACT 1,0-2,5MM2	10493493	724	6	494	96023971	WIRING HARNESS
SLEEVE CONTACT DIN 72585 0	602339508	647	4	491	96063649	WIRING HARNESS
SLEEVE CONTACT DIN 72585 0	602339408	643	3	491	96063649	WIRING HARNESS
SLEEVE CONTACT DIN 72585 0	602339408	643	2	495	96049294	WIRING HARNESS
SLEEVE RD.32X41 X12CRNIS	955917908	40	4	679	91000055	MECHANICAL EXTENSION SYS
SLEWING GEAR	919235408	119	1	13		LIEBHERR LTR 1100
SLEWING GEAR DRIVE DAT 22	933074801	1	1	367	919235408	SLEWING GEAR
SLEWING PLATFORM PANELL	96024809	2	1	403	918728908	TURNTABLE PANELLING
SLEWING PLATFORM PANELL	96022627	1	1	403	918728908	TURNTABLE PANELLING
SLIDE BLOCK CPL.	10455144	15	1	397	10877138	OPERATOR SEAT
SLIDE PLATE 33X50X310 PA6	283082508	47	27	655	91000049	PIVOT SECTION, PRE-ASSEMB
SLIDE PLATE 33X50X310 PA6	283082508	47	25	661	91000050	TELESCOPIC SECTION 1 PRE
SLIDE PLATE 33X50X310 PA6	283082508	47	23	664	91000051	TELESCOPIC SECT.2 PRE-AS
SLIDE PLATE 33X50X310 PA6	283082508	47	21	667	91000052	TELESCOPIC SECT.3 PRE-ASS
SLIDE PLATE 33X50X310 PA6	283082508	47	19	670	91000053	TELESCOPIC SECT.IV PRE-A
SLIDER	749063714	2	2	24	749013714	GUIDE WHEEL CPL
SLIDER 100X115X250 PA6G+	283092508	14	1	679	91000055	MECHANICAL EXTENSION SYS
SLIDER 110X56X65	97054040	3	2	52	968374908	LIMIT SWITCH ADD-ON
SLIDER 130X150X167 PA6G+	283083308	39	2	655	91000049	PIVOT SECTION, PRE-ASSEMB
SLIDER 130X150X167 PA6G+	283083308	39	2	661	91000050	TELESCOPIC SECTION 1 PRE
SLIDER 130X150X167 PA6G+	283083308	39	2	664	91000051	TELESCOPIC SECT.2 PRE-AS
SLIDER 130X150X167 PA6G+	283083308	39	2	667	91000052	TELESCOPIC SECT.3 PRE-ASS
SLIDER 130X150X167 PA6G+	283083308	39	2	670	91000053	TELESCOPIC SECT.IV PRE-A

Description	Item	Pos.	Quantity	Page	Assembly	Description
SLIDER 30X115X165 PA6G+OE	283092608	25	1	679	91000055	MECHANICAL EXTENSION SYS
SLIDER 40X170X575 PA6G+OE	283083908	15	1	679	91000055	MECHANICAL EXTENSION SYS
SLIDER 50.0X372X207 PA6G+	283092408	13	1	679	91000055	MECHANICAL EXTENSION SYS
SLIDER RD42X75 PA6G+OEL	288190908	22	2	420	919484908	FALL PROTECTION
SLIDING BEAM LEFT LH-GRAU	10224278	2	2	30	992078314	CENTRE PIECE
SLIDING DOOR INSTALLATION	917304708	116	1	13		LIEBHERR LTR 1100
SLINGING MEAN MONTAGE	917893008	299	1	14		LIEBHERR LTR 1100
SLIP RING 16A	12106200	20	6	697	12104731	CABLE REEL
SLIP RING 16A	12106201	22	6	697	12104731	CABLE REEL
SLIP RING 60X2 2,5²	10114843	7	21	95	10878097	SLIP RING TRANSMITTER
SLIP RING TRANSMITTER 21X	10878097	5	1	81	96062917	ELECTR.FOR CENTER SECTIO
SLIP-ON TUBE	607226808	21	1	484	919940408	ELECTR. SYSTEM F.SLEWING
SLIPPER 65X340X450 GS-CK 4	308115114	14	2	22	96062226	CRAWLER CARRIER RIGHT CP
SLIPPER 65X340X450 GS-CK 4	308115114	14	2	27	96062228	CRAWLER TRACK CARRIER LE
SLOTTED NUT DIN 1804 M80X	241047802	7	1	321	96015921	OPERATING ELEMENT INSTAL
SLOTTED NUT M38X1,5	570110108	9	1	372	570109008	DRIVING GEAR
SLOTTED NUT M42X1,5 42CrM	938760801	60	1	383	968607101	PLANETARY GEARBOX
SLOTTED NUT M42X1,5 42CrM	938760801	60	1	584	938759801	PLANETARY GEARBOX
SLOTTED NUT M70X2X19 C45	927530201	13	1	369	933074801	SLEWING GEAR DRIVE
SMALL HILL COVERING 65X2	979206708	8	1	338	917305408	INTERNAL PANELLING INSTA
SMALL-PARTS	12109108	5	1	648	10876885	GREASE SPRAYER
SNAP FOOT	10492256	11	1	703	96063458	TERMINAL BOX CPL.
SNAP HOOK DIN 5299 C 60X6-	744010208	16	1	679	91000055	MECHANICAL EXTENSION SYS
SNAP LOCK ABS	10296157	(2)	3	407	96022627	SLEWING PLATFORM PANELLI
SNAP RING 52X2 FSt	4980482	7	2	159	10146367	PISTON CPL.
SNAP SWITCH	571486808	28	1	95	10878097	SLIP RING TRANSMITTER
SNAP-IN LOCK NIROSTA	10010025	35	2	420	919484908	FALL PROTECTION
SOCKET 2-POL	10342518	525	1	427	96023891	WIRING HARNESS
SOCKET 2-POL	10342518	523	3	494	96023971	WIRING HARNESS
SOCKET 2-POL	10342518	511	3	495	96049294	WIRING HARNESS
SOCKET 3-POL	605201508	502	1	611	96057250	LEAD
SOCKET 3-POL	6205239	521	1	495	96049294	WIRING HARNESS
SOCKET 8-POL	11008529	1	1	439	966979108	SOCKET
SOCKET COMBINATION 2 X 3-	12103327	1	1	603	91003677	EXTERNAL FEED
SOCKET DUST-PROOF	510540908	153	4	33	967304508	UNDERCARRIAGE HYDRAULIC
SOCKET DUST-PROOF	510548208	158	12	33	967304508	UNDERCARRIAGE HYDRAULIC
SOCKET DUST-PROOF	510548208	(151)	8	67	917155408	QUICK-FITTING UNION
SOCKET DUST-PROOF	7405494	(1)	1	33	967304508	UNDERCARRIAGE HYDRAULIC
SOCKET ETHERNET	966979108	52	1	431	96056347	ELECTRIC ADD-ON PARTS CA
SOCKET HEAD SCREW DIN 6	10875559	38	6	395	918810308	CONTROL STAND
SOCKET HEAD SCREW DIN 6	10875561	32	8	661	91000050	TELESCOPIC SECTION 1 PRE
SOCKET HEAD SCREW DIN 6	10875561	32	8	664	91000051	TELESCOPIC SECT.2 PRE-AS
SOCKET HEAD SCREW DIN 6	10875561	32	8	667	91000052	TELESCOPIC SECT.3 PRE-ASS
SOCKET HEAD SCREW DIN 6	10875561	32	8	670	91000053	TELESCOPIC SECT.IV PRE-A
SOCKET HEAD SCREW DIN 6	10875561	53	8	673	91000054	TELESCOPIC SECT.5 PRE-AS
SOCKET HEAD SCREW DIN 7	4980927	9	3	170	10147787	CAMSHAFT CPL.
SOCKET HEAD SCREW DIN 7	240122602	3	3	171	10145815	RS FLANGE
SOCKET HEAD SCREW DIN 79	10178345	14	4	52	968374908	LIMIT SWITCH ADD-ON
SOCKET HEAD SCREW DIN 7	10876084	34	14	349	966497908	FRONT WINDOW CPL.
SOCKET HEAD SCREW DIN 7	12216054	80	2	656	91000049	PIVOT SECTION, PRE-ASSEMB
SOCKET HEAD SCREW DIN 7	12216054	72	2	661	91000050	TELESCOPIC SECTION 1 PRE
SOCKET HEAD SCREW DIN 7	12216054	72	2	664	91000051	TELESCOPIC SECT.2 PRE-AS
SOCKET HEAD SCREW DIN 7	12216054	72	2	667	91000052	TELESCOPIC SECT.3 PRE-ASS
SOCKET HEAD SCREW DIN 7	12216054	72	2	670	91000053	TELESCOPIC SECT.IV PRE-A
SOCKET HEAD SCREW DIN 84	510797708	22	1	558	511417708	PRESSURE LIMITING VALVE
SOCKET HEAD SCREW DIN 84	510797708	22	1	621	511417608	PRESSURE LIMITING VALVE
SOCKET HEAD SCREW ISO 14	11600879	3	1	187	10135434	PRESSURE ADAPTER FASTEN
SOCKET HEAD SCREW ISO 14	11600879	4	1	189	10153151	HIGH PRESS.CONNECTOR W
SOCKET HEAD SCREW ISO 1	12219491	3	1	184	10152867	INJECTOR WITH FASTENING
SOCKET HEAD SCREW ISO 1	12219491	3	1	185	13743036	RK INJECTOR

Description	Item	Pos.	Quantity	Page	Assembly	Description
SOCKET HEAD SCREW ISO 47	10560807	23	8	47	968374708	MOUNTING PARTS
SOCKET HEAD SCREW ISO 47	12208101	302	2	269	918811108	DRIVE ASSEMBLY, PRE-ASSE
SOCKET HEAD SCREW ISO 4	11320344	71	12	383	968607101	PLANETARY GEARBOX
SOCKET HEAD SCREW ISO 4	11320344	71	12	584	938759801	PLANETARY GEARBOX
SOCKET HEAD SCREW ISO 4	12222407	320	2	269	918811108	DRIVE ASSEMBLY, PRE-ASSE
SOCKET HEAD SCREW ISO 4	12222407	304	2	272	96020819	RADIATOR, PRE-ASSEMBLED
SOCKET HEAD SCREW ISO 4	11320360	8	4	52	968374908	LIMIT SWITCH ADD-ON
SOCKET HEAD SCREW ISO 4	12219296	12	6	19	96062225	UNDERCARRIAGE CPL.
SOCKET HEAD SCREW ISO 47	404293213	17	1	319	919010108	CRANE OPERATOR CABIN P
SOCKET HEAD SCREW ISO 4	10415162	5	2	60	991456314	ACCESS COMPL
SOCKET HEAD SCREW ISO 4	10415162	2	3	248	9078961	POWER TAKE-OFF ADD-ON
SOCKET HEAD SCREW ISO 4	10415162	321	1	269	918811108	DRIVE ASSEMBLY, PRE-ASSE
SOCKET HEAD SCREW ISO 4	10415162	45	4	581	96062734	AUXILIARY HOISTING GEAR
SOCKET HEAD SCREW ISO 4	10415162	102	4	645	919950308	DISPATCH ASSY.MECH.PART
SOCKET HEAD SCREW ISO 4	10415162	24	6	679	91000055	MECHANICAL EXTENSION SYS
SOCKET HEAD SCREW ISO 4	10875571	10	8	52	968374908	LIMIT SWITCH ADD-ON
SOCKET HEAD SCREW ISO 4	10875571	301	6	374	916109208	ROTATING PLATFORM LOCK
SOCKET HEAD SCREW ISO 47	10468820	5	4	367	919235408	SLEWING GEAR
SOCKET HEAD SCREW ISO 47	404362408	85	4	522	11170514	VALVE BLOCK
SOCKET HEAD SCREW ISO 4	240206302	89	2	530	11170518	VALVE BLOCK
SOCKET HEAD SCREW ISO 4	11690628	303	1	63	967301408	PREPARATION HYDR
SOCKET HEAD SCREW ISO 4	11690628	30	8	661	91000050	TELESCOPIC SECTION 1 PRE
SOCKET HEAD SCREW ISO 4	11690628	30	8	664	91000051	TELESCOPIC SECT.2 PRE-AS
SOCKET HEAD SCREW ISO 4	11690628	30	8	667	91000052	TELESCOPIC SECT.3 PRE-ASS
SOCKET HEAD SCREW ISO 4	11690628	30	8	670	91000053	TELESCOPIC SECT.IV PRE-A
SOCKET HEAD SCREW ISO 4	11690628	18	4	673	91000054	TELESCOPIC SECT.5 PRE-AS
SOCKET HEAD SCREW ISO 4	10875573	30	6	22	96062226	CRAWLER CARRIER RIGHT CP
SOCKET HEAD SCREW ISO 4	10875573	30	6	28	96062228	CRAWLER TRACK CARRIER LE
SOCKET HEAD SCREW ISO 47	11008297	2	4	181	10150741	HIGH PRESSURE PUMP W.FAS
SOCKET HEAD SCREW ISO 4	12223034	25	1	381	938759601	ROPE DRUM
SOCKET HEAD SCREW ISO 4	12223034	90	2	530	11170518	VALVE BLOCK
SOCKET HEAD SCREW ISO 4	11321144	7	15	232	10115829	FLYWHEEL HOUSING ASSEM
SOCKET HEAD SCREW ISO 47	4043006	5	2	164	10148438	ROCKER ARM BRACKET CPL.
SOCKET HEAD SCREW ISO 47	514802308	3	4	552	10292670	LOWERING BRAKE VALVE
SOCKET HEAD SCREW ISO 4	4600167	306	4	33	967304508	UNDERCARRIAGE HYDRAULIC
SOCKET HEAD SCREW ISO 4	10875577	6	2	367	919235408	SLEWING GEAR
SOCKET HEAD SCREW ISO 4	4980947	21	8	261	12487540	HYDR.DOUBLE PUMP
SOCKET HEAD SCREW ISO 47	404294613	17	4	326	968483708	STEP CPL.
SOCKET HEAD SCREW ISO 4	10875578	52	8	383	968607101	PLANETARY GEARBOX
SOCKET HEAD SCREW ISO 4	10875578	52	8	584	938759801	PLANETARY GEARBOX
SOCKET HEAD SCREW ISO 4	10875578	26	4	679	91000055	MECHANICAL EXTENSION SYS
SOCKET HEAD SCREW ISO 47	404312008	77	8	383	968607101	PLANETARY GEARBOX
SOCKET HEAD SCREW ISO 47	404312008	77	8	585	938759801	PLANETARY GEARBOX
SOCKET HEAD SCREW ISO 4	4980012	6	2	232	10115829	FLYWHEEL HOUSING ASSEM
SOCKET HEAD SCREW ISO 4	10875565	302	4	295	969219208	OIL TANK PRE-ASS.
SOCKET HEAD SCREW ISO 4	10875565	313	4	517	96045552	HYDRAULICS UPPER CARRI
SOCKET HEAD SCREW ISO 4	4980257	12	6	170	10147787	CAMSHAFT CPL.
SOCKET HEAD SCREW ISO 4	4980434	23	8	261	12487540	HYDR.DOUBLE PUMP
SOCKET HEAD SCREW ISO 47	10012659	56	8	383	968607101	PLANETARY GEARBOX
SOCKET HEAD SCREW ISO 47	10012659	56	8	584	938759801	PLANETARY GEARBOX
SOCKET HEAD SCREW ISO 4	11840140	40	4	655	91000049	PIVOT SECTION, PRE-ASSEMB
SOCKET HEAD SCREW ISO 4	11840140	40	4	661	91000050	TELESCOPIC SECTION 1 PRE
SOCKET HEAD SCREW ISO 4	11840140	40	4	664	91000051	TELESCOPIC SECT.2 PRE-AS
SOCKET HEAD SCREW ISO 4	11840140	40	4	667	91000052	TELESCOPIC SECT.3 PRE-ASS
SOCKET HEAD SCREW ISO 4	11840140	40	4	670	91000053	TELESCOPIC SECT.IV PRE-A
SOCKET HEAD SCREW ISO 4	12213814	27	6	679	91000055	MECHANICAL EXTENSION SYS
SOCKET HEAD SCREW ISO 4	10876374	5	1	422	96044789	
SOCKET HEAD SCREW ISO 47	10353713	304	4	473	96051762	EXHAUST SYSTEM PRE-ASSE
SOCKET HEAD SCREW ISO 47	10663388	4	24	367	919235408	SLEWING GEAR
SOCKET HEAD SCREW ISO 4	4900973	6	4	551	10355774	LOWERING BRAKE VALVE

Description	Item	Pos.	Quantity	Page	Assembly	Description
SOCKET HEAD SCREW ISO 4	12691448	552	12	709	965994108	HYDR.F.TELESCOPIC BOOM
SOCKET HEAD SCREW ISO 4	10876373	308	24	33	967304508	UNDERCARRIAGE HYDRAULIC
SOCKET HEAD SCREW ISO 4	10878822	317	4	517	96045552	HYDRAULICS UPPER CARRI
SOCKET HEAD SCREW ISO 4	10001471	21	24	383	968607101	PLANETARY GEARBOX
SOCKET HEAD SCREW ISO 4	10001471	21	24	584	938759801	PLANETARY GEARBOX
SOCKET HEAD SCREW ISO 47	10001075	31	4	381	938759601	ROPE DRUM
SOCKET HEAD SCREW ISO 47	4000521	6	16	380	968558601	COMPACT ROPE WINCH
SOCKET HEAD SCREW ISO 47	4000521	6	16	583	938707001	COMPACT ROPE WINCH
SOCKET HEAD SCREW ISO 4	10878835	3	8	454	919501608	HYDRAULIC BALLASTING
SOCKET HEAD SCREW ISO 47	10001470	6	8	454	919501608	HYDRAULIC BALLASTING
SOCKET HEAD SCREW ISO 47	10228541	87	4	528	11170515	VALVE BLOCK
SOCKET HEAD SCREW ISO 47	10228541	87	4	530	11170518	VALVE BLOCK
SOCKET HEAD SCREW ISO 47	10228541	87	4	531	11170519	VALVE BLOCK
SOCKET HEAD SCREW ISO 47	10228541	40	4	534	10802090	CONTROL BLOCK
SOCKET HEAD SCREW ISO 47	10228541	87	4	602	10665173	CONTROL BLOCK
SOCKET HEAD SCREW ISO 47	11691539	15	4	319	919010108	CRANE OPERATOR CABIN P
SOCKET HEAD SCREW ISO 47	11691539	36	8	395	918810308	CONTROL STAND
SOCKET HEAD SCREW ISO 47	10876395	81	18	502	96025348	BASE ASSEMBLY
SOCKET HEAD SCREW ISO 47	11690042	10	2	386	917894308	HEATING CRANE DRIVER'S CA
SOCKET HEAD SCREW ISO 47	11690042	34	24	395	918810308	CONTROL STAND
SOCKET HEAD SCREW ISO 47	10875582	62	2	339	917305408	INTERNAL PANELLING INSTA
SOCKET HEAD SCREW ISO 47	10875583	20	11	326	968483708	STEP CPL.
SOCKET HEAD SCREW ISO 47	10875584	25	8	81	96062917	ELECTR.FOR CENTER SECTIO
SOCKET HEAD SCREW ISO 47	10875584	63	1	339	917305408	INTERNAL PANELLING INSTA
SOCKET HEAD SCREW ISO 47	12207210	7	4	532	11002717	DIRECTIONAL CONTROL VALV
SOCKET HEAD SCREW ISO 47	404363708	15	4	540	511486908	CONTROL PLATE
SOCKET HEAD SCREW ISO 47	12204614	4	4	478	915300208	CENT. LUBRIC. SYSTEM SUP
SOCKET HEAD SCREW ISO 47	12203070	37	2	388	11083498	AIR CONDITIONING UNIT
SOCKET HEAD SCREW ISO 47	404361208	70	16	538	511307808	CONTROL PLATE
SOCKET HEAD SCREW ISO 47	404361208	16	4	540	511486908	CONTROL PLATE
SOCKET HEAD SCREW ISO 4	404202701	3	8	35	10675161	CONTROL BLOCK
SOCKET HEAD SCREW ISO 4	10181382	312	8	33	967304508	UNDERCARRIAGE HYDRAULIC
SOCKET HEAD SCREW ISO 47	12216217	40	4	395	918810308	CONTROL STAND
SOCKET HEAD SCREW ISO 47	404364108	(74)	4	261	12487540	HYDR.DOUBLE PUMP
SOCKET HEAD SCREW ISO 47	404302914	88	4	531	11170519	VALVE BLOCK
SOCKET HEAD SCREW ISO 47	11690044	302	2	476	918729308	AIR FILTER UNIT
SOCKET HEAD SCREW ISO 47	11690044	(10)	3	484	919940408	ELECTR. SYSTEM F.SLEWING
SOCKET HEAD SCREW ISO 47	11690044	10	3	588	96055197	ELECTRIC FOR WINCH 2
SOCKET HEAD SCREW ISO 4	10181389	329	2	517	96045552	HYDRAULICS UPPER CARRI
SOCKET HEAD SCREW ISO 4	12100498	245	2	599	96075102	FASTENING PIECES HYDRAUL
SOCKET HEAD SCREW ISO 47	10875586	3	1	235	10127979	LOCKING PIECES
SOCKET HEAD SCREW ISO 47	10875586	(2)	1	243	12583633	ENGINE CONTROL SENSORS
SOCKET HEAD SCREW ISO 47	10875586	3	1	244	12544505	ROTATIONAL SPEED SENSOR
SOCKET HEAD SCREW ISO 47	10875586	14	2	350	965784408	ROOF WINDOW PRE-ASS.
SOCKET HEAD SCREW ISO 47	10875586	7	4	421	96044787	HOLDER PRE-ASSEMBLY
SOCKET HEAD SCREW ISO 47	10875586	4	1	646	925141508	HOSE GUIDE PRE-ASS.
SOCKET HEAD SCREW ISO 47	10875586	4	2	700	966591408	LIMIT SWITCH ADD-ON
SOCKET HEAD SCREW ISO 4	404250914	51	1	361	917304708	SLIDING DOOR INSTALLATION
SOCKET HEAD SCREW ISO 47	11140465	33	7	30	992078314	CENTRE PIECE
SOCKET HEAD SCREW ISO 47	11140465	313	4	33	967304508	UNDERCARRIAGE HYDRAULIC
SOCKET HEAD SCREW ISO 4	12225935	41	4	395	918810308	CONTROL STAND
SOCKET HEAD SCREW ISO 47	240196202	(41)	3	534	10802090	CONTROL BLOCK
SOCKET HEAD SCREW ISO 47	10875588	(1)	2	319	919010108	CRANE OPERATOR CABIN P
SOCKET HEAD SCREW ISO 47	10875588	6	3	480	10327065	ELECTRIC PUMP
SOCKET HEAD SCREW ISO 47	10875588	(12)	2	725	918258408	EL.2 HOISTING LIMIT SWITCH
SOCKET HEAD SCREW ISO 47	11820284	11	4	329	916170808	CABLE INLET
SOCKET HEAD SCREW ISO 47	10875590	9	2	329	916170808	CABLE INLET
SOCKET HEAD SCREW ISO 4	10022183	308	2	470	919674308	EXHAUST SYSTEM
SOCKET HEAD SCREW ISO 4	12223035	88	4	530	11170518	VALVE BLOCK
SOCKET HEAD SCREW ISO 47	10875591	318	2	33	967304508	UNDERCARRIAGE HYDRAULIC

Description	Item	Pos.	Quantity	Page	Assembly	Description
SOCKET HEAD SCREW ISO 47	10875591	305	10	269	918811108	DRIVE ASSEMBLY, PRE-ASSE
SOCKET HEAD SCREW ISO 47	10875591	21	4	543	10333672	CONTROL BLOCK
SOCKET HEAD SCREW ISO 47	10875591	6	3	736	96056560	WIND WARNING PREASSEMB
SOCKET HEAD SCREW ISO 4	404230308	45	1	361	917304708	SLIDING DOOR INSTALLATION
SOCKET HEAD SCREW ISO 47	10875592	51	4	461	96074081	UREA TANK, PRE-MOUNTING
SOCKET HEAD SCREW ISO 47	10875592	38	4	679	91000055	MECHANICAL EXTENSION SYS
SOCKET HEAD SCREW ISO 47	12203634	38	3	388	11083498	AIR CONDITIONING UNIT
SOCKET HEAD SCREW ISO 47	10876359	11	2	127	968305308	LIMIT SWITCH, PRE-ASSEMB
SOCKET HEAD SCREW ISO 47	10876359	38	2	768	91001040	PIVOT SECTION, PRE-ASSEMB
SOCKET HEAD SCREW ISO 4	11088382	11	2	734	96056553	LOCATION FIXTURE PRE-ASS.
SOCKET HEAD SCREW ISO 47	511011808	42	3	536	10665127	COVER
SOCKET HEAD SCREW ISO 47	12202784	309	2	33	967304508	UNDERCARRIAGE HYDRAULIC
SOCKET HEAD SCREW ISO 47	12202784	77	2	655	91000049	PIVOT SECTION, PRE-ASSEMB
SOCKET HEAD SCREW ISO 47	12202784	7	2	773	96037297	ANGULAR TRANSMITTER AT
SOCKET HEAD SCREW ISO 47	10876360	302	34	517	96045552	HYDRAULICS UPPER CARRI
SOCKET HEAD SCREW ISO 47	10876361	6	2	421	96044787	HOLDER PRE-ASSEMBLY
SOCKET HEAD SCREW ISO 47	10876361	28	2	625	96036821	REAR END TURNT. CAMERA E
SOCKET HEAD SCREW ISO 4	10539468	305	4	473	96051762	EXHAUST SYSTEM PRE-ASSE
SOCKET HEAD SCREW ISO 47	10875593	6	1	363	966230508	GUIDE PRE-ASS.
SOCKET HEAD SCREW ISO 4	10875596	85	4	528	11170515	VALVE BLOCK
SOCKET HEAD SCREW ISO 4	10875596	85	4	530	11170518	VALVE BLOCK
SOCKET HEAD SCREW ISO 4	10875596	85	4	531	11170519	VALVE BLOCK
SOCKET HEAD SCREW ISO 4	10875596	85	4	602	10665173	CONTROL BLOCK
SOCKET HEAD SCREW ISO 47	10875597	82	8	674	91000054	TELESCOPIC SECT.5 PRE-AS
SOCKET HEAD SCREW ISO 47	10875597	46	4	679	91000055	MECHANICAL EXTENSION SYS
SOCKET HEAD SCREW ISO 4	10663523	14	2	222	10140729	EXHAUST TC MOUNTING
SOCKET HEAD SCREW ISO 4	4980007	35	18	261	12487540	HYDR.DOUBLE PUMP
SOCKET HEAD SCREW ISO 47	10875598	22	5	326	968483708	STEP CPL.
SOCKET HEAD SCREW ISO 47	10875598	7	2	371	510229408	HYDRO MOTOR
SOCKET HEAD SCREW ISO 47	10875598	30	9	655	91000049	PIVOT SECTION, PRE-ASSEMB
SOCKET HEAD SCREW ISO 4	10007677	4	12	331	916162808	RELING
SOCKET HEAD SCREW ISO 4	240049702	7	5	168	10120186	BALANCER ASSEMBLY
SOCKET HEAD SCREW ISO 47	10875599	302	8	124	918728408	ASSEMBLY PARTS F.SLEWING
SOCKET HEAD SCREW ISO 47	10875599	314	8	269	918811108	DRIVE ASSEMBLY, PRE-ASSE
SOCKET HEAD SCREW ISO 47	10875599	26	8	369	933074801	SLEWING GEAR DRIVE
SOCKET HEAD SCREW ISO 47	10875599	315	3	407	96022627	SLEWING PLATFORM PANELLI
SOCKET HEAD SCREW ISO 47	10875599	3	4	440	916870808	MIRROR ATTACHM.AT SLEW.P
SOCKET HEAD SCREW ISO 47	10875599	64	4	661	91000050	TELESCOPIC SECTION 1 PRE
SOCKET HEAD SCREW ISO 47	10875599	64	4	664	91000051	TELESCOPIC SECT.2 PRE-AS
SOCKET HEAD SCREW ISO 47	10875599	64	8	667	91000052	TELESCOPIC SECT.3 PRE-ASS
SOCKET HEAD SCREW ISO 47	10875599	64	8	670	91000053	TELESCOPIC SECT.IV PRE-A
SOCKET HEAD SCREW ISO 4	10007205	5	12	331	916162808	RELING
SOCKET HEAD SCREW ISO 4	240049802	5	2	169	12408221	FLANGE PRE-ASS.
SOCKET HEAD SCREW ISO 47	12208098	18	4	661	91000050	TELESCOPIC SECTION 1 PRE
SOCKET HEAD SCREW ISO 47	12208098	18	4	664	91000051	TELESCOPIC SECT.2 PRE-AS
SOCKET HEAD SCREW ISO 47	12208098	18	4	667	91000052	TELESCOPIC SECT.3 PRE-ASS
SOCKET HEAD SCREW ISO 47	12208098	18	4	670	91000053	TELESCOPIC SECT.IV PRE-A
SOCKET HEAD SCREW ISO 47	12208098	56	4	673	91000054	TELESCOPIC SECT.5 PRE-AS
SOCKET HEAD SCREW ISO 4	404230208	24	2	326	968483708	STEP CPL.
SOCKET HEAD SCREW ISO 47	11691424	17	2	37	510438508	PRESSURE RELIEF VALVE
SOCKET HEAD SCREW ISO 47	11691424	21	4	119	96045222	MOUNTING PARTS
SOCKET HEAD SCREW ISO 47	11691424	74	8	369	933074801	SLEWING GEAR DRIVE
SOCKET HEAD SCREW ISO 4	10468234	(20)	4	261	12487540	HYDR.DOUBLE PUMP
SOCKET HEAD SCREW ISO 47	4980840	2	4	552	10292670	LOWERING BRAKE VALVE
SOCKET HEAD SCREW ISO 47	12206699	31	6	543	10333672	CONTROL BLOCK
SOCKET HEAD SCREW ISO 47	404350701	43	1	537	10665128	COVER
SOCKET HEAD SCREW ISO 47	404350701	5	4	551	10355774	LOWERING BRAKE VALVE
SOCKET HEAD SCREW ISO 47	10875601	10	4	371	510229408	HYDRO MOTOR
SOCKET HEAD SCREW ISO 47	10875601	4	1	402	916049908	MIRROR ATTACHM.IN CRANE
SOCKET HEAD SCREW ISO 47	10875570	61	2	339	917305408	INTERNAL PANELLING INSTA

Description	Item	Pos.	Quantity	Page	Assembly	Description
SOCKET HEAD SCREW ISO 47	240188502	44	8	534	10802090	CONTROL BLOCK
SOCKET HEAD SCREW ISO 47	12202901	8	2	127	968305308	LIMIT SWITCH, PRE-ASSEMB
SOCKET HEAD SCREW ISO 47	12213825	86	10	369	933074801	SLEWING GEAR DRIVE
SOCKET HOUSING 2-POL	6001790	524	1	426	96023891	WIRING HARNESS
SOCKET KABINE	919584608	385	1	14		LIEBHERR LTR 1100
SOCKET WRENCH SW8	12105803	1017	4	66	11481975	CONTROL BLOCK
SOLDERING WIRE	820000208	262	0.01	505	966157408	INSERTION MODULE
SOLENOID VALVE	10217127	3	1	534	10802090	CONTROL BLOCK
SOLENOID VALVE	10343003	2	1	392	969300008	HEATING, PRE-ASSEMBLED
SOLENOID VALVE	10343003	15	1	446	96019783	ADDNL.HEATING, PRE-ASSE
SOUND PROOFING/SOUND I	96022943	15	1	407	96022627	SLEWING PLATFORM PANELLI
SPACER PIECE	571130408	5	1	524	571130108	PRESSURE LIMITING VALVE
SPACER PIECE 160X75X25 P	979009508	52	1	661	91000050	TELESCOPIC SECTION 1 PRE
SPACER PIECE 160X75X25 P	979009508	52	1	664	91000051	TELESCOPIC SECT.2 PRE-AS
SPACER PIECE 160X75X25 P	979009508	52	2	667	91000052	TELESCOPIC SECT.3 PRE-ASS
SPACER PIECE 160X75X25 P	979009508	52	2	670	91000053	TELESCOPIC SECT.IV PRE-A
SPACER PIECE 160X75X25 P	979009508	87	2	674	91000054	TELESCOPIC SECT.5 PRE-AS
SPACER PIECE 8,4X20X15,6 S	13566415	6	1	177	10148432	LUBE OIL PUMP WITH FASTEN
SPACER PIECE PA6G SPF	97167074	48	12	655	91000049	PIVOT SECTION, PRE-ASSEMB
SPACER PIECE PA6G SPF	97167074	48	12	661	91000050	TELESCOPIC SECTION 1 PRE
SPACER PIECE PA6G SPF	97167074	48	12	664	91000051	TELESCOPIC SECT.2 PRE-AS
SPACER PIECE PA6G SPF	97167074	48	12	667	91000052	TELESCOPIC SECT.3 PRE-ASS
SPACER RING	11181884	5	1	95	10878097	SLIP RING TRANSMITTER
SPARE ELEMENT OEL	12886224	(1)	1	143	10126713	CRANKCASE BREATHER ASS
SPARE PARTS SET GRIFF	10873517	5	1	436	10343693	JOYSTICK
SPHERICAL BEARING	10491694	4	1	316	10650940	TILT CYLINDER
SPHERICAL KNOB DIN 319 C40	704004208	6	1	750	96062062	FOLDING BRACKET PRE-ASS.
SPHERICAL WASHER DIN 631	10875863	40	1	747	919933308	TRANSPORT MOUNTING
SPHERICAL WASHER DIN 631	11622278	4	1	184	10152867	INJECTOR WITH FASTENING
SPHERICAL WASHER DIN 631	11622278	4	2	185	13743036	RK INJECTOR
SPHERICAL WASHER DIN 631	11622278	2	1	186	10141140	RK HIGH PRESSURE CONNEC
SPHERICAL WASHER DIN 631	11622278	2	1	187	10135434	PRESSURE ADAPTER FASTEN
SPHERICAL WASHER DIN 631	11622278	3	1	189	10153151	HIGH PRESS.CONNECTOR W
SPHERICAL WASHER DIN 631	11622278	2	1	191	13757616	RK HIGH PRESSURE CONNEC
SPIRIT LEVEL	714000808	10	2	61	917155308	PREPARATION HYDR
SPLIT PIN ISO 1234 1,6X14 A2	10180340	13	1	326	968483708	STEP CPL.
SPLIT PIN ISO 1234 1,6X14 A2	10180340	4	1	736	96056560	WIND WARNING PREASSEMB
SPLIT PIN ISO 1234 10X100 St	10180377	20	4	454	919501608	HYDRAULIC BALLASTING
SPLIT PIN ISO 1234 10X80 St 4	10180375	24	8	454	919501608	HYDRAULIC BALLASTING
SPLIT PIN ISO 1234 10X80 St 4	10180375	58	4	760	918533508	ADAPTER PRE-ASS.
SPLIT PIN ISO 1234 10X80 St 4	10180375	6	4	772	918221408	TENSION PLATE PRE-ASS.
SPLIT PIN ISO 1234 13X125 St	10180381	13	4	47	968374708	MOUNTING PARTS
SPLIT PIN ISO 1234 1X14 ST 4	10875872	12	1	326	968483708	STEP CPL.
SPLIT PIN ISO 1234 3,2X20 A2	51152	25	4	760	918533508	ADAPTER PRE-ASS.
SPLIT PIN ISO 1234 4X25 St 4	10180351	14	2	422	96044789	
SPLIT PIN ISO 1234 4X25 St 4	10180351	10	1	763	917695308	GUIDE PULLEY COMPL.
SPLIT PIN ISO 1234 4X32 St 4	10180352	15	2	422	96044789	
SPLIT PIN ISO 1234 4X40 St 4	10180354	39	2	673	91000054	TELESCOPIC SECT.5 PRE-AS
SPLIT PIN ISO 1234 4X40 St 4	10180354	11	1	723	964502908	BOOM NOSE PRE-ASS.
SPLIT PIN ISO 1234 5X32 St 4	10180357	4	2	60	991456314	ACCESS COMPL
SPLIT PIN ISO 1234 5X32 St 4	10180357	11	8	119	96045222	MOUNTING PARTS
SPLIT PIN ISO 1234 5X32 St 4	10180357	36	6	420	919484908	FALL PROTECTION
SPLIT PIN ISO 1234 5X40 St 4	10180359	5	1	748	925280008	CONSOLE PRE-ASS.
SPLIT PIN ISO 1234 5X40 St 4	10180359	5	3	751	929582108	MOUNTING PRE-ASS.
SPLIT PIN ISO 1234 5X40 St 4	10180359	40	2	760	918533508	ADAPTER PRE-ASS.
SPLIT PIN ISO 1234 5X40 St 4	10180359	11	4	768	91001040	PIVOT SECTION, PRE-ASSEMB
SPLIT PIN ISO 1234 5X40 St 4	10180359	15	2	771	918596708	HEAD SECTION PRE-ASS.
SPLIT PIN ISO 1234 5X45 St 4	10180360	8	3	77	990618314	TRANSPORT SUPPORT
SPLIT PIN ISO 1234 6,3X50 St 4	10180364	17	2	315	917357108	CRANE DRIVER CAB ADDITIO
SPLIT PIN ISO 1234 6,3X50 St 4	10180364	11	1	750	96062062	FOLDING BRACKET PRE-ASS.

Description	Item	Pos.	Quantity	Page	Assembly	Description
SPLIT PIN ISO 1234 6,3X50 St 4	10180364	21	1	760	918533508	ADAPTER PRE-ASS.
SPLIT PIN ISO 1234 6,3X63 St 4	10180365	4	8	70	915447908	HYDRAULIC SUPPORT
SPLIT PIN ISO 1234 6,3X63 St 4	10180365	14	1	315	917357108	CRANE DRIVER CAB ADDITIO
SPLIT PIN ISO 1234 8X63 ST 4	10875873	2	1	721	915415908	BOOM NOSE
SPLIT PIN ISO 1234 8X63 ST 4	10875873	9	1	723	964502908	BOOM NOSE PRE-ASS.
SPONGE RUBBER 20X4 MOOS	262103108	30	0.064	395	918810308	CONTROL STAND
SPOUT	971565208	9	1	334	917304508	CRANE OPERATOR CABIN P
SPOUT 6,5/6,5/2 GUMMI	591055508	3	2	356	966408908	WATER CONTAINER CPL
SPRAY LANCE SET 4-TEILIG	10876890	2	1	647	96010020	GREASE SPRAY SYSTEM
SPRING COUPLING 16X35	11342308	(2)	1	486	968365908	EL.ADD-ON SET-LIMIT SWITCH
SPRING CUP ABOVE 11,7X23X	9074480	(7)	4	160	10149580	CYLINDER HEAD ASSEMBLY
SPRING CUP ABOVE 11,7X23X	9074480	7	4	162	10149579	CYLINDER HEAD PRE-ASSY.
SPRING LOADED MULTI-DISC	502036301	80	1	369	933074801	SLEWING GEAR DRIVE
SPRING LOADED MULTI-DISC	502037201	70	1	383	968607101	PLANETARY GEARBOX
SPRING LOADED MULTI-DISC	502037201	70	1	584	938759801	PLANETARY GEARBOX
SPRING PLUG 4,5X4X78 A2K	433206208	2	2	783	968952708	MOUNTING HOOK ROD
SPRING PLUG DIN 11024 2,5-2	11968422	34	2	315	917357108	CRANE DRIVER CAB ADDITIO
SPRING PLUG DIN 11024 3,2-2	433206114	13	4	119	96045222	MOUNTING PARTS
SPRING SUPPORT	510797008	3	1	558	511417708	PRESSURE LIMITING VALVE
SPRING SUPPORT	510797008	3	1	621	511417608	PRESSURE LIMITING VALVE
SPRING SUPPORT	570110808	6	1	373	570109508	DRIVING GEAR
SPRING WASHER DIN 137 10	10411093	6	2	228	11386644	STARTER
SPRING WASHER DIN 137 6 X1	10411092	4	1	228	11386644	STARTER
SPRING WASHER DIN 137 B 20	12100333	62	8	661	91000050	TELESCOPIC SECTION 1 PRE
SPRING WASHER DIN 137 B 20	12100333	62	8	664	91000051	TELESCOPIC SECT.2 PRE-AS
SPRING WASHER DIN 137 B 20	12100333	62	8	667	91000052	TELESCOPIC SECT.3 PRE-ASS
SPRING WASHER DIN 137 B 20	12100333	62	8	670	91000053	TELESCOPIC SECT.IV PRE-A
SPRING WASHER DIN 137 B 20	12100333	41	4	673	91000054	TELESCOPIC SECT.5 PRE-AS
SPRING-LOADED PIN	510797308	6	1	558	511417708	PRESSURE LIMITING VALVE
SPRING-LOADED PIN	510797308	6	1	621	511417608	PRESSURE LIMITING VALVE
STAIR 4-360X0,9M ALMG3 ELO	12102327	1	1	420	919484908	FALL PROTECTION
STAND	963772608	4	1	623	915403108	ADD-ON PARTS CAMERA
STAND PIPE 27X111X113,5 EN	927521301	5	1	586	927521201	OIL-LEVEL GAUGE INSTALLAT
STAR HANDLE SCREW	10443625	24	2	395	918810308	CONTROL STAND
STARTER 7.8KW 24V	11386644	1	1	226	10115539	STARTER ASSEMBLY
STARTER ASSEMBLY 7.8KW	10115539	450	1	134	13455311	DIESEL ENGINE
STEEL BALL DIN 5401 15	747003801	28	1	584	938759801	PLANETARY GEARBOX
STEEP-ANGLE BEARING DIN 6	10013601	3	1	383	968607101	PLANETARY GEARBOX
STEEP-ANGLE BEARING DIN 6	10013601	3	1	584	938759801	PLANETARY GEARBOX
STEP CPL.	968483708	3	1	319	919010108	CRANE OPERATOR CABIN P
STEP DIN EN ISO 1461 T ZN K	10099161	1	1	60	991456314	ACCESS COMPL
STICKER	10663909	(1)	1	480	10327065	ELECTRIC PUMP
STICKER BEHAELTER 2,5KG	967421808	30	1	480	10327065	ELECTRIC PUMP
STOP BOLT NIROSTA	704231608	12	1	623	915403108	ADD-ON PARTS CAMERA
STOP PLUG D10,7 LD-PE	10678375	7	2	331	916162808	RELING
STOP PLUG D10,7 LD-PE	10678375	47	1	338	917305408	INTERNAL PANELLING INSTA
STOP PLUG VSTI 1 1/4"	11002696	67	1	528	11170515	VALVE BLOCK
STOP PLUG VSTI 1 1/4"	11002696	67	2	530	11170518	VALVE BLOCK
STOP PLUG VSTI 1 1/4"	11002696	67	1	531	11170519	VALVE BLOCK
STOP PLUG VSTI 1 1/4"	11002696	67	1	602	10665173	CONTROL BLOCK
STOP PLUG VSTI G1/2A CR6-F	477704208	45	2	71	10356288	SUPPORT CYLINDER
STOP PLUG VSTI G1/2A CR6-F	477704208	410	1	291	969543308	FUEL TANK, PRE-ASSEMBLED
STOP PLUG VSTI G1/2A CR6-F	477704208	48	2	534	10802090	CONTROL BLOCK
STOP PLUG VSTI G1/2A CR6-F	477704208	100	1	543	10333672	CONTROL BLOCK
STOP PLUG VSTI G1/2A CR6-F	477704208	170	2	543	10333672	CONTROL BLOCK
STOP PLUG VSTI G1/2A CR6-F	477704208	3	1	551	10355774	LOWERING BRAKE VALVE
STOP PLUG VSTI G1/2A CR6-F	477704208	61	2	684	12105406	TELESCOPIC CYLINDER
STOP PLUG VSTI G1A CR6-F	477704608	409	2	291	969543308	FUEL TANK, PRE-ASSEMBLED
STOP PLUG VSTI G3/4A CR6-F	477704708	65	2	522	11170514	VALVE BLOCK
STOP PLUG VSTI G3/4A CR6-F	477704708	65	1	528	11170515	VALVE BLOCK

Description	Item	Pos.	Quantity	Page	Assembly	Description
STOP PLUG VSTI G3/4A CR6-F	477704708	65	2	530	11170518	VALVE BLOCK
STOP PLUG VSTI G3/4A CR6-F	477704708	65	2	531	11170519	VALVE BLOCK
STOP PLUG VSTI G3/4A CR6-F	477704708	65	1	602	10665173	CONTROL BLOCK
STOP PLUG VSTI M12X1,5 CR6	477704308	41	2	71	10356288	SUPPORT CYLINDER
STOP PLUG VSTI M12X1,5 CR6	477704308	22	1	380	968558601	COMPACT ROPE WINCH
STOP PLUG VSTI M12X1,5 CR6	477704308	600	1	566	969767908	PIPEWORK AIR INSTALLATIO
STOP PLUG VSTI M12X1,5 CR6	477704308	22	1	583	938707001	COMPACT ROPE WINCH
STOP PLUG VSTI1/8"ED ST C	510741508	61	4	522	11170514	VALVE BLOCK
STOP PLUG VSTI1/8"ED ST C	510741508	8	1	523	11065879	PRESSURE VALVE
STOP PLUG VSTI1/8"ED ST C	510741508	61	3	528	11170515	VALVE BLOCK
STOP PLUG VSTI1/8"ED ST C	510741508	61	11	530	11170518	VALVE BLOCK
STOP PLUG VSTI1/8"ED ST C	510741508	61	3	531	11170519	VALVE BLOCK
STOP PLUG VSTI1/8"ED ST C	510741508	45	4	534	10802090	CONTROL BLOCK
STOP PLUG VSTI1/8"ED ST C	510741508	110	2	543	10333672	CONTROL BLOCK
STOP PLUG VSTI1/8"ED ST C	510741508	61	3	602	10665173	CONTROL BLOCK
STOP PLUG VSTI3/8"ED CR6-F	477704108	652	2	34	967304508	UNDERCARRIAGE HYDRAULIC
STOP PLUG VSTI3/8"ED CR6-F	477704108	63	1	522	11170514	VALVE BLOCK
STOP PLUG VSTI3/8"ED CR6-F	477704108	47	14	534	10802090	CONTROL BLOCK
STOP PLUG VSTI3/8"ED CR6-F	477704108	160	1	543	10333672	CONTROL BLOCK
STOP PLUG VSTIM14X1,5ED C	477704908	2	4	369	933074801	SLEWING GEAR DRIVE
STOP PLUG VSTIM14X1,5ED C	477704908	727	2	519	96045552	HYDRAULICS UPPER CARRI
STOP PLUG VSTIM16X1,5ED C	477704408	402	2	280	96035595	EXPANSION TANK PRE-ASS.
STOP PLUG VSTIM16X1,5ED C	477704408	6	1	282	96035743	EQUALIZING RESERVOIR
STOP PLUG VSTIM16X1,5ED C	477704408	21	2	583	938707001	COMPACT ROPE WINCH
STOP PLUG VSTIM18X1,5ED C	477705108	401	2	291	969543308	FUEL TANK, PRE-ASSEMBLED
STOP PLUG VSTIM22X1,5ED C	477704508	78	1	369	933074801	SLEWING GEAR DRIVE
STOP PLUG VSTIM22X1,5ED C	477704508	28	1	384	939368401	OIL-GAUGING INSTRUMENT
STOP PLUG VSTIM22X1,5ED C	477704508	4	1	551	10355774	LOWERING BRAKE VALVE
STOP PLUG VSTIM22X1,5ED C	477704508	639	1	566	969767908	PIPEWORK AIR INSTALLATIO
STOP PLUG VSTIM27X2ED C	477705608	87	2	369	933074801	SLEWING GEAR DRIVE
STOP PLUG VSTIM33X2ED C	477705208	404	1	295	969219208	OIL TANK PRE-ASS.
STOPPER BUZ 28L CR6-FREI	477700808	627	1	34	967304508	UNDERCARRIAGE HYDRAULIC
STOPPER PLUG	692404908	811	1	491	96063649	WIRING HARNESS
STOPPER PLUG	692404908	811	2	494	96023971	WIRING HARNESS
STOPPER PLUG 3,6MM SILIK	602331108	806	12	90	96062920	WIRING HARNESS
STOPPER PLUG 3,6MM SILIK	602331108	806	12	98	96045216	WIRING HARNESS
STOPPER PLUG 3,6MM SILIK	602331108	806	12	491	96063649	WIRING HARNESS
STOPPER PLUG 3,6MM SILIK	602331108	806	41	494	96023971	WIRING HARNESS
STOPPER PLUG 3,6MM SILIK	602331108	806	12	640	96045220	WIRING HARNESS
STOPPER PLUG 3,6MM SILIK	602331108	806	12	694	96063583	LEAD
STOPPER PLUG 3,6MM SILIK	602331108	806	12	699	96051215	CABLES, PRE-ASSEMBLED
STOPPER PLUG 3,9-4,1MM SIL	10870403	844	1	496	96049294	WIRING HARNESS
STOPPER PLUG AMP JPT-SER	602329208	807	2	494	96023971	WIRING HARNESS
STOPPER PLUG AMP JPT-SER	602329208	807	2	694	96063583	LEAD
STOPPER PLUG AMP JPT-SER	602329208	807	3	699	96051215	CABLES, PRE-ASSEMBLED
STOPPER PLUG BAUREIHE_M	604518908	812	5	704	96062034	WIRES TERMINAL BOX CPL.
STOPPER PLUG BAUREIHE_M	604518908	812	7	775	96035674	LEAD
STOPPER PLUG DEUTSCH GR	7368253	823	5	427	96023891	WIRING HARNESS
STOPPER PLUG DEUTSCH GR	7368253	823	3	494	96023971	WIRING HARNESS
STOPPER PLUG DEUTSCH GR	7368253	823	1	496	96049294	WIRING HARNESS
STOPPER PLUG DEUTSCH-ST	10800046	842	6	494	96023971	WIRING HARNESS
STOPPER PLUG DIN 72585 4	692405808	817	1	491	96063649	WIRING HARNESS
STOPPER PLUG DIN 72585 4	692405808	817	2	496	96049294	WIRING HARNESS
STOPPER PLUG DIN 72585 7	692405708	822	3	491	96063649	WIRING HARNESS
STOPPER PLUG MCON 1,23,5	10813642	836	1	496	96049294	WIRING HARNESS
STOPPER PLUG VSTI1/4"ED C	477704008	604	2	63	967301408	PREPARATION HYDR
STOPPER PLUG VSTI1/4"ED C	477704008	62	5	522	11170514	VALVE BLOCK
STOPPER PLUG VSTI1/4"ED C	477704008	62	1	528	11170515	VALVE BLOCK
STOPPER PLUG VSTI1/4"ED C	477704008	62	1	530	11170518	VALVE BLOCK
STOPPER PLUG VSTI1/4"ED C	477704008	62	1	531	11170519	VALVE BLOCK

Description	Item	Pos.	Quantity	Page	Assembly	Description
STOPPER PLUG VSTI1/4"ED C	477704008	46	3	534	10802090	CONTROL BLOCK
STOPPER PLUG VSTI1/4"ED C	477704008	17	6	540	511486908	CONTROL PLATE
STOPPER PLUG VSTI1/4"ED C	477704008	120	4	543	10333672	CONTROL BLOCK
STOPPER PLUG VSTI1/4"ED C	477704008	11	2	550	10663060	CONTROL BLOCK
STOPPER PLUG VSTI1/4"ED C	477704008	2	2	551	10355774	LOWERING BRAKE VALVE
STOPPER PLUG VSTI1/4"ED C	477704008	1	2	552	10292670	LOWERING BRAKE VALVE
STOPPER PLUG VSTIM10X1ED	477705508	23	3	380	968558601	COMPACT ROPE WINCH
STOPPER PLUG VSTIM10X1ED	477705508	23	2	583	938707001	COMPACT ROPE WINCH
STRAINER FILTER	10346599	1	1	551	10355774	LOWERING BRAKE VALVE
STRAINER FILTER	13562648	1	1	463	13475475	SUCTION MODUL
STRIP PA6G	97139849	18	1	420	919484908	FALL PROTECTION
SUBSTRUCTURE	11171274	60	1	397	10877138	OPERATOR SEAT
SUCTION FLANGE CR6-FREI	510146208	400	1	272	96020819	RADIATOR, PRE-ASSEMBLED
SUCTION FLANGE CR6-FREI	510146208	514	1	517	96045552	HYDRAULICS UPPER CARRI
SUCTION HOSE	972965408	250	1	263	918728708	DRIVE ASSEMBLY CPL.
SUCTION MODUL L=405 24V NI	13475475	2	1	462	96071742	UREA TANK
SUCTION PIPE OIL	974558708	402	1	269	918811108	DRIVE ASSEMBLY, PRE-ASSE
SUCTION PIPE OIL G-ALSI10M	973021008	5	1	295	969219208	OIL TANK PRE-ASS.
SUCTION PIPE OIL SPF	973861408	202	1	268	918811108	DRIVE ASSEMBLY, PRE-ASSE
SUN WHEEL Z=21 18CrNiMo7-	927601901	25	1	383	968607101	PLANETARY GEARBOX
SUN WHEEL Z=24 18CrNiMo7-	939251401	30	1	369	933074801	SLEWING GEAR DRIVE
SUN WHEEL Z=24 18CrNiMo7-	939251601	45	1	369	933074801	SLEWING GEAR DRIVE
SUN WHEEL Z=24 18CrNiMo7-	939251701	60	1	369	933074801	SLEWING GEAR DRIVE
SUN WHEEL Z=28 18CrNiMo7-	927602901	35	1	383	968607101	PLANETARY GEARBOX
SUN WHEEL Z=42 18CrNiMo7-	938760401	45	1	383	968607101	PLANETARY GEARBOX
SUPPORT CYLINDER 170/100-1	10356288	1	4	70	915447908	HYDRAULIC SUPPORT
SUPPORT FLANGE	938760601	50	1	383	968607101	PLANETARY GEARBOX
SUPPORT FRAME RAL 7016 SP	966553108	1	1	320	916164208	BEARING INSTALLATION
SUPPORT TRESTLE FE//ZNNI8/	965255408	26	1	315	917357108	CRANE DRIVER CAB ADDITIO
SUPPORTING ARM T ZN O	96022400	1	1	473	96051762	EXHAUST SYSTEM PRE-ASSE
SUPPORTING RING	790272514	4	1	25	749065414	TENSION JACK HYDR CPL
SUPPORTING RING 17,5X20,9	571082808	(4)	1	516	96045552	HYDRAULICS UPPER CARRI
SUPPORTING RING 17,5X20,9	571082808	(3)	1	591	96064697	HYDR.AUXILIARY HOISTING
SUPPORTING WASHER DIN 98	422002308	12	1	763	917695308	GUIDE PULLEY COMPL.
SUPPORTING WASHER DIN 98	5009001	11	1	43	592326914	VARIABLE DISPLACEMENT MO
SURFACE SEALING 300ML KA	10354595	100	1	144	10132560	OIL SUMP WITH FASTENING
SURFACE SEALING 300ML KA	10354595	10	1	253	10141167	SEAL KIT OIL SUMP
SUSPENSION CPL.	12104666	30	1	741	919421708	HOOK BLOCK
SWITCH	11979975	24	1	397	10877138	OPERATOR SEAT
SWITCH BOX COMPL.	96075205	2	1	82	96062918	SWITCH BOX CPL.
SWITCH BOX CPL.	96062918	2	1	81	96062917	ELECTR.FOR CENTER SECTIO
SWITCH BOX WELDED RAL 7	96072660	1	1	84	96075205	SWITCH BOX COMPL.
SWITCH PANEL 21X75X160 P	972373708	19	2	667	91000052	TELESCOPIC SECT.3 PRE-ASS
SWITCH PANEL 21X75X160 P	972373708	19	2	670	91000053	TELESCOPIC SECT.IV PRE-A
SWITCH PANEL 21X75X160 P	972373708	85	2	674	91000054	TELESCOPIC SECT.5 PRE-AS
SWITCH PANEL 21X75X160 P	972392108	19	1	661	91000050	TELESCOPIC SECTION 1 PRE
SWITCH PANEL 21X75X160 P	972392108	19	1	664	91000051	TELESCOPIC SECT.2 PRE-AS
SWITCH PLATE 2X139X46 DC0	972373808	50	2	661	91000050	TELESCOPIC SECTION 1 PRE
SWITCH PLATE 2X139X46 DC0	972373808	50	2	664	91000051	TELESCOPIC SECT.2 PRE-AS
SWITCH PLATE 2X139X46 DC0	972373808	50	2	667	91000052	TELESCOPIC SECT.3 PRE-ASS
SWITCH PLATE 2X139X46 DC0	972373808	50	2	670	91000053	TELESCOPIC SECT.IV PRE-A
SWITCH PLATE 2X139X46 DC0	972373808	86	2	674	91000054	TELESCOPIC SECT.5 PRE-AS
SWITCHBOX MOUNTING PART	919940108	181	1	13		LIEBHERR LTR 1100
SWIVEL BOLT BRACKET CLAM	10871001	304	2	566	969767908	PIPEWORK AIR INSTALLATIO
SWIVEL BOLT CLAMPING BA	10583974	40	2	461	96074081	UREA TANK, PRE-MOUNTING
SWIVEL ELBOW	591051008	22	2	355	916163008	WIPERS INSTALLATION
SWIVEL ELBOW 90,H33,5 POM	10873979	6	1	462	96071742	UREA TANK
SWIVEL ELBOW EW 12L M18X1	247117702	646	6	34	967304508	UNDERCARRIAGE HYDRAULIC
SWIVEL ELBOW EW 12L M18X1	247117702	612	5	518	96045552	HYDRAULICS UPPER CARRI
SWIVEL ELBOW EW 12L M18X1	247117702	633	2	592	96064697	HYDR.AUXILIARY HOISTING

Description	Item	Pos.	Quantity	Page	Assembly	Description
SWIVEL ELBOW EW 12L M18X1	247117702	601	1	619	969856508	ADDITIONAL HYDRAULICS
SWIVEL ELBOW EW 12L M18X1	247117702	610	1	709	965994108	HYDR.F.TELESCOPIC BOOM
SWIVEL ELBOW EW 18L M26X1	247108302	401	2	306	96066239	PREMOUNTED FUEL FILTER
SWIVEL ELBOW EW 18L M26X1	247108302	604	4	518	96045552	HYDRAULICS UPPER CARRI
SWIVEL ELBOW EW 22L CR6-F	247126202	2	1	211	10145176	PIPELINE INSTALLATION
SWIVEL ELBOW EW 6L CR6-F	247021702	734	2	519	96045552	HYDRAULICS UPPER CARRI
SWIVEL ELBOW EW 6L CR6-F	247021702	605	1	717	966004808	ADDNL.HYDR. FOLDING JIB
SWIVEL ELBOW EW 8L CR6-F	247021802	34	1	461	96074081	UREA TANK, PRE-MOUNTING
SWIVEL SCREW JOINT DG105	474234008	150	3	709	965994108	HYDR.F.TELESCOPIC BOOM
SYMBOL INSERT 14X14X1,5	606782008	6	2	620	913978308	ADDITIONAL ELECTRICS
SYMBOL INSERT SCHWARZ	606763308	7	1	620	913978308	ADDITIONAL ELECTRICS
T CONNECTION PIECE ET 12L	247105602	645	2	34	967304508	UNDERCARRIAGE HYDRAULIC
T CONNECTION PIECE ET 12L	247105602	659	3	518	96045552	HYDRAULICS UPPER CARRI
T CONNECTION PIECE ET 12L	247105602	617	1	591	96064697	HYDR.AUXILIARY HOISTING
T CONNECTION PIECE ET 18L	247108402	736	2	519	96045552	HYDRAULICS UPPER CARRI
TALLOW-DROP SCREW 4X10 1	10875795	29	4	392	969300008	HEATING, PRE-ASSEMBLED
TALLOW-DROP SCREW 4X10 1	10875795	17	4	446	96019783	ADDNL.HEATING, PRE-ASSE
TALLOW-DROP SCREW K4X12	10019040	29	8	395	918810308	CONTROL STAND
TANK SENSOR L=1200 24V SP	789015608	100	1	291	969543308	FUEL TANK, PRE-ASSEMBLED
TAPER	11244462	4	1	524	571130108	PRESSURE LIMITING VALVE
TAPER COLLET VKA 22L CR6-F	4772028	12	2	146	10155227	OIL SUMP PRE-ASS.
TAPERED ROLLER BEARING	10293775	10	1	372	570109008	DRIVING GEAR
TAPERED ROLLER BEARING	746201408	12	1	369	933074801	SLEWING GEAR DRIVE
TAPERED ROLLER BEARING	746221908	11	1	372	570109008	DRIVING GEAR
TAPERED ROLLER BEARING	746246001	3	1	369	933074801	SLEWING GEAR DRIVE
TAPERED SOCKET DIN 6319	10875862	41	1	747	919933308	TRANSPORT MOUNTING
TAPPET PUSH ROD	9079131	3	2	172	9079870	CONTROL PARTS
TEE 20X20 L=90	10872612	4	1	392	969300008	HEATING, PRE-ASSEMBLED
TEE 20X20 L=90	10872612	21	1	446	96019783	ADDNL.HEATING, PRE-ASSE
TEE 30 G-ALMG TROWALPOLI	10285701	21	1	319	919010108	CRANE OPERATOR CABIN P
TEE REDUCER 20X10 L=80	11626529	21	2	458	91003833	UREA PLANT
TELESCOPIC BOOM CPL. SPF	919935408	201	1	14		LIEBHERR LTR 1100
TELESCOPIC CYLINDER 180/1	12105406	1	1	679	91000055	MECHANICAL EXTENSION SYS
TELESCOPIC OUTRIGGER RI	10224279	3	2	30	992078314	CENTRE PIECE
TELESCOPIC SECT.2 PRE-AS	91000051	3	1	652	919935408	TELESCOPIC BOOM CPL.
TELESCOPIC SECT.2 WELD.	91000081	1	1	664	91000051	TELESCOPIC SECT.2 PRE-AS
TELESCOPIC SECT.3 PRE-ASS	91000052	4	1	652	919935408	TELESCOPIC BOOM CPL.
TELESCOPIC SECT.3 WELD.C	91000082	1	1	667	91000052	TELESCOPIC SECT.3 PRE-ASS
TELESCOPIC SECT.4 WELD.	91000083	1	1	670	91000053	TELESCOPIC SECT.IV PRE-A
TELESCOPIC SECT.5 PRE-ASS	91000054	6	1	652	919935408	TELESCOPIC BOOM CPL.
TELESCOPIC SECT.5 WELD.C	91000085	1	1	673	91000054	TELESCOPIC SECT.5 PRE-AS
TELESCOPIC SECT.IV PRE-AS	91000053	5	1	652	919935408	TELESCOPIC BOOM CPL.
TELESCOPIC SECTION 1 PRE-	91000050	2	1	652	919935408	TELESCOPIC BOOM CPL.
TELESCOPIC SECTION 1 WEL	91000080	1	1	661	91000050	TELESCOPIC SECTION 1 PRE
TEMPERATURE PROBE CPL. -	10152036	40	1	243	12583633	ENGINE CONTROL SENSORS
TEMPERATURE PROBE CPL. -	13410342	30	2	243	12583633	ENGINE CONTROL SENSORS
TEMPERATURE SENSOR	10290126	23	1	448	10876576	WATER HEATING SYSTEM
TEMPERATURE SENSOR	10290126	(5)	1	448	10876576	WATER HEATING SYSTEM
TEMPERATURE SENSOR	11826650	21	1	448	10876576	WATER HEATING SYSTEM
TEMPERATURE SENSOR	11826650	(4)	1	448	10876576	WATER HEATING SYSTEM
TEMPERATURE SENSOR	966181208	8	1	484	919940408	ELECTR. SYSTEM F.SLEWING
TEMPERATURE SENSOR -30/+	691183108	64	1	516	96045552	HYDRAULICS UPPER CARRI
TEMPERATURE SENSOR -30°C	10424276	7	1	431	96056347	ELECTRIC ADD-ON PARTS CA
TEMPERATURE SENSOR -40°C	10493625	(1)	1	243	12583633	ENGINE CONTROL SENSORS
TEMPERATURE SENSOR -40°C	12889334	156	1	474	96041566	ELECTRIC ADD-ON PARTS
TEMPERATURE SENSOR -40°	11349182	151	2	474	96041566	ELECTRIC ADD-ON PARTS
TEMPERATURE SENSOR -50/+	10800266	(150)	1	484	919940408	ELECTR. SYSTEM F.SLEWING
TENSION FLANGE 47X2220	10334488	100	1	407	96022627	SLEWING PLATFORM PANELLI
TENSION FLANGE 47X2220	10334488	100	1	415	96024809	SLEWING PLATFORM PANELLI
TENSION JACK HYDR CPL LH	749065414	3	1	23	790256114	GUIDE WHEEL UNIT CPL

Description	Item	Pos.	Quantity	Page	Assembly	Description
TENSION PLATE PRE-ASS.	918221408	4	1	757	91001038	MECH. DOUBLE FOLD JIB PR
TERMINAL BOARD PRE-ASS.	922648308	20	1	502	96025348	BASE ASSEMBLY
TERMINAL BOX CPL. S930	96063458	1	1	701	96063454	ELECTR. FOR HEAD SECTION
TERMINAL BOX S900	96063456	1	1	690	96063954	ELECTRIC F.BASE SECTION
TERMINAL CLIP 40,5/39-42	553054208	16	1	444	918759708	ADD HEATING SUPERSTRUCT
TERMINAL CLIP 40,5/39-42	553054208	4	3	446	96019783	ADDNL.HEATING, PRE-ASSE
TERMINAL DISK	11951833	7	2	56	790258414	CRAWLER CHAIN CPL
TERMINAL FLANGE NG 125-15	9276423	11	1	261	12487540	HYDR.DOUBLE PUMP
TERMINAL HOUSING DIN 7258	692406008	517	2	491	96063649	WIRING HARNESS
TERMINAL HOUSING DIN 7258	692406008	523	1	495	96049294	WIRING HARNESS
TERMINAL MARKER 0,2-2,5MM	602761608	5	2	504	968077108	TERMINAL STRIP
TERMINAL STRIP	968077108	21	1	502	96025348	BASE ASSEMBLY
TERMINAL/CLAMP	636107901	3	2	504	968077108	TERMINAL STRIP
TERMINAL/CLAMP 6,3/2,8X0,8	10286354	502	18	704	96062034	WIRES TERMINAL BOX CPL.
TEST CONNECTION M22X1,5	502921408	641	1	566	969767908	PIPEWORK AIR INSTALLATIO
TEST POINT FITTING BMA3 6S	475601508	641	3	34	967304508	UNDERCARRIAGE HYDRAULIC
TEST POINT FITTING BMA3 6S	475601508	607	1	63	967301408	PREPARATION HYDR
TEST POINT FITTING BMA3 6S	475601508	600	5	518	96045552	HYDRAULICS UPPER CARRI
TEST POINT FITTING BMA3 6S	475601508	614	1	591	96064697	HYDR.AUXILIARY HOISTING
TEST POINT FITTING BMA3 6S	475601508	602	1	619	969856508	ADDITIONAL HYDRAULICS
TEST POINT FITTING EMA3 G1	475602608	682	3	518	96045552	HYDRAULICS UPPER CARRI
TEST POINT FITTING G1/4"	10430230	63	1	684	12105406	TELESCOPIC CYLINDER
TEST POINT FITTING VKA3 10	510629008	649	3	34	967304508	UNDERCARRIAGE HYDRAULIC
TEST POINT FITTING VKA3 10	510629008	631	4	518	96045552	HYDRAULICS UPPER CARRI
TEST POINT FITTING VKA3 10	510629008	620	1	592	96064697	HYDR.AUXILIARY HOISTING
THERMAL SWITCH BERUEHR	11080088	62	1	432	96056347	ELECTRIC ADD-ON PARTS CA
THERMOSTAT	10154798	2	1	216	10148215	THERMOSTAT HOUSING ASS
THERMOSTAT	571867708	44	1	388	11083498	AIR CONDITIONING UNIT
THERMOSTAT HOUSING ASS	10148215	380	1	133	13455311	DIESEL ENGINE
THREAD FORM SCREW DIN 75	407500508	10	1	773	96037297	ANGULAR TRANSMITTER AT
THREAD FORM SCREW DIN 7	12102051	20	4	395	918810308	CONTROL STAND
THREAD LOCK 50ML FLASCH	811208001	102	1	146	10155227	OIL SUMP PRE-ASS.
THREADED BUSHING 14,5X24	9079078	9	1	163	10149578	CYLINDER HEAD
THREADED CARRIER FE//ZNNI	963991608	17	1	407	96022627	SLEWING PLATFORM PANELLI
THREADED CARRIER FE//ZNNI	964307108	16	1	407	96022627	SLEWING PLATFORM PANELLI
THREADED CARRIER FE//ZNNI	967695808	7	2	407	96022627	SLEWING PLATFORM PANELLI
THREADED CARRIER FE//ZNNI	968321708	6	2	415	96024809	SLEWING PLATFORM PANELLI
THREADED CARRIER FE//ZNNI	968588908	8	1	407	96022627	SLEWING PLATFORM PANELLI
THREADED PIN 20X53X78 C45	97096918	2	2	395	918810308	CONTROL STAND
THREADED PIN DIN 976 M8X14	10332987	7	4	386	917894308	HEATING CRANE DRIVER'S CA
THREADED PLATE 10X100X30	97001665	20	1	124	918728408	ASSEMBLY PARTS F.SLEWING
THREADED PLATE 10X180X30	97051989	35	1	315	917357108	CRANE DRIVER CAB ADDITIO
THREADED PLATE 15X40X130	953147708	7	1	747	919933308	TRANSPORT MOUNTING
THREADED PLATE 15X45X300	949380808	6	2	747	919933308	TRANSPORT MOUNTING
THREADED PLATE 20X185X45	979243508	3	1	350	965784408	ROOF WINDOW PRE-ASS.
THREADED PLATE 20X40X315	974911108	20	1	747	919933308	TRANSPORT MOUNTING
THREADED PLATE 8.0 X0 S23	953695308	9	4	287	96024716	BATTERY BOX, PRE-ASSEMB
THREADED PLATE 8.0 X0 S23	953695308	6	2	361	917304708	SLIDING DOOR INSTALLATION
THREADED PLATE 8.0 X0 S23	953695308	50	3	407	96022627	SLEWING PLATFORM PANELLI
THREADED PLATE 8.0 X0 S23	953695308	4	3	410	969425608	FLAP RIGHT PRE-ASS.
THREADED PLATE 8.0 X0 S23	953695308	21	2	415	96024809	SLEWING PLATFORM PANELLI
THREADED PLATE 8.0 X0 S23	953695308	4	6	416	969399608	FLAP PRE-ASS.
THREADED PLATE 8.0 X0 S23	953695308	5	2	781	968940708	HOLDER LEFT
THREADED PLATE 8.0 X0 S23	953695308	5	2	782	968940808	HOLDER RIGHT
THREADED PLATE 8X110X35 S	97000276	4	1	361	917304708	SLIDING DOOR INSTALLATION
THREADED PLATE 8X98X60 S	97000277	5	1	361	917304708	SLIDING DOOR INSTALLATION
THREADED PLATE M6 PA6GF3	11004117	28	2	349	966497908	FRONT WINDOW CPL.
THREADED PLATE M8	704262608	22	2	287	96024716	BATTERY BOX, PRE-ASSEMB
THREADED ROD DIN 975 M16X	948996914	20	4	22	96062226	CRAWLER CARRIER RIGHT CP
THREADED ROD DIN 975 M16X	948996914	20	4	27	96062228	CRAWLER TRACK CARRIER LE

Description	Item	Pos.	Quantity	Page	Assembly	Description
THREADED ROD RD36X85 42C	957095914	40	4	22	96062226	CRAWLER CARRIER RIGHT CP
THREADED ROD RD36X85 42C	957095914	40	4	28	96062228	CRAWLER TRACK CARRIER LE
THREADED ROD RD36X95 42C	957095814	43	4	22	96062226	CRAWLER CARRIER RIGHT CP
THREADED ROD RD36X95 42C	957095814	43	4	28	96062228	CRAWLER TRACK CARRIER LE
THRUST PIECE RD40X60 42C	957095714	42	4	22	96062226	CRAWLER CARRIER RIGHT CP
THRUST PIECE RD40X60 42C	957095714	42	4	28	96062228	CRAWLER TRACK CARRIER LE
THRUST WASHER	571582308	4	1	209	5700161	AIR COMPRESSOR
THRUST WASHER	571582408	6	1	209	5700161	AIR COMPRESSOR
THRUST WASHER	749015614	40	1	26	749065314	CARRYING ROLLER CPL
THRUST WASHER 112X138X3	10119927	3	2	155	10116939	RS CRANKSHAFT BEARING K
THRUST WASHER 112X138X3	10119928	4	2	155	10116939	RS CRANKSHAFT BEARING K
THRUST WASHER 47X200X6	938760501	46	1	383	968607101	PLANETARY GEARBOX
TIGHT FIT SLEEVE 12X20X20 1	10134348	3	2	139	10147687	POWER UNIT SUPPORT ATT
TIGHT FIT SLEEVE 12X20X20 1	10134348	3	2	232	10115829	FLYWHEEL HOUSING ASSEM
TIGHT FIT SLEEVE 15,5X19,5	9177636	6	10	137	10154379	CRANKCASE PRE-ASSY.
TIGHT FIT SLEEVE 16X20X20 S	9074798	4	2	160	10149580	CYLINDER HEAD ASSEMBLY
TIGHTENING STRAP 240-280/	774210508	309	2	566	969767908	PIPEWORK AIR INSTALLATIO
TILT CYLINDER 50/28-110 -40°	10650940	2	1	315	917357108	CRANE DRIVER CAB ADDITIO
TIME RELAY 60S 24V	10877999	3	1	498	919940108	SWITCHBOX MOUNTING PART
TIN M1	10872381	155	2	703	96063458	TERMINAL BOX CPL.
TONGUE	570340077	5	4	332	968462608	INSTALLATION SWITCH CAB. C
TONGUE	704255808	103	2	417	969392008	FRONT LEFT-HAND HOOD
TONGUE	704256708	8	4	85	966167808	COVER COMPL.
TONGUE 45X19 STAHL VERZ	704259008	15	1	287	96024716	BATTERY BOX, PRE-ASSEMB
TOOLING AGENT KANISTER-5L	811203108	16	1	346	916162508	WINDOW ASSEMBLY
TOOLING AGENT KANISTER-5L	811203108	49	1	361	917304708	SLIDING DOOR INSTALLATION
TOOLS	917508408	352	1	14		LIEBHERR LTR 1100
TOOLS AND ACCESSORIES	914860608	55	1	12		LIEBHERR LTR 1100
TOOTH LOCK WASHER 12X99/	938996501	90	1	369	933074801	SLEWING GEAR DRIVE
TOOTH LOCK WASHER DIN 6	425100408	20	4	87	96062922	MOUNTING PLATE PRE-ASS.
TOOTH LOCK WASHER DIN 6	425100408	22	4	498	919940108	SWITCHBOX MOUNTING PART
TOOTHED BELT	11083453	1	1	388	11083498	AIR CONDITIONING UNIT
TOP HAT RAIL 35X27X7,3X1	602106708	1	0.135	504	968077108	TERMINAL STRIP
TOP HAT RAIL 35X27X7,3X1	602106708	298	0.205	703	96063458	TERMINAL BOX CPL.
TORCH TIP	11826647	28	1	448	10876576	WATER HEATING SYSTEM
TORCH TIP	11826647	(8)	1	448	10876576	WATER HEATING SYSTEM
TORSIONAL VIBRATION DAM	10228100	1	1	255	10115780	CLUTCH ASSEMBLY
TOUCH CONTACT TRANSMITT	11100197	(3)	1	434	96030724	INSTRUMENT CLUSTER ELEC
TOUCH CONTACT TRANSMITT	606143208	16	1	435	96022872	CONTROL PANEL ROOF
TRACK GUIDE WELDMENT SP	964650808	17	3	22	96062226	CRAWLER CARRIER RIGHT CP
TRACK GUIDE WELDMENT SP	964650808	17	3	27	96062228	CRAWLER TRACK CARRIER LE
TRACK ROLLER COMPL. 200X	10874655	8	12	22	96062226	CRAWLER CARRIER RIGHT CP
TRACK ROLLER COMPL. 200X	10874655	8	12	27	96062228	CRAWLER TRACK CARRIER LE
TRACK ROLLER RD85X84 PA6	749001008	8	1	768	91001040	PIVOT SECTION, PRE-ASSEMB
TRACK ROLLER RD85X84 PA6	749001008	12	1	771	918596708	HEAD SECTION PRE-ASS.
TRACK WIDTH ADJUSTING C	12102924	4	2	42	96048348	INSTALLATION PARTS F.HYD
TRACTION DRIVE LPI1000 30S	13710427	(1)	1	22	96062226	CRAWLER CARRIER RIGHT CP
TRACTION DRIVE LPI1000 30S	13587399	3	1	22	96062226	CRAWLER CARRIER RIGHT CP
TRACTION DRIVE LPI1000 30S	13587399	3	1	27	96062228	CRAWLER TRACK CARRIER LE
TRANSMISSION MOTOR 24V	10355140	2	1	480	10327065	ELECTRIC PUMP
TRANSPONDER SPF	10354922	2	6	52	968374908	LIMIT SWITCH ADD-ON
TRANSPONDER SPF	11060128	57	2	432	96056347	ELECTRIC ADD-ON PARTS CA
TRANSPORT DEVICE ATTACH	10142864	481	1	134	13455311	DIESEL ENGINE
TRANSPORT DEVICE ATTACH	9079823	480	1	134	13455311	DIESEL ENGINE
TRANSPORT LASHING	96070203	200	1	47	968374708	MOUNTING PARTS
TRANSPORT MOUNTING	919933308	350	1	14		LIEBHERR LTR 1100
TRANSPORT SUPPORT	990618314	1	6	76	914950308	CRAWLER-TRACK CARRIER
TRANSPORTER CONSOLE S35	9078849	1	1	230	9079823	TRANSPORT DEVICE ATTACH
TRAVERSE	11494298	3	1	743	910445708	HOOK BLOCK
TRAVERSE 20X61X37 S355J2+	979620608	6	4	473	96051762	EXHAUST SYSTEM PRE-ASSE

Description	Item	Pos.	Quantity	Page	Assembly	Description
TRAVERSE 30X161X190 S690Q	955552508	14	1	747	919933308	TRANSPORT MOUNTING
TRAVERSE AL	12103790	(2)	1	780	917508508	LADDER ATTACHMENT
TRAY RAL 7016 SPF	966241008	14	1	329	916170808	CABLE INLET
TREAD IN FRONT SPF	966270808	1	1	326	968483708	STEP CPL.
TREAD SPF	968493408	(1)	1	326	968483708	STEP CPL.
TRIP CAM	11181886	12	1	95	10878097	SLIP RING TRANSMITTER
TUBE 10.0 X38 E235+N	97038827	4	2	127	968305308	LIMIT SWITCH, PRE-ASSEMB
TUBE 100X33 ABS	97005143	4	1	340	966282308	PANELLING,LEFT
TUBE 114,3X6,3X132 S355J2H	953162308	3	1	727	914557108	INST.BACK SHEAVE FOR BOO
TUBE 12.0X1285 E235+N	97066840	(299)	1	268	918811108	DRIVE ASSEMBLY, PRE-ASSE
TUBE 15.0 X24 S355J2C+C FE//	971805708	19	4	395	918810308	CONTROL STAND
TUBE 15X1,5X35 E235+N VER	943122808	3	2	127	968305308	LIMIT SWITCH, PRE-ASSEMB
TUBE 16X2X70 E235+N VERZ	946104608	11	2	268	918811108	DRIVE ASSEMBLY, PRE-ASSE
TUBE 18.0X622 X5CRNI18-10	97008549	1	1	441	966707708	MIRROR RETAINER PRE-ASS.
TUBE 1959X1553X30 X5CRNI18	975218508	1	2	331	916162808	RELING
TUBE 22.0X633 X6CRNITI1810	97045170	(297)	1	268	918811108	DRIVE ASSEMBLY, PRE-ASSE
TUBE 30/FLEXIBEL PAK	553159408	6	0.67	446	96019783	ADDNL.HEATING, PRE-ASSE
TUBE 38.0X615 S355J2H FE//	97153021	37	1	673	91000054	TELESCOPIC SECT.5 PRE-AS
TUBE 48.3 X0 S235JRH FE//ZN	938545908	11	2	763	917695308	GUIDE PULLEY COMPL.
TUBE 49X68X78 EPDM	97006624	4	1	355	916163008	WIPERS INSTALLATION
TUBE 8.0X320 X5CRNI18-10	97122611	2	1	283	96038054	CONNECTION PIECE
TUBE 85X27 ABS	97005144	3	1	341	966282408	PANELLING
TUBE 88.9X36 S235JRH FE//ZN	977267208	11	4	30	992078314	CENTRE PIECE
TUBE 8X1X222	9080660	10	1	146	10155227	OIL SUMP PRE-ASS.
TUBE ST12 SPF	97087964	6	1	476	918729308	AIR FILTER UNIT
TURBOCHARGER HE300	10139626	1	1	222	10140729	EXHAUST TC MOUNTING
TURNTABLE PANELLING	918728908	135	1	13		LIEBHERR LTR 1100
TWIN HOOK NR. 016-T 63t GS-	11341375	30	1	743	910445708	HOOK BLOCK
TWO-STAGE PUMP WP15 SPF	512142508	101	1	268	918811108	DRIVE ASSEMBLY, PRE-ASSE
TYRE INFLATING HOSE 4,5X10	520190408	67	1	104	928569808	MAIN TOOLS
U-PROFILE 1.5X94X685 DC01	97068500	5	1	458	91003833	UREA PLANT
U-PROFILE 1X1000X60 FE//ZN	97156836	65	7	655	91000049	PIVOT SECTION, PRE-ASSEMB
U-PROFILE 1X1000X78 FE//ZN	97156839	67	5	655	91000049	PIVOT SECTION, PRE-ASSEMB
U-PROFILE 1X500X60 FE//ZNNI	97156838	34	1	673	91000054	TELESCOPIC SECT.5 PRE-AS
U-PROFILE 1X750X60 FE//ZNNI	97156837	62	1	655	91000049	PIVOT SECTION, PRE-ASSEMB
U-PROFILE 1X750X74 DC01 FE	953714008	31	1	581	96062734	AUXILIARY HOISTING GEAR
U-PROFILE 1X750X78 FE//ZNNI	97156840	66	1	655	91000049	PIVOT SECTION, PRE-ASSEMB
UNDERCARRIAGE COMPLETE	919950108	2	1	12		LIEBHERR LTR 1100
UNDERCARRIAGE CPL. B7B	96062225	1	1	17	919950108	UNDERCARRIAGE COMPLETE
UNDERCARRIAGE HYDRAULIC	967304508	5	1	19	96062225	UNDERCARRIAGE CPL.
UNIVERSAL INPUT-OUTPUT M	96069052	5	2	498	919940108	SWITCHBOX MOUNTING PART
UREA CONTAINER 87,4L/78L P	12108844	1	1	462	96071742	UREA TANK
UREA PLANT	91003833	162	1	13		LIEBHERR LTR 1100
UREA SYSTEM AIR LINE STU	96074083	30	1	461	96074081	UREA TANK, PRE-MOUNTING
UREA TANK 87L/78L PE SPF	96071742	10	1	461	96074081	UREA TANK, PRE-MOUNTING
UREA TANK, PRE-MOUNTING	96074081	1	1	458	91003833	UREA PLANT
V-RING 350 NBR,60 SHORE	710908701	15	1	380	968558601	COMPACT ROPE WINCH
V-RING 350 NBR,60 SHORE	710908701	(2)	1	383	968607101	PLANETARY GEARBOX
V-RING 350 NBR,60 SHORE	710908701	15	1	583	938707001	COMPACT ROPE WINCH
V-RIPPED BELT 8XPKX2152 EP	11482426	1	1	213	12418347	AIR COND. COMPRESSOR A
VALVE	10011832	13	1	139	10147687	POWER UNIT SUPPORT ATT
VALVE	10011832	1	1	175	9078233	VALVE
VALVE	10011832	31	1	223	12512627	EXHAUST NOZZLE ATTACHM
VALVE	10815029	32	2	528	11170515	VALVE BLOCK
VALVE	10815029	32	4	530	11170518	VALVE BLOCK
VALVE	10815029	32	2	531	11170519	VALVE BLOCK
VALVE	10815029	32	2	602	10665173	CONTROL BLOCK
VALVE	11979976	29	1	397	10877138	OPERATOR SEAT
VALVE	7622478	16	1	388	11083498	AIR CONDITIONING UNIT
VALVE BLOCK	11170514	1	1	521	10665174	CONTROL BLOCK

Description	Item	Pos.	Quantity	Page	Assembly	Description
VALVE BLOCK	11170515	2	1	521	10665174	CONTROL BLOCK
VALVE BLOCK	11170518	4	1	521	10665174	CONTROL BLOCK
VALVE BLOCK	11170519	5	1	521	10665174	CONTROL BLOCK
VALVE BRIDGE	10119695	2	2	164	10148438	ROCKER ARM BRACKET CPL.
VALVE COLLET MK9	11357514	8	8	162	10149579	CYLINDER HEAD PRE-ASSY.
VALVE CONE	510710408	20	1	37	510438508	PRESSURE RELIEF VALVE
VALVE COVER 45 PA6.6	12101064	5	1	280	96035595	EXPANSION TANK PRE-ASS.
VALVE COVER 45 PA6.6	12101064	5	1	282	96035743	EQUALIZING RESERVOIR
VALVE M14X1,5	9078233	6	1	174	10129474	OIL COOLER, PRE-ASSEMBLE
VALVE OPERATION	927758701	11	1	583	938707001	COMPACT ROPE WINCH
VALVE SEAT	510797608	10	1	558	511417708	PRESSURE LIMITING VALVE
VALVE SEAT	510797608	10	1	621	511417608	PRESSURE LIMITING VALVE
VALVE SEAT	570647508	3	1	524	571130108	PRESSURE LIMITING VALVE
VALVE STEM GUIDE NOVOFE	10150204	4	4	163	10149578	CYLINDER HEAD
VALVE STEM SEAL RING	10120334	(5)	4	160	10149580	CYLINDER HEAD ASSEMBLY
VALVE STEM SEAL RING	10120334	5	4	162	10149579	CYLINDER HEAD PRE-ASSY.
VARIABLE DISPLACEMENT MO	592326914	1	2	42	96048348	INSTALLATION PARTS F.HYD
VARIATIONAL COMPONENT 12	660008108	1	1	505	966157408	INSERTION MODULE
VARISTOR 19X4,4 RM7,5	660011408	9	2	505	966157408	INSERTION MODULE
VELCRO 25MMBREIT	704232408	100	0.6	290	917962508	FUEL TANK ADD-ON UNIT
VENTILATION	10292000	35	2	338	917305408	INTERNAL PANELLING INSTA
VENTILATION CONNECTING PI	927501901	2	1	370	927554301	VENTILATION CONNECTING PI
VENTILATION CONNECTING PI	927501901	13	1	384	939368401	OIL-GAUGING INSTRUMENT
VENTILATION CONNECTING PI	927501901	2	1	586	927521201	OIL-LEVEL GAUGE INSTALLAT
VENTILATION CONNECTING PI	927554301	77	1	369	933074801	SLEWING GEAR DRIVE
VENTILATION SCREW G1/2"X3	602501308	11	1	85	966167808	COVER COMPL.
VENTILATION SCREW R1/4"	518620508	42	2	71	10356288	SUPPORT CYLINDER
VENTILATION UNIT Steel CR6-F	721108801	7	1	384	939368401	OIL-GAUGING INSTRUMENT
VENTILATION VALVE	10097910	408	1	291	969543308	FUEL TANK, PRE-ASSEMBLED
VENTILATION VALVE	10424983	21	2	628	12102922	LUFFING CYLINDER
VENTILATION VALVE	10493944	68	1	684	12105406	TELESCOPIC CYLINDER
VENTILATION VALVE	11622218	3	1	392	969300008	HEATING, PRE-ASSEMBLED
VENTILATION VALVE	11622218	13	1	446	96019783	ADDNL.HEATING, PRE-ASSE
VENTILATION VALVE	721114701	30	1	380	968558601	COMPACT ROPE WINCH
VENTILATION VALVE	721114701	30	1	583	938707001	COMPACT ROPE WINCH
VIBRATION DAMPER 45NR39	10287383	103	4	268	918811108	DRIVE ASSEMBLY, PRE-ASSE
VISCOSE DAMPER D934 L	10118526	8	1	157	10141974	CRANKSHAFT ADD-ON PARTS
VOLTAGE REGULATOR 24V 1	614020508	5	1	612	913753108	RADIO PREPARATION UPPER
WAGON	966253908	2	2	363	966230508	GUIDE PRE-ASS.
WAGON 68X64.5X33 G-ALSI7	97001102	1	1	364	966253908	WAGON
WARNING DESIGNATION DIN	11067612	1	0.254	113	917026008	HATCHING PLAN
WARNING DESIGNATION DIN 4	11067611	2	0.173	113	917026008	HATCHING PLAN
WARNING DESIGNATION DIN 4	11067611	3	0.404	113	917026008	HATCHING PLAN
WARNING DESIGNATION DIN 4	11067611	4	0.498	113	917026008	HATCHING PLAN
WARNING DESIGNATION DIN 4	11067611	5	1.485	113	917026008	HATCHING PLAN
WARNING LIGHT 14W 13-36V	10340105	5	1	431	96056347	ELECTRIC ADD-ON PARTS CA
WARNING TRIANGLE 430X45	10044762	1	1	105	928620108	ACCESSORIES
WASHER	510713908	2	1	37	510438508	PRESSURE RELIEF VALVE
WASHER	510714108	12	1	37	510438508	PRESSURE RELIEF VALVE
WASHER	510797208	5	1	558	511417708	PRESSURE LIMITING VALVE
WASHER	510797208	5	1	621	511417608	PRESSURE LIMITING VALVE
WASHER	591063508	63	1	432	96056347	ELECTRIC ADD-ON PARTS CA
WASHER 10,5X18,5X2	9076638	17	4	222	10140729	EXHAUST TC MOUNTING
WASHER 1X50X50 DC01 FE//	972260808	43	4	679	91000055	MECHANICAL EXTENSION SYS
WASHER 20,2X25X3XA GUMMI	710207408	64	1	432	96056347	ELECTRIC ADD-ON PARTS CA
WASHER 34X45X1	9078522	6	2	165	11448005	ROCKER ARM BRACKET PRE
WASHER 34X45X1	9078522	6	2	166	12549825	ROCKER ARM BRACKET PRE
WASHER 3X21X21 DC01 FE//	973618208	377	2	269	918811108	DRIVE ASSEMBLY, PRE-ASSE
WASHER 3X60X60 X5CRNI18-1	97147778	74	1	673	91000054	TELESCOPIC SECT.5 PRE-AS
WASHER 40/25X18 42CRMO4	959552614	45	48	22	96062226	CRAWLER CARRIER RIGHT CP

Description	Item	Pos.	Quantity	Page	Assembly	Description
WASHER 40/25X18 42CRMO4	959552614	45	48	28	96062228	CRAWLER TRACK CARRIER LE
WASHER 52,2X107X3 -S355J2G	10144311	11	1	157	10141974	CRANKSHAFT ADD-ON PARTS
WASHER 5X40X40 S355MC FE	97040356	16	3	315	917357108	CRANE DRIVER CAB ADDITIO
WASHER 8,4X18X15 -	9177776	10	1	201	10145173	INTAKE STACK ASSEMBLY
WASHER 8,4X18X15 -	9177776	2	2	221	10144756	HEAT PROTECTION W.FASTEN
WASHER 85,2X139X9,5 C45	931807501	5	1	369	933074801	SLEWING GEAR DRIVE
WASHER 8X140X140 S355MC	97016807	12	4	47	968374708	MOUNTING PARTS
WASHER 8X65X65 S355MC FE	97038431	13	4	268	918811108	DRIVE ASSEMBLY, PRE-ASSE
WASHER A 10X20X2 200HV-St	10011658	24	1	431	96056347	ELECTRIC ADD-ON PARTS CA
WASHER DIN 1440 10 ST VER	421100808	61	8	581	96062734	AUXILIARY HOISTING GEAR
WASHER DIN 1440 32 ST VER	421102608	6	3	77	990618314	TRANSPORT SUPPORT
WASHER DIN 1441 26 -St FLZN	10179376	378	1	272	96020819	RADIATOR, PRE-ASSEMBLED
WASHER DIN 1441 31 ST FLZN	10875638	3	4	422	96044789	
WASHER DIN 1441 31 ST FLZN	10875638	20	1	760	918533508	ADAPTER PRE-ASS.
WASHER DIN 1441 41 St FLZN	10179377	5	8	70	915447908	HYDRAULIC SUPPORT
WASHER DIN 1441 41 St FLZN	10179377	13	1	315	917357108	CRANE DRIVER CAB ADDITIO
WASHER DIN 433 19 140HV A3	530609208	65	1	432	96056347	ELECTRIC ADD-ON PARTS CA
WASHER DIN 440 6,6 -ST 480H	10875640	21	1	624	96036820	EQUIPMENT CAMERA CAB
WASHER DIN 440 V 9 ST VERZ	420604208	109	2	70	915447908	HYDRAULIC SUPPORT
WASHER DIN 6340 13 FLZN SP	10179356	375	8	473	96051762	EXHAUST SYSTEM PRE-ASSE
WASHER DIN 6340 13 FLZN SP	10179356	42	36	655	91000049	PIVOT SECTION, PRE-ASSEMB
WASHER DIN 6340 13 FLZN SP	10179356	42	36	661	91000050	TELESCOPIC SECTION 1 PRE
WASHER DIN 6340 13 FLZN SP	10179356	42	36	664	91000051	TELESCOPIC SECT.2 PRE-AS
WASHER DIN 6340 13 FLZN SP	10179356	42	24	667	91000052	TELESCOPIC SECT.3 PRE-ASS
WASHER DIN 6340 13 FLZN SP	10179356	42	24	670	91000053	TELESCOPIC SECT.IV PRE-A
WASHER DIN 6340 17 FLZN SP	4600180	16	12	22	96062226	CRAWLER CARRIER RIGHT CP
WASHER DIN 6340 17 FLZN SP	4600180	16	12	27	96062228	CRAWLER TRACK CARRIER LE
WASHER DIN 6916 21 C 45 A3	460022203	10	14	22	96062226	CRAWLER CARRIER RIGHT CP
WASHER DIN 6916 21 C 45 A3	460022203	10	14	27	96062228	CRAWLER TRACK CARRIER LE
WASHER DIN 7349 10,5 200HV-	11658580	12	4	52	968374908	LIMIT SWITCH ADD-ON
WASHER DIN 7349 10,5 200HV-	11658580	77	1	241	10151329	WIRING HARNESS ASSEMBLY
WASHER DIN 7349 10,5 200HV-	11658580	4	4	285	918955208	BATTERY BOX CPL.
WASHER DIN 7349 10,5 200HV-	11658580	380	10	408	96022627	SLEWING PLATFORM PANELLI
WASHER DIN 7349 10,5 200HV-	11658580	251	4	420	919484908	FALL PROTECTION
WASHER DIN 7349 10,5 200HV-	11658580	377	4	562	919528608	OIL COOLER INSTALLATION
WASHER DIN 7349 10,5 200HV-	11658580	32	9	655	91000049	PIVOT SECTION, PRE-ASSEMB
WASHER DIN 7349 13 200HV F	10006370	383	8	124	918728408	ASSEMBLY PARTS F.SLEWING
WASHER DIN 7349 13 200HV F	10006370	379	5	415	96024809	SLEWING PLATFORM PANELLI
WASHER DIN 7349 13 200HV F	10006370	60	8	581	96062734	AUXILIARY HOISTING GEAR
WASHER DIN 7349 13 200HV F	10006370	8	8	655	91000049	PIVOT SECTION, PRE-ASSEMB
WASHER DIN 7349 13 200HV F	10006370	6	1	737	917825608	ADD-ON PARTS
WASHER DIN 7349 17 200HV F	4600021	381	12	124	918728408	ASSEMBLY PARTS F.SLEWING
WASHER DIN 7349 17 200HV F	4600021	375	4	470	919674308	EXHAUST SYSTEM
WASHER DIN 7349 17 200HV F	4600021	51	5	747	919933308	TRANSPORT MOUNTING
WASHER DIN 7349 21 100HV F	4600604	375	4	290	917962508	FUEL TANK ADD-ON UNIT
WASHER DIN 7349 21 100HV F	4600604	375	4	293	918008908	OIL RESERVOIR, EXTENSION
WASHER DIN 7349 21 100HV F	4600604	11	6	747	919933308	TRANSPORT MOUNTING
WASHER DIN 7349 6,4 200HV 4	11693878	375	9	408	96022627	SLEWING PLATFORM PANELLI
WASHER DIN 7349 6,4 200HV 4	11693878	95	4	420	919484908	FALL PROTECTION
WASHER DIN 7349 8,4 -A4	11113931	378	10	470	919674308	EXHAUST SYSTEM
WASHER DIN 7349 8,4 200HV 4	11840501	377	4	263	918728708	DRIVE ASSEMBLY CPL.
WASHER DIN 7349 8,4 200HV 4	11840501	378	17	408	96022627	SLEWING PLATFORM PANELLI
WASHER DIN 7349 8,4 200HV 4	11840501	5	4	440	916870808	MIRROR ATTACHM.AT SLEW.P
WASHER DIN 7349 8,4 200HV 4	11840501	376	8	562	919528608	OIL COOLER INSTALLATION
WASHER DIN 7349 8,4 200HV 4	11840501	331	2	566	969767908	PIPEWORK AIR INSTALLATIO
WASHER DIN 7349 8,4 200HV 4	11840501	28	18	655	91000049	PIVOT SECTION, PRE-ASSEMB
WASHER DIN 7989-2 16 -ST F	10875866	382	4	269	918811108	DRIVE ASSEMBLY, PRE-ASSE
WASHER DIN 7989-2 16 -ST F	10875866	18	2	747	919933308	TRANSPORT MOUNTING
WASHER DIN 7989-2 16 -ST F	10875866	53	2	760	918533508	ADAPTER PRE-ASS.
WASHER EN 14399-6 12 300H	10870512	60	8	458	91003833	UREA PLANT

Description	Item	Pos.	Quantity	Page	Assembly	Description
WASHER EN 14399-6 16 300-3	4600242	52	24	31	992078314	CENTRE PIECE
WASHER EN 14399-6 16 300-3	4600242	379	8	124	918728408	ASSEMBLY PARTS F.SLEWING
WASHER EN 14399-6 16 300-3	4600242	379	1	272	96020819	RADIATOR, PRE-ASSEMBLED
WASHER EN 14399-6 24 300-3	4600146	5	48	22	96062226	CRAWLER CARRIER RIGHT CP
WASHER EN 14399-6 24 300-3	4600146	5	48	27	96062228	CRAWLER TRACK CARRIER LE
WASHER EN 14399-6 24 300-3	4600146	4	8	454	919501608	HYDRAULIC BALLASTING
WASHER EN 14399-6 24 300-3	4600146	7	4	679	91000055	MECHANICAL EXTENSION SYS
WASHER EN 28738 70 160HV-	11964262	21	4	454	919501608	HYDRAULIC BALLASTING
WASHER ISO 7089 10 200HV-A	500917508	376	12	470	919674308	EXHAUST SYSTEM
WASHER ISO 7089 10 200HV-A	420001114	304	2	63	967301408	PREPARATION HYDR
WASHER ISO 7089 10 200HV-A	420001114	18	1	319	919010108	CRANE OPERATOR CABIN P
WASHER ISO 7089 10 300HV F	10289795	44	8	30	992078314	CENTRE PIECE
WASHER ISO 7089 10 300HV F	10289795	11	12	52	968374908	LIMIT SWITCH ADD-ON
WASHER ISO 7089 10 300HV F	10289795	7	2	60	991456314	ACCESS COMPL
WASHER ISO 7089 10 300HV F	10289795	377	8	124	918728408	ASSEMBLY PARTS F.SLEWING
WASHER ISO 7089 10 300HV F	10289795	375	2	263	918728708	DRIVE ASSEMBLY CPL.
WASHER ISO 7089 10 300HV F	10289795	380	13	269	918811108	DRIVE ASSEMBLY, PRE-ASSE
WASHER ISO 7089 10 300HV F	10289795	377	2	272	96020819	RADIATOR, PRE-ASSEMBLED
WASHER ISO 7089 10 300HV F	10289795	11	4	315	917357108	CRANE DRIVER CAB ADDITIO
WASHER ISO 7089 10 300HV F	10289795	302	6	374	916109208	ROTATING PLATFORM LOCK
WASHER ISO 7089 10 300HV F	10289795	381	10	408	96022627	SLEWING PLATFORM PANELLI
WASHER ISO 7089 10 300HV F	10289795	377	10	473	96051762	EXHAUST SYSTEM PRE-ASSE
WASHER ISO 7089 10 300HV F	10289795	326	2	517	96045552	HYDRAULICS UPPER CARRI
WASHER ISO 7089 10 300HV F	10289795	20	8	577	96033759	ADD-ON PARTS WORK FLOOD
WASHER ISO 7089 10 300HV F	10289795	18	2	625	96036821	REAR END TURNT. CAMERA E
WASHER ISO 7089 10 300HV F	10289795	9	20	658	96014777	LIFTING ROPE GUIDE PREAS
WASHER ISO 7089 10 300HV F	10289795	12	6	679	91000055	MECHANICAL EXTENSION SYS
WASHER ISO 7089 10 300HV F	10289795	43	2	760	918533508	ADAPTER PRE-ASS.
WASHER ISO 7089 10 300HV F	10289795	17	3	763	917695308	GUIDE PULLEY COMPL.
WASHER ISO 7089 12 200HV-A	10410178	376	8	473	96051762	EXHAUST SYSTEM PRE-ASSE
WASHER ISO 7089 12 300HV F	10289804	27	3	22	96062226	CRAWLER CARRIER RIGHT CP
WASHER ISO 7089 12 300HV F	10289804	27	3	28	96062228	CRAWLER TRACK CARRIER LE
WASHER ISO 7089 12 300HV F	10289804	42	24	30	992078314	CENTRE PIECE
WASHER ISO 7089 12 300HV F	10289804	28	8	61	917155308	PREPARATION HYDR
WASHER ISO 7089 12 300HV F	10289804	33	16	70	915447908	HYDRAULIC SUPPORT
WASHER ISO 7089 12 300HV F	10289804	378	4	124	918728408	ASSEMBLY PARTS F.SLEWING
WASHER ISO 7089 12 300HV F	10289804	8	17	232	10115829	FLYWHEEL HOUSING ASSEM
WASHER ISO 7089 12 300HV F	10289804	3	8	255	10115780	CLUTCH ASSEMBLY
WASHER ISO 7089 12 300HV F	10289804	378	5	269	918811108	DRIVE ASSEMBLY, PRE-ASSE
WASHER ISO 7089 12 300HV F	10289804	376	8	295	969219208	OIL TANK PRE-ASS.
WASHER ISO 7089 12 300HV F	10289804	7	2	367	919235408	SLEWING GEAR
WASHER ISO 7089 12 300HV F	10289804	333	3	566	969767908	PIPEWORK AIR INSTALLATIO
WASHER ISO 7089 12 300HV F	10289804	37	34	655	91000049	PIVOT SECTION, PRE-ASSEMB
WASHER ISO 7089 12 300HV F	10289804	12	2	658	96014777	LIFTING ROPE GUIDE PREAS
WASHER ISO 7089 12 300HV F	10289804	37	28	661	91000050	TELESCOPIC SECTION 1 PRE
WASHER ISO 7089 12 300HV F	10289804	37	28	664	91000051	TELESCOPIC SECT.2 PRE-AS
WASHER ISO 7089 12 300HV F	10289804	37	24	667	91000052	TELESCOPIC SECT.3 PRE-ASS
WASHER ISO 7089 12 300HV F	10289804	37	10	670	91000053	TELESCOPIC SECT.IV PRE-A
WASHER ISO 7089 12 300HV F	10289804	64	3	673	91000054	TELESCOPIC SECT.5 PRE-AS
WASHER ISO 7089 12 300HV F	10289804	4	3	737	917825608	ADD-ON PARTS
WASHER ISO 7089 12 300HV F	10289804	50	2	760	918533508	ADAPTER PRE-ASS.
WASHER ISO 7089 14 300HV F	10289805	382	1	272	96020819	RADIATOR, PRE-ASSEMBLED
WASHER ISO 7089 14 300HV F	10289805	13	6	422	96044789	
WASHER ISO 7089 16 300HV F	10289806	41	3	30	992078314	CENTRE PIECE
WASHER ISO 7089 16 300HV F	10289806	385	3	124	918728408	ASSEMBLY PARTS F.SLEWING
WASHER ISO 7089 16 300HV F	10289806	21	4	315	917357108	CRANE DRIVER CAB ADDITIO
WASHER ISO 7089 16 300HV F	10289806	62	2	581	96062734	AUXILIARY HOISTING GEAR
WASHER ISO 7089 16 300HV F	10289806	34	2	747	919933308	TRANSPORT MOUNTING
WASHER ISO 7089 16 300HV F	10289806	9	1	763	917695308	GUIDE PULLEY COMPL.
WASHER ISO 7089 16 300HV F	10289806	35	4	768	91001040	PIVOT SECTION, PRE-ASSEMB

Description	Item	Pos.	Quantity	Page	Assembly	Description
WASHER ISO 7089 18 300HV F	10289807	42	2	679	91000055	MECHANICAL EXTENSION SYS
WASHER ISO 7089 20 300HV F	10289808	(395)	2	22	96062226	CRAWLER CARRIER RIGHT CP
WASHER ISO 7089 20 300HV F	10289808	250	10	420	919484908	FALL PROTECTION
WASHER ISO 7089 20 300HV F	10289808	39	2	760	918533508	ADAPTER PRE-ASS.
WASHER ISO 7089 20 300HV F	10289808	10	2	768	91001040	PIVOT SECTION, PRE-ASSEMB
WASHER ISO 7089 20 300HV F	10289808	32	6	771	918596708	HEAD SECTION PRE-ASS.
WASHER ISO 7089 24 300HV F	10289810	376	1	272	96020819	RADIATOR, PRE-ASSEMBLED
WASHER ISO 7089 24 300HV F	10289810	19	6	315	917357108	CRANE DRIVER CAB ADDITIO
WASHER ISO 7089 3,5 200HV 4	10875644	5	12	508	966193108	RESISTANCE MODULE PRE-A
WASHER ISO 7089 30 300HV F	10289811	12	1	750	96062062	FOLDING BRACKET PRE-ASS.
WASHER ISO 7089 4 200HV 4	10875645	9	2	346	916162508	WINDOW ASSEMBLY
WASHER ISO 7089 4 200HV 4	10875645	(2)	4	431	96056347	ELECTRIC ADD-ON PARTS CA
WASHER ISO 7089 4 200HV 4	10875645	42	4	431	96056347	ELECTRIC ADD-ON PARTS CA
WASHER ISO 7089 4 200HV 4	10875645	90	16	502	96025348	BASE ASSEMBLY
WASHER ISO 7089 42 300HV F	10289847	36	1	760	918533508	ADAPTER PRE-ASS.
WASHER ISO 7089 45 300HV F	10289850	59	2	760	918533508	ADAPTER PRE-ASS.
WASHER ISO 7089 48 300HV F	10289852	60	2	760	918533508	ADAPTER PRE-ASS.
WASHER ISO 7089 48 300HV F	10289852	5	4	772	918221408	TENSION PLATE PRE-ASS.
WASHER ISO 7089 5 -A2	10410193	14	2	458	91003833	UREA PLANT
WASHER ISO 7089 5 -A2	10410193	2	2	736	96056560	WIND WARNING PREASSEMB
WASHER ISO 7089 5 200HV ZN	10197808	24	18	61	917155308	PREPARATION HYDR
WASHER ISO 7089 5 200HV ZN	10197808	4	2	78	964765008	PIN COMPL.
WASHER ISO 7089 5 200HV ZN	10197808	20	6	287	96024716	BATTERY BOX, PRE-ASSEMB
WASHER ISO 7089 5 200HV ZN	10197808	375	5	291	969543308	FUEL TANK, PRE-ASSEMBLED
WASHER ISO 7089 5 200HV ZN	10197808	35	28	395	918810308	CONTROL STAND
WASHER ISO 7089 5 200HV ZN	10197808	30	8	431	96056347	ELECTRIC ADD-ON PARTS CA
WASHER ISO 7089 5 200HV ZN	10197808	6	4	478	915300208	CENT. LUBRIC. SYSTEM SUP
WASHER ISO 7089 5 200HV ZN	10197808	13	4	612	913753108	RADIO PREPARATION UPPER
WASHER ISO 7089 5 200HV ZN	10197808	12	1	703	96063458	TERMINAL BOX CPL.
WASHER ISO 7089 5 200HV ZN	10197808	5	1	734	96056553	LOCATION FIXTURE PRE-ASS.
WASHER ISO 7089 5 200HV ZN	10197808	5	2	760	918533508	ADAPTER PRE-ASS.
WASHER ISO 7089 5 200HV ZN	10197808	9	3	781	968940708	HOLDER LEFT
WASHER ISO 7089 5 200HV ZN	10197808	9	3	782	968940808	HOLDER RIGHT
WASHER ISO 7089 6 200HV 4	10278585	8	3	736	96056560	WIND WARNING PREASSEMB
WASHER ISO 7089 6 200HV ZN	10197771	14	2	85	966167808	COVER COMPL.
WASHER ISO 7089 6 200HV ZN	10197771	17	2	87	96062922	MOUNTING PLATE PRE-ASS.
WASHER ISO 7089 6 200HV ZN	10197771	382	2	124	918728408	ASSEMBLY PARTS F.SLEWING
WASHER ISO 7089 6 200HV ZN	10197771	379	6	269	918811108	DRIVE ASSEMBLY, PRE-ASSE
WASHER ISO 7089 6 200HV ZN	10197771	380	8	272	96020819	RADIATOR, PRE-ASSEMBLED
WASHER ISO 7089 6 200HV ZN	10197771	26	4	287	96024716	BATTERY BOX, PRE-ASSEMB
WASHER ISO 7089 6 200HV ZN	10197771	50	3	338	917305408	INTERNAL PANELLING INSTA
WASHER ISO 7089 6 200HV ZN	10197771	18	4	352	916168308	AIR DUCT
WASHER ISO 7089 6 200HV ZN	10197771	42	4	395	918810308	CONTROL STAND
WASHER ISO 7089 6 200HV ZN	10197771	375	10	415	96024809	SLEWING PLATFORM PANELLI
WASHER ISO 7089 6 200HV ZN	10197771	375	2	417	969392008	FRONT LEFT-HAND HOOD
WASHER ISO 7089 6 200HV ZN	10197771	10	6	421	96044787	HOLDER PRE-ASSEMBLY
WASHER ISO 7089 6 200HV ZN	10197771	62	4	461	96074081	UREA TANK, PRE-MOUNTING
WASHER ISO 7089 6 200HV ZN	10197771	3	6	503	922648308	TERMINAL BOARD PRE-ASS.
WASHER ISO 7089 6 200HV ZN	10197771	4	4	506	926891108	GROUND RAIL
WASHER ISO 7089 6 200HV ZN	10197771	10	4	623	915403108	ADD-ON PARTS CAMERA
WASHER ISO 7089 6 200HV ZN	10197771	29	2	625	96036821	REAR END TURNT. CAMERA E
WASHER ISO 7089 6 200HV ZN	10197771	7	4	655	91000049	PIVOT SECTION, PRE-ASSEMB
WASHER ISO 7089 6 200HV ZN	10197771	70	4	661	91000050	TELESCOPIC SECTION 1 PRE
WASHER ISO 7089 6 200HV ZN	10197771	70	4	664	91000051	TELESCOPIC SECT.2 PRE-AS
WASHER ISO 7089 6 200HV ZN	10197771	70	4	667	91000052	TELESCOPIC SECT.3 PRE-ASS
WASHER ISO 7089 6 200HV ZN	10197771	70	4	670	91000053	TELESCOPIC SECT.IV PRE-A
WASHER ISO 7089 6 200HV ZN	10197771	32	2	679	91000055	MECHANICAL EXTENSION SYS
WASHER ISO 7089 6 200HV ZN	10197771	3	2	700	966591408	LIMIT SWITCH ADD-ON
WASHER ISO 7089 6 200HV ZN	10197771	12	8	760	918533508	ADAPTER PRE-ASS.
WASHER ISO 7089 6 200HV-A2	420060201	39	2	361	917304708	SLIDING DOOR INSTALLATION

Description	Item	Pos.	Quantity	Page	Assembly	Description
WASHER ISO 7089 6 200HV-A4	420000414	96	2	420	919484908	FALL PROTECTION
WASHER ISO 7089 8 200HV-A2	420060705	301	4	63	967301408	PREPARATION HYDR
WASHER ISO 7089 8 200HV-A2	420060705	(7)	8	326	968483708	STEP CPL.
WASHER ISO 7089 8 200HV-A2	420060705	34	16	326	968483708	STEP CPL.
WASHER ISO 7089 8 200HV-A2	420060705	328	3	517	96045552	HYDRAULICS UPPER CARRI
WASHER ISO 7089 8 200HV-A4	420001014	21	4	61	917155308	PREPARATION HYDR
WASHER ISO 7089 8 200HV-A4	420001014	375	8	295	969219208	OIL TANK PRE-ASS.
WASHER ISO 7089 8 300HV ZN	12103465	305	2	33	967304508	UNDERCARRIAGE HYDRAULIC
WASHER ISO 7089 8 300HV ZN	12103465	3	24	47	968374708	MOUNTING PARTS
WASHER ISO 7089 8 300HV ZN	12103465	380	22	124	918728408	ASSEMBLY PARTS F.SLEWING
WASHER ISO 7089 8 300HV ZN	12103465	10	2	125	963260408	LOCKING
WASHER ISO 7089 8 300HV ZN	12103465	10	2	126	96049764	LOCKING
WASHER ISO 7089 8 300HV ZN	12103465	375	26	269	918811108	DRIVE ASSEMBLY, PRE-ASSE
WASHER ISO 7089 8 300HV ZN	12103465	375	21	272	96020819	RADIATOR, PRE-ASSEMBLED
WASHER ISO 7089 8 300HV ZN	12103465	375	8	305	91002857	FUEL FEED
WASHER ISO 7089 8 300HV ZN	12103465	9	1	319	919010108	CRANE OPERATOR CABIN P
WASHER ISO 7089 8 300HV ZN	12103465	28	8	326	968483708	STEP CPL.
WASHER ISO 7089 8 300HV ZN	12103465	12	3	327	96025887	PEDAL CANTILEVER INSTALL
WASHER ISO 7089 8 300HV ZN	12103465	64	4	339	917305408	INTERNAL PANELLING INSTA
WASHER ISO 7089 8 300HV ZN	12103465	13	4	355	916163008	WIPERS INSTALLATION
WASHER ISO 7089 8 300HV ZN	12103465	6	12	386	917894308	HEATING CRANE DRIVER'S CA
WASHER ISO 7089 8 300HV ZN	12103465	28	6	392	969300008	HEATING, PRE-ASSEMBLED
WASHER ISO 7089 8 300HV ZN	12103465	376	24	408	96022627	SLEWING PLATFORM PANELLI
WASHER ISO 7089 8 300HV ZN	12103465	11	4	410	969425608	FLAP RIGHT PRE-ASS.
WASHER ISO 7089 8 300HV ZN	12103465	12	2	416	969399608	FLAP PRE-ASS.
WASHER ISO 7089 8 300HV ZN	12103465	23	7	444	918759708	ADD HEATING SUPERSTRUCT
WASHER ISO 7089 8 300HV ZN	12103465	8	8	446	96019783	ADDNL.HEATING, PRE-ASSE
WASHER ISO 7089 8 300HV ZN	12103465	61	9	461	96074081	UREA TANK, PRE-MOUNTING
WASHER ISO 7089 8 300HV ZN	12103465	17	2	502	96025348	BASE ASSEMBLY
WASHER ISO 7089 8 300HV ZN	12103465	13	4	506	926891108	GROUND RAIL
WASHER ISO 7089 8 300HV ZN	12103465	319	4	517	96045552	HYDRAULICS UPPER CARRI
WASHER ISO 7089 8 300HV ZN	12103465	3	2	642	96045219	MECHANICAL AUXILIARIES
WASHER ISO 7089 8 300HV ZN	12103465	15	7	652	919935408	TELESCOPIC BOOM CPL.
WASHER ISO 7089 8 300HV ZN	12103465	18	4	652	919935408	TELESCOPIC BOOM CPL.
WASHER ISO 7089 8 300HV ZN	12103465	31	9	655	91000049	PIVOT SECTION, PRE-ASSEMB
WASHER ISO 7089 8 300HV ZN	12103465	17	5	661	91000050	TELESCOPIC SECTION 1 PRE
WASHER ISO 7089 8 300HV ZN	12103465	17	4	664	91000051	TELESCOPIC SECT.2 PRE-AS
WASHER ISO 7089 8 300HV ZN	12103465	17	4	667	91000052	TELESCOPIC SECT.3 PRE-ASS
WASHER ISO 7089 8 300HV ZN	12103465	17	4	670	91000053	TELESCOPIC SECT.IV PRE-A
WASHER ISO 7089 8 300HV ZN	12103465	17	4	673	91000054	TELESCOPIC SECT.5 PRE-AS
WASHER ISO 7089 8 300HV ZN	12103465	29	8	679	91000055	MECHANICAL EXTENSION SYS
WASHER ISO 7089 8 300HV ZN	12103465	33	4	747	919933308	TRANSPORT MOUNTING
WASHER ISO 7089 8 300HV ZN	12103465	24	2	760	918533508	ADAPTER PRE-ASS.
WASHER ISO 7089 8 300HV ZN	12103465	2	2	773	96037297	ANGULAR TRANSMITTER AT
WASHER ISO 7092 20 300HV F	11691327	61	12	661	91000050	TELESCOPIC SECTION 1 PRE
WASHER ISO 7092 20 300HV F	11691327	61	12	664	91000051	TELESCOPIC SECT.2 PRE-AS
WASHER ISO 7092 20 300HV F	11691327	61	12	667	91000052	TELESCOPIC SECT.3 PRE-ASS
WASHER ISO 7092 20 300HV F	11691327	34	12	670	91000053	TELESCOPIC SECT.IV PRE-A
WASHER ISO 7092 20 300HV F	11691327	42	16	673	91000054	TELESCOPIC SECT.5 PRE-AS
WASHER ISO 7092 6 200HV-A2	10035694	10	2	332	968462608	INSTALLATION SWITCH CAB. C
WASHER ISO 7092 6 200HV-A2	10035694	36	8	349	966497908	FRONT WINDOW CPL.
WASHER ISO 7092 8 200HV 4	10299679	10	2	127	968305308	LIMIT SWITCH, PRE-ASSEMB
WASHER ISO 7092 8 200HV 4	10299679	65	4	661	91000050	TELESCOPIC SECTION 1 PRE
WASHER ISO 7092 8 200HV 4	10299679	65	4	664	91000051	TELESCOPIC SECT.2 PRE-AS
WASHER ISO 7092 8 200HV 4	10299679	65	8	667	91000052	TELESCOPIC SECT.3 PRE-ASS
WASHER ISO 7092 8 200HV 4	10299679	65	8	670	91000053	TELESCOPIC SECT.IV PRE-A
WASHER ISO 7092 8 200HV 4	10299679	83	8	674	91000054	TELESCOPIC SECT.5 PRE-AS
WASHER ISO 7093-1 10 300HV	11491889	43	8	30	992078314	CENTRE PIECE
WASHER ISO 7093-1 10 300HV	11491889	6	20	40	990840414	COVER
WASHER ISO 7093-1 10 300HV	11491889	376	8	124	918728408	ASSEMBLY PARTS F.SLEWING

Description	Item	Pos.	Quantity	Page	Assembly	Description
WASHER ISO 7093-1 10 300HV	11491889	376	2	263	918728708	DRIVE ASSEMBLY CPL.
WASHER ISO 7093-1 10 300HV	11491889	377	4	415	96024809	SLEWING PLATFORM PANELLI
WASHER ISO 7093-1 10 300HV	11491889	60	4	461	96074081	UREA TANK, PRE-MOUNTING
WASHER ISO 7093-1 10 300HV	11491889	377	2	470	919674308	EXHAUST SYSTEM
WASHER ISO 7093-1 10 300HV	11491889	308	4	517	96045552	HYDRAULICS UPPER CARRI
WASHER ISO 7093-1 10 300HV	11491889	103	8	645	919950308	DISPATCH ASSY.MECH.PART
WASHER ISO 7093-1 10 300HV	11491889	46	4	760	918533508	ADAPTER PRE-ASS.
WASHER ISO 7093-1 10 A2	421802108	14	1	355	916163008	WIPERS INSTALLATION
WASHER ISO 7093-1 10 A2	421802108	7	1	363	966230508	GUIDE PRE-ASS.
WASHER ISO 7093-1 12 200HV	421801908	151	8	420	919484908	FALL PROTECTION
WASHER ISO 7093-1 12 300HV	11182717	83	12	656	91000049	PIVOT SECTION, PRE-ASSEMB
WASHER ISO 7093-1 12 300HV	11182717	68	12	661	91000050	TELESCOPIC SECTION 1 PRE
WASHER ISO 7093-1 12 300HV	11182717	68	12	664	91000051	TELESCOPIC SECT.2 PRE-AS
WASHER ISO 7093-1 12 300HV	11182717	68	8	667	91000052	TELESCOPIC SECT.3 PRE-ASS
WASHER ISO 7093-1 12 300HV	11182717	68	8	670	91000053	TELESCOPIC SECT.IV PRE-A
WASHER ISO 7093-1 16 300HV	4000809	9	4	320	916164208	BEARING INSTALLATION
WASHER ISO 7093-1 5 200HV 4	10875643	312	4	517	96045552	HYDRAULICS UPPER CARRI
WASHER ISO 7093-1 5 200HV 4	10875643	314	2	591	96064697	HYDR.AUXILIARY HOISTING
WASHER ISO 7093-1 5 200HV 4	10875643	16	4	606	91002360	CHARGER
WASHER ISO 7093-1 6 200HV 4	10875648	315	8	33	967304508	UNDERCARRIAGE HYDRAULIC
WASHER ISO 7093-1 6 200HV 4	10875648	381	10	269	918811108	DRIVE ASSEMBLY, PRE-ASSE
WASHER ISO 7093-1 6 200HV 4	10875648	11	4	350	965784408	ROOF WINDOW PRE-ASS.
WASHER ISO 7093-1 6 200HV 4	10875648	9	2	410	969425608	FLAP RIGHT PRE-ASS.
WASHER ISO 7093-1 6 200HV 4	10875648	307	8	517	96045552	HYDRAULICS UPPER CARRI
WASHER ISO 7093-1 6 200HV 4	10875648	302	4	591	96064697	HYDR.AUXILIARY HOISTING
WASHER ISO 7093-1 6 200HV 4	10875648	61	2	599	96075102	FASTENING PIECES HYDRAUL
WASHER ISO 7093-1 6 200HV 4	10875648	98	10	656	91000049	PIVOT SECTION, PRE-ASSEMB
WASHER ISO 7093-1 6 200HV 4	10875648	92	2	674	91000054	TELESCOPIC SECT.5 PRE-AS
WASHER ISO 7093-1 6 200HV 4	10875648	8	2	773	96037297	ANGULAR TRANSMITTER AT
WASHER ISO 7093-1 6 200HV-A	421801708	14	2	349	966497908	FRONT WINDOW CPL.
WASHER ISO 7093-1 6 200HV-A	421801708	58	2	361	917304708	SLIDING DOOR INSTALLATION
WASHER ISO 7093-1 6 200HV-A	421801708	4	2	363	966230508	GUIDE PRE-ASS.
WASHER ISO 7093-1 6 200HV-A	421801708	379	11	470	919674308	EXHAUST SYSTEM
WASHER ISO 7093-1 6 200HV-A	421801708	378	8	473	96051762	EXHAUST SYSTEM PRE-ASSE
WASHER ISO 7093-1 6 200HV-A	421801708	26	2	625	96036821	REAR END TURNT. CAMERA E
WASHER ISO 7093-1 6 200HV-A	10540500	375	3	306	96066239	PREMOUNTED FUEL FILTER
WASHER ISO 7093-1 6 200HV-A	10540500	40	4	361	917304708	SLIDING DOOR INSTALLATION
WASHER ISO 7093-1 6 200HV-A	10540500	378	4	415	96024809	SLEWING PLATFORM PANELLI
WASHER ISO 7093-1 6 200HV-A	10540500	8	1	734	96056553	LOCATION FIXTURE PRE-ASS.
WASHER ISO 7093-1 8 200HV 4	11140469	317	7	33	967304508	UNDERCARRIAGE HYDRAULIC
WASHER ISO 7093-1 8 200HV 4	11140469	375	14	124	918728408	ASSEMBLY PARTS F.SLEWING
WASHER ISO 7093-1 8 200HV 4	11140469	378	2	263	918728708	DRIVE ASSEMBLY CPL.
WASHER ISO 7093-1 8 200HV 4	11140469	376	4	269	918811108	DRIVE ASSEMBLY, PRE-ASSE
WASHER ISO 7093-1 8 200HV 4	11140469	7	4	285	918955208	BATTERY BOX CPL.
WASHER ISO 7093-1 8 200HV 4	11140469	29	2	315	917357108	CRANE DRIVER CAB ADDITIO
WASHER ISO 7093-1 8 200HV 4	11140469	36	2	326	968483708	STEP CPL.
WASHER ISO 7093-1 8 200HV 4	11140469	22	2	346	916162508	WINDOW ASSEMBLY
WASHER ISO 7093-1 8 200HV 4	11140469	377	6	408	96022627	SLEWING PLATFORM PANELLI
WASHER ISO 7093-1 8 200HV 4	11140469	376	17	415	96024809	SLEWING PLATFORM PANELLI
WASHER ISO 7093-1 8 200HV 4	11140469	150	42	420	919484908	FALL PROTECTION
WASHER ISO 7093-1 8 200HV 4	11140469	40	6	431	96056347	ELECTRIC ADD-ON PARTS CA
WASHER ISO 7093-1 8 200HV 4	11140469	375	12	476	918729308	AIR FILTER UNIT
WASHER ISO 7093-1 8 200HV 4	11140469	21	5	478	915300208	CENT. LUBRIC. SYSTEM SUP
WASHER ISO 7093-1 8 200HV 4	11140469	324	2	517	96045552	HYDRAULICS UPPER CARRI
WASHER ISO 7093-1 8 200HV 4	11140469	375	16	562	919528608	OIL COOLER INSTALLATION
WASHER ISO 7093-1 8 200HV 4	11140469	(6)	16	566	969767908	PIPEWORK AIR INSTALLATIO
WASHER ISO 7093-1 8 200HV 4	11140469	21	4	577	96033759	ADD-ON PARTS WORK FLOOD
WASHER ISO 7093-1 8 200HV 4	11140469	63	8	581	96062734	AUXILIARY HOISTING GEAR
WASHER ISO 7093-1 8 200HV 4	11140469	310	4	591	96064697	HYDR.AUXILIARY HOISTING
WASHER ISO 7093-1 8 200HV 4	11140469	319	2	598	96075086	HYD.AUX.LIFT GEAR UPPER

Description	Item	Pos.	Quantity	Page	Assembly	Description
WASHER ISO 7093-1 8 200HV 4	11140469	13	4	604	96066401	MECHANICAL AUXILIARIES
WASHER ISO 7093-1 8 200HV 4	11140469	13	3	606	91002360	CHARGER
WASHER ISO 7093-1 8 200HV 4	11140469	8	2	612	913753108	RADIO PREPARATION UPPER
WASHER ISO 7093-1 8 200HV 4	11140469	106	4	645	919950308	DISPATCH ASSY.MECH.PART
WASHER ISO 7093-1 8 200HV 4	11140469	11	2	679	91000055	MECHANICAL EXTENSION SYS
WASHER ISO 7093-1 8 200HV 4	11140469	31	3	723	964502908	BOOM NOSE PRE-ASS.
WASHER ISO 7093-1 8 200HV 4	11140469	37	3	747	919933308	TRANSPORT MOUNTING
WASHER ISO 7093-1 8 200HV 4	11140469	5	8	773	96037297	ANGULAR TRANSMITTER AT
WASHER ISO 7093-1 8 200HV-A	421861405	29	6	326	968483708	STEP CPL.
WASHER ISO 7093-1 8 200HV-A	421861405	379	4	473	96051762	EXHAUST SYSTEM PRE-ASSE
WASHER ISO 7093-1 8 200HV-A	421861405	30	4	625	96036821	REAR END TURNT. CAMERA E
WASHER ISO 7093-1 8 200HV-A	10540510	21	4	361	917304708	SLIDING DOOR INSTALLATION
WASHER ISO 7093-1 8 200HV-A	10540510	379	3	408	96022627	SLEWING PLATFORM PANELLI
WASHER ISO 8738 20 160HV-St	10179404	10	8	119	96045222	MOUNTING PARTS
WASHER ISO 8738 22 ST FLZN	12100631	3	2	60	991456314	ACCESS COMPL
WASHER ISO 8738 55 160HV-St	10179409	23	8	454	919501608	HYDRAULIC BALLASTING
WASHER SPRING DIN 127 B 10	12214461	39	2	741	919421708	HOOK BLOCK
WASHER SPRING DIN 127 B 8	11659025	16	2	37	510438508	PRESSURE RELIEF VALVE
WASHER SPRING DIN 128 A 20	11968421	8	4	24	749013714	GUIDE WHEEL CPL
WASHER SPRING DIN 128 A 5	12227697	111	2	70	915447908	HYDRAULIC SUPPORT
WASHER SPRING DIN 7980 12	4980013	25	16	261	12487540	HYDR.DOUBLE PUMP
WASHER SPRING DIN 7980 8 F	424100708	8	6	371	510229408	HYDRO MOTOR
WATER BASIN 505X126X100 P	97003164	1	1	356	966408908	WATER CONTAINER CPL
WATER CONTAINER CPL	966408908	1	1	355	916163008	WIPERS INSTALLATION
WATER COOLER	11651349	17	1	274	97095949	COMBINATED RADIATOR
WATER DRAIN PLUG M12 PA6	602501208	10	2	84	96075205	SWITCH BOX COMPL.
WATER DRAIN VALVE 22BAR	502921908	151	2	566	969767908	PIPEWORK AIR INSTALLATIO
WATER HEATING SYSTEM 24	10876576	1	1	446	96019783	ADDNL.HEATING, PRE-ASSE
WATER HOSE DN4-RAUCLAIR-	11000710	17	1.3	355	916163008	WIPERS INSTALLATION
WATER HOSE DN4-RAUCLAIR-	11000710	18	2.8	355	916163008	WIPERS INSTALLATION
WATER LEVEL SENSOR L=50	10335960	450	1	280	96035595	EXPANSION TANK PRE-ASS.
WATER PUMP WITH FASTENIN	10142733	370	1	133	13455311	DIESEL ENGINE
WATER PUMP, PRE-ASSEMB	10150386	1	1	215	10142733	WATER PUMP WITH FASTENIN
WATER PUMP, PRE-ASSEMB	12863021	1	1	215	10142733	WATER PUMP WITH FASTENIN
WATER SENSOR	12101984	13	1	308	12106874	FUEL FILTER
WATER SENSOR 5V	11370365	5	1	308	12106874	FUEL FILTER
WATER VALVE NW12X2,5 NICH	11082158	17	2	461	96074081	UREA TANK, PRE-MOUNTING
WEARING RING AlSn20Cu	10133693	6	2	170	10147787	CAMSHAFT CPL.
WEARING RING AlSn20Cu	11348100	6	1	170	10147787	CAMSHAFT CPL.
WEARING RING AlSn20Cu	11348100	2	2	171	10145815	RS FLANGE
WEDGE LOCK WASHER NORD	7015814	50	2	361	917304708	SLIDING DOOR INSTALLATION
WEDGE SOCKET 21-23 GR.23	12100037	5	1	645	919950308	DISPATCH ASSY.MECH.PART
WEDGING LEFT FRONT CPL	970760403	5	1	30	992078314	CENTRE PIECE
WEDGING LEFT REAR CPL	970759803	4	1	30	992078314	CENTRE PIECE
WEDGING RIGHT FRONT CPL	970760103	7	1	30	992078314	CENTRE PIECE
WEDGING RIGHT REAR CPL	970760703	6	1	30	992078314	CENTRE PIECE
WEIGHT	11492017	1	1	739	910543708	LOAD HOOK
WEIGHT EN-GJS400-18 FE//ZN	10873379	1	1	676	96013575	HOIST LIM.SWITCH PLUMMET
WELD PLATE S315MC RAL 704	956211014	18	2	30	992078314	CENTRE PIECE
WELDING SLEEVE M8X17 ST37	10412105	23	4	287	96024716	BATTERY BOX, PRE-ASSEMB
WHEATHER CAP 114,3 EDEL	12100105	106	1	470	919674308	EXHAUST SYSTEM
WHEEL NUT DIN 74361 M20X1,	520303308	10	1	209	5700161	AIR COMPRESSOR
WIDE ANGLE MIRROR 219X17	591069508	2	1	402	916049908	MIRROR ATTACHM.IN CRANE
WIDE ANGLE MIRROR 316X17	591070908	1	1	440	916870808	MIRROR ATTACHM.AT SLEW.P
WINCH	962046508	10	1	581	96062734	AUXILIARY HOISTING GEAR
WINCH REVOLUTION TRANS	12102805	(5)	1	484	919940408	ELECTR. SYSTEM F.SLEWING
WINCH REVOLUTION TRANS	12102805	5	1	588	96055197	ELECTRIC FOR WINCH 2
WIND VELOCITY TRANSMITTE	12102807	2	1	729	96058737	ELECTRIC MEASURING & WAR
WIND WARNING PREASSEMB	96056560	2	1	732	96056273	MECH MEAS AND WARNING D
WINDOW	11110060	39	1	480	10327065	ELECTRIC PUMP

Description	Item	Pos.	Quantity	Page	Assembly	Description
WINDOW ASSEMBLY SPF	916162508	2	1	334	917304508	CRANE OPERATOR CABIN P
WING SCREW DIN 316 M10X25	11968431	7	10	40	990840414	COVER
WING SCREW DIN 316 M8X16 4	12215977	32	2	315	917357108	CRANE DRIVER CAB ADDITIO
WING SCREW DIN 316 M8X16 4	12215977	30	1	723	964502908	BOOM NOSE PRE-ASS.
WIPER ARM 650MM	10292014	3	1	355	916163008	WIPERS INSTALLATION
WIPER ARM 900MM	10292015	22	1	349	966497908	FRONT WINDOW CPL.
WIPER BEARING ST	11001115	16	1	349	966497908	FRONT WINDOW CPL.
WIPER BLADE 1000	10292017	23	1	349	966497908	FRONT WINDOW CPL.
WIPER BLADE 700	10292016	5	1	355	916163008	WIPERS INSTALLATION
WIPER FRAME	10292018	7	1	355	916163008	WIPERS INSTALLATION
WIPER FRAME	10870968	8	1	355	916163008	WIPERS INSTALLATION
WIPER MOTOR 55NM 24V SPF	10292021	2	2	355	916163008	WIPERS INSTALLATION
WIPERS INSTALLATION	916163008	5	1	334	917304508	CRANE OPERATOR CABIN P
WIRE HOSE CLAMP 70-75	11000902	14	2	352	916168308	AIR DUCT
WIRE HOSE CLAMP 79-85	11000903	13	6	352	916168308	AIR DUCT
WIRED END FERRULE 0,75X8	11520456	2276	9	698	96063213	LEAD
WIRED END FERRULE 16X12 V	602308508	104	1	490	96063649	WIRING HARNESS
WIRED END FERRULE 2X0,75	602342101	2312	1	698	96063213	LEAD
WIRED END FERRULE DIN 462	602308008	87	1	706	96063415	WIRING HARNESS
WIRED END FERRULE DIN 46	602307808	114	3	490	96063649	WIRING HARNESS
WIRED END FERRULE DIN 462	602307908	85	2	706	96063415	WIRING HARNESS
WIRED END FERRULE DIN 46	602307708	86	14	90	96062920	WIRING HARNESS
WIRED END FERRULE DIN 46	602307708	86	39	490	96063649	WIRING HARNESS
WIRED END FERRULE DIN 46	602307708	86	4	493	96023971	WIRING HARNESS
WIRED END FERRULE DIN 46	602307708	86	4	589	96055198	WIRING HARNESS
WIRED END FERRULE DIN 462	602308208	698	2	706	96063415	WIRING HARNESS
WIRED END FERRULE DIN 46	602308308	89	1	706	96063415	WIRING HARNESS
WIRED END FERRULE DIN 46	10101686	658	3	611	96057250	LEAD
WIRED END FERRULE DIN 46	10101686	658	3	698	96063213	LEAD
WIRES PRE-ASS. S930	96062040	2	1	704	96062034	WIRES TERMINAL BOX CPL.
WIRES TERMINAL BOX CPL. S	96062034	6	1	703	96063458	TERMINAL BOX CPL.
WIRING DUCT 80X25/2000 HAR	260020702	50	0.28	502	96025348	BASE ASSEMBLY
WIRING FAN HEATER ROTAR	91000484	384	1	14		LIEBHERR LTR 1100
WIRING HARNESS ASSEMBLY	10151329	2	1	239	10151328	CABLE HARNESS MOUNTING
WIRING HARNESS ASSEMBLY	10151390	8	1	239	10151328	CABLE HARNESS MOUNTING
WIRING HARNESS W200	96062921	4	1	82	96062918	SWITCH BOX CPL.
WIRING HARNESS W202	96062920	3	1	82	96062918	SWITCH BOX CPL.
WIRING HARNESS W227	96045216	30	1	97	96045215	CABLE LIST
WIRING HARNESS W300	96023891	2	1	425	96068695	CABLE LIST DRIVER'S CABIN
WIRING HARNESS W301	967541908	3	1	425	96068695	CABLE LIST DRIVER'S CABIN
WIRING HARNESS W302	967542008	4	1	425	96068695	CABLE LIST DRIVER'S CABIN
WIRING HARNESS W310	96022870	7	1	425	96068695	CABLE LIST DRIVER'S CABIN
WIRING HARNESS W321	96020554	13	1	624	96036820	EQUIPMENT CAMERA CAB
WIRING HARNESS W491	968986608	3	1	508	966193108	RESISTANCE MODULE PRE-A
WIRING HARNESS W500	96063649	1	1	489	96063648	CABLE LIST SLEWING PLATF
WIRING HARNESS W501	96023971	16	1	489	96063648	CABLE LIST SLEWING PLATF
WIRING HARNESS W512	968552008	(6)	1	598	96075086	HYD.AUX.LIFT GEAR UPPER
WIRING HARNESS W522	96055198	20	1	588	96055197	ELECTRIC FOR WINCH 2
WIRING HARNESS W555	96049294	17	1	489	96063648	CABLE LIST SLEWING PLATF
WIRING HARNESS W661	96045220	30	1	639	96045218	CABLE LIST
WIRING HARNESS W916	96063415	1	1	705	96063455	ELECTR. F.EXTENDING MECH
WIRING HARNESS W917	96063864	150	1	692	96063456	TERMINAL BOX
WIRING HARNESS W933Y	96058738	1	1	729	96058737	ELECTRIC MEASURING & WAR
WIRING HARNESS WRCAN	967709108	516	1	90	96062920	WIRING HARNESS
WOODRUFF KEY DIN 6888 3X5	570435508	18	1	275	10429930	GEAR WHEEL MOTOR
WORK LIGHT 20W 12-24V AL	10877828	6	1	431	96056347	ELECTRIC ADD-ON PARTS CA
WORK LIGHT 20W 12-24V AL	10877828	(10)	1	576	918988908	A-HEADLIGHT SLEWING PLA
WORK LIGHT 20W 12-24V AL	10877828	20	1	625	96036821	REAR END TURNT. CAMERA E
WP DC01 EN 12329 FE/ZN 12	955747203	13	10	30	992078314	CENTRE PIECE

Bezeichnung	Artikel	Pos.	Menge	Seite	Baugruppe	Bezeichnung
A-SCHEINWERFER DREHBUE	918988908	327	1	14		LIEBHERR LTR 1100
ABDECKBLECH	11494116	41	2	743	910445708	HAKENFLASCHE
ABDECKBLECH 4X270X270 S	97042701	9	1	124	918728408	MONTAGETEILE DREHBUEHN
ABDECKBLECH VORM.	965021508	46	2	395	918810308	STEUERSTAND
ABDECKKAPPE	11171306	2	1	731	12102807	WINDGESCHWINDIGKEITSGE
ABDECKKAPPE 112,7 PPA	10115832	7	1	146	10155227	OELWANNE VORM.
ABDECKKAPPE 12,7	591572208	62	2	673	91000054	TELESKOP 5 VORM.
ABDECKKAPPE 36X22 PVC-S	10215892	9	1	441	966707708	SPIEGELHALTER VORM.
ABDECKKAPPE 700 M18X1,5 P	10129392	2	2	183	12489819	ABDECKKAPPEN-KIT
ABDECKKAPPE 9,5X11 POLYA	591064708	71	1	339	917305408	INNENVERKLEIDUNG EINBAU
ABDECKKAPPE POLYSTIC27-3	591570908	111	7	407	96022627	DREHBUEHNENVERKLEIDUN
ABDECKKAPPE POLYSTIC27-3	591570908	51	1	431	96056347	ELEKTRIK ANBAUTEILE KABIN
ABDECKKAPPE POLYSTIC27-3	591570908	6	1	435	96022872	ARMATURENBRETT DACH
ABDECKKAPPE POLYSTIC27-3	591570908	13	1	562	919528608	OELKUEHLER EINBAU
ABDECKKAPPE PP	10129394	7	1	183	12489819	ABDECKKAPPEN-KIT
ABDECKKAPPEN-KIT	12485523	220	1	190	10135080	DRUCKROHRSTUTZEN
ABDECKKAPPEN-KIT	12489819	300	1	182	10146658	HOCHDRUCKPUMPE
ABDECKUNG	10650507	(2)	1	402	916049908	SPIEGELANBAU KRANFUEHR
ABDECKUNG	11005170	17	1	397	10877138	FAHRERSITZ
ABDECKUNG	11171270	32	1	397	10877138	FAHRERSITZ
ABDECKUNG	11979998	31	1	397	10877138	FAHRERSITZ
ABDECKUNG 8X735X83 PE SC	97008572	13	1	346	916162508	SCHEIBEN EINBAU
ABDECKUNG MOLERIT T59	11008024	526	4	427	96023891	KABELSTRANG
ABDECKUNG NRS	990840414	15	1	19	96062225	UNTERWAGEN KPL.
ABDICHTPROFIL	979896308	2	1	85	966167808	DECKEL KPL.
ABGASANLAGE	919674308	163	1	13		LIEBHERR LTR 1100
ABGASANLAGE VORM.	96051762	1	1	470	919674308	ABGASANLAGE
ABGASKLAPPE	10153116	3	1	223	12512627	ABGASSTUTZEN ANBAU
ABGASKLAPPE	12983604	3	1	223	12512627	ABGASSTUTZEN ANBAU
ABGASKRUEMMER NW=38 X5	97081905	23	1	446	96019783	ZUSATZHEIZUNG VORM.
ABGASMISCHROHR SCRFILTE	13402640	104	1	473	96051762	ABGASANLAGE VORM.
ABGASROHR 38/FLEXIBEL	553054108	15	2.25	444	918759708	ZUSATZHEIZUNG OW
ABGASROHR 38/FLEXIBEL	553054108	5	0.35	446	96019783	ZUSATZHEIZUNG VORM.
ABGASROHR ANBAU R-MOT	10140087	410	1	133	13455311	DIESELMOTOR
ABGASROHR R-MOTOR D934	10145524	1	1	220	10140087	ABGASROHR ANBAU
ABGASROHR X5CRNI18-10	97098878	103	1	473	96051762	ABGASANLAGE VORM.
ABGASROHR X5CRNI18-10 SP	97055658	103	1	470	919674308	ABGASANLAGE
ABGASROHR X5CRNI18-10 SP	97098877	104	1	470	919674308	ABGASANLAGE
ABGASSCHALLDAEMPFER 116	553187208	2	1	446	96019783	ZUSATZHEIZUNG VORM.
ABGASSTUTZEN ANBAU R-M	12512627	432	1	133	13455311	DIESELMOTOR
ABGASSTUTZEN R-MOTOR D	10153666	1	1	223	12512627	ABGASSTUTZEN ANBAU
ABGLAETTMITTEL KANISTER-	811203108	16	1	346	916162508	SCHEIBEN EINBAU
ABGLAETTMITTEL KANISTER-	811203108	49	1	361	917304708	SCHIEBETUER EINBAU
ABLASSSCHRAUBE	12106640	26	1	766	10801932	HANDPUMPE
ABSCHIRMUNG	966980708	36	2	431	96056347	ELEKTRIK ANBAUTEILE KABIN
ABSCHIRMUNG ZURUECKGEB	965617208	995	6	427	96023891	KABELSTRANG
ABSCHIRMUNG ZURUECKGEB	965617208	995	1	698	96063213	LEITUNG
ABSCHLUSSFLANSCH NG 125-	9276423	11	1	261	12487540	HYDRAULIKDOPPELPUMPE
ABSPERRORGAN DN125-FLAN	10475262	105	1	295	969219208	OELBEHAELTER VORM.
ABSTANDSBOLZEN M5X30 11	97028159	48	4	338	917305408	INNENVERKLEIDUNG EINBAU
ABSTANDSBOLZEN M6X30 ST	11001955	57	3	338	917305408	INNENVERKLEIDUNG EINBAU
ABSTANDSBOLZEN M6X50 S	10875447	58	2	338	917305408	INNENVERKLEIDUNG EINBAU
ABSTANDSRING	11181884	5	1	95	10878097	SCHLEIFRINGUEBERTRAGER
ABSTREIFER 125X140X9,5	7371745	5	1	25	749065414	SPANNER HYDR KPL
ABSTUETZPLATTE	964536408	15	4	70	915447908	HYDRAULISCHE ABSTUETZUN
ABSTUETZZYLINDER 170/100-1	10356288	1	4	70	915447908	HYDRAULISCHE ABSTUETZUN
ABSTURZSICHERUNG	919484908	136	1	13		LIEBHERR LTR 1100
ABTRIEBSFLANSCH	927639801	10	1	383	968607101	PLANETENGETRIEBE
ABTRIEBSFLANSCH	927639801	10	1	584	938759801	PLANETENGETRIEBE
ABTRIEBSWELLE 143,8 18CrNi	933074901	10	1	369	933074801	DREHWERKANTRIEB

Bezeichnung	Artikel	Pos.	Menge	Seite	Baugruppe	Bezeichnung
ACHSE	5200017	3	1	24	749013714	LEITRAD KPL
ACHSE 108.0X92 S355J2H FE//	955560208	5	1	723	964502908	MASTNASE VORM.
ACHSE 108.0X99 S355J2H FE//	97053673	5	1	763	917695308	UMLENKROLLE VORM.
ACHSE 170X310 35NICRMOV12	957100008	11	2	124	918728408	MONTAGETEILE DREHBUEHN
ACHSE 30.0X95 S355J2C+C FE	97011246	22	1	319	919010108	KRANFUEHRERKABINE VORM.
ACHSE RD100X125 S355J2H	949347508	3	1	768	91001040	ANLENKSTUECK VORM.
ACHSE RD100X125 S355J2H	949347508	5	1	771	918596708	KOPFSTUECK VORM.
ACHSE RD110X818 35NICRM	953656108	31	2	673	91000054	TELESKOP 5 VORM.
ACHSHALTER	11492235	6	1	739	910543708	LASTHAKEN
ACHSHALTER 12X108X84 S69	973105408	26	2	376	919935508	HAUPTHUBWERK
ACHSHALTER 20X118X220 S69	972608208	6	1	626	919616808	WIPPZYLINDER M.LAGERUNG
ACHSHALTER 20x250x119 S69	951913908	12	2	124	918728408	MONTAGETEILE DREHBUEHN
ACHSHALTER 20x250x119 S69	951913908	4	1	626	919616808	WIPPZYLINDER M.LAGERUNG
ACHSHALTER 8X29X100 S235J	967230603	10	4	30	992078314	MITTELTEIL
ACHSHALTER LN 4/1 S235JR+	997040101	31	1	747	919933308	TRANSPORTHALTERUNG DKS
ACHSHALTER LN 4/4 ZNNI	997040401	4	1	768	91001040	ANLENKSTUECK VORM.
ACHSHALTER LN 4/4 ZNNI	997040401	6	1	771	918596708	KOPFSTUECK VORM.
ADAPTER 18-POL SPF	660024508	29	1	498	919940108	EINBAUTEILE SCHALTSCHRAN
ADAPTER 19.0X17 S235JRC+C	97051324	66	1	432	96056347	ELEKTRIK ANBAUTEILE KABIN
ADAPTER 32X185X45 PAGF30	979243408	2	1	350	965784408	DACHSCHEIBE VORM.
ADAPTER SCHWK.	96013744	1	1	760	918533508	ADAPTER VORM.
ADAPTER VORM.	918533508	1	1	757	91001038	DOPPELKLAPPSPITZE MECH.
ADAPTERKABEL AWG22+CAN	12105779	9	1	87	96062922	MONTAGEPLATTE VORM.
ADAPTERKABEL AWG22+CAN	12105779	20	1	498	919940108	EINBAUTEILE SCHALTSCHRAN
ADERENDHUELSE 0,75X8	11520456	2276	9	698	96063213	LEITUNG
ADERENDHUELSE 16X12 VER	602308508	104	1	490	96063649	KABELSTRANG
ADERENDHUELSE 2X0,75mm	602342101	2312	1	698	96063213	LEITUNG
ADERENDHUELSE DIN 46228 1	602308008	87	1	706	96063415	KABELSTRANG
ADERENDHUELSE DIN 46228-	602307808	114	3	490	96063649	KABELSTRANG
ADERENDHUELSE DIN 46228-1	602307908	85	2	706	96063415	KABELSTRANG
ADERENDHUELSE DIN 46228-	602307708	86	14	90	96062920	KABELSTRANG
ADERENDHUELSE DIN 46228-	602307708	86	39	490	96063649	KABELSTRANG
ADERENDHUELSE DIN 46228-	602307708	86	4	493	96023971	KABELSTRANG
ADERENDHUELSE DIN 46228-	602307708	86	4	589	96055198	KABELSTRANG
ADERENDHUELSE DIN 46228-1	602308208	698	2	706	96063415	KABELSTRANG
ADERENDHUELSE DIN 46228-	602308308	89	1	706	96063415	KABELSTRANG
ADERENDHUELSE DIN 46228-	10101686	658	3	611	96057250	LEITUNG
ADERENDHUELSE DIN 46228-	10101686	658	3	698	96063213	LEITUNG
AGGREGATETRAEGER ANBAU	10147687	12	1	130	13455311	DIESELMOTOR
AGGREGATETRAEGER SCH	969269308	1	1	268	918811108	ANTRIEBSAGGREGAT VORM.
AGGREGATETRAEGER VORM.	12542812	1	1	140	13782803	AGGREGATETRAEGER VORM
AGGREGATETRAEGER VORM.	13782803	1	1	139	10147687	AGGREGATETRAEGER ANBA
AKTIVATOR 1000ML	870004108	23	1	346	916162508	SCHEIBEN EINBAU
AKTIVATOR 250ML DOSE	10815283	14	1	346	916162508	SCHEIBEN EINBAU
ANBAUTEILE	927234408	500	1	725	918258408	ELEKTRIK 2.HUBENDSCHALTE
ANBAUTEILE ARBEITSSCHEI	96033759	10	1	576	918988908	A-SCHEINWERFER DREHBUE
ANBAUTEILE KAMERA DB-HEC	915403108	1	1	622	918805408	KAMERAUEBERWACHUNG O
ANBAUTEILE LUFTPRESSER	10145278	334	1	133	13455311	DIESELMOTOR
ANBAUTEILE TELE	917825608	287	1	14		LIEBHERR LTR 1100
ANLAUFRING AlSn20Cu	10133693	6	2	170	10147787	NOCKENWELLE KPL.
ANLAUFRING AlSn20Cu	11348100	6	1	170	10147787	NOCKENWELLE KPL.
ANLAUFRING AlSn20Cu	11348100	2	2	171	10145815	RS FLANSCH
ANLAUFSCHEIBE	571582308	4	1	209	5700161	LUFTPRESSER
ANLAUFSCHEIBE	571582408	6	1	209	5700161	LUFTPRESSER
ANLAUFSCHEIBE	749015614	40	1	26	749065314	TRAGROLLE KPL
ANLAUFSCHEIBE 112X138X3	10119927	3	2	155	10116939	RS KURBELWELLENLAGERU
ANLAUFSCHEIBE 112X138X3	10119928	4	2	155	10116939	RS KURBELWELLENLAGERU
ANLAUFSCHEIBE 47X200X6	938760501	46	1	383	968607101	PLANETENGETRIEBE
ANLENKSTUECK SCHWK.	96062032	1	1	768	91001040	ANLENKSTUECK VORM.
ANLENKSTUECK SCHWK. SPF	91000079	1	1	655	91000049	ANLENKSTUECK VORM.

Bezeichnung	Artikel	Pos.	Menge	Seite	Baugruppe	Bezeichnung
ANLENKSTUECK VORM.	91000049	1	1	652	919935408	TELESKOPAUSLEGER KPL.
ANLENKSTUECK VORM.	91001040	2	1	757	91001038	DOPPELKLAPPSPITZE MECH.
ANSAUGSTUTZEN ANBAU R-M	10145173	221	1	132	13455311	DIESELMOTOR
ANSAUGSTUTZEN R-MOTOR	11444999	1	1	201	10145173	ANSAUGSTUTZEN ANBAU
ANSCHLAG KPL.	955746303	12	2	30	992078314	MITTELTEIL
ANSCHLAGMITTEL MONTAGE	917893008	299	1	14		LIEBHERR LTR 1100
ANSCHLAGSCHEIBE 16,5X75X	10875905	6	4	320	916164208	LAGERUNG EINBAU
ANSCHLAGSEIL -5M PP SPF	773326508	3	1	779	917508408	WERKZEUG KLAPPSPITZE
ANSCHLAGSEIL DIN EN 13414-	773315108	1	3	738	917893008	ANSCHLAGMITTEL
ANSCHLUSSBLOCK	11211226	9	1	684	12105406	TELESKOPIERZYLINDER
ANSCHLUSSBLOCK KPL.	12105785	1	1	66	11481975	STEUERBLOCK
ANSCHLUSSKABEL 2X0,75-1,5	10877798	18	1	426	96023891	KABELSTRANG
ANSCHLUSSKABEL 2X0,75-10	10877801	15	1	490	96063649	KABELSTRANG
ANSCHLUSSKABEL 2X0,75-10	10877801	16	1	490	96063649	KABELSTRANG
ANSCHLUSSKABEL 2X0,75-10	10877801	17	1	490	96063649	KABELSTRANG
ANSCHLUSSKABEL 2X0,75-10	10877801	383	1	493	96023971	KABELSTRANG
ANSCHLUSSKABEL 2X0,75-10	10877801	384	1	493	96023971	KABELSTRANG
ANSCHLUSSPLATTE	510629508	161	2	33	967304508	HYDRAULIK UNTERWAGEN
ANSCHLUSSPLATTE	570109208	4	1	371	510229408	HYDROMOTOR
ANSCHLUSSSTECKER	12102524	1011	4	66	11481975	STEUERBLOCK
ANSCHLUSSSTECKER AX	602337008	508	2	428	96022870	KABELSTRANG
ANSCHLUSSTRAEGER 42CrMo	968607201	1	1	383	968607101	PLANETENGETRIEBE
ANSCHRAUBSCHARNIER 25X	10871177	12	4	349	966497908	FRONTSCHEIBE KPL.
ANSCHRAUBSCHARNIER 25X	10871177	9	2	350	965784408	DACHSCHEIBE VORM.
ANSCHWEISSPLATTE S315MC	956211014	18	2	30	992078314	MITTELTEIL
ANTENNE	10878172	1	1	650	12257818	AUTORADIO
ANTENNE	12102772	4	1	93	96060494	ANTENNE KPL.
ANTENNE	12102773	4	1	92	96060493	ANTENNE KPL.
ANTENNE AKTIV	12107816	11	1	431	96056347	ELEKTRIK ANBAUTEILE KABIN
ANTENNE KPL.	96060493	5	1	82	96062918	SCHALTKASTEN KPL.
ANTENNE KPL.	96060494	6	1	82	96062918	SCHALTKASTEN KPL.
ANTENNENKABEL 1X0,34-2M	12104642	8	1	93	96060494	ANTENNE KPL.
ANTENNENKABEL 1X0,34-2M	12104642	60	1	432	96056347	ELEKTRIK ANBAUTEILE KABIN
ANTENNENKABEL 1X0,34-4M	12104638	6	1	92	96060493	ANTENNE KPL.
ANTENNENKABEL 1X0,34-4M	12104638	6	1	93	96060494	ANTENNE KPL.
ANTENNENKABEL 1X0,34-5M	12104640	7	1	93	96060494	ANTENNE KPL.
ANTENNENKABEL 1X0,34-5M	12107824	59	1	432	96056347	ELEKTRIK ANBAUTEILE KABIN
ANTENNENSTAB AKTIV	12108590	(1)	1	431	96056347	ELEKTRIK ANBAUTEILE KABIN
ANTIRUTSCHBELAG 1.6X25X	97037477	67	2	339	917305408	INNENVERKLEIDUNG EINBAU
ANTIRUTSCHBELAG 1.6X51X	97108842	2	3	786	917028508	ANTIRUTSCHBESCHICHTUNG
ANTIRUTSCHBESCHICHTUNG	917028508	891	1	15		LIEBHERR LTR 1100
ANTRIEB FUER HOCHDRUCK	11407917	180	1	132	13455311	DIESELMOTOR
ANTRIEBSAGGREGAT KPL.	918728708	105	1	12		LIEBHERR LTR 1100
ANTRIEBSAGGREGAT VORM.	918811108	1	1	263	918728708	ANTRIEBSAGGREGAT KPL.
ANTRIEBSFLANSCH EDELST	606012608	(6)	1	484	919940408	EL.ANLAGE DREHBUEHNE
ANTRIEBSFLANSCH EDELST	606012608	6	1	588	96055197	ELEKTRIK WINDE 2
ANTRIEBSGRUPPE AG 944 P38	13471292	1	1	128	919832408	DIESELMOTOR KAUFTEIL
ANTRIEBSRAD 12XB7X215,9 98	11306946	6	1	22	96062226	RAUPENTRAEGER KPL.RE.
ANTRIEBSRAD 12XB7X215,9 98	11306946	6	1	27	96062228	RAUPENTRAEGER KPL.LI.
ANTRIEBSWELLE	938760001	5	1	383	968607101	PLANETENGETRIEBE
ARBEITSSCHEINWERFER 20W	10877828	6	1	431	96056347	ELEKTRIK ANBAUTEILE KABIN
ARBEITSSCHEINWERFER 20W	10877828	(10)	1	576	918988908	A-SCHEINWERFER DREHBUE
ARBEITSSCHEINWERFER 20W	10877828	20	1	625	96036821	AUSRUESTUNG KAMERA DRE
ARMATURENBRETT DACH	96022872	2	1	431	96056347	ELEKTRIK ANBAUTEILE KABIN
ARMATURENHALTER	10009700	57	1	388	11083498	HEIZKLIMAGERAET
ARMLEHNE 310ERGO	774119708	1	1	399	962282208	ARMLEHNE LINKS
ARMLEHNE 310ERGO	774119808	1	1	401	962282308	ARMLEHNE RECHTS
ARMLEHNE LINKS	962282208	1	1	398	96032222	NACHARBEIT ARMLEHNE LI.
ARMLEHNE RECHTS	962282308	1	1	400	96032223	NACHARBEIT ARMLEHNE RE.
ARMLEHNENAUFLAGE 45X65X	971636608	2	1	399	962282208	ARMLEHNE LINKS

Bezeichnung	Artikel	Pos.	Menge	Seite	Baugruppe	Bezeichnung
ARMLEHNENAUFLAGE 45X65X	971636608	2	1	401	962282308	ARMLEHNE RECHTS
ASCHENBECHER KUNSTSTOF	10291997	33	1	338	917305408	INNENVERKLEIDUNG EINBAU
ATL-ANBAU HE300	10140729	430	1	133	13455311	DIESELMOTOR
AUFFANGGURT EN 361 IK G 2	11007305	1	1	120	916959808	PERSOENLICHE SCHUTZAUS
AUFHAENGUNG KPL.	12104666	30	1	741	919421708	HAKENFLASCHE
AUFKLEBER	10663909	(1)	1	480	10327065	ELEKTROPUMPE
AUFKLEBER BEHAELTER 2,5K	967421808	30	1	480	10327065	ELEKTROPUMPE
AUFLAGEBOCK FE//ZNNI8//CN/	965255408	26	1	315	917357108	KRANFUEHRERKABINE ANBA
AUFLAGEPLATTE 108X30X 10	97086973	2	2	421	96044787	HALTER VORM.
AUFNAHME	979589208	5	1	127	968305308	ENDSCHALTER VORM.
AUFNAHME SCHWK. WARNEI	968410408	1	1	737	917825608	ANBAUTEILE
AUFNAHMEBOLZEN 65.0X330	975762108	9	4	635	915090008	GEGENGEWICHT M.BEFESTIG
AUFNAHMEGEHAEUSE 4-POL	602337608	516	1	500	96059659	DRAEHTE GRUNDAUFBAU KPL
AUFSTECKROHR	607226808	21	1	484	919940408	EL.ANLAGE DREHBUEHNE
AUFSTIEG KPL.	991456314	2	4	53	915562508	RAUPENBESTUECKUNG
AUSGLEICHSBEHAELTER	96035743	3	1	263	918728708	ANTRIEBSAGGREGAT KPL.
AUSGLEICHSBEHAELTER 0,2L	502807308	(1)	1	591	96064697	HYDRAULIK HILFSHUBWERK
AUSGLEICHSBEHAELTER KPL	96028331	150	1	591	96064697	HYDRAULIK HILFSHUBWERK
AUSGLEICHSBEHAELTER SCH	96035739	1	1	282	96035743	AUSGLEICHSBEHAELTER
AUSGLEICHSBEHAELTER SCH	96035326	1	1	280	96035595	AUSGLEICHSBEHAELTER VO
AUSGLEICHSBEHAELTER VO	96035595	2	1	263	918728708	ANTRIEBSAGGREGAT KPL.
AUSGLEICHSBLECH FE//ZNNI	964984108	26	2	395	918810308	STEUERSTAND
AUSGLEICHSCHEIBE	510783208	17	1	558	511417708	DRUCKBEGRENZUNGSVENTI
AUSGLEICHSCHEIBE	510783208	17	1	621	511417608	DRUCKBEGRENZUNGSVENTI
AUSGLEICHSPLATTE	10115155	18	4	95	10878097	SCHLEIFRINGUEBERTRAGER
AUSGLEICHSPLATTE	10359124	20	2	95	10878097	SCHLEIFRINGUEBERTRAGER
AUSGLEICHWELLE VORM.	10152441	1	2	168	10120186	MASSENAUSGLEICH ANBAU
AUSLASSMODUL SCRFILTER	11429877	30	1	475	11429845	SCRFILTER-BAUGRUPPE
AUSLASSVENTIL	10136751	(4)	2	160	10149580	ZYLINDERKOPF ANBAU
AUSLASSVENTIL	10136751	4	2	162	10149579	ZYLINDERKOPF VORM.
AUSRUESTUNG KAMERA DRE	96036821	4	1	622	918805408	KAMERAUEBERWACHUNG O
AUSRUESTUNG KAMERA KAB	96036820	3	1	622	918805408	KAMERAUEBERWACHUNG O
AUSSCHUBMECHANIK	91000055	7	1	652	919935408	TELESKOPAUSLEGER KPL.
AUSSENGRIFF ZUG	11005987	4	1	362	966230408	SCHLIESSANLAGE
AUSSTROEMDUESE D=63 AB	10301409	30	2	338	917305408	INNENVERKLEIDUNG EINBAU
AUSSTROEMDUESE D=82 T=5	553193208	29	6	338	917305408	INNENVERKLEIDUNG EINBAU
AUSZIEHBUEGEL	12108688	4	1	650	12257818	AUTORADIO
AUTORADIO	12257818	1	1	649	916166208	AUTORADIO
AUTORADIO	916166208	199	1	14		LIEBHERR LTR 1100
AXIALLUEFTER 24V	10222682	1	1	438	963398008	AXIALLUEFTER VORM.OBEN
AXIALLUEFTER VORM.OBEN	963398008	35	1	431	96056347	ELEKTRIK ANBAUTEILE KABIN
AXIALZYLINDERROLLENLAG	746604101	37	1	741	919421708	HAKENFLASCHE
AXIALZYLINDERROLLENLAGE	746604908	5	1	739	910543708	LASTHAKEN
AXIALZYLINDERROLLENLAGE	746607108	37	1	743	910445708	HAKENFLASCHE
BALLASTIERZYLINDER 110/100	12102342	1	2	454	919501608	HYDRAULISCHE BALLASTIER
BALLASTUEBERWACHUNG	919499008	82	1	12		LIEBHERR LTR 1100
BALLASTUEBERWACHUNG	919502708	160	1	13		LIEBHERR LTR 1100
BATTERIE 1.5V 16.5AH	613200608	3	10	105	928620108	ZUBEHOER
BATTERIE 12V 180AH	10664204	5	2	288	96023914	ELEKTRIK BATTERIEKASTEN
BATTERIEHAUPTSCHALTER	96023960	19	1	288	96023914	ELEKTRIK BATTERIEKASTEN
BATTERIEKASTEN KPL.	918955208	107	1	12		LIEBHERR LTR 1100
BATTERIEKASTEN SCHWK. SP	96023028	1	1	287	96024716	BATTERIEKASTEN VORM.
BATTERIEKASTEN VORM.	96024716	1	1	285	918955208	BATTERIEKASTEN KPL.
BATTERIEKLEMME 15,9MM² V	613206608	21	2	288	96023914	ELEKTRIK BATTERIEKASTEN
BATTERIEKLEMME 17,5MM² V	613206508	22	2	288	96023914	ELEKTRIK BATTERIEKASTEN
BE- UND ENTLUEFTUNGSFILT	721108801	7	1	384	939368401	OELMESSEINRICHTUNG
BEARBEITUNG CAN- STUETZ	96014807	2998	2	427	96023891	KABELSTRANG
BEARBEITUNG CAN- STUETZ	96014807	2998	8	496	96049294	KABELSTRANG
BECHERHALTER	96048757	1	1	322	96057226	BECHERHALTER EINBAU
BECHERHALTER EINBAU	96057226	8	1	321	96015921	BEDIENELEMENTE EINBAU

Bezeichnung	Artikel	Pos.	Menge	Seite	Baugruppe	Bezeichnung
BECKENGURT	12102677	1	1	615	919392208	BECKENGURT EINBAU
BECKENGURT EINBAU	919392208	403	1	15		LIEBHERR LTR 1100
BEDIENELEMENTE EINBAU	96015921	2	1	319	919010108	KRANFUEHRERKABINE VORM.
BEFESTIGUNG DRUCKROHR	10135434	5	1	185	13743036	RS INJEKTOR
BEFESTIGUNG DRUCKROHR	10135434	3	1	186	10141140	RS DRUCKROHRSTUTZEN
BEFESTIGUNG DRUCKROHR	10135434	3	1	191	13757616	RS DRUCKROHRSTUTZEN
BEFESTIGUNGSBLECH 61,7 S	10149476	2	1	225	10142863	GENERATOR VORM.
BEFESTIGUNGSMATERIAL	10650403	49	1	397	10877138	FAHRERSITZ
BEFESTIGUNGSMATERIAL	11171275	65	1	397	10877138	FAHRERSITZ
BEFESTIGUNGSSCHELLE 34 E	10123304	1	1	238	10144098	BEFESTIGUNGSSCHELLE
BEFESTIGUNGSSCHELLE 34	10144098	6	2	237	10144227	STEUERGERAET ANBAU
BEFESTIGUNGSTEILE DREHV	914860508	29	1	12		LIEBHERR LTR 1100
BEFESTIGUNGSTEILE ELEKT	96041469	(30)	1	755	91001037	DOPPELKLAPPSPITZE MECH.
BEFESTIGUNGSTEILE HYDR	96075102	9	1	598	96075086	HYDRAULIK HILFSHUBWERK D
BEHAELTER	10038271	29	1	480	10327065	ELEKTROPUMPE
BEHAELTER	12101219	3	1	648	10876885	FETTSPRUEHGERAET
BEHAELTERDECKEL	12102477	34	1	480	10327065	ELEKTROPUMPE
BEHAELTERVERSCHRAUBUN	10878281	(2)	1	591	96064697	HYDRAULIK HILFSHUBWERK
BELUEFTUNGSFILTER	510667308	102	2	295	969219208	OELBEHAELTER VORM.
BESCHILDERUNG	96062735	4	1	578	919935608	HILFSHUBWERK KPL.
BESCHILDERUNG	96072367	880	1	652	919935408	TELESKOPAUSLEGER KPL.
BESCHILDERUNG DKS MECH	96062033	880	1	754	919932208	DOPPELKLAPPSPITZE MECH.K
BESCHILDERUNG GROSSBRI	919933708	74	1	12		LIEBHERR LTR 1100
BESCHILDERUNG MASTNASE	967695508	8	1	721	915415908	MASTNASE
BESCHILDERUNG ZUGLASCH	96017737	881	1	754	919932208	DOPPELKLAPPSPITZE MECH.K
BESCHRIFTUNG ADER	965622108	996	8	90	96062920	KABELSTRANG
BESCHRIFTUNG ADER	965622108	996	24	91	96062921	KABELSTRANG
BESCHRIFTUNG ADER	965622108	996	6	98	96045216	KABELSTRANG
BESCHRIFTUNG ADER	965622108	996	8	427	96023891	KABELSTRANG
BESCHRIFTUNG ADER	965622108	996	8	428	96022870	KABELSTRANG
BESCHRIFTUNG ADER	965622108	996	62	491	96063649	KABELSTRANG
BESCHRIFTUNG ADER	965622108	996	125	494	96023971	KABELSTRANG
BESCHRIFTUNG ADER	965622108	996	52	496	96049294	KABELSTRANG
BESCHRIFTUNG ADER	965622108	996	6	640	96045220	KABELSTRANG
BESCHRIFTUNG ADER	965622108	996	27	698	96063213	LEITUNG
BESCHRIFTUNG KABELBAUM	965622208	998	1	90	96062920	KABELSTRANG
BESCHRIFTUNG KABELBAUM	965622208	998	1	91	96062921	KABELSTRANG
BESCHRIFTUNG KABELBAUM	965622208	998	2	98	96045216	KABELSTRANG
BESCHRIFTUNG KABELBAUM	965622208	998	1	427	96023891	KABELSTRANG
BESCHRIFTUNG KABELBAUM	965622208	998	1	428	96022870	KABELSTRANG
BESCHRIFTUNG KABELBAUM	965622208	998	1	491	96063649	KABELSTRANG
BESCHRIFTUNG KABELBAUM	965622208	998	2	492	96063650	LEITUNG
BESCHRIFTUNG KABELBAUM	965622208	998	1	494	96023971	KABELSTRANG
BESCHRIFTUNG KABELBAUM	965622208	998	1	496	96049294	KABELSTRANG
BESCHRIFTUNG KABELBAUM	965622208	998	1	589	96055198	KABELSTRANG
BESCHRIFTUNG KABELBAUM	965622208	998	2	608	96060353	LEITUNG
BESCHRIFTUNG KABELBAUM	965622208	998	2	611	96057250	LEITUNG
BESCHRIFTUNG KABELBAUM	965622208	998	1	640	96045220	KABELSTRANG
BESCHRIFTUNG KABELBAUM	965622208	998	2	693	96063864	KABELSTRANG
BESCHRIFTUNG KABELBAUM	965622208	998	2	694	96063583	LEITUNG
BESCHRIFTUNG KABELBAUM	965622208	998	2	698	96063213	LEITUNG
BESCHRIFTUNG KABELBAUM	965622208	998	1	699	96051215	DRAEHTE
BESCHRIFTUNG KABELBAUM	965622208	998	2	706	96063415	KABELSTRANG
BESCHRIFTUNG KABELBAUM	965622208	998	2	730	96058738	KABELSTRANG
BESCHRIFTUNG KABELBAUM	965622208	998	2	775	96035674	LEITUNG
BESTUECKUNGSMODUL 12PO	966157408	2	1	504	968077108	KLEMMENLEISTE
BETAETIGUNGSDORN GD-ZN	704253408	(1)	1	85	966167808	DECKEL KPL.
BETAETIGUNGSDORN GD-ZN	704253408	7	4	85	966167808	DECKEL KPL.
BETAETIGUNGSDORN GD-ZN	704253408	14	1	287	96024716	BATTERIEKASTEN VORM.
BETAETIGUNGSDORN GD-ZN	704253408	101	2	417	969392008	FRONTHAUBE LI.

Bezeichnung	Artikel	Pos.	Menge	Seite	Baugruppe	Bezeichnung
BETAETIGUNGSEINHEIT	571935508	(1)	1	369	933074801	DREHWERKANTRIEB
BETRIEBSSTUNDENZAEHLER	691798508	3	1	435	96022872	ARMATURENBRETT DACH
BEZEICHNUNGSSCHILD 20X8	602761408	12	10	506	926891108	VERTEILER MASSE
BEZEICHNUNGSSCHILD 70X4	10288121	300	1	89	968252908	BTB PROGRAMMIERT
BEZEICHNUNGSSCHILD 70X4	10288121	(980)	1	431	96056347	ELEKTRIK ANBAUTEILE KABIN
BEZEICHNUNGSSCHILD 70X4	10288121	(980)	1	431	96056347	ELEKTRIK ANBAUTEILE KABIN
BEZEICHNUNGSSCHILD 70X4	10288121	(2)	1	435	96022872	ARMATURENBRETT DACH
BEZEICHNUNGSSCHILD 70X4	10288121	300	1	509	96069052	UNIVERSAL EIN-AUSGANGS
BEZEICHNUNGSSTREIFEN	602762908	7	1	504	968077108	KLEMMENLEISTE
BEZUG	12100617	(1)	1	397	10877138	FAHRERSITZ
BEZUG	12100619	(1)	1	397	10877138	FAHRERSITZ
BLECH	10142763	2	1	219	10142744	KUEHLWASSERENTLUEFTUN
BLECH	518565008	46	1	684	12105406	TELESKOPIERZYLINDER
BLECH 1.5X107X120 DC01 RA	97006876	37	1	338	917305408	INNENVERKLEIDUNG EINBAU
BLECH 1.5X110X178 DC01 FE//	97013718	(1)	1	431	96056347	ELEKTRIK ANBAUTEILE KABIN
BLECH 1.5X131X117 DC01 FE//	97002645	3	1	329	916170808	KABELEINFUEHRUNG
BLECH 1.5X156X117 DC01	97016796	11	1	502	96025348	GRUNDAUFBAU
BLECH 1.5X170X50 DC01 FE//	976673908	27	6	315	917357108	KRANFUEHRERKABINE ANBA
BLECH 1.5X174X114 DC01 RAL	976094108	5	1	329	916170808	KABELEINFUEHRUNG
BLECH 1.5X204X178 DC01 FE//	97015052	2	1	507	968015808	MONTAGEEINHEIT VORM.
BLECH 1.5X25X47 DC01 RAL 7	97006875	36	1	338	917305408	INNENVERKLEIDUNG EINBAU
BLECH 1.5X290X162 DC01 FE//	97000735	2	1	329	916170808	KABELEINFUEHRUNG
BLECH 1.5X349X152 DC01 FE//	97154530	2	1	87	96062922	MONTAGEPLATTE VORM.
BLECH 1.5X436X90 DC01 RAL	97003298	24	1	338	917305408	INNENVERKLEIDUNG EINBAU
BLECH 1.5X44X97 X5CRNI18-1	97015722	16	1	319	919010108	KRANFUEHRERKABINE VORM.
BLECH 1.5X551X299 DC01 RA	97002609	23	1	338	917305408	INNENVERKLEIDUNG EINBAU
BLECH 1.5X560X43 DC01 FE//	97091350	8	1	280	96035595	AUSGLEICHSBEHAELTER VO
BLECH 1.5X682X49 X5CRNI18	97030182	2	1	734	96056553	GRUNDHALTER VORM.
BLECH 1.5X72X538 X5CRNI18	97000469	15	1	338	917305408	INNENVERKLEIDUNG EINBAU
BLECH 1.5X832X41 DC01 RAL	97027494	65	1	339	917305408	INNENVERKLEIDUNG EINBAU
BLECH 1.5X90X96 DC01 RAL	976167908	16	1	431	96056347	ELEKTRIK ANBAUTEILE KABIN
BLECH 1.5X95X40 DC01 RAL	97025127	35	3	349	966497908	FRONTSCHEIBE KPL.
BLECH 100X290 DC01 FE//ZNNI	97011478	27	2	47	968374708	MONTAGETEILE
BLECH 103X20 S315MC FE//ZN	952859808	9	1	272	96020819	KUEHLER VORM.
BLECH 10X194X25 S355MC FE	97165309	71	2	661	91000050	TELESKOP 1 VORM.
BLECH 10X194X25 S355MC FE	97165309	71	2	664	91000051	TELESKOP 2 VORM.
BLECH 10X194X25 S355MC FE	97165309	71	2	667	91000052	TELESKOP 3 VORM.
BLECH 10X194X25 S355MC FE	97165309	71	2	670	91000053	TELESKOP 4 VORM.
BLECH 10X194X35 S355MC FE	97154023	79	2	656	91000049	ANLENKSTUECK VORM.
BLECH 10X220X290 S960QL	956758608	5	1	679	91000055	AUSSCHUBMECHANIK
BLECH 10X22X66 S355MC FE//	97133541	2	1	48	96046146	SCHUTZ KPL.
BLECH 10X345X70 S355MC FE	97172678	15	4	420	919484908	ABSTURZSICHERUNG
BLECH 10X434X69 S700MC	97070023	27	1	747	919933308	TRANSPORTHALTERUNG DKS
BLECH 110X34 S315MC FE//ZN	979132008	80	1	673	91000054	TELESKOP 5 VORM.
BLECH 110X34 S315MC FE//ZN	979132008	5	1	726	967321308	HALTERUNG 2.HUB OBEN
BLECH 15X135X128 S690QL F	953856308	51	1	760	918533508	ADAPTER VORM.
BLECH 15X300X120 S355MC	976541108	8	4	119	96045222	MONTAGETEILE
BLECH 15X95X220 S960QL	975257708	6	4	374	916109208	DREHBUEHNENARRETIERUN
BLECH 18X66X117 S355J2+N	97133540	1	1	48	96046146	SCHUTZ KPL.
BLECH 196X63 S315MC FE//ZN	955668108	13	2	124	918728408	MONTAGETEILE DREHBUEHN
BLECH 1X128X128 DC01 FE//	97045516	18	2	763	917695308	UMLENKROLLE VORM.
BLECH 1X128X128 DC01 FE//	97045516	6	2	768	91001040	ANLENKSTUECK VORM.
BLECH 1X128X128 DC01 FE//	97045516	10	1	771	918596708	KOPFSTUECK VORM.
BLECH 1X157X157 DC01 FE//	976986008	9	4	315	917357108	KRANFUEHRERKABINE ANBA
BLECH 1X176X176 X5CRNI18-1	974792608	(1)	1	407	96022627	DREHBUEHNENVERKLEIDUN
BLECH 1X285X126 DC01 RAL 9	977444308	17	1	395	918810308	STEUERSTAND
BLECH 1X285X126 DC01 RAL 9	977444408	18	1	395	918810308	STEUERSTAND
BLECH 1X35X100 DC01 FE//ZN	957068708	24	3	581	96062734	HILFSHUBWERK
BLECH 1X681X57 DC01 FE//ZN	97027312	18	3	407	96022627	DREHBUEHNENVERKLEIDUN
BLECH 1X70X80 DC01 FE//ZN	953515508	6	3	290	917962508	KRAFTSTOFFBEHAELTER AN

Bezeichnung	Artikel	Pos.	Menge	Seite	Baugruppe	Bezeichnung
BLECH 1X70X80 DC01 FE//ZN	953515508	4	3	293	918008908	OELBEHAELTER ANBAU
BLECH 1X86X40 DC01 FE//ZN	97084143	4	2	658	96014777	HUBSEILFUEHRUNG VORM.
BLECH 1X90X60 DC01 FE//ZN	97032616	5	2	52	968374908	ENDSCHALTER ANBAU
BLECH 2.5X130X28 DC01 RAL	979022608	7	2	350	965784408	DACHSCHEIBE VORM.
BLECH 2.5X699X839 ALMG3 H1	97039558	1	1	332	968462608	SCHALTSCHRANKDECKEL EIN
BLECH 2.5X71X196 DC01 RAL	97022452	53	1	431	96056347	ELEKTRIK ANBAUTEILE KABIN
BLECH 20X126X40 S355J2+N	97118866	9	2	473	96051762	ABGASANLAGE VORM.
BLECH 20X45X230 S690QL	953608508	5	2	747	919933308	TRANSPORTHALTERUNG DKS
BLECH 235X575 DC01 FE//ZNNI	97100731	4	1	287	96024716	BATTERIEKASTEN VORM.
BLECH 2X114X114 DC01 FE//	957018808	8	4	670	91000053	TELESKOP 4 VORM.
BLECH 2X114X114 DC01 FE//	957018808	8	4	673	91000054	TELESKOP 5 VORM.
BLECH 2X124X124 DC01 FE//	957011208	8	4	661	91000050	TELESKOP 1 VORM.
BLECH 2X124X124 DC01 FE//	957011208	8	4	664	91000051	TELESKOP 2 VORM.
BLECH 2X124X124 DC01 FE//	957011208	8	4	667	91000052	TELESKOP 3 VORM.
BLECH 2X128X128 DC01 FE//	97045517	7	1	768	91001040	ANLENKSTUECK VORM.
BLECH 2X128X128 DC01 FE//	97045517	11	1	771	918596708	KOPFSTUECK VORM.
BLECH 2X140X265 X5CRNI18-1	97059260	2	1	461	96074081	HARNSTOFFTANK VORM.
BLECH 2X143X88 DC01 FE//ZN	97083880	1	1	506	926891108	VERTEILER MASSE
BLECH 2X143X92 X5CRNI18-1	97030562	3	1	736	96056560	WINDWARNUNG VORM.
BLECH 2X155X38 DC01 FE//ZN	971067708	1	1	726	967321308	HALTERUNG 2.HUB OBEN
BLECH 2X156X137 DC01 RAL 7	97071962	15	1	329	916170808	KABELEINFUEHRUNG
BLECH 2X158X79 DC01 FE//ZN	97061320	8	1	268	918811108	ANTRIEBSAGGREGAT VORM.
BLECH 2X162X131 DC01 FE//	97013089	20	1	268	918811108	ANTRIEBSAGGREGAT VORM.
BLECH 2X162X142 ALMG3 H11	976536208	3	1	507	968015808	MONTAGEEINHEIT VORM.
BLECH 2X165X115 DC01 FE//	973733508	21	1	268	918811108	ANTRIEBSAGGREGAT VORM.
BLECH 2X170X116 DC01 FE//	97049613	37	1	407	96022627	DREHBUEHNENVERKLEIDUN
BLECH 2X170X51 DC01 FE//ZN	97024781	19	1	346	916162508	SCHEIBEN EINBAU
BLECH 2X177X240 DC01 FE//	97006461	9	1	355	916163008	WISCHANLAGE EINBAU
BLECH 2X188X40 DC01 FE//ZN	978661408	1	1	508	966193108	WIDERSTANDSMODUL VORM.
BLECH 2X195X66 X5CRNI18-1	974742308	7	1	410	969425608	KLAPPE VORM.RECHTS
BLECH 2X200X100 X5CRNI18-1	975352908	1	1	595	96062735	BESCHILDERUNG
BLECH 2X227X109 DC01 FE//	97005289	5	1	349	966497908	FRONTSCHEIBE KPL.
BLECH 2X231X192 DC01 RAL	97025080	24	1	624	96036820	AUSRUESTUNG KAMERA KAB
BLECH 2X236X50 X5CRNI18-1	974656608	7	1	416	969399608	KLAPPE VORM.
BLECH 2X245X245 DC01 FE//	953744908	61	2	655	91000049	ANLENKSTUECK VORM.
BLECH 2X275X250 DC01 FE//	979896608	1	1	87	96062922	MONTAGEPLATTE VORM.
BLECH 2X278X250 DC01 FE//	97140373	13	2	652	919935408	TELESKOPAUSLEGER KPL.
BLECH 2X290X100 DC01 FE//	97037945	28	2	47	968374708	MONTAGETEILE
BLECH 2X291X205 X5CRNI18-1	973272208	5	1	623	915403108	ANBAUTEILE KAMERA
BLECH 2X300X125 DC01 FE//	97045050	25	1	268	918811108	ANTRIEBSAGGREGAT VORM.
BLECH 2X300X27 DC01 FE//ZN	97048294	24	1	407	96022627	DREHBUEHNENVERKLEIDUN
BLECH 2X30X130 DC01 FE//ZN	97062383	18	1	768	91001040	ANLENKSTUECK VORM.
BLECH 2X310X22 DC01 FE//ZN	97047056	25	1	407	96022627	DREHBUEHNENVERKLEIDUN
BLECH 2X35X100 DC01 FE//ZN	957068808	25	3	581	96062734	HILFSHUBWERK
BLECH 2X361X79 DC01 FE//ZN	97072959	30	1	268	918811108	ANTRIEBSAGGREGAT VORM.
BLECH 2X363X413 ALMG3 H11	97067161	2	1	476	918729308	LUFTFILTERANLAGE
BLECH 2X370X600 ALMG3 H11	97067253	23	1	407	96022627	DREHBUEHNENVERKLEIDUN
BLECH 2X377X579 X5CRNI18-1	97072923	(1)	1	268	918811108	ANTRIEBSAGGREGAT VORM.
BLECH 2X381X148 DC01 FE//	97003805	10	1	321	96015921	BEDIENELEMENTE EINBAU
BLECH 2X405X202 ALMG3 H11	97047025	8	1	272	96020819	KUEHLER VORM.
BLECH 2X50X115 X5CRNI18-1	974657908	17	1	415	96024809	DREHBUEHNENVERKLEIDUN
BLECH 2X50X76 X5CRNI18-10	973536508	8	6	378	963564908	HAUPTHUBWERK VORM.
BLECH 2X550X297 DC01	97100598	3	1	287	96024716	BATTERIEKASTEN VORM.
BLECH 2X597X541 ALMG3 H11	97100184	30	1	407	96022627	DREHBUEHNENVERKLEIDUN
BLECH 2X680X420 DC01	956470108	24	1	652	919935408	TELESKOPAUSLEGER KPL.
BLECH 2X700X109 DC01 FE//	97025690	8	1	334	917304508	KRANFUEHRERKABINE VORM.
BLECH 2X703X192 ALMG3 H11	97042029	3	1	272	96020819	KUEHLER VORM.
BLECH 2X70X80 DC01 FE//ZN	953515408	5	5	290	917962508	KRAFTSTOFFBEHAELTER AN
BLECH 2X70X80 DC01 FE//ZN	953515408	3	7	293	918008908	OELBEHAELTER ANBAU
BLECH 2X719X40 DC01 FE//ZN	97005273	4	1	349	966497908	FRONTSCHEIBE KPL.

Bezeichnung	Artikel	Pos.	Menge	Seite	Baugruppe	Bezeichnung
BLECH 2X721X107 DC01 FE//	97043680	31	1	407	96022627	DREHBUEHNENVERKLEIDUN
BLECH 2X737X46 DC01 FE//ZN	979022508	6	1	350	965784408	DACHSCHEIBE VORM.
BLECH 2X73X380 DC01 FE//ZN	97045515	23	2	771	918596708	KOPFSTUECK VORM.
BLECH 2X748X942 DC01	97139571	5	1	562	919528608	OELKUEHLER EINBAU
BLECH 2X752X515 DC01	97063985	32	1	407	96022627	DREHBUEHNENVERKLEIDUN
BLECH 2X759X264 ALMG3 H11	97041782	4	1	272	96020819	KUEHLER VORM.
BLECH 2X810X132 DC01 RAL 7	97000470	14	1	338	917305408	INNENVERKLEIDUNG EINBAU
BLECH 2X895X965 DC01	97058579	4	1	562	919528608	OELKUEHLER EINBAU
BLECH 2X90X60 DC01 FE//ZN	97032617	4	4	52	968374908	ENDSCHALTER ANBAU
BLECH 30X126X51 S355J2+N	97098868	3	1	473	96051762	ABGASANLAGE VORM.
BLECH 3X111X222 DC01 FE//	971135808	19	1	723	964502908	MASTNASE VORM.
BLECH 3X125X48 DC01 FE//ZN	97096913	22	1	760	918533508	ADAPTER VORM.
BLECH 3X127X139 X5CRNI18-1	97055661	3	3	470	919674308	ABGASANLAGE
BLECH 3X128X30 DC01 FE//ZN	973114708	21	4	376	919935508	HAUPTHUBWERK
BLECH 3X1293X146 ALMG3 H	97058580	35	1	407	96022627	DREHBUEHNENVERKLEIDUN
BLECH 3X130X140 X5CRNI18-1	97038824	1	1	127	968305308	ENDSCHALTER VORM.
BLECH 3X135X251 ALMG3 H1	97045292	5	1	340	966282308	VERKLEIDUNG LI.
BLECH 3X138X77 DC01 FE//ZN	97150626	6	2	658	96014777	HUBSEILFUEHRUNG VORM.
BLECH 3X145X42 DC01 FE//ZN	97003990	20	1	444	918759708	ZUSATZHEIZUNG OW
BLECH 3X146X80 DC01 FE//ZN	970771908	(2)	1	33	967304508	HYDRAULIK UNTERWAGEN
BLECH 3X146X80 DC01 FE//ZN	970771908	29	1	47	968374708	MONTAGETEILE
BLECH 3X155X139 DC01 FE//	97049599	36	1	407	96022627	DREHBUEHNENVERKLEIDUN
BLECH 3X155X210 X5CRNI18-1	97060224	5	1	470	919674308	ABGASANLAGE
BLECH 3X157X121 DC01 FE//	97131533	1	1	421	96044787	HALTER VORM.
BLECH 3X160X522 X5CRNI18-1	97050040	1	1	781	968940708	HALTER LINKS
BLECH 3X160X522 X5CRNI18-1	97050040	1	1	782	968940808	HALTER RECHTS
BLECH 3X163X159 X5CRNI18-1	97098872	8	1	470	919674308	ABGASANLAGE
BLECH 3X164X250 DC01 FE//	97085847	3	2	461	96074081	HARNSTOFFTANK VORM.
BLECH 3X180X70 DC01 FE//ZN	957025808	29	2	667	91000052	TELESKOP 3 VORM.
BLECH 3X193X93 S355MC FE//	97081862	6	2	327	96025887	PEDALTRAEGER EINBAU
BLECH 3X206X85 X5CRNI18-1	97127896	8	2	473	96051762	ABGASANLAGE VORM.
BLECH 3X212X271 DC01 FE//	97057135	31	1	444	918759708	ZUSATZHEIZUNG OW
BLECH 3X229X285 DC01 FE//	97075057	26	1	268	918811108	ANTRIEBSAGGREGAT VORM.
BLECH 3X232X317 ALMG3 H11	97045987	1	2	476	918729308	LUFTFILTERANLAGE
BLECH 3X240X109 S355MC FE	97132207	1	1	100	96045217	MECHANISCHE ANBAUTEILE
BLECH 3X240X98 X5CRNI18-1	97055896	4	1	470	919674308	ABGASANLAGE
BLECH 3X255X133 DC01	975874208	8	1	290	917962508	KRAFTSTOFFBEHAELTER AN
BLECH 3X25X112 X5CRNI18-1	97132679	1	1	423	96045536	BLECH VORM.
BLECH 3X26X26 DC01 FE//ZN	971974208	22	2	395	918810308	STEUERSTAND
BLECH 3X274X221 S355MC FE	97042788	14	1	124	918728408	MONTAGETEILE DREHBUEHN
BLECH 3X292X697 X5CRNI18-1	97050043	2	1	782	968940808	HALTER RECHTS
BLECH 3X294X224 S355MC FE	97042787	18	1	124	918728408	MONTAGETEILE DREHBUEHN
BLECH 3X295X159 S355MC FE	974680008	2	2	327	96025887	PEDALTRAEGER EINBAU
BLECH 3X302X386 DC01 FE//	97138345	1	1	604	96066401	MECHANISCHE ANBAUTEILE
BLECH 3X30X119 X5CRNI18-1	97026779	54	1	361	917304708	SCHIEBETUER EINBAU
BLECH 3X30X130 DC01 FE//ZN	97062384	19	1	768	91001040	ANLENKSTUECK VORM.
BLECH 3X30X60 S355MC RAL 7	97095079	24	1	446	96019783	ZUSATZHEIZUNG VORM.
BLECH 3X318X697 X5CRNI18-1	97050041	2	1	781	968940708	HALTER LINKS
BLECH 3X342X268 DC01 FE//	97072740	27	1	268	918811108	ANTRIEBSAGGREGAT VORM.
BLECH 3X366X104 DC01 RAL 9	977444008	15	1	395	918810308	STEUERSTAND
BLECH 3X366X104 DC01 RAL 9	977444108	16	1	395	918810308	STEUERSTAND
BLECH 3X390X340 DC01 FE//	97162173	6	1	606	91002360	LADEGERAET
BLECH 3X40X300 DC01 FE//ZN	953781608	(1)	2	566	969767908	VERROHRUNG DRUCKLUFTA
BLECH 3X40X373 S355MC FE//	97117720	2	1	577	96033759	ANBAUTEILE ARBEITSSCHEIN
BLECH 3X430X104 DC01 FE//	97084676	19	1	415	96024809	DREHBUEHNENVERKLEIDUN
BLECH 3X439X212 X5CRNI18-1	974497908	21	1	581	96062734	HILFSHUBWERK
BLECH 3X44X75 DC01 FE//ZN	97038825	2	1	127	968305308	ENDSCHALTER VORM.
BLECH 3X45X120 DC01 FE//ZN	953760908	(1)	1	591	96064697	HYDRAULIK HILFSHUBWERK
BLECH 3X530X215 S355MC FE	97092558	15	1	47	968374708	MONTAGETEILE
BLECH 3X60X25 DC01 FE//ZN	97001250	8	2	352	916168308	LUFTFUEHRUNG

Bezeichnung	Artikel	Pos.	Menge	Seite	Baugruppe	Bezeichnung
BLECH 3X60X80 DC01 FE//ZN	973717208	18	2	268	918811108	ANTRIEBSAGGREGAT VORM.
BLECH 3X630X160 DC01 FE//	97100178	34	1	407	96022627	DREHBUEHNENVERKLEIDUN
BLECH 3X71X218 DC01 FE//ZN	97071587	28	1	268	918811108	ANTRIEBSAGGREGAT VORM.
BLECH 3X74X98 X5CRNI18-10	97098871	7	3	470	919674308	ABGASANLAGE
BLECH 3X75X61 X5CRNI18-10	97000492	26	1	361	917304708	SCHIEBETUER EINBAU
BLECH 3X80X68 DC01 FE//ZN	973717308	17	1	268	918811108	ANTRIEBSAGGREGAT VORM.
BLECH 3X873X323 S355MC FE	97087617	2	1	658	96014777	HUBSEILFUEHRUNG VORM.
BLECH 3X88X96 DC01 FE//ZN	97030183	12	1	268	918811108	ANTRIEBSAGGREGAT VORM.
BLECH 40X40 DC01 FE//ZNNI8/	971974108	21	4	395	918810308	STEUERSTAND
BLECH 4X104X325 S315MC FE	97040100	6	2	52	968374908	ENDSCHALTER ANBAU
BLECH 4X110X77 S315MC FE//	979717908	16	2	410	969425608	KLAPPE VORM.RECHTS
BLECH 4X113X87 S315MC FE//	97044949	6	1	272	96020819	KUEHLER VORM.
BLECH 4X125X178 S315MC FE	97037626	26	2	47	968374708	MONTAGETEILE
BLECH 4X132X73 S315MC FE//	97041747	23	1	268	918811108	ANTRIEBSAGGREGAT VORM.
BLECH 4X137X44 S315MC FE//	97084144	5	2	658	96014777	HUBSEILFUEHRUNG VORM.
BLECH 4X138X138 S315MC FE	975208408	6	1	321	96015921	BEDIENELEMENTE EINBAU
BLECH 4X138X242 S315MC R	97041916	10	1	326	968483708	TRITT KPL.
BLECH 4X140X113 S315MC FE	953649008	(2)	1	591	96064697	HYDRAULIK HILFSHUBWERK
BLECH 4X142X218 S315MC R	97041915	9	1	326	968483708	TRITT KPL.
BLECH 4X173X230 S315MC FE	97044948	5	1	272	96020819	KUEHLER VORM.
BLECH 4X182X695 S315MC FE	955560708	41	1	760	918533508	ADAPTER VORM.
BLECH 4X188X172 S315MC FE	974730008	20	2	581	96062734	HILFSHUBWERK
BLECH 4X190X158 S315MC FE	97133542	3	1	48	96046146	SCHUTZ KPL.
BLECH 4X206X342 S315MC FE	97045637	20	1	407	96022627	DREHBUEHNENVERKLEIDUN
BLECH 4X222X213 S315MC FE	97043211	22	1	268	918811108	ANTRIEBSAGGREGAT VORM.
BLECH 4X224X146 S315MC FE	97048362	9	1	407	96022627	DREHBUEHNENVERKLEIDUN
BLECH 4X228X191 S315MC FE	97066655	7	1	562	919528608	OELKUEHLER EINBAU
BLECH 4X228X191 S315MC FE	97066656	9	1	562	919528608	OELKUEHLER EINBAU
BLECH 4X246X20 S315MC FE//	955002908	64	1	761	918533508	ADAPTER VORM.
BLECH 4X246X213 S315MC FE	97111977	8	1	125	963260408	VERRIEGELUNG
BLECH 4X246X213 S315MC FE	97111977	8	1	126	96049764	VERRIEGELUNG
BLECH 4X250X190 S315MC FE	953749408	65	1	673	91000054	TELESKOP 5 VORM.
BLECH 4X255X278 X5CRNI18-1	97047477	4	2	473	96051762	ABGASANLAGE VORM.
BLECH 4X270X157 S315MC FE	954141508	17	1	478	915300208	ZENTRALSCHMIERANLAGE O
BLECH 4X290X230 S315MC FE	972335908	70	1	655	91000049	ANLENKSTUECK VORM.
BLECH 4X293X157 X5CRNI18-1	97055891	2	1	470	919674308	ABGASANLAGE
BLECH 4X30X128 S315MC FE//	970836008	30	1	444	918759708	ZUSATZHEIZUNG OW
BLECH 4X30X82 X5CRNI18-10	97093827	5	4	473	96051762	ABGASANLAGE VORM.
BLECH 4X324X189 S315MC FE	976822308	(2)	1	598	96075086	HYDRAULIK HILFSHUBWERK D
BLECH 4X336X157 S315MC FE	975230508	7	2	780	917508508	LEITER ANBAU
BLECH 4X347X222 S315MC FE	97000389	6	1	355	916163008	WISCHANLAGE EINBAU
BLECH 4X400X200 S315MC FE	977753708	13	1	61	917155308	HYDRAULIK VORB.
BLECH 4X410X98 S315MC FE//	979537108	16	1	415	96024809	DREHBUEHNENVERKLEIDUN
BLECH 4X416X298 S315MC FE	97092340	1	2	577	96033759	ANBAUTEILE ARBEITSSCHEIN
BLECH 4X465X159 S315MC FE	97056627	11	1	415	96024809	DREHBUEHNENVERKLEIDUN
BLECH 4X478X160 S315MC FE	97116341	1	1	306	96066239	KRAFTSTOFFFILTER VORM.
BLECH 4X48X29 S315MC RAL	97007597	60	4	339	917305408	INNENVERKLEIDUNG EINBAU
BLECH 4X50X80 S315MC FE//	979719508	21	1	407	96022627	DREHBUEHNENVERKLEIDUN
BLECH 4X510X850 S235JR	958346414	4	2	40	990840414	ABDECKUNG
BLECH 4X528X266 S315MC R	97041914	8	1	326	968483708	TRITT KPL.
BLECH 4X52X32 S315MC FE//	97024783	24	1	346	916162508	SCHEIBEN EINBAU
BLECH 4X564X493 S315MC FE	97117576	4	1	263	918728708	ANTRIEBSAGGREGAT KPL.
BLECH 4X60X163 S315MC FE//	97045111	19	1	268	918811108	ANTRIEBSAGGREGAT VORM.
BLECH 4X62X134 S315MC	97132169	25	2	119	96045222	MONTAGETEILE
BLECH 4X65X65 S315MC FE//	979326008	15	1	315	917357108	KRANFUEHRERKABINE ANBA
BLECH 4X74X219 S315MC FE//	97132168	24	2	119	96045222	MONTAGETEILE
BLECH 4X80X254 S315MC FE//	957102808	38	1	747	919933308	TRANSPORTHALTERUNG DKS
BLECH 4X811X527 S315MC FE	97088601	44	1	760	918533508	ADAPTER VORM.
BLECH 4X828X147 S315MC FE	97132325	4	1	461	96074081	HARNSTOFFTANK VORM.
BLECH 4X86X40 S315MC FE//	97084142	3	2	658	96014777	HUBSEILFUEHRUNG VORM.

Bezeichnung	Artikel	Pos.	Menge	Seite	Baugruppe	Bezeichnung
BLECH 4X879X259 S315MC FE	97039169	10	1	415	96024809	DREHBUEHNENVERKLEIDUN
BLECH 4X89X233 S315MC FE//	97088602	48	1	760	918533508	ADAPTER VORM.
BLECH 4X90X67 S315MC FE//	954113708	26	1	407	96022627	DREHBUEHNENVERKLEIDUN
BLECH 4X90X70 S315MC FE//	975170608	18	1	415	96024809	DREHBUEHNENVERKLEIDUN
BLECH 4X927X220 X5CRNI18-1	97042014	(2)	1	326	968483708	TRITT KPL.
BLECH 4X93X68 S315MC RAL	97006057	19	1	349	966497908	FRONTSCHEIBE KPL.
BLECH 4x383x125 S315MC FE//	957032508	44	4	655	91000049	ANLENKSTUECK VORM.
BLECH 4x383x125 S315MC FE//	957032508	44	4	661	91000050	TELESKOP 1 VORM.
BLECH 4x383x125 S315MC FE//	957032508	44	4	664	91000051	TELESKOP 2 VORM.
BLECH 4x383x125 S315MC FE//	957032508	44	2	667	91000052	TELESKOP 3 VORM.
BLECH 4x383x125 S315MC FE//	957032508	44	2	670	91000053	TELESKOP 4 VORM.
BLECH 50X200X20 S355J2+N	971799908	29	2	581	96062734	HILFSHUBWERK
BLECH 50X250X210 S355J2+N	977240208	19	1	22	96062226	RAUPENTRAEGER KPL.RE.
BLECH 50X250X210 S355J2+N	977240208	19	1	27	96062228	RAUPENTRAEGER KPL.LI.
BLECH 5X1099X558 X5CRNI18	976638108	24	1	376	919935508	HAUPTHUBWERK
BLECH 5X110X154 S355MC FE	955560308	6	1	723	964502908	MASTNASE VORM.
BLECH 5X110X154 S355MC FE	955560308	15	1	763	917695308	UMLENKROLLE VORM.
BLECH 5X110X210 S355MC FE	977905308	14	1	61	917155308	HYDRAULIK VORB.
BLECH 5X120X20 S355MC T Z	97133214	57	1	673	91000054	TELESKOP 5 VORM.
BLECH 5X140X380 S355MC	967232803	14	2	30	992078314	MITTELTEIL
BLECH 5X180X141 S355MC T Z	97126551	10	2	655	91000049	ANLENKSTUECK VORM.
BLECH 5X184X184 S960QL	955450608	38	2	655	91000049	ANLENKSTUECK VORM.
BLECH 5X184X184 S960QL	955450608	38	2	661	91000050	TELESKOP 1 VORM.
BLECH 5X184X184 S960QL	955450608	38	2	664	91000051	TELESKOP 2 VORM.
BLECH 5X184X184 S960QL	955450608	38	2	667	91000052	TELESKOP 3 VORM.
BLECH 5X184X184 S960QL	955450608	38	2	670	91000053	TELESKOP 4 VORM.
BLECH 5X200X130 S355MC	977441008	22	2	22	96062226	RAUPENTRAEGER KPL.RE.
BLECH 5X200X130 S355MC	977441008	22	2	27	96062228	RAUPENTRAEGER KPL.LI.
BLECH 5X240X130 S355MC	976540808	31	2	22	96062226	RAUPENTRAEGER KPL.RE.
BLECH 5X240X130 S355MC	976540808	31	1	28	96062228	RAUPENTRAEGER KPL.LI.
BLECH 5X349X30 S355MC FE//	976993208	1	4	47	968374708	MONTAGETEILE
BLECH 5X366X288 X5CRNI18-1	976514908	26	2	70	915447908	HYDRAULISCHE ABSTUETZUN
BLECH 5X366X288 X5CRNI18-1	976515008	27	2	70	915447908	HYDRAULISCHE ABSTUETZUN
BLECH 5X409X288 X5CRNI18-1	976514408	25	2	70	915447908	HYDRAULISCHE ABSTUETZUN
BLECH 5X409X288 X5CRNI18-1	976515108	28	2	70	915447908	HYDRAULISCHE ABSTUETZUN
BLECH 5X41X63 S960QL	954762708	10	1	670	91000053	TELESKOP 4 VORM.
BLECH 5X41X63 S960QL	954762708	10	1	673	91000054	TELESKOP 5 VORM.
BLECH 5X420X742 ALMG3 H11	97132471	3	1	458	91003833	HARNSTOFFANLAGE
BLECH 5X590X79 X5CRNI18-1	97042015	(3)	1	326	968483708	TRITT KPL.
BLECH 5X590X79 X5CRNI18-1	97042016	(4)	1	326	968483708	TRITT KPL.
BLECH 5X60X60 S355MC FE//	953676308	7	2	290	917962508	KRAFTSTOFFBEHAELTER AN
BLECH 5X60X60 S355MC FE//	953676308	2	4	293	918008908	OELBEHAELTER ANBAU
BLECH 5X670X510 S355MC	976540508	25	1	22	96062226	RAUPENTRAEGER KPL.RE.
BLECH 5X670X510 S355MC	976540508	25	1	28	96062228	RAUPENTRAEGER KPL.LI.
BLECH 5X80X381 S355MC FE//	97145502	25	2	655	91000049	ANLENKSTUECK VORM.
BLECH 5X80X488 S355MC FE//	955523908	26	4	655	91000049	ANLENKSTUECK VORM.
BLECH 5x69x44 S960QL FE/FL	970148308	10	1	661	91000050	TELESKOP 1 VORM.
BLECH 5x69x44 S960QL FE/FL	970148308	10	1	664	91000051	TELESKOP 2 VORM.
BLECH 5x69x44 S960QL FE/FL	970148308	10	1	667	91000052	TELESKOP 3 VORM.
BLECH 6X346X227 S355MC	976541508	11	1	61	917155308	HYDRAULIK VORB.
BLECH 6X363X312 S355MC	97042444	16	1	47	968374708	MONTAGETEILE
BLECH 6X363X312 S355MC	97042444	(1)	1	63	967301408	HYDRAULIK VORB.
BLECH 8X100X166 S355MC FE	976541308	12	4	61	917155308	HYDRAULIK VORB.
BLECH 8X138X44 S355MC FE//	97087497	7	2	658	96014777	HUBSEILFUEHRUNG VORM.
BLECH 8X195X15 S355MC FE//	97130445	16	4	420	919484908	ABSTURZSICHERUNG
BLECH 8X25X160 S355MC FE//	952940908	15	2	410	969425608	KLAPPE VORM.RECHTS
BLECH 8X270X228 S355MC	97020762	4	1	315	917357108	KRANFUEHRERKABINE ANBA
BLECH 8X274X228 S355MC	97020761	3	1	315	917357108	KRANFUEHRERKABINE ANBA
BLECH 8X30X58 S355MC FE//	955974308	29	1	747	919933308	TRANSPORTHALTERUNG DKS
BLECH 8X315X425 S960	957039908	49	2	670	91000053	TELESKOP 4 VORM.

Bezeichnung	Artikel	Pos.	Menge	Seite	Baugruppe	Bezeichnung
BLECH 8X325X325 S355MC FE	97042667	11	2	19	96062225	UNTERWAGEN KPL.
BLECH 8X383X431 S960 RAL 7	97154300	49	2	667	91000052	TELESKOP 3 VORM.
BLECH 8X404X456 S960 RAL 7	97154299	49	2	664	91000051	TELESKOP 2 VORM.
BLECH 8X428X484 S960 RAL 7	97154298	49	2	661	91000050	TELESKOP 1 VORM.
BLECH 8X452X512 S960 RAL 7	97154297	49	2	655	91000049	ANLENKSTUECK VORM.
BLECH 8X70X182 S960 FE//FLZ	955552608	24	1	747	919933308	TRANSPORTHALTERUNG DKS
BLECH 8X965X516 S700MC	974911208	21	1	747	919933308	TRANSPORTHALTERUNG DKS
BLECH 8x160x79 S700MC	970298308	51	1	655	91000049	ANLENKSTUECK VORM.
BLECH 8x160x79 S700MC	970298308	51	1	661	91000050	TELESKOP 1 VORM.
BLECH 8x160x79 S700MC	970298308	51	1	664	91000051	TELESKOP 2 VORM.
BLECH 8x160x79 S700MC	970298308	51	1	667	91000052	TELESKOP 3 VORM.
BLECH 8x160x79 S700MC	970298308	51	1	670	91000053	TELESKOP 4 VORM.
BLECH DC01	927530301	14	1	369	933074801	DREHWERKANTRIEB
BLECH RST 37-2 LH-GRAU	958340414	5	2	40	990840414	ABDECKUNG
BLECH S315MC FE//ZNNI8//CN/	953696908	15	1	478	915300208	ZENTRALSCHMIERANLAGE O
BLECH S315MC FE//ZNNI8//CN/	970762808	(1)	2	33	967304508	HYDRAULIK UNTERWAGEN
BLECH S315MC FE//ZNNI8//CN/	970762808	30	1	47	968374708	MONTAGETEILE
BLECH SCHWK.	96062303	17	1	768	91001040	ANLENKSTUECK VORM.
BLECH SCHWK.	966363808	37	1	361	917304708	SCHIEBETUER EINBAU
BLECH SCHWK. FE//ZNNI8//CN/	966629308	1	1	327	96025887	PEDALTRAEGER EINBAU
BLECH SCHWK. FE//ZNNI8//CN/	967257808	39	2	395	918810308	STEUERSTAND
BLECH SCHWK. FE//ZNNI8//CN/	967775308	34	1	338	917305408	INNENVERKLEIDUNG EINBAU
BLECH SCHWK. FE//ZNNI8//FN/	966497808	2	1	349	966497908	FRONTSCHEIBE KPL.
BLECH SCHWK. RAL 9005,M,G	96022873	1	1	435	96022872	ARMATURENBRETT DACH
BLECH SCHWK. RAL 9005,M,G	96048684	3	1	610	96050762	ELEKTRIK ANBAUTEILE
BLECH SCHWK. RAL 9005,M,G	965417108	17	1	431	96056347	ELEKTRIK ANBAUTEILE KABIN
BLECH SCHWK. SPF	969431908	6	1	407	96022627	DREHBUEHNENVERKLEIDUN
BLECH STAHLBLECH	11083215	7	1	388	11083498	HEIZKLIMAGERAET
BLECH VORM.	96045536	13	1	420	919484908	ABSTURZSICHERUNG
BLECHMUTTER M8 480H SPF	12100332	350	2	263	918728708	ANTRIEBSAGGREGAT KPL.
BLECHMUTTER M8 480H SPF	12100332	5	4	285	918955208	BATTERIEKASTEN KPL.
BLECHMUTTER M8 480H SPF	12100332	352	2	408	96022627	DREHBUEHNENVERKLEIDUN
BLECHMUTTER M8 480H SPF	12100332	352	4	415	96024809	DREHBUEHNENVERKLEIDUN
BLECHMUTTER M8 480H SPF	12100332	73	12	461	96074081	HARNSTOFFTANK VORM.
BLECHSCHRAUBE ISO 7049 ST	10875793	10	2	575	918627208	KLIMAANLAGE OW
BLECHSCHRAUBE ISO 7050 ST	10876382	43	16	338	917305408	INNENVERKLEIDUNG EINBAU
BLENDE	10870472	69	1	432	96056347	ELEKTRIK ANBAUTEILE KABIN
BLENDE 3X741X401 ALMG3 H	97132326	5	1	461	96074081	HARNSTOFFTANK VORM.
BLINDABDECKUNG	11822051	33	1	431	96056347	ELEKTRIK ANBAUTEILE KABIN
BLINDNIET 3,0X3,2-5,0	704212108	4	12	508	966193108	WIDERSTANDSMODUL VORM.
BLINDNIET 4,0X10,5	704232308	72	18	502	96025348	GRUNDAUFBAU
BLINDNIETMUTTER M10 K=2,0	12100265	13	1	334	917304508	KRANFUEHRERKABINE VORM.
BLINDNIETMUTTER M4 K=1,0-	413006208	13	4	319	919010108	KRANFUEHRERKABINE VORM.
BLINDNIETMUTTER M6 K=1,5-	10042593	11	19	334	917304508	KRANFUEHRERKABINE VORM.
BLINDNIETMUTTER M6 K=1,5-	10042593	35	13	361	917304708	SCHIEBETUER EINBAU
BLINDNIETMUTTER M8 K=3,0-5	12100289	12	9	334	917304508	KRANFUEHRERKABINE VORM.
BLINDNIETMUTTER M8 K=3,0-5	12100289	2	2	423	96045536	BLECH VORM.
BLINDSTECKER DT 2 POLIG	10353004	530	1	494	96023971	KABELSTRANG
BLINDSTOPFEN	692404908	811	1	491	96063649	KABELSTRANG
BLINDSTOPFEN	692404908	811	2	494	96023971	KABELSTRANG
BLINDSTOPFEN 3,6MM SILIK	602331108	806	12	90	96062920	KABELSTRANG
BLINDSTOPFEN 3,6MM SILIK	602331108	806	12	98	96045216	KABELSTRANG
BLINDSTOPFEN 3,6MM SILIK	602331108	806	12	491	96063649	KABELSTRANG
BLINDSTOPFEN 3,6MM SILIK	602331108	806	41	494	96023971	KABELSTRANG
BLINDSTOPFEN 3,6MM SILIK	602331108	806	12	640	96045220	KABELSTRANG
BLINDSTOPFEN 3,6MM SILIK	602331108	806	12	694	96063583	LEITUNG
BLINDSTOPFEN 3,6MM SILIK	602331108	806	12	699	96051215	DRAEHTE
BLINDSTOPFEN 3,9-4,1MM SIL	10870403	844	1	496	96049294	KABELSTRANG
BLINDSTOPFEN AMP JPT-SER	602329208	807	2	494	96023971	KABELSTRANG
BLINDSTOPFEN AMP JPT-SER	602329208	807	2	694	96063583	LEITUNG

Bezeichnung	Artikel	Pos.	Menge	Seite	Baugruppe	Bezeichnung
BLINDSTOPFEN AMP JPT-SER	602329208	807	3	699	96051215	DRAEHTE
BLINDSTOPFEN BAUREIHE_M	604518908	812	5	704	96062034	DRAEHTE KLEMMKASTEN KPL
BLINDSTOPFEN BAUREIHE_M	604518908	812	7	775	96035674	LEITUNG
BLINDSTOPFEN DEUTSCH GR	7368253	823	5	427	96023891	KABELSTRANG
BLINDSTOPFEN DEUTSCH GR	7368253	823	3	494	96023971	KABELSTRANG
BLINDSTOPFEN DEUTSCH GR	7368253	823	1	496	96049294	KABELSTRANG
BLINDSTOPFEN DEUTSCH-ST	10800046	842	6	494	96023971	KABELSTRANG
BLINDSTOPFEN DIN 72585 4	692405808	817	1	491	96063649	KABELSTRANG
BLINDSTOPFEN DIN 72585 4	692405808	817	2	496	96049294	KABELSTRANG
BLINDSTOPFEN DIN 72585 7	692405708	822	3	491	96063649	KABELSTRANG
BLINDSTOPFEN MCON 1,23,5	10813642	836	1	496	96049294	KABELSTRANG
BLINDSTOPFEN VSTI1/4"ED C	477704008	604	2	63	967301408	HYDRAULIK VORB.
BLINDSTOPFEN VSTI1/4"ED C	477704008	62	5	522	11170514	VENTILBLOCK
BLINDSTOPFEN VSTI1/4"ED C	477704008	62	1	528	11170515	VENTILBLOCK
BLINDSTOPFEN VSTI1/4"ED C	477704008	62	1	530	11170518	VENTILBLOCK
BLINDSTOPFEN VSTI1/4"ED C	477704008	62	1	531	11170519	VENTILBLOCK
BLINDSTOPFEN VSTI1/4"ED C	477704008	46	3	534	10802090	STEUERBLOCK
BLINDSTOPFEN VSTI1/4"ED C	477704008	17	6	540	511486908	STEUERLEISTE
BLINDSTOPFEN VSTI1/4"ED C	477704008	120	4	543	10333672	STEUERBLOCK
BLINDSTOPFEN VSTI1/4"ED C	477704008	11	2	550	10663060	STEUERBLOCK
BLINDSTOPFEN VSTI1/4"ED C	477704008	2	2	551	10355774	SENKBREMSVENTIL
BLINDSTOPFEN VSTI1/4"ED C	477704008	1	2	552	10292670	SENKBREMSVENTIL
BLINDSTOPFEN VSTIM10X1ED	477705508	23	3	380	968558601	KOMPAKTSEILWINDE
BLINDSTOPFEN VSTIM10X1ED	477705508	23	2	583	938707001	KOMPAKTSEILWINDE
BLOCK	510713808	1	1	37	510438508	DRUCKMINDERVENTIL
BLOCK	510714308	14	1	37	510438508	DRUCKMINDERVENTIL
BLOCK GR.12	511475314	350	1	33	967304508	HYDRAULIK UNTERWAGEN
BODENBLECH	96000683	1	1	562	919528608	OELKUEHLER EINBAU
BODENBLECH SCHWK.	969426008	4	1	407	96022627	DREHBUEHNENVERKLEIDUN
BODENBLECH SCHWK. SPF	96024811	4	1	415	96024809	DREHBUEHNENVERKLEIDUN
BODENMATTE 227X798X849	97000467	11	1	338	917305408	INNENVERKLEIDUNG EINBAU
BODENMATTE 61X753X552 PU	97000466	10	1	338	917305408	INNENVERKLEIDUNG EINBAU
BOLZEN 115.0X228 35NICRM	957017608	6	1	670	91000053	TELESKOP 4 VORM.
BOLZEN 115.0X228 35NICRM	957017608	6	1	673	91000054	TELESKOP 5 VORM.
BOLZEN 118X340 35NICRMOV	956657414	8	8	47	968374708	MONTAGETEILE
BOLZEN 12.0X140 S355J2C+C	942053708	12	4	119	96045222	MONTAGETEILE
BOLZEN 120.0X225 35NICRM	972608108	2	1	626	919616808	WIPPZYLINDER M.LAGERUNG
BOLZEN 125.0X233 35NICRM	957011008	6	1	661	91000050	TELESKOP 1 VORM.
BOLZEN 125.0X233 35NICRM	957011008	6	1	664	91000051	TELESKOP 2 VORM.
BOLZEN 125.0X233 35NICRM	957011008	6	1	667	91000052	TELESKOP 3 VORM.
BOLZEN 12X49 X5CRNI18-10	97170279	28	1	346	916162508	SCHEIBEN EINBAU
BOLZEN 160.0x195 35NICRM	956164808	3	1	626	919616808	WIPPZYLINDER M.LAGERUNG
BOLZEN 160X50 35NICRMOV12	956214014	29	2	22	96062226	RAUPENTRAEGER KPL.RE.
BOLZEN 160X50 35NICRMOV12	956214014	29	2	28	96062228	RAUPENTRAEGER KPL.LI.
BOLZEN 20.0 X160 S355J2+AR	97053675	7	1	763	917695308	UMLENKROLLE VORM.
BOLZEN 20.0X13 5 S355J2C+C	955112308	24	1	771	918596708	KOPFSTUECK VORM.
BOLZEN 22X11 1.4301	97001103	3	2	364	966253908	WAGEN
BOLZEN 22X57 1.4305	97001095	3	2	363	966230508	FUEHRUNG VORM.
BOLZEN 25.0 X152 S355J2G3	97061277	20	2	420	919484908	ABSTURZSICHERUNG
BOLZEN 25.0X150 35NICRMOV	97134816	10	2	422	96044789	SPANNEINHEIT KPL.
BOLZEN 25.0X50 42CRMO4+Q	974922808	15	6	326	968483708	TRITT KPL.
BOLZEN 25.0X52 S355J2G3C+	971973608	3	1	399	962282208	ARMLEHNE LINKS
BOLZEN 25.0X52 S355J2G3C+	971973608	3	1	401	962282308	ARMLEHNE RECHTS
BOLZEN 30X132X95 35NICRM	977252108	1	1	78	964765008	BOLZEN KPL.
BOLZEN 35.0X165 35NICRMOV	938865908	10	1	750	96062062	KLAPPKONSOLE VORM.
BOLZEN 35.0X264 35NICRMOV	973635308	3	3	721	915415908	MASTNASE
BOLZEN 35x81 42CRMO4+QT	931913308	6	1	748	925280008	KONSOLE VORM.
BOLZEN 39X18 1.4301	97007043	8	1	364	966253908	WAGEN
BOLZEN 45.0X140 35NICRMOV	975686908	6	4	70	915447908	HYDRAULISCHE ABSTUETZUN
BOLZEN 45.0X53 35NICRMOV	977242408	5	2	77	990618314	TRANSPORTABSTUETZUNG

Bezeichnung	Artikel	Pos.	Menge	Seite	Baugruppe	Bezeichnung
BOLZEN 45.0X545 35NICRMOV	97131534	1	1	422	96044789	SPANNEINHEIT KPL.
BOLZEN 45.0X65 35NICRMOV	975758508	3	4	70	915447908	HYDRAULISCHE ABSTUETZUN
BOLZEN 50.0 X96 S355J2+AR	97053674	6	1	763	917695308	UMLENKROLLE VORM.
BOLZEN 50.0X135 35NICRMOV	973106708	20	4	376	919935508	HAUPTHUBWERK
BOLZEN 50.0X175 35NICRMOV	971799808	28	2	581	96062734	HILFSHUBWERK
BOLZEN 50.0X360 35NICRMOV	950477508	31	4	760	918533508	ADAPTER VORM.
BOLZEN 55.0X10 3 35NICRMOV	953766408	22	2	581	96062734	HILFSHUBWERK
BOLZEN 55.0X147 35NICRMOV	953620108	4	1	772	918221408	ZUGLASCHE VORM.
BOLZEN 60.0X675 S355J2C+C	952228108	34	1	760	918533508	ADAPTER VORM.
BOLZEN 65.0 X340 35NICRMOV	951493908	2	1	374	916109208	DREHBUEHNENARRETIERUN
BOLZEN 65.0X300 35NICRMOV	977240308	8	2	30	992078314	MITTELTEIL
BOLZEN 75X370X325 35NICRM	956210114	9	2	30	992078314	MITTELTEIL
BOLZEN DIN 1434 10X90X85	451000508	33	2	315	917357108	KRANFUEHRERKABINE ANBA
BOLZEN DIN 1434 5X40X35 X	451000208	1	1	736	96056560	WINDWARNUNG VORM.
BOLZEN DIN 1435 20X50X43 42	10875669	4	1	748	925280008	KONSOLE VORM.
BOLZEN DIN 1435 20X50X43 42	10875669	4	3	751	929582108	HALTERUNG VORM.
BOLZEN DIN 1435 20X50X43 42	10875669	24	2	768	91001040	ANLENKSTUECK VORM.
BOLZEN DIN 1435 25X75X65 S	451226408	18	1	315	917357108	KRANFUEHRERKABINE ANBA
BOLZEN DIN 1435 8X50X47 ST	451210308	11	1	326	968483708	TRITT KPL.
BOLZEN DIN 1436 30X105X97 3	451430808	4	1	77	990618314	TRANSPORTABSTUETZUNG
BOLZEN DIN 1436 30X105X97 3	451430808	19	1	760	918533508	ADAPTER VORM.
BOLZEN DIN 1436 30X105X97 3	451430808	20	1	763	917695308	UMLENKROLLE VORM.
BOLZEN DIN EN 22340 B20X39	452549108	36	2	673	91000054	TELESKOP 5 VORM.
BOLZEN DIN EN 22340 B55X1	450044814	22	4	454	919501608	HYDRAULISCHE BALLASTIER
BOLZEN ISO 2340 B10X90X81	452552708	42	1	760	918533508	ADAPTER VORM.
BOLZEN ISO 2340 B20X110X94	452540908	2	1	723	964502908	MASTNASE VORM.
BOLZEN ISO 2340 B20X135X1	450023108	9	1	768	91001040	ANLENKSTUECK VORM.
BOLZEN ISO 2340 B20X135X1	450023108	13	1	771	918596708	KOPFSTUECK VORM.
BOLZEN ISO 2340 B20X190X1	450023508	38	1	760	918533508	ADAPTER VORM.
BOLZEN ISO 2340 B20X400X3	452550908	2	1	60	991456314	AUFSTIEG KPL.
BOLZEN ISO 2340 B50X120X96	452550508	56	1	760	918533508	ADAPTER VORM.
BOLZEN ISO 2340 B50X120X96	452550508	3	2	772	918221408	ZUGLASCHE VORM.
BOLZEN ISO 2340-B B20X85X6	450022014	9	4	119	96045222	MONTAGETEILE
BOLZEN ISO 2340-B B70X180	485501014	19	2	454	919501608	HYDRAULISCHE BALLASTIER
BOLZEN ISO 2341 B16X152X1	453009308	8	1	763	917695308	UMLENKROLLE VORM.
BOLZEN ISO 2341 B20X115X10	453020908	35	1	747	919933308	TRANSPORTHALTERUNG DKS
BOLZEN ISO 2341 B20X115X10	453020908	12	1	768	91001040	ANLENKSTUECK VORM.
BOLZEN ISO 2341 B20X115X10	453020908	8	2	771	918596708	KOPFSTUECK VORM.
BOLZEN ISO 2341 B45X102X85	453041108	57	2	760	918533508	ADAPTER VORM.
BOLZEN ISO 2341 B6X25X22	10875678	16	1	326	968483708	TRITT KPL.
BOLZEN KPL.	964765008	3	2	77	990618314	TRANSPORTABSTUETZUNG
BOLZEN KPL.	965010008	15	2	30	992078314	MITTELTEIL
BOLZEN KPL.	965010008	19	2	30	992078314	MITTELTEIL
BOLZEN MIT KOPF 50.0X182 3	97035300	12	1	315	917357108	KRANFUEHRERKABINE ANBA
BOLZEN RD30X107 42CRMO4	956349008	3	1	750	96062062	KLAPPKONSOLE VORM.
BOLZEN RD35X71 35NICRMOV	944029908	30	1	747	919933308	TRANSPORTHALTERUNG DKS
BOLZEN RD35X88 35NICRMOV	942439808	7	1	760	918533508	ADAPTER VORM.
BOLZEN RD40X140 35NICRM	940315108	7	2	723	964502908	MASTNASE VORM.
BOLZEN RD40X160 42CRMO4	939048708	14	1	768	91001040	ANLENKSTUECK VORM.
BOLZEN RD40X270 35NICRM	950477408	2	4	771	918596708	KOPFSTUECK VORM.
BOLZEN RD49.5X58 42CRMO4	956349108	4	1	750	96062062	KLAPPKONSOLE VORM.
BOLZENGRIFF FE//ZNNI8//CN/	96030352	9	1	125	963260408	VERRIEGELUNG
BOLZENGRIFF FE//ZNNI8//CN/	96049765	9	1	126	96049764	VERRIEGELUNG
BREMSBETAETIGUNGSEINHEI	502807501	(1)	1	383	968607101	PLANETENGETRIEBE
BREMSE-DICHTUNGSSATZ	939589601	(998)	1	383	968607101	PLANETENGETRIEBE
BREMSFEDERSATZ	939589701	(999)	1	383	968607101	PLANETENGETRIEBE
BREMSLAMELLENSATZ	939589501	(997)	1	383	968607101	PLANETENGETRIEBE
BRENNER 24V	11826648	39	1	448	10876576	WASSERHEIZGERAET
BRENNER 24V	11826648	(9)	1	448	10876576	WASSERHEIZGERAET
BRENNERKOPF	11826647	28	1	448	10876576	WASSERHEIZGERAET

Bezeichnung	Artikel	Pos.	Menge	Seite	Baugruppe	Bezeichnung
BRENNERKOPF	11826647	(8)	1	448	10876576	WASSERHEIZGERAET
BRENNSTOFFLEITUNG 5X1 PA	11626108	3	1.75	444	918759708	ZUSATZHEIZUNG OW
BRENNSTOFFLEITUNG 5X1 PA	11626108	4	4	444	918759708	ZUSATZHEIZUNG OW
BTB PROGRAMMIERT	968252908	5	1	87	96062922	MONTAGEPLATTE VORM.
BTT PROGRAMMIERT BTTC	96033227	9	1	435	96022872	ARMATURENBRETT DACH
BUCHSE	10043610	2	1	209	5700161	LUFTPRESSER
BUCHSE 10,5X16X19 11SMnP	10145395	6	1	225	10142863	GENERATOR VORM.
BUCHSE 14X14X5 PA6 SCHW	97094637	20	10	349	966497908	FRONTSCHEIBE KPL.
BUCHSE 15,1X27,8X10	927520701	26	1	584	938759801	PLANETENGETRIEBE
BUCHSE 16.0X11 E235+N GA	974501208	30	2	581	96062734	HILFSHUBWERK
BUCHSE 160X180X100	11004996	5	1	628	12102922	WIPPZYLINDER
BUCHSE 16X12 1.4301	97002990	15	1	361	917304708	SCHIEBETUER EINBAU
BUCHSE 16X12 1.4301	97002990	47	4	395	918810308	STEUERSTAND
BUCHSE 35.0X30 42CRMO4+Q	973998708	3	1	441	966707708	SPIEGELHALTER VORM.
BUCHSE 8X6 PA6	97155801	37	10	349	966497908	FRONTSCHEIBE KPL.
BUCHSE RD110X13 S960QL	953726108	9	1	670	91000053	TELESKOP 4 VORM.
BUCHSE RD110X13 S960QL	953726108	9	1	673	91000054	TELESKOP 5 VORM.
BUCHSE RD115X13 S960QL	957011308	9	1	661	91000050	TELESKOP 1 VORM.
BUCHSE RD115X13 S960QL	957011308	9	1	664	91000051	TELESKOP 2 VORM.
BUCHSE RD115X13 S960QL	957011308	9	1	667	91000052	TELESKOP 3 VORM.
BUCHSE RD150X130 GZ-CUZN	972503408	15	1	124	918728408	MONTAGETEILE DREHBUEHN
BUCHSE RD20X7.5 X5CRNI18	97072035	26	4	346	916162508	SCHEIBEN EINBAU
BUCHSENGEHAEUSE 1-POL	11118242	504	1	428	96022870	KABELSTRANG
BUCHSENGEHAEUSE 15-POL	10874996	503	1	694	96063583	LEITUNG
BUCHSENGEHAEUSE 15-POL	12102916	501	1	694	96063583	LEITUNG
BUCHSENGEHAEUSE 18-POL	11067833	508	1	90	96062920	KABELSTRANG
BUCHSENGEHAEUSE 18-POL	11067833	513	1	490	96063649	KABELSTRANG
BUCHSENGEHAEUSE 2-POL	11060619	505	2	495	96049294	KABELSTRANG
BUCHSENGEHAEUSE 2-POL 5	10424622	511	2	426	96023891	KABELSTRANG
BUCHSENGEHAEUSE 2-POL 5	10424622	509	1	490	96063649	KABELSTRANG
BUCHSENGEHAEUSE 2-POL B	11342208	509	1	495	96049294	KABELSTRANG
BUCHSENGEHAEUSE 4-POL	11341840	508	1	495	96049294	KABELSTRANG
BUCHSENGEHAEUSE 8-POL 5	10875280	516	1	426	96023891	KABELSTRANG
BUCHSENKONTAKT 0,2-0,5MM	10335820	690	14	90	96062920	KABELSTRANG
BUCHSENKONTAKT 0,2-0,5MM	10335820	690	52	427	96023891	KABELSTRANG
BUCHSENKONTAKT 0,2-0,5MM	10335820	690	6	428	96022870	KABELSTRANG
BUCHSENKONTAKT 0,2-0,5MM	10335820	690	51	491	96063649	KABELSTRANG
BUCHSENKONTAKT 0,2-0,5MM	10335820	690	4	693	96063864	KABELSTRANG
BUCHSENKONTAKT 0,3-0,89	602332108	611	4	428	96022870	KABELSTRANG
BUCHSENKONTAKT 0,5-0,75	10873194	700	4	427	96023891	KABELSTRANG
BUCHSENKONTAKT 0,5-0,75	10873194	793	2	491	96063649	KABELSTRANG
BUCHSENKONTAKT 0,5-0,75M	10813644	754	9	496	96049294	KABELSTRANG
BUCHSENKONTAKT 0,5-1,0M	10493495	726	6	90	96062920	KABELSTRANG
BUCHSENKONTAKT 0,5-1,0M	10493495	726	6	491	96063649	KABELSTRANG
BUCHSENKONTAKT 0,5-1,0M	10493495	726	67	494	96023971	KABELSTRANG
BUCHSENKONTAKT 0,5-1,0M	10493495	726	4	495	96049294	KABELSTRANG
BUCHSENKONTAKT 0,5-1,0M	10493495	726	6	694	96063583	LEITUNG
BUCHSENKONTAKT 0,5-1,0M	10800631	753	4	494	96023971	KABELSTRANG
BUCHSENKONTAKT 0,5-1,0M	10800631	753	10	694	96063583	LEITUNG
BUCHSENKONTAKT 0,5-1,0M	10874057	2211	7	91	96062921	KABELSTRANG
BUCHSENKONTAKT 0,5-1,0M	11622989	789	4	496	96049294	KABELSTRANG
BUCHSENKONTAKT 0,5-1MM2	10877343	2258	25	427	96023891	KABELSTRANG
BUCHSENKONTAKT 0,50-1MM	10300946	717	4	495	96049294	KABELSTRANG
BUCHSENKONTAKT 0,5MM2	10875281	2238	6	427	96023891	KABELSTRANG
BUCHSENKONTAKT 0,5MM2 S	10493970	721	4	775	96035674	LEITUNG
BUCHSENKONTAKT 0,75-1,0	604519308	629	7	730	96058738	KABELSTRANG
BUCHSENKONTAKT 0,75-1,0	604519308	629	5	775	96035674	LEITUNG
BUCHSENKONTAKT 0,75-1,0M	11342253	788	9	496	96049294	KABELSTRANG
BUCHSENKONTAKT 0,75-1,5	6202434	96	2	490	96063649	KABELSTRANG
BUCHSENKONTAKT 0,75-1,5	6202434	96	2	493	96023971	KABELSTRANG

Bezeichnung	Artikel	Pos.	Menge	Seite	Baugruppe	Bezeichnung
BUCHSENKONTAKT 0,75-2,5	12104876	2337	6	608	96060353	LEITUNG
BUCHSENKONTAKT 1,0-1,5M	10493496	727	4	494	96023971	KABELSTRANG
BUCHSENKONTAKT 1,0-1,5M	10493496	727	2	495	96049294	KABELSTRANG
BUCHSENKONTAKT 1,0-2,5M	10493493	724	6	494	96023971	KABELSTRANG
BUCHSENKONTAKT DIN 72585	602339508	647	4	491	96063649	KABELSTRANG
BUCHSENKONTAKT DIN 72585	602339408	643	3	491	96063649	KABELSTRANG
BUCHSENKONTAKT DIN 72585	602339408	643	2	495	96049294	KABELSTRANG
BUCHSENSTECKER 15-POLE	10024744	502	2	426	96023891	KABELSTRANG
BUCHSENSTECKER 25-POLE	602322708	504	1	426	96023891	KABELSTRANG
BUCHSENSTECKER 9-POLE	602338608	527	1	500	96059659	DRAEHTE GRUNDAUFBAU KPL
BUCHSENTRAEGER 6-POL 16	604526508	501	2	704	96062034	DRAEHTE KLEMMKASTEN KPL
BUCHSENTRAEGER 6-POL 16	604526508	502	1	730	96058738	KABELSTRANG
BUCHSENTRAEGER 6-POL 16	604526508	502	2	775	96035674	LEITUNG
BUCHSENTRAEGER 6-POL 28	12104875	502	2	608	96060353	LEITUNG
BUEGEL	11171276	(71)	1	397	10877138	FAHRERSITZ
BUEGEL 10 ST	10216529	21	1	575	918627208	KLIMAANLAGE OW
BUEGEL 20.0X728 S355J2C+C	951665708	30	1	771	918596708	KOPFSTUECK VORM.
BUEGELSCHELLE 132 X5CRNI	11963742	184	1	470	919674308	ABGASANLAGE
BUEGELSCHELLE 132 X5CRNI	11963742	183	1	473	96051762	ABGASANLAGE VORM.
BUNDBOLZEN 20-22MM	571712308	1	1	629	773941308	TASCHENSCHLOSS
BUNDLAGER DIN 1850 / ISO 2	10424489	2	2	364	966253908	WAGEN
BUNDSCHEIBE	510714408	18	1	37	510438508	DRUCKMINDERVENTIL
BUNDSCHRAUBE	11492018	4	1	739	910543708	LASTHAKEN
BUNDSCHRAUBE	927515201	6	2	586	927521201	OELMESSSTABEINRICHTUNG
BUSLEITUNG 2 X 0,5	11840113	6	4.28	90	96062920	KABELSTRANG
BUSLEITUNG 2 X 0,5	11840113	7	0.3	91	96062921	KABELSTRANG
BUSLEITUNG 2 X 0,5	11840113	8	0.4	91	96062921	KABELSTRANG
BUSLEITUNG 2 X 0,5	11840113	9	0.45	91	96062921	KABELSTRANG
BUSLEITUNG 2 X 0,5	11840113	10	0.45	91	96062921	KABELSTRANG
BUSLEITUNG 2 X 0,5	11840113	12	4.08	426	96023891	KABELSTRANG
BUSLEITUNG 2 X 0,5	11840113	13	4.08	426	96023891	KABELSTRANG
BUSLEITUNG 2 X 0,5	11840113	14	0.17	426	96023891	KABELSTRANG
BUSLEITUNG 2 X 0,5	11840113	17	4.46	426	96023891	KABELSTRANG
BUSLEITUNG 2 X 0,5	11840113	10	5.59	493	96023971	KABELSTRANG
BUSLEITUNG 2 X 0,5	11840113	11	5.59	493	96023971	KABELSTRANG
BUSLEITUNG 2 X 0,5	11840113	18	5.59	493	96023971	KABELSTRANG
BUSLEITUNG 2 X 0,5	11840113	371	5.59	493	96023971	KABELSTRANG
BUSLEITUNG 2 X 0,5	11840113	5	5.23	495	96049294	KABELSTRANG
BUSLEITUNG 2 X 0,5	11840113	7	0.17	495	96049294	KABELSTRANG
BUSLEITUNG 2 X 0,5	11840113	8	5.86	495	96049294	KABELSTRANG
BUSLEITUNG 2 X 0,5	11840113	9	0.17	495	96049294	KABELSTRANG
BUSLEITUNG 2 X 0,5	11840113	10	5.86	495	96049294	KABELSTRANG
BUSLEITUNG 2 X 0,5	11840113	11	0.17	495	96049294	KABELSTRANG
BUSLEITUNG 2 X 0,5	11840113	12	3.86	495	96049294	KABELSTRANG
BUSLEITUNG 2 X 0,5	11840113	13	0.17	495	96049294	KABELSTRANG
BUSLEITUNG 2 X 0,5	11840113	14	0.33	495	96049294	KABELSTRANG
BUTZEN BUZ 28L CR6-FREI	477700808	627	1	34	967304508	HYDRAULIK UNTERWAGEN
CLIP 23 ST	10216534	22	2	575	918627208	KLIMAANLAGE OW
CRIMPKONTAKT 0,2-0,56MM2	602322808	615	55	427	96023891	KABELSTRANG
DACHSCHEIBE 10.28X941X740	979240608	1	1	350	965784408	DACHSCHEIBE VORM.
DACHSCHEIBE VORM.	965784408	4	1	346	916162508	SCHEIBEN EINBAU
DACHVERKLEIDUNG KPL.	965763608	9	1	338	917305408	INNENVERKLEIDUNG EINBAU
DAEMMMATTE 10X455X110 E	97038836	15	1	386	917894308	HEIZUNG KRANFUEHRERKAB
DAEMMMATTE 13X115X179 ZP	97038834	13	1	386	917894308	HEIZUNG KRANFUEHRERKAB
DAEMMMATTE 20X115X199 ZP	97038835	14	1	386	917894308	HEIZUNG KRANFUEHRERKAB
DAEMMMATTE 20X1160X638	97058663	1	1	411	96022943	SCHALLDAEMMUNG
DAEMMMATTE 20X376X326 P	97067162	3	1	476	918729308	LUFTFILTERANLAGE
DAEMMMATTE 20X378X328 P	97067163	4	1	476	918729308	LUFTFILTERANLAGE
DAEMMMATTE 40X334X385 ME	97053106	7	1	411	96022943	SCHALLDAEMMUNG
DAEMMMATTE 40X390X385 ME	97053105	5	1	411	96022943	SCHALLDAEMMUNG

Bezeichnung	Artikel	Pos.	Menge	Seite	Baugruppe	Bezeichnung
DAEMMMATTE 40X422X93 E30	97038833	12	1	386	917894308	HEIZUNG KRANFUEHRERKAB
DAEMMMATTE 40X491X112 ME	97058602	6	1	411	96022943	SCHALLDAEMMUNG
DAEMMMATTE 40X540X407 ME	97053107	8	1	411	96022943	SCHALLDAEMMUNG
DAEMMMATTE 40X720X427 P	97045991	2	1	411	96022943	SCHALLDAEMMUNG
DAEMMMATTE 40X726X368 ME	97100393	4	1	411	96022943	SCHALLDAEMMUNG
DAEMMMATTE 40X740X370 P	973767608	102	1	409	96017568	KUEHLERHAUBE KPL.
DAEMMMATTE 40X964X749 P	973073308	101	1	409	96017568	KUEHLERHAUBE KPL.
DAEMMMATTE 40X975X755 P	973073208	100	1	409	96017568	KUEHLERHAUBE KPL.
DAEMMMATTE 50X60X182 E30	97038837	16	1	386	917894308	HEIZUNG KRANFUEHRERKAB
DAEMMMATTE 50X78X235 E30	97038838	17	1	386	917894308	HEIZUNG KRANFUEHRERKAB
DAEMMSTOFF 20X20X2000 PU	10425409	20	1	411	96022943	SCHALLDAEMMUNG
DAEMPFER	10650488	66	1	397	10877138	FAHRERSITZ
DAEMPFUNGSKOLBEN	510797408	7	1	558	511417708	DRUCKBEGRENZUNGSVENTI
DAEMPFUNGSKOLBEN	510797408	7	1	621	511417608	DRUCKBEGRENZUNGSVENTI
DATENLEITUNG 2 X 1 FEP SP	12100217	5	0.4	91	96062921	KABELSTRANG
DATENLEITUNG 2 X 1 FEP SP	12100217	6	0.4	91	96062921	KABELSTRANG
DATENLEITUNG 2 X 1 FEP SP	12100217	8	3	428	96022870	KABELSTRANG
DATENLEITUNG 2 X 1 FEP SP	12100217	9	3	428	96022870	KABELSTRANG
DATENLEITUNG 2 X 1 FEP SP	12100217	15	5.59	493	96023971	KABELSTRANG
DATENLEITUNG 2 X 1 FEP SP	12100217	16	6.69	493	96023971	KABELSTRANG
DATENLEITUNG 2 X 1 FEP SP	12100217	17	3.54	493	96023971	KABELSTRANG
DATENLEITUNG 2 X 1 FEP SP	12100217	19	1.89	493	96023971	KABELSTRANG
DATENLEITUNG 2 X 1 FEP SP	12100217	370	1	493	96023971	KABELSTRANG
DATENLEITUNG 2 X 1 FEP SP	12100217	373	5.59	493	96023971	KABELSTRANG
DATENLEITUNG 2 X 1 FEP SP	12100217	375	5.59	493	96023971	KABELSTRANG
DATENLEITUNG 2 X 1 FEP SP	12100217	376	5.59	493	96023971	KABELSTRANG
DATENLEITUNG 2 X 1 FEP SP	12100217	377	5.59	493	96023971	KABELSTRANG
DATENLEITUNG 2 X 1 FEP SP	12100217	378	5.59	493	96023971	KABELSTRANG
DATENLEITUNG 2 X 1 FEP SP	12100217	379	5.59	493	96023971	KABELSTRANG
DATENLEITUNG 2 X 1 FEP SP	12100217	380	5.59	493	96023971	KABELSTRANG
DATENLEITUNG 2 X 1 FEP SP	12100217	16	5.3	495	96049294	KABELSTRANG
DATENLEITUNG 2 X 1 FEP SP	12100217	18	5.4	495	96049294	KABELSTRANG
DATENLEITUNG 2 X 1 FEP SP	12100217	19	5.4	495	96049294	KABELSTRANG
DATENLEITUNG 2 X 1 FEP SP	12100217	370	4.65	495	96049294	KABELSTRANG
DATENLEITUNG 2 X 1 FEP SP	12100217	371	5.15	495	96049294	KABELSTRANG
DATENLEITUNG 2 X 1 FEP SP	12100217	372	4.65	495	96049294	KABELSTRANG
DATENLEITUNG 2 X 1,5 FEP	12100216	372	5.59	493	96023971	KABELSTRANG
DATENLEITUNG 2 X 1,5 FEP	12100216	15	5.3	495	96049294	KABELSTRANG
DATENLEITUNG 2 X 2,5 FEP	12100214	7	5.59	493	96023971	KABELSTRANG
DATENLEITUNG 2 X 2,5 FEP	12100214	8	5.59	493	96023971	KABELSTRANG
DATENLEITUNG 2 X 2,5 FEP	12100214	9	5.59	493	96023971	KABELSTRANG
DATENLEITUNG 3 X 1 FEP SP	12100215	12	5.59	493	96023971	KABELSTRANG
DATENLEITUNG 3 X 1 FEP SP	12100215	13	5.59	493	96023971	KABELSTRANG
DATENLEITUNG 3 X 1 FEP SP	12100215	14	3.39	493	96023971	KABELSTRANG
DATENLEITUNG 3 X 1 FEP SP	12100215	374	5.59	493	96023971	KABELSTRANG
DATENLEITUNG 3 X 1 FEP SP	12100215	381	5.59	493	96023971	KABELSTRANG
DATENLEITUNG 3 X 1 FEP SP	12100215	382	5.59	493	96023971	KABELSTRANG
DATENLEITUNG 3 X 1 FEP SP	12100215	17	5.4	495	96049294	KABELSTRANG
DATENLEITUNG 3 X 1 FEP SP	12100215	373	6	495	96049294	KABELSTRANG
DATENLOGGER LDL2 DIGITAL	10340438	5	1	507	968015808	MONTAGEEINHEIT VORM.
DECKBLECH SCHWK. SPF	96022920	3	1	407	96022627	DREHBUEHNENVERKLEIDUN
DECKBLECH SCHWK. SPF	969619708	2	1	415	96024809	DREHBUEHNENVERKLEIDUN
DECKEL	10147409	1	1	246	9078249	VERSCHLUSSTEILE
DECKEL	10286353	295	1	703	96063458	KLEMMKASTEN KPL.
DECKEL	10331026	61	1	432	96056347	ELEKTRIK ANBAUTEILE KABIN
DECKEL	10663242	5	1	531	11170519	VENTILBLOCK
DECKEL	10663242	5	1	602	10665173	STEUERBLOCK
DECKEL	10665126	11	1	534	10802090	STEUERBLOCK
DECKEL	10665127	14	1	534	10802090	STEUERBLOCK
DECKEL	10665128	15	1	534	10802090	STEUERBLOCK

Bezeichnung	Artikel	Pos.	Menge	Seite	Baugruppe	Bezeichnung
DECKEL	10873239	7	1	766	10801932	HANDPUMPE
DECKEL	11368890	4	1	308	12106874	KRAFTSTOFFFILTER
DECKEL	11600977	2	1	296	10871354	RUECKLAUFFILTER
DECKEL	602761708	6	1	504	968077108	KLEMMENLEISTE
DECKEL	636109301	4	1	504	968077108	KLEMMENLEISTE
DECKEL	9178294	5	1	249	9078962	NEBENABTRIEB VORM.
DECKEL 1 SCHWK. RAL 7037,	96024977	2	1	287	96024716	BATTERIEKASTEN VORM.
DECKEL 1.5X450X381 DC01 FE	951892408	35	1	673	91000054	TELESKOP 5 VORM.
DECKEL 170X19,5	927504601	17	1	381	938759601	SEILTROMMEL
DECKEL 18X205X205 S960QL	976641408	8	1	315	917357108	KRANFUEHRERKABINE ANBA
DECKEL 3X1269X789 ALMG3 H	97100175	22	1	407	96022627	DREHBUEHNENVERKLEIDUN
DECKEL 635X575X95 ABS	97007030	2	1	386	917894308	HEIZUNG KRANFUEHRERKAB
DECKEL 8X225X290	944214403	(94)	1	22	96062226	RAUPENTRAEGER KPL.RE.
DECKEL Al Rm>200N/m	10127967	1	1	235	10127979	VERSCHLUSSTEILE
DECKEL DC01 LH-GRAU	955532403	16	1	30	992078314	MITTELTEIL
DECKEL EN AC-Al Si1	10124116	1	1	229	10115664	VERSCHLUSSTEILE
DECKEL GEKLEBT	966189708	1	1	85	966167808	DECKEL KPL.
DECKEL KPL.	963544508	110	1	407	96022627	DREHBUEHNENVERKLEIDUN
DECKEL KPL.	966167808	2	1	84	96075205	SCHALTKASTEN VORM.
DECKEL KPL.	967576308	17	8	30	992078314	MITTELTEIL
DECKEL KPL.	969699108	14	1	407	96022627	DREHBUEHNENVERKLEIDUN
DECKEL PA 66	9078881	1	1	247	10144027	VERSCHLUSSTEILE
DECKEL RD165X22 S960QL	957017708	7	1	670	91000053	TELESKOP 4 VORM.
DECKEL RD165X22 S960QL	957017708	7	1	673	91000054	TELESKOP 5 VORM.
DECKEL RD175X22 S960QL	957011108	7	1	661	91000050	TELESKOP 1 VORM.
DECKEL RD175X22 S960QL	957011108	7	1	664	91000051	TELESKOP 2 VORM.
DECKEL RD175X22 S960QL	957011108	7	1	667	91000052	TELESKOP 3 VORM.
DECKEL RD200X12 PA6G	283094508	59	3	661	91000050	TELESKOP 1 VORM.
DECKEL RD200X12 PA6G	283094508	59	3	664	91000051	TELESKOP 2 VORM.
DECKEL RD200X12 PA6G	283094508	59	3	667	91000052	TELESKOP 3 VORM.
DECKEL RD200X12 PA6G	283094508	59	3	670	91000053	TELESKOP 4 VORM.
DECKEL RD200X25 PA6G	283095408	59	3	655	91000049	ANLENKSTUECK VORM.
DECKEL RD245X17 PA6G	288184008	19	1	655	91000049	ANLENKSTUECK VORM.
DECKEL RD74X4 S315MC FE//	955917808	39	2	679	91000055	AUSSCHUBMECHANIK
DECKEL S235JR	10117094	10	1	233	10116110	VERSCHLUSSTEILE
DECKEL SCHWK.	921368608	17	1	655	91000049	ANLENKSTUECK VORM.
DECKEL SCHWK.	96016196	18	1	655	91000049	ANLENKSTUECK VORM.
DECKEL SCHWK. FE//ZNNI8//C	967569908	(1)	1	30	992078314	MITTELTEIL
DECKPLATTE DIN 3015-1 L-DP	5005219	300	18	517	96045552	HYDRAULIK OBERWAGEN
DECKPLATTE DIN 3015-2 S-DP-	5005525	324	2	566	969767908	VERROHRUNG DRUCKLUFTA
DECKSCHEIBE 8X60	691041808	9	1	95	10878097	SCHLEIFRINGUEBERTRAGER
DEHNSCHRAUBE M27X145 30	409817708	1	56	101	914860508	BEFESTIGUNGSTEILE DREH
DEHNSCHRAUBE M27X145 30	409817708	2	44	365	917472008	ROLLENDREHVERBINDUNG
DICHTBAND	261101108	50	0.3	388	11083498	HEIZKLIMAGERAET
DICHTKANTENRING	571326108	7	2	586	927521201	OELMESSSTABEINRICHTUNG
DICHTMITTEL A80MR HYLOMA	870002808	265	0.1	692	96063456	KLEMMKASTEN
DICHTMUTTER M6	510753408	10	1	524	571130108	DRUCKBEGRENZUNGSVENTI
DICHTMUTTER M6	510753408	11	1	548	11170276	DRUCKREDUZIERVENTIL
DICHTMUTTER M8	510741708	57	1	536	10665127	DECKEL
DICHTMUTTER M8	510741708	21	1	558	511417708	DRUCKBEGRENZUNGSVENTI
DICHTMUTTER M8	510741708	21	1	621	511417608	DRUCKBEGRENZUNGSVENTI
DICHTPROFIL	262183501	314	4.8	366	931696301	ROLLENDREHVERBINDUNG
DICHTPROFIL NBR 70-4833	262181001	315	4.83	366	931696301	ROLLENDREHVERBINDUNG
DICHTPROFIL NBR 70-4833	262181001	316	4.78	366	931696301	ROLLENDREHVERBINDUNG
DICHTRING 10,7X16X1,5 St/FP	10011864	5	15	198	10143342	LECKOELRUECKLAUF
DICHTRING 10,7X16X1,5 St/FP	10011864	8	2	212	10145278	ANBAUTEILE LUFTPRESSER
DICHTRING 10,7X16X1,5 St/FP	10011864	5	2	224	11420633	TAKTVENTIL
DICHTRING 114,6X130,4X13	10802681	120	2	470	919674308	ABGASANLAGE
DICHTRING 12,7X18,00X1,5 F	10011865	7	2	198	10143342	LECKOELRUECKLAUF
DICHTRING 12,7X18,00X1,5 F	10011865	27	2	223	12512627	ABGASSTUTZEN ANBAU

Bezeichnung	Artikel	Pos.	Menge	Seite	Baugruppe	Bezeichnung
DICHTRING 14,7X22,00X1,5 F	10011866	11	3	198	10143342	LECKOELRUECKLAUF
DICHTRING 14,7X22,00X1,5 F	10011866	2	7	217	10148216	ROHRLEITUNG ANBAU
DICHTRING 14,7X22,00X1,5 F	10011866	6	1	219	10142744	KUEHLWASSERENTLUEFTUN
DICHTRING 14,7X22,00X1,5 F	10011866	28	2	223	12512627	ABGASSTUTZEN ANBAU
DICHTRING 14,7X22,00X1,5 F	10011866	3872	1	251	10148366	DS DIESELMOTOR
DICHTRING 14,7X22,00X1,5 F	10011866	10	4	254	10141217	DS KRAFTSTOFFLEITUNG
DICHTRING 140X155X13	10802682	121	2	470	919674308	ABGASANLAGE
DICHTRING 140X155X13	10802682	120	1	473	96051762	ABGASANLAGE VORM.
DICHTRING 16,7X24,00X1,5 F	10011867	9	2	196	10143341	KRAFTSTOFFLEITUNGEN
DICHTRING 16,7X24,00X1,5 F	10011867	4	8	212	10145278	ANBAUTEILE LUFTPRESSER
DICHTRING 16,7X24,00X1,5 F	10011867	26	1	223	12512627	ABGASSTUTZEN ANBAU
DICHTRING 16,7X24,00X1,5 F	10011867	5	2	254	10141217	DS KRAFTSTOFFLEITUNG
DICHTRING 18,7X26X1,5 St/FP	10011868	2	1	150	10130406	NIVEAUGEBER
DICHTRING 18,7X26X1,5 St/FP	10011868	15	10	196	10143341	KRAFTSTOFFLEITUNGEN
DICHTRING 18,7X26X1,5 St/FP	10011868	221	1	250	10148366	DS DIESELMOTOR
DICHTRING 18,7X26X1,5 St/FP	10011868	3	14	254	10141217	DS KRAFTSTOFFLEITUNG
DICHTRING 19,6X24,3X1,5 NBR	761022503	6	1	370	927554301	ENTLUEFTUNGSSTUTZEN
DICHTRING 19,6X24,3X1,5 NBR	761022503	14	1	384	939368401	OELMESSEINRICHTUNG
DICHTRING 19,6X24,3X1,5 NBR	761022503	4	1	586	927521201	OELMESSSTABEINRICHTUNG
DICHTRING 22,7X30X2 St/FPM1	10011869	3	2	207	9080294	LUFTPRESSER VORM.
DICHTRING 26,7X34,93X2 St/FP	10011870	5	2	201	10145173	ANSAUGSTUTZEN ANBAU
DICHTRING 26,7X34,93X2 St/FP	10011870	27	1	222	10140729	ATL-ANBAU
DICHTRING 26,7X34,93X2 St/FP	10011870	222	1	250	10148366	DS DIESELMOTOR
DICHTRING 27X20X1,5 CU	10014697	10	3	480	10327065	ELEKTROPUMPE
DICHTRING 30,7X39X2 St/FPM1	10113731	3	1	176	10152592	UEBERDRUCKVENTIL
DICHTRING 8,7X14X1 St/FPM1	10011871	22	2	198	10143342	LECKOELRUECKLAUF
DICHTRING DIN 7603 A10X16	710101408	7	4	332	968462608	SCHALTSCHRANKDECKEL EIN
DICHTRING DIN 7603 A12X16	710101708	29	1	583	938707001	KOMPAKTSEILWINDE
DICHTRING DIN 7603 A14X18	710102508	11	1	146	10155227	OELWANNE VORM.
DICHTRING DIN 7603 A14X20	710103008	7	1	392	969300008	HEIZUNG VORM.
DICHTRING DIN 7603 A14X20	710103008	312	1	598	96075086	HYDRAULIK HILFSHUBWERK D
DICHTRING DIN 7603 A14X20	738122523	2	1	175	9078233	VENTIL
DICHTRING DIN 7603 A14X20	7381225	14	1	139	10147687	AGGREGATETRAEGER ANBA
DICHTRING DIN 7603 A14X20	7381225	30	1	223	12512627	ABGASSTUTZEN ANBAU
DICHTRING DIN 7603 A18X22 C	7101012	223	1	250	10148366	DS DIESELMOTOR
DICHTRING DIN 7603 A18X22	710104008	(23)	2	517	96045552	HYDRAULIK OBERWAGEN
DICHTRING DIN 7603 A30X36	710106508	3	1	141	10138450	ENDREGELVENTIL
DICHTRING DIN 7603 A30X36	710106508	5	3	146	10155227	OELWANNE VORM.
DICHTRING DIN 7603 A30X36	710106508	141	1	250	10148366	DS DIESELMOTOR
DICHTRING DIN 7603 A6,5X9,5	710100408	9	1	332	968462608	SCHALTSCHRANKDECKEL EIN
DICHTRING DIN 7603 A8X12X1	710100708	9	8	331	916162808	RELING
DICHTSATZ	10219620	999	1	276	10492431	DRUCKBEGRENZUNGSVENTI
DICHTSATZ	10280184	6	1	525	10032696	PATRONE
DICHTSATZ	10331946	998	1	276	10492431	DRUCKBEGRENZUNGSVENTI
DICHTSATZ	10489208	999	1	532	11002717	WEGEVENTIL
DICHTSATZ	12101220	999	1	648	10876885	FETTSPRUEHGERAET
DICHTSATZ	12101886	999	1	308	12106874	KRAFTSTOFFFILTER
DICHTSATZ	12103474	(999)	1	23	790256114	LEITRADEINHEIT KPL
DICHTSATZ	12105942	999	1	714	511493608	WEGEVENTIL
DICHTSATZ	12108598	(999)	1	42	96048348	HYDR.INSTALLATIONSTEILE
DICHTSATZ	511043308	(999)	1	543	10333672	STEUERBLOCK
DICHTSATZ	511043308	999	1	545	570427108	DRUCKBEGRENZUNGSVENTI
DICHTSATZ	571426108	(1)	1	33	967304508	HYDRAULIK UNTERWAGEN
DICHTSATZ	571426108	(1)	1	33	967304508	HYDRAULIK UNTERWAGEN
DICHTSATZ	571491208	999	1	753	512353708	HYDROZYLINDER
DICHTSATZ	571840008	(999)	1	33	967304508	HYDRAULIK UNTERWAGEN
DICHTSATZ	571840008	999	1	36	511302008	WEGEVENTIL
DICHTSATZ	96082028	(999)	1	369	933074801	DREHWERKANTRIEB
DICHTSATZ ABTRIEBSFLANSC	965335608	11	1	383	968607101	PLANETENGETRIEBE
DICHTSCHEIBE	7363427	60	1	26	749065314	TRAGROLLE KPL

Bezeichnung	Artikel	Pos.	Menge	Seite	Baugruppe	Bezeichnung
DICHTSCHEIBE 150X158X0,10	10154459	2	1	138	10154458	ZYLINDER
DICHTSCHEIBE 7,6X15,8X1 VI	571082508	(1)	1	516	96045552	HYDRAULIK OBERWAGEN
DICHTSCHEIBE A7X13,6X2 Cu	12931997	1	1	188	13703082	DS INJEKTOR
DICHTSCHEIBE VITON	571083008	(1)	1	591	96064697	HYDRAULIK HILFSHUBWERK
DICHTSTOPFEN GPN 735 M33	10465711	15	2	139	10147687	AGGREGATETRAEGER ANBA
DICHTSTOPFEN GPN 738 M33	13687089	15	1	139	10147687	AGGREGATETRAEGER ANBA
DICHTSTOPFEN LK 950	10030837	14	14	136	11389608	KURBELGEHAEUSE KPL. MIT
DICHTSTOPFEN LK 950	10030837	101	14	250	10148366	DS DIESELMOTOR
DICHTSTOPFEN LK 950	10036325	8	1	165	11448005	KIPPHEBELBOCK VORM.
DICHTSTOPFEN LK 950	10036325	8	1	166	12549825	KIPPHEBELBOCK VORM.
DICHTSTOPFEN LK 950	10036325	811	4	250	10148366	DS DIESELMOTOR
DICHTSTOPFEN M18X1.5	11389287	3	1	199	10143825	EINSPRITZLEITUNGEN
DICHTSTOPFEN M18X1.5	11389287	2151	1	251	10148366	DS DIESELMOTOR
DICHTSTOPFEN MB 850 CR6-F	7380123	2	1	169	12408221	FLANSCH VORM.
DICHTSTOPFEN MB 850 CR6-F	7380123	902	1	250	10148366	DS DIESELMOTOR
DICHTSTOPFEN MB 850 CR6-F	7380123	1002	1	250	10148366	DS DIESELMOTOR
DICHTSTREIFEN 40X4 NBR/S	262001308	42	1.95	461	96074081	HARNSTOFFTANK VORM.
DICHTUNG	10135885	3	4	220	10140087	ABGASROHR ANBAU
DICHTUNG	10144861	13	1	458	91003833	HARNSTOFFANLAGE
DICHTUNG	11826653	12	1	448	10876576	WASSERHEIZGERAET
DICHTUNG	11826653	(3)	1	448	10876576	WASSERHEIZGERAET
DICHTUNG	12462476	50	2	475	11429845	SCRFILTER-BAUGRUPPE
DICHTUNG	13484584	3	4	167	11358036	ZYLINDERKOPFDECKEL ANBA
DICHTUNG	7011131	2	1	147	5004624	OELABLASSSCHRAUBE
DICHTUNG	7371064	9	1	23	790256114	LEITRADEINHEIT KPL
DICHTUNG	9144762	(3)	1	151	10118839	OELEINFUELLUNG
DICHTUNG	9144762	232	1	250	10148366	DS DIESELMOTOR
DICHTUNG	9885529	4	1	249	9078962	NEBENABTRIEB VORM.
DICHTUNG 0,33 METALOSEAL	10126738	2	1	139	10147687	AGGREGATETRAEGER ANBA
DICHTUNG 0,33 METALOSEAL	10137721	5	1	232	10115829	SCHWUNGRADGEHAEUSE AN
DICHTUNG 1	9079130	3	1	192	10146791	KRAFTSTOFF-FEINFILTERAN
DICHTUNG 1	9079130	2011	1	251	10148366	DS DIESELMOTOR
DICHTUNG 1,5 AFM 32/2	9268131	18	1	222	10140729	ATL-ANBAU
DICHTUNG 1.5X721X86 EPDM	97005272	3	1	349	966497908	FRONTSCHEIBE KPL.
DICHTUNG 120X60X 30 SCHW	976094308	7	1	329	916170808	KABELEINFUEHRUNG
DICHTUNG 25X14X4080 EPDM	97046043	18	1	346	916162508	SCHEIBEN EINBAU
DICHTUNG 25X892X720 EPDM	97033487	7	1	346	916162508	SCHEIBEN EINBAU
DICHTUNG 2X148X84 EPDM	97005291	7	1	349	966497908	FRONTSCHEIBE KPL.
DICHTUNG 2X225X107 EPDM	97005290	6	1	349	966497908	FRONTSCHEIBE KPL.
DICHTUNG 2X86X28 EPDM	97012017	29	2	349	966497908	FRONTSCHEIBE KPL.
DICHTUNG 2X94X39 EPDM	97005309	11	9	349	966497908	FRONTSCHEIBE KPL.
DICHTUNG 439X120X5 POLYA	97012288	6	1	329	916170808	KABELEINFUEHRUNG
DICHTUNG 4X322X62 EPDM 20	97005040	9	1	352	916168308	LUFTFUEHRUNG
DICHTUNG 4X407X85 EPDM 20	97005042	10	2	352	916168308	LUFTFUEHRUNG
DICHTUNG 645X786 EPDM	97007649	2	1	332	968462608	SCHALTSCHRANKDECKEL EIN
DICHTUNG 721X43X 1.5 EPDM	97006055	18	1	349	966497908	FRONTSCHEIBE KPL.
DICHTUNG 78X64 30	976193208	8	1	329	916170808	KABELEINFUEHRUNG
DICHTUNG 7X182X51 POLYO	97006874	32	6	338	917305408	INNENVERKLEIDUNG EINBAU
DICHTUNG 85.5X89X30 ZP-30	97071963	16	1	329	916170808	KABELEINFUEHRUNG
DICHTUNG 90X97X5 POLYALE	978172508	13	1	431	96056347	ELEKTRIK ANBAUTEILE KABIN
DICHTUNG AFM 30	10117709	2	1	173	10129475	OELKUEHLER ANBAU
DICHTUNG AFM 30	10128516	2	1	144	10132560	OELWANNE MIT BEFEST.
DICHTUNG AFM 30	10128516	2	1	253	10141167	DS OELWANNE
DICHTUNG DIN 71511 1,5X25X	4980359	4	2	174	10129474	OELKUEHLER VORM.
DICHTUNG S235JR	10118556	2	4	200	10147365	LUFTANSAUGROHR ANBAU
DICHTUNG X15CrNiSi20-	10125739	7	1	222	10140729	ATL-ANBAU
DICHTUNG X5CrNi18-10	12436701	32	1	223	12512627	ABGASSTUTZEN ANBAU
DICHTUNG XTREME PLUS	10125148	122	1	470	919674308	ABGASANLAGE
DICHTUNGEN KPL NBR	11311955	2	2	303	10475262	ABSPERRORGAN
DICHTUNGSMASSE	10447539	99	1	480	10327065	ELEKTROPUMPE

Bezeichnung	Artikel	Pos.	Menge	Seite	Baugruppe	Bezeichnung
DICHTUNGSMASSE TUBE 50M	811201314	2	0.1	613	919386708	KUEHLWASSERVORWAERM
DICHTUNGSMITTEL 90G TUBE	8627609	112	1	146	10155227	OELWANNE VORM.
DICHTUNGSSATZ	10331947	800	1	275	10429930	ZAHNRADMOTOR
DICHTUNGSSATZ	510184001	(999)	1	454	919501608	HYDRAULISCHE BALLASTIER
DIESELMOTOR D944 A7-05	13455311	1	1	129	13471292	ANTRIEBSGRUPPE
DIESELMOTOR KAUFTEIL	919832408	104	1	12		LIEBHERR LTR 1100
DIESELOXIDATIONSKATALYSA	12888562	101	1	470	919674308	ABGASANLAGE
DIFFERENZDRUCKSENSOR 0-	10127114	155	1	474	96041566	ELEKTRIK ANBAUTEILE
DIODE BY255P DO-13	660014308	6	1	505	966157408	BESTUECKUNGSMODUL
DISTANZHUELSE 10X6,2X10 P	10354375	56	1	338	917305408	INNENVERKLEIDUNG EINBAU
DISTANZHUELSE 11X20X25 42	10138657	7	14	220	10140087	ABGASROHR ANBAU
DISTANZHUELSE 11X24X10,5	9076588	90	1	239	10151328	KABELBAUM ANBAU
DISTANZHUELSE 15X6,3X25 P	10441664	55	1	338	917305408	INNENVERKLEIDUNG EINBAU
DISTANZHUELSE 18.0X26 E23	97047984	16	1	268	918811108	ANTRIEBSAGGREGAT VORM.
DISTANZHUELSE 30.0 X0 42C	952177008	11	8	263	918728708	ANTRIEBSAGGREGAT KPL.
DISTANZHUELSE 30.0 X0 42C	952177008	14	8	268	918811108	ANTRIEBSAGGREGAT VORM.
DISTANZHUELSE 35.0X40 35N	970780908	9	2	290	917962508	KRAFTSTOFFBEHAELTER AN
DISTANZHUELSE 8,5X18X10 11	9132577	93	1	239	10151328	KABELBAUM ANBAU
DISTANZHUELSE 9X15X30 42	12843150	5	1	184	10152867	INJEKTOR MIT BEFEST.
DISTANZHUELSE 9X15X30 42	12843150	6	1	185	13743036	RS INJEKTOR
DISTANZPLATTE 22X306X425	283095108	48	2	670	91000053	TELESKOP 4 VORM.
DISTANZRING 152X25X50 ST.3	956657514	9	4	47	968374708	MONTAGETEILE
DISTANZRING 48.3 X0 S235JR	970501108	8	4	723	964502908	MASTNASE VORM.
DISTANZROHR 114.3X234 S355	951892308	54	1	673	91000054	TELESKOP 5 VORM.
DISTANZROHR RD114,3X6,3X3	940380008	30	1	673	91000054	TELESKOP 5 VORM.
DISTANZROHR RD114,3X6,3X3	940380008	2	1	727	914557108	EINBAU NACKENROLLE
DISTANZSTUECK	571130408	5	1	524	571130108	DRUCKBEGRENZUNGSVENTI
DISTANZSTUECK 160X75X25 P	979009508	52	1	661	91000050	TELESKOP 1 VORM.
DISTANZSTUECK 160X75X25 P	979009508	52	1	664	91000051	TELESKOP 2 VORM.
DISTANZSTUECK 160X75X25 P	979009508	52	2	667	91000052	TELESKOP 3 VORM.
DISTANZSTUECK 160X75X25 P	979009508	52	2	670	91000053	TELESKOP 4 VORM.
DISTANZSTUECK 160X75X25 P	979009508	87	2	674	91000054	TELESKOP 5 VORM.
DISTANZSTUECK 8,4X20X15,6	13566415	6	1	177	10148432	SCHMIEROELPUMPE MIT BE
DISTANZSTUECK PA6G SPF	97167074	48	12	655	91000049	ANLENKSTUECK VORM.
DISTANZSTUECK PA6G SPF	97167074	48	12	661	91000050	TELESKOP 1 VORM.
DISTANZSTUECK PA6G SPF	97167074	48	12	664	91000051	TELESKOP 2 VORM.
DISTANZSTUECK PA6G SPF	97167074	48	12	667	91000052	TELESKOP 3 VORM.
DOKUMENTATION	980288008	1000	1	180	10297295	WECHSELFILTER
DOKUMENTATION	980288008	1	1	195	12820742	KRAFTSTOFFFEINFILTER
DOKUMENTATION	980288008	1000	1	297	11068050	FILTERELEMENT
DOKUMENTATION	980288008	1	1	300	514615408	O-RING
DOKUMENTATION	980288008	1	1	302	11341871	DS RUECKLAUFFILTER
DOKUMENTATION	980288008	1	1	310	10149977	KRAFTSTOFFFILTEREINSATZ
DOKUMENTATION	980288008	1	1	313	12101886	DICHTSATZ
DOKUMENTATION	980288008	1	1	344	11182242	FILTER
DOKUMENTATION	980288008	1	1	390	11083438	FILTER
DOKUMENTATION	980288008	1000	1	452	553174008	KRAFTSTOFFFILTER
DOKUMENTATION	980288008	1000	1	527	10280184	DICHTSATZ
DOKUMENTATION	980288008	1000	1	553	12108313	DS VENTIL
DOKUMENTATION	980288008	1	1	557	10037616	FILTEREINSATZ
DOKUMENTATION	980288008	1000	1	569	571352308	KARTUSCHE
DOPPELFEDERKONTAKT 0,5-1	6001703	2267	2	91	96062921	KABELSTRANG
DOPPELHAKEN NR. 016-T 63t	11341375	30	1	743	910445708	HAKENFLASCHE
DOPPELHOHLSCHRAUBE 6-M1	12210029	12	1	198	10143342	LECKOELRUECKLAUF
DOPPELKLAPPSPITZE MECH.K	919932208	351	1	14		LIEBHERR LTR 1100
DOPPELKLAPPSPITZE MECH.	91001037	1	1	754	919932208	DOPPELKLAPPSPITZE MECH.K
DOPPELKLAPPSPITZE MECH.	91001038	1	1	755	91001037	DOPPELKLAPPSPITZE MECH.
DOPPELMAULSCHLUESSEL D	790003908	20	1	104	928569808	GRUNDWERKZEUG
DOPPELMAULSCHLUESSEL D	790003308	11	1	104	928569808	GRUNDWERKZEUG
DOPPELMAULSCHLUESSEL D	790002208	12	1	104	928569808	GRUNDWERKZEUG

Bezeichnung	Artikel	Pos.	Menge	Seite	Baugruppe	Bezeichnung
DOPPELMAULSCHLUESSEL D	790002408	13	1	104	928569808	GRUNDWERKZEUG
DOPPELMAULSCHLUESSEL D	790003608	15	1	104	928569808	GRUNDWERKZEUG
DOPPELMAULSCHLUESSEL D	790002508	16	1	104	928569808	GRUNDWERKZEUG
DOPPELMAULSCHLUESSEL D	790002608	17	1	104	928569808	GRUNDWERKZEUG
DOPPELMAULSCHLUESSEL D	790002808	18	1	104	928569808	GRUNDWERKZEUG
DOPPELMAULSCHLUESSEL D	790002908	19	1	104	928569808	GRUNDWERKZEUG
DOPPELMAULSCHLUESSEL DI	790001708	10	1	104	928569808	GRUNDWERKZEUG
DOPPELMAULSCHLUESSEL	10652772	14	1	104	928569808	GRUNDWERKZEUG
DOPPELRUECKSCHLAGVENTI	11006543	4	1	550	10663060	STEUERBLOCK
DOPPELSTECKDOSE 2-POL	10875121	16	1	426	96023891	KABELSTRANG
DORNNIET 4X10,3	704207608	7	4	87	96062922	MONTAGEPLATTE VORM.
DORNNIET 4X15	704207708	200	4	111	919933708	BESCHILDERUNG GROSSBRI
DOSE M1	10872381	155	2	703	96063458	KLEMMKASTEN KPL.
DOSIERPUMPE DP42.4 HD	11110051	2	1	444	918759708	ZUSATZHEIZUNG OW
DRAEHTE GRUNDAUFBAU KP	96059659	1	1	499	96059658	GRUNDAUFBAU KPL.
DRAEHTE GRUNDAUFBAU V	96059660	2	1	500	96059659	DRAEHTE GRUNDAUFBAU KPL
DRAEHTE KLEMMKASTEN KP	96062034	6	1	703	96063458	KLEMMKASTEN KPL.
DRAEHTE S902	96051215	7	1	695	96063212	LEITUNGSTROMMEL KPL.
DRAEHTE VORM. S930	96062040	2	1	704	96062034	DRAEHTE KLEMMKASTEN KPL
DRAHTSCHLAUCHKLEMME 70	11000902	14	2	352	916168308	LUFTFUEHRUNG
DRAHTSCHLAUCHKLEMME 79	11000903	13	6	352	916168308	LUFTFUEHRUNG
DREHBUEHNENARRETIERUN	916109208	121	1	13		LIEBHERR LTR 1100
DREHBUEHNENVERKLEIDUN	918728908	135	1	13		LIEBHERR LTR 1100
DREHBUEHNENVERKLEIDUN	96024809	2	1	403	918728908	DREHBUEHNENVERKLEIDUN
DREHBUEHNENVERKLEIDUN	96022627	1	1	403	918728908	DREHBUEHNENVERKLEIDUN
DREHDURCHFUEHRUNG 6 KA	10282928	3	1	42	96048348	HYDR.INSTALLATIONSTEILE
DREHFALLENSCHLOSS LINKS	11005985	1	1	362	966230408	SCHLIESSANLAGE
DREHGEBER	968248508	30	1	486	968365908	EL.GEBER U.ENDSCHALTER
DREHGEBER 360° LSB PL:E SP	11342313	(1)	1	486	968365908	EL.GEBER U.ENDSCHALTER
DREHVERSCHRAUBUNG DG1	474234008	150	3	709	965994108	HYDRAULIK TELE
DREHWERK	919235408	119	1	13		LIEBHERR LTR 1100
DREHWERKANTRIEB DAT 225/	933074801	1	1	367	919235408	DREHWERK
DREHZAHLGEBER 10-10000H	13736146	1	1	244	12544505	DREHZAHLGEBER KPL.
DREHZAHLGEBER KPL. 10-10	12544505	20	2	243	12583633	MOTORREGELUNGSENSORIK
DROSSELRUECKSCHLAGVEN	511497208	167	1	516	96045552	HYDRAULIK OBERWAGEN
DROSSELRUECKSCHLAGVEN	511497208	156	1	591	96064697	HYDRAULIK HILFSHUBWERK
DRUCK-/TEMPERATUR SENSO	12414685	739	1	464	11373478	REDUKTIONSMITTELPUMPE
DRUCKAUFNEHMER 0-400/400	10813738	58	7	516	96045552	HYDRAULIK OBERWAGEN
DRUCKAUFNEHMER 0-400/400	10813738	52	1	591	96064697	HYDRAULIK HILFSHUBWERK
DRUCKAUFNEHMER 0-400/400	10813738	51	1	709	965994108	HYDRAULIK TELE
DRUCKAUFNEHMER 0-400/400	10816185	62	1	516	96045552	HYDRAULIK OBERWAGEN
DRUCKAUSGLEICHSELEMEN	11921782	307	1	692	96063456	KLEMMKASTEN
DRUCKAUSGLEICHSELEMEN	11921782	293	1	703	96063458	KLEMMKASTEN KPL.
DRUCKBEGRENZUNGSVENTI	10491574	10	1	537	10665128	DECKEL
DRUCKBEGRENZUNGSVENTI	10492431	11	1	275	10429930	ZAHNRADMOTOR
DRUCKBEGRENZUNGSVENTI	10801852	39	1	71	10356288	ABSTUETZZYLINDER
DRUCKBEGRENZUNGSVENTI	511655114	50	2	44	10801751	VERSTELLUNG
DRUCKBEGRENZUNGSVENTI	571130108	17	1	522	11170514	VENTILBLOCK
DRUCKBEGRENZUNGSVENTI	571130108	17	2	528	11170515	VENTILBLOCK
DRUCKBEGRENZUNGSVENTI	571130108	17	5	530	11170518	VENTILBLOCK
DRUCKBEGRENZUNGSVENTI	571130108	17	2	531	11170519	VENTILBLOCK
DRUCKBEGRENZUNGSVENTI	571130108	17	2	602	10665173	STEUERBLOCK
DRUCKBEGRENZUNGSVENTI	571534908	70	1	543	10333672	STEUERBLOCK
DRUCKBEGRENZUNGSVENTI	571539808	40	1	543	10333672	STEUERBLOCK
DRUCKBEGRENZUNGSVENTI	571691108	5	1	549	10877219	STEUERBLOCK
DRUCKBEGRENZUNGSVENTI	571877008	3	2	538	511307808	STEUERLEISTE
DRUCKBEGRENZUNGSVENTI	571928308	37	1	684	12105406	TELESKOPIERZYLINDER
DRUCKBEGRENZUNGSVENTIL	10451060	5	2	550	10663060	STEUERBLOCK
DRUCKBEGRENZUNGSVENTI	10872307	1	1	465	969904608	DRUCKBEGRENZUNGSVENTI
DRUCKBEGRENZUNGSVENTI	969904608	16	1	461	96074081	HARNSTOFFTANK VORM.

Bezeichnung	Artikel	Pos.	Menge	Seite	Baugruppe	Bezeichnung
DRUCKBEGRENZUNGSVENTI	511450208	193	1	517	96045552	HYDRAULIK OBERWAGEN
DRUCKBEGRENZUNGSVENTI	571400108	60	1	543	10333672	STEUERBLOCK
DRUCKBEGRENZUNGSVENTI	570427108	50	1	543	10333672	STEUERBLOCK
DRUCKBEGRENZUNGSVENTI	511417608	150	1	619	969856508	ZUSATZHYDRAULIK OELVOR
DRUCKBEGRENZUNGSVENTI	511417708	191	1	517	96045552	HYDRAULIK OBERWAGEN
DRUCKBEGRENZUNGSVENTI	12106454	5	1	35	10675161	STEUERBLOCK
DRUCKFEDER	12105786	3	1	66	11481975	STEUERBLOCK
DRUCKFEDER	510714008	6	1	37	510438508	DRUCKMINDERVENTIL
DRUCKFEDER	510714508	19	1	37	510438508	DRUCKMINDERVENTIL
DRUCKFEDER	511015108	4	1	558	511417708	DRUCKBEGRENZUNGSVENTI
DRUCKFEDER	570631008	3	1	525	10032696	PATRONE
DRUCKFEDER	720011508	25	1	771	918596708	KOPFSTUECK VORM.
DRUCKFEDER	927520801	27	1	584	938759801	PLANETENGETRIEBE
DRUCKFEDER 0,5X3X12,4	510797508	9	1	558	511417708	DRUCKBEGRENZUNGSVENTI
DRUCKFEDER 0,5X3X12,4	510797508	9	1	621	511417608	DRUCKBEGRENZUNGSVENTI
DRUCKFEDER 1,6X18,2X44	720009408	7	2	127	968305308	ENDSCHALTER VORM.
DRUCKFEDER 1,6X18,2X44	720009408	19	4	679	91000055	AUSSCHUBMECHANIK
DRUCKFEDER 1,9X6,9X21,5	510735908	6	1	524	571130108	DRUCKBEGRENZUNGSVENTI
DRUCKFEDER 10X100X150 X	720009308	2	1	670	91000053	TELESKOP 4 VORM.
DRUCKFEDER 10X100X150 X	720009308	2	1	673	91000054	TELESKOP 5 VORM.
DRUCKFEDER 10X105X150 SP	720009608	2	1	661	91000050	TELESKOP 1 VORM.
DRUCKFEDER 10X105X150 SP	720009608	2	1	664	91000051	TELESKOP 2 VORM.
DRUCKFEDER 10X105X150 SP	720009608	2	1	667	91000052	TELESKOP 3 VORM.
DRUCKFEDER 2,10X17,80X75,0	9886756	9	1	174	10129474	OELKUEHLER VORM.
DRUCKFEDER 2,2X11X38	510797108	4	1	621	511417608	DRUCKBEGRENZUNGSVENTI
DRUCKFEDER 2X12X41,73 EN	11067867	38	1	361	917304708	SCHIEBETUER EINBAU
DRUCKFEDER 3,2X16,8X100,7	10129501	4	1	176	10152592	UEBERDRUCKVENTIL
DRUCKFEDER 3,6X56,4X122 E	10876108	3	1	374	916109208	DREHBUEHNENARRETIERUN
DRUCKFEDER 3X17X74,67 O	11118160	6	1	141	10138450	ENDREGELVENTIL
DRUCKFEDER 4,60X28,40X62,7	9074481	(9)	4	160	10149580	ZYLINDERKOPF ANBAU
DRUCKFEDER 4,60X28,40X62,7	9074481	9	4	162	10149579	ZYLINDERKOPF VORM.
DRUCKFEDER 4X25X41 EN 10	11003426	5	1	441	966707708	SPIEGELHALTER VORM.
DRUCKFEDER 5X40X205 X10	720008308	2	2	422	96044789	SPANNEINHEIT KPL.
DRUCKFEDER 8X92X50 FED	10297691	5	1	321	96015921	BEDIENELEMENTE EINBAU
DRUCKFEDER DIN 2098 2,5X2	720007108	7	4	52	968374908	ENDSCHALTER ANBAU
DRUCKFEDER DIN 2098 2X16	720008508	5	1	750	96062062	KLAPPKONSOLE VORM.
DRUCKFEDER DIN 2098 6,3X5	720001108	35	1	760	918533508	ADAPTER VORM.
DRUCKFEDER EN10270-3	720012608	42	1	747	919933308	TRANSPORTHALTERUNG DKS
DRUCKGEBER 0,5-4,5 BAR	12907020	(1)	1	243	12583633	MOTORREGELUNGSENSORIK
DRUCKGEBER 0-10 BAR	12907001	(1)	1	243	12583633	MOTORREGELUNGSENSORIK
DRUCKGEBER KPL. 0,5-4,5 BA	9076550	11	1	243	12583633	MOTORREGELUNGSENSORIK
DRUCKGEBER KPL. 0-10 BAR	9076531	10	2	243	12583633	MOTORREGELUNGSENSORIK
DRUCKLUFTANLAGE OW	918118408	189	1	14		LIEBHERR LTR 1100
DRUCKMINDERVENTIL pv=30	510438508	160	1	33	967304508	HYDRAULIK UNTERWAGEN
DRUCKREDUZIERVENTIL	11170276	1	1	547	511306608	STEUERBLOCK
DRUCKREGELVENTIL	10450051	49	1	44	10801751	VERSTELLUNG
DRUCKRING	502923708	46	2	431	96056347	ELEKTRIK ANBAUTEILE KABIN
DRUCKRING DR/R22X27	502932508	406	1	291	969543308	KRAFTSTOFFBEHAELTER VO
DRUCKRING DR/R26X31	502932808	312	1	566	969767908	VERROHRUNG DRUCKLUFTA
DRUCKROHRSTUTZEN LCRC-	10135080	1	1	189	10153151	DRUCKROHRSTUTZEN MIT BE
DRUCKROHRSTUTZEN MIT BE	10153151	191	4	132	13455311	DIESELMOTOR
DRUCKSCHALTER 1,5-26 BAR	571489108	106	1	272	96020819	KUEHLER VORM.
DRUCKSCHALTER 10-100/400	510676908	50	1	33	967304508	HYDRAULIK UNTERWAGEN
DRUCKSCHALTER 10-100/400	510676908	51	2	516	96045552	HYDRAULIK OBERWAGEN
DRUCKSCHALTER 10-100/400	510676908	51	1	591	96064697	HYDRAULIK HILFSHUBWERK
DRUCKSTUECK RD40X60 42C	957095714	42	4	22	96062226	RAUPENTRAEGER KPL.RE.
DRUCKSTUECK RD40X60 42C	957095714	42	4	28	96062228	RAUPENTRAEGER KPL.LI.
DRUCKTASTE	606143008	18	1	435	96022872	ARMATURENBRETT DACH
DRUCKTASTER	11171271	33	1	397	10877138	FAHRERSITZ
DRUCKVENTIL	11009440	29	1	530	11170518	VENTILBLOCK

Bezeichnung	Artikel	Pos.	Menge	Seite	Baugruppe	Bezeichnung
DRUCKVENTIL	11065879	4	1	522	11170514	VENTILBLOCK
DRUCKVENTIL	571453708	7	1	540	511486908	STEUERLEISTE
DRUCKVENTIL	571889108	6	1	534	10802090	STEUERBLOCK
DS	11220418	999	1	66	11481975	STEUERBLOCK
DS ABGASSTUTZEN	11351426	4320	1	251	10148366	DS DIESELMOTOR
DS ABSTUETZZYLINDER	10801854	999	1	71	10356288	ABSTUETZZYLINDER
DS AGGREGATETRAEGER	10141157	120	1	250	10148366	DS DIESELMOTOR
DS ANSAUGSTUTZEN	11351429	2210	1	251	10148366	DS DIESELMOTOR
DS ANSCHLUSSGEHAEUSE	9274731	91	1	261	12487540	HYDRAULIKDOPPELPUMPE
DS ATL-ANBAU	11351313	4300	1	251	10148366	DS DIESELMOTOR
DS BALLASTIERZYLINDER	12104660	999	1	456	12102342	BALLASTIERZYLINDER
DS DIESELMOTOR D944 A7-04	10148366	939	1	135	13455311	DIESELMOTOR
DS DOPPELPUMPE	9276426	98	1	261	12487540	HYDRAULIKDOPPELPUMPE
DS DRUCKBEGRENZUNGSV	10872100	(999)	1	543	10333672	STEUERBLOCK
DS DRUCKBEGRENZUNGSV	10872101	(999)	1	543	10333672	STEUERBLOCK
DS DRUCKROHRSTUTZEN	10141216	12	1	186	10141140	RS DRUCKROHRSTUTZEN
DS DRUCKROHRSTUTZEN	10141216	210	1	189	10153151	DRUCKROHRSTUTZEN MIT BE
DS DRUCKROHRSTUTZEN	10141216	210	1	190	10135080	DRUCKROHRSTUTZEN
DS DRUCKROHRSTUTZEN	10141216	210	1	191	13757616	RS DRUCKROHRSTUTZEN
DS HOCHDRUCKPUMPE	12417001	210	1	182	10146658	HOCHDRUCKPUMPE
DS HOCHDRUCKPUMPE	12937883	211	1	182	10146658	HOCHDRUCKPUMPE
DS HOCHDRUCKPUMPE	12937883	1710	1	251	10148366	DS DIESELMOTOR
DS HYDROZYLINDER	10490901	(999)	1	374	916109208	DREHBUEHNENARRETIERUN
DS HYDROZYLINDER	10491695	999	1	316	10650940	KIPPZYLINDER
DS INJEKTOR	13703082	210	1	184	10152867	INJEKTOR MIT BEFEST.
DS KRAFTSTOFFLEITUNG	10141217	2120	1	251	10148366	DS DIESELMOTOR
DS KUEHLMITTELKRUEMMER	11351432	3820	1	251	10148366	DS DIESELMOTOR
DS KURBELGEHAEUSEENTL	10141165	160	1	250	10148366	DS DIESELMOTOR
DS LECKOELRUECKLAUF	11351500	2140	1	251	10148366	DS DIESELMOTOR
DS LUFTANSAUGUNG	11351430	2240	1	251	10148366	DS DIESELMOTOR
DS OELKUEHLER	10141182	1300	1	250	10148366	DS DIESELMOTOR
DS OELLEITUNG	10141169	250	1	250	10148366	DS DIESELMOTOR
DS OELWANNE	10141167	200	1	250	10148366	DS DIESELMOTOR
DS REGELVENTIL	9270147	(90)	1	261	12487540	HYDRAULIKDOPPELPUMPE
DS REGELVENTIL	9270147	88	2	261	12487540	HYDRAULIKDOPPELPUMPE
DS RUECKLAUFFILTER	11341871	999	1	296	10871354	RUECKLAUFFILTER
DS SCHMIEROELPUMPE	11351510	1400	1	250	10148366	DS DIESELMOTOR
DS SCHWUNGRADGEHAEUSE	11351428	5200	1	251	10148366	DS DIESELMOTOR
DS SENKBREMSVENTIL	10650953	999	1	551	10355774	SENKBREMSVENTIL
DS SENKBREMSVENTIL	11114202	(999)	1	534	10802090	STEUERBLOCK
DS SENKBREMSVENTIL	11114206	(999)	1	591	96064697	HYDRAULIK HILFSHUBWERK
DS TAKTVENTIL	11351427	4360	1	251	10148366	DS DIESELMOTOR
DS TELESKOPZYLINDER	12107425	999	1	684	12105406	TELESKOPIERZYLINDER
DS THERMOSTATGEHAEUSE	11351503	3800	1	251	10148366	DS DIESELMOTOR
DS VENTIL	10875274	(999)	1	528	11170515	VENTILBLOCK
DS VENTIL	11450691	999	1	542	570527908	WEGEVENTIL
DS VENTIL	12108313	999	1	552	10292670	SENKBREMSVENTIL
DS VENTIL	571561908	999	1	685	570960608	SENKBREMSVENTIL
DS VENTILBLOCK	10412609	999	1	530	11170518	VENTILBLOCK
DS VENTILBLOCK	10412632	999	1	528	11170515	VENTILBLOCK
DS VENTILBLOCK	10412632	999	1	531	11170519	VENTILBLOCK
DS VENTILBLOCK	10412632	999	1	602	10665173	STEUERBLOCK
DS VERBINDUNGSLEITUNG	11351425	2300	1	251	10148366	DS DIESELMOTOR
DS VORFOERDERPUMPE	12424993	215	1	182	10146658	HOCHDRUCKPUMPE
DS VORFOERDERPUMPE	12424993	1719	1	251	10148366	DS DIESELMOTOR
DS WEGEVENTIL	10802253	(999)	1	619	969856508	ZUSATZHYDRAULIK OELVOR
DS WEGEVENTIL	11006275	999	1	544	571737808	WEGEVENTIL
DS WEGEVENTIL	11342418	(999)	1	35	10675161	STEUERBLOCK
DS WEGEVENTIL	5009562	(999)	1	534	10802090	STEUERBLOCK
DS WIPPZYLINDER	12104384	999	1	628	12102922	WIPPZYLINDER

Bezeichnung	Artikel	Pos.	Menge	Seite	Baugruppe	Bezeichnung
DS ZAHNRADPUMPE	10492710	999	1	279	10488363	ZAHNRADPUMPE
DS ZAHNRADPUMPE	11600193	1	1	278	512142508	ZWEIFACHZAHNRADPUMPE
DS ZYLINDERKOPF	12107426	(999)	1	684	12105406	TELESKOPIERZYLINDER
DS ZYLINDERKOPF KPL.	10141181	800	4	250	10148366	DS DIESELMOTOR
DSF-RING 130X121,9X3,5	12478647	5	1	159	10146367	KOLBEN KPL.
DU-BUCHSE 25X28X12	708011608	25	2	747	919933308	TRANSPORTHALTERUNG DKS
DUESE	12101218	2	1	648	10876885	FETTSPRUEHGERAET
DUESE 0,4 M5X6 MS	510754308	25	2	522	11170514	VENTILBLOCK
DUESE 0,5 M10X10 MS	511062908	181	1	517	96045552	HYDRAULIK OBERWAGEN
DUESE 0,5 M5X9 MS	511062708	177	2	516	96045552	HYDRAULIK OBERWAGEN
DUESE 0,5 M5X9 MS	511062708	154	1	591	96064697	HYDRAULIK HILFSHUBWERK
DUESE 0,5 M5X9 MS	511062708	152	1	709	965994108	HYDRAULIK TELE
DUESE 0,6 M5X5 MS	510754408	22	4	534	10802090	STEUERBLOCK
DUESE 0,6 M5X5 MS	510754408	21	1	537	10665128	DECKEL
DUESE 0,8 M5	571527308	25	2	534	10802090	STEUERBLOCK
DUESE 1,3 M10X10 MS SPF	10101092	187	1	517	96045552	HYDRAULIK OBERWAGEN
DUESE 1,3 M10X10 MS SPF	10101092	159	1	591	96064697	HYDRAULIK HILFSHUBWERK
DUESE 1,5 M6	571877108	6	1	538	511307808	STEUERLEISTE
DUESE 1,6 M5	571704608	23	1	534	10802090	STEUERBLOCK
DUESE 2,0 M10X10 ST	511062608	182	1	517	96045552	HYDRAULIK OBERWAGEN
DUESE 2,5 M10X10 ST	511064108	196	2	517	96045552	HYDRAULIK OBERWAGEN
DUESE DIN 913 0,6 M10X10 M	511062208	183	1	517	96045552	HYDRAULIK OBERWAGEN
DUESE DIN 913 1,2 M5X5 MS	571362208	24	1	522	11170514	VENTILBLOCK
DUESENHALTER	12105795	1006	8	66	11481975	STEUERBLOCK
DUESENSATZ PA	10815496	16	1	355	916163008	WISCHANLAGE EINBAU
DURCHFUEHRUNGSTUELLE	602701308	1	1	329	916170808	KABELEINFUEHRUNG
DURCHFUEHRUNGSTUELLE	602701808	11	2	781	968940708	HALTER LINKS
DURCHFUEHRUNGSTUELLE	602701808	11	2	782	968940808	HALTER RECHTS
DURCHGANGSNIPPELBLOCK	774375108	12	2	478	915300208	ZENTRALSCHMIERANLAGE O
EIN-/AUSGANGSMODUL	12780040	100	1	509	96069052	UNIVERSAL EIN-AUSGANGS
EINBAU NACKENROLLE	914557108	363	1	14		LIEBHERR LTR 1100
EINBAURAHMEN	12108687	3	1	650	12257818	AUTORADIO
EINBAUSTECKDOSE 2-POL	605203908	5	1	435	96022872	ARMATURENBRETT DACH
EINBAUTEILE SCHALTSCHRAN	919940108	181	1	13		LIEBHERR LTR 1100
EINBAUVENTIL	12101147	3	1	549	10877219	STEUERBLOCK
EINFACHHAKEN	11492232	2	1	739	910543708	LASTHAKEN
EINFUELLDECKEL 42 PA	10815416	19	1	355	916163008	WISCHANLAGE EINBAU
EINFUELLSTUTZEN KPL.	10118838	1	1	151	10118839	OELEINFUELLUNG
EINLASSMODUL SCRFILTER	11428887	10	1	475	11429845	SCRFILTER-BAUGRUPPE
EINLASSVENTIL	10144556	(2)	2	160	10149580	ZYLINDERKOPF ANBAU
EINLASSVENTIL	10144556	2	2	162	10149579	ZYLINDERKOPF VORM.
EINLEGEBRUECKE	602735508	18	42	498	919940108	EINBAUTEILE SCHALTSCHRAN
EINMAULSCHLUESSEL DIN 8	885132208	21	1	104	928569808	GRUNDWERKZEUG
EINMAULSCHLUESSEL DIN 8	790004608	22	1	104	928569808	GRUNDWERKZEUG
EINSCHRAUBBLENDE	10800672	6	1	549	10877219	STEUERBLOCK
EINSCHRAUBBLENDE	5610372	7	1	549	10877219	STEUERBLOCK
EINSPANNBUCHSE DIN 1498 4	704339608	30	2	768	91001040	ANLENKSTUECK VORM.
EINSPRITZLEITUNG R-MOTOR	10143826	1	1	199	10143825	EINSPRITZLEITUNGEN
EINSPRITZLEITUNG R-MOTOR	10143827	2	3	199	10143825	EINSPRITZLEITUNGEN
EINSPRITZLEITUNGEN R-MOT	10143825	215	1	132	13455311	DIESELMOTOR
EINSTECKHUELSE E10-7	772002708	31	1	458	91003833	HARNSTOFFANLAGE
EINSTECKHUELSE E8-6 EDEL	10871759	34	1	458	91003833	HARNSTOFFANLAGE
EINSTELLSCHRAUBE	510779808	28	1	37	510438508	DRUCKMINDERVENTIL
EINSTELLSCHRAUBE M10X1	10012225	5	2	165	11448005	KIPPHEBELBOCK VORM.
EINSTELLSCHRAUBE M10X1	10012225	5	2	166	12549825	KIPPHEBELBOCK VORM.
EINWEISER ISO 8062-3DCTG6	972426708	33	4	661	91000050	TELESKOP 1 VORM.
EINWEISER ISO 8062-3DCTG6	972426708	33	4	664	91000051	TELESKOP 2 VORM.
EINWEISER ISO 8062-3DCTG6	972426708	33	4	667	91000052	TELESKOP 3 VORM.
EINWEISER ISO 8062-3DCTG6	972426708	33	4	670	91000053	TELESKOP 4 VORM.
EINWEISER ISO 8062-3DCTG6	972426708	60	4	673	91000054	TELESKOP 5 VORM.

Bezeichnung	Artikel	Pos.	Menge	Seite	Baugruppe	Bezeichnung
EINZELADERABDICHTUNG 1,2-	10678471	849	6	98	96045216	KABELSTRANG
EINZELADERABDICHTUNG 1,2-	10678471	849	6	640	96045220	KABELSTRANG
EINZELADERABDICHTUNG 1,2	602330808	802	6	90	96062920	KABELSTRANG
EINZELADERABDICHTUNG 1,2	602330808	802	2	427	96023891	KABELSTRANG
EINZELADERABDICHTUNG 1,2	602330808	802	6	494	96023971	KABELSTRANG
EINZELADERABDICHTUNG 1,2	602330808	802	4	496	96049294	KABELSTRANG
EINZELADERABDICHTUNG 1,2	602330808	802	10	694	96063583	LEITUNG
EINZELADERABDICHTUNG 1,2	602330808	802	9	699	96051215	DRAEHTE
EINZELADERABDICHTUNG 1,4-	10424625	828	4	427	96023891	KABELSTRANG
EINZELADERABDICHTUNG 1,4-	10424625	828	2	491	96063649	KABELSTRANG
EINZELADERABDICHTUNG 1,4-	10424625	828	9	496	96049294	KABELSTRANG
EINZELADERABDICHTUNG 2	605619708	813	7	90	96062920	KABELSTRANG
EINZELADERABDICHTUNG 2	605619708	813	19	491	96063649	KABELSTRANG
EINZELADERABDICHTUNG 2	605619708	813	4	494	96023971	KABELSTRANG
EINZELADERABDICHTUNG 2	605619708	813	2	589	96055198	KABELSTRANG
EINZELADERABDICHTUNG 2	605619708	813	1	706	96063415	KABELSTRANG
EINZELADERABDICHTUNG 2,2-	602330508	801	6	494	96023971	KABELSTRANG
EINZELADERABDICHTUNG DI	605619908	821	4	491	96063649	KABELSTRANG
EINZELADERABDICHTUNG DI	605619808	816	3	491	96063649	KABELSTRANG
EINZELADERABDICHTUNG DI	605619808	816	2	496	96049294	KABELSTRANG
EINZELDICHTUNG 0,5-0,75MM	10007388	829	6	706	96063415	KABELSTRANG
EINZELDICHTUNG 1,0-1,5MM2	10014387	830	6	90	96062920	KABELSTRANG
EINZELDICHTUNG 1,0-1,5MM2	10014387	830	6	491	96063649	KABELSTRANG
EINZELDICHTUNG 1,0-1,5MM2	10014387	830	71	494	96023971	KABELSTRANG
EINZELDICHTUNG 1,0-1,5MM2	10014387	830	6	496	96049294	KABELSTRANG
EINZELDICHTUNG 1,0-1,5MM2	10014387	830	6	694	96063583	LEITUNG
EINZELDICHTUNG 1,0-1,5MM2	10014387	830	6	699	96051215	DRAEHTE
EINZELDICHTUNG MLK 1,2 ELA	10870402	845	9	496	96049294	KABELSTRANG
EL.ANLAGE AUSLEGER	919938608	213	1	14		LIEBHERR LTR 1100
EL.ANLAGE DREHBUEHNE	919940408	179	1	13		LIEBHERR LTR 1100
EL.ANLENKST.MECH.KLAPPS	96055854	500	1	755	91001037	DOPPELKLAPPSPITZE MECH.
EL.GEBER U.ENDSCHALTER	968365908	11	1	484	919940408	EL.ANLAGE DREHBUEHNE
EL.KUEHLWASSERVORWAER	91000497	404	1	15		LIEBHERR LTR 1100
EL.TEILE VERSANDMONTAGE	915731908	71	1	12		LIEBHERR LTR 1100
ELASTOMEREINSATZ DIN 301	7363897	326	2	566	969767908	VERROHRUNG DRUCKLUFTA
ELEKTRIK 2.HUBENDSCHALTE	918258408	362	1	14		LIEBHERR LTR 1100
ELEKTRIK ANBAUTEILE	96041566	100	1	473	96051762	ABGASANLAGE VORM.
ELEKTRIK ANBAUTEILE	96050762	10	1	609	919584608	STECKDOSE
ELEKTRIK ANBAUTEILE KABIN	96056347	6	1	424	919812608	ELEKTRIK KRANFUEHRERKAB
ELEKTRIK ANLENKSTUECK	96063954	1	1	689	919938608	EL.ANLAGE AUSLEGER
ELEKTRIK ARBEITSSCHEINW	96028878	20	4	576	918988908	A-SCHEINWERFER DREHBUE
ELEKTRIK ARMATURENKONS	96030724	1	1	431	96056347	ELEKTRIK ANBAUTEILE KABIN
ELEKTRIK AUSSCHUBMECHA	96063455	3	1	689	919938608	EL.ANLAGE AUSLEGER
ELEKTRIK BATTERIEKASTEN	96023914	100	1	285	918955208	BATTERIEKASTEN KPL.
ELEKTRIK DREHWERK	966720708	15	1	486	968365908	EL.GEBER U.ENDSCHALTER
ELEKTRIK KOPFSTUECK	96063454	2	1	689	919938608	EL.ANLAGE AUSLEGER
ELEKTRIK KOPFSTUECK	966636808	501	1	755	91001037	DOPPELKLAPPSPITZE MECH.
ELEKTRIK KRANFUEHRERKAB	919812608	143	1	13		LIEBHERR LTR 1100
ELEKTRIK MESS-U.WARNEINR	96058737	1	1	728	919868808	TRAEGER MESS-U.WARNEIN
ELEKTRIK MITTELSTUECK	96062917	1	1	79	919938908	ELEKTRIK RAUPE
ELEKTRIK OELKUEHLER 2	96030354	100	1	562	919528608	OELKUEHLER EINBAU
ELEKTRIK RAUPE	919938908	66	1	12		LIEBHERR LTR 1100
ELEKTRIK VORBEREITUNG WI	968551908	18	1	598	96075086	HYDRAULIK HILFSHUBWERK D
ELEKTRIK WINDE 1	96047707	10	1	484	919940408	EL.ANLAGE DREHBUEHNE
ELEKTRIK WINDE 2	96055197	2	1	578	919935608	HILFSHUBWERK KPL.
ELEKTRONIKEINHEIT	10650399	35	1	397	10877138	FAHRERSITZ
ELEKTROPUMPE	10327065	1	1	478	915300208	ZENTRALSCHMIERANLAGE O
ELEKTROZYLINDER 24V	10292008	4	1	326	968483708	TRITT KPL.
ENDBUCHSE 48,49X71,38X158	5209131	4	1	56	790258414	RAUPENKETTE KPL
ENDGEHAEUSE DIN 72585 AP	692406008	517	2	491	96063649	KABELSTRANG

Bezeichnung	Artikel	Pos.	Menge	Seite	Baugruppe	Bezeichnung
ENDGEHAEUSE DIN 72585 AP	692406008	523	1	495	96049294	KABELSTRANG
ENDKAPPE 34	553181108	3	1	446	96019783	ZUSATZHEIZUNG VORM.
ENDKAPPE 42,3	553174108	17	1	444	918759708	ZUSATZHEIZUNG OW
ENDREGELVENTIL pmax=4.5	10138450	14	1	130	13455311	DIESELMOTOR
ENDROHR X5CRNI18-10	97098879	105	1	470	919674308	ABGASANLAGE
ENDSCHALTER	928828008	17	1	486	968365908	EL.GEBER U.ENDSCHALTER
ENDSCHALTER ANBAU	968374908	5	1	17	919950108	UNTERWAGEN KPL.M.SCHNEL
ENDSCHALTER ANBAU AUSL	965371508	9	1	484	919940408	EL.ANLAGE DREHBUEHNE
ENDSCHALTER ANBAU AUSL	966591408	10	1	690	96063954	ELEKTRIK ANLENKSTUECK
ENDSCHALTER AUSLEGER ST	966563508	6	1	700	966591408	ENDSCHALTER ANBAU
ENDSCHALTER TASTEND SPF	606053108	5	2	488	928828008	ENDSCHALTER
ENDSCHALTER TQ200-RFID	10678395	(2)	1	652	919935408	TELESKOPAUSLEGER KPL.
ENDSCHALTER TQ200-RFID	10678395	10	1	725	918258408	ELEKTRIK 2.HUBENDSCHALTE
ENDSCHALTER TQ200-RFID	10678395	7	1	776	966479308	GEBER HUB OBEN ENDSCHAL
ENDSCHALTER VORM.	968305308	22	1	124	918728408	MONTAGETEILE DREHBUEHN
ENDWINKEL	602794608	8	2	504	968077108	KLEMMENLEISTE
ENDWINKEL	602794608	299	2	703	96063458	KLEMMKASTEN KPL.
ENTLUEFTUNG	10292000	35	2	338	917305408	INNENVERKLEIDUNG EINBAU
ENTLUEFTUNGSSCHRAUBE G	602501308	11	1	85	966167808	DECKEL KPL.
ENTLUEFTUNGSSCHRAUBE	518620508	42	2	71	10356288	ABSTUETZZYLINDER
ENTLUEFTUNGSSTUTZEN	927501901	2	1	370	927554301	ENTLUEFTUNGSSTUTZEN
ENTLUEFTUNGSSTUTZEN	927501901	13	1	384	939368401	OELMESSEINRICHTUNG
ENTLUEFTUNGSSTUTZEN	927501901	2	1	586	927521201	OELMESSSTABEINRICHTUNG
ENTLUEFTUNGSSTUTZEN	927554301	77	1	369	933074801	DREHWERKANTRIEB
ENTLUEFTUNGSVENTIL	10097910	408	1	291	969543308	KRAFTSTOFFBEHAELTER VO
ENTLUEFTUNGSVENTIL	10424983	21	2	628	12102922	WIPPZYLINDER
ENTLUEFTUNGSVENTIL	10493944	68	1	684	12105406	TELESKOPIERZYLINDER
ENTLUEFTUNGSVENTIL	11622218	3	1	392	969300008	HEIZUNG VORM.
ENTLUEFTUNGSVENTIL	11622218	13	1	446	96019783	ZUSATZHEIZUNG VORM.
ENTLUEFTUNGSVENTIL	721114701	30	1	380	968558601	KOMPAKTSEILWINDE
ENTLUEFTUNGSVENTIL	721114701	30	1	583	938707001	KOMPAKTSEILWINDE
ENTNAHMEMODUL L=405 24V	13475475	2	1	462	96071742	HARNSTOFFTANK
ENTWAESSERUNGSSTOPFEN	602501208	10	2	84	96075205	SCHALTKASTEN VORM.
ENTWAESSERUNGSVENTIL 22	502921908	151	2	566	969767908	VERROHRUNG DRUCKLUFTA
ERSATZELEMENT OEL	12886224	(1)	1	143	10126713	KURBELGEHAEUSEENTLUEF
ERSATZTEILSATZ GRIFF	10873517	5	1	436	10343693	MEISTERSCHALTER
ERWEITERUNG M20X1,5/M25	602613208	19	1	84	96075205	SCHALTKASTEN VORM.
ERWEITERUNG M20X1,5/M25	602613208	505	1	775	96035674	LEITUNG
ES BOLZEN 8X16 FE/ZN8/CN/T	725111808	12	2	410	969425608	KLAPPE VORM.RECHTS
ES BOLZEN 8X16 FE/ZN8/CN/T	725111808	10	1	416	969399608	KLAPPE VORM.
ETIKETTEN 10X90 POLYESTE	11007853	301	1	89	968252908	BTB PROGRAMMIERT
ETIKETTEN 10X90 POLYESTE	11007853	(3)	1	435	96022872	ARMATURENBRETT DACH
ETIKETTEN 10X90 POLYESTE	11007853	301	1	509	96069052	UNIVERSAL EIN-AUSGANGS
FAECHERSCHEIBE DIN 6798 A	12102694	46	7	30	992078314	MITTELTEIL
FAECHERSCHEIBE DIN 6798 A	12102694	18	1	87	96062922	MONTAGEPLATTE VORM.
FAECHERSCHEIBE DIN 6798 A	12102694	12	1	332	968462608	SCHALTSCHRANKDECKEL EIN
FAECHERSCHEIBE DIN 6798 A	12102694	4	12	503	922648308	KLEMMBRETT VORM.
FAECHERSCHEIBE DIN 6798 J	425221208	24	8	22	96062226	RAUPENTRAEGER KPL.RE.
FAECHERSCHEIBE DIN 6798 J	425221208	24	6	27	96062228	RAUPENTRAEGER KPL.LI.
FAECHERSCHEIBE DIN 6798 J	425221608	14	6	19	96062225	UNTERWAGEN KPL.
FAECHERSCHEIBE DIN 6798 J	425221608	13	20	22	96062226	RAUPENTRAEGER KPL.RE.
FAECHERSCHEIBE DIN 6798 J	425221608	13	20	27	96062228	RAUPENTRAEGER KPL.LI.
FAECHERSCHEIBE DIN 6798 J	425221908	40	12	30	992078314	MITTELTEIL
FAECHERSCHEIBE DIN 6798 J	425220708	43	4	431	96056347	ELEKTRIK ANBAUTEILE KABIN
FAECHERSCHEIBE DIN 6798 J	425220708	92	16	502	96025348	GRUNDAUFBAU
FAECHERSCHEIBE DIN 6798 J	425221108	18	1	502	96025348	GRUNDAUFBAU
FAEUSTEL DIN 6475 3000	790031108	61	1	104	928569808	GRUNDWERKZEUG
FAHRANTRIEB LPI1000 30S 0	13710427	(1)	1	22	96062226	RAUPENTRAEGER KPL.RE.
FAHRANTRIEB LPI1000 30S 00	13587399	3	1	22	96062226	RAUPENTRAEGER KPL.RE.
FAHRANTRIEB LPI1000 30S 00	13587399	3	1	27	96062228	RAUPENTRAEGER KPL.LI.

Bezeichnung	Artikel	Pos.	Menge	Seite	Baugruppe	Bezeichnung
FAHRERSITZ 1030/880NTS	10877138	1	1	395	918810308	STEUERSTAND
FALTENBALG	571912308	2	1	436	10343693	MEISTERSCHALTER
FEDERBOLZEN	510797308	6	1	558	511417708	DRUCKBEGRENZUNGSVENTI
FEDERBOLZEN	510797308	6	1	621	511417608	DRUCKBEGRENZUNGSVENTI
FEDERDRUCKLAMELLENBRE	502036301	80	1	369	933074801	DREHWERKANTRIEB
FEDERDRUCKLAMELLENBRE	502037201	70	1	383	968607101	PLANETENGETRIEBE
FEDERDRUCKLAMELLENBRE	502037201	70	1	584	938759801	PLANETENGETRIEBE
FEDERKUPPLUNG 16X35	11342308	(2)	1	486	968365908	EL.GEBER U.ENDSCHALTER
FEDERRING DIN 127 B 10 FSt F	12214461	39	2	741	919421708	HAKENFLASCHE
FEDERRING DIN 127 B 8 FLZN	11659025	16	2	37	510438508	DRUCKMINDERVENTIL
FEDERRING DIN 128 A 20 FST	11968421	8	4	24	749013714	LEITRAD KPL
FEDERRING DIN 128 A 5 FST 4	12227697	111	2	70	915447908	HYDRAULISCHE ABSTUETZUN
FEDERRING DIN 7980 12 FSt	4980013	25	16	261	12487540	HYDRAULIKDOPPELPUMPE
FEDERRING DIN 7980 8 FST V	424100708	8	6	371	510229408	HYDROMOTOR
FEDERSCHEIBE DIN 137 10 X1	10411093	6	2	228	11386644	STARTER
FEDERSCHEIBE DIN 137 6 X1	10411092	4	1	228	11386644	STARTER
FEDERSCHEIBE DIN 137 B 20 F	12100333	62	8	661	91000050	TELESKOP 1 VORM.
FEDERSCHEIBE DIN 137 B 20 F	12100333	62	8	664	91000051	TELESKOP 2 VORM.
FEDERSCHEIBE DIN 137 B 20 F	12100333	62	8	667	91000052	TELESKOP 3 VORM.
FEDERSCHEIBE DIN 137 B 20 F	12100333	62	8	670	91000053	TELESKOP 4 VORM.
FEDERSCHEIBE DIN 137 B 20 F	12100333	41	4	673	91000054	TELESKOP 5 VORM.
FEDERSTECKER 4,5X4X78 A2	433206208	2	2	783	968952708	HAKENSTANGE ANBAU
FEDERSTECKER DIN 11024 2,5	11968422	34	2	315	917357108	KRANFUEHRERKABINE ANBA
FEDERSTECKER DIN 11024 3,2	433206114	13	4	119	96045222	MONTAGETEILE
FEDERTELLER	510797008	3	1	558	511417708	DRUCKBEGRENZUNGSVENTI
FEDERTELLER	510797008	3	1	621	511417608	DRUCKBEGRENZUNGSVENTI
FEDERTELLER	570110808	6	1	373	570109508	TRIEBWERK
FEDERTELLER OBEN 11,7X23X	9074480	(7)	4	160	10149580	ZYLINDERKOPF ANBAU
FEDERTELLER OBEN 11,7X23X	9074480	7	4	162	10149579	ZYLINDERKOPF VORM.
FERNSTEUEREMPFAENGER	11212256	100	1	89	968252908	BTB PROGRAMMIERT
FERNSTEUERSENDER SPF	11160970	(1)	1	435	96022872	ARMATURENBRETT DACH
FERRIT KLAPPBAR	617000608	527	1	427	96023891	KABELSTRANG
FERRIT KLAPPBAR	617000608	512	1	428	96022870	KABELSTRANG
FETT NBU 30 1KG DOSE	10285708	100	1	138	10154458	ZYLINDER
FETT NBU 30 1KG DOSE	10285708	100	1	139	10147687	AGGREGATETRAEGER ANBA
FETT NBU 30 1KG DOSE	10285708	100	1	148	10121667	VERBINDUNGSSTUECK M.O-R
FETT NBU 30 1KG DOSE	10285708	100	1	163	10149578	ZYLINDERKOPF
FETT NBU 30 1KG DOSE	10285708	100	1	168	10120186	MASSENAUSGLEICH ANBAU
FETT NBU 30 1KG DOSE	10285708	100	1	170	10147787	NOCKENWELLE KPL.
FETT NBU 30 1KG DOSE	10285708	100	1	177	10148432	SCHMIEROELPUMPE MIT BE
FETT NBU 30 1KG DOSE	10285708	100	1	201	10145173	ANSAUGSTUTZEN ANBAU
FETT NBU 30 1KG DOSE	10285708	100	1	203	10149677	VERBINDUNGSLEITUNG ANBA
FETT NBU 30 1KG DOSE	10285708	100	1	206	10127566	LUFTPRESSER ANBAU
FETT NBU 30 1KG DOSE	10285708	100	1	215	10142733	WASSERPUMPE MIT BEFEST.
FETT NBU 30 1KG DOSE	10285708	100	1	216	10148215	THERMOSTATGEHAEUSE AN
FETT NBU 30 1KG DOSE	10285708	100	1	218	10142742	KUEHLMITTELKRUEMMER AN
FETT NBU 30 1KG DOSE	10285708	100	1	223	12512627	ABGASSTUTZEN ANBAU
FETT NBU 30 1KG DOSE	10285708	100	1	232	10115829	SCHWUNGRADGEHAEUSE AN
FETT NBU 30 1KG DOSE	10285708	100	1	235	10127979	VERSCHLUSSTEILE
FETT NBU 30 1KG DOSE	10285708	(100)	1	243	12583633	MOTORREGELUNGSENSORIK
FETT NBU 30 1KG DOSE	10285708	100	1	244	12544505	DREHZAHLGEBER KPL.
FETT NBU 30 1KG DOSE	10285708	100	1	246	9078249	VERSCHLUSSTEILE
FETT NBU 30 1KG DOSE	10285708	100	1	247	10144027	VERSCHLUSSTEILE
FETT NBU 30 1KG DOSE	10285708	100	1	249	9078962	NEBENABTRIEB VORM.
FETT STABURAGS NBU 30 0.01	10282622	(10)	1	138	10154458	ZYLINDER
FETT STABURAGS NBU 30 0.01	10282622	100	1	229	10115664	VERSCHLUSSTEILE
FETTSPRUEHGERAET ALUMI	10876885	1	1	647	96010020	FETTSPRUEHSYSTEM
FETTSPRUEHSYSTEM	96010020	15	1	645	919950308	MECH.TEILE VERSANDMONT
FEUERLOESCHER DIN EN 3	12101159	4	1	105	928620108	ZUBEHOER
FEUERLOESCHERHALTERUN	10874802	300	1	645	919950308	MECH.TEILE VERSANDMONT

Bezeichnung	Artikel	Pos.	Menge	Seite	Baugruppe	Bezeichnung
FILTER	11083438	2	1	388	11083498	HEIZKLIMAGERAET
FILTER	12211223	(1)	1	462	96071742	HARNSTOFFTANK
FILTER	571528008	34	1	522	11170514	VENTILBLOCK
FILTER SYNFASAN	11182242	66	1	339	917305408	INNENVERKLEIDUNG EINBAU
FILTEREINSATZ 1m³/min 10µm	510671808	(1)	1	295	969219208	OELBEHAELTER VORM.
FILTEREINSATZ OEL 10µm	10037616	(1)	1	516	96045552	HYDRAULIK OBERWAGEN
FILTEREINSATZ OEL 10µm	10037616	1	1	555	510670808	LEITUNGSFILTER
FILTERELEMENT OEL 8µm	11068050	1	1	296	10871354	RUECKLAUFFILTER
FILTERKONSOLE VORM.	13512036	1	1	192	10146791	KRAFTSTOFF-FEINFILTERAN
FILTERKOPF VORM.	13472766	1	1	193	13512036	FILTERKONSOLE VORM.
FILTERMODUL SCRFILTER G	11429849	20	1	475	11429845	SCRFILTER-BAUGRUPPE
FILTERPATRONE 0,005m³/min 2	510671108	176	2	516	96045552	HYDRAULIK OBERWAGEN
FILTERPATRONE 0,005m³/min 2	510671108	155	1	591	96064697	HYDRAULIK HILFSHUBWERK
FILTERPATRONE 0,005m³/min 2	510671108	153	1	709	965994108	HYDRAULIK TELE
FILTERTOPF	571021308	3	1	555	510670808	LEITUNGSFILTER
FLACHBODENPLATTE B7B BPL	11161944	40	62	55	10430241	RAUPENKETTE KPL.
FLACHDICHTRING 14X19,5X1,	570116908	403	1	280	96035595	AUSGLEICHSBEHAELTER VO
FLACHDICHTRING 14X19,5X1,	570116908	321	1	517	96045552	HYDRAULIK OBERWAGEN
FLACHDICHTRING 17,4X24X1,	710121114	7	1	23	790256114	LEITRADEINHEIT KPL
FLACHDICHTUNG	704274908	10	4	85	966167808	DECKEL KPL.
FLACHKOPFSCHRAUBE ISO 7	408311208	19	4	87	96062922	MONTAGEPLATTE VORM.
FLACHKOPFSCHRAUBE ISO 7	408311208	21	4	498	919940108	EINBAUTEILE SCHALTSCHRAN
FLACHKOPFSCHRAUBE ISO 70	12212474	7	4	610	96050762	ELEKTRIK ANBAUTEILE
FLACHKOPFSCHRAUBE ISO 70	12219804	39	4	388	11083498	HEIZKLIMAGERAET
FLACHKOPFSCHRAUBE ISO 7	408401901	41	4	431	96056347	ELEKTRIK ANBAUTEILE KABIN
FLACHKOPFSCHRAUBE ISO 7	10875472	13	1	703	96063458	KLEMMKASTEN KPL.
FLACHKOPFSCHRAUBE ISO 70	11658059	9	4	321	96015921	BEDIENELEMENTE EINBAU
FLACHKOPFSCHRAUBE ISO 70	11658059	11	4	612	913753108	FUNKVORBEREITUNG OW
FLACHKOPFSCHRAUBE ISO 70	11658059	8	3	781	968940708	HALTER LINKS
FLACHKOPFSCHRAUBE ISO 70	11658059	8	3	782	968940808	HALTER RECHTS
FLACHKOPFSCHRAUBE ISO 70	10876384	82	2	502	96025348	GRUNDAUFBAU
FLACHRUNDSCHRAUBE DIN	10181375	315	2	269	918811108	ANTRIEBSAGGREGAT VORM.
FLACHSICHERUNGSEINSATZ	604007108	14	14	498	919940108	EINBAUTEILE SCHALTSCHRAN
FLACHSICHERUNGSEINSATZ	604007108	6	1	612	913753108	FUNKVORBEREITUNG OW
FLACHSICHERUNGSEINSATZ	604007208	15	6	498	919940108	EINBAUTEILE SCHALTSCHRAN
FLACHSICHERUNGSEINSATZ	604007308	16	9	498	919940108	EINBAUTEILE SCHALTSCHRAN
FLACHSICHERUNGSEINSATZ	604007608	17	1	498	919940108	EINBAUTEILE SCHALTSCHRAN
FLACHSICHERUNGSEINSATZ	604007708	11	3	498	919940108	EINBAUTEILE SCHALTSCHRAN
FLACHSICHERUNGSEINSATZ	604006908	12	9	498	919940108	EINBAUTEILE SCHALTSCHRAN
FLACHSICHERUNGSEINSATZ	604007008	517	2	91	96062921	KABELSTRANG
FLACHSICHERUNGSEINSATZ	604007008	13	14	498	919940108	EINBAUTEILE SCHALTSCHRAN
FLACHSTECKER	602304808	2	2	438	963398008	AXIALLUEFTER VORM.OBEN
FLACHSTECKER	602304808	74	2	612	913753108	FUNKVORBEREITUNG OW
FLACHSTECKER 0,2-0,5MM2	10874243	2222	6	98	96045216	KABELSTRANG
FLACHSTECKER 0,2-0,5MM2	10874243	2222	6	640	96045220	KABELSTRANG
FLACHSTECKER 0,5-1,0MM2	11622890	2223	2	494	96023971	KABELSTRANG
FLACHSTECKER 0,5-1,0MM2	11622890	2223	9	699	96051215	DRAEHTE
FLACHSTECKER 0,5-1,0MM2	11008403	752	6	699	96051215	DRAEHTE
FLACHSTECKER 0,5-1,0MM2	11008403	752	6	706	96063415	KABELSTRANG
FLACHSTECKER 0,8X0,5-1 Cu	10097470	671	2	90	96062920	KABELSTRANG
FLACHSTECKER 1,0-2,5MM2	602323208	120	18	91	96062921	KABELSTRANG
FLACHSTECKER 1,0-2,5MM2	602323208	120	17	492	96063650	LEITUNG
FLACHSTECKER 2,8X0,5-1 SN	602323508	124	45	91	96062921	KABELSTRANG
FLACHSTECKER 2,8X0,5-1 SN	602323508	124	6	426	96023891	KABELSTRANG
FLACHSTECKER 2,8X0,5-1 SN	602323508	124	22	492	96063650	LEITUNG
FLACHSTECKER 6,3X1-2,5 SN	602203908	75	2	91	96062921	KABELSTRANG
FLACHSTECKER 6,3X1-2,5 SN	602203908	75	2	426	96023891	KABELSTRANG
FLACHSTECKER 6,3X1-2,5 SN	602203908	75	3	493	96023971	KABELSTRANG
FLACHSTECKERGEHAEUSE 1	10874995	501	1	699	96051215	DRAEHTE
FLACHSTECKERGEHAEUSE 1	12102915	502	1	699	96051215	DRAEHTE

Bezeichnung	Artikel	Pos.	Menge	Seite	Baugruppe	Bezeichnung
FLACHSTECKERGEHAEUSE 1	11067932	519	1	91	96062921	KABELSTRANG
FLACHSTECKERGEHAEUSE 1	11067932	509	9	500	96059659	DRAEHTE GRUNDAUFBAU KPL
FLACHSTECKERGEHAEUSE 1	602323308	503	4	91	96062921	KABELSTRANG
FLACHSTECKERGEHAEUSE 1	602323308	503	1	492	96063650	LEITUNG
FLACHSTECKERGEHAEUSE 1	602323308	502	52	500	96059659	DRAEHTE GRUNDAUFBAU KPL
FLACHSTECKERGEHAEUSE 18	11644347	501	1	98	96045216	KABELSTRANG
FLACHSTECKERGEHAEUSE 18	11644347	501	1	640	96045220	KABELSTRANG
FLACHSTECKERGEHAEUSE	602208708	525	1	500	96059659	DRAEHTE GRUNDAUFBAU KPL
FLACHSTECKERGEHAEUSE	602208908	512	1	494	96023971	KABELSTRANG
FLACHSTECKERGEHAEUSE	602305908	512	1	91	96062921	KABELSTRANG
FLACHSTECKERGEHAEUSE	602305908	523	1	426	96023891	KABELSTRANG
FLACHSTECKERGEHAEUSE	602305908	3	1	438	963398008	AXIALLUEFTER VORM.OBEN
FLACHSTECKERGEHAEUSE	602305908	15	1	612	913753108	FUNKVORBEREITUNG OW
FLACHSTECKERGEHAEUSE	602325608	504	2	492	96063650	LEITUNG
FLACHSTECKERGEHAEUSE	602325608	503	6	500	96059659	DRAEHTE GRUNDAUFBAU KPL
FLACHSTECKHUELSE 0,3-1,5	602203708	63	10	698	96063213	LEITUNG
FLACHSTECKHUELSE 0,5-1,5	602320508	62	9	428	96022870	KABELSTRANG
FLACHSTECKHUELSE 6,3X0,5-	602303308	134	2	90	96062920	KABELSTRANG
FLACHSTECKHUELSE 6,3X0,5-	602303308	134	2	426	96023891	KABELSTRANG
FLACHSTECKHUELSE 6,3X0,5-	602303308	134	2	490	96063649	KABELSTRANG
FLAECHENDICHTUNG 300ML	10354595	100	1	144	10132560	OELWANNE MIT BEFEST.
FLAECHENDICHTUNG 300ML	10354595	10	1	253	10141167	DS OELWANNE
FLANSCH	12400857	3	1	168	10120186	MASSENAUSGLEICH ANBAU
FLANSCH	927504701	23	1	381	938759601	SEILTROMMEL
FLANSCH	927504801	15	1	381	938759601	SEILTROMMEL
FLANSCH 10X65X37 ALMG3 H	97057024	5	1	476	918729308	LUFTFILTERANLAGE
FLANSCH 120X150X217 S355J	956442614	351	2	33	967304508	HYDRAULIK UNTERWAGEN
FLANSCH 25.0X16 9 42CRMO4	970003708	7	1	272	96020819	KUEHLER VORM.
FLANSCH VORM.	11348648	8	1	170	10147787	NOCKENWELLE KPL.
FLANSCH VORM.	11348648	1	1	171	10145815	RS FLANSCH
FLANSCH VORM.	12408221	2	1	168	10120186	MASSENAUSGLEICH ANBAU
FLANSCHDICHTUNG	10346938	(5)	1	291	969543308	KRAFTSTOFFBEHAELTER VO
FLANSCHHAELFTE SAE1 1/4-C	510586608	501	16	33	967304508	HYDRAULIK UNTERWAGEN
FLANSCHHAELFTE SAE1 1/4-C	510586608	500	4	517	96045552	HYDRAULIK OBERWAGEN
FLANSCHHAELFTE SAE1-C62	510586908	502	4	33	967304508	HYDRAULIK UNTERWAGEN
FLANSCHHAELFTE SAE3/4-C	510587508	503	6	33	967304508	HYDRAULIK UNTERWAGEN
FLANSCHSTUTZEN AFG 38S	511517808	502	1	591	96064697	HYDRAULIK HILFSHUBWERK
FLANSCHSTUTZEN AFG 38S	511517808	500	3	709	965994108	HYDRAULIK TELE
FLANSCHVERSCHRAUBUNG	953641308	401	1	269	918811108	ANTRIEBSAGGREGAT VORM.
FLANSCHVERSCHRAUBUNG C	510033408	517	2	518	96045552	HYDRAULIK OBERWAGEN
FLANSCHVERSCHRAUBUNG C	510133208	516	1	517	96045552	HYDRAULIK OBERWAGEN
FLANSCHVERSCHRAUBUNG C	511518808	401	1	272	96020819	KUEHLER VORM.
FLANSCHVERSCHRAUBUNG C	511518808	515	1	517	96045552	HYDRAULIK OBERWAGEN
FLEXROHR X5CRNI18-10 SPF	97098876	102	1	470	919674308	ABGASANLAGE
FLUEGELSCHRAUBE DIN 316	11968431	7	10	40	990840414	ABDECKUNG
FLUEGELSCHRAUBE DIN 316	12215977	32	2	315	917357108	KRANFUEHRERKABINE ANBA
FLUEGELSCHRAUBE DIN 316	12215977	30	1	723	964502908	MASTNASE VORM.
FORMCLIP 10X55 VERZ	433200908	5	8	47	968374708	MONTAGETEILE
FORMSCHLAUCH	551719708	250	1	268	918811108	ANTRIEBSAGGREGAT VORM.
FORMSCHLAUCH	96046407	250	2	470	919674308	ABGASANLAGE
FORMSCHLAUCH 4,5	11081453	6	1	444	918759708	ZUSATZHEIZUNG OW
FORMSCHLAUCH 55/65X504 B	97042032	253	1	268	918811108	ANTRIEBSAGGREGAT VORM.
FORMSCHLAUCH 55/65X900 B	97042031	252	1	268	918811108	ANTRIEBSAGGREGAT VORM.
FORMSCHLAUCH DN20 X3.5 B	97042067	13	2	444	918759708	ZUSATZHEIZUNG OW
FORMSCHLAUCH DN20 X3.5 B	97042067	18	1	446	96019783	ZUSATZHEIZUNG VORM.
FORMSCHLAUCH DN20 X3.5 B	97042068	251	1	263	918728708	ANTRIEBSAGGREGAT KPL.
FORMSCHLAUCH DN20 X3.5 B	97042069	8	1	392	969300008	HEIZUNG VORM.
FORMSCHLAUCH DN20 X3.5 B	97042070	19	1	392	969300008	HEIZUNG VORM.
FORMSCHLAUCH DN20 X3.5 B	97042071	252	1	263	918728708	ANTRIEBSAGGREGAT KPL.
FORMSCHLAUCH DN20 X3.5 B	97042071	9	1	392	969300008	HEIZUNG VORM.

Bezeichnung	Artikel	Pos.	Menge	Seite	Baugruppe	Bezeichnung
FORMSCHLAUCH DN20 X3.5 B	97046324	10	1	392	969300008	HEIZUNG VORM.
FORMSCHLAUCH DN20 X3.5 B	97046326	13	1	392	969300008	HEIZUNG VORM.
FORMSCHLAUCH DN20 X3.5 B	97046328	16	1	392	969300008	HEIZUNG VORM.
FORMSCHLAUCH DN20 X3.5 B	97046567	12	1	446	96019783	ZUSATZHEIZUNG VORM.
FORMSCHLAUCH DN20 X3.5 B	97046568	11	1	446	96019783	ZUSATZHEIZUNG VORM.
FORMSCHLAUCH DN20 X3.5 B	97050857	11	1	392	969300008	HEIZUNG VORM.
FORMSCHLAUCH DN20 X3.5 B	97055365	15	1	392	969300008	HEIZUNG VORM.
FORMTEIL 317-1397-000 SUR	605212808	515	1	491	96063649	KABELSTRANG
FORMTEIL 317-1397-000 SUR	605212808	528	2	494	96023971	KABELSTRANG
FREMDEINSPEISUNG 110V	91003677	381	1	14		LIEBHERR LTR 1100
FRONTHAUBE LI.	969392008	3	1	415	96024809	DREHBUEHNENVERKLEIDUN
FRONTHAUBE SCHWK.LI. SPF	969392108	1	1	417	969392008	FRONTHAUBE LI.
FRONTSCHEIBE 6X735X1506	97003558	1	1	349	966497908	FRONTSCHEIBE KPL.
FRONTSCHEIBE KPL.	966497908	1	1	346	916162508	SCHEIBEN EINBAU
FUEHRUNG 306X48X37 ENA	977430408	10	2	395	918810308	STEUERSTAND
FUEHRUNG 80.0X76 35NICRM	97008548	2	1	441	966707708	SPIEGELHALTER VORM.
FUEHRUNG PA6G	975778508	16	2	124	918728408	MONTAGETEILE DREHBUEHN
FUEHRUNG SCHWK.	964502708	3	1	623	915403108	ANBAUTEILE KAMERA
FUEHRUNG SCHWK. GLASPE	966230608	28	1	361	917304708	SCHIEBETUER EINBAU
FUEHRUNG VORM.	966230508	27	1	361	917304708	SCHIEBETUER EINBAU
FUEHRUNGSBUCHSE 290,7X	11341829	3	1	628	12102922	WIPPZYLINDER
FUEHRUNGSBUCHSE CODIER	10871289	507	2	589	96055198	KABELSTRANG
FUEHRUNGSRING 323X318X1	11490453	19	1	628	12102922	WIPPZYLINDER
FUEHRUNGSROHR 10X1X90	9079532	2	1	149	10150934	OELMESSSTAB KPL.
FUEHRUNGSSTIFT CODIERUN	10871288	505	2	589	96055198	KABELSTRANG
FUNKVORBEREITUNG OW	913753108	391	1	15		LIEBHERR LTR 1100
FUSSWIPPE SPF	10297310	54	2	431	96056347	ELEKTRIK ANBAUTEILE KABIN
GARDEROBENHAKEN SCHW	12106136	69	1	339	917305408	INNENVERKLEIDUNG EINBAU
GASFEDER 12X80-100N ST	10476211	6	2	346	916162508	SCHEIBEN EINBAU
GASFEDER 19X60-550N	591067008	23	1	395	918810308	STEUERSTAND
GASFEDER 23X251-550N ST	11003837	17	2	346	916162508	SCHEIBEN EINBAU
GASFEDER 23X265-1000N	591064508	9	1	416	969399608	KLAPPE VORM.
GASFEDER 23X265-500N	591061908	10	2	410	969425608	KLAPPE VORM.RECHTS
GASFEDER 28X350-900N	591514408	23	1	760	918533508	ADAPTER VORM.
GASRUECKSCHLAGVENTIL	5000569	8	1	23	790256114	LEITRADEINHEIT KPL
GASSENSOR GEN 4.0 NICHT	12984315	152	2	474	96041566	ELEKTRIK ANBAUTEILE
GASSENSOR NICHT LACKIERE	10144038	153	1	474	96041566	ELEKTRIK ANBAUTEILE
GEBER ANLENKSTUECK	96047742	10	1	652	919935408	TELESKOPAUSLEGER KPL.
GEBER BALLASTUEBERWACH	918802108	161	2	13		LIEBHERR LTR 1100
GEBER BALLASTUEBERWACH	919284308	142	1	13		LIEBHERR LTR 1100
GEBER HUB OBEN ENDSCHAL	966479308	(10)	1	755	91001037	DOPPELKLAPPSPITZE MECH.
GEBER HUB OBEN ENDSCHAL	966479308	21	1	774	96055854	EL.ANLENKST.MECH.KLAPPS
GEBER KOPFSTUECK	96047743	30	1	652	919935408	TELESKOPAUSLEGER KPL.
GEBER SPF	10876368	10	1	643	918802108	GEBER BALLASTUEBERWACH
GEBERANBAU AUSSCHUBM	965264808	34	1	679	91000055	AUSSCHUBMECHANIK
GEGENGEWICHT EN-GJL-200	380061708	2	1	635	915090008	GEGENGEWICHT M.BEFESTIG
GEGENGEWICHT EN-GJL-200	380061908	3	2	635	915090008	GEGENGEWICHT M.BEFESTIG
GEGENGEWICHT EN-GJL-200	380061908	30	2	637	915090108	ZUSATZBALLAST
GEGENGEWICHT KPL. SPF	963733208	1	1	635	915090008	GEGENGEWICHT M.BEFESTIG
GEGENGEWICHT M.BEFESTIG	915090008	147	1	13		LIEBHERR LTR 1100
GEHAEUSE	510796908	1	1	558	511417708	DRUCKBEGRENZUNGSVENTI
GEHAEUSE	510796908	1	1	621	511417608	DRUCKBEGRENZUNGSVENTI
GEHAEUSE	570109108	3	1	371	510229408	HYDROMOTOR
GEHAEUSE 12-POL	10099861	508	1	91	96062921	KABELSTRANG
GEHAEUSE 12-POL	10099861	509	1	494	96023971	KABELSTRANG
GEHAEUSE 15-POLE	10099863	510	1	91	96062921	KABELSTRANG
GEHAEUSE 15-POLE	10099863	512	2	500	96059659	DRAEHTE GRUNDAUFBAU KPL
GEHAEUSE 18-POL	10099864	502	3	428	96022870	KABELSTRANG
GEHAEUSE 18-POL	10099864	521	2	500	96059659	DRAEHTE GRUNDAUFBAU KPL
GEHAEUSE 21-POLE	10099856	501	2	91	96062921	KABELSTRANG

Bezeichnung	Artikel	Pos.	Menge	Seite	Baugruppe	Bezeichnung
GEHAEUSE 21-POLE	10099856	517	2	500	96059659	DRAEHTE GRUNDAUFBAU KPL
GEHAEUSE 4-POL	602331308	507	4	426	96023891	KABELSTRANG
GEHAEUSE 4-POL	602331308	505	2	428	96022870	KABELSTRANG
GEHAEUSE 4-POL	602331308	511	1	490	96063649	KABELSTRANG
GEHAEUSE 4-POL	602331308	507	2	493	96023971	KABELSTRANG
GEHAEUSE 4-POL	602331308	515	26	500	96059659	DRAEHTE GRUNDAUFBAU KPL
GEHAEUSE 4-POL	602331308	501	1	693	96063864	KABELSTRANG
GEHAEUSE 4-POL	602339308	504	1	90	96062920	KABELSTRANG
GEHAEUSE 6-POL	602325508	506	4	426	96023891	KABELSTRANG
GEHAEUSE 6-POL	602325508	509	1	428	96022870	KABELSTRANG
GEHAEUSE 6-POL	602325508	506	3	490	96063649	KABELSTRANG
GEHAEUSE 6-POL	602325508	505	1	492	96063650	LEITUNG
GEHAEUSE 6-POL	602325508	506	1	500	96059659	DRAEHTE GRUNDAUFBAU KPL
GEHAEUSE 8-POL	602300508	513	1	426	96023891	KABELSTRANG
GEHAEUSE 8-POL	602300608	514	1	426	96023891	KABELSTRANG
GEHAEUSE 8-POL	602301408	501	1	90	96062920	KABELSTRANG
GEHAEUSE 8-POL	602301408	519	2	500	96059659	DRAEHTE GRUNDAUFBAU KPL
GEHAEUSE 9-POL	10099860	506	1	91	96062921	KABELSTRANG
GEHAEUSE GD-ZN SW GEPU	704253308	6	4	85	966167808	DECKEL KPL.
GEHAEUSE GD-ZN SW GEPU	704253308	13	1	287	96024716	BATTERIEKASTEN VORM.
GEHAEUSE GD-ZN SW GEPU	704256608	100	2	417	969392008	FRONTHAUBE LI.
GEHAEUSE PLIXXOPOL R* SP	975850708	7	1	338	917305408	INNENVERKLEIDUNG EINBAU
GEHAEUSE RAL 9005 SPF	97136698	1	1	323	96048757	BECHERHALTER
GELAENDER 50X250X1100 A	12102325	2	1	420	919484908	ABSTURZSICHERUNG
GELENKBANDKONSOLENSC	10871001	304	2	566	969767908	VERROHRUNG DRUCKLUFTA
GELENKBOLZENSCHELLE 33	12102925	180	2	473	96051762	ABGASANLAGE VORM.
GELENKBOLZENSPANNBAND	10583974	40	2	461	96074081	HARNSTOFFTANK VORM.
GELENKHAKENSCHLUESSEL	885182808	11	1	102	914860608	WERKZEUG M.ZUBEHOER
GELENKHAKENSCHLUESSEL 6	885182208	12	1	102	914860608	WERKZEUG M.ZUBEHOER
GELENKKOPF	10491613	1	1	316	10650940	KIPPZYLINDER
GELENKLAGER	10491694	4	1	316	10650940	KIPPZYLINDER
GENERATOR VORM. 4.32KW	10142863	440	1	134	13455311	DIESELMOTOR
GENERATOR VORM. 4.32KW	10148088	1	1	225	10142863	GENERATOR VORM.
GERAETEBEUTEL 300X600	11320720	(1)	1	120	916959808	PERSOENLICHE SCHUTZAUS
GERAETESTECKDOSE 2-POL	605210608	506	1	90	96062920	KABELSTRANG
GERAETESTECKDOSE 2-POL	605210608	515	1	494	96023971	KABELSTRANG
GERAETESTECKDOSE 2-POL	605210608	502	1	706	96063415	KABELSTRANG
GERAETESTECKDOSE 2POL	605007908	505	5	90	96062920	KABELSTRANG
GERAETESTECKDOSE 2POL	605007908	503	16	490	96063649	KABELSTRANG
GERAETESTECKDOSE 2POL	605007908	508	1	494	96023971	KABELSTRANG
GERAETESTECKDOSE 2POL	605007908	501	1	589	96055198	KABELSTRANG
GERAETESTECKER 3POL+PE	605006608	507	1	90	96062920	KABELSTRANG
GERAETESTECKER 3POL+PE	605006608	505	3	490	96063649	KABELSTRANG
GERAETESTECKER 3POL+PE	605006608	504	1	589	96055198	KABELSTRANG
GERAEUSCHDAEMPFER	502661608	153	1	566	969767908	VERROHRUNG DRUCKLUFTA
GEWICHT	11492017	1	1	739	910543708	LASTHAKEN
GEWINDEBOLZEN 20X53X78	97096918	2	2	395	918810308	STEUERSTAND
GEWINDEBOLZEN DIN 976 M	10332987	7	4	386	917894308	HEIZUNG KRANFUEHRERKAB
GEWINDEBUCHSE 14,5X24X1	9079078	9	1	163	10149578	ZYLINDERKOPF
GEWINDEFORMSCHRAUBE DI	407500508	10	1	773	96037297	WINKELGEBER ANBAU
GEWINDEFORMSCHRAUBE D	12102051	20	4	395	918810308	STEUERSTAND
GEWINDEPLATTE 10X100X30	97001665	20	1	124	918728408	MONTAGETEILE DREHBUEHN
GEWINDEPLATTE 10X180X30	97051989	35	1	315	917357108	KRANFUEHRERKABINE ANBA
GEWINDEPLATTE 15X40X130	953147708	7	1	747	919933308	TRANSPORTHALTERUNG DKS
GEWINDEPLATTE 15X45X300	949380808	6	2	747	919933308	TRANSPORTHALTERUNG DKS
GEWINDEPLATTE 20X185X45	979243508	3	1	350	965784408	DACHSCHEIBE VORM.
GEWINDEPLATTE 20X40X315	974911108	20	1	747	919933308	TRANSPORTHALTERUNG DKS
GEWINDEPLATTE 8.0 X0 S235J	953695308	9	4	287	96024716	BATTERIEKASTEN VORM.
GEWINDEPLATTE 8.0 X0 S235J	953695308	6	2	361	917304708	SCHIEBETUER EINBAU
GEWINDEPLATTE 8.0 X0 S235J	953695308	50	3	407	96022627	DREHBUEHNENVERKLEIDUN

Bezeichnung	Artikel	Pos.	Menge	Seite	Baugruppe	Bezeichnung
GEWINDEPLATTE 8.0 X0 S235J	953695308	4	3	410	969425608	KLAPPE VORM.RECHTS
GEWINDEPLATTE 8.0 X0 S235J	953695308	21	2	415	96024809	DREHBUEHNENVERKLEIDUN
GEWINDEPLATTE 8.0 X0 S235J	953695308	4	6	416	969399608	KLAPPE VORM.
GEWINDEPLATTE 8.0 X0 S235J	953695308	5	2	781	968940708	HALTER LINKS
GEWINDEPLATTE 8.0 X0 S235J	953695308	5	2	782	968940808	HALTER RECHTS
GEWINDEPLATTE 8X110X35 S	97000276	4	1	361	917304708	SCHIEBETUER EINBAU
GEWINDEPLATTE 8X98X60 S	97000277	5	1	361	917304708	SCHIEBETUER EINBAU
GEWINDEPLATTE M6 PA6GF3	11004117	28	2	349	966497908	FRONTSCHEIBE KPL.
GEWINDEPLATTE M8	704262608	22	2	287	96024716	BATTERIEKASTEN VORM.
GEWINDESICHERUNG 50ML	811208001	102	1	146	10155227	OELWANNE VORM.
GEWINDESTANGE DIN 975 M1	948996914	20	4	22	96062226	RAUPENTRAEGER KPL.RE.
GEWINDESTANGE DIN 975 M1	948996914	20	4	27	96062228	RAUPENTRAEGER KPL.LI.
GEWINDESTANGE RD36X85 4	957095914	40	4	22	96062226	RAUPENTRAEGER KPL.RE.
GEWINDESTANGE RD36X85 4	957095914	40	4	28	96062228	RAUPENTRAEGER KPL.LI.
GEWINDESTANGE RD36X95 4	957095814	43	4	22	96062226	RAUPENTRAEGER KPL.RE.
GEWINDESTANGE RD36X95 4	957095814	43	4	28	96062228	RAUPENTRAEGER KPL.LI.
GEWINDESTIFT	570435308	39	1	684	12105406	TELESKOPIERZYLINDER
GEWINDESTIFT DIN 913 M5X6	510762108	(301)	3	268	918811108	ANTRIEBSAGGREGAT VORM.
GEWINDESTIFT DIN 913 M6X25	404400508	16	1	361	917304708	SCHIEBETUER EINBAU
GEWINDESTIFT DIN 913 M6X25	404400508	5	1	720	511479408	LASTHALTEVENTIL
GEWINDESTIFT DIN 914 M8X10	12100620	18	1	456	12102342	BALLASTIERZYLINDER
GEWINDESTIFT DIN 914 M8X10	12100620	26	1	628	12102922	WIPPZYLINDER
GEWINDESTIFT ISO 4026 M10X	10179470	4	1	399	962282208	ARMLEHNE LINKS
GEWINDESTIFT ISO 4026 M10X	10179470	4	1	401	962282308	ARMLEHNE RECHTS
GEWINDESTIFT ISO 4026 M16X	12100611	17	1	771	918596708	KOPFSTUECK VORM.
GEWINDESTIFT ISO 4026 M20X	11968244	26	4	30	992078314	MITTELTEIL
GEWINDESTIFT ISO 4026 M20X	10875481	63	4	661	91000050	TELESKOP 1 VORM.
GEWINDESTIFT ISO 4026 M20X	10875481	63	4	664	91000051	TELESKOP 2 VORM.
GEWINDESTIFT ISO 4026 M20X	10875481	63	4	667	91000052	TELESKOP 3 VORM.
GEWINDESTIFT ISO 4026 M20X	10875481	63	4	670	91000053	TELESKOP 4 VORM.
GEWINDESTIFT ISO 4026 M20X	10875481	61	4	673	91000054	TELESKOP 5 VORM.
GEWINDESTIFT ISO 4026 M6X	12100613	3	1	398	96032222	NACHARBEIT ARMLEHNE LI.
GEWINDESTIFT ISO 4026 M6X	12100613	6	1	399	962282208	ARMLEHNE LINKS
GEWINDESTIFT ISO 4026 M6X	12100613	3	1	400	96032223	NACHARBEIT ARMLEHNE RE.
GEWINDESTIFT ISO 4026 M6X	12106077	27	6	326	968483708	TRITT KPL.
GEWINDESTIFT ISO 4026 M6X	12106077	9	1	524	571130108	DRUCKBEGRENZUNGSVENTI
GEWINDESTIFT ISO 4026 M8X	12100292	21	2	723	964502908	MASTNASE VORM.
GEWINDESTIFT ISO 4026 M8X	12100292	3	2	726	967321308	HALTERUNG 2.HUB OBEN
GEWINDESTIFT ISO 4028 M12X	12100624	12	5	645	919950308	MECH.TEILE VERSANDMONT
GEWINDESTIFT M6X50 A2-70	10450694	25	1	349	966497908	FRONTSCHEIBE KPL.
GEWINDESTIFT M6X50 A2-70	10450694	22	1	361	917304708	SCHIEBETUER EINBAU
GEWINDETRAEGER FE//ZNNI8/	963991608	17	1	407	96022627	DREHBUEHNENVERKLEIDUN
GEWINDETRAEGER FE//ZNNI8/	964307108	16	1	407	96022627	DREHBUEHNENVERKLEIDUN
GEWINDETRAEGER FE//ZNNI8/	967695808	7	2	407	96022627	DREHBUEHNENVERKLEIDUN
GEWINDETRAEGER FE//ZNNI8/	968321708	6	2	415	96024809	DREHBUEHNENVERKLEIDUN
GEWINDETRAEGER FE//ZNNI8/	968588908	8	1	407	96022627	DREHBUEHNENVERKLEIDUN
GLASEINHEIT 203X154	10286840	(1)	1	402	916049908	SPIEGELANBAU KRANFUEHR
GLEICHSTROMGETRIEBEMO	10355140	2	1	480	10327065	ELEKTROPUMPE
GLEITBLOCK 110X56X65	97054040	3	2	52	968374908	ENDSCHALTER ANBAU
GLEITKLOTZ KPL.	10455144	15	1	397	10877138	FAHRERSITZ
GLEITLAGER 30X20 KUNSTST	10215893	4	1	441	966707708	SPIEGELHALTER VORM.
GLEITLAGERBUCHSE 30X34X	9889290	(2)	2	210	9072906	ZWISCHENRAD KPL.
GLEITPLATTE 33X50X310 PA6	283082508	47	27	655	91000049	ANLENKSTUECK VORM.
GLEITPLATTE 33X50X310 PA6	283082508	47	25	661	91000050	TELESKOP 1 VORM.
GLEITPLATTE 33X50X310 PA6	283082508	47	23	664	91000051	TELESKOP 2 VORM.
GLEITPLATTE 33X50X310 PA6	283082508	47	21	667	91000052	TELESKOP 3 VORM.
GLEITPLATTE 33X50X310 PA6	283082508	47	19	670	91000053	TELESKOP 4 VORM.
GLEITRINGDICHTUNG	749057314	20	1	26	749065314	TRAGROLLE KPL
GLEITRINGDICHTUNG KPL	749068514	4	2	24	749013714	LEITRAD KPL
GLEITSCHUH 65X340X450 GS-	308115114	14	2	22	96062226	RAUPENTRAEGER KPL.RE.

Bezeichnung	Artikel	Pos.	Menge	Seite	Baugruppe	Bezeichnung
GLEITSCHUH 65X340X450 GS-	308115114	14	2	27	96062228	RAUPENTRAEGER KPL.LI.
GLEITSTUECK	749063714	2	2	24	749013714	LEITRAD KPL
GLEITSTUECK 100X115X250 P	283092508	14	1	679	91000055	AUSSCHUBMECHANIK
GLEITSTUECK 130X150X167 P	283083308	39	2	655	91000049	ANLENKSTUECK VORM.
GLEITSTUECK 130X150X167 P	283083308	39	2	661	91000050	TELESKOP 1 VORM.
GLEITSTUECK 130X150X167 P	283083308	39	2	664	91000051	TELESKOP 2 VORM.
GLEITSTUECK 130X150X167 P	283083308	39	2	667	91000052	TELESKOP 3 VORM.
GLEITSTUECK 130X150X167 P	283083308	39	2	670	91000053	TELESKOP 4 VORM.
GLEITSTUECK 30X115X165 P	283092608	25	1	679	91000055	AUSSCHUBMECHANIK
GLEITSTUECK 40X170X575 P	283083908	15	1	679	91000055	AUSSCHUBMECHANIK
GLEITSTUECK 50.0X372X207 P	283092408	13	1	679	91000055	AUSSCHUBMECHANIK
GLEITSTUECK RD42X75 PA6	288190908	22	2	420	919484908	ABSTURZSICHERUNG
GLUEHLAMPE 1,2W 30V	607008708	13	1	435	96022872	ARMATURENBRETT DACH
GLUEHLAMPE 1,3W 24V	607009708	(1)	2	620	913978308	ZUSATZELEKTRIK VORWAE
GLUEHLAMPE DIN 49848 2,4W	607011108	(1)	2	105	928620108	ZUBEHOER
GLUEHLAMPE DIN 72601 70W	607023708	2	1	106	915731908	EL.TEILE VERSANDMONTAGE
GLUEHSTIFT	11826649	40	1	448	10876576	WASSERHEIZGERAET
GLUEHSTIFT	11826649	(10)	1	448	10876576	WASSERHEIZGERAET
GRIFF	12103434	(2)	1	397	10877138	FAHRERSITZ
GRIFF DIN 3122 A 3/4"	790026208	63	1	104	928569808	GRUNDWERKZEUG
GRIFF KUNSTSTOFF	704254508	110	1	417	969392008	FRONTHAUBE LI.
GRIFF SCHWK. FE//ZNNI8//CN/	963557408	2	1	78	964765008	BOLZEN KPL.
GRIFFADAPTION	11005983	3	1	362	966230408	SCHLIESSANLAGE
GRIFFKAPPE	571824708	1	1	436	10343693	MEISTERSCHALTER
GRIFFMULDE X0 KUNSTSTOF	955500008	6	1	410	969425608	KLAPPE VORM.RECHTS
GRIFFROHR SCHWK.	968321608	5	1	415	96024809	DREHBUEHNENVERKLEIDUN
GRUNDAUFBAU	96025348	2	1	499	96059658	GRUNDAUFBAU KPL.
GRUNDAUFBAU KPL.	96059658	2	1	498	919940108	EINBAUTEILE SCHALTSCHRAN
GRUNDHALTER SCHWK.	96051503	1	1	734	96056553	GRUNDHALTER VORM.
GRUNDHALTER VORM.	96056553	1	1	732	96056273	MECHANIK MESS-U.WARNEI
GRUNDWERKZEUG	928569808	1	1	102	914860608	WERKZEUG M.ZUBEHOER
GUMMI-METALLANSCHLAGP	726617408	24	1	349	966497908	FRONTSCHEIBE KPL.
GUMMI-METALLANSCHLAGPU	726616708	30	4	420	919484908	ABSTURZSICHERUNG
GUMMI-METALLANSCHLAGP	726907308	120	2	407	96022627	DREHBUEHNENVERKLEIDUN
GUMMI-METALLANSCHLAGP	726907308	105	2	415	96024809	DREHBUEHNENVERKLEIDUN
GUMMI-METALLANSCHLAGP	10030440	9	1	361	917304708	SCHIEBETUER EINBAU
GUMMI-METALLANSCHLAGPU	726613008	31	2	420	919484908	ABSTURZSICHERUNG
GUMMI-METALLANSCHLAGPU	726613008	16	2	655	91000049	ANLENKSTUECK VORM.
GUMMI-METALLANSCHLAGP	726617908	16	1	771	918596708	KOPFSTUECK VORM.
GUMMIDICHTUNG 16X10,9 N	10873980	5	1	462	96071742	HARNSTOFFTANK
GUMMIKAPPE	12104653	(1)	4	780	917508508	LEITER ANBAU
GUMMIMUFFE	10116310	24	1	222	10140729	ATL-ANBAU
GUMMIMUFFE	10126317	5	1	152	10139112	OELLEITUNG VORM.
GUMMIMUFFE	10126317	(2)	1	250	10148366	DS DIESELMOTOR
GUMMIMUFFE	10129904	4	1	203	10149677	VERBINDUNGSLEITUNG ANBA
GUMMIMUFFE 06-12X45 Silicon	10126119	16	1	224	11420633	TAKTVENTIL
GUMMIMUFFE 12X18X45	9079603	7	1	152	10139112	OELLEITUNG VORM.
GUMMIMUFFE 12X18X45	9079603	(4)	1	250	10148366	DS DIESELMOTOR
GUMMIMUFFE 22X30X65L.	9273161	7	2	201	10145173	ANSAUGSTUTZEN ANBAU
GUMMIMUFFE 25X33X56L.	9271340	5	1	143	10126713	KURBELGEHAEUSEENTLUEF
GUMMIMUFFE Rubber	10126417	4	1	143	10126713	KURBELGEHAEUSEENTLUEF
GUMMIMUFFE Silicone	10128228	7	3	224	11420633	TAKTVENTIL
GUMMIPANZERSCHLAUCH 30	790042908	71	1	104	928569808	GRUNDWERKZEUG
GUMMIPLATTE 1.5X185X45 E	979243608	4	2	350	965784408	DACHSCHEIBE VORM.
GUMMIPLATTE 184X10X2 GU	977240008	(2)	2	30	992078314	MITTELTEIL
GUMMIPUFFER 19X9,6 PU SC	10354670	25	2	338	917305408	INNENVERKLEIDUNG EINBAU
GUMMIPUFFER 32X32XM6 EL	10472890	8	1	361	917304708	SCHIEBETUER EINBAU
GUMMIPUFFER 8,3/26X7,2 30	10116274	4	8	237	10144227	STEUERGERAET ANBAU
GUMMIRING X12	10133991	102	1	240	10151328	KABELBAUM ANBAU
GUMMIRING X16	10123876	103	1	240	10151328	KABELBAUM ANBAU

Bezeichnung	Artikel	Pos.	Menge	Seite	Baugruppe	Bezeichnung
GUMMIRING X22	10123878	33	2	484	919940408	EL.ANLAGE DREHBUEHNE
GUMMISCHLAUCH 100X6X75 E	942875408	251	1	476	918729308	LUFTFILTERANLAGE
HAFTREINIGER 250ML	811205108	47	1	361	917304708	SCHIEBETUER EINBAU
HAKENFLASCHE 32 EM SPF	919421708	311	1	14		LIEBHERR LTR 1100
HAKENFLASCHE 63DM SPF	910445708	312	1	14		LIEBHERR LTR 1100
HAKENSTANGE ANBAU	968952708	2	1	779	917508408	WERKZEUG KLAPPSPITZE
HAKENSTANGE FE//ZNNI8//CN/	929529908	1	1	783	968952708	HAKENSTANGE ANBAU
HALBRUNDKOPFSCHRAUBE A	10875475	9	2	327	96025887	PEDALTRAEGER EINBAU
HALBRUNDKOPFSCHRAUBE A	10875475	41	4	376	919935508	HAUPTHUBWERK
HALBRUNDKOPFSCHRAUBE	11160744	301	2	280	96035595	AUSGLEICHSBEHAELTER VO
HALBRUNDKOPFSCHRAUBE	11160744	13	3	361	917304708	SCHIEBETUER EINBAU
HALBRUNDKOPFSCHRAUBE	10028237	6	1	734	96056553	GRUNDHALTER VORM.
HALBRUNDKOPFSCHRAUBE	10813359	20	8	119	96045222	MONTAGETEILE
HALBRUNDKOPFSCHRAUBE	10813359	(300)	2	268	918811108	ANTRIEBSAGGREGAT VORM.
HALBRUNDKOPFSCHRAUBE	10813359	43	7	361	917304708	SCHIEBETUER EINBAU
HALBRUNDKOPFSCHRAUBE	10813359	19	4	444	918759708	ZUSATZHEIZUNG OW
HALBRUNDKOPFSCHRAUBE	10475893	14	10	361	917304708	SCHIEBETUER EINBAU
HALBRUNDKOPFSCHRAUBE	10475893	97	10	656	91000049	ANLENKSTUECK VORM.
HALBRUNDKOPFSCHRAUBE	10475893	91	2	674	91000054	TELESKOP 5 VORM.
HALBRUNDKOPFSCHRAUBE	10875468	302	1	280	96035595	AUSGLEICHSBEHAELTER VO
HALBRUNDKOPFSCHRAUBE	10875468	10	3	327	96025887	PEDALTRAEGER EINBAU
HALBRUNDKOPFSCHRAUBE	10875468	14	12	334	917304508	KRANFUEHRERKABINE VORM.
HALBRUNDKOPFSCHRAUBE	10875468	40	73	338	917305408	INNENVERKLEIDUNG EINBAU
HALBRUNDKOPFSCHRAUBE	10875468	23	6	355	916163008	WISCHANLAGE EINBAU
HALBRUNDKOPFSCHRAUBE	10875468	19	5	361	917304708	SCHIEBETUER EINBAU
HALBRUNDKOPFSCHRAUBE	10875468	303	1	407	96022627	DREHBUEHNENVERKLEIDUN
HALBRUNDKOPFSCHRAUBE	10875468	22	7	431	96056347	ELEKTRIK ANBAUTEILE KABIN
HALBRUNDKOPFSCHRAUBE	10412851	11	12	287	96024716	BATTERIEKASTEN VORM.
HALBRUNDKOPFSCHRAUBE	10412851	10	6	329	916170808	KABELEINFUEHRUNG
HALBRUNDKOPFSCHRAUBE	10412851	8	1	332	968462608	SCHALTSCHRANKDECKEL EIN
HALBRUNDKOPFSCHRAUBE	10412851	12	4	361	917304708	SCHIEBETUER EINBAU
HALBRUNDKOPFSCHRAUBE	10412851	301	12	407	96022627	DREHBUEHNENVERKLEIDUN
HALBRUNDKOPFSCHRAUBE	10412851	301	4	415	96024809	DREHBUEHNENVERKLEIDUN
HALBRUNDKOPFSCHRAUBE	10412851	51	10	458	91003833	HARNSTOFFANLAGE
HALBRUNDKOPFSCHRAUBE	10412851	305	6	470	919674308	ABGASANLAGE
HALBRUNDKOPFSCHRAUBE	10412851	24	2	625	96036821	AUSRUESTUNG KAMERA DRE
HALBRUNDKOPFSCHRAUBE	10412851	7	1	734	96056553	GRUNDHALTER VORM.
HALBRUNDKOPFSCHRAUBE	10412852	15	6	349	966497908	FRONTSCHEIBE KPL.
HALBRUNDKOPFSCHRAUBE	10412852	303	4	415	96024809	DREHBUEHNENVERKLEIDUN
HALBRUNDKOPFSCHRAUBE	10412852	306	2	470	919674308	ABGASANLAGE
HALBRUNDKOPFSCHRAUBE	10412852	8	2	623	915403108	ANBAUTEILE KAMERA
HALBRUNDKOPFSCHRAUBE	10412852	30	2	679	91000055	AUSSCHUBMECHANIK
HALBRUNDKOPFSCHRAUBE	10412853	18	8	326	968483708	TRITT KPL.
HALBRUNDKOPFSCHRAUBE	10412853	41	1	361	917304708	SCHIEBETUER EINBAU
HALBRUNDKOPFSCHRAUBE	12102696	25	47	47	968374708	MONTAGETEILE
HALBRUNDKOPFSCHRAUBE	12102696	103	4	70	915447908	HYDRAULISCHE ABSTUETZUN
HALBRUNDKOPFSCHRAUBE	12102696	310	2	269	918811108	ANTRIEBSAGGREGAT VORM.
HALBRUNDKOPFSCHRAUBE	12102696	8	10	327	96025887	PEDALTRAEGER EINBAU
HALBRUNDKOPFSCHRAUBE	12102696	300	2	374	916109208	DREHBUEHNENARRETIERUN
HALBRUNDKOPFSCHRAUBE	12102696	320	1	407	96022627	DREHBUEHNENVERKLEIDUN
HALBRUNDKOPFSCHRAUBE	12102696	310	2	517	96045552	HYDRAULIK OBERWAGEN
HALBRUNDKOPFSCHRAUBE	12102696	11	2	575	918627208	KLIMAANLAGE OW
HALBRUNDKOPFSCHRAUBE	12102696	47	14	581	96062734	HILFSHUBWERK
HALBRUNDKOPFSCHRAUBE	12102696	2	2	595	96062735	BESCHILDERUNG
HALBRUNDKOPFSCHRAUBE	12102696	69	45	655	91000049	ANLENKSTUECK VORM.
HALBRUNDKOPFSCHRAUBE	12102696	43	27	673	91000054	TELESKOP 5 VORM.
HALBRUNDKOPFSCHRAUBE	12102696	58	2	673	91000054	TELESKOP 5 VORM.
HALBRUNDKOPFSCHRAUBE	12102696	7	5	721	915415908	MASTNASE
HALBRUNDKOPFSCHRAUBE	12102696	27	3	723	964502908	MASTNASE VORM.
HALBRUNDKOPFSCHRAUBE	12102696	6	2	726	967321308	HALTERUNG 2.HUB OBEN

Bezeichnung	Artikel	Pos.	Menge	Seite	Baugruppe	Bezeichnung
HALBRUNDKOPFSCHRAUBE	12102696	61	7	760	918533508	ADAPTER VORM.
HALBRUNDKOPFSCHRAUBE	12102696	65	2	761	918533508	ADAPTER VORM.
HALBRUNDKOPFSCHRAUBE	12102696	31	11	768	91001040	ANLENKSTUECK VORM.
HALBRUNDKOPFSCHRAUBE	12102696	21	7	771	918596708	KOPFSTUECK VORM.
HALBRUNDKOPFSCHRAUBE A	10876082	11	2	100	96045217	MECHANISCHE ANBAUTEILE
HALBRUNDKOPFSCHRAUBE A	10876082	300	6	124	918728408	MONTAGETEILE DREHBUEHN
HALBRUNDKOPFSCHRAUBE A	10876082	303	8	562	919528608	OELKUEHLER EINBAU
HALBRUNDKOPFSCHRAUBE	10875485	10	4	100	96045217	MECHANISCHE ANBAUTEILE
HALBRUNDKOPFSCHRAUBE	10875485	315	4	124	918728408	MONTAGETEILE DREHBUEHN
HALBRUNDKOPFSCHRAUBE	10875485	302	9	272	96020819	KUEHLER VORM.
HALBRUNDKOPFSCHRAUBE	10875485	15	6	334	917304508	KRANFUEHRERKABINE VORM.
HALBRUNDKOPFSCHRAUBE	10875485	40	5	376	919935508	HAUPTHUBWERK
HALBRUNDKOPFSCHRAUBE	10875485	310	5	407	96022627	DREHBUEHNENVERKLEIDUN
HALBRUNDKOPFSCHRAUBE	10875485	25	3	444	918759708	ZUSATZHEIZUNG OW
HALBRUNDKOPFSCHRAUBE	10875485	52	2	458	91003833	HARNSTOFFANLAGE
HALBRUNDKOPFSCHRAUBE	10875485	52	4	461	96074081	HARNSTOFFTANK VORM.
HALBRUNDKOPFSCHRAUBE	10875485	301	4	476	918729308	LUFTFILTERANLAGE
HALBRUNDKOPFSCHRAUBE	10875485	26	2	478	915300208	ZENTRALSCHMIERANLAGE O
HALBRUNDKOPFSCHRAUBE	10875485	306	4	562	919528608	OELKUEHLER EINBAU
HALBRUNDKOPFSCHRAUBE	10875485	22	4	623	915403108	ANBAUTEILE KAMERA
HALBRUNDKOPFSCHRAUBE	10875485	89	2	674	91000054	TELESKOP 5 VORM.
HALBRUNDKOPFSCHRAUBE	10875471	104	2	70	915447908	HYDRAULISCHE ABSTUETZUN
HALBRUNDKOPFSCHRAUBE	10875471	13	2	350	965784408	DACHSCHEIBE VORM.
HALBRUNDKOPFSCHRAUBE	10875471	317	12	407	96022627	DREHBUEHNENVERKLEIDUN
HALBRUNDKOPFSCHRAUBE	10875471	313	4	415	96024809	DREHBUEHNENVERKLEIDUN
HALBRUNDKOPFSCHRAUBE	10875471	54	12	461	96074081	HARNSTOFFTANK VORM.
HALBRUNDKOPFSCHRAUBE	10875471	302	6	562	919528608	OELKUEHLER EINBAU
HALBRUNDKOPFSCHRAUBE	10875471	11	3	606	91002360	LADEGERAET
HALBRUNDKOPFSCHRAUBE	10875471	25	3	652	919935408	TELESKOPAUSLEGER KPL.
HALBRUNDKOPFSCHRAUBE	10875471	8	8	780	917508508	LEITER ANBAU
HALBRUNDKOPFSCHRAUBE	10876067	325	2	269	918811108	ANTRIEBSAGGREGAT VORM.
HALBRUNDKOPFSCHRAUBE	10875486	313	4	124	918728408	MONTAGETEILE DREHBUEHN
HALBRUNDKOPFSCHRAUBE	10875486	316	1	407	96022627	DREHBUEHNENVERKLEIDUN
HALBRUNDKOPFSCHRAUBE	10875486	314	2	415	96024809	DREHBUEHNENVERKLEIDUN
HALBRUNDKOPFSCHRAUBE	10875486	2	2	642	96045219	MECHANISCHE ANBAUTEILE
HALBRUNDKOPFSCHRAUBE D	12103123	20	4	679	91000055	AUSSCHUBMECHANIK
HALBRUNDKOPFSCHRAUBE	10875017	70	2	339	917305408	INNENVERKLEIDUNG EINBAU
HALBRUNDKOPFSCHRAUBE	10875017	32	4	431	96056347	ELEKTRIK ANBAUTEILE KABIN
HALBRUNDKOPFSCHRAUBE I	10875448	7	3	327	96025887	PEDALTRAEGER EINBAU
HALBRUNDKOPFSCHRAUBE I	10875448	43	8	376	919935508	HAUPTHUBWERK
HALBRUNDKOPFSCHRAUBE I	10875448	5	4	378	963564908	HAUPTHUBWERK VORM.
HALBRUNDKOPFSCHRAUBE I	10875448	8	2	416	969399608	KLAPPE VORM.
HALBRUNDKOPFSCHRAUBE I	10875448	44	4	581	96062734	HILFSHUBWERK
HALBRUNDKOPFSCHRAUBE I	10178203	23	4	679	91000055	AUSSCHUBMECHANIK
HALBRUNDKOPFSCHRAUBE	10875482	20	8	431	96056347	ELEKTRIK ANBAUTEILE KABIN
HALBRUNDKOPFSCHRAUBE	11835043	43	2	395	918810308	STEUERSTAND
HALBRUNDKOPFSCHRAUBE	10875483	17	6	287	96024716	BATTERIEKASTEN VORM.
HALBRUNDKOPFSCHRAUBE	10875483	3	2	322	96057226	BECHERHALTER EINBAU
HALBRUNDKOPFSCHRAUBE	10875483	16	14	352	916168308	LUFTFUEHRUNG
HALBRUNDKOPFSCHRAUBE	10875483	26	2	355	916163008	WISCHANLAGE EINBAU
HALBRUNDKOPFSCHRAUBE	10875483	21	8	431	96056347	ELEKTRIK ANBAUTEILE KABIN
HALBRUNDKOPFSCHRAUBE I	12229337	11	14	327	96025887	PEDALTRAEGER EINBAU
HALBRUNDKOPFSCHRAUBE	10875474	38	16	338	917305408	INNENVERKLEIDUNG EINBAU
HALBRUNDKOPFSCHRAUBE	10875474	15	5	352	916168308	LUFTFUEHRUNG
HALBRUNDKOPFSCHRAUBE	10875474	28	6	395	918810308	STEUERSTAND
HALBRUNDKOPFSCHRAUBE	10875474	18	18	431	96056347	ELEKTRIK ANBAUTEILE KABIN
HALBRUNDKOPFSCHRAUBE	10875474	25	4	624	96036820	AUSRUESTUNG KAMERA KAB
HALBRUNDKOPFSCHRAUBE I	11697855	12	4	321	96015921	BEDIENELEMENTE EINBAU
HALBRUNDKOPFSCHRAUBE I	11697855	27	7	346	916162508	SCHEIBEN EINBAU
HALBRUNDKOPFSCHRAUBE	10875488	300	1	268	918811108	ANTRIEBSAGGREGAT VORM.

Bezeichnung	Artikel	Pos.	Menge	Seite	Baugruppe	Bezeichnung
HALBRUNDKOPFSCHRAUBE	10875488	17	3	329	916170808	KABELEINFUEHRUNG
HALBRUNDKOPFSCHRAUBE	10875488	33	4	349	966497908	FRONTSCHEIBE KPL.
HALBRUNDKOPFSCHRAUBE	10874884	39	13	338	917305408	INNENVERKLEIDUNG EINBAU
HALBRUNDKOPFSCHRAUBE	10875469	41	10	338	917305408	INNENVERKLEIDUNG EINBAU
HALBRUNDKOPFSCHRAUBE	10875469	36	7	361	917304708	SCHIEBETUER EINBAU
HALBRUNDKOPFSCHRAUBE	10410198	13	2	329	916170808	KABELEINFUEHRUNG
HALBRUNDKOPFSCHRAUBE	10875470	42	2	338	917305408	INNENVERKLEIDUNG EINBAU
HALBRUNDKOPFSCHRAUBE	10353737	21	4	287	96024716	BATTERIEKASTEN VORM.
HALBRUNDKOPFSCHRAUBE I	10429635	7	1	319	919010108	KRANFUEHRERKABINE VORM.
HALBRUNDKOPFSCHRAUBE	408650508	309	2	470	919674308	ABGASANLAGE
HALBRUNDKOPFSCHRAUBE	408650608	307	2	470	919674308	ABGASANLAGE
HALBRUNDKOPFSCHRAUBE	10301319	326	1	269	918811108	ANTRIEBSAGGREGAT VORM.
HALBRUNDKOPFSCHRAUBE	10301319	11	5	321	96015921	BEDIENELEMENTE EINBAU
HALBRUNDKOPFSCHRAUBE	10301319	(5)	21	326	968483708	TRITT KPL.
HALBRUNDKOPFSCHRAUBE	10301319	33	8	326	968483708	TRITT KPL.
HALBRUNDKOPFSCHRAUBE	12100574	101	2	420	919484908	ABSTURZSICHERUNG
HALBRUNDKOPFSCHRAUBE	12100574	105	4	645	919950308	MECH.TEILE VERSANDMONT
HALBRUNDKOPFSCHRAUBE	10182032	26	1	84	96075205	SCHALTKASTEN VORM.
HALTEBUEGEL RAL 9005 SPF	97136700	3	1	323	96048757	BECHERHALTER
HALTEGRIFF 215X25X59,2X16	10443309	59	1	339	917305408	INNENVERKLEIDUNG EINBAU
HALTEGURT 3X20X1295 POLY	97170326	30	1	349	966497908	FRONTSCHEIBE KPL.
HALTER	10145373	15	1	224	11420633	TAKTVENTIL
HALTER	10146789	2	1	192	10146791	KRAFTSTOFF-FEINFILTERAN
HALTER	919032814	2	1	77	990618314	TRANSPORTABSTUETZUNG
HALTER	964764908	1	1	77	990618314	TRANSPORTABSTUETZUNG
HALTER	966253708	1	1	363	966230508	FUEHRUNG VORM.
HALTER 1.4308	975218608	2	6	331	916162808	RELING
HALTER 1.4308	975384508	3	6	331	916162808	RELING
HALTER 1.5X414X239 DC01 FE	97015051	1	1	507	968015808	MONTAGEEINHEIT VORM.
HALTER 2X163X140 DC01 FE//	97134822	2	1	322	96057226	BECHERHALTER EINBAU
HALTER 2X194X119 DC01 FE//	97175640	9	1	502	96025348	GRUNDAUFBAU
HALTER 3X272X326 DC01 FE//	955044808	21	1	679	91000055	AUSSCHUBMECHANIK
HALTER 3X272X501 DC01 FE//	955044908	22	1	679	91000055	AUSSCHUBMECHANIK
HALTER 40X80X40 G-ALMG3	979489508	3	1	402	916049908	SPIEGELANBAU KRANFUEHR
HALTER 44X88.5X40 G-ALSIM	97009160	7	2	334	917304508	KRANFUEHRERKABINE VORM.
HALTER 4X408X186 S315MC	953843608	9	1	679	91000055	AUSSCHUBMECHANIK
HALTER ANBAU	10143707	10	1	239	10151328	KABELBAUM ANBAU
HALTER DT/DTM	10041876	532	2	494	96023971	KABELSTRANG
HALTER GX5CRNI19-10	97077297	9	1	268	918811108	ANTRIEBSAGGREGAT VORM.
HALTER GX5CRNI19-10	97077309	(2)	3	268	918811108	ANTRIEBSAGGREGAT VORM.
HALTER KPL.	10127689	2	1	237	10144227	STEUERGERAET ANBAU
HALTER KPL.	10143454	1	1	237	10144227	STEUERGERAET ANBAU
HALTER KPL. S235JR	10145371	2	1	242	10143707	HALTER ANBAU
HALTER KPL. S235JR	12978423	1	1	242	10143707	HALTER ANBAU
HALTER LINKS	968940708	2	1	780	917508508	LEITER ANBAU
HALTER MONITOR	10874763	20	1	624	96036820	AUSRUESTUNG KAMERA KAB
HALTER PA6MDGF30 SPF	97098446	2	2	100	96045217	MECHANISCHE ANBAUTEILE
HALTER PA6MDGF30 SPF	97098446	1	1	642	96045219	MECHANISCHE ANBAUTEILE
HALTER PA6MDGF30 SPF	97098446	88	1	674	91000054	TELESKOP 5 VORM.
HALTER RECHTS	968940808	4	1	780	917508508	LEITER ANBAU
HALTER S235JR	10150252	10	1	241	10151329	KABELSATZ ANBAU
HALTER S235JR	10150838	13	1	241	10151329	KABELSATZ ANBAU
HALTER S235JR	12429351	2	1	224	11420633	TAKTVENTIL
HALTER S235JR	9275178	91	1	239	10151328	KABELBAUM ANBAU
HALTER SCHWK.	966230708	29	1	361	917304708	SCHIEBETUER EINBAU
HALTER SCHWK.	966230808	30	1	361	917304708	SCHIEBETUER EINBAU
HALTER SCHWK. FE//ZNNI8//C	96022401	2	1	473	96051762	ABGASANLAGE VORM.
HALTER SCHWK. FE//ZNNI8//C	96049767	23	1	124	918728408	MONTAGETEILE DREHBUEHN
HALTER SCHWK. FE//ZNNI8//C	968510708	8	1	124	918728408	MONTAGETEILE DREHBUEHN
HALTER VORM.	96044787	11	1	420	919484908	ABSTURZSICHERUNG

Bezeichnung	Artikel	Pos.	Menge	Seite	Baugruppe	Bezeichnung
HALTER VORM. FE//ZNNI8//CN/	962207008	21	1	124	918728408	MONTAGETEILE DREHBUEHN
HALTER X10CRNI18-8	97003985	18	4	444	918759708	ZUSATZHEIZUNG OW
HALTER X12CRNIS188	965371708	1	1	700	966591408	ENDSCHALTER ANBAU
HALTERBLECH 2X121X18 DC0	97010815	8	1	502	96025348	GRUNDAUFBAU
HALTERBLECH 2X138X18 DC0	97015049	7	1	502	96025348	GRUNDAUFBAU
HALTERBLECH 2X192X41 DC0	97010814	6	2	502	96025348	GRUNDAUFBAU
HALTERBLECH 4X253X398 S31	97131661	100	1	645	919950308	MECH.TEILE VERSANDMONT
HALTERBLECH 4X253X398 S31	97131662	101	1	645	919950308	MECH.TEILE VERSANDMONT
HALTERUNG	965256808	3	1	87	96062922	MONTAGEPLATTE VORM.
HALTERUNG 2.HUB OBEN	967321308	11	1	725	918258408	ELEKTRIK 2.HUBENDSCHALTE
HALTERUNG SCHWK.	929582208	1	1	751	929582108	HALTERUNG VORM.
HALTERUNG SCHWK. T ZN O	963556008	52	1	673	91000054	TELESKOP 5 VORM.
HALTERUNG VORM.	929582108	3	1	747	919933308	TRANSPORTHALTERUNG DKS
HALTESCHEIBE 100X55X6	927601301	6	1	383	968607101	PLANETENGETRIEBE
HALTESCHEIBE 4X60X4 -42Cr	944134103	36	2	369	933074801	DREHWERKANTRIEB
HALTESCHEIBE 4X70X4 -42Cr	927531901	16	1	369	933074801	DREHWERKANTRIEB
HALTESCHEIBE 55X125X6	927602801	31	1	383	968607101	PLANETENGETRIEBE
HANDGRIFF	591066808	10	2	349	966497908	FRONTSCHEIBE KPL.
HANDGRIFF	591066808	5	1	350	965784408	DACHSCHEIBE VORM.
HANDGRIFF 212X53	12554272	6	1	416	969399608	KLAPPE VORM.
HANDGRIFF KPL. DREH KUN	704232208	9	1	349	966497908	FRONTSCHEIBE KPL.
HANDHAMMER DIN 1041 800G	790030008	60	1	104	928569808	GRUNDWERKZEUG
HANDHEBELPRESSE	885602114	6	1	102	914860608	WERKZEUG M.ZUBEHOER
HANDHEBELPRESSE VERZ.	790042008	70	1	104	928569808	GRUNDWERKZEUG
HANDPUMPE	10801932	10	1	760	918533508	ADAPTER VORM.
HARNSTOFFANLAGE	91003833	162	1	13		LIEBHERR LTR 1100
HARNSTOFFBEHAELTER 87,4L	12108844	1	1	462	96071742	HARNSTOFFTANK
HARNSTOFFTANK 87L/78L PE	96071742	10	1	461	96074081	HARNSTOFFTANK VORM.
HARNSTOFFTANK VORM.	96074081	1	1	458	91003833	HARNSTOFFANLAGE
HAUBE 2X669X579 DC01 FE//	971907008	3	1	773	96037297	WINKELGEBER ANBAU
HAUBE D180X420 PU-TEX-070	97176134	9	1	736	96056560	WINDWARNUNG VORM.
HAUBENAUFLAGE	704229908	105	4	417	969392008	FRONTHAUBE LI.
HAUBENDECKEL	11181887	33	1	95	10878097	SCHLEIFRINGUEBERTRAGER
HAUPTFILTERELEMENT	10294938	(1)	1	476	918729308	LUFTFILTERANLAGE
HAUPTHUBWERK	919935508	125	1	13		LIEBHERR LTR 1100
HAUPTHUBWERK SCHWK.	962573308	1	1	378	963564908	HAUPTHUBWERK VORM.
HAUPTHUBWERK VORM.	963564908	10	1	376	919935508	HAUPTHUBWERK
HAUPTLAGER 104/111/32	9073734	1	5	155	10116939	RS KURBELWELLENLAGERU
HAUPTLAGER 104/111/32 MIB	9075606	2	5	155	10116939	RS KURBELWELLENLAGERU
HEBELVERSCHLUSS	11450420	5	2	410	969425608	KLAPPE VORM.RECHTS
HEBELVERSCHLUSS	11450420	5	2	416	969399608	KLAPPE VORM.
HECKBLENDE	96000686	2	1	562	919528608	OELKUEHLER EINBAU
HECKSCHEIBE ESG SPF	97000279	5	1	346	916162508	SCHEIBEN EINBAU
HEIZELEMENT	10650387	(13)	1	397	10877138	FAHRERSITZ
HEIZFLANSCH 24V 1,9KW	12856186	1	1	205	13701882	HEIZFLANSCH KOMPLETT
HEIZFLANSCH ANBAU	9078314	260	1	132	13455311	DIESELMOTOR
HEIZFLANSCH KOMPLETT 24V	13701882	1	1	204	9078314	HEIZFLANSCH ANBAU
HEIZKLIMAGERAET	11083498	1	1	386	917894308	HEIZUNG KRANFUEHRERKAB
HEIZUNG	502651408	2	1	567	502657308	LUFTTROCKNER
HEIZUNG KRANFUEHRERKABI	917894308	128	1	13		LIEBHERR LTR 1100
HEIZUNG VORM. LTR1100	969300008	4	1	386	917894308	HEIZUNG KRANFUEHRERKAB
HEIZUNGSSCHLAUCH 70/PRIM	553181208	12	0.25	352	916168308	LUFTFUEHRUNG
HILFSEINSCHERSEIL KPL. 16X	915037208	440	1	15		LIEBHERR LTR 1100
HILFSHUBSEIL M.ZUBEHOER	917910708	332	1	14		LIEBHERR LTR 1100
HILFSHUBWERK	96062734	1	1	578	919935608	HILFSHUBWERK KPL.
HILFSHUBWERK KPL. 4B-23	919935608	330	1	14		LIEBHERR LTR 1100
HINWEISSCHILD 105X50 KLE	97151431	4	1	595	96062735	BESCHILDERUNG
HINWEISSCHILD 120X80 KLE	97094940	107	1	111	919933708	BESCHILDERUNG GROSSBRI
HINWEISSCHILD 208X100 KLE	97131530	110	1	111	919933708	BESCHILDERUNG GROSSBRI
HITZESCHUTZ MIT BEFESTIG	10144756	415	1	133	13455311	DIESELMOTOR

Bezeichnung	Artikel	Pos.	Menge	Seite	Baugruppe	Bezeichnung
HITZESCHUTZBLECH	10144755	1	1	221	10144756	HITZESCHUTZ MIT BEFESTIG
HITZESCHUTZBLECH S355JR	11382888	10	1	203	10149677	VERBINDUNGSLEITUNG ANBA
HITZESCHUTZBLECH S355JR	12428325	10	1	203	10149677	VERBINDUNGSLEITUNG ANBA
HOCHDRUCKPUMPE MIT BEF	10150741	171	1	131	13455311	DIESELMOTOR
HOCHDRUCKPUMPE R-MOT	10146658	1	1	181	10150741	HOCHDRUCKPUMPE MIT BEFE
HOCHDRUCKSCHLAUCH 2X1	10014847	512	4	517	96045552	HYDRAULIK OBERWAGEN
HOCHDRUCKSCHLAUCH 2X2	470901908	513	2	517	96045552	HYDRAULIK OBERWAGEN
HOCHDRUCKSCHLAUCH 2X3	510501308	506	2	517	96045552	HYDRAULIK OBERWAGEN
HOCHSTROMVERTEILER	10878680	(10)	1	288	96023914	ELEKTRIK BATTERIEKASTEN
HOEHENSICHERUNGSGERAE	12107776	2	1	120	916959808	PERSOENLICHE SCHUTZAUS
HOEHENVERSTELLUNG	12102116	28	1	397	10877138	FAHRERSITZ
HOHLPROFIL 40.0X60X1500 S	97084140	1	2	658	96014777	HUBSEILFUEHRUNG VORM.
HOHLSCHLUESSEL	704271108	7	2	105	928620108	ZUBEHOER
HOHLSCHRAUBE 10X1X27 11S	9080466	3	3	217	10148216	ROHRLEITUNG ANBAU
HOHLSCHRAUBE 15-3-M18X1.	12987460	17	2	196	10143341	KRAFTSTOFFLEITUNGEN
HOHLSCHRAUBE DIN 74305 22	502940108	405	1	291	969543308	KRAFTSTOFFBEHAELTER VO
HOHLSCHRAUBE DIN 7643 10	12210013	17	1	198	10143342	LECKOELRUECKLAUF
HOHLSCHRAUBE DIN 7643 12	12210025	3	4	212	10145278	ANBAUTEILE LUFTPRESSER
HOHLSCHRAUBE DIN 7643 12-	11002995	2	1	196	10143341	KRAFTSTOFFLEITUNGEN
HOHLSCHRAUBE DIN 7643 15	12210015	16	3	196	10143341	KRAFTSTOFFLEITUNGEN
HOHLSCHRAUBE DIN 7643 4-3-	12210009	23	1	198	10143342	LECKOELRUECKLAUF
HOHLSCHRAUBE DIN 7643 6-3	12210010	6	6	198	10143342	LECKOELRUECKLAUF
HOHLSCHRAUBE DIN 7643 6-3	12210010	7	1	212	10145278	ANBAUTEILE LUFTPRESSER
HOHLSCHRAUBE DIN 7643 6-3	12210010	6	1	224	11420633	TAKTVENTIL
HOHLSCHRAUBE DIN 7643 8-3	12210024	2	1	198	10143342	LECKOELRUECKLAUF
HOHLSCHRAUBE DIN 7643 8-3	12210024	20	1	223	12512627	ABGASSTUTZEN ANBAU
HORN 24V	614003108	24	1	84	96075205	SCHALTKASTEN VORM.
HORN 24V	614003108	32	1	484	919940408	EL.ANLAGE DREHBUEHNE
HUBENDSCHALTER GEWICHT	96013575	50	1	673	91000054	TELESKOP 5 VORM.
HUBENDSCHALTER GEWICHT	96013575	2	1	744	917910708	HILFSHUBSEIL M.ZUBEHOER
HUBENDSCHALTERGEWICHT	10873379	1	1	676	96013575	HUBENDSCHALTER GEWICHT
HUBSEIL 21X205M -40°C SPF	10871170	1	1	632	917910508	SEIL F.WINDE 1
HUBSEIL 21X205M -40°C SPF	10871170	1	1	744	917910708	HILFSHUBSEIL M.ZUBEHOER
HUBSEILFUEHRUNG VORM.	96014777	3	1	655	91000049	ANLENKSTUECK VORM.
HUBZYLINDER 73,15/66,55-61,	790038808	4	1	760	918533508	ADAPTER VORM.
HUELSE	11493793	1	1	784	915037208	HILFSEINSCHERSEIL KPL.
HUELSE	571130308	2	1	524	571130108	DRUCKBEGRENZUNGSVENTI
HUELSE 18.0X145 S355J2C+C	97080775	13	4	52	968374908	ENDSCHALTER ANBAU
HUELSE 18X12 PA 12	97012184	44	1	361	917304708	SCHIEBETUER EINBAU
HUELSE 18X24 PA12	97001760	34	1	361	917304708	SCHIEBETUER EINBAU
HUELSE 20.0X32 S355J2C+C	97131538	12	2	422	96044789	SPANNEINHEIT KPL.
HUELSE 22X13 X5CRNI18-10	97155739	2	2	615	919392208	BECKENGURT EINBAU
HUELSE 25.0X24 S355J2G3C+	97131537	11	2	422	96044789	SPANNEINHEIT KPL.
HUELSE 25.0X30 35NICRMOV	97114100	9	24	367	919235408	DREHWERK
HUELSE 25X15 PA 12	97001711	33	1	361	917304708	SCHIEBETUER EINBAU
HUELSE 25X20 11SMNPB37 FE	953873408	25	1	84	96075205	SCHALTKASTEN VORM.
HUELSE 25X20 11SMNPB37 FE	953873408	3	2	100	96045217	MECHANISCHE ANBAUTEILE
HUELSE 25X20 11SMNPB37 FE	953873408	23	4	119	96045222	MONTAGETEILE
HUELSE 25X20 11SMNPB37 FE	953873408	103	4	124	918728408	MONTAGETEILE DREHBUEHN
HUELSE 25X20 11SMNPB37 FE	953873408	31	2	315	917357108	KRANFUEHRERKABINE ANBA
HUELSE 25X20 11SMNPB37 FE	953873408	23	5	376	919935508	HAUPTHUBWERK
HUELSE 25X20 11SMNPB37 FE	953873408	22	5	478	915300208	ZENTRALSCHMIERANLAGE O
HUELSE 25X20 11SMNPB37 FE	953873408	(4)	8	566	969767908	VERROHRUNG DRUCKLUFTA
HUELSE 25X20 11SMNPB37 FE	953873408	21	4	623	915403108	ANBAUTEILE KAMERA
HUELSE 25X21 X12CRNIS188	955600008	6	1	127	968305308	ENDSCHALTER VORM.
HUELSE 32X30	955918008	41	2	679	91000055	AUSSCHUBMECHANIK
HUELSE 33X19 11SMNPB37 FE	978787708	21	4	81	96062917	ELEKTRIK MITTELSTUECK
HUELSE 33X19 11SMNPB37 FE	978787708	12	4	263	918728708	ANTRIEBSAGGREGAT KPL.
HUELSE 33X19 11SMNPB37 FE	978787708	6	10	470	919674308	ABGASANLAGE
HUELSE 33X19 11SMNPB37 FE	978787708	(3)	10	566	969767908	VERROHRUNG DRUCKLUFTA

Bezeichnung	Artikel	Pos.	Menge	Seite	Baugruppe	Bezeichnung
HUELSE 40.0X20 35NICRMOV1	97146006	9	4	747	919933308	TRANSPORTHALTERUNG DKS
HUELSE 40.0X87 S355J2C+C	97131535	4	1	422	96044789	SPANNEINHEIT KPL.
HUELSE 8X26X64,5 X46Cr13	10152168	2	1	163	10149578	ZYLINDERKOPF
HUELSE RD.32X41 X12CRNIS	955917908	40	4	679	91000055	AUSSCHUBMECHANIK
HUTMUTTER	510710608	30	1	37	510438508	DRUCKMINDERVENTIL
HUTMUTTER DIN 1587 M6 A2-7	10219361	12	4	350	965784408	DACHSCHEIBE VORM.
HUTMUTTER DIN 986 M4 A2-7	4002886	25	4	480	10327065	ELEKTROPUMPE
HUTSCHIENE 35X27X7,3X1	602106708	1	0.135	504	968077108	KLEMMENLEISTE
HUTSCHIENE 35X27X7,3X1	602106708	298	0.205	703	96063458	KLEMMKASTEN KPL.
HYDR.INSTALLATIONSTEILE	96048348	30	1	19	96062225	UNTERWAGEN KPL.
HYDRAULIK	918730608	185	1	13		LIEBHERR LTR 1100
HYDRAULIK HILFSHUBWERK	96064697	3	1	578	919935608	HILFSHUBWERK KPL.
HYDRAULIK HILFSHUBWERK D	91004922	333	1	14		LIEBHERR LTR 1100
HYDRAULIK HILFSHUBWERK D	96075086	4	1	596	91004922	HYDRAULIK HILFSHUBWERK D
HYDRAULIK OBERWAGEN LT	96045552	4	1	510	918730608	HYDRAULIK
HYDRAULIK TELE	915928608	217	1	14		LIEBHERR LTR 1100
HYDRAULIK TELE	965994108	4	1	707	915928608	HYDRAULIK TELE
HYDRAULIK UNTERWAGEN	967304508	5	1	19	96062225	UNTERWAGEN KPL.
HYDRAULIK VORB. JACK-UP	967301408	2	1	61	917155308	HYDRAULIK VORB.
HYDRAULIK VORB. JACKUP	917155308	40	1	12		LIEBHERR LTR 1100
HYDRAULIKDOPPELPUMPE L	12487540	10	1	129	13471292	ANTRIEBSGRUPPE
HYDRAULISCHE ABSTUETZUN	915447908	58	1	12		LIEBHERR LTR 1100
HYDRAULISCHE BALLASTIER	919501608	153	1	13		LIEBHERR LTR 1100
HYDROMOTOR A2FM 125CM³/	510240708	1	1	376	919935508	HAUPTHUBWERK
HYDROMOTOR A2FM 125CM³/	510240708	2	1	581	96062734	HILFSHUBWERK
HYDROMOTOR A2FM 23CM³/U	510229408	2	1	367	919235408	DREHWERK
HYDROZYLINDER 65/36-367 SP	512353708	26	1	747	919933308	TRANSPORTHALTERUNG DKS
HYDROZYLINDER 70/45-50 SP	10443748	1	1	374	916109208	DREHBUEHNENARRETIERUN
INBUSSCHLUESSEL DIN 911	790021208	34	1	104	928569808	GRUNDWERKZEUG
INBUSSCHLUESSEL DIN 911	790021308	35	1	104	928569808	GRUNDWERKZEUG
INBUSSCHLUESSEL DIN 911 4	790021608	30	1	104	928569808	GRUNDWERKZEUG
INBUSSCHLUESSEL DIN 911 5	790020008	31	1	104	928569808	GRUNDWERKZEUG
INBUSSCHLUESSEL DIN 911 6	790020108	32	1	104	928569808	GRUNDWERKZEUG
INBUSSCHLUESSEL DIN 911	790021008	33	1	104	928569808	GRUNDWERKZEUG
INDUKTIVSENSOR BERUEHR	10354584	1	2	52	968374908	ENDSCHALTER ANBAU
INDUKTIVSENSOR BERUEHR	10354584	58	1	432	96056347	ELEKTRIK ANBAUTEILE KABIN
INDUKTIVSENSOR BERUEHR	10354584	10	1	633	919284308	GEBER BALLASTUEBERWACH
INDUKTIVSENSOR BERUEHR	10354584	6	6	686	965264808	GEBERANBAU AUSSCHUBM
INDUKTIVSENSOR BERUEHR	10354584	(5)	1	700	966591408	ENDSCHALTER ANBAU
INDUKTIVSENSOR BERUEHR	692312708	7	2	686	965264808	GEBERANBAU AUSSCHUBM
INJEKTOR LI2.7-20-SF-950	13574085	1	1	185	13743036	RS INJEKTOR
INJEKTOR MIT BEFEST. LI2.7-	10152867	190	4	132	13455311	DIESELMOTOR
INNENGRIFF ZUG	11005984	2	1	362	966230408	SCHLIESSANLAGE
INNENLEUCHTE 6W 24V WEIS	10342854	8	2	431	96056347	ELEKTRIK ANBAUTEILE KABIN
INNENRAD Z=-96 42CrMo4	938760701	55	1	383	968607101	PLANETENGETRIEBE
INNENRAD Z=74 42CrMo4	927601801	20	1	383	968607101	PLANETENGETRIEBE
INNENRING 40X45X20	747404001	71	1	369	933074801	DREHWERKANTRIEB
INNENVERKLEIDUNG EINBAU	917305408	1	1	334	917304508	KRANFUEHRERKABINE VORM.
ISOLIERRING	691041708	6	37	95	10878097	SCHLEIFRINGUEBERTRAGER
ISOLIERSCHLAUCH DN10X0,6	11082604	204	1.16	90	96062920	KABELSTRANG
ISOLIERSCHLAUCH DN10X0,6	11082604	204	3.4	426	96023891	KABELSTRANG
ISOLIERSCHLAUCH DN10X0,6	11082604	204	0.73	428	96022870	KABELSTRANG
ISOLIERSCHLAUCH DN10X0,6	11082604	204	1.87	490	96063649	KABELSTRANG
ISOLIERSCHLAUCH DN10X0,6	11082604	204	1.96	493	96023971	KABELSTRANG
ISOLIERSCHLAUCH DN10X0,6	11082604	204	0.22	694	96063583	LEITUNG
ISOLIERSCHLAUCH DN10X0,6	11082604	204	0.4	706	96063415	KABELSTRANG
ISOLIERSCHLAUCH DN12X0,6	11082605	205	1.78	426	96023891	KABELSTRANG
ISOLIERSCHLAUCH DN12X0,6	11082605	205	0.53	490	96063649	KABELSTRANG
ISOLIERSCHLAUCH DN12X0,6	11082605	205	0.1	698	96063213	LEITUNG
ISOLIERSCHLAUCH DN12X0,6	11082605	205	0.45	699	96051215	DRAEHTE

Bezeichnung	Artikel	Pos.	Menge	Seite	Baugruppe	Bezeichnung
ISOLIERSCHLAUCH DN14X0,6	11082606	206	0.33	495	96049294	KABELSTRANG
ISOLIERSCHLAUCH DN14X0,8	603012608	232	4.39	495	96049294	KABELSTRANG
ISOLIERSCHLAUCH DN14X0,8	603012608	232	4.32	611	96057250	LEITUNG
ISOLIERSCHLAUCH DN16X0,8	11082607	207	0.68	589	96055198	KABELSTRANG
ISOLIERSCHLAUCH DN18X0,8	11082608	208	0.28	493	96023971	KABELSTRANG
ISOLIERSCHLAUCH DN4X0,5	11082601	201	1.03	428	96022870	KABELSTRANG
ISOLIERSCHLAUCH DN4X0,5	11082601	4	0.28	438	963398008	AXIALLUEFTER VORM.OBEN
ISOLIERSCHLAUCH DN4X0,5	11082601	201	0.37	706	96063415	KABELSTRANG
ISOLIERSCHLAUCH DN6X0,5	11082602	202	6.14	90	96062920	KABELSTRANG
ISOLIERSCHLAUCH DN6X0,5	11082602	15	0.04	350	965784408	DACHSCHEIBE VORM.
ISOLIERSCHLAUCH DN6X0,5	11082602	202	6.8	426	96023891	KABELSTRANG
ISOLIERSCHLAUCH DN6X0,5	11082602	202	6.72	428	96022870	KABELSTRANG
ISOLIERSCHLAUCH DN6X0,5	11082602	202	17.75	490	96063649	KABELSTRANG
ISOLIERSCHLAUCH DN6X0,5	11082602	202	7.51	493	96023971	KABELSTRANG
ISOLIERSCHLAUCH DN6X0,5	11082602	202	1.95	495	96049294	KABELSTRANG
ISOLIERSCHLAUCH DN6X0,5	11082602	202	0.71	589	96055198	KABELSTRANG
ISOLIERSCHLAUCH DN6X0,5	11082602	202	0.94	706	96063415	KABELSTRANG
ISOLIERSCHLAUCH DN8X0,65	11082603	203	0.83	90	96062920	KABELSTRANG
ISOLIERSCHLAUCH DN8X0,65	11082603	203	3.61	426	96023891	KABELSTRANG
ISOLIERSCHLAUCH DN8X0,65	11082603	203	2.26	428	96022870	KABELSTRANG
ISOLIERSCHLAUCH DN8X0,65	11082603	203	12.61	490	96063649	KABELSTRANG
ISOLIERSCHLAUCH DN8X0,65	11082603	203	6.16	493	96023971	KABELSTRANG
ISOLIERSCHLAUCH DN8X0,65	11082603	203	5.52	495	96049294	KABELSTRANG
ISOLIERSCHLAUCH DN8X0,65	11082603	203	0.3	694	96063583	LEITUNG
ISOLIERSCHLAUCH DN8X0,65	11082603	203	0.83	706	96063415	KABELSTRANG
ISOLIERSCHLAUCH ISO 3302-	11006584	120	4	272	96020819	KUEHLER VORM.
ISOLIERSCHLAUCH ISO 3302-	11006584	40	3.4	411	96022943	SCHALLDAEMMUNG
KABEL	10097087	15	2	624	96036820	AUSRUESTUNG KAMERA KAB
KABEL	10346773	5	4.51	611	96057250	LEITUNG
KABEL 2X0,14+2X0,22-9M	10870643	11	1	625	96036821	AUSRUESTUNG KAMERA DRE
KABELBAUM 3300MM	553186908	29	1	489	96063648	KABELLISTE DREHBUEHNE
KABELBAUM ANBAU	10151328	580	1	135	13455311	DIESELMOTOR
KABELBAUM W700	10153987	1	1	239	10151328	KABELBAUM ANBAU
KABELBINDER 2,5X99-SCHWA	12104811	268	50	500	96059659	DRAEHTE GRUNDAUFBAU KPL
KABELBINDER 3,6X142-SCH	12104809	261	1	90	96062920	KABELSTRANG
KABELBINDER 3,6X142-SCH	12104809	261	15	91	96062921	KABELSTRANG
KABELBINDER 3,6X142-SCH	12104809	261	1	426	96023891	KABELSTRANG
KABELBINDER 3,6X142-SCH	12104809	261	20	428	96022870	KABELSTRANG
KABELBINDER 3,6X142-SCH	12104809	261	1	493	96023971	KABELSTRANG
KABELBINDER 3,6X142-SCH	12104809	261	50	500	96059659	DRAEHTE GRUNDAUFBAU KPL
KABELBINDER 3,6X203-SCH	12104810	269	20	490	96063649	KABELSTRANG
KABELBINDER 3,6X203-SCH	12104810	269	1	493	96023971	KABELSTRANG
KABELBINDER 3,6X203-SCH	12104810	269	50	500	96059659	DRAEHTE GRUNDAUFBAU KPL
KABELBINDER 3,6X203-SCH	12104810	269	5	698	96063213	LEITUNG
KABELBINDER 4,6X200-SCH	11691035	(40)	10	484	919940408	EL.ANLAGE DREHBUEHNE
KABELBINDER 4,6X202-SCHW	11691013	97	2	240	10151328	KABELBAUM ANBAU
KABELBINDER 4,8X292-SCH	10874588	99	3	240	10151328	KABELBAUM ANBAU
KABELBINDER 4,8X292-SCH	10874588	100	8	241	10151329	KABELSATZ ANBAU
KABELBINDER 4,8X292-SCH	10874588	(10)	50	484	919940408	EL.ANLAGE DREHBUEHNE
KABELBINDER 7,6X368-SCH	10874587	(20)	50	484	919940408	EL.ANLAGE DREHBUEHNE
KABELBINDER 7,6X380-SCHW	10870333	(30)	100	484	919940408	EL.ANLAGE DREHBUEHNE
KABELBINDERHALTER 28X28-	10870511	308	2	692	96063456	KLEMMKASTEN
KABELBINDERHALTER 46X70-	10872676	121	1	268	918811108	ANTRIEBSAGGREGAT VORM.
KABELBINDERHALTER 46X70-	10872676	68	15	655	91000049	ANLENKSTUECK VORM.
KABELBINDERHALTER 46X70-	10872676	45	14	673	91000054	TELESKOP 5 VORM.
KABELBINDERHALTER 46X70-	10872676	62	7	760	918533508	ADAPTER VORM.
KABELBINDERHALTER 46X70-	10872676	32	10	768	91001040	ANLENKSTUECK VORM.
KABELBINDERHALTER 46X70-	10872676	20	2	771	918596708	KOPFSTUECK VORM.
KABELBINDERHALTER 8,1X-S	11492315	26	11	502	96025348	GRUNDAUFBAU
KABELBINDERHALTER 8,1X-S	11492315	7	2	507	968015808	MONTAGEEINHEIT VORM.

Bezeichnung	Artikel	Pos.	Menge	Seite	Baugruppe	Bezeichnung
KABELDOSE M11-Z	604505508	507	1	730	96058738	KABELSTRANG
KABELDOSE M11-Z	604505508	511	1	775	96035674	LEITUNG
KABELEINFUEHRUNG	916170808	5	1	319	919010108	KRANFUEHRERKABINE VORM.
KABELHALTER 4X40X67 1.431	720014408	40	2	673	91000054	TELESKOP 5 VORM.
KABELHALTER 4X40X67 1.431	720014408	5	4	721	915415908	MASTNASE
KABELHALTER 4X40X67 1.431	720014408	26	2	723	964502908	MASTNASE VORM.
KABELHALTER 4X40X67 1.431	720014408	33	2	768	91001040	ANLENKSTUECK VORM.
KABELHALTER 4X40X67 1.431	720014408	22	2	771	918596708	KOPFSTUECK VORM.
KABELHALTER DC01 FE//ZNNI	953650008	24	27	47	968374708	MONTAGETEILE
KABELHALTER DC01 FE//ZNNI	953650008	15	2	268	918811108	ANTRIEBSAGGREGAT VORM.
KABELHALTER DC01 FE//ZNNI	953650008	3	2	575	918627208	KLIMAANLAGE OW
KABELHALTER DC01 FE//ZNNI	953650008	6	1	721	915415908	MASTNASE
KABELHALTER DC01 FE//ZNNI	953650008	28	1	723	964502908	MASTNASE VORM.
KABELKANAL 40X120/2000	601407008	49	0.308	502	96025348	GRUNDAUFBAU
KABELKANAL 80X80/2000	601413908	48	0.28	502	96025348	GRUNDAUFBAU
KABELLISTE	96045215	10	1	96	919499008	BALLASTUEBERWACHUNG
KABELLISTE	96045218	10	1	638	919502708	BALLASTUEBERWACHUNG
KABELLISTE DREHBUEHNE	96063648	12	1	484	919940408	EL.ANLAGE DREHBUEHNE
KABELLISTE KRANFUEHRERK	96068695	5	1	424	919812608	ELEKTRIK KRANFUEHRERKAB
KABELMARKER	923512208	500	18	90	96062920	KABELSTRANG
KABELMARKER	923512208	500	22	91	96062921	KABELSTRANG
KABELMARKER	923512208	500	3	98	96045216	KABELSTRANG
KABELMARKER	923512208	500	53	426	96023891	KABELSTRANG
KABELMARKER	923512208	500	28	428	96022870	KABELSTRANG
KABELMARKER	923512208	500	85	490	96063649	KABELSTRANG
KABELMARKER	923512208	500	9	492	96063650	LEITUNG
KABELMARKER	923512208	500	34	493	96023971	KABELSTRANG
KABELMARKER	923512208	500	20	495	96049294	KABELSTRANG
KABELMARKER	923512208	500	5	589	96055198	KABELSTRANG
KABELMARKER	923512208	500	3	608	96060353	LEITUNG
KABELMARKER	923512208	500	2	611	96057250	LEITUNG
KABELMARKER	923512208	500	3	640	96045220	KABELSTRANG
KABELMARKER	923512208	500	2	693	96063864	KABELSTRANG
KABELMARKER	923512208	500	3	694	96063583	LEITUNG
KABELMARKER	923512208	500	1	698	96063213	LEITUNG
KABELMARKER	923512208	500	3	699	96051215	DRAEHTE
KABELMARKER	923512208	500	11	706	96063415	KABELSTRANG
KABELMARKER	923512208	500	3	730	96058738	KABELSTRANG
KABELMARKER	923512208	500	3	775	96035674	LEITUNG
KABELMUFFE 12/21/25 EDPM	602600808	12	2	329	916170808	KABELEINFUEHRUNG
KABELSATZ ANBAU	10151329	2	1	239	10151328	KABELBAUM ANBAU
KABELSATZ ANBAU	10151390	8	1	239	10151328	KABELBAUM ANBAU
KABELSATZ WL705	10151164	1	1	241	10151329	KABELSATZ ANBAU
KABELSATZ WL720	10150081	(1)	1	239	10151328	KABELBAUM ANBAU
KABELSCHLAUCH DN16X0,6	11124205	223	1.43	90	96062920	KABELSTRANG
KABELSCHLAUCH DN16X0,6	11124205	160	1.3	93	96060494	ANTENNE KPL.
KABELSCHLAUCH DN16X0,6	11124205	223	3.86	490	96063649	KABELSTRANG
KABELSCHLAUCH DN16X0,6	11124205	223	3.66	493	96023971	KABELSTRANG
KABELSCHLAUCH DN16X0,6	11124205	223	5.5	775	96035674	LEITUNG
KABELSCHLAUCH DN20X0,6	11124207	224	0.83	426	96023891	KABELSTRANG
KABELSCHLAUCH DN20X0,6	11124207	224	0.53	428	96022870	KABELSTRANG
KABELSCHLAUCH DN20X0,6	11124207	224	3.11	490	96063649	KABELSTRANG
KABELSCHLAUCH DN25X0,6	11124208	225	1.66	90	96062920	KABELSTRANG
KABELSCHLAUCH DN25X0,6	11124208	225	0.33	426	96023891	KABELSTRANG
KABELSCHLAUCH DN25X0,6	11124208	225	0.43	428	96022870	KABELSTRANG
KABELSCHLAUCH DN25X0,6	11124208	225	1.21	490	96063649	KABELSTRANG
KABELSCHLAUCH DN25X0,6	11124208	225	3.03	493	96023971	KABELSTRANG
KABELSCHLAUCH DN25X0,6	11124208	225	1.93	495	96049294	KABELSTRANG
KABELSCHLAUCH DN30X0,6	11124209	226	2.84	490	96063649	KABELSTRANG
KABELSCHLAUCH DN30X0,6	11124209	226	0.6	493	96023971	KABELSTRANG

Bezeichnung	Artikel	Pos.	Menge	Seite	Baugruppe	Bezeichnung
KABELSCHLAUCH DN30X0,6	11124209	226	4.36	495	96049294	KABELSTRANG
KABELSCHLAUCH DN35X0,6	11124210	227	1.36	426	96023891	KABELSTRANG
KABELSCHLAUCH DN35X0,6	11124210	227	0.88	428	96022870	KABELSTRANG
KABELSCHLAUCH DN35X0,6	11124210	227	3.09	490	96063649	KABELSTRANG
KABELSCHLAUCH DN35X0,6	11124210	227	0.35	706	96063415	KABELSTRANG
KABELSCHLAUCH DN40X0,6	11124211	228	0.9	426	96023891	KABELSTRANG
KABELSCHLAUCH DN40X0,6	11124211	228	4.36	493	96023971	KABELSTRANG
KABELSCHLAUCH DN40X0,6	11124211	228	0.55	500	96059659	DRAEHTE GRUNDAUFBAU KPL
KABELSCHLAUCH DN50X0,6	11124212	229	0.9	490	96063649	KABELSTRANG
KABELSCHLAUCH DN50X0,6	11124212	229	0.5	500	96059659	DRAEHTE GRUNDAUFBAU KPL
KABELSCHUH AEHNL.DIN 462	602305605	766	1	91	96062921	KABELSTRANG
KABELSCHUH AEHNL.DIN 462	602305605	766	2	494	96023971	KABELSTRANG
KABELSCHUH DIN 46234 M12/	602217308	50	1	490	96063649	KABELSTRANG
KABELSCHUH DIN 46234 M8/16	602301708	106	1	493	96023971	KABELSTRANG
KABELSCHUH DIN 46237 6/6m	602213308	39	2	91	96062921	KABELSTRANG
KABELSCHUH DIN 46237 M6/1	602217908	34	3	91	96062921	KABELSTRANG
KABELSCHUH DIN 46237 M6/1	602217908	34	1	426	96023891	KABELSTRANG
KABELSCHUH M4/0,25-1,5MM²	602218408	112	9	699	96051215	DRAEHTE
KABELSCHUH M4/2,5mm² VER	602306108	31	3	699	96051215	DRAEHTE
KABELSCHUH M6/16,8-26,7MM	602205808	111	1	493	96023971	KABELSTRANG
KABELSCHUH M6/16MM²	602217008	49	3	490	96063649	KABELSTRANG
KABELSCHUH M6/16MM²	602217008	49	2	493	96023971	KABELSTRANG
KABELSCHUH M8/16MM²	602207508	48	2	490	96063649	KABELSTRANG
KABELSCHUH aehnlich DIN 46	6002637	2281	1	706	96063415	KABELSTRANG
KABELSTECKER 4-POL 90°	10324830	514	1	490	96063649	KABELSTRANG
KABELSTECKVERBINDER M23	12104883	503	1	611	96057250	LEITUNG
KABELSTECKVERBINDER M23	12104884	503	1	608	96060353	LEITUNG
KABELSTECKVERBINDER M23	12106223	504	2	608	96060353	LEITUNG
KABELSTRANG W200	96062921	4	1	82	96062918	SCHALTKASTEN KPL.
KABELSTRANG W202	96062920	3	1	82	96062918	SCHALTKASTEN KPL.
KABELSTRANG W227	96045216	30	1	97	96045215	KABELLISTE
KABELSTRANG W300	96023891	2	1	425	96068695	KABELLISTE KRANFUEHRERK
KABELSTRANG W301	967541908	3	1	425	96068695	KABELLISTE KRANFUEHRERK
KABELSTRANG W302	967542008	4	1	425	96068695	KABELLISTE KRANFUEHRERK
KABELSTRANG W310	96022870	7	1	425	96068695	KABELLISTE KRANFUEHRERK
KABELSTRANG W321	96020554	13	1	624	96036820	AUSRUESTUNG KAMERA KAB
KABELSTRANG W491	968986608	3	1	508	966193108	WIDERSTANDSMODUL VORM.
KABELSTRANG W500	96063649	1	1	489	96063648	KABELLISTE DREHBUEHNE
KABELSTRANG W501	96023971	16	1	489	96063648	KABELLISTE DREHBUEHNE
KABELSTRANG W512	968552008	(6)	1	598	96075086	HYDRAULIK HILFSHUBWERK D
KABELSTRANG W522	96055198	20	1	588	96055197	ELEKTRIK WINDE 2
KABELSTRANG W555	96049294	17	1	489	96063648	KABELLISTE DREHBUEHNE
KABELSTRANG W661	96045220	30	1	639	96045218	KABELLISTE
KABELSTRANG W916	96063415	1	1	705	96063455	ELEKTRIK AUSSCHUBMECHA
KABELSTRANG W917	96063864	150	1	692	96063456	KLEMMKASTEN
KABELSTRANG W933Y	96058738	1	1	729	96058737	ELEKTRIK MESS-U.WARNEINR
KABELSTRANG WRCAN	967709108	516	1	90	96062920	KABELSTRANG
KABELSTRUMPF 8-15 700	602707308	503	1	698	96063213	LEITUNG
KABELTUELLE 1,9-2,5/1,75/0,5	10473047	707	1	698	96063213	LEITUNG
KABELTUELLE 12,0-3,0/12/1,4	10872032	98	1	490	96063649	KABELSTRANG
KABELTUELLE 16,0-4,0/16/1,78	10872033	709	2	494	96023971	KABELSTRANG
KABELTUELLE 2,4-3,0/2,4/0,6 SI	10473048	708	2	427	96023891	KABELSTRANG
KABELTUELLE 2,4-3,0/2,4/0,6 SI	10473048	708	3	428	96022870	KABELSTRANG
KABELTUELLE 2,4-3,0/2,4/0,6 SI	10473048	708	2	491	96063649	KABELSTRANG
KABELTUELLE 4-6	602704808	509	1	775	96035674	LEITUNG
KABELTUELLE 6-8	604508708	512	1	775	96035674	LEITUNG
KABELTUELLE 8-10	604509408	506	1	730	96058738	KABELSTRANG
KABELVERBINDER	602336408	2	1	506	926891108	VERTEILER MASSE
KABELVERSCHRAUBUNG M12	602424008	67	2	432	96056347	ELEKTRIK ANBAUTEILE KABIN
KABELVERSCHRAUBUNG M12	602424008	502	1	693	96063864	KABELSTRANG

Bezeichnung	Artikel	Pos.	Menge	Seite	Baugruppe	Bezeichnung
KABELVERSCHRAUBUNG M1	602424108	14	1	84	96075205	SCHALTKASTEN VORM.
KABELVERSCHRAUBUNG M16	10428532	48	2	431	96056347	ELEKTRIK ANBAUTEILE KABIN
KABELVERSCHRAUBUNG M20	12105979	505	1	730	96058738	KABELSTRANG
KABELVERSCHRAUBUNG M20	602425608	501	1	698	96063213	LEITUNG
KABELVERSCHRAUBUNG M2	602424208	509	1	589	96055198	KABELSTRANG
KABELVERSCHRAUBUNG M2	602424208	507	2	775	96035674	LEITUNG
KABELVERSCHRAUBUNG M2	12104695	20	1	84	96075205	SCHALTKASTEN VORM.
KABELVERSCHRAUBUNG M2	12104695	153	1	92	96060493	ANTENNE KPL.
KABELVERSCHRAUBUNG M2	12104695	153	1	93	96060494	ANTENNE KPL.
KABELVERSCHRAUBUNG M25	10873447	506	1	775	96035674	LEITUNG
KABELVERSCHRAUBUNG M25	602424308	508	1	492	96063650	LEITUNG
KABELVERSCHRAUBUNG M25	602424308	506	1	694	96063583	LEITUNG
KABINENSICHERUNG 4X302X	97020763	30	1	315	917357108	KRANFUEHRERKABINE ANBA
KAEFIGMUTTER M5	413002608	9	4	612	913753108	FUNKVORBEREITUNG OW
KAEFIGMUTTER M5 ST	10455281	27	6	395	918810308	STEUERSTAND
KAEFIGMUTTER M6	413002708	44	4	395	918810308	STEUERSTAND
KAEFIGMUTTER M6	413002808	53	1	338	917305408	INNENVERKLEIDUNG EINBAU
KAEFIGMUTTER M6 NIROSTA	10875857	71	4	655	91000049	ANLENKSTUECK VORM.
KAEFIGMUTTER M6 NIROSTA	10875857	2	2	700	966591408	ENDSCHALTER ANBAU
KAEFIGMUTTER M8 A2/ST A2	10875858	351	3	562	919528608	OELKUEHLER EINBAU
KAEFIGMUTTER M8 A2/ST A2	413003208	355	1	408	96022627	DREHBUEHNENVERKLEIDUN
KAEFIGMUTTER M8 A2/ST A2	413003208	26	3	652	919935408	TELESKOPAUSLEGER KPL.
KAELTEMASCHINENOEL WA	11211803	101	0.18	575	918627208	KLIMAANLAGE OW
KAELTEMITTEL 12KG FLASCH	7020440	100	1.6	575	918627208	KLIMAANLAGE OW
KAMERA SPF	10097079	10	1	625	96036821	AUSRUESTUNG KAMERA DRE
KAMERAUEBERWACHUNG O	918805408	494	1	15		LIEBHERR LTR 1100
KANTENSCHUTZ 1-2X9,5X6,5	262103908	115	0.3	272	96020819	KUEHLER VORM.
KANTENSCHUTZ 1-2X9,5X6,5	262103908	8	1.55	287	96024716	BATTERIEKASTEN VORM.
KANTENSCHUTZ 1-2X9,5X6,5	262103908	(3)	0.6	407	96022627	DREHBUEHNENVERKLEIDUN
KANTENSCHUTZ 1-2X9,5X6,5	262103908	7	0.16	506	926891108	VERTEILER MASSE
KANTENSCHUTZ 73X43X28 PA	97160916	95	8	656	91000049	ANLENKSTUECK VORM.
KANTENSCHUTZ 73X43X28 PA	97160916	90	2	674	91000054	TELESKOP 5 VORM.
KANTENSCHUTZ 90X43X28 PA	97160917	96	2	656	91000049	ANLENKSTUECK VORM.
KAPPE	571582808	30	1	209	5700161	LUFTPRESSER
KAPPE	591064408	8	1	441	966707708	SPIEGELHALTER VORM.
KARABINERHAKEN DIN 5299 C	744010208	16	1	679	91000055	AUSSCHUBMECHANIK
KARTUSCHE	571352308	1	1	567	502657308	LUFTTROCKNER
KBA-RING 130X121,1X3,5	11351303	3	1	159	10146367	KOLBEN KPL.
KEGEL	11244462	4	1	524	571130108	DRUCKBEGRENZUNGSVENTI
KEGELPFANNE DIN 6319 19 4	10875862	41	1	747	919933308	TRANSPORTHALTERUNG DKS
KEGELROLLENLAGER	10293775	10	1	372	570109008	TRIEBWERK
KEGELROLLENLAGER DIN 720	746201408	12	1	369	933074801	DREHWERKANTRIEB
KEGELROLLENLAGER DIN 720	746221908	11	1	372	570109008	TRIEBWERK
KEGELROLLENLAGER DIN 720	746246001	3	1	369	933074801	DREHWERKANTRIEB
KEGELSCHMIERNIPPEL	11080392	15	1	480	10327065	ELEKTROPUMPE
KEGELSCHMIERNIPPEL DIN 71	7743242	4	1	48	96046146	SCHUTZ KPL.
KEGELSCHMIERNIPPEL DIN 71	7743242	36	3	741	919421708	HAKENFLASCHE
KEGELSCHMIERNIPPEL DIN 71	571578608	2	1	483	774375108	DURCHGANGSNIPPELBLOCK
KEGELSCHMIERNIPPEL DIN 7	774301101	18	1	380	968558601	KOMPAKTSEILWINDE
KEGELSCHMIERNIPPEL DIN 7	774301101	18	1	583	938707001	KOMPAKTSEILWINDE
KEGELSTOPFEN GPN 600 LD	779006901	(393)	1	22	96062226	RAUPENTRAEGER KPL.RE.
KEILENDKLEMME 21-23 GR.23	12100037	5	1	645	919950308	MECH.TEILE VERSANDMONT
KEILPLATTE 40X310X200 S96	975761808	2	2	454	919501608	HYDRAULISCHE BALLASTIER
KEILRIPPENRIEMEN 8XPKX215	11482426	1	1	213	12418347	KLIMAKOMPRESSOR ANBAU
KEILSICHERUNGSSCHEIBE	7015814	50	2	361	917304708	SCHIEBETUER EINBAU
KERBSTIFT DIN 1472 4X12	431100201	24	1	381	938759601	SEILTROMMEL
KERBSTIFT ISO 8740 3X20	431200501	91	3	369	933074801	DREHWERKANTRIEB
KERBSTIFT ISO 8740 4H11X24	431202401	18	1	381	938759601	SEILTROMMEL
KETTE DIN 763 7X49 0.3t ST35	10663970	3	2	676	96013575	HUBENDSCHALTER GEWICHT
KETTE DIN EN 818-2 10T-2.976	10326803	5	2	635	915090008	GEGENGEWICHT M.BEFESTIG

Bezeichnung	Artikel	Pos.	Menge	Seite	Baugruppe	Bezeichnung
KETTENAUFNAHME SCHWK.	964424908	4	2	635	915090008	GEGENGEWICHT M.BEFESTIG
KETTENBOLZEN 47,71	11951831	5	60	56	790258414	RAUPENKETTE KPL
KETTENBUCHSE 48,74X71,45X	11951828	3	60	56	790258414	RAUPENKETTE KPL
KETTENENDBOLZEN	786525214	6	1	56	790258414	RAUPENKETTE KPL
KETTENENDSEGMENT KPL	786528114	99	1	56	790258414	RAUPENKETTE KPL
KETTENFUEHRUNG SCHWK.	964650808	17	3	22	96062226	RAUPENTRAEGER KPL.RE.
KETTENFUEHRUNG SCHWK.	964650808	17	3	27	96062228	RAUPENTRAEGER KPL.LI.
KETTENGEHAENGE 10T-2132	10326816	17	4	454	919501608	HYDRAULISCHE BALLASTIER
KETTENGLIED	786526614	1	62	56	790258414	RAUPENKETTE KPL
KETTENGLIED	786526714	2	62	56	790258414	RAUPENKETTE KPL
KETTENHALTER	964765308	1	1	636	964060608	KETTENHALTER KPL.
KETTENHALTER KPL.	964060608	6	2	635	915090008	GEGENGEWICHT M.BEFESTIG
KETTENVERSCHLUSS GALV.V	773947708	504	1	698	96063213	LEITUNG
KFZ-LEITUNG 0,5	10870538	344	17	426	96023891	KABELSTRANG
KFZ-LEITUNG 0,75	10870539	345	8.76	426	96023891	KABELSTRANG
KFZ-LEITUNG 0,75	10870539	345	8.55	428	96022870	KABELSTRANG
KFZ-LEITUNG 0,75	10870539	345	10.2	490	96063649	KABELSTRANG
KFZ-LEITUNG 0,75	10870539	345	24.6	495	96049294	KABELSTRANG
KFZ-LEITUNG 0,75	10870539	345	5.21	706	96063415	KABELSTRANG
KFZ-LEITUNG 0,75	600415208	352	0.23	698	96063213	LEITUNG
KFZ-LEITUNG 1,0	10870540	305	59.66	90	96062920	KABELSTRANG
KFZ-LEITUNG 1,0	10870540	305	29.82	91	96062921	KABELSTRANG
KFZ-LEITUNG 1,0	10870540	305	282.78	426	96023891	KABELSTRANG
KFZ-LEITUNG 1,0	10870540	305	152.56	428	96022870	KABELSTRANG
KFZ-LEITUNG 1,0	10870540	305	435.76	490	96063649	KABELSTRANG
KFZ-LEITUNG 1,0	10870540	305	9.6	492	96063650	LEITUNG
KFZ-LEITUNG 1,0	10870540	305	189.51	493	96023971	KABELSTRANG
KFZ-LEITUNG 1,0	10870540	305	75.4	495	96049294	KABELSTRANG
KFZ-LEITUNG 1,0	10870540	305	4.42	589	96055198	KABELSTRANG
KFZ-LEITUNG 1,0	10870540	305	8	612	913753108	FUNKVORBEREITUNG OW
KFZ-LEITUNG 1,0	10870540	305	9.75	699	96051215	DRAEHTE
KFZ-LEITUNG 1,5	10870541	307	0.7	91	96062921	KABELSTRANG
KFZ-LEITUNG 1,5	10870541	307	11.18	493	96023971	KABELSTRANG
KFZ-LEITUNG 10	12102630	2807	3.9	494	96023971	KABELSTRANG
KFZ-LEITUNG 16	12102632	2809	3.9	494	96023971	KABELSTRANG
KFZ-LEITUNG 16	12102634	2811	7.8	491	96063649	KABELSTRANG
KFZ-LEITUNG 2,5	10870542	309	39.7	426	96023891	KABELSTRANG
KFZ-LEITUNG 2,5	10870542	309	18.4	428	96022870	KABELSTRANG
KFZ-LEITUNG 2,5	10870542	309	23	490	96063649	KABELSTRANG
KFZ-LEITUNG 2,5	10870542	309	19.5	493	96023971	KABELSTRANG
KFZ-LEITUNG 25	12102635	2812	6.6	494	96023971	KABELSTRANG
KIPPHEBEL VORM.	11448000	2	2	165	11448005	KIPPHEBELBOCK VORM.
KIPPHEBEL VORM.	12549824	2	2	166	12549825	KIPPHEBELBOCK VORM.
KIPPHEBELBOCK	11448002	1	1	165	11448005	KIPPHEBELBOCK VORM.
KIPPHEBELBOCK	11448002	1	1	166	12549825	KIPPHEBELBOCK VORM.
KIPPHEBELBOCK KPL. NEIN	10148438	81	4	131	13455311	DIESELMOTOR
KIPPHEBELBOCK VORM.	11448005	1	1	164	10148438	KIPPHEBELBOCK KPL.
KIPPHEBELBOCK VORM.	12549825	1	1	164	10148438	KIPPHEBELBOCK KPL.
KIPPSCHALTER	606023008	3	1	620	913978308	ZUSATZELEKTRIK VORWAE
KIPPZYLINDER 50/28-110 -40°	10650940	2	1	315	917357108	KRANFUEHRERKABINE ANBA
KLAMMER	6202909	100	1	280	96035595	AUSGLEICHSBEHAELTER VO
KLAMMER EMVFSK 1 FEDER	10424210	37	2	431	96056347	ELEKTRIK ANBAUTEILE KABIN
KLAMMER EMVSK 12	602042808	38	2	431	96056347	ELEKTRIK ANBAUTEILE KABIN
KLAMMER SURE-SEAL	605215508	516	1	491	96063649	KABELSTRANG
KLAMMER SURE-SEAL	605215508	526	2	494	96023971	KABELSTRANG
KLAPPE KPL.	969399508	1	1	416	969399608	KLAPPE VORM.
KLAPPE VORM.	969399608	1	1	415	96024809	DREHBUEHNENVERKLEIDUN
KLAPPE VORM. SPF	969425708	1	1	410	969425608	KLAPPE VORM.RECHTS
KLAPPE VORM.RECHTS SPF	969425608	2	1	407	96022627	DREHBUEHNENVERKLEIDUN
KLAPPGRIFF 118X18X43	10870376	3	2	332	968462608	SCHALTSCHRANKDECKEL EIN

Bezeichnung	Artikel	Pos.	Menge	Seite	Baugruppe	Bezeichnung
KLAPPKONSOLE SCHWK.	96022932	1	1	750	96062062	KLAPPKONSOLE VORM.
KLAPPKONSOLE VORM.	96062062	2	1	747	919933308	TRANSPORTHALTERUNG DKS
KLAPPTEIL SCHWK. SPF	96062063	2	1	750	96062062	KLAPPKONSOLE VORM.
KLAUE	11004031	9	1	753	512353708	HYDROZYLINDER
KLEBEFOLIE AUSSENGRIFF 2	97088496	56	1	361	917304708	SCHIEBETUER EINBAU
KLEBER 600ML FC-BEUTEL	811203308	15	1	346	916162508	SCHEIBEN EINBAU
KLEBER 600ML FC-BEUTEL	811203308	48	1	361	917304708	SCHIEBETUER EINBAU
KLEBSTOFF 10ML FLASCHE -5	8655032	104	1	136	11389608	KURBELGEHAEUSE KPL. MIT
KLEBSTOFF 10ML FLASCHE -5	8655032	104	1	163	10149578	ZYLINDERKOPF
KLEINTEILESATZ	12109108	5	1	648	10876885	FETTSPRUEHGERAET
KLEMMBAND 1-3X21X9,3 ZELL	262101308	68	0.04	339	917305408	INNENVERKLEIDUNG EINBAU
KLEMMBRETT 6XM6	604412408	1	1	503	922648308	KLEMMBRETT VORM.
KLEMMBRETT VORM.	922648308	20	1	502	96025348	GRUNDAUFBAU
KLEMME	636107901	3	2	504	968077108	KLEMMENLEISTE
KLEMME 6,3/2,8X0,8MM²	10286354	502	18	704	96062034	DRAEHTE KLEMMKASTEN KPL
KLEMMENLEISTE	968077108	21	1	502	96025348	GRUNDAUFBAU
KLEMMHAELFTE 6 R R 44,5 SA	602010908	44	4	599	96075102	BEFESTIGUNGSTEILE HYDR
KLEMMHAELFTE AEHNL.DIN	7367238	22	8	47	968374708	MONTAGETEILE
KLEMMHAELFTE DIN 3015-1 L	10875557	185	4	470	919674308	ABGASANLAGE
KLEMMHAELFTE DIN 3015-1 L	602007108	37	6	679	91000055	AUSSCHUBMECHANIK
KLEMMHAELFTE DIN 3015-1 L	602008108	(10)	4	725	918258408	ELEKTRIK 2.HUBENDSCHALTE
KLEMMHAELFTE DIN 3015-1 L	602002208	306	8	566	969767908	VERROHRUNG DRUCKLUFTA
KLEMMHAELFTE DIN 3015-1 L	602008508	453	2	269	918811108	ANTRIEBSAGGREGAT VORM.
KLEMMHAELFTE DIN 3015-1 L	7005052	452	4	269	918811108	ANTRIEBSAGGREGAT VORM.
KLEMMHAELFTE DIN 3015-1 L	7005052	27	4	625	96036821	AUSRUESTUNG KAMERA DRE
KLEMMHAELFTE DIN 3015-1 L	7005052	10	3	734	96056553	GRUNDHALTER VORM.
KLEMMHAELFTE DIN 3015-1 L	7005052	39	3	768	91001040	ANLENKSTUECK VORM.
KLEMMHAELFTE DIN 3015-1 L	7005052	11	3	773	96037297	WINKELGEBER ANBAU
KLEMMHAELFTE DIN 3015-1 L	602009208	301	26	517	96045552	HYDRAULIK OBERWAGEN
KLEMMHAELFTE DIN 3015-1 L	7412067	314	6	517	96045552	HYDRAULIK OBERWAGEN
KLEMMHAELFTE DIN 3015-1 L	602009408	315	6	517	96045552	HYDRAULIK OBERWAGEN
KLEMMHAELFTE DIN 3015-1 L	7413103	75	2	655	91000049	ANLENKSTUECK VORM.
KLEMMHAELFTE L 3 R 22 AL	11160668	450	4	269	918811108	ANTRIEBSAGGREGAT VORM.
KLEMMHAELFTE S 4 E 64 PP	10492888	325	4	566	969767908	VERROHRUNG DRUCKLUFTA
KLEMMHEBEL NIROSTA	10024803	11	1	623	915403108	ANBAUTEILE KAMERA
KLEMMKASTEN KPL. S930	96063458	1	1	701	96063454	ELEKTRIK KOPFSTUECK
KLEMMKASTEN S900	96063456	1	1	690	96063954	ELEKTRIK ANLENKSTUECK
KLEMMPROFIL 1,5-4X25X13 E	11002218	3	2.22	386	917894308	HEIZUNG KRANFUEHRERKAB
KLEMMPROFIL 25,7X21,5 EPD	10876056	55	3.4	361	917304708	SCHIEBETUER EINBAU
KLEMMPROFIL 2X13,5X20 EP	10300600	11	4.2	361	917304708	SCHIEBETUER EINBAU
KLEMMRING RD10X12 PA6G	288182508	9	1	444	918759708	ZUSATZHEIZUNG OW
KLEMMSCHELLE 40,5/39-42	553054208	16	1	444	918759708	ZUSATZHEIZUNG OW
KLEMMSCHELLE 40,5/39-42	553054208	4	3	446	96019783	ZUSATZHEIZUNG VORM.
KLEMMSTUECK 12 G20MN5 FE	380057108	451	6	269	918811108	ANTRIEBSAGGREGAT VORM.
KLEMMSTUECK 22	927638801	30	1	381	938759601	SEILTROMMEL
KLETTVERSCHLUSS 25MMBR	704232408	100	0.6	290	917962508	KRAFTSTOFFBEHAELTER AN
KLIMAANLAGE OW	918627208	301	1	14		LIEBHERR LTR 1100
KLIMAKOMPRESSOR	12922849	1	1	214	13719288	KLIMAKOMPRESSOR KPL.
KLIMAKOMPRESSOR ANBAU	12418347	340	1	133	13455311	DIESELMOTOR
KLIMAKOMPRESSOR KPL. D9	13719288	2	1	213	12418347	KLIMAKOMPRESSOR ANBAU
KLINKE	11490010	1	1	753	512353708	HYDROZYLINDER
KOLBEN	10152593	1	1	176	10152592	UEBERDRUCKVENTIL
KOLBEN	510713708	4	1	37	510438508	DRUCKMINDERVENTIL
KOLBEN	570110608	4	7	373	570109508	TRIEBWERK
KOLBEN	571582608	13	1	209	5700161	LUFTPRESSER
KOLBEN	790272214	1	1	25	749065414	SPANNER HYDR KPL
KOLBEN 16MnCrS5	13730923	8	1	174	10129474	OELKUEHLER VORM.
KOLBEN 31CrMoV9	10149655	1	1	141	10138450	ENDREGELVENTIL
KOLBEN KPL. R-MOTORX130	10146367	70	4	131	13455311	DIESELMOTOR
KOLBENKUEHLUNG	10142749	15	4	130	13455311	DIESELMOTOR

Bezeichnung	Artikel	Pos.	Menge	Seite	Baugruppe	Bezeichnung
KOLBENKUEHLUNG VORM.	10151634	1	1	142	10142749	KOLBENKUEHLUNG
KOMBIKUEHLER	97095949	100	1	272	96020819	KUEHLER VORM.
KOMBIZANGE DIN 5244 180	790031508	62	1	104	928569808	GRUNDWERKZEUG
KOMPAKTSEILWINDE KSW 40	938707001	1	1	581	96062734	HILFSHUBWERK
KOMPAKTSEILWINDE KSW 40	968558601	2	1	378	963564908	HAUPTHUBWERK VORM.
KOMPENSATOR	10149144	2	1	223	12512627	ABGASSTUTZEN ANBAU
KONDENSATOR	10815368	104	1	272	96020819	KUEHLER VORM.
KONSOLE	963383408	11	1	581	96062734	HILFSHUBWERK
KONSOLE 339X239 S315MC FE	97063866	(2)	1	566	969767908	VERROHRUNG DRUCKLUFTA
KONSOLE 3X378X545 DC01 FE	97162206	10	1	604	96066401	MECHANISCHE ANBAUTEILE
KONSOLE 4X235X224 S315MC	97042207	6	1	124	918728408	MONTAGETEILE DREHBUEHN
KONSOLE 4X260X239 S315MC	954180008	8	1	679	91000055	AUSSCHUBMECHANIK
KONSOLE 4X893X546 S315MC	97103234	10	1	285	918955208	BATTERIEKASTEN KPL.
KONSOLE LINKS SPF	967588308	3	1	395	918810308	STEUERSTAND
KONSOLE RECHTS SPF	967588408	4	1	395	918810308	STEUERSTAND
KONSOLE SCHWK.	925042108	4	1	747	919933308	TRANSPORTHALTERUNG DKS
KONSOLE SCHWK.	925275608	1	1	748	925280008	KONSOLE VORM.
KONSOLE SCHWK.	96045307	1	1	461	96074081	HARNSTOFFTANK VORM.
KONSOLE SCHWK.	963672408	5	1	124	918728408	MONTAGETEILE DREHBUEHN
KONSOLE SCHWK.	964003208	2	4	70	915447908	HYDRAULISCHE ABSTUETZUN
KONSOLE SCHWK.	968300908	1	1	124	918728408	MONTAGETEILE DREHBUEHN
KONSOLE SCHWK.	968301008	2	1	124	918728408	MONTAGETEILE DREHBUEHN
KONSOLE SCHWK.	968510608	7	1	124	918728408	MONTAGETEILE DREHBUEHN
KONSOLE SCHWK.	969856308	8	1	415	96024809	DREHBUEHNENVERKLEIDUN
KONSOLE SCHWK. FE//ZNNI8/	96021362	7	1	395	918810308	STEUERSTAND
KONSOLE SCHWK. FE//ZNNI8/	96062526	17	1	420	919484908	ABSTURZSICHERUNG
KONSOLE SCHWK. FE//ZNNI8/	968376808	100	2	52	968374908	ENDSCHALTER ANBAU
KONSOLE SCHWK. RAL 7016,	969304708	1	1	392	969300008	HEIZUNG VORM.
KONSOLE SCHWK. RAL 9005	964843708	12	2	395	918810308	STEUERSTAND
KONSOLE SCHWK.LI. FE//ZNNI	925721308	2	1	679	91000055	AUSSCHUBMECHANIK
KONSOLE SCHWK.LI. FE//ZNNI	96021363	8	1	395	918810308	STEUERSTAND
KONSOLE SCHWK.LI. RAL 900	964843808	13	1	395	918810308	STEUERSTAND
KONSOLE SCHWK.RE. FE//ZN	925721408	3	1	679	91000055	AUSSCHUBMECHANIK
KONSOLE SCHWK.RE. FE//ZN	96021365	9	1	395	918810308	STEUERSTAND
KONSOLE SCHWK.RE. RAL 900	964843908	14	1	395	918810308	STEUERSTAND
KONSOLE T ZN O	965080808	21	2	70	915447908	HYDRAULISCHE ABSTUETZUN
KONSOLE T ZN O	965080908	22	1	70	915447908	HYDRAULISCHE ABSTUETZUN
KONSOLE VORM.	925280008	1	1	747	919933308	TRANSPORTHALTERUNG DKS
KONSOLE VORM. FE//ZNNI8//C	963930408	5	1	407	96022627	DREHBUEHNENVERKLEIDUN
KONSOLE X5CrNi18-10	10149679	3	1	203	10149677	VERBINDUNGSLEITUNG ANBA
KONTAKT 0,5-1MM2	602300308	125	22	90	96062920	KABELSTRANG
KONTAKT 0,5-1MM2	602300308	125	47	91	96062921	KABELSTRANG
KONTAKT 0,5-1MM2	602300308	125	106	426	96023891	KABELSTRANG
KONTAKT 0,5-1MM2	602300308	125	117	428	96022870	KABELSTRANG
KONTAKT 0,5-1MM2	602300308	125	93	490	96063649	KABELSTRANG
KONTAKT 0,5-1MM2	602300308	125	16	492	96063650	LEITUNG
KONTAKT 0,5-1MM2	602300308	125	70	493	96023971	KABELSTRANG
KONTAKT 0,5-1MM2	602300308	125	29	495	96049294	KABELSTRANG
KONTAKT 0,5-1MM2	602300308	125	16	694	96063583	LEITUNG
KONTAKT 0,5-1MM2	602329108	617	4	90	96062920	KABELSTRANG
KONTAKT 1,0-2,5MM2	10877344	2259	5	427	96023891	KABELSTRANG
KONTAKT 1-2,5MM2	602300108	121	3	90	96062920	KABELSTRANG
KONTAKT 1-2,5MM2	602300108	121	9	91	96062921	KABELSTRANG
KONTAKT 1-2,5MM2	602300108	121	16	426	96023891	KABELSTRANG
KONTAKT 1-2,5MM2	602300108	121	25	428	96022870	KABELSTRANG
KONTAKT 1-2,5MM2	602300108	121	9	490	96063649	KABELSTRANG
KONTAKT 1-2,5MM2	602300108	121	4	492	96063650	LEITUNG
KONTAKT 1-2,5MM2	602300108	121	22	493	96023971	KABELSTRANG
KONTAKT 1-2,5MM2	602300108	121	7	495	96049294	KABELSTRANG
KONTAKTSICHERUNGSSTIFT	10045101	507	1	91	96062921	KABELSTRANG

Bezeichnung	Artikel	Pos.	Menge	Seite	Baugruppe	Bezeichnung
KONTAKTSICHERUNGSSTIFT J	10099866	509	1	91	96062921	KABELSTRANG
KONTAKTSICHERUNGSSTIFT J	10099866	510	1	494	96023971	KABELSTRANG
KONTAKTSICHERUNGSSTIFT	10099867	511	1	91	96062921	KABELSTRANG
KONTAKTSICHERUNGSSTIFT	10099867	513	2	500	96059659	DRAEHTE GRUNDAUFBAU KPL
KONTAKTSICHERUNGSSTIFT J	10099868	502	2	91	96062921	KABELSTRANG
KONTAKTSICHERUNGSSTIFT J	10099868	518	2	500	96059659	DRAEHTE GRUNDAUFBAU KPL
KONTAKTSTIFT 1MM2	605601701	130	4	589	96055198	KABELSTRANG
KONTAKTVERRIEGELUNG 2-	7368241	529	2	494	96023971	KABELSTRANG
KONTAKTVERRIEGELUNG 2-	7368241	518	2	495	96049294	KABELSTRANG
KONTAKTVERRIEGELUNG 2-P	12693951	520	1	495	96049294	KABELSTRANG
KONTAKTVERRIEGELUNG DT	10216772	514	1	494	96023971	KABELSTRANG
KONTAKTVERRIEGELUNG DT	10342519	525	3	494	96023971	KABELSTRANG
KONTAKTVERRIEGELUNG DT	10342519	517	2	495	96049294	KABELSTRANG
KONTAKTVERRIEGELUNG DT-	7368246	504	1	495	96049294	KABELSTRANG
KONTAKTVERRIEGELUNG DT-	6205242	522	1	495	96049294	KABELSTRANG
KONTROLLLEUCHTE 24V	607135408	4	1	620	913978308	ZUSATZELEKTRIK VORWAE
KONUSLAGER	10291989	5	4	320	916164208	LAGERUNG EINBAU
KOPFSTUECK SCHWK.	962049408	1	1	771	918596708	KOPFSTUECK VORM.
KOPFSTUECK VORM.	918596708	3	1	757	91001038	DOPPELKLAPPSPITZE MECH.
KRAFTSTOFF-FEINFILTERAN	10146791	201	1	132	13455311	DIESELMOTOR
KRAFTSTOFFBEHAELTER AN	917962508	108	1	12		LIEBHERR LTR 1100
KRAFTSTOFFBEHAELTER SCH	969543408	1	1	291	969543308	KRAFTSTOFFBEHAELTER VO
KRAFTSTOFFBEHAELTER VO	969543308	1	1	290	917962508	KRAFTSTOFFBEHAELTER AN
KRAFTSTOFFFEINFILTER	12820742	2	1	193	13512036	FILTERKONSOLE VORM.
KRAFTSTOFFFILTER	12106874	100	1	306	96066239	KRAFTSTOFFFILTER VORM.
KRAFTSTOFFFILTER	553174008	1	1	450	11110051	DOSIERPUMPE
KRAFTSTOFFFILTER VORM.	96066239	2	1	305	91002857	KRAFTSTOFFFOERDERUNG
KRAFTSTOFFFILTEREINSATZ	10149977	1	1	308	12106874	KRAFTSTOFFFILTER
KRAFTSTOFFFOERDERUNG	91002857	110	1	12		LIEBHERR LTR 1100
KRAFTSTOFFHEIZER 24V 0,2	11381100	2	1	308	12106874	KRAFTSTOFFFILTER
KRAFTSTOFFLEITUNG	9078935	4	1	198	10143342	LECKOELRUECKLAUF
KRAFTSTOFFLEITUNG 12X1	10143240	7	1	196	10143341	KRAFTSTOFFLEITUNGEN
KRAFTSTOFFLEITUNGEN	10143341	212	1	132	13455311	DIESELMOTOR
KRAFTSTOFFPUMPE KPL.	12107190	11	1	308	12106874	KRAFTSTOFFFILTER
KRAFTSTOFFSCHLAUCH DN4,	10815777	5	1	444	918759708	ZUSATZHEIZUNG OW
KRAFTSTOFFSCHLAUCH DN4,	10815777	19	1	446	96019783	ZUSATZHEIZUNG VORM.
KRANFUEHRERKABINE ANBA	917357108	112	1	12		LIEBHERR LTR 1100
KRANFUEHRERKABINE KAUF	916165808	1	1	357	917304608	KRANFUEHRERKABINE ROH
KRANFUEHRERKABINE ROH	917304608	115	1	13		LIEBHERR LTR 1100
KRANFUEHRERKABINE VORM.	917304508	114	1	12		LIEBHERR LTR 1100
KRANFUEHRERKABINE VORM.	919010108	113	1	12		LIEBHERR LTR 1100
KREUZLASCHE SCHWK.	925074608	3	1	760	918533508	ADAPTER VORM.
KREUZSCHL.SCHR.DREHER 2	790033208	53	1	104	928569808	GRUNDWERKZEUG
KRUEMMER	10142671	1	1	218	10142742	KUEHLMITTELKRUEMMER AN
KUEHLER VORM.	96020819	2	1	268	918811108	ANTRIEBSAGGREGAT VORM.
KUEHLERGRILL 820X730X80	96007145	1	1	645	919950308	MECH.TEILE VERSANDMONT
KUEHLERHAUBE	968700608	10	1	409	96017568	KUEHLERHAUBE KPL.
KUEHLERHAUBE KPL.	96017568	1	1	407	96022627	DREHBUEHNENVERKLEIDUN
KUEHLMITTELKRUEMMER AN	10142742	382	1	133	13455311	DIESELMOTOR
KUEHLWASSERENTLUEFTUN	10142744	387	1	133	13455311	DIESELMOTOR
KUEHLWASSERLEITUNG 12X1	10145177	1	1	212	10145278	ANBAUTEILE LUFTPRESSER
KUEHLWASSERLEITUNG 12X1	10145178	2	1	212	10145278	ANBAUTEILE LUFTPRESSER
KUEHLWASSERSCHLAUCH D	11621770	20	3.5	386	917894308	HEIZUNG KRANFUEHRERKAB
KUEHLWASSERSCHLAUCH D	11621770	21	3.5	386	917894308	HEIZUNG KRANFUEHRERKAB
KUEHLWASSERSCHLAUCH D	11621770	12	0.06	392	969300008	HEIZUNG VORM.
KUEHLWASSERSCHLAUCH D	11621770	14	0.7	392	969300008	HEIZUNG VORM.
KUEHLWASSERSCHLAUCH D	11621770	16	0.08	446	96019783	ZUSATZHEIZUNG VORM.
KUEHLWASSERVORWAERMU	919386708	401	1	15		LIEBHERR LTR 1100
KUGEL DIN 5401 3	610706308	6	1	720	511479408	LASTHALTEVENTIL
KUGEL DIN 5401 6	747000277	22	2	628	12102922	WIPPZYLINDER

Bezeichnung	Artikel	Pos.	Menge	Seite	Baugruppe	Bezeichnung
KUGEL DIN 5401 6 G20	747000208	43	6	71	10356288	ABSTUETZZYLINDER
KUGELELEMENT 145X43 PLIXX	975040308	4	1	321	96015921	BEDIENELEMENTE EINBAU
KUGELHAHN BKH12-L-10 A3C	510697608	157	1	516	96045552	HYDRAULIK OBERWAGEN
KUGELHAHN BKHU DN 10	571723608	30	1	543	10333672	STEUERBLOCK
KUGELHAHN DN20-G 3/4	10044661	101	1	306	96066239	KRAFTSTOFFFILTER VORM.
KUGELHAHNKOMBINATION DN	10333686	158	1	516	96045552	HYDRAULIK OBERWAGEN
KUGELKNOPF DIN 319 C40XM	704004208	6	1	750	96062062	KLAPPKONSOLE VORM.
KUGELSCHEIBE DIN 6319 17 4	10875863	40	1	747	919933308	TRANSPORTHALTERUNG DKS
KUGELSCHEIBE DIN 6319 C 8,	11622278	4	1	184	10152867	INJEKTOR MIT BEFEST.
KUGELSCHEIBE DIN 6319 C 8,	11622278	4	2	185	13743036	RS INJEKTOR
KUGELSCHEIBE DIN 6319 C 8,	11622278	2	1	186	10141140	RS DRUCKROHRSTUTZEN
KUGELSCHEIBE DIN 6319 C 8,	11622278	2	1	187	10135434	BEFESTIGUNG DRUCKROHR
KUGELSCHEIBE DIN 6319 C 8,	11622278	3	1	189	10153151	DRUCKROHRSTUTZEN MIT BE
KUGELSCHEIBE DIN 6319 C 8,	11622278	2	1	191	13757616	RS DRUCKROHRSTUTZEN
KUGELSPERRBOLZEN 12X130	11320193	4	1	125	963260408	VERRIEGELUNG
KUGELSPERRBOLZEN 12X130	11320193	4	1	126	96049764	VERRIEGELUNG
KUGELSPERRBOLZEN NIROST	704008508	71	2	581	96062734	HILFSHUBWERK
KUNSTSTOFFROHR KPL.	969383908	(2331)	1	461	96074081	HARNSTOFFTANK VORM.
KUPFERPASTE MOTOREX 14 0	10002552	132	1	222	10140729	ATL-ANBAU
KUPPLUNG	12101221	6	1	648	10876885	FETTSPRUEHGERAET
KUPPLUNGSANBAU	10115780	2	1	129	13471292	ANTRIEBSGRUPPE
KUPPLUNGSDOSE 14-POL G	12102895	7	1	490	96063649	KABELSTRANG
KUPPLUNGSDOSE 14-POL G	12106616	5	1	589	96055198	KABELSTRANG
KUPPLUNGSDOSE 4-POL 90°	680000708	5	1	426	96023891	KABELSTRANG
KUPPLUNGSDOSE 4-POL GER	680001708	19	1	490	96063649	KABELSTRANG
KUPPLUNGSDOSE 4-POL GER	680001708	5	1	693	96063864	KABELSTRANG
KUPPLUNGSDOSE 4-POL SPF	10678491	7	1	90	96062920	KABELSTRANG
KUPPLUNGSDOSE 4-POL SPF	10678491	8	1	90	96062920	KABELSTRANG
KUPPLUNGSDOSE 4-POL SPF	10678491	8	1	490	96063649	KABELSTRANG
KUPPLUNGSDOSE 4-POL SPF	10678491	14	1	490	96063649	KABELSTRANG
KUPPLUNGSDOSE 4-POL SPF	10678491	18	1	490	96063649	KABELSTRANG
KUPPLUNGSDOSE 4-POL SPF	10678491	373	1	490	96063649	KABELSTRANG
KUPPLUNGSDOSE 4-POL SPF	10678491	374	1	490	96063649	KABELSTRANG
KUPPLUNGSDOSE 4-POL SPF	10871126	11	1	490	96063649	KABELSTRANG
KUPPLUNGSDOSE 4-POL SPF	680001408	5	1	90	96062920	KABELSTRANG
KUPPLUNGSDOSE 4-POL SPF	680001408	5	1	98	96045216	KABELSTRANG
KUPPLUNGSDOSE 4-POL SPF	680001408	5	1	490	96063649	KABELSTRANG
KUPPLUNGSDOSE 4-POL SPF	680001408	6	1	490	96063649	KABELSTRANG
KUPPLUNGSDOSE 4-POL SPF	680001408	9	1	490	96063649	KABELSTRANG
KUPPLUNGSDOSE 4-POL SPF	680001408	10	1	490	96063649	KABELSTRANG
KUPPLUNGSDOSE 4-POL SPF	680001408	12	1	490	96063649	KABELSTRANG
KUPPLUNGSDOSE 4-POL SPF	680001408	13	1	490	96063649	KABELSTRANG
KUPPLUNGSDOSE 4-POLE 90°	680000308	6	1	428	96022870	KABELSTRANG
KUPPLUNGSDOSE 4-POLE 90°	680000308	7	1	706	96063415	KABELSTRANG
KUPPLUNGSDOSE 4-POLE 90°	680000308	8	1	706	96063415	KABELSTRANG
KUPPLUNGSDOSE 4-POLE 90°	680000308	9	1	706	96063415	KABELSTRANG
KUPPLUNGSDOSE 4-POLE 90°	680000308	10	1	706	96063415	KABELSTRANG
KUPPLUNGSDOSE 4-POLE 90°	680000308	11	1	706	96063415	KABELSTRANG
KUPPLUNGSDOSE 4-POLE 90°	680000308	12	1	706	96063415	KABELSTRANG
KUPPLUNGSDOSE 4-POLE SP	680000008	9	1	90	96062920	KABELSTRANG
KUPPLUNGSDOSE 4-POLE SP	680000008	6	1	98	96045216	KABELSTRANG
KUPPLUNGSDOSE 4-POLE SP	680000008	6	1	426	96023891	KABELSTRANG
KUPPLUNGSDOSE 4-POLE SP	680000008	5	1	428	96022870	KABELSTRANG
KUPPLUNGSDOSE 4-POLE SP	680000008	7	1	428	96022870	KABELSTRANG
KUPPLUNGSDOSE 4-POLE SP	680000008	6	1	589	96055198	KABELSTRANG
KUPPLUNGSDOSE 4-POLE SP	680000008	5	1	640	96045220	KABELSTRANG
KUPPLUNGSDOSE 4-POLE SP	680000008	6	1	640	96045220	KABELSTRANG
KUPPLUNGSDOSE 4-POLE SP	680000008	5	1	706	96063415	KABELSTRANG
KUPPLUNGSDOSE 4-POLE SP	680000008	6	1	706	96063415	KABELSTRANG
KUPPLUNGSDOSE 5-POL GER	11481973	6	1	730	96058738	KABELSTRANG

Bezeichnung	Artikel	Pos.	Menge	Seite	Baugruppe	Bezeichnung
KUPPLUNGSMUFFE	510548108	157	12	33	967304508	HYDRAULIK UNTERWAGEN
KUPPLUNGSMUFFE	510548108	(150)	8	67	917155408	SCHNELLKUPPLUNG
KUPPLUNGSMUFFE	774372608	1	1	587	921444108	ZENTRALSCHMIERANLAGE
KUPPLUNGSMUFFE	774372608	311	1	598	96075086	HYDRAULIK HILFSHUBWERK D
KUPPLUNGSMUFFE B2 12-L	511505808	159	2	516	96045552	HYDRAULIK OBERWAGEN
KUPPLUNGSMUFFE B2 12-L	511505808	173	1	598	96075086	HYDRAULIK HILFSHUBWERK D
KUPPLUNGSMUFFE B3 15-L	511500508	163	1	598	96075086	HYDRAULIK HILFSHUBWERK D
KUPPLUNGSMUFFE B8 38-S	511512208	169	1	591	96064697	HYDRAULIK HILFSHUBWERK
KUPPLUNGSMUFFE B8 38-S	511512208	169	1	598	96075086	HYDRAULIK HILFSHUBWERK D
KUPPLUNGSMUFFE HDM-E2	510540808	154	4	33	967304508	HYDRAULIK UNTERWAGEN
KUPPLUNGSSTECKER	774372708	2	2	587	921444108	ZENTRALSCHMIERANLAGE
KUPPLUNGSSTECKER	774372708	310	1	598	96075086	HYDRAULIK HILFSHUBWERK D
KUPPLUNGSSTECKER B2 10-L	511515008	154	2	709	965994108	HYDRAULIK TELE
KUPPLUNGSSTECKER B2 12-L	511509608	171	1	591	96064697	HYDRAULIK HILFSHUBWERK
KUPPLUNGSSTECKER B3 15-L	511500408	165	1	591	96064697	HYDRAULIK HILFSHUBWERK
KUPPLUNGSSTECKER B8 38-	511512308	168	1	591	96064697	HYDRAULIK HILFSHUBWERK
KUPPLUNGSSTECKER B8 38-	511512308	168	1	598	96075086	HYDRAULIK HILFSHUBWERK D
KUPPLUNGSSTECKER DN8/G	510541908	159	12	33	967304508	HYDRAULIK UNTERWAGEN
KUPPLUNGSSTECKER DN8/G	510541908	(152)	8	67	917155408	SCHNELLKUPPLUNG
KUPPLUNGSSTECKER HDS-E	510541008	152	4	33	967304508	HYDRAULIK UNTERWAGEN
KURBELGEHAEUSE KPL. MIT Z	11389608	10	1	130	13455311	DIESELMOTOR
KURBELGEHAEUSE VORM. R	10154379	1	1	136	11389608	KURBELGEHAEUSE KPL. MIT
KURBELGEHAEUSEENTLUEF	10126713	16	1	130	13455311	DIESELMOTOR
KURBELGEHAEUSEENTLUEFT	12886223	1	1	143	10126713	KURBELGEHAEUSEENTLUEF
KURBELWELLE MIT ZAHNRAD	10147438	50	1	130	13455311	DIESELMOTOR
KURBELWELLE R-MOTORXD9	10131177	1	1	153	10147438	KURBELWELLE MIT ZAHNRAD
KURBELWELLENANBAUTEILE	10141974	53	1	131	13455311	DIESELMOTOR
KURBELWELLENDICHTUNG	10153583	52	1	130	13455311	DIESELMOTOR
KURBELWELLENLAGERSATZ	9076457	51	1	130	13455311	DIESELMOTOR
L-STUTZEN EL 12L M18X1,5 C	247128602	648	6	34	967304508	HYDRAULIK UNTERWAGEN
L-STUTZEN EL 12L M18X1,5 C	247128602	637	10	518	96045552	HYDRAULIK OBERWAGEN
L-STUTZEN EL 12L M18X1,5 C	247128602	636	2	592	96064697	HYDRAULIK HILFSHUBWERK
L-STUTZEN EL 12L M18X1,5 C	247128602	600	1	619	969856508	ZUSATZHYDRAULIK OELVOR
L-STUTZEN EL 12L M18X1,5 C	247128602	608	3	709	965994108	HYDRAULIK TELE
L-STUTZEN EL 18L CR6-FREI	247128502	638	1	34	967304508	HYDRAULIK UNTERWAGEN
L-STUTZEN EL 18L CR6-FREI	247128502	603	5	518	96045552	HYDRAULIK OBERWAGEN
LADEEINHEIT BTT SPF	10412777	10	1	435	96022872	ARMATURENBRETT DACH
LADEGERAET 110/230V/24V/16	12104889	5	1	606	91002360	LADEGERAET
LADEGERAET 110V-230V	91002360	383	1	14		LIEBHERR LTR 1100
LADELUFTKUEHLER	12108602	18	1	274	97095949	KOMBIKUEHLER
LADELUFTLEITUNG	10143612	1	1	203	10149677	VERBINDUNGSLEITUNG ANBA
LADELUFTLEITUNG	10143614	2	1	203	10149677	VERBINDUNGSLEITUNG ANBA
LADELUFTROHR G-ALSI10MG	97045610	200	1	268	918811108	ANTRIEBSAGGREGAT VORM.
LADELUFTROHR G-ALST10MG	97055366	201	1	268	918811108	ANTRIEBSAGGREGAT VORM.
LADELUFTWELLSCHLAUCH D	10337349	251	1	268	918811108	ANTRIEBSAGGREGAT VORM.
LAGER FRONTWISCHANLAGE	97052119	8	1	349	966497908	FRONTSCHEIBE KPL.
LAGER PA6	976641108	5	1	315	917357108	KRANFUEHRERKABINE ANBA
LAGER PA6	976641208	6	1	315	917357108	KRANFUEHRERKABINE ANBA
LAGER PA6	976641308	7	1	315	917357108	KRANFUEHRERKABINE ANBA
LAGERABDECKRING 33117 AV	747258401	4	1	369	933074801	DREHWERKANTRIEB
LAGERABDECKRING 6219 JV	747272501	19	1	381	938759601	SEILTROMMEL
LAGERAUFNAHME	11100949	13	1	95	10878097	SCHLEIFRINGUEBERTRAGER
LAGERBOCK 40x115x42	970365108	10	2	263	918728708	ANTRIEBSAGGREGAT KPL.
LAGERBUCHSE 195X117 GZ-	704338808	2	2	655	91000049	ANLENKSTUECK VORM.
LAGERBUCHSE 60X65X28 GLY	9888259	12	6	137	10154379	KURBELGEHAEUSE VORM.
LAGERDECKEL 31CrMoV9	9072908	3	1	210	9072906	ZWISCHENRAD KPL.
LAGERGEHAEUSE VORM.	9078963	1	1	249	9078962	NEBENABTRIEB VORM.
LAGERPLATTE 12X105X290 P	283094408	46	2	655	91000049	ANLENKSTUECK VORM.
LAGERPLATTE 12X105X290 P	283094408	46	2	661	91000050	TELESKOP 1 VORM.
LAGERPLATTE 12X70X192 PA6	283094208	25	2	670	91000053	TELESKOP 4 VORM.

Bezeichnung	Artikel	Pos.	Menge	Seite	Baugruppe	Bezeichnung
LAGERPLATTE 12X70X192 PA6	283094208	25	2	673	91000054	TELESKOP 5 VORM.
LAGERPLATTE 12X70X202 PA6	283093908	25	2	661	91000050	TELESKOP 1 VORM.
LAGERPLATTE 12X70X202 PA6	283093908	25	2	664	91000051	TELESKOP 2 VORM.
LAGERPLATTE 12X70X202 PA6	283093908	25	2	667	91000052	TELESKOP 3 VORM.
LAGERPLATTE 14X105X290 P	283094308	45	2	655	91000049	ANLENKSTUECK VORM.
LAGERPLATTE 14X105X290 P	283094308	45	2	661	91000050	TELESKOP 1 VORM.
LAGERPLATTE 14X105X290 P	283094308	45	4	664	91000051	TELESKOP 2 VORM.
LAGERPLATTE 14X70X192 PA6	283094108	24	2	670	91000053	TELESKOP 4 VORM.
LAGERPLATTE 14X70X192 PA6	283094108	24	2	673	91000054	TELESKOP 5 VORM.
LAGERPLATTE 14x70x202 PA6	283093808	24	2	661	91000050	TELESKOP 1 VORM.
LAGERPLATTE 14x70x202 PA6	283093808	24	2	664	91000051	TELESKOP 2 VORM.
LAGERPLATTE 14x70x202 PA6	283093808	24	2	667	91000052	TELESKOP 3 VORM.
LAGERPLATTE 18X105X290 P	283094708	45	2	667	91000052	TELESKOP 3 VORM.
LAGERPLATTE 18X105X290 P	283094708	45	2	670	91000053	TELESKOP 4 VORM.
LAGERPLATTE 53X57X192 PA6	283093708	23	2	661	91000050	TELESKOP 1 VORM.
LAGERPLATTE 53X57X192 PA6	283093708	23	2	664	91000051	TELESKOP 2 VORM.
LAGERPLATTE 53X57X192 PA6	283093708	23	2	667	91000052	TELESKOP 3 VORM.
LAGERPLATTE 53X57X192 PA6	283093708	23	2	670	91000053	TELESKOP 4 VORM.
LAGERPLATTE 53X57X192 PA6	283093708	23	2	673	91000054	TELESKOP 5 VORM.
LAGERPLATTE 53X87X200 PA6	283093608	22	2	661	91000050	TELESKOP 1 VORM.
LAGERPLATTE 53X87X200 PA6	283093608	22	2	664	91000051	TELESKOP 2 VORM.
LAGERPLATTE 53X87X200 PA6	283093608	22	2	667	91000052	TELESKOP 3 VORM.
LAGERPLATTE 53X87X200 PA6	283093608	22	2	670	91000053	TELESKOP 4 VORM.
LAGERPLATTE 53X87X200 PA6	283093608	22	2	673	91000054	TELESKOP 5 VORM.
LAGERPLATTE 75X140X230 P	97145319	12	2	661	91000050	TELESKOP 1 VORM.
LAGERPLATTE 75X190X140 P	97153784	12	2	670	91000053	TELESKOP 4 VORM.
LAGERPLATTE 75X190X140 P	97153784	12	2	673	91000054	TELESKOP 5 VORM.
LAGERPLATTE 75X200X140 P	97153781	12	2	664	91000051	TELESKOP 2 VORM.
LAGERPLATTE 75X200X140 P	97153781	12	2	667	91000052	TELESKOP 3 VORM.
LAGERRING	570109708	3	1	372	570109008	TRIEBWERK
LAGERRING 42CrMo4+QT	927601701	15	1	383	968607101	PLANETENGETRIEBE
LAGERRING 42CrMo4+QT	927601701	15	1	584	938759801	PLANETENGETRIEBE
LAGERUNG EINBAU BLKAB.	916164208	1	1	319	919010108	KRANFUEHRERKABINE VORM.
LAMELLENSTOPFEN 28MM PE-	10678377	8	2	331	916162808	RELING
LAMELLENSTOPFEN PE-LLD	779020508	11	1	319	919010108	KRANFUEHRERKABINE VORM.
LAMELLENSTOPFEN PE-LLD	779020508	106	2	415	96024809	DREHBUEHNENVERKLEIDUN
LAMELLENTRAEGER 100	938760901	65	1	383	968607101	PLANETENGETRIEBE
LAMELLENTRAEGER 100	938760901	65	1	584	938759801	PLANETENGETRIEBE
LAMELLENTRAEGER 42CrMo4	927716701	70	1	369	933074801	DREHWERKANTRIEB
LASCHE VORM.	964541408	31	4	70	915447908	HYDRAULISCHE ABSTUETZUN
LASTHAKEN 10 E SPF	910543708	310	1	14		LIEBHERR LTR 1100
LASTHALTEVENTIL	511479408	151	1	717	966004808	ZUSATZHYDRAULIK KLAPPSPI
LASTHALTEVENTIL 400BAR SP	10218310	3	1	316	10650940	KIPPZYLINDER
LASTHALTEVENTILEINSATZ	11002678	7	1	720	511479408	LASTHALTEVENTIL
LAUFROLLE KPL. 200X210 LH	10874655	8	12	22	96062226	RAUPENTRAEGER KPL.RE.
LAUFROLLE KPL. 200X210 LH	10874655	8	12	27	96062228	RAUPENTRAEGER KPL.LI.
LAUFROLLE RD85X84 PA6G	749001008	8	1	768	91001040	ANLENKSTUECK VORM.
LAUFROLLE RD85X84 PA6G	749001008	12	1	771	918596708	KOPFSTUECK VORM.
LAUTSPRECHER 2,77V 86DBA	10489011	10	2	431	96056347	ELEKTRIK ANBAUTEILE KABIN
LECKOELRUECKLAUF	10143342	214	1	132	13455311	DIESELMOTOR
LEERGEHAEUSE 120X220X80	97153848	5	1	703	96063458	KLEMMKASTEN KPL.
LEERGEHAEUSE 160X260X90	97156873	7	1	692	96063456	KLEMMKASTEN
LEERGEHAEUSE 57X80X 125 A	97148691	5	1	92	96060493	ANTENNE KPL.
LEERGEHAEUSE 57X80X 125 A	97148691	5	1	93	96060494	ANTENNE KPL.
LEHRE 1.5X130X23 X5CRNI18	97127072	13	1	102	914860608	WERKZEUG M.ZUBEHOER
LEISTE PA6G	97139849	18	1	420	919484908	ABSTURZSICHERUNG
LEISTUNGSRELAIS 75A	11656191	43	2	502	96025348	GRUNDAUFBAU
LEITER ANBAU	917508508	1	1	779	917508408	WERKZEUG KLAPPSPITZE
LEITERHALTERUNG	10326792	9	1	780	917508508	LEITER ANBAU
LEITRAD	749063614	1	1	24	749013714	LEITRAD KPL

Bezeichnung	Artikel	Pos.	Menge	Seite	Baugruppe	Bezeichnung
LEITRAD KPL B7X710 LH-GRA	749013714	1	1	23	790256114	LEITRADEINHEIT KPL
LEITRADEINHEIT KPL B7X710	790256114	2	1	22	96062226	RAUPENTRAEGER KPL.RE.
LEITRADEINHEIT KPL B7X710	790256114	2	1	27	96062228	RAUPENTRAEGER KPL.LI.
LEITUNG	12107191	12	1	308	12106874	KRAFTSTOFFFILTER
LEITUNG 15 X 0,34 TPE-U	10428544	10	4.367	426	96023891	KABELSTRANG
LEITUNG 15 X 0,34 TPE-U	10428544	11	4.367	426	96023891	KABELSTRANG
LEITUNG 2 X 1	11620017	9	3	426	96023891	KABELSTRANG
LEITUNG 2 X 1	11620017	15	0.48	426	96023891	KABELSTRANG
LEITUNG 2 X 1,5	11341599	5	4.28	493	96023971	KABELSTRANG
LEITUNG 2 X 1,5	11341599	6	4.28	493	96023971	KABELSTRANG
LEITUNG 25 X 0,34 TPE-U	10428545	7	4.375	426	96023891	KABELSTRANG
LEITUNG 3 G 1,5	600265101	5	1.7	608	96060353	LEITUNG
LEITUNG 3 G 1,5	600265101	6	2.63	608	96060353	LEITUNG
LEITUNG 36 G 1	12108364	5	16.4	492	96063650	LEITUNG
LEITUNG 4 X 0,5	10870332	6	6.06	775	96035674	LEITUNG
LEITUNG 7 G 1	10871285	5	2.46	730	96058738	KABELSTRANG
LEITUNG 7 G 1	10871285	5	13.59	775	96035674	LEITUNG
LEITUNG W398	96057250	20	1	609	919584608	STECKDOSE
LEITUNG W510	96063650	2	1	489	96063648	KABELLISTE DREHBUEHNE
LEITUNG W563	96037273	23	1	625	96036821	AUSRUESTUNG KAMERA DRE
LEITUNG W582	96060353	20	1	607	91000484	VERKABELUNG HEIZLUEFTER
LEITUNG W587	96022971	22	1	489	96063648	KABELLISTE DREHBUEHNE
LEITUNG W588	96022970	15	1	489	96063648	KABELLISTE DREHBUEHNE
LEITUNG W591	96023931	11	1	288	96023914	ELEKTRIK BATTERIEKASTEN
LEITUNG W592	96023932	14	1	288	96023914	ELEKTRIK BATTERIEKASTEN
LEITUNG W593	96023930	10	1	288	96023914	ELEKTRIK BATTERIEKASTEN
LEITUNG W621	96060392	10	1	606	91002360	LADEGERAET
LEITUNG W682	96060380	10	1	616	91000497	EL.KUEHLWASSERVORWAE
LEITUNG W694	96071003	14	1	603	91003677	FREMDEINSPEISUNG
LEITUNG W900	96063843	120	1	692	96063456	KLEMMKASTEN
LEITUNG W906	96063849	140	1	692	96063456	KLEMMKASTEN
LEITUNG W911	96063676	190	1	692	96063456	KLEMMKASTEN
LEITUNG W912	96063583	200	1	692	96063456	KLEMMKASTEN
LEITUNG W912A	96063213	6	1	695	96063212	LEITUNGSTROMMEL KPL.
LEITUNG W921	96063872	160	1	692	96063456	KLEMMKASTEN
LEITUNG W930	96063561	120	1	703	96063458	KLEMMKASTEN KPL.
LEITUNG W931	965965108	6	1	725	918258408	ELEKTRIK 2.HUBENDSCHALTE
LEITUNG W932	96063559	110	1	703	96063458	KLEMMKASTEN KPL.
LEITUNG W940	965096408	12	1	774	96055854	EL.ANLENKST.MECH.KLAPPS
LEITUNG W942A	96035674	11	1	774	96055854	EL.ANLENKST.MECH.KLAPPS
LEITUNG W942B	96054467	13	1	774	96055854	EL.ANLENKST.MECH.KLAPPS
LEITUNG W943	965262808	(7)	1	755	91001037	DOPPELKLAPPSPITZE MECH.
LEITUNG W945	965096608	(8)	1	755	91001037	DOPPELKLAPPSPITZE MECH.
LEITUNGSFILTER	510670808	161	1	516	96045552	HYDRAULIK OBERWAGEN
LEITUNGSFILTER	510674508	169	1	516	96045552	HYDRAULIK OBERWAGEN
LEITUNGSTROMMEL 11+PE SP	12104731	5	1	695	96063212	LEITUNGSTROMMEL KPL.
LEITUNGSTROMMEL KPL.	96063212	2	1	690	96063954	ELEKTRIK ANLENKSTUECK
LEITUNGSVERBINDER	5603876	515	1	426	96023891	KABELSTRANG
LEITUNGSVERBINDER	5603876	507	1	428	96022870	KABELSTRANG
LEITUNGSVERBINDER	5603876	526	1	500	96059659	DRAEHTE GRUNDAUFBAU KPL
LEUCHTMELDER	606143508	11	2	435	96022872	ARMATURENBRETT DACH
LIBELLE	714000808	10	2	61	917155308	HYDRAULIK VORB.
LICCON MONITOR LCD5C-A	10886525	(80)	1	431	96056347	ELEKTRIK ANBAUTEILE KABIN
LICCON MONITOR LSB-BSE LC	96033140	19	1	431	96056347	ELEKTRIK ANBAUTEILE KABIN
LICHTHAUBE	11346616	(1)	1	106	915731908	EL.TEILE VERSANDMONTAGE
LINEARGLEITFUEHRUNGSSY	11007589	5	1	326	968483708	TRITT KPL.
LINSENKOPFSCHRAUBE 4X10	10875795	29	4	392	969300008	HEIZUNG VORM.
LINSENKOPFSCHRAUBE 4X10	10875795	17	4	446	96019783	ZUSATZHEIZUNG VORM.
LINSENKOPFSCHRAUBE K4X	10019040	29	8	395	918810308	STEUERSTAND
LINSENSCHRAUBE M4X12 10.	514525208	20	7	372	570109008	TRIEBWERK

Bezeichnung	Artikel	Pos.	Menge	Seite	Baugruppe	Bezeichnung
LOCHBLECH 75X75	9080377	8	1	146	10155227	OELWANNE VORM.
LOETDRAHT	820000208	262	0.01	505	966157408	BESTUECKUNGSMODUL
LSB-MODUL	10878159	10	1	703	96063458	KLEMMKASTEN KPL.
LUEFTER	10650386	(11)	1	397	10877138	FAHRERSITZ
LUEFTER	12100177	(59)	1	397	10877138	FAHRERSITZ
LUEFTER 24V	10354837	3	1	563	10097345	OEL-LUFTKUEHLER
LUEFTERGEHAEUSE	10354836	2	1	563	10097345	OEL-LUFTKUEHLER
LUFTANSAUGROHR ANBAU R	10147365	220	1	132	13455311	DIESELMOTOR
LUFTANSAUGROHR R-MOTOR	11415774	1	1	200	10147365	LUFTANSAUGROHR ANBAU
LUFTANSAUGUNG ANBAU R-M	10147364	224	1	132	13455311	DIESELMOTOR
LUFTBEHAELTER EN 286-2 20L	502657708	167	1	566	969767908	VERROHRUNG DRUCKLUFTA
LUFTBEHAELTER EN 286-2 5L	11491896	166	1	566	969767908	VERROHRUNG DRUCKLUFTA
LUFTFILTER 12,7M³/MIN	10876238	100	1	476	918729308	LUFTFILTERANLAGE
LUFTFILTERANLAGE	918729308	165	1	13		LIEBHERR LTR 1100
LUFTFUEHRUNG	916168308	3	1	334	917304508	KRANFUEHRERKABINE VORM.
LUFTFUEHRUNG 128X523X170	97000437	2	1	352	916168308	LUFTFUEHRUNG
LUFTFUEHRUNG 152X627X339	97000438	3	1	352	916168308	LUFTFUEHRUNG
LUFTFUEHRUNG 81X233X419	97000436	1	1	352	916168308	LUFTFUEHRUNG
LUFTFUEHRUNG LI. 107X394	97000440	4	1	352	916168308	LUFTFUEHRUNG
LUFTFUEHRUNG LI. 113X705	97001699	2	1	340	966282308	VERKLEIDUNG LI.
LUFTFUEHRUNG LI. 144X143X	97001248	6	1	352	916168308	LUFTFUEHRUNG
LUFTFUEHRUNG RE. 100X71	97001700	2	1	341	966282408	VERKLEIDUNG RE.
LUFTFUEHRUNG RE. 109X391	97000442	5	1	352	916168308	LUFTFUEHRUNG
LUFTFUEHRUNG RE. 143X15	97001249	7	1	352	916168308	LUFTFUEHRUNG
LUFTFUEHRUNGSSCHLAUCH	97042185	250	1	476	918729308	LUFTFILTERANLAGE
LUFTLEITKANAL 39X75X227	97004696	3	1	340	966282308	VERKLEIDUNG LI.
LUFTLEITUNGEN HARNSTOFF	96074083	30	1	461	96074081	HARNSTOFFTANK VORM.
LUFTPRESSER	10650490	85	1	397	10877138	FAHRERSITZ
LUFTPRESSER 293CM3	5700161	1	1	207	9080294	LUFTPRESSER VORM.
LUFTPRESSER ANBAU 293CM	10127566	330	1	132	13455311	DIESELMOTOR
LUFTPRESSER VORM. 293CM	9080294	1	1	206	10127566	LUFTPRESSER ANBAU
LUFTTROCKNER	502657308	55	1	566	969767908	VERROHRUNG DRUCKLUFTA
M-RING 130X120,5X2,5 F14	12476138	4	1	159	10146367	KOLBEN KPL.
MAGNET	12109319	2	1	714	511493608	WEGEVENTIL
MAGNET 24V	570633808	(1)	1	619	969856508	ZUSATZHYDRAULIK OELVOR
MAGNET 24V	570827808	1	1	546	511444408	WEGEVENTIL
MAGNET 24V	571135508	1	1	714	511493608	WEGEVENTIL
MAGNETSCHALTER	12108716	7	1	228	11386644	STARTER
MAGNETSPULE	10564740	(1)	1	33	967304508	HYDRAULIK UNTERWAGEN
MAGNETSPULE	10564740	157	2	36	511302008	WEGEVENTIL
MAGNETSPULE	11003699	(11)	1	550	10663060	STEUERBLOCK
MAGNETSPULE	571817708	8	2	539	571817608	WEGEVENTIL
MAGNETSPULE	6204416	(1)	1	534	10802090	STEUERBLOCK
MAGNETSPULE 24V	10488103	10	1	532	11002717	WEGEVENTIL
MAGNETSPULE 24V	11342414	(1)	2	35	10675161	STEUERBLOCK
MAGNETSPULE 24V	571910108	1	1	541	571453708	DRUCKVENTIL
MAGNETSPULE 27V	12102117	1	1	544	571737808	WEGEVENTIL
MAGNETSPULE 28V	570817908	1	1	542	570527908	WEGEVENTIL
MAGNETVENTIL	10217127	3	1	534	10802090	STEUERBLOCK
MAGNETVENTIL	10343003	2	1	392	969300008	HEIZUNG VORM.
MAGNETVENTIL	10343003	15	1	446	96019783	ZUSATZHEIZUNG VORM.
MASSENAUSGLEICH ANBAU	10120186	90	1	131	13455311	DIESELMOTOR
MASSEVERBINDUNGSBLECH	12826252	4	1	204	9078314	HEIZFLANSCH ANBAU
MASTNASE	915415908	356	1	14		LIEBHERR LTR 1100
MASTNASE SCHWK.	928659608	1	1	723	964502908	MASTNASE VORM.
MASTNASE VORM.	964502908	1	1	721	915415908	MASTNASE
MECH.BEFESTIGUNGSTEILE	96023050	19	1	516	96045552	HYDRAULIK OBERWAGEN
MECH.BEFESTIGUNGSTEILE	96064701	19	1	591	96064697	HYDRAULIK HILFSHUBWERK
MECH.BEFESTIGUNGSTEILE	96075100	19	1	598	96075086	HYDRAULIK HILFSHUBWERK D
MECH.BEFESTIGUNGSTEILE	968521308	19	1	33	967304508	HYDRAULIK UNTERWAGEN

Bezeichnung	Artikel	Pos.	Menge	Seite	Baugruppe	Bezeichnung
MECH.BEFESTIGUNGSTEILE	968522208	19	1	63	967301408	HYDRAULIK VORB.
MECH.BEFESTIGUNGSTEILE	969849608	19	1	566	969767908	VERROHRUNG DRUCKLUFTA
MECH.TEILE VERSANDMONT	919950308	175	1	13		LIEBHERR LTR 1100
MECHANIK MESS-U.WARNEIN	96056273	2	1	728	919868808	TRAEGER MESS-U.WARNEIN
MECHANISCHE ANBAUTEILE	96045217	30	1	96	919499008	BALLASTUEBERWACHUNG
MECHANISCHE ANBAUTEILE	96045219	30	1	638	919502708	BALLASTUEBERWACHUNG
MECHANISCHE ANBAUTEILE	96066401	100	1	603	91003677	FREMDEINSPEISUNG
MEISTERSCHALTER LSB-AMS	10343693	4	2	431	96056347	ELEKTRIK ANBAUTEILE KABIN
MELDELEUCHTE 24V	10876030	34	1	431	96056347	ELEKTRIK ANBAUTEILE KABIN
MEMBRAN-DURCHFUEHRUN	602717308	112	1	407	96022627	DREHBUEHNENVERKLEIDUN
MEMBRAN-DURCHFUEHRUN	602717308	107	1	415	96024809	DREHBUEHNENVERKLEIDUN
MEMBRANSPEICHER 0,075L 40	510645108	175	1	516	96045552	HYDRAULIK OBERWAGEN
MEMBRANSPEICHER 0,32L 10	510642008	156	1	516	96045552	HYDRAULIK OBERWAGEN
MEMBRANSPEICHER 0,32L 40	510643408	195	2	517	96045552	HYDRAULIK OBERWAGEN
MEMBRANTUELLE 29/37/44	553027808	116	1	272	96020819	KUEHLER VORM.
MEMBRANTUELLE 29/37/44	553027808	4	7	329	916170808	KABELEINFUEHRUNG
MESSANSCHLUSS BMA3 6S C	475601508	641	3	34	967304508	HYDRAULIK UNTERWAGEN
MESSANSCHLUSS BMA3 6S C	475601508	607	1	63	967301408	HYDRAULIK VORB.
MESSANSCHLUSS BMA3 6S C	475601508	600	5	518	96045552	HYDRAULIK OBERWAGEN
MESSANSCHLUSS BMA3 6S C	475601508	614	1	591	96064697	HYDRAULIK HILFSHUBWERK
MESSANSCHLUSS BMA3 6S C	475601508	602	1	619	969856508	ZUSATZHYDRAULIK OELVOR
MESSANSCHLUSS EMA3 G1/4	475602608	682	3	518	96045552	HYDRAULIK OBERWAGEN
MESSANSCHLUSS G1/4"	10430230	63	1	684	12105406	TELESKOPIERZYLINDER
MESSANSCHLUSS VKA3 10LM	510629008	649	3	34	967304508	HYDRAULIK UNTERWAGEN
MESSANSCHLUSS VKA3 10LM	510629008	631	4	518	96045552	HYDRAULIK OBERWAGEN
MESSANSCHLUSS VKA3 10LM	510629008	620	1	592	96064697	HYDRAULIK HILFSHUBWERK
MESSERTRENNKLEMME 0,2-2	602761608	5	2	504	968077108	KLEMMENLEISTE
MESSKUPPLUNG SPF	475603308	705	8	519	96045552	HYDRAULIK OBERWAGEN
MESSSTUTZEN 12S M20X1,5 C	7409922	770	7	519	96045552	HYDRAULIK OBERWAGEN
MESSSTUTZEN DKO 10S M18	5607617	788	2	520	96045552	HYDRAULIK OBERWAGEN
MESSSTUTZEN VKA3 12LM18	7409918	775	1	519	96045552	HYDRAULIK OBERWAGEN
MESSWIDERSTAND -40/+125°	10449516	9	3	431	96056347	ELEKTRIK ANBAUTEILE KABIN
METALLGUMMISCHIENE 170	726617008	100	2	124	918728408	MONTAGETEILE DREHBUEHN
MIKROPHON	11826513	2	1	650	12257818	AUTORADIO
MIKROSCHALTER	10335596	3	4	436	10343693	MEISTERSCHALTER
MITNEHMER	10014729	7	1	480	10327065	ELEKTROPUMPE
MITTELTEIL BEARB 983593114	10222999	1	1	30	992078314	MITTELTEIL
MITTELTEIL KPL.	992078314	4	1	19	96062225	UNTERWAGEN KPL.
MITTELZAPFEN	570110508	3	1	373	570109508	TRIEBWERK
MODEM TELEMETRIEMODUL	12104397	8	1	87	96062922	MONTAGEPLATTE VORM.
MODEM TELEMETRIEMODUL	12104397	19	1	498	919940108	EINBAUTEILE SCHALTSCHRAN
MONITOR TFT 7 800X480	10876638	10	1	624	96036820	AUSRUESTUNG KAMERA KAB
MONITORGEHAEUSE GEKLEB	963257908	2	1	321	96015921	BEDIENELEMENTE EINBAU
MONITORTRAEGER 162X765	96015926	1	1	321	96015921	BEDIENELEMENTE EINBAU
MONTAGEBLECH VORM.	967608708	2	1	502	96025348	GRUNDAUFBAU
MONTAGEEINHEIT VORM.	968015808	4	1	498	919940108	EINBAUTEILE SCHALTSCHRAN
MONTAGEMATERIAL	968693208	30	1	484	919940408	EL.ANLAGE DREHBUEHNE
MONTAGEPLATTE VORM.	96062922	3	1	84	96075205	SCHALTKASTEN VORM.
MONTAGETEILE	11826654	27	1	448	10876576	WASSERHEIZGERAET
MONTAGETEILE	96045222	2	1	116	919498808	ZENTRALBALLAST
MONTAGETEILE DREHBUEHN	918728408	103	1	12		LIEBHERR LTR 1100
MONTAGETEILE LWE	968374708	3	1	17	919950108	UNTERWAGEN KPL.M.SCHNEL
MONTAGEWERKZEUGKASTE	790045408	1	1	104	928569808	GRUNDWERKZEUG
MOOSGUMMI 20X4 MOOSGU	262103108	30	0.064	395	918810308	STEUERSTAND
MOTORAUFHAENGUNG	12108533	16	1	274	97095949	KOMBIKUEHLER
MOTORFLANSCH A2FM 125	968607301	75	1	383	968607101	PLANETENGETRIEBE
MOTORFLANSCH EN-GJL-250	938996401	85	1	369	933074801	DREHWERKANTRIEB
MOTORGEHAEUSE	10014692	3	1	480	10327065	ELEKTROPUMPE
MOTORGEHAEUSE	10493920	1	1	480	10327065	ELEKTROPUMPE
MOTORKONSOLE LI. G28MN6	97061306	4	1	268	918811108	ANTRIEBSAGGREGAT VORM.

Bezeichnung	Artikel	Pos.	Menge	Seite	Baugruppe	Bezeichnung
MOTORKONSOLE RE. G28MN6	97061151	3	1	268	918811108	ANTRIEBSAGGREGAT VORM.
MOTORKONSOLE SCHWK.HI.LI	968764008	5	1	268	918811108	ANTRIEBSAGGREGAT VORM.
MOTORKONSOLE SCHWK.HI.	968764108	6	1	268	918811108	ANTRIEBSAGGREGAT VORM.
MOTORREGELUNGSENSORIK	12583633	581	1	135	13455311	DIESELMOTOR
MOTORSTEUERGERAET ECU	13470818	570	1	134	13455311	DIESELMOTOR
MUFFE 140.0X25 35NICRMOV	972140108	5	1	374	916109208	DREHBUEHNENARRETIERUN
MUTTER	10219618	1	1	276	10492431	DRUCKBEGRENZUNGSVENTI
MUTTER	510779908	29	1	37	510438508	DRUCKMINDERVENTIL
MUTTER	7027459	(2)	1	33	967304508	HYDRAULIK UNTERWAGEN
MUTTER	7027459	160	2	36	511302008	WEGEVENTIL
MUTTER DIN 15413 M100	12104472	31	1	741	919421708	HAKENFLASCHE
MUTTER M10X1,5 X6NiCrTiMoV	10120639	6	3	222	10140729	ATL-ANBAU
MUTTER M18X1	12109804	(1)	2	52	968374908	ENDSCHALTER ANBAU
MUTTER M6X8	10878951	2	1	398	96032222	NACHARBEIT ARMLEHNE LI.
MUTTER M6X8	10878951	5	1	399	962282208	ARMLEHNE LINKS
MUTTER M6X8	10878951	2	1	400	96032223	NACHARBEIT ARMLEHNE RE.
MUTTER UNF7/8X14 13.9	10515048	30	248	55	10430241	RAUPENKETTE KPL.
MUTTER UNF7/8X14 13.9	10515048	2	4	57	965336308	RS RAUPENKETTE
MUTTER UNF7/8X14 13.9	10515048	2	8	58	965359808	RS RAUPENKETTE
MUTTER UNF7/8X14 13.9	10515048	2	12	59	965359908	RS RAUPENKETTE
NABE 42CrMo4+N+QT	9267273	4	1	169	12408221	FLANSCH VORM.
NACHARBEIT ARMLEHNE LI.	96032222	5	1	395	918810308	STEUERSTAND
NACHARBEIT ARMLEHNE RE.	96032223	6	1	395	918810308	STEUERSTAND
NACHRUESTSATZ	965356108	30	1	288	96023914	ELEKTRIK BATTERIEKASTEN
NAEHERUNGSSCHALTER	10097621	1	1	482	12101719	VERTEILERKOMBINATION
NAEHERUNGSSCHALTER BER	11003193	10	2	487	966720708	ELEKTRIK DREHWERK
NEBENABTRIEB ANBAU	9078961	654	1	135	13455311	DIESELMOTOR
NEBENABTRIEB VORM.	9078962	1	1	248	9078961	NEBENABTRIEB ANBAU
NEIGUNGSGEBER +/-5°X/Y/ +/-	12102799	10	1	81	96062917	ELEKTRIK MITTELSTUECK
NIPPEL GA10-45°H32	97057512	20	1	575	918627208	KLIMAANLAGE OW
NIVEAUGEBER L=115 24V	10130406	22	1	130	13455311	DIESELMOTOR
NIVEAUGEBER L=115 24V	10816943	1	1	150	10130406	NIVEAUGEBER
NOCKE	11341708	24	2	628	12102922	WIPPZYLINDER
NOCKENSCHALTER	570338308	26	1	95	10878097	SCHLEIFRINGUEBERTRAGER
NOCKENWELLE KPL. R-MOT	10147787	100	1	131	13455311	DIESELMOTOR
NOCKENWELLE R-MOTORXD	10125742	1	1	170	10147787	NOCKENWELLE KPL.
NOCKENWELLENBUCHSE 60,	9132281	11	2	137	10154379	KURBELGEHAEUSE VORM.
NOCKENWELLENBUCHSE 70,	9274859	10	5	137	10154379	KURBELGEHAEUSE VORM.
NOT-AUS TASTE	606144108	(2)	1	434	96030724	ELEKTRIK ARMATURENKONS
NOTAUS KRANFUEHRERKAB	967260908	4	1	434	96030724	ELEKTRIK ARMATURENKONS
NOTHANDBETAETIGUNG	11007817	4	1	544	571737808	WEGEVENTIL
NUTMUTTER DIN 1804 M80X2	241047802	7	1	321	96015921	BEDIENELEMENTE EINBAU
NUTMUTTER M38X1,5	570110108	9	1	372	570109008	TRIEBWERK
NUTMUTTER M42X1,5 42CrMo4	938760801	60	1	383	968607101	PLANETENGETRIEBE
NUTMUTTER M42X1,5 42CrMo4	938760801	60	1	584	938759801	PLANETENGETRIEBE
NUTMUTTER M70X2X19 C45	927530201	13	1	369	933074801	DREHWERKANTRIEB
NUTRING 125X133X11,5	7368257	6	1	25	749065414	SPANNER HYDR KPL
NUTRING 125X133X6	790272414	3	1	25	749065414	SPANNER HYDR KPL
O-RING 10,00X2,5 NBR90	10337381	(1)	2	543	10333672	STEUERBLOCK
O-RING 10,00X2,5 NBR90	10337381	7	1	554	510697608	KUGELHAHN
O-RING 10,8X1, 78 NEOPREN	5610999	32	2	575	918627208	KLIMAANLAGE OW
O-RING 10X2 NBR70	726406508	(22)	1	549	10877219	STEUERBLOCK
O-RING 10X2,2 NBR70	502933208	430	1	476	918729308	LUFTFILTERANLAGE
O-RING 10X2,2 NBR70	502933208	(7)	2	516	96045552	HYDRAULIK OBERWAGEN
O-RING 12,42X1,78 TPU 90 SH	12105807	1101	8	66	11481975	STEUERBLOCK
O-RING 12X2 NBR70	704274808	9	4	85	966167808	DECKEL KPL.
O-RING 12X2 NBR70	704274808	8	2	303	10475262	ABSPERRORGAN
O-RING 12X2 NBR70	704274808	102	2	417	969392008	FRONTHAUBE LI.
O-RING 133,07X1,78 NBR 70	10099208	32	1	480	10327065	ELEKTROPUMPE
O-RING 140X3 NBR70	570163708	5	1	480	10327065	ELEKTROPUMPE

Bezeichnung	Artikel	Pos.	Menge	Seite	Baugruppe	Bezeichnung
O-RING 145 FKM 75-17939	10282774	4	2	138	10154458	ZYLINDER
O-RING 145 FKM 75-606	12894049	103	8	250	10148366	DS DIESELMOTOR
O-RING 14X2 NBR70	726411508	47	2	431	96056347	ELEKTRIK ANBAUTEILE KABIN
O-RING 14X3 NBR70	726405608	10	12	331	916162808	RELING
O-RING 14X3 NBR70	726405608	78	8	585	938759801	PLANETENGETRIEBE
O-RING 15,5X2,5 NBR70	10279914	(1)	1	534	10802090	STEUERBLOCK
O-RING 155X3 NBR 70 SPF	726426601	31	1	380	968558601	KOMPAKTSEILWINDE
O-RING 155X3 NBR 70 SPF	726426601	31	1	583	938707001	KOMPAKTSEILWINDE
O-RING 15X3 NBR 70	726403401	78	6	383	968607101	PLANETENGETRIEBE
O-RING 165X3 FKM 70	726440001	73	1	369	933074801	DREHWERKANTRIEB
O-RING 16X2 NBR70	726407908	401	2	280	96035595	AUSGLEICHSBEHAELTER VO
O-RING 16X2 NBR70	726407908	7	2	303	10475262	ABSPERRORGAN
O-RING 16X2 NBR70	726407908	(1)	1	306	96066239	KRAFTSTOFFFILTER VORM.
O-RING 175X3 NBR 70	726453601	24	1	369	933074801	DREHWERKANTRIEB
O-RING 17X2 FPM70	571082608	(2)	1	516	96045552	HYDRAULIK OBERWAGEN
O-RING 17X2 FPM70	571082608	(2)	1	591	96064697	HYDRAULIK HILFSHUBWERK
O-RING 180X4 NBR70	726401808	2	2	42	96048348	HYDR.INSTALLATIONSTEILE
O-RING 18X2,5 NBR70	726406908	(1)	1	517	96045552	HYDRAULIK OBERWAGEN
O-RING 195X3 NBR 70	761021703	76	1	383	968607101	PLANETENGETRIEBE
O-RING 195X3 NBR 70	761021703	76	1	584	938759801	PLANETENGETRIEBE
O-RING 19X2,5 FKM80	10219619	2	1	276	10492431	DRUCKBEGRENZUNGSVENTI
O-RING 19X2,5 NBR70	726424108	(21)	2	549	10877219	STEUERBLOCK
O-RING 20,3X2,4 NBR70	502932908	407	1	291	969543308	KRAFTSTOFFBEHAELTER VO
O-RING 20X2 NBR90	510792708	8	2	554	510697608	KUGELHAHN
O-RING 20X4 NBR 70	726414901	69	1	369	933074801	DREHWERKANTRIEB
O-RING 22X1,5 FPM70	571082708	(3)	1	516	96045552	HYDRAULIK OBERWAGEN
O-RING 22X2 NBR90	726418408	(8)	4	516	96045552	HYDRAULIK OBERWAGEN
O-RING 23,47X2,95 FKM 70-M	10129193	2	1	188	13703082	DS INJEKTOR
O-RING 23,52X1,78 HNBR 610	12105791	16	1	66	11481975	STEUERBLOCK
O-RING 23,52X1,78 NBR90	514611808	(70)	1	261	12487540	HYDRAULIKDOPPELPUMPE
O-RING 24X3 FKM 70	10217777	2	1	234	10128439	VERSCHLUSSTEILE
O-RING 24X3 FKM 70	10217777	5241	1	252	10148366	DS DIESELMOTOR
O-RING 25,5X2,3 TPU 90 SH	12105806	1100	4	66	11481975	STEUERBLOCK
O-RING 26,7X1,78	12156873	1102	4	66	11481975	STEUERBLOCK
O-RING 26X2,5 NBR70	502643508	433	1	269	918811108	ANTRIEBSAGGREGAT VORM.
O-RING 290X6 NBR70	726428408	16	1	583	938707001	KOMPAKTSEILWINDE
O-RING 300X3 NBR70	530032508	51	1	383	968607101	PLANETENGETRIEBE
O-RING 300X6 EPDM 70	726458401	(3)	1	383	968607101	PLANETENGETRIEBE
O-RING 300X6 NBR70	726421508	16	1	380	968558601	KOMPAKTSEILWINDE
O-RING 330X3 NBR 70	726429901	19	2	383	968607101	PLANETENGETRIEBE
O-RING 330X3 NBR 70	726429901	19	2	584	938759801	PLANETENGETRIEBE
O-RING 33X2,5 NBR70	726424708	400	1	280	96035595	AUSGLEICHSBEHAELTER VO
O-RING 40,64X5,33 FKM 70	7381566	2	2	148	10121667	VERBINDUNGSSTUECK M.O-R
O-RING 4X1 NBR90	510712308	3	1	720	511479408	LASTHALTEVENTIL
O-RING 59,92X3,53 HNBR 70	7381779	7	2	139	10147687	AGGREGATETRAEGER ANBA
O-RING 59X3 NBR70	726407608	2	1	555	510670808	LEITUNGSFILTER
O-RING 6X1 NBR90	570690608	33	1	480	10327065	ELEKTROPUMPE
O-RING 6X1 NBR90	570690608	7	1	524	571130108	DRUCKBEGRENZUNGSVENTI
O-RING 6X1 NBR90	570690608	3	1	547	511306608	STEUERBLOCK
O-RING 7,6X1,78 NEOPREN	10216678	31	4	575	918627208	KLIMAANLAGE OW
O-RING 85X2 HNBR 70	10218370	2	1	228	11386644	STARTER
O-RING 85X2 HNBR 70	10218370	4501	1	251	10148366	DS DIESELMOTOR
O-RING 88,49X3,53	726431114	6	2	24	749013714	LEITRAD KPL
O-RING 88X3 ACM70	570979708	7	1	209	5700161	LUFTPRESSER
O-RING 8X2 NBR70	502652908	73	1	584	938759801	PLANETENGETRIEBE
O-RING 8X2 NBR90	10166157	73	1	383	968607101	PLANETENGETRIEBE
O-RING 94,5X3 VMQ 70	13711602	2	1	205	13701882	HEIZFLANSCH KOMPLETT
O-RING 95X3 NBR70	726405708	97	1	369	933074801	DREHWERKANTRIEB
O-RING 98,02X3,53 FKM 70-M	10128671	1801	2	251	10148366	DS DIESELMOTOR
O-RING 98,02X3,53 HNBR 70	7381995	4	1	229	10115664	VERSCHLUSSTEILE

Bezeichnung	Artikel	Pos.	Menge	Seite	Baugruppe	Bezeichnung
O-RING 98,02X3,53 HNBR 70	7381995	4521	1	251	10148366	DS DIESELMOTOR
O-RING AEHNL.ISO 3601-1 100	11008055	2	1	201	10145173	ANSAUGSTUTZEN ANBAU
O-RING AEHNL.ISO 3601-1 101	7382158	2	1	247	10144027	VERSCHLUSSTEILE
O-RING AEHNL.ISO 3601-1 101	7382158	7	1	249	9078962	NEBENABTRIEB VORM.
O-RING AEHNL.ISO 3601-1 125	10002310	3	1	206	10127566	LUFTPRESSER ANBAU
O-RING AEHNL.ISO 3601-1 15,5	10113975	(2)	1	243	12583633	MOTORREGELUNGSENSORIK
O-RING AEHNL.ISO 3601-1 21,	7381526	4	1	219	10142744	KUEHLWASSERENTLUEFTUN
O-RING AEHNL.ISO 3601-1 21,	7381526	3871	1	251	10148366	DS DIESELMOTOR
O-RING AEHNL.ISO 3601-1 25	10342770	3	1	163	10149578	ZYLINDERKOPF
O-RING AEHNL.ISO 3601-1 26X	10004261	9	1	139	10147687	AGGREGATETRAEGER ANBA
O-RING AEHNL.ISO 3601-1 26X	10004261	4	1	173	10129475	OELKUEHLER ANBAU
O-RING AEHNL.ISO 3601-1 43	11066168	4	1	177	10148432	SCHMIEROELPUMPE MIT BE
O-RING AEHNL.ISO 3601-1 6,2	7381448	(1)	1	531	11170519	VENTILBLOCK
O-RING AEHNL.ISO 3601-1 60	12212022	16	2	223	12512627	ABGASSTUTZEN ANBAU
O-RING AEHNL.ISO 3601-1 63,	7380970	7	1	203	10149677	VERBINDUNGSLEITUNG ANBA
O-RING AEHNL.ISO 3601-1 63,	7380970	434	1	269	918811108	ANTRIEBSAGGREGAT VORM.
O-RING AEHNL.ISO 3601-1 7X1,	7381685	8	1	168	10120186	MASSENAUSGLEICH ANBAU
O-RING AEHNL.ISO 3601-1 7X1,	7381685	14	1	170	10147787	NOCKENWELLE KPL.
O-RING AEHNL.ISO 3601-1 7X1,	7381685	901	1	250	10148366	DS DIESELMOTOR
O-RING AEHNL.ISO 3601-1 7X1,	7381685	1001	1	250	10148366	DS DIESELMOTOR
O-RING AEHNL.ISO 3601-1 94,5	10116255	(1)	1	205	13701882	HEIZFLANSCH KOMPLETT
O-RING AEHNL.ISO 3601-1 94,5	10116255	2601	1	251	10148366	DS DIESELMOTOR
O-RING ARP 568 10,52X1,83 NB	501243708	1	1	559	471030708	VERSCHRAUBUNG
O-RING ARP 568 10,82X1,78 NB	510718108	27	1	548	11170276	DRUCKREDUZIERVENTIL
O-RING ARP 568 10,82X1,78 NB	510760408	32	1	388	11083498	HEIZKLIMAGERAET
O-RING ARP 568 10,82X1,78 NB	510760408	11	1	523	11065879	DRUCKVENTIL
O-RING ARP 568 11,89X1,98 N	571130508	8	1	524	571130108	DRUCKBEGRENZUNGSVENTI
O-RING ARP 568 110,72X3,53	514615408	1	1	298	11600977	DECKEL
O-RING ARP 568 117,07X3,53	514614108	15	1	377	510240708	HYDROMOTOR
O-RING ARP 568 12,37X2,62 NB	510746108	1	1	317	10218310	LASTHALTEVENTIL
O-RING ARP 568 14X1,78 NBR9	515710608	31	1	388	11083498	HEIZKLIMAGERAET
O-RING ARP 568 17,12X2,62 NB	510710108	3	2	37	510438508	DRUCKMINDERVENTIL
O-RING ARP 568 17,12X2,62 NB	510710108	15	1	37	510438508	DRUCKMINDERVENTIL
O-RING ARP 568 19,18X2,46 NB	571068108	12	1	523	11065879	DRUCKVENTIL
O-RING ARP 568 190,09X3,53	514604208	12	1	43	592326914	VERSTELLMOTOR
O-RING ARP 568 23,47x2,62 NB	570322408	(1)	1	272	96020819	KUEHLER VORM.
O-RING ARP 568 23,52X1,78 N	570652308	64	1	537	10665128	DECKEL
O-RING ARP 568 23,52X1,78 N	570652308	25	1	548	11170276	DRUCKREDUZIERVENTIL
O-RING ARP 568 29,87X1,78 NB	510747808	(66)	2	534	10802090	STEUERBLOCK
O-RING ARP 568 29,87X1,78 NB	510747808	66	2	536	10665127	DECKEL
O-RING ARP 568 31,42X2,62 NB	515706008	(1)	1	518	96045552	HYDRAULIK OBERWAGEN
O-RING ARP 568 32,92X3,53 NB	510587008	432	2	269	918811108	ANTRIEBSAGGREGAT VORM.
O-RING ARP 568 32,92X3,53 NB	510587008	(1)	1	517	96045552	HYDRAULIK OBERWAGEN
O-RING ARP 568 32,92X3,53 NB	510587008	550	1	591	96064697	HYDRAULIK HILFSHUBWERK
O-RING ARP 568 32,99X2,62 NB	510761708	5	3	525	10032696	PATRONE
O-RING ARP 568 36,17X2,62 NB	570242808	69	1	685	570960608	SENKBREMSVENTIL
O-RING ARP 568 37,69X3,53 NB	510586708	304	2	517	96045552	HYDRAULIK OBERWAGEN
O-RING ARP 568 37,69X3,53 NB	510586708	(1)	1	517	96045552	HYDRAULIK OBERWAGEN
O-RING ARP 568 37,69X3,53 NB	510586708	551	3	709	965994108	HYDRAULIK TELE
O-RING ARP 568 4,47X1,78 NB	510714208	13	2	37	510438508	DRUCKMINDERVENTIL
O-RING ARP 568 44,04X3,53 NB	570296608	2	1	297	11068050	FILTERELEMENT
O-RING ARP 568 44,12X2,62 NB	514618308	68	1	685	570960608	SENKBREMSVENTIL
O-RING ARP 568 66,27X3,53 NB	518648508	6	1	371	510229408	HYDROMOTOR
O-RING ARP 568 7,65X1,78 NB	726419408	10	2	523	11065879	DRUCKVENTIL
O-RING ARP 568 7,65X1,78 NB	726419408	63	2	537	10665128	DECKEL
O-RING ARP 568 72,62X3,53 NB	518629608	31	2	338	917305408	INNENVERKLEIDUNG EINBAU
O-RING ARP 568 75,87X2,62 NB	514530408	15	1	372	570109008	TRIEBWERK
O-RING ARP 568 9,25X1,78 NB	510719008	26	1	548	11170276	DRUCKREDUZIERVENTIL
O-RING ARP 568 9,25X1,78 NB	510738608	(4)	4	540	511486908	STEUERLEISTE
O-RING ARP 568 98,02X3,53 NB	514613208	431	1	269	918811108	ANTRIEBSAGGREGAT VORM.

Bezeichnung	Artikel	Pos.	Menge	Seite	Baugruppe	Bezeichnung
O-RING ARP 568 98,02X3,53 NB	514613208	6	1	377	510240708	HYDROMOTOR
O-RING DIN 3770 25X2,5 FPM7	726422308	313	1	566	969767908	VERROHRUNG DRUCKLUFTA
O-RING DIN 3771 28X3,55 NB	726404508	410	1	295	969219208	OELBEHAELTER VORM.
O-RING DIN 3771 35,00X2,00	530151508	68	1	369	933074801	DREHWERKANTRIEB
O-RING DIN 3771 44X3 NBR70	726405908	5	1	48	96046146	SCHUTZ KPL.
O-RING ISO 3601 23,6X2,9 NBR	571817308	(1)	1	487	966720708	ELEKTRIK DREHWERK
O-RING ISO 3601-1 101,27X2,6	7380605	5	1	202	10147364	LUFTANSAUGUNG ANBAU
O-RING ISO 3601-1 101,27X2,6	7380605	430	1	269	918811108	ANTRIEBSAGGREGAT VORM.
O-RING ISO 3601-1 107,54X3,53	10002167	4	2	216	10148215	THERMOSTATGEHAEUSE AN
O-RING ISO 3601-1 12,37X2,62	7380935	(2)	1	205	13701882	HEIZFLANSCH KOMPLETT
O-RING ISO 3601-1 12,37X2,62	7380935	3	1	205	13701882	HEIZFLANSCH KOMPLETT
O-RING ISO 3601-1 12,37X2,62	7380935	2602	1	251	10148366	DS DIESELMOTOR
O-RING ISO 3601-1 132,94X3,53	7016016	(1)	1	215	10142733	WASSERPUMPE MIT BEFEST.
O-RING ISO 3601-1 132,94X3,53	7016016	(7)	1	215	10142733	WASSERPUMPE MIT BEFEST.
O-RING ISO 3601-1 132,94X3,53	7016016	7	1	215	10142733	WASSERPUMPE MIT BEFEST.
O-RING ISO 3601-1 132,94X3,53	7016016	3701	1	251	10148366	DS DIESELMOTOR
O-RING ISO 3601-1 17,17X1,78	7381103	2	1	235	10127979	VERSCHLUSSTEILE
O-RING ISO 3601-1 17,17X1,78	7381103	2	1	244	12544505	DREHZAHLGEBER KPL.
O-RING ISO 3601-1 17,17X1,78	7381103	5261	1	252	10148366	DS DIESELMOTOR
O-RING ISO 3601-1 34,59X2,62	7382059	5	1	177	10148432	SCHMIEROELPUMPE MIT BE
O-RING ISO 3601-1 34,59X2,62	7380653	8	2	139	10147687	AGGREGATETRAEGER ANBA
O-RING ISO 3601-1 34,59X2,62	7380653	9	1	232	10115829	SCHWUNGRADGEHAEUSE AN
O-RING ISO 3601-1 55,25X2,62	7380083	3	1	218	10142742	KUEHLMITTELKRUEMMER AN
O-RING ISO 3601-1 75,79X3,53	7009080	5	1	216	10148215	THERMOSTATGEHAEUSE AN
O-RING ISO 3601-1 85,32X3,53	7381361	2	2	246	9078249	VERSCHLUSSTEILE
O-RING NEOPRENE (W)	7411823	30	1	575	918627208	KLIMAANLAGE OW
OEL-LUFTKUEHLER	10097345	10	2	562	919528608	OELKUEHLER EINBAU
OEL-LUFTKUEHLER	550628308	103	1	272	96020819	KUEHLER VORM.
OELABLASSSCHLAUCH KPL.	10032297	68	1	104	928569808	GRUNDWERKZEUG
OELABLASSSCHRAUBE M 30	5004624	6	1	146	10155227	OELWANNE VORM.
OELABLASSSCHRAUBE M26X	7365034	11	1	274	97095949	KOMBIKUEHLER
OELABLASSSCHRAUBE M26X	789011908	403	2	295	969219208	OELBEHAELTER VORM.
OELBEHAELTER ANBAU	918008908	109	1	12		LIEBHERR LTR 1100
OELBEHAELTER SCHWK. SPF	969392608	1	1	295	969219208	OELBEHAELTER VORM.
OELBEHAELTER VORM. SPF	969219208	1	1	293	918008908	OELBEHAELTER ANBAU
OELEINFUELLUNG	10118839	23	1	130	13455311	DIESELMOTOR
OELFILTEREINSATZ OEL	10877167	71	1	684	12105406	TELESKOPIERZYLINDER
OELFILTERSCHRAUBE	12105789	7	1	66	11481975	STEUERBLOCK
OELKUEHLER	10325001	3	1	174	10129474	OELKUEHLER VORM.
OELKUEHLER	10354835	1	1	563	10097345	OEL-LUFTKUEHLER
OELKUEHLER ANBAU	10129475	130	1	131	13455311	DIESELMOTOR
OELKUEHLER EINBAU	919528608	187	1	14		LIEBHERR LTR 1100
OELKUEHLER VORM.	10129474	1	1	173	10129475	OELKUEHLER ANBAU
OELKUEHLERGEHAEUSE	10146722	1	1	174	10129474	OELKUEHLER VORM.
OELLEITUNG VORM. 10X1	10139112	25	1	130	13455311	DIESELMOTOR
OELMESSEINRICHTUNG	939368401	10	1	380	968558601	KOMPAKTSEILWINDE
OELMESSSTAB 1 1/8"	927554401	1	1	370	927554301	ENTLUEFTUNGSSTUTZEN
OELMESSSTAB 1 1/8"	927610201	15	1	384	939368401	OELMESSEINRICHTUNG
OELMESSSTAB 1 1/8" MIT LU	500131501	1	1	586	927521201	OELMESSSTABEINRICHTUNG
OELMESSSTAB KPL.	10150934	21	1	130	13455311	DIESELMOTOR
OELMESSSTAB MIT RING	10150935	1	1	149	10150934	OELMESSSTAB KPL.
OELMESSSTABEINRICHTUNG	927521201	10	1	583	938707001	KOMPAKTSEILWINDE
OELRUECKLAUFLEITUNG 10X	10139111	1	1	152	10139112	OELLEITUNG VORM.
OELRUECKLAUFLEITUNG 22X	12847441	2	1	222	10140729	ATL-ANBAU
OELSTANDSAUGE G1" ALU	774320108	402	1	295	969219208	OELBEHAELTER VORM.
OELWANNE MIT BEFEST. R-M	10132560	20	1	130	13455311	DIESELMOTOR
OELWANNE VORM. R-MOTOR	10155227	1	1	145	10133837	OELWANNE VORM.
OELWANNE VORM. R-MOTOR	10133837	1	1	144	10132560	OELWANNE MIT BEFEST.
OVALRING 26X140X260 EDELB	773924708	13	1	645	919950308	MECH.TEILE VERSANDMONT
PASSHUELSE 12X20X20 100Cr	10134348	3	2	139	10147687	AGGREGATETRAEGER ANBA

Bezeichnung	Artikel	Pos.	Menge	Seite	Baugruppe	Bezeichnung
PASSHUELSE 12X20X20 100Cr	10134348	3	2	232	10115829	SCHWUNGRADGEHAEUSE AN
PASSHUELSE 15,5X19,5X24	9177636	6	10	137	10154379	KURBELGEHAEUSE VORM.
PASSHUELSE 16X20X20 S235J	9074798	4	2	160	10149580	ZYLINDERKOPF ANBAU
PASSSCHEIBE DIN 988 13X19	10876085	50	2	655	91000049	ANLENKSTUECK VORM.
PASSSCHEIBE DIN 988 22X30	10876086	14	2	655	91000049	ANLENKSTUECK VORM.
PASSSCHEIBE DIN 988 22X30	10876087	13	4	655	91000049	ANLENKSTUECK VORM.
PASSSCHEIBE DIN 988 25X36	422061501	49	6	383	968607101	PLANETENGETRIEBE
PASSSCHEIBE DIN 988 25X36X	422061401	48	9	383	968607101	PLANETENGETRIEBE
PASSSCHEIBE DIN 988 25X36	422062101	47	3	383	968607101	PLANETENGETRIEBE
PASSSCHEIBE DIN 988 63X80X	421000408	17	2	372	570109008	TRIEBWERK
PASSSCHEIBE DIN 988 63X80X	421000508	18	1	372	570109008	TRIEBWERK
PATCHKABEL 1M	10472203	5	1	425	96068695	KABELLISTE KRANFUEHRERK
PATCHKABEL 4X2 AWG 26/7-5	10219462	6	1	425	96068695	KABELLISTE KRANFUEHRERK
PATRONE	10032696	33	1	522	11170514	VENTILBLOCK
PEDALGEBER 20° SPF	10343484	55	2	432	96056347	ELEKTRIK ANBAUTEILE KABIN
PEDALTRAEGER EINBAU	96025887	4	1	319	919010108	KRANFUEHRERKABINE VORM.
PENDELROLLENLAGER DIN 6	746001601	20	1	381	938759601	SEILTROMMEL
PERSOENLICHE SCHUTZAUSR	916959808	98	1	12		LIEBHERR LTR 1100
PILZKOPFBAND 25MM PS18	802102008	150	13.5	409	96017568	KUEHLERHAUBE KPL.
PILZKOPFBAND 25MM PS18	802102008	30	15	411	96022943	SCHALLDAEMMUNG
PL FALLE	10331874	3	1	739	910543708	LASTHAKEN
PLANETENGETRIEBE	968607101	5	1	380	968558601	KOMPAKTSEILWINDE
PLANETENGETRIEBE PEG 400	938759801	5	1	583	938707001	KOMPAKTSEILWINDE
PLANETENRAD	927530801	40	6	369	933074801	DREHWERKANTRIEB
PLANETENRAD	927601401	7	5	383	968607101	PLANETENGETRIEBE
PLANETENRAD	927602101	32	3	383	968607101	PLANETENGETRIEBE
PLANETENRAD Z=27	938760201	42	3	383	968607101	PLANETENGETRIEBE
PLANETENRAD Z=28	939251101	20	5	369	933074801	DREHWERKANTRIEB
PLANETENTRAEGER 150 42C	939251501	35	1	369	933074801	DREHWERKANTRIEB
PLANETENTRAEGER 150 42C	939257301	50	1	369	933074801	DREHWERKANTRIEB
PLANETENTRAEGER 170 42Cr	939250301	15	1	369	933074801	DREHWERKANTRIEB
PLANETENTRAEGER 215 42Cr	938760101	40	1	383	968607101	PLANETENGETRIEBE
PLANETENTRAEGER 275 42C	927602001	30	1	383	968607101	PLANETENGETRIEBE
PLATTE	10874831	3	1	530	11170518	VENTILBLOCK
PLATTE 10X310X200 S355MC	97124340	5	4	454	919501608	HYDRAULISCHE BALLASTIER
PLATTE 126X24X1.5 EPDM 80	979142208	8	4	350	965784408	DACHSCHEIBE VORM.
PLATTE 15X30X50 PA6G	288176208	101	1	124	918728408	MONTAGETEILE DREHBUEHN
PLATTE S235JR	9275826	16	1	233	10116110	VERSCHLUSSTEILE
PLEUELSCHRAUBE M14X1,5X6	9174981	1	2	158	11348072	PLEUELSTANGE
PLEUELSTANGE	571582508	11	1	209	5700161	LUFTPRESSER
PLEUELSTANGE R-MOTORX8	11348054	1	1	158	11348072	PLEUELSTANGE
PLEUELSTANGE R-MOTORX8	11348072	60	4	131	13455311	DIESELMOTOR
PNEUMATIKLEITUNGEN OW	969849208	10	1	566	969767908	VERROHRUNG DRUCKLUFTA
PODEST 120X460X907 ALMG3	12102326	3	1	420	919484908	ABSTURZSICHERUNG
PODEST 40X103X720 ALMG3 E	12103227	5	3	420	919484908	ABSTURZSICHERUNG
PODEST 40X240X800 ALMG3 E	12102280	4	3	420	919484908	ABSTURZSICHERUNG
PODEST SCHWK. T ZN O	96044379	10	1	420	919484908	ABSTURZSICHERUNG
POLYAMIDROHR DIN 73378 6	10873149	14	40	478	915300208	ZENTRALSCHMIERANLAGE O
POLYAMIDROHR DIN 73378 6	10873149	5	5	587	921444108	ZENTRALSCHMIERANLAGE
POLYAMIDROHR DIN 73378 6	10873149	313	2	598	96075086	HYDRAULIK HILFSHUBWERK D
PRATZE 42CrMoS4+QT	10150144	1	1	187	10135434	BEFESTIGUNG DRUCKROHR
PRATZE 42CrMoS4+QT	10150144	2	1	189	10153151	DRUCKROHRSTUTZEN MIT BE
PRATZE 42CrMoS4+QT	11403994	2	1	184	10152867	INJEKTOR MIT BEFEST.
PRESSKLEMME 2 CU	11170565	7	16	47	968374708	MONTAGETEILE
PRESSKLEMME 2 CU	11170565	3	4	50	96070203	TRANSPORTSICHERUNG
PRESSKLEMME 2 CU	11170565	13	16	70	915447908	HYDRAULISCHE ABSTUETZUN
PRESSKLEMME 2 CU	11170565	7	2	125	963260408	VERRIEGELUNG
PRESSKLEMME 2 CU	11170565	7	2	126	96049764	VERRIEGELUNG
PRESSKLEMME 2 CU	11170565	9	2	750	96062062	KLAPPKONSOLE VORM.
PRESSKLEMME 2 CU	11170565	29	2	771	918596708	KOPFSTUECK VORM.

Bezeichnung	Artikel	Pos.	Menge	Seite	Baugruppe	Bezeichnung
PRESSKLEMME 2 CU	11170565	4	4	783	968952708	HAKENSTANGE ANBAU
PROFIL	10331637	6	6	274	97095949	KOMBIKUEHLER
PROFIL 667X50X12 ALMGSI0.5	97001317	25	1	326	968483708	TRITT KPL.
PROFIL HINTEN 820X125X72.6	97000517	32	1	361	917304708	SCHIEBETUER EINBAU
PROFIL VORN 803X122X44 1.4	97000516	31	1	361	917304708	SCHIEBETUER EINBAU
PROFILDICHTRING DIN 3869 1	10040984	(2)	1	243	12583633	MOTORREGELUNGSENSORIK
PROFILDICHTRING DIN 3869	10335629	3	1	151	10118839	OELEINFUELLUNG
PROFILDICHTRING DIN 3869	10335629	231	1	250	10148366	DS DIESELMOTOR
PROFILRING P-R8-L/S A2GS	477100208	3	1	283	96038054	STUTZEN KPL.
PROFILRING PR10-S/L A3P	477100308	32	1	458	91003833	HARNSTOFFANLAGE
PROFILRING PR6-S/L A3P	477101408	314	2	598	96075086	HYDRAULIK HILFSHUBWERK D
PROFILSCHELLE 137,6/K1	10494115	182	3	470	919674308	ABGASANLAGE
PROFILSCHELLE 137,6/K1	10494115	181	2	473	96051762	ABGASANLAGE VORM.
PROFILSCHELLE 163,0/K1	10494116	183	2	470	919674308	ABGASANLAGE
PROFILSCHELLE 163,0/K1	10494116	182	1	473	96051762	ABGASANLAGE VORM.
PROFILSCHELLE 312/K1	12560584	60	2	475	11429845	SCRFILTER-BAUGRUPPE
PRUEFANSCHLUSS M22X1,5	502921408	641	1	566	969767908	VERROHRUNG DRUCKLUFTA
PUFFER 30X20 GUMMI 50SH	97025484	10	4	268	918811108	ANTRIEBSAGGREGAT VORM.
PUMPE MP41 SPF	591055408	2	2	356	966408908	WASSERBEHAELTER KPL.
PUMPENELEMENT	10216340	13	1	480	10327065	ELEKTROPUMPE
PUMPENELEMENT	774387508	11	1	480	10327065	ELEKTROPUMPE
PUMPENGEHAEUSE	10014693	4	1	480	10327065	ELEKTROPUMPE
PUMPENRUECKLAUF	774372808	13	1	478	915300208	ZENTRALSCHMIERANLAGE O
PUMPENWELLE 31CrMoV9	9078964	2	1	249	9078962	NEBENABTRIEB VORM.
RADIALDICHTRING 70X90X7	7008986	10	1	43	592326914	VERSTELLMOTOR
RADIALGEBLAESE	11083445	45	1	388	11083498	HEIZKLIMAGERAET
RADIALGEBLAESE D=170 26VD	13366890	45	1	388	11083498	HEIZKLIMAGERAET
RADIALWELLENDICHTRING AS	10006550	1	1	156	10153583	KURBELWELLENDICHTUNG
RADIALWELLENDICHTRING B	710062601	63	2	383	968607101	PLANETENGETRIEBE
RADIALWELLENDICHTRING B	710062601	63	2	584	938759801	PLANETENGETRIEBE
RADIALWELLENDICHTRING D	710032508	22	1	381	938759601	SEILTROMMEL
RADIALWELLENDICHTRING DI	10167462	64	2	369	933074801	DREHWERKANTRIEB
RADIALWELLENDICHTRING D	710059301	11	1	369	933074801	DREHWERKANTRIEB
RADIALWELLENDICHTRING DI	710054601	(1)	1	383	968607101	PLANETENGETRIEBE
RADIALWELLENDICHTRING DI	710054601	11	1	584	938759801	PLANETENGETRIEBE
RADMUTTER DIN 74361 M20X	520303308	10	1	209	5700161	LUFTPRESSER
RAENDELKNOPF 21-M4 PA	10652206	8	2	346	916162508	SCHEIBEN EINBAU
RAENDELKNOPF PA	10800916	49	4	338	917305408	INNENVERKLEIDUNG EINBAU
RAENDELMUTTER	10217383	9	2	539	571817608	WEGEVENTIL
RAENDELMUTTER	10488102	6	1	532	11002717	WEGEVENTIL
RAENDELMUTTER	10872448	5	1	544	571737808	WEGEVENTIL
RAENDELMUTTER	11342417	(2)	1	35	10675161	STEUERBLOCK
RAENDELMUTTER	12100707	100	1	401	962282308	ARMLEHNE RECHTS
RAENDELMUTTER	571455308	(1)	1	542	570527908	WEGEVENTIL
RAENDELSCHRAUBE M5X10	10449664	84	6	502	96025348	GRUNDAUFBAU
RASTBOLZEN NIROSTA	704231608	12	1	623	915403108	ANBAUTEILE KAMERA
RASTE	10492347	19	1	397	10877138	FAHRERSITZ
RASTRIEGEL NIROSTA	10010025	35	2	420	919484908	ABSTURZSICHERUNG
RAUPENBESTUECKUNG 900 F	915562508	30	1	12		LIEBHERR LTR 1100
RAUPENKETTE KPL 62GL.B7B	790258414	10	1	55	10430241	RAUPENKETTE KPL.
RAUPENKETTE KPL. 62GL.B7	10430241	1	2	53	915562508	RAUPENBESTUECKUNG
RAUPENTRAEGER KPL.LI.	96062228	3	1	19	96062225	UNTERWAGEN KPL.
RAUPENTRAEGER KPL.RE.	96062226	2	1	19	96062225	UNTERWAGEN KPL.
RAUPENTRAEGER LI.	10225967	1	1	27	96062228	RAUPENTRAEGER KPL.LI.
RAUPENTRAEGER RE.	10225969	1	1	22	96062226	RAUPENTRAEGER KPL.RE.
RECHTECKRING 12,42X1,68	571915108	10	1	543	10333672	STEUERBLOCK
RECHTECKRING 32,30X2,80X3,	7367610	300	3	33	967304508	HYDRAULIK UNTERWAGEN
RECHTECKRING 40,15-2,80-1"	10490781	302	2	33	967304508	HYDRAULIK UNTERWAGEN
RECHTECKRING 45,05X2,80X3,	7367612	310	8	33	967304508	HYDRAULIK UNTERWAGEN
REDUKTION M20X1,5/M12X1,5	602606108	503	1	693	96063864	KABELSTRANG

Bezeichnung	Artikel	Pos.	Menge	Seite	Baugruppe	Bezeichnung
REDUKTION M25X1,5/M20X1,5	602606408	508	1	589	96055198	KABELSTRANG
REDUKTION M25X1,5/M20X1,5	602606408	504	1	693	96063864	KABELSTRANG
REDUKTION M25X1,5/M20X1,5	602606408	502	1	698	96063213	LEITUNG
REDUKTION M32X1,5/M25X1,5	602606608	505	1	694	96063583	LEITUNG
REDUKTION M40X1,5/M25X1,5	602606708	507	1	492	96063650	LEITUNG
REDUKTION M40X1,5/M32X1,5	602606808	511	1	90	96062920	KABELSTRANG
REDUKTIONSMITTEL-DRUCK	10144297	19	1	458	91003833	HARNSTOFFANLAGE
REDUKTIONSMITTEL-SAUGLEI	10144270	18	1	461	96074081	HARNSTOFFTANK VORM.
REDUKTIONSMITTELINJEKT	12445245	12	1	458	91003833	HARNSTOFFANLAGE
REDUKTIONSMITTELPUMPE A	11373478	11	1	461	96074081	HARNSTOFFTANK VORM.
REDUZIERSTUTZEN RI 8 M16x	10120066	19	1	223	12512627	ABGASSTUTZEN ANBAU
REDUZIERUNG M22/M14X1,5	10354839	4	1	563	10097345	OEL-LUFTKUEHLER
REFLEKTOR	607225008	5	1	620	913978308	ZUSATZELEKTRIK VORWAE
REGELVENTIL EL-DA	9074716	4	1	261	12487540	HYDRAULIKDOPPELPUMPE
REIBPLATTE 3M TYP35	97116895	8	3	367	919235408	DREHWERK
REIBSCHEIBE	975529708	150	2	407	96022627	DREHBUEHNENVERKLEIDUN
REIFENFUELLSCHLAUCH 4,5X	520190408	67	1	104	928569808	GRUNDWERKZEUG
RELAIS 24V/1S 26X26X24MM	630105108	7	5	498	919940108	EINBAUTEILE SCHALTSCHRAN
RELAIS 24V/1S 26X26X24MM	630105108	(1)	1	562	919528608	OELKUEHLER EINBAU
RELAIS 24V/1W 26X26X24MM	630105408	8	1	498	919940108	EINBAUTEILE SCHALTSCHRAN
RELAISSTECKSOCKEL	630122908	505	2	91	96062921	KABELSTRANG
RELAISSTECKSOCKEL	630122908	504	13	500	96059659	DRAEHTE GRUNDAUFBAU KPL
RELAISSTECKSOCKEL	630122908	503	1	704	96062034	DRAEHTE KLEMMKASTEN KPL
RELING	916162808	19	1	319	919010108	KRANFUEHRERKABINE VORM.
REP-DICHTSCHEIBE 151,6X15	12993450	2	1	138	10154458	ZYLINDER
REPARATURSATZ	10650501	(998)	1	516	96045552	HYDRAULIK OBERWAGEN
REPARATURSATZ	10650501	(998)	1	517	96045552	HYDRAULIK OBERWAGEN
REPARATURSATZ	11003094	999	1	567	502657308	LUFTTROCKNER
REPARATURSATZ	12107162	(999)	1	760	918533508	ADAPTER VORM.
REPARATURSATZ	571582108	1	1	209	5700161	LUFTPRESSER
REPARATURSATZ	571582708	15	1	209	5700161	LUFTPRESSER
REPARATURSATZ	571838008	98	1	766	10801932	HANDPUMPE
REPARATURSATZ -E DF/LF	10035534	(2)	1	516	96045552	HYDRAULIK OBERWAGEN
REPARATURSATZ BREMSE LI	12572663	950	1	369	933074801	DREHWERKANTRIEB
REPARATURSATZ SICHERUN	967361508	3	1	629	773941308	TASCHENSCHLOSS
REPARATURSEGMENT 1-FAC	10814497	1	1	57	965336308	RS RAUPENKETTE
REPARATURSEGMENT 2-FAC	10816194	1	1	58	965359808	RS RAUPENKETTE
REPARATURSEGMENT 3-FAC	10816195	1	1	59	965359908	RS RAUPENKETTE
RIEGEL SCHWK.	966825408	10	1	361	917304708	SCHIEBETUER EINBAU
RIEGELKLEMME	602116008	14	4	319	919010108	KRANFUEHRERKABINE VORM.
RIEMENSCHEIBE 31.5X8PKX21	10146185	1	1	157	10141974	KURBELWELLENANBAUTEILE
RILLENKUGELLAGER	10114839	4	1	95	10878097	SCHLEIFRINGUEBERTRAGER
RILLENKUGELLAGER 50X65X7	10114838	10	1	95	10878097	SCHLEIFRINGUEBERTRAGER
RILLENKUGELLAGER DIN 625	745139101	66	1	369	933074801	DREHWERKANTRIEB
RILLENKUGELLAGER DIN 625	745129501	4	1	364	966253908	WAGEN
RILLENKUGELLAGER DIN 625	10294494	3	6	326	968483708	TRITT KPL.
RING	570110708	5	14	373	570109508	TRIEBWERK
RING RD20X8 S355J2C+C FE//	950306608	15	2	655	91000049	ANLENKSTUECK VORM.
RINGLUEFTER D=654	550639508	101	1	272	96020819	KUEHLER VORM.
RINGSCHRAUBE DIN 580 M12	10179932	310	1	291	969543308	KRAFTSTOFFBEHAELTER VO
RINGSCHRAUBE DIN 580 M12	10179932	310	1	295	969219208	OELBEHAELTER VORM.
RINGSCHRAUBE DIN 580 M16X	402600508	46	1	71	10356288	ABSTUETZZYLINDER
RIPPENROHR ALU	10493045	168	1	566	969767908	VERROHRUNG DRUCKLUFTA
ROHR 10.0 X38 E235+N	97038827	4	2	127	968305308	ENDSCHALTER VORM.
ROHR 100X33 ABS	97005143	4	1	340	966282308	VERKLEIDUNG LI.
ROHR 114,3X6,3X132 S355J2H	953162308	3	1	727	914557108	EINBAU NACKENROLLE
ROHR 12.0X1285 E235+N	97066840	(299)	1	268	918811108	ANTRIEBSAGGREGAT VORM.
ROHR 15.0 X24 S355J2C+C FE	971805708	19	4	395	918810308	STEUERSTAND
ROHR 15X1,5X35 E235+N VER	943122808	3	2	127	968305308	ENDSCHALTER VORM.
ROHR 16X2X70 E235+N VERZ	946104608	11	2	268	918811108	ANTRIEBSAGGREGAT VORM.

Bezeichnung	Artikel	Pos.	Menge	Seite	Baugruppe	Bezeichnung
ROHR 18.0X622 X5CRNI18-10	97008549	1	1	441	966707708	SPIEGELHALTER VORM.
ROHR 1959X1553X30 X5CRNI	975218508	1	2	331	916162808	RELING
ROHR 22.0X633 X6CRNITI1810	97045170	(297)	1	268	918811108	ANTRIEBSAGGREGAT VORM.
ROHR 30/FLEXIBEL PAK	553159408	6	0.67	446	96019783	ZUSATZHEIZUNG VORM.
ROHR 38.0X615 S355J2H FE//	97153021	37	1	673	91000054	TELESKOP 5 VORM.
ROHR 48.3 X0 S235JRH FE//ZN	938545908	11	2	763	917695308	UMLENKROLLE VORM.
ROHR 49X68X78 EPDM	97006624	4	1	355	916163008	WISCHANLAGE EINBAU
ROHR 8.0X320 X5CRNI18-10	97122611	2	1	283	96038054	STUTZEN KPL.
ROHR 85X27 ABS	97005144	3	1	341	966282408	VERKLEIDUNG RE.
ROHR 88.9X36 S235JRH FE//ZN	977267208	11	4	30	992078314	MITTELTEIL
ROHR 8X1X222	9080660	10	1	146	10155227	OELWANNE VORM.
ROHR KPL.	918998614	10	2	19	96062225	UNTERWAGEN KPL.
ROHR KPL.	96047747	(1)	1	470	919674308	ABGASANLAGE
ROHR KPL.	96051456	(2)	1	470	919674308	ABGASANLAGE
ROHR KPL.	968661408	405	2	269	918811108	ANTRIEBSAGGREGAT VORM.
ROHR KPL. 10X1,5X134	921512708	491	1	711	967498308	ROHRLEITUNGEN TELE
ROHR KPL. 10X1,5X167	921513008	494	1	711	967498308	ROHRLEITUNGEN TELE
ROHR KPL. 10X1,5X174	921513108	495	1	711	967498308	ROHRLEITUNGEN TELE
ROHR KPL. 10X1,5X214	921512608	490	1	711	967498308	ROHRLEITUNGEN TELE
ROHR KPL. 10X1,5X278	921513208	496	1	711	967498308	ROHRLEITUNGEN TELE
ROHR KPL. 10X1,5X679	921512808	492	1	711	967498308	ROHRLEITUNGEN TELE
ROHR KPL. 10X1,5X992	921512908	493	1	711	967498308	ROHRLEITUNGEN TELE
ROHR KPL. 12X1,5X165	926894508	476	1	573	919028108	ROHRLEITUNGEN OBERWAGE
ROHR KPL. 18X1,5X1291	969865708	(382)	1	566	969767908	VERROHRUNG DRUCKLUFTA
ROHR KPL. 18X1,5X1312	969865608	(381)	1	566	969767908	VERROHRUNG DRUCKLUFTA
ROHR KPL. 18X1,5X1636	969865508	(380)	1	566	969767908	VERROHRUNG DRUCKLUFTA
ROHR KPL. 30X4X1018,5	96025929	432	1	573	919028108	ROHRLEITUNGEN OBERWAGE
ROHR KPL. 30X4X1033,9	96025928	431	1	573	919028108	ROHRLEITUNGEN OBERWAGE
ROHR KPL. 30X4X1079,7	96025930	433	1	573	919028108	ROHRLEITUNGEN OBERWAGE
ROHR KPL. 30X4X1081,4	96025927	430	1	573	919028108	ROHRLEITUNGEN OBERWAGE
ROHR KPL. 35X2X473	963533708	291	1	573	919028108	ROHRLEITUNGEN OBERWAGE
ROHR KPL. 38X5X1410	968613908	478	1	573	919028108	ROHRLEITUNGEN OBERWAGE
ROHR KPL. 38X5X1532	968613808	477	1	573	919028108	ROHRLEITUNGEN OBERWAGE
ROHR KPL. 38X5X203	921297408	497	1	711	967498308	ROHRLEITUNGEN TELE
ROHR KPL. 38X5X206	921297608	499	1	711	967498308	ROHRLEITUNGEN TELE
ROHR KPL. 38X5X258	921297508	498	1	711	967498308	ROHRLEITUNGEN TELE
ROHR KPL. 38X5X260	968612908	252	1	601	968543908	ROHRLEITUNGEN HUBWERK
ROHR KPL. 38X5X260	968613508	473	1	573	919028108	ROHRLEITUNGEN OBERWAGE
ROHR KPL. 38X5X356	968613608	474	3	573	919028108	ROHRLEITUNGEN OBERWAGE
ROHR KPL. 38X5X380	968613408	472	1	573	919028108	ROHRLEITUNGEN OBERWAGE
ROHR KPL. 38X5X615	968613708	475	1	573	919028108	ROHRLEITUNGEN OBERWAGE
ROHR KPL. 42X3X1970	968614008	479	1	573	919028108	ROHRLEITUNGEN OBERWAGE
ROHR KPL. 42X3X440	963533608	290	1	573	919028108	ROHRLEITUNGEN OBERWAGE
ROHR KPL. 6X1X210	962261308	(487)	1	717	966004808	ZUSATZHYDRAULIK KLAPPSPI
ROHR SCHWK.	96055524	66	1	673	91000054	TELESKOP 5 VORM.
ROHR SCHWK. RAL 9005,M,G	966620008	13	1	338	917305408	INNENVERKLEIDUNG EINBAU
ROHR SCHWK. RAL 9005,M,G	966621108	12	1	338	917305408	INNENVERKLEIDUNG EINBAU
ROHR SCHWK. SCHWARZ PUL	966513708	17	1	349	966497908	FRONTSCHEIBE KPL.
ROHR SCHWK. SCHWARZ PUL	966662508	6	1	319	919010108	KRANFUEHRERKABINE VORM.
ROHR ST12 SPF	97087964	6	1	476	918729308	LUFTFILTERANLAGE
ROHRLEITUNG	10143542	4	1	196	10143341	KRAFTSTOFFLEITUNGEN
ROHRLEITUNG	10143543	3	1	196	10143341	KRAFTSTOFFLEITUNGEN
ROHRLEITUNG 10X1	12921811	1	1	217	10148216	ROHRLEITUNG ANBAU
ROHRLEITUNG 15X1,5	10130104	6	1	196	10143341	KRAFTSTOFFLEITUNGEN
ROHRLEITUNG 22X1,5	10140732	9	1	201	10145173	ANSAUGSTUTZEN ANBAU
ROHRLEITUNG 22X1,5	10145175	1	1	211	10145176	ROHRLEITUNG ANBAU
ROHRLEITUNG 6X1	10132170	3	1	198	10143342	LECKOELRUECKLAUF
ROHRLEITUNG 6X1	10133607	13	1	198	10143342	LECKOELRUECKLAUF
ROHRLEITUNG 6X1	10141846	8	1	198	10143342	LECKOELRUECKLAUF
ROHRLEITUNG 6X1	11420632	3	1	224	11420633	TAKTVENTIL

Bezeichnung	Artikel	Pos.	Menge	Seite	Baugruppe	Bezeichnung
ROHRLEITUNG 6X1	12429430	4	1	224	11420633	TAKTVENTIL
ROHRLEITUNG 6X1	9078984	4	1	248	9078961	NEBENABTRIEB ANBAU
ROHRLEITUNG 8X1	10132180	19	1	198	10143342	LECKOELRUECKLAUF
ROHRLEITUNG 8X1	10145069	17	1	223	12512627	ABGASSTUTZEN ANBAU
ROHRLEITUNG 8X1	10145070	18	1	223	12512627	ABGASSTUTZEN ANBAU
ROHRLEITUNG 8X2	10143251	1	1	198	10143342	LECKOELRUECKLAUF
ROHRLEITUNG ANBAU	10145176	333	1	133	13455311	DIESELMOTOR
ROHRLEITUNG ANBAU	10148216	381	1	133	13455311	DIESELMOTOR
ROHRLEITUNGEN ABGASANL	96051451	90	1	470	919674308	ABGASANLAGE
ROHRLEITUNGEN ANTRIEBSA	96002103	7	1	268	918811108	ANTRIEBSAGGREGAT VORM.
ROHRLEITUNGEN HUBWERK	968543908	11	1	598	96075086	HYDRAULIK HILFSHUBWERK D
ROHRLEITUNGEN KLAPPSPI	967498608	11	1	717	966004808	ZUSATZHYDRAULIK KLAPPSPI
ROHRLEITUNGEN OBERWAGE	919028108	193	1	14		LIEBHERR LTR 1100
ROHRLEITUNGEN TELE SCR	967498308	11	1	709	965994108	HYDRAULIK TELE
ROHRLEITUNGEN ZUSATZTEIL	969849308	11	1	566	969767908	VERROHRUNG DRUCKLUFTA
ROHRSCHELLE 12/15	774221408	3	1	734	96056553	GRUNDHALTER VORM.
ROHRSCHELLE 33/20	774225008	10	2	446	96019783	ZUSATZHEIZUNG VORM.
ROHRSCHELLE 43/20	774221708	21	3	444	918759708	ZUSATZHEIZUNG OW
ROHRSCHELLE 8 S235JR	10127139	23	2	223	12512627	ABGASSTUTZEN ANBAU
ROHRSCHELLE DIN3016 8X15	10876636	180	1	470	919674308	ABGASANLAGE
ROHRSTUTZEN GSCK45	97042155	6	1	392	969300008	HEIZUNG VORM.
ROHRSTUTZEN R1/4"	10014698	1	1	483	774375108	DURCHGANGSNIPPELBLOCK
ROLLE 130.0X56 35NICRMOV	97053660	(1)	1	763	917695308	UMLENKROLLE VORM.
ROLLE 22X13 PA 12	97001109	6	2	364	966253908	WAGEN
ROLLE 30X11 PA 12	97008171	5	1	364	966253908	WAGEN
ROLLE 50.0X25 S355J2+AR FE	947868208	2	1	748	925280008	KONSOLE VORM.
ROLLE 50.0X25 S355J2+AR FE	947868208	2	2	751	929582108	HALTERUNG VORM.
ROLLE 50.0X25 S355J2+AR FE	947868208	22	2	768	91001040	ANLENKSTUECK VORM.
ROLLE KPL.	969174808	3	1	763	917695308	UMLENKROLLE VORM.
ROLLENDREHVERBINDUNG	917472008	117	1	13		LIEBHERR LTR 1100
ROLLENDREHVERBINDUNG 13	931696301	1	1	365	917472008	ROLLENDREHVERBINDUNG
ROLLENHALTER SCHWK.	962051508	12	2	581	96062734	HILFSHUBWERK
ROLLENHALTER SCHWK.	967708808	4	1	723	964502908	MASTNASE VORM.
ROLLENHALTER SCHWK. FE//	969142508	2	1	763	917695308	UMLENKROLLE VORM.
ROLLENHALTERUNG FE//ZNNI	927493908	21	2	768	91001040	ANLENKSTUECK VORM.
ROLLENKAEFIG	927514301	16	38	383	968607101	PLANETENGETRIEBE
ROLLENKAEFIG	927514301	16	38	584	938759801	PLANETENGETRIEBE
ROLLENMUNDSTUECK	749013808	4	1	655	91000049	ANLENKSTUECK VORM.
ROLLENMUNDSTUECK	749013808	15	1	661	91000050	TELESKOP 1 VORM.
ROLLENMUNDSTUECK	749013808	15	1	664	91000051	TELESKOP 2 VORM.
ROLLENMUNDSTUECK	749013808	15	1	667	91000052	TELESKOP 3 VORM.
ROLLENMUNDSTUECK	749013808	15	1	670	91000053	TELESKOP 4 VORM.
ROLLENSTOESSEL	10153536	1	2	172	9079870	STEUERUNGSTEILE
ROLLENTRAEGER SCHWK.	929591608	6	1	751	929582108	HALTERUNG VORM.
ROLLO	11002446	27	1	338	917305408	INNENVERKLEIDUNG EINBAU
ROLLO	11002447	26	1	338	917305408	INNENVERKLEIDUNG EINBAU
ROTOR	11171311	1	1	731	12102807	WINDGESCHWINDIGKEITSGE
ROTORDICHTUNG 150X165,5X	10492566	(31)	8	42	96048348	HYDR.INSTALLATIONSTEILE
RS ANSCHLUSSGEHAEUSE N	9889837	90	1	261	12487540	HYDRAULIKDOPPELPUMPE
RS DECKEL NG 100	9275443	85	2	261	12487540	HYDRAULIKDOPPELPUMPE
RS DRUCKREGLER	11003089	998	1	567	502657308	LUFTTROCKNER
RS DRUCKROHRSTUTZEN	10141140	2	1	185	13743036	RS INJEKTOR
RS DRUCKROHRSTUTZEN	10141140	1	1	191	13757616	RS DRUCKROHRSTUTZEN
RS DRUCKROHRSTUTZEN	13757616	200	1	189	10153151	DRUCKROHRSTUTZEN MIT BE
RS FLANSCH	10145815	8	1	170	10147787	NOCKENWELLE KPL.
RS GRIFF	12100622	1	1	342	11002447	ROLLO
RS HOCHDRUCKANSCHLUSS	12932487	270	1	182	10146658	HOCHDRUCKPUMPE
RS HOCHDRUCKSENSOR	12881001	260	1	182	10146658	HOCHDRUCKPUMPE
RS INJEKTOR LI2.7-20-SF-950	13743036	200	1	184	10152867	INJEKTOR MIT BEFEST.
RS KABELSATZ	967363808	999	1	437	10340105	WARNLEUCHTE

Bezeichnung	Artikel	Pos.	Menge	Seite	Baugruppe	Bezeichnung
RS KOLBEN MIT GLEITSCHUH	9073393	77	2	261	12487540	HYDRAULIKDOPPELPUMPE
RS KURBELWELLENDICHTU	10121335	2	1	156	10153583	KURBELWELLENDICHTUNG
RS KURBELWELLENDICHTU	10141178	520	1	250	10148366	DS DIESELMOTOR
RS KURBELWELLENLAGERUN	10116939	1	1	154	9076457	KURBELWELLENLAGERSATZ
RS MAGNET	9273187	97	2	261	12487540	HYDRAULIKDOPPELPUMPE
RS PLEUELLAGER D930	10116934	50	1	158	11348072	PLEUELSTANGE
RS RAUPENKETTE 1-FACH	965336308	990	1	55	10430241	RAUPENKETTE KPL.
RS RAUPENKETTE 2-FACH	965359808	991	1	55	10430241	RAUPENKETTE KPL.
RS RAUPENKETTE 3-FACH	965359908	992	1	55	10430241	RAUPENKETTE KPL.
RS RUECKZUGKUGEL+RUECK	9073389	78	2	261	12487540	HYDRAULIKDOPPELPUMPE
RS SAUGDROSSELVENTIL	12490199	230	1	182	10146658	HOCHDRUCKPUMPE
RS SCHWENKJOCH NG 125	10139744	84	2	261	12487540	HYDRAULIKDOPPELPUMPE
RS TRIEBWERK NG 125	9073916	92	1	261	12487540	HYDRAULIKDOPPELPUMPE
RS TRIEBWERK NG 125-130	9073486	94	1	261	12487540	HYDRAULIKDOPPELPUMPE
RS VENTIL	12917604	250	1	182	10146658	HOCHDRUCKPUMPE
RS VENTIL	12966286	240	1	182	10146658	HOCHDRUCKPUMPE
RS VERSCHLUSSRING NG 125	9268016	96	1	261	12487540	HYDRAULIKDOPPELPUMPE
RS VERSCHLUSSSCHRAUBE	12932488	275	1	182	10146658	HOCHDRUCKPUMPE
RS VERSTELLUNG	10872672	998	1	342	11002447	ROLLO
RS VORFOERDERPUMPE	12923599	220	1	182	10146658	HOCHDRUCKPUMPE
RS WASSERHEIZGERAET	96004475	999	1	448	10876576	WASSERHEIZGERAET
RS WELLE NG 125	9073528	93	1	261	12487540	HYDRAULIKDOPPELPUMPE
RS WELLE NG 125	9073915	95	1	261	12487540	HYDRAULIKDOPPELPUMPE
RS ZYLINDER+STEUERPLAT	9073918	81	1	261	12487540	HYDRAULIKDOPPELPUMPE
RS ZYLINDER+STEUERPLAT	9073484	79	1	261	12487540	HYDRAULIKDOPPELPUMPE
RS ZYLINDERKOPF	13486106	(998)	1	160	10149580	ZYLINDERKOPF ANBAU
RUECKENTEIL	10663466	1	1	397	10877138	FAHRERSITZ
RUECKFAHRWARNUNG 12-36	614009908	11	1	84	96075205	SCHALTKASTEN VORM.
RUECKLAUFFILTER 400L/MIN	10871354	100	2	295	969219208	OELBEHAELTER VORM.
RUECKSCHLAGVENTIL	10012943	3	1	550	10663060	STEUERBLOCK
RUECKSCHLAGVENTIL	10119971	4	1	152	10139112	OELLEITUNG VORM.
RUECKSCHLAGVENTIL	10430042	91	1	543	10333672	STEUERBLOCK
RUECKSCHLAGVENTIL	10430042	131	1	543	10333672	STEUERBLOCK
RUECKSCHLAGVENTIL	10801853	40	1	71	10356288	ABSTUETZZYLINDER
RUECKSCHLAGVENTIL	11170277	2	1	547	511306608	STEUERBLOCK
RUECKSCHLAGVENTIL	11692099	25	1	628	12102922	WIPPZYLINDER
RUECKSCHLAGVENTIL	12101681	3	4	482	12101719	VERTEILERKOMBINATION
RUECKSCHLAGVENTIL	510741308	4	8	538	511307808	STEUERLEISTE
RUECKSCHLAGVENTIL	570651408	27	1	528	11170515	VENTILBLOCK
RUECKSCHLAGVENTIL	570651408	27	1	530	11170518	VENTILBLOCK
RUECKSCHLAGVENTIL	570651408	27	1	602	10665173	STEUERBLOCK
RUECKSCHLAGVENTIL	571889008	4	2	534	10802090	STEUERBLOCK
RUECKSCHLAGVENTIL	591055608	10	2	355	916163008	WISCHANLAGE EINBAU
RUECKSCHLAGVENTIL	774378108	(1)	1	478	915300208	ZENTRALSCHMIERANLAGE O
RUECKSCHLAGVENTIL 2.5BAR	11839607	100	1	263	918728708	ANTRIEBSAGGREGAT KPL.
RUECKSCHLAGVENTIL 250B	511481508	151	1	591	96064697	HYDRAULIK HILFSHUBWERK
RUECKSCHLAGVENTIL 250BA	511458608	188	1	517	96045552	HYDRAULIK OBERWAGEN
RUECKSCHLAGVENTIL 250BA	511457808	401	2	295	969219208	OELBEHAELTER VORM.
RUECKSCHLAGVENTIL 400BA	510412408	164	1	516	96045552	HYDRAULIK OBERWAGEN
RUECKSCHLAGVENTIL 400BA	510413508	170	1	516	96045552	HYDRAULIK OBERWAGEN
RUECKSCHLAGVENTIL 400BA	511311808	179	1	516	96045552	HYDRAULIK OBERWAGEN
RUECKSCHLAGVENTIL 400BA	511311808	153	1	591	96064697	HYDRAULIK HILFSHUBWERK
RUECKSCHLAGVENTIL 400BA	511446908	190	1	517	96045552	HYDRAULIK OBERWAGEN
RUECKSCHLAGVENTIL 400BA	511460608	152	1	516	96045552	HYDRAULIK OBERWAGEN
RUECKSCHLAGVENTIL 400BA	511460608	152	1	591	96064697	HYDRAULIK HILFSHUBWERK
RUECKSCHLAGVENTIL 400BA	511493708	151	1	709	965994108	HYDRAULIK TELE
RUECKSCHLAGVENTIL 400BA	510410408	189	1	517	96045552	HYDRAULIK OBERWAGEN
RUECKSCHLAGVENTIL 400B	511431514	150	1	63	967301408	HYDRAULIK VORB.
RUECKSCHLAGVENTIL 420BA	510412008	166	1	516	96045552	HYDRAULIK OBERWAGEN
RUECKSCHLAGVENTIL 420BA	511491708	162	3	516	96045552	HYDRAULIK OBERWAGEN

Bezeichnung	Artikel	Pos.	Menge	Seite	Baugruppe	Bezeichnung
RUECKSCHLAGVENTIL 420BA	511491708	161	1	598	96075086	HYDRAULIK HILFSHUBWERK D
RUECKSCHLAGVENTIL 420BA	511432408	178	1	516	96045552	HYDRAULIK OBERWAGEN
RUECKSCHLAGVENTIL 420BA	511432408	175	1	591	96064697	HYDRAULIK HILFSHUBWERK
RUECKZUGPLATTE	570110008	7	1	372	570109008	TRIEBWERK
RUEHRFLUEGEL	10014712	27	1	480	10327065	ELEKTROPUMPE
RUNDLAGER B30X30XM8	726906508	101	1	407	96022627	DREHBUEHNENVERKLEIDUN
RUNDLAGER B30X30XM8	726906508	11	8	562	919528608	OELKUEHLER EINBAU
RUNDLAGER C50X30XM10	726905008	121	2	272	96020819	KUEHLER VORM.
RUNDPUFFER 25X20-M6X38,0	10870544	32	1	420	919484908	ABSTURZSICHERUNG
RUNDUMKENNLEUCHTE 55W	10470032	1	1	106	915731908	EL.TEILE VERSANDMONTAGE
SAE-FLANSCH	12107041	52	3	684	12105406	TELESKOPIERZYLINDER
SAE-FLANSCHVERBINDUNG G	510702408	511	1	517	96045552	HYDRAULIK OBERWAGEN
SAE-FLANSCHVERBINDUNG W	474906708	510	1	517	96045552	HYDRAULIK OBERWAGEN
SAE-FLANSCHVERBINDUNG W	474906708	501	1	591	96064697	HYDRAULIK HILFSHUBWERK
SAE-FLANSCHVERBINDUNG	474906908	501	1	517	96045552	HYDRAULIK OBERWAGEN
SAE-FLANSCHVERBINDUNG	474906608	500	4	33	967304508	HYDRAULIK UNTERWAGEN
SAE-ZWISCHENFLANSCH 1 1/	511519208	509	2	517	96045552	HYDRAULIK OBERWAGEN
SAE-ZWISCHENFLANSCH 1 1/	511519208	500	2	591	96064697	HYDRAULIK HILFSHUBWERK
SAMMELROHR	927892208	322	1	517	96045552	HYDRAULIK OBERWAGEN
SAMMELROHR FE//ZNNI8//CN/	925933208	2	1	295	969219208	OELBEHAELTER VORM.
SAMMELROHR VERZ SPF	10033109	323	1	517	96045552	HYDRAULIK OBERWAGEN
SAUGFLANSCH CR6-FREI	510146208	400	1	272	96020819	KUEHLER VORM.
SAUGFLANSCH CR6-FREI	510146208	514	1	517	96045552	HYDRAULIK OBERWAGEN
SAUGROHR-OEL	974558708	402	1	269	918811108	ANTRIEBSAGGREGAT VORM.
SAUGROHR-OEL G-ALSI10MG	973021008	5	1	295	969219208	OELBEHAELTER VORM.
SAUGROHR-OEL SPF	973861408	202	1	268	918811108	ANTRIEBSAGGREGAT VORM.
SAUGSCHLAUCH	972965408	250	1	263	918728708	ANTRIEBSAGGREGAT KPL.
SCHAEKEL 0,08T NG4 STAINLE	10300552	31	2	349	966497908	FRONTSCHEIBE KPL.
SCHAEKEL 17T SPF	773930308	3	4	738	917893008	ANSCHLAGMITTEL
SCHAEKEL DIN 82101 0,25T N	773933508	3	1	646	925141508	SCHLAUCHFUEHRUNG VORM.
SCHAEKEL DIN 82101 0,25T N	773933508	23	1	723	964502908	MASTNASE VORM.
SCHAEKEL DIN 82101 0,4T N	773930008	1	2	50	96070203	TRANSPORTSICHERUNG
SCHALLDAEMMUNG	96022943	15	1	407	96022627	DREHBUEHNENVERKLEIDUN
SCHALTBLECH 2X139X46 DC0	972373808	50	2	661	91000050	TELESKOP 1 VORM.
SCHALTBLECH 2X139X46 DC0	972373808	50	2	664	91000051	TELESKOP 2 VORM.
SCHALTBLECH 2X139X46 DC0	972373808	50	2	667	91000052	TELESKOP 3 VORM.
SCHALTBLECH 2X139X46 DC0	972373808	50	2	670	91000053	TELESKOP 4 VORM.
SCHALTBLECH 2X139X46 DC0	972373808	86	2	674	91000054	TELESKOP 5 VORM.
SCHALTER	11979975	24	1	397	10877138	FAHRERSITZ
SCHALTKASTEN KPL.	96062918	2	1	81	96062917	ELEKTRIK MITTELSTUECK
SCHALTKASTEN SCHWK. RAL	96072660	1	1	84	96075205	SCHALTKASTEN VORM.
SCHALTKASTEN VORM.	96075205	2	1	82	96062918	SCHALTKASTEN KPL.
SCHALTLEISTE 21X75X160 P	972373708	19	2	667	91000052	TELESKOP 3 VORM.
SCHALTLEISTE 21X75X160 P	972373708	19	2	670	91000053	TELESKOP 4 VORM.
SCHALTLEISTE 21X75X160 P	972373708	85	2	674	91000054	TELESKOP 5 VORM.
SCHALTLEISTE 21X75X160 P	972392108	19	1	661	91000050	TELESKOP 1 VORM.
SCHALTLEISTE 21X75X160 P	972392108	19	1	664	91000051	TELESKOP 2 VORM.
SCHALTNOCKE	11181886	12	1	95	10878097	SCHLEIFRINGUEBERTRAGER
SCHALTSCHRANKDECKEL EIN	968462608	20	1	319	919010108	KRANFUEHRERKABINE VORM.
SCHARNIER 20X20X40/180° G	704258208	47	6	502	96025348	GRUNDAUFBAU
SCHARNIER 35X35X50/180° S	704228108	22	2	119	96045222	MONTAGETEILE
SCHARNIER 35X35X50/180° S	704228108	12	2	287	96024716	BATTERIEKASTEN VORM.
SCHARNIER 35X35X50/180° S	704228108	2	3	410	969425608	KLAPPE VORM.RECHTS
SCHARNIER 35X35X50/180° S	704228108	2	3	416	969399608	KLAPPE VORM.
SCHARNIER 35X35X50/180° S	704228108	3	1	781	968940708	HALTER LINKS
SCHARNIER 35X35X50/180° S	704228108	3	1	782	968940808	HALTER RECHTS
SCHEIBE	510713908	2	1	37	510438508	DRUCKMINDERVENTIL
SCHEIBE	510714108	12	1	37	510438508	DRUCKMINDERVENTIL
SCHEIBE	510797208	5	1	558	511417708	DRUCKBEGRENZUNGSVENTI
SCHEIBE	510797208	5	1	621	511417608	DRUCKBEGRENZUNGSVENTI

Bezeichnung	Artikel	Pos.	Menge	Seite	Baugruppe	Bezeichnung
SCHEIBE	591063508	63	1	432	96056347	ELEKTRIK ANBAUTEILE KABIN
SCHEIBE 10,5X18,5X2	9076638	17	4	222	10140729	ATL-ANBAU
SCHEIBE 1X50X50 DC01 FE//	972260808	43	4	679	91000055	AUSSCHUBMECHANIK
SCHEIBE 20,2X25X3XA GUMMI	710207408	64	1	432	96056347	ELEKTRIK ANBAUTEILE KABIN
SCHEIBE 34X45X1	9078522	6	2	165	11448005	KIPPHEBELBOCK VORM.
SCHEIBE 34X45X1	9078522	6	2	166	12549825	KIPPHEBELBOCK VORM.
SCHEIBE 3X21X21 DC01 FE//	973618208	377	2	269	918811108	ANTRIEBSAGGREGAT VORM.
SCHEIBE 3X60X60 X5CRNI18-1	97147778	74	1	673	91000054	TELESKOP 5 VORM.
SCHEIBE 40/25X18 42CRMO4	959552614	45	48	22	96062226	RAUPENTRAEGER KPL.RE.
SCHEIBE 40/25X18 42CRMO4	959552614	45	48	28	96062228	RAUPENTRAEGER KPL.LI.
SCHEIBE 52,2X107X3 -S355J2G	10144311	11	1	157	10141974	KURBELWELLENANBAUTEILE
SCHEIBE 5X40X40 S355MC FE	97040356	16	3	315	917357108	KRANFUEHRERKABINE ANBA
SCHEIBE 8,4X18X15 -	9177776	10	1	201	10145173	ANSAUGSTUTZEN ANBAU
SCHEIBE 8,4X18X15 -	9177776	2	2	221	10144756	HITZESCHUTZ MIT BEFESTIG
SCHEIBE 85,2X139X9,5 C45	931807501	5	1	369	933074801	DREHWERKANTRIEB
SCHEIBE 8X140X140 S355MC	97016807	12	4	47	968374708	MONTAGETEILE
SCHEIBE 8X65X65 S355MC FE	97038431	13	4	268	918811108	ANTRIEBSAGGREGAT VORM.
SCHEIBE A 10X20X2 200HV-St	10011658	24	1	431	96056347	ELEKTRIK ANBAUTEILE KABIN
SCHEIBE DIN 1440 10 ST VER	421100808	61	8	581	96062734	HILFSHUBWERK
SCHEIBE DIN 1440 32 ST VER	421102608	6	3	77	990618314	TRANSPORTABSTUETZUNG
SCHEIBE DIN 1441 26 -St FLZN	10179376	378	1	272	96020819	KUEHLER VORM.
SCHEIBE DIN 1441 31 ST FLZN	10875638	3	4	422	96044789	SPANNEINHEIT KPL.
SCHEIBE DIN 1441 31 ST FLZN	10875638	20	1	760	918533508	ADAPTER VORM.
SCHEIBE DIN 1441 41 St FLZN	10179377	5	8	70	915447908	HYDRAULISCHE ABSTUETZUN
SCHEIBE DIN 1441 41 St FLZN	10179377	13	1	315	917357108	KRANFUEHRERKABINE ANBA
SCHEIBE DIN 433 19 140HV A3	530609208	65	1	432	96056347	ELEKTRIK ANBAUTEILE KABIN
SCHEIBE DIN 440 6,6 -ST 480H	10875640	21	1	624	96036820	AUSRUESTUNG KAMERA KAB
SCHEIBE DIN 440 V 9 ST VERZ	420604208	109	2	70	915447908	HYDRAULISCHE ABSTUETZUN
SCHEIBE DIN 6340 13 FLZN SP	10179356	375	8	473	96051762	ABGASANLAGE VORM.
SCHEIBE DIN 6340 13 FLZN SP	10179356	42	36	655	91000049	ANLENKSTUECK VORM.
SCHEIBE DIN 6340 13 FLZN SP	10179356	42	36	661	91000050	TELESKOP 1 VORM.
SCHEIBE DIN 6340 13 FLZN SP	10179356	42	36	664	91000051	TELESKOP 2 VORM.
SCHEIBE DIN 6340 13 FLZN SP	10179356	42	24	667	91000052	TELESKOP 3 VORM.
SCHEIBE DIN 6340 13 FLZN SP	10179356	42	24	670	91000053	TELESKOP 4 VORM.
SCHEIBE DIN 6340 17 FLZN SP	4600180	16	12	22	96062226	RAUPENTRAEGER KPL.RE.
SCHEIBE DIN 6340 17 FLZN SP	4600180	16	12	27	96062228	RAUPENTRAEGER KPL.LI.
SCHEIBE DIN 6916 21 C 45 A3	460022203	10	14	22	96062226	RAUPENTRAEGER KPL.RE.
SCHEIBE DIN 6916 21 C 45 A3	460022203	10	14	27	96062228	RAUPENTRAEGER KPL.LI.
SCHEIBE DIN 7349 10,5 200HV-	11658580	12	4	52	968374908	ENDSCHALTER ANBAU
SCHEIBE DIN 7349 10,5 200HV-	11658580	77	1	241	10151329	KABELSATZ ANBAU
SCHEIBE DIN 7349 10,5 200HV-	11658580	4	4	285	918955208	BATTERIEKASTEN KPL.
SCHEIBE DIN 7349 10,5 200HV-	11658580	380	10	408	96022627	DREHBUEHNENVERKLEIDUN
SCHEIBE DIN 7349 10,5 200HV-	11658580	251	4	420	919484908	ABSTURZSICHERUNG
SCHEIBE DIN 7349 10,5 200HV-	11658580	377	4	562	919528608	OELKUEHLER EINBAU
SCHEIBE DIN 7349 10,5 200HV-	11658580	32	9	655	91000049	ANLENKSTUECK VORM.
SCHEIBE DIN 7349 13 200HV F	10006370	383	8	124	918728408	MONTAGETEILE DREHBUEHN
SCHEIBE DIN 7349 13 200HV F	10006370	379	5	415	96024809	DREHBUEHNENVERKLEIDUN
SCHEIBE DIN 7349 13 200HV F	10006370	60	8	581	96062734	HILFSHUBWERK
SCHEIBE DIN 7349 13 200HV F	10006370	8	8	655	91000049	ANLENKSTUECK VORM.
SCHEIBE DIN 7349 13 200HV F	10006370	6	1	737	917825608	ANBAUTEILE
SCHEIBE DIN 7349 17 200HV F	4600021	381	12	124	918728408	MONTAGETEILE DREHBUEHN
SCHEIBE DIN 7349 17 200HV F	4600021	375	4	470	919674308	ABGASANLAGE
SCHEIBE DIN 7349 17 200HV F	4600021	51	5	747	919933308	TRANSPORTHALTERUNG DKS
SCHEIBE DIN 7349 21 100HV F	4600604	375	4	290	917962508	KRAFTSTOFFBEHAELTER AN
SCHEIBE DIN 7349 21 100HV F	4600604	375	4	293	918008908	OELBEHAELTER ANBAU
SCHEIBE DIN 7349 21 100HV F	4600604	11	6	747	919933308	TRANSPORTHALTERUNG DKS
SCHEIBE DIN 7349 6,4 200HV 4	11693878	375	9	408	96022627	DREHBUEHNENVERKLEIDUN
SCHEIBE DIN 7349 6,4 200HV 4	11693878	95	4	420	919484908	ABSTURZSICHERUNG
SCHEIBE DIN 7349 8,4 -A4	11113931	378	10	470	919674308	ABGASANLAGE
SCHEIBE DIN 7349 8,4 200HV 4	11840501	377	4	263	918728708	ANTRIEBSAGGREGAT KPL.

Bezeichnung	Artikel	Pos.	Menge	Seite	Baugruppe	Bezeichnung
SCHEIBE DIN 7349 8,4 200HV 4	11840501	378	17	408	96022627	DREHBUEHNENVERKLEIDUN
SCHEIBE DIN 7349 8,4 200HV 4	11840501	5	4	440	916870808	SPIEGELANBAU DREHBUEHN
SCHEIBE DIN 7349 8,4 200HV 4	11840501	376	8	562	919528608	OELKUEHLER EINBAU
SCHEIBE DIN 7349 8,4 200HV 4	11840501	331	2	566	969767908	VERROHRUNG DRUCKLUFTA
SCHEIBE DIN 7349 8,4 200HV 4	11840501	28	18	655	91000049	ANLENKSTUECK VORM.
SCHEIBE DIN 7989-2 16 -ST F	10875866	382	4	269	918811108	ANTRIEBSAGGREGAT VORM.
SCHEIBE DIN 7989-2 16 -ST F	10875866	18	2	747	919933308	TRANSPORTHALTERUNG DKS
SCHEIBE DIN 7989-2 16 -ST F	10875866	53	2	760	918533508	ADAPTER VORM.
SCHEIBE EN 14399-6 12 300H	10870512	60	8	458	91003833	HARNSTOFFANLAGE
SCHEIBE EN 14399-6 16 300-3	4600242	52	24	31	992078314	MITTELTEIL
SCHEIBE EN 14399-6 16 300-3	4600242	379	8	124	918728408	MONTAGETEILE DREHBUEHN
SCHEIBE EN 14399-6 16 300-3	4600242	379	1	272	96020819	KUEHLER VORM.
SCHEIBE EN 14399-6 24 300-3	4600146	5	48	22	96062226	RAUPENTRAEGER KPL.RE.
SCHEIBE EN 14399-6 24 300-3	4600146	5	48	27	96062228	RAUPENTRAEGER KPL.LI.
SCHEIBE EN 14399-6 24 300-3	4600146	4	8	454	919501608	HYDRAULISCHE BALLASTIER
SCHEIBE EN 14399-6 24 300-3	4600146	7	4	679	91000055	AUSSCHUBMECHANIK
SCHEIBE EN 28738 70 160HV-	11964262	21	4	454	919501608	HYDRAULISCHE BALLASTIER
SCHEIBE ISO 7089 10 200HV-A	500917508	376	12	470	919674308	ABGASANLAGE
SCHEIBE ISO 7089 10 200HV-A	420001114	304	2	63	967301408	HYDRAULIK VORB.
SCHEIBE ISO 7089 10 200HV-A	420001114	18	1	319	919010108	KRANFUEHRERKABINE VORM.
SCHEIBE ISO 7089 10 300HV F	10289795	44	8	30	992078314	MITTELTEIL
SCHEIBE ISO 7089 10 300HV F	10289795	11	12	52	968374908	ENDSCHALTER ANBAU
SCHEIBE ISO 7089 10 300HV F	10289795	7	2	60	991456314	AUFSTIEG KPL.
SCHEIBE ISO 7089 10 300HV F	10289795	377	8	124	918728408	MONTAGETEILE DREHBUEHN
SCHEIBE ISO 7089 10 300HV F	10289795	375	2	263	918728708	ANTRIEBSAGGREGAT KPL.
SCHEIBE ISO 7089 10 300HV F	10289795	380	13	269	918811108	ANTRIEBSAGGREGAT VORM.
SCHEIBE ISO 7089 10 300HV F	10289795	377	2	272	96020819	KUEHLER VORM.
SCHEIBE ISO 7089 10 300HV F	10289795	11	4	315	917357108	KRANFUEHRERKABINE ANBA
SCHEIBE ISO 7089 10 300HV F	10289795	302	6	374	916109208	DREHBUEHNENARRETIERUN
SCHEIBE ISO 7089 10 300HV F	10289795	381	10	408	96022627	DREHBUEHNENVERKLEIDUN
SCHEIBE ISO 7089 10 300HV F	10289795	377	10	473	96051762	ABGASANLAGE VORM.
SCHEIBE ISO 7089 10 300HV F	10289795	326	2	517	96045552	HYDRAULIK OBERWAGEN
SCHEIBE ISO 7089 10 300HV F	10289795	20	8	577	96033759	ANBAUTEILE ARBEITSSCHEIN
SCHEIBE ISO 7089 10 300HV F	10289795	18	2	625	96036821	AUSRUESTUNG KAMERA DRE
SCHEIBE ISO 7089 10 300HV F	10289795	9	20	658	96014777	HUBSEILFUEHRUNG VORM.
SCHEIBE ISO 7089 10 300HV F	10289795	12	6	679	91000055	AUSSCHUBMECHANIK
SCHEIBE ISO 7089 10 300HV F	10289795	43	2	760	918533508	ADAPTER VORM.
SCHEIBE ISO 7089 10 300HV F	10289795	17	3	763	917695308	UMLENKROLLE VORM.
SCHEIBE ISO 7089 12 200HV-A	10410178	376	8	473	96051762	ABGASANLAGE VORM.
SCHEIBE ISO 7089 12 300HV F	10289804	27	3	22	96062226	RAUPENTRAEGER KPL.RE.
SCHEIBE ISO 7089 12 300HV F	10289804	27	3	28	96062228	RAUPENTRAEGER KPL.LI.
SCHEIBE ISO 7089 12 300HV F	10289804	42	24	30	992078314	MITTELTEIL
SCHEIBE ISO 7089 12 300HV F	10289804	28	8	61	917155308	HYDRAULIK VORB.
SCHEIBE ISO 7089 12 300HV F	10289804	33	16	70	915447908	HYDRAULISCHE ABSTUETZUN
SCHEIBE ISO 7089 12 300HV F	10289804	378	4	124	918728408	MONTAGETEILE DREHBUEHN
SCHEIBE ISO 7089 12 300HV F	10289804	8	17	232	10115829	SCHWUNGRADGEHAEUSE AN
SCHEIBE ISO 7089 12 300HV F	10289804	3	8	255	10115780	KUPPLUNGSANBAU
SCHEIBE ISO 7089 12 300HV F	10289804	378	5	269	918811108	ANTRIEBSAGGREGAT VORM.
SCHEIBE ISO 7089 12 300HV F	10289804	376	8	295	969219208	OELBEHAELTER VORM.
SCHEIBE ISO 7089 12 300HV F	10289804	7	2	367	919235408	DREHWERK
SCHEIBE ISO 7089 12 300HV F	10289804	333	3	566	969767908	VERROHRUNG DRUCKLUFTA
SCHEIBE ISO 7089 12 300HV F	10289804	37	34	655	91000049	ANLENKSTUECK VORM.
SCHEIBE ISO 7089 12 300HV F	10289804	12	2	658	96014777	HUBSEILFUEHRUNG VORM.
SCHEIBE ISO 7089 12 300HV F	10289804	37	28	661	91000050	TELESKOP 1 VORM.
SCHEIBE ISO 7089 12 300HV F	10289804	37	28	664	91000051	TELESKOP 2 VORM.
SCHEIBE ISO 7089 12 300HV F	10289804	37	24	667	91000052	TELESKOP 3 VORM.
SCHEIBE ISO 7089 12 300HV F	10289804	37	10	670	91000053	TELESKOP 4 VORM.
SCHEIBE ISO 7089 12 300HV F	10289804	64	3	673	91000054	TELESKOP 5 VORM.
SCHEIBE ISO 7089 12 300HV F	10289804	4	3	737	917825608	ANBAUTEILE
SCHEIBE ISO 7089 12 300HV F	10289804	50	2	760	918533508	ADAPTER VORM.

Bezeichnung	Artikel	Pos.	Menge	Seite	Baugruppe	Bezeichnung
SCHEIBE ISO 7089 14 300HV F	10289805	382	1	272	96020819	KUEHLER VORM.
SCHEIBE ISO 7089 14 300HV F	10289805	13	6	422	96044789	SPANNEINHEIT KPL.
SCHEIBE ISO 7089 16 300HV F	10289806	41	3	30	992078314	MITTELTEIL
SCHEIBE ISO 7089 16 300HV F	10289806	385	3	124	918728408	MONTAGETEILE DREHBUEHN
SCHEIBE ISO 7089 16 300HV F	10289806	21	4	315	917357108	KRANFUEHRERKABINE ANBA
SCHEIBE ISO 7089 16 300HV F	10289806	62	2	581	96062734	HILFSHUBWERK
SCHEIBE ISO 7089 16 300HV F	10289806	34	2	747	919933308	TRANSPORTHALTERUNG DKS
SCHEIBE ISO 7089 16 300HV F	10289806	9	1	763	917695308	UMLENKROLLE VORM.
SCHEIBE ISO 7089 16 300HV F	10289806	35	4	768	91001040	ANLENKSTUECK VORM.
SCHEIBE ISO 7089 18 300HV F	10289807	42	2	679	91000055	AUSSCHUBMECHANIK
SCHEIBE ISO 7089 20 300HV F	10289808	(395)	2	22	96062226	RAUPENTRAEGER KPL.RE.
SCHEIBE ISO 7089 20 300HV F	10289808	250	10	420	919484908	ABSTURZSICHERUNG
SCHEIBE ISO 7089 20 300HV F	10289808	39	2	760	918533508	ADAPTER VORM.
SCHEIBE ISO 7089 20 300HV F	10289808	10	2	768	91001040	ANLENKSTUECK VORM.
SCHEIBE ISO 7089 20 300HV F	10289808	32	6	771	918596708	KOPFSTUECK VORM.
SCHEIBE ISO 7089 24 300HV F	10289810	376	1	272	96020819	KUEHLER VORM.
SCHEIBE ISO 7089 24 300HV F	10289810	19	6	315	917357108	KRANFUEHRERKABINE ANBA
SCHEIBE ISO 7089 3,5 200HV 4	10875644	5	12	508	966193108	WIDERSTANDSMODUL VORM.
SCHEIBE ISO 7089 30 300HV F	10289811	12	1	750	96062062	KLAPPKONSOLE VORM.
SCHEIBE ISO 7089 4 200HV 4	10875645	9	2	346	916162508	SCHEIBEN EINBAU
SCHEIBE ISO 7089 4 200HV 4	10875645	(2)	4	431	96056347	ELEKTRIK ANBAUTEILE KABIN
SCHEIBE ISO 7089 4 200HV 4	10875645	42	4	431	96056347	ELEKTRIK ANBAUTEILE KABIN
SCHEIBE ISO 7089 4 200HV 4	10875645	90	16	502	96025348	GRUNDAUFBAU
SCHEIBE ISO 7089 42 300HV F	10289847	36	1	760	918533508	ADAPTER VORM.
SCHEIBE ISO 7089 45 300HV F	10289850	59	2	760	918533508	ADAPTER VORM.
SCHEIBE ISO 7089 48 300HV F	10289852	60	2	760	918533508	ADAPTER VORM.
SCHEIBE ISO 7089 48 300HV F	10289852	5	4	772	918221408	ZUGLASCHE VORM.
SCHEIBE ISO 7089 5 -A2	10410193	14	2	458	91003833	HARNSTOFFANLAGE
SCHEIBE ISO 7089 5 -A2	10410193	2	2	736	96056560	WINDWARNUNG VORM.
SCHEIBE ISO 7089 5 200HV ZN	10197808	24	18	61	917155308	HYDRAULIK VORB.
SCHEIBE ISO 7089 5 200HV ZN	10197808	4	2	78	964765008	BOLZEN KPL.
SCHEIBE ISO 7089 5 200HV ZN	10197808	20	6	287	96024716	BATTERIEKASTEN VORM.
SCHEIBE ISO 7089 5 200HV ZN	10197808	375	5	291	969543308	KRAFTSTOFFBEHAELTER VO
SCHEIBE ISO 7089 5 200HV ZN	10197808	35	28	395	918810308	STEUERSTAND
SCHEIBE ISO 7089 5 200HV ZN	10197808	30	8	431	96056347	ELEKTRIK ANBAUTEILE KABIN
SCHEIBE ISO 7089 5 200HV ZN	10197808	6	4	478	915300208	ZENTRALSCHMIERANLAGE O
SCHEIBE ISO 7089 5 200HV ZN	10197808	13	4	612	913753108	FUNKVORBEREITUNG OW
SCHEIBE ISO 7089 5 200HV ZN	10197808	12	1	703	96063458	KLEMMKASTEN KPL.
SCHEIBE ISO 7089 5 200HV ZN	10197808	5	1	734	96056553	GRUNDHALTER VORM.
SCHEIBE ISO 7089 5 200HV ZN	10197808	5	2	760	918533508	ADAPTER VORM.
SCHEIBE ISO 7089 5 200HV ZN	10197808	9	3	781	968940708	HALTER LINKS
SCHEIBE ISO 7089 5 200HV ZN	10197808	9	3	782	968940808	HALTER RECHTS
SCHEIBE ISO 7089 6 200HV 4	10278585	8	3	736	96056560	WINDWARNUNG VORM.
SCHEIBE ISO 7089 6 200HV ZN	10197771	14	2	85	966167808	DECKEL KPL.
SCHEIBE ISO 7089 6 200HV ZN	10197771	17	2	87	96062922	MONTAGEPLATTE VORM.
SCHEIBE ISO 7089 6 200HV ZN	10197771	382	2	124	918728408	MONTAGETEILE DREHBUEHN
SCHEIBE ISO 7089 6 200HV ZN	10197771	379	6	269	918811108	ANTRIEBSAGGREGAT VORM.
SCHEIBE ISO 7089 6 200HV ZN	10197771	380	8	272	96020819	KUEHLER VORM.
SCHEIBE ISO 7089 6 200HV ZN	10197771	26	4	287	96024716	BATTERIEKASTEN VORM.
SCHEIBE ISO 7089 6 200HV ZN	10197771	50	3	338	917305408	INNENVERKLEIDUNG EINBAU
SCHEIBE ISO 7089 6 200HV ZN	10197771	18	4	352	916168308	LUFTFUEHRUNG
SCHEIBE ISO 7089 6 200HV ZN	10197771	42	4	395	918810308	STEUERSTAND
SCHEIBE ISO 7089 6 200HV ZN	10197771	375	10	415	96024809	DREHBUEHNENVERKLEIDUN
SCHEIBE ISO 7089 6 200HV ZN	10197771	375	2	417	969392008	FRONTHAUBE LI.
SCHEIBE ISO 7089 6 200HV ZN	10197771	10	6	421	96044787	HALTER VORM.
SCHEIBE ISO 7089 6 200HV ZN	10197771	62	4	461	96074081	HARNSTOFFTANK VORM.
SCHEIBE ISO 7089 6 200HV ZN	10197771	3	6	503	922648308	KLEMMBRETT VORM.
SCHEIBE ISO 7089 6 200HV ZN	10197771	4	4	506	926891108	VERTEILER MASSE
SCHEIBE ISO 7089 6 200HV ZN	10197771	10	4	623	915403108	ANBAUTEILE KAMERA
SCHEIBE ISO 7089 6 200HV ZN	10197771	29	2	625	96036821	AUSRUESTUNG KAMERA DRE

Bezeichnung	Artikel	Pos.	Menge	Seite	Baugruppe	Bezeichnung
SCHEIBE ISO 7089 6 200HV ZN	10197771	7	4	655	91000049	ANLENKSTUECK VORM.
SCHEIBE ISO 7089 6 200HV ZN	10197771	70	4	661	91000050	TELESKOP 1 VORM.
SCHEIBE ISO 7089 6 200HV ZN	10197771	70	4	664	91000051	TELESKOP 2 VORM.
SCHEIBE ISO 7089 6 200HV ZN	10197771	70	4	667	91000052	TELESKOP 3 VORM.
SCHEIBE ISO 7089 6 200HV ZN	10197771	70	4	670	91000053	TELESKOP 4 VORM.
SCHEIBE ISO 7089 6 200HV ZN	10197771	32	2	679	91000055	AUSSCHUBMECHANIK
SCHEIBE ISO 7089 6 200HV ZN	10197771	3	2	700	966591408	ENDSCHALTER ANBAU
SCHEIBE ISO 7089 6 200HV ZN	10197771	12	8	760	918533508	ADAPTER VORM.
SCHEIBE ISO 7089 6 200HV-A2	420060201	39	2	361	917304708	SCHIEBETUER EINBAU
SCHEIBE ISO 7089 6 200HV-A4	420000414	96	2	420	919484908	ABSTURZSICHERUNG
SCHEIBE ISO 7089 8 200HV-A2	420060705	301	4	63	967301408	HYDRAULIK VORB.
SCHEIBE ISO 7089 8 200HV-A2	420060705	(7)	8	326	968483708	TRITT KPL.
SCHEIBE ISO 7089 8 200HV-A2	420060705	34	16	326	968483708	TRITT KPL.
SCHEIBE ISO 7089 8 200HV-A2	420060705	328	3	517	96045552	HYDRAULIK OBERWAGEN
SCHEIBE ISO 7089 8 200HV-A4	420001014	21	4	61	917155308	HYDRAULIK VORB.
SCHEIBE ISO 7089 8 200HV-A4	420001014	375	8	295	969219208	OELBEHAELTER VORM.
SCHEIBE ISO 7089 8 300HV ZN	12103465	305	2	33	967304508	HYDRAULIK UNTERWAGEN
SCHEIBE ISO 7089 8 300HV ZN	12103465	3	24	47	968374708	MONTAGETEILE
SCHEIBE ISO 7089 8 300HV ZN	12103465	380	22	124	918728408	MONTAGETEILE DREHBUEHN
SCHEIBE ISO 7089 8 300HV ZN	12103465	10	2	125	963260408	VERRIEGELUNG
SCHEIBE ISO 7089 8 300HV ZN	12103465	10	2	126	96049764	VERRIEGELUNG
SCHEIBE ISO 7089 8 300HV ZN	12103465	375	26	269	918811108	ANTRIEBSAGGREGAT VORM.
SCHEIBE ISO 7089 8 300HV ZN	12103465	375	21	272	96020819	KUEHLER VORM.
SCHEIBE ISO 7089 8 300HV ZN	12103465	375	8	305	91002857	KRAFTSTOFFFOERDERUNG
SCHEIBE ISO 7089 8 300HV ZN	12103465	9	1	319	919010108	KRANFUEHRERKABINE VORM.
SCHEIBE ISO 7089 8 300HV ZN	12103465	28	8	326	968483708	TRITT KPL.
SCHEIBE ISO 7089 8 300HV ZN	12103465	12	3	327	96025887	PEDALTRAEGER EINBAU
SCHEIBE ISO 7089 8 300HV ZN	12103465	64	4	339	917305408	INNENVERKLEIDUNG EINBAU
SCHEIBE ISO 7089 8 300HV ZN	12103465	13	4	355	916163008	WISCHANLAGE EINBAU
SCHEIBE ISO 7089 8 300HV ZN	12103465	6	12	386	917894308	HEIZUNG KRANFUEHRERKAB
SCHEIBE ISO 7089 8 300HV ZN	12103465	28	6	392	969300008	HEIZUNG VORM.
SCHEIBE ISO 7089 8 300HV ZN	12103465	376	24	408	96022627	DREHBUEHNENVERKLEIDUN
SCHEIBE ISO 7089 8 300HV ZN	12103465	11	4	410	969425608	KLAPPE VORM.RECHTS
SCHEIBE ISO 7089 8 300HV ZN	12103465	12	2	416	969399608	KLAPPE VORM.
SCHEIBE ISO 7089 8 300HV ZN	12103465	23	7	444	918759708	ZUSATZHEIZUNG OW
SCHEIBE ISO 7089 8 300HV ZN	12103465	8	8	446	96019783	ZUSATZHEIZUNG VORM.
SCHEIBE ISO 7089 8 300HV ZN	12103465	61	9	461	96074081	HARNSTOFFTANK VORM.
SCHEIBE ISO 7089 8 300HV ZN	12103465	17	2	502	96025348	GRUNDAUFBAU
SCHEIBE ISO 7089 8 300HV ZN	12103465	13	4	506	926891108	VERTEILER MASSE
SCHEIBE ISO 7089 8 300HV ZN	12103465	319	4	517	96045552	HYDRAULIK OBERWAGEN
SCHEIBE ISO 7089 8 300HV ZN	12103465	3	2	642	96045219	MECHANISCHE ANBAUTEILE
SCHEIBE ISO 7089 8 300HV ZN	12103465	15	7	652	919935408	TELESKOPAUSLEGER KPL.
SCHEIBE ISO 7089 8 300HV ZN	12103465	18	4	652	919935408	TELESKOPAUSLEGER KPL.
SCHEIBE ISO 7089 8 300HV ZN	12103465	31	9	655	91000049	ANLENKSTUECK VORM.
SCHEIBE ISO 7089 8 300HV ZN	12103465	17	5	661	91000050	TELESKOP 1 VORM.
SCHEIBE ISO 7089 8 300HV ZN	12103465	17	4	664	91000051	TELESKOP 2 VORM.
SCHEIBE ISO 7089 8 300HV ZN	12103465	17	4	667	91000052	TELESKOP 3 VORM.
SCHEIBE ISO 7089 8 300HV ZN	12103465	17	4	670	91000053	TELESKOP 4 VORM.
SCHEIBE ISO 7089 8 300HV ZN	12103465	17	4	673	91000054	TELESKOP 5 VORM.
SCHEIBE ISO 7089 8 300HV ZN	12103465	29	8	679	91000055	AUSSCHUBMECHANIK
SCHEIBE ISO 7089 8 300HV ZN	12103465	33	4	747	919933308	TRANSPORTHALTERUNG DKS
SCHEIBE ISO 7089 8 300HV ZN	12103465	24	2	760	918533508	ADAPTER VORM.
SCHEIBE ISO 7089 8 300HV ZN	12103465	2	2	773	96037297	WINKELGEBER ANBAU
SCHEIBE ISO 7092 20 300HV F	11691327	61	12	661	91000050	TELESKOP 1 VORM.
SCHEIBE ISO 7092 20 300HV F	11691327	61	12	664	91000051	TELESKOP 2 VORM.
SCHEIBE ISO 7092 20 300HV F	11691327	61	12	667	91000052	TELESKOP 3 VORM.
SCHEIBE ISO 7092 20 300HV F	11691327	34	12	670	91000053	TELESKOP 4 VORM.
SCHEIBE ISO 7092 20 300HV F	11691327	42	16	673	91000054	TELESKOP 5 VORM.
SCHEIBE ISO 7092 6 200HV-A2	10035694	10	2	332	968462608	SCHALTSCHRANKDECKEL EIN
SCHEIBE ISO 7092 6 200HV-A2	10035694	36	8	349	966497908	FRONTSCHEIBE KPL.

Bezeichnung	Artikel	Pos.	Menge	Seite	Baugruppe	Bezeichnung
SCHEIBE ISO 7092 8 200HV 4	10299679	10	2	127	968305308	ENDSCHALTER VORM.
SCHEIBE ISO 7092 8 200HV 4	10299679	65	4	661	91000050	TELESKOP 1 VORM.
SCHEIBE ISO 7092 8 200HV 4	10299679	65	4	664	91000051	TELESKOP 2 VORM.
SCHEIBE ISO 7092 8 200HV 4	10299679	65	8	667	91000052	TELESKOP 3 VORM.
SCHEIBE ISO 7092 8 200HV 4	10299679	65	8	670	91000053	TELESKOP 4 VORM.
SCHEIBE ISO 7092 8 200HV 4	10299679	83	8	674	91000054	TELESKOP 5 VORM.
SCHEIBE ISO 7093-1 10 300HV	11491889	43	8	30	992078314	MITTELTEIL
SCHEIBE ISO 7093-1 10 300HV	11491889	6	20	40	990840414	ABDECKUNG
SCHEIBE ISO 7093-1 10 300HV	11491889	376	8	124	918728408	MONTAGETEILE DREHBUEHN
SCHEIBE ISO 7093-1 10 300HV	11491889	376	2	263	918728708	ANTRIEBSAGGREGAT KPL.
SCHEIBE ISO 7093-1 10 300HV	11491889	377	4	415	96024809	DREHBUEHNENVERKLEIDUN
SCHEIBE ISO 7093-1 10 300HV	11491889	60	4	461	96074081	HARNSTOFFTANK VORM.
SCHEIBE ISO 7093-1 10 300HV	11491889	377	2	470	919674308	ABGASANLAGE
SCHEIBE ISO 7093-1 10 300HV	11491889	308	4	517	96045552	HYDRAULIK OBERWAGEN
SCHEIBE ISO 7093-1 10 300HV	11491889	103	8	645	919950308	MECH.TEILE VERSANDMONT
SCHEIBE ISO 7093-1 10 300HV	11491889	46	4	760	918533508	ADAPTER VORM.
SCHEIBE ISO 7093-1 10 A2	421802108	14	1	355	916163008	WISCHANLAGE EINBAU
SCHEIBE ISO 7093-1 10 A2	421802108	7	1	363	966230508	FUEHRUNG VORM.
SCHEIBE ISO 7093-1 12 200HV	421801908	151	8	420	919484908	ABSTURZSICHERUNG
SCHEIBE ISO 7093-1 12 300HV	11182717	83	12	656	91000049	ANLENKSTUECK VORM.
SCHEIBE ISO 7093-1 12 300HV	11182717	68	12	661	91000050	TELESKOP 1 VORM.
SCHEIBE ISO 7093-1 12 300HV	11182717	68	12	664	91000051	TELESKOP 2 VORM.
SCHEIBE ISO 7093-1 12 300HV	11182717	68	8	667	91000052	TELESKOP 3 VORM.
SCHEIBE ISO 7093-1 12 300HV	11182717	68	8	670	91000053	TELESKOP 4 VORM.
SCHEIBE ISO 7093-1 16 300HV	4000809	9	4	320	916164208	LAGERUNG EINBAU
SCHEIBE ISO 7093-1 5 200HV 4	10875643	312	4	517	96045552	HYDRAULIK OBERWAGEN
SCHEIBE ISO 7093-1 5 200HV 4	10875643	314	2	591	96064697	HYDRAULIK HILFSHUBWERK
SCHEIBE ISO 7093-1 5 200HV 4	10875643	16	4	606	91002360	LADEGERAET
SCHEIBE ISO 7093-1 6 200HV 4	10875648	315	8	33	967304508	HYDRAULIK UNTERWAGEN
SCHEIBE ISO 7093-1 6 200HV 4	10875648	381	10	269	918811108	ANTRIEBSAGGREGAT VORM.
SCHEIBE ISO 7093-1 6 200HV 4	10875648	11	4	350	965784408	DACHSCHEIBE VORM.
SCHEIBE ISO 7093-1 6 200HV 4	10875648	9	2	410	969425608	KLAPPE VORM.RECHTS
SCHEIBE ISO 7093-1 6 200HV 4	10875648	307	8	517	96045552	HYDRAULIK OBERWAGEN
SCHEIBE ISO 7093-1 6 200HV 4	10875648	302	4	591	96064697	HYDRAULIK HILFSHUBWERK
SCHEIBE ISO 7093-1 6 200HV 4	10875648	61	2	599	96075102	BEFESTIGUNGSTEILE HYDR
SCHEIBE ISO 7093-1 6 200HV 4	10875648	98	10	656	91000049	ANLENKSTUECK VORM.
SCHEIBE ISO 7093-1 6 200HV 4	10875648	92	2	674	91000054	TELESKOP 5 VORM.
SCHEIBE ISO 7093-1 6 200HV 4	10875648	8	2	773	96037297	WINKELGEBER ANBAU
SCHEIBE ISO 7093-1 6 200HV-A	421801708	14	2	349	966497908	FRONTSCHEIBE KPL.
SCHEIBE ISO 7093-1 6 200HV-A	421801708	58	2	361	917304708	SCHIEBETUER EINBAU
SCHEIBE ISO 7093-1 6 200HV-A	421801708	4	2	363	966230508	FUEHRUNG VORM.
SCHEIBE ISO 7093-1 6 200HV-A	421801708	379	11	470	919674308	ABGASANLAGE
SCHEIBE ISO 7093-1 6 200HV-A	421801708	378	8	473	96051762	ABGASANLAGE VORM.
SCHEIBE ISO 7093-1 6 200HV-A	421801708	26	2	625	96036821	AUSRUESTUNG KAMERA DRE
SCHEIBE ISO 7093-1 6 200HV-A	10540500	375	3	306	96066239	KRAFTSTOFFFILTER VORM.
SCHEIBE ISO 7093-1 6 200HV-A	10540500	40	4	361	917304708	SCHIEBETUER EINBAU
SCHEIBE ISO 7093-1 6 200HV-A	10540500	378	4	415	96024809	DREHBUEHNENVERKLEIDUN
SCHEIBE ISO 7093-1 6 200HV-A	10540500	8	1	734	96056553	GRUNDHALTER VORM.
SCHEIBE ISO 7093-1 8 200HV 4	11140469	317	7	33	967304508	HYDRAULIK UNTERWAGEN
SCHEIBE ISO 7093-1 8 200HV 4	11140469	375	14	124	918728408	MONTAGETEILE DREHBUEHN
SCHEIBE ISO 7093-1 8 200HV 4	11140469	378	2	263	918728708	ANTRIEBSAGGREGAT KPL.
SCHEIBE ISO 7093-1 8 200HV 4	11140469	376	4	269	918811108	ANTRIEBSAGGREGAT VORM.
SCHEIBE ISO 7093-1 8 200HV 4	11140469	7	4	285	918955208	BATTERIEKASTEN KPL.
SCHEIBE ISO 7093-1 8 200HV 4	11140469	29	2	315	917357108	KRANFUEHRERKABINE ANBA
SCHEIBE ISO 7093-1 8 200HV 4	11140469	36	2	326	968483708	TRITT KPL.
SCHEIBE ISO 7093-1 8 200HV 4	11140469	22	2	346	916162508	SCHEIBEN EINBAU
SCHEIBE ISO 7093-1 8 200HV 4	11140469	377	6	408	96022627	DREHBUEHNENVERKLEIDUN
SCHEIBE ISO 7093-1 8 200HV 4	11140469	376	17	415	96024809	DREHBUEHNENVERKLEIDUN
SCHEIBE ISO 7093-1 8 200HV 4	11140469	150	42	420	919484908	ABSTURZSICHERUNG
SCHEIBE ISO 7093-1 8 200HV 4	11140469	40	6	431	96056347	ELEKTRIK ANBAUTEILE KABIN

Bezeichnung	Artikel	Pos.	Menge	Seite	Baugruppe	Bezeichnung
SCHEIBE ISO 7093-1 8 200HV 4	11140469	375	12	476	918729308	LUFTFILTERANLAGE
SCHEIBE ISO 7093-1 8 200HV 4	11140469	21	5	478	915300208	ZENTRALSCHMIERANLAGE O
SCHEIBE ISO 7093-1 8 200HV 4	11140469	324	2	517	96045552	HYDRAULIK OBERWAGEN
SCHEIBE ISO 7093-1 8 200HV 4	11140469	375	16	562	919528608	OELKUEHLER EINBAU
SCHEIBE ISO 7093-1 8 200HV 4	11140469	(6)	16	566	969767908	VERROHRUNG DRUCKLUFTA
SCHEIBE ISO 7093-1 8 200HV 4	11140469	21	4	577	96033759	ANBAUTEILE ARBEITSSCHEIN
SCHEIBE ISO 7093-1 8 200HV 4	11140469	63	8	581	96062734	HILFSHUBWERK
SCHEIBE ISO 7093-1 8 200HV 4	11140469	310	4	591	96064697	HYDRAULIK HILFSHUBWERK
SCHEIBE ISO 7093-1 8 200HV 4	11140469	319	2	598	96075086	HYDRAULIK HILFSHUBWERK D
SCHEIBE ISO 7093-1 8 200HV 4	11140469	13	4	604	96066401	MECHANISCHE ANBAUTEILE
SCHEIBE ISO 7093-1 8 200HV 4	11140469	13	3	606	91002360	LADEGERAET
SCHEIBE ISO 7093-1 8 200HV 4	11140469	8	2	612	913753108	FUNKVORBEREITUNG OW
SCHEIBE ISO 7093-1 8 200HV 4	11140469	106	4	645	919950308	MECH.TEILE VERSANDMONT
SCHEIBE ISO 7093-1 8 200HV 4	11140469	11	2	679	91000055	AUSSCHUBMECHANIK
SCHEIBE ISO 7093-1 8 200HV 4	11140469	31	3	723	964502908	MASTNASE VORM.
SCHEIBE ISO 7093-1 8 200HV 4	11140469	37	3	747	919933308	TRANSPORTHALTERUNG DKS
SCHEIBE ISO 7093-1 8 200HV 4	11140469	5	8	773	96037297	WINKELGEBER ANBAU
SCHEIBE ISO 7093-1 8 200HV-A	421861405	29	6	326	968483708	TRITT KPL.
SCHEIBE ISO 7093-1 8 200HV-A	421861405	379	4	473	96051762	ABGASANLAGE VORM.
SCHEIBE ISO 7093-1 8 200HV-A	421861405	30	4	625	96036821	AUSRUESTUNG KAMERA DRE
SCHEIBE ISO 7093-1 8 200HV-A	10540510	21	4	361	917304708	SCHIEBETUER EINBAU
SCHEIBE ISO 7093-1 8 200HV-A	10540510	379	3	408	96022627	DREHBUEHNENVERKLEIDUN
SCHEIBE ISO 8738 20 160HV-St	10179404	10	8	119	96045222	MONTAGETEILE
SCHEIBE ISO 8738 22 ST FLZN	12100631	3	2	60	991456314	AUFSTIEG KPL.
SCHEIBE ISO 8738 55 160HV-St	10179409	23	8	454	919501608	HYDRAULISCHE BALLASTIER
SCHEIBEN EINBAU SPF	916162508	2	1	334	917304508	KRANFUEHRERKABINE VORM.
SCHEIBENBOLZEN	11494299	4	1	743	910445708	HAKENFLASCHE
SCHEIBENFEDER DIN 6888 3	570435508	18	1	275	10429930	ZAHNRADMOTOR
SCHELLE DIN 3016-1 10X15X	7381770	32	6	239	10151328	KABELBAUM ANBAU
SCHELLE DIN 3016-1 10X20X	7381628	38	2	239	10151328	KABELBAUM ANBAU
SCHELLE DIN 3016-1 10X20X	7381628	211	1	250	10148366	DS DIESELMOTOR
SCHELLE DIN 3016-1 10X25X	7382092	2	2	152	10139112	OELLEITUNG VORM.
SCHELLE DIN 3016-1 10X25X	7382092	47	4	239	10151328	KABELBAUM ANBAU
SCHELLE DIN 3016-1 12X20X	7381629	39	5	239	10151328	KABELBAUM ANBAU
SCHELLE DIN 3016-1 16X20X	7382085	13	1	196	10143341	KRAFTSTOFFLEITUNGEN
SCHELLE DIN 3016-1 16X20X	7382085	2121	1	251	10148366	DS DIESELMOTOR
SCHELLE DIN 3016-1 18X25X	7382086	39	1	241	10151329	KABELSATZ ANBAU
SCHELLE DIN 3016-1 22X20X	7381286	11	1	201	10145173	ANSAUGSTUTZEN ANBAU
SCHELLE DIN 3016-1 22X20X	7381630	13	1	201	10145173	ANSAUGSTUTZEN ANBAU
SCHELLE DIN 3016-1 22X20X	7381630	42	3	239	10151328	KABELBAUM ANBAU
SCHELLE DIN 3016-1 28X20XD	11481080	22	4	392	969300008	HEIZUNG VORM.
SCHELLE DIN 3016-1 28X20XD	11481080	22	1	446	96019783	ZUSATZHEIZUNG VORM.
SCHELLE DIN 3016-1 6X15XD1	7381292	20	1	198	10143342	LECKOELRUECKLAUF
SCHELLE DIN 3016-1 6X15XD1	7381292	9	6	224	11420633	TAKTVENTIL
SCHELLE DIN 3016-1 6X20XA1	11000593	10	2	224	11420633	TAKTVENTIL
SCHELLE DIN 3016-1 6X20XD1	7382088	14	1	198	10143342	LECKOELRUECKLAUF
SCHELLE DIN 3016-1 8X15XD1	7381771	31	1	239	10151328	KABELBAUM ANBAU
SCHELLE DIN 3016-1 8X20XD1	7382090	37	4	239	10151328	KABELBAUM ANBAU
SCHELLE DIN 3017-1 16/12-20	4601105	6	1	152	10139112	OELLEITUNG VORM.
SCHELLE DIN 3017-1 16/12-20	4601105	(3)	4	250	10148366	DS DIESELMOTOR
SCHELLE G-ST-52 FE//ZN20//C	97039859	7	5	473	96051762	ABGASANLAGE VORM.
SCHENKELFEDER 2,5X13,5	571741908	19	1	753	512353708	HYDROZYLINDER
SCHIEBEHOLM LI LH-GRAU	10224278	2	2	30	992078314	MITTELTEIL
SCHIEBEHOLM RE LH-GRAU	10224279	3	2	30	992078314	MITTELTEIL
SCHIEBEKUPPLUNG	790042708	9	1	102	914860608	WERKZEUG M.ZUBEHOER
SCHIEBER HDSCS GROUP E	10874992	503	2	699	96051215	DRAEHTE
SCHIEBERAHMEN RAL 9005	97136699	2	1	323	96048757	BECHERHALTER
SCHIEBETUER EINBAU SPF	917304708	116	1	13		LIEBHERR LTR 1100
SCHIENENPAAR	10650489	70	1	397	10877138	FAHRERSITZ
SCHILD	11494432	(2)	1	480	10327065	ELEKTROPUMPE

Bezeichnung	Artikel	Pos.	Menge	Seite	Baugruppe	Bezeichnung
SCHILD	11494581	(3)	1	480	10327065	ELEKTROPUMPE
SCHILD	11696245	3	2	274	97095949	KOMBIKUEHLER
SCHILD	12237851	19	1	274	97095949	KOMBIKUEHLER
SCHILD	553031008	1	1	575	918627208	KLIMAANLAGE OW
SCHILD	772637308	17	1	111	919933708	BESCHILDERUNG GROSSBRI
SCHILD	971749908	2	2	111	919933708	BESCHILDERUNG GROSSBRI
SCHILD +S930 LEXAN	97128523	4	1	703	96063458	KLEMMKASTEN KPL.
SCHILD 100X184X0,1 KLEBEFO	11952500	1	2	115	919553608	ZUSATZBESCHILD.CALIFORN
SCHILD 105DBA/100X90 KLEBE	975809508	76	1	111	919933708	BESCHILDERUNG GROSSBRI
SCHILD 120X80 KLEBEFOLIE	97037383	82	1	461	96074081	HARNSTOFFTANK VORM.
SCHILD 12V	772614008	2	1	612	913753108	FUNKVORBEREITUNG OW
SCHILD 158X50 KLEBEFOLIE	97155791	2	2	688	96072367	BESCHILDERUNG
SCHILD 168X62 KLEBEFOLIE	978674808	63	4	111	919933708	BESCHILDERUNG GROSSBRI
SCHILD 168X62 KLEBEFOLIE	978674808	1	1	688	96072367	BESCHILDERUNG
SCHILD 168X62 KLEBEFOLIE	978674808	3	6	778	96062033	BESCHILDERUNG DKS
SCHILD 168X88 KLEBEFOLIE	97009799	101	1	111	919933708	BESCHILDERUNG GROSSBRI
SCHILD 168X88 KLEBEFOLIE	97011689	95	1	111	919933708	BESCHILDERUNG GROSSBRI
SCHILD 168X88 KLEBEFOLIE	97011690	96	1	111	919933708	BESCHILDERUNG GROSSBRI
SCHILD 168X88 KLEBEFOLIE	97036732	68	1	111	919933708	BESCHILDERUNG GROSSBRI
SCHILD 168X88 KLEBEFOLIE	97037952	18	1	111	919933708	BESCHILDERUNG GROSSBRI
SCHILD 168X88 KLEBEFOLIE	97060689	100	1	111	919933708	BESCHILDERUNG GROSSBRI
SCHILD 168X88 KLEBEFOLIE	978674308	28	2	111	919933708	BESCHILDERUNG GROSSBRI
SCHILD 168X88 KLEBEFOLIE	978867108	33	2	111	919933708	BESCHILDERUNG GROSSBRI
SCHILD 168X88 KLEBEFOLIE	979383308	62	1	111	919933708	BESCHILDERUNG GROSSBRI
SCHILD 168X88 KLEBESCHILD	97017044	90	4	111	919933708	BESCHILDERUNG GROSSBRI
SCHILD 168X88 KLEBESCHILD	97017045	91	4	111	919933708	BESCHILDERUNG GROSSBRI
SCHILD 168X88 KLEBESCHILD	97017046	92	4	111	919933708	BESCHILDERUNG GROSSBRI
SCHILD 180X40X1 KLEBEFOLI	979806608	185	1	517	96045552	HYDRAULIK OBERWAGEN
SCHILD 1X75X45 ALUMINIUM	97038433	16	1	334	917304508	KRANFUEHRERKABINE VORM.
SCHILD 1X80X80 KLEBEFOLIE	974150408	84	1	111	919933708	BESCHILDERUNG GROSSBRI
SCHILD 1X80X80 KLEBEFOLIE	974150508	85	1	111	919933708	BESCHILDERUNG GROSSBRI
SCHILD 1X80X80 KLEBEFOLIE	974150608	86	1	111	919933708	BESCHILDERUNG GROSSBRI
SCHILD 1X80X80 KLEBEFOLIE	974150708	87	1	111	919933708	BESCHILDERUNG GROSSBRI
SCHILD 200X100 KLEBEFOLIE	97087173	4	2	778	96062033	BESCHILDERUNG DKS
SCHILD 208X88 KLEBEFOLIE	97016304	49	1	111	919933708	BESCHILDERUNG GROSSBRI
SCHILD 208X88 KLEBEFOLIE	978673908	11	2	111	919933708	BESCHILDERUNG GROSSBRI
SCHILD 208X88 KLEBEFOLIE	978674008	12	3	111	919933708	BESCHILDERUNG GROSSBRI
SCHILD 208X88 KLEBEFOLIE	978674108	14	13	111	919933708	BESCHILDERUNG GROSSBRI
SCHILD 208X88 KLEBEFOLIE	978674408	29	5	111	919933708	BESCHILDERUNG GROSSBRI
SCHILD 208X88 KLEBEFOLIE	978674508	31	1	111	919933708	BESCHILDERUNG GROSSBRI
SCHILD 208X88 KLEBEFOLIE	978674608	32	1	111	919933708	BESCHILDERUNG GROSSBRI
SCHILD 208X88 KLEBEFOLIE	978674908	64	1	111	919933708	BESCHILDERUNG GROSSBRI
SCHILD 208X88 KLEBEFOLIE	978675008	66	3	111	919933708	BESCHILDERUNG GROSSBRI
SCHILD 20X10 KLEBEFOLIE SP	97064219	80	1	461	96074081	HARNSTOFFTANK VORM.
SCHILD 20X10 KLEBEFOLIE SP	97064220	81	1	461	96074081	HARNSTOFFTANK VORM.
SCHILD 225X165 KLEBEFOLIE	971539808	1	1	778	96062033	BESCHILDERUNG DKS
SCHILD 225X165 KLEBEFOLIE	971539908	2	1	778	96062033	BESCHILDERUNG DKS
SCHILD 240X80 3A-34 KLEBE	97158453	5	4	778	96062033	BESCHILDERUNG DKS
SCHILD 240X80 KLEBEFOLIE	97158717	3	1	595	96062735	BESCHILDERUNG
SCHILD 2X100X240 DC01 FE//	97003792	31	2	47	968374708	MONTAGETEILE
SCHILD 2X100X240 DC01 FE//	97044861	32	2	47	968374708	MONTAGETEILE
SCHILD 58X58 KLEBEFOLIE SP	97078977	(1)	2	754	919932208	DOPPELKLAPPSPITZE MECH.K
SCHILD 58X93 KLEBEFOLIE SP	97078979	(2)	2	754	919932208	DOPPELKLAPPSPITZE MECH.K
SCHILD 58X93 KLEBEFOLIE SP	97078980	(3)	2	754	919932208	DOPPELKLAPPSPITZE MECH.K
SCHILD 6X107X237 G-ALSI12	97160609	1	1	107	91003809	ZUSATZBESCHILD.FABRIKDA
SCHILD 70X184X0,1 KLEBEFO	13187353	2	1	115	919553608	ZUSATZBESCHILD.CALIFORN
SCHILD 70X360X0,1 FOLIE	10684156	8	1	739	910543708	LASTHAKEN
SCHILD 75X45 ALUMINIUM	976955508	2	1	575	918627208	KLIMAANLAGE OW
SCHILD 80-38X0 LEXAN	976917008	4	1	692	96063456	KLEMMKASTEN
SCHILD 85X55 SPF	97025520	1	1	724	967695508	BESCHILDERUNG

Bezeichnung	Artikel	Pos.	Menge	Seite	Baugruppe	Bezeichnung
SCHILD 88X450X0,1 FOLIE	10663718	9	2	743	910445708	HAKENFLASCHE
SCHILD IDENTNR. IDENT-NR	973567608	20	1	19	96062225	UNTERWAGEN KPL.
SCHILD SPF	12106335	10	1	695	96063212	LEITUNGSTROMMEL KPL.
SCHILD SPF	978461908	186	1	517	96045552	HYDRAULIK OBERWAGEN
SCHLAUCH DIN1283 11X300	12104544	(1)	1	102	914860608	WERKZEUG M.ZUBEHOER
SCHLAUCH DN16 500	510501008	300	1	566	969767908	VERROHRUNG DRUCKLUFTA
SCHLAUCH DN3,5-GU23725	591080608	28	0.25	355	916163008	WISCHANLAGE EINBAU
SCHLAUCH DN82-UNIE13 SC	11000901	11	2.15	352	916168308	LUFTFUEHRUNG
SCHLAUCH KPL.	925185208	10	1	645	919950308	MECH.TEILE VERSANDMONT
SCHLAUCH KPL.	925185308	11	1	645	919950308	MECH.TEILE VERSANDMONT
SCHLAUCH KPL.	927679208	330	1	571	918730808	SCHLAUCHLEITUNGEN OBER
SCHLAUCH KPL.	964196608	210	1	571	918730808	SCHLAUCHLEITUNGEN OBER
SCHLAUCH KPL.	969041908	350	1	572	918730808	SCHLAUCHLEITUNGEN OBER
SCHLAUCH KPL. 1SC 8X1100	96013144	373	1	572	918730808	SCHLAUCHLEITUNGEN OBER
SCHLAUCH KPL. 1SC 8X1600	926968008	329	1	571	918730808	SCHLAUCHLEITUNGEN OBER
SCHLAUCH KPL. 1SC 8X2150	926466108	379	1	572	918730808	SCHLAUCHLEITUNGEN OBER
SCHLAUCH KPL. 1SC 8X240	962857908	1255	1	593	96064698	SCHLAUCHLEITUNGEN HUBW
SCHLAUCH KPL. 1SC 8X2550	926094708	209	1	571	918730808	SCHLAUCHLEITUNGEN OBER
SCHLAUCH KPL. 1SC 8X300	926122108	377	1	572	918730808	SCHLAUCHLEITUNGEN OBER
SCHLAUCH KPL. 1SC 8X300	926497508	324	1	571	918730808	SCHLAUCHLEITUNGEN OBER
SCHLAUCH KPL. 1SC 8X3100	927604908	380	1	572	918730808	SCHLAUCHLEITUNGEN OBER
SCHLAUCH KPL. 1SC 8X360	965202408	322	1	571	918730808	SCHLAUCHLEITUNGEN OBER
SCHLAUCH KPL. 1SC 8X420	926971408	318	1	571	918730808	SCHLAUCHLEITUNGEN OBER
SCHLAUCH KPL. 1SC 8X620	966570608	376	1	572	918730808	SCHLAUCHLEITUNGEN OBER
SCHLAUCH KPL. 1SC 8X700	928761808	1257	1	593	96064698	SCHLAUCHLEITUNGEN HUBW
SCHLAUCH KPL. 1SC 8X900	927691408	317	1	571	918730808	SCHLAUCHLEITUNGEN OBER
SCHLAUCH KPL. 1SC 8X940	964483408	381	1	572	918730808	SCHLAUCHLEITUNGEN OBER
SCHLAUCH KPL. 1SN 25X1900	926385708	378	1	572	918730808	SCHLAUCHLEITUNGEN OBER
SCHLAUCH KPL. 1SN 25X2700	927670408	359	1	572	918730808	SCHLAUCHLEITUNGEN OBER
SCHLAUCH KPL. 1SN 25X560	926868308	206	1	571	918730808	SCHLAUCHLEITUNGEN OBER
SCHLAUCH KPL. 1SN 32X800	968603008	305	1	571	918730808	SCHLAUCHLEITUNGEN OBER
SCHLAUCH KPL. 1SN 32X900	968602208	1382	1	600	967498008	SCHLAUCHLEITUNGEN HW 2
SCHLAUCH KPL. 2SN 10X1160	928037508	100	1	39	917598608	SCHLAUCHLEITUNGEN RAUP
SCHLAUCH KPL. 2SN 10X1200	928013108	1384	1	600	967498008	SCHLAUCHLEITUNGEN HW 2
SCHLAUCH KPL. 2SN 10X1360	969746308	365	1	572	918730808	SCHLAUCHLEITUNGEN OBER
SCHLAUCH KPL. 2SN 10X1480	964327508	181	1	64	967499008	SCHLAUCHLEITUNGEN ABST
SCHLAUCH KPL. 2SN 10X1500	928469408	(798)	4	74	967314108	ZUSATZHYDR.ABSTUETZZYL
SCHLAUCH KPL. 2SN 10X1550	928006908	128	1	39	917598608	SCHLAUCHLEITUNGEN RAUP
SCHLAUCH KPL. 2SN 10X1550	928006908	129	1	39	917598608	SCHLAUCHLEITUNGEN RAUP
SCHLAUCH KPL. 2SN 10X1550	928756608	(799)	4	74	967314108	ZUSATZHYDR.ABSTUETZZYL
SCHLAUCH KPL. 2SN 10X2190	964325708	130	1	39	917598608	SCHLAUCHLEITUNGEN RAUP
SCHLAUCH KPL. 2SN 10X2190	964325708	132	1	39	917598608	SCHLAUCHLEITUNGEN RAUP
SCHLAUCH KPL. 2SN 10X2700	962439008	122	1	39	917598608	SCHLAUCHLEITUNGEN RAUP
SCHLAUCH KPL. 2SN 10X3300	964328008	187	1	64	967499008	SCHLAUCHLEITUNGEN ABST
SCHLAUCH KPL. 2SN 10X3360	964327708	183	1	64	967499008	SCHLAUCHLEITUNGEN ABST
SCHLAUCH KPL. 2SN 10X3400	927611908	333	1	571	918730808	SCHLAUCHLEITUNGEN OBER
SCHLAUCH KPL. 2SN 10X3500	929750408	334	1	571	918730808	SCHLAUCHLEITUNGEN OBER
SCHLAUCH KPL. 2SN 10X3830	964327908	185	1	64	967499008	SCHLAUCHLEITUNGEN ABST
SCHLAUCH KPL. 2SN 10X3830	964327908	186	1	64	967499008	SCHLAUCHLEITUNGEN ABST
SCHLAUCH KPL. 2SN 10X3920	968600508	98	1	39	917598608	SCHLAUCHLEITUNGEN RAUP
SCHLAUCH KPL. 2SN 10X3920	968600508	117	1	39	917598608	SCHLAUCHLEITUNGEN RAUP
SCHLAUCH KPL. 2SN 10X430	923015008	95	1	39	917598608	SCHLAUCHLEITUNGEN RAUP
SCHLAUCH KPL. 2SN 10X460	968600608	97	1	39	917598608	SCHLAUCHLEITUNGEN RAUP
SCHLAUCH KPL. 2SN 10X500	927612108	131	1	39	917598608	SCHLAUCHLEITUNGEN RAUP
SCHLAUCH KPL. 2SN 10X500	927612108	133	1	39	917598608	SCHLAUCHLEITUNGEN RAUP
SCHLAUCH KPL. 2SN 10X520	962760208	96	1	39	917598608	SCHLAUCHLEITUNGEN RAUP
SCHLAUCH KPL. 2SN 10X520	962760208	124	1	39	917598608	SCHLAUCHLEITUNGEN RAUP
SCHLAUCH KPL. 2SN 10X5300	964275408	99	1	39	917598608	SCHLAUCHLEITUNGEN RAUP
SCHLAUCH KPL. 2SN 10X5300	964275408	118	1	39	917598608	SCHLAUCHLEITUNGEN RAUP
SCHLAUCH KPL. 2SN 10X600	928870708	335	1	571	918730808	SCHLAUCHLEITUNGEN OBER

Bezeichnung	Artikel	Pos.	Menge	Seite	Baugruppe	Bezeichnung
SCHLAUCH KPL. 2SN 10X730	964327808	184	1	64	967499008	SCHLAUCHLEITUNGEN ABST
SCHLAUCH KPL. 2SN 10X730	964327808	188	1	64	967499008	SCHLAUCHLEITUNGEN ABST
SCHLAUCH KPL. 2SN 10X790	964327608	182	1	64	967499008	SCHLAUCHLEITUNGEN ABST
SCHLAUCH KPL. 2SN 10X790	964327608	189	1	64	967499008	SCHLAUCHLEITUNGEN ABST
SCHLAUCH KPL. 2SN 10X850	964325608	126	1	39	917598608	SCHLAUCHLEITUNGEN RAUP
SCHLAUCH KPL. 2SN 10X850	964325608	127	1	39	917598608	SCHLAUCHLEITUNGEN RAUP
SCHLAUCH KPL. 2SN 12X1040	965569108	338	1	571	918730808	SCHLAUCHLEITUNGEN OBER
SCHLAUCH KPL. 2SN 12X1180	967687008	364	1	572	918730808	SCHLAUCHLEITUNGEN OBER
SCHLAUCH KPL. 2SN 12X1750	927632108	211	1	571	918730808	SCHLAUCHLEITUNGEN OBER
SCHLAUCH KPL. 2SN 12X1750	927632108	363	1	572	918730808	SCHLAUCHLEITUNGEN OBER
SCHLAUCH KPL. 2SN 12X2000	927632208	362	1	572	918730808	SCHLAUCHLEITUNGEN OBER
SCHLAUCH KPL. 2SN 12X300	927611508	262	1	571	918730808	SCHLAUCHLEITUNGEN OBER
SCHLAUCH KPL. 2SN 12X3000	924505508	486	1	710	967498108	SCHLAUCHLEITUNGEN TELE
SCHLAUCH KPL. 2SN 12X350	96024263	204	1	571	918730808	SCHLAUCHLEITUNGEN OBER
SCHLAUCH KPL. 2SN 12X400	927605908	201	1	571	918730808	SCHLAUCHLEITUNGEN OBER
SCHLAUCH KPL. 2SN 12X450	969629508	360	1	572	918730808	SCHLAUCHLEITUNGEN OBER
SCHLAUCH KPL. 2SN 16X1580	964327408	180	1	64	967499008	SCHLAUCHLEITUNGEN ABST
SCHLAUCH KPL. 2SN 6X11750	962258008	1490	1	718	967498508	SCHLAUCHLEITUNGEN KLAP
SCHLAUCH KPL. 2SN 6X11750	962258008	1491	1	718	967498508	SCHLAUCHLEITUNGEN KLAP
SCHLAUCH KPL. 2SN 6X1500	927064908	355	1	572	918730808	SCHLAUCHLEITUNGEN OBER
SCHLAUCH KPL. 2SN 6X1650	929315508	9	1	760	918533508	ADAPTER VORM.
SCHLAUCH KPL. 2SN 6X170	965946208	279	1	571	918730808	SCHLAUCHLEITUNGEN OBER
SCHLAUCH KPL. 2SN 6X250	963562308	1258	1	593	96064698	SCHLAUCHLEITUNGEN HUBW
SCHLAUCH KPL. 2SN 6X2900	962257308	485	1	710	967498108	SCHLAUCHLEITUNGEN TELE
SCHLAUCH KPL. 2SN 6X340	961920208	1261	1	593	96064698	SCHLAUCHLEITUNGEN HUBW
SCHLAUCH KPL. 2SN 6X370	920976308	314	1	571	918730808	SCHLAUCHLEITUNGEN OBER
SCHLAUCH KPL. 2SN 6X390	968601708	1256	1	593	96064698	SCHLAUCHLEITUNGEN HUBW
SCHLAUCH KPL. 2SN 6X400	963921808	312	1	571	918730808	SCHLAUCHLEITUNGEN OBER
SCHLAUCH KPL. 2SN 6X400	963921808	313	1	571	918730808	SCHLAUCHLEITUNGEN OBER
SCHLAUCH KPL. 2SN 8X1000	921002708	343	1	572	918730808	SCHLAUCHLEITUNGEN OBER
SCHLAUCH KPL. 2SN 8X1000	929966908	337	1	571	918730808	SCHLAUCHLEITUNGEN OBER
SCHLAUCH KPL. 2SN 8X1100	965434208	342	1	572	918730808	SCHLAUCHLEITUNGEN OBER
SCHLAUCH KPL. 2SN 8X1200	926872208	121	1	39	917598608	SCHLAUCHLEITUNGEN RAUP
SCHLAUCH KPL. 2SN 8X1600	962439208	323	1	571	918730808	SCHLAUCHLEITUNGEN OBER
SCHLAUCH KPL. 2SN 8X1900	969450708	346	1	572	918730808	SCHLAUCHLEITUNGEN OBER
SCHLAUCH KPL. 2SN 8X1900	969450708	347	1	572	918730808	SCHLAUCHLEITUNGEN OBER
SCHLAUCH KPL. 2SN 8X2250	963593008	104	1	39	917598608	SCHLAUCHLEITUNGEN RAUP
SCHLAUCH KPL. 2SN 8X2280	964324708	102	1	39	917598608	SCHLAUCHLEITUNGEN RAUP
SCHLAUCH KPL. 2SN 8X2300	964324808	105	1	39	917598608	SCHLAUCHLEITUNGEN RAUP
SCHLAUCH KPL. 2SN 8X2300	964325508	119	1	39	917598608	SCHLAUCHLEITUNGEN RAUP
SCHLAUCH KPL. 2SN 8X2350	929614008	103	1	39	917598608	SCHLAUCHLEITUNGEN RAUP
SCHLAUCH KPL. 2SN 8X260	921536708	484	1	710	967498108	SCHLAUCHLEITUNGEN TELE
SCHLAUCH KPL. 2SN 8X2650	964274408	143	1	39	917598608	SCHLAUCHLEITUNGEN RAUP
SCHLAUCH KPL. 2SN 8X280	963700008	384	1	572	918730808	SCHLAUCHLEITUNGEN OBER
SCHLAUCH KPL. 2SN 8X280	968604508	349	1	572	918730808	SCHLAUCHLEITUNGEN OBER
SCHLAUCH KPL. 2SN 8X3200	966351608	142	1	39	917598608	SCHLAUCHLEITUNGEN RAUP
SCHLAUCH KPL. 2SN 8X330	929361408	483	1	710	967498108	SCHLAUCHLEITUNGEN TELE
SCHLAUCH KPL. 2SN 8X3450	964326108	137	1	39	917598608	SCHLAUCHLEITUNGEN RAUP
SCHLAUCH KPL. 2SN 8X3800	968603308	340	1	571	918730808	SCHLAUCHLEITUNGEN OBER
SCHLAUCH KPL. 2SN 8X3900	968603408	341	1	571	918730808	SCHLAUCHLEITUNGEN OBER
SCHLAUCH KPL. 2SN 8X4000	968600708	138	1	39	917598608	SCHLAUCHLEITUNGEN RAUP
SCHLAUCH KPL. 2SN 8X5100	968845608	344	1	572	918730808	SCHLAUCHLEITUNGEN OBER
SCHLAUCH KPL. 2SN 8X5300	969746208	345	1	572	918730808	SCHLAUCHLEITUNGEN OBER
SCHLAUCH KPL. 2SN 8X600	929630508	120	1	39	917598608	SCHLAUCHLEITUNGEN RAUP
SCHLAUCH KPL. 2SN 8X600	929630508	123	1	39	917598608	SCHLAUCHLEITUNGEN RAUP
SCHLAUCH KPL. 2SN 8X900	968600208	336	1	571	918730808	SCHLAUCHLEITUNGEN OBER
SCHLAUCH KPL. 2TE 10X1120	966965108	382	1	572	918730808	SCHLAUCHLEITUNGEN OBER
SCHLAUCH KPL. 2TE 10X1200	926711908	(1377)	1	619	969856508	ZUSATZHYDRAULIK OELVOR
SCHLAUCH KPL. 2TE 10X1600	929392308	331	1	571	918730808	SCHLAUCHLEITUNGEN OBER
SCHLAUCH KPL. 2TE 10X1700	926121108	332	1	571	918730808	SCHLAUCHLEITUNGEN OBER

Bezeichnung	Artikel	Pos.	Menge	Seite	Baugruppe	Bezeichnung
SCHLAUCH KPL. 2TE 10X1900	96026092	348	1	572	918730808	SCHLAUCHLEITUNGEN OBER
SCHLAUCH KPL. 2TE 10X250	927044108	375	1	572	918730808	SCHLAUCHLEITUNGEN OBER
SCHLAUCH KPL. 2TE 10X3300	96026097	374	1	572	918730808	SCHLAUCHLEITUNGEN OBER
SCHLAUCH KPL. 2TE 10X3700	928046808	319	1	571	918730808	SCHLAUCHLEITUNGEN OBER
SCHLAUCH KPL. 2TE 10X420	965479408	1254	1	593	96064698	SCHLAUCHLEITUNGEN HUBW
SCHLAUCH KPL. 2TE 10X540	923013608	371	1	572	918730808	SCHLAUCHLEITUNGEN OBER
SCHLAUCH KPL. 2TE 10X580	968601908	1260	1	593	96064698	SCHLAUCHLEITUNGEN HUBW
SCHLAUCH KPL. 2TE 10X720	926399508	316	1	571	918730808	SCHLAUCHLEITUNGEN OBER
SCHLAUCH KPL. 2TE 12X160	96046763	203	1	571	918730808	SCHLAUCHLEITUNGEN OBER
SCHLAUCH KPL. 2TE 12X1750	967650208	(2393)	1	305	91002857	KRAFTSTOFFFOERDERUNG
SCHLAUCH KPL. 2TE 12X5500	964193608	(2394)	1	305	91002857	KRAFTSTOFFFOERDERUNG
SCHLAUCH KPL. 2TE 12X650	96033235	(2395)	1	305	91002857	KRAFTSTOFFFOERDERUNG
SCHLAUCH KPL. 2TE 12X940	964273808	1383	1	600	967498008	SCHLAUCHLEITUNGEN HW 2
SCHLAUCH KPL. 2TE 16X2200	96033765	(2391)	1	305	91002857	KRAFTSTOFFFOERDERUNG
SCHLAUCH KPL. 2TE 16X2400	969385408	366	1	572	918730808	SCHLAUCHLEITUNGEN OBER
SCHLAUCH KPL. 2TE 16X2700	927641608	309	1	571	918730808	SCHLAUCHLEITUNGEN OBER
SCHLAUCH KPL. 2TE 16X3500	928714208	205	1	571	918730808	SCHLAUCHLEITUNGEN OBER
SCHLAUCH KPL. 2TE 16X400	927248808	200	1	571	918730808	SCHLAUCHLEITUNGEN OBER
SCHLAUCH KPL. 2TE 16X4500	926495008	(2390)	1	305	91002857	KRAFTSTOFFFOERDERUNG
SCHLAUCH KPL. 2TE 16X460	969042608	361	1	572	918730808	SCHLAUCHLEITUNGEN OBER
SCHLAUCH KPL. 2TE 16X800	966601008	339	1	571	918730808	SCHLAUCHLEITUNGEN OBER
SCHLAUCH KPL. 2TE 20X2900	962535408	383	1	572	918730808	SCHLAUCHLEITUNGEN OBER
SCHLAUCH KPL. 2TE 20X960	966860408	327	1	571	918730808	SCHLAUCHLEITUNGEN OBER
SCHLAUCH KPL. 2TE 6X160	968601808	1259	1	593	96064698	SCHLAUCHLEITUNGEN HUBW
SCHLAUCH KPL. 2TE 6X350	920991708	325	1	571	918730808	SCHLAUCHLEITUNGEN OBER
SCHLAUCH KPL. 2TE 6X640	961721508	315	1	571	918730808	SCHLAUCHLEITUNGEN OBER
SCHLAUCH KPL. 2TE 6X780	96026098	326	1	571	918730808	SCHLAUCHLEITUNGEN OBER
SCHLAUCH KPL. 2TE 8X350	96044527	(2412)	1	290	917962508	KRAFTSTOFFBEHAELTER AN
SCHLAUCH KPL. 304 35X370	96014738	306	1	571	918730808	SCHLAUCHLEITUNGEN OBER
SCHLAUCH KPL. 304 35X760	96014736	307	1	571	918730808	SCHLAUCHLEITUNGEN OBER
SCHLAUCH KPL. 304 42X760	96014955	308	1	571	918730808	SCHLAUCHLEITUNGEN OBER
SCHLAUCH KPL. 4ST+ 31X202	968603108	310	1	571	918730808	SCHLAUCHLEITUNGEN OBER
SCHLAUCH KPL. 4ST+ 31X328	968602008	1380	1	600	967498008	SCHLAUCHLEITUNGEN HW 2
SCHLAUCH KPL. 4ST+ 31X440	968602908	303	1	571	918730808	SCHLAUCHLEITUNGEN OBER
SCHLAUCH KPL. 4ST+ 31X460	968602608	300	1	571	918730808	SCHLAUCHLEITUNGEN OBER
SCHLAUCH KPL. 4ST+ 31X540	968602708	301	1	571	918730808	SCHLAUCHLEITUNGEN OBER
SCHLAUCH KPL. 4ST+ 31X680	968602808	302	1	571	918730808	SCHLAUCHLEITUNGEN OBER
SCHLAUCH KPL. CONTI-KWS	96014023	2456	1	284	96021213	SCHLAUCHLEITUNGEN ANTR
SCHLAUCH KPL. CONTI-KWS 1	969456008	2322	2	466	96074082	SCHLAUCHLEITUNGEN HARN
SCHLAUCH KPL. CONTI-KWS 1	969962808	2325	1	466	96074082	SCHLAUCHLEITUNGEN HARN
SCHLAUCH KPL. CONTI-KWS 1	969384108	2321	1	466	96074082	SCHLAUCHLEITUNGEN HARN
SCHLAUCH KPL. CONTI-KWS	96014042	2316	1	466	96074082	SCHLAUCHLEITUNGEN HARN
SCHLAUCH KPL. CONTI-KWS	969450308	2310	1	466	96074082	SCHLAUCHLEITUNGEN HARN
SCHLAUCH KPL. CONTI-KWS 1	969572308	2324	1	466	96074082	SCHLAUCHLEITUNGEN HARN
SCHLAUCH KPL. CONTI-KWS 1	96021238	2455	1	284	96021213	SCHLAUCHLEITUNGEN ANTR
SCHLAUCH KPL. CONTI-KWS 1	96016097	2323	1	466	96074082	SCHLAUCHLEITUNGEN HARN
SCHLAUCH KPL. CONTI-KWS 1	96021241	2457	1	284	96021213	SCHLAUCHLEITUNGEN ANTR
SCHLAUCH KPL. CONTI-KWS	96032715	2466	1	284	96021213	SCHLAUCHLEITUNGEN ANTR
SCHLAUCH KPL. CONTI-KWS	96026635	2463	1	284	96021213	SCHLAUCHLEITUNGEN ANTR
SCHLAUCH KPL. CONTI-KWS 2	96021231	2451	1	284	96021213	SCHLAUCHLEITUNGEN ANTR
SCHLAUCH KPL. CONTI-KWS	96031888	2450	1	284	96021213	SCHLAUCHLEITUNGEN ANTR
SCHLAUCH KPL. CONTI-KWS 8	96039477	2453	1	284	96021213	SCHLAUCHLEITUNGEN ANTR
SCHLAUCH KPL. GH001 10X1	969041408	(1102)	1	575	918627208	KLIMAANLAGE OW
SCHLAUCH KPL. GH001 13X5	969040908	(1100)	1	575	918627208	KLIMAANLAGE OW
SCHLAUCH KPL. GH001 8X110	969636808	(1103)	1	575	918627208	KLIMAANLAGE OW
SCHLAUCH KPL. GH001 8X690	969041008	(1101)	1	575	918627208	KLIMAANLAGE OW
SCHLAUCH KPL. GH425 12X1	924028408	101	1	39	917598608	SCHLAUCHLEITUNGEN RAUP
SCHLAUCH KPL. GH425 12X2	922099408	115	1	39	917598608	SCHLAUCHLEITUNGEN RAUP
SCHLAUCH KPL. GH425 12X2	967769908	358	1	572	918730808	SCHLAUCHLEITUNGEN OBER
SCHLAUCH KPL. GH425 12X2	922417208	140	1	39	917598608	SCHLAUCHLEITUNGEN RAUP

Bezeichnung	Artikel	Pos.	Menge	Seite	Baugruppe	Bezeichnung
SCHLAUCH KPL. GH425 12X3	922298008	114	1	39	917598608	SCHLAUCHLEITUNGEN RAUP
SCHLAUCH KPL. GH425 12X3	964326008	136	1	39	917598608	SCHLAUCHLEITUNGEN RAUP
SCHLAUCH KPL. GH425 12X47	926850208	320	1	571	918730808	SCHLAUCHLEITUNGEN OBER
SCHLAUCH KPL. GH425 12X47	926850208	321	1	571	918730808	SCHLAUCHLEITUNGEN OBER
SCHLAUCH KPL. GH425 16X3	922124408	328	1	571	918730808	SCHLAUCHLEITUNGEN OBER
SCHLAUCH KPL. GH425 16X45	964325408	116	1	39	917598608	SCHLAUCHLEITUNGEN RAUP
SCHLAUCH KPL. GH425 25X1	964324908	106	1	39	917598608	SCHLAUCHLEITUNGEN RAUP
SCHLAUCH KPL. GH425 25X1	964325108	108	1	39	917598608	SCHLAUCHLEITUNGEN RAUP
SCHLAUCH KPL. GH425 25X2	964325008	107	1	39	917598608	SCHLAUCHLEITUNGEN RAUP
SCHLAUCH KPL. GH425 25X2	964325308	110	1	39	917598608	SCHLAUCHLEITUNGEN RAUP
SCHLAUCH KPL. GH425 25X2	964325308	111	1	39	917598608	SCHLAUCHLEITUNGEN RAUP
SCHLAUCH KPL. GH425 25X2	964325308	112	1	39	917598608	SCHLAUCHLEITUNGEN RAUP
SCHLAUCH KPL. GH425 25X2	964325308	113	1	39	917598608	SCHLAUCHLEITUNGEN RAUP
SCHLAUCH KPL. GH425 25X2	964325208	109	1	39	917598608	SCHLAUCHLEITUNGEN RAUP
SCHLAUCH KPL. GH425 25X2	964326408	141	1	39	917598608	SCHLAUCHLEITUNGEN RAUP
SCHLAUCH KPL. GH425 25X2	964326308	139	1	39	917598608	SCHLAUCHLEITUNGEN RAUP
SCHLAUCH KPL. GH425 25X2	964325808	134	1	39	917598608	SCHLAUCHLEITUNGEN RAUP
SCHLAUCH KPL. GH425 25X3	964325908	135	1	39	917598608	SCHLAUCHLEITUNGEN RAUP
SCHLAUCH KPL. GH506 25X1	963698908	292	1	571	918730808	SCHLAUCHLEITUNGEN OBER
SCHLAUCH KPL. GH506 25X1	963698808	291	1	571	918730808	SCHLAUCHLEITUNGEN OBER
SCHLAUCH KPL. GH506 25X2	968604008	354	1	572	918730808	SCHLAUCHLEITUNGEN OBER
SCHLAUCH KPL. GH506 25X29	96027797	290	1	571	918730808	SCHLAUCHLEITUNGEN OBER
SCHLAUCH KPL. GH506 25X59	96026091	351	1	572	918730808	SCHLAUCHLEITUNGEN OBER
SCHLAUCH KPL. GH506 25X68	966184608	353	1	572	918730808	SCHLAUCHLEITUNGEN OBER
SCHLAUCH KPL. GH506 25X76	96027796	293	1	571	918730808	SCHLAUCHLEITUNGEN OBER
SCHLAUCH KPL. GH506 25X82	966185908	352	1	572	918730808	SCHLAUCHLEITUNGEN OBER
SCHLAUCH KPL. GH506 31X1	968603208	311	1	571	918730808	SCHLAUCHLEITUNGEN OBER
SCHLAUCH KPL. GH506 31X1	925519008	481	1	710	967498108	SCHLAUCHLEITUNGEN TELE
SCHLAUCH KPL. GH506 31X1	925519008	482	1	710	967498108	SCHLAUCHLEITUNGEN TELE
SCHLAUCH KPL. GH506 31X2	928753308	480	1	710	967498108	SCHLAUCHLEITUNGEN TELE
SCHLAUCH KPL. GH506 31X2	929920508	357	1	572	918730808	SCHLAUCHLEITUNGEN OBER
SCHLAUCH KPL. GH506 31X3	968602108	1381	1	600	967498008	SCHLAUCHLEITUNGEN HW 2
SCHLAUCH KPL. GH506 31X56	968604108	356	1	572	918730808	SCHLAUCHLEITUNGEN OBER
SCHLAUCH KPL. HPC 4X450	962335508	410	1	572	918730808	SCHLAUCHLEITUNGEN OBER
SCHLAUCH KPL. HPC 4X4800	968604608	411	1	572	918730808	SCHLAUCHLEITUNGEN OBER
SCHLAUCH KPL. KUNSTSTOF	96013921	2333	1	466	96074082	SCHLAUCHLEITUNGEN HARN
SCHLAUCH KPL. S45 10X800	96014315	2334	1	466	96074082	SCHLAUCHLEITUNGEN HARN
SCHLAUCH KPL. SC117 38X1	966683308	261	1	571	918730808	SCHLAUCHLEITUNGEN OBER
SCHLAUCH KPL. SC117 38X2	966051308	260	1	571	918730808	SCHLAUCHLEITUNGEN OBER
SCHLAUCH KPL. SC117 38X38	967616708	304	1	571	918730808	SCHLAUCHLEITUNGEN OBER
SCHLAUCH KPL. SC117 38X90	968602508	263	1	571	918730808	SCHLAUCHLEITUNGEN OBER
SCHLAUCHFUEHRUNG SCH	925143708	1	1	646	925141508	SCHLAUCHFUEHRUNG VORM.
SCHLAUCHFUEHRUNG VORM.	925141508	9	1	645	919950308	MECH.TEILE VERSANDMONT
SCHLAUCHHALTER FE//ZNNI8/	965225808	19	1	124	918728408	MONTAGETEILE DREHBUEHN
SCHLAUCHLEITUNG X300	790042214	7	1	102	914860608	WERKZEUG M.ZUBEHOER
SCHLAUCHLEITUNG X300	790042914	8	1	102	914860608	WERKZEUG M.ZUBEHOER
SCHLAUCHLEITUNGEN	96046807	290	1	290	917962508	KRAFTSTOFFBEHAELTER AN
SCHLAUCHLEITUNGEN ABST	967499008	10	1	63	967301408	HYDRAULIK VORB.
SCHLAUCHLEITUNGEN ABST	967499208	10	1	74	967314108	ZUSATZHYDR.ABSTUETZZYL
SCHLAUCHLEITUNGEN ANTR	96021213	290	1	263	918728708	ANTRIEBSAGGREGAT KPL.
SCHLAUCHLEITUNGEN HAR	96074082	20	1	461	96074081	HARNSTOFFTANK VORM.
SCHLAUCHLEITUNGEN HUBW	96064698	10	1	591	96064697	HYDRAULIK HILFSHUBWERK
SCHLAUCHLEITUNGEN HW 2	967498008	10	1	598	96075086	HYDRAULIK HILFSHUBWERK D
SCHLAUCHLEITUNGEN KLAP	967498508	10	1	717	966004808	ZUSATZHYDRAULIK KLAPPSPI
SCHLAUCHLEITUNGEN KLIMA	96018574	500	1	575	918627208	KLIMAANLAGE OW
SCHLAUCHLEITUNGEN KRAFT	96033380	1	1	305	91002857	KRAFTSTOFFFOERDERUNG
SCHLAUCHLEITUNGEN MOTO	96020707	50	1	268	918811108	ANTRIEBSAGGREGAT VORM.
SCHLAUCHLEITUNGEN OBER	918730808	191	1	14		LIEBHERR LTR 1100
SCHLAUCHLEITUNGEN OELVO	969856608	10	1	619	969856508	ZUSATZHYDRAULIK OELVOR
SCHLAUCHLEITUNGEN RAUP	917598608	7	1	19	96062225	UNTERWAGEN KPL.

Bezeichnung	Artikel	Pos.	Menge	Seite	Baugruppe	Bezeichnung
SCHLAUCHLEITUNGEN TELE	967498108	10	1	709	965994108	HYDRAULIK TELE
SCHLAUCHNIPPEL	10142668	1	1	219	10142744	KUEHLWASSERENTLUEFTUN
SCHLAUCHNIPPEL	11170727	5	1	274	97095949	KOMBIKUEHLER
SCHLAUCHNIPPEL	9140351	6	2	201	10145173	ANSAUGSTUTZEN ANBAU
SCHLAUCHNIPPEL	9140351	26	1	222	10140729	ATL-ANBAU
SCHLAUCHNIPPEL 11SMn30+	10140969	5	1	219	10142744	KUEHLWASSERENTLUEFTUN
SCHLAUCHSCHELLE 10/9,5-10,	553102308	7	5	444	918759708	ZUSATZHEIZUNG OW
SCHLAUCHSCHELLE 10/9,5-10,	553102308	20	1	446	96019783	ZUSATZHEIZUNG VORM.
SCHLAUCHSCHELLE 110/100-	550849408	180	3	476	918729308	LUFTFILTERANLAGE
SCHLAUCHSCHELLE 115/113-	12102528	181	3	470	919674308	ABGASANLAGE
SCHLAUCHSCHELLE 140/130-	774209908	181	1	476	918729308	LUFTFILTERANLAGE
SCHLAUCHSCHELLE 21/16-27/	11118077	21	21	392	969300008	HEIZUNG VORM.
SCHLAUCHSCHELLE 21/16-27/	11118077	14	8	446	96019783	ZUSATZHEIZUNG VORM.
SCHLAUCHSCHELLE 26/20-32/	774215008	3	1	143	10126713	KURBELGEHAEUSEENTLUEF
SCHLAUCHSCHELLE 26/20-32/	774215008	8	4	201	10145173	ANSAUGSTUTZEN ANBAU
SCHLAUCHSCHELLE 26/20-32/	774215008	25	2	222	10140729	ATL-ANBAU
SCHLAUCHSCHELLE 26/20-32/	774215008	185	2	268	918811108	ANTRIEBSAGGREGAT VORM.
SCHLAUCHSCHELLE 26/20-32/	774215008	19	4	386	917894308	HEIZUNG KRANFUEHRERKAB
SCHLAUCHSCHELLE 26/20-32/	774215008	14	1	444	918759708	ZUSATZHEIZUNG OW
SCHLAUCHSCHELLE 32/25-40/	774208508	181	4	263	918728708	ANTRIEBSAGGREGAT KPL.
SCHLAUCHSCHELLE 32/25-40/	774208508	9	1	446	96019783	ZUSATZHEIZUNG VORM.
SCHLAUCHSCHELLE 32/25-40/	774208508	23	4	458	91003833	HARNSTOFFANLAGE
SCHLAUCHSCHELLE 41/35-50/	550849508	184	2	268	918811108	ANTRIEBSAGGREGAT VORM.
SCHLAUCHSCHELLE 45/30-45	10878445	20	2	355	916163008	WISCHANLAGE EINBAU
SCHLAUCHSCHELLE 50/40-60/	550838008	183	2	268	918811108	ANTRIEBSAGGREGAT VORM.
SCHLAUCHSCHELLE 60/50-70/	774208008	182	2	268	918811108	ANTRIEBSAGGREGAT VORM.
SCHLAUCHSCHELLE 70/60-80/	774214308	181	2	268	918811108	ANTRIEBSAGGREGAT VORM.
SCHLAUCHSCHELLE 80/70-90/	774206408	180	4	268	918811108	ANTRIEBSAGGREGAT VORM.
SCHLAUCHSCHELLE DIN 3017-	10872022	315	1	591	96064697	HYDRAULIK HILFSHUBWERK
SCHLAUCHSCHELLE DIN 3017	5004929	6	2	203	10149677	VERBINDUNGSLEITUNG ANBA
SCHLAUCHSCHELLE DIN 3017	12696398	8	7	224	11420633	TAKTVENTIL
SCHLAUCHSCHELLE DIN 3017	4981029	6	4	152	10139112	OELLEITUNG VORM.
SCHLAUCHSCHELLE DIN 3017-	774223808	180	2	263	918728708	ANTRIEBSAGGREGAT KPL.
SCHLAUCHSCHELLE DIN 3021	11162002	24	2	458	91003833	HARNSTOFFANLAGE
SCHLAUCHSCHELLE DIN 3021	11162002	24	6	461	96074081	HARNSTOFFTANK VORM.
SCHLAUCHVERBINDUNGSSTU	10801609	22	2	461	96074081	HARNSTOFFTANK VORM.
SCHLAUCHVERSCHRAUBUNG	602441008	506	1	589	96055198	KABELSTRANG
SCHLAUCHVERSCHRAUBUNG	602441508	510	1	90	96062920	KABELSTRANG
SCHLEIFBUEGEL	691041608	19	21	95	10878097	SCHLEIFRINGUEBERTRAGER
SCHLEIFBUEGELHALTER	10359128	21	2	95	10878097	SCHLEIFRINGUEBERTRAGER
SCHLEIFBUEGELHALTER	691043108	17	35	95	10878097	SCHLEIFRINGUEBERTRAGER
SCHLEIFRING 16A	12106200	20	6	697	12104731	LEITUNGSTROMMEL
SCHLEIFRING 16A	12106201	22	6	697	12104731	LEITUNGSTROMMEL
SCHLEIFRING 60X2 2,5²	10114843	7	21	95	10878097	SCHLEIFRINGUEBERTRAGER
SCHLEIFRINGUEBERTRAGER	10878097	5	1	81	96062917	ELEKTRIK MITTELSTUECK
SCHLIESSANLAGE	966230408	25	1	361	917304708	SCHIEBETUER EINBAU
SCHLIESSBOLZEN 1.4305	97019129	52	1	361	917304708	SCHIEBETUER EINBAU
SCHLUSSSCHEIBE	11951833	7	2	56	790258414	RAUPENKETTE KPL
SCHMIERNIPPEL M16X1.5	774351714	6	1	23	790256114	LEITRADEINHEIT KPL
SCHMIERNIPPELKAPPE	10014701	16	1	480	10327065	ELEKTROPUMPE
SCHMIEROELFILTER ANBAU	10142942	150	1	131	13455311	DIESELMOTOR
SCHMIEROELLEITUNG 10X1	10140757	3	1	222	10140729	ATL-ANBAU
SCHMIEROELLEITUNG 6X1	9080310	5	1	212	10145278	ANBAUTEILE LUFTPRESSER
SCHMIEROELPUMPE B=41,4	12438990	1	1	177	10148432	SCHMIEROELPUMPE MIT BE
SCHMIEROELPUMPE MIT BEF	10148432	140	1	131	13455311	DIESELMOTOR
SCHNAPPFUSS	10492256	11	1	703	96063458	KLEMMKASTEN KPL.
SCHNAPPSCHALTER	571486808	28	1	95	10878097	SCHLEIFRINGUEBERTRAGER
SCHNAPPVERSCHLUSS ABS	10296157	(2)	3	407	96022627	DREHBUEHNENVERKLEIDUN
SCHNELLBEFESTIGER	704259608	57	1	361	917304708	SCHIEBETUER EINBAU
SCHNELLKUPPL.RAUPENTR	914950208	60	1	12		LIEBHERR LTR 1100

Bezeichnung	Artikel	Pos.	Menge	Seite	Baugruppe	Bezeichnung
SCHNELLKUPPLUNG HYDR.	967292708	4	1	67	917155408	SCHNELLKUPPLUNG
SCHNELLKUPPLUNG JACKUP	917155408	50	1	12		LIEBHERR LTR 1100
SCHNELLKUPPLUNG NRS	919926114	1	1	75	914950208	SCHNELLKUPPL.RAUPENTR
SCHNELLVERSCHRAUBUNGS	511708314	155	2	33	967304508	HYDRAULIK UNTERWAGEN
SCHNELLVERSCHRAUBUNGS	511708414	156	2	33	967304508	HYDRAULIK UNTERWAGEN
SCHRAEGKUGELLAGER DIN 6	10013601	3	1	383	968607101	PLANETENGETRIEBE
SCHRAEGKUGELLAGER DIN 6	10013601	3	1	584	938759801	PLANETENGETRIEBE
SCHRAFFURPLAN SPF	917026008	75	1	12		LIEBHERR LTR 1100
SCHRAUBE	570941408	2	1	720	511479408	LASTHALTEVENTIL
SCHRAUBE 25X25X65 8.8 FE//	956414208	17	4	679	91000055	AUSSCHUBMECHANIK
SCHRAUBE DIN 912 M12X40 1	404361977	86	4	528	11170515	VENTILBLOCK
SCHRAUBE DIN 912 M12X40 1	404361977	86	4	530	11170518	VENTILBLOCK
SCHRAUBE DIN 912 M12X40 1	404361977	86	4	531	11170519	VENTILBLOCK
SCHRAUBE DIN 912 M12X40 1	404361977	86	4	602	10665173	STEUERBLOCK
SCHRAUBE DIN 912 M8X25 12.	570613877	9	4	209	5700161	LUFTPRESSER
SCHRAUBE M10X1,5X25 FLZN	12692417	43	3	383	968607101	PLANETENGETRIEBE
SCHRAUBE M8X30 St Rm>=80	13541106	2	1	238	10144098	BEFESTIGUNGSSCHELLE
SCHRAUBE RD70X120 35NIC	954766708	11	1	673	91000054	TELESKOP 5 VORM.
SCHRAUBE RD70X164 35NIC	954766608	11	1	670	91000053	TELESKOP 4 VORM.
SCHRAUBE UNF7/8X14X3 12.9	786511414	3	4	57	965336308	RS RAUPENKETTE
SCHRAUBE UNF7/8X14X3 12.9	786511414	3	8	58	965359808	RS RAUPENKETTE
SCHRAUBE UNF7/8X14X3 12.9	786511414	3	12	59	965359908	RS RAUPENKETTE
SCHRAUBE UNF7/8X14X3 3/4 1	485507414	20	248	55	10430241	RAUPENKETTE KPL.
SCHRAUBE UNF7/8X14X3 3/4 1	485507414	3	4	57	965336308	RS RAUPENKETTE
SCHRAUBE UNF7/8X14X3 3/4 1	485507414	3	8	58	965359808	RS RAUPENKETTE
SCHRAUBE UNF7/8X14X3 3/4 1	485507414	3	12	59	965359908	RS RAUPENKETTE
SCHRAUBENDREHER 10 CRV	790032508	52	1	104	928569808	GRUNDWERKZEUG
SCHRAUBENDREHER 3,5 CRV	790032008	50	1	104	928569808	GRUNDWERKZEUG
SCHRAUBENDREHER 5,5 CRV	790032308	51	1	104	928569808	GRUNDWERKZEUG
SCHRAUBENSICHERUNG FLA	811205708	105	1	168	10120186	MASSENAUSGLEICH ANBAU
SCHRAUBENSICHERUNG FLA	811205708	109	1	169	12408221	FLANSCH VORM.
SCHRAUBENSICHERUNG FLA	811205708	105	1	178	10142942	SCHMIEROELFILTER ANBAU
SCHRAUBENSICHERUNG FLA	811205708	105	1	213	12418347	KLIMAKOMPRESSOR ANBAU
SCHRAUBENSICHERUNG FLA	811205708	109	1	226	10115539	STARTER ANBAU
SCHRAUBENSICHERUNG FLA	811205708	109	1	230	9079823	TRANSPORTVORRICHTUNG
SCHRAUBENSICHERUNG FLA	811205708	109	1	237	10144227	STEUERGERAET ANBAU
SCHRAUBENSICHERUNG FLA	811205708	105	1	248	9078961	NEBENABTRIEB ANBAU
SCHRAUBKAPPE GPN 800 M1	10021410	3	2	183	12489819	ABDECKKAPPEN-KIT
SCHRAUBKARABINER OVAL	10877382	2	2	676	96013575	HUBENDSCHALTER GEWICHT
SCHRAUBSTOPFEN GPN 700	7003652	4	1	183	12489819	ABDECKKAPPEN-KIT
SCHRAUBSTOPFEN GPN 700	7011745	1	1	183	12489819	ABDECKKAPPEN-KIT
SCHRAUBSTUTZEN	12211232	3	1	462	96071742	HARNSTOFFTANK
SCHRUMPFFORMTEIL 24	603020508	518	2	494	96023971	KABELSTRANG
SCHRUMPFSCHLAUCH 11,6/2	10441166	298	0.1	426	96023891	KABELSTRANG
SCHRUMPFSCHLAUCH 11,6/2	10441166	298	0.4	495	96049294	KABELSTRANG
SCHRUMPFSCHLAUCH 12/2,5	10429652	288	0.12	706	96063415	KABELSTRANG
SCHRUMPFSCHLAUCH 27 - 8	603016908	243	0.25	698	96063213	LEITUNG
SCHRUMPFSCHLAUCH 38,1/19	603032214	319	0.3	33	967304508	HYDRAULIK UNTERWAGEN
SCHRUMPFSCHLAUCH 38,1/19	603032314	321	0.6	33	967304508	HYDRAULIK UNTERWAGEN
SCHRUMPFSCHLAUCH 38/19X	603032614	320	0.3	33	967304508	HYDRAULIK UNTERWAGEN
SCHRUMPFSCHLAUCH 9,0/2,3	10441165	297	0.06	608	96060353	LEITUNG
SCHUTZ KPL. LWE	96046146	100	8	47	968374708	MONTAGETEILE
SCHUTZBLECH 3x146x437 DC0	970596208	3	1	367	919235408	DREHWERK
SCHUTZBLECH KPL.	96004318	29	1	268	918811108	ANTRIEBSAGGREGAT VORM.
SCHUTZKAPPE	10042323	(1)	1	516	96045552	HYDRAULIK OBERWAGEN
SCHUTZKAPPE	610701108	527	1	494	96023971	KABELSTRANG
SCHUTZKAPPE 180°	11060618	516	3	495	96049294	KABELSTRANG
SCHUTZKAPPE 180°	11491349	519	1	495	96049294	KABELSTRANG
SCHUTZKAPPE 180°	11491349	503	1	706	96063415	KABELSTRANG
SCHUTZKAPPE HDSCS GROU	10875279	514	1	90	96062920	KABELSTRANG

Bezeichnung	Artikel	Pos.	Menge	Seite	Baugruppe	Bezeichnung
SCHUTZKAPPE HDSCS GROU	10875279	518	1	491	96063649	KABELSTRANG
SCHUTZKAPPE HDSCS GRO	11697580	513	1	90	96062920	KABELSTRANG
SCHUTZKAPPE HDSCS GRO	11697580	502	1	98	96045216	KABELSTRANG
SCHUTZKAPPE HDSCS GRO	11697580	519	1	491	96063649	KABELSTRANG
SCHUTZKAPPE HDSCS GRO	11697580	502	1	640	96045220	KABELSTRANG
SCHUTZKAPPE HDSCS GRO	11697580	504	2	694	96063583	LEITUNG
SCHUTZKAPPE JPT	10874331	528	1	427	96023891	KABELSTRANG
SCHUTZKAPPE JPT	10874331	524	1	494	96023971	KABELSTRANG
SCHUTZKAPPE M26X1,5	7013456	3	1	147	5004624	OELABLASSSCHRAUBE
SCHUTZKAPPE MCP BUCHS	10678458	503	2	493	96023971	KABELSTRANG
SCHUTZKAPPE NETZW. RJ45/	11008530	2	1	439	966979108	STECKDOSE
SCHUTZKAPPE STECKER 4-P	602339608	515	1	90	96062920	KABELSTRANG
SCHUTZKAPPE SW 24	779040801	18	2	334	917304508	KRANFUEHRERKABINE VORM.
SCHUTZKAPPE SW10	779020108	2	6	503	922648308	KLEMMBRETT VORM.
SCHUTZPOLSTER	520402808	3	1	102	914860608	WERKZEUG M.ZUBEHOER
SCHUTZRING EN AC-Al Si1	10152974	3	1	156	10153583	KURBELWELLENDICHTUNG
SCHUTZSCHLAUCH 30MM AL-	11118396	211	1	495	96049294	KABELSTRANG
SCHUTZSCHLAUCH DN16XNO	10871063	213	2	730	96058738	KABELSTRANG
SCHUTZSCHLAUCH DN20 NO	10870635	15	1	625	96036821	AUSRUESTUNG KAMERA DRE
SCHWEISSBUCHSE M8X17 ST	10412105	23	4	287	96024716	BATTERIEKASTEN VORM.
SCHWINGUNGSDAEMPFER 4	10287383	103	4	268	918811108	ANTRIEBSAGGREGAT VORM.
SCHWUNGRAD ANBAU SAE 1	9077238	530	1	134	13455311	DIESELMOTOR
SCHWUNGRAD VORM. SAE 1	12809567	1	1	236	9077238	SCHWUNGRAD ANBAU
SCHWUNGRADGEHAEUSE AN	10115829	520	1	134	13455311	DIESELMOTOR
SCHWUNGRADGEHAEUSE VO	10118148	1	1	232	10115829	SCHWUNGRADGEHAEUSE AN
SCRFILTER-BAUGRUPPE SC	11429845	101	1	473	96051762	ABGASANLAGE VORM.
SEAL-LOCK-MUTTER M1414X1,	11320421	(2)	1	534	10802090	STEUERBLOCK
SECHSKANTMUTTER AEHNL.	11004444	99	10	656	91000049	ANLENKSTUECK VORM.
SECHSKANTMUTTER AEHNL.	11004444	93	2	674	91000054	TELESKOP 5 VORM.
SECHSKANTMUTTER AEHNL.	11004444	9	3	734	96056553	GRUNDHALTER VORM.
SECHSKANTMUTTER AEHNL.	11626393	352	4	473	96051762	ABGASANLAGE VORM.
SECHSKANTMUTTER AEHNL.	11113917	350	4	473	96051762	ABGASANLAGE VORM.
SECHSKANTMUTTER DIN 985	10875605	104	4	645	919950308	MECH.TEILE VERSANDMONT
SECHSKANTMUTTER DIN 985	10197769	9	4	52	968374908	ENDSCHALTER ANBAU
SECHSKANTMUTTER DIN 985	10197769	12	1	355	916163008	WISCHANLAGE EINBAU
SECHSKANTMUTTER DIN 985	10197769	55	4	673	91000054	TELESKOP 5 VORM.
SECHSKANTMUTTER DIN 985	12218127	352	2	124	918728408	MONTAGETEILE DREHBUEHN
SECHSKANTMUTTER DIN 985	12218127	47	4	679	91000055	AUSSCHUBMECHANIK
SECHSKANTMUTTER DIN 985	10875607	11	4	47	968374708	MONTAGETEILE
SECHSKANTMUTTER DIN 985	10875607	34	4	70	915447908	HYDRAULISCHE ABSTUETZUN
SECHSKANTMUTTER DIN 985	12100600	353	1	272	96020819	KUEHLER VORM.
SECHSKANTMUTTER DIN 985	10875609	22	2	315	917357108	KRANFUEHRERKABINE ANBA
SECHSKANTMUTTER DIN 985	10875609	8	4	320	916164208	LAGERUNG EINBAU
SECHSKANTMUTTER DIN 985	10875610	350	1	290	917962508	KRAFTSTOFFBEHAELTER AN
SECHSKANTMUTTER DIN 985	10875610	350	1	293	918008908	OELBEHAELTER ANBAU
SECHSKANTMUTTER DIN 985	10875610	59	4	673	91000054	TELESKOP 5 VORM.
SECHSKANTMUTTER DIN 985	10876399	26	4	431	96056347	ELEKTRIK ANBAUTEILE KABIN
SECHSKANTMUTTER DIN 985	10875612	10	3	781	968940708	HALTER LINKS
SECHSKANTMUTTER DIN 985	10875612	10	3	782	968940808	HALTER RECHTS
SECHSKANTMUTTER DIN 985	10301317	26	8	81	96062917	ELEKTRIK MITTELSTUECK
SECHSKANTMUTTER DIN 985	10301317	4	1	734	96056553	GRUNDHALTER VORM.
SECHSKANTMUTTER DIN 985	12102692	314	6	33	967304508	HYDRAULIK UNTERWAGEN
SECHSKANTMUTTER DIN 985	12102692	12	6	421	96044787	HALTER VORM.
SECHSKANTMUTTER DIN 985	12102692	14	6	506	926891108	VERTEILER MASSE
SECHSKANTMUTTER DIN 985	12102692	311	2	591	96064697	HYDRAULIK HILFSHUBWERK
SECHSKANTMUTTER DIN 985	12102692	60	2	599	96075102	BEFESTIGUNGSTEILE HYDR
SECHSKANTMUTTER DIN 985	12102692	5	1	646	925141508	SCHLAUCHFUEHRUNG VORM.
SECHSKANTMUTTER DIN 985	411903008	11	1	332	968462608	SCHALTSCHRANKDECKEL EIN
SECHSKANTMUTTER DIN 985	411903008	23	4	361	917304708	SCHIEBETUER EINBAU
SECHSKANTMUTTER DIN 985	411903008	5	2	363	966230508	FUEHRUNG VORM.

Bezeichnung	Artikel	Pos.	Menge	Seite	Baugruppe	Bezeichnung
SECHSKANTMUTTER DIN 985	411903008	354	4	415	96024809	DREHBUEHNENVERKLEIDUN
SECHSKANTMUTTER DIN 985	411903008	9	3	623	915403108	ANBAUTEILE KAMERA
SECHSKANTMUTTER DIN 985	411903008	25	2	625	96036821	AUSRUESTUNG KAMERA DRE
SECHSKANTMUTTER DIN 985	10875614	4	8	47	968374708	MONTAGETEILE
SECHSKANTMUTTER DIN 985	10875614	9	2	127	968305308	ENDSCHALTER VORM.
SECHSKANTMUTTER DIN 985	10875614	26	2	326	968483708	TRITT KPL.
SECHSKANTMUTTER DIN 985	10875614	46	1	338	917305408	INNENVERKLEIDUNG EINBAU
SECHSKANTMUTTER DIN 985	10875614	5	4	386	917894308	HEIZUNG KRANFUEHRERKAB
SECHSKANTMUTTER DIN 985	10875614	5	1	402	916049908	SPIEGELANBAU KRANFUEHR
SECHSKANTMUTTER DIN 985	10875614	351	8	408	96022627	DREHBUEHNENVERKLEIDUN
SECHSKANTMUTTER DIN 985	10875614	4	4	440	916870808	SPIEGELANBAU DREHBUEHN
SECHSKANTMUTTER DIN 985	10875614	22	2	444	918759708	ZUSATZHEIZUNG OW
SECHSKANTMUTTER DIN 985	10875614	26	1	446	96019783	ZUSATZHEIZUNG VORM.
SECHSKANTMUTTER DIN 985	10875614	352	4	562	919528608	OELKUEHLER EINBAU
SECHSKANTMUTTER DIN 985	10875614	12	3	606	91002360	LADEGERAET
SECHSKANTMUTTER DIN 985	10875614	7	2	612	913753108	FUNKVORBEREITUNG OW
SECHSKANTMUTTER DIN 985	10875614	14	1	623	915403108	ANBAUTEILE KAMERA
SECHSKANTMUTTER DIN 985	10875614	6	4	773	96037297	WINKELGEBER ANBAU
SECHSKANTMUTTER DIN 985	10875614	6	8	780	917508508	LEITER ANBAU
SECHSKANTMUTTER DIN 985	411903108	(6)	21	326	968483708	TRITT KPL.
SECHSKANTMUTTER DIN 985	411903108	23	20	326	968483708	TRITT KPL.
SECHSKANTMUTTER DIN 985	411903108	6	12	331	916162808	RELING
SECHSKANTMUTTER EN 1661	12215460	4	3	202	10147364	LUFTANSAUGUNG ANBAU
SECHSKANTMUTTER EN 1661	12215460	7	1	225	10142863	GENERATOR VORM.
SECHSKANTMUTTER EN 1661	12215460	3	3	226	10115539	STARTER ANBAU
SECHSKANTMUTTER EN 1661	11820285	11	2	203	10149677	VERBINDUNGSLEITUNG ANBA
SECHSKANTMUTTER EN 1661	11820285	78	1	239	10151328	KABELBAUM ANBAU
SECHSKANTMUTTER ISO 403	11002807	14	12	129	13471292	ANTRIEBSGRUPPE
SECHSKANTMUTTER ISO 403	411503103	6	2	60	991456314	AUFSTIEG KPL.
SECHSKANTMUTTER ISO 403	12102695	351	3	124	918728408	MONTAGETEILE DREHBUEHN
SECHSKANTMUTTER ISO 403	12102695	32	2	395	918810308	STEUERSTAND
SECHSKANTMUTTER ISO 403	12102695	354	9	408	96022627	DREHBUEHNENVERKLEIDUN
SECHSKANTMUTTER ISO 403	12102695	353	2	415	96024809	DREHBUEHNENVERKLEIDUN
SECHSKANTMUTTER ISO 403	12102695	51	6	581	96062734	HILFSHUBWERK
SECHSKANTMUTTER ISO 403	12102695	25	2	723	964502908	MASTNASE VORM.
SECHSKANTMUTTER ISO 403	411514614	350	6	470	919674308	ABGASANLAGE
SECHSKANTMUTTER ISO 4032	10875616	351	4	473	96051762	ABGASANLAGE VORM.
SECHSKANTMUTTER ISO 4032	10875616	50	4	581	96062734	HILFSHUBWERK
SECHSKANTMUTTER ISO 4032	10875616	17	2	747	919933308	TRANSPORTHALTERUNG DKS
SECHSKANTMUTTER ISO 4032	10875616	29	4	760	918533508	ADAPTER VORM.
SECHSKANTMUTTER ISO 403	10873081	353	8	124	918728408	MONTAGETEILE DREHBUEHN
SECHSKANTMUTTER ISO 403	411514608	8	1	751	929582108	HALTERUNG VORM.
SECHSKANTMUTTER ISO 4032	10875617	21	4	22	96062226	RAUPENTRAEGER KPL.RE.
SECHSKANTMUTTER ISO 4032	10875617	21	4	27	96062228	RAUPENTRAEGER KPL.LI.
SECHSKANTMUTTER ISO 4032	10875617	3	3	636	964060608	KETTENHALTER KPL.
SECHSKANTMUTTER ISO 4032	10875617	13	11	747	919933308	TRANSPORTHALTERUNG DKS
SECHSKANTMUTTER ISO 4032	10875617	27	4	760	918533508	ADAPTER VORM.
SECHSKANTMUTTER ISO 4032	10875617	36	2	768	91001040	ANLENKSTUECK VORM.
SECHSKANTMUTTER ISO 4032	10875617	18	1	771	918596708	KOPFSTUECK VORM.
SECHSKANTMUTTER ISO 4032	10875617	9	1	772	918221408	ZUGLASCHE VORM.
SECHSKANTMUTTER ISO 4032	10875618	34	4	661	91000050	TELESKOP 1 VORM.
SECHSKANTMUTTER ISO 4032	10875618	34	4	664	91000051	TELESKOP 2 VORM.
SECHSKANTMUTTER ISO 4032	10875618	34	4	667	91000052	TELESKOP 3 VORM.
SECHSKANTMUTTER ISO 4032	10875618	46	4	670	91000053	TELESKOP 4 VORM.
SECHSKANTMUTTER ISO 4032	10875618	15	4	741	919421708	HAKENFLASCHE
SECHSKANTMUTTER ISO 4032	10875618	15	4	743	910445708	HAKENFLASCHE
SECHSKANTMUTTER ISO 4032	10875618	33	4	771	918596708	KOPFSTUECK VORM.
SECHSKANTMUTTER ISO 403	10425688	25	4	768	91001040	ANLENKSTUECK VORM.
SECHSKANTMUTTER ISO 403	10425689	33	2	22	96062226	RAUPENTRAEGER KPL.RE.
SECHSKANTMUTTER ISO 403	10425689	33	2	28	96062228	RAUPENTRAEGER KPL.LI.

Bezeichnung	Artikel	Pos.	Menge	Seite	Baugruppe	Bezeichnung
SECHSKANTMUTTER ISO 403	10875619	10	2	346	916162508	SCHEIBEN EINBAU
SECHSKANTMUTTER ISO 403	10875620	108	2	70	915447908	HYDRAULISCHE ABSTUETZUN
SECHSKANTMUTTER ISO 403	10875620	18	6	287	96024716	BATTERIEKASTEN VORM.
SECHSKANTMUTTER ISO 403	10875620	5	4	478	915300208	ZENTRALSCHMIERANLAGE O
SECHSKANTMUTTER ISO 4032	400100703	23	18	61	917155308	HYDRAULIK VORB.
SECHSKANTMUTTER ISO 4032	10878117	15	2	458	91003833	HARNSTOFFANLAGE
SECHSKANTMUTTER ISO 403	10197764	13	2	85	966167808	DECKEL KPL.
SECHSKANTMUTTER ISO 403	10197764	16	2	87	96062922	MONTAGEPLATTE VORM.
SECHSKANTMUTTER ISO 403	10197764	354	2	124	918728408	MONTAGETEILE DREHBUEHN
SECHSKANTMUTTER ISO 403	10197764	350	12	269	918811108	ANTRIEBSAGGREGAT VORM.
SECHSKANTMUTTER ISO 403	10197764	351	4	272	96020819	KUEHLER VORM.
SECHSKANTMUTTER ISO 403	10197764	27	4	287	96024716	BATTERIEKASTEN VORM.
SECHSKANTMUTTER ISO 403	10197764	51	2	338	917305408	INNENVERKLEIDUNG EINBAU
SECHSKANTMUTTER ISO 403	10197764	350	4	408	96022627	DREHBUEHNENVERKLEIDUN
SECHSKANTMUTTER ISO 403	10197764	350	6	415	96024809	DREHBUEHNENVERKLEIDUN
SECHSKANTMUTTER ISO 403	10197764	350	2	417	969392008	FRONTHAUBE LI.
SECHSKANTMUTTER ISO 403	10197764	97	4	420	919484908	ABSTURZSICHERUNG
SECHSKANTMUTTER ISO 403	10197764	71	4	461	96074081	HARNSTOFFTANK VORM.
SECHSKANTMUTTER ISO 403	10197764	5	12	503	922648308	KLEMMBRETT VORM.
SECHSKANTMUTTER ISO 403	10197764	6	4	506	926891108	VERTEILER MASSE
SECHSKANTMUTTER ISO 4032	411530301	98	2	420	919484908	ABSTURZSICHERUNG
SECHSKANTMUTTER ISO 4032	411517114	351	11	470	919674308	ABGASANLAGE
SECHSKANTMUTTER ISO 403	10197760	10	4	506	926891108	VERTEILER MASSE
SECHSKANTMUTTER ISO 403	11693875	107	2	70	915447908	HYDRAULISCHE ABSTUETZUN
SECHSKANTMUTTER ISO 403	11693875	350	10	124	918728408	MONTAGETEILE DREHBUEHN
SECHSKANTMUTTER ISO 403	11693875	351	13	269	918811108	ANTRIEBSAGGREGAT VORM.
SECHSKANTMUTTER ISO 403	11693875	350	11	272	96020819	KUEHLER VORM.
SECHSKANTMUTTER ISO 403	11693875	350	4	305	91002857	KRAFTSTOFFFOERDERUNG
SECHSKANTMUTTER ISO 403	11693875	27	2	355	916163008	WISCHANLAGE EINBAU
SECHSKANTMUTTER ISO 403	11693875	8	4	386	917894308	HEIZUNG KRANFUEHRERKAB
SECHSKANTMUTTER ISO 403	11693875	353	13	408	96022627	DREHBUEHNENVERKLEIDUN
SECHSKANTMUTTER ISO 403	11693875	351	3	415	96024809	DREHBUEHNENVERKLEIDUN
SECHSKANTMUTTER ISO 403	11693875	11	1	416	969399608	KLAPPE VORM.
SECHSKANTMUTTER ISO 403	11693875	170	15	420	919484908	ABSTURZSICHERUNG
SECHSKANTMUTTER ISO 403	11693875	70	9	461	96074081	HARNSTOFFTANK VORM.
SECHSKANTMUTTER ISO 403	11693875	350	4	476	918729308	LUFTFILTERANLAGE
SECHSKANTMUTTER ISO 403	11693875	24	2	478	915300208	ZENTRALSCHMIERANLAGE O
SECHSKANTMUTTER ISO 403	11693875	19	2	502	96025348	GRUNDAUFBAU
SECHSKANTMUTTER ISO 403	11693875	350	8	562	919528608	OELKUEHLER EINBAU
SECHSKANTMUTTER ISO 403	11693875	(7)	4	566	969767908	VERROHRUNG DRUCKLUFTA
SECHSKANTMUTTER ISO 403	11693875	52	2	581	96062734	HILFSHUBWERK
SECHSKANTMUTTER ISO 403	11693875	5	1	636	964060608	KETTENHALTER KPL.
SECHSKANTMUTTER ISO 403	11693875	4	2	642	96045219	MECHANISCHE ANBAUTEILE
SECHSKANTMUTTER ISO 403	11693875	22	2	723	964502908	MASTNASE VORM.
SECHSKANTMUTTER ISO 403	11693875	4	2	726	967321308	HALTERUNG 2.HUB OBEN
SECHSKANTMUTTER ISO 4032	510737408	19	2	326	968483708	TRITT KPL.
SECHSKANTMUTTER ISO 403	10411095	5	2	228	11386644	STARTER
SECHSKANTMUTTER ISO 403	4600037	51	40	31	992078314	MITTELTEIL
SECHSKANTMUTTER ISO 403	4600037	18	4	679	91000055	AUSSCHUBMECHANIK
SECHSKANTMUTTER ISO 403	511001708	9	2	386	917894308	HEIZUNG KRANFUEHRERKAB
SECHSKANTMUTTER ISO 403	410120308	29	1	723	964502908	MASTNASE VORM.
SECHSKANTMUTTER ISO 403	10544163	36	4	30	992078314	MITTELTEIL
SECHSKANTMUTTER ISO 7040	10875629	15	4	577	96033759	ANBAUTEILE ARBEITSSCHEIN
SECHSKANTMUTTER ISO 7040	10875629	19	1	625	96036821	AUSRUESTUNG KAMERA DRE
SECHSKANTMUTTER ISO 7040	10875629	11	12	658	96014777	HUBSEILFUEHRUNG VORM.
SECHSKANTMUTTER ISO 7040	10875629	31	4	661	91000050	TELESKOP 1 VORM.
SECHSKANTMUTTER ISO 7040	10875629	31	4	664	91000051	TELESKOP 2 VORM.
SECHSKANTMUTTER ISO 7040	10875629	31	4	667	91000052	TELESKOP 3 VORM.
SECHSKANTMUTTER ISO 7040	10875629	31	4	670	91000053	TELESKOP 4 VORM.
SECHSKANTMUTTER ISO 7040	10875629	47	2	760	918533508	ADAPTER VORM.

Bezeichnung	Artikel	Pos.	Menge	Seite	Baugruppe	Bezeichnung
SECHSKANTMUTTER ISO 7040	11840127	6	1	422	96044789	SPANNEINHEIT KPL.
SECHSKANTMUTTER ISO 7040	11840127	43	20	655	91000049	ANLENKSTUECK VORM.
SECHSKANTMUTTER ISO 7040	11840127	43	12	661	91000050	TELESKOP 1 VORM.
SECHSKANTMUTTER ISO 7040	11840127	43	12	664	91000051	TELESKOP 2 VORM.
SECHSKANTMUTTER ISO 7040	11840127	43	8	667	91000052	TELESKOP 3 VORM.
SECHSKANTMUTTER ISO 7040	11840127	43	8	670	91000053	TELESKOP 4 VORM.
SECHSKANTMUTTER ISO 7040	11840127	3	2	737	917825608	ANBAUTEILE
SECHSKANTMUTTER ISO 7040	11840127	30	2	760	918533508	ADAPTER VORM.
SECHSKANTMUTTER ISO 7040	10875859	23	2	747	919933308	TRANSPORTHALTERUNG DKS
SECHSKANTMUTTER ISO 7040	10875630	31	2	771	918596708	KOPFSTUECK VORM.
SECHSKANTMUTTER ISO 7040	10415159	22	1	624	96036820	AUSRUESTUNG KAMERA KAB
SECHSKANTMUTTER ISO 704	11656734	12	2	127	968305308	ENDSCHALTER VORM.
SECHSKANTMUTTER ISO 704	11656734	6	2	655	91000049	ANLENKSTUECK VORM.
SECHSKANTMUTTER ISO 704	11656734	69	2	661	91000050	TELESKOP 1 VORM.
SECHSKANTMUTTER ISO 704	11656734	69	2	664	91000051	TELESKOP 2 VORM.
SECHSKANTMUTTER ISO 704	11656734	69	2	667	91000052	TELESKOP 3 VORM.
SECHSKANTMUTTER ISO 704	11656734	69	2	670	91000053	TELESKOP 4 VORM.
SECHSKANTMUTTER ISO 704	11656734	31	2	679	91000055	AUSSCHUBMECHANIK
SECHSKANTMUTTER ISO 704	11656734	7	3	736	96056560	WINDWARNUNG VORM.
SECHSKANTMUTTER ISO 704	11656734	13	4	760	918533508	ADAPTER VORM.
SECHSKANTMUTTER ISO 704	11656734	9	2	773	96037297	WINKELGEBER ANBAU
SECHSKANTMUTTER ISO 704	11656731	352	2	269	918811108	ANTRIEBSAGGREGAT VORM.
SECHSKANTMUTTER ISO 704	11656731	352	4	272	96020819	KUEHLER VORM.
SECHSKANTMUTTER ISO 704	11656731	16	2	577	96033759	ANBAUTEILE ARBEITSSCHEIN
SECHSKANTMUTTER ISO 704	11656731	12	2	604	96066401	MECHANISCHE ANBAUTEILE
SECHSKANTMUTTER ISO 704	11656731	107	4	645	919950308	MECH.TEILE VERSANDMONT
SECHSKANTMUTTER ISO 704	10814801	270	4	420	919484908	ABSTURZSICHERUNG
SECHSKANTMUTTER ISO 7042	10814800	353	2	473	96051762	ABGASANLAGE VORM.
SECHSKANTMUTTER ISO 8673	10179115	53	1	361	917304708	SCHIEBETUER EINBAU
SECHSKANTMUTTER ISO 867	10875633	25	1	431	96056347	ELEKTRIK ANBAUTEILE KABIN
SECHSKANTMUTTER ISO 8675	10285016	470	2	420	919484908	ABSTURZSICHERUNG
SECHSKANTMUTTER ISO 8675	411703308	2	1	316	10650940	KIPPZYLINDER
SECHSKANTMUTTER ISO 867	10878614	471	2	420	919484908	ABSTURZSICHERUNG
SECHSKANTMUTTER M10X1	10012557	3	2	165	11448005	KIPPHEBELBOCK VORM.
SECHSKANTMUTTER M10X1	10012557	3	2	166	12549825	KIPPHEBELBOCK VORM.
SECHSKANTMUTTER M16X1,5	602504108	15	1	84	96075205	SCHALTKASTEN VORM.
SECHSKANTMUTTER M20X1,5	602504208	18	1	84	96075205	SCHALTKASTEN VORM.
SECHSKANTMUTTER M32X1,5	602504408	17	1	84	96075205	SCHALTKASTEN VORM.
SECHSKANTMUTTER M40X1,	602504508	509	1	90	96062920	KABELSTRANG
SECHSKANTMUTTER M6 8	10411094	3	1	228	11386644	STARTER
SECHSKANTRIPPENMUTTER	10003366	3	1	204	9078314	HEIZFLANSCH ANBAU
SECHSKANTRIPPENMUTTER	10003366	25	2	223	12512627	ABGASSTUTZEN ANBAU
SECHSKANTSCHRAUBE DIN 6	10005511	1	20	274	97095949	KOMBIKUEHLER
SECHSKANTSCHRAUBE DIN 6	10009007	2	5	215	10142733	WASSERPUMPE MIT BEFEST.
SECHSKANTSCHRAUBE DIN 6	10009007	3	4	237	10144227	STEUERGERAET ANBAU
SECHSKANTSCHRAUBE DIN	11600960	(4)	6	170	10147787	NOCKENWELLE KPL.
SECHSKANTSCHRAUBE DIN 6	10005713	2	1	177	10148432	SCHMIEROELPUMPE MIT BE
SECHSKANTSCHRAUBE DIN 6	10016907	5	4	237	10144227	STEUERGERAET ANBAU
SECHSKANTSCHRAUBE DIN 6	11645138	3	2	177	10148432	SCHMIEROELPUMPE MIT BE
SECHSKANTSCHRAUBE EN 1	12207562	4	8	139	10147687	AGGREGATETRAEGER ANBA
SECHSKANTSCHRAUBE EN 16	12207559	5	1	225	10142863	GENERATOR VORM.
SECHSKANTSCHRAUBE EN 16	10299560	(46)	1	239	10151328	KABELBAUM ANBAU
SECHSKANTSCHRAUBE EN 1	11656153	3	2	152	10139112	OELLEITUNG VORM.
SECHSKANTSCHRAUBE EN 1	11656153	68	3	239	10151328	KABELBAUM ANBAU
SECHSKANTSCHRAUBE EN 1	11656153	58	2	241	10151329	KABELSATZ ANBAU
SECHSKANTSCHRAUBE EN 1	11656153	6	2	246	9078249	VERSCHLUSSTEILE
SECHSKANTSCHRAUBE EN 1	11656153	3	2	247	10144027	VERSCHLUSSTEILE
SECHSKANTSCHRAUBE EN 1	11656153	6	2	249	9078962	NEBENABTRIEB VORM.
SECHSKANTSCHRAUBE EN 1	11656154	10	3	223	12512627	ABGASSTUTZEN ANBAU
SECHSKANTSCHRAUBE EN 16	10299564	2	4	230	9079823	TRANSPORTVORRICHTUNG

Bezeichnung	Artikel	Pos.	Menge	Seite	Baugruppe	Bezeichnung
SECHSKANTSCHRAUBE EN 1	11656155	3	2	225	10142863	GENERATOR VORM.
SECHSKANTSCHRAUBE EN 1	11656155	3	3	229	10115664	VERSCHLUSSTEILE
SECHSKANTSCHRAUBE EN 1	11656155	69	1	239	10151328	KABELBAUM ANBAU
SECHSKANTSCHRAUBE EN 1	11643686	2	3	206	10127566	LUFTPRESSER ANBAU
SECHSKANTSCHRAUBE EN 1	11626068	5	6	213	12418347	KLIMAKOMPRESSOR ANBAU
SECHSKANTSCHRAUBE EN 16	10299585	6	1	139	10147687	AGGREGATETRAEGER ANBA
SECHSKANTSCHRAUBE EN 1	11656158	4	2	192	10146791	KRAFTSTOFF-FEINFILTERAN
SECHSKANTSCHRAUBE EN 1	11656158	3	4	200	10147365	LUFTANSAUGROHR ANBAU
SECHSKANTSCHRAUBE EN 1	11656158	7	2	213	12418347	KLIMAKOMPRESSOR ANBAU
SECHSKANTSCHRAUBE EN 16	10299589	5	9	139	10147687	AGGREGATETRAEGER ANBA
SECHSKANTSCHRAUBE EN 1	11656160	6	1	213	12418347	KLIMAKOMPRESSOR ANBAU
SECHSKANTSCHRAUBE EN 1	12208088	4	4	200	10147365	LUFTANSAUGROHR ANBAU
SECHSKANTSCHRAUBE EN 1	12208088	9	1	223	12512627	ABGASSTUTZEN ANBAU
SECHSKANTSCHRAUBE EN 1	11690641	17	2	47	968374708	MONTAGETEILE
SECHSKANTSCHRAUBE EN 1	10875423	4	1	225	10142863	GENERATOR VORM.
SECHSKANTSCHRAUBE EN 1	11656452	9	1	146	10155227	OELWANNE VORM.
SECHSKANTSCHRAUBE EN 1	12207570	2	2	231	10142864	TRANSPORTVORRICHTUNG
SECHSKANTSCHRAUBE EN 1	10875503	13	6	84	96075205	SCHALTKASTEN VORM.
SECHSKANTSCHRAUBE EN 1	10875503	13	8	87	96062922	MONTAGEPLATTE VORM.
SECHSKANTSCHRAUBE EN 1	10875503	24	8	498	919940108	EINBAUTEILE SCHALTSCHRAN
SECHSKANTSCHRAUBE EN 1	10875503	80	25	502	96025348	GRUNDAUFBAU
SECHSKANTSCHRAUBE EN 1	10875503	6	12	507	968015808	MONTAGEEINHEIT VORM.
SECHSKANTSCHRAUBE EN 16	12207546	12	2	224	11420633	TAKTVENTIL
SECHSKANTSCHRAUBE EN 16	12207546	52	1	239	10151328	KABELBAUM ANBAU
SECHSKANTSCHRAUBE EN 16	12207546	42	1	241	10151329	KABELSATZ ANBAU
SECHSKANTSCHRAUBE EN 16	11692607	3	4	604	96066401	MECHANISCHE ANBAUTEILE
SECHSKANTSCHRAUBE EN 16	11840297	22	3	81	96062917	ELEKTRIK MITTELSTUECK
SECHSKANTSCHRAUBE EN 16	11840297	5	4	167	11358036	ZYLINDERKOPFDECKEL ANBA
SECHSKANTSCHRAUBE EN 16	11840297	21	1	198	10143342	LECKOELRUECKLAUF
SECHSKANTSCHRAUBE EN 16	11840297	13	7	224	11420633	TAKTVENTIL
SECHSKANTSCHRAUBE EN 16	11840297	54	7	239	10151328	KABELBAUM ANBAU
SECHSKANTSCHRAUBE EN 16	11840297	324	4	269	918811108	ANTRIEBSAGGREGAT VORM.
SECHSKANTSCHRAUBE EN 16	11840297	19	2	352	916168308	LUFTFUEHRUNG
SECHSKANTSCHRAUBE EN 16	11840297	24	4	355	916163008	WISCHANLAGE EINBAU
SECHSKANTSCHRAUBE EN 16	11840297	300	3	407	96022627	DREHBUEHNENVERKLEIDUN
SECHSKANTSCHRAUBE EN 16	11840297	4	4	604	96066401	MECHANISCHE ANBAUTEILE
SECHSKANTSCHRAUBE EN 16	12207548	2	4	204	9078314	HEIZFLANSCH ANBAU
SECHSKANTSCHRAUBE EN 16	12207549	24	2	223	12512627	ABGASSTUTZEN ANBAU
SECHSKANTSCHRAUBE EN 16	12207587	3	1	201	10145173	ANSAUGSTUTZEN ANBAU
SECHSKANTSCHRAUBE EN 16	11656991	20	4	81	96062917	ELEKTRIK MITTELSTUECK
SECHSKANTSCHRAUBE EN 16	11656991	39	6	431	96056347	ELEKTRIK ANBAUTEILE KABIN
SECHSKANTSCHRAUBE EN 16	11656992	15	1	198	10143342	LECKOELRUECKLAUF
SECHSKANTSCHRAUBE EN 16	11656992	14	1	224	11420633	TAKTVENTIL
SECHSKANTSCHRAUBE EN 16	11656992	11	4	233	10116110	VERSCHLUSSTEILE
SECHSKANTSCHRAUBE EN 16	11656992	60	2	239	10151328	KABELBAUM ANBAU
SECHSKANTSCHRAUBE EN 16	11656992	3	3	242	10143707	HALTER ANBAU
SECHSKANTSCHRAUBE EN 16	11657219	12	1	196	10143341	KRAFTSTOFFLEITUNGEN
SECHSKANTSCHRAUBE EN 16	11657219	14	1	201	10145173	ANSAUGSTUTZEN ANBAU
SECHSKANTSCHRAUBE EN 16	11657219	11	2	224	11420633	TAKTVENTIL
SECHSKANTSCHRAUBE EN 16	11657219	3	1	234	10128439	VERSCHLUSSTEILE
SECHSKANTSCHRAUBE EN 16	11657219	61	14	239	10151328	KABELBAUM ANBAU
SECHSKANTSCHRAUBE EN 16	11657219	51	2	241	10151329	KABELSATZ ANBAU
SECHSKANTSCHRAUBE EN 16	11657219	4	1	242	10143707	HALTER ANBAU
SECHSKANTSCHRAUBE EN 1	12215999	3	1	219	10142744	KUEHLWASSERENTLUEFTUN
SECHSKANTSCHRAUBE EN 16	11690637	14	2	196	10143341	KRAFTSTOFFLEITUNGEN
SECHSKANTSCHRAUBE EN 16	11690637	313	2	407	96022627	DREHBUEHNENVERKLEIDUN
SECHSKANTSCHRAUBE EN 16	11826563	2	2	143	10126713	KURBELGEHAEUSEENTLUEF
SECHSKANTSCHRAUBE EN 16	11826563	6	4	192	10146791	KRAFTSTOFF-FEINFILTERAN
SECHSKANTSCHRAUBE EN 16	11826563	12	1	201	10145173	ANSAUGSTUTZEN ANBAU
SECHSKANTSCHRAUBE EN 16	11826563	63	1	239	10151328	KABELBAUM ANBAU

Bezeichnung	Artikel	Pos.	Menge	Seite	Baugruppe	Bezeichnung
SECHSKANTSCHRAUBE EN 16	11826563	53	2	241	10151329	KABELSATZ ANBAU
SECHSKANTSCHRAUBE EN 1	10299604	3	14	173	10129475	OELKUEHLER ANBAU
SECHSKANTSCHRAUBE EN 16	11658660	8	2	203	10149677	VERBINDUNGSLEITUNG ANBA
SECHSKANTSCHRAUBE EN 16	11691686	5	4	174	10129474	OELKUEHLER VORM.
SECHSKANTSCHRAUBE EN 16	11691686	5	1	192	10146791	KRAFTSTOFF-FEINFILTERAN
SECHSKANTSCHRAUBE EN 16	12210060	3	28	144	10132560	OELWANNE MIT BEFEST.
SECHSKANTSCHRAUBE EN 1	12697335	2	1	177	10148432	SCHMIEROELPUMPE MIT BE
SECHSKANTSCHRAUBE EN 16	10876385	4	20	167	11358036	ZYLINDERKOPFDECKEL ANBA
SECHSKANTSCHRAUBE ISO	12218490	323	2	269	918811108	ANTRIEBSAGGREGAT VORM.
SECHSKANTSCHRAUBE ISO	10878922	16	4	287	96024716	BATTERIEKASTEN VORM.
SECHSKANTSCHRAUBE ISO	10875504	330	4	566	969767908	VERROHRUNG DRUCKLUFTA
SECHSKANTSCHRAUBE ISO	12224027	10	4	47	968374708	MONTAGETEILE
SECHSKANTSCHRAUBE ISO 4	11651578	28	16	30	992078314	MITTELTEIL
SECHSKANTSCHRAUBE ISO 4	11651578	5	1	737	917825608	ANBAUTEILE
SECHSKANTSCHRAUBE ISO 4	11658891	82	12	656	91000049	ANLENKSTUECK VORM.
SECHSKANTSCHRAUBE ISO 4	11658891	67	12	661	91000050	TELESKOP 1 VORM.
SECHSKANTSCHRAUBE ISO 4	11658891	67	12	664	91000051	TELESKOP 2 VORM.
SECHSKANTSCHRAUBE ISO 4	11658891	67	8	667	91000052	TELESKOP 3 VORM.
SECHSKANTSCHRAUBE ISO 4	11658891	67	8	670	91000053	TELESKOP 4 VORM.
SECHSKANTSCHRAUBE ISO 4	11658890	4	1	210	9072906	ZWISCHENRAD KPL.
SECHSKANTSCHRAUBE ISO 4	10875507	303	4	295	969219208	OELBEHAELTER VORM.
SECHSKANTSCHRAUBE ISO 4	11840139	309	4	269	918811108	ANTRIEBSAGGREGAT VORM.
SECHSKANTSCHRAUBE ISO 4	12225301	316	4	517	96045552	HYDRAULIK OBERWAGEN
SECHSKANTSCHRAUBE ISO 4	12225301	551	8	591	96064697	HYDRAULIK HILFSHUBWERK
SECHSKANTSCHRAUBE ISO	10875797	10	4	320	916164208	LAGERUNG EINBAU
SECHSKANTSCHRAUBE ISO 4	11642377	12	4	22	96062226	RAUPENTRAEGER KPL.RE.
SECHSKANTSCHRAUBE ISO 4	11642377	12	4	27	96062228	RAUPENTRAEGER KPL.LI.
SECHSKANTSCHRAUBE ISO 4	10875798	37	2	768	91001040	ANLENKSTUECK VORM.
SECHSKANTSCHRAUBE ISO	406212901	7	4	24	749013714	LEITRAD KPL
SECHSKANTSCHRAUBE ISO	10878574	16	4	741	919421708	HAKENFLASCHE
SECHSKANTSCHRAUBE ISO 4	406214708	16	4	743	910445708	HAKENFLASCHE
SECHSKANTSCHRAUBE ISO 4	11656999	301	1	293	918008908	OELBEHAELTER ANBAU
SECHSKANTSCHRAUBE ISO 4	12219309	301	2	290	917962508	KRAFTSTOFFBEHAELTER AN
SECHSKANTSCHRAUBE ISO 4	12691274	4	24	22	96062226	RAUPENTRAEGER KPL.RE.
SECHSKANTSCHRAUBE ISO 4	12691274	4	24	27	96062228	RAUPENTRAEGER KPL.LI.
SECHSKANTSCHRAUBE ISO	10876069	9	48	22	96062226	RAUPENTRAEGER KPL.RE.
SECHSKANTSCHRAUBE ISO	10876069	9	48	27	96062228	RAUPENTRAEGER KPL.LI.
SECHSKANTSCHRAUBE ISO	12104785	6	4	679	91000055	AUSSCHUBMECHANIK
SECHSKANTSCHRAUBE ISO	10875511	63	2	761	918533508	ADAPTER VORM.
SECHSKANTSCHRAUBE ISO	12216183	306	2	269	918811108	ANTRIEBSAGGREGAT VORM.
SECHSKANTSCHRAUBE ISO	10875512	19	1	623	915403108	ANBAUTEILE KAMERA
SECHSKANTSCHRAUBE ISO	12216186	307	2	269	918811108	ANTRIEBSAGGREGAT VORM.
SECHSKANTSCHRAUBE ISO	12219810	300	3	306	96066239	KRAFTSTOFFFILTER VORM.
SECHSKANTSCHRAUBE ISO 4	12217239	50	3	461	96074081	HARNSTOFFTANK VORM.
SECHSKANTSCHRAUBE ISO	11651580	47	2	673	91000054	TELESKOP 5 VORM.
SECHSKANTSCHRAUBE ISO 4	10021245	303	2	473	96051762	ABGASANLAGE VORM.
SECHSKANTSCHRAUBE ISO	11632102	53	2	461	96074081	HARNSTOFFTANK VORM.
SECHSKANTSCHRAUBE ISO	10875514	4	1	636	964060608	KETTENHALTER KPL.
SECHSKANTSCHRAUBE ISO 4	11652470	23	8	22	96062226	RAUPENTRAEGER KPL.RE.
SECHSKANTSCHRAUBE ISO 4	11652470	23	6	27	96062228	RAUPENTRAEGER KPL.LI.
SECHSKANTSCHRAUBE ISO 4	11652470	31	8	30	992078314	MITTELTEIL
SECHSKANTSCHRAUBE ISO 4	11652470	306	10	124	918728408	MONTAGETEILE DREHBUEHN
SECHSKANTSCHRAUBE ISO 4	11652470	318	1	269	918811108	ANTRIEBSAGGREGAT VORM.
SECHSKANTSCHRAUBE ISO 4	11652470	325	2	517	96045552	HYDRAULIK OBERWAGEN
SECHSKANTSCHRAUBE ISO 4	11652470	305	4	562	919528608	OELKUEHLER EINBAU
SECHSKANTSCHRAUBE ISO 4	11652470	14	3	723	964502908	MASTNASE VORM.
SECHSKANTSCHRAUBE ISO	406509808	321	1	407	96022627	DREHBUEHNENVERKLEIDUN
SECHSKANTSCHRAUBE ISO	10197730	30	8	30	992078314	MITTELTEIL
SECHSKANTSCHRAUBE ISO	10197730	6	2	48	96046146	SCHUTZ KPL.
SECHSKANTSCHRAUBE ISO	10197730	7	16	320	916164208	LAGERUNG EINBAU

Bezeichnung	Artikel	Pos.	Menge	Seite	Baugruppe	Bezeichnung
SECHSKANTSCHRAUBE ISO	10197730	23	1	431	96056347	ELEKTRIK ANBAUTEILE KABIN
SECHSKANTSCHRAUBE ISO	10197730	301	2	470	919674308	ABGASANLAGE
SECHSKANTSCHRAUBE ISO	10197730	309	4	517	96045552	HYDRAULIK OBERWAGEN
SECHSKANTSCHRAUBE ISO	10197730	33	5	655	91000049	ANLENKSTUECK VORM.
SECHSKANTSCHRAUBE ISO	10197730	33	2	741	919421708	HAKENFLASCHE
SECHSKANTSCHRAUBE ISO	10197730	16	3	763	917695308	UMLENKROLLE VORM.
SECHSKANTSCHRAUBE ISO	406590805	302	6	470	919674308	ABGASANLAGE
SECHSKANTSCHRAUBE ISO 4	11631816	8	2	48	96046146	SCHUTZ KPL.
SECHSKANTSCHRAUBE ISO 4	11631816	305	3	124	918728408	MONTAGETEILE DREHBUEHN
SECHSKANTSCHRAUBE ISO 4	11631816	301	2	263	918728708	ANTRIEBSAGGREGAT KPL.
SECHSKANTSCHRAUBE ISO 4	11631816	322	8	269	918811108	ANTRIEBSAGGREGAT VORM.
SECHSKANTSCHRAUBE ISO 4	11631816	3	4	285	918955208	BATTERIEKASTEN KPL.
SECHSKANTSCHRAUBE ISO 4	11631816	10	4	577	96033759	ANBAUTEILE ARBEITSSCHEIN
SECHSKANTSCHRAUBE ISO 4	11631816	17	1	625	96036821	AUSRUESTUNG KAMERA DRE
SECHSKANTSCHRAUBE ISO 4	11642358	7	2	48	96046146	SCHUTZ KPL.
SECHSKANTSCHRAUBE ISO 4	11642358	322	10	408	96022627	DREHBUEHNENVERKLEIDUN
SECHSKANTSCHRAUBE ISO 4	11642358	315	2	415	96024809	DREHBUEHNENVERKLEIDUN
SECHSKANTSCHRAUBE ISO 4	11642358	301	6	473	96051762	ABGASANLAGE VORM.
SECHSKANTSCHRAUBE ISO 4	11642358	64	4	655	91000049	ANLENKSTUECK VORM.
SECHSKANTSCHRAUBE ISO 4	11642358	10	8	658	96014777	HUBSEILFUEHRUNG VORM.
SECHSKANTSCHRAUBE ISO	406601008	4	6	378	963564908	HAUPTHUBWERK VORM.
SECHSKANTSCHRAUBE ISO	406601008	200	2	420	919484908	ABSTURZSICHERUNG
SECHSKANTSCHRAUBE ISO	406601008	42	6	581	96062734	HILFSHUBWERK
SECHSKANTSCHRAUBE ISO 4	11691328	301	12	33	967304508	HYDRAULIK UNTERWAGEN
SECHSKANTSCHRAUBE ISO 4	11691328	43	2	581	96062734	HILFSHUBWERK
SECHSKANTSCHRAUBE ISO 4	11691328	45	2	760	918533508	ADAPTER VORM.
SECHSKANTSCHRAUBE ISO 4	11626706	38	16	22	96062226	RAUPENTRAEGER KPL.RE.
SECHSKANTSCHRAUBE ISO 4	11626706	38	16	28	96062228	RAUPENTRAEGER KPL.LI.
SECHSKANTSCHRAUBE ISO 4	11626706	302	1	63	967301408	HYDRAULIK VORB.
SECHSKANTSCHRAUBE ISO 4	11626706	300	2	263	918728708	ANTRIEBSAGGREGAT KPL.
SECHSKANTSCHRAUBE ISO 4	11626706	302	4	473	96051762	ABGASANLAGE VORM.
SECHSKANTSCHRAUBE ISO 4	11626706	24	1	723	964502908	MASTNASE VORM.
SECHSKANTSCHRAUBE ISO	11002718	10	4	315	917357108	KRANFUEHRERKABINE ANBA
SECHSKANTSCHRAUBE ISO 4	11642355	31	2	395	918810308	STEUERSTAND
SECHSKANTSCHRAUBE ISO	10178898	52	1	760	918533508	ADAPTER VORM.
SECHSKANTSCHRAUBE ISO 4	11651006	26	3	22	96062226	RAUPENTRAEGER KPL.RE.
SECHSKANTSCHRAUBE ISO 4	11651006	26	3	28	96062228	RAUPENTRAEGER KPL.LI.
SECHSKANTSCHRAUBE ISO 4	11651006	14	2	658	96014777	HUBSEILFUEHRUNG VORM.
SECHSKANTSCHRAUBE ISO 4	11651006	63	3	673	91000054	TELESKOP 5 VORM.
SECHSKANTSCHRAUBE ISO	406608708	53	2	655	91000049	ANLENKSTUECK VORM.
SECHSKANTSCHRAUBE ISO 4	406609008	2	8	255	10115780	KUPPLUNGSANBAU
SECHSKANTSCHRAUBE ISO 4	11658892	29	18	30	992078314	MITTELTEIL
SECHSKANTSCHRAUBE ISO 4	11658892	27	8	61	917155308	HYDRAULIK VORB.
SECHSKANTSCHRAUBE ISO 4	11658892	317	3	269	918811108	ANTRIEBSAGGREGAT VORM.
SECHSKANTSCHRAUBE ISO 4	11658892	320	2	415	96024809	DREHBUEHNENVERKLEIDUN
SECHSKANTSCHRAUBE ISO 4	11658892	50	8	458	91003833	HARNSTOFFANLAGE
SECHSKANTSCHRAUBE ISO 4	11658892	303	3	566	969767908	VERROHRUNG DRUCKLUFTA
SECHSKANTSCHRAUBE ISO 4	11658892	36	6	655	91000049	ANLENKSTUECK VORM.
SECHSKANTSCHRAUBE ISO 4	11658892	53	2	661	91000050	TELESKOP 1 VORM.
SECHSKANTSCHRAUBE ISO 4	11658892	53	2	664	91000051	TELESKOP 2 VORM.
SECHSKANTSCHRAUBE ISO 4	11658892	53	2	667	91000052	TELESKOP 3 VORM.
SECHSKANTSCHRAUBE ISO 4	11658892	53	2	670	91000053	TELESKOP 4 VORM.
SECHSKANTSCHRAUBE ISO 4	11658892	7	2	739	910543708	LASTHAKEN
SECHSKANTSCHRAUBE ISO 4	11631742	50	5	26	749065314	TRAGROLLE KPL
SECHSKANTSCHRAUBE ISO 4	11631742	32	12	70	915447908	HYDRAULISCHE ABSTUETZUN
SECHSKANTSCHRAUBE ISO 4	11631742	308	9	124	918728408	MONTAGETEILE DREHBUEHN
SECHSKANTSCHRAUBE ISO 4	11631742	36	2	661	91000050	TELESKOP 1 VORM.
SECHSKANTSCHRAUBE ISO 4	11631742	36	2	664	91000051	TELESKOP 2 VORM.
SECHSKANTSCHRAUBE ISO 4	11631742	36	2	667	91000052	TELESKOP 3 VORM.
SECHSKANTSCHRAUBE ISO 4	11631742	36	2	670	91000053	TELESKOP 4 VORM.

Bezeichnung	Artikel	Pos.	Menge	Seite	Baugruppe	Bezeichnung
SECHSKANTSCHRAUBE ISO 4	11642349	316	2	269	918811108	ANTRIEBSAGGREGAT VORM.
SECHSKANTSCHRAUBE ISO 4	11645384	303	8	33	967304508	HYDRAULIK UNTERWAGEN
SECHSKANTSCHRAUBE ISO 4	11645384	307	2	124	918728408	MONTAGETEILE DREHBUEHN
SECHSKANTSCHRAUBE ISO 4	11645384	321	3	415	96024809	DREHBUEHNENVERKLEIDUN
SECHSKANTSCHRAUBE ISO 4	11645386	301	1	268	918811108	ANTRIEBSAGGREGAT VORM.
SECHSKANTSCHRAUBE ISO 4	11645386	300	4	473	96051762	ABGASANLAGE VORM.
SECHSKANTSCHRAUBE ISO 4	11645386	41	4	581	96062734	HILFSHUBWERK
SECHSKANTSCHRAUBE ISO 4	11645386	11	4	655	91000049	ANLENKSTUECK VORM.
SECHSKANTSCHRAUBE ISO 4	11645386	2	1	737	917825608	ANBAUTEILE
SECHSKANTSCHRAUBE ISO 4	11645386	28	2	760	918533508	ADAPTER VORM.
SECHSKANTSCHRAUBE ISO 4	11840136	41	12	655	91000049	ANLENKSTUECK VORM.
SECHSKANTSCHRAUBE ISO 4	11840136	41	12	661	91000050	TELESKOP 1 VORM.
SECHSKANTSCHRAUBE ISO 4	11840136	41	12	664	91000051	TELESKOP 2 VORM.
SECHSKANTSCHRAUBE ISO 4	11840136	41	12	667	91000052	TELESKOP 3 VORM.
SECHSKANTSCHRAUBE ISO 4	11840136	41	12	670	91000053	TELESKOP 4 VORM.
SECHSKANTSCHRAUBE ISO 4	11840136	16	2	747	919933308	TRANSPORTHALTERUNG DKS
SECHSKANTSCHRAUBE ISO 4	11834813	5	4	661	91000050	TELESKOP 1 VORM.
SECHSKANTSCHRAUBE ISO 4	11834813	5	4	664	91000051	TELESKOP 2 VORM.
SECHSKANTSCHRAUBE ISO 4	11834813	5	4	667	91000052	TELESKOP 3 VORM.
SECHSKANTSCHRAUBE ISO 4	11834813	5	4	670	91000053	TELESKOP 4 VORM.
SECHSKANTSCHRAUBE ISO 4	11834813	5	4	673	91000054	TELESKOP 5 VORM.
SECHSKANTSCHRAUBE ISO 4	10878799	307	24	33	967304508	HYDRAULIK UNTERWAGEN
SECHSKANTSCHRAUBE ISO 4	10878799	305	8	517	96045552	HYDRAULIK OBERWAGEN
SECHSKANTSCHRAUBE ISO	10875518	33	2	760	918533508	ADAPTER VORM.
SECHSKANTSCHRAUBE ISO	12224044	2	3	636	964060608	KETTENHALTER KPL.
SECHSKANTSCHRAUBE ISO	12224044	12	4	747	919933308	TRANSPORTHALTERUNG DKS
SECHSKANTSCHRAUBE ISO	10875801	15	2	747	919933308	TRANSPORTHALTERUNG DKS
SECHSKANTSCHRAUBE ISO	10179032	50	8	31	992078314	MITTELTEIL
SECHSKANTSCHRAUBE ISO 4	10877796	5	2	768	91001040	ANLENKSTUECK VORM.
SECHSKANTSCHRAUBE ISO 4	10877796	7	2	771	918596708	KOPFSTUECK VORM.
SECHSKANTSCHRAUBE ISO	10878575	43	1	747	919933308	TRANSPORTHALTERUNG DKS
SECHSKANTSCHRAUBE ISO 4	4902326	311	3	124	918728408	MONTAGETEILE DREHBUEHN
SECHSKANTSCHRAUBE ISO 4	4902326	300	4	470	919674308	ABGASANLAGE
SECHSKANTSCHRAUBE ISO 4	12214938	13	6	19	96062225	UNTERWAGEN KPL.
SECHSKANTSCHRAUBE ISO 4	12214938	27	3	30	992078314	MITTELTEIL
SECHSKANTSCHRAUBE ISO 4	12214938	54	2	760	918533508	ADAPTER VORM.
SECHSKANTSCHRAUBE ISO	406603008	5	8	626	919616808	WIPPZYLINDER M.LAGERUNG
SECHSKANTSCHRAUBE ISO 4	10875519	308	4	269	918811108	ANTRIEBSAGGREGAT VORM.
SECHSKANTSCHRAUBE ISO	406603108	3	22	378	963564908	HAUPTHUBWERK VORM.
SECHSKANTSCHRAUBE ISO	406603108	40	26	581	96062734	HILFSHUBWERK
SECHSKANTSCHRAUBE ISO 4	10875803	310	8	124	918728408	MONTAGETEILE DREHBUEHN
SECHSKANTSCHRAUBE ISO 4	10875803	42	4	376	919935508	HAUPTHUBWERK
SECHSKANTSCHRAUBE ISO 4	10875803	22	6	747	919933308	TRANSPORTHALTERUNG DKS
SECHSKANTSCHRAUBE ISO 4	10875520	15	12	22	96062226	RAUPENTRAEGER KPL.RE.
SECHSKANTSCHRAUBE ISO 4	10875520	15	12	27	96062228	RAUPENTRAEGER KPL.LI.
SECHSKANTSCHRAUBE ISO 4	10875520	304	6	269	918811108	ANTRIEBSAGGREGAT VORM.
SECHSKANTSCHRAUBE ISO 4	10875520	8	1	772	918221408	ZUGLASCHE VORM.
SECHSKANTSCHRAUBE ISO 4	10875804	20	2	315	917357108	KRANFUEHRERKABINE ANBA
SECHSKANTSCHRAUBE ISO	406603408	19	4	747	919933308	TRANSPORTHALTERUNG DKS
SECHSKANTSCHRAUBE ISO	406603408	7	1	751	929582108	HALTERUNG VORM.
SECHSKANTSCHRAUBE ISO 4	10875521	312	8	124	918728408	MONTAGETEILE DREHBUEHN
SECHSKANTSCHRAUBE ISO 4	10875521	52	1	747	919933308	TRANSPORTHALTERUNG DKS
SECHSKANTSCHRAUBE ISO 4	10875521	26	1	760	918533508	ADAPTER VORM.
SECHSKANTSCHRAUBE ISO 4	12226910	302	8	263	918728708	ANTRIEBSAGGREGAT KPL.
SECHSKANTSCHRAUBE ISO 4	12226910	303	6	269	918811108	ANTRIEBSAGGREGAT VORM.
SECHSKANTSCHRAUBE ISO 4	12223051	55	1	760	918533508	ADAPTER VORM.
SECHSKANTSCHRAUBE ISO 4	406207208	18	12	22	96062226	RAUPENTRAEGER KPL.RE.
SECHSKANTSCHRAUBE ISO 4	406207208	18	12	27	96062228	RAUPENTRAEGER KPL.LI.
SECHSKANTSCHRAUBE ISO 4	12224035	(391)	2	22	96062226	RAUPENTRAEGER KPL.RE.
SECHSKANTSCHRAUBE ISO 4	4600199	25	12	30	992078314	MITTELTEIL

Bezeichnung	Artikel	Pos.	Menge	Seite	Baugruppe	Bezeichnung
SECHSKANTSCHRAUBE ISO 4	12224018	36	2	22	96062226	RAUPENTRAEGER KPL.RE.
SECHSKANTSCHRAUBE ISO 4	12224018	36	2	28	96062228	RAUPENTRAEGER KPL.LI.
SECHSKANTSCHRAUBE ISO	406604208	8	2	747	919933308	TRANSPORTHALTERUNG DKS
SECHSKANTSCHRAUBE ISO 4	10875806	300	2	293	918008908	OELBEHAELTER ANBAU
SECHSKANTSCHRAUBE ISO 4	10875806	10	4	747	919933308	TRANSPORTHALTERUNG DKS
SECHSKANTSCHRAUBE ISO 4	12219312	300	1	290	917962508	KRAFTSTOFFBEHAELTER AN
SECHSKANTSCHRAUBE ISO	4062144	7	24	22	96062226	RAUPENTRAEGER KPL.RE.
SECHSKANTSCHRAUBE ISO	4062144	7	24	27	96062228	RAUPENTRAEGER KPL.LI.
SECHSKANTSCHRAUBE ISO	10878793	32	2	22	96062226	RAUPENTRAEGER KPL.RE.
SECHSKANTSCHRAUBE ISO	10878793	32	2	28	96062228	RAUPENTRAEGER KPL.LI.
SECHSKANTSCHRAUBE ISO	11690047	(3)	2	431	96056347	ELEKTRIK ANBAUTEILE KABIN
SECHSKANTSCHRAUBE ISO	12211444	3	2	78	964765008	BOLZEN KPL.
SECHSKANTSCHRAUBE ISO	11140402	25	4	61	917155308	HYDRAULIK VORB.
SECHSKANTSCHRAUBE ISO	11140402	37	8	395	918810308	STEUERSTAND
SECHSKANTSCHRAUBE ISO	11140402	311	4	517	96045552	HYDRAULIK OBERWAGEN
SECHSKANTSCHRAUBE ISO	11140402	313	2	591	96064697	HYDRAULIK HILFSHUBWERK
SECHSKANTSCHRAUBE ISO	11140402	14	4	606	91002360	LADEGERAET
SECHSKANTSCHRAUBE ISO	10875524	6	2	760	918533508	ADAPTER VORM.
SECHSKANTSCHRAUBE ISO	12220684	300	5	291	969543308	KRAFTSTOFFBEHAELTER VO
SECHSKANTSCHRAUBE ISO	12100540	22	6	61	917155308	HYDRAULIK VORB.
SECHSKANTSCHRAUBE ISO	11642497	(302)	1	268	918811108	ANTRIEBSAGGREGAT VORM.
SECHSKANTSCHRAUBE ISO	11642497	54	1	338	917305408	INNENVERKLEIDUNG EINBAU
SECHSKANTSCHRAUBE ISO	11642497	13	2	410	969425608	KLAPPE VORM.RECHTS
SECHSKANTSCHRAUBE ISO	11642497	66	4	661	91000050	TELESKOP 1 VORM.
SECHSKANTSCHRAUBE ISO	11642497	66	4	664	91000051	TELESKOP 2 VORM.
SECHSKANTSCHRAUBE ISO	11642497	66	4	667	91000052	TELESKOP 3 VORM.
SECHSKANTSCHRAUBE ISO	11642497	66	4	670	91000053	TELESKOP 4 VORM.
SECHSKANTSCHRAUBE ISO	11642497	84	4	674	91000054	TELESKOP 5 VORM.
SECHSKANTSCHRAUBE ISO	11692824	17	4	352	916168308	LUFTFUEHRUNG
SECHSKANTSCHRAUBE ISO	11692824	300	2	415	96024809	DREHBUEHNENVERKLEIDUN
SECHSKANTSCHRAUBE ISO	11692824	300	2	417	969392008	FRONTHAUBE LI.
SECHSKANTSCHRAUBE ISO	11692824	300	4	591	96064697	HYDRAULIK HILFSHUBWERK
SECHSKANTSCHRAUBE ISO	11657360	305	4	272	96020819	KUEHLER VORM.
SECHSKANTSCHRAUBE ISO	11657360	306	8	517	96045552	HYDRAULIK OBERWAGEN
SECHSKANTSCHRAUBE ISO	11657360	7	1	623	915403108	ANBAUTEILE KAMERA
SECHSKANTSCHRAUBE ISO 4	10001739	46	1	361	917304708	SCHIEBETUER EINBAU
SECHSKANTSCHRAUBE ISO 4	10001739	310	1	470	919674308	ABGASANLAGE
SECHSKANTSCHRAUBE ISO	11644899	15	1	87	96062922	MONTAGEPLATTE VORM.
SECHSKANTSCHRAUBE ISO	11644899	304	5	407	96022627	DREHBUEHNENVERKLEIDUN
SECHSKANTSCHRAUBE ISO	11644899	302	2	415	96024809	DREHBUEHNENVERKLEIDUN
SECHSKANTSCHRAUBE ISO 4	10197836	11	2	506	926891108	VERTEILER MASSE
SECHSKANTSCHRAUBE ISO 4	10197836	11	2	760	918533508	ADAPTER VORM.
SECHSKANTSCHRAUBE ISO	12217223	304	1	415	96024809	DREHBUEHNENVERKLEIDUN
SECHSKANTSCHRAUBE ISO	12217223	5	2	655	91000049	ANLENKSTUECK VORM.
SECHSKANTSCHRAUBE ISO	12217223	16	2	661	91000050	TELESKOP 1 VORM.
SECHSKANTSCHRAUBE ISO	12217223	16	2	664	91000051	TELESKOP 2 VORM.
SECHSKANTSCHRAUBE ISO	12217223	16	2	667	91000052	TELESKOP 3 VORM.
SECHSKANTSCHRAUBE ISO	12217223	16	2	670	91000053	TELESKOP 4 VORM.
SECHSKANTSCHRAUBE ISO	12216201	305	1	415	96024809	DREHBUEHNENVERKLEIDUN
SECHSKANTSCHRAUBE ISO	12216202	303	2	124	918728408	MONTAGETEILE DREHBUEHN
SECHSKANTSCHRAUBE ISO 4	11007009	7	1	361	917304708	SCHIEBETUER EINBAU
SECHSKANTSCHRAUBE ISO	11690048	8	1	319	919010108	KRANFUEHRERKABINE VORM.
SECHSKANTSCHRAUBE ISO	11690048	14	2	326	968483708	TRITT KPL.
SECHSKANTSCHRAUBE ISO	11690048	27	2	392	969300008	HEIZUNG VORM.
SECHSKANTSCHRAUBE ISO	11690048	300	4	562	919528608	OELKUEHLER EINBAU
SECHSKANTSCHRAUBE ISO 4	10299649	300	4	63	967301408	HYDRAULIK VORB.
SECHSKANTSCHRAUBE ISO	11651612	304	18	124	918728408	MONTAGETEILE DREHBUEHN
SECHSKANTSCHRAUBE ISO	11651612	311	3	269	918811108	ANTRIEBSAGGREGAT VORM.
SECHSKANTSCHRAUBE ISO	11651612	300	12	272	96020819	KUEHLER VORM.
SECHSKANTSCHRAUBE ISO	11651612	30	2	326	968483708	TRITT KPL.

Bezeichnung	Artikel	Pos.	Menge	Seite	Baugruppe	Bezeichnung
SECHSKANTSCHRAUBE ISO	11651612	21	2	346	916162508	SCHEIBEN EINBAU
SECHSKANTSCHRAUBE ISO	11651612	11	4	386	917894308	HEIZUNG KRANFUEHRERKAB
SECHSKANTSCHRAUBE ISO	11651612	26	3	392	969300008	HEIZUNG VORM.
SECHSKANTSCHRAUBE ISO	11651612	311	2	407	96022627	DREHBUEHNENVERKLEIDUN
SECHSKANTSCHRAUBE ISO	11651612	312	2	415	96024809	DREHBUEHNENVERKLEIDUN
SECHSKANTSCHRAUBE ISO	11651612	28	1	444	918759708	ZUSATZHEIZUNG OW
SECHSKANTSCHRAUBE ISO	11651612	7	6	446	96019783	ZUSATZHEIZUNG VORM.
SECHSKANTSCHRAUBE ISO	11651612	303	4	476	918729308	LUFTFILTERANLAGE
SECHSKANTSCHRAUBE ISO	11651612	20	3	478	915300208	ZENTRALSCHMIERANLAGE O
SECHSKANTSCHRAUBE ISO	11651612	327	3	517	96045552	HYDRAULIK OBERWAGEN
SECHSKANTSCHRAUBE ISO	11651612	307	1	562	919528608	OELKUEHLER EINBAU
SECHSKANTSCHRAUBE ISO	11651612	(5)	8	566	969767908	VERROHRUNG DRUCKLUFTA
SECHSKANTSCHRAUBE ISO	11651612	309	4	591	96064697	HYDRAULIK HILFSHUBWERK
SECHSKANTSCHRAUBE ISO	11651612	317	2	598	96075086	HYDRAULIK HILFSHUBWERK D
SECHSKANTSCHRAUBE ISO	11651612	27	21	655	91000049	ANLENKSTUECK VORM.
SECHSKANTSCHRAUBE ISO	11651612	4	2	661	91000050	TELESKOP 1 VORM.
SECHSKANTSCHRAUBE ISO	11651612	4	2	664	91000051	TELESKOP 2 VORM.
SECHSKANTSCHRAUBE ISO	11651612	4	2	667	91000052	TELESKOP 3 VORM.
SECHSKANTSCHRAUBE ISO	11651612	4	2	670	91000053	TELESKOP 4 VORM.
SECHSKANTSCHRAUBE ISO	11651612	4	4	673	91000054	TELESKOP 5 VORM.
SECHSKANTSCHRAUBE ISO	11651612	28	4	679	91000055	AUSSCHUBMECHANIK
SECHSKANTSCHRAUBE ISO	11651612	32	5	747	919933308	TRANSPORTHALTERUNG DKS
SECHSKANTSCHRAUBE ISO 4	406527808	24	4	361	917304708	SCHIEBETUER EINBAU
SECHSKANTSCHRAUBE ISO 4	406527808	303	2	470	919674308	ABGASANLAGE
SECHSKANTSCHRAUBE ISO 4	406527808	75	1	673	91000054	TELESKOP 5 VORM.
SECHSKANTSCHRAUBE ISO 4	10299666	11	2	577	96033759	ANBAUTEILE ARBEITSSCHEIN
SECHSKANTSCHRAUBE ISO	11651767	316	7	33	967304508	HYDRAULIK UNTERWAGEN
SECHSKANTSCHRAUBE ISO	11651767	20	4	61	917155308	HYDRAULIK VORB.
SECHSKANTSCHRAUBE ISO	11651767	303	6	263	918728708	ANTRIEBSAGGREGAT KPL.
SECHSKANTSCHRAUBE ISO	11651767	312	6	269	918811108	ANTRIEBSAGGREGAT VORM.
SECHSKANTSCHRAUBE ISO	11651767	6	4	285	918955208	BATTERIEKASTEN KPL.
SECHSKANTSCHRAUBE ISO	11651767	300	4	305	91002857	KRAFTSTOFFFOERDERUNG
SECHSKANTSCHRAUBE ISO	11651767	31	2	326	968483708	TRITT KPL.
SECHSKANTSCHRAUBE ISO	11651767	13	3	327	96025887	PEDALTRAEGER EINBAU
SECHSKANTSCHRAUBE ISO	11651767	15	4	355	916163008	WISCHANLAGE EINBAU
SECHSKANTSCHRAUBE ISO	11651767	312	12	407	96022627	DREHBUEHNENVERKLEIDUN
SECHSKANTSCHRAUBE ISO	11651767	14	4	410	969425608	KLAPPE VORM.RECHTS
SECHSKANTSCHRAUBE ISO	11651767	311	5	415	96024809	DREHBUEHNENVERKLEIDUN
SECHSKANTSCHRAUBE ISO	11651767	102	15	420	919484908	ABSTURZSICHERUNG
SECHSKANTSCHRAUBE ISO	11651767	300	4	476	918729308	LUFTFILTERANLAGE
SECHSKANTSCHRAUBE ISO	11651767	16	1	502	96025348	GRUNDAUFBAU
SECHSKANTSCHRAUBE ISO	11651767	318	6	517	96045552	HYDRAULIK OBERWAGEN
SECHSKANTSCHRAUBE ISO	11651767	301	3	562	919528608	OELKUEHLER EINBAU
SECHSKANTSCHRAUBE ISO	11651767	(8)	4	566	969767908	VERROHRUNG DRUCKLUFTA
SECHSKANTSCHRAUBE ISO	11651767	332	2	566	969767908	VERROHRUNG DRUCKLUFTA
SECHSKANTSCHRAUBE ISO	11651767	10	2	679	91000055	AUSSCHUBMECHANIK
SECHSKANTSCHRAUBE ISO	11651767	28	2	747	919933308	TRANSPORTHALTERUNG DKS
SECHSKANTSCHRAUBE ISO	11651767	1	2	773	96037297	WINKELGEBER ANBAU
SECHSKANTSCHRAUBE ISO 4	406518814	304	8	470	919674308	ABGASANLAGE
SECHSKANTSCHRAUBE ISO 4	406518814	306	4	473	96051762	ABGASANLAGE VORM.
SECHSKANTSCHRAUBE ISO 4	10299581	14	2	604	96066401	MECHANISCHE ANBAUTEILE
SECHSKANTSCHRAUBE ISO 4	10197831	301	4	124	918728408	MONTAGETEILE DREHBUEHN
SECHSKANTSCHRAUBE ISO 4	10197831	5	2	125	963260408	VERRIEGELUNG
SECHSKANTSCHRAUBE ISO 4	10197831	5	2	126	96049764	VERRIEGELUNG
SECHSKANTSCHRAUBE ISO 4	10197831	313	4	269	918811108	ANTRIEBSAGGREGAT VORM.
SECHSKANTSCHRAUBE ISO 4	10197831	301	8	295	969219208	OELBEHAELTER VORM.
SECHSKANTSCHRAUBE ISO 4	10197831	318	8	407	96022627	DREHBUEHNENVERKLEIDUN
SECHSKANTSCHRAUBE ISO 4	10197831	24	4	444	918759708	ZUSATZHEIZUNG OW
SECHSKANTSCHRAUBE ISO 4	10197831	25	1	446	96019783	ZUSATZHEIZUNG VORM.
SECHSKANTSCHRAUBE ISO 4	10197831	23	2	478	915300208	ZENTRALSCHMIERANLAGE O

Bezeichnung	Artikel	Pos.	Menge	Seite	Baugruppe	Bezeichnung
SECHSKANTSCHRAUBE ISO 4	10197831	8	2	506	926891108	VERTEILER MASSE
SECHSKANTSCHRAUBE ISO 4	10197831	304	4	562	919528608	OELKUEHLER EINBAU
SECHSKANTSCHRAUBE ISO 4	10197831	11	2	604	96066401	MECHANISCHE ANBAUTEILE
SECHSKANTSCHRAUBE ISO 4	10197831	14	4	652	919935408	TELESKOPAUSLEGER KPL.
SECHSKANTSCHRAUBE ISO 4	10197831	17	4	652	919935408	TELESKOPAUSLEGER KPL.
SECHSKANTSCHRAUBE ISO 4	10197831	22	8	652	919935408	TELESKOPAUSLEGER KPL.
SECHSKANTSCHRAUBE ISO 4	10197831	4	4	773	96037297	WINKELGEBER ANBAU
SECHSKANTSCHRAUBE ISO 4	406590105	35	4	326	968483708	TRITT KPL.
SECHSKANTSCHRAUBE ISO	11826527	2	8	47	968374708	MONTAGETEILE
SECHSKANTSCHRAUBE ISO	11826527	309	4	124	918728408	MONTAGETEILE DREHBUEHN
SECHSKANTSCHRAUBE ISO	11826527	319	2	269	918811108	ANTRIEBSAGGREGAT VORM.
SECHSKANTSCHRAUBE ISO	11826527	303	4	272	96020819	KUEHLER VORM.
SECHSKANTSCHRAUBE ISO	11826527	45	1	338	917305408	INNENVERKLEIDUNG EINBAU
SECHSKANTSCHRAUBE ISO	11826527	314	3	407	96022627	DREHBUEHNENVERKLEIDUN
SECHSKANTSCHRAUBE ISO	11826527	100	12	420	919484908	ABSTURZSICHERUNG
SECHSKANTSCHRAUBE ISO	11826527	46	2	581	96062734	HILFSHUBWERK
SECHSKANTSCHRAUBE ISO	11692827	28	2	315	917357108	KRANFUEHRERKABINE ANBA
SECHSKANTSCHRAUBE ISO	11692827	32	2	326	968483708	TRITT KPL.
SECHSKANTSCHRAUBE ISO	10875537	16	2	768	91001040	ANLENKSTUECK VORM.
SECHSKANTSCHRAUBE ISO	10875537	19	2	771	918596708	KOPFSTUECK VORM.
SECHSKANTSCHRAUBE ISO	10875538	44	2	338	917305408	INNENVERKLEIDUNG EINBAU
SECHSKANTSCHRAUBE ISO	10875538	13	1	623	915403108	ANBAUTEILE KAMERA
SECHSKANTSCHRAUBE ISO	10876386	304	2	33	967304508	HYDRAULIK UNTERWAGEN
SECHSKANTSCHRAUBE M8X	11066521	24	4	209	5700161	LUFTPRESSER
SECHSKANTSTIFTSCHLUESS	885166108	29	1	104	928569808	GRUNDWERKZEUG
SECHSRUNDSCHRAUBE M10X	10138656	4	14	220	10140087	ABGASROHR ANBAU
SECHSRUNDSCHRAUBE M14X	10139578	6	2	168	10120186	MASSENAUSGLEICH ANBAU
SECHSRUNDSCHRAUBE M16	10125439	3	6	160	10149580	ZYLINDERKOPF ANBAU
SECHSRUNDSCHRAUBE M16	10118910	4	10	236	9077238	SCHWUNGRAD ANBAU
SECHSRUNDSCHRAUBE M16	10118912	10	6	157	10141974	KURBELWELLENANBAUTEILE
SECHSRUNDSCHRAUBE M18X	10130816	5	10	137	10154379	KURBELGEHAEUSE VORM.
SECHSRUNDSCHRAUBE M8X	13569467	11	13	223	12512627	ABGASSTUTZEN ANBAU
SECHSRUNDSCHRAUBE M8X	10118695	9	3	203	10149677	VERBINDUNGSLEITUNG ANBA
SECHSRUNDSCHRAUBE M8X	10125702	3	2	221	10144756	HITZESCHUTZ MIT BEFESTIG
SEIL 2 2,3KN EDELSTAHL	11160431	6	2	47	968374708	MONTAGETEILE
SEIL 2 2,3KN EDELSTAHL	11160431	2	0.6	50	96070203	TRANSPORTSICHERUNG
SEIL 2 2,3KN EDELSTAHL	11160431	14	3	70	915447908	HYDRAULISCHE ABSTUETZUN
SEIL 2 2,3KN EDELSTAHL	11160431	6	0.75	125	963260408	VERRIEGELUNG
SEIL 2 2,3KN EDELSTAHL	11160431	6	0.75	126	96049764	VERRIEGELUNG
SEIL 2 2,3KN EDELSTAHL	11160431	8	0.3	750	96062062	KLAPPKONSOLE VORM.
SEIL 2 2,3KN EDELSTAHL	11160431	28	1	771	918596708	KOPFSTUECK VORM.
SEIL 2 2,3KN EDELSTAHL	11160431	3	0.4	783	968952708	HAKENSTANGE ANBAU
SEIL 6 0,59KN PERLON	773404508	6	1.6	646	925141508	SCHLAUCHFUEHRUNG VORM.
SEIL 6 0,59KN PERLON	773404508	34	1.2	771	918596708	KOPFSTUECK VORM.
SEIL F.WINDE 1	917910508	127	1	13		LIEBHERR LTR 1100
SEILFESTPUNKT	11494297	2	1	743	910445708	HAKENFLASCHE
SEILKLEMME DIN 1142 22 VER	773913308	6	1	645	919950308	MECH.TEILE VERSANDMONT
SEILLAENGENGEBER 10M LSB	12102801	(1)	1	652	919935408	TELESKOPAUSLEGER KPL.
SEILROLLE 525X56 S355J2G3	976249108	1	1	675	964283508	SEILROLLE KPL.
SEILROLLE 56X470X470 PA6G	975555308	1	1	764	963904108	SEILROLLE KPL.
SEILROLLE KPL. RD640 SPF	927311708	2	1	768	91001040	ANLENKSTUECK VORM.
SEILROLLE KPL. SPF	927310008	71	1	673	91000054	TELESKOP 5 VORM.
SEILROLLE KPL. SPF	927310008	1	1	727	914557108	EINBAU NACKENROLLE
SEILROLLE KPL. SPF	927310008	4	1	771	918596708	KOPFSTUECK VORM.
SEILROLLE KPL. SPF	963904108	4	1	763	917695308	UMLENKROLLE VORM.
SEILROLLE KPL. SPF	964283508	33	5	673	91000054	TELESKOP 5 VORM.
SEILROLLE KPL. SPF	964283508	3	1	723	964502908	MASTNASE VORM.
SEILROLLE RD485X63 PA6G	773952208	1	1	742	924073908	SEILROLLE
SEILROLLE RD525X56 PA6G	288157708	1	1	677	927310008	SEILROLLE KPL.
SEILROLLE RD700X56 PA6G	288158408	1	1	769	927311708	SEILROLLE KPL.

Bezeichnung	Artikel	Pos.	Menge	Seite	Baugruppe	Bezeichnung
SEILROLLE SPF	924073908	1	1	741	919421708	HAKENFLASCHE
SEILROLLE SPF	924073908	1	3	743	910445708	HAKENFLASCHE
SEILSCHUTZ KPL.	571926008	10	1	743	910445708	HAKENFLASCHE
SEILSCHUTZ LI. 4X205X173 S	971812308	26	1	581	96062734	HILFSHUBWERK
SEILSCHUTZ LI. 4X311X318 S	973116808	6	2	378	963564908	HAUPTHUBWERK VORM.
SEILSCHUTZ RE. 4X205X173 S	971812408	27	1	581	96062734	HILFSHUBWERK
SEILSCHUTZSTANGE	10801473	12	2	741	919421708	HAKENFLASCHE
SEILSCHUTZSTANGE	571926108	12	2	743	910445708	HAKENFLASCHE
SEILTROMMEL	938759601	1	1	380	968558601	KOMPAKTSEILWINDE
SEILTROMMEL	938759601	1	1	583	938707001	KOMPAKTSEILWINDE
SEITENBLECH	11621964	8	2	743	910445708	HAKENFLASCHE
SEITENBLECH SCHWK. SPF	968481208	1	1	272	96020819	KUEHLER VORM.
SEITENBLECH SCHWK. SPF	968481308	2	1	272	96020819	KUEHLER VORM.
SEITENSCHEIBE LI. 646.2X94X	97003560	2	1	346	916162508	SCHEIBEN EINBAU
SEITENSCHEIBE RE. 1252X12	97003561	3	1	346	916162508	SCHEIBEN EINBAU
SENKBREMSVENTIL	10665124	7	2	534	10802090	STEUERBLOCK
SENKBREMSVENTIL	570960608	36	2	684	12105406	TELESKOPIERZYLINDER
SENKBREMSVENTIL 420BAR	10355774	150	1	516	96045552	HYDRAULIK OBERWAGEN
SENKBREMSVENTIL 420BAR	10355776	157	1	591	96064697	HYDRAULIK HILFSHUBWERK
SENKBREMSVENTIL 420BAR Z	511636314	16	2	454	919501608	HYDRAULISCHE BALLASTIER
SENKBREMSVENTIL 420BAR Z	10292670	151	1	516	96045552	HYDRAULIK OBERWAGEN
SENKSCHRAUBE AEHNL.ISO	12100589	45	4	395	918810308	STEUERSTAND
SENKSCHRAUBE AEHNL.ISO	12100589	3	6	410	969425608	KLAPPE VORM.RECHTS
SENKSCHRAUBE AEHNL.ISO	12100589	3	12	416	969399608	KLAPPE VORM.
SENKSCHRAUBE DIN 7991 M1	10875807	15	4	658	96014777	HUBSEILFUEHRUNG VORM.
SENKSCHRAUBE DIN 7991 M1	10875808	12	2	655	91000049	ANLENKSTUECK VORM.
SENKSCHRAUBE DIN 7991 M	10875549	20	2	352	916168308	LUFTFUEHRUNG
SENKSCHRAUBE DIN 7991 M	10875549	33	4	395	918810308	STEUERSTAND
SENKSCHRAUBE DIN 7991 M	10875550	83	24	502	96025348	GRUNDAUFBAU
SENKSCHRAUBE DIN 7991 M	10875809	11	4	346	916162508	SCHEIBEN EINBAU
SENKSCHRAUBE DIN 7991 M6	408606008	103	3	420	919484908	ABSTURZSICHERUNG
SENKSCHRAUBE DIN 7991 M	10875551	12	8	346	916162508	SCHEIBEN EINBAU
SENKSCHRAUBE DIN 7991 M	10875551	13	8	349	966497908	FRONTSCHEIBE KPL.
SENKSCHRAUBE DIN 7991 M	10875551	18	4	361	917304708	SCHIEBETUER EINBAU
SENKSCHRAUBE DIN 7991 M	10875551	302	6	407	96022627	DREHBUEHNENVERKLEIDUN
SENKSCHRAUBE DIN 7991 M	10875551	4	4	781	968940708	HALTER LINKS
SENKSCHRAUBE DIN 7991 M	10875551	4	4	782	968940808	HALTER RECHTS
SENKSCHRAUBE DIN 7991 M	10875552	29	16	70	915447908	HYDRAULISCHE ABSTUETZUN
SENKSCHRAUBE DIN 7991 M	10875552	81	2	656	91000049	ANLENKSTUECK VORM.
SENKSCHRAUBE DIN 7991 M	10875552	73	2	661	91000050	TELESKOP 1 VORM.
SENKSCHRAUBE DIN 7991 M	10875552	73	2	664	91000051	TELESKOP 2 VORM.
SENKSCHRAUBE DIN 7991 M	10875552	73	2	667	91000052	TELESKOP 3 VORM.
SENKSCHRAUBE DIN 7991 M	10875552	73	2	670	91000053	TELESKOP 4 VORM.
SENKSCHRAUBE ISO 10642	12100279	10	4	350	965784408	DACHSCHEIBE VORM.
SENKSCHRAUBE ISO 10642	10181421	30	32	70	915447908	HYDRAULISCHE ABSTUETZUN
SENKSCHRAUBE ISO 10642	12220375	34	3	655	91000049	ANLENKSTUECK VORM.
SENKSCHRAUBE ISO 10642	12220375	60	9	661	91000050	TELESKOP 1 VORM.
SENKSCHRAUBE ISO 10642	12220375	60	9	664	91000051	TELESKOP 2 VORM.
SENKSCHRAUBE ISO 10642	12220375	60	9	667	91000052	TELESKOP 3 VORM.
SENKSCHRAUBE ISO 10642	12220375	60	9	670	91000053	TELESKOP 4 VORM.
SENKSCHRAUBE ISO 14581 M	12210040	4	3	156	10153583	KURBELWELLENDICHTUNG
SENKSCHRAUBE ISO 7046-1 M	10181487	106	2	70	915447908	HYDRAULISCHE ABSTUETZUN
SENKSCHRAUBE ISO 7047 M	12216233	300	12	295	969219208	OELBEHAELTER VORM.
SENKSCHRAUBE ISO 7047 M	12100291	14	4	645	919950308	MECH.TEILE VERSANDMONT
SENSORHALTER 30X75X190 P	972261508	4	2	679	91000055	AUSSCHUBMECHANIK
SENSORROHR	12898856	102	1	473	96051762	ABGASANLAGE VORM.
SENSORSTEUERGERAET NI	10144039	154	1	474	96041566	ELEKTRIK ANBAUTEILE
SICHERHEITSELEMENT	10294939	(2)	1	476	918729308	LUFTFILTERANLAGE
SICHERHEITSKLAPPSTECKER	10875869	44	2	673	91000054	TELESKOP 5 VORM.
SICHERHEITSKLAPPSTECKER	10875869	81	3	673	91000054	TELESKOP 5 VORM.

Bezeichnung	Artikel	Pos.	Menge	Seite	Baugruppe	Bezeichnung
SICHERHEITSKLAPPSTECKER	10875869	7	1	726	967321308	HALTERUNG 2.HUB OBEN
SICHERHEITSKLAPPSTECKER	10875869	13	4	741	919421708	HAKENFLASCHE
SICHERHEITSKLAPPSTECKER	10875869	(1)	2	743	910445708	HAKENFLASCHE
SICHERHEITSKLAPPSTECKER	10875869	13	1	768	91001040	ANLENKSTUECK VORM.
SICHERHEITSKLAPPSTECKER	10875869	9	2	771	918596708	KOPFSTUECK VORM.
SICHERHEITSKLAPPSTECKER	10875870	12	8	70	915447908	HYDRAULISCHE ABSTUETZUN
SICHERHEITSKLAPPSTECKER	10875870	21	1	763	917695308	UMLENKROLLE VORM.
SICHERHEITSKLAPPSTECKER	10180884	10	4	635	915090008	GEGENGEWICHT M.BEFESTIG
SICHERHEITSKLAPPSTECKER	571530608	2	1	629	773941308	TASCHENSCHLOSS
SICHERHEITSWARNBLINKLEU	607106208	2	2	105	928620108	ZUBEHOER
SICHERUNG 50A 32V SPF	10023751	(20)	1	288	96023914	ELEKTRIK BATTERIEKASTEN
SICHERUNGSBELEGUNG	96004143	3	1	502	96025348	GRUNDAUFBAU
SICHERUNGSBLECH 30X70X30	978068708	44	8	22	96062226	RAUPENTRAEGER KPL.RE.
SICHERUNGSBLECH 30X70X30	978068708	44	8	28	96062228	RAUPENTRAEGER KPL.LI.
SICHERUNGSCLIP 35-40	929818008	3	8	771	918596708	KOPFSTUECK VORM.
SICHERUNGSCLIP 45-50	929819308	32	8	760	918533508	ADAPTER VORM.
SICHERUNGSCLIP FUER GRI	10678848	4	2	436	10343693	MEISTERSCHALTER
SICHERUNGSEINSATZ 100A D	10878143	(22)	1	288	96023914	ELEKTRIK BATTERIEKASTEN
SICHERUNGSEINSATZ 80A D	10878142	(21)	1	288	96023914	ELEKTRIK BATTERIEKASTEN
SICHERUNGSEINSATZ DIN 72	6905877	(1)	1	241	10151329	KABELSATZ ANBAU
SICHERUNGSFALLE	12104667	34	1	741	919421708	HAKENFLASCHE
SICHERUNGSFALLE	571714308	34	2	743	910445708	HAKENFLASCHE
SICHERUNGSFEDER 3X55 V	433102808	140	1	407	96022627	DREHBUEHNENVERKLEIDUN
SICHERUNGSFEDER 3X55 V	433102808	101	1	415	96024809	DREHBUEHNENVERKLEIDUN
SICHERUNGSFEDER 3X55 V	433102808	5	1	736	96056560	WINDWARNUNG VORM.
SICHERUNGSFEDER 4,5X98 IS	433100908	4	2	721	915415908	MASTNASE
SICHERUNGSFEDER 4,5X98 IS	433100908	7	1	748	925280008	KONSOLE VORM.
SICHERUNGSFEDER 4X68 ISO	433101208	39	4	22	96062226	RAUPENTRAEGER KPL.RE.
SICHERUNGSFEDER 4X68 ISO	433101208	39	4	28	96062228	RAUPENTRAEGER KPL.LI.
SICHERUNGSFEDER 4X68 ISO	433101208	7	2	77	990618314	TRANSPORTABSTUETZUNG
SICHERUNGSFEDER 4X68 ISO	433101208	70	2	581	96062734	HILFSHUBWERK
SICHERUNGSFEDER 4X68 ISO	433101208	38	1	673	91000054	TELESKOP 5 VORM.
SICHERUNGSFEDER 4X68 ISO	433101208	12	1	723	964502908	MASTNASE VORM.
SICHERUNGSFEDER 4X68 ISO	433101208	20	1	723	964502908	MASTNASE VORM.
SICHERUNGSFEDER 4X68 ISO	433101208	2	1	726	967321308	HALTERUNG 2.HUB OBEN
SICHERUNGSFEDER 4X68 ISO	433101208	36	1	747	919933308	TRANSPORTHALTERUNG DKS
SICHERUNGSFEDER 4X68 ISO	433101208	7	1	750	96062062	KLAPPKONSOLE VORM.
SICHERUNGSFEDER 4X68 ISO	433101208	8	1	760	918533508	ADAPTER VORM.
SICHERUNGSFEDER 4X68 ISO	433101208	14	1	763	917695308	UMLENKROLLE VORM.
SICHERUNGSFEDER 4X68 ISO	433101208	27	1	771	918596708	KOPFSTUECK VORM.
SICHERUNGSFEDER 5X122 IS	433102508	67	1	673	91000054	TELESKOP 5 VORM.
SICHERUNGSFEDER 5X122 IS	433102508	10	1	723	964502908	MASTNASE VORM.
SICHERUNGSFEDER 5X122 IS	433102508	12	1	734	96056553	GRUNDHALTER VORM.
SICHERUNGSFEDER DIN 2194	433105008	15	1	768	91001040	ANLENKSTUECK VORM.
SICHERUNGSFEDER DIN 2194	433105008	7	1	772	918221408	ZUGLASCHE VORM.
SICHERUNGSKNOPF	10424601	1	1	631	967361508	REPARATURSATZ
SICHERUNGSKNOPF	10470667	2	1	631	967361508	REPARATURSATZ
SICHERUNGSMUTTER M8 GE	11646255	2	4	274	97095949	KOMBIKUEHLER
SICHERUNGSRING DIN 471 1	10875652	32	2	673	91000054	TELESKOP 5 VORM.
SICHERUNGSRING DIN 471 1	10875654	3	2	675	964283508	SEILROLLE KPL.
SICHERUNGSRING DIN 471 1	10874537	3	2	677	927310008	SEILROLLE KPL.
SICHERUNGSRING DIN 471 1	10874537	3	2	764	963904108	SEILROLLE KPL.
SICHERUNGSRING DIN 471 1	10874537	3	2	769	927311708	SEILROLLE KPL.
SICHERUNGSRING DIN 471 18	428009408	3	2	742	924073908	SEILROLLE
SICHERUNGSRING DIN 471 22	463000003	41	6	369	933074801	DREHWERKANTRIEB
SICHERUNGSRING DIN 471 2	463000103	21	5	369	933074801	DREHWERKANTRIEB
SICHERUNGSRING DIN 471 3	428011301	7	2	165	11448005	KIPPHEBELBOCK VORM.
SICHERUNGSRING DIN 471 3	428011301	7	2	166	12549825	KIPPHEBELBOCK VORM.
SICHERUNGSRING DIN 471 3	428002908	92	1	369	933074801	DREHWERKANTRIEB
SICHERUNGSRING DIN 471 4	10875657	72	1	369	933074801	DREHWERKANTRIEB

Bezeichnung	Artikel	Pos.	Menge	Seite	Baugruppe	Bezeichnung
SICHERUNGSRING DIN 471 4	428003308	33	3	383	968607101	PLANETENGETRIEBE
SICHERUNGSRING DIN 471 4	428003308	33	3	584	938759801	PLANETENGETRIEBE
SICHERUNGSRING DIN 471 4	428003308	13	1	763	917695308	UMLENKROLLE VORM.
SICHERUNGSRING DIN 471 4	428004008	44	2	383	968607101	PLANETENGETRIEBE
SICHERUNGSRING DIN 471 4	428004008	44	2	584	938759801	PLANETENGETRIEBE
SICHERUNGSRING DIN 471 5	530133308	8	5	383	968607101	PLANETENGETRIEBE
SICHERUNGSRING DIN 471 5	530133308	8	5	584	938759801	PLANETENGETRIEBE
SICHERUNGSRING DIN 471 68	10875662	(3)	2	763	917695308	UMLENKROLLE VORM.
SICHERUNGSRING DIN 471 8X	10450160	7	1	364	966253908	WAGEN
SICHERUNGSRING DIN 471 9	12100338	21	6	326	968483708	TRITT KPL.
SICHERUNGSRING DIN 472 12	428103808	12	1	377	510240708	HYDROMOTOR
SICHERUNGSRING DIN 472 17	428105908	21	1	381	938759601	SEILTROMMEL
SICHERUNGSRING DIN 472 2	428110001	29	1	584	938759801	PLANETENGETRIEBE
SICHERUNGSRING DIN 472 3	428100708	5	1	275	10429930	ZAHNRADMOTOR
SICHERUNGSRING DIN 472 6	428102108	67	1	369	933074801	DREHWERKANTRIEB
SICHERUNGSRING DIN 472 8	428102508	12	1	372	570109008	TRIEBWERK
SICHERUNGSRING DIN 472 8	428102708	4	1	383	968607101	PLANETENGETRIEBE
SICHERUNGSRING DIN 472 8	428102708	4	1	584	938759801	PLANETENGETRIEBE
SICHERUNGSRING DIN 472 9	10171632	9	1	43	592326914	VERSTELLMOTOR
SICHERUNGSSCHEIBE DIN 67	12210037	3	1	238	10144098	BEFESTIGUNGSSCHELLE
SICHERUNGSSCHEIBE VS 10	423901508	26	1	381	938759601	SEILTROMMEL
SICHERUNGSSCHEIBE VS 10	4229913	12	12	129	13471292	ANTRIEBSGRUPPE
SICHERUNGSSCHEIBE VS 12	423901708	53	8	383	968607101	PLANETENGETRIEBE
SICHERUNGSSCHEIBE VS 16	4239009	24	8	261	12487540	HYDRAULIKDOPPELPUMPE
SICHERUNGSSCHEIBE VS 8 S	423901408	27	16	369	933074801	DREHWERKANTRIEB
SICHERUNGSSCHRAUBE GE	11494008	4	12	274	97095949	KOMBIKUEHLER
SICHERUNGSSCHRAUBE M1	10153538	2	2	172	9079870	STEUERUNGSTEILE
SICHERUNGSSTIFT FOR JPT P	602338208	503	3	428	96022870	KABELSTRANG
SICHERUNGSSTIFT FOR JPT P	602338208	522	2	500	96059659	DRAEHTE GRUNDAUFBAU KPL
SICHERUNGSSTUECK	12104585	32	1	741	919421708	HAKENFLASCHE
SICHTFENSTER	11110060	39	1	480	10327065	ELEKTROPUMPE
SIEBFILTER	10346599	1	1	551	10355774	SENKBREMSVENTIL
SIEBFILTER	13562648	1	1	463	13475475	ENTNAHMEMODUL
SINTERFILTER	570926808	(1)	1	534	10802090	STEUERBLOCK
SITZTEIL KPL.	12100570	55	1	397	10877138	FAHRERSITZ
SL-SICHERUNG 8X0,94	704271208	29	1	346	916162508	SCHEIBEN EINBAU
SOCKELGEHAEUSE HAN 16B	605618308	503	1	589	96055198	KABELSTRANG
SONNENRAD Z=21 18CrNiMo7-	927601901	25	1	383	968607101	PLANETENGETRIEBE
SONNENRAD Z=24 18CrNiMo7-	939251401	30	1	369	933074801	DREHWERKANTRIEB
SONNENRAD Z=24 18CrNiMo7-	939251601	45	1	369	933074801	DREHWERKANTRIEB
SONNENRAD Z=24 18CrNiMo7-	939251701	60	1	369	933074801	DREHWERKANTRIEB
SONNENRAD Z=28 18CrNiMo7-	927602901	35	1	383	968607101	PLANETENGETRIEBE
SONNENRAD Z=42 18CrNiMo7-	938760401	45	1	383	968607101	PLANETENGETRIEBE
SORTIMENTKASTEN FLACHSI	10877437	8	1	105	928620108	ZUBEHOER
SPANNBAND 240-280/260/30 S	774210508	309	2	566	969767908	VERROHRUNG DRUCKLUFTA
SPANNEINHEIT KPL.	96044789	12	2	420	919484908	ABSTURZSICHERUNG
SPANNER HYDR KPL LH-GRA	749065414	3	1	23	790256114	LEITRADEINHEIT KPL
SPANNSCHEIBE DIN 6796 12 F	425301208	49	1	760	918533508	ADAPTER VORM.
SPANNSCHELLE 122,5/K1 St/I	10127984	2	1	202	10147364	LUFTANSAUGUNG ANBAU
SPANNSCHELLE 125/K1 Inox	10138826	6	1	223	12512627	ABGASSTUTZEN ANBAU
SPANNSCHELLE 129	12222896	22	1	448	10876576	WASSERHEIZGERAET
SPANNSCHELLE 150/K1 Inox	10138820	3	1	216	10148215	THERMOSTATGEHAEUSE AN
SPANNSCHELLE 73/K1 St/Inox	10122841	2	1	218	10142742	KUEHLMITTELKRUEMMER AN
SPANNSCHELLE 75/25	774209708	180	1	272	96020819	KUEHLER VORM.
SPANNSCHELLE 77/K1 St/Inox	10124798	5	2	203	10149677	VERBINDUNGSLEITUNG ANBA
SPANNSTIFT ISO 8752 10X80 4	10875874	37	1	760	918533508	ADAPTER VORM.
SPANNSTIFT ISO 8752 12X85 4	10875876	39	1	747	919933308	TRANSPORTHALTERUNG DKS
SPANNSTIFT ISO 8752 18X36 4	10875877	23	2	315	917357108	KRANFUEHRERKABINE ANBA
SPANNSTIFT ISO 8752 18X36 4	10875877	7	4	626	919616808	WIPPZYLINDER M.LAGERUNG
SPANNSTIFT ISO 8752 21X140	432013108	5	2	24	749013714	LEITRAD KPL

Bezeichnung	Artikel	Pos.	Menge	Seite	Baugruppe	Bezeichnung
SPANNSTIFT ISO 8752 4X28 4	10875878	26	1	771	918596708	KOPFSTUECK VORM.
SPANNSTIFT ISO 8752 5X28 4	12100669	6	1	441	966707708	SPIEGELHALTER VORM.
SPANNSTIFT ISO 8752 5X36 A	12102738	7	1	441	966707708	SPIEGELHALTER VORM.
SPANNSTIFT ISO 8752 6X10 ST	10875881	25	2	346	916162508	SCHEIBEN EINBAU
SPANNSTIFT ISO 8752 6X30 S	243034002	10	2	168	10120186	MASSENAUSGLEICH ANBAU
SPANNSTIFT ISO 8752 6X40 4	12100674	5	2	485	965371508	ENDSCHALTER ANBAU
SPANNSTIFT ISO 8752 8X40 St	4980376	5	1	153	10147438	KURBELWELLE MIT ZAHNRAD
SPANNSTIFT ISO 8752 A 8X16	432007908	72	1	383	968607101	PLANETENGETRIEBE
SPANNSTIFT ISO 8752 A 8X16	432007908	72	1	584	938759801	PLANETENGETRIEBE
SPANNUNGSREGLER 24V 12V	614020508	5	1	612	913753108	FUNKVORBEREITUNG OW
SPANNVORRICHTUNG	10153374	4	1	213	12418347	KLIMAKOMPRESSOR ANBAU
SPIEGELANBAU DREHBUEHN	916870808	144	1	13		LIEBHERR LTR 1100
SPIEGELANBAU KRANFUEHRE	916049908	132	1	13		LIEBHERR LTR 1100
SPIEGELGLAS 315X178	10675116	(1)	1	440	916870808	SPIEGELANBAU DREHBUEHN
SPIEGELHALTER 28X2 ST.37.4	979320608	1	1	402	916049908	SPIEGELANBAU KRANFUEHR
SPIEGELHALTER VORM.	966707708	2	1	440	916870808	SPIEGELANBAU DREHBUEHN
SPIRALBLATTFEDER 552	616200808	2	2	697	12104731	LEITUNGSTROMMEL
SPLINT ISO 1234 1,6X14 A2	10180340	13	1	326	968483708	TRITT KPL.
SPLINT ISO 1234 1,6X14 A2	10180340	4	1	736	96056560	WINDWARNUNG VORM.
SPLINT ISO 1234 10X100 St 480	10180377	20	4	454	919501608	HYDRAULISCHE BALLASTIER
SPLINT ISO 1234 10X80 St 480	10180375	24	8	454	919501608	HYDRAULISCHE BALLASTIER
SPLINT ISO 1234 10X80 St 480	10180375	58	4	760	918533508	ADAPTER VORM.
SPLINT ISO 1234 10X80 St 480	10180375	6	4	772	918221408	ZUGLASCHE VORM.
SPLINT ISO 1234 13X125 St 480	10180381	13	4	47	968374708	MONTAGETEILE
SPLINT ISO 1234 1X14 ST 480	10875872	12	1	326	968483708	TRITT KPL.
SPLINT ISO 1234 3,2X20 A2	51152	25	4	760	918533508	ADAPTER VORM.
SPLINT ISO 1234 4X25 St 480H	10180351	14	2	422	96044789	SPANNEINHEIT KPL.
SPLINT ISO 1234 4X25 St 480H	10180351	10	1	763	917695308	UMLENKROLLE VORM.
SPLINT ISO 1234 4X32 St 480H	10180352	15	2	422	96044789	SPANNEINHEIT KPL.
SPLINT ISO 1234 4X40 St 480H	10180354	39	2	673	91000054	TELESKOP 5 VORM.
SPLINT ISO 1234 4X40 St 480H	10180354	11	1	723	964502908	MASTNASE VORM.
SPLINT ISO 1234 5X32 St 480H	10180357	4	2	60	991456314	AUFSTIEG KPL.
SPLINT ISO 1234 5X32 St 480H	10180357	11	8	119	96045222	MONTAGETEILE
SPLINT ISO 1234 5X32 St 480H	10180357	36	6	420	919484908	ABSTURZSICHERUNG
SPLINT ISO 1234 5X40 St 480H	10180359	5	1	748	925280008	KONSOLE VORM.
SPLINT ISO 1234 5X40 St 480H	10180359	5	3	751	929582108	HALTERUNG VORM.
SPLINT ISO 1234 5X40 St 480H	10180359	40	2	760	918533508	ADAPTER VORM.
SPLINT ISO 1234 5X40 St 480H	10180359	11	4	768	91001040	ANLENKSTUECK VORM.
SPLINT ISO 1234 5X40 St 480H	10180359	15	2	771	918596708	KOPFSTUECK VORM.
SPLINT ISO 1234 5X45 St 480H	10180360	8	3	77	990618314	TRANSPORTABSTUETZUNG
SPLINT ISO 1234 6,3X50 St 480	10180364	17	2	315	917357108	KRANFUEHRERKABINE ANBA
SPLINT ISO 1234 6,3X50 St 480	10180364	11	1	750	96062062	KLAPPKONSOLE VORM.
SPLINT ISO 1234 6,3X50 St 480	10180364	21	1	760	918533508	ADAPTER VORM.
SPLINT ISO 1234 6,3X63 St 480	10180365	4	8	70	915447908	HYDRAULISCHE ABSTUETZUN
SPLINT ISO 1234 6,3X63 St 480	10180365	14	1	315	917357108	KRANFUEHRERKABINE ANBA
SPLINT ISO 1234 8X63 ST 480	10875873	2	1	721	915415908	MASTNASE
SPLINT ISO 1234 8X63 ST 480	10875873	9	1	723	964502908	MASTNASE VORM.
SPRENGRING 52X2 FSt	4980482	7	2	159	10146367	KOLBEN KPL.
SPRUEHLANZENSET 4-TEILIG	10876890	2	1	647	96010020	FETTSPRUEHSYSTEM
SPRUEHPISTOLE	12107074	1	1	648	10876885	FETTSPRUEHGERAET
SPURVERSTELLZYLINDER 14	12102924	4	2	42	96048348	HYDR.INSTALLATIONSTEILE
STAHLKUGEL DIN 5401 15	747003801	28	1	584	938759801	PLANETENGETRIEBE
STANGE 20.0X1140 S355J2+A	97130460	21	2	420	919484908	ABSTURZSICHERUNG
STARTER 7.8KW 24V	11386644	1	1	226	10115539	STARTER ANBAU
STARTER ANBAU 7.8KW 24V	10115539	450	1	134	13455311	DIESELMOTOR
STATIV	963772608	4	1	623	915403108	ANBAUTEILE KAMERA
STAUBKAPPE	518620608	44	2	71	10356288	ABSTUETZZYLINDER
STAUBKAPPE POLYETHYLEN	704254808	12	4	85	966167808	DECKEL KPL.
STAUBMUFFE	510540908	153	4	33	967304508	HYDRAULIK UNTERWAGEN
STAUBMUFFE	510548208	158	12	33	967304508	HYDRAULIK UNTERWAGEN

Bezeichnung	Artikel	Pos.	Menge	Seite	Baugruppe	Bezeichnung
STAUBMUFFE	510548208	(151)	8	67	917155408	SCHNELLKUPPLUNG
STAUBMUFFE	7405494	(1)	1	33	967304508	HYDRAULIK UNTERWAGEN
STAUBSTECKER	510541108	151	4	33	967304508	HYDRAULIK UNTERWAGEN
STAUBSTECKER	7405495	(1)	1	33	967304508	HYDRAULIK UNTERWAGEN
STAUBSTECKER DN6	7364491	(1)	1	33	967304508	HYDRAULIK UNTERWAGEN
STECKANSCHLUSS WSV 6 M1	12102343	7	7	478	915300208	ZENTRALSCHMIERANLAGE O
STECKDOSE 2-POL	10342518	525	1	427	96023891	KABELSTRANG
STECKDOSE 2-POL	10342518	523	3	494	96023971	KABELSTRANG
STECKDOSE 2-POL	10342518	511	3	495	96049294	KABELSTRANG
STECKDOSE 3-POL	605201508	502	1	611	96057250	LEITUNG
STECKDOSE 3-POL	6205239	521	1	495	96049294	KABELSTRANG
STECKDOSE 8-POL	11008529	1	1	439	966979108	STECKDOSE
STECKDOSE ETHERNET	966979108	52	1	431	96056347	ELEKTRIK ANBAUTEILE KABIN
STECKDOSE KABINE	919584608	385	1	14		LIEBHERR LTR 1100
STECKDOSENGEHAEUSE 2-	6001790	524	1	426	96023891	KABELSTRANG
STECKDOSENKOERPER 3-PO	605212708	521	1	494	96023971	KABELSTRANG
STECKDOSENKOERPER 4-PO	605251608	512	1	490	96063649	KABELSTRANG
STECKDOSENKOMBINATION	12103327	1	1	603	91003677	FREMDEINSPEISUNG
STECKER	920381108	502	1	90	96062920	KABELSTRANG
STECKER	920381108	512	1	426	96023891	KABELSTRANG
STECKER	920381108	502	18	490	96063649	KABELSTRANG
STECKER	920381108	519	1	494	96023971	KABELSTRANG
STECKER	927996308	507	1	490	96063649	KABELSTRANG
STECKER	927996308	522	1	494	96023971	KABELSTRANG
STECKER 12-POL	10491808	(2)	1	489	96063648	KABELLISTE DREHBUEHNE
STECKER 2	10492113	(1)	1	489	96063648	KABELLISTE DREHBUEHNE
STECKER 2-POL SW	11342255	510	1	495	96049294	KABELSTRANG
STECKER 2POL	6202637	517	2	494	96023971	KABELSTRANG
STECKER 3-POL	6003168	515	1	495	96049294	KABELSTRANG
STECKER 4-POL 13A	6003248	503	1	495	96049294	KABELSTRANG
STECKER 4-POL SW	11342257	512	1	495	96049294	KABELSTRANG
STECKER 4-POL VIOLETT	11342259	513	1	495	96049294	KABELSTRANG
STECKER 6-POL	604508608	508	1	775	96035674	LEITUNG
STECKER 8-POL	10046999	511	10	500	96059659	DRAEHTE GRUNDAUFBAU KPL
STECKER 8-POL	10047000	501	10	500	96059659	DRAEHTE GRUNDAUFBAU KPL
STECKER 8-POL	10047001	510	9	500	96059659	DRAEHTE GRUNDAUFBAU KPL
STECKER 9-POL PVC	10301148	520	1	426	96023891	KABELSTRANG
STECKER DIN 72585 4-POL PO	692406308	504	1	490	96063649	KABELSTRANG
STECKER DIN 72585 4-POL PO	692406308	507	1	495	96049294	KABELSTRANG
STECKER DIN 72585 7-POL PO	692406708	510	1	490	96063649	KABELSTRANG
STECKER FUER DIESELHEIZ	962196208	516	1	494	96023971	KABELSTRANG
STECKER M1	10476383	504	1	730	96058738	KABELSTRANG
STECKER M1	10476383	504	1	775	96035674	LEITUNG
STECKER VORM. 36POL	96008399	513	1	91	96062921	KABELSTRANG
STECKER VORM. 36POL	96008399	514	1	500	96059659	DRAEHTE GRUNDAUFBAU KPL
STECKERBLECH 1.5X449X175	97010811	4	1	502	96025348	GRUNDAUFBAU
STECKERBLECH 1.5X594X283	97010812	5	1	502	96025348	GRUNDAUFBAU
STECKERBUCHSE 0,5-1,0MM2	7624353	761	2	427	96023891	KABELSTRANG
STECKERBUCHSE 0,75-1,0M	11000401	2253	3	496	96049294	KABELSTRANG
STECKERBUCHSE 0,75-2,0M	10100063	670	2	427	96023891	KABELSTRANG
STECKERBUCHSE 0,75-2,0M	10100063	670	11	494	96023971	KABELSTRANG
STECKERBUCHSE 0,75-2,0M	10100063	670	6	495	96049294	KABELSTRANG
STECKEREINSATZ 16-POL+PE	637005201	502	1	589	96055198	KABELSTRANG
STECKERGEHAEUSE	11822050	517	1	426	96023891	KABELSTRANG
STECKERGEHAEUSE 12-POL	10412433	513	1	494	96023971	KABELSTRANG
STECKERGEHAEUSE 14-POL	602336008	510	4	426	96023891	KABELSTRANG
STECKERGEHAEUSE 14-POL	602336008	505	6	500	96059659	DRAEHTE GRUNDAUFBAU KPL
STECKERGEHAEUSE 14-POL	602336508	3	6	506	926891108	VERTEILER MASSE
STECKERGEHAEUSE 18-POL	11067930	514	1	91	96062921	KABELSTRANG
STECKERGEHAEUSE 18-POL	11067930	508	2	500	96059659	DRAEHTE GRUNDAUFBAU KPL

Bezeichnung	Artikel	Pos.	Menge	Seite	Baugruppe	Bezeichnung
STECKERGEHAEUSE 18-POL	602300208	503	2	90	96062920	KABELSTRANG
STECKERGEHAEUSE 18-POL	602300208	501	9	426	96023891	KABELSTRANG
STECKERGEHAEUSE 18-POL	602300208	501	6	428	96022870	KABELSTRANG
STECKERGEHAEUSE 18-POL	602300208	501	12	490	96063649	KABELSTRANG
STECKERGEHAEUSE 18-POL	602300208	501	1	492	96063650	LEITUNG
STECKERGEHAEUSE 18-POL	602300208	501	5	493	96023971	KABELSTRANG
STECKERGEHAEUSE 18-POL	602300208	501	2	495	96049294	KABELSTRANG
STECKERGEHAEUSE 18-POL	602300208	507	8	500	96059659	DRAEHTE GRUNDAUFBAU KPL
STECKERGEHAEUSE 18-POL	602300208	502	1	694	96063583	LEITUNG
STECKERGEHAEUSE 2 13A TH	10342517	509	1	426	96023891	KABELSTRANG
STECKERGEHAEUSE 2 13A TH	10342517	505	3	493	96023971	KABELSTRANG
STECKERGEHAEUSE 2 13A TH	10342517	502	2	495	96049294	KABELSTRANG
STECKERGEHAEUSE 2-POL	6004195	512	1	90	96062920	KABELSTRANG
STECKERGEHAEUSE 2-POL	6004195	520	1	494	96023971	KABELSTRANG
STECKERGEHAEUSE 2-POL 13	10429638	531	1	494	96023971	KABELSTRANG
STECKERGEHAEUSE 2-POLE 9	602331808	510	2	428	96022870	KABELSTRANG
STECKERGEHAEUSE 4-POL	602335908	515	1	91	96062921	KABELSTRANG
STECKERGEHAEUSE 4-POL	602335908	522	3	426	96023891	KABELSTRANG
STECKERGEHAEUSE 4-POL	602335908	511	1	428	96022870	KABELSTRANG
STECKERGEHAEUSE 4-POL	602335908	506	3	492	96063650	LEITUNG
STECKERGEHAEUSE 4-POL	602335908	523	4	500	96059659	DRAEHTE GRUNDAUFBAU KPL
STECKERGEHAEUSE 62-POL	10678453	502	1	493	96023971	KABELSTRANG
STECKERGEHAEUSE 62-POL P	10678452	506	1	493	96023971	KABELSTRANG
STECKERGEHAEUSE 8-POL	10021571	504	1	91	96062921	KABELSTRANG
STECKERGEHAEUSE 8-POL	10021571	502	1	492	96063650	LEITUNG
STECKERGEHAEUSE 8-POL	10021571	528	1	500	96059659	DRAEHTE GRUNDAUFBAU KPL
STECKERGEHAEUSE D-SUB M	10355170	505	1	426	96023891	KABELSTRANG
STECKERGEHAEUSE D-SUB M	10355182	503	2	426	96023891	KABELSTRANG
STECKERGEHAEUSE HP PBT	11000394	514	1	495	96049294	KABELSTRANG
STECKERGEHAEUSE MCON	10813633	506	2	495	96049294	KABELSTRANG
STECKERKOERPER 4-POL	605613908	504	1	493	96023971	KABELSTRANG
STECKERSTIFT 0,75-2,0MM2 C	10100062	669	4	427	96023891	KABELSTRANG
STECKERSTIFT 0,75-2,0MM2 C	10100062	669	4	494	96023971	KABELSTRANG
STECKERSTIFT 0,75-2,0MM2 C	10100062	669	2	495	96049294	KABELSTRANG
STECKHUELSE 2,8X0,3-1,5 V	602203108	67	2	428	96022870	KABELSTRANG
STECKHUELSE 4,8X1,5	602225914	703	2	428	96022870	KABELSTRANG
STECKHUELSE 5X1,5-2,5	602339108	642	4	91	96062921	KABELSTRANG
STECKHUELSE 6,3X0,5-1,0 V	11080881	758	9	91	96062921	KABELSTRANG
STECKHUELSE 6,3X0,5-1,0 V	11080881	758	16	427	96023891	KABELSTRANG
STECKHUELSE 6,3X0,5-1,0 V	11080881	758	3	428	96022870	KABELSTRANG
STECKHUELSE 6,3X0,5-1,0 V	11080881	758	4	494	96023971	KABELSTRANG
STECKHUELSE 6,3X0,5-1,5 SN	602207608	140	3	428	96022870	KABELSTRANG
STECKHUELSE 6,3X0,5-1,5 SN	602207608	140	2	490	96063649	KABELSTRANG
STECKHUELSE 6,3X1,5-2,5	602303208	64	3	698	96063213	LEITUNG
STECKHUELSE 6,3X1-2,5 MES	602203408	72	1	91	96062921	KABELSTRANG
STECKHUELSE 6,3X1-2,5 MES	602203408	72	3	426	96023891	KABELSTRANG
STECKHUELSE 6,3X1-2,5 MES	602203408	72	5	428	96022870	KABELSTRANG
STECKHUELSE 6,3X1-2,5 MES	602203408	72	4	490	96063649	KABELSTRANG
STECKHUELSE 6,3X1-2,5 MES	602203408	72	4	612	913753108	FUNKVORBEREITUNG OW
STECKHUELSE 9,5X1-2,5 CU	602208408	143	2	426	96023891	KABELSTRANG
STECKHUELSENGEHAEUSE	604501708	516	2	91	96062921	KABELSTRANG
STECKHUELSENGEHAEUSE 2-	602209708	518	1	91	96062921	KABELSTRANG
STECKHUELSENGEHAEUSE 2-	602209708	508	3	426	96023891	KABELSTRANG
STECKHUELSENGEHAEUSE 2-	602209708	506	2	428	96022870	KABELSTRANG
STECKHUELSENGEHAEUSE 2-	602209708	508	2	490	96063649	KABELSTRANG
STECKHUELSENGEHAEUSE 2-	602209708	520	2	500	96059659	DRAEHTE GRUNDAUFBAU KPL
STECKHUELSENGEHAEUSE 2-	602209708	16	1	612	913753108	FUNKVORBEREITUNG OW
STECKHUELSENGEHAEUSE	602208608	511	2	494	96023971	KABELSTRANG
STECKHUELSENGEHAEUSE	602208608	524	1	500	96059659	DRAEHTE GRUNDAUFBAU KPL
STECKHUELSENGEHAEUSE	602208608	17	1	612	913753108	FUNKVORBEREITUNG OW

Bezeichnung	Artikel	Pos.	Menge	Seite	Baugruppe	Bezeichnung
STECKHUELSENGEHAEUSE	602319808	521	1	426	96023891	KABELSTRANG
STECKSCHLUESSEL SW8	12105803	1017	4	66	11481975	STEUERBLOCK
STECKSCHLUESSELEINSATZ	7361649	10	1	102	914860608	WERKZEUG M.ZUBEHOER
STECKSCHLUESSELEINSATZ	790028508	66	1	104	928569808	GRUNDWERKZEUG
STECKVERBINDER GE M10X	12101831	8	1	478	915300208	ZENTRALSCHMIERANLAGE O
STECKVERBINDER GE M8X1K	12101847	9	1	478	915300208	ZENTRALSCHMIERANLAGE O
STECKVERBINDER GE M8X1K	12101847	4	1	587	921444108	ZENTRALSCHMIERANLAGE
STECKVERSCHRAUBUNG 8	12001446	90	1	458	91003833	HARNSTOFFANLAGE
STEHLEITER 2X7-485X2,116M	10877696	1	1	780	917508508	LEITER ANBAU
STEIGROHR 27X111X113,5 EN	927521301	5	1	586	927521201	OELMESSSTABEINRICHTUNG
STELLMOTOR 0,0024KW24V	10287301	13	2	388	11083498	HEIZKLIMAGERAET
STELLSCHRAUBE	10423817	78	1	528	11170515	VENTILBLOCK
STELLSCHRAUBE	10423817	78	2	530	11170518	VENTILBLOCK
STELLSCHRAUBE	10423817	78	1	531	11170519	VENTILBLOCK
STELLSCHRAUBE	10423817	78	1	602	10665173	STEUERBLOCK
STELLSCHRAUBE	571529708	77	2	528	11170515	VENTILBLOCK
STELLSCHRAUBE	571529708	77	4	530	11170518	VENTILBLOCK
STELLSCHRAUBE	571529708	77	2	531	11170519	VENTILBLOCK
STELLSCHRAUBE	571529708	77	2	602	10665173	STEUERBLOCK
STELLSCHRAUBE	571814108	(52)	1	534	10802090	STEUERBLOCK
STELLSCHRAUBE	571814108	52	1	536	10665127	DECKEL
STELLSCHRAUBE	571889608	53	1	537	10665128	DECKEL
STERNGRIFFSCHRAUBE	10443625	24	2	395	918810308	STEUERSTAND
STEUERBLOCK	511306608	55	1	516	96045552	HYDRAULIK OBERWAGEN
STEUERBLOCK 120BAR NG12	10333672	25	1	516	96045552	HYDRAULIK OBERWAGEN
STEUERBLOCK 250BAR SPF	10663060	63	1	516	96045552	HYDRAULIK OBERWAGEN
STEUERBLOCK 300BAR 56L/MI	10802090	22	1	516	96045552	HYDRAULIK OBERWAGEN
STEUERBLOCK 300BAR SPF	10675161	21	1	33	967304508	HYDRAULIK UNTERWAGEN
STEUERBLOCK 385BAR 380L/	10665173	21	1	598	96075086	HYDRAULIK HILFSHUBWERK D
STEUERBLOCK 385BAR 450L/	10665174	21	1	516	96045552	HYDRAULIK OBERWAGEN
STEUERBLOCK 420BAR SPF	11481975	21	1	63	967301408	HYDRAULIK VORB.
STEUERBLOCK pmax=320BAR	10877219	61	1	516	96045552	HYDRAULIK OBERWAGEN
STEUERGERAET ANBAU	10144227	571	1	134	13455311	DIESELMOTOR
STEUERLEISTE	511307808	23	1	516	96045552	HYDRAULIK OBERWAGEN
STEUERLEISTE 60BAR	511486908	24	1	516	96045552	HYDRAULIK OBERWAGEN
STEUERLEITUNG 19 X 1 SPF	12103084	5	2.67	694	96063583	LEITUNG
STEUERLEITUNG 3+12 X 1,5X0	12104034	5	49.51	698	96063213	LEITUNG
STEUERPLATTE	570110408	2	1	373	570109508	TRIEBWERK
STEUERSTAND	918810308	131	1	13		LIEBHERR LTR 1100
STEUERUNGSTEILE	9079870	110	4	131	13455311	DIESELMOTOR
STICKSTOFFSPANNER KPL LH	790336014	2	1	23	790256114	LEITRADEINHEIT KPL
STIFTGEHAEUSE 6-POL PBT G	12697283	501	1	706	96063415	KABELSTRANG
STIFTKONTAKT 0,14-0,37MM2	11100228	762	9	589	96055198	KABELSTRANG
STIFTKONTAKT 0,2-0,5MM2	10335819	689	3	427	96023891	KABELSTRANG
STIFTKONTAKT 0,2-0,5MM2	10335819	689	4	428	96022870	KABELSTRANG
STIFTKONTAKT 0,5-1,0MM2 C	7369458	740	4	496	96049294	KABELSTRANG
STIFTKONTAKT 0,5-1MM2MM2	10300944	715	2	427	96023891	KABELSTRANG
STIFTKONTAKT 0,75-1,5MM2	6202444	95	1	490	96063649	KABELSTRANG
STIFTKONTAKT 0,75-1,5MM2	6202444	95	3	493	96023971	KABELSTRANG
STIFTKONTAKT 0,75-1MM2	604519208	628	3	730	96058738	KABELSTRANG
STIFTKONTAKT 0,75-1MM2	604519208	628	3	775	96035674	LEITUNG
STIFTKONTAKT 0,75-2,5MM2	12104872	2338	6	608	96060353	LEITUNG
STIFTKONTAKT 0,75-2,5MM2	12104872	2338	3	611	96057250	LEITUNG
STIFTKONTAKT 0.5QMM2	605619814	139	2	589	96055198	KABELSTRANG
STIFTKONTAKT 1,5MM2	604519108	637	4	730	96058738	KABELSTRANG
STIFTKONTAKT 1,5MM2	604519108	637	2	775	96035674	LEITUNG
STIFTSCHRAUBE DIN 835 M1	12210035	3	3	202	10147364	LUFTANSAUGUNG ANBAU
STIFTSCHRAUBE DIN 835 M1	10179459	4	3	226	10115539	STARTER ANBAU
STIFTSCHRAUBE DIN 835 M10	12211782	11	12	129	13471292	ANTRIEBSGRUPPE
STIFTSCHRAUBE DIN 939 M1	4981172	5	3	222	10140729	ATL-ANBAU

Bezeichnung	Artikel	Pos.	Menge	Seite	Baugruppe	Bezeichnung
STIFTTRAEGER 6-POL 16A	604526608	501	1	730	96058738	KABELSTRANG
STIFTTRAEGER 6-POL 16A	604526608	501	1	775	96035674	LEITUNG
STIFTTRAEGER 6-POL 28A	12104874	501	1	608	96060353	LEITUNG
STIFTTRAEGER 6-POL 28A	12104874	501	1	611	96057250	LEITUNG
STOERANZEIGE	10429952	9	1	480	10327065	ELEKTROPUMPE
STOESSELSTANGE	9079131	3	2	172	9079870	STEUERUNGSTEILE
STOPFEN D10,7 LD-PE	10678375	7	2	331	916162808	RELING
STOPFEN D10,7 LD-PE	10678375	47	1	338	917305408	INNENVERKLEIDUNG EINBAU
STOPFEN VSTI 1 1/4"	11002696	67	1	528	11170515	VENTILBLOCK
STOPFEN VSTI 1 1/4"	11002696	67	2	530	11170518	VENTILBLOCK
STOPFEN VSTI 1 1/4"	11002696	67	1	531	11170519	VENTILBLOCK
STOPFEN VSTI 1 1/4"	11002696	67	1	602	10665173	STEUERBLOCK
STOPFEN VSTI G1/2A CR6-FRE	477704208	45	2	71	10356288	ABSTUETZZYLINDER
STOPFEN VSTI G1/2A CR6-FRE	477704208	410	1	291	969543308	KRAFTSTOFFBEHAELTER VO
STOPFEN VSTI G1/2A CR6-FRE	477704208	48	2	534	10802090	STEUERBLOCK
STOPFEN VSTI G1/2A CR6-FRE	477704208	100	1	543	10333672	STEUERBLOCK
STOPFEN VSTI G1/2A CR6-FRE	477704208	170	2	543	10333672	STEUERBLOCK
STOPFEN VSTI G1/2A CR6-FRE	477704208	3	1	551	10355774	SENKBREMSVENTIL
STOPFEN VSTI G1/2A CR6-FRE	477704208	61	2	684	12105406	TELESKOPIERZYLINDER
STOPFEN VSTI G1A CR6-FREI	477704608	409	2	291	969543308	KRAFTSTOFFBEHAELTER VO
STOPFEN VSTI G3/4A CR6-FRE	477704708	65	2	522	11170514	VENTILBLOCK
STOPFEN VSTI G3/4A CR6-FRE	477704708	65	1	528	11170515	VENTILBLOCK
STOPFEN VSTI G3/4A CR6-FRE	477704708	65	2	530	11170518	VENTILBLOCK
STOPFEN VSTI G3/4A CR6-FRE	477704708	65	2	531	11170519	VENTILBLOCK
STOPFEN VSTI G3/4A CR6-FRE	477704708	65	1	602	10665173	STEUERBLOCK
STOPFEN VSTI M12X1,5 CR6-F	477704308	41	2	71	10356288	ABSTUETZZYLINDER
STOPFEN VSTI M12X1,5 CR6-F	477704308	22	1	380	968558601	KOMPAKTSEILWINDE
STOPFEN VSTI M12X1,5 CR6-F	477704308	600	1	566	969767908	VERROHRUNG DRUCKLUFTA
STOPFEN VSTI M12X1,5 CR6-F	477704308	22	1	583	938707001	KOMPAKTSEILWINDE
STOPFEN VSTI1/8"ED ST CR6	510741508	61	4	522	11170514	VENTILBLOCK
STOPFEN VSTI1/8"ED ST CR6	510741508	8	1	523	11065879	DRUCKVENTIL
STOPFEN VSTI1/8"ED ST CR6	510741508	61	3	528	11170515	VENTILBLOCK
STOPFEN VSTI1/8"ED ST CR6	510741508	61	11	530	11170518	VENTILBLOCK
STOPFEN VSTI1/8"ED ST CR6	510741508	61	3	531	11170519	VENTILBLOCK
STOPFEN VSTI1/8"ED ST CR6	510741508	45	4	534	10802090	STEUERBLOCK
STOPFEN VSTI1/8"ED ST CR6	510741508	110	2	543	10333672	STEUERBLOCK
STOPFEN VSTI1/8"ED ST CR6	510741508	61	3	602	10665173	STEUERBLOCK
STOPFEN VSTI3/8"ED CR6-FRE	477704108	652	2	34	967304508	HYDRAULIK UNTERWAGEN
STOPFEN VSTI3/8"ED CR6-FRE	477704108	63	1	522	11170514	VENTILBLOCK
STOPFEN VSTI3/8"ED CR6-FRE	477704108	47	14	534	10802090	STEUERBLOCK
STOPFEN VSTI3/8"ED CR6-FRE	477704108	160	1	543	10333672	STEUERBLOCK
STOPFEN VSTIM14X1,5ED CR6	477704908	2	4	369	933074801	DREHWERKANTRIEB
STOPFEN VSTIM14X1,5ED CR6	477704908	727	2	519	96045552	HYDRAULIK OBERWAGEN
STOPFEN VSTIM16X1,5ED CR6	477704408	402	2	280	96035595	AUSGLEICHSBEHAELTER VO
STOPFEN VSTIM16X1,5ED CR6	477704408	6	1	282	96035743	AUSGLEICHSBEHAELTER
STOPFEN VSTIM16X1,5ED CR6	477704408	21	2	583	938707001	KOMPAKTSEILWINDE
STOPFEN VSTIM18X1,5ED CR6	477705108	401	2	291	969543308	KRAFTSTOFFBEHAELTER VO
STOPFEN VSTIM22X1,5ED CR6	477704508	78	1	369	933074801	DREHWERKANTRIEB
STOPFEN VSTIM22X1,5ED CR6	477704508	28	1	384	939368401	OELMESSEINRICHTUNG
STOPFEN VSTIM22X1,5ED CR6	477704508	4	1	551	10355774	SENKBREMSVENTIL
STOPFEN VSTIM22X1,5ED CR6	477704508	639	1	566	969767908	VERROHRUNG DRUCKLUFTA
STOPFEN VSTIM27X2ED CR6	477705608	87	2	369	933074801	DREHWERKANTRIEB
STOPFEN VSTIM33X2ED CR6	477705208	404	1	295	969219208	OELBEHAELTER VORM.
STOPFENSATZ NICHT LACKIE	12466377	738	1	464	11373478	REDUKTIONSMITTELPUMPE
STROMABNEHMER	10491892	23	6	697	12104731	LEITUNGSTROMMEL
STROMQUELLE LSB SPF	10027448	29	2	502	96025348	GRUNDAUFBAU
STUETZFLANSCH	938760601	50	1	383	968607101	PLANETENGETRIEBE
STUETZRING	790272514	4	1	25	749065414	SPANNER HYDR KPL
STUETZRING 17,5X20,9X1 PTF	571082808	(4)	1	516	96045552	HYDRAULIK OBERWAGEN
STUETZRING 17,5X20,9X1 PTF	571082808	(3)	1	591	96064697	HYDRAULIK HILFSHUBWERK

Bezeichnung	Artikel	Pos.	Menge	Seite	Baugruppe	Bezeichnung
STUETZSCHEIBE DIN 988 S 40	422002308	12	1	763	917695308	UMLENKROLLE VORM.
STUETZSCHEIBE DIN 988 S 75	5009001	11	1	43	592326914	VERSTELLMOTOR
STUTZEN 11SMnPb30+C	10130906	21	1	223	12512627	ABGASSTUTZEN ANBAU
STUTZEN KPL.	96035597	3	2	280	96035595	AUSGLEICHSBEHAELTER VO
STUTZEN KPL.	96038054	2	1	282	96035743	AUSGLEICHSBEHAELTER
STUTZEN X5CRNI18-10	97119563	4	1	280	96035595	AUSGLEICHSBEHAELTER VO
SYMBOLEINSATZ 14X14X1,5	606782008	6	2	620	913978308	ZUSATZELEKTRIK VORWAE
SYMBOLEINSATZ SCHWARZ	606763308	7	1	620	913978308	ZUSATZELEKTRIK VORWAE
T-REDUZIERSTUECK 20X10 L	11626529	21	2	458	91003833	HARNSTOFFANLAGE
T-STUECK 20X20 L=90	10872612	4	1	392	969300008	HEIZUNG VORM.
T-STUECK 20X20 L=90	10872612	21	1	446	96019783	ZUSATZHEIZUNG VORM.
T-STUECK 30 G-ALMG TROW	10285701	21	1	319	919010108	KRANFUEHRERKABINE VORM.
T-STUTZEN ET 12L CR6-FREI	247105602	645	2	34	967304508	HYDRAULIK UNTERWAGEN
T-STUTZEN ET 12L CR6-FREI	247105602	659	3	518	96045552	HYDRAULIK OBERWAGEN
T-STUTZEN ET 12L CR6-FREI	247105602	617	1	591	96064697	HYDRAULIK HILFSHUBWERK
T-STUTZEN ET 18L CR6-FREI	247108402	736	2	519	96045552	HYDRAULIK OBERWAGEN
TAKTVENTIL 3.4BAR 8L/MIN 6	10149191	1	1	224	11420633	TAKTVENTIL
TAKTVENTIL 3.4BAR 8L/MIN 6	11420633	436	1	134	13455311	DIESELMOTOR
TANKSENSOR L=1200 24V SP	789015608	100	1	291	969543308	KRAFTSTOFFBEHAELTER VO
TANKVERSCHLUSS 40	10870226	4	1	462	96071742	HARNSTOFFTANK
TASCHE KUNSTSTOFF	740300008	22	1	338	917305408	INNENVERKLEIDUNG EINBAU
TASCHENSCHLOSS 19-22 SPF	773941308	123	2	13		LIEBHERR LTR 1100
TASTATUREINHEIT LSB-TE PR	96052297	3	2	431	96056347	ELEKTRIK ANBAUTEILE KABIN
TASTATUREINHEIT LSB-TE-B	12101942	(80)	1	431	96056347	ELEKTRIK ANBAUTEILE KABIN
TASTATUREINHEIT SPF	10816196	2	1	434	96030724	ELEKTRIK ARMATURENKONS
TASTATUREINHEIT SPF	10874785	31	1	431	96056347	ELEKTRIK ANBAUTEILE KABIN
TASTE	606144008	15	2	435	96022872	ARMATURENBRETT DACH
TASTERKAPPE FLACH KLAR	606144408	17	1	435	96022872	ARMATURENBRETT DACH
TASTKONTAKTGEBER 1OE+1	11100197	(3)	1	434	96030724	ELEKTRIK ARMATURENKONS
TASTKONTAKTGEBER 1OE+1	606143208	16	1	435	96022872	ARMATURENBRETT DACH
TELESKOP 1 SCHWK. RAL 701	91000080	1	1	661	91000050	TELESKOP 1 VORM.
TELESKOP 1 VORM.	91000050	2	1	652	919935408	TELESKOPAUSLEGER KPL.
TELESKOP 2 SCHWK. RAL 701	91000081	1	1	664	91000051	TELESKOP 2 VORM.
TELESKOP 2 VORM.	91000051	3	1	652	919935408	TELESKOPAUSLEGER KPL.
TELESKOP 3 SCHWK. RAL 701	91000082	1	1	667	91000052	TELESKOP 3 VORM.
TELESKOP 3 VORM.	91000052	4	1	652	919935408	TELESKOPAUSLEGER KPL.
TELESKOP 4 SCHWK. RAL 701	91000083	1	1	670	91000053	TELESKOP 4 VORM.
TELESKOP 4 VORM.	91000053	5	1	652	919935408	TELESKOPAUSLEGER KPL.
TELESKOP 5 SCHWK. RAL 701	91000085	1	1	673	91000054	TELESKOP 5 VORM.
TELESKOP 5 VORM.	91000054	6	1	652	919935408	TELESKOPAUSLEGER KPL.
TELESKOPAUSLEGER KPL. SP	919935408	201	1	14		LIEBHERR LTR 1100
TELESKOPIERZYLINDER 180/1	12105406	1	1	679	91000055	AUSSCHUBMECHANIK
TELLERFEDER	570110908	7	4	373	570109508	TRIEBWERK
TELLERFEDER DIN 2093 40X2	720801908	25	4	395	918810308	STEUERSTAND
TEMPERATURFUEHLER	10290126	23	1	448	10876576	WASSERHEIZGERAET
TEMPERATURFUEHLER	10290126	(5)	1	448	10876576	WASSERHEIZGERAET
TEMPERATURFUEHLER	966181208	8	1	484	919940408	EL.ANLAGE DREHBUEHNE
TEMPERATURFUEHLER -30°C	10424276	7	1	431	96056347	ELEKTRIK ANBAUTEILE KABIN
TEMPERATURFUEHLER -40°C	10493625	(1)	1	243	12583633	MOTORREGELUNGSENSORIK
TEMPERATURFUEHLER -50/+	10800266	(150)	1	484	919940408	EL.ANLAGE DREHBUEHNE
TEMPERATURFUEHLER KPL. -	10152036	40	1	243	12583633	MOTORREGELUNGSENSORIK
TEMPERATURFUEHLER KPL. -	13410342	30	2	243	12583633	MOTORREGELUNGSENSORIK
TEMPERATURGEBER -30/+13	691183108	64	1	516	96045552	HYDRAULIK OBERWAGEN
TEMPERATURSENSOR	11826650	21	1	448	10876576	WASSERHEIZGERAET
TEMPERATURSENSOR	11826650	(4)	1	448	10876576	WASSERHEIZGERAET
TEMPERATURSENSOR -40°C B	12889334	156	1	474	96041566	ELEKTRIK ANBAUTEILE
TEMPERATURSENSOR -40°C	11349182	151	2	474	96041566	ELEKTRIK ANBAUTEILE
THERMOSCHALTER BERUEHR	11080088	62	1	432	96056347	ELEKTRIK ANBAUTEILE KABIN
THERMOSTAT	10154798	2	1	216	10148215	THERMOSTATGEHAEUSE AN
THERMOSTAT	571867708	44	1	388	11083498	HEIZKLIMAGERAET

Bezeichnung	Artikel	Pos.	Menge	Seite	Baugruppe	Bezeichnung
THERMOSTATGEHAEUSE AN	10148215	380	1	133	13455311	DIESELMOTOR
TORSIONSDAEMPFER	10228100	1	1	255	10115780	KUPPLUNGSANBAU
TRAEGER 3X1247X142 S355M	97134347	3	1	562	919528608	OELKUEHLER EINBAU
TRAEGER HINTEN T ZN O	968485608	7	1	326	968483708	TRITT KPL.
TRAEGER MESS-U.WARNEINR	919868808	285	1	14		LIEBHERR LTR 1100
TRAEGER VORN T ZN O	968485508	6	1	326	968483708	TRITT KPL.
TRAGARM SCHWK. T ZN O	96022400	1	1	473	96051762	ABGASANLAGE VORM.
TRAGRAHMEN RAL 7016 SPF	966553108	1	1	320	916164208	LAGERUNG EINBAU
TRAGROLLE 107/8/40X590 GA	749014508	2	1	376	919935508	HAUPTHUBWERK
TRAGROLLE 107/8/40X590 GA	749014508	3	1	581	96062734	HILFSHUBWERK
TRAGROLLE 80/5/20X600 GALV	749010708	35	1	670	91000053	TELESKOP 4 VORM.
TRAGROLLE 80/5/20X650 GALV	749009208	35	1	667	91000052	TELESKOP 3 VORM.
TRAGROLLE 80/5/20X700 GALV	749011408	35	1	664	91000051	TELESKOP 2 VORM.
TRAGROLLE 80/5/20X750 GALV	749009308	35	1	661	91000050	TELESKOP 1 VORM.
TRAGROLLE 80/5/20X795 GALV	749010808	35	1	655	91000049	ANLENKSTUECK VORM.
TRAGROLLE 80/5/20X795 GALV	749010808	13	1	658	96014777	HUBSEILFUEHRUNG VORM.
TRAGROLLE KPL LH-GRAU	749065314	11	2	22	96062226	RAUPENTRAEGER KPL.RE.
TRAGROLLE KPL LH-GRAU	749065314	11	2	27	96062228	RAUPENTRAEGER KPL.LI.
TRAGSCHIENE X0	954117308	24	1	287	96024716	BATTERIEKASTEN VORM.
TRAGSCHIENENMUTTER DIN 3	602018008	303	36	517	96045552	HYDRAULIK OBERWAGEN
TRAGSCHIENENMUTTER DIN 3	602018008	78	2	655	91000049	ANLENKSTUECK VORM.
TRAGSCHIENENMUTTER DIN 3	602018008	(15)	2	725	918258408	ELEKTRIK 2.HUBENDSCHALTE
TRANSPONDER SPF	10354922	2	6	52	968374908	ENDSCHALTER ANBAU
TRANSPONDER SPF	11060128	57	2	432	96056347	ELEKTRIK ANBAUTEILE KABIN
TRANSPORTABSTUETZUNG	990618314	1	6	76	914950308	TRANSPORTRAUPE
TRANSPORTHALTERUNG DKS	919933308	350	1	14		LIEBHERR LTR 1100
TRANSPORTKONSOLE S355J0	9078849	1	1	230	9079823	TRANSPORTVORRICHTUNG
TRANSPORTRAUPE	914950308	62	1	12		LIEBHERR LTR 1100
TRANSPORTSICHERUNG	96070203	200	1	47	968374708	MONTAGETEILE
TRANSPORTVORRICHTUNG	10142864	481	1	134	13455311	DIESELMOTOR
TRANSPORTVORRICHTUNG	9079823	480	1	134	13455311	DIESELMOTOR
TRAVERSE	11494298	3	1	743	910445708	HAKENFLASCHE
TRAVERSE 20X61X37 S355J2+	979620608	6	4	473	96051762	ABGASANLAGE VORM.
TRAVERSE 30X161X190 S690Q	955552508	14	1	747	919933308	TRANSPORTHALTERUNG DKS
TRAVERSE AL	12103790	(2)	1	780	917508508	LEITER ANBAU
TRENNRING	10114850	8	15	95	10878097	SCHLEIFRINGUEBERTRAGER
TREPPE 4-360X0,9M ALMG3 E	12102327	1	1	420	919484908	ABSTURZSICHERUNG
TRIEBWELLE	570109608	2	1	372	570109008	TRIEBWERK
TRIEBWERK	10289549	1	1	377	510240708	HYDROMOTOR
TRIEBWERK	570109008	1	1	371	510229408	HYDROMOTOR
TRIEBWERK	570109508	1	1	372	570109008	TRIEBWERK
TRIEBWERK	571541208	1	1	43	592326914	VERSTELLMOTOR
TRITT KPL.	968483708	3	1	319	919010108	KRANFUEHRERKABINE VORM.
TRITT SEITLICH	968485308	2	1	326	968483708	TRITT KPL.
TRITT SPF	968493408	(1)	1	326	968483708	TRITT KPL.
TRITT VORN SPF	966270808	1	1	326	968483708	TRITT KPL.
TRITTSTUFE DIN EN ISO 1461	10099161	1	1	60	991456314	AUFSTIEG KPL.
TROCKNER	571489008	105	1	272	96020819	KUEHLER VORM.
TUELLE	971565208	9	1	334	917304508	KRANFUEHRERKABINE VORM.
TUELLE 6,5/6,5/2 GUMMI	591055508	3	2	356	966408908	WASSERBEHAELTER KPL.
TUERKONTAKTSCHALTER	606020708	12	1	431	96056347	ELEKTRIK ANBAUTEILE KABIN
TUERSCHEIBE 4X1161X 950	97000274	2	1	361	917304708	SCHIEBETUER EINBAU
TUERVERKLEIDUNG 880X390	97000275	3	1	361	917304708	SCHIEBETUER EINBAU
TURBOLADER HE300	10139626	1	1	222	10140729	ATL-ANBAU
U-PROFIL 1.5X94X685 DC01 FE	97068500	5	1	458	91003833	HARNSTOFFANLAGE
U-PROFIL 1X1000X60 FE//ZNNI	97156836	65	7	655	91000049	ANLENKSTUECK VORM.
U-PROFIL 1X1000X78 FE//ZNNI	97156839	67	5	655	91000049	ANLENKSTUECK VORM.
U-PROFIL 1X500X60 FE//ZNNI8/	97156838	34	1	673	91000054	TELESKOP 5 VORM.
U-PROFIL 1X750X60 FE//ZNNI8/	97156837	62	1	655	91000049	ANLENKSTUECK VORM.
U-PROFIL 1X750X74 DC01 FE//	953714008	31	1	581	96062734	HILFSHUBWERK

Bezeichnung	Artikel	Pos.	Menge	Seite	Baugruppe	Bezeichnung
U-PROFIL 1X750X78 FE//ZNNI8/	97156840	66	1	655	91000049	ANLENKSTUECK VORM.
UEBERDRUCKVENTIL	571328408	14	1	480	10327065	ELEKTROPUMPE
UEBERDRUCKVENTIL 187BAR	571689508	38	1	684	12105406	TELESKOPIERZYLINDER
UEBERDRUCKVENTIL pmax=9	10152592	12	1	174	10129474	OELKUEHLER VORM.
UEBERHITZUNGSSCHUTZ	10290127	24	1	448	10876576	WASSERHEIZGERAET
UEBERHITZUNGSSCHUTZ	10290127	(6)	1	448	10876576	WASSERHEIZGERAET
UEBERWURFMUTTER AL8 CR6	477401408	4	1	283	96038054	STUTZEN KPL.
UEBERWURFMUTTER AL8 CR6	477401408	8	1	444	918759708	ZUSATZHEIZUNG OW
UEBERWURFMUTTER DIN 38	477401508	33	1	458	91003833	HARNSTOFFANLAGE
UEBERWURFMUTTER DIN 38	477401508	613	1	518	96045552	HYDRAULIK OBERWAGEN
UEBERWURFMUTTER DIN 38	477401608	701	3	519	96045552	HYDRAULIK OBERWAGEN
UEBERWURFMUTTER DIN 38	477401208	704	1	519	96045552	HYDRAULIK OBERWAGEN
UEBERWURFMUTTER DIN 38	477402408	616	3	518	96045552	HYDRAULIK OBERWAGEN
UEBERWURFMUTTER DIN 38	477401708	628	1	34	967304508	HYDRAULIK UNTERWAGEN
UEBERWURFMUTTER DIN 38	477400308	750	2	519	96045552	HYDRAULIK OBERWAGEN
UEBERWURFMUTTER DIN 38	477400408	601	8	63	967301408	HYDRAULIK VORB.
UEBERWURFMUTTER DIN 38	477400608	655	2	34	967304508	HYDRAULIK UNTERWAGEN
UEBERWURFMUTTER DIN 38	477400908	626	4	34	967304508	HYDRAULIK UNTERWAGEN
UEBERWURFMUTTER DIN 387	477400108	637	2	598	96075086	HYDRAULIK HILFSHUBWERK D
UMLENKROLLE SCHWK.	968714508	1	1	763	917695308	UMLENKROLLE VORM.
UMLENKROLLE VORM.	10149360	3	2	213	12418347	KLIMAKOMPRESSOR ANBAU
UMLENKROLLE VORM.	917695308	2	1	760	918533508	ADAPTER VORM.
UMWAELZPUMPE	11622224	20	1	392	969300008	HEIZUNG VORM.
UMWAELZPUMPE	11622224	26	1	448	10876576	WASSERHEIZGERAET
UMWAELZPUMPE	11622224	(7)	1	448	10876576	WASSERHEIZGERAET
UNIVERSAL EIN-AUSGANGS	96069052	5	2	498	919940108	EINBAUTEILE SCHALTSCHRAN
UNTERBAU	11171274	60	1	397	10877138	FAHRERSITZ
UNTERLAGE 1X200X70 DC01	949361408	44	1	747	919933308	TRANSPORTHALTERUNG DKS
UNTERLAGE 1X280X70 DC01	949380908	46	1	747	919933308	TRANSPORTHALTERUNG DKS
UNTERLAGE 2X200X70 DC01	949362208	45	1	747	919933308	TRANSPORTHALTERUNG DKS
UNTERLAGE 2X280X70 DC01	949381008	47	1	747	919933308	TRANSPORTHALTERUNG DKS
UNTERLEGSCHEIBE	10293786	5	1	372	570109008	TRIEBWERK
UNTERWAGEN KPL. B7B	96062225	1	1	17	919950108	UNTERWAGEN KPL.M.SCHNEL
UNTERWAGEN KPL.M.SCHNEL	919950108	2	1	12		LIEBHERR LTR 1100
V-RING 350 NBR,60 SHORE	710908701	15	1	380	968558601	KOMPAKTSEILWINDE
V-RING 350 NBR,60 SHORE	710908701	(2)	1	383	968607101	PLANETENGETRIEBE
V-RING 350 NBR,60 SHORE	710908701	15	1	583	938707001	KOMPAKTSEILWINDE
VARIATIONSBAUSTEIN 12POL	660008108	1	1	505	966157408	BESTUECKUNGSMODUL
VARISTOR 19X4,4 RM7,5	660011408	9	2	505	966157408	BESTUECKUNGSMODUL
VENTIL	10011832	13	1	139	10147687	AGGREGATETRAEGER ANBA
VENTIL	10011832	1	1	175	9078233	VENTIL
VENTIL	10011832	31	1	223	12512627	ABGASSTUTZEN ANBAU
VENTIL	10815029	32	2	528	11170515	VENTILBLOCK
VENTIL	10815029	32	4	530	11170518	VENTILBLOCK
VENTIL	10815029	32	2	531	11170519	VENTILBLOCK
VENTIL	10815029	32	2	602	10665173	STEUERBLOCK
VENTIL	11979976	29	1	397	10877138	FAHRERSITZ
VENTIL	7622478	16	1	388	11083498	HEIZKLIMAGERAET
VENTIL M14X1,5	9078233	6	1	174	10129474	OELKUEHLER VORM.
VENTILBETAETIGUNG	927758701	11	1	583	938707001	KOMPAKTSEILWINDE
VENTILBLOCK	11170514	1	1	521	10665174	STEUERBLOCK
VENTILBLOCK	11170515	2	1	521	10665174	STEUERBLOCK
VENTILBLOCK	11170518	4	1	521	10665174	STEUERBLOCK
VENTILBLOCK	11170519	5	1	521	10665174	STEUERBLOCK
VENTILBRUECKE	10119695	2	2	164	10148438	KIPPHEBELBOCK KPL.
VENTILDECKEL 45 PA6.6	12101064	5	1	280	96035595	AUSGLEICHSBEHAELTER VO
VENTILDECKEL 45 PA6.6	12101064	5	1	282	96035743	AUSGLEICHSBEHAELTER
VENTILFUEHRUNG NOVOFER	10150204	4	4	163	10149578	ZYLINDERKOPF
VENTILKEGEL	510710408	20	1	37	510438508	DRUCKMINDERVENTIL
VENTILKEGELSTUECK MK9	11357514	8	8	162	10149579	ZYLINDERKOPF VORM.

Bezeichnung	Artikel	Pos.	Menge	Seite	Baugruppe	Bezeichnung
VENTILSCHAFTDICHTRING	10120334	(5)	4	160	10149580	ZYLINDERKOPF ANBAU
VENTILSCHAFTDICHTRING	10120334	5	4	162	10149579	ZYLINDERKOPF VORM.
VENTILSITZ	510797608	10	1	558	511417708	DRUCKBEGRENZUNGSVENTI
VENTILSITZ	510797608	10	1	621	511417608	DRUCKBEGRENZUNGSVENTI
VENTILSITZ	570647508	3	1	524	571130108	DRUCKBEGRENZUNGSVENTI
VENTILSITZRING AUSLASS PL	10128680	7	2	163	10149578	ZYLINDERKOPF
VENTILSITZRING EINLASS PL	10149739	6	2	163	10149578	ZYLINDERKOPF
VERBANDSKASTEN DIN 13164	789000308	5	1	105	928620108	ZUBEHOER
VERBINDUNGSLEITUNG 7X0,2	10472995	30	1	498	919940108	EINBAUTEILE SCHALTSCHRAN
VERBINDUNGSLEITUNG ANBA	10149677	230	1	132	13455311	DIESELMOTOR
VERBINDUNGSLEITUNG R-M	10141549	1	1	202	10147364	LUFTANSAUGUNG ANBAU
VERBINDUNGSMITTEL EN 358	12102869	3	1	120	916959808	PERSOENLICHE SCHUTZAUS
VERBINDUNGSROHR 0	11000700	101	2	263	918728708	ANTRIEBSAGGREGAT KPL.
VERBINDUNGSROHR 0	11000700	5	3	392	969300008	HEIZUNG VORM.
VERBINDUNGSSTUECK Al Rm	10121666	1	1	148	10121667	VERBINDUNGSSTUECK M.O-R
VERBINDUNGSSTUECK M.O-R	10121667	4	1	144	10132560	OELWANNE MIT BEFEST.
VERBINDUNGSSTUECK M.O-R	10121667	1	1	253	10141167	DS OELWANNE
VERBINDUNGSSTUTZEN 4723	971434408	194	1	517	96045552	HYDRAULIK OBERWAGEN
VERBINDUNGSSTUTZEN EL 1	953600608	172	1	516	96045552	HYDRAULIK OBERWAGEN
VERBINDUNGSSTUTZEN EL 1	953600608	158	1	591	96064697	HYDRAULIK HILFSHUBWERK
VERDAMPFER	10874825	15	1	388	11083498	HEIZKLIMAGERAET
VERDRAHTUNGSKANAL 80X2	260020702	50	0.28	502	96025348	GRUNDAUFBAU
VERKABELUNG HEIZLUEFTER	91000484	384	1	14		LIEBHERR LTR 1100
VERKEILUNG LI HINTEN KPL	970759803	4	1	30	992078314	MITTELTEIL
VERKEILUNG LI VORNE KPL	970760403	5	1	30	992078314	MITTELTEIL
VERKEILUNG RE HINTEN KPL	970760703	6	1	30	992078314	MITTELTEIL
VERKEILUNG RE VORNE KPL	970760103	7	1	30	992078314	MITTELTEIL
VERKLEIDUNG A-SAEULE LI. 1	97002207	18	1	338	917305408	INNENVERKLEIDUNG EINBAU
VERKLEIDUNG A-SAEULE RE.	97002209	19	1	338	917305408	INNENVERKLEIDUNG EINBAU
VERKLEIDUNG ABLAGE 82X59	97001553	17	1	338	917305408	INNENVERKLEIDUNG EINBAU
VERKLEIDUNG HOLM LI. 84X1	97001015	3	1	338	917305408	INNENVERKLEIDUNG EINBAU
VERKLEIDUNG HOLM RE. 65X2	979206708	8	1	338	917305408	INNENVERKLEIDUNG EINBAU
VERKLEIDUNG LI.	966282308	1	1	338	917305408	INNENVERKLEIDUNG EINBAU
VERKLEIDUNG LI. 130X832X1	97001013	1	1	340	966282308	VERKLEIDUNG LI.
VERKLEIDUNG MONITORGEH	979207008	3	1	321	96015921	BEDIENELEMENTE EINBAU
VERKLEIDUNG OBEN RECHTS	97001589	4	1	338	917305408	INNENVERKLEIDUNG EINBAU
VERKLEIDUNG PEDALE 258X	97105652	3	1	327	96025887	PEDALTRAEGER EINBAU
VERKLEIDUNG PEDALE 315X	97089358	4	1	327	96025887	PEDALTRAEGER EINBAU
VERKLEIDUNG RE.	966282408	2	1	338	917305408	INNENVERKLEIDUNG EINBAU
VERKLEIDUNG RE. 120X526X	97138958	21	1	338	917305408	INNENVERKLEIDUNG EINBAU
VERKLEIDUNG RE. 127X1598	97001014	1	1	341	966282408	VERKLEIDUNG RE.
VERKLEIDUNG ROLLO 96X81	97001048	6	1	338	917305408	INNENVERKLEIDUNG EINBAU
VERKLEIDUNG RUECKWAND	97001404	5	1	338	917305408	INNENVERKLEIDUNG EINBAU
VERKLEIDUNG VORN 201X84	97006863	16	1	338	917305408	INNENVERKLEIDUNG EINBAU
VERKLEIDUNG ZWANGSENT	979206908	20	1	338	917305408	INNENVERKLEIDUNG EINBAU
VERLAENGERUNG B DIN 3123	790026408	65	1	104	928569808	GRUNDWERKZEUG
VERLAENGERUNG B DIN 3123	790026308	64	1	104	928569808	GRUNDWERKZEUG
VERLAENGERUNG M10X1K/	774373408	10	4	478	915300208	ZENTRALSCHMIERANLAGE O
VERRIEGELUNG	96049764	4	1	124	918728408	MONTAGETEILE DREHBUEHN
VERRIEGELUNG	963260408	3	1	124	918728408	MONTAGETEILE DREHBUEHN
VERRIEGELUNGSBOLZEN 70.0	975766808	3	1	125	963260408	VERRIEGELUNG
VERRIEGELUNGSBOLZEN 70.0	975766808	3	1	126	96049764	VERRIEGELUNG
VERRIEGELUNGSSATZ SUB-D	602093514	3	2	499	96059658	GRUNDAUFBAU KPL.
VERROHRUNG DRUCKLUFTA	969767908	4	1	564	918118408	DRUCKLUFTANLAGE OW
VERSCHLUSS FEDERBUEGEL	704227608	7	1	781	968940708	HALTER LINKS
VERSCHLUSS FEDERBUEGEL	704227608	7	1	782	968940808	HALTER RECHTS
VERSCHLUSS HAKEN	704230208	25	2	287	96024716	BATTERIEKASTEN VORM.
VERSCHLUSSBOLZEN 3X25 P	12104694	21	1	84	96075205	SCHALTKASTEN VORM.
VERSCHLUSSBOLZEN 3X25 P	12104694	154	2	92	96060493	ANTENNE KPL.
VERSCHLUSSDECKEL 60	9144757	2	1	151	10118839	OELEINFUELLUNG

Bezeichnung	Artikel	Pos.	Menge	Seite	Baugruppe	Bezeichnung
VERSCHLUSSDECKEL DIN 443	12209779	2	4	136	11389608	KURBELGEHAEUSE KPL. MIT
VERSCHLUSSDECKEL DIN 443	12209781	10	3	163	10149578	ZYLINDERKOPF
VERSCHLUSSDECKEL DIN 443	12209783	3	7	136	11389608	KURBELGEHAEUSE KPL. MIT
VERSCHLUSSKAPPE	571511808	14	1	545	570427108	DRUCKBEGRENZUNGSVENTI
VERSCHLUSSKAPPE M 1-K	604508508	503	1	730	96058738	KABELSTRANG
VERSCHLUSSKAPPE M 1-K	604508508	503	2	775	96035674	LEITUNG
VERSCHLUSSKAPPE M1-D	604512108	153	2	703	96063458	KLEMMKASTEN KPL.
VERSCHLUSSKAPPE M1-D	604512108	508	1	730	96058738	KABELSTRANG
VERSCHLUSSKAPPE M1-D	604512108	510	1	775	96035674	LEITUNG
VERSCHLUSSKEGEL VKA 22L	4772028	12	2	146	10155227	OELWANNE VORM.
VERSCHLUSSMUTTER BGR.8	12102190	166	1	591	96064697	HYDRAULIK HILFSHUBWERK
VERSCHLUSSMUTTER BGR.8	12102190	166	1	598	96075086	HYDRAULIK HILFSHUBWERK D
VERSCHLUSSMUTTER RD32X	10466914	160	2	516	96045552	HYDRAULIK OBERWAGEN
VERSCHLUSSMUTTER RD32X	10466914	174	1	598	96075086	HYDRAULIK HILFSHUBWERK D
VERSCHLUSSMUTTER RD36X	10466915	162	1	598	96075086	HYDRAULIK HILFSHUBWERK D
VERSCHLUSSRING	10803065	14	1	371	510229408	HYDROMOTOR
VERSCHLUSSRING	570109808	4	1	372	570109008	TRIEBWERK
VERSCHLUSSSCHRAUBE	10650014	48	1	684	12105406	TELESKOPIERZYLINDER
VERSCHLUSSSCHRAUBE	774378208	2	4	482	12101719	VERTEILERKOMBINATION
VERSCHLUSSSCHRAUBE 15	602425008	197	2	703	96063458	KLEMMKASTEN KPL.
VERSCHLUSSSCHRAUBE BG	12102189	167	1	591	96064697	HYDRAULIK HILFSHUBWERK
VERSCHLUSSSCHRAUBE BG	12102189	167	1	598	96075086	HYDRAULIK HILFSHUBWERK D
VERSCHLUSSSCHRAUBE DIN	4600370	80	1	26	749065314	TRAGROLLE KPL
VERSCHLUSSSCHRAUBE DIN	12218194	12	1	480	10327065	ELEKTROPUMPE
VERSCHLUSSSCHRAUBE DIN	10878578	27	1	209	5700161	LUFTPRESSER
VERSCHLUSSSCHRAUBE DIN	4600232	29	3	209	5700161	LUFTPRESSER
VERSCHLUSSSCHRAUBE G1/4	10470377	59	1	684	12105406	TELESKOPIERZYLINDER
VERSCHLUSSSCHRAUBE G1/	11232679	9	1	66	11481975	STEUERBLOCK
VERSCHLUSSSCHRAUBE G1/	11232679	2004	4	66	11481975	STEUERBLOCK
VERSCHLUSSSCHRAUBE M12	602425508	196	1	703	96063458	KLEMMKASTEN KPL.
VERSCHLUSSSCHRAUBE M16	602424908	10	2	319	919010108	KRANFUEHRERKABINE VORM.
VERSCHLUSSSCHRAUBE M16	602424908	17	1	334	917304508	KRANFUEHRERKABINE VORM.
VERSCHLUSSSCHRAUBE M22	477500301	8	2	586	927521201	OELMESSSTABEINRICHTUNG
VERSCHLUSSSCHRAUBE M25	602425108	216	1	692	96063456	KLEMMKASTEN
VERSCHLUSSSCHRAUBE M2	570109408	11	2	371	510229408	HYDROMOTOR
VERSCHLUSSSCHRAUBE M30	10137918	2	1	141	10138450	ENDREGELVENTIL
VERSCHLUSSSCHRAUBE M3	10152594	2	1	176	10152592	UEBERDRUCKVENTIL
VERSCHLUSSSCHRAUBE M32	602425208	16	1	84	96075205	SCHALTKASTEN VORM.
VERSCHLUSSSCHRAUBE M32	602425208	212	1	692	96063456	KLEMMKASTEN
VERSCHLUSSSCHRAUBE M32	602425208	505	1	698	96063213	LEITUNG
VERSCHLUSSSCHRAUBE M3	10814445	49	2	684	12105406	TELESKOPIERZYLINDER
VERSCHLUSSSCHRAUBE RD3	10466910	172	1	591	96064697	HYDRAULIK HILFSHUBWERK
VERSCHLUSSSCHRAUBE RD3	10466911	164	1	591	96064697	HYDRAULIK HILFSHUBWERK
VERSCHLUSSSCHRAUBE VST	7381638	12	1	203	10149677	VERBINDUNGSLEITUNG ANBA
VERSCHLUSSSCHRAUBE VST	7381638	9	2	212	10145278	ANBAUTEILE LUFTPRESSER
VERSCHLUSSSCHRAUBE VST	7381638	10	2	232	10115829	SCHWUNGRADGEHAEUSE AN
VERSCHLUSSSCHRAUBE VST	7380566	6	3	136	11389608	KURBELGEHAEUSE KPL. MIT
VERSCHLUSSSCHRAUBE VST	7380566	4	1	201	10145173	ANSAUGSTUTZEN ANBAU
VERSCHLUSSSCHRAUBE VST	7380566	20	1	222	10140729	ATL-ANBAU
VERSCHLUSSSCHRAUBE VST	7382203	5	2	247	10144027	VERSCHLUSSTEILE
VERSCHLUSSSCHRAUBE VSTI	7380177	10	3	136	11389608	KURBELGEHAEUSE KPL. MIT
VERSCHLUSSSCHRAUBE VSTI	7380177	14	1	233	10116110	VERSCHLUSSTEILE
VERSCHLUSSSCHRAUBE VSTI	7380177	4	1	247	10144027	VERSCHLUSSTEILE
VERSCHLUSSSCHRAUBE VST	10041903	2	5	140	13782803	AGGREGATETRAEGER VORM
VERSCHLUSSSCHRAUBE VSTI	7381457	7	2	136	11389608	KURBELGEHAEUSE KPL. MIT
VERSCHLUSSSCHRAUBE VSTI	7381457	21	1	222	10140729	ATL-ANBAU
VERSCHLUSSSCHRAUBE VSTI	7382204	11	1	174	10129474	OELKUEHLER VORM.
VERSCHLUSSSCHRAUBE VSTI	10137121	3	1	140	13782803	AGGREGATETRAEGER VORM
VERSCHLUSSSCHRAUBE VSTI	10043136	8	1	223	12512627	ABGASSTUTZEN ANBAU
VERSCHLUSSSCHRAUBE VSTI	7382202	1	1	245	10142747	VERSCHLUSSTEILE

Bezeichnung	Artikel	Pos.	Menge	Seite	Baugruppe	Bezeichnung
VERSCHLUSSSCHRAUBE VSTI	10285724	3	1	178	10142942	SCHMIEROELFILTER ANBAU
VERSCHLUSSSTOPFEN	10015404	(1)	1	272	96020819	KUEHLER VORM.
VERSCHLUSSSTOPFEN GPN 3	779016501	10	10	334	917304508	KRANFUEHRERKABINE VORM.
VERSCHLUSSSTOPFEN GPN 3	779016501	42	2	361	917304708	SCHIEBETUER EINBAU
VERSCHLUSSSTOPFEN GPN	11698481	5	1	183	12489819	ABDECKKAPPEN-KIT
VERSCHLUSSSTOPFEN GPN 3	11835061	6	2	183	12489819	ABDECKKAPPEN-KIT
VERSCHLUSSSTOPFEN ISO 8	477700408	617	3	518	96045552	HYDRAULIK OBERWAGEN
VERSCHLUSSSTOPFEN ISO 8	477700508	600	8	63	967301408	HYDRAULIK VORB.
VERSCHLUSSSTOPFEN ISO 8	477700508	702	3	519	96045552	HYDRAULIK OBERWAGEN
VERSCHLUSSSTOPFEN ISO 8	477700608	703	1	519	96045552	HYDRAULIK OBERWAGEN
VERSCHLUSSSTOPFEN ISO 8	477700108	615	3	518	96045552	HYDRAULIK OBERWAGEN
VERSCHLUSSSTOPFEN PE-L	11066908	311	8	33	967304508	HYDRAULIK UNTERWAGEN
VERSCHLUSSTEILE	10115664	452	1	134	13455311	DIESELMOTOR
VERSCHLUSSTEILE	10116110	521	1	134	13455311	DIESELMOTOR
VERSCHLUSSTEILE	10127979	526	1	134	13455311	DIESELMOTOR
VERSCHLUSSTEILE	10128439	524	1	134	13455311	DIESELMOTOR
VERSCHLUSSTEILE	10142747	630	1	135	13455311	DIESELMOTOR
VERSCHLUSSTEILE	10144027	652	1	135	13455311	DIESELMOTOR
VERSCHLUSSTEILE	9078249	650	1	135	13455311	DIESELMOTOR
VERSCHLUSSTEILE Al Rm>150	10128440	1	1	234	10128439	VERSCHLUSSTEILE
VERSCHMUTZUNGSANZEIGE	11068222	101	1	295	969219208	OELBEHAELTER VORM.
VERSCHMUTZUNGSANZEIGE	571356108	4	1	555	510670808	LEITUNGSFILTER
VERSCHRAUBUNG	11081053	3	1	483	774375108	DURCHGANGSNIPPELBLOCK
VERSCHRAUBUNG	790065608	4	1	102	914860608	WERKZEUG M.ZUBEHOER
VERSCHRAUBUNG	790533908	5	2	102	914860608	WERKZEUG M.ZUBEHOER
VERSCHRAUBUNG	955919508	180	4	516	96045552	HYDRAULIK OBERWAGEN
VERSCHRAUBUNG 36.0X46 11	977253208	614	2	34	967304508	HYDRAULIK UNTERWAGEN
VERSCHRAUBUNG BUZ 16S C	477701108	657	2	34	967304508	HYDRAULIK UNTERWAGEN
VERSCHRAUBUNG BUZ 30S C	477701608	625	4	34	967304508	HYDRAULIK UNTERWAGEN
VERSCHRAUBUNG BUZ 8 M1	10816958	400	6	473	96051762	ABGASANLAGE VORM.
VERSCHRAUBUNG EGE 12L	471903808	709	1	519	96045552	HYDRAULIK OBERWAGEN
VERSCHRAUBUNG EGE 12S G	471901808	633	5	518	96045552	HYDRAULIK OBERWAGEN
VERSCHRAUBUNG EGE 12S G	471900508	784	1	520	96045552	HYDRAULIK OBERWAGEN
VERSCHRAUBUNG EGE 12S G	471900508	609	1	717	966004808	ZUSATZHYDRAULIK KLAPPSPI
VERSCHRAUBUNG EGE 16S	471901908	621	1	518	96045552	HYDRAULIK OBERWAGEN
VERSCHRAUBUNG EGE 18L G	471901308	687	1	518	96045552	HYDRAULIK OBERWAGEN
VERSCHRAUBUNG EGE 18L	10878394	400	1	306	96066239	KRAFTSTOFFFILTER VORM.
VERSCHRAUBUNG EGE 42L	471903608	400	1	295	969219208	OELBEHAELTER VORM.
VERSCHRAUBUNG EGESD10-L	471901108	667	3	518	96045552	HYDRAULIK OBERWAGEN
VERSCHRAUBUNG EGESD10-L	471901108	621	2	592	96064697	HYDRAULIK HILFSHUBWERK
VERSCHRAUBUNG EGESD10-L	471901108	611	3	709	965994108	HYDRAULIK TELE
VERSCHRAUBUNG EGESD12-L	471901208	689	1	518	96045552	HYDRAULIK OBERWAGEN
VERSCHRAUBUNG EGESD16	471900608	605	2	34	967304508	HYDRAULIK UNTERWAGEN
VERSCHRAUBUNG EGESD16	471900608	686	1	518	96045552	HYDRAULIK OBERWAGEN
VERSCHRAUBUNG EGESD28-L	471901508	747	4	519	96045552	HYDRAULIK OBERWAGEN
VERSCHRAUBUNG EGESD6-S	471900308	640	1	34	967304508	HYDRAULIK UNTERWAGEN
VERSCHRAUBUNG EGESD6-S	471900308	768	2	519	96045552	HYDRAULIK OBERWAGEN
VERSCHRAUBUNG EGESD6-S	471900308	609	1	591	96064697	HYDRAULIK HILFSHUBWERK
VERSCHRAUBUNG EGESD6-S	471900308	605	2	619	969856508	ZUSATZHYDRAULIK OELVOR
VERSCHRAUBUNG EL 10L CR6	472330208	657	5	518	96045552	HYDRAULIK OBERWAGEN
VERSCHRAUBUNG EL 10L CR6	472330208	619	2	592	96064697	HYDRAULIK HILFSHUBWERK
VERSCHRAUBUNG EL 10L CR6	472330208	605	3	709	965994108	HYDRAULIK TELE
VERSCHRAUBUNG EL 10S C	7367776	660	2	34	967304508	HYDRAULIK UNTERWAGEN
VERSCHRAUBUNG EL 12S C	7617461	622	2	34	967304508	HYDRAULIK UNTERWAGEN
VERSCHRAUBUNG EL 12S C	7617461	634	11	518	96045552	HYDRAULIK OBERWAGEN
VERSCHRAUBUNG EL 15L CR6	472300414	606	1	591	96064697	HYDRAULIK HILFSHUBWERK
VERSCHRAUBUNG EL 16S C	7407098	656	1	34	967304508	HYDRAULIK UNTERWAGEN
VERSCHRAUBUNG EL 16S C	7407098	624	4	518	96045552	HYDRAULIK OBERWAGEN
VERSCHRAUBUNG EL 28L CR6	7407120	782	1	519	96045552	HYDRAULIK OBERWAGEN
VERSCHRAUBUNG EL 6S CR6	472331208	643	1	34	967304508	HYDRAULIK UNTERWAGEN

Bezeichnung	Artikel	Pos.	Menge	Seite	Baugruppe	Bezeichnung
VERSCHRAUBUNG EL 6S CR6	472331208	663	4	518	96045552	HYDRAULIK OBERWAGEN
VERSCHRAUBUNG EL 6S CR6	472331208	612	2	591	96064697	HYDRAULIK HILFSHUBWERK
VERSCHRAUBUNG EL 6S CR6	472331208	603	1	619	969856508	ZUSATZHYDRAULIK OELVOR
VERSCHRAUBUNG EL 6S CR6	472331208	602	1	717	966004808	ZUSATZHYDRAULIK KLAPPSPI
VERSCHRAUBUNG ELSD38-S	472331908	716	3	519	96045552	HYDRAULIK OBERWAGEN
VERSCHRAUBUNG ELSD38-S	472331908	639	1	598	96075086	HYDRAULIK HILFSHUBWERK D
VERSCHRAUBUNG ET 15L M22	472430408	791	1	520	96045552	HYDRAULIK OBERWAGEN
VERSCHRAUBUNG EV 18L C	10035314	793	1	520	96045552	HYDRAULIK OBERWAGEN
VERSCHRAUBUNG EV16S CR6	10410770	779	2	519	96045552	HYDRAULIK OBERWAGEN
VERSCHRAUBUNG EV38S M52	10467292	776	1	519	96045552	HYDRAULIK OBERWAGEN
VERSCHRAUBUNG EW 10L M	7403569	614	9	518	96045552	HYDRAULIK OBERWAGEN
VERSCHRAUBUNG EW 10L M	7403569	646	1	566	969767908	VERROHRUNG DRUCKLUFTA
VERSCHRAUBUNG EW 10L M	7403569	622	3	592	96064697	HYDRAULIK HILFSHUBWERK
VERSCHRAUBUNG EW 10L M	7403569	604	6	709	965994108	HYDRAULIK TELE
VERSCHRAUBUNG EW 10S C	7617268	609	4	34	967304508	HYDRAULIK UNTERWAGEN
VERSCHRAUBUNG EW 10S C	7617268	761	3	519	96045552	HYDRAULIK OBERWAGEN
VERSCHRAUBUNG EW 10S C	7617268	601	3	717	966004808	ZUSATZHYDRAULIK KLAPPSPI
VERSCHRAUBUNG EW 12S C	7617354	621	1	34	967304508	HYDRAULIK UNTERWAGEN
VERSCHRAUBUNG EW 12S C	7617354	608	2	63	967301408	HYDRAULIK VORB.
VERSCHRAUBUNG EW 12S C	7617354	771	10	519	96045552	HYDRAULIK OBERWAGEN
VERSCHRAUBUNG EW 12S C	7617354	607	1	717	966004808	ZUSATZHYDRAULIK KLAPPSPI
VERSCHRAUBUNG EW 16S C	7617460	616	3	34	967304508	HYDRAULIK UNTERWAGEN
VERSCHRAUBUNG EW 16S C	7617460	622	8	518	96045552	HYDRAULIK OBERWAGEN
VERSCHRAUBUNG EW 18L ST	10815664	404	1	291	969543308	KRAFTSTOFFBEHAELTER VO
VERSCHRAUBUNG EW 18L ST	10815664	633	3	566	969767908	VERROHRUNG DRUCKLUFTA
VERSCHRAUBUNG EW 20S M	7407108	624	1	34	967304508	HYDRAULIK UNTERWAGEN
VERSCHRAUBUNG EW 25S C	7407119	653	1	34	967304508	HYDRAULIK UNTERWAGEN
VERSCHRAUBUNG EW 6S M14	472531508	666	4	518	96045552	HYDRAULIK OBERWAGEN
VERSCHRAUBUNG EW 6S M14	472531508	608	2	591	96064697	HYDRAULIK HILFSHUBWERK
VERSCHRAUBUNG EW 6S M14	472531508	606	1	619	969856508	ZUSATZHYDRAULIK OELVOR
VERSCHRAUBUNG EW 6S M14	472531508	604	1	717	966004808	ZUSATZHYDRAULIK KLAPPSPI
VERSCHRAUBUNG EWSD22-L	472530608	755	3	519	96045552	HYDRAULIK OBERWAGEN
VERSCHRAUBUNG EWSD38-S	472531808	643	6	518	96045552	HYDRAULIK OBERWAGEN
VERSCHRAUBUNG EWSD38-S	472531808	632	2	592	96064697	HYDRAULIK HILFSHUBWERK
VERSCHRAUBUNG EWSD38-S	472531808	632	2	598	96075086	HYDRAULIK HILFSHUBWERK D
VERSCHRAUBUNG G 24 M30x	9273271	2	2	178	10142942	SCHMIEROELFILTER ANBAU
VERSCHRAUBUNG G 28L A3C	470000814	28	1	628	12102922	WIPPZYLINDER
VERSCHRAUBUNG G 6LL	774374208	11	1	478	915300208	ZENTRALSCHMIERANLAGE O
VERSCHRAUBUNG GAI 12S G3	470730308	777	1	519	96045552	HYDRAULIK OBERWAGEN
VERSCHRAUBUNG GE 10L M	471030508	629	1	518	96045552	HYDRAULIK OBERWAGEN
VERSCHRAUBUNG GE 10L M	7021521	2	1	465	969904608	DRUCKBEGRENZUNGSVENTI
VERSCHRAUBUNG GE 10L M	471039808	623	2	566	969767908	VERROHRUNG DRUCKLUFTA
VERSCHRAUBUNG GE 12 M14	11002988	5	1	196	10143341	KRAFTSTOFFLEITUNGEN
VERSCHRAUBUNG GE 12 M14	11002988	1711	1	251	10148366	DS DIESELMOTOR
VERSCHRAUBUNG GE 12L G1	471034808	647	1	34	967304508	HYDRAULIK UNTERWAGEN
VERSCHRAUBUNG GE 12L G1	471034808	640	4	518	96045552	HYDRAULIK OBERWAGEN
VERSCHRAUBUNG GE 12L G1	471034808	609	1	619	969856508	ZUSATZHYDRAULIK OELVOR
VERSCHRAUBUNG GE 12L G1	471034808	603	4	709	965994108	HYDRAULIK TELE
VERSCHRAUBUNG GE 12S G1/	471032608	620	2	34	967304508	HYDRAULIK UNTERWAGEN
VERSCHRAUBUNG GE 12S G1/	471032608	605	1	63	967301408	HYDRAULIK VORB.
VERSCHRAUBUNG GE 12S G1/	471032608	600	8	74	967314108	ZUSATZHYDR.ABSTUETZZYL
VERSCHRAUBUNG GE 12S G1/	471032608	744	9	519	96045552	HYDRAULIK OBERWAGEN
VERSCHRAUBUNG GE 12S G1/	471032608	608	1	619	969856508	ZUSATZHYDRAULIK OELVOR
VERSCHRAUBUNG GE 12S G1/	7617784	781	1	519	96045552	HYDRAULIK OBERWAGEN
VERSCHRAUBUNG GE 12S G3/	471032708	603	8	63	967301408	HYDRAULIK VORB.
VERSCHRAUBUNG GE 12S G3/	471032708	765	3	519	96045552	HYDRAULIK OBERWAGEN
VERSCHRAUBUNG GE 12S M	471032908	698	2	519	96045552	HYDRAULIK OBERWAGEN
VERSCHRAUBUNG GE 14,15,1	10813942	5	1	197	13472510	VERTEILERBLOCK VORM.
VERSCHRAUBUNG GE 15L M	471030908	605	1	591	96064697	HYDRAULIK HILFSHUBWERK
VERSCHRAUBUNG GE 15L M	471035508	400	1	291	969543308	KRAFTSTOFFBEHAELTER VO

Bezeichnung	Artikel	Pos.	Menge	Seite	Baugruppe	Bezeichnung
VERSCHRAUBUNG GE 15L M	471035508	636	2	566	969767908	VERROHRUNG DRUCKLUFTA
VERSCHRAUBUNG GE 16S M	7018370	739	2	519	96045552	HYDRAULIK OBERWAGEN
VERSCHRAUBUNG GE 18L M	471031108	637	1	34	967304508	HYDRAULIK UNTERWAGEN
VERSCHRAUBUNG GE 18L M	471031108	402	1	291	969543308	KRAFTSTOFFBEHAELTER VO
VERSCHRAUBUNG GE 18L M	471031108	737	1	519	96045552	HYDRAULIK OBERWAGEN
VERSCHRAUBUNG GE 18L M	471031108	602	1	566	969767908	VERROHRUNG DRUCKLUFTA
VERSCHRAUBUNG GE 18L M2	10815662	644	2	566	969767908	VERROHRUNG DRUCKLUFTA
VERSCHRAUBUNG GE 42L G1	471034708	649	2	518	96045552	HYDRAULIK OBERWAGEN
VERSCHRAUBUNG GE 6 M10	10813933	7	1	197	13472510	VERTEILERBLOCK VORM.
VERSCHRAUBUNG GE 6S G1/	471032108	665	4	518	96045552	HYDRAULIK OBERWAGEN
VERSCHRAUBUNG GE 6S G1/	471032108	3	3	587	921444108	ZENTRALSCHMIERANLAGE
VERSCHRAUBUNG GE 6S G1/	471032108	611	2	591	96064697	HYDRAULIK HILFSHUBWERK
VERSCHRAUBUNG GE 6S G1/	471032108	638	2	598	96075086	HYDRAULIK HILFSHUBWERK D
VERSCHRAUBUNG GE 6S G1/	471032108	604	1	619	969856508	ZUSATZHYDRAULIK OELVOR
VERSCHRAUBUNG GE 6S G1/	471032108	601	1	709	965994108	HYDRAULIK TELE
VERSCHRAUBUNG GE 8 M12	10801399	29	2	223	12512627	ABGASSTUTZEN ANBAU
VERSCHRAUBUNG GE 8 M12	10813935	2	2	197	13472510	VERTEILERBLOCK VORM.
VERSCHRAUBUNG GE 8L M18	471039308	10	1	444	918759708	ZUSATZHEIZUNG OW
VERSCHRAUBUNG GE8L M16X	97123127	1	1	283	96038054	STUTZEN KPL.
VERSCHRAUBUNG GEF.A M2	10493479	57	1	684	12105406	TELESKOPIERZYLINDER
VERSCHRAUBUNG GEO 8L M	10872598	3	1	465	969904608	DRUCKBEGRENZUNGSVENTI
VERSCHRAUBUNG GR 20/16S	475033608	740	1	519	96045552	HYDRAULIK OBERWAGEN
VERSCHRAUBUNG GR 22/18L	475030708	743	1	519	96045552	HYDRAULIK OBERWAGEN
VERSCHRAUBUNG GZ 15L C	470011208	790	1	520	96045552	HYDRAULIK OBERWAGEN
VERSCHRAUBUNG GZ 15L C	470011208	638	1	592	96064697	HYDRAULIK HILFSHUBWERK
VERSCHRAUBUNG GZ 18L C	470010408	741	2	519	96045552	HYDRAULIK OBERWAGEN
VERSCHRAUBUNG ISO 8434	482331814	602	4	34	967304508	HYDRAULIK UNTERWAGEN
VERSCHRAUBUNG ISO 8434	482330814	745	1	519	96045552	HYDRAULIK OBERWAGEN
VERSCHRAUBUNG ISO 8434	482430314	630	3	518	96045552	HYDRAULIK OBERWAGEN
VERSCHRAUBUNG ISO 8434	482431314	764	2	519	96045552	HYDRAULIK OBERWAGEN
VERSCHRAUBUNG ISO 8434	482431414	632	2	518	96045552	HYDRAULIK OBERWAGEN
VERSCHRAUBUNG ISO 8434	482431514	627	2	518	96045552	HYDRAULIK OBERWAGEN
VERSCHRAUBUNG ISO 8434	482531614	722	2	519	96045552	HYDRAULIK OBERWAGEN
VERSCHRAUBUNG ISO 8434	482530914	748	2	519	96045552	HYDRAULIK OBERWAGEN
VERSCHRAUBUNG ISO 8434	482530814	719	5	519	96045552	HYDRAULIK OBERWAGEN
VERSCHRAUBUNG ISO 8434 G	471004514	763	2	519	96045552	HYDRAULIK OBERWAGEN
VERSCHRAUBUNG ISO 8434	471008214	613	4	34	967304508	HYDRAULIK UNTERWAGEN
VERSCHRAUBUNG ISO 8434-1	7615379	403	2	269	918811108	ANTRIEBSAGGREGAT VORM.
VERSCHRAUBUNG ISO 8434-1	7615379	403	1	291	969543308	KRAFTSTOFFBEHAELTER VO
VERSCHRAUBUNG ISO 8434-1	7615379	792	1	520	96045552	HYDRAULIK OBERWAGEN
VERSCHRAUBUNG ISO 8434-1	7615379	647	1	566	969767908	VERROHRUNG DRUCKLUFTA
VERSCHRAUBUNG ISO 8434-1	7362091	656	9	518	96045552	HYDRAULIK OBERWAGEN
VERSCHRAUBUNG ISO 8434-1	7362091	624	2	592	96064697	HYDRAULIK HILFSHUBWERK
VERSCHRAUBUNG ISO 8434-1	7362091	606	2	709	965994108	HYDRAULIK TELE
VERSCHRAUBUNG ISO 8434-1	471039708	606	4	518	96045552	HYDRAULIK OBERWAGEN
VERSCHRAUBUNG ISO 8434-1	471039708	605	1	566	969767908	VERROHRUNG DRUCKLUFTA
VERSCHRAUBUNG ISO 8434-1	471039708	623	1	592	96064697	HYDRAULIK HILFSHUBWERK
VERSCHRAUBUNG ISO 8434-1	4981235	3	1	149	10150934	OELMESSSTAB KPL.
VERSCHRAUBUNG ISO 8434-1	4981235	19	2	222	10140729	ATL-ANBAU
VERSCHRAUBUNG ISO 8434-1	471032808	617	4	34	967304508	HYDRAULIK UNTERWAGEN
VERSCHRAUBUNG ISO 8434-1	471032808	762	2	519	96045552	HYDRAULIK OBERWAGEN
VERSCHRAUBUNG ISO 8434-1	471032808	608	1	717	966004808	ZUSATZHYDRAULIK KLAPPSPI
VERSCHRAUBUNG ISO 8434-1	471030708	683	1	518	96045552	HYDRAULIK OBERWAGEN
VERSCHRAUBUNG ISO 8434-1	4981232	6	2	197	13472510	VERTEILERBLOCK VORM.
VERSCHRAUBUNG ISO 8434-1	7362515	3	1	211	10145176	ROHRLEITUNG ANBAU
VERSCHRAUBUNG ISO 8434-1	4981233	6	1	212	10145278	ANBAUTEILE LUFTPRESSER
VERSCHRAUBUNG ISO 8434-1	4981233	3	2	248	9078961	NEBENABTRIEB ANBAU
VERSCHRAUBUNG M25X1,5	12106198	8	1	697	12104731	LEITUNGSTROMMEL
VERSCHRAUBUNG RD70X70	953641408	404	1	269	918811108	ANTRIEBSAGGREGAT VORM.
VERSCHRAUBUNG RED 15/12L	475431808	637	1	592	96064697	HYDRAULIK HILFSHUBWERK

Bezeichnung	Artikel	Pos.	Menge	Seite	Baugruppe	Bezeichnung
VERSCHRAUBUNG RED 18/15L	475435608	706	2	519	96045552	HYDRAULIK OBERWAGEN
VERSCHRAUBUNG RED 18/6L	475430708	742	1	519	96045552	HYDRAULIK OBERWAGEN
VERSCHRAUBUNG RED 42/18L	475431708	712	1	519	96045552	HYDRAULIK OBERWAGEN
VERSCHRAUBUNG RED 42/28L	475431308	752	2	519	96045552	HYDRAULIK OBERWAGEN
VERSCHRAUBUNG RED 42/35L	475436708	746	1	519	96045552	HYDRAULIK OBERWAGEN
VERSCHRAUBUNG REDSD12/	475431408	650	3	34	967304508	HYDRAULIK UNTERWAGEN
VERSCHRAUBUNG REDSD12/	475431408	609	4	709	965994108	HYDRAULIK TELE
VERSCHRAUBUNG REDSD12/	475433408	658	1	34	967304508	HYDRAULIK UNTERWAGEN
VERSCHRAUBUNG REDSD12/6	475432908	642	1	34	967304508	HYDRAULIK UNTERWAGEN
VERSCHRAUBUNG REDSD12/6	475432908	786	1	520	96045552	HYDRAULIK OBERWAGEN
VERSCHRAUBUNG REDSD12/6	475432908	607	1	619	969856508	ZUSATZHYDRAULIK OELVOR
VERSCHRAUBUNG REDSD16/	475433508	601	2	518	96045552	HYDRAULIK OBERWAGEN
VERSCHRAUBUNG REDSD16/	475433308	619	4	34	967304508	HYDRAULIK UNTERWAGEN
VERSCHRAUBUNG REDSD16/	475433308	628	2	518	96045552	HYDRAULIK OBERWAGEN
VERSCHRAUBUNG REDSD18/	475436308	639	1	34	967304508	HYDRAULIK UNTERWAGEN
VERSCHRAUBUNG REDSD18/	475436308	735	1	519	96045552	HYDRAULIK OBERWAGEN
VERSCHRAUBUNG REDSD20/	475434808	623	1	34	967304508	HYDRAULIK UNTERWAGEN
VERSCHRAUBUNG REDSD28/	475430508	783	1	520	96045552	HYDRAULIK OBERWAGEN
VERSCHRAUBUNG REDSD30/	475433908	601	4	33	967304508	HYDRAULIK UNTERWAGEN
VERSCHRAUBUNG REDSD35/	475430408	725	3	519	96045552	HYDRAULIK OBERWAGEN
VERSCHRAUBUNG REDSD38/6	475408108	772	1	519	96045552	HYDRAULIK OBERWAGEN
VERSCHRAUBUNG REDSDN10	475432008	659	2	34	967304508	HYDRAULIK UNTERWAGEN
VERSCHRAUBUNG REDSDN10	475432008	603	2	717	966004808	ZUSATZHYDRAULIK KLAPPSPI
VERSCHRAUBUNG REDSDN12	475430208	684	2	518	96045552	HYDRAULIK OBERWAGEN
VERSCHRAUBUNG REDSDN12	475430208	635	1	592	96064697	HYDRAULIK HILFSHUBWERK
VERSCHRAUBUNG REDSDN2	475432108	663	1	34	967304508	HYDRAULIK UNTERWAGEN
VERSCHRAUBUNG REDSDN2	475432108	619	1	518	96045552	HYDRAULIK OBERWAGEN
VERSCHRAUBUNG REDSDN2	475432308	654	1	34	967304508	HYDRAULIK UNTERWAGEN
VERSCHRAUBUNG REDSDN3	475435308	723	5	519	96045552	HYDRAULIK OBERWAGEN
VERSCHRAUBUNG RI G1AXG1	475500708	604	4	34	967304508	HYDRAULIK UNTERWAGEN
VERSCHRAUBUNG RI M22X1,	7381363	4	2	207	9080294	LUFTPRESSER VORM.
VERSCHRAUBUNG RSWS10-L	473230508	655	1	518	96045552	HYDRAULIK OBERWAGEN
VERSCHRAUBUNG RSWS10-S	473210508	600	1	717	966004808	ZUSATZHYDRAULIK KLAPPSPI
VERSCHRAUBUNG RSWS16-S	473231208	600	4	33	967304508	HYDRAULIK UNTERWAGEN
VERSCHRAUBUNG RSWS6-S	473230608	606	1	63	967301408	HYDRAULIK VORB.
VERSCHRAUBUNG RSWS6-S	473230608	661	2	518	96045552	HYDRAULIK OBERWAGEN
VERSCHRAUBUNG SNV10-L C	470010108	681	1	518	96045552	HYDRAULIK OBERWAGEN
VERSCHRAUBUNG SNV10-S C	470010208	610	3	34	967304508	HYDRAULIK UNTERWAGEN
VERSCHRAUBUNG SNV12-L C	470011308	641	2	518	96045552	HYDRAULIK OBERWAGEN
VERSCHRAUBUNG SNV12-L C	470011308	615	2	591	96064697	HYDRAULIK HILFSHUBWERK
VERSCHRAUBUNG SNV12-S C	470010308	611	12	34	967304508	HYDRAULIK UNTERWAGEN
VERSCHRAUBUNG SNV12-S C	470010308	(600)	8	67	917155408	SCHNELLKUPPLUNG
VERSCHRAUBUNG SNV12-S C	470010308	787	1	520	96045552	HYDRAULIK OBERWAGEN
VERSCHRAUBUNG SNV30-S C	470011108	606	4	34	967304508	HYDRAULIK UNTERWAGEN
VERSCHRAUBUNG SNV30-S C	470011108	733	2	519	96045552	HYDRAULIK OBERWAGEN
VERSCHRAUBUNG SNV38-S C	470010708	670	2	518	96045552	HYDRAULIK OBERWAGEN
VERSCHRAUBUNG SNV38-S C	470010708	628	2	592	96064697	HYDRAULIK HILFSHUBWERK
VERSCHRAUBUNG SNV38-S C	470010708	628	1	598	96075086	HYDRAULIK HILFSHUBWERK D
VERSCHRAUBUNG SNV6-S C	470011508	730	1	519	96045552	HYDRAULIK OBERWAGEN
VERSCHRAUBUNG SV 18L C	474030708	605	1	518	96045552	HYDRAULIK OBERWAGEN
VERSCHRAUBUNG T 42L CR6	470431408	711	2	519	96045552	HYDRAULIK OBERWAGEN
VERSCHRAUBUNG VSTI G1/4	7361553	55	1	684	12105406	TELESKOPIERZYLINDER
VERSCHRAUBUNG W 20S CR6	470232708	664	1	34	967304508	HYDRAULIK UNTERWAGEN
VERSCHRAUBUNG W 28L CR6	470230808	662	1	34	967304508	HYDRAULIK UNTERWAGEN
VERSCHRAUBUNG W 35L CR6	470231108	749	1	519	96045552	HYDRAULIK OBERWAGEN
VERSCHRAUBUNG W 42L CR6	470231408	751	1	519	96045552	HYDRAULIK OBERWAGEN
VERSCHRAUBUNG WSV 12S C	474232408	618	4	34	967304508	HYDRAULIK UNTERWAGEN
VERSCHRAUBUNG XG10-S C	470032408	720	3	519	96045552	HYDRAULIK OBERWAGEN
VERSCHRAUBUNG XG16-S C	470032708	710	1	519	96045552	HYDRAULIK OBERWAGEN
VERSCHRAUBUNG XG42-L C	470030908	766	1	519	96045552	HYDRAULIK OBERWAGEN

Bezeichnung	Artikel	Pos.	Menge	Seite	Baugruppe	Bezeichnung
VERSCHRAUBUNG XGAI6-LM	470730008	28	1	583	938707001	KOMPAKTSEILWINDE
VERSCHRAUBUNG XGAI6-SR	470700208	731	2	519	96045552	HYDRAULIK OBERWAGEN
VERSCHRAUBUNG XGAI6-SR	470700208	607	1	591	96064697	HYDRAULIK HILFSHUBWERK
VERSCHRAUBUNG XGE10-LR-	471039608	690	2	519	96045552	HYDRAULIK OBERWAGEN
VERSCHRAUBUNG XGE10-LR-	471039608	618	1	591	96064697	HYDRAULIK HILFSHUBWERK
VERSCHRAUBUNG XGE12-LR-	471030808	651	6	34	967304508	HYDRAULIK UNTERWAGEN
VERSCHRAUBUNG XGE12-LR-	471030808	638	6	518	96045552	HYDRAULIK OBERWAGEN
VERSCHRAUBUNG XGE12-LR-	471030808	616	1	591	96064697	HYDRAULIK HILFSHUBWERK
VERSCHRAUBUNG XGE12-LR-	471035308	644	1	34	967304508	HYDRAULIK UNTERWAGEN
VERSCHRAUBUNG XGE12-LR-	471035308	653	5	518	96045552	HYDRAULIK OBERWAGEN
VERSCHRAUBUNG XGE16-SM-	471033008	636	3	34	967304508	HYDRAULIK UNTERWAGEN
VERSCHRAUBUNG XGE16-SR-	471033208	603	3	34	967304508	HYDRAULIK UNTERWAGEN
VERSCHRAUBUNG XGE16-SR-	471033208	625	8	518	96045552	HYDRAULIK OBERWAGEN
VERSCHRAUBUNG XGE16-SR-	471033208	602	1	709	965994108	HYDRAULIK TELE
VERSCHRAUBUNG XGE16-SR-	471033108	615	2	34	967304508	HYDRAULIK UNTERWAGEN
VERSCHRAUBUNG XGE16-SR-	471033108	620	3	518	96045552	HYDRAULIK OBERWAGEN
VERSCHRAUBUNG XGE18-LM	476607608	634	1	566	969767908	VERROHRUNG DRUCKLUFTA
VERSCHRAUBUNG XGE18-LR-	471031208	714	2	519	96045552	HYDRAULIK OBERWAGEN
VERSCHRAUBUNG XGE18-LR-	471037508	402	3	306	96066239	KRAFTSTOFFFILTER VORM.
VERSCHRAUBUNG XGE18-LR-	471037508	708	1	519	96045552	HYDRAULIK OBERWAGEN
VERSCHRAUBUNG XGE20-SM-	471033308	631	1	34	967304508	HYDRAULIK UNTERWAGEN
VERSCHRAUBUNG XGE20-SM-	471034308	400	2	269	918811108	ANTRIEBSAGGREGAT VORM.
VERSCHRAUBUNG XGE25-SM-	471033508	635	1	34	967304508	HYDRAULIK UNTERWAGEN
VERSCHRAUBUNG XGE28-LM-	471031508	636	1	518	96045552	HYDRAULIK OBERWAGEN
VERSCHRAUBUNG XGE6-LM-	471030108	679	2	518	96045552	HYDRAULIK OBERWAGEN
VERSCHRAUBUNG XGE6-LR-	471030008	676	1	518	96045552	HYDRAULIK OBERWAGEN
VERSCHRAUBUNG XGE6-LR-	471030008	610	1	591	96064697	HYDRAULIK HILFSHUBWERK
VERSCHRAUBUNG XGE6-LR-	471030008	606	1	717	966004808	ZUSATZHYDRAULIK KLAPPSPI
VERSCHRAUBUNG XGEV38-S	471034408	602	13	518	96045552	HYDRAULIK OBERWAGEN
VERSCHRAUBUNG XGEV38-S	471034408	629	2	598	96075086	HYDRAULIK HILFSHUBWERK D
VERSCHRAUBUNG XGR16/12	475032508	785	1	520	96045552	HYDRAULIK OBERWAGEN
VERSCHRAUBUNG XSV10-L C	474030308	607	1	518	96045552	HYDRAULIK OBERWAGEN
VERSCHRAUBUNG XSV12-S C	474032408	612	8	34	967304508	HYDRAULIK UNTERWAGEN
VERSCHRAUBUNG XSV12-S C	474032408	602	8	63	967301408	HYDRAULIK VORB.
VERSCHRAUBUNG XSV15-L C	474030508	611	1	518	96045552	HYDRAULIK OBERWAGEN
VERSCHRAUBUNG XSV16-S C	474032608	608	2	34	967304508	HYDRAULIK UNTERWAGEN
VERSCHRAUBUNG XSV30-S C	474032908	607	4	34	967304508	HYDRAULIK UNTERWAGEN
VERSCHRAUBUNG XW10-L C	470230308	607	3	709	965994108	HYDRAULIK TELE
VERSCHRAUBUNG XW18-L C	470230608	645	1	566	969767908	VERROHRUNG DRUCKLUFTA
VERSCHRAUBUNG XW30-S C	470233008	661	4	34	967304508	HYDRAULIK UNTERWAGEN
VERSCHRAUBUNG XW30-S C	470233008	732	2	519	96045552	HYDRAULIK OBERWAGEN
VERSCHRAUBUNG XW38-S C	470233408	668	4	518	96045552	HYDRAULIK OBERWAGEN
VERSCHRAUBUNG XW38-S C	470233408	627	1	598	96075086	HYDRAULIK HILFSHUBWERK D
VERSTELLMOTOR A6VE 160	592326914	1	2	42	96048348	HYDR.INSTALLATIONSTEILE
VERSTELLUNG	10801751	2	1	43	592326914	VERSTELLMOTOR
VERTEILER MASSE	926891108	27	1	502	96025348	GRUNDAUFBAU
VERTEILERBLOCK EN AC-Al Si	12511916	1	1	197	13472510	VERTEILERBLOCK VORM.
VERTEILERBLOCK VORM.	13472510	1	1	196	10143341	KRAFTSTOFFLEITUNGEN
VERTEILERKOMBINATION MX-	10028235	3	1	478	915300208	ZENTRALSCHMIERANLAGE O
VERTEILERKOMBINATION MX-	12101719	2	1	478	915300208	ZENTRALSCHMIERANLAGE O
VISKOSEDAEMPFER D934 L	10118526	8	1	157	10141974	KURBELWELLENANBAUTEILE
VORHAENGESCHLOSS ABUS	885251508	2	1	104	928569808	GRUNDWERKZEUG
VORHAENGESCHLOSS ABUS	885251508	3	2	780	917508508	LEITER ANBAU
VORREIBER	10650295	4	4	332	968462608	SCHALTSCHRANKDECKEL EIN
VORWAERMGERAET 115V 1K	12103149	1	1	613	919386708	KUEHLWASSERVORWAERM
WAELZLAGER 100X150X67	745902508	2	1	675	964283508	SEILROLLE KPL.
WAELZLAGER 100X150X67	745902508	2	1	677	927310008	SEILROLLE KPL.
WAELZLAGER 100X150X67	745902508	2	1	764	963904108	SEILROLLE KPL.
WAELZLAGER 100X150X67	745902508	2	1	769	927311708	SEILROLLE KPL.
WAELZLAGER 120X180X80	745902708	2	1	742	924073908	SEILROLLE

Bezeichnung	Artikel	Pos.	Menge	Seite	Baugruppe	Bezeichnung
WAELZLAGER 68X40X38	745900808	(2)	1	763	917695308	UMLENKROLLE VORM.
WAERMETAUSCHER ALU	10801858	14	1	388	11083498	HEIZKLIMAGERAET
WAGEN	966253908	2	2	363	966230508	FUEHRUNG VORM.
WAGEN 68X64.5X33 G-ALSI7	97001102	1	1	364	966253908	WAGEN
WALZENDUESE	10292013	28	8	338	917305408	INNENVERKLEIDUNG EINBAU
WANNE SCHWK. RAL 7016 SP	966241008	14	1	329	916170808	KABELEINFUEHRUNG
WARNDREIECK 430X45X30	10044762	1	1	105	928620108	ZUBEHOER
WARNLEUCHTE 14W 13-36V	10340105	5	1	431	96056347	ELEKTRIK ANBAUTEILE KABIN
WARNMARKIERUNG DIN 3071	11067612	1	0.254	113	917026008	SCHRAFFURPLAN
WARNMARKIERUNG DIN 48844	11067611	2	0.173	113	917026008	SCHRAFFURPLAN
WARNMARKIERUNG DIN 48844	11067611	3	0.404	113	917026008	SCHRAFFURPLAN
WARNMARKIERUNG DIN 48844	11067611	4	0.498	113	917026008	SCHRAFFURPLAN
WARNMARKIERUNG DIN 48844	11067611	5	1.485	113	917026008	SCHRAFFURPLAN
WARNSCHILD UNFALLVERH	9412158	35	1	111	919933708	BESCHILDERUNG GROSSBRI
WARNWESTE EN ISO 20471	872101908	6	1	105	928620108	ZUBEHOER
WARTUNGSSCHALTER 0,05	11101017	101	1	476	918729308	LUFTFILTERANLAGE
WASSERBEHAELTER 505X126	97003164	1	1	356	966408908	WASSERBEHAELTER KPL.
WASSERBEHAELTER KPL.	966408908	1	1	355	916163008	WISCHANLAGE EINBAU
WASSERHEIZGERAET 24V	10876576	1	1	446	96019783	ZUSATZHEIZUNG VORM.
WASSERKUEHLER	11651349	17	1	274	97095949	KOMBIKUEHLER
WASSERPUMPE MIT BEFEST.	10142733	370	1	133	13455311	DIESELMOTOR
WASSERPUMPE VORM. R-MO	10150386	1	1	215	10142733	WASSERPUMPE MIT BEFEST.
WASSERPUMPE VORM. R-MO	12863021	1	1	215	10142733	WASSERPUMPE MIT BEFEST.
WASSERSCHLAUCH DN4-RAU	11000710	17	1.3	355	916163008	WISCHANLAGE EINBAU
WASSERSCHLAUCH DN4-RAU	11000710	18	2.8	355	916163008	WISCHANLAGE EINBAU
WASSERSONDE	12101984	13	1	308	12106874	KRAFTSTOFFFILTER
WASSERSONDE 5V	11370365	5	1	308	12106874	KRAFTSTOFFFILTER
WASSERSTANDSSONDE L=50	10335960	450	1	280	96035595	AUSGLEICHSBEHAELTER VO
WASSERVENTIL NW12X2,5 NI	11082158	17	2	461	96074081	HARNSTOFFTANK VORM.
WECHSELFILTER OEL 9µm	10297295	1	2	178	10142942	SCHMIEROELFILTER ANBAU
WECHSELVENTIL	10115233	14	1	44	10801751	VERSTELLUNG
WECHSELVENTIL 350BAR	571529508	28	1	528	11170515	VENTILBLOCK
WECHSELVENTIL 350BAR	571529508	28	1	530	11170518	VENTILBLOCK
WECHSELVENTIL 350BAR	571529508	28	1	531	11170519	VENTILBLOCK
WECHSELVENTIL 350BAR	571529508	28	1	602	10665173	STEUERBLOCK
WECHSELVENTIL 500BAR CR6	511491914	150	3	33	967304508	HYDRAULIK UNTERWAGEN
WECHSLERRELAIS 24V 10A SP	630121508	6	2	87	96062922	MONTAGEPLATTE VORM.
WECHSLERRELAIS 24V 10A SP	630121508	6	1	498	919940108	EINBAUTEILE SCHALTSCHRAN
WEGEVENTIL	10430280	2	2	35	10675161	STEUERBLOCK
WEGEVENTIL	10475300	27	1	531	11170519	VENTILBLOCK
WEGEVENTIL	10475300	17	2	534	10802090	STEUERBLOCK
WEGEVENTIL	11002717	6	1	531	11170519	VENTILBLOCK
WEGEVENTIL	571817608	2	4	538	511307808	STEUERLEISTE
WEGEVENTIL	571889308	12	2	534	10802090	STEUERBLOCK
WEGEVENTIL 2/2	12101146	4	1	549	10877219	STEUERBLOCK
WEGEVENTIL 2/2 350BAR SPF	511320108	50	1	619	969856508	ZUSATZHYDRAULIK OELVOR
WEGEVENTIL 3/2 350BAR	511444408	50	2	516	96045552	HYDRAULIK OBERWAGEN
WEGEVENTIL 3/2 350BAR	511444408	50	1	591	96064697	HYDRAULIK HILFSHUBWERK
WEGEVENTIL 3/2-320BAR	511493608	50	1	709	965994108	HYDRAULIK TELE
WEGEVENTIL 350BAR 2/2WEG	10412605	31	2	530	11170518	VENTILBLOCK
WEGEVENTIL 4/2 NG10-320BA	571737808	20	1	543	10333672	STEUERBLOCK
WEGEVENTIL 4/2 NG6-350BAR	11691258	9	1	540	511486908	STEUERLEISTE
WEGEVENTIL 4/2 NG6-350BAR	511302008	51	1	33	967304508	HYDRAULIK UNTERWAGEN
WEGEVENTIL 4/2 NG6-350BAR	570527908	9	1	540	511486908	STEUERLEISTE
WEGEVENTIL 4/2 NG6-350BAR	10652724	22	1	33	967304508	HYDRAULIK UNTERWAGEN
WEGEVENTIL 4/3	11009411	2	1	550	10663060	STEUERBLOCK
WEITWINKELSPIEGEL 219X17	591069508	2	1	402	916049908	SPIEGELANBAU KRANFUEHR
WEITWINKELSPIEGEL 316X17	591070908	1	1	440	916870808	SPIEGELANBAU DREHBUEHN
WELLENDICHTRING	10335855	3	1	275	10429930	ZAHNRADMOTOR
WELLENDICHTRING 35X52X6/	7022315	(14)	1	371	510229408	HYDROMOTOR

Bezeichnung	Artikel	Pos.	Menge	Seite	Baugruppe	Bezeichnung
WELLENDICHTRING 35X52X6/	7022315	14	1	372	570109008	TRIEBWERK
WELLENDICHTRING 50X72X7	7003478	14	1	377	510240708	HYDROMOTOR
WELLROHR DN10 PA 6	10475426	160	3.8	92	96060493	ANTENNE KPL.
WERKZEUG KLAPPSPITZE	917508408	352	1	14		LIEBHERR LTR 1100
WERKZEUG M.ZUBEHOER	914860608	55	1	12		LIEBHERR LTR 1100
WETTERKAPPE 114,3 EDELST	12100105	106	1	470	919674308	ABGASANLAGE
WIDERSTAND 1K 5% 3W SPF	635058508	8	1	505	966157408	BESTUECKUNGSMODUL
WIDERSTAND 20R 1% 25W	635052808	2	6	508	966193108	WIDERSTANDSMODUL VORM.
WIDERSTAND 500R 0.1% 3W	635051508	3	2	505	966157408	BESTUECKUNGSMODUL
WIDERSTAND 5K1 1% 0.25W	10489549	4	3	505	966157408	BESTUECKUNGSMODUL
WIDERSTAND MS 27K4 1% 0.	635042608	7	2	505	966157408	BESTUECKUNGSMODUL
WIDERSTANDSMODUL VORM.	966193108	4	1	507	968015808	MONTAGEEINHEIT VORM.
WINDE 2 SCHWK.	962046508	10	1	581	96062734	HILFSHUBWERK
WINDENDREHGEBER 655360	12102805	(5)	1	484	919940408	EL.ANLAGE DREHBUEHNE
WINDENDREHGEBER 655360	12102805	5	1	588	96055197	ELEKTRIK WINDE 2
WINDGESCHWINDIGKEITSGE	12102807	2	1	729	96058737	ELEKTRIK MESS-U.WARNEINR
WINDWARNUNG VORM.	96056560	2	1	732	96056273	MECHANIK MESS-U.WARNEI
WINKEL 4X113X40 S315MC FE	973720808	27	1	407	96022627	DREHBUEHNENVERKLEIDUN
WINKEL 4X113X40 S315MC FE	973720808	8	1	562	919528608	OELKUEHLER EINBAU
WINKELGEBER 360GRAD M12	96049700	20	1	774	96055854	EL.ANLENKST.MECH.KLAPPS
WINKELGEBER 360° LSB PL:D	12102806	(2)	1	652	919935408	TELESKOPAUSLEGER KPL.
WINKELGEBER 360° LSB PL:D	12102806	(1)	1	652	919935408	TELESKOPAUSLEGER KPL.
WINKELGEBER 360° LSB PL:D	12102806	(151)	1	774	96055854	EL.ANLENKST.MECH.KLAPPS
WINKELGEBER ANBAU	96037297	5	1	757	91001038	DOPPELKLAPPSPITZE MECH.
WINKELSCHRAUBENDREHER	10043002	41	1	104	928569808	GRUNDWERKZEUG
WINKELSCHRAUBENDREHER	10471363	40	1	104	928569808	GRUNDWERKZEUG
WINKELSCHWENKVERSCHR	7624176	4	1	482	12101719	VERTEILERKOMBINATION
WINKELSTUTZEN	591051008	22	2	355	916163008	WISCHANLAGE EINBAU
WINKELSTUTZEN 90,H33,5 PO	10873979	6	1	462	96071742	HARNSTOFFTANK
WINKELSTUTZEN EW 12L M18	247117702	646	6	34	967304508	HYDRAULIK UNTERWAGEN
WINKELSTUTZEN EW 12L M18	247117702	612	5	518	96045552	HYDRAULIK OBERWAGEN
WINKELSTUTZEN EW 12L M18	247117702	633	2	592	96064697	HYDRAULIK HILFSHUBWERK
WINKELSTUTZEN EW 12L M18	247117702	601	1	619	969856508	ZUSATZHYDRAULIK OELVOR
WINKELSTUTZEN EW 12L M18	247117702	610	1	709	965994108	HYDRAULIK TELE
WINKELSTUTZEN EW 18L M26	247108302	401	2	306	96066239	KRAFTSTOFFFILTER VORM.
WINKELSTUTZEN EW 18L M26	247108302	604	4	518	96045552	HYDRAULIK OBERWAGEN
WINKELSTUTZEN EW 22L CR6	247126202	2	1	211	10145176	ROHRLEITUNG ANBAU
WINKELSTUTZEN EW 6L CR6-F	247021702	734	2	519	96045552	HYDRAULIK OBERWAGEN
WINKELSTUTZEN EW 6L CR6-F	247021702	605	1	717	966004808	ZUSATZHYDRAULIK KLAPPSPI
WINKELSTUTZEN EW 8L CR6-F	247021802	34	1	461	96074081	HARNSTOFFTANK VORM.
WIPPE 983593114 LH-GRAU	918578614	18	2	454	919501608	HYDRAULISCHE BALLASTIER
WIPPZYLINDER 320/290-3345	12102922	1	1	626	919616808	WIPPZYLINDER M.LAGERUNG
WIPPZYLINDER M.LAGERUNG	919616808	111	1	12		LIEBHERR LTR 1100
WISCHANLAGE EINBAU	916163008	5	1	334	917304508	KRANFUEHRERKABINE VORM.
WISCHERARM 650MM	10292014	3	1	355	916163008	WISCHANLAGE EINBAU
WISCHERARM 900MM	10292015	22	1	349	966497908	FRONTSCHEIBE KPL.
WISCHERBLATT 1000	10292017	23	1	349	966497908	FRONTSCHEIBE KPL.
WISCHERBLATT 700	10292016	5	1	355	916163008	WISCHANLAGE EINBAU
WISCHERGESTAENGE	10292018	7	1	355	916163008	WISCHANLAGE EINBAU
WISCHERGESTAENGE	10870968	8	1	355	916163008	WISCHANLAGE EINBAU
WISCHERMOTOR 55NM 24V	10292021	2	2	355	916163008	WISCHANLAGE EINBAU
WISCHLAGER ST	11001115	16	1	349	966497908	FRONTSCHEIBE KPL.
WP DC01 EN 12329 FE/ZN 12	955747203	13	10	30	992078314	MITTELTEIL
ZACKBAND PA	636184001	207	1	703	96063458	KLEMMKASTEN KPL.
ZAHNRAD	10872521	80	1	388	11083498	HEIZKLIMAGERAET
ZAHNRAD 2,5	10139764	4	1	168	10120186	MASSENAUSGLEICH ANBAU
ZAHNRAD 2,5	10139765	5	1	168	10120186	MASSENAUSGLEICH ANBAU
ZAHNRAD 2,5	9072834	3	1	153	10147438	KURBELWELLE MIT ZAHNRAD
ZAHNRAD 2,5	9073343	2	1	207	9080294	LUFTPRESSER VORM.
ZAHNRAD 2,5 20MnCr5	9079001	3	1	249	9078962	NEBENABTRIEB VORM.

Bezeichnung	Artikel	Pos.	Menge	Seite	Baugruppe	Bezeichnung
ZAHNRAD 2,75	10137602	(2)	1	170	10147787	NOCKENWELLE KPL.
ZAHNRAD VORM.	10138447	3	1	170	10147787	NOCKENWELLE KPL.
ZAHNRAD VORM.	10145049	(1)	1	170	10147787	NOCKENWELLE KPL.
ZAHNRADMOTOR AZMF 16CM	10429930	102	1	272	96020819	KUEHLER VORM.
ZAHNRADPUMPE WP9	10488363	102	1	268	918811108	ANTRIEBSAGGREGAT VORM.
ZAHNRIEMEN	11083453	1	1	388	11083498	HEIZKLIMAGERAET
ZAHNSCHEIBE 12X99/17RD S	938996501	90	1	369	933074801	DREHWERKANTRIEB
ZAHNSCHEIBE DIN 6797 A 2,7	425100408	20	4	87	96062922	MONTAGEPLATTE VORM.
ZAHNSCHEIBE DIN 6797 A 2,7	425100408	22	4	498	919940108	EINBAUTEILE SCHALTSCHRAN
ZEIGER 2X120X82 X5CRNI18-1	979673208	4	1	374	916109208	DREHBUEHNENARRETIERUN
ZEITRELAIS 60S 24V	10877999	3	1	498	919940108	EINBAUTEILE SCHALTSCHRAN
ZELLGUMMI 10X8	262109108	10	0.15	87	96062922	MONTAGEPLATTE VORM.
ZELLGUMMI 20X12 CR SCHW	262104308	5	1.08	85	966167808	DECKEL KPL.
ZELLGUMMI 25X4 NEOPRENE	262107814	12	0.12	781	968940708	HALTER LINKS
ZELLGUMMI 25X4 NEOPRENE	262107814	12	0.12	782	968940808	HALTER RECHTS
ZENTRALBALLAST	96045221	1	2	116	919498808	ZENTRALBALLAST
ZENTRALBALLAST 15T	919498808	80	1	12		LIEBHERR LTR 1100
ZENTRALBALLAST LH355-40	919418714	1	1	117	96045221	ZENTRALBALLAST
ZENTRALSCHMIERANLAGE	921444108	300	1	581	96062734	HILFSHUBWERK
ZENTRALSCHMIERANLAGE O	915300208	169	1	13		LIEBHERR LTR 1100
ZENTRALSTECKER 4-POL	602225508	518	1	426	96023891	KABELSTRANG
ZENTRALSTECKER 6-POL	602225608	519	1	426	96023891	KABELSTRANG
ZENTRIERFLANSCH 42CrMo4+	10142170	2	1	157	10141974	KURBELWELLENANBAUTEILE
ZIEHPILZ 75x225 35NICRMOV	957056308	11	1	667	91000052	TELESKOP 3 VORM.
ZIEHPILZ 75x271 35NICRMOV	957037908	11	1	664	91000051	TELESKOP 2 VORM.
ZIEHPILZ 75x319 35NICRMOV	957011408	11	1	661	91000050	TELESKOP 1 VORM.
ZIGARETTENANZUENDER 24V	605407608	3	1	612	913753108	FUNKVORBEREITUNG OW
ZUBEHOER	928620108	2	1	102	914860608	WERKZEUG M.ZUBEHOER
ZUENDSTARTSCHALTER 3S	10335557	50	1	431	96056347	ELEKTRIK ANBAUTEILE KABIN
ZUGGURT 47X2220	10334488	100	1	407	96022627	DREHBUEHNENVERKLEIDUN
ZUGGURT 47X2220	10334488	100	1	415	96024809	DREHBUEHNENVERKLEIDUN
ZUGLASCHE SCHWK.	927159108	1	1	772	918221408	ZUGLASCHE VORM.
ZUGLASCHE SCHWK.	927159208	2	1	772	918221408	ZUGLASCHE VORM.
ZUGLASCHE VORM.	918221408	4	1	757	91001038	DOPPELKLAPPSPITZE MECH.
ZUGSTANGE	10099209	28	4	480	10327065	ELEKTROPUMPE
ZUNGE	570340077	5	4	332	968462608	SCHALTSCHRANKDECKEL EIN
ZUNGE	704255808	103	2	417	969392008	FRONTHAUBE LI.
ZUNGE	704256708	8	4	85	966167808	DECKEL KPL.
ZUNGE 45X19 STAHL VERZ	704259008	15	1	287	96024716	BATTERIEKASTEN VORM.
ZURRGURT 0,35MX18MM	7621780	3	1	729	96058737	ELEKTRIK MESS-U.WARNEINR
ZURRGURT 0,5MX18MM	10020519	3	1	421	96044787	HALTER VORM.
ZURRGURT 0,75MX18MM	10020520	120	1	268	918811108	ANTRIEBSAGGREGAT VORM.
ZURRGURT 1,25MX25MM PO	11492423	10	1	780	917508508	LEITER ANBAU
ZUSATZBALLAST	915090108	149	1	13		LIEBHERR LTR 1100
ZUSATZBESCHILD.CALIFORN	919553608	78	1	12		LIEBHERR LTR 1100
ZUSATZBESCHILD.FABRIKDA	91003809	72	1	12		LIEBHERR LTR 1100
ZUSATZELEKTRIK VORWAE	913978308	17	1	619	969856508	ZUSATZHYDRAULIK OELVOR
ZUSATZHEIZUNG OW	918759708	145	1	13		LIEBHERR LTR 1100
ZUSATZHEIZUNG VORM.	96019783	1	1	444	918759708	ZUSATZHEIZUNG OW
ZUSATZHYDR.ABSTUETZZYL	917155508	59	1	12		LIEBHERR LTR 1100
ZUSATZHYDR.ABSTUETZZYL	967314108	4	1	72	917155508	ZUSATZHYDR.ABSTUETZZYL
ZUSATZHYDRAULIK KLAPPSPI	915928808	229	1	14		LIEBHERR LTR 1100
ZUSATZHYDRAULIK KLAPPSPI	966004808	4	1	715	915928808	ZUSATZHYDRAULIK KLAPPSPI
ZUSATZHYDRAULIK OELVO	915927808	488	1	15		LIEBHERR LTR 1100
ZUSATZHYDRAULIK OELVO	969856508	1	1	617	915927808	ZUSATZHYDRAULIK OELVOR
ZWEIFACHZAHNRADPUMPE W	512142508	101	1	268	918811108	ANTRIEBSAGGREGAT VORM.
ZWISCHENRAD KPL.	9072906	331	1	133	13455311	DIESELMOTOR
ZWISCHENRAD VORM.	9072633	3	1	169	12408221	FLANSCH VORM.
ZWISCHENRAD VORM.	9072904	1	1	210	9072906	ZWISCHENRAD KPL.
ZWISCHENRADACHSE 42CrM	9072907	2	1	210	9072906	ZWISCHENRAD KPL.

Bezeichnung	Artikel	Pos.	Menge	Seite	Baugruppe	Bezeichnung
ZWISCHENRING	10014730	8	1	480	10327065	ELEKTROPUMPE
ZWISCHENSTUECK 11SMnPb3	10132935	16	1	198	10143342	LECKOELRUECKLAUF
ZWOELFKANTSCHRAUBE M1	12475399	4	1	222	10140729	ATL-ANBAU
ZYL KPL	790272314	2	1	25	749065414	SPANNER HYDR KPL
ZYLINDER	570110308	1	1	373	570109508	TRIEBWERK
ZYLINDER R-MOTORXD944/D9	10154458	80	4	136	11389608	KURBELGEHAEUSE KPL. MIT
ZYLINDERBUCHSE 20X23X25	708010008	3	1	748	925280008	KONSOLE VORM.
ZYLINDERBUCHSE 20X23X25	708010008	3	2	751	929582108	HALTERUNG VORM.
ZYLINDERBUCHSE 20X23X25	708010008	23	2	768	91001040	ANLENKSTUECK VORM.
ZYLINDERBUCHSE R-MOTORX	10153973	1	1	138	10154458	ZYLINDER
ZYLINDERBUCHSE R-MOTORX	12898375	1	1	138	10154458	ZYLINDER
ZYLINDERKOPF	12107427	4	1	684	12105406	TELESKOPIERZYLINDER
ZYLINDERKOPF	7025732	23	1	209	5700161	LUFTPRESSER
ZYLINDERKOPF ANBAU R-MO	10149580	80	4	131	13455311	DIESELMOTOR
ZYLINDERKOPF R-MOTOR	10145862	1	1	163	10149578	ZYLINDERKOPF
ZYLINDERKOPF R-MOTOR	10149578	(1)	1	160	10149580	ZYLINDERKOPF ANBAU
ZYLINDERKOPF R-MOTOR	10149578	1	1	162	10149579	ZYLINDERKOPF VORM.
ZYLINDERKOPF VORM. R-MO	10149579	1	1	160	10149580	ZYLINDERKOPF ANBAU
ZYLINDERKOPF VORM. R-MO	13476764	1	1	160	10149580	ZYLINDERKOPF ANBAU
ZYLINDERKOPFDECKEL	10134750	1	3	167	11358036	ZYLINDERKOPFDECKEL ANBA
ZYLINDERKOPFDECKEL	12874086	2	1	167	11358036	ZYLINDERKOPFDECKEL ANBA
ZYLINDERKOPFDECKEL ANBA	11358036	82	1	131	13455311	DIESELMOTOR
ZYLINDERKOPFDICHTUNG	10133667	2	1	160	10149580	ZYLINDERKOPF ANBAU
ZYLINDERROLLE 14X14	747006101	17	114	383	968607101	PLANETENGETRIEBE
ZYLINDERROLLE 14X14	747006101	17	114	584	938759801	PLANETENGETRIEBE
ZYLINDERSCHRAUBE DIN 691	10875559	38	6	395	918810308	STEUERSTAND
ZYLINDERSCHRAUBE DIN 691	10875561	32	8	661	91000050	TELESKOP 1 VORM.
ZYLINDERSCHRAUBE DIN 691	10875561	32	8	664	91000051	TELESKOP 2 VORM.
ZYLINDERSCHRAUBE DIN 691	10875561	32	8	667	91000052	TELESKOP 3 VORM.
ZYLINDERSCHRAUBE DIN 691	10875561	32	8	670	91000053	TELESKOP 4 VORM.
ZYLINDERSCHRAUBE DIN 691	10875561	53	8	673	91000054	TELESKOP 5 VORM.
ZYLINDERSCHRAUBE DIN 798	4980927	9	3	170	10147787	NOCKENWELLE KPL.
ZYLINDERSCHRAUBE DIN 798	240122602	3	3	171	10145815	RS FLANSCH
ZYLINDERSCHRAUBE DIN 79	10178345	14	4	52	968374908	ENDSCHALTER ANBAU
ZYLINDERSCHRAUBE DIN 798	10876084	34	14	349	966497908	FRONTSCHEIBE KPL.
ZYLINDERSCHRAUBE DIN 798	12216054	80	2	656	91000049	ANLENKSTUECK VORM.
ZYLINDERSCHRAUBE DIN 798	12216054	72	2	661	91000050	TELESKOP 1 VORM.
ZYLINDERSCHRAUBE DIN 798	12216054	72	2	664	91000051	TELESKOP 2 VORM.
ZYLINDERSCHRAUBE DIN 798	12216054	72	2	667	91000052	TELESKOP 3 VORM.
ZYLINDERSCHRAUBE DIN 798	12216054	72	2	670	91000053	TELESKOP 4 VORM.
ZYLINDERSCHRAUBE DIN 84	510797708	22	1	558	511417708	DRUCKBEGRENZUNGSVENTI
ZYLINDERSCHRAUBE DIN 84	510797708	22	1	621	511417608	DRUCKBEGRENZUNGSVENTI
ZYLINDERSCHRAUBE ISO 14	11600879	3	1	187	10135434	BEFESTIGUNG DRUCKROHR
ZYLINDERSCHRAUBE ISO 14	11600879	4	1	189	10153151	DRUCKROHRSTUTZEN MIT BE
ZYLINDERSCHRAUBE ISO 145	12219491	3	1	184	10152867	INJEKTOR MIT BEFEST.
ZYLINDERSCHRAUBE ISO 145	12219491	3	1	185	13743036	RS INJEKTOR
ZYLINDERSCHRAUBE ISO 47	10560807	23	8	47	968374708	MONTAGETEILE
ZYLINDERSCHRAUBE ISO 47	12208101	302	2	269	918811108	ANTRIEBSAGGREGAT VORM.
ZYLINDERSCHRAUBE ISO 476	11320344	71	12	383	968607101	PLANETENGETRIEBE
ZYLINDERSCHRAUBE ISO 476	11320344	71	12	584	938759801	PLANETENGETRIEBE
ZYLINDERSCHRAUBE ISO 476	12222407	320	2	269	918811108	ANTRIEBSAGGREGAT VORM.
ZYLINDERSCHRAUBE ISO 476	12222407	304	2	272	96020819	KUEHLER VORM.
ZYLINDERSCHRAUBE ISO 476	11320360	8	4	52	968374908	ENDSCHALTER ANBAU
ZYLINDERSCHRAUBE ISO 476	12219296	12	6	19	96062225	UNTERWAGEN KPL.
ZYLINDERSCHRAUBE ISO 47	404293213	17	1	319	919010108	KRANFUEHRERKABINE VORM.
ZYLINDERSCHRAUBE ISO 476	10415162	5	2	60	991456314	AUFSTIEG KPL.
ZYLINDERSCHRAUBE ISO 476	10415162	2	3	248	9078961	NEBENABTRIEB ANBAU
ZYLINDERSCHRAUBE ISO 476	10415162	321	1	269	918811108	ANTRIEBSAGGREGAT VORM.
ZYLINDERSCHRAUBE ISO 476	10415162	45	4	581	96062734	HILFSHUBWERK
ZYLINDERSCHRAUBE ISO 476	10415162	102	4	645	919950308	MECH.TEILE VERSANDMONT

Bezeichnung	Artikel	Pos.	Menge	Seite	Baugruppe	Bezeichnung
ZYLINDERSCHRAUBE ISO 476	10415162	24	6	679	91000055	AUSSCHUBMECHANIK
ZYLINDERSCHRAUBE ISO 476	10875571	10	8	52	968374908	ENDSCHALTER ANBAU
ZYLINDERSCHRAUBE ISO 476	10875571	301	6	374	916109208	DREHBUEHNENARRETIERUN
ZYLINDERSCHRAUBE ISO 47	10468820	5	4	367	919235408	DREHWERK
ZYLINDERSCHRAUBE ISO 47	404362408	85	4	522	11170514	VENTILBLOCK
ZYLINDERSCHRAUBE ISO 476	240206302	89	2	530	11170518	VENTILBLOCK
ZYLINDERSCHRAUBE ISO 476	11690628	303	1	63	967301408	HYDRAULIK VORB.
ZYLINDERSCHRAUBE ISO 476	11690628	30	8	661	91000050	TELESKOP 1 VORM.
ZYLINDERSCHRAUBE ISO 476	11690628	30	8	664	91000051	TELESKOP 2 VORM.
ZYLINDERSCHRAUBE ISO 476	11690628	30	8	667	91000052	TELESKOP 3 VORM.
ZYLINDERSCHRAUBE ISO 476	11690628	30	8	670	91000053	TELESKOP 4 VORM.
ZYLINDERSCHRAUBE ISO 476	11690628	18	4	673	91000054	TELESKOP 5 VORM.
ZYLINDERSCHRAUBE ISO 476	10875573	30	6	22	96062226	RAUPENTRAEGER KPL.RE.
ZYLINDERSCHRAUBE ISO 476	10875573	30	6	28	96062228	RAUPENTRAEGER KPL.LI.
ZYLINDERSCHRAUBE ISO 47	11008297	2	4	181	10150741	HOCHDRUCKPUMPE MIT BEFE
ZYLINDERSCHRAUBE ISO 476	12223034	25	1	381	938759601	SEILTROMMEL
ZYLINDERSCHRAUBE ISO 476	12223034	90	2	530	11170518	VENTILBLOCK
ZYLINDERSCHRAUBE ISO 476	11321144	7	15	232	10115829	SCHWUNGRADGEHAEUSE AN
ZYLINDERSCHRAUBE ISO 47	4043006	5	2	164	10148438	KIPPHEBELBOCK KPL.
ZYLINDERSCHRAUBE ISO 47	514802308	3	4	552	10292670	SENKBREMSVENTIL
ZYLINDERSCHRAUBE ISO 476	4600167	306	4	33	967304508	HYDRAULIK UNTERWAGEN
ZYLINDERSCHRAUBE ISO 476	10875577	6	2	367	919235408	DREHWERK
ZYLINDERSCHRAUBE ISO 476	4980947	21	8	261	12487540	HYDRAULIKDOPPELPUMPE
ZYLINDERSCHRAUBE ISO 47	404294613	17	4	326	968483708	TRITT KPL.
ZYLINDERSCHRAUBE ISO 476	10875578	52	8	383	968607101	PLANETENGETRIEBE
ZYLINDERSCHRAUBE ISO 476	10875578	52	8	584	938759801	PLANETENGETRIEBE
ZYLINDERSCHRAUBE ISO 476	10875578	26	4	679	91000055	AUSSCHUBMECHANIK
ZYLINDERSCHRAUBE ISO 47	404312008	77	8	383	968607101	PLANETENGETRIEBE
ZYLINDERSCHRAUBE ISO 47	404312008	77	8	585	938759801	PLANETENGETRIEBE
ZYLINDERSCHRAUBE ISO 476	4980012	6	2	232	10115829	SCHWUNGRADGEHAEUSE AN
ZYLINDERSCHRAUBE ISO 476	10875565	302	4	295	969219208	OELBEHAELTER VORM.
ZYLINDERSCHRAUBE ISO 476	10875565	313	4	517	96045552	HYDRAULIK OBERWAGEN
ZYLINDERSCHRAUBE ISO 476	4980257	12	6	170	10147787	NOCKENWELLE KPL.
ZYLINDERSCHRAUBE ISO 476	4980434	23	8	261	12487540	HYDRAULIKDOPPELPUMPE
ZYLINDERSCHRAUBE ISO 47	10012659	56	8	383	968607101	PLANETENGETRIEBE
ZYLINDERSCHRAUBE ISO 47	10012659	56	8	584	938759801	PLANETENGETRIEBE
ZYLINDERSCHRAUBE ISO 476	11840140	40	4	655	91000049	ANLENKSTUECK VORM.
ZYLINDERSCHRAUBE ISO 476	11840140	40	4	661	91000050	TELESKOP 1 VORM.
ZYLINDERSCHRAUBE ISO 476	11840140	40	4	664	91000051	TELESKOP 2 VORM.
ZYLINDERSCHRAUBE ISO 476	11840140	40	4	667	91000052	TELESKOP 3 VORM.
ZYLINDERSCHRAUBE ISO 476	11840140	40	4	670	91000053	TELESKOP 4 VORM.
ZYLINDERSCHRAUBE ISO 476	12213814	27	6	679	91000055	AUSSCHUBMECHANIK
ZYLINDERSCHRAUBE ISO 476	10876374	5	1	422	96044789	SPANNEINHEIT KPL.
ZYLINDERSCHRAUBE ISO 47	10353713	304	4	473	96051762	ABGASANLAGE VORM.
ZYLINDERSCHRAUBE ISO 47	10663388	4	24	367	919235408	DREHWERK
ZYLINDERSCHRAUBE ISO 476	4900973	6	4	551	10355774	SENKBREMSVENTIL
ZYLINDERSCHRAUBE ISO 476	12691448	552	12	709	965994108	HYDRAULIK TELE
ZYLINDERSCHRAUBE ISO 476	10876373	308	24	33	967304508	HYDRAULIK UNTERWAGEN
ZYLINDERSCHRAUBE ISO 476	10878822	317	4	517	96045552	HYDRAULIK OBERWAGEN
ZYLINDERSCHRAUBE ISO 476	10001471	21	24	383	968607101	PLANETENGETRIEBE
ZYLINDERSCHRAUBE ISO 476	10001471	21	24	584	938759801	PLANETENGETRIEBE
ZYLINDERSCHRAUBE ISO 47	10001075	31	4	381	938759601	SEILTROMMEL
ZYLINDERSCHRAUBE ISO 47	4000521	6	16	380	968558601	KOMPAKTSEILWINDE
ZYLINDERSCHRAUBE ISO 47	4000521	6	16	583	938707001	KOMPAKTSEILWINDE
ZYLINDERSCHRAUBE ISO 476	10878835	3	8	454	919501608	HYDRAULISCHE BALLASTIER
ZYLINDERSCHRAUBE ISO 47	10001470	6	8	454	919501608	HYDRAULISCHE BALLASTIER
ZYLINDERSCHRAUBE ISO 47	10228541	87	4	528	11170515	VENTILBLOCK
ZYLINDERSCHRAUBE ISO 47	10228541	87	4	530	11170518	VENTILBLOCK
ZYLINDERSCHRAUBE ISO 47	10228541	87	4	531	11170519	VENTILBLOCK
ZYLINDERSCHRAUBE ISO 47	10228541	40	4	534	10802090	STEUERBLOCK

Bezeichnung	Artikel	Pos.	Menge	Seite	Baugruppe	Bezeichnung
ZYLINDERSCHRAUBE ISO 47	10228541	87	4	602	10665173	STEUERBLOCK
ZYLINDERSCHRAUBE ISO 47	11691539	15	4	319	919010108	KRANFUEHRERKABINE VORM.
ZYLINDERSCHRAUBE ISO 47	11691539	36	8	395	918810308	STEUERSTAND
ZYLINDERSCHRAUBE ISO 47	10876395	81	18	502	96025348	GRUNDAUFBAU
ZYLINDERSCHRAUBE ISO 47	11690042	10	2	386	917894308	HEIZUNG KRANFUEHRERKAB
ZYLINDERSCHRAUBE ISO 47	11690042	34	24	395	918810308	STEUERSTAND
ZYLINDERSCHRAUBE ISO 47	10875582	62	2	339	917305408	INNENVERKLEIDUNG EINBAU
ZYLINDERSCHRAUBE ISO 47	10875583	20	11	326	968483708	TRITT KPL.
ZYLINDERSCHRAUBE ISO 47	10875584	25	8	81	96062917	ELEKTRIK MITTELSTUECK
ZYLINDERSCHRAUBE ISO 47	10875584	63	1	339	917305408	INNENVERKLEIDUNG EINBAU
ZYLINDERSCHRAUBE ISO 47	12207210	7	4	532	11002717	WEGEVENTIL
ZYLINDERSCHRAUBE ISO 47	404363708	15	4	540	511486908	STEUERLEISTE
ZYLINDERSCHRAUBE ISO 47	12204614	4	4	478	915300208	ZENTRALSCHMIERANLAGE O
ZYLINDERSCHRAUBE ISO 47	12203070	37	2	388	11083498	HEIZKLIMAGERAET
ZYLINDERSCHRAUBE ISO 47	404361208	70	16	538	511307808	STEUERLEISTE
ZYLINDERSCHRAUBE ISO 47	404361208	16	4	540	511486908	STEUERLEISTE
ZYLINDERSCHRAUBE ISO 476	404202701	3	8	35	10675161	STEUERBLOCK
ZYLINDERSCHRAUBE ISO 476	10181382	312	8	33	967304508	HYDRAULIK UNTERWAGEN
ZYLINDERSCHRAUBE ISO 47	12216217	40	4	395	918810308	STEUERSTAND
ZYLINDERSCHRAUBE ISO 47	404364108	(74)	4	261	12487540	HYDRAULIKDOPPELPUMPE
ZYLINDERSCHRAUBE ISO 47	404302914	88	4	531	11170519	VENTILBLOCK
ZYLINDERSCHRAUBE ISO 47	11690044	302	2	476	918729308	LUFTFILTERANLAGE
ZYLINDERSCHRAUBE ISO 47	11690044	(10)	3	484	919940408	EL.ANLAGE DREHBUEHNE
ZYLINDERSCHRAUBE ISO 47	11690044	10	3	588	96055197	ELEKTRIK WINDE 2
ZYLINDERSCHRAUBE ISO 476	10181389	329	2	517	96045552	HYDRAULIK OBERWAGEN
ZYLINDERSCHRAUBE ISO 476	12100498	245	2	599	96075102	BEFESTIGUNGSTEILE HYDR
ZYLINDERSCHRAUBE ISO 47	10875586	3	1	235	10127979	VERSCHLUSSTEILE
ZYLINDERSCHRAUBE ISO 47	10875586	(2)	1	243	12583633	MOTORREGELUNGSENSORIK
ZYLINDERSCHRAUBE ISO 47	10875586	3	1	244	12544505	DREHZAHLGEBER KPL.
ZYLINDERSCHRAUBE ISO 47	10875586	14	2	350	965784408	DACHSCHEIBE VORM.
ZYLINDERSCHRAUBE ISO 47	10875586	7	4	421	96044787	HALTER VORM.
ZYLINDERSCHRAUBE ISO 47	10875586	4	1	646	925141508	SCHLAUCHFUEHRUNG VORM.
ZYLINDERSCHRAUBE ISO 47	10875586	4	2	700	966591408	ENDSCHALTER ANBAU
ZYLINDERSCHRAUBE ISO 476	404250914	51	1	361	917304708	SCHIEBETUER EINBAU
ZYLINDERSCHRAUBE ISO 47	11140465	33	7	30	992078314	MITTELTEIL
ZYLINDERSCHRAUBE ISO 47	11140465	313	4	33	967304508	HYDRAULIK UNTERWAGEN
ZYLINDERSCHRAUBE ISO 476	12225935	41	4	395	918810308	STEUERSTAND
ZYLINDERSCHRAUBE ISO 47	240196202	(41)	3	534	10802090	STEUERBLOCK
ZYLINDERSCHRAUBE ISO 47	10875588	(1)	2	319	919010108	KRANFUEHRERKABINE VORM.
ZYLINDERSCHRAUBE ISO 47	10875588	6	3	480	10327065	ELEKTROPUMPE
ZYLINDERSCHRAUBE ISO 47	10875588	(12)	2	725	918258408	ELEKTRIK 2.HUBENDSCHALTE
ZYLINDERSCHRAUBE ISO 47	11820284	11	4	329	916170808	KABELEINFUEHRUNG
ZYLINDERSCHRAUBE ISO 47	10875590	9	2	329	916170808	KABELEINFUEHRUNG
ZYLINDERSCHRAUBE ISO 476	10022183	308	2	470	919674308	ABGASANLAGE
ZYLINDERSCHRAUBE ISO 476	12223035	88	4	530	11170518	VENTILBLOCK
ZYLINDERSCHRAUBE ISO 47	10875591	318	2	33	967304508	HYDRAULIK UNTERWAGEN
ZYLINDERSCHRAUBE ISO 47	10875591	305	10	269	918811108	ANTRIEBSAGGREGAT VORM.
ZYLINDERSCHRAUBE ISO 47	10875591	21	4	543	10333672	STEUERBLOCK
ZYLINDERSCHRAUBE ISO 47	10875591	6	3	736	96056560	WINDWARNUNG VORM.
ZYLINDERSCHRAUBE ISO 476	404230308	45	1	361	917304708	SCHIEBETUER EINBAU
ZYLINDERSCHRAUBE ISO 47	10875592	51	4	461	96074081	HARNSTOFFTANK VORM.
ZYLINDERSCHRAUBE ISO 47	10875592	38	4	679	91000055	AUSSCHUBMECHANIK
ZYLINDERSCHRAUBE ISO 47	12203634	38	3	388	11083498	HEIZKLIMAGERAET
ZYLINDERSCHRAUBE ISO 47	10876359	11	2	127	968305308	ENDSCHALTER VORM.
ZYLINDERSCHRAUBE ISO 47	10876359	38	2	768	91001040	ANLENKSTUECK VORM.
ZYLINDERSCHRAUBE ISO 476	11088382	11	2	734	96056553	GRUNDHALTER VORM.
ZYLINDERSCHRAUBE ISO 47	511011808	42	3	536	10665127	DECKEL
ZYLINDERSCHRAUBE ISO 47	12202784	309	2	33	967304508	HYDRAULIK UNTERWAGEN
ZYLINDERSCHRAUBE ISO 47	12202784	77	2	655	91000049	ANLENKSTUECK VORM.
ZYLINDERSCHRAUBE ISO 47	12202784	7	2	773	96037297	WINKELGEBER ANBAU

Bezeichnung	Artikel	Pos.	Menge	Seite	Baugruppe	Bezeichnung
ZYLINDERSCHRAUBE ISO 47	10876360	302	34	517	96045552	HYDRAULIK OBERWAGEN
ZYLINDERSCHRAUBE ISO 47	10876361	6	2	421	96044787	HALTER VORM.
ZYLINDERSCHRAUBE ISO 47	10876361	28	2	625	96036821	AUSRUESTUNG KAMERA DRE
ZYLINDERSCHRAUBE ISO 476	10539468	305	4	473	96051762	ABGASANLAGE VORM.
ZYLINDERSCHRAUBE ISO 47	10875593	6	1	363	966230508	FUEHRUNG VORM.
ZYLINDERSCHRAUBE ISO 476	10875596	85	4	528	11170515	VENTILBLOCK
ZYLINDERSCHRAUBE ISO 476	10875596	85	4	530	11170518	VENTILBLOCK
ZYLINDERSCHRAUBE ISO 476	10875596	85	4	531	11170519	VENTILBLOCK
ZYLINDERSCHRAUBE ISO 476	10875596	85	4	602	10665173	STEUERBLOCK
ZYLINDERSCHRAUBE ISO 47	10875597	82	8	674	91000054	TELESKOP 5 VORM.
ZYLINDERSCHRAUBE ISO 47	10875597	46	4	679	91000055	AUSSCHUBMECHANIK
ZYLINDERSCHRAUBE ISO 476	10663523	14	2	222	10140729	ATL-ANBAU
ZYLINDERSCHRAUBE ISO 476	4980007	35	18	261	12487540	HYDRAULIKDOPPELPUMPE
ZYLINDERSCHRAUBE ISO 47	10875598	22	5	326	968483708	TRITT KPL.
ZYLINDERSCHRAUBE ISO 47	10875598	7	2	371	510229408	HYDROMOTOR
ZYLINDERSCHRAUBE ISO 47	10875598	30	9	655	91000049	ANLENKSTUECK VORM.
ZYLINDERSCHRAUBE ISO 476	10007677	4	12	331	916162808	RELING
ZYLINDERSCHRAUBE ISO 476	240049702	7	5	168	10120186	MASSENAUSGLEICH ANBAU
ZYLINDERSCHRAUBE ISO 47	10875599	302	8	124	918728408	MONTAGETEILE DREHBUEHN
ZYLINDERSCHRAUBE ISO 47	10875599	314	8	269	918811108	ANTRIEBSAGGREGAT VORM.
ZYLINDERSCHRAUBE ISO 47	10875599	26	8	369	933074801	DREHWERKANTRIEB
ZYLINDERSCHRAUBE ISO 47	10875599	315	3	407	96022627	DREHBUEHNENVERKLEIDUN
ZYLINDERSCHRAUBE ISO 47	10875599	3	4	440	916870808	SPIEGELANBAU DREHBUEHN
ZYLINDERSCHRAUBE ISO 47	10875599	64	4	661	91000050	TELESKOP 1 VORM.
ZYLINDERSCHRAUBE ISO 47	10875599	64	4	664	91000051	TELESKOP 2 VORM.
ZYLINDERSCHRAUBE ISO 47	10875599	64	8	667	91000052	TELESKOP 3 VORM.
ZYLINDERSCHRAUBE ISO 47	10875599	64	8	670	91000053	TELESKOP 4 VORM.
ZYLINDERSCHRAUBE ISO 476	10007205	5	12	331	916162808	RELING
ZYLINDERSCHRAUBE ISO 476	240049802	5	2	169	12408221	FLANSCH VORM.
ZYLINDERSCHRAUBE ISO 47	12208098	18	4	661	91000050	TELESKOP 1 VORM.
ZYLINDERSCHRAUBE ISO 47	12208098	18	4	664	91000051	TELESKOP 2 VORM.
ZYLINDERSCHRAUBE ISO 47	12208098	18	4	667	91000052	TELESKOP 3 VORM.
ZYLINDERSCHRAUBE ISO 47	12208098	18	4	670	91000053	TELESKOP 4 VORM.
ZYLINDERSCHRAUBE ISO 47	12208098	56	4	673	91000054	TELESKOP 5 VORM.
ZYLINDERSCHRAUBE ISO 476	404230208	24	2	326	968483708	TRITT KPL.
ZYLINDERSCHRAUBE ISO 47	11691424	17	2	37	510438508	DRUCKMINDERVENTIL
ZYLINDERSCHRAUBE ISO 47	11691424	21	4	119	96045222	MONTAGETEILE
ZYLINDERSCHRAUBE ISO 47	11691424	74	8	369	933074801	DREHWERKANTRIEB
ZYLINDERSCHRAUBE ISO 476	10468234	(20)	4	261	12487540	HYDRAULIKDOPPELPUMPE
ZYLINDERSCHRAUBE ISO 47	4980840	2	4	552	10292670	SENKBREMSVENTIL
ZYLINDERSCHRAUBE ISO 47	12206699	31	6	543	10333672	STEUERBLOCK
ZYLINDERSCHRAUBE ISO 47	404350701	43	1	537	10665128	DECKEL
ZYLINDERSCHRAUBE ISO 47	404350701	5	4	551	10355774	SENKBREMSVENTIL
ZYLINDERSCHRAUBE ISO 47	10875601	10	4	371	510229408	HYDROMOTOR
ZYLINDERSCHRAUBE ISO 47	10875601	4	1	402	916049908	SPIEGELANBAU KRANFUEHR
ZYLINDERSCHRAUBE ISO 47	10875570	61	2	339	917305408	INNENVERKLEIDUNG EINBAU
ZYLINDERSCHRAUBE ISO 47	240188502	44	8	534	10802090	STEUERBLOCK
ZYLINDERSCHRAUBE ISO 47	12202901	8	2	127	968305308	ENDSCHALTER VORM.
ZYLINDERSCHRAUBE ISO 47	12213825	86	10	369	933074801	DREHWERKANTRIEB
ZYLINDERSTIFT DIN 6325 12	430709608	2	1	753	512353708	HYDROZYLINDER
ZYLINDERSTIFT ISO 2338 10H	430670808	3	1	661	91000050	TELESKOP 1 VORM.
ZYLINDERSTIFT ISO 2338 10H	430670808	3	1	664	91000051	TELESKOP 2 VORM.
ZYLINDERSTIFT ISO 2338 10H	430670808	3	1	667	91000052	TELESKOP 3 VORM.
ZYLINDERSTIFT ISO 2338 10H	430670808	3	1	670	91000053	TELESKOP 4 VORM.
ZYLINDERSTIFT ISO 2338 10H	430670808	3	1	673	91000054	TELESKOP 5 VORM.
ZYLINDERSTIFT ISO 2338 4M	570109308	5	1	371	510229408	HYDROMOTOR
ZYLINDERSTIFT ISO 8734 6m	4980000	9	1	168	10120186	MASSENAUSGLEICH ANBAU
ZYLINDERSTIFT ISO 8734 6m	4980000	(5)	1	170	10147787	NOCKENWELLE KPL.
ZYLINDERSTIFT ISO 8734 6m	4980736	5	1	170	10147787	NOCKENWELLE KPL.