LIEBHERR

Crawler crane with telescopic boom

LTR 1100

LTR 1100-009

Operating instructions

BAL No.: 25105-02-02

Serial No.	
Date	

ORIGINAL OPERATING INSTRUCTIONS

The operating instructions are part of the crane and must be followed!

The operating instructions must always be available within reach!

All local regulations for crane operation must be observed!

Liebherr-Werk Ehingen GmbH
Dr.-Hans-Liebherr-Straße 1
89584 Ehingen/Donau
+49 (0) 7391 502–0
+49 (0) 7391 502–3399
info.lwe@liebherr.com
www.liebherr.com

Preface

Manufacturer

Liebherr-Werk Ehingen GmbH
Dr.-Hans-Liebherr-Straße 1
D-89584 Ehingen/Donau
+49 (0) 7391 502–0
+49 (0) 7391 502–3399
info.lwe@liebherr.com
www.liebherr.com

California Proposition 65

Proposition 65 of the US State of California warns against chemicals that are known to cause cancer and birth defects or other reproductive harm.

For additional information, see the website: **www.P65Warnings.ca.gov**.

Proposition 65

⚠ **WARNING:** This product can expose you to chemicals, which are known to the State of California to cause cancer and birth defects or other reproductive harm.

- Avoid direct contact with chemicals.
- Use personal protective equipment: Always wear protective gloves.
- After handling: Wash hands thoroughly.
- Dispose of chemicals in an environmentally acceptable manner according to local regulations.

For more information see: www.P65Warnings.ca.gov.

Fig.154660: Example of a Proposition 65 sign for USA: Chemicals

Proposition 65

⚠ **WARNING:** Breathing diesel engine exhaust exposes you to chemicals known to the State of California to cause cancer and birth defects or other reproductive harm.

- Always start and operate the engine in a well-ventilated area.
- If in an enclosed area, vent the exhaust to the outside.
- Do not modify or tamper with the exhaust system.
- Do not idle the engine except as necessary.

For more information see: www.P65Warnings.ca.gov/diesel.

Fig.154661: Example of a Proposition 65 sign for USA: Diesel engine exhaust

LWE/LTR 1100-009/25105-02-02/en

copyright © Liebherr-Werk Ehingen GmbH 2023

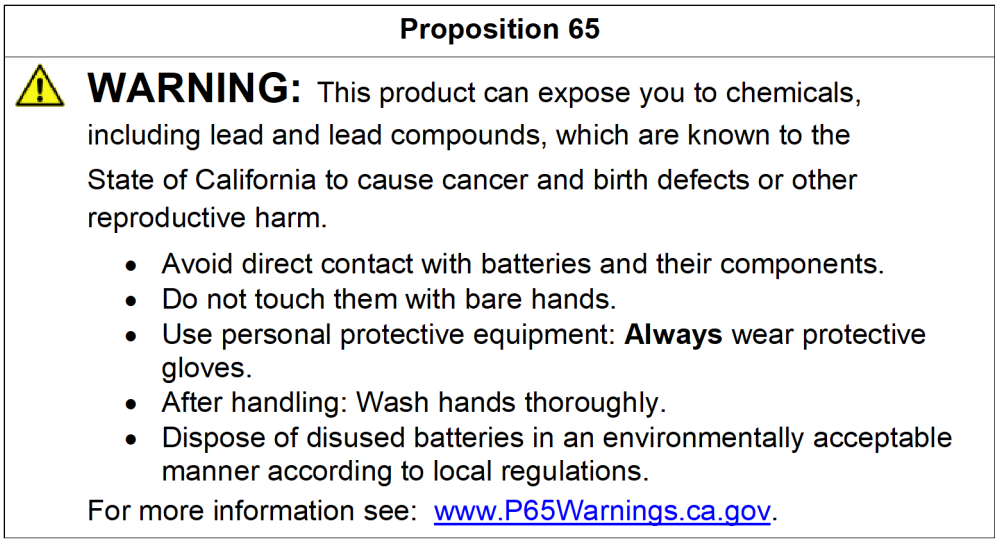

Fig.154662: Example of a Proposition 65 sign for USA: Lead and lead compounds

General

This crane was built according to the state of technology and recognized safety technical regulations. Despite that, danger to body and life for the user and / or third persons or damage to the crane and / or other material assets is still possible.

This crane may only be used:
- When in a perfect technical condition.
- For the intended use.
- By authorized and trained personnel, who work in a safety and danger conscious way.
- When no safety relevant problems are present.
- When no modifications were made on the crane.

Any problems that could affect safety must be fixed immediately.

Modifications to the crane may only be made with written approval by Liebherr-Werk Ehingen GmbH.

Data logger

This crane is equipped with a data recording device. Among others, the following data is recorded:
- date and time of day
- entered set up configuration of the crane
- actual load
- percentage of crane utilization
- boom radius (working radius)
- main boom angle, luffing jib angle
- total telescopic boom length, length of each telescopic section
- every actuation of bypass devices

The recorded data can be read with a respective software.

Safety and warning display

The safety and warning display is directed to all persons who work with the crane or are located nearby. Failure to observe the safety and warning display can lead to accidents.

The terms **DANGER**, **WARNING**, **CAUTION** and **NOTICE** used in the crane documentation are intended to point out certain rules of conduct to all persons working with the crane or are located nearby.

LWE/LTR 1100-009/25105-02-02/en

copyright © Liebherr-Werk Ehingen GmbH 2023

Warning signs	Signal word	Explanation
	DANGER	Designates a dangerous situation which will lead to death or serious injury if it is not prevented.[1)]
	WARNING	Designates a dangerous situation which could lead to death or serious injury if it is not prevented. [1)]
	CAUTION	Designates a dangerous situation which could lead to slight or medium injury if it is not prevented. [1)]
	NOTICE	Designates a dangerous situation, which can lead to property damage if it is not prevented.

[1)] This could also result in property damage.

Additional notes

The term **Note** is used in the crane documentation to make all persons working with the crane or are located nearby aware of useful information and tips.

Sign	Signal word	Explanation
	Note	Designates useful information and tips.

Crane documentation

The crane documentation is comprised of:
- all supplied documents on paper and in digital form
- all supplied programs and applications
- the list of the crane documentation can be taken from the delivery note

The crane documentation:
- indicates how to use the crane safely
- supports the operators in using the permissible application possibilities of the crane
- provides information about the functionality of important components and systems

Note
Terminology in the crane documentation
Certain expressions are used in the crane documentation.
► In order to avoid misunderstandings, the same expressions should always be used.

If you find any errors or if any misunderstandings arise when reading the crane documentation, please contact Liebherr-Werk Ehingen GmbH immediately.

WARNING
Danger of accident due to incorrect operation of the crane!
Incorrect operation of the crane can lead to accidents.
Death, severe bodily injuries, property damage.
► Only authorized and trained personnel are permitted to work on the crane or have access to it.
► The crane documentation is part of the crane and must be accessible on the crane.
► The crane documentation and on-site regulations (such as accident prevention regulations) must be observed.

LWE/LTR 1100-009/25105-02-02/en

copyright © Liebherr-Werk Ehingen GmbH 2023

Using the crane documentation:
- **makes it easier** to become familiar with the crane.
- **avoids** problems due to improper operation.

Observing the crane documentation:
- **increases** reliability in use.
- **extends** the service life of the crane.
- **minimizes** repair costs and downtime.

The crane documentation must be accessible in the driver's cab or in the crane cab.

WARNING
Outdated version of crane documentation!
If subsequently supplied information, updates and addenda to the crane documentation are not observed and added, there is a danger of accident.
Death, severe bodily injuries, property damage.
- ► Add and observe all subsequently supplied information, updates and supplements for the crane documentation.
- ► Make sure that all involved persons always know of and understand the latest version of the crane documentation.

If there is any doubt regarding if the crane documentation is **not** up-to-date:
- ► Do **not** operate the crane. Contact Liebherr-Werk Ehingen GmbH.

WARNING
Crane documentation is not understood!
If parts of the crane documentation are not understood and the tasks are carried out on or with the crane, then there is a danger of accident.
Death, severe bodily injuries, property damage.
- ► Have any open questions clarified by Customer Service at Liebherr-Werk Ehingen GmbH before carrying out the respective task.

This documentation may not be reproduced or duplicated, distributed or used for purposes of the competition, neither completely nor in excerpts. All rights are expressly reserved in accordance with copyright laws.

All accident prevention regulations, operating instructions, load charts etc. are based on the intended use of the crane.

LWE/LTR 1100-009/25105-02-02/en

copyright © Liebherr-Werk Ehingen GmbH 2023

Data tag

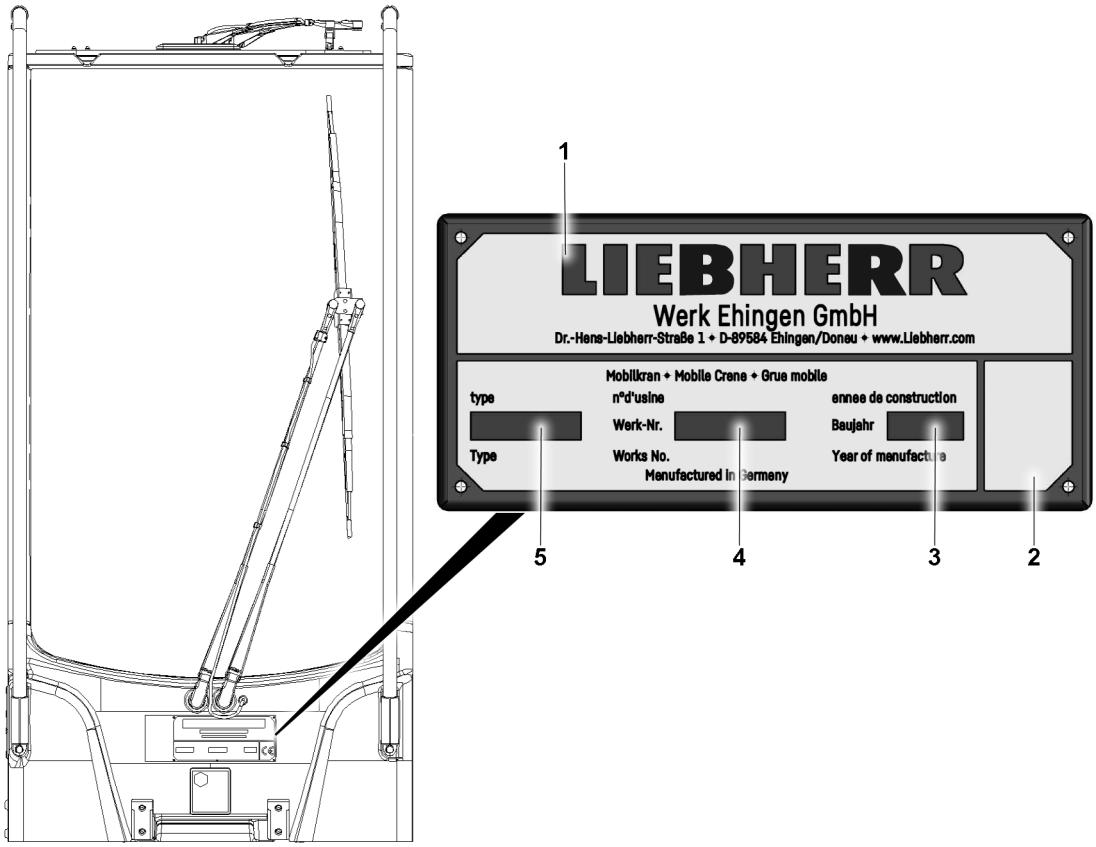

Fig.164277: Exemplary illustration: Data tag

1 Manufacturer
2 Markings
3 Year of construction
4 Serial no.
5 Type

Possible makings on the data tag

Depending on the regulation at the moment the crane is placed on the market, the data tag contains one of the following markings:

CE marking

Combined CE and UKCA marking

EAC marking

Without code

copyright © Liebherr-Werk Ehingen GmbH 2023

CE marking

The CE marking is a mark according to EU laws:
- Cranes with CE markings are compliant with the European Directives applicable at the moment of placing the cranes on the market, and in particular European Machinery Directive 2006/42/EC and product standard EN 13000.
- Cranes that are operated outside the respective area of application of the European Machinery Directive do not require a CE marking.
- It is prohibited to market and operate cranes without a CE marking, and which do not meet the product-specific regulations valid in Europe, when a CE marking is specified for the country, especially in the single European market.
- European Union Directives prohibit operating cranes with a tipping load utilization of 85 % or a bypass device that does not comply with EN 13000 within the European Union or in countries that only permit a lower tipping load utilization! The local regulations apply. Cranes that do not comply with EN 13000 may not have the CE marking and therefore may not be operated in the European Union.

UKCA marking

The UKCA marking is a mark according to the regulations of the United Kingdom (UK):
- UKCA marking (UK Conformity Assessed) is the British product marking for placing products on the market in Great Britain (England, Scotland and Wales). The CE marking still applies for North Ireland.
- Cranes with UKCA markings are compliant with the Directives of the United Kingdom applicable at the moment of placing the cranes on the market.

In the case of a combined CE/UKCA marking, a tag is applied in the crane cab with the name and address of the GB agent.

Fig.164279

EAC marking

The EAC marking is a mark according to the Commonwealth of Independent States (CIS):
- Cranes with EAC markings are compliant with the Directives of the GUS applicable at the moment of placing the cranes on the market.

Without marking

Cranes that are operated outside the respective area of application of the EU, CIS or UK are subject to the marking provisions applicable at the moment of placing the cranes on the market.

EU Declaration of Conformity

Upon delivery of the equipment with a CE marking, the EU Declaration of Conformity according to Directive 2006/42/EC is provided directly after the cover sheet of the crane operating instructions. The EU Declaration of Conformity is valid in the following form and language in all countries of the European Union, as well as in countries that recognize the Directives of the European Union. Keep the EU Declaration of Conformity in a safe place.

LWE/LTR 1100-009/25105-02-02/en

copyright © Liebherr-Werk Ehingen GmbH 2023

Note

- This declaration of conformity is only valid when this mobile crane meets the directives and standards stated in this EU Declaration of Conformity. This applies especially for the programming and function of the safety-relevant overload protection. The CE marking must be removed if changes were made to the crane that do not conform to the stated directives and standards. These include in particular a tipping load utilization (85 % load charts) that are not permissible in Europe and a changed version of the bypass device for the overload protection.
- If this modified mobile crane is re-imported later into a country which is within the validity range of the EC machine directive, then the importer is responsible for the verification and the written confirmation, that the condition of the mobile crane at importation into the EC meets the directives and standards, which are stated in this declaration of conformity.
- The complete crane documentation must be complete and present in the official language of the community of the member state in which the machine is placed into service and / or where it is operated.
- For the verification and confirmation we recommend that the importer contacts the crane manufacturer or a person authorized by him.
- After written confirmation of the importer and the mobile crane manufacturer, the mobile crane may be labeled again with a CE marking and the EU Declaration of Conformity becomes valid again. Therefore the directives and standards valid at initial delivery continue to apply for this crane.

LWE/LTR 1100-009/25105-02-02/en

copyright © Liebherr-Werk Ehingen GmbH 2023

LIEBHERR

Original

EU-Declaration of Conformity

CE

If changes are made to the machinery that were not approved in writing by Liebherr-Werk Ehingen GmbH, then this EU declaration of conformity becomes invalid.
This declaration of conformity is issued under the sole responsibility of the manufacturer.

Designation:	Mobile crane
Type:	_0001_
Serial number:	_0002_
Year of construction	_0003_
Nominal power of the diesel Engine:	_0004_ [kW] / _0005_ [rpm]
Representative measured sound power level L_{WA} [1]:	_0006_ [dB]
Guaranteed sound power level L_{WA} [1]:	_0007_ [dB]

We herewith declare that the above declared machine in its delivery condition complies with all relevant provisions of the following EU directives.

1 EU Directives

1.1 Directive 2006/42/EC of the European Parliament on machinery
1.2 Directive 2005/88/EC of the European Parliament amending the Directive 2000/14/EC relating to noise emission[1]
1.3 Directive 2014/53/EU of the European Parliament relating to the making available on the market of radio equipment

Applied evaluation procedure according to Annex VIII of Directive 2000/14/EC
Notified body: TÜV SÜD Industrie Service GmbH, Westendstrasse 199, 80686 München, Germany;
Identification number: 0036

2 Applied harmonized standards

2.1 EN 13000:2010+A1:2014 Cranes – Mobile cranes

Manufacturer: Liebherr-Werk Ehingen GmbH, Dr.-Hans-Liebherr-Straße 1, 89584 Ehingen/Donau, Germany.

Person authorised to compile the technical file: Bernd Boos, Dr.-Hans-Liebherr-Straße 1, 89584 Ehingen/Donau, Germany, bernd.boos@liebherr.com.

Bernd Boos
Head of Engineering Department

Ehingen, xx.xx.xxxx

[1] during crane operation

Fig.164285-en: Exemplary illustration of the crane's EU Declaration of Conformity

UK Declaration of Conformity

Upon delivery of the equipment with a UKCA marking in Great Britain, the UK Declaration of Conformity according to The Supply of Machinery (Safety) Regulations 2008 is provided directly after the cover sheet of the crane operating instructions. The UK Declaration of Conformity is valid in the following

LWE/LTR 1100-009/25105-02-02/en

copyright © Liebherr-Werk Ehingen GmbH 2023

form and language in Great Britain (England, Scotland and Wales). Keep the UK Declaration of Conformity in a safe place.

For cranes with CE/UKCA marking that are not delivered to Great Britain: If necessary, please request a UK Declaration of Conformity from customer service at Liebherr-Werk Ehingen GmbH.

Note

► This declaration of conformity is only valid when this mobile crane meets the directives and standards stated in this UK Declaration of Conformity. This applies especially for the programming and function of the safety-relevant overload protection. The UKCA marking must be removed if changes were made to the crane that do not conform to the stated directives and standards.

LWE/LTR 1100-009/25105-02-02/en

copyright © Liebherr-Werk Ehingen GmbH 2023

LIEBHERR

Original

UK-Declaration of Conformity

UK CA

If changes are made to the machinery that were not approved in writing by Liebherr-Werk Ehingen GmbH, then this UK-declaration of conformity becomes invalid.
This declaration of conformity is issued under the sole responsibility of the manufacturer.

Designation:	Mobile crane
Type:	_0001_
Serial number:	_0002_
Year of construction	_0003_
Nominal power of the diesel Engine:	_0004_ [kW] / _0005_ [rpm]
Representative measured sound power level L_{WA} [1]:	_0006_ [dB]
Guaranteed sound power level L_{WA} [1]:	_0007_ [dB]

We herewith declare that the above declared machine in its delivery condition complies with all relevant provisions of the following statutory requirements.

1 Statutory requirements

1.1 The Supply of Machinery (Safety) Regulations 2008, SI 2008 No. 1597
1.2 The Noise Emission in the Environment by Equipment for use Outdoors Regulations 2001, SI 2001 No. 1701
1.3 The Radio Equipment Regulations 2017, SI 2017 No. 1206

Applied evaluation procedure according to Schedule 11 of The Noise Emission in the Environment by Equipment for use Outdoors Regulations 2001, SI 2001 No. 1701[1]
Approved body: TUV SUD BABT Unlimited, Octagon House, Concorde Way, Segensworth North, Hampshire, PO15 5RL, United Kingdom; Identification number: 0168

2 Applied designated standards

2.1 EN 13000:2010+A1:2014 Cranes – Mobile cranes

Manufacturer: Liebherr-Werk Ehingen GmbH, Dr.-Hans-Liebherr-Straße 1, 89584 Ehingen/Donau, Germany.

Authorised representative of the manufacturer and person authorised to compile the technical file:
Liebherr-Great Britain Ltd., Normandy Lane, Stratton Business Park, Biggleswade, SG18 8QB, United Kingdom, contact.ukca.lgb@liebherr.com

Bernd Boos
Head of Engineering Department

Ehingen, xx.xx.xxxx

[1] during crane operation

Fig.164286-en: Exemplary illustration of the crane's UK Declaration of Conformity

Information for the REACH regulation of the European Union

Based on the REACH regulation (EC) no. 1907/2006, article 33, there is an information requirement for substances of very high concern, hereafter indicated as SVHC. SVHC: Substance of Very High Concern.

LWE/LTR 1100-009/25105-02-02/en

copyright © Liebherr-Werk Ehingen GmbH 2023

Liebherr-Werk Ehingen GmbH uses its best judgment to avoid the use of these SVHC and to enable the customer to handle these substances safely.

When using the crane as intended, there is not expected to be any significant risk to human health or the environment.

According to information from suppliers and internal product information, Liebherr-Werk Ehingen GmbH is aware of SVHC that are present in more than 0.1 percent by weight in individual products of this vehicle.

For more information, contact REACH-LWE@liebherr.com.

Intended use

Everyone who is involved in the use, operation, assembly, maintenance and inspection of the crane must read and use the crane documentation.

Only the following represents intended use:
- Lifting and lowering non-fixed loads vertically.
- Moving loads using the devices specified according to the crane documentation.
- Driving the crane with a suitable view or with a guide.
- Driving the crane with the equipment in place or with a suspended load only when the corresponding charts are available.

To do so, the weight, center of gravity and wind-exposed surface of the load must be known and observed. Permissible movement speeds and delay times must be observed.

The crane is used as intended when the following specifications and prerequisites are observed:
- Only operate the crane according to the set up configurations described in the crane documentation and that can be selected in the crane control.
- The entries and settings in the crane control match the actual set up configuration of the crane.
- The crane documentation includes: The operating instruction, load charts, wind speed charts, erection and take-down charts, job planner, assembly plans, rod plans, reeving plans, rigging plans.
- Comply with the crane documentation and the safety regulations, conditions, prerequisites, set up conditions and work steps it contains.
- Operate the crane within the permissible limit values, for example in compliance with the classification according to ISO 4301-1 and categorization according to ISO 4301-2, see chapter „Technical data“.
- Operate the crane on ground that is suitable for the applied loads.
- Only allow access to the crane and operation of the crane by authorized and trained personnel.
- Operate the crane in a safety and danger conscious manner.
- Operate the crane in a perfect technical condition.
- The crane does not have safety-relevant problems.
- The roles of the people located near the crane are defined according to the crane documentation and known to all involved personnel.
- All involved personnel fulfill the personnel requirements according to their roles in the crane documentation.
- All involved personnel are aware of their areas of responsibility according to their roles in the crane documentation.
- All involved personnel act in a safety and danger conscious manner.
- Perform the maintenance and inspection work according to the specifications in the crane documentation. Have the required service work performed.
- Only use the equipment parts, components, spare parts and operating fluids approved in the crane documentation. This also applies for load hook und hook blocks.
- Comply with the national and regional regulations, for example regarding periodic inspections, safety distances when working with the crane, permissible travel conditions including axle loads for on-road driving.

Any other use or any use that exceeds what is indicated without the written declaration of consent from the manufacturer is unintended use.

LWE/LTR 1100-009/25105-02-02/en

copyright © Liebherr-Werk Ehingen GmbH 2023

Unintended use

The manufacturer is **not** liable for damage caused by unintended use or improper use of the crane. Any associated risk is the sole responsibility of the owner, the operating company, the crane operator or the responsible person appointed by the operating company.

Unintended use includes, but is not limited to, the following:
- Operating the crane in an area exposed to explosion hazards.
- Operating the crane for dynamic uses, for example soil compaction, demolition balls.
- Using the crane at sports and recreational events, for example „bungee jumping“ or „Dinner in the sky®“/„suspended restaurants“.
- Unloading or loading the crane suddenly, for example: Grab or dumping operation.
- Using the crane when the weight of the load is suspended on the crane is changed, for example by filling a container suspended on the load hook.
- Operation on a floating device if the conditions in chapter „Crane on a floating device“ are not fulfilled and the written release by Liebherr-Werk Ehingen GmbH is not present.
- Operation of the crane when there are additional persons in addition to the crane operator outside of the crane cab, on the crane or in the danger zone. Exceptions to this are procedures allowed in the crane documentation.
- Pushing, pulling or lifting objects with the level control, sliding beams or the support cylinders.
- Rubbing or transversely pulling a load.
- Transporting personnel outside the driver's cab or in the crane cab.
- Transporting personnel with the carrying equipment or load handling equipment or on the load.
- Transporting personnel with work baskets, if the national and regional regulations are not observed, for example the responsible work safety organization.
- Transporting loads and objects on or to the side of the crane. Exceptions to this are the intended positions.

Ambient temperature

The range of application of the crane is an ambient temperature from -20 °C to +50 °C. The use of the crane at ambient temperatures from +40 °C to +50 °C is connected to a reduction in drive performance and service life.

If the ambient temperature is lower than -20 °C the crane must be modified with „auxiliary equipment for working at low temperatures“.

WARNING
Working at low temperatures without the corresponding auxiliary equipment!
The crane components can be damaged and fail. The load can rip off.
Death, severe bodily injuries, property damage.

If the crane is operated at an ambient temperature lower than -20 °C:
- ► Make sure that the crane is equipped with the corresponding „auxiliary equipment for working at low temperatures“. Comply with chapter 2.08.
- ► Use the operating fluids for the corresponding ambient temperature in time. Comply with the specifications in chapter 7.07.

Cranes with electric mode

Electric mode is installed only for certain cranes.

The range of application of the crane is an ambient temperature from -20 °C to +40 °C and in diesel operation an ambient temperature from -20 °C to +50 °C A use of the crane in diesel operation at ambient temperatures from +40 °C to +50 °C is connected to a reduction in drive performance and service life.

LWE/LTR 1100-009/25105-02-02/en

copyright © Liebherr-Werk Ehingen GmbH 2023

Safety equipment

Special attention must be paid to the safety equipment built into the crane. The safety equipment must constantly be checked for functionality. The crane may not be operated if the safety equipment are not working or not working correctly.

Note
Your motto must always be:
► **Safety first!**

The crane has been built in accordance with the European regulations for crane operation and travel operation and has been approved by the relevant authorities.

Equipment and spare parts

WARNING
Danger of fatal injury if original equipment parts are **not** used!
If the crane is operated with **non**-original equipment parts, the crane can fail.
Death, severe bodily injuries, property damage.
► Operate the crane only with original equipment parts!
► Crane operation with equipment parts that do **not** belong to the crane is prohibited!
► If there is any doubt about the origin of equipment parts, contact Customer Service at Liebherr-Werk Ehingen GmbH.

WARNING
The crane permit and manufacturer's warranty will become void!
If any original installed parts are modified, manipulated or replaced (e.g. removal of parts, installation of non-original Liebherr parts), both the crane permit and the manufacturer's warranty will become void.
► Leave installed original parts unchanged.
► Do not remove installed original parts.
► Use only Original Liebherr spare parts.
► If there is any doubt about the origin of the spare parts, contact Customer Service at Liebherr-Werk Ehingen GmbH.

For ordering equipment parts and spare parts, always keep the crane number handy and provide it.

Definition of directional data for mobile cranes

Driving forward: Driving with the driver's cab forward.

Driving in reverse: Driving with the taillights of the crane chassis forward.

Front, **rear**, **right**, **left** in the **driver's cab** refer to the crane chassis. The driver's cab is always in the front.

Front, **rear**, **right**, **left** in the **crane cab** refer to the crane superstructure. The front is always in the direction of the taken-down boom.

0° crane superstructure slewing angle: The boom points in the longitudinal direction to the rear over the rear of the vehicle.

180° crane superstructure slewing angle: The boom points in the longitudinal direction to the front over the driver's cab.

Definition of directional data for crawler cranes

Driving forward driving forward from the view of the crane operator seated in the crane cab. Turn-table in the 0° or 180° position.

LWE/LTR 1100-009/25105-02-02/en

copyright © Liebherr-Werk Ehingen GmbH 2023

Driving reverse driving backward from the view of the crane operator seated in the crane cab. Turntable in the 0° or 180° position.

Front, **rear**, **right**, **left** always orient themselves on the **crawler travel gear** from the position of the chain tension devices. The chain tension devices on the crawler travel gear are always on the front.

Front, **rear**, **right**, **left** refer to the direction of view of the crane operator seated in the **crane cab**. The front is always in the direction of the taken-down boom.

Optional equipment and functions

The equipment marked with ***** and the functions are optionally available and are **not** part of the standard crane (optional equipment).

Conversion chart

	Initial unit	Multiplication factor	Target unit
Length	mm	0.03937	in
	in	25.4000	mm
	mm	0.00328	ft
	ft	304.8	mm
	cm	0.39370	in
	in	2.5400	cm
	cm	0.0328	ft
	ft	30.48	cm
	m	39.37	in
	in	0.0254	m
	m	**3.281**	**ft**
	ft	**0.3048**	**m**
	km	0.62137	mile
	mile	1.6093	km
Area	cm^2	0.155	in^2
	in^2	6.4516	cm^2
	m^2	**10.764**	**ft^2**
	ft^2	**0.0929**	**m^2**

LWE/LTR 1100-009/25105-02-02/en

copyright © Liebherr-Werk Ehingen GmbH 2023

	Initial unit	Multiplication factor	Target unit
Volume	cm^3	0.06102	in^3
	in^3	16.387	cm^3
	m^3	35.3147	ft^3
	ft^3	0.0283	m^3
	l	0.001	m^3
	m^3	1000	l
	l	61.024	in^3
	in^3	0.016387	l
	l	0.0353	ft^3
	ft^3	28.32	l
	l	0.264178	US. liq. gal
	US. liq. gal	3.7853265	l
Weight (mass)	kg	2.20462	lb
	lb	0.45359	kg
	t	**2204.62**	**lb**
	lb	**0.0004536**	**t**
	t	1.1023	short ton US (tn. sh.)
	short ton US (tn. sh.)	0.90718	t
	t	**0.45359**	**kip**
	kip	**2.20462**	**t**
Weight/length	kg/m	0.055998	lb/in
	lb/in	17.857781	kg/m
	kg/m	0.67197	lb/ft
	lb/ft	1.48816	kg/m
Force	N	0.2248	lbf
	lbf	4.4483986	N
	kN	**224.809**	**lbf**
	lbf	**0.0044483986**	**kN**
Turning moment	Nm	8.85075	lbf·in
	lbf·in	0.112984	Nm
	Nm	0.73756	lbf·ft
	lbf·ft	1.3559	Nm
Performance	HP (DIN HP)	0.7355	kW
	kW	1.3596	HP (DIN HP)

LWE/LTR 1100-009/25105-02-02/en

copyright © Liebherr-Werk Ehingen GmbH 2023

	Initial unit	Multiplication factor	Target unit
Speed	m/s	39.37	in/s
	in/s	0.0254	m/s
	m/s	**3.28084**	**ft/s**
	ft/s	**0.3048**	**m/s**
	km/h	0.62137	mph (mi/h)
	mph (mi/h)	1.60935	km/h
	m/s	2.2369	mph (mi/h)
	mph (mi/h)	0.44704	m/s
Pressure	kPa (kN/m²)	0.01	bar
	bar	100	kPa (kN/m²)
	bar	14.5038	psi
	psi	0.06895	bar
	kPa (kN/m²)	**0.145038**	**psi**
	psi	**6.894759**	**kPa (kN/m²)**
	N/cm²	1.450377	psi
	psi	0.6894759	N/cm²
	N/m²	0.000145038	psi
	psi	6894.759	N/m²
	t/m²	204.81	lbs/ft²
	lbs/ft²	0.0048828	t/m²
Load-related area	m²/t	0.004882	ft²/lbs
	ft²/lb	204.81	m²/t
Temperature	**°C**	**([°C] · 1.8) + 32**	**°F**
	°F	**([°F] - 32) / 1.8**	**°C**

Conversion chart

LWE/LTR 1100-009/25105-02-02/en

copyright © Liebherr-Werk Ehingen GmbH 2023

Contents

1 Description of crane

1.01 Terminology 1

1	Crane components	3
2	Boom	7
3	Equipment designation	7
4	Ground connection	8

1.02 Product description 1

1	Crawler travel gear	2
2	Crane superstructure	2
3	Auxiliary equipment*	4

1.03 Technical data 1

1	Dimensions	5
2	Operating and load conditions	5
3	Weights	5
4	Crane data	6
5	Noise emission	6
6	Vibrations	6
7	Speeds	7
8	Ropes	7
9	Lifting heights	7

1.03.10 Outrigger pads 1

1	Description	2
2	Safety	2
3	Fastening the outrigger pad	5
4	Technical track pad data for cranes with a telescopic boom	8
5	Technical outrigger pad data for cranes with a lattice mast boom	24

2 Safety

2.03 Job planning 1

1	Planning Crane operation	3

2.04 Technical safety instructions 1

1	Dangers on the crane	2
2	Safe working environment	4
3	Definition of roles	5
4	Instructions to personnel	11
5	Danger zone of the crane	12
6	Traffic endangerment and environmental damage	13
7	Endangering air traffic	13
8	Movement on the crane	14
9	Emergency exit - driver's cab	16
10	Emergency crane cab exit	16
11	Personal protective equipment	20
12	Supplied fire extinguisher	26

LWE/LTR 1100-009/25105-02-02/en

copyright © Liebherr-Werk Ehingen GmbH 2023

13	Securing persons to prevent them from falling	26
14	Saving personnel	28
15	Crane cab	28
16	Side window	36
17	Emergency hammer*	36
18	Transport	37
19	Fastening	40
20	Selecting the location	40
21	Slopes and excavations	44
22	Loads on the ground due to crane operation	47
23	Support	51
24	Alignment of the crane	53
25	Checking the safety measures	54
26	Safety instructions in case of an external power supply	55
27	Grounding for potential equalization	55
28	Working in the vicinity of transmitters	57
29	Crane operation in case of thunderstorms	58
30	Wind influences	59
31	Lifting a load with two cranes	66
32	Overlapping of working ranges of several cranes	68
33	Hand signals for guidance	69
34	Travel operation	77
35	Crane operation	79
36	Lifting of personnel	87
37	Securing personnel on shut off crane	89
38	Welding work on the load	91

2.04.10 Ladders		1
1	Intended use	2
2	Safety instructions	2
3	Safety signs	3
4	Ladder inspection	12
5	User guidelines	12
6	Assembling the ladder	14
7	Ladder access	25

2.05 Signs on the crane		1
1	Signs	2

2.05.10 Labeling of the load carriers		1
1	Identifications on the hook block or load hook	3
2	Identifications on single hook or double hook	4
3	Identifications on auxiliary weights	5

2.06 Fall protection equipment on the crane		1
1	Safety	3
2	Hook points	3
3	Telescopic boom	4
4	Auxiliary boom	6
5	Folding jib	7
6	Special folding jib	9
7	Crane cab	10

LWE/LTR 1100-009/25105-02-02/en

copyright © Liebherr-Werk Ehingen GmbH 2023

8	Turntable	13
9	Winch II	25
10	Transporting the ladder	27

2.07 Accesses to the crane 1

1	Safety	3
2	Climbing up and down the crane chassis	4
3	Ascending and descending the crane superstructure	6
4	Entering and exiting the crane cab	12
5	Walking surfaces and stepping surfaces	13

2.08 Working in low temperatures 1

1	Auxiliary equipment	2
2	Safety	2
3	Environmental / component temperature below -20 °C	3
4	Maintenance	7

2.25 Crane on floating body 1

1	Non-intended use	2
2	Intended use	2
3	Floating device	2
4	Operating conditions	2
5	Crane transport on floating devices	3
6	Increased corrosion	4

3 Crane assembly

3.01 Crawler carrier assembly 1

1	Assembling the crane	3
2	Disassembling the crane	50
3	Unloading / loading the crane from / onto an extra wide transport vehicle	77

3.03 Central ballast 1

1	Assembling and disassembling the central ballast	3

3.80 Crane and crane component transport 1

1	Safety	3
2	Crane	4
3	Loading the crane with auxiliary cranes*	7
4	Driving the crane on / off the transport vehicle	9
5	Rigging	11
6	Securing the crane	12

4 Operation of crane superstructure

4.01 Operating and monitoring instruments on the crane superstructure 1

1	Crane cab inside and outside	3
2	Control platform	5
3	Pedal carrier	7
4	LMB emergency operation	9
5	Control elements	9
6	Roof instrument panel	10
7	Side panel	11

LWE/LTR 1100-009/25105-02-02/en

copyright © Liebherr-Werk Ehingen GmbH 2023

8	Control panels	13
9	Climate control	39
10	Operating and control unit (BKE)	44

4.02 LICCON computer system		1
1	General	2
2	System start of the LICCON computer system	4
3	Operating elements of the LICCON computer system	5
4	The set up program	7
5	Crane operation program	15
6	The Telescoping program	65
7	The working range limitation program*	74
8	Speed reduction master switch	78
9	Setting the operating mode of the slewing gear	82
10	Track width monitoring without shut-off of crane movement	84
11	Track width monitoring with shut off of crane movement*	85
12	ECO-Mode	88
13	Power-save mode and Stand-by mode in the LICCON computer system	94

4.03 Start up and shut down of crane		1
1	Inspections	2
2	Monitoring functions	5
3	Diesel particle filter (DPF)*	6
4	*Exhaust system* cleaning procedure	11
5	Crane driver's seat Version 1	12
6	Crane driver's seat Version 2	17
7	Control platform	19
8	Step	21
9	Crane cab	23
10	Hydraulic oil preheating*	26
11	LICCON computer system	27
12	Disengaging / engaging the coupling control on the pump distributor gear	30
13	Starting the engine	32
14	Turning the engine off	33
15	Indicator lights	35
16	Window wiper / window washer system	35
17	Hook block	36

4.03.50 Adjustment of the track width		1
1	Track adjustment through crawler carrier relief	3
2	Adjusting the track width with the master switch	15
3	Adjusting the track width with the Bluetooth Terminal	27
4	Adjusting the track width with the radio remote control*	37

4.04 Safety equipment		1
1	General	3
2	Crane geometry quick test	3
3	Overload protection quick test	3
4	LICCON computer system	3
5	Safety equipment on the crane	9

4.05 Crane operation		1

LWE/LTR 1100-009/25105-02-02/en

copyright © Liebherr-Werk Ehingen GmbH 2023

1	Description	2
2	Safety instructions	2
3	Prerequisites for crane operation	3
4	Master switch	3
5	Pinning the crane superstructure	8
6	Master switch assignment	10
7	Luffing	10
8	Lifting / lowering	12
9	Turning	16
10	Telescoping	22

4.06 Rope reeving	1

1	Wire ropes and rope end connections	2
2	Hoist rope lug*	3
3	Moveable back pulley*	6
4	Hoist rope	7
5	Hook block	16
6	Load hook	19
7	Two-part hoist limit switch weight	22
8	One-part hoist limit switch weight	25
9	Assembling / disassembling the wedge lock	27
10	Auxiliary pulley*	39
11	Rope reeving	40

4.07 Counterweight	1

1	Safety	2
2	Description	5
3	Counterweight combinations	7
4	Checking the counterweight plates	8
5	Permissible telescopic boom angle when picking up the counterweight	8
6	Permissible incline for ballasting	8
7	Assembling	10
8	Ballast monitoring	21
9	Counterweight error message	25
10	Disassembling	28

4.08 Working with a load	1

1	Safety instructions	3
2	Checks before starting to work with the crane	4
3	Telescoping crane movement	5
4	Taking on a load	7
5	Load weighing and load display	13
6	Crane operation	18
7	Ram work or pulling sheet piles	19
8	Crane rope pretension	20

4.10 Driving from the crane cab	1

1	Prerequisites for driving the crane (crawler operation)	2
2	Displays for center of gravity, surface pressure and incline on the LICCON monitor	6
3	Preparing for crane driving	13
4	Driving the crane: Load chart available	15
5	Driving the crane: No load chart is available	17

LWE/LTR 1100-009/25105-02-02/en

copyright © Liebherr-Werk Ehingen GmbH 2023

6	Crawler crane in crawler operation	20
4.12 Two hook operation		1
1	Auxiliary boom	3
2	Hook operation	7
3	Two hook operation monitored / Two hook operation not monitored	10
4	Safety instructions	11
5	Boom nose on telescopic boom	13
6	Auxiliary jib on the telescopic boom	14
7	Folding jib	15
8	Strong lattice jib	17
9	Fixed lattice jib	18
10	Boom nose on the fixed lattice jib	19
11	Auxiliary jib on the fixed lattice jib	21
12	Luffing lattice jib	22
13	Boom nose on the luffing lattice jib	23
14	Auxiliary jib on the luffing lattice jib	24
15	Lifting a joint load	26
4.20 Procedure for shut-off of crane movement		1
1	General	3
2	Instructions for resuming crane movement	19

5 Equipment

5.01 Technical safety instructions for assembly and disassembly		1
1	Equipment	2
2	Rope pulleys	2
3	Ropes	2
4	Fiber guy ropes	4
5	Control measures before crane operation	9
6	Relapse cylinders	11
7	Pneumatic springs	11
8	Manual rope winches	12
9	Weights	12
10	Guy rods	13
11	Auxiliary guying	14
12	Bypassing the overload protection	14
13	Bypassing the hoist top shut-off	16
14	Pin connections	17
15	Retaining elements	22
16	Assembling / disassembling	31
17	Erecting / taking-down	93
18	Walking on a boom component	97
5.02 Folding jib - TK		1
1	Safety	2
2	Folding jibs from other crane types	4
3	Description	7
4	Assembling the folding jib	13
5	Reeving the hoist rope in	35
6	Changing over the mechanical folding jib from 0° to 20° or 40°	37

LWE/LTR 1100-009/25105-02-02/en

copyright © Liebherr-Werk Ehingen GmbH 2023

7	Hydraulic connections	51
8	Electrical connections	57
9	Erecting	63
10	Adjusting the folding jib angle hydraulically*	65
11	Changing over the mechanical folding jib from 20° or 40° to 0°	67
12	Reeving the hoist rope out	79
13	Disassembling the folding jib	81

5.09 Hoist gear 2 1

1	Safety	2
2	Component description	5
3	Assembling	7
4	Disassembling	9

5.10 Boom nose - telescopic boom 1

1	General	3
2	Assembly	5
3	Disassembly	11

5.12 Special folding jib 1

1	Safety	2
2	Special folding jib	5
3	Assembling the special folding jib	7
4	Electrical connections on the special folding jib	23
5	Erecting	27
6	Disassembling the special folding jib	29

5.19 Hook blocks 1

1	Safety	2
2	Hook block / load hook fastening points	3
3	Rope guard	4
4	Transporting the hook block / load hook	5
5	Divisible hook block*	6
6	Overview of the fastening systems	10
7	Fastening system 1	11
8	Fastening system 2	14
9	Fastening system 3	17
10	Slack rope formation	23

5.25 Telescopic boom extension 1

1	Component description	2
2	Telescopic boom extension fastening points	2
3	Assembling	3
4	Disassembling	5

5.31 BTT - Operating element 1

1	Display / operating element BTT	3
2	Start menu of the BTT	12
3	Settings and status displays on the BTT	17
4	Aligning the BTT with the crane	19
5	Crawler travel gear menu	21
6	Engine operation menu	27
7	Support menu	37

LWE/LTR 1100-009/25105-02-02/en

copyright © Liebherr-Werk Ehingen GmbH 2023

8	*Ballasting* menu	45
9	Assembly functions menu	51
10	Menu Test system	65
11	BTT operation	67
12	Measures in case of problems	69

5.70 Camera 1

1	Safety instructions	2
2	Bringing the camera to assembly height	2
3	Bringing the cable drum to the assembly height	3
4	Assembling the camera on the telescopic boom	3
5	Assembling the cable drum on the telescopic boom	5
6	Assembling the cable drum on the auxiliary boom	6
7	Assembling the cable drum on the fixed jib	6
8	Assembling the cable drum on the luffing lattice jib	6
9	Assembling the camera on the auxiliary boom	6
10	Assembling the camera on the fixed jib	10
11	Assembling the camera on the luffing lattice jib	14
12	Establishing the electrical connections	18
13	Checking the electrical connections	29
14	Disconnecting the electrical connections	30
15	Disassembling the camera	30
16	Disassembling the cable drum	31
17	Transporting the camera	32
18	Folding the camera on the winch	32

5.75 Wind speed sensor / airplane warning light 1

1	Safety	2
2	Description	2
3	Disassembling the wind speed sensor in the transport position	3
4	Assembling the wind speed sensor for crane operation	3
5	Electrical connection	10
6	Disassembling the wind speed sensor	10
7	Assembling the wind speed sensor in the transport position	12
8	Transporting the wind speed sensor	13

5.80 Floodlight 1

1	Safety	2
2	Assembling the floodlight	2
3	Electrical connection	3
4	Disassembling the floodlight	4

6 Auxiliary equipment

6.02 Crane operator's cab heater / engine preheating / air conditioning system 1

1	Climate control systems	3
2	Safety instructions	3
3	Climate control	4
4	Air distribution	12
5	Defrosting the window	13
6	Air supply	14
7	Operating the timer	14

LWE/LTR 1100-009/25105-02-02/en

copyright © Liebherr-Werk Ehingen GmbH 2023

8	Air heater*	16
9	Checking the fill level of the fuel container*	17

6.25 Emergency control 1

1	Crane control emergency control	2
2	Preparing for emergency control	7
3	Controlling crane movements via master switches: Preselecting the crane movements for the master switch	13
4	Carrying out the crane movement	21
5	Ending emergency control	35

7 Maintenance and service

7.01 Maintenance and service - General 1

1	Safety	2
2	Warranty and coverage	7
3	Liebherr Customer Service	7
4	Taking an oil sample	8
5	Taking care of the crane	8
6	Storage	14
7	Recommendation for safe disposal	15

7.01.10 Service system 1

1	Description	2
2	Safety instructions	2
3	Calling up the service system	2
4	*Service system* operating interface	3
5	*Service system* function key line	5
6	Maintenance is due	5
7	Selecting the maintenance status	6
8	Resetting the maintenance status	7

7.02 Maintenance and inspection schedule 1

1	Crane operator	3
2	Maintenance personnel	11

7.04 Crane operator maintenance tasks 1

1	Safety	2
2	Diesel engine	2
3	Cooling system	3
4	Air filter system	5
5	Fuel system	6
6	Urea system*	9
7	Exhaust system*	11
8	Compressed air system	12
9	Hydraulic system	12
10	Hydraulic hose lines	18
11	Central lubrication system	19
12	Travel gear	27
13	Crawler chain	29
14	Slewing ring connection	34
15	Slewing gear	36

LWE/LTR 1100-009/25105-02-02/en

copyright © Liebherr-Werk Ehingen GmbH 2023

16	Telescopic boom	37
17	Winch	38
18	Engine preheating auxiliary heater*	40
19	Crane cab auxiliary heater*	43
20	Crane cab window washing system	45

7.05 Maintenance personnel maintenance activities 1

1	Safety	2
2	Fall protection equipment	2
3	Diesel engine	3
4	Cooling system	6
5	Fuel system	13
6	Urea system*	20
7	Exhaust system*	23
8	Air filter system	26
9	Compressed air system*	28
10	Hydraulic system	29
11	Hydraulic hose lines	36
12	Central lubrication system	37
13	Travel gear	45
14	Crawler chain	47
15	Slewing ring connection	51
16	Slewing gear	52
17	Winch	53
18	Telescopic boom	61
19	Rope pulleys	68
20	Crane ropes	69
21	Crane cab heating-air conditioner device	82
22	Crane cab auxiliary heater*	86
23	Engine preheating auxiliary heater*	87
24	Electrical system	88

7.06 Fill quantities, lubrication chart 1

1	Fill quantities	3
2	Lubrication schedule	4

7.07 Operating fluids and lubricants 1

1	Specified service fluids and lubricants for Liebherr cranes	3

8 Inspections of cranes

8.01 Periodic crane inspections 1

1	General information	2
2	Inspecting load bearing crane structures, especially steel structures	4
3	Inspecting the locking system of the telescopic boom	89
4	Inspection of the screws in the adjustment plates	91
5	Checking the safety ropes and anchor points	92
6	Inspecting the load handling equipment and assembly aids	94
7	Inspecting of fastening equipment	94
8	Inspecting the hydro reservoir	95
9	Inspecting the relapse cylinders	95
10	Inspecting the rope pulleys	96

LWE/LTR 1100-009/25105-02-02/en

copyright © Liebherr-Werk Ehingen GmbH 2023

11	Inspecting the carrier rollers	97
12	Inspecting the extension conditions of sliding beams	98
13	Inspecting the inclination sensor	99
14	Inspecting the function of the overload protection	100
15	Inspecting the pin connections	100
16	Inspecting the slewing ring connection	101
17	Inspecting the mounting of the load bearing equipment	101
18	Inspecting the tele extension with eccentric, illustration 1	103
19	Inspecting the change over pulleys, illustration 2	104
20	Inspecting the oil and fuel tanks	104

8.01.10 Inspection plan		1
1	Authorized inspector	2

8.03 Inspecting of winches		1
1	Inspecting the hoist and retracting winches	3
2	Inspection of the auxiliary reeving winch, recovery winch and spare wheel winch	5
3	Monitoring the winches	5

8.04 Inspection of crane wire ropes		1
1	Crane ropes	3
2	Importance of inspection	3
3	Personal protective equipment	3
4	Inspection personnel qualification	3
5	Unscheduled inspection	3
6	Intervals	4
7	Areas	4
8	Documenting inspection results	5
9	Wire ropes and rope end connections	5
10	Degree of severity	8
11	Rope diameter abbreviations	8
12	Distortions and mechanical damage	8
13	Removal criteria overview	8
14	Checking for broken strands	10
15	Determining the number of broken wires	10
16	Checking the rope end connection	15
17	Checking the rope diameter	15
18	Corrosion	18
19	Corkscrew-like distortion	20
20	Basket formation	21
21	Protruding, distorted insert or strand	22
22	Loop formation	23
23	Kinking or rope loops pulled closed	24
24	Buckles	25
25	Effects of heat, arcs	26
26	Combined degree of severity	26
27	Flattenings	26
28	Current inspection checklist	31

8.05 Inspection of load hooks		1
1	Safety instructions	2
2	Inspection intervals	2

LWE/LTR 1100-009/25105-02-02/en

copyright © Liebherr-Werk Ehingen GmbH 2023

3 Checking the load hook 2

8.06 Inspection of hydraulic hose lines 1
1 Safety guidelines 3
2 Inspection intervals 3
3 Checking the end of the service life 3
4 Inspecting the hydraulic hose lines for damage 4
5 Inspecting the hydraulic hose lines for leaks 5
6 Documenting the inspection 5
7 Replacing hydraulic hose lines 5

8.17 Inspection of ladders 1
1 Safety instructions 3
2 Inspection intervals 3
3 Inspecting the ladders 3
4 Inspection sheet and check list 3

8.90 Inspection chart for cranes 1
1 Inspection chart for recurring inspections of Liebherr cranes 3

90 Appendix

90.01 Preface to the appendix 1
1 Foreword 3

90.05 Update confirmation 1
1 Change confirmation form 3
2 Update confirmation 3
3 Customer information 4

LWE/LTR 1100-009/25105-02-02/en

copyright © Liebherr-Werk Ehingen GmbH 2023

1 Description of crane

LWE/LTR 1100-009/25105-02-02/en

copyright © Liebherr-Werk Ehingen GmbH 2023

LWE/LTR 1100-009/25105-02-02/en

copyright © Liebherr-Werk Ehingen GmbH 2023

1.01 Terminology

1	Crane components	3
2	Boom	7
3	Equipment designation	7
4	Ground connection	8

LWE/LTR 1100-009/25105-02-02/en

copyright © Liebherr-Werk Ehingen GmbH 2023

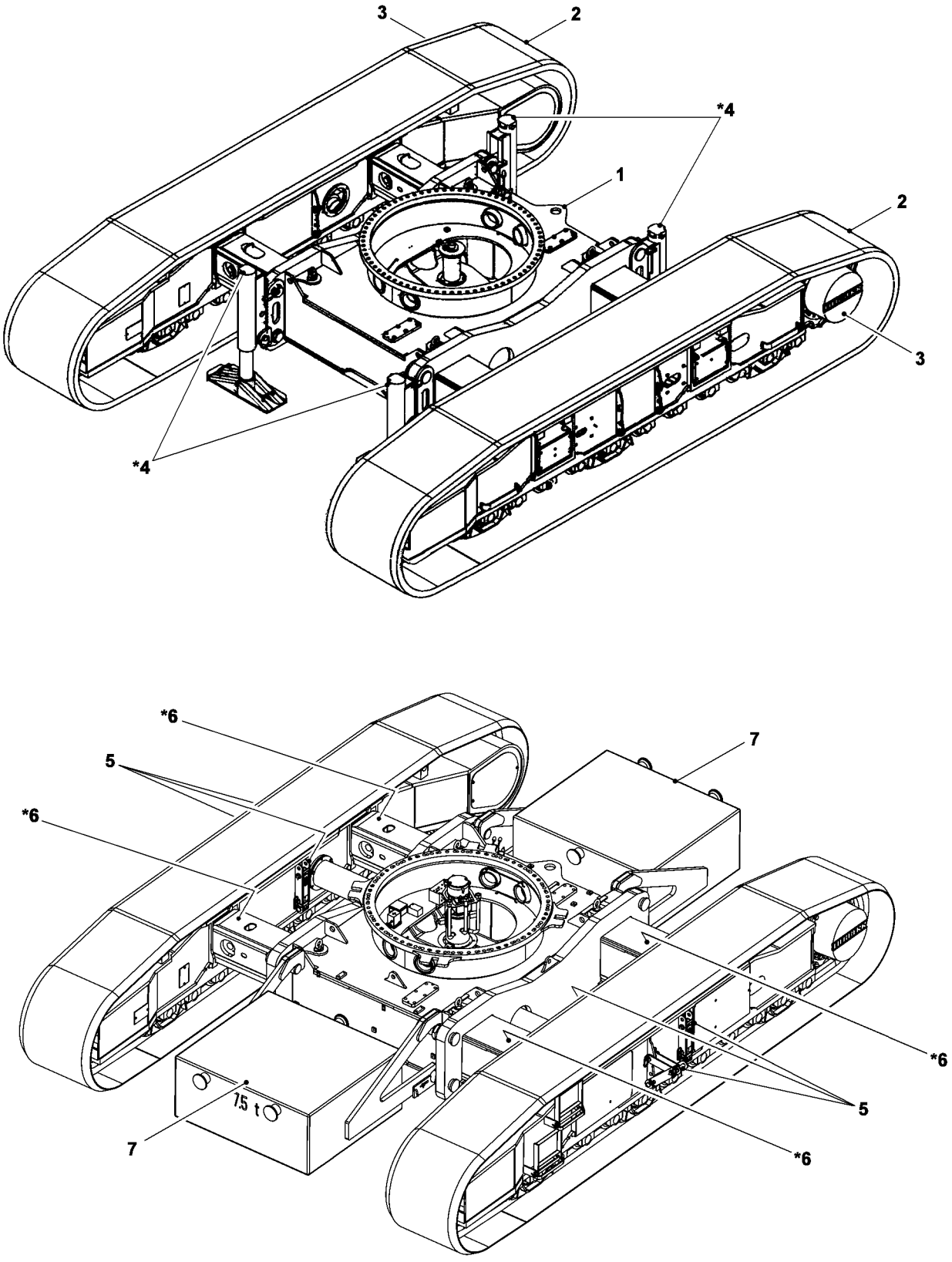

LWE/LTR 1100-009/25105-02-02/en

Fig.198746

copyright © Liebherr-Werk Ehingen GmbH 2023

1 Crane components

1.1 Crawler travel gear

1 Crawler center section
2 Crawler carrier
3 Travel gear
4 Hydraulic assembly support*
5 Transport retainers*
6 Beams for track adjustment*
7 Central ballast

LWE/LTR 1100-009/25105-02-02/en

copyright © Liebherr-Werk Ehingen GmbH 2023

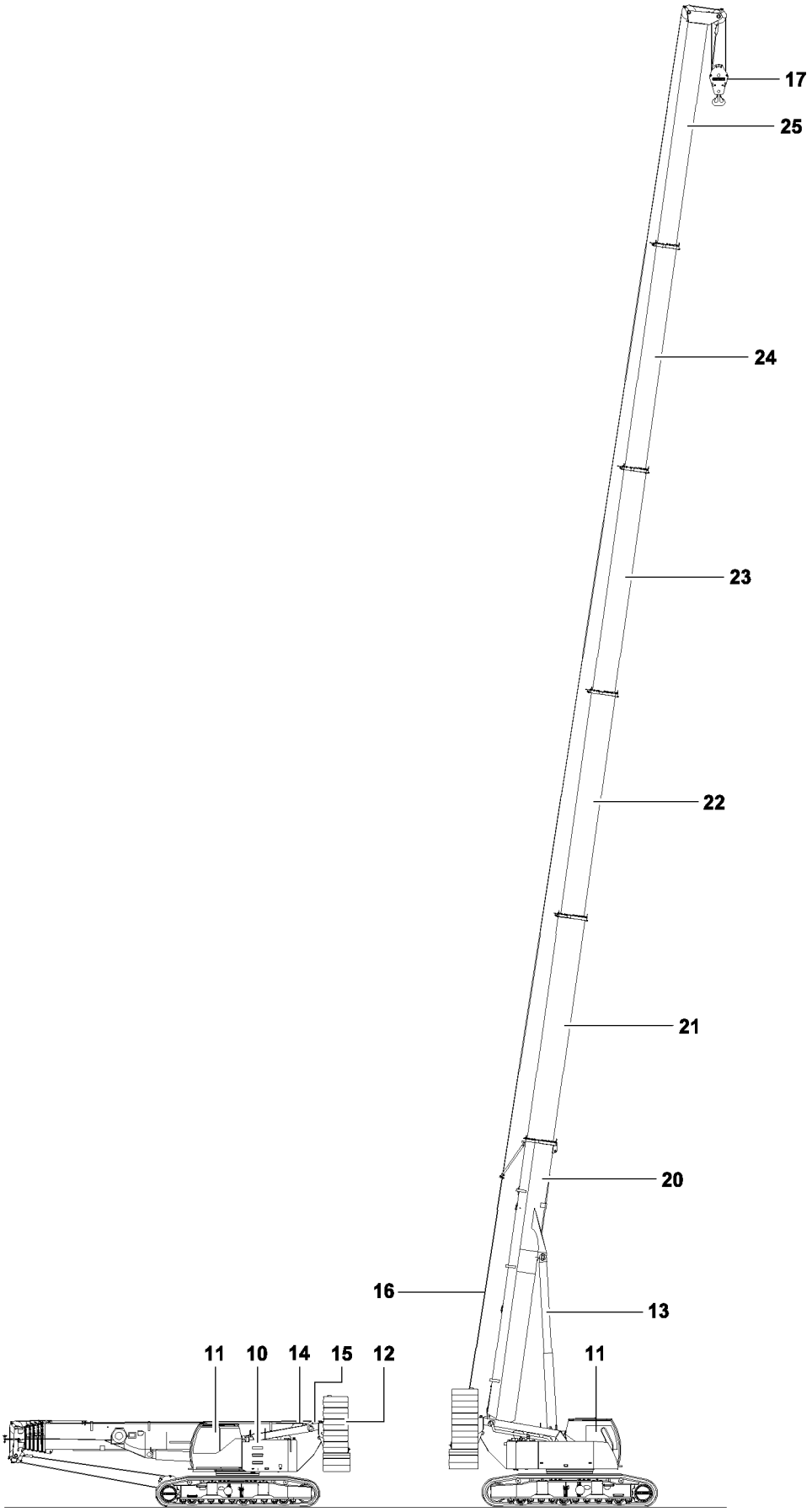

Fig.198747

LWE/LTR 1100-009/25105-02-02/en

copyright © Liebherr-Werk Ehingen GmbH 2023

1.2 Crane superstructure

10 Crane engine
11 Crane cab
12 Counterweight
13 Luffing cylinder
- For telescopic boom adjustment

14 Winch 1
15 Winch 2*
16 Hoist rope*
17 Hook block*

1.3 Telescopic boom (T)

20 Pivot section
21 Telescopic section 1
22 Telescopic section 2
23 Telescopic section 3
24 Telescopic section 4
25 Telescopic section 5

LWE/LTR 1100-009/25105-02-02/en

copyright © Liebherr-Werk Ehingen GmbH 2023

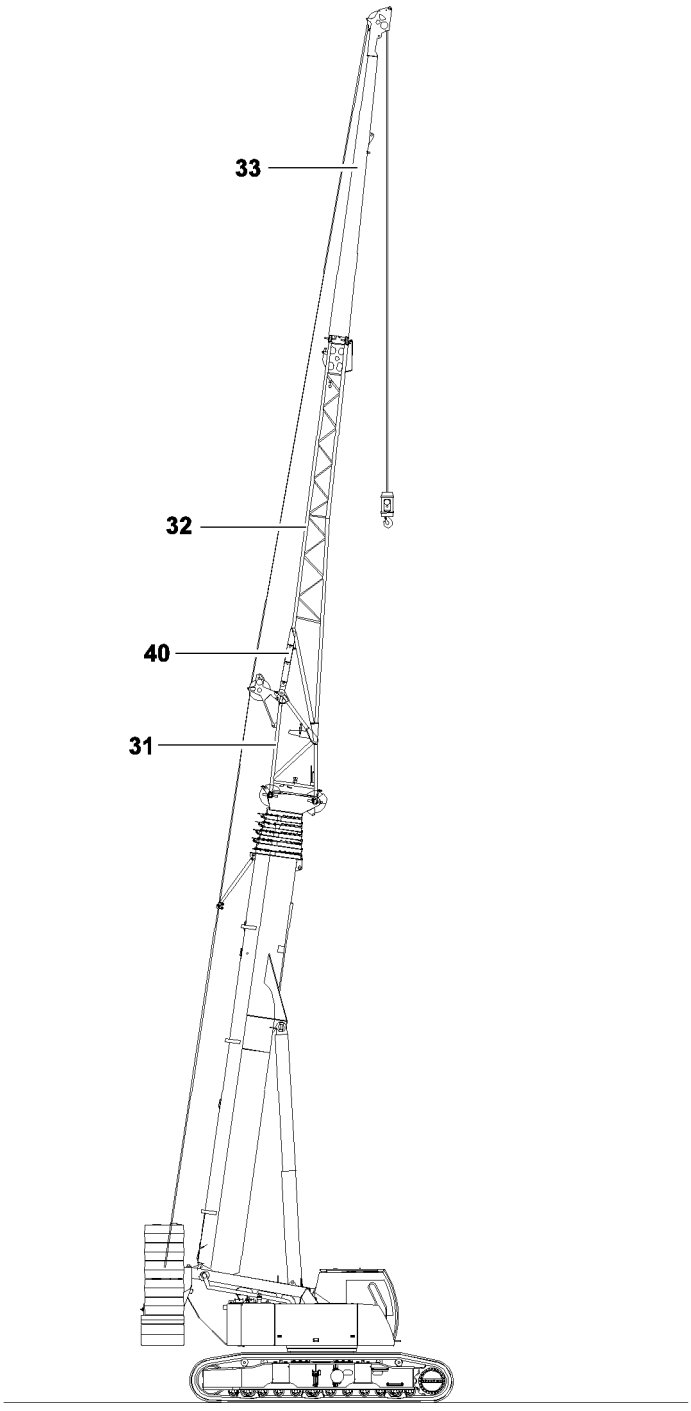

LWE/LTR 1100-009/25105-02-02/en

Fig.198748

copyright © Liebherr-Werk Ehingen GmbH 2023

2 Boom

2.1 Folding jib (TK)*

31 Adapter
32 Pivot section
33 End section

2.2 Hydraulically adjustable folding jib (TNZK)*

31 Adapter
32 Pivot section
33 End section
40 Control cylinder

3 Equipment designation

If a telescopic boom extension is used when operating the hydraulic folding jib (3A-35), then the hydraulic telescopic boom extension (3A-14) is required.

When operating the mechanical folding jib (3A-34), the mechanical telescopic boom extension (3A-13) or the hydraulic telescopic boom extension (3A-14) can be used.

3.1 Folding jib

Component	Length	Designation
Hydraulic double folding jib	19 m	3A-35
Hydraulic single folding jib	10.75 m	
Mechanical double folding jib	19 m	3A-34
Mechanical single folding jib	10.75 m	
Special folding jib	2.9 m	3A-24

3.2 Telescopic boom extension

Component	Length	Designation
Hydraulic telescopic boom extension	7 m	3A-14
Mechanical telescopic boom extension	7 m	3A-13

3.3 Winch 2

Component	Designation
Winch 2	4B-23

LWE/LTR 1100-009/25105-02-02/en

copyright © Liebherr-Werk Ehingen GmbH 2023

4 Ground connection

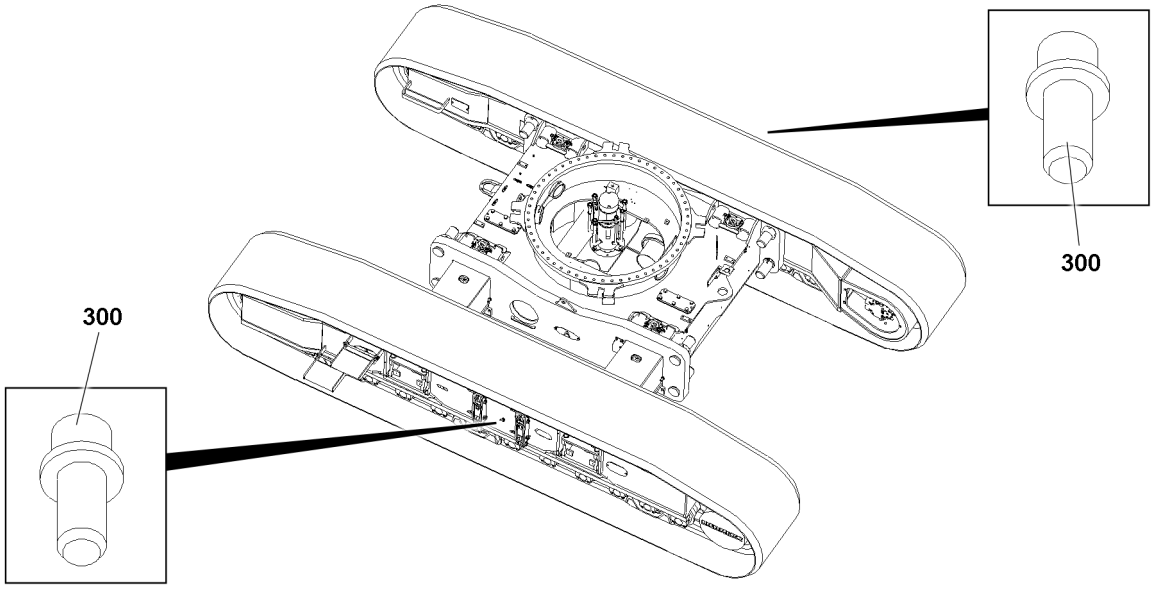

Fig.158650: Crawler carrier ground connection

300 Ground connection

Note

To ground the mobile crane:
► Observe and adhere to the description in chapter 2.04.

LWE/LTR 1100-009/25105-02-02/en

copyright © Liebherr-Werk Ehingen GmbH 2023

1.02 Product description

1	Crawler travel gear	2
2	Crane superstructure	2
3	Auxiliary equipment*	4

LWE/LTR 1100-009/25105-02-02/en

copyright © Liebherr-Werk Ehingen GmbH 2023

1 Crawler travel gear

1.1 Frame

The torsion-free box construction consists of:

- Crawler center section
- Left crawler carrier
- Right crawler carrier

The crawler carriers can be removed from the telescoping beams.

1.2 Hydraulic track width adjustment

Track width adjustment is carried out via two independent, hydraulic cylinders.

They are actuated via two manually actuated directional valves, which are installed on the crawler chassis.

1.3 Tracks

Crawler tracks with 900 mm wide triple grouser track pads

1.4 Travel drive

Travel speed: 0 km/h to 2.8 km/h

Per crawler carrier, a hydraulic travel drive consists of:

- Axial piston variable displacement motor
- Planetary gear with spring loaded hydraulically vented travel brake

The crawler chains can be controlled synchronously as well as independently and counterrotating.

1.5 Central ballast

- Total weight: 15.0 t
- Ballast blocks with 7.5 t each
- Hung and fastened on the crawler center section

2 Crane superstructure

2.1 Frame

In-house manufactured, weight-optimized and distortion-resistant welded structure made from high-strength, close-grained structural steel.

A 3-row slewing ring connection is used as the connecting element to the crawler travel gear, providing unlimited turning.

2.2 Engine

Diesel engine D 944 A7 is installed for this crane.

4-cylinder diesel, manufactured by Liebherr, water cooled

LWE/LTR 1100-009/25105-02-02/en

copyright © Liebherr-Werk Ehingen GmbH 2023

The devices can be equipped with different exhaust aftertreatment systems.

Refer to the diesel engine operating instructions to see which engine exhaust aftertreatment system is installed in your crane.

2.2.1 Engine type D 944 A7-05

Engine exhaust emissions Stage V according to Regulation (EU) 2016/1628

Performance: 129 KW at 1800 rpm
Maximum torque: 1231 Nm at 1000 rpm

2.2.2 Engine type D 944 A7-04

Engine exhaust emissions Tier 4 according to EPA / CARB and ECE-R.96 performance range Q (previously Stage IV according to Directive 97/68/EC)

Performance: 129 KW at 1800 rpm
Maximum torque: 1231 Nm at 1000 rpm

2.2.3 Engine type D 944 A7-03

Engine exhaust emissions according to ECE-R.96 performance range H (previously Stage IIIA according to Directive 97/68/EC)

Performance: 129 KW at 1800 rpm
Maximum torque: 1231 Nm at 1000 rpm

2.3 Crane drive

- Diesel hydraulic with two axial piston variable displacement pumps
- With servo control and power regulation
- One gear double pump, open, regulated oil circuits
- Hydraulic drive in compact design, flanged directly on the diesel engine
- Complete drive aggregate encapsulated for noise reduction

2.4 Control

- Electric „Load Sensing“ control, four working movements simultaneously controllable
- Two self-centering 4-way manual control levers via two 2-way controllable foot pedals
- The crawler track is actuated via two 2-way controllable foot pedals
- Crawler track and crane superstructure can be moved at the same time

2.5 Hoist gear 1

- Axial piston fixed displacement motor
- Liebherr rope winch with built-in planetary gear and spring-loaded stop brake

2.6 Hoist gear 2 replacement ballast

- Installed at the factory if hoist gear 2 is not present

2.7 Luffing gear

One differential cylinder with safety check valves

LWE/LTR 1100-009/25105-02-02/en

copyright © Liebherr-Werk Ehingen GmbH 2023

2.8 Slewing gear

- Axial piston fixed displacement motor
- Planetary gear
- Spring-loaded stop brake

2.9 Crane driver’s cab

- Corrosion resistant steel cab
- Large field of visibility, safety glass
- Comfort features
- To improve visibility, can be tilted back 20°

2.10 Safety equipment

- LICCON2 overload system
- Test system
- Hoist limitation
- Safety valves against pipe and hose breaks

2.11 Telescopic boom

- Constructionally safe and torsion-resistant design made from high-strength, close-grained structural steel with oval boom profile
- One pivot section and five telescopic sections
- Telescopic sections are hydraulically extendable, independently of each other
- „Telematik“ rapid-cycle telescoping system
- Boom length: 11.5 m to 52.0 m

2.12 Counterweight

- Total weight: 26 t
- Counterweight plates with 10 t each and with 3 t each

2.13 Electrical system

Modern data bus technology

3 Auxiliary equipment*

3.1 Folding jib

- 10.8 m to 19.0 m long.
- Can be attached under 0°, 20° or 40° to the telescopic boom
- Hydraulic cylinder for stepless adjustment of folding jib from 0° to 40°

3.2 Jib boom

Length: 2.9 m

LWE/LTR 1100-009/25105-02-02/en

copyright © Liebherr-Werk Ehingen GmbH 2023

3.3 Hoist gear 2

- For 2-hook operation
- **or:** For operation with the folding jib, if the main hoist rope is to remain reeved

3.4 Auxiliary counterweight

- 6.0 t for a total counterweight of 32 t
- Counterweight plates with 3 t each

3.5 Jack-up cylinder

- For crawler carrier disassembly
- Flatbed trailer passage height: 1.1 m
- Flatbed trailer passage width: 3.0 m

3.6 Track pads

900 mm wide flat base plates

LWE/LTR 1100-009/25105-02-02/en

copyright © Liebherr-Werk Ehingen GmbH 2023

Empty page!

LWE/LTR 1100-009/25105-02-02/en

copyright © Liebherr-Werk Ehingen GmbH 2023

1.03 Technical data

1	Dimensions	5
2	Operating and load conditions	5
3	Weights	5
4	Crane data	6
5	Noise emission	6
6	Vibrations	6
7	Speeds	7
8	Ropes	7
9	Lifting heights	7

LWE/LTR 1100-009/25105-02-02/en

copyright © Liebherr-Werk Ehingen GmbH 2023

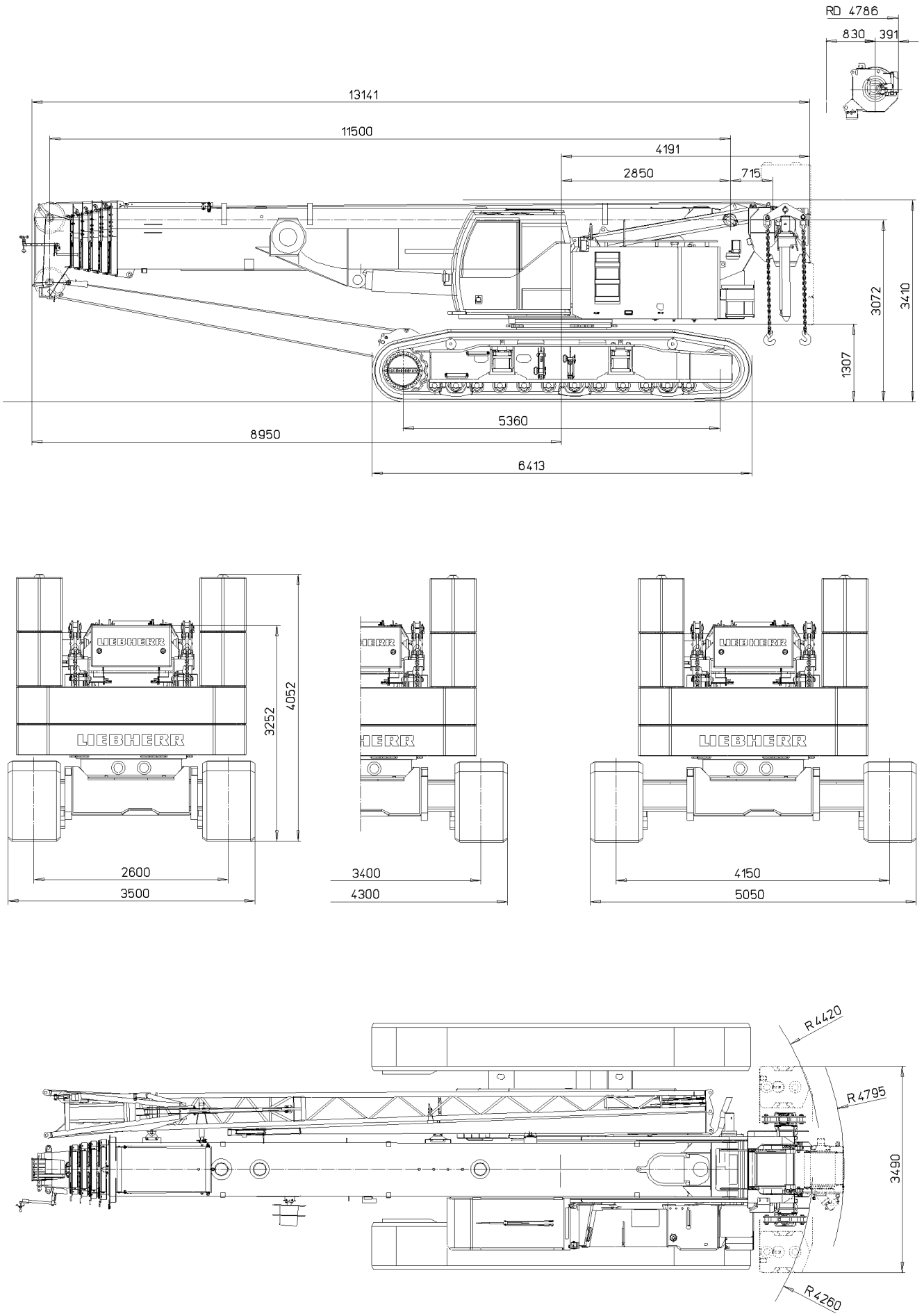

Fig.114063

LWE/LTR 1100-009/25105-02-02/en

copyright © Liebherr-Werk Ehingen GmbH 2023

52,6 t

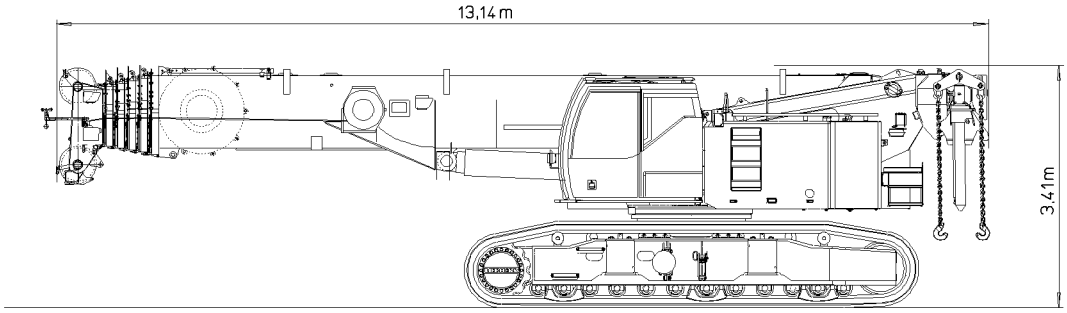

35,2 t

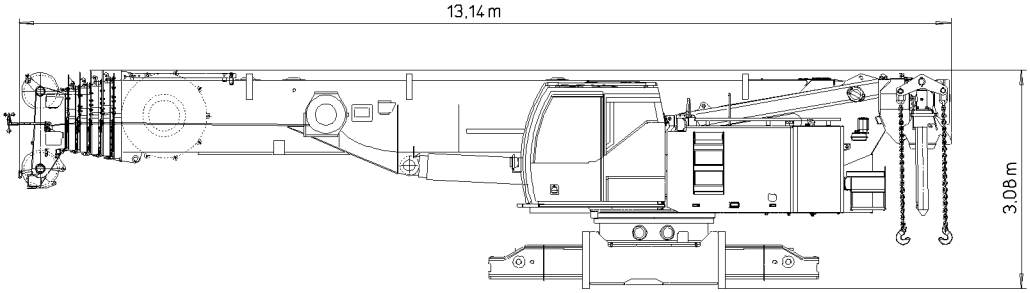

36,6 t

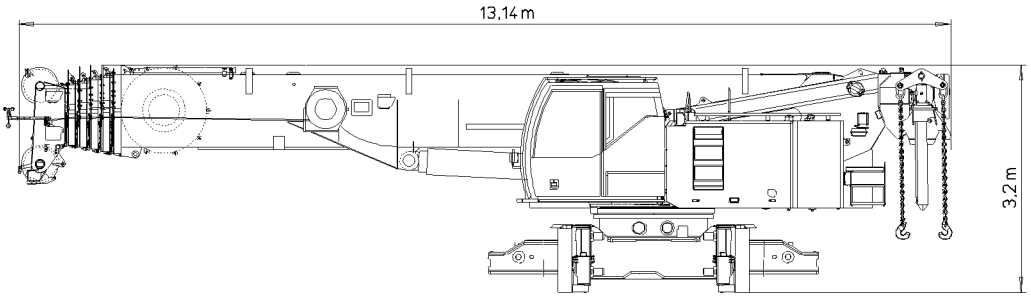

9,9 t

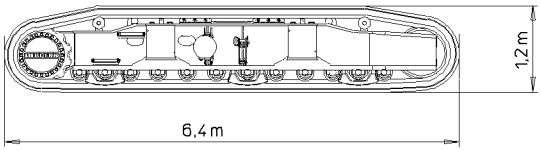

1,67 t (1,8 t)

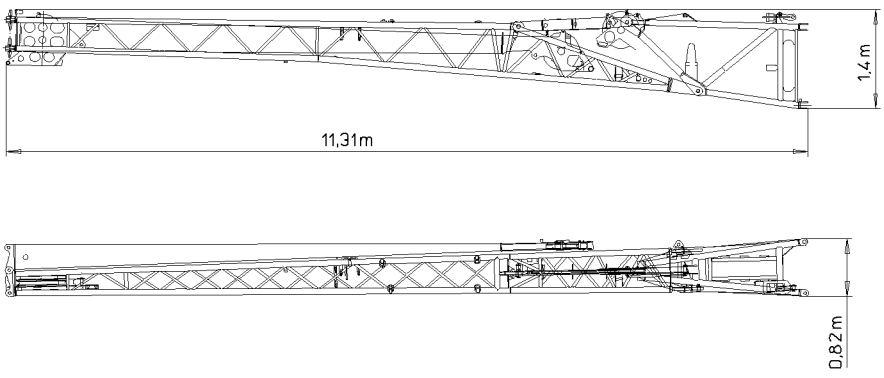

Fig.110976

LWE/LTR 1100-009/25105-02-02/en

copyright © Liebherr-Werk Ehingen GmbH 2023

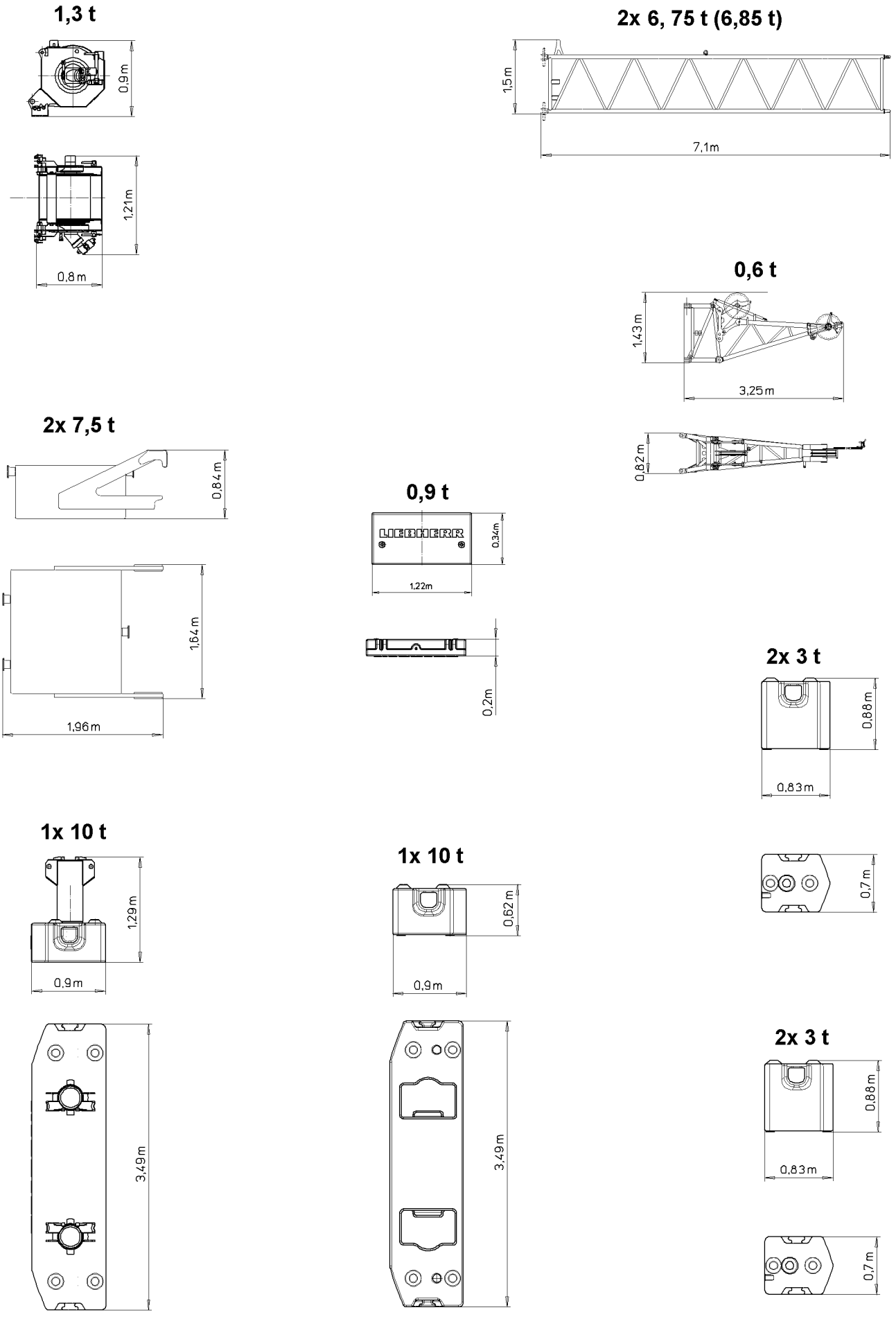

Fig.105824

LWE/LTR 1100-009/25105-02-02/en

copyright © Liebherr-Werk Ehingen GmbH 2023

1 Dimensions

See illustrations.

2 Operating and load conditions

Name	Value
Maximum number of operation cycles (N)	63000
Class according to ISO 4301-2	A1
Collective class according to ISO 4301-1	Q_1 = light k_p = 0.125

Operating and load conditions

3 Weights

3.1 Crane

Quantity	Component	Weight
	Turntable with telescopic boom **and** crawlers	52.6 t
	Turntable with telescopic boom **without** crawlers **without** „jack-up system*“	35.2 t
	Turntable with telescopic boom **without** crawlers **with** „jack-up system*“	36.6 t
2	Crawlers with outrigger pads	9.9 t
1	Mechanical folding jib*	1.67 t
1	Hydraulic folding jib*	1.8 t
2	Mechanical telescopic boom extension*	6.75 t
2	Hydraulic telescopic boom extension*	6.85 t
1	Winch 2*	1.3 t
1	Jib boom*	0.6 t
2	Central ballast	7.5 t
1	Replacement ballast for winch 2	0.9 t
1	Base plate	10 t
1	Counterweight plate	10 t
4	Counterweight plates	3 t

LWE/LTR 1100-009/25105-02-02/en

copyright © Liebherr-Werk Ehingen GmbH 2023

3.2 Load handling equipment

Load	Pulleys	Strands	Net weight
100 t	7	14	1.2 t
90 t	5	11	0.7 t
59 t	3	7	0.5 t
26 t	1	3	0.45 t
8.8 t	-	1	0.25 t

4 Crane data

Crane data	
Total propelling force	660 kN
Maximum ground pressure with nominal load	1550 kN/m²
Total weight with 32 t counterweight, 15 t central ballast and 3-pulley hook block	approx. 102 t

5 Noise emission

Name	Value
Emissions sound pressure level [L_{pA}] in the crane cab (Door and windows closed)	72 dB(A)
Guaranteed sound power level [L_{WA}] of the crane	105 dB(A)

A weighted sound emissions determined according to Annex VIII of Directive 2000/14/EC

6 Vibrations

Name	Value
Vibrations on the arms	< 2.5 m/s²
Vibrations on the whole body	< 0.5 m/s²

Vibrations transmitted to the operator determined according to EN 12096:1997, Table D.1

LWE/LTR 1100-009/25105-02-02/en

copyright © Liebherr-Werk Ehingen GmbH 2023

7 Speeds

7.1 Travel speeds

Gear	Speed
Creeper gear	0 - 1 km/h
Rapid gear	0 - 2.8 km/h

7.2 Crane speeds

Drives	Infinitely variable	Rope / rope length
Hoist gear 1	0 m/min – 110 m/min for single strand	21 mm / 200 m
Hoist gear 2	0 m/min – 110 m/min for single strand	21 mm / 200 m
Slewing gear	0 rpm – 1.8 rpm	
Luffing gear	Approx. 60 s -2° to 82° boom position	
Telescoping	Approx. 360 s for boom length 11.5 m – 52 m	

8 Ropes

Components	Rope diameter	Rope category number RCN
Hoist rope 1	21 mm	See the rope certificate
Hoist rope 2	21 mm	See the rope certificate

9 Lifting heights

LWE/LTR 1100-009/25105-02-02/en

copyright © Liebherr-Werk Ehingen GmbH 2023

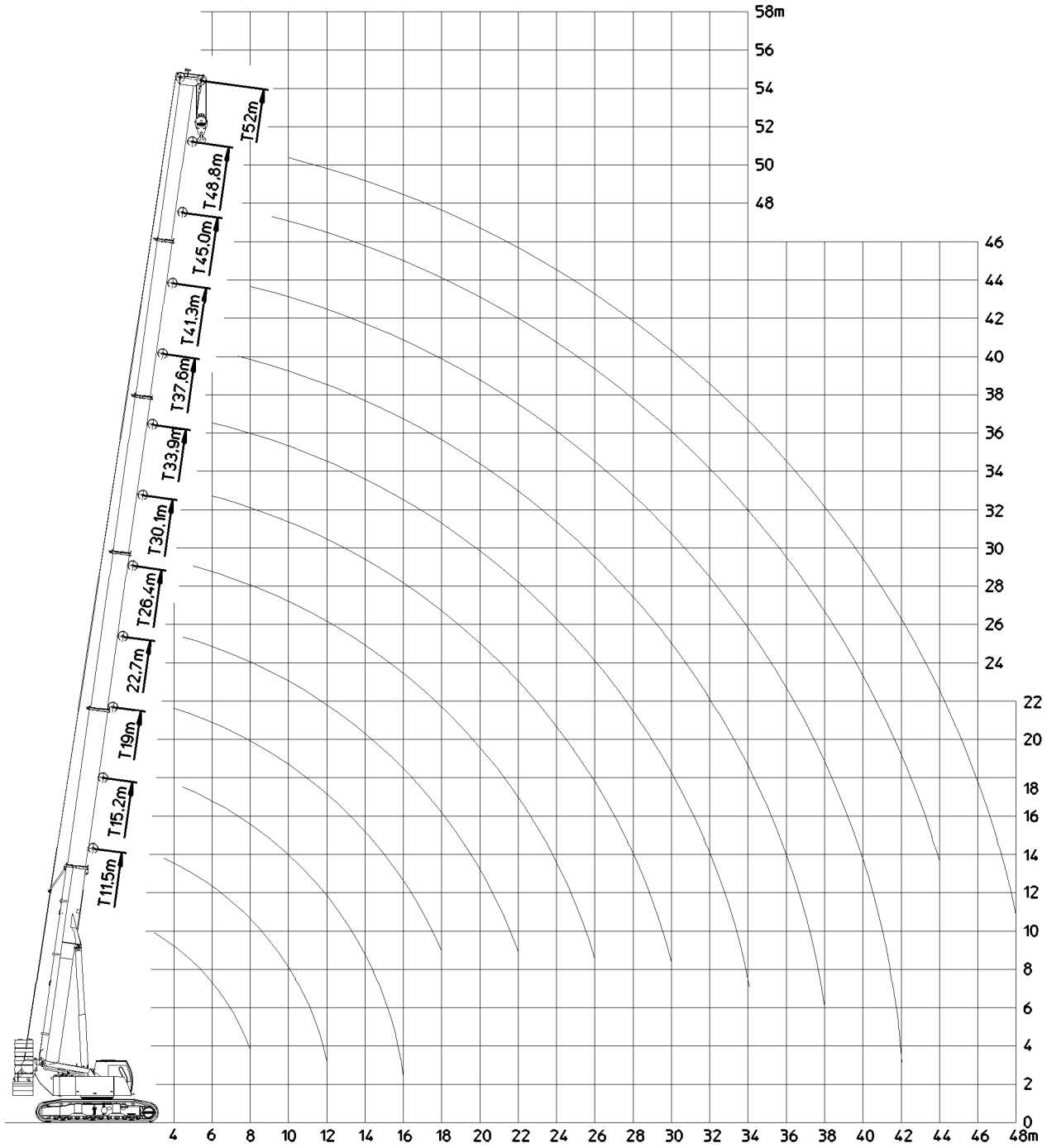

Fig.198675: Telescopic boom (T)

LWE/LTR 1100-009/25105-02-02/en

copyright © Liebherr-Werk Ehingen GmbH 2023

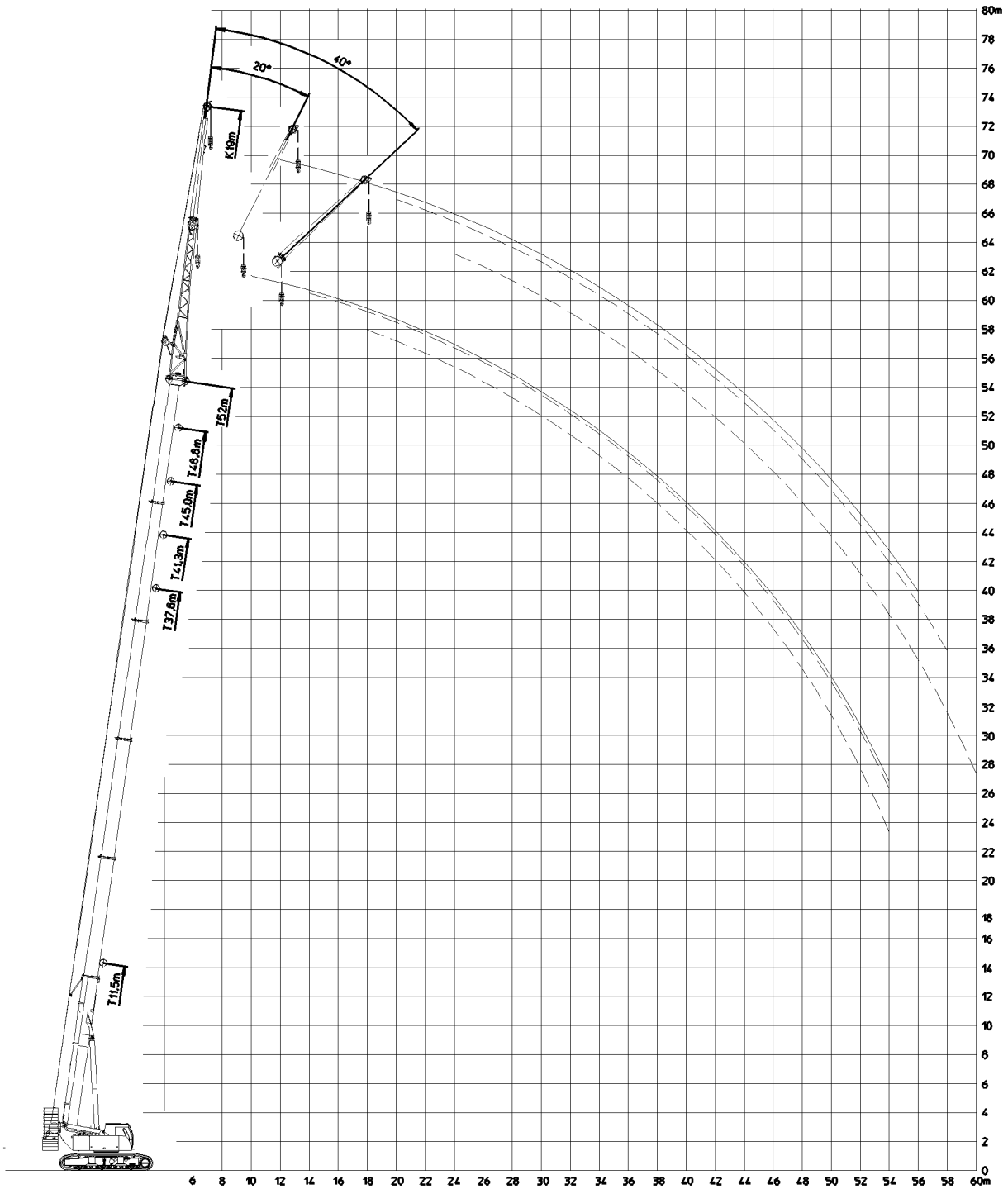

Fig.198676: Telescopic boom with folding jib (TK)

LWE/LTR 1100-009/25105-02-02/en

copyright © Liebherr-Werk Ehingen GmbH 2023

Empty page!

LWE/LTR 1100-009/25105-02-02/en

copyright © Liebherr-Werk Ehingen GmbH 2023

1.03.10 Outrigger pads

1	Description	2
2	Safety	2
3	Fastening the outrigger pad	5
4	Technical track pad data for cranes with a telescopic boom	8
5	Technical outrigger pad data for cranes with a lattice mast boom	24

LWE/LTR 1100-009/25105-02-02/en

copyright © Liebherr-Werk Ehingen GmbH 2023

1 Description

By using the outrigger pads, the support load is distributed over a large area of the ground. Liebherr-Werk Ehingen GmbH offers different versions of outrigger pads. The outrigger pads suitable for the respective crane type can be taken via the corresponding LWE ID number from the following table „Track pads for support load distribution“.

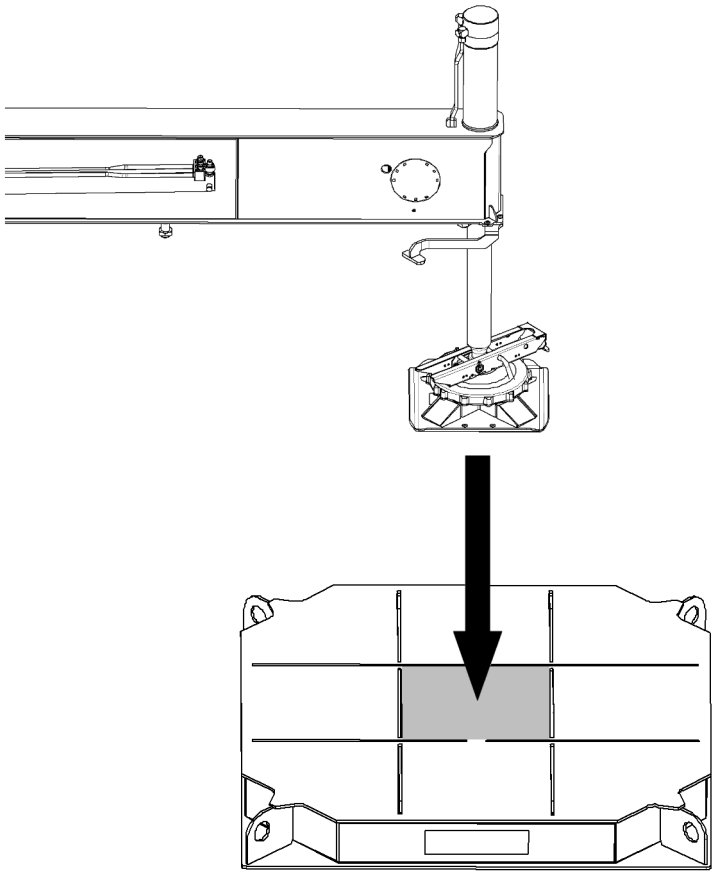

Fig.154813: Sample illustration of a outrigger pad for a crane with a telescopic boom

2 Safety

Before working with the outrigger pads, observe the safety instructions:
- General safety instructions, see chapter 2.04.
- Supporting the crane, see chapter 3.05.
- Installing and driving the outrigger pad (not for all crane types), see chapter 3.05.
- Assembling the outrigger pad (not for all crane types), see chapter 3.10.

WARNING
Impermissible support plate substructure!
The crane can topple over.
Death, bodily injury, property damage.
- ► The ground must be able to safely absorb the occurring forces.
- ► Position a maximum of **one** support plate on **one** outrigger pad.
- ► Place the outrigger pads **centrally** below the support plates.
- ► The outrigger pad must be able to safely absorb the support force.

LWE/LTR 1100-009/25105-02-02/en

copyright © Liebherr-Werk Ehingen GmbH 2023

2.1 Placement width

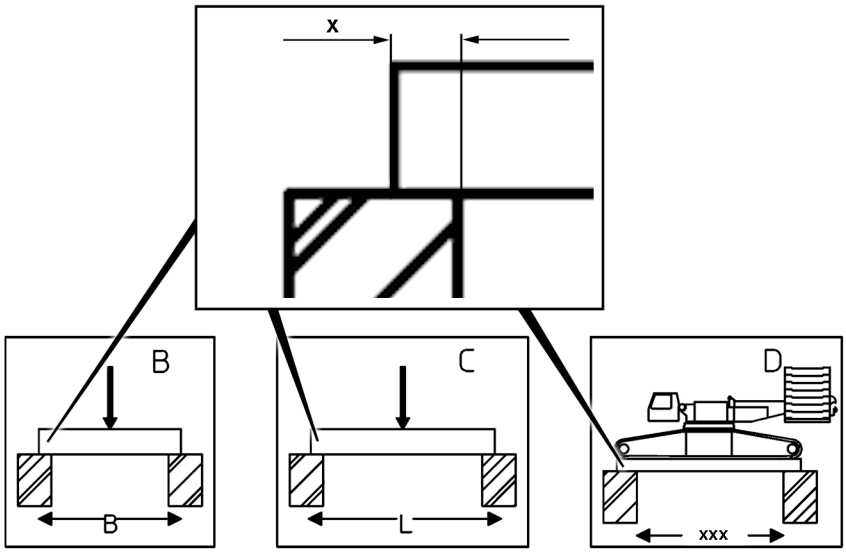

*Fig.154918: Placement width **x***

WARNING
Placement width **x not** adhered to!
The crane can topple over.
Death, bodily injury, property damage.
► Adhere to the placement width **x**.

2.2 Loads on the ground

When the crane is supported, significant forces (support forces) are transferred by the support cylinders via the support plates to the ground, see chapter 2.04. The same applies for crane operation on crawler. In this case, the forces (support forces) are transferred via the crawler plates to the ground.

– The ground must be able to safely withstand the resulting pressure. If the surface area of the crawler plates or support plates is inadequate, a substructure is required according to the load bearing capacity of the ground. Outrigger pads can be used for this.
– The support plate must be placed in the **center** on the outrigger pad. If off-center positioning is permitted, this is indicated for the corresponding outrigger pad with permissible support area.
– The required substructure for outrigger pads can be calculated from the load bearing capacity of the ground and the crawler pressures of the crane, see chapter 2.04. For the calculation examples, an even pressure distribution over the substructure surface is assumed.

Note
► An even pressure distribution over the substructure surface can be obtained by centrally positioning the crawler or the support plates on the outrigger pad.

2.2.1 Permissible load configurations

Pressure forces distribute themselves differently on the ground depending on the support type and the support condition. The permissible load configurations are shown in the following illustration.

LWE/LTR 1100-009/25105-02-02/en

copyright © Liebherr-Werk Ehingen GmbH 2023

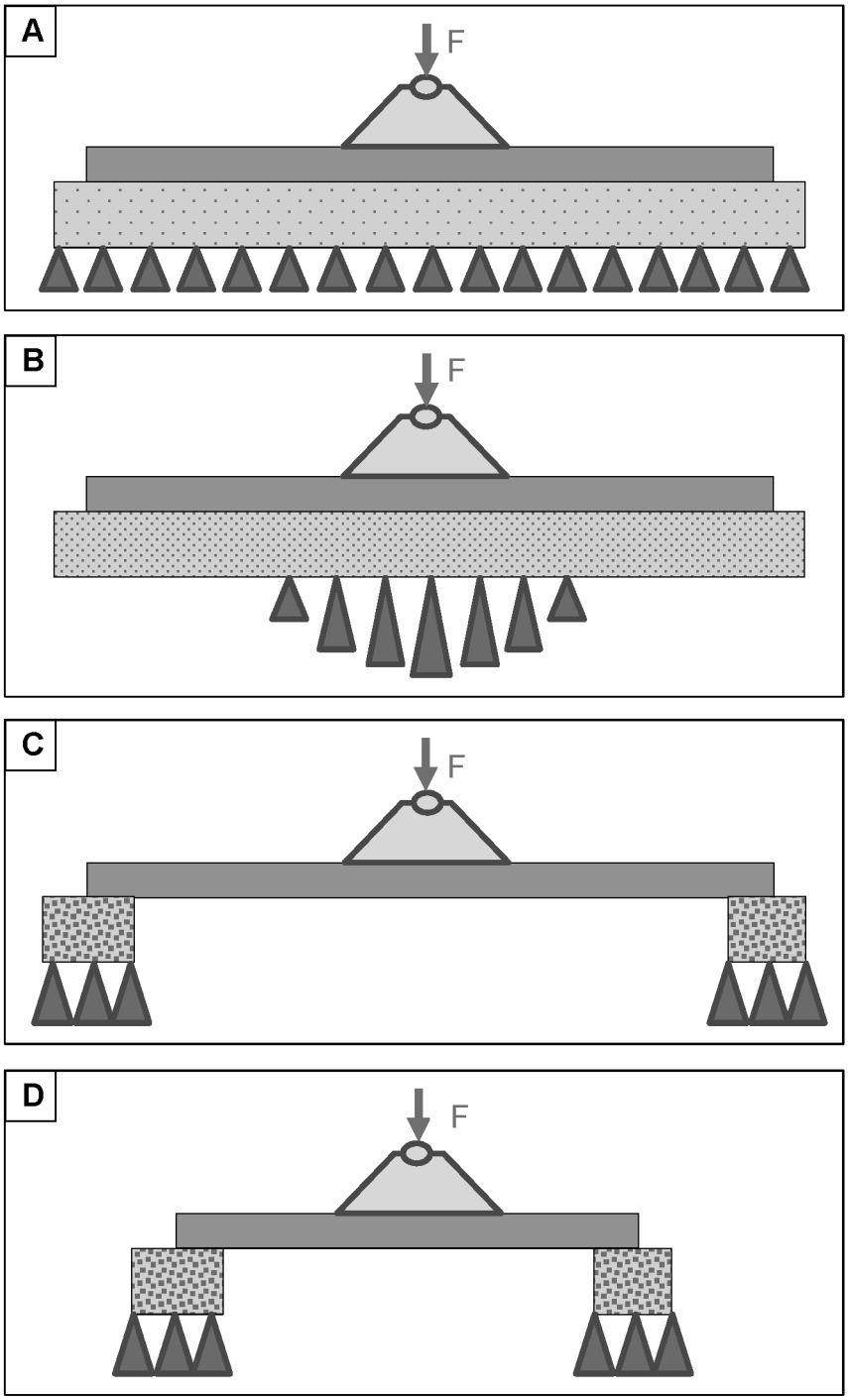

Fig.154921: Permissible load configurations

A Soft ground — even pressure distribution

B Hard ground — concentrated pressure distribution in the middle

C Bridge a cavity (longitudinal direction) — concentrated pressure distribution on the support surface

D Bridge a cavity (cross direction) — concentrated pressure distribution on the support surface

LWE/LTR 1100-009/25105-02-02/en

copyright © Liebherr-Werk Ehingen GmbH 2023

3 Fastening the outrigger pad

WARNING
Incorrectly fastened outrigger pad!
Death, severe bodily injury, property damage.
- ► Fasten the outrigger pad in **all** fastening points.
- ► Use only approved and suitable fastening equipment.
- ► Always maintain a sufficient distance from the suspended load.
- ► Carry out all crane movements with a suspended load precisely and with caution.

Depending on the version, the outrigger pad can be fastened individually or in multiples in a stack. The number of outrigger pads permitted when fastening is specified in the chapter for the respective outrigger pads.

3.1 Fastening the individual outrigger pad

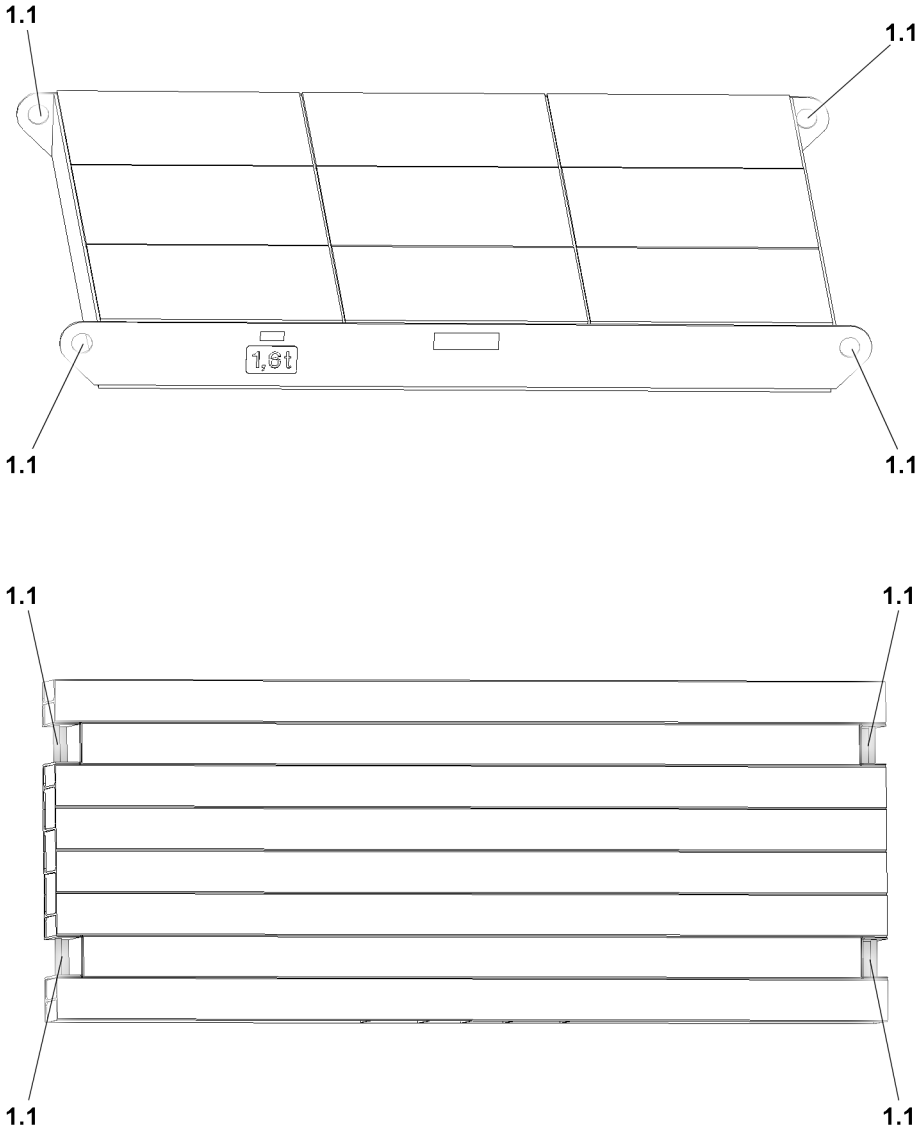

Fig.154993: Fastening points on the outrigger pads are shown as an example

Fasten the outrigger pad in the fastening points **1.1**.

LWE/LTR 1100-009/25105-02-02/en

copyright © Liebherr-Werk Ehingen GmbH 2023

3.2 Fastening the multiple outrigger pads

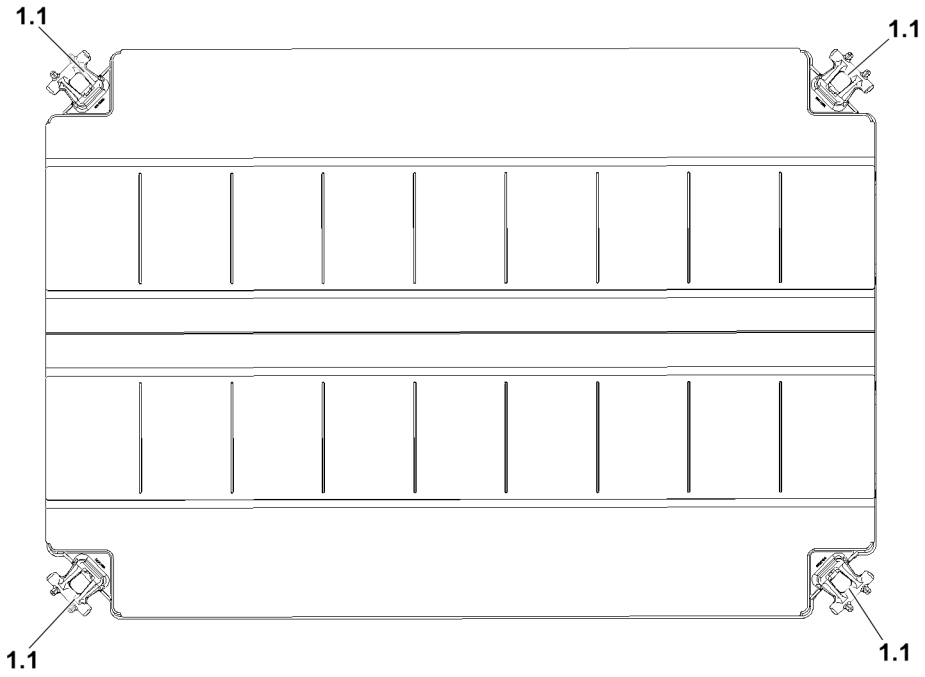

Fig.162745: Fastening points on the outrigger pads are shown as an example

Fasten the outrigger pad in the fastening points **1.1**.

3.2.1 Fastening multiple outrigger pads with a round sling

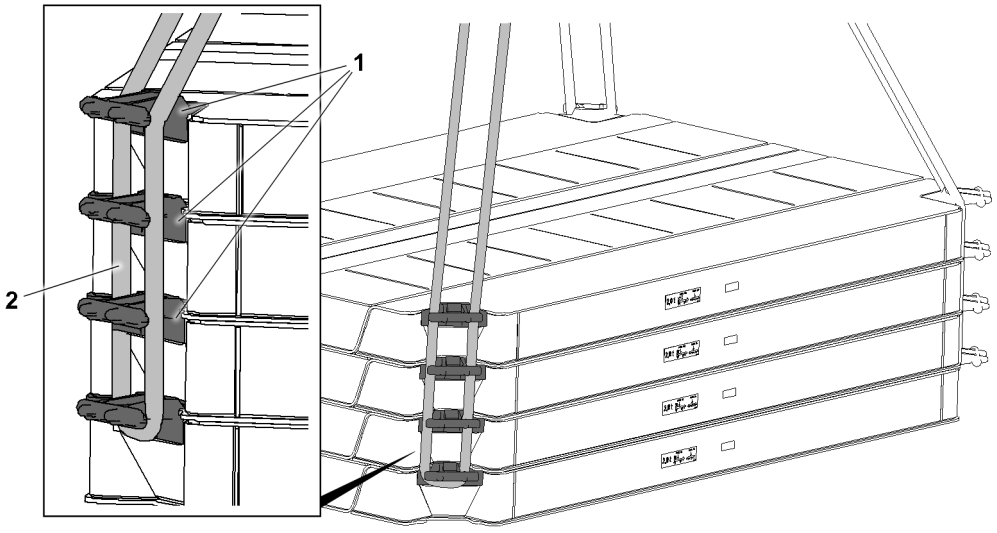

Fig.162740: Fastening multiple outrigger pads with a round sling

Fasten only the lowest outrigger pad.

When fastening with a round sling **2** make sure that the round sling **2** is located to the **side** on the fastening panel **1**.

LWE/LTR 1100-009/25105-02-02/en

copyright © Liebherr-Werk Ehingen GmbH 2023

3.2.2 Fastening multiple outrigger pads with a chain

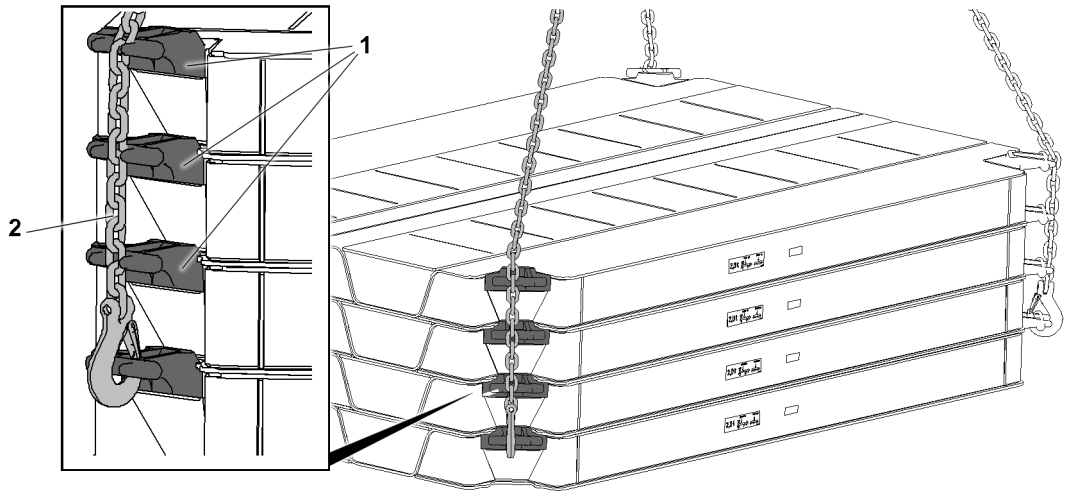

Fig.162742: Fastening multiple outrigger pads with a chain

Fasten only the lowest outrigger pad.

When fastening with a chain **2** make sure that the chain **2** is located to the **front** on the fastening panel **1**.

3.2.3 Stacking the outrigger pads

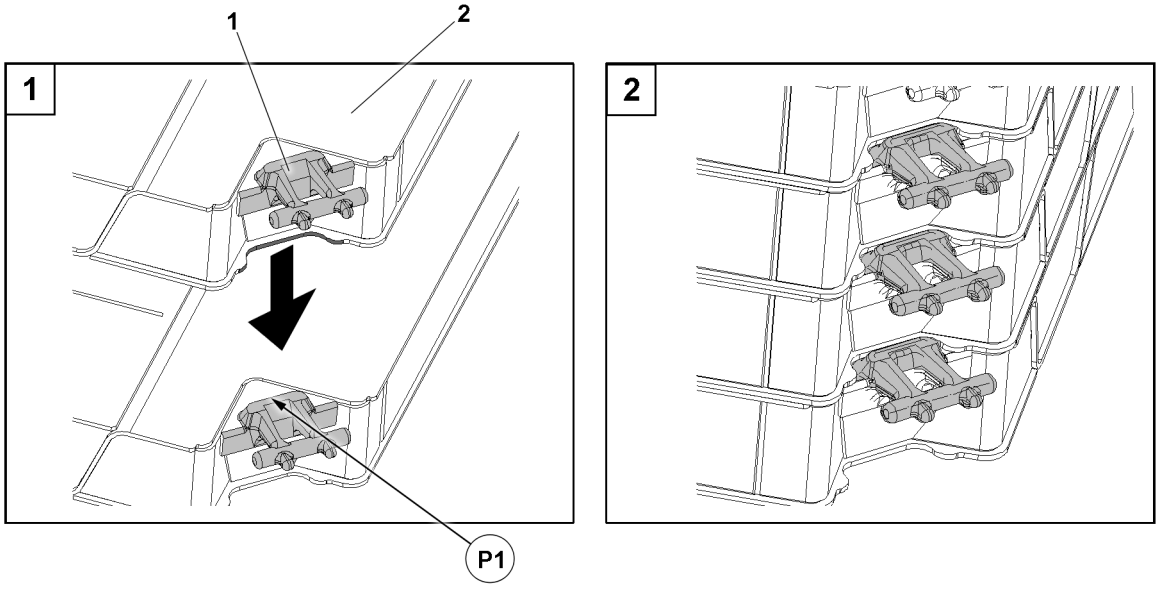

Fig.162744: Stacking the interlocking outrigger pads

Until the outrigger pads align on top of each other:
Position the upper outrigger pad **2** and lower carefully.

The fastening panels **1** are used when stacking the outrigger pads to establish an interlocking connection in position **P1**.

LWE/LTR 1100-009/25105-02-02/en

copyright © Liebherr-Werk Ehingen GmbH 2023

4 Technical track pad data for cranes with a telescopic boom

The following description of the outrigger pads only applies for supported crane operation.

The following outrigger pads are designed for all LWE support plates.

4.1 Outrigger pad LWE ID number 914786508

Observe the additional information:
– see section “Fastening the outrigger pads”.

WARNING
Incorrectly fastened outrigger pad!
Death, severe bodily injury, property damage.
► Fasten a maximum of **one** outrigger pad.

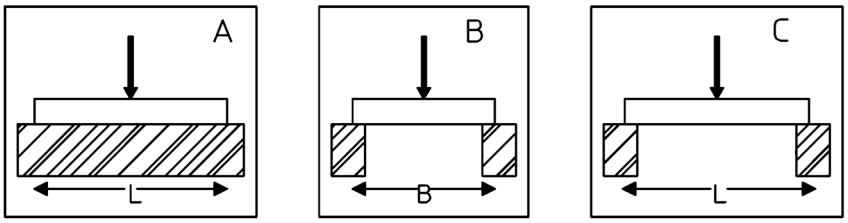

Fig.154815: Permissible support pressures

A The outrigger pad is placed completely on the surface
B The outrigger pad is positioned in the cross direction over a cavity
C The outrigger pad is placed in the longitudinal direction over a cavity

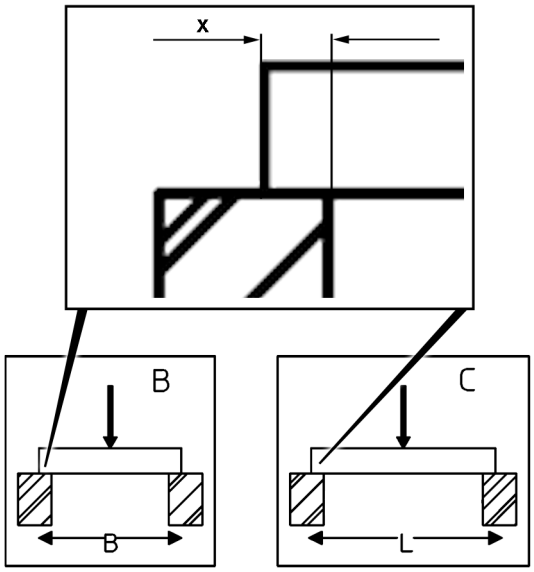

*Fig.154911: Placement width **x***

The placement width **x** must be at least 1.5 x height of the outrigger pad.

LWE/LTR 1100-009/25105-02-02/en

copyright © Liebherr-Werk Ehingen GmbH 2023

LWE ID number	Dimensions L x W x H[1)]	Surface	Mass	Permissible support pressures		
				A[2)]	B[3)]	C[4)]
914786508	1.0 x 1.0 x 0.12 m	1 m²	130 kg	100 t	100 t	100 t

Outrigger pads for support load distribution

[1)] Dimensions in Length x Width x Height
[2)] The outrigger pad is placed completely on the surface
[3)] The outrigger pad is positioned in the cross direction over a cavity
[4)]The outrigger pad is placed in the longitudinal direction over a cavity

4.2 Outrigger pad LWE ID number 914861908

Observe the additional information:
– see section “Fastening the outrigger pads”.

WARNING
Incorrectly fastened outrigger pad!
Death, severe bodily injury, property damage.
► Fasten a maximum of **one** outrigger pad.

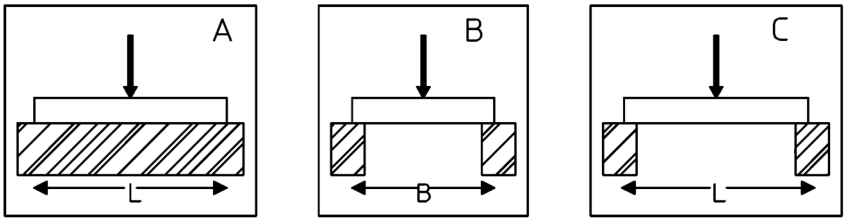

Fig.154815: Permissible support pressures

A The outrigger pad is placed completely on the surface
B The outrigger pad is positioned in the cross direction over a cavity
C The outrigger pad is placed in the longitudinal direction over a cavity

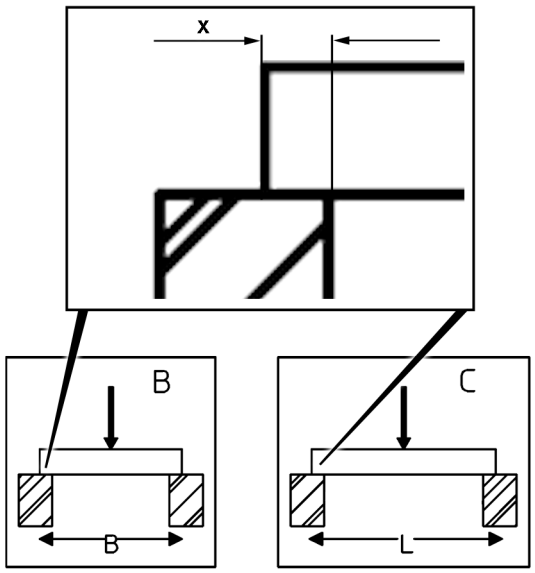

*Fig.154911: Placement width **x***

The placement width **x** must be at least 1.5 x height of the outrigger pad.

LWE/LTR 1100-009/25105-02-02/en

copyright © Liebherr-Werk Ehingen GmbH 2023

LWE ID number	Dimensions L x W x H[1)]	Surface	Mass	Permissible support pressures		
				A[2)]	B[3)]	C[4)]
914861908	1.4 x 1.2 x 0.122 m	1.68 m²	232 kg	130 t	130 t	130 t

Outrigger pads for support load distribution

[1)] Dimensions in Length x Width x Height
[2)] The outrigger pad is placed completely on the surface
[3)] The outrigger pad is positioned in the cross direction over a cavity
[4)]The outrigger pad is placed in the longitudinal direction over a cavity

4.3 Outrigger pad LWE ID number 914786808

Observe the additional information:
– see section “Fastening the outrigger pads”.

WARNING
Incorrectly fastened outrigger pad!
Death, severe bodily injury, property damage.
► Fasten a maximum of **one** outrigger pad.

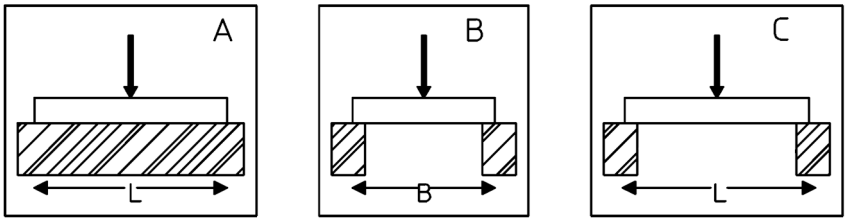

Fig.154815: Permissible support pressures

A The outrigger pad is placed completely on the surface
B The outrigger pad is positioned in the cross direction over a cavity
C The outrigger pad is placed in the longitudinal direction over a cavity

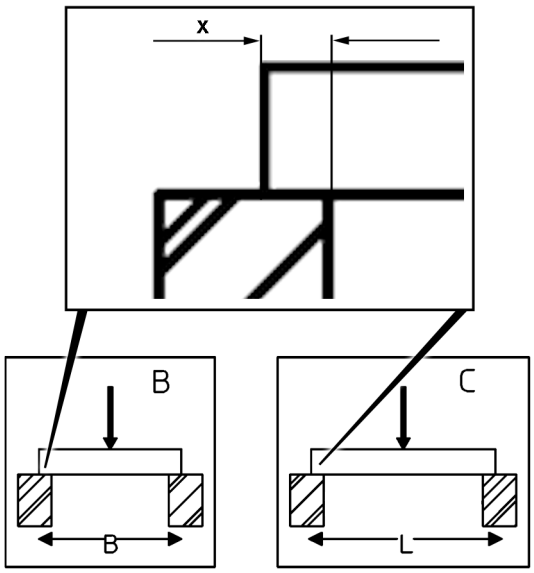

*Fig.154911: Placement width **x***

The placement width **x** must be at least 1.5 x height of the outrigger pad.

LWE/LTR 1100-009/25105-02-02/en

copyright © Liebherr-Werk Ehingen GmbH 2023

LWE ID number	Dimensions L x W x H[1)]	Surface	Mass	Permissible support pressures		
				A[2)]	B[3)]	C[4)]
914786808	2.0 x 1.8 x 0.2 m	3.6 m²	555 kg	210 t	210 t	210 t

Outrigger pads for support load distribution

[1)] Dimensions in Length x Width x Height
[2)] The outrigger pad is placed completely on the surface
[3)] The outrigger pad is positioned in the cross direction over a cavity
[4)]The outrigger pad is placed in the longitudinal direction over a cavity

4.4 Outrigger pad LWE ID number 915236308

Observe the additional information:
– see section “Fastening the outrigger pads”.

WARNING
Incorrectly fastened outrigger pad!
Death, severe bodily injury, property damage.
► Fasten a maximum of **one** outrigger pad.

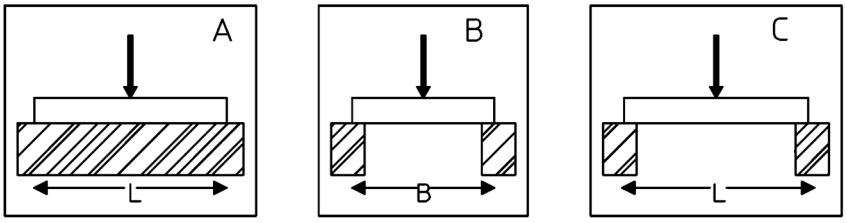

Fig.154815: Permissible support pressures

A The outrigger pad is placed completely on the surface
B The outrigger pad is positioned in the cross direction over a cavity
C The outrigger pad is placed in the longitudinal direction over a cavity

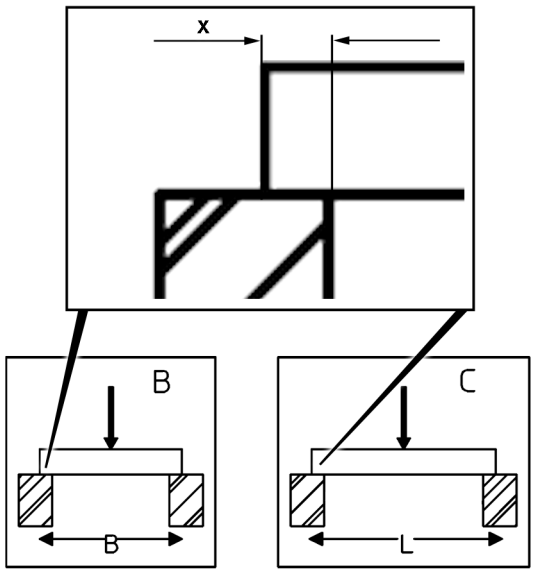

*Fig.154911: Placement width **x***

The placement width **x** must be at least 1.5 x height of the outrigger pad.

copyright © Liebherr-Werk Ehingen GmbH 2023

LWE ID number	Dimensions L x W x H[1)]	Surface	Mass	Permissible support pressures		
				A[2)]	B[3)]	C[4)]
915236308	2.5 x 2.4 x 0.25 m	6 m²	1600 kg	320 t	320 t	320 t

Outrigger pads for support load distribution

[1)] Dimensions in Length x Width x Height
[2)] The outrigger pad is placed completely on the surface
[3)] The outrigger pad is positioned in the cross direction over a cavity
[4)]The outrigger pad is placed in the longitudinal direction over a cavity

4.4.1 Positioning the support plate off-center on the outrigger pad

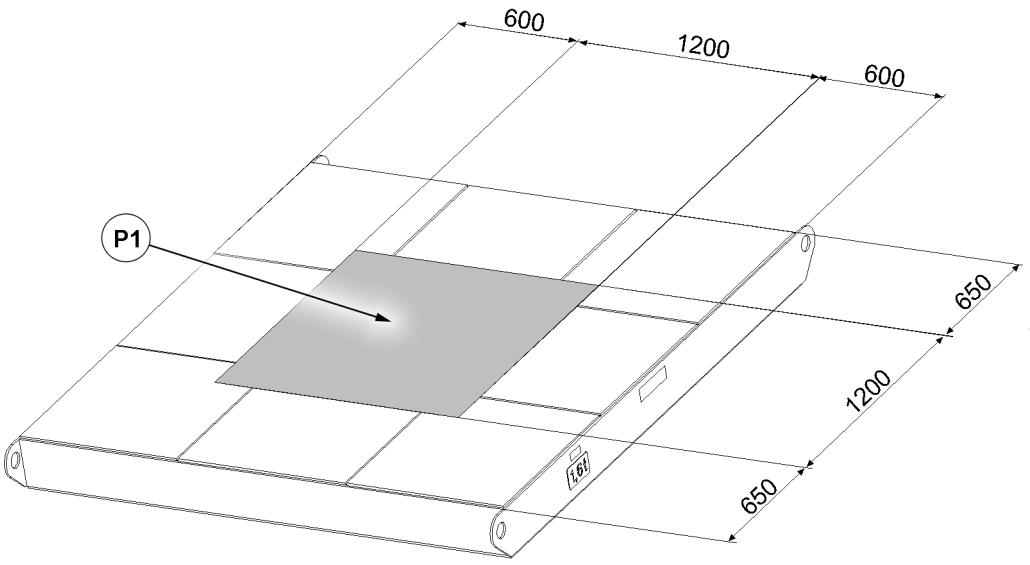

Fig.154923: Permissible placement surface for support plates

P1 Support surface for support plates with permissible support pressure 320 t

An even pressure distribution over the substructure surface can be obtained by centrally positioning the support plates on the outrigger pad.

WARNING
Impermissible support plate substructure!
The crane can topple over.
Death, bodily injury, property damage.
► Place the outrigger pads **centrally** or according to the description under the support plates.

4.5 Outrigger pad LWE ID number 915236408/915464608

Observe the additional information:
– see section “Fastening the outrigger pads”.

WARNING
Incorrectly fastened outrigger pad!
Death, severe bodily injury, property damage.
► Fasten a maximum of **one** outrigger pad.

LWE/LTR 1100-009/25105-02-02/en

copyright © Liebherr-Werk Ehingen GmbH 2023

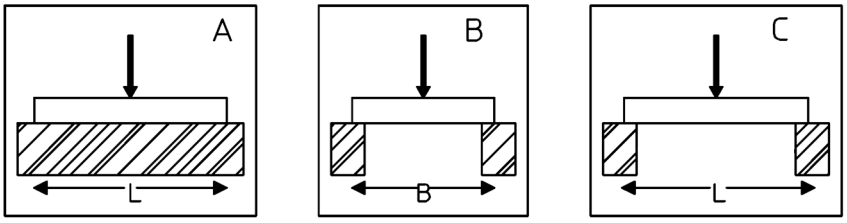

Fig.154815: Permissible support pressures

A The outrigger pad is placed completely on the surface

B The outrigger pad is positioned in the cross direction over a cavity

C The outrigger pad is placed in the longitudinal direction over a cavity

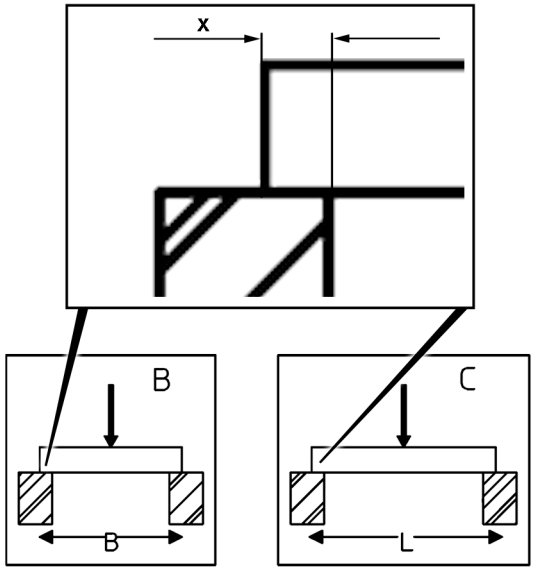

*Fig.154911: Placement width **x***

The placement width **x** must be at least 1.5 x height of the outrigger pad.

LWE ID number	Dimensions L x W x H[1)]	Surface	Mass	Permissible support pressures		
				A[2)]	B[3)]	C[4)]
915236408/915464608	3.5 x 2.4 x 0.25 m	8.4 m^2	2350 kg	320 t	320 t	320 t

Outrigger pads for support load distribution

[1)] Dimensions in Length x Width x Height
[2)] The outrigger pad is placed completely on the surface
[3)] The outrigger pad is positioned in the cross direction over a cavity
[4)]The outrigger pad is placed in the longitudinal direction over a cavity

LWE/LTR 1100-009/25105-02-02/en

copyright © Liebherr-Werk Ehingen GmbH 2023

4.5.1 Positioning the support plate off-center on the outrigger pad

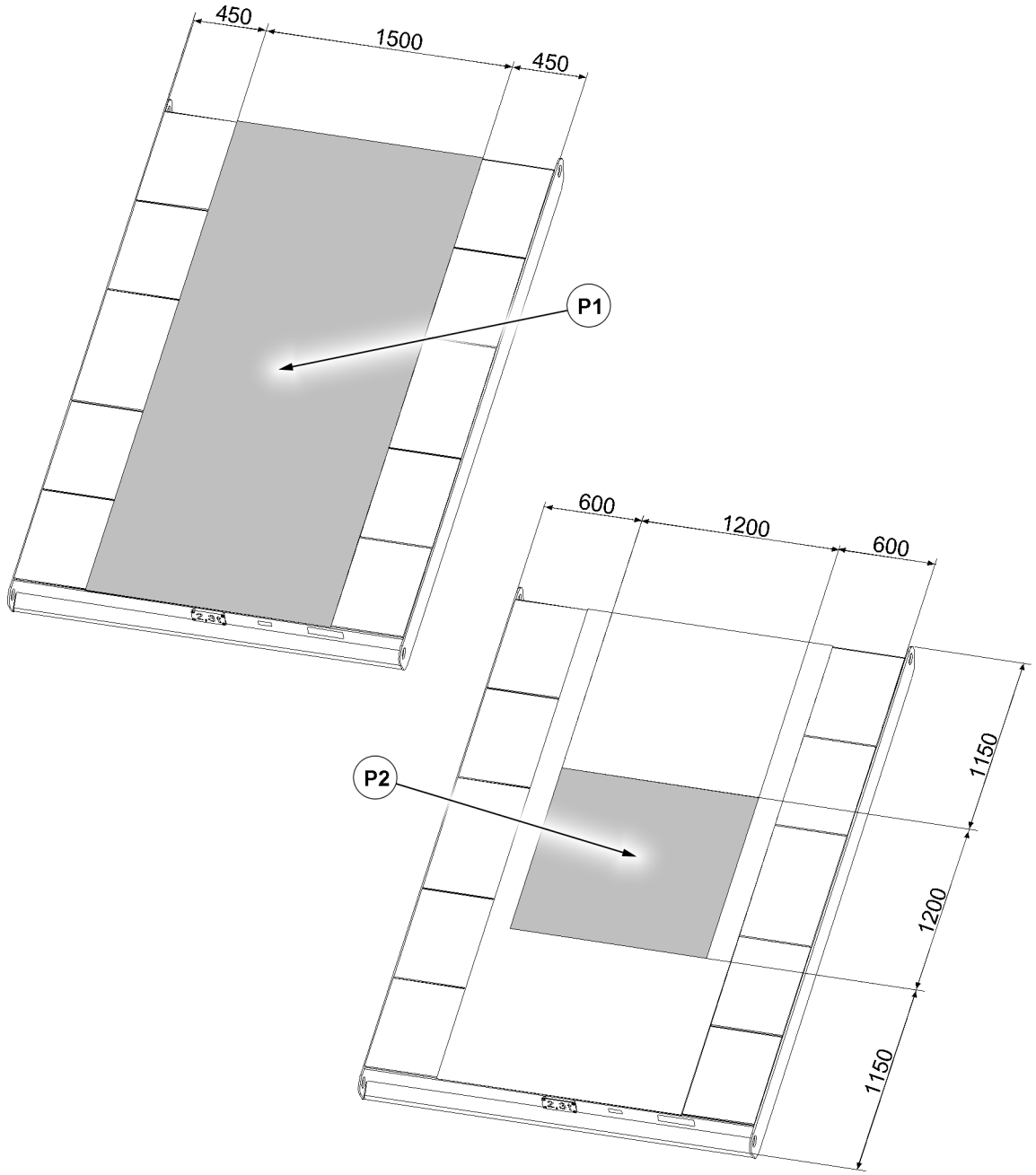

Fig.154924: Permissible placement surface for support plates

P1 Support surface for support plates with permissible support pressure up to 210 t

P2 Support surface for support plates with permissible support pressure greater than 210 t up to 320 t

An even pressure distribution over the substructure surface can be obtained by centrally positioning the support plates on the outrigger pad.

WARNING
Impermissible support plate substructure!
The crane can topple over.
Death, bodily injury, property damage.
► Place the outrigger pads **centrally** or according to the description under the support plates.

LWE/LTR 1100-009/25105-02-02/en

copyright © Liebherr-Werk Ehingen GmbH 2023

4.6 Outrigger pad LWE ID number 919663108

Observe the additional information:
– see section “Fastening the outrigger pads”.

WARNING
Incorrectly fastened outrigger pad!
Death, severe bodily injury, property damage.
► Fasten a maximum of **four** outrigger pads.
► Fasten the fastening equipment only on the lowest outrigger pad.

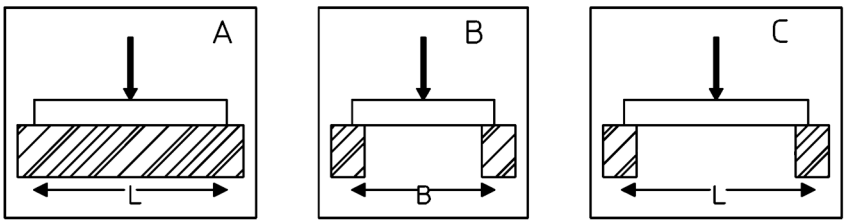

Fig.154815: Permissible support pressures

A The outrigger pad is placed completely on the surface
B The outrigger pad is positioned in the cross direction over a cavity
C The outrigger pad is placed in the longitudinal direction over a cavity

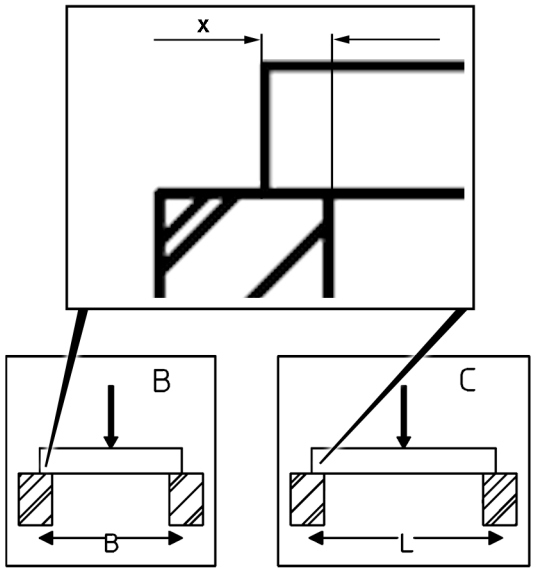

*Fig.154911: Placement width **x***

The placement width **x** must be at least 2.5 x height of the outrigger pad.

LWE ID number	Dimensions L x W x H[1)]	Surface	Mass	Permissible support pressures		
				A[2)]	B[3)]	C[4)]
919663108	1.2 x 1.5 x 0.12 m	1.7 m²	270 kg	1100 kN	1100 kN	1100 kN

Outrigger pads for support load distribution

[1)] Dimensions in Length x Width x Height
[2)] The outrigger pad is placed completely on the surface
[3)] The outrigger pad is positioned in the cross direction over a cavity
[4)]The outrigger pad is placed in the longitudinal direction over a cavity

LWE/LTR 1100-009/25105-02-02/en

copyright © Liebherr-Werk Ehingen GmbH 2023

4.6.1 Positioning the support plate off-center on the outrigger pad

Depending on the support surfaces of the outrigger paid, the support plates can be placed off-center on the outrigger pad.

Positioning the support plate off-center on the outrigger pad lying on the complete surface

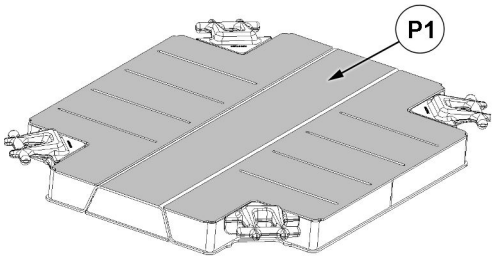

Fig.162737: Permissible placement surface for support plates

P1 Support surface for support plates with permissible support pressure 1100 kN

An even pressure distribution below the support surface can be obtained by centrally positioning the support plates on the outrigger pad.

Positioning the support plate off-center on the outrigger pad over a cavity

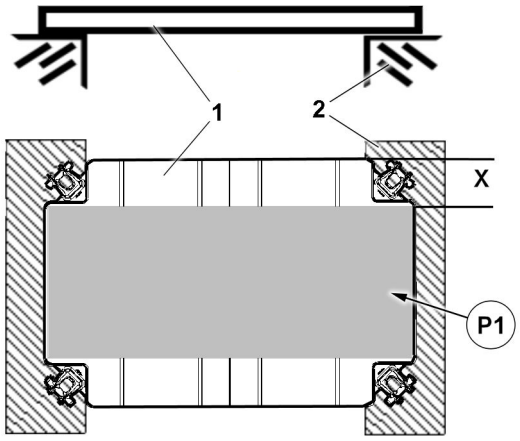

Fig.162738: Exemplary illustration of a permissible placement surface for support plates

1 Outrigger pad

2 Substructure

P1 Support surface for support plates with permissible support pressure 1100 kN

The distance **X** between the support plates and freely standing outrigger pad edge must be at least 2.5 x the height of the outrigger pad.

An even pressure distribution on the substructure surface can be obtained by centrally positioning the support plates on the outrigger pad.

WARNING
Impermissible support plate substructure!
The crane can topple over.
Death, bodily injury, property damage.
► Place the outrigger pads **centrally** or according to the description under the support plates.

LWE/LTR 1100-009/25105-02-02/en

copyright © Liebherr-Werk Ehingen GmbH 2023

4.7 Outrigger pad LWE ID number 919663508

Observe the additional information:
– see section “Fastening the outrigger pads”.

WARNING
Incorrectly fastened outrigger pad!
Death, severe bodily injury, property damage.
► Fasten a maximum of **four** outrigger pads.
► Fasten the fastening equipment only on the lowest outrigger pad.

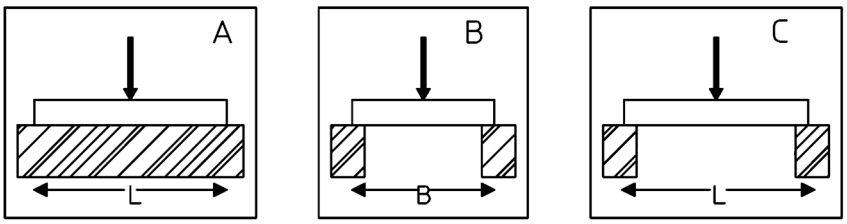

Fig.154815: Permissible support pressures

A The outrigger pad is placed completely on the surface
B The outrigger pad is positioned in the cross direction over a cavity
C The outrigger pad is placed in the longitudinal direction over a cavity

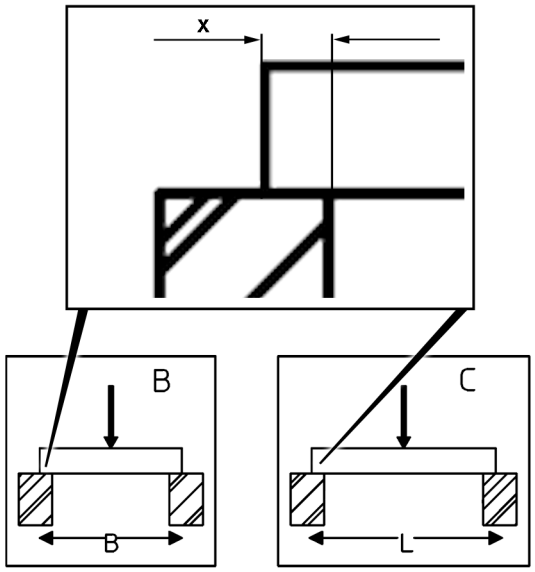

*Fig.154911: Placement width **x***

The placement width **x** must be at least 1.5 x height of the outrigger pad.

LWE/LTR 1100-009/25105-02-02/en

copyright © Liebherr-Werk Ehingen GmbH 2023

LWE ID number	Dimensions L x W x H[1)]	Surface	Mass	Permissible support pressures		
				A[2)]	B[3)]	C[4)]
919663508	2.4 x 1.6 x 0.19 m	3.8 m²	720 kg	1800 kN	1800 kN	1800 kN

Outrigger pads for support load distribution

[1)] Dimensions in Length x Width x Height
[2)] The outrigger pad is placed completely on the surface
[3)] The outrigger pad is positioned in the cross direction over a cavity
[4)]The outrigger pad is placed in the longitudinal direction over a cavity

4.7.1 Positioning the support plate off-center on the outrigger pad

Depending on the support surfaces of the outrigger paid, the support plates can be placed off-center on the outrigger pad.

Positioning the support plate off-center on the outrigger pad lying on the complete surface

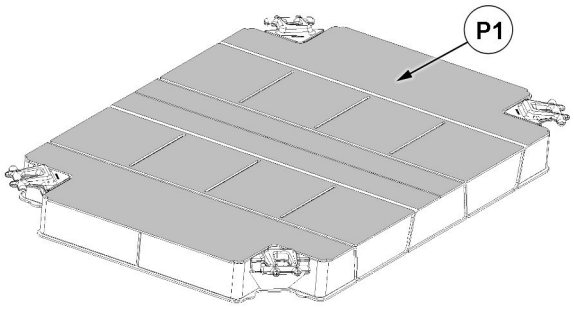

Fig.162739: Permissible placement surface for support plates

P1 Support surface for support plates with permissible support pressure 1800 kN

An even pressure distribution below the support surface can be obtained by centrally positioning the support plates on the outrigger pad.

LWE/LTR 1100-009/25105-02-02/en

copyright © Liebherr-Werk Ehingen GmbH 2023

Positioning the support plate off-center on the outrigger pad over a cavity

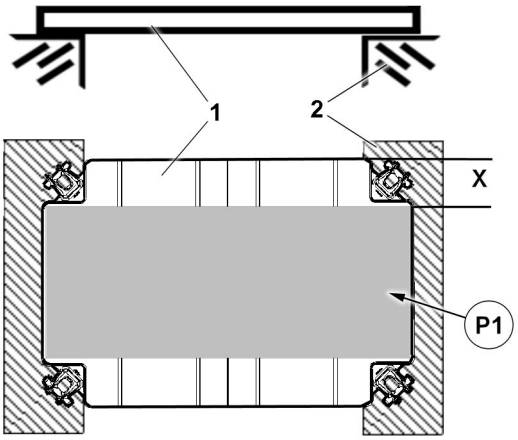

Fig.162738: Exemplary illustration of a permissible placement surface for support plates

1 Outrigger pad

2 Substructure

P1 Support surface for support plates with permissible support pressure 1800 kN

The distance **X** between the support plates and freely standing outrigger pad edge must be at least 1.5 x the height of the outrigger pad.

An even pressure distribution on the substructure surface can be obtained by centrally positioning the support plates on the outrigger pad.

WARNING
Impermissible support plate substructure!
The crane can topple over.
Death, bodily injury, property damage.
► Place the outrigger pads **centrally** or according to the description under the support plates.

4.8 Outrigger pad LWE ID number 919663608

Observe the additional information:
– see section “Fastening the outrigger pads”.

WARNING
Incorrectly fastened outrigger pad!
Death, severe bodily injury, property damage.
► Fasten a maximum of **four** outrigger pads.
► Fasten the fastening equipment only on the lowest outrigger pad.

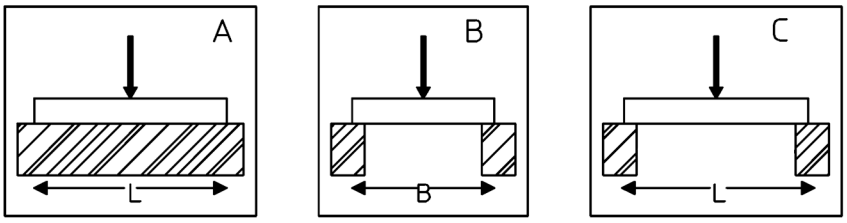

Fig.154815: Permissible support pressures

A The outrigger pad is placed completely on the surface

C The outrigger pad is placed in the longitudinal direction over a cavity

For continuation of legend for illustrations, see next page

LWE/LTR 1100-009/25105-02-02/en

copyright © Liebherr-Werk Ehingen GmbH 2023

B The outrigger pad is positioned in the cross direction over a cavity

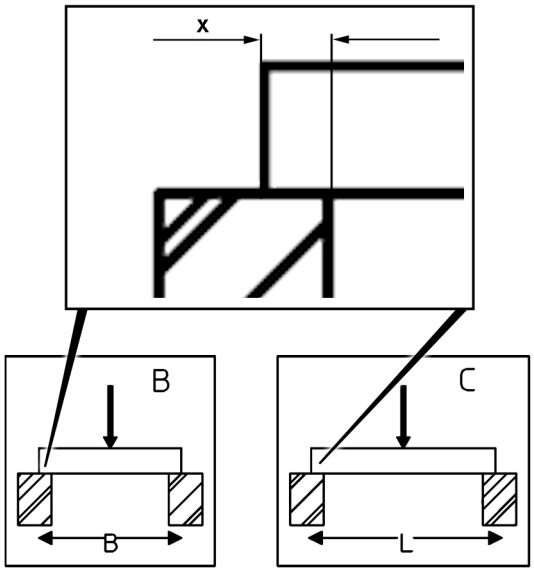

*Fig.154911: Placement width **x***

The placement width **x** must be at least 1.5 x height of the outrigger pad.

LWE ID number	Dimensions L x W x H[1)]	Surface	Mass	Permissible support pressures		
				A[2)]	B[3)]	C[4)]
919663608	2.4 x 2.4 x 0.21 m	5.7 m²	1200 kg	2100 kN	2100 kN	2100 kN

Outrigger pads for support load distribution

[1)] Dimensions in Length x Width x Height
[2)] The outrigger pad is placed completely on the surface
[3)] The outrigger pad is positioned in the cross direction over a cavity
[4)]The outrigger pad is placed in the longitudinal direction over a cavity

4.8.1 Positioning the support plate off-center on the outrigger pad

Depending on the support surfaces of the outrigger paid, the support plates can be placed off-center on the outrigger pad.

Positioning the support plate off-center on the outrigger pad lying on the complete surface

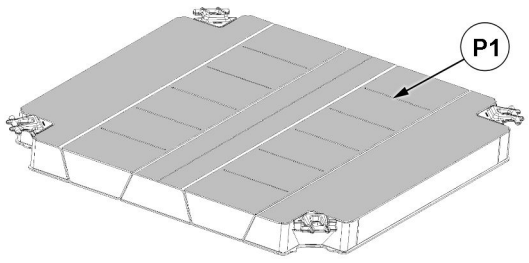

Fig.162741: Permissible placement surface for support plates

P1 Support surface for support plates with permissible support pressure 2100 kN

LWE/LTR 1100-009/25105-02-02/en

copyright © Liebherr-Werk Ehingen GmbH 2023

An even pressure distribution below the support surface can be obtained by centrally positioning the support plates on the outrigger pad.

Positioning the support plate off-center on the outrigger pad over a cavity

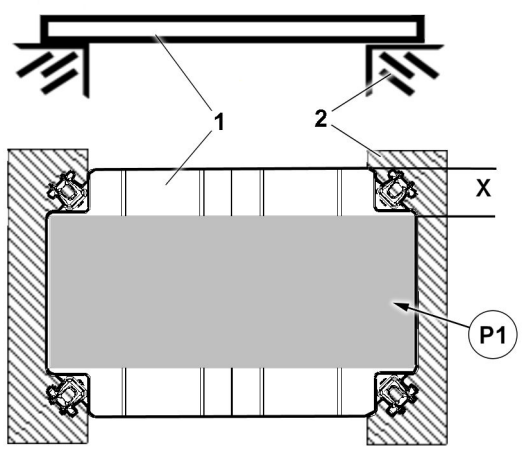

Fig.162738: Exemplary illustration of a permissible placement surface for support plates

1 Outrigger pad

2 Substructure

P1 Support surface for support plates with permissible support pressure 2100 kN

The distance **X** between the support plates and freely standing outrigger pad edge must be at least 1.5 x the height of the outrigger pad.

An even pressure distribution on the substructure surface can be obtained by centrally positioning the support plates on the outrigger pad.

WARNING
Impermissible support plate substructure!
The crane can topple over.
Death, bodily injury, property damage.
► Place the outrigger pads **centrally** or according to the description under the support plates.

4.9 Outrigger pad LWE ID number 919663708

Observe the additional information:
– see section “Fastening the outrigger pads”.

WARNING
Incorrectly fastened outrigger pad!
Death, severe bodily injury, property damage.
► Fasten a maximum of **four** outrigger pads.
► Fasten the fastening equipment only on the lowest outrigger pad.

LWE/LTR 1100-009/25105-02-02/en

copyright © Liebherr-Werk Ehingen GmbH 2023

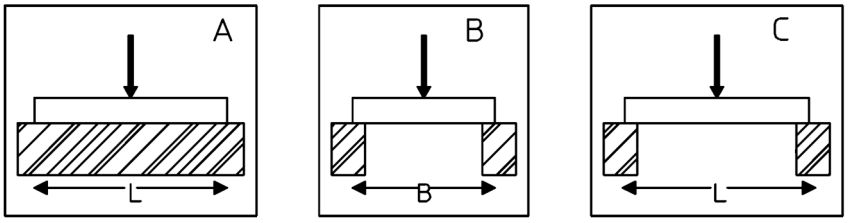

Fig.154815: Permissible support pressures

A The outrigger pad is placed completely on the surface

B The outrigger pad is positioned in the cross direction over a cavity

C The outrigger pad is placed in the longitudinal direction over a cavity

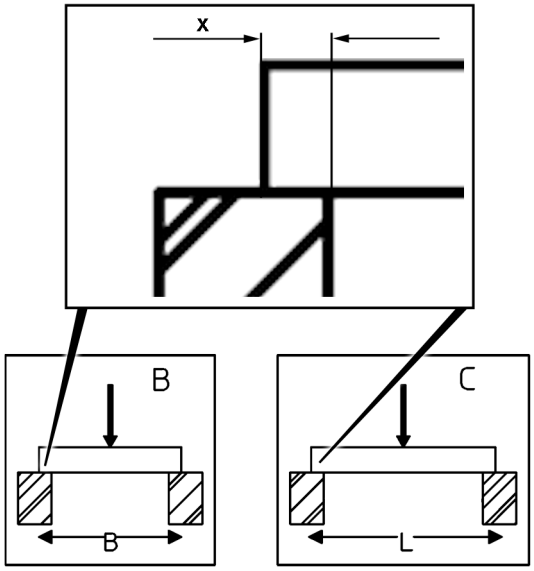

*Fig.154911: Placement width **x***

The placement width **x** must be at least 1.5 x height of the outrigger pad.

LWE ID number	Dimensions L x W x H[1)]	Surface	Mass	Permissible support pressures		
				A[2)]	B[3)]	C[4)]
919663708	3.5 x 2.4 x 0.23 m	8.3 m^2	2000 kg	3200 kN	3200 kN	3200 kN

Outrigger pads for support load distribution

[1)] Dimensions in Length x Width x Height
[2)] The outrigger pad is placed completely on the surface
[3)] The outrigger pad is positioned in the cross direction over a cavity
[4)]The outrigger pad is placed in the longitudinal direction over a cavity

4.9.1 Positioning the support plate off-center on the outrigger pad

Depending on the support surfaces of the outrigger paid, the support plates can be placed off-center on the outrigger pad.

LWE/LTR 1100-009/25105-02-02/en

copyright © Liebherr-Werk Ehingen GmbH 2023

Positioning the support plate off-center on the outrigger pad lying on the complete surface

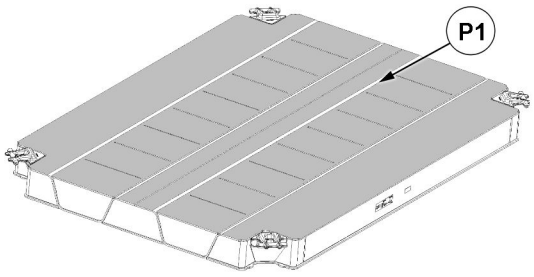

Fig.162743: Permissible placement surface for support plates

P1 Support surface for support plates with permissible support pressure 3200 kN

An even pressure distribution below the support surface can be obtained by centrally positioning the support plates on the outrigger pad.

Positioning the support plate off-center on the outrigger pad over a cavity

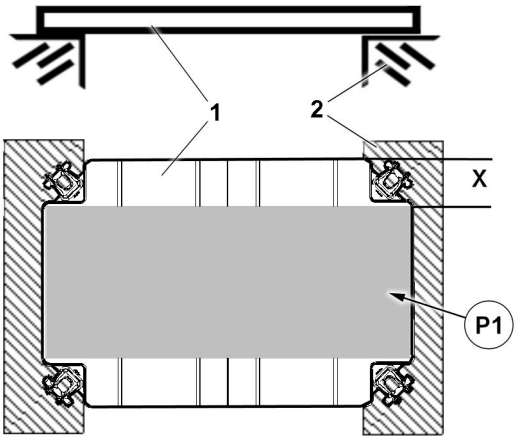

Fig.162738: Exemplary illustration of a permissible placement surface for support plates

1 Outrigger pad

2 Substructure

P1 Support surface for support plates with permissible support pressure 3200 kN

The distance **X** between the support plates and freely standing outrigger pad edge must be at least 1.5 x the height of the outrigger pad.

An even pressure distribution on the substructure surface can be obtained by centrally positioning the support plates on the outrigger pad.

WARNING
Impermissible support plate substructure!
The crane can topple over.
Death, bodily injury, property damage.
► Place the outrigger pads **centrally** or according to the description under the support plates.

LWE/LTR 1100-009/25105-02-02/en

copyright © Liebherr-Werk Ehingen GmbH 2023

5 Technical outrigger pad data for cranes with a lattice mast boom

The following description of the outrigger pads only applies for supported crane operation and in crane operation on crawler.

5.1 Outrigger pad LWE ID number 914618608

Observe the additional information:
– Installing and driving the outrigger pad, see chapter 3.05.

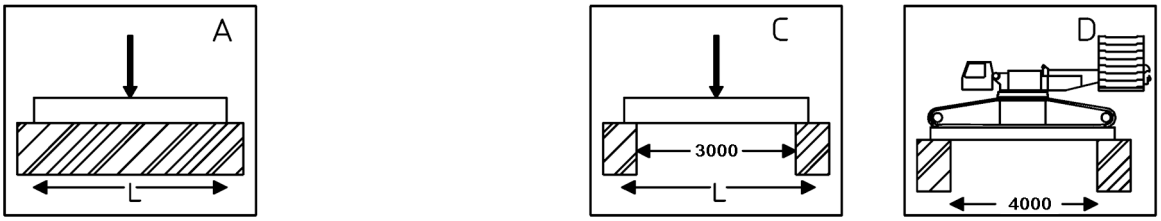

Fig.154942: Permissible support pressures

A The outrigger pad is placed completely on the surface

C The outrigger pad is placed in the longitudinal direction over a cavity

D The outrigger pad is placed in the longitudinal direction over a cavity and driven with the crawler crane

Note
► Driving the outrigger pads over a cavity is only permissible with the own weight of the crane (without a hoist load).

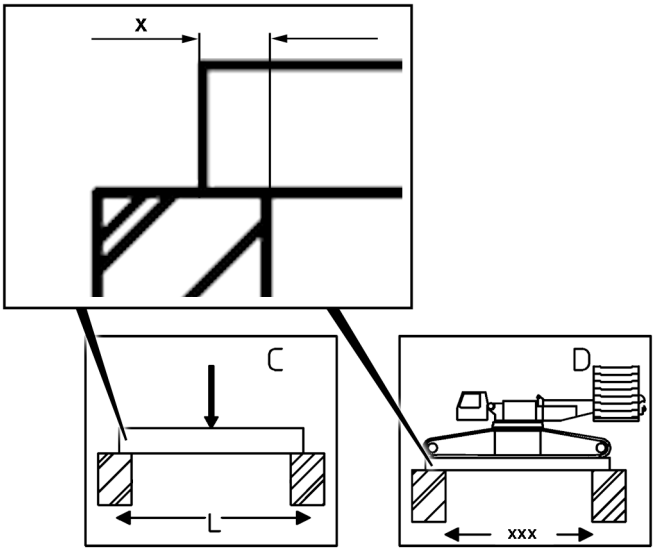

*Fig.154941: Placement widths **x***

C The placement width must be at least 1.5 m.

D The placement width must be at least 1.0 m.

LWE/LTR 1100-009/25105-02-02/en

copyright © Liebherr-Werk Ehingen GmbH 2023

LWE ID number	Dimensions L x W x H[1)]	Surface	Mass	Permissible support pressures			
				A[2)]	B[3)]	C[4)]	D[5)]
914618608	6.0 x 2.4 x 0.3 m	14.4 m²	7800 kg	4500 kN		4500 kN	

Outrigger pads for support load distribution

[1)] Dimensions in Length x Width x Height
[2)] The outrigger pad is placed completely on the surface
[3)] The outrigger pad is positioned in the cross direction over a cavity
[4)]The outrigger pad is placed in the longitudinal direction over a cavity
[5)]The outrigger pad is placed in the longitudinal direction over a cavity and driven with the crawler crane

5.1.1 Positioning the support plate off-center on the outrigger pad

Off-center positioning is only permitted if the outrigger pad lies across the entire circumference (not only on two sides) on ground that is at least 100 mm wide.

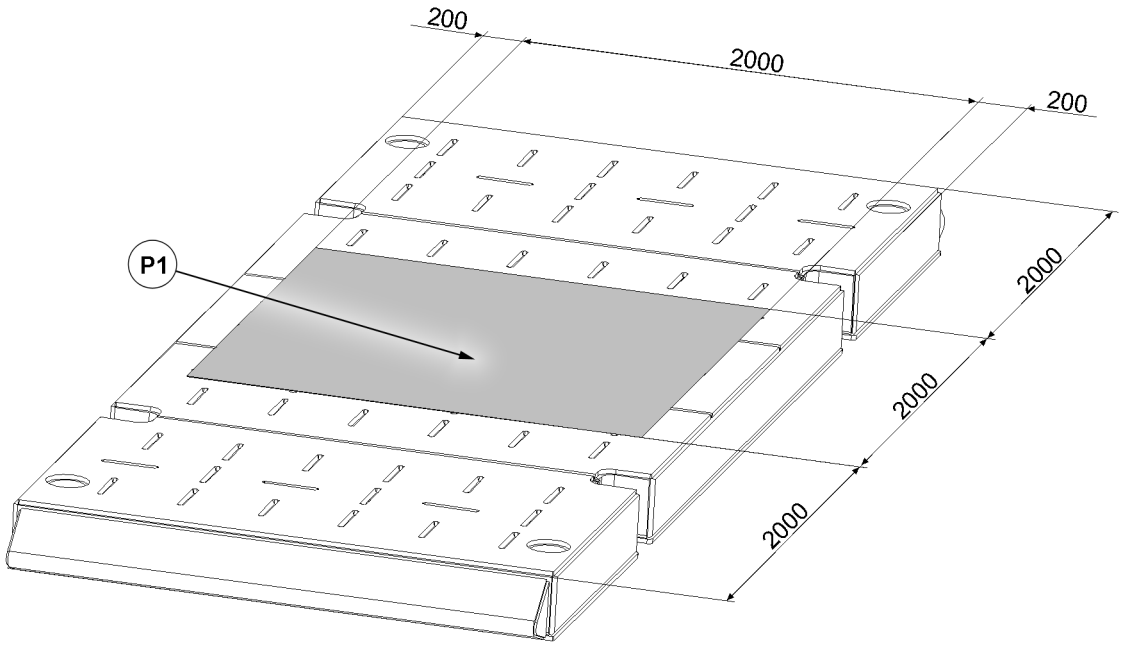

Fig.154926: Permissible placement surface for support plates

P1 Support surface for support plates with permissible support pressure 4500 kN

An even pressure distribution over the substructure surface can be obtained by centrally positioning the support plates on the outrigger pad.

WARNING
Impermissible support plate substructure!
The crane can topple over.
Death, bodily injury, property damage.
► Place the outrigger pads **centrally** or according to the description under the support plates.

5.2 Outrigger pad LWE ID number 915696408

Observe the additional information:
– Outrigger pad assembly, see chapter 3.10.

copyright © Liebherr-Werk Ehingen GmbH 2023

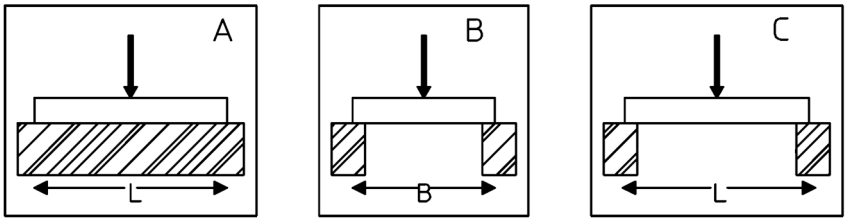

Fig.154815: Permissible support pressures

A The outrigger pad is placed completely on the surface

B The outrigger pad is positioned in the cross direction over a cavity

C The outrigger pad is placed in the longitudinal direction over a cavity

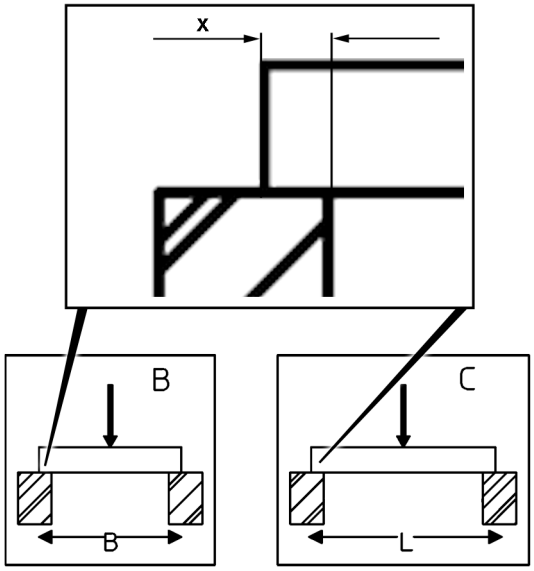

*Fig.154911: Placement width **x***

The placement width **x** must be at least 2.5 x height of the outrigger pad.

LWE ID number	Dimensions L x W x H[1)]	Surface	Mass	Permissible support pressures		
				A[2)]	B[3)]	C[4)]
915696408	4.0 x 2.4 x 0.25 m	9.6 m^2	3300 kg	4500 kN	4500 kN	4500 kN

Outrigger pads for support load distribution

[1)] Dimensions in Length x Width x Height
[2)] The outrigger pad is placed completely on the surface
[3)] The outrigger pad is positioned in the cross direction over a cavity
[4)]The outrigger pad is placed according to the longitudinal direction over a cavity

LWE/LTR 1100-009/25105-02-02/en

copyright © Liebherr-Werk Ehingen GmbH 2023

5.3 Outrigger pad LWE ID number 918339808

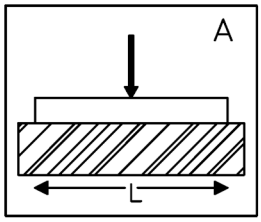

Fig.154917: Permissible support pressures

A The outrigger pad is placed completely on the surface

LWE ID number	Dimensions L x W x H[1)]	Surface	Mass	Permissible support pressures
				A[2)]
918339808	6.0 x 2.4 x 0.4 m	14.4 m^2	7900 kg	2650 kN

Outrigger pads for support load distribution

[1)] Dimensions in Length x Width x Height
[2)] The outrigger pad is placed completely on the surface

LWE/LTR 1100-009/25105-02-02/en

copyright © Liebherr-Werk Ehingen GmbH 2023

5.3.1 Positioning the support plate off-center on the outrigger pad

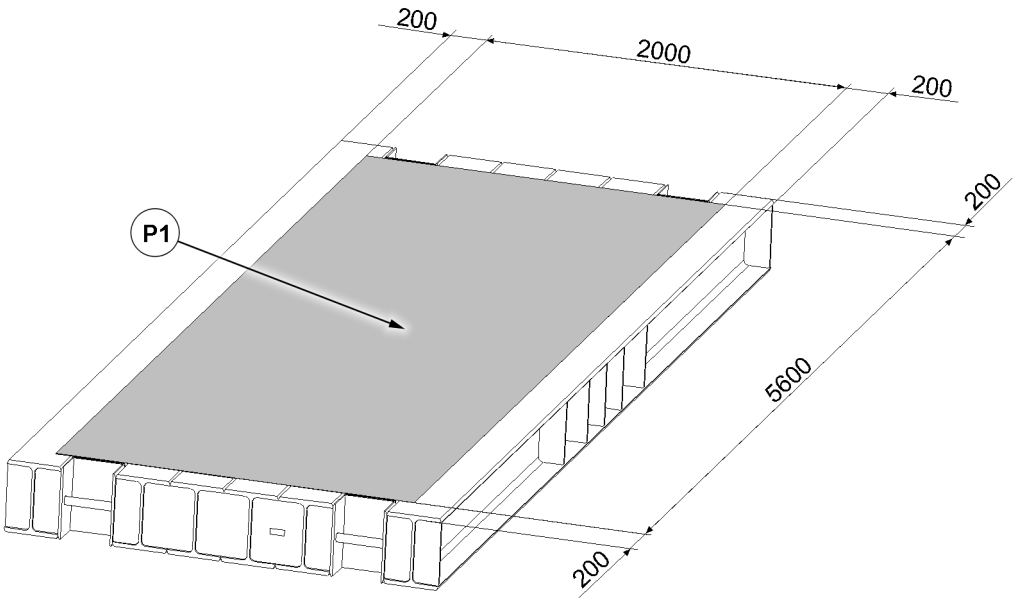

Fig.154925: Permissible placement surface for support plates

P1 Support surface for support plates with permissible support pressure 2650 kN

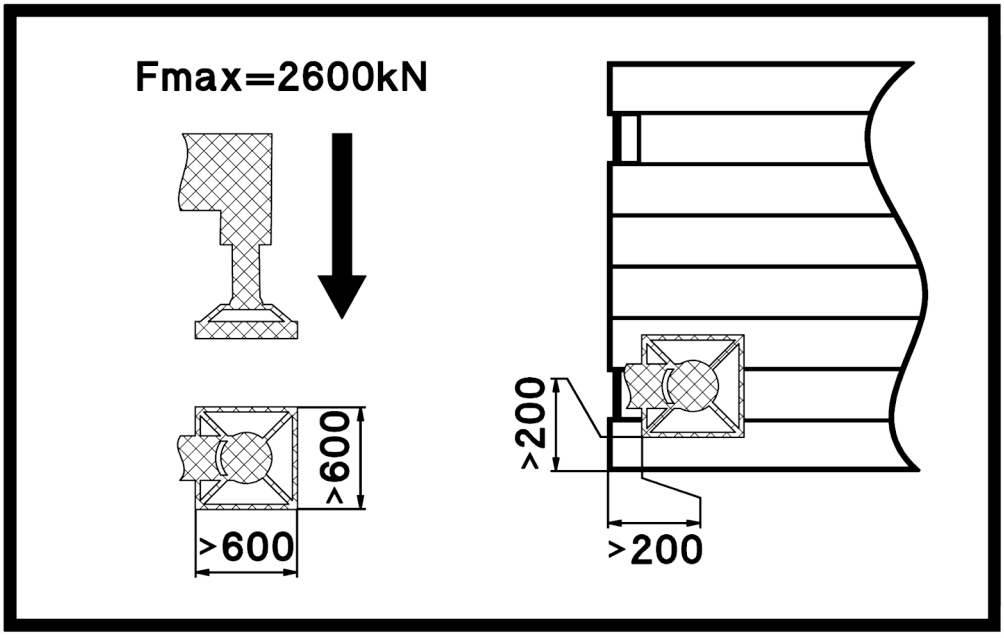

Fig.154913: The support plate is positioned off-center on the outrigger pad

LWE/LTR 1100-009/25105-02-02/en

copyright © Liebherr-Werk Ehingen GmbH 2023

An even pressure distribution over the substructure surface can be obtained by centrally positioning the support plates on the outrigger pad.

WARNING
Impermissible support plate substructure!
The crane can topple over.
Death, bodily injury, property damage.
► Place the outrigger pads **centrally** or according to the description under the support plates.

A support plate can be placed off-center on this outrigger pad. The minimum distance is 200 mm from the side edge of the outrigger pad. The side length of the support plate must be at least 600 mm.

5.3.2 Driving the outrigger pad in the cross direction with a crawler crane

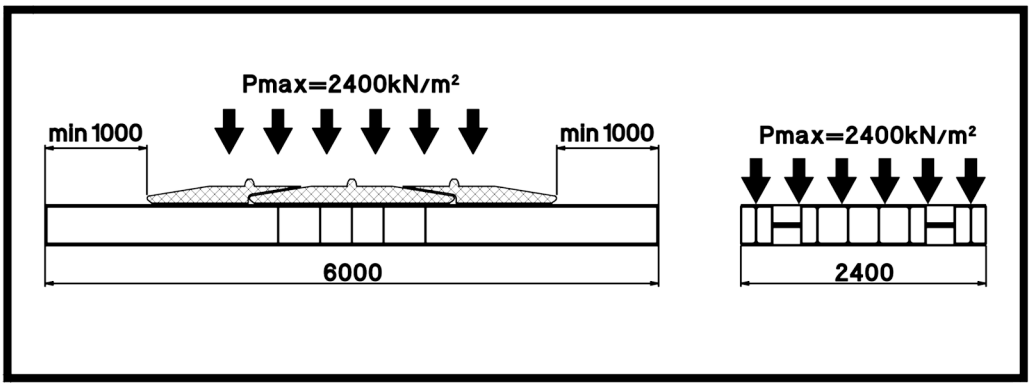

Fig.154912: Driving the outrigger pad in the cross direction with a crawler crane

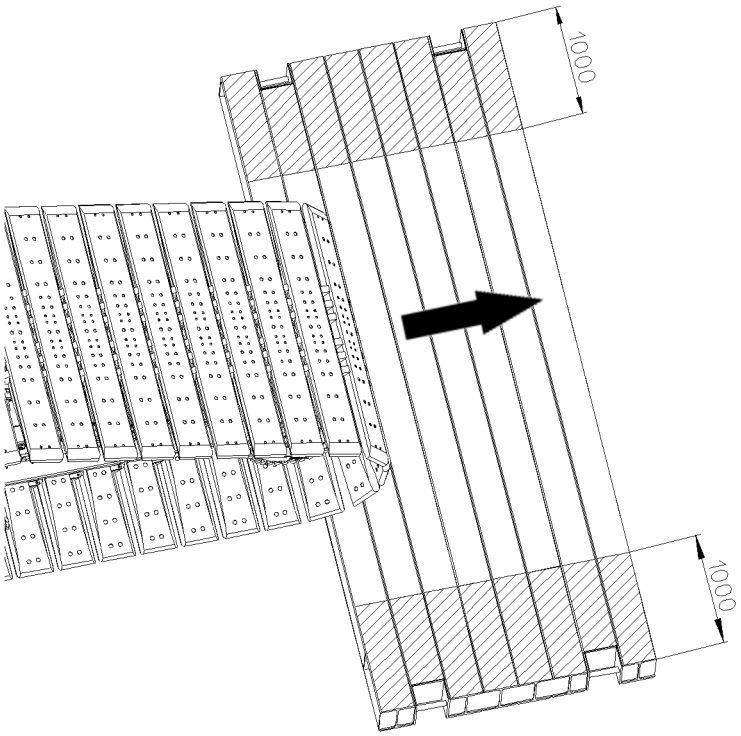

Fig.154922: Permissible driving range with the crawler crane

This outrigger pad can be driven in the cross direction with an approved crawler crane. The distance of at least 1000 mm to the side edges (longitudinal side) of the outrigger pad must be observed.

LWE/LTR 1100-009/25105-02-02/en

copyright © Liebherr-Werk Ehingen GmbH 2023

5.4 Outrigger pad LWE ID number 919427108

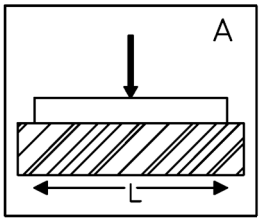

Fig.154917: Permissible support pressures

A The outrigger pad is placed completely on the surface

Note

► Driving the outrigger pads over a cavity is only permissible with the own weight of the crane (without a hoist load).

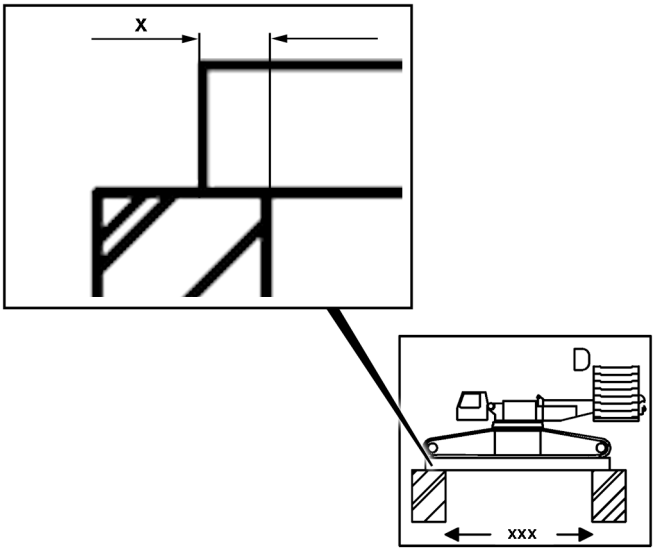

*Fig.156550: Placement widths **x***

D The placement width must be at least 0.5 m .

D The cavity may be maximum 1.0 m .

LWE/LTR 1100-009/25105-02-02/en

copyright © Liebherr-Werk Ehingen GmbH 2023

LWE ID number	Dimensions L x W x H[1)]	Surface	Mass	Permissible support pressures	
				A[2)]	D[3)]
919427108	4.0 x 2.4 x 0.2 m	9.6 m²	3200 kg	2000 t for support plates with a placement surface of 0.6 x 0.6 m	
				3100 t for support plates with a placement surface of 0.7 x 0.7 m	

Outrigger pads for support load distribution

[1)] Dimensions in Length x Width x Height
[2)] The outrigger pad is placed completely on the surface
[3)] The outrigger pad is placed in the longitudinal direction over a cavity and driven with the crawler crane

5.4.1 Positioning the support plate off-center on the outrigger pad

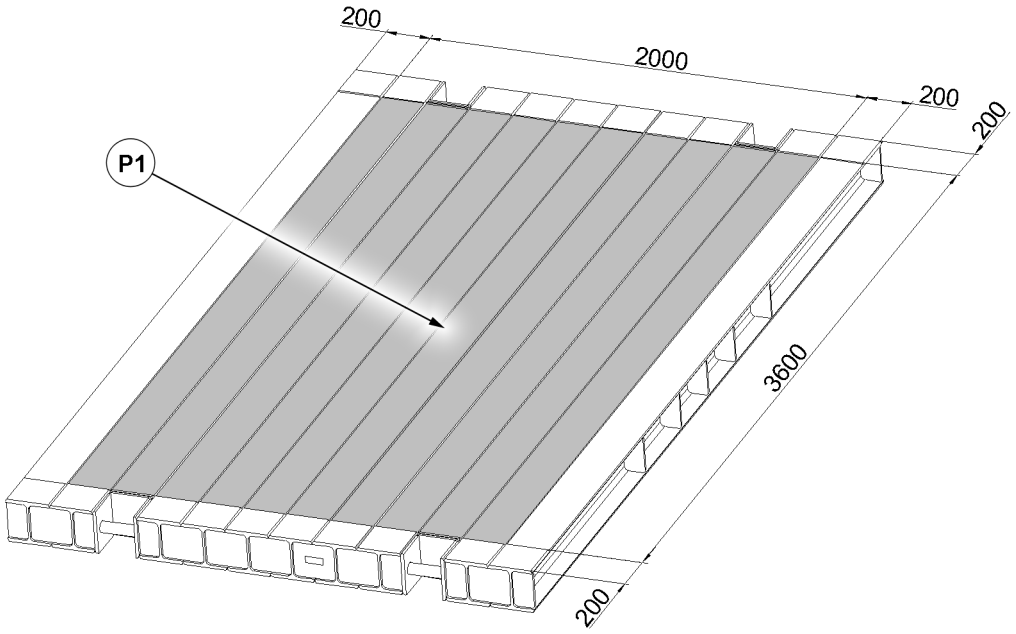

Fig.156546: Permissible placement surface for support plates

P1 Support surface for support plates with placement surface of 600 x 600 mm with permissible support pressure of 2650 kN

P1 Support surface for support plates with placement surface of 700 x 700 mm with permissible support pressure of 3100 kN

copyright © Liebherr-Werk Ehingen GmbH 2023

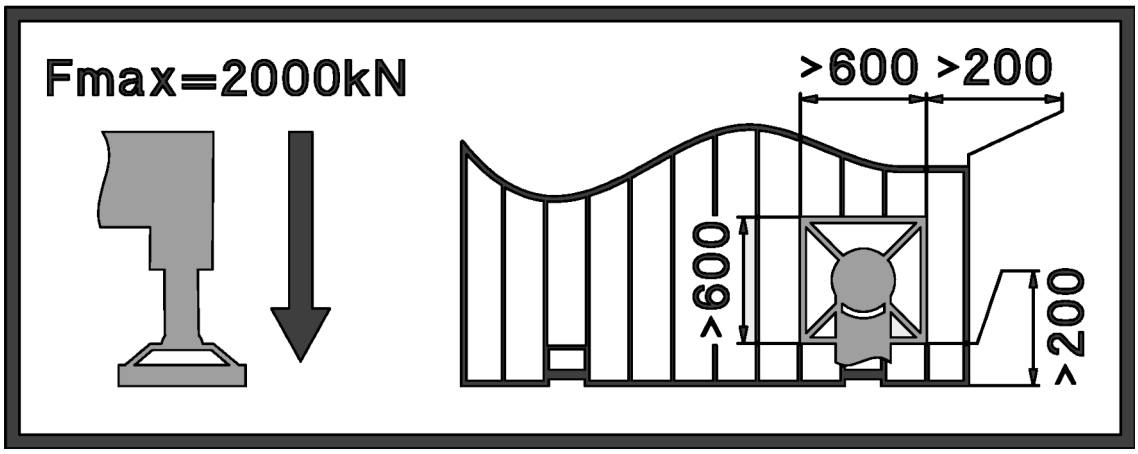

Fig.156549: The support plate is positioned off-center on the outrigger pad

An even pressure distribution over the substructure surface can be obtained by centrally positioning the support plates on the outrigger pad.

WARNING
Impermissible support plate substructure!
The crane can topple over.
Death, bodily injury, property damage.
► Place the outrigger pads **centrally** or according to the description under the support plates.

A support plate can be placed off-center on this outrigger pad. The minimum distance is 200 mm from the side edge of the outrigger pad. The side length of the support plate must be at least 600 mm.

5.4.2 Driving the outrigger pad in the cross direction with a crawler crane

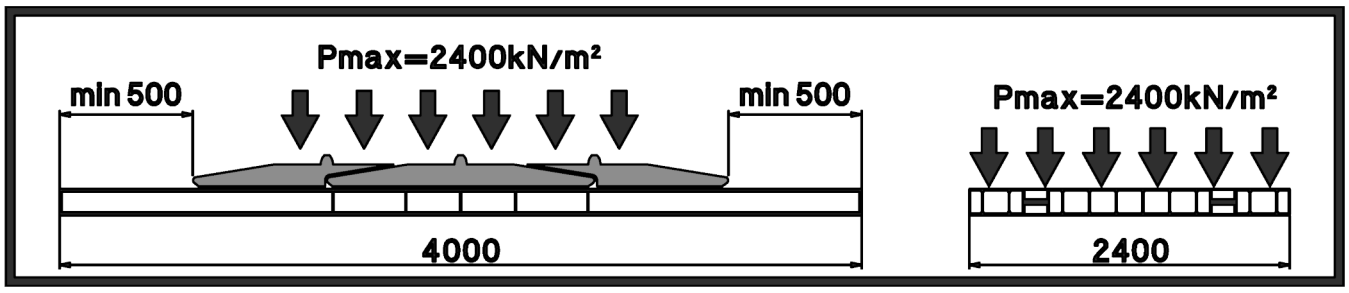

Fig.156548: Driving the outrigger pad in the cross direction with a crawler crane

LWE/LTR 1100-009/25105-02-02/en

copyright © Liebherr-Werk Ehingen GmbH 2023

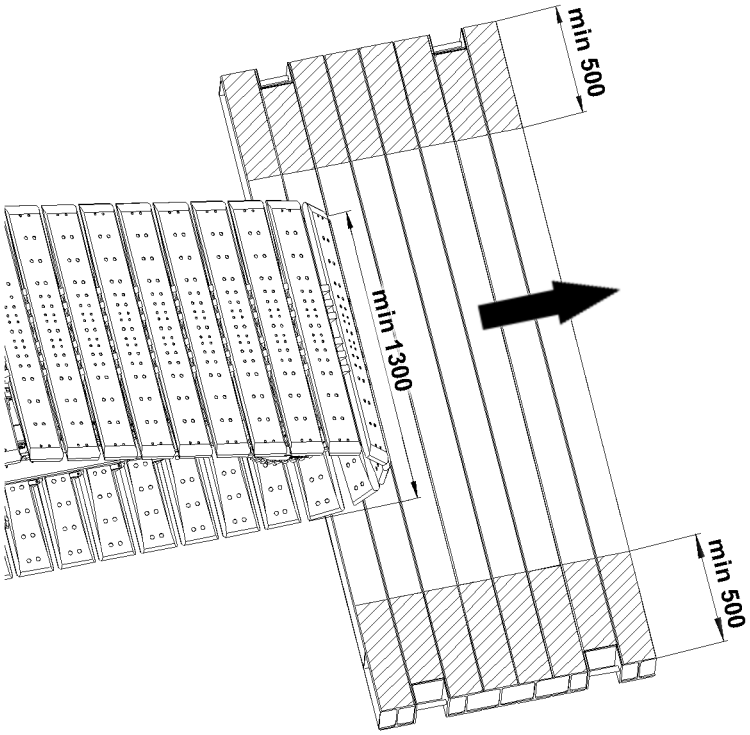

Fig.156547: Permissible driving range with the crawler crane

This outrigger pad can be driven in the cross direction with an approved crawler crane. The distance of at least 500 mm to the side edges (longitudinal side) of the outrigger pad must be observed. The support width of the crawler chain must be at least 1300 mm.

5.4.3 Driving the outrigger pad in the cross direction over a cavity with a crawler crane

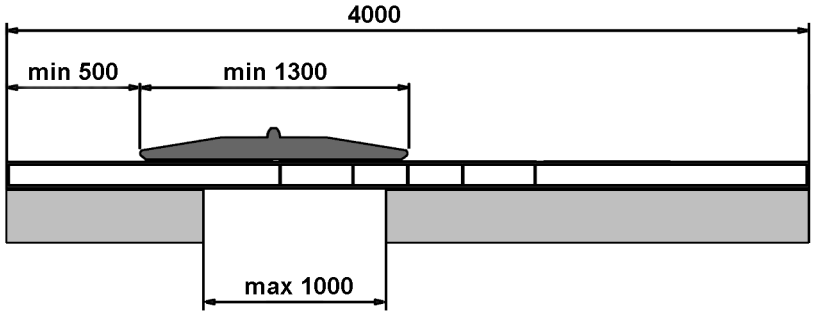

Fig.156551: Permissible driving range with the crawler crane

This outrigger pad can be driven in the cross direction over a cavity with an approved crawler crane. The distance of at least 500 mm to the side edges (longitudinal side) of the outrigger pad must be observed. The support width of the crawler chain must be at least 1300 mm. The cavity can have a maximum width of 1000 mm.

LWE/LTR 1100-009/25105-02-02/en

copyright © Liebherr-Werk Ehingen GmbH 2023

Empty page!

LWE/LTR 1100-009/25105-02-02/en

copyright © Liebherr-Werk Ehingen GmbH 2023

2 Safety

LWE/LTR 1100-009/25105-02-02/en

copyright © Liebherr-Werk Ehingen GmbH 2023

LWE/LTR 1100-009/25105-02-02/en

copyright © Liebherr-Werk Ehingen GmbH 2023

2.03 Job planning

1 Planning Crane operation 3

LWE/LTR 1100-009/25105-02-02/en

copyright © Liebherr-Werk Ehingen GmbH 2023

LWE/LTR 1100-009/25105-02-02/en

Fig.195219

copyright © Liebherr-Werk Ehingen GmbH 2023

1 Planning Crane operation

In addition to a perfectly working crane and a well-trained crew, the **planning for crane operation** is an important principle for safe crane operation.

WARNING
Missing information!
Death, severe bodily injuries, property damage.
► Obtain the required information and adhere to it.

Obtain the following information before crane operation and adhere to it:
– Type of crane operation
– National laws and regulations
– Height and width clearance measurements
– When mobile crane: Job site, distance and travel route
– Space prerequisites at the job site
– Electrical transmission lines with voltage data
– Movement restrictions caused by buildings
– Weight and dimensions of the load(s) to be lifted
– Geometric form and air resistance coefficient of the load(s) to be lifted
– Required lifting height and boom projection
– Ground bearing capacity at the job site
– Required space for the assembly and disassembly of the crane
– Weather data and weather forecasts

Assemble the equipment for crane operation:
– Hook block / load hook
– Auxiliary boom
– Fastening equipment
– Counterweight
– Base materials for support plates

LWE/LTR 1100-009/25105-02-02/en

copyright © Liebherr-Werk Ehingen GmbH 2023

Empty page!

LWE/LTR 1100-009/25105-02-02/en

copyright © Liebherr-Werk Ehingen GmbH 2023

2.04 Technical safety instructions

1	Dangers on the crane	2
2	Safe working environment	4
3	Definition of roles	5
4	Instructions to personnel	11
5	Danger zone of the crane	12
6	Traffic endangerment and environmental damage	13
7	Endangering air traffic	13
8	Movement on the crane	14
9	Emergency exit - driver's cab	16
10	Emergency crane cab exit	16
11	Personal protective equipment	20
12	Supplied fire extinguisher	26
13	Securing persons to prevent them from falling	26
14	Saving personnel	28
15	Crane cab	28
16	Side window	36
17	Emergency hammer*	36
18	Transport	37
19	Fastening	40
20	Selecting the location	40
21	Slopes and excavations	44
22	Loads on the ground due to crane operation	47
23	Support	51
24	Alignment of the crane	53
25	Checking the safety measures	54
26	Safety instructions in case of an external power supply	55
27	Grounding for potential equalization	55
28	Working in the vicinity of transmitters	57
29	Crane operation in case of thunderstorms	58
30	Wind influences	59
31	Lifting a load with two cranes	66
32	Overlapping of working ranges of several cranes	68
33	Hand signals for guidance	69
34	Travel operation	77
35	Crane operation	79
36	Lifting of personnel	87
37	Securing personnel on shut off crane	89
38	Welding work on the load	91

LWE/LTR 1100-009/25105-02-02/en

copyright © Liebherr-Werk Ehingen GmbH 2023

Note
► The illustrations in this chapter are only examples. The illustrations may differ depending on the respective crane.

1 Dangers on the crane

1.1 Chemicals

Proposition 65 of the US State of California warns against chemicals that are known to cause cancer and birth defects or other reproductive harm. For additional information, see the website: **www.P65Warnings.ca.gov**

Proposition 65

WARNING: This product can expose you to chemicals, which are known to the State of California to cause cancer and birth defects or other reproductive harm.

- Avoid direct contact with chemicals.
- Use personal protective equipment: Always wear protective gloves.
- After handling: Wash hands thoroughly.
- Dispose of chemicals in an environmentally acceptable manner according to local regulations.

For more information see: www.P65Warnings.ca.gov.

Fig.154660: Example of a Proposition 65 sign for USA: Chemicals

WARNING
Chemicals!
Damage to health such as cancer and birth defects or other reproductive harm.
► Avoid direct contact with chemicals.
► Use personal protective equipment: **Always** wear protective gloves.
► After handling: Wash hands thoroughly.
► Dispose of chemicals in an environmentally acceptable manner according to local regulations.

1.2 Diesel engine exhaust emissions

Proposition 65 of the US State of California warns against diesel engine exhaust emissions that are known to cause cancer and birth defects or other reproductive harm. For additional information, see the website: **www.P65Warnings.ca.gov/diesel**

LWE/LTR 1100-009/25105-02-02/en

copyright © Liebherr-Werk Ehingen GmbH 2023

Proposition 65

WARNING: Breathing diesel engine exhaust exposes you to chemicals known to the State of California to cause cancer and birth defects or other reproductive harm.

- Always start and operate the engine in a well-ventilated area.
- If in an enclosed area, vent the exhaust to the outside.
- Do not modify or tamper with the exhaust system.
- Do not idle the engine except as necessary.

For more information see: www.P65Warnings.ca.gov/diesel.

Fig.154661: Example of a Proposition 65 sign for USA: Diesel engine exhaust emissions

WARNING
Diesel engine exhaust emissions!
Damage to health such as cancer and birth defects or other reproductive harm.
► Always start and operate the diesel engine in properly ventilated spaces.
► If in enclosed areas: Direct the exhaust gas to the outside.
► Do not convert the exhaust system or make any other changes.
► Do not run the engine at idle speed for longer than necessary.

1.3 Lead and lead compounds

Proposition 65 of the US State of California warns against lead and lead compounds that are known to cause cancer and birth defects or other reproductive harm. For additional information, see the website: **www.P65Warnings.ca.gov**

Proposition 65

WARNING: This product can expose you to chemicals, including lead and lead compounds, which are known to the State of California to cause cancer and birth defects or other reproductive harm.

- Avoid direct contact with batteries and their components.
- Do not touch them with bare hands.
- Use personal protective equipment: **Always** wear protective gloves.
- After handling: Wash hands thoroughly.
- Dispose of disused batteries in an environmentally acceptable manner according to local regulations.

For more information see: www.P65Warnings.ca.gov.

Fig.154662: Example of a Proposition 65 sign for USA: Lead and lead compounds

LWE/LTR 1100-009/25105-02-02/en

copyright © Liebherr-Werk Ehingen GmbH 2023

WARNING
Batteries, battery poles, battery terminals and other battery components contain lead and lead compounds!
Damage to health such as birth defects and other reproductive harm.
- ► Avoid direct contact with batteries and their components.
- ► Do not touch them with bare hands.
- ► Use personal protective equipment: **Always** wear protective gloves.
- ► After handling: Wash hands thoroughly.
- ► Dispose of disused batteries in an environmentally acceptable manner according to local regulations.

1.4 Hydraulic oil, diesel fuel, operating fluids

WARNING
Due to technical defects or open tank covers, hydraulic oil, diesel fuel or service fluids spill out!
Dirt from the road and ground.
Traffic endangerment: Danger of skidding, death, severe bodily injuries.
Environmental pollution: Death, severe damage to health.
- ► Remedy the technical defect immediately.
- ► Securely close the tank cover after refueling.
- ► Immediately and thoroughly remove traces of hydraulic oil, diesel fuel, operating fluids.
- ► Avoid skin contact with hydraulic oil, diesel fuel and operating fluids.
- ► Wear personal protective equipment.

WARNING
Hot hydraulic oil! Hot service fluids!
Severe burns, severe scalds and severe bodily injuries.
- ► Before all work: Let hot hydraulic oil and hot operating fluids cool off.
- ► Avoid contact with hot hydraulic oil and hot operating fluids.
- ► Wear personal protective equipment.

1.5 Heated crane components

WARNING
Heated crane components! Hot surfaces!
Severe burns.
This applies in particular to exhaust systems, engines and transmissions.
- ► Let the components cool down before touching them.
- ► Proceed with special caution near heated crane components.
- ► Avoid skin contact with hot surfaces.
- ► Use personal protective equipment, such as protective gloves.

2 Safe working environment

A systematic procedure for creating a safe working environment must be ensured. The procedure must be followed for all components of crane use, regardless if it concerns an individual procedure or a group of repeating procedures.

All required preparations of the job site, assembly, disassembly, maintenance and driving the crane and the equipment must be understood as components of crane use. The following points concerning a systematic procedure for creating a safe working environment are effectively communicated to all involved parties.

LWE/LTR 1100-009/25105-02-02/en

copyright © Liebherr-Werk Ehingen GmbH 2023

The systematic procedure is as follows:
- Job planning: So that crane uses can be carried out safety, they must be planned in advance in consideration of all foreseeable risks. Planning is carried out by people with corresponding technical knowledge. In the case of repeated uses or routine uses, this planning is possibly required only for the first use. A check must be performed regularly if the factors of use or environmental conditions have changed. If the factors of use have changed, job planning must be performed again. The national and regional specifications on crane use must be observed. For example, the European Directive “Use of work equipment” and its implementation as a national or regional regulation, such as the “Operational safety regulation” in Germany.
- Selection, operational provision and use of suitable cranes and equipment:
  This concerns, for example, assembly tools, personal protective equipment (PPE), material for supporting the crane, load handling equipment and fastening equipment.
- Maintenance, testing and inspection of cranes and equipment:
  This concerns, for example, assembly tools, personal protective equipment (PPE), material for supporting the crane, load handling equipment and fastening equipment. Observe the national and regional regulations when checking the work equipment and cranes.
- Reasonable supervision by properly trained and competent personnel provided with the required authority.
- Provision of properly trained and competent personnel who fulfill all necessary requirements.
- Provision of properly trained and competent personnel who have received an explanation of their responsibilities and the responsibility of the others involved in crane use.
- Make sure that all required certificates and documents, such as, for example, crane test reports, qualification certifications for personnel, are valid, are available and demonstrate the required suitability.
- Cooperation with other authorities and test points for reaching the corresponding conformity with approvals.
- Cooperation with other trades and service providers with regard to crane use for preventing danger or protecting against danger, for example with additional crane operators and machine operators.
- Make sure, at all times, that unauthorized movements or unauthorized uses of the crane are prevented.
- Ensure safety for people who are not involved in crane use.
- Establish a communication system that is understood by everyone involved in crane use. For safety of crane use, all personnel must be able to communicate clearly in the same language.

3 Definition of roles

Safe crane operation depends on suitable personnel, for example.

Selection of personnel:
- Training certificates and evidence of practical experience are helpful when selecting competent personnel.
- Observe the national and regional regulations concerning personnel qualification.

All personnel have the following responsibilities:
- Personnel wear the personal protective equipment necessary for the respective work procedure in accordance with the Crane documentation and national and regional regulations.
- Personnel contact their supervisors when there are questions about the crane documentation or the information in the crane documentation is not sufficient.

All personnel must fulfil the following requirements:
- Personnel are physically and psychologically suitable to fulfil their roles, in particular with regard to vision, hearing, reflexes and a short reaction time.
- Personnel are **not** impaired by alcohol, drugs or other influences. Personnel who are impaired by alcohol, drugs or other influences may **not** be used.
- Personnel are able to fulfil the tasks assigned to them in a reliable manner.
- Personnel are trained according to the requirements.
- Personnel comply with the national and regulation regulations on age. An exception to this are personnel who, for training purposes, are under the direct supervision of an authorized person.

LWE/LTR 1100-009/25105-02-02/en

copyright © Liebherr-Werk Ehingen GmbH 2023

All personnel must have the following qualifications and knowledge that are relevant for their individual scope of duties:
- Technical training and work experience.
- Knowledge of the use of suitable personnel protective equipment, especially fall protection equipment.
- Knowledge of the relevant standards, national and regional regulations, accident prevention regulations.
- Knowledge of the tasks and responsibilities of the involved persons.
- Ability to recognize and avoid possible dangers.

3.1 Understanding of roles

The roles in the following sections define the respective requirements and responsibilities. One person can fulfil multiple roles.

The roles of the people located near the crane must be defined at all times and be known to all involved personnel.

3.2 Manufacturer

The manufacturer has the following responsibilities:
- The manufacturer is responsible for the safety-related, proper condition of a new crane with accessories and crane documentation when handed over the first time to the operating company.
- The manufacturer documents all service work carried out by the manufacturer.
- The manufacturer offers training for crane operators, assembly personnel and maintenance personnel.
- The manufacturer offers services to support the operating company.

3.3 Operating company

The operating company can also be the owner of the crane.

The operating company has the following responsibilities:
- The operating company makes sure that the crane fulfils the national and regional regulations of the job site. If necessary, the crane must be changed, for example with signs, lighting, exhaust system, underride protection.
  When importing the crane into the United Kingdom, English crane documentation must also be provided. Examples are provided. If necessary, request them from the customer service at Liebherr-Werk Ehingen GmbH.
- The operating company is responsible for the safety-related, proper condition of the crane with accessories and complete crane documentation after hand over from the manufacturer.
- The crane documentation must be made available to personnel that work on and with the crane.
- The operating company makes sure that only trained personnel are used.
- The operating company provides the necessary personal protective equipment to all involved personnel. This responsibility includes all work on the crane and with the crane.
- When personnel are being trained, they must be suitably supervised.
- The responsible individuals make sure that personnel are efficiently organized, so that safe cooperation is ensured while working.
- The operating company checks at regular intervals that personnel are working in a safety-conscious manner.
- The operating company makes sure that when driving the crane on public roads, all national and regional traffic regulations as well as those required by the manufacturer are observed.
- The operating company commissions maintenance personnel and authorized and trained service personnel according to the maintenance and inspection schedule.
- The operating company appoints an authorized inspector. The operating company appoints an authorized inspector to perform the tests and maintenance required nationally, regionally and by Liebherr-Werk Ehingen GmbH. In this way the operating company ensures the further, safe and reliable operation of the crane.
- The operating company shall not make any alterations or repairs to load bearing or safety-relevant parts of the crane without consulting with the manufacturer and receiving written approval.

LWE/LTR 1100-009/25105-02-02/en

copyright © Liebherr-Werk Ehingen GmbH 2023

- The operating company makes sure that only original spare parts from Liebherr-Werk Ehingen GmbH are used.
- The operating company contacts customer service at Liebherr-Werk Ehingen GmbH when the information in the crane documentation is not sufficient.
- The operating company will inform the manufacturer of every safety-relevant incident that was caused directly by the crane, its components or by the crane documentation.

3.3.1 Transferring of responsibility

When the use of the crane is not carried out by the operating company, they must make sure that their areas of responsibility are contractually transferred to the organization using the crane.

3.3.2 Monitoring by a designated person

The operating company determines a „designated person“ who is responsible for the monitoring of crane use.

The designated person is known to the crane operator and the involved persons located near crane use.

The designated person has the following tasks:
- The designated person assesses the use of the crane, so that the planning, selection of the crane or cranes, selection of the hoist gear and lifting equipment, support substructure, wind planning as well as instructions and supervision are ensured for the safe performance of the task. This includes consultation with other people responsible and guaranteeing the required cooperation with any other involved organizations.
- The designated person checks that the set up configuration was assembled properly before erection of the boom.
- The designated person makes sure that the tests and inspections as well as crane and equipment maintenance required nationally, regionally and by Liebherr-Werk Ehingen GmbH are carried out.
- The designated person makes sure that an effective procedure is in place for reporting defects and events as well as for carrying out the necessary corrective measures.
- The designated person is responsible for the organization and monitoring of crane use. The designated person assigns the role of crane operator and the other roles to competent people are assigned the role of crane operator as well as other roles and authorizes their activities.

The designated person receives the authority required for performance all their tasks in consultation with the crane operator. The designated person receives in particular the authority to stop operation when they believe that continuing operation could be dangerous.

3.4 Crane operator (crane driver)

The crane operator has the following responsibilities:
- The crane operator is responsible for the proper operation of the crane in compliance with the Crane documentation and within the framework of the systematic procedure for creating a safe working environment. See section „Safe working environment“ in this chapter. This concerns both the lifting of loads as well as driving at the job site, and when required driving on public roads.
- The crane operator must always react only to the signal of the slinger or the guide, except in the case of a stop signal. The slinger or guide must be clearly recognizable. See section „Slinger“ and section „Guide“ in this chapter.
- The crane operator has read and understood the crane documentation.
- The crane operator operates the crane as intended within the limit values of the crane, depending on the weather and wind.
- The crane operator stops operation immediately when a safe method of operation is no longer possible, for example due to the weather and wind. The crane operator immediately initiates the required measures.
- The crane operator carries out all the tasks assigned to them by their role in the manufacturer’s maintenance and inspection plan.
- The crane operator uses only original spare parts from Liebherr-Werk Ehingen GmbH.
- The crane operator shall not make any alterations or repairs to the crane without consulting with the operating company and receiving written approval.

LWE/LTR 1100-009/25105-02-02/en

copyright © Liebherr-Werk Ehingen GmbH 2023

- The crane operator observes the national and regional regulations.
- When driving on public roads, the crane operator follows the national and regional traffic regulations.
- The crane operator establishes a travel condition that complies with the locally valid rules and the definitions in the crane documentation.
- When transferring the crane to another crane operator: All data and settings for which the last crane operator is responsible must be transferred to the new crane operator.
- The crane operator informs the operating company about every unsafe change to the crane.

The crane operator fulfils the following requirements:
- The crane operator fulfils the requirements in section „Slinger“ and section „Guide“.
- The crane operator is physically capable of operating the crane in a safe manner.
- The crane operator provides the operating company with a health certificate that confirms that he is physically fit to operate the crane, if required by national or regional regulations.
- The crane operator is authorized to operate the crane.
- The crane operator is suitably trained with regard to the crane type to be operated. The crane operator has sufficient knowledge about the crane, the control and the safety equipment of the crane.
- The crane operator has the necessary knowledge to act independently in emergency situations and in the case of special events.
- The crane operator is trained in the use of and is familiar with all fire extinguishers on the crane.
- The crane operator is able to evaluate distances, heights and spaces.
- The crane operator is familiar with driving the crane from the driver's cab.
- Depending on the crane type, the crane operator is familiar with driving the crane from the crane cab.
- The crane operator is familiar with the maintenance and inspection schedule and the recommended procedures and preventive measures.
- The crane operator is familiar with the signal signs according to the regulations at the job site.

3.5 Slinger

The slinger has the following responsibilities:
- The slinger is responsible for fastening and loosening the load to or from the crane load carriers.
- The slinger is responsible for using the correct fastening equipment, load handling equipment and the correct equipment in compliance with the job planning for proper load handling.
- The slinger is responsible for guiding the load.
- When more than one slinger is present, at every moment only one slinger is responsible for the signal for releasing the load for the stroke.

The slinger fulfils the following requirements:
- The slinger fulfils the requirements in the section „Guide“.
- The slinger is physically able to use the load handling equipment, fastening equipment and the equipment.
- The slinger is physically able to guide the load.
- The slinger is authorized to give signal signs.
- The slinger is authorized to perform fastening operations.
- The slinger has received training in fastening techniques.
- The slinger has received training in securing against unforeseen unhooking of load handling equipment or fastening equipment.
- The slinger has received training in avoiding damage to load handling equipment and fastening equipment.
- The slinger is able to select the required load handling equipment, fastening equipment and equipment in a suitable condition for the load to be lifted.
- The slinger is aware of the weight of the load to be lifted with the dimensions and distance from the crane.
- The slinger is able to fasten balanced loads.
- The slinger is able to give precise and clear verbal instructions when audio devices are used (radio equipment, for example) and can use this equipment.

LWE/LTR 1100-009/25105-02-02/en

copyright © Liebherr-Werk Ehingen GmbH 2023

3.6 Guide

The guide has the following responsibilities:
- The guide is responsible for relaying the signal from the slinger to the crane operator.
- The guide is responsible for directing the crane movements, the load and travel movements.
  The guide must select a suitable position that ensures visual contact with the crane operator. If the guide does not have visual contact with the crane operator, the responsibility must be transferred to another guide.
  Alternatively, other suitable acoustic or visual methods can be used.
- When more than one guide is present, at every moment only one guide is responsible.
- If while the crane is being used, the responsibility for directing the crane movements, the load and the travel movements is transferred to another person, the guide must clearly notify the crane operator that the responsibility was transferred and to whom. Furthermore, the crane operator and the newly designated person must clearly indicate that they accept the transfer of the responsibility.

The guide fulfils the following requirements:
- The guide is authorized to give signal signs.
- The guide has received training in guidance and is familiar with the signal signs according to the regulations at the job site.
- The guide is able to evaluate distances, heights and spaces.
- The guide is able to safely guide the load.
- The guide is able to safely direct the crane movements, the load and the travel movements.
- The guide is aware of the hazards that can result from the crane movements, load, travel movements and conditions at the job site. The guide selects a safe working position for themselves.
- The guide is able to give precise and clear verbal instructions when audio devices are used (radio equipment, for example), and can use this equipment.

3.7 Assembly personnel

The assembly technician has the following responsibilities:
- The assembly technician is responsible for crane assembly and disassembly and for the equipment in compliance with the manufacturer’s crane documentation.
- When two or more people are required for an activity, one person is appointed as the „responsible technician“, to constantly monitor assembly and disassembly. The responsible technician is responsible for proper assembly and disassembly of the crane and the equipment.
- The assembly technician has read and understood the operating instructions, assembly plans, rod plans and all other documents necessary for assembly and disassembly.
- The assembly technician is aware of the weight of the load to be lifted and, in particular, of the crane components to be assembled, with the dimensions and distance from the crane.
- The assembly technician shall not make any alterations or repairs to the crane without consulting with the operating company and receiving written approval.
- The assembly technician carries out all the tasks assigned to them by their role in the manufacturer’s maintenance and inspection plan.
- The assembly technician shall immediately clarify anything that is not clear with their supervisor.

The assembly technician fulfils the following requirements:
- The assembly technician fulfils the requirements in section „Slinger“ and section „Guide“.
- The assembly technician is physically able to use the load handling equipment, fastening equipment and the equipment as well as tools and work equipment.
- The assembly technician is able to work at heights in a confident and safe manner.
- The assembly technician has received suitable training in the assembly and disassembly and in the method of operating the crane type to be set up.
- The assembly technician has received suitable training in the erection and testing of the safety equipment on the crane to be set up.
- The assembly technician is familiar with the crane that is being assembled or disassembled by the assembly technician. The assembly technician is familiar with the resulting dangers.
- The assembly technician is familiar with the procedures and precautions for assembly and disassembly.
- The assembly technician is able to select the required load handling equipment, fastening equipment and equipment. The suitable condition of the load handling equipment, fastening equipment

LWE/LTR 1100-009/25105-02-02/en

copyright © Liebherr-Werk Ehingen GmbH 2023

and equipment depends on the load to be lifted, and in particular the crane components to be assembled.
- The assembly technician is able to fasten balanced loads in accordance with the crane documentation, and in particular with the crane components to be assembled.
- The assembly technician is familiar with the maintenance and inspection schedule and the recommended procedures and preventive measures.

3.8 Auxiliary operator

The auxiliary operator follows the instructions of the other defined roles. The activities of the auxiliary operator must be monitored by the other defined roles and checked at the end. The auxiliary operator is **not** authorized to make further decisions that go beyond the ancillary tasks assigned to them.

The auxiliary operator has the following responsibilities:
- The auxiliary operator supports the other defined roles during the work process by performing manual and supervisory tasks. These tasks include, for example, handing tools and auxiliary materials, aligning tools, connecting tool parts and auxiliary materials, as well as monitoring movements in hard to see areas.

The auxiliary operator fulfils the following requirements:
- The auxiliary operator knows the steps of the work procedure for which the auxiliary operator is providing support.
- The auxiliary operator has a technical understanding and knowledge of common tools.
- The auxiliary operator is capable of carrying out technical activities with tools and measuring equipment.
- The auxiliary operator is able to fulfil the ancillary activities assigned to them in a reliable manner.

3.9 Maintenance technician

The maintenance technician has the following responsibilities:
- The maintenance technician us responsible for the assigned crane maintenance according to the maintenance and inspection schedule and for guaranteeing safe and problem-free operation.
- The maintenance technician performs all required maintenance work in compliance with the manufacturer's maintenance and inspection schedule and within the framework of a systematic procedure for creating a safe working environment. See section „Safe working environment“ in this chapter.
- The maintenance technician has read and understood the operating instructions and all other necessary documents.
- The maintenance technician uses only original spare parts from Liebherr-Werk Ehingen GmbH.

The maintenance technician fulfils the following requirements:
- The maintenance technician is physically able to use the load handling equipment, fastening equipment and the equipment.
- The maintenance technician is trained personnel with qualified training, who have the technical knowledge and experience required to perform the respective maintenance operations.
- The maintenance technician is properly trained and authorized, according to the obligations of the operating company. This includes participation in corresponding courses, when special equipment is used.
- The maintenance technician is familiar with the maintenance and inspection schedule and the recommended procedures and preventive measures.
- The maintenance technician is familiar with the crane to be serviced and the resulting dangers.

3.10 Authorized and trained service technician

The service technician has the following responsibilities:
- The service technician is responsible for carrying out the assigned crane maintenance and repairs to guarantee safe and satisfactory operation.
- The service technician performs all required work in compliance with the manufacturer's maintenance and inspection schedule and within the framework of a systematic procedure for creating a safe working environment. See section „Safe working environment“ in this chapter.

LWE/LTR 1100-009/25105-02-02/en

copyright © Liebherr-Werk Ehingen GmbH 2023

– The service technician only carries out work for which the service technician was authorized and trained to carry out by Liebherr-Werk Ehingen GmbH or a Liebherr service point.

The service technician fulfils the following requirements:
– The service technician has comprehensive detailed knowledge about the components and systems.

3.11 Authorized inspector

The authorized inspector has the following responsibilities according to national and regional regulations:
– The authorized inspector carries out inspections and maintenance on the crane in accordance with the manufacturer's inspection schedule to guarantee further, safe and reliable crane operation.
– The performance of these inspections and maintenance requires particular technical competency and therefore **cannot** be performed by maintenance personnel or authorized and trained service personnel.
– The authorized inspector carries out acceptances and product certifications, on behalf of a notified body, according to the applicable, valid directives and standards.
– The authorized inspector provides the operating company with permission and approval for further use of the component and / or the crane.
– The authorized inspector has the authority to prohibit further use of the component and / or the crane.
– The authorized inspector documents the test results in a suitable document.

The authorized inspector fulfils the following requirements:
– The authorized inspector has the required knowledge for inspecting the components.
– The authorized inspector has experience in inspecting the components.
– The authorized inspector has knowledge about the valid standards, directives, national and regional regulations and accident prevention regulations.
– The authorized inspector fulfils the requirements according to national and regional regulations.
– If required by national or regional regulations: The authorized inspector is appointed by an independent accreditation body or similar.

4 Instructions to personnel

4.1 Before the start of crane operation

Carry out the following checks before starting to work with the crane:
– Make sure that job planner determines the set up configuration and positioning of the crane, use of supports and ground conditions.
– Make sure that the permissible crane utilization and the load carrying capacity of the ground is not exceeded.
– Check the proper assembly of the crane parts according to the crane documentation.
– Check all accessible ropes, rope end connections, winches, rope pulleys and hook blocks for visible defects.
– Check the displays for operating fluids and system parameters as well as the wind speed.
– If a BTT or radio remote control is present: Check the assignment of the BTT or the radio remote control with the crane.
– Check the safety equipment: For example overload protection, limit switch.
– Check the warning devices: Output of acoustic and optical warning signals.
– Check the function of the brakes.
– Ensure a good view of the load and working area.
– Ensure communication between the crane operator, slinger and guide. Make sure that the signals for communication between personnel are agreed upon prior to their use.
– Make sure that all control systems are in the neutral or idle position before starting the drive assembly.
– Make sure that only necessary persons are in the danger zone. For the rules, see section „Danger zone of the crane".

LWE/LTR 1100-009/25105-02-02/en

copyright © Liebherr-Werk Ehingen GmbH 2023

4.2 While working with the crane

Observe the following basic safety requirements while working with the crane:
- Make sure that personnel know how to proceed in the case of a storm or thunderstorm.
- After a potential lightning strike: Check the crane.
- Make sure that only necessary persons are in the danger zone. For the rules, see section „Danger zone of the crane“.
- The crane operator must give an acoustic warning sign prior to a lifting movement.
- The crane operator must exclude hazards by crane movements. The crane operator gives the warning signs at their own discretion and decides if the crane movements are stopped.
- Do not move loads over personnel.
- The crane operator monitors the load for all crane movements or the load lifting devices when moving the crane without a load. If observation is not possible, the crane can be controlled only with the aid of a guide.
- Only move loads attached by hand when the crane operator has received a clear sign from the slinger, the guide or another authorized person.
- Make sure that only properly fastened loads are carried.
- Make sure that the load or load handling equipment does not touch the boom.
- When a load is suspended on the crane, the crane operator must keep their hands near the control systems.
- In the case of an emergency, stop the crane movements and set down the load if necessary.
- Make sure that the crane movements are not shut off when multiple crane movements are controlled at the same time.
- Do **not** run up against end positions that are limited by a limit switch during operation.
- Do **not** drag the load on the ground. Make sure that the hook is located vertically over the center of gravity of the load. Only lift the load off the ground vertically and only with the hoist gear.
- In the limit ranges of the load chart and the overload protection: Proceed carefully. Prevent shut-offs.
- Make sure that the regulations are observed when bypassing the overload protection.
- Comply with the specifications for emergency operation.

4.3 Leaving the crane, ending work with the crane

Comply with the following basic safety requirements before leaving the crane:
- In the case of unpredictable weather conditions and exceedance of the maximum permissible wind speed, take down the equipment and boom. Telescope the telescopic boom in. If necessary: Adjust the set up configuration, dismantle the boom.
- Make sure that, with the help of the weather forecast, the permissible wind speed depending on the crane condition is not exceeded. Comply with the specifications in the wind speed charts, erection and take-down charts and in the load chart manual. If necessary: Adjust the set up configuration, dismantle the boom.
- Bring the control systems to the neutral or idle position before leaving the control platform.
- Turn the engine off.
- During take-down, protect the BTT or radio remote control against unauthorized turning on.
- Close the crane cab und if present the driver's cab.
- Observe the regulations concerning interrupting work with the crane with a set up crane.
- Observe the regulations concerning interrupting work with the crane with a set up crane out of operation.

5 Danger zone of the crane

5.1 Crane in operation

The danger zone of the crane is made up of the areas that are accessed during crane operation by the load or by movements of the crane or the crane components.

LWE/LTR 1100-009/25105-02-02/en

copyright © Liebherr-Werk Ehingen GmbH 2023

WARNING
Remaining in the danger zone!
Personnel within the danger zone can be hit by falling loads or components.
Personnel in the danger zone can be caught by moving crane components or loads.
Fatal or severe injuries can be the result.
- ► Warn any personnel in the danger zone with the crane warning device.
- ► After the warning is issued, wait and ensure that no personnel remains in the danger zone.
- ► If required, block off the danger zone at a safety distance.

5.2 Crane out of service

Take the crane out of service, failure to comply with the regulations represents considerable danger for the entire area around the crane.

WARNING
Actual wind speed higher than the wind speed permitted for the crane set up configuration!
Personnel in the danger zone can be hit by a toppling crane or crane components.
- ► Make sure that the condition of the crane complies with the regulations and the wind speed charts.
- ► If required, block off the danger zone at a safety distance.

WARNING
Icing on the boom!
Personnel within the danger zone can be hit by a falling ice.
- ► Make sure that there are no persons in the danger zone.
- ► If required, block off the danger zone at a safety distance.

6 Traffic endangerment and environmental damage

WARNING
Danger of slipping and skidding!
If the road becomes contaminated due to technical defects, open tank covers or leaking hydraulic oil, then this would pose a severe traffic endangerment.
Fatal accidents can result.
- ► Remove oil immediately and thoroughly.

7 Endangering air traffic

When working with crane, heights are reached which could endanger air traffic. This applies especially to areas near airports.

WARNING
Endangering air traffic!
If no protective measures are taken, this can result in endangerment to air traffic.
- ► Obtain approval from the agency responsible for air traffic.
- ► Observe the national and regional regulations. For example, in order to identify aviation obstructions.
- ► Carry out identification if required according to the national and regional regulations (for example with flags or warning signs).
- ► Assemble the airplane warning light on the boom head and turn it on.
- ► If the airplane warning lights is operated for a longer period of time, with the engine turned off, then the battery can be discharged and as the result the airplane warning light turns off. To prevent the battery from discharging, an external electrical power supply must be established.

LWE/LTR 1100-009/25105-02-02/en

copyright © Liebherr-Werk Ehingen GmbH 2023

8 Movement on the crane

WARNING
Working at heights without suitable aids and fall protection equipment!
Danger of falling.
- ► Always use proper fall protection equipment according to national and regional regulations.
- ► Comply with the specifications in section „Personal protective equipment“.
- ► Comply with the specifications in section „Aids for working at a height“.
- ► Comply with the specifications for fall protection equipment on lattice sections and booms, see section „Securing persons to prevent them from falling“.
- ► Comply with the specifications for the fall protection equipment, see chapter 2.06 and chapter 2.07.

When railings are available:
- ► Make sure that the railings are swung in and secured in the operating position.

When the railings are **not** assembled in the operating position:
- ► Make sure that personnel are secured with the supplied fall arrest system, see section „Personal protective equipment“.

8.1 Aids for working at a height

All work at a height, when there is a danger of falling, must be carried out with suitable aids.

Part of the category „Aids for working at a height“ are, for example:
- – Work platforms
- – Scaffolding
- – Assembly platform
- – Catwalks
- – Ladders

When working at a height, working on a work platform, scaffolding, assembly platform, catwalk or similar is preferential to working on a ladder.

WARNING
Persons not secured when working at a height!
Personnel can fall down. Death, severe bodily injuries.

When work platforms, scaffolding, catwalks or similar are not available and the work cannot be carried out from the ground:
- ► Secure personnel with the supplied fall arrest system to prevent falling.

When fall protection equipment such as hook points, safety ropes and fastening points are available on the crane:
- ► Secure personnel with the fall arrest system to the fall protection equipment. See chapter 2.06.

When stepping on a ladder:
- ► Do not hold any objects in your hands.
- ► Adhere to the 3-point support. See chapter 2.04.10.

Rules when using the aids:
- – Step on the ladder only with clean shoes.
- – Keep it free from heavy dirt deposits.
- – Keep it free of snow and ice.

8.2 Accessible surfaces

Flat accessible surfaces have an anti-slip coating:
- – Self-adhesive slip-resistant mats
- – Sanding
- – Painting

LWE/LTR 1100-009/25105-02-02/en

copyright © Liebherr-Werk Ehingen GmbH 2023

Accessible surfaces are, for example:
- Walking surfaces and stepping surfaces
- Stairs
- Ladders
- Gratings
- Platforms

Only step on the crane on the marked, accessible surfaces, see chapter 2.07.

Do **not** step on the driver's cab roof or crane cab roof, see chapter 2.05.

WARNING
Danger of slipping and falling!
The traction of accessible surfaces and hand rails changes due to effects of the weather, such as wetness, snow, ice, frost and dirt.
Personnel can slip and fall down from the crane. Death, severe bodily injuries are possible.
The crane can be damaged.
- ► Step on the accessible surfaces only by taking the present conditions into account, such as icing in winter or dirt.
- ► Step or place a load only on the approved accessible surfaces.
- ► Comply with the specifications on the signs.
- ► Replace damaged safety signs (warning signs) immediately.

WARNING
Slippery surfaces, lack of stability!
Personnel can fall down. Death, severe bodily injuries.
- ► Keep accessible surfaces free of objects and obstacles.
- ► Only step on accessible surfaces with a sufficiently clear height.
- ► Step on accessible surfaces only with clean shoes.
- ► Keep accessible surfaces free of heavy dirt, snow and ice!
- ► Stepping on accessible surfaces by persons, including tools and equipment, weighing more than 150 kg is prohibited.
- ► Do **not** step on damaged accessible surfaces.
- ► Replace any damaged or missing accessible surfaces immediately.
- ► Order the spare parts for accessible surfaces from Customer Service at Liebherr-Werk Ehingen GmbH.
- ► Do **not** trip over attachment parts.
- ► Personnel must wear an approved fall arrest system and protective equipment before performing any work on the crane superstructure.

When fall protection equipment is **not** in the assembly / disassembly position or personnel are on **non**-accessible surfaces:
- ► Personnel must hook themselves to the hook points and safety ropes with an approved fall arrest system to prevent falling.

WARNING
Danger of tripping and falling!
When walking on a lattice boom / lattice section, there is a danger of tripping due to attachment parts.
Personnel can fall down. Death, severe bodily injuries.
- ► Personnel must hook themselves to the hook points and safety ropes with an approved fall arrest system to prevent falling.
- ► A grating is approved for a maximum of two people with a total weight of 150 kg including tools and equipment.
- ► No objects, such as boom components or a pin pulling aggregate may be placed or moved on the grating.

LWE/LTR 1100-009/25105-02-02/en

copyright © Liebherr-Werk Ehingen GmbH 2023

9 Emergency exit - driver's cab

WARNING
The driver’s cab **can** not be left using the normal path!
Danger of falling when exiting.
Crane damaged, inclined or tipped over: Increased danger of falling when exiting.
► Exit carefully in an emergency.

If the crane is damaged, inclined or tipped over:
► Accept help from others if possible.

The driver's cab can be exited through the driver's door or the passenger door.

9.1 Emergency exit through an open door

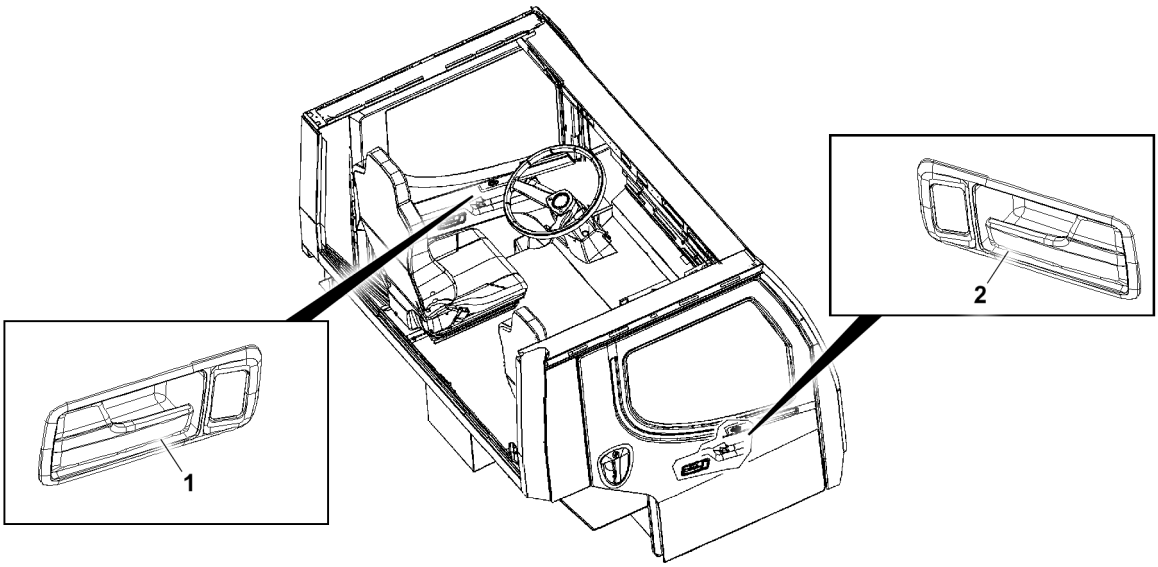

Fig.160365: Example of an emergency exit through an open door

Emergency exit through the open driver’s door:
– Pull the door handle *to the left* **1** and open the driver’s door.
– Leave the driver’s cab through the driver’s door.

Emergency exit through the open passenger door:
– Pull the door handle *to the right* **2** and open the passenger door.
– Leave the driver’s cab through the passenger door.

10 Emergency crane cab exit

WARNING
The crane cab **can** not be left using the normal path!
Danger of falling when exiting.
Crane damaged, inclined or tipped over: Increased danger of falling when exiting.
► Exit carefully in an emergency.

If the crane is damaged, inclined or tipped over:
► Accept help from others if possible.

The crane cab can be left in different ways depending on the type of crane:
– Emergency exit through the open cab door

LWE/LTR 1100-009/25105-02-02/en

copyright © Liebherr-Werk Ehingen GmbH 2023

– Emergency exit through the open front window
– Emergency exit through the roof window with emergency release
– Emergency exit through the side window with emergency release

Note
Each crane cab has at least a suitable window for an emergency exit.
► Windows with sufficiently large openings can be used as an emergency exit depending on the emergency situation.
► Some windows require an emergency release in order to create an opening large enough to climb through.

Not all windows can be used for an emergency exit:
► Some windows are kept small for safety reasons or secured, for example with a securing bracket.

10.1 Emergency exit through the open cab door

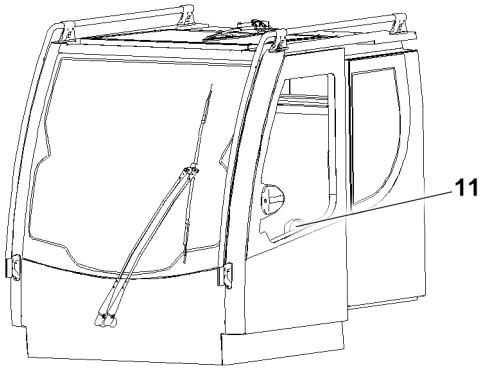

Fig.160389: Emergency exit through the open cab door

Emergency exit through the open cab door:
– Turn the inner door handle **11** and open the cab door.
– Leave the crane cab through the cab door.

10.2 Emergency exit through the open front window

For crane types with a tipping front window

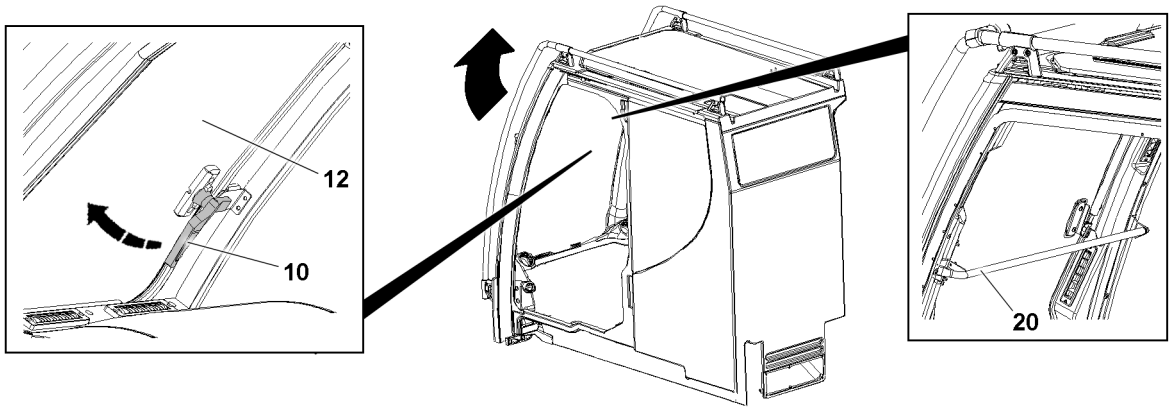

Fig.157680: Emergency exit through the open front window

Note
► The front windows **12** with a securing bracket **20** are not designed as an emergency exit.

LWE/LTR 1100-009/25105-02-02/en

copyright © Liebherr-Werk Ehingen GmbH 2023

– Release all turn handles **10** on the front window **12**.
– Open the front window **12**.
– Leave the crane cab through the front window **12**.

10.3 Emergency exit through the roof window with emergency release

Note
When the roof window is closed, the emergency release is difficult to operate.
► First open the roof window.

There are two variations of the emergency release:
– Window handle emergency release
– Gas pressure spring emergency release

10.3.1 Emergency release on the window handle

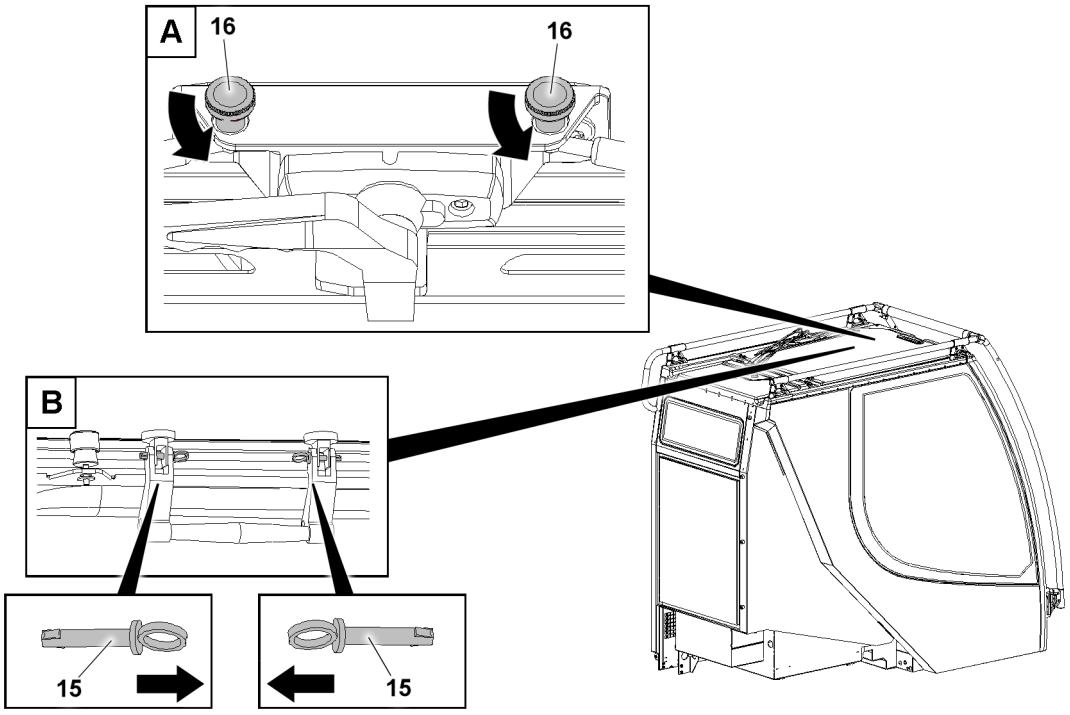

Fig.160655: Emergency release on the window handle

For crane types with an emergency release on the roof window:
– Open the roof window with the window handle.
– Operate the emergency release for the roof window, see variation A or variation B.

Variation A:
• Turn both thumbscrews **16** counterclockwise and release.

Variation B:
• Unpin both pins **15** by pulling them.
– Leave the crane cab through the roof window.

LWE/LTR 1100-009/25105-02-02/en

copyright © Liebherr-Werk Ehingen GmbH 2023

10.3.2 Gas pressure spring emergency release

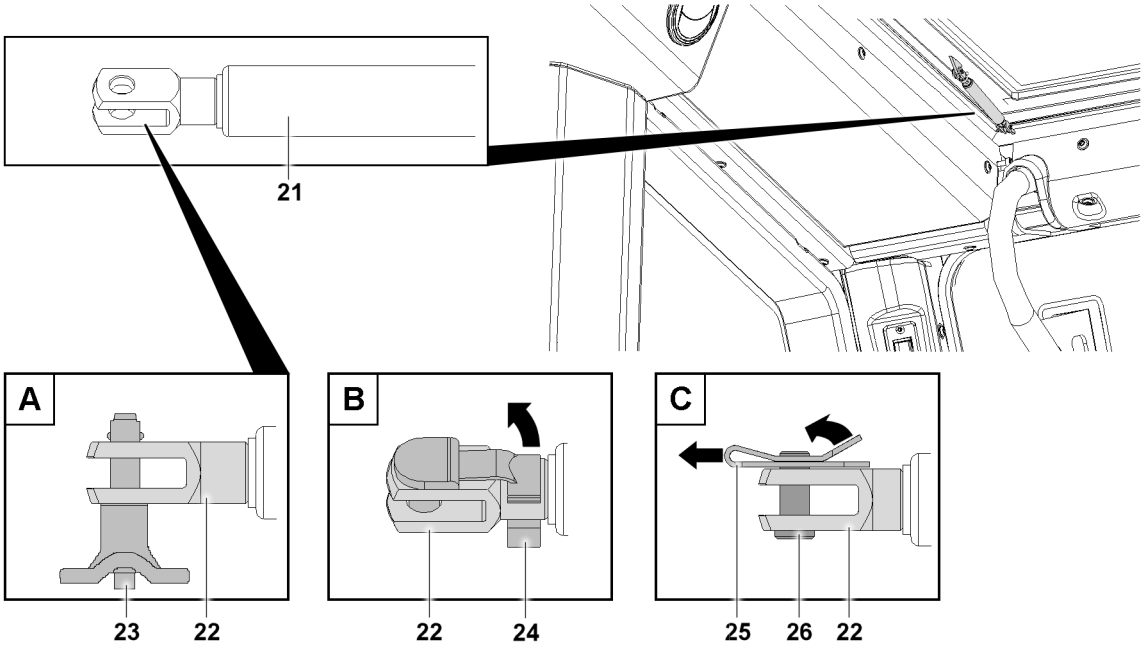

Fig.160604: Gas pressure spring emergency release

For crane types with an emergency release on the roof window:

– Open the roof window with the window handle.
– Operate the emergency release for the roof window on the gas pressure spring **21**, see variation A, variation B or Variation C:

  Variation A:
  - Release the ball locking pin **23** by pressing and holding the press button on the side of the handle.
  - Unpin the ball locking pin **23** by pulling it out of the fork head **22**.

  Variation B:
  - Release the pin **24** on the fork head **22** by swinging it.
  - Unpin the released pin **24** by pulling it out of the fork head **22**.

  Variation C:
  - Lift the retaining element **25** on the protruding part and push it away at the same time.
  - Unpin the released pin **26** by pulling it out of the fork head **22**.
– Leave the crane cab through the roof window.

LWE/LTR 1100-009/25105-02-02/en

copyright © Liebherr-Werk Ehingen GmbH 2023

10.4 Emergency exit through the side window with emergency release

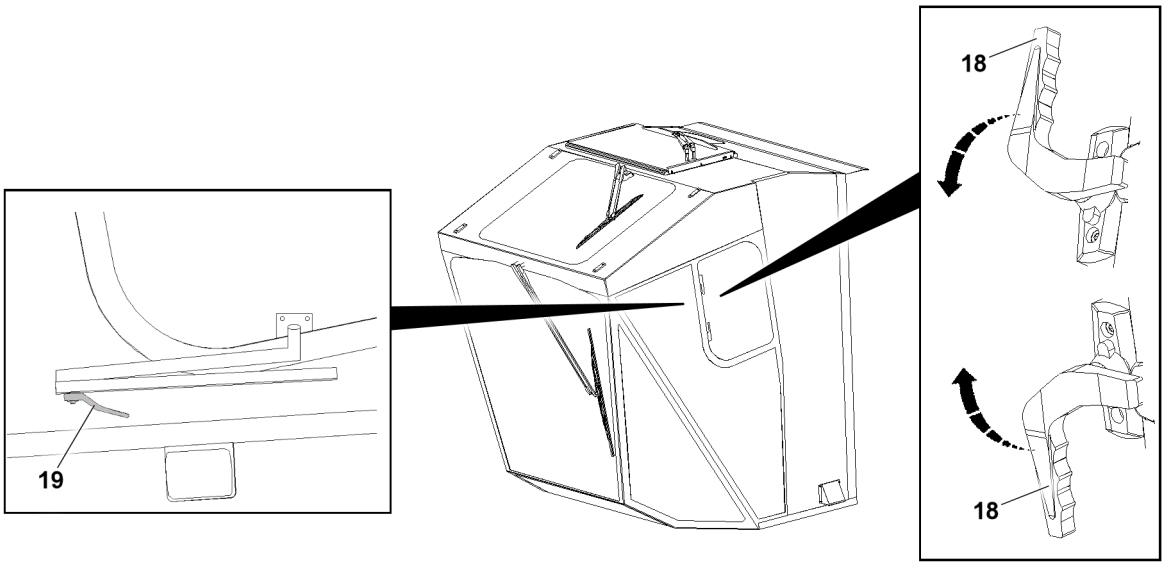

Fig.158755: Emergency exit through the side window with emergency release

For crane types with an emergency release on the side window:
- Release all turn handles **18** on the side window.
- Disassemble the clamping lever **19** on the side window.
- Open the side window completely.
- Leave the crane cab through the side window.

11 Personal protective equipment

Persons are exposed to various dangers when working on the crane.

Personal protective equipment is required when the risk assessment by the operating company has shown that risks cannot be avoided or sufficiently limited:
- By protective technical devices
- By organizational measures

When working on the crane, the required personal protective equipment according to national and regional regulations and accident prevention regulations must be provided and used.

Personal protective equipment protects against risks that can have severe results such as death or serious damage to health and injuries.

Personal protective equipment includes, for example:
- Supplied fall arrest system (safety harness and height safety equipment)
- Any supplied height rescue system
- Industrial helmet
- Safety shoes
- Protective gloves
- Safety goggles
- Warning apparel
- Hearing protection
- Respiratory protection

11.1 Rules for the use of personnel protective equipment

The operating company must ensure the following:
- Personal protective equipment is provided.

LWE/LTR 1100-009/25105-02-02/en

copyright © Liebherr-Werk Ehingen GmbH 2023

– Personnel are instructed in the use of personal protective equipment.
– The provided personal protective equipment is taken along and used.
– The operating instructions and maintenance instructions of the manufacturer for the personal protective equipment are observed and complied with.

Check and replace the personal protective equipment:
– Personal protective equipment is checked for damage and completeness before use.
– Defective or damaged personal protective equipment is replaced immediately with functioning protective equipment.
– Protective equipment is replaced when the maximum service life specified by the manufacture has been reached.
– Damaged fall arrest systems with height rescue systems will be replaced immediately and handed over to an authorized inspector.
– The product identifications are regularly checked for damage.
– Personal protective equipment with damaged product identification is replaced immediately.

11.2 Supplied fall arrest system

Personnel must work at a height often when working on the crane. Working at a height is connected with a risk of falling. Working at a height without suitable fall protection equipment can lead to serious injuries or death.

Always use proper fall protection equipment according to national and regional regulations.

A fall with a fall arrest system cannot exclude an injury. The fall arrest system reduces the severity of the injuries by catching the user during a free fall and limiting the impacts on the body from being caught.

When no other safety measures are possible for working in the presence of a fall hazard, the supplied fall arrest system must be used.

Rules for handling the fall arrest system:
– Utilize exclusively a fall arrest systems from Liebherr-Werk Ehingen GmbH.
  Or use fall arrest systems that correspond to the specifications that are listed in the Liebherr spare parts catalog of the respective crane.
– Do **not** use a damaged fall arrest system.
– Replace a damaged fall arrest system immediately with a new fall arrest system.
– Do **not** use the fall arrest system as fastening equipment for loads.

Protect the fall arrest system against the following external influences:
– Extreme temperatures
– Guiding the connecting devices over or around sharp edges
– Effects of chemicals
– Electrical influences
– Cuts, wear
– Climatic effects

Note

If the fall arrest system (safety harness and height safety equipment) is not available or is damaged:
► Order it from Liebherr-Werk Ehingen GmbH.
► Or obtain a fall arrest systems that correspond to the specifications that are listed in the Liebherr spare parts catalog of the respective crane.

Identification and operating instructions:
– The supplied fall arrest system must be clearly and permanently identified.
– If the identification is no longer legible, then the supplied fall arrest system must be immediately replaced and handed over to an authorized inspector.

LWE/LTR 1100-009/25105-02-02/en

copyright © Liebherr-Werk Ehingen GmbH 2023

11.3 Components of the supplied fall arrest system

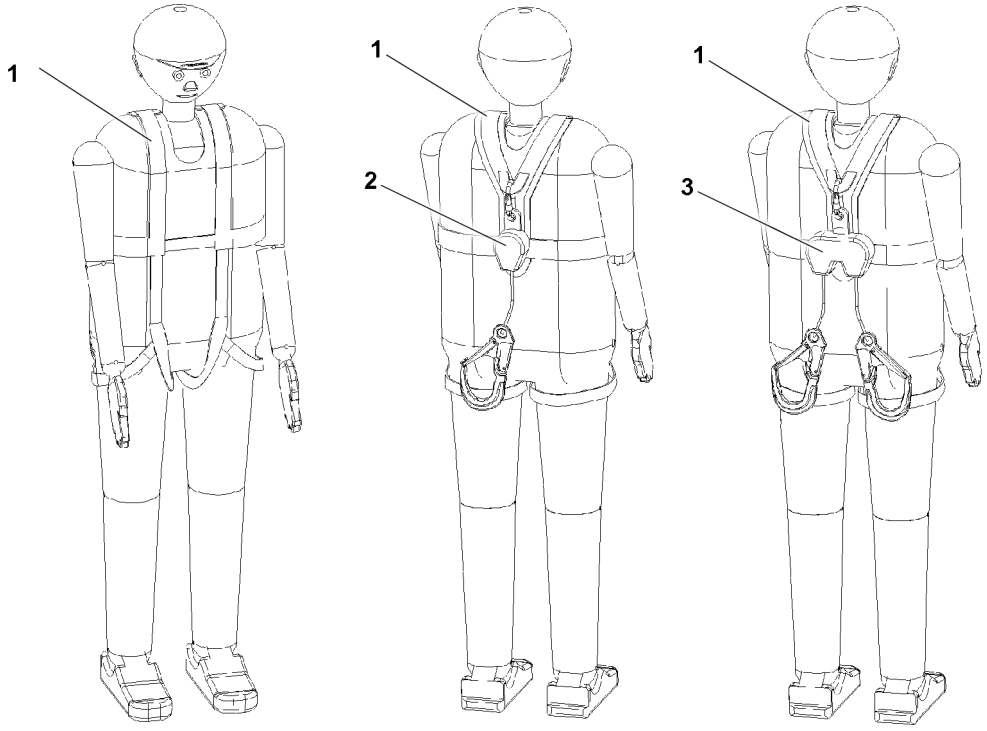

Fig.159819: Examples of a safety harness with height safety equipment

1 Safety harness
2 Height safety equipment, 1-strand
3 Height safety equipment, 2-strands

The fall arrest system consists of the following components:
– Safety harness
– Height safety equipment, 1-strand or 2-strands

Component	Description	Properties
Safety harness	A safety harness is a body retaining device that is used in a fall arrest system. It consists of belt straps, fittings, buckles and other individual parts. The safety harness holds the body of the user after being caught from a fall.	It is approved according to **EN 361**

LWE/LTR 1100-009/25105-02-02/en

copyright © Liebherr-Werk Ehingen GmbH 2023

Component	Description	Properties
Height safety equipment, 1-strand	Height safety equipment with an extendable belt strap and snap hook with swivel Provided for all cranes that do not have walking surfaces with safety ropes.	It is approved according to **EN 360** (for horizontal use and sharp edges).
Height safety equipment, 2-strands	Height safety equipment with two extendable belt straps and snap hooks with swivel Provided for cranes with walking surfaces and two ropes as fastening device on the left and right hand side of the walking surface, for example lattice sections, lattice booms, telescopic booms or assembly units.	It is approved according to **EN 360** (for horizontal use and sharp edges).

Components of the supplied fall arrest system

The fall arrest system supplied by Liebherr-Werk Ehingen GmbH is designed in accordance with the crane structure.

Utilize exclusively a fall arrest system from Liebherr-Werk Ehingen GmbH.

Prior to use of the crane:
- Make sure that the fall arrest system is completely available and functional.
- Check the fall arrest system before use for visible defects. In the case of visible defects: Replace the fall arrest system immediately.

Rules for handling the fall arrest system:
- Comply with the specifications of the operating instructions for the fall arrest system.
- Check the fall arrest system before use for visible defects. In the case of visible defects: Replace the fall arrest system immediately.
- The fall arrest system must be worn where no other fall protection equipment, such as railings, can be installed for technical reasons.
- The fall arrest system is effective from a height of 2.5 m. The fall space must be free of obstacles.
- Do **not** change the configuration of the fall arrest system.
- Do **not** lengthen or shorten the fall arrest rope.
- A fall absorber is integrated in the height safety equipment. Do **not** use an additional fall absorbers.
- Fasten the fall arrest system only to the structural hook points, safety ropes and fastening points. See chapter 2.06.

Behavior in the case of a fall, damage or impairment of functionality:
- In the case of damage or impairment of the functionality: Have the fall arrest systems replaced immediately and checked by an authorized inspector.
- The fall arrest system may only be used further after written and documented approval.
- Fall arrest systems that are not longer approved may **not** be used. Unapproved fall arrest systems must be disposed of and replaced with new fall arrest systems.

Storage of the fall arrest system:
- Store the fall arrest system dry and without the effect of UV radiation in the corresponding transport bag.

The operating company must ensure the following:
- Personnel must be instructed at least once a year on how to use the supplied fall arrest system (safety harness and height safety equipment) with practical exercises. Performance of the instruction and exercises must be documented.
- The safety harness and height safety equipment must be checked at least once a year by an authorized inspector. The results must be documented in the fall arrest system inspection log book.

LWE/LTR 1100-009/25105-02-02/en

copyright © Liebherr-Werk Ehingen GmbH 2023

11.3.1 Using 1-strand height safety equipment

Fasten the fall arrest system with 1-strand height safety equipment only to the structural hook points and fastening points.

11.3.2 Using 2-strand height safety equipment

Fasten the fall arrest system with 2-strand height safety equipment only to the structural hook points, safety ropes and fastening points.

When two safety ropes are present on the booms, lattice sections or other components:
- **Only** use the height safety equipment with two belt straps.
- Per safety rope: Connect one belt strap with snap hook for the fall arrest system.
- When transferring to new safety equipment, a snap hook for the fall arrest system must **always** be connected.

11.4 Supplied height rescue system

The height rescue system is only supplied for certain crane types.

The height rescue system is an evacuation and rescue device. It is used to lift the fallen person to be able to unhook him from the height safety equipment and to lower him by rope.

The height rescue system consists of the following components:
- Rappelling rescue device
- Telescopic rod for connecting the snap hook to the safety harness

Component	Description	Properties
Rappelling rescue device	For rescuing a suspended person who cannot free themselves with their own strength.	It is approved according to **EN 361**
Snap hook	Connecting element	Trilock lock
Telescope rod with assembled carabiner retainer	As an aid for attaching the rescue rope	Extendable

Components of the height rescue system

The operating company must ensure the following:
- Personnel must be instructed at least once a year on how to use the height rescue system with practical exercises. Performance of the instruction and exercises must be documented.
- The height rescue system must be checked at least once a year by an authorized inspector. The results must be documented in the height rescue system inspection log.

Storage of the height rescue system:
- Store the height rescue system dry and without the effect of UV radiation in the corresponding transport bag.

Protect the height rescue system from external influences, for example:
- Extreme temperatures
- Effects of chemicals
- Electrical influences
- Cuts, wear
- Climatic effects

Before every use of the crane:
- Make sure that the height rescue system is completely available and functional.
- Check the height rescue system for visible defects. In the case of visible defects: Replace the height rescue system immediately.

Handling the height rescue system:
- Comply with the specifications of the operating instructions for the height rescue system.

LWE/LTR 1100-009/25105-02-02/en

copyright © Liebherr-Werk Ehingen GmbH 2023

– Do **not** change the configuration of the height rescue system.

Behavior in the case of a fall, damage or impairment of functionality:
– In the case of damage or impairment of the functionality: Do **not** use the height rescue system.
– In the case of damage or impairment of the functionality: Have the height rescue system replaced **immediately** and checked by an authorized inspector.
– After every use: Have the height rescue system checked immediately by an authorized inspector. The results must be documented in the height rescue system inspection log.
– The height rescue system may only be used further after written and documented approval.
– Height rescue systems that are no longer approved may **not** be used. Unapproved height rescue systems must be disposed of and replaced with new height rescue systems.

11.5 Further protective equipment

Required personal protective equipment must be provided and used according to national and regional regulations.

The protective equipment listed below is not provided.

Name	Description	Recommendation
Industrial helmet	Protection against head injuries, for example, due to: Striking, falling objects and oscillating objects	Industrial helmet with a chin strip should be preferred.
Protective gloves	Protection against pointed or sharp objects Protection against hot surfaces or operating fluids Protection against grazing, scratches	Depending on the task and the danger: Wear suitable protective gloves. For example: Puncture resistant, abrasion resistant, heat-resistant, impermeable, slip-proof
Safety shoes	Protection against falling objects or components Protection against slipping on slippery ground or accessible surfaces	Depending on the task and the danger: Wear suitable safety shoes. For example: With toe protection, anti-slip soles, antistatic properties
Safety clothing, for example: Safety vest, safety jacket, safety pants	Make personnel more visible and recognizable.	Reflecting for better detection when dark Fluorescent for better detection at a far distance during the day or in poor conditions of visibility
Safety goggles	Protection against eye injury, for example when working with a grease spraying system when greasing the boom or if other lubrication or operating fluids are sprayed.	Depending on the task and the danger: Wear suitable safety goggles. For example, protection against: Corrosive or pressurized fluids and projecting parts UV-rays and sun

LWE/LTR 1100-009/25105-02-02/en

copyright © Liebherr-Werk Ehingen GmbH 2023

Name	Description	Recommendation
Hearing protection	Protection against damage to hearing due to noise	Selection depending on the volume and the necessary protection effect
Respiratory protection	Protection against damage to health due to dirty air, for example when working with a grease spraying system when greasing the boom or other lubrication or operating fluids that are sprayed.	Selection depending on the hazardous substance and duration of the activity Respiratory protection covers the mouth and nose.

Protective equipment

12 Supplied fire extinguisher

Storage of the fire extinguisher:
– To protect against damage, store the fire extinguisher in its designated location.

Before crane operation and travel operation:
– Make sure that the fire extinguisher is always freely accessible and functional.

After use:
– Have the fire extinguisher refilled immediately or replaced.

Replace the fire extinguisher immediately, if:
– It has visible defects.
– The fire extinguisher does not function.
– The inspection term specified by the manufacturer has been exceeded.
– The maximum service life specified by the manufacture has been reached.

The operating company must ensure the following:
– Personnel must be instructed at least once a year on how to use the fire extinguisher with practical exercises. Performance of the instruction and exercises must be documented.
– The fire extinguisher must be checked by an authorized inspector according to the manufacturer's specifications and national and regional regulations. The results must be documented.
– Non-functional and used fire extinguishers must be immediately repaired or replaced.

13 Securing persons to prevent them from falling

WARNING
Danger of falling!
► Wear the supplied fall arrest systems (safety harnesses and height safety equipment) correctly.
► When accessing a ladder, do not hold any objects in your hands.
► When accessing a ladder, adhere to the 3-point support. See the Crane operating instructions, chapter 2.04.10.

13.1 Working on the telescopic boom head and / or auxiliary boom

When performing assembly or disassembly work on a ladder, people can fall down:
– A second person must be present to hand the necessary items to the person on the ladder.

Reeve the hoist rope in or out on the pulley head:
– For ladder work, use the supplied ladder: For fastening and hook points, see the Crane operating instructions, chapter 2.06.
– For cranes that carry a ladder along **with** a hook device:
Use the hook device to secure the ladder.

LWE/LTR 1100-009/25105-02-02/en

copyright © Liebherr-Werk Ehingen GmbH 2023

– For cranes that carry a ladder along **without** a hook device:
  Use the rigging belt to secure the ladder.
– When climbing up, personnel must ensure a 3-point support.
– If there is a danger of falling, personnel must connect themselves with the snap hooks of the fall arrest system in the fastening points and secure themselves against falling.

13.2 Walking on the telescopic boom

WARNING
Danger of falling!
Personnel can fall down by slipping on the telescopic boom and be killed or severely injured!
► The telescopic boom may only be accessed if personnel are protected with suitable safety measures to prevent them from falling.
► If safety ropes are present on the telescopic boom, then personnel must connect themselves with the supplied fall arrest system to the safety ropes of the telescopic boom on the left and right with both snap hooks and secure themselves against falling.
► Without safety measures, it is **strictly** prohibited to step on the telescopic boom.

Assembly of the hoist rope or the TY-guying:
– During assembly, personnel must connect themselves to the fastening devices on the left and right with both snap hooks of the fall arrest system and secure themselves against falling.

13.3 Climbing up to the lattice sections or booms

Climbing the ladder:
– When climbing up, personnel must ensure a 3-point support.

Changing from a ladder to a catwalk **without** a transition aid:
– From a transition height above 1.8 m: **Before** transitioning, personnel must connect at least one snap hook of the fall arrest system to a safety rope and secure themselves against falling.

Changing from a ladder to a catwalk **with** a transition aid:
– **After** transitioning, personnel must hook at least one snap hook of the fall arrest system to a safety rope and secure themselves against falling.

13.4 Walking on lattice sections or booms

Walking on catwalks:
– When walking on catwalks, personnel must connect themselves to the safety ropes on the left and right with both snap hooks of the fall arrest system and secure themselves against falling.
– When transferring the fall arrest system to a new lattice section, personnel must be connected with at least one snap hook of the fall arrest system to safety equipment.

13.5 Working on lattice sections or booms

Pinning, unpinning the lattice sections or pull rods:
– During the pinning, unpinning of lattice sections or pull rods, personnel must connect themselves to the safety ropes on the left and right with both snap hooks of the fall arrest system and secure themselves against falling.

Fastening the lattice sections:
– When fastening the lattice sections, personnel must connect themselves to the safety ropes on the left and right with both snap hooks of the fall arrest system and secure themselves against falling.

13.6 Climbing down from lattice sections or booms

Accessing the ladder **without** a transition aid:
– From a transition height above 1.8 m: **Before** stepping on the ladder, personnel must connect at least one snap hook of the fall arrest system to a safety rope and secure themselves against falling.

LWE/LTR 1100-009/25105-02-02/en

copyright © Liebherr-Werk Ehingen GmbH 2023

– When stepping on the ladder, personnel must ensure a 3-point support.
– The snap hook of the fall arrest system may only be disconnected after standing safely on the ladder (3-point support).

Accessing the ladder **with** transition aid:
– When stepping on the ladder, personnel must ensure a 3-point support.

Climbing down the ladder:
– When climbing down, personnel must ensure a 3-point support.

14 Saving personnel

The height rescue system is only supplied with certain crane types.

The height rescue system, consisting of the rappelling rescue device, is an evacuation and rescue device. It is used to lift the fallen person to be able to unhook him from the height safety equipment and to lower him by rope.

WARNING
Danger of falling!
► Personnel must be instructed and trained properly in the correct handling of the height rescue system. Annual practical instructions and drills must be carried out.
► The supplied height rescue system must be kept available.
► Comply with the manufacturer's documentation for the height rescue system.
► Have the height rescue system checked every year by an authorized inspector and the results documented in the inspection log.

14.1 First aid measures after rescue

WARNING
Danger of fatal injury!
► After the rescue, the patient must be positioned with the upper body raised (in seated or squatting position).
► Immediate flat position or even shock position can be fatal.

15 Crane cab

The roof of the crane cab is not designed as a support surface.

WARNING
Standing on the roof of the crane cab!
Persons on the roof of the crane cab can fall down, break through the roof or slide off.
► Do not access the roof of the crane cab.

WARNING
The superstructure is in a position in which it is **no** longer safe to climb up to it and it is **no** longer possible to change the position of the superstructure to a safe ascent position!
People can fall down while ascending. Death, severe bodily injuries.
► Guarantee safe ascent / descent: Set up suitable climbing aids, such as a platform or ladder.

15.1 Extendible step* for cranes on tires

An extendible step allows comfortable entry into the crane cab as well as safe exit from the crane cab to the crane chassis and safe access to the turntable.

LWE/LTR 1100-009/25105-02-02/en

copyright © Liebherr-Werk Ehingen GmbH 2023

The description for an „extendible step for cranes on tires“ only applies for cranes that drive on tires.

Climbing up and down takes place via the ladder on the crane chassis. See chapter 2.07 „Accesses to the crane“.

WARNING
Extendible step in the incorrect position!
Personnel can fall down. Death, severe bodily injuries.
► Make sure that the extendible step is in the correct position.

The extendible step must be **retracted** for:
– **Access to the crane cab below the cab door**
  Access to the crane cab via the ladder from the ground or when directly descending from the crane cab via the ladder to the ground
– **Access to the crane cab in front of the crane cab**
  Access to the crane cab via the ladder from the ground or when directly descending from the crane cab via the ladder to the ground

The extendible step must be **extended** for:
– **Access via an extendable step from the rear**
  Access to the crane cab via the crane chassis or the crane superstructure
– **Accessing via the front step**
  Access to the crane cab via the crane chassis or the crane superstructure

15.1.1 Access to the crane cab below the cab door

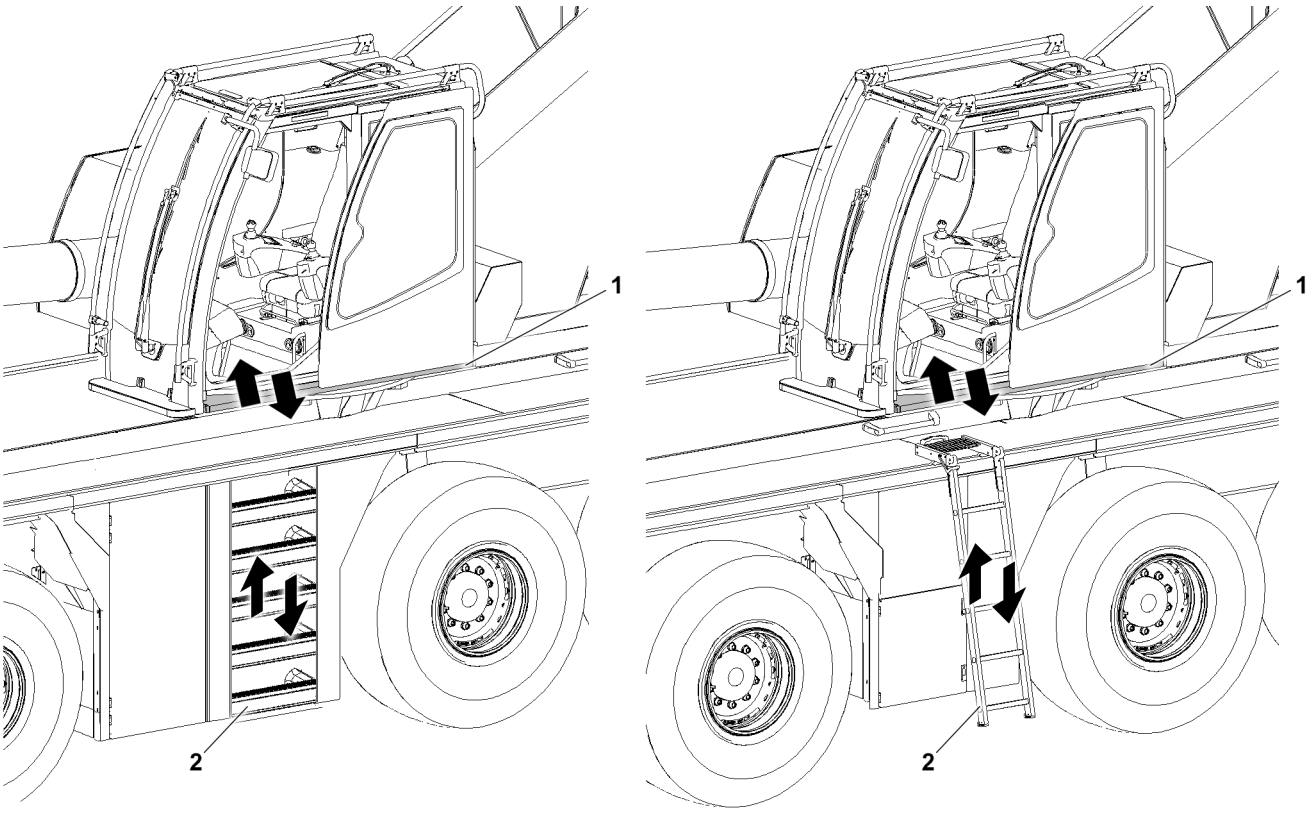

*Fig.160754: Crane superstructure in the 180° position: Step **retracted***

1 Extendible step **2** Ladder / folding ladder

Prior to climbing up to the crane cab via the ladder **2** from the ground or before descending from the crane cab via the ladder **2** to the ground, the following prerequisites must be met:
– The crane superstructure is in the 180° position.
– In the case of a crane cab with incline adjustment: The crane cab is in the horizontal position.

LWE/LTR 1100-009/25105-02-02/en

copyright © Liebherr-Werk Ehingen GmbH 2023

– The extendible step **1** under the crane cab is **retracted**.
– The folding ladders **2** are in the ascent and descent position.

WARNING
Extendible step **1** in the incorrect position!
Personnel can fall down. Death, severe bodily injuries.
► Make sure that the extendible step **1** is fully retracted.

WARNING
The step **1 cannot** be retracted!
People can fall during ascent and descent via the ladder **2**.
Death, severe bodily injuries.
► Guarantee safe ascent / descent: Set up suitable climbing aids, such as a platform or ladder.

15.1.2 Access to the crane cab in front of the crane cab

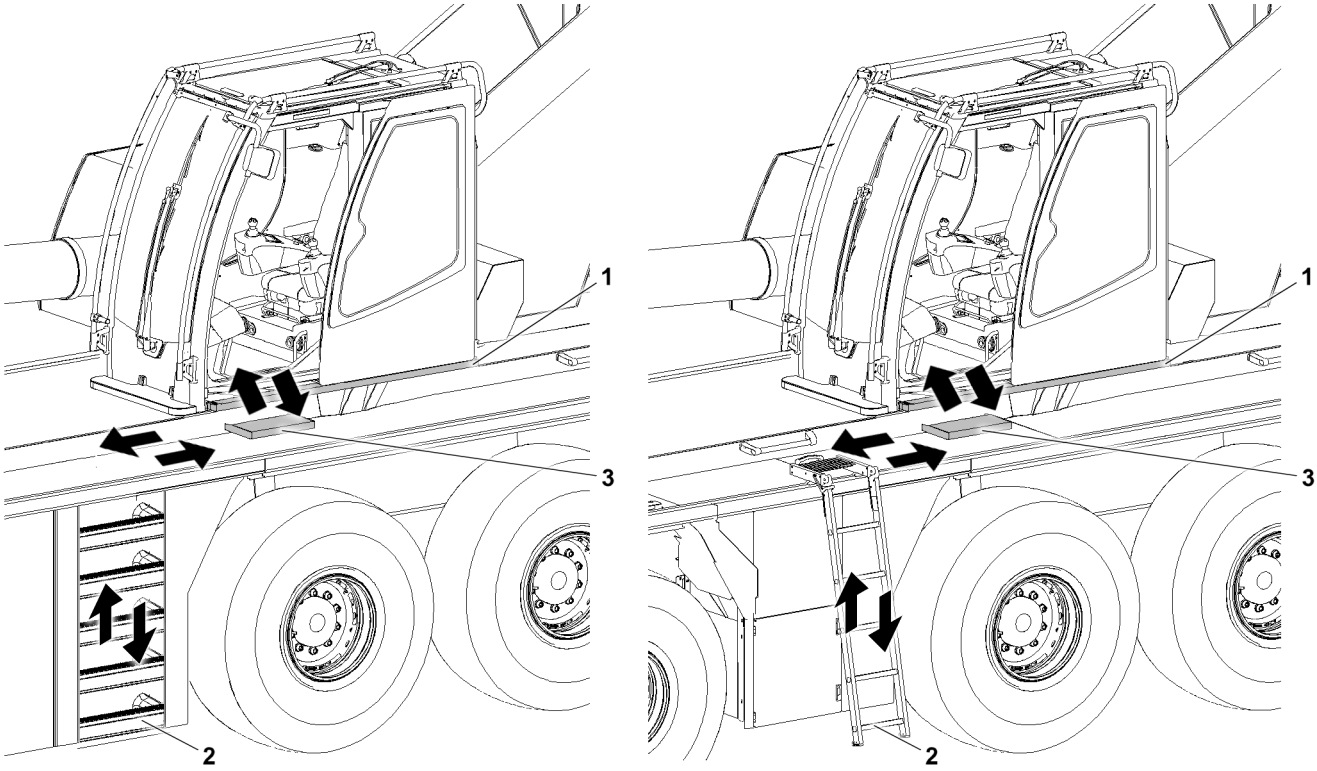

*Fig.160768: Crane superstructure in the 180° position: Step **retracted***

1 Extendible step **2** Ladder / folding ladder **3** Intermediate step

The intermediate step **3** is installed only for certain crane types.

When accessing the crane cab, the following prerequisites must be met:
– The crane superstructure is in the 180° position.
– In the case of a crane cab with incline adjustment: The crane cab is in the horizontal position.
– The extendible step **1** is **retracted**.
– The folding ladders **2** are in the ascent and descent position.

WARNING
Extendible step **1** in the incorrect position!
Personnel can fall down. Death, severe bodily injuries.
► Make sure that the extendible step **1** is fully retracted.

LWE/LTR 1100-009/25105-02-02/en

copyright © Liebherr-Werk Ehingen GmbH 2023

15.1.3 Access via an extendable step from the rear

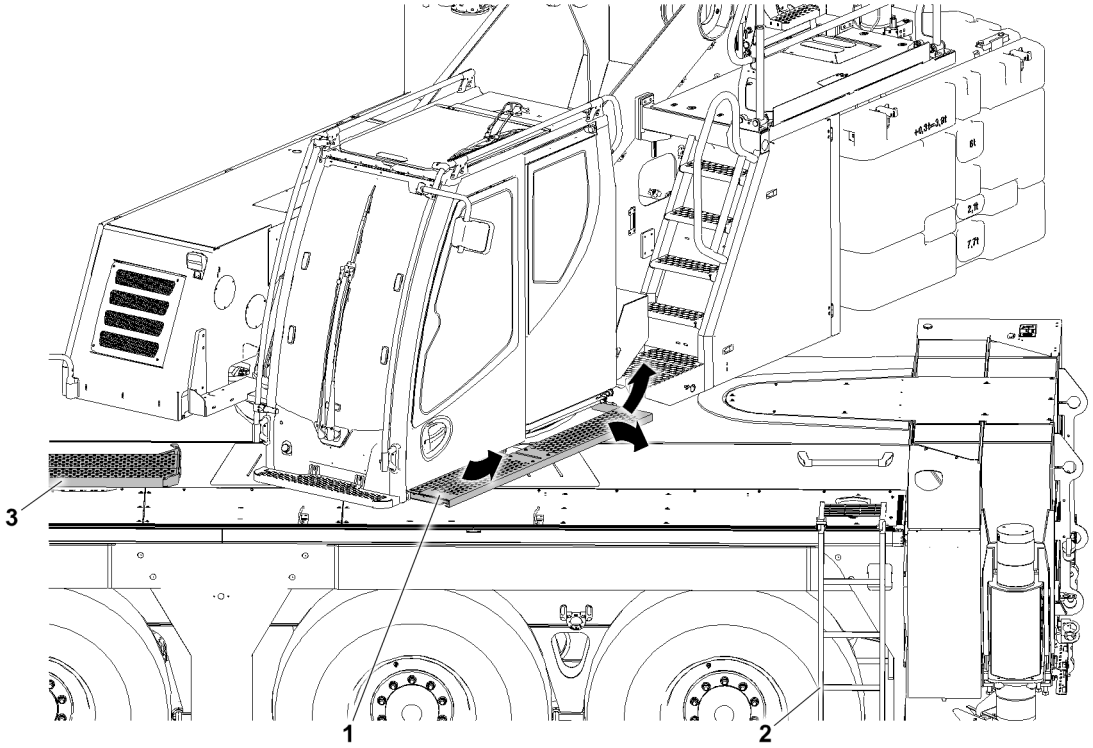

Fig.160756: Access via an extendable step from the rear

1 Extendible step
2 Folding ladder
3 Intermediate step

The intermediate step **3** is installed only for certain crane types.

When accessing via an extendable step **1** from the rear, the following prerequisites must be met:
- Access to walkable surfaces of the crane chassis is ensured.
- The extendible step **1 must** be extended.
- The **cab door** must be closed.
- In the case of a crane cab with incline adjustment: The crane cab is in the horizontal position.
- The folding ladders **2** are in the ascent and descent position.

WARNING
Extendible step **1** in the incorrect position!
Personnel can fall down. Death, severe bodily injuries.
► Make sure that the extendible step **1** is fully extended.

WARNING
Cab door opened!
The step depth of the extendible step **1** is too shallow.
Personnel can fall down. Death, severe bodily injuries.
► Make sure that the cab door is closed completely.

LWE/LTR 1100-009/25105-02-02/en

copyright © Liebherr-Werk Ehingen GmbH 2023

15.1.4 Accessing via the front step

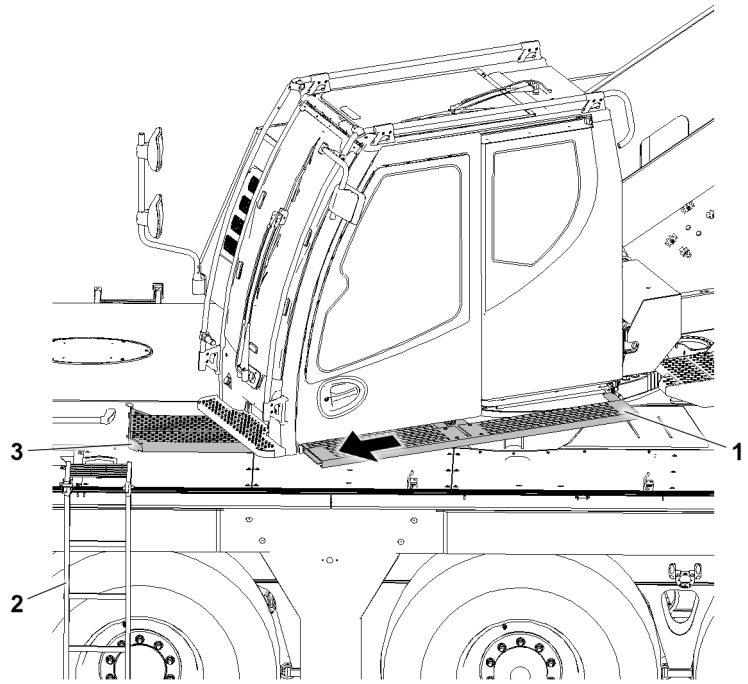

Fig.160757: Accessing via the front step

1 Extendible step
2 Folding ladder
3 Intermediate step

The intermediate step **3** is installed only for certain crane types.

When accessing via the front step, the following prerequisites must be met:
- Access to walkable surfaces of the crane chassis is ensured.
- The extendible step **1 must** be extended.
- In the case of a crane cab with incline adjustment: The crane cab is in the horizontal position.
- The folding ladders **2** are in the ascent and descent position.

WARNING
Extendible step **1** in the incorrect position!
Personnel can fall down. Death, severe bodily injuries.
► Make sure that the extendible step **1** is fully extended.

15.2 Access for LTR cranes

An extendible step allows comfortable entry into the crane cab as well as exit from the crane cab during crane operation.

The description for an „extendible step for LTR cranes“ only applies for LTR cranes.

LWE/LTR 1100-009/25105-02-02/en

copyright © Liebherr-Werk Ehingen GmbH 2023

15.2.1 Access for LTR 1060 and LTR 1100

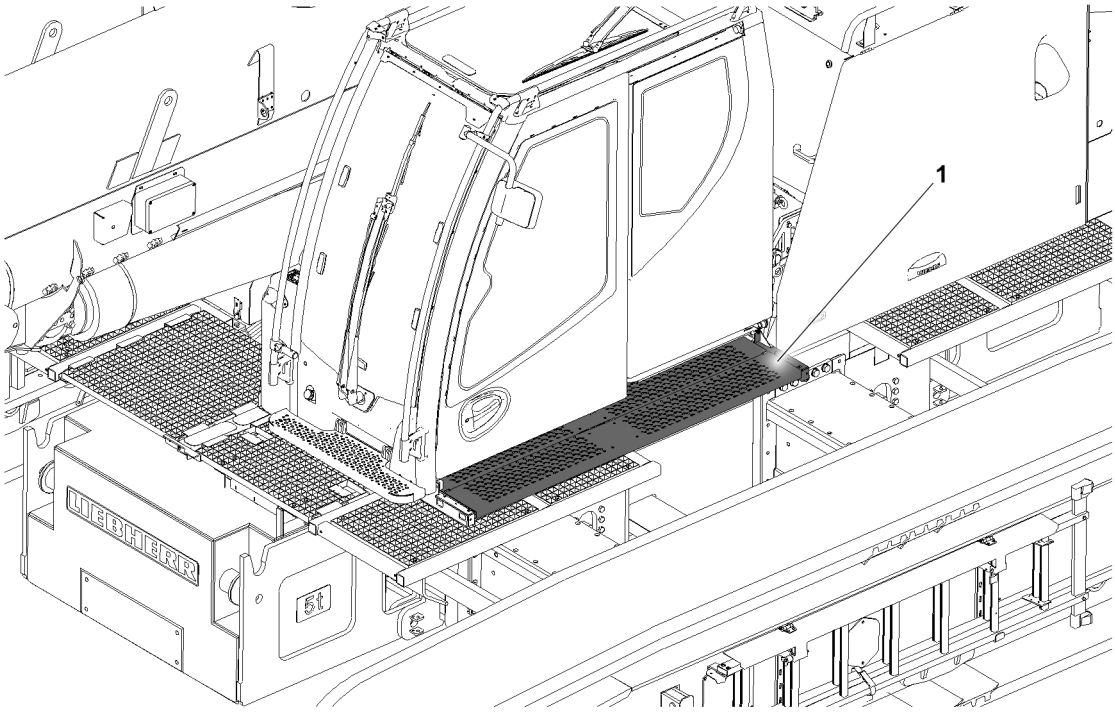

Fig.161886: Access for LTR 1060 and LTR 1100

1 Extendible step

Climbing up and down takes place on the walking surfaces of the crawler chain. See chapter 2.07 „Accesses to the crane“.

Before entering or exiting the crane cab, the following prerequisites must be met:
- The crane superstructure is in the 0° position (driving position).
- The crane is horizontally aligned.
- The crane cab is in the horizontal position.

WARNING
The superstructure is in a position in which it is **no** longer safe to climb up to it and it is **no** longer possible to change the position of the superstructure to a safe ascent position!
People can fall down while ascending. Death, severe bodily injuries.
► Guarantee safe ascent / descent: Set up suitable climbing aids, such as a platform or ladder.

WARNING
The rise from the walking surface and cab floor is more than 300 mm !
Personnel can fall down. Death, severe bodily injuries.
► Guarantee safe ascent and descent: Set up suitable climbing aids, such as a safety step.

LWE/LTR 1100-009/25105-02-02/en

copyright © Liebherr-Werk Ehingen GmbH 2023

15.2.2 Access for LTR 1220

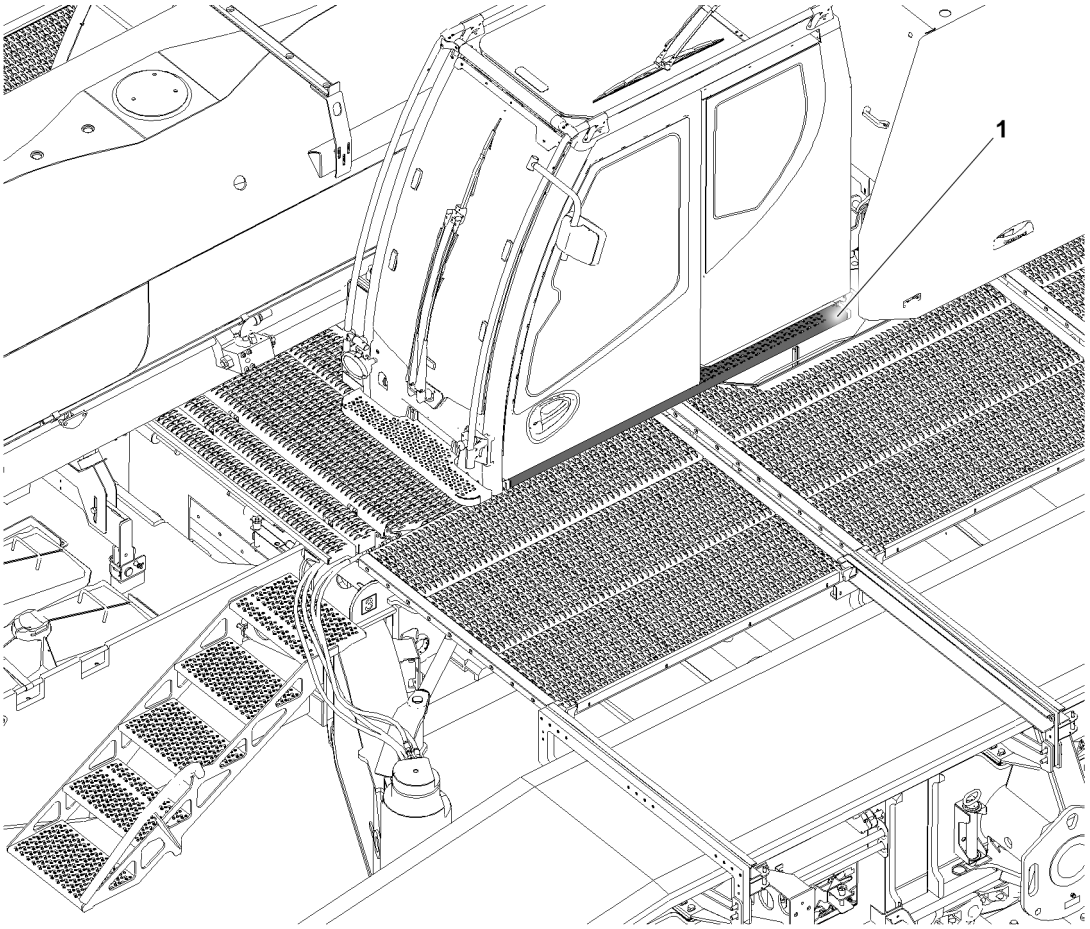

Fig.161887: Access for LTR 1220

1 Extendible step

Climbing up and down takes place on the walking surfaces of the crawler chain. See chapter 2.07 „Accesses to the crane“.

Before entering or exiting the crane cab, the following prerequisites must be met:
- The crane superstructure is turned to the point where a safe access to walkable surfaces of the crane chassis is ensured.
- The crane is horizontally aligned.
- The crane cab is in the horizontal position.

WARNING
The superstructure is in a position in which it is **no** longer safe to climb up to it and it is **no** longer possible to change the position of the superstructure to a safe ascent position!
People can fall down while ascending. Death, severe bodily injuries.
► Guarantee safe ascent / descent: Set up suitable climbing aids, such as a platform or ladder.

WARNING
The rise from the walking surface and cab floor is more than 300 mm !
Personnel can fall down. Death, severe bodily injuries.
► Guarantee safe ascent and descent: Set up suitable climbing aids, such as a safety step.

LWE/LTR 1100-009/25105-02-02/en

copyright © Liebherr-Werk Ehingen GmbH 2023

15.3 Crane cab with incline adjustment

WARNING
Danger of falling!
If the crane cab cannot be swung from an inclined position (for example 20° position) to the horizontal position, for example due to a problem, then utmost caution must be used when entering and exiting.
Personnel can fall, death, severe bodily injuries.
- ► For safety reasons, we recommend making use of outside help.
- ► If necessary, have platforms or other suitable entry aids set up to ensure safe exit from the crane cab.

WARNING
Danger of accident!
If the door of the crane cab is opened in inclined position, then the door can move back suddenly.
Hands can be crushed or injured.
- ► When the crane cab is in an inclined position, open the door carefully.

15.4 Crane cab with securing bracket

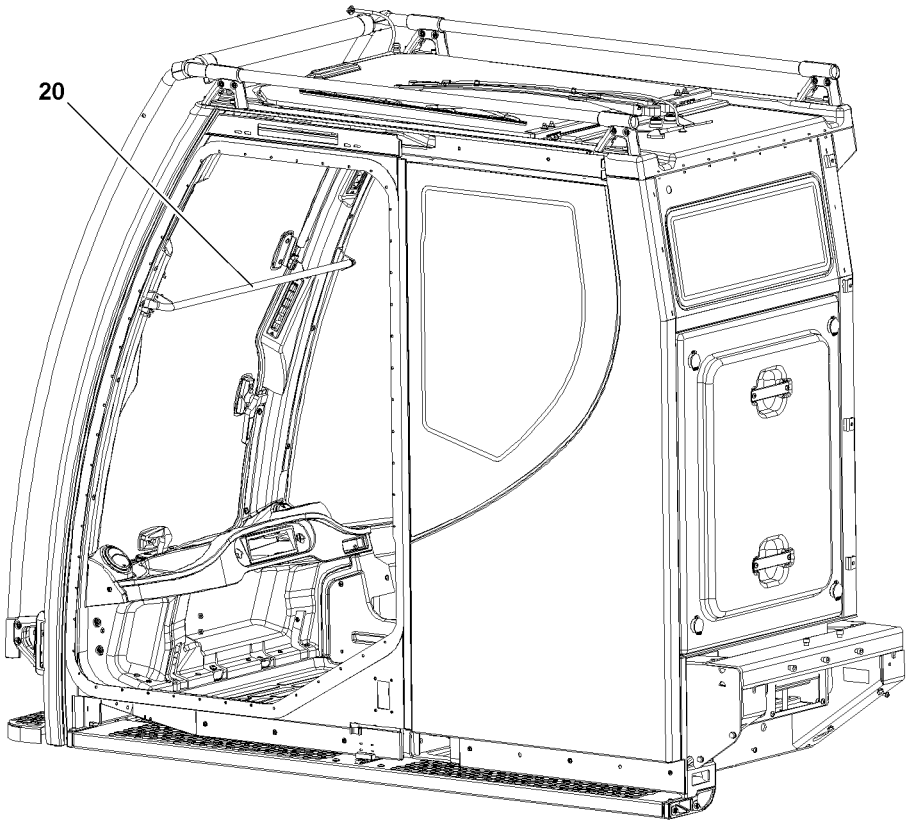

Fig.121158: Example of crane cab with securing bracket

Note
- ► The securing bracket **20** is installed to protect the crane operator from a danger of falling when the front window is open.

copyright © Liebherr-Werk Ehingen GmbH 2023

16 Side window

WARNING
Close side window inadvertently!
Personnel can be crushed. Objects can be damaged!
- ► During closing, watch the side window pane as it moves up.
- ► Make sure that no persons are crushed or objects damaged.

17 Emergency hammer*

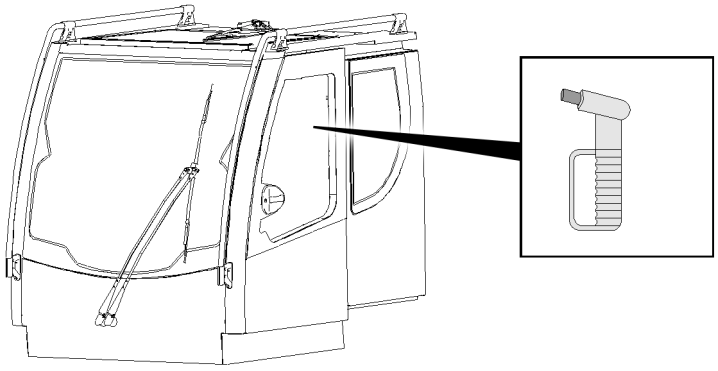

Fig.157682: The emergency hammer is shown as an example*

WARNING
Glass splinters and sharp broken edges!
If personnel is not suitably protected against glass splinters and sharp broken edges, serious bodily injury can result.
- ► Protect personnel when possible against glass splinters and sharp broken edges.
- ► When removing the destroyed glass pane, take the falling direction of the glass splinter into account.
- ► To climb through a destroyed glass pane, cover the broken edges or keep a distance.

17.1 Destruction of a glass pane

When an object suitable for destroying a glass panel is carried along, for example an emergency hammer* (as shown in the example)

WARNING
Glass splinters and sharp broken edges!
If personnel is not suitably protected against glass splinters when destroying a glass pane, serious bodily injury can result.

When a glass panel is destroyed:
- ► Cover your eyes and protect against glass splinters.

LWE/LTR 1100-009/25105-02-02/en

copyright © Liebherr-Werk Ehingen GmbH 2023

Note
- ► Glass panes breaker easier when the outer edge of the glass pane is struck.
- ► Cover your eyes when striking a pane.
- ► When striking a pane, go to a position if possible that offers protection from the falling glass splinters.
- ► When removing the destroyed glass splinters, use an object if possible and protect people against the glass splinters.
- ► When removing the destroyed glass pane, proceed from the top to the bottom and take the falling direction of the glass splinter into account.
- ► In the case of a glass pane made out of laminated safety glass, the incorporated film makes it is harder to create a large opening for climbing through. Select another pane if possible.

With suitable self-protection:
- – Knock out the glass pane using a suitable object, such as an emergency hammer*.
- – Create a large enough opening.
- – Climb through the opening carefully.

18 Transport

WARNING
Error during transport!
Death, severe bodily injuries, property damage.
- ► To avoid accidents, comply with the notes provided in the following sections.
- ► Observe the national and regional regulations on load securing.

WARNING
Falling of crane components!
If rigging devices are released and removed from crane components after transport, the crane components can slip or fall over.
Death, severe bodily injuries, property damage.
- ► Make sure that the crane components are fastened to the auxiliary crane after releasing the rigging devices.
- ► Make sure that the fastening equipment is tensioned before releasing the rigging devices on the crane components.

18.1 Crane and crane components

Follow the notes provided below to safely transport the crane and crane components:
- – Close the crane cab and all cover doors.
- – Use suitable transport vehicles.
- – Use rigging devices with sufficient load capacity.
- – Regularly check the rigging points and fastening points. See chapter 8.01.
- – Properly support and secure the components on the transport vehicle.
- – Use special transport devices. See chapter 3.80.
- – Transporting a complete luffing lattice jib is prohibited.

18.2 Lattice sections

Follow the notes provided below to safely transport the telescoped lattice sections:
- – Securely rig the lattice sections on the transport vehicle and secure them together in at least two independent points.
- – When there are rigging points on the lattice sections: Secure each lattice section individually to the provided rigging points using suitable rigging elements and clamping elements on the transport vehicle.
- – If there are no rigging points on the lattice sections: Secure each lattice section individually with suitable rigging devices and clamping elements to the transport vehicle.

LWE/LTR 1100-009/25105-02-02/en

copyright © Liebherr-Werk Ehingen GmbH 2023

18.3 Fiber guy ropes

The prerequisites for transporting the fiber guy ropes are closely connected with the prerequisites for storage.

WARNING
Incorrect storage or transport of the fiber guy ropes!
Damage. The fiber guy ropes can rip.
Death, severe bodily injuries, property damage.
- ► Comply with the instructions and conditions for storage and transport in this section.
- ► Inspect the fiber guy ropes regularly, see chapter 8.16.
- ► Comply with the maintenance intervals, see chapter 7.03.50.

Fig.160904: Twisting marking for a straight fiber guy rope, example of a twisted fiber guy rope!

1 Straight fiber guy rope
2 Twisting marking
3 Fiber guy rope twisted 180°
4 Fiber guy rope twisted 360°

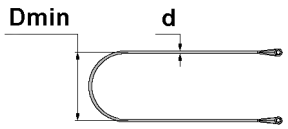

Dmin = 20 x d

Fig.160908: Fiber guy rope: Calculation of minimum permissible bending diameter

Formula element	Meaning
Dmin	Minimum permissible bending diameter
d	Rope diameter

Minimum permissible bending diameter: Definition of the formula elements

Make sure that the following instructions for storage and transport of fiber guy ropes are observed:
- – Keep the fiber guy ropes free of ice and snow.
- – Do **not** bend, knot, twist or sever the fiber guy ropes.
- – The twist marking **2** is aligned straight along the entire rope length.
- – Never fall below the minimum permissible bending diameter **Dmin** of **20** x rope diameter **d**.

LWE/LTR 1100-009/25105-02-02/en

copyright © Liebherr-Werk Ehingen GmbH 2023

- Do **not** drag the fiber guy ropes over the ground, rough surfaces or sharp edges.
- Do **not** let the fiber guy ropes ball onto the ground or components.
- Do not place heavy loads on the rope.
- Do **not** allow heavy or sharp-edged objects fall onto the rope.
- Do **not** place the fiber guy ropes on sharp edges or pull them over sharp edges.
- Keep the fiber guy ropes away from hot surfaces, flames, lamps or other objects that radiate heat.
- Keep fiber guy ropes away from environments where grinding or welding takes place.
- Prevent contact with chemicals.
- Only fasten the fiber guy ropes in the permissible range with belt loops, see chapter 5.01.

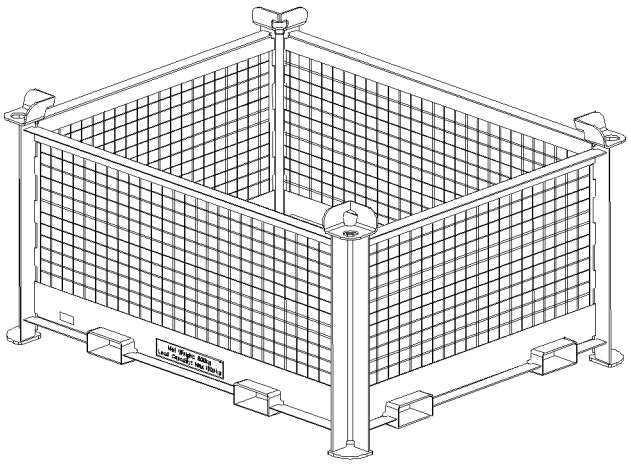

Fig.149503: Transport box for fiber guy ropes

The following factors can lead to damaging the fiber guy ropes:
- Moist and wet environment
- Temperatures below 0 °C

Make sure that the following conditions for storage and transport are observed:
- Do **not** bend rigidly frozen fiber guy ropes.
- Do **not** store fiber guy ropes that are rigidly frozen or covered with ice.
- Warm up and dry fiber guy ropes that are rigidly frozen or covered with ice at temperatures below 50 °C.
- Let wet fiber guy ropes dry in the air at approx. 20 °C prior to storage.
- Store and transport the fiber guy ropes only in the provided transport box.
- Do **not** store or transport fiber guy ropes together with other components.
- Store the fiber guy ropes in a dry and well-ventilated area.

When assembled fiber guy ropes are transported and stored as part of an assembly unit:
- All instructions for storage and transport of fiber guy ropes apply to the same extent.
- Make sure that the assembly unit is stored in a dry and well-ventilated area.
- If the assembly unit **cannot** be stored in a well-ventilated and dry area until the next assembly: Disassemble the fiber guy ropes.

18.4 Mobile cranes

Follow the notes provided below for the safe transport of mobile cranes:
- To ensure the largest possible frictional coefficient to the transport surface, clean the wheels before transport.
- When driving on the transport vehicle, check the easy movement of the vehicle with the aid of a guide to avoid hitting too hard.
- Apply the parking brake. See the Crane operating instructions, chapter 3.04.
- Lower the crane with the level control to obtain a center of gravity as low as possible. Level control, see the Crane operating instructions, chapter 3.03.
- Stopping the mobile crane: Place chocks behind the wheels. See the Crane operating instructions, chapter 2.04.
- Close the driver's cab.

LWE/LTR 1100-009/25105-02-02/en

copyright © Liebherr-Werk Ehingen GmbH 2023

18.5 Accelerating, changing the load

NOTICE
Permissible acceleration exceeded!
Damage to the crane.
- ► Observe the maximum permissible longitudinal acceleration of 1.0 g.
- ► Observe the maximum permissible lateral acceleration of 0.8 g.
- ► Offloading and running is prohibited during rail transport.

If higher accelerations are expected (sea transport, rail transport, maneuvering operation):
- ► Carry out the special measures to secure the crane and crane components.

NOTICE
Frequent dynamic load change!
Premature fatigue of load bearing crane components.
- ► Demount and properly secure components with large masses.
- ► Prior to transport: Have the rigging points and crane structures checked for damage by an authorized inspector. See chapter 8.01.

19 Fastening

WARNING
Defective fastening equipment or fastening points!
The load can fall down.
- ► Make sure that the fastening points and fastening equipment are in a perfect condition.
- ► Regularly check the rigging points and fastening points. See the Crane operating instructions, chapter 8.01.
- ► Check the fastening equipment regularly. See the Crane operating instructions, chapter 8.01.

WARNING
Load bearing capacity of the fastening equipment is **not** sufficient!
The load can fall down.
- ► Determine the weight of the crane component to be fastened.
- ► Fasten the components solely with approved and sufficiently load bearing fastening equipment.

WARNING
Component incorrectly fastened!
The load can fall down.
- ► Attach the components only to the intended fastening points.

20 Selecting the location

In the following illustrations 1 to 3 the possible situations are shown as an example.

It is very important to choose an appropriate site in order to prevent the danger of accidents.

It must always be possible to take down the crane in order to take it down in a timely manner in the case of unexpected weather conditions.

It must always be possible to position the crane in a safe out of operation position.

LWE/LTR 1100-009/25105-02-02/en

copyright © Liebherr-Werk Ehingen GmbH 2023

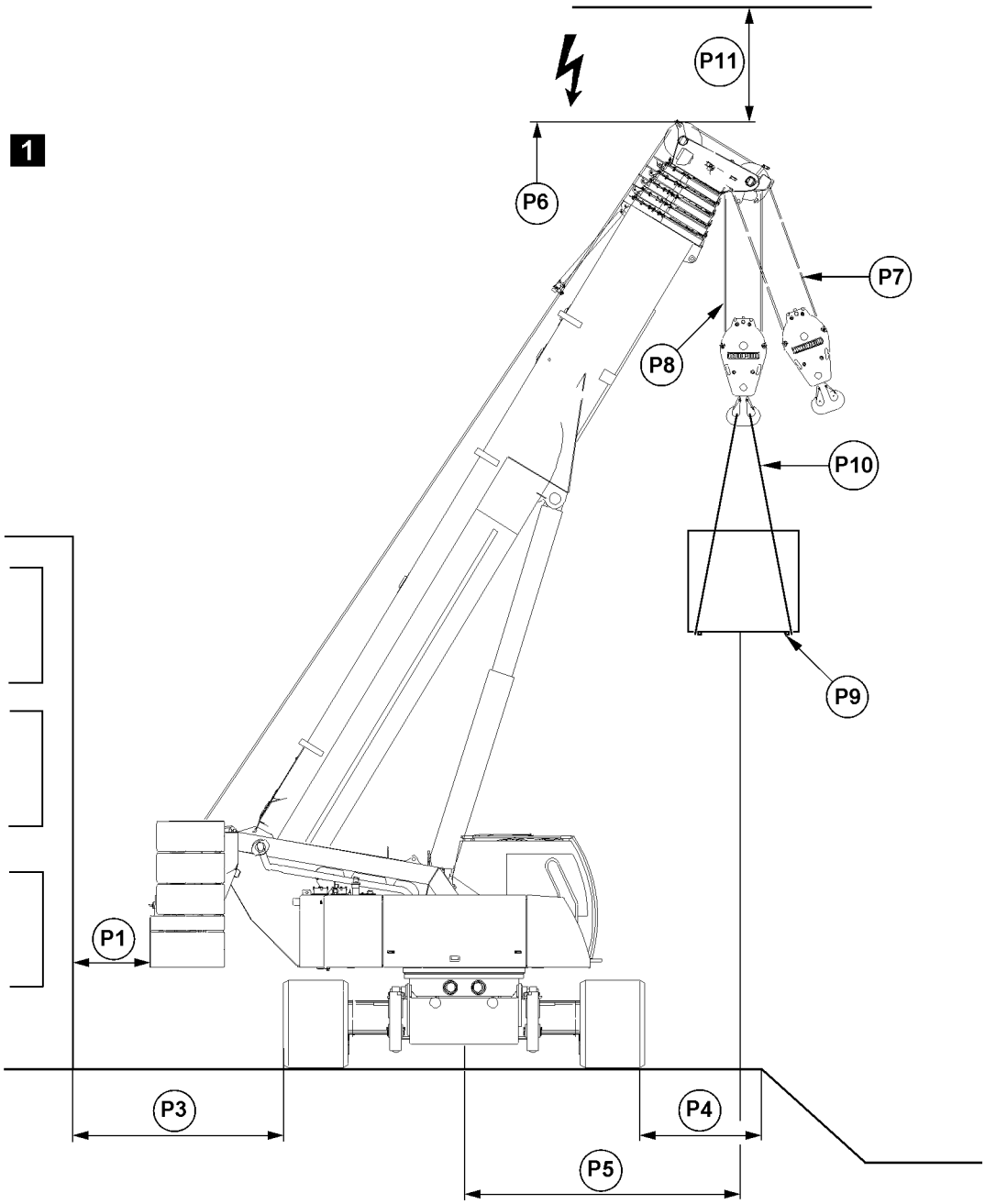

Fig.121166: Example of a crawler crane with telescopic boom

LWE/LTR 1100-009/25105-02-02/en

copyright © Liebherr-Werk Ehingen GmbH 2023

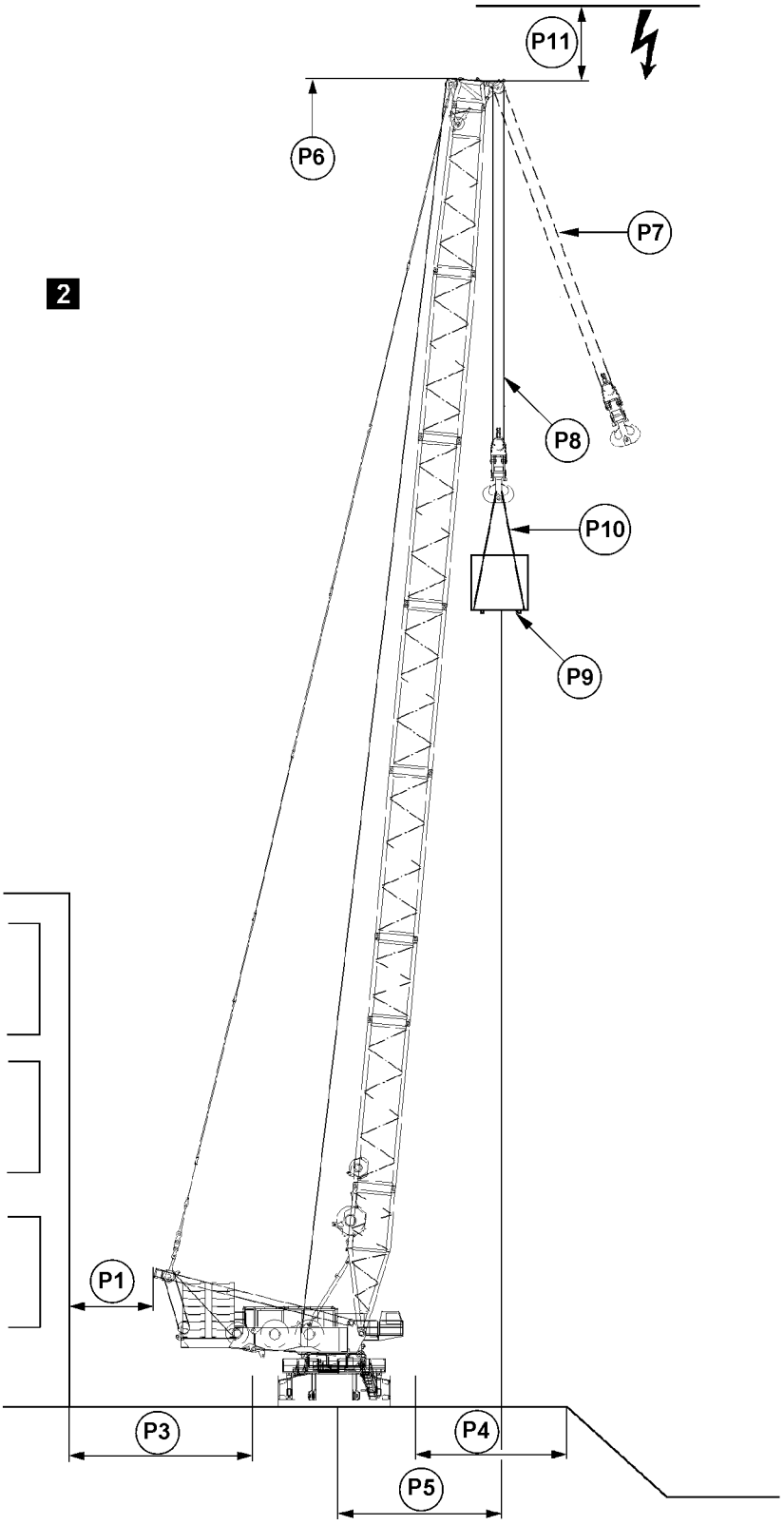

Fig.121167: Example of crawler crane with lattice mast boom

LWE/LTR 1100-009/25105-02-02/en

copyright © Liebherr-Werk Ehingen GmbH 2023

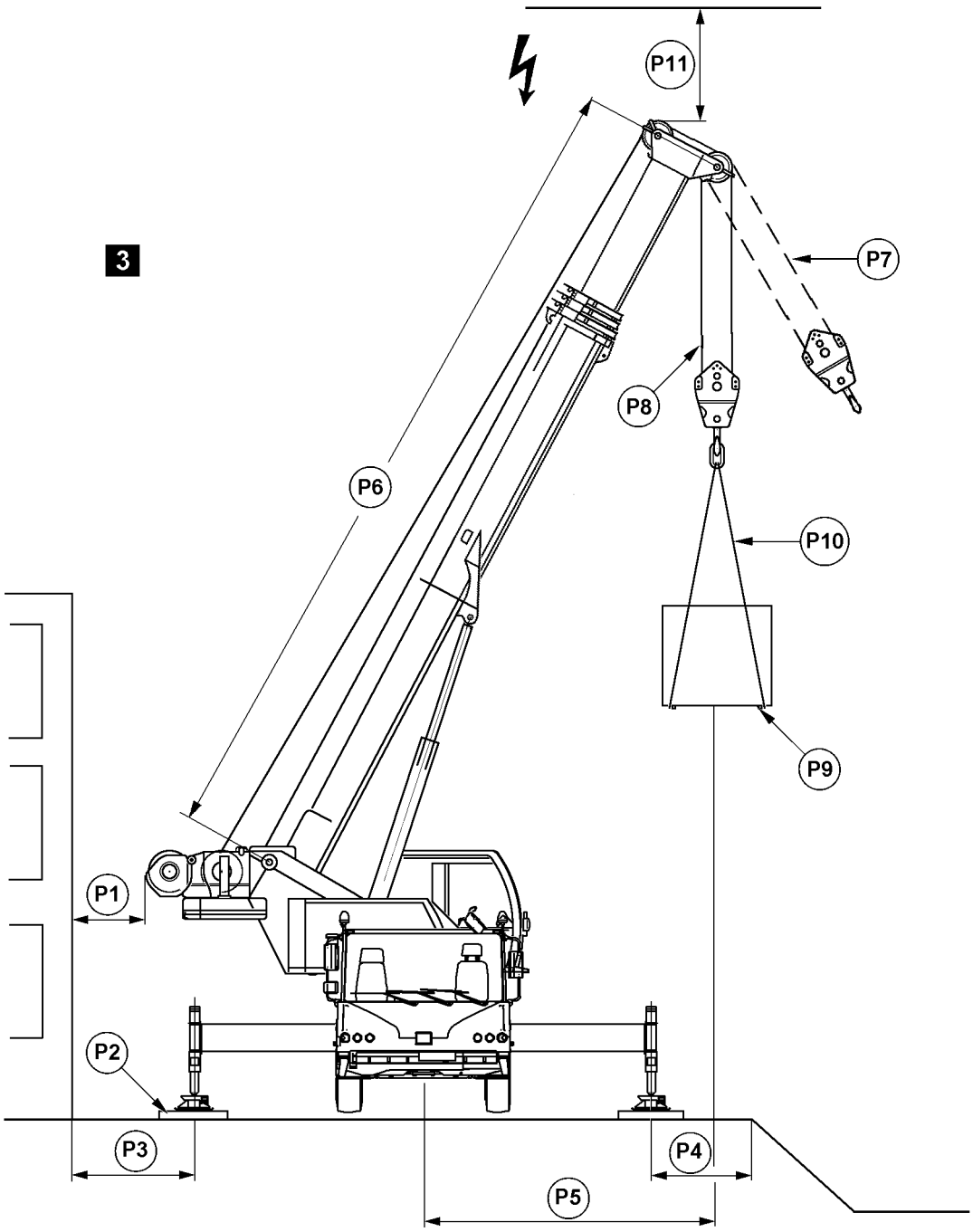

Fig.121168: Example of mobile cranes

DANGER

Danger of accidents due to ground with **insufficient** load bearing capacity!

If the crane is supported or driven on ground with an **insufficient** load bearing capacity, then the crane can topple over and kill personnel.

- ► Only support or drive the crane on ground with a sufficient load bearing capacity.
- ► Act responsibly when planning and selecting the crane location and route.
- ► Comply with the following points.

LWE/LTR 1100-009/25105-02-02/en

copyright © Liebherr-Werk Ehingen GmbH 2023

Sign	When selecting the location of the crane, observe the following points:
P1	Select the placement location in such a way that crane movements can be carried out without collision and that the supports can be extended to the support base specified in the load charts Make sure that no personnel is injured or killed Always keep a safety distance of 0.5 m. If this is not possible, block the danger zone off
P2	When crane support is required: Support the crane correctly and support the support plates large enough according to the load bearing capacity of the ground and the placement location
P3	Maintain a safety distance from basements or similar
P4	Maintain a safety distance from slopes or similar
P5	Select a boom radius as low as possible
P6	Select the correct boom length for the load case
P7	Angular pull is prohibited
P8	Select the correct reeving of the hoist rope for the load case
P9	Keep in mind the weight and the wind-exposed surface of the load
P10	Select fastening equipment according to the weight of the load, the type of attachment and the incline angle
P11	Maintain sufficient distance from electrical overhead lines

21 Slopes and excavations

In the following illustrations 4 and 5 the possible situations are shown as an example.

The crane may not be set up too close to slopes or excavations. Maintain adequate safety distance **A** and safety distance **B** in accordance with the type of soil.

LWE/LTR 1100-009/25105-02-02/en

copyright © Liebherr-Werk Ehingen GmbH 2023

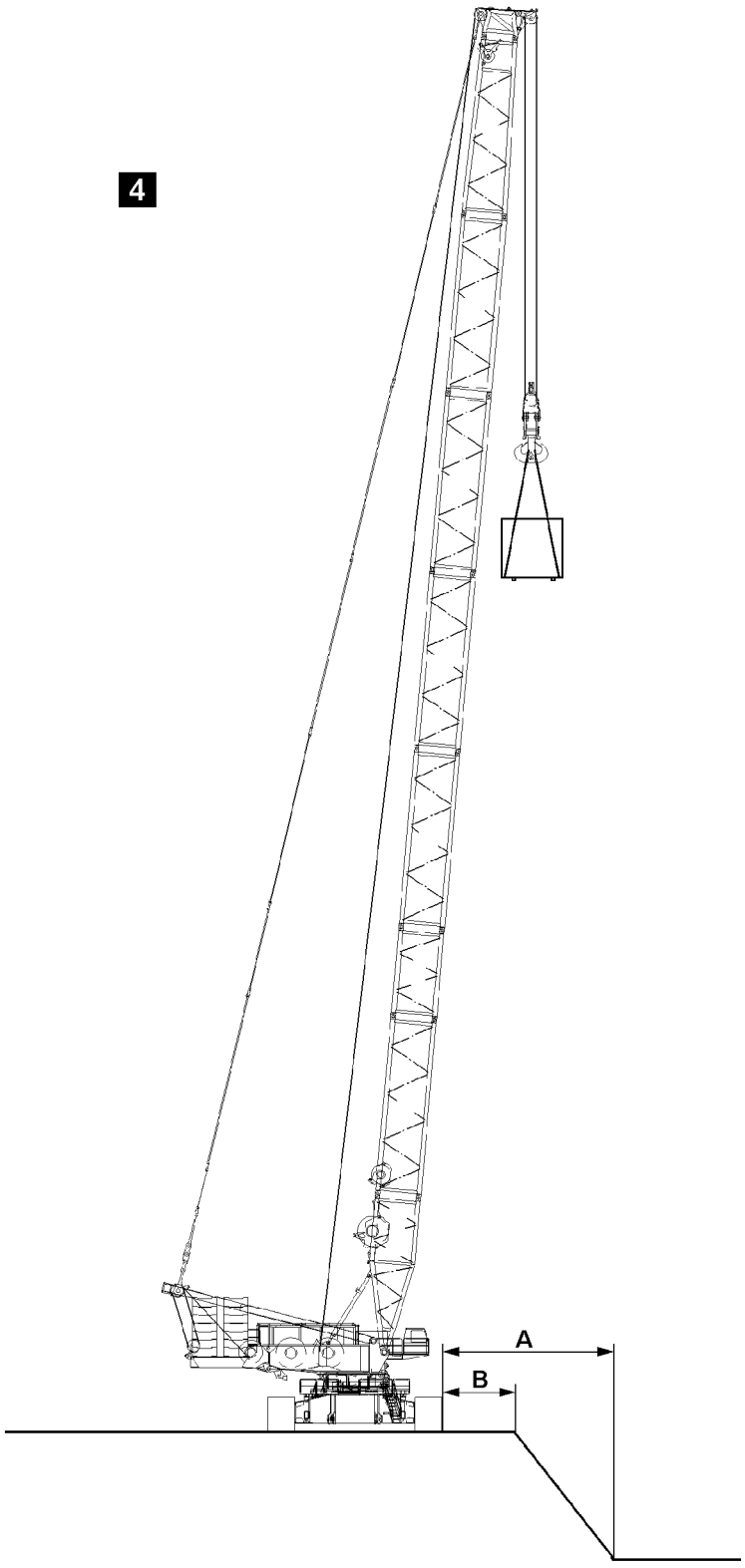

Fig.121162: Example of crawler cranes

A Distance from the bottom of excavation

B Distance from the excavation

LWE/LTR 1100-009/25105-02-02/en

copyright © Liebherr-Werk Ehingen GmbH 2023

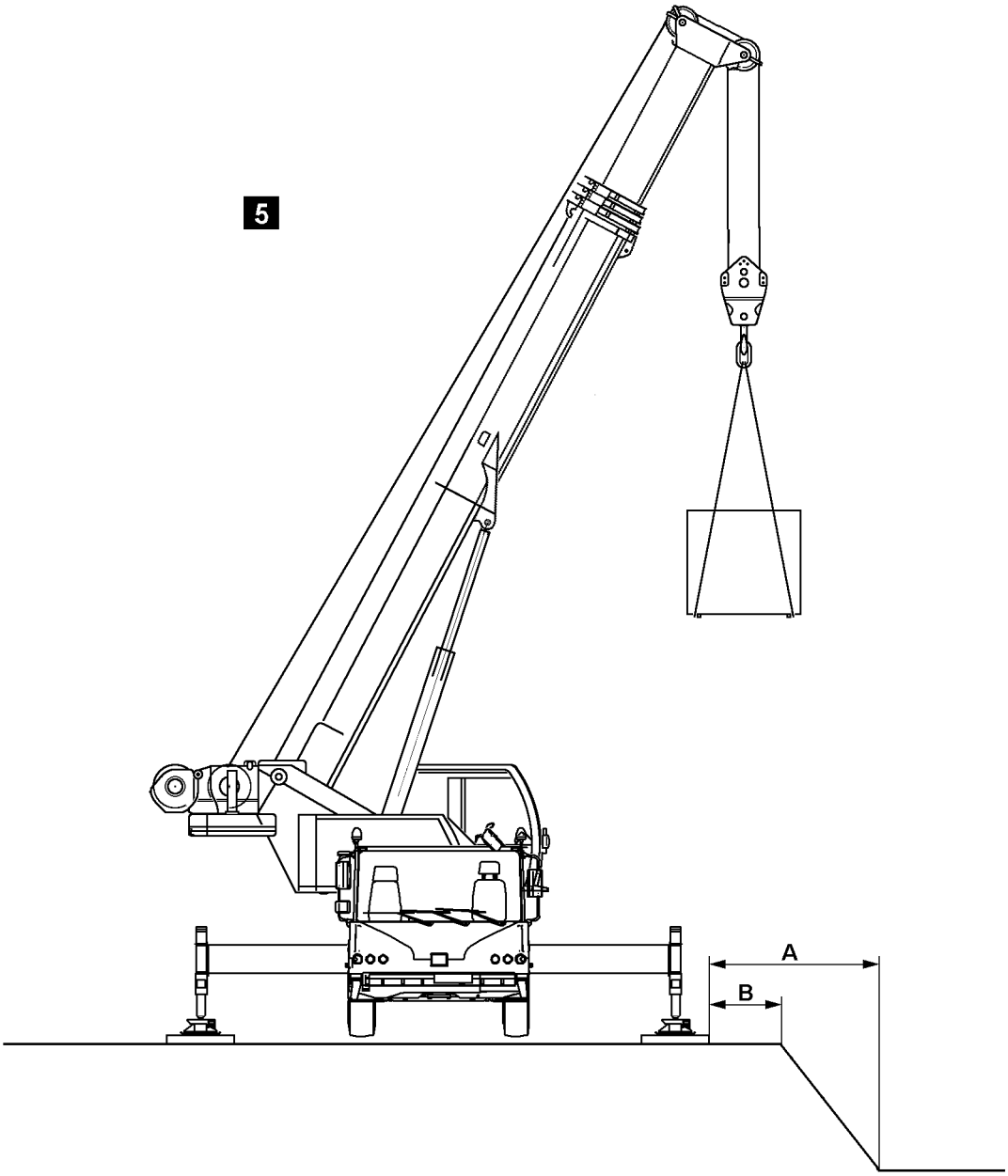

Fig.121163: Example of mobile cranes

A Distance from the bottom of excavation

B Distance from the excavation

WARNING
Safety distance **A** or safety distance **B** is too small!
The edge of the slope or the edge of the excavation can cave in.
The crane can topple over. Death, severe bodily injuries, property damage.
► Maintain the safety distance **A** and safety distance **B**.

Have the safety distance **A** and safety distance **B** calculated by a soil expert or geologist.

LWE/LTR 1100-009/25105-02-02/en

copyright © Liebherr-Werk Ehingen GmbH 2023

22 Loads on the ground due to crane operation

Note
► Take into account that on a crane with high counterweight the crawler pressures or support forces at low load can be higher than at high load.

22.1 Load burdens on the ground on cranes on crawlers

For cranes on crawlers significant forces are transferred via the outrigger pads of the crawlers into the ground (crawler pressures).
– The ground must be able to safely withstand the resulting pressure.
– If the surface of the outrigger pads is inadequate, then the crawlers must be supported according to the load bearing capacity of the ground.
– The required substructure can be calculated from the load bearing capacity of the ground and the crawler pressures of the crane.

WARNING
Load bearing capacity of the ground insufficient!
The ground can give, the crane can topple over.
Death or severe bodily injuries.
► Support large enough, according to the load bearing capacity of the ground with suitable materials, such as wooden beams or steel plates.

To obtain an even pressure distribution over the substructure surface:
► Set the crawlers centered on the substructure.

Note
► The respective ideal crawler pressure can be determined with the job planner program.

22.2 Load burdens on the ground on cranes on supports

When the crane is supported, significant forces (support forces) are transferred by the support cylinders via the support plates to the ground.

The ground must be able to safely withstand the resulting pressure.

If the support plate surface area is inadequate, then the support plates must be supported according to the load bearing capacity of the ground.

The required support surface areas can be calculated from the load bearing capacity of the ground and the support forces of the crane.

WARNING
Load bearing capacity of the ground insufficient!
The ground can give, the crane can topple over.
Death or severe bodily injuries.
► Support large enough, according to the load bearing capacity of the ground with suitable materials, such as wooden beams or steel plates.

To obtain an even pressure distribution over the substructure surface:
► Set the support plates centered on the substructure.

LWE/LTR 1100-009/25105-02-02/en

copyright © Liebherr-Werk Ehingen GmbH 2023

22.3 Examples of the load bearing capacity of the ground

	Soil type	Permissible ground pressure [kN/m²]
1.	Organic ground:	
	Peat, sludge, muck	0
2.	Uncompacted fill:	
	Construction debris	0 to 100
3.	Non-cohesive ground:	
	Sand, gravel, rocks and mix	200
4.	Cohesive soil:	
	a) Clayed silt, mixed with topsoil	120
	b) Silt, consisting of poor clay and coarse clay	130
	c) Plastic clay, consisting of potter's clay and fill	
	Stiff	90
	Semi-solid	140
	Solid	200
	d) Mixed granular ground, clay to sand, gravel and rocky areas	
	Stiff	150
	Semi-solid	220
	Solid	330
5.	Rock in evenly solid condition:	
	a) Brittle, with traces of decomposition	1500
	b) Not brittle	4000

Examples: Permissible ground pressure of the ground

If there is any doubt about the load bearing capacity of the ground at the placement location, soil tests must be carried out by an authorized inspector, for example with a ram penetrometer.

22.4 Calculation examples

The following are general calculation examples. The values are used only to explain the calculation steps. For the values specific to the crane, see the Crane operating instructions, chapter 1.03.

LWE/LTR 1100-009/25105-02-02/en

copyright © Liebherr-Werk Ehingen GmbH 2023

Example: Calculation of ground pressure of support plates for cranes on supports		□
Support force according to the Crane operating instructions, chapter 1.03 for example: 720 kN	720 kN	
Surface of square support plate with 550 mm side length according to the crane operating instructions, chapter 1.03, for example: 0.55 m x 0.55 m = 0.3 m^2	0.3 m^2	
80 % as the load bearing surface of the support plate: 0.3 m^2 x 0.8 = 0.24 m^2	0.24 m^2	
Ground pressure = Support force / load bearing surface support plate	720 kN / 0.24 m^2 = 3000 kN/m^2	
Ground pressure per support:	**3000 kN/m^2**	

Example: Calculation of ground pressure

- The value of the ground pressure is far higher than the permissible ground pressure for all types of granular soil.
- If this crane is utilized on bedrock, gravel type of ground, permissible ground pressure 200 kN/m^2 , then the support surface must be increased.

Example: Calculation of required support surface for cranes on supports		□
Support force according to the Crane operating instructions, chapter 1.03 for example: 720 kN	720 kN	
Ground pressure from chart *Permissible ground pressures* for example: 200 kN/m^2	200 kN/m^2	
Required support surface = Support force / permissible ground pressure	720 kN / 200 kN/m^2 = 3.6 m^2	
Required support surface per support:	**3.6 m^2**	

Example: Calculation of the support surface

- The surface of the substructure for each support plate must be at least **3.6 m^2**.
- The height of the substructure must be selected depending on the load distribution angle.

Note

► The corresponding ideal support forces can be determined with the Job planner.

22.5 LICCON job planner

The calculation of support forces and crawler pressures with the LICCON job planner are based on idealized assumptions: level and homogenous ground, rigid crane structure, no consideration in regard to wind.

Side deformations of the boom system due to wind, incline position and elastic compliance of the steel structure can lead to increase of support forces or increase of crawler pressures.

The determination of the values, taking wind load on the crane and the load into account, as well as the elastic deformation of the crane can only be carried out by the crane manufacturer or a person with suitable technical knowledge.

LWE/LTR 1100-009/25105-02-02/en

copyright © Liebherr-Werk Ehingen GmbH 2023

22.5.1 Example of a crane on crawler with derrick boom, suspended ballast and short (main) boom system

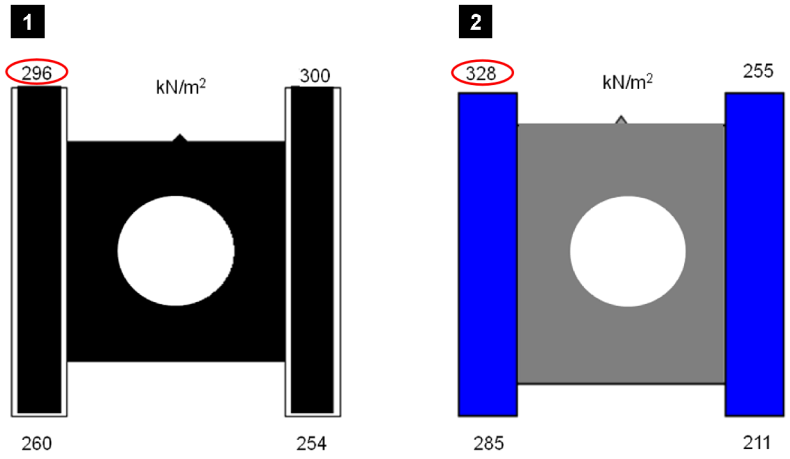

Fig.125052: Example of a crane on crawler with derrick boom, suspended ballast and short (main) boom system

Illustration 1: Idealized crawler pressures from Job planner calculated with the aid of a rigid body system and without considering the wind

Illustration 2: Idealized crawler pressures with consideration of elastic deformation and wind on crane and load

22.5.2 Example of crane on crawler with derrick boom, suspended ballast and long (main) boom system

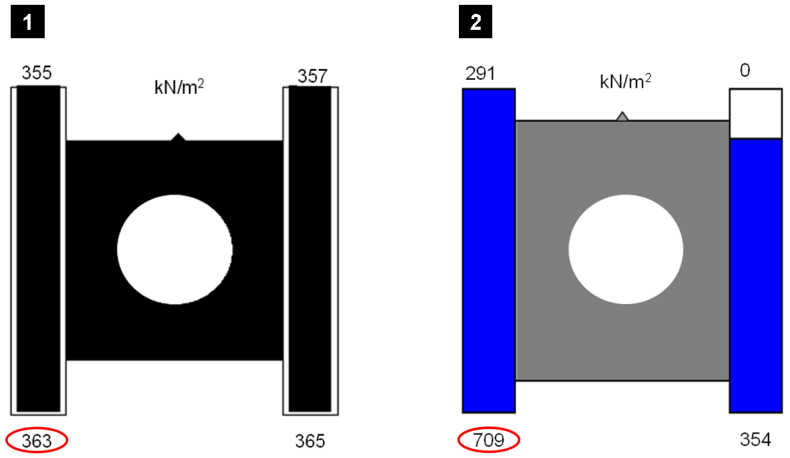

Fig.125053: Example of crane on crawler with derrick boom, suspended ballast and long (main) boom system

Illustration 1: Idealized crawler pressures from Job planner calculated with the aid of a rigid body system and without considering the wind

Illustration 2: Idealized crawler pressures with consideration of elastic deformation and wind on crane and load

LWE/LTR 1100-009/25105-02-02/en

copyright © Liebherr-Werk Ehingen GmbH 2023

22.5.3 Example of crane on supports

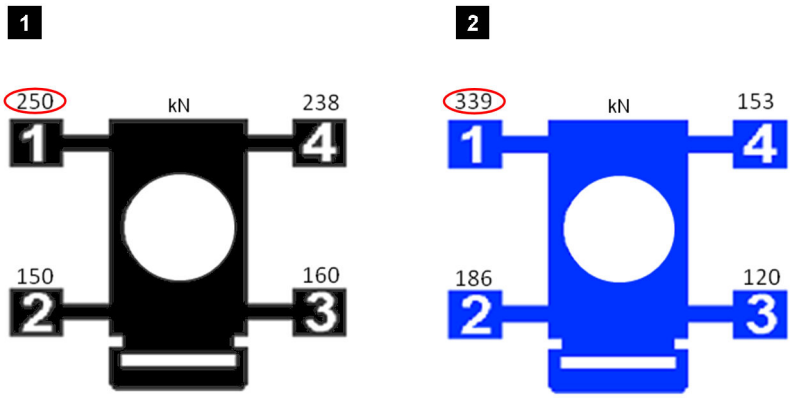

Fig.125054: Example of crane on supports

Illustration 1: Support forces from Job planner calculated with the aid of a rigid body system and without considering the wind

Illustration 2: Support forces with consideration of elastic deformation and wind on crane and load

23 Support

23.1 Support plates

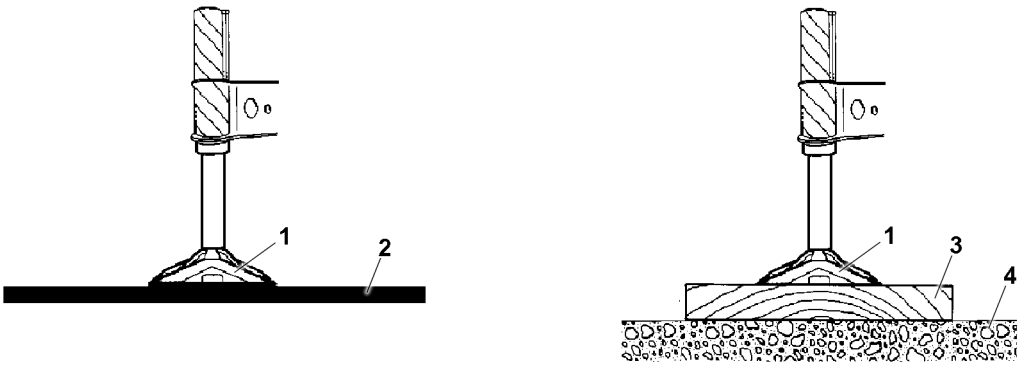

Fig.144244: Support plates

1 Support plate
2 Ground (**no** substructure necessary)
3 Substructure
4 Ground (substructure necessary)

When supporting the crane, the support plates must lie horizontally on the ground or on the substructure.

WARNING
The support plates are **not** lying horizontally!
The crane can topple over, death, property damage.
► Before supporting the crane, align the support plates horizontally.

LWE/LTR 1100-009/25105-02-02/en

copyright © Liebherr-Werk Ehingen GmbH 2023

23.2 Supporting the crane

WARNING
The crane is **not** horizontally aligned!
The crane can topple over, death, property damage.
► Align the crane horizontally to 0.0° during the support procedure.

DANGER
The crane can topple over!
When actuating the supports with attached load and / or loaded derrick ballast guying, the incline and the force conditions of the entire boom system change.
There is **no** shut-off by the LICCON overload protection.
The crane can topple over.
Personnel can be severely injured or killed.
► When a load is suspended it is prohibited to actuate the support.
► When the derrick ballast guying is loaded, it is prohibited to actuate the support.

It is absolutely essential that the crane be supported with the support base exactly in accordance with the load chart to ensure safe crane operation.

The correspondence of the support surfaces on the sliding beams must be observed to ensure proper force transfer between the sliding beams.

The crane may only be supported in these extension conditions.

WARNING
The crane can topple over!
If only the sliding beams on the load side are extended, then the crane can topple over and kill personnel.
► Push all four sliding beams and support cylinders out according to the specifications in the load chart and pin them.
► Do **not** support in intermediate positions between the support bases.
► Pin the sliding beams to the support base according to the load chart.
► Fully insert and secure the pins.

WARNING
Risk of crane toppling due to incorrect extension of the sliding beams!
The load suspended on the hook causes tension and deformation of the hoist rope and telescopic boom. The same applies for operation with lattice jib and guy ropes. If the load falls from the fastening ropes or if the fastening or hoist rope breaks in this situation, a sudden relief occurs. The boom snaps back quickly. This can cause the crane to topple over.
Despite previous assumption, it might become necessary to swing the load to the opposite side. This can cause the crane to topple over.
The boom and / or counterweight momentum may cause the crane to topple when turning out of the longitudinal vehicle direction.
► Extend all four sliding beams and support cylinders according to the specifications in the load chart.

23.3 Supporting the crane with a *variable support*

When supporting the crane with a *variable support* special measures are required. These measures are described in detail in the Crane operating instructions, chapter 6.26.

LWE/LTR 1100-009/25105-02-02/en

copyright © Liebherr-Werk Ehingen GmbH 2023

24 Alignment of the crane

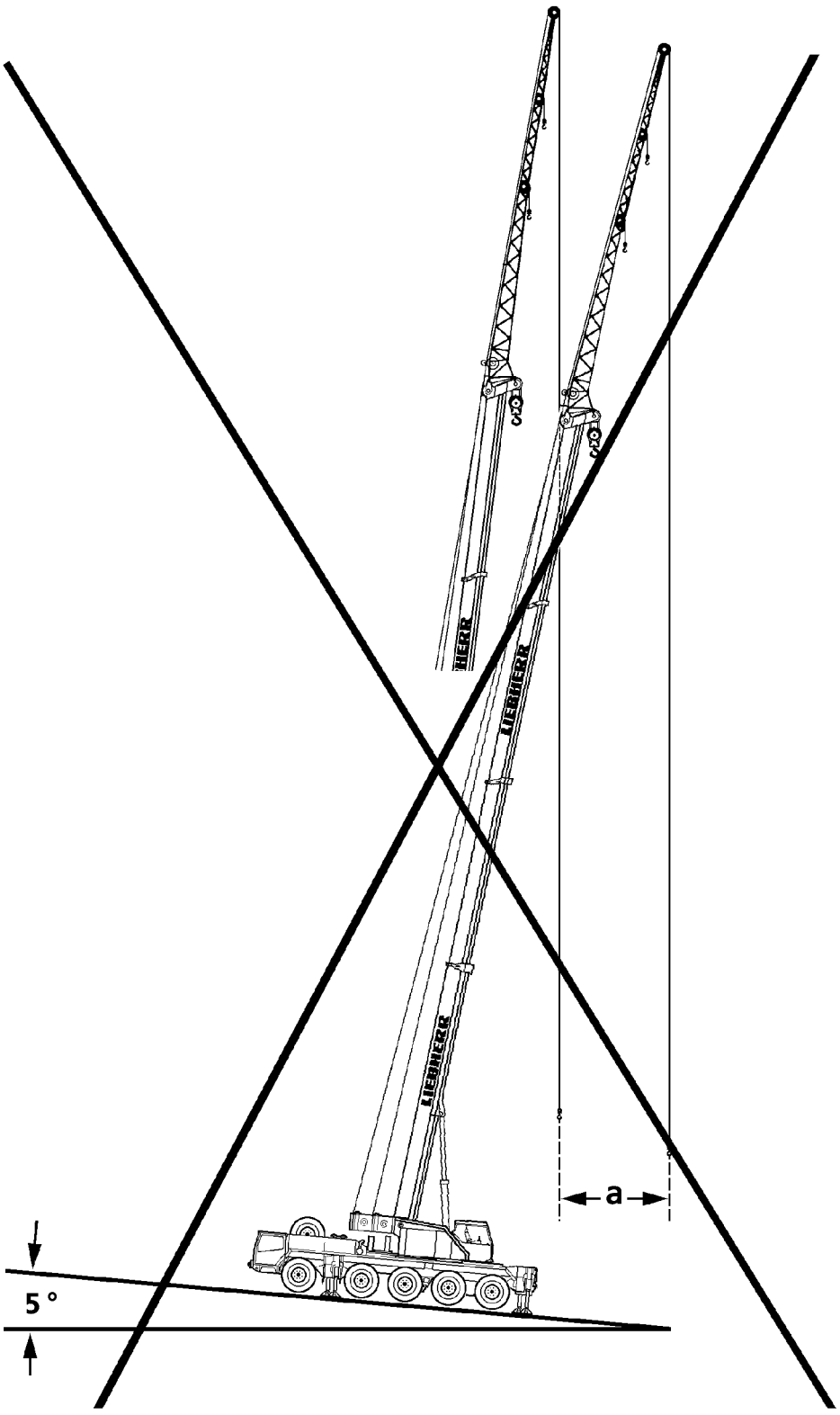

*Fig.121164: Example of **non-permissible** incline position*

In addition to the proper substructure for the supports, the horizontal alignment of the crane is of utmost importance for safe crane operation.

LWE/LTR 1100-009/25105-02-02/en

copyright © Liebherr-Werk Ehingen GmbH 2023

DANGER
The crane may fall over due to the incline position!
If the crane is positioned at an incline, and if the boom is turned towards the slope, then the boom radius is increased as a result.
It is possible that the slewing gear can no longer hold the crane superstructure and, in extreme cases, the crane can topple over.
Personnel can be severely injured or killed.
► Align the crane horizontally before starting crane operation.

If the horizontal alignment of the crane has to be readjusted:
► Set the load down on the ground before readjusting the crane.

For cranes on crawlers, readjustment is **not** possible:
► If possible, use load charts for limited terrain incline.

Example: At a boom length of 50 m , an incline position of the crane of only 5° with a boom radius of 10 m causes a radius increase of a = 4 m.

25 Checking the safety measures

- The placement location has been selected so that all planned lifts included in the load chart for the erected set up configuration can be lifted.
- The load bearing capacity of the ground is adequate.
- There is a sufficient safety distance from excavations and slopes.
- It is ensured that there are no current-carrying lines within the working range of the crane.
- There are no obstacles that will hinder the required crane movements.
- The crane is horizontally aligned.
- When crane support is required:
  - All four sliding beams and support cylinders have been extended according to the support base given in the load chart.
  - The sliding beams have been secured with pins to prevent them from moving.
  - The support plates are pinned and secured in the operating position.
- On mobile cranes:
  - The axle suspension is blocked.
  - The axles are relieved, which means the tires do not touch the ground.

LWE/LTR 1100-009/25105-02-02/en

copyright © Liebherr-Werk Ehingen GmbH 2023

26 Safety instructions in case of an external power supply

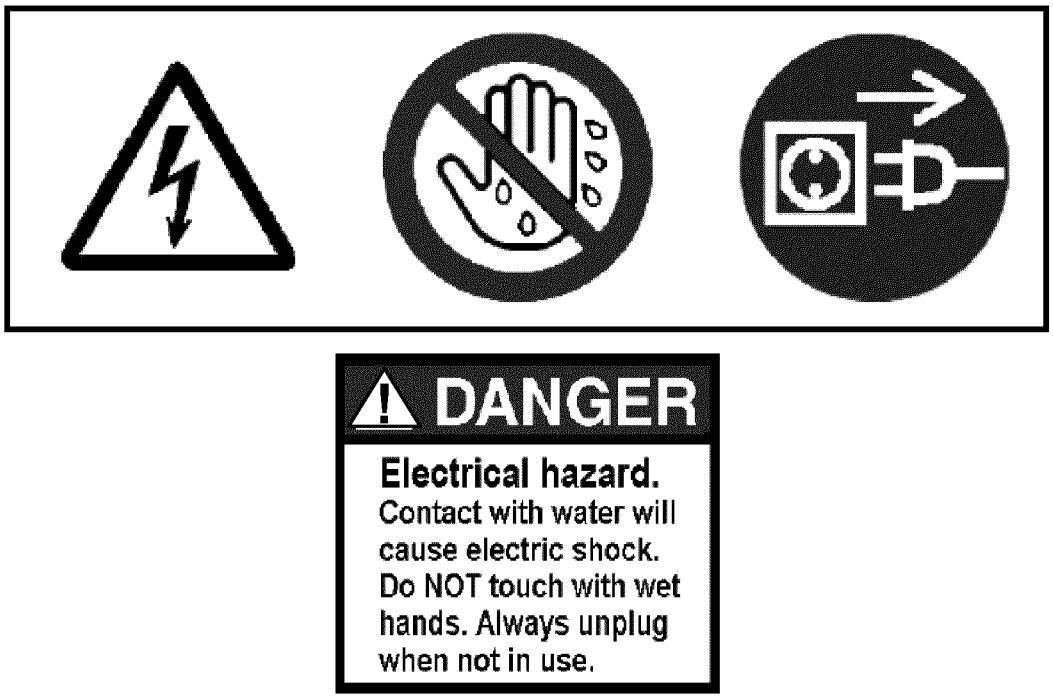

Fig.197720

A potential danger exists when supplying a crane with an external power supply from a low voltage distribution system (100 V AC to 400 V AC).

A special electrical hazard is present when a protective conductor is interrupted (caused by the mechanical stress on flexible supply lines or the service connection), loose terminal connections, high wire or contact resistance, mixed up conductors, defective or missing protective equipment (FI / fault interrupters) in combination with a body contact on the crane.

WARNING
Danger of fatal injury if the body conducts current!
Water and / or defective devices can cause hazardous stray voltages when touched. The person touching the crane is subject to lethal currents.
► The external supply cable must be in good working order.

Make sure that the external flexible supply cable is in good working order.

Where applicable, we recommend the use of a power isolating transformer.

27 Grounding for potential equalization

Have tasks regarding grounding performed by authorized and trained electricians.

– Crane grounding is done to establish the defined potential equalization between the crane that is electrically charged for any reason and the ground.
– Potential equalization protects people who are located near the crane. Potential equalization prevents currents from flowing through people who possibly touch a charged crane while standing on the ground.
– Potential equalization serves the purpose of protecting electronic components to prevent electrostatic charge.

LWE/LTR 1100-009/25105-02-02/en

copyright © Liebherr-Werk Ehingen GmbH 2023

– Grounding for potential equalization is not designed to protect crane components against extreme external influences (such as lightning).

27.1 Crane grounding

For crane types with a ground connection*:
– Location of the ground connection*, see chapter 1.01 or chapter 3.01.

For crane types without a ground connection for grounding of the crane:
– Properly connect the grounding with the crane.

WARNING
Danger of fatal injury due to electric shock!
There is a danger of electrical shock, if the crane is not properly grounded.
► Properly ground the crane.
► Make sure that there is a potential equalization between the crane and the ground.

The crane must be grounded before start up.

Examples of extremely strong electromagnetic fields:
– Near transmitters (transmission equipment, radio and TV transmitters, radio stations, etc.)
– Near high frequency switching stations and high voltage lines.
– In case of severe possibility of thunderstorms or potential thunderstorms.
Note: As regards protecting a crane against lightning, grounding must be considered separately.

The crane can become electrostatically charged, especially if the crane is equipped with synthetic support mats or if the support mats are placed on insulating materials (such as wooden planks).

27.2 Grounding the load

WARNING
Danger of fatal injury due to electric shock!
There is a danger of electrical shock, if the load is not properly grounded.
► Properly ground the load.
► Make sure that there is a potential equalization between the load and the ground.

The load must be grounded before start up:
– Near transmitters (radio and TV transmitters, radio stations, etc.).
– Near high frequency switching stations and high voltage lines.
– In case of severe possibility of thunderstorms or potential thunderstorms.
Note: As regards protecting the load against lightning, grounding must be considered separately.

The load can become electrostatically charged, even if the crane is grounded. This applies in particular if a hook block with pulleys made of synthetic material and non-conductive fastening equipment (for example plastic or manila ropes) are used.

LWE/LTR 1100-009/25105-02-02/en

copyright © Liebherr-Werk Ehingen GmbH 2023

28 Working in the vicinity of transmitters

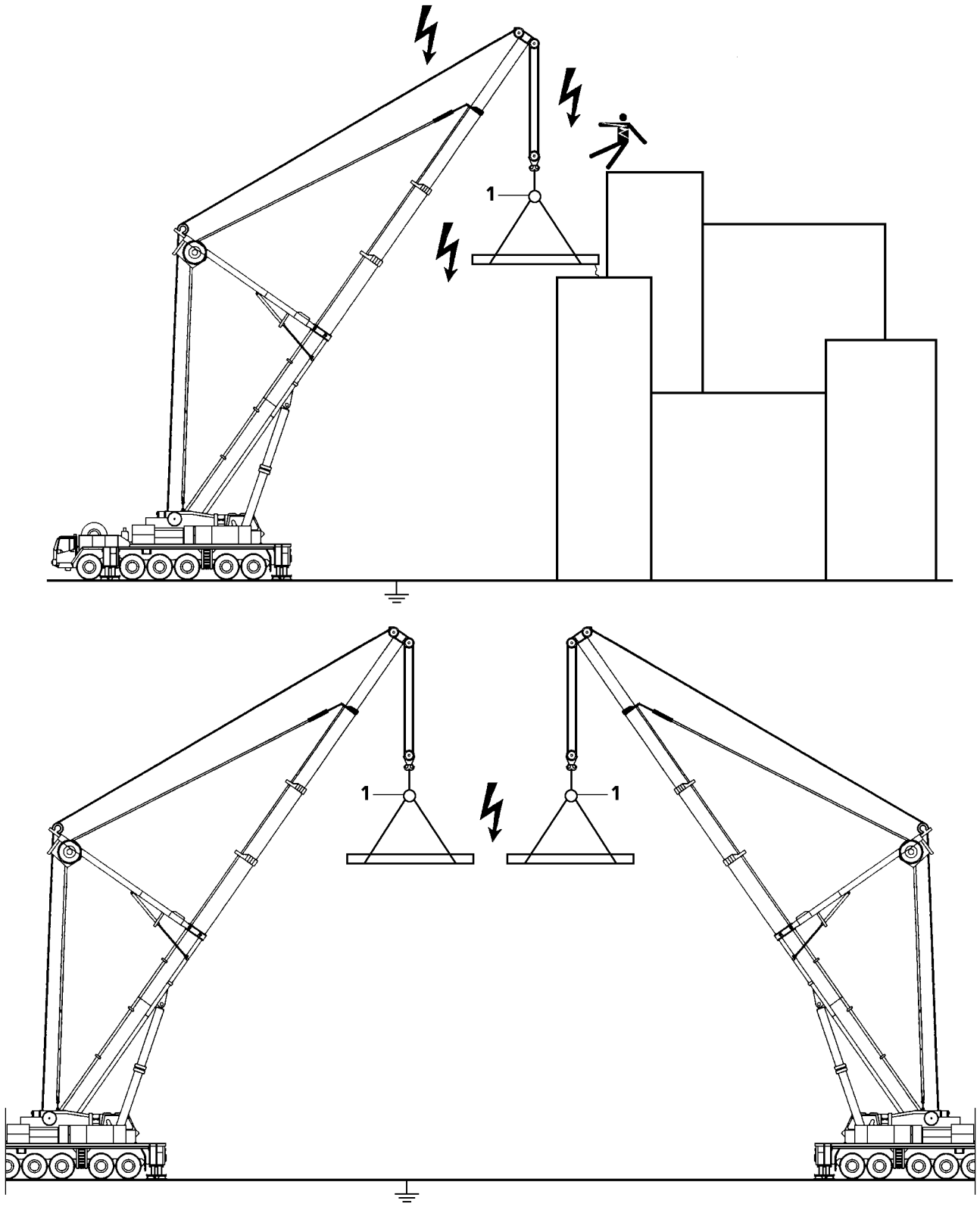

Fig.121165: Example of electrostatic charge

Strong electromagnetic fields are likely to be present if the construction site is close to a transmitter.

These electromagnetic fields can pose direct or indirect danger to persons or objects, for example:

– Effect on human organs due to temperature increase

LWE/LTR 1100-009/25105-02-02/en

copyright © Liebherr-Werk Ehingen GmbH 2023

– Danger of burns or inflammation due to temperature increase
– Spark or electric arc formation

DANGER
Danger due to electromagnetic fields!
► Before operating a crane in the vicinity of transmitters, be sure to: Consult with Liebherr-Werk Ehingen GmbH.
► In addition, involve an authorized and trained electrician with knowledge about high frequency fields.

High frequency (HF-) radiation from a transmitter requires extended work safety protection and special accident prevention regulations for personnel:

1. Each crane must be „fully“ grounded. Check visually or use a simple continuity tester to ensure that the ladder, crane cab and rope pulleys are grounded.
2. All personnel working on the crane or with large metal objects must protect themselves from burns by wearing non-conductive synthetic gloves and suitable clothing while working.
3. There is no need to panic if you feel your hand warm up. Always work under the assumption that the respective workpiece, structural steel member or carrier is „hot“.
4. The temperature of objects affected by high frequency radiation depends on their „size“. Cranes, carriers and coverings, for example, are „hotter“.
5. Contact with other crane loads is not permitted when operating the crane (arcing). Since defects caused by burns considerably reduce the rope's load bearing capacity, any such occurrences must be reported immediately to customer service at Liebherr-Werk Ehingen GmbH so that the ropes can be inspected.
6. An insulator **1** is required at all times between the crane load hook and fastening equipment. It is strictly prohibited to remove this insulator **1**.
7. Do not touch the ropes above the insulator **1**.
8. Loads that are attached to the crane may not be touched by any unprotected parts of the body after the load has been lifted or set down.
9. Do not work with a bare upper torso or in short pants, this is prohibited.
10. To minimize absorption of high-frequency radiation, larger loads should be transported horizontally if possible.
11. Loads must be grounded, or additional insulation used (rubber material between the object and gloves) when manual work is required.
12. Use a suitable measuring instrument to check the „temperature“ of the workpiece.
    For example, if 500 V can be measured on a workpiece at a distance of 1 cm to 2 cm , then the workpiece may not be touched with bare hands.
    The greater the distance, the higher the voltage is on the object:
    At 10 cm distance, approx. 600 V are present, at 30 cm distance approx. 2000 V are present.
13. When refueling the crane, it must be ensured that no sparks are created within a radius of 6 m by handling larger metallic parts or due to other work.
14. To avoid secondary accidents, use personal protective equipment when working on components that are high above the ground.
15. Any accidents and unexpected events must immediately be reported to the local construction supervisor and the safety engineer.

29 Crane operation in case of thunderstorms

WARNING
Danger of accident due to lightning!
Direct or indirect high current flow through the body.
Danger of falling when working above ground.
Death or severe bodily injuries.
► Make sure that there are no persons in the immediate area of the crane.
► Obtain the weather forecast for the entire period during which the crane will be used.
► Introduce safety measures in time.

LWE/LTR 1100-009/25105-02-02/en

copyright © Liebherr-Werk Ehingen GmbH 2023

In the case of weather where there may be lightning, observe the following specifications:
– Work on the crane is stopped.
– The load is set down.
– In the case of cranes with derrick ballast: The derrick ballast is set down, if possible.
– The boom is, if possible, telescoped in and / or taken down.
– The crane is in a safe condition.

Make sure that no persons are seeking protection in the immediate area of the crane.

Make sure that the danger zone of the crane is blocked off.

29.1 After a possible lightening strike to the crane

Lightening can cause many types of damage. For example, damage to casings, scorched cable or melding of metal components.

29.1.1 Checking the crane

WARNING
Damaged crane!

When crane damage is found:
► Crane operation with damaged components is prohibited.
► Repair the crane.

WARNING
Possible damage to the crane!

When crane damage cannot be excluded:
► Do not restart crane operation.
► Contact Customer Service at Liebherr-Werk Ehingen GmbH.

Step 1: Inspect the crane in detail, in particular perform a visual inspection for:
– Damage to the fiber guy ropes and plastic ropes.
– Damage to the hoist ropes and control ropes.
– Damage to cables, lines and hoses.
– Damage to hydraulic cylinders.

Step 2: If no damage is found during the visual inspection:
– Check the operation of the crane control, evaluate the error memory.

Step 3: If no damage was found in step 1 or step 2:
– Perform a function check for unusual behavior, vibrations and noise - control the slewing gear and winches slowly and pay attention to functionality and the generation of noise.
– Monitor the hydraulic cylinder for a long period of time for leakage.

29.2 Lightning: Protective measures for the crane and load

Protective measures regarding lightning / lightning protection for the crane and load, including optional grounding.

– Have the protective measures implemented by authorized and trained electricians with suitable knowledge about lightning protection.

30 Wind influences

Note
► The wind speeds are valid for a 360° wind direction for a 3-second wind gust at the highest point of the crane.

LWE/LTR 1100-009/25105-02-02/en

copyright © Liebherr-Werk Ehingen GmbH 2023

WARNING
Disregard of permissible wind speeds!
If the permissible wind speeds are disregarded, the crane can topple over. Personnel can be severely injured or killed.
► It is prohibited to erect the crane to measure the wind speed.
► Comply with the permissible wind speeds depending on the assembly / crane conditions, see following chart.

Assembly / crane conditions	Reference for permissible wind speed
Erection and take-down of various boom configurations	Wind speed charts and / or erection and take-down charts
Crane operation	Load chart manual
When the permissible wind speed according to the load charts is exceeded during crane operation, then **crane operation is prohibited.**	Wind speed charts
Interruption of crane operation when crane remains equipped	Wind speed charts
Crane out of operation, when crane remains equipped	Wind speed charts

Note
No wind speed charts available!

For a set up configuration for which no wind speed charts are available:
► Comply with the maximum permissible wind speeds in the load charts.

The wind load on the crane boom has **not** been taken into account for the planning of crane operation with the LICCON job planner.
– As a result, the actual values of the support force and / or the crawler pressure can be significantly higher than the values determined with the LICCON Job planner.
– The wind affecting the crane and the load, the elastic distortion of the crane structure, incline position as well as wind-exposed surface (A_W) per ton of hoist load larger than 1.2 m^2/t can significantly increase the support force and / or the crawler pressure.

WARNING
Increase of support force and / or the crawler pressure!
The resulting pressure on the ground becomes larger.
The permissible ground pressure can be exceeded.
► Do not exceed the permissible ground pressure.

Note
► The determining factor for all crane work in the actual wind speed at the job site of the crane.
► The current wind speed can be checked with the nearest weather bureau.
► The wind speed at the boom jib is higher than near the ground.
► Observe the national and regional regulations.

30.1 Wind speed charts for a *variable support*

For a *variable support*: Observe the wind speed charts according to the support base for the smallest extension length of the sliding beams.

LWE/LTR 1100-009/25105-02-02/en

copyright © Liebherr-Werk Ehingen GmbH 2023

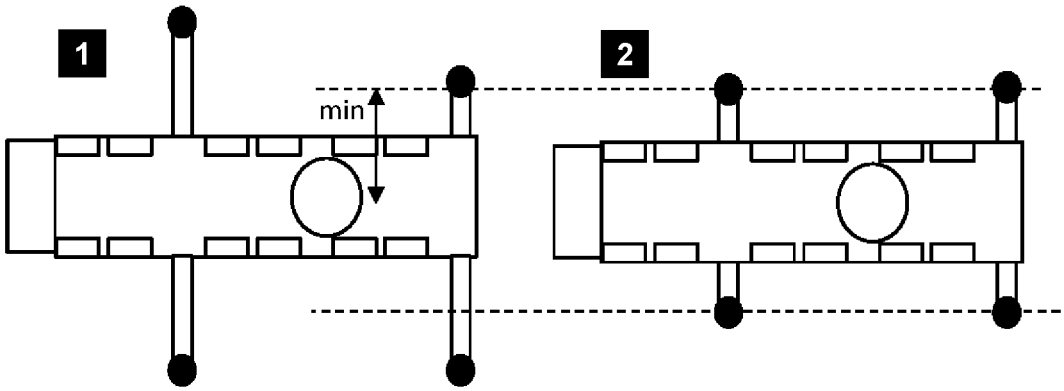

Fig.121577: Example of the selection of wind speed charts for a variable support

Example of the selection of wind speed charts for a *variable support*:
- The crane is supported with a *variable support* according to illustration **1**.
- Select wind speed charts according to the support base in illustration **2**.

Note
No wind speed charts available!

If the smallest extension length of a sliding beam is less than those of the wind speed charts on hand:
► Comply with the maximum permissible wind speeds in the load charts.

30.2 Wind speed, wind gust speed and wind direction

The depiction of the wind is made by statement of wind speed (wind force), wind gust speed and wind direction.

High above the ground, the wind is less influenced by the surface condition of the ground. In the lower layers of the atmosphere, the wind speed is reduced by the ground friction. One differentiates between roughness of terrain, influence of obstacles and influence of terrain contours. Vegetation, buildings etc. have great influence on the wind speed, wind gust speed and wind direction.

The site selection is thus especially important for wind measurement.

The wind speed, wind gust speed and wind direction are subject to significant time and local fluctuations. For that reason it is important to have reliable information regarding the expected wind speed, wind gust speed and wind direction during a load lift and to carry out exact wind measurements.

For mobile cranes, always assume a wind load of 360°. The determining factor is the „3 second gust speed“ at the highest point of the boom.

30.3 Measurement of wind speed

The anemometer installed on the crane boom measures the wind speed on the boom jib and shows the current wind speed in the crane cab.

The function of the anemometer must be checked every time before erection of the boom by manually actuating the shell start for easy movement and proper function.

Before lifting a load, especially with large wind-exposed surface, the wind speed and the wind direction expected during the lift must be known. Information can be obtained for example from the local weather bureau. The determining factor is the „3-second gust speed“ at the highest point of the boom.

LWE/LTR 1100-009/25105-02-02/en

copyright © Liebherr-Werk Ehingen GmbH 2023

WARNING
Overload of the crane!
The acoustic wind warning is only issued if the wind speed specified for the standard wind exposure surface in the load chart is exceeded (wind surface per ton load: 1 m^2 , drag coefficient: 1.2).
If the permissible wind speed must be reduced for loads due to large wind-exposed surfaces, no acoustic wind warning is issued.
There is no shut-off of crane movement.
- ► The wind-exposed surface and the wind resistance coefficient for the load to be lifted must be known.
- ► The maximum permissible wind speed specified in the load chart must be reduced for large wind exposure surfaces as described in the load chart manual chapter "Wind influences during crane operation".

To safely determination the wind speed, the crane must be turned 360° before use. The highest measured value while doing so must be compared with the „maximum permissible wind speed“ for the load according to the load chart. Therefore the possibility that the result of the measurement is distorted due to nearby buildings, cranes or components is eliminated.

In gusty wind conditions, the probability of sudden high wind speed increases. In gusty wind conditions no loads with a large surface may be lifted.

Note
- ► If in doubt and in case of questions for further information and / or training in the area of „Wind influences in crane operation“: Contact Customer Service at Liebherr-Werk Ehingen GmbH.

30.4 Conversion chart for wind force

Note
- ► The influence of the wind on the surrounding area is described clearly in the Beaufort scale to provide an orientation for the crane operator.
- ► The wind force of the Beaufort scale refers to the wind speed determined over 10 minutes at a height of 10 m.

Wind force		Wind speed		Effect of the wind
Beaufort number	Designation	[m/s]	[km/h]	Inland
0	Calm	0 to 0.2	1	Calm, smoke rises vertically
1	Slight air movement (draft)	0.3 to 1.5	1 to 5	Wind direction is shown only by observing the trail of smoke, not by the wind sock
2	Light breeze	1.6 to 3.3	6 to 11	Wind can be felt on the face, the leaves rustle, wind sock moves slightly
3	Gentle breeze	3.4 to 5.4	12 to 19	Leaves and small twigs in constant motion. Wind extends a flag
4	Moderate breeze	5.5 to 7.9	20 to 28	Swirls up dust and loose paper, moves twigs and thin branches
5	Fresh breeze	8.0 to 10.7	29 to 38	Small deciduous trees begin to sway, whitecaps form at sea
6	Strong breeze	10.8 to 13.8	39 to 49	Thicker branches move; telephone lines begin to whistle, umbrellas are difficult to use
7	Near gale	13.9 to 17.1	50 to 61	Entire trees swaying; difficult to walk into wind

LWE/LTR 1100-009/25105-02-02/en

copyright © Liebherr-Werk Ehingen GmbH 2023

Wind force		Wind speed		Effect of the wind
Beaufort number	Designation	[m/s]	[km/h]	Inland
8	Gale force wind	17.2 to 20.7	62 to 74	Breaks branches off trees, impedes walking in open areas considerably
9	Gale	20.8 to 24.4	75 to 88	Minor damage to property (chimney caps and roofing tile are blown off)
10	Severe storm	24.5 to 28.4	89 to 102	Trees are uprooted, significant damage to property
11	Violent storm	28.5 to 32.6	103 to 117	Extensive, widespread storm damage
12	Hurricane	32.7 and more	118 and more	Major destruction

Beaufort scale

30.5 Height-dependent wind speed

Note

- The maximum permissible wind speed (v_{max}) and the maximum permissible wind speed according to the load chart (v_{max_TAB}) always refer to the 3-second wind gust speed at the maximum height of the crane.
- Instead of the 3-second wind gust speed, weather information services often report a wind speed (v_m) that is averaged over a time period of 10 minutes (so-called 10 minute average). It refers to the wind force on the Beaufort scale, normally to the medium value of the wind speed that is determined over a time period of 10 minutes at a height of 10 m above ground or above sea level.
- The 3-second wind gust speed at the maximum height of the crane that is the determining factor for the calculation is significantly higher than the average value of the wind speed that is determined over a time period of 10 minutes at a height of 10 m above ground.

Note

- The following chart shows the 3-second wind gust speed depending on the height and the Beaufort number and / or the wind speed determined over a period of 10 minutes at a height of 10 m.
- With the aid of this chart, the 3-second wind gust speed can be determined for a certain height.

Beaufort number	3	4	5[a]	5	6	7[a]	7	8	9	10
v_m [m/s[b]]	5.4	7.9	**10.1**	10.7	13.8	**14.3**	17.1	20.7	24.4	28.4
z [m]	v(z) [m/s]									
10	7.6	11.1	**14.1**	15.0	19.3	**20.0**	23.9	29.0	34.2	39.8
20	8.1	11.9	**15.2**	16.1	20.7	**21.5**	25.7	31.1	36.6	42.7
30	8.5	12.4	**15.8**	16.8	21.6	**22.4**	26.8	32.4	38.2	44.5
40	8.7	12.8	**16.3**	17.3	22.3	**23.1**	27.6	33.4	39.4	45.8
50	8.9	13.1	**16.7**	17.7	22.8	**23.6**	28.3	34.2	40.3	46.9
60	9.1	13.3	**17.0**	18.0	23.3	**24.1**	28.8	34.9	41.1	47.9
70	9.3	13.5	**17.3**	18.3	23.6	**24.5**	29.3	35.5	41.8	48.7
80	9.4	13.7	**17.6**	18.6	24.0	**24.8**	29.7	36.0	42.4	49.4
90	9.5	13.9	**17.8**	18.8	24.3	**25.1**	30.1	36.4	42.9	50.0
100	9.6	14.1	**18.0**	19.1	24.6	**25.4**	30.4	36.9	43.4	50.6

LWE/LTR 1100-009/25105-02-02/en

copyright © Liebherr-Werk Ehingen GmbH 2023

Beaufort number	3	4	5[a]	5	6	7[a]	7	8	9	10
110	9.7	14.2	**18.2**	19.2	24.8	**25.7**	30.8	37.2	43.9	51.1
120	9.8	14.3	**18.3**	19.4	25.1	**25.9**	31.1	37.6	44.3	51.6
130	9.9	14.5	**18.5**	19.6	25.3	**26.2**	31.3	37.9	44.7	52.0
140	10.0	14.6	**18.7**	19.8	25.5	**26.4**	31.6	38.2	45.1	52.5
150	10.0	14.7	**18.8**	19.9	25.7	**26.6**	31.8	38.5	45.4	52.9
160	10.1	14.8	**18.9**	20.1	25.9	**26.8**	32.1	38.8	45.7	53.2
170	10.2	14.9	**19.1**	20.2	26.0	**27.0**	32.3	39.1	46.0	53.6
180	10.3	15.0	**19.2**	20.3	26.2	**27.1**	32.5	39.3	46.3	53.9
190	10.3	15.1	**19.3**	20.4	26.4	**27.3**	32.7	39.5	46.6	54.2
200	10.4	15.2	**19.4**	20.6	26.5	**27.4**	32.8	39.8	46.9	54.6

[a] Wind stages for the crane in operation:

1 light	v_m = 10.1 m/s	at z = 10 m	v(z) = 14.1 m/s	q(z) = 125 N/m²
2 normal	v_m = 14.3 m/s	at z = 10 m	v(z) = 20.0 m/s	q(z) = 250 N/m²

[b] Upper limit of the Beaufort scale

3-second wind gust speed depending on the height and the Beaufort number and / or the wind speed determined over a time of 10 minutes at a height of 10 m

Sign	Unit	Definition
v_m	[m/s]	Wind speed determined over a time of 10 minutes at a height of 10 m
z	[m]	Height above level ground
v(z)	[m/s]	Speed effective at height z, decisive for the calculation of a 3 second gust
q(z)	[N/m²]	At a height z effective quasi-static dynamic pressure, determined from v(z)

Symbol

30.6 Wind influences during erection and take-down

WARNING
The crane can topple over!
If a boom or a boom system is erected or taken down and the expected wind speeds are higher than the maximum permissible wind speeds according to the wind speed chart, the crane can topple over and fatally injure personnel.

- ► If wind speeds are expected which are larger than the maximum permissible wind speeds for erection, then erection of the boom or erection of the boom system is prohibited.
- ► If wind speeds are expected, which are larger than the maximum permissible wind speeds for take-down, then the boom or the boom system must be taken down immediately.

LWE/LTR 1100-009/25105-02-02/en

copyright © Liebherr-Werk Ehingen GmbH 2023

WARNING
Wind speed higher than permissible!
When the permissible wind speed for „Crane out of operation“ is higher than the permissible wind speed for take-down: Take-down of the boom is not permissible in case of an unexpected increase in wind speed.
The crane can topple over. Death, severe injury, property damage.
- ► If wind speeds are expected that are higher than the maximum permissible wind speeds for "Crane out of operation", then take the equipment and the boom down.
- ► Always take the boom down for safety reasons if weather conditions are unclear, see the Erection and take-down charts.
- ► Comply with the permissible wind speeds for take-down.

30.7 Wind influences during crane operation

WARNING
The crane can topple over!
Unforeseeable factors, such as sudden wind gusts on the crane and the load cannot be predicted precisely in advance.
- ► The size and shape of the load has a significant influence on the permissible wind speed during crane operation.
- ► Have professional job planning carried out by people with corresponding technical knowledge. All environmental conditions, such as the weather forecast and wind speeds, must be taken into account.
- ► Personnel with corresponding technical knowledge must have sufficient knowledge in the area of „Wind influences during crane operation“.

Note
- ► Calculation examples are included in the load charts. For further information: Contact Customer Service at Liebherr-Werk Ehingen GmbH.

Depending on crane application, for example:
1. Lifting of large surfaced loads.
2. Working with long boom combinations.
3. Erection and take-down of boom combinations.

The crane operator must check with appropriate information sources about the expected wind speeds, at:
1. The start of crane operation.
2. Interruption of crane operation.
3. Resumption of crane operation.

WARNING
The crane can topple over!
If the crane is operated at wind speeds that are higher than the maximum permissible wind speeds according to the load chart, then the crane can topple over and kill personnel.
- ► If wind speeds are expected that are larger than the maximum permissible wind speeds for the equipped crane, then the equipment and the boom must be taken down.
- ► If wind speeds are expected that are higher than the maximum permissible winds speeds for crane operation, then it is prohibited to lift the load.

LWE/LTR 1100-009/25105-02-02/en

copyright © Liebherr-Werk Ehingen GmbH 2023

30.8 Wind influences for „Crane out of operation“

WARNING
The crane can topple over. Death, severe injury, property damage!
If the crane is taken out of operation in the set up condition and the expected wind speeds are higher than the maximum permissible wind speeds according to the wind chart, then the crane can topple over and fatally injure personnel.
- ► If wind speeds are expected that are higher than the maximum permissible wind speeds for „Crane out of operation“, then take the equipment and the boom down.
- ► Always take the boom down for safety reasons if weather conditions are unclear, see the Erection and take-down charts.
- ► Comply with the permissible wind speeds for take-down.

31 Lifting a load with two cranes

Before lifting a load with two cranes, the operating company or a representative of the operating company must plan the use and indicate a „designated person“. The „designated person“ must monitor the operation and remain in constant contact with the crane operators.

WARNING
Overload and toppling of the cranes!
If the load is not lifted or lowered exactly evenly by both cranes, then the center of gravity changes.
The cranes can be overloaded and topple over.
Personnel can be killed or seriously injured.
- ► Make sure that the cranes are horizontally aligned.
- ► Observe the national and regional regulations.
- ► Determine the utilization degree of the cranes in operation, depending on the complexity of the load hoist.
- ► Plan for sufficient safety reserves.
- ► Avoid side load on the boom.
- ► Carry out crane movements synchronously and slowly.

Note
- ► The total weight and the center of gravity of the load must be known exactly.
- ► Carry out the job planning in detail and with care.
- ► Avoid fastening points below the center of gravity of the load.

When the operational conditions or the work to be carried out require:
- ► Set up an assembly plan and operating instructions for the operation.

The drawing shows how the center of gravity for the load changes if the load is lifted or lowered unevenly. Even a slight incline of the load can cause the crane to be overloaded.

If the load on crane 2 **(F_2)** is lowered, the load on crane 1 **(F_1)** increases. Crane 1 can thereby be overloaded.

LWE/LTR 1100-009/25105-02-02/en

copyright © Liebherr-Werk Ehingen GmbH 2023

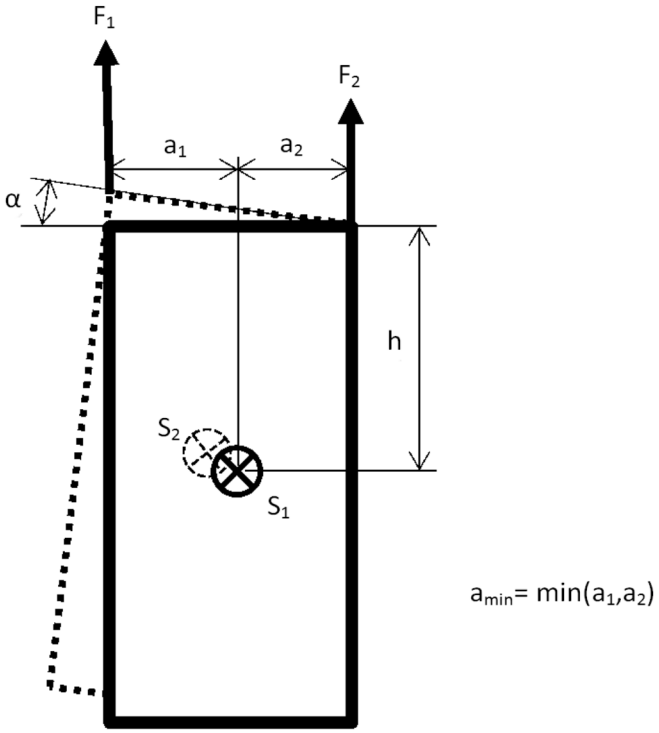

Fig.124126: Geometric conditions

F_1	Load on crane 1	**F_2**	Load on crane 2
S_1	Center of gravity of load	**S_2**	Center of gravity of load at incline position
h	Vertical distance between center of gravity of the load and the fastening points	**α**	Angle of load at incline position
a_1	Horizontal distance between center of gravity of load and fastening point crane 1	**a_2**	Horizontal distance between center of gravity of load and fastening point crane 2
a_{min}	Smallest horizontal distance between the center of gravity of the load and the fastening point (minimum from a_1 and a_2)		

The following diagram shows the dependence of the ratio of h/a_{min} at a maximum permissible incline position of the load of 3° in reference to the permissible load utilization of cranes as a percentage.

LWE/LTR 1100-009/25105-02-02/en

copyright © Liebherr-Werk Ehingen GmbH 2023

Fig.124127: Maximum permissible load utilization

x Ratio of h to a_{min}

y Maximum permissible load utilization as a percentage, if α is smaller or equal to 3°

Example: A ratio h to a_{min} of 6, when retaining the incline position of the load of maximum 3° results in a maximum permissible load utilization of both cranes of approx. 76 % each.

32 Overlapping of working ranges of several cranes

WARNING
Danger of collision!
If the working ranges of several cranes overlap, there is a danger of collision.
Personnel can be injured or killed.
Significant property damage can result.
- ► The contractor or his representative must determine the work sequence in detail in advance.
- ► The contractor or his representative must ensure flawless communication between crane operators.
- ► The crane operators must ensure through calm operating mode, that no collisions occur due to uncontrolled movements. The crane operators must have been trained and instructed accordingly.

If the communication between the crane operators is not ensured by sound or visual connection, then suitable measures must be taken, such as using radio communication, guides or similar. When using derrick booms or TY-guying, it is necessary to proceed with extreme caution as these components protrude far past the rear turning radius of the turntable.

Note
- ► If guides are used, then the signals must be agreed upon between them and the crane operators, see section „Hand signals for guidance“.

LWE/LTR 1100-009/25105-02-02/en

copyright © Liebherr-Werk Ehingen GmbH 2023

33 Hand signals for guidance

For all crane movements, the crane operator must always keep the load as well as the crane hook or load handling equipment when the crane is not loaded, in his field of vision.

WARNING
Danger of accident if standing under suspended loads!
- ► Always keep loads in sight.
- ► Standing under suspended loads is prohibited.

If this is not possible, the crane operator may only operate the crane if he is signed by an assigned guide.

The operator may be guided by hand signals or a two-way radio. It must be ensured that there are no misunderstandings.

WARNING
Danger of accident caused by misunderstood hand signals!
- ► Hand signals must be mutually agreed upon and clearly executed.
- ► In any case, the **national and regional regulations** must be observed.

33.1 Hand signals

33.1.1 Starting operation, follow my instructions

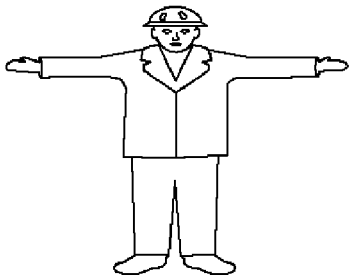

Fig.111700: Starting operation, follow my instructions

Both arms stretched out horizontally with hands open and palms directed to the front.

33.1.2 Stop (normal stop)

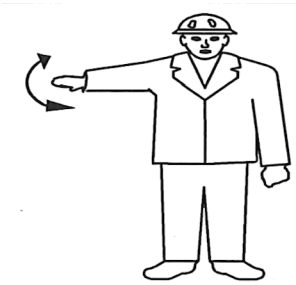

Fig.144245: Stop (normal stop)

Arm stretched out, palm of hand facing down, move the arm horizontally backward and forward.

LWE/LTR 1100-009/25105-02-02/en

copyright © Liebherr-Werk Ehingen GmbH 2023

33.1.3 Emergency stop (quick stop)

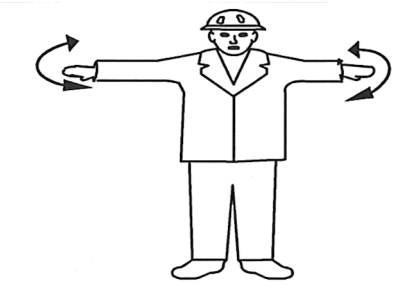

Fig.144246: Emergency stop (quick stop)

Both arms stretched out, both hand palms facing down, move arms horizontally backward and forward.

33.1.4 Ending operation, no longer follow my instructions

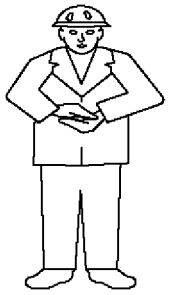

Fig.111703: Ending operation, no longer follow my instructions

Fold hands together at chest height in front of body.

33.1.5 Creeper gear or very slow movement

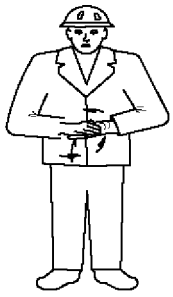

Fig.111704: Creeper gear or very slow movement

Rub palms together in circular motion. After this sign, all other applicable hand signals apply.

LWE/LTR 1100-009/25105-02-02/en

copyright © Liebherr-Werk Ehingen GmbH 2023

33.2 Vertical movements

33.2.1 Showing the vertical distance

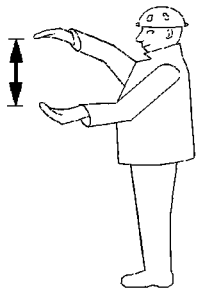

Fig.121364: Showing the vertical distance

Both arms stretched out in front of the body one on top of the other, with opposing palms.

33.2.2 Lifting / lowering a load with even speed

Fig.111706: Lifting / lowering a load with even speed

Lift one arm overhead with closed hand and index finger pointing upward, with small horizontal circular movements with forearm.

33.2.3 Lifting slowly

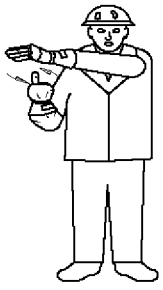

Fig.121365: Lifting slowly

Give lift signal with one hand, the other palm is not moving and positioned over the hand, which gives the signal.

LWE/LTR 1100-009/25105-02-02/en

copyright © Liebherr-Werk Ehingen GmbH 2023

33.2.4 Lowering the load while stationary

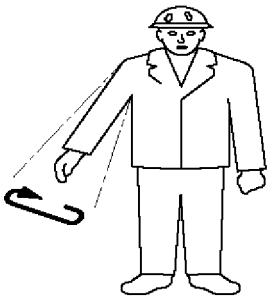

Fig.111708: Lowering the load while stationary

Point one arm away from the body, downward, with hand closed and index finger pointing down. Make small circular movements with forearm.

33.2.5 Lowering slowly

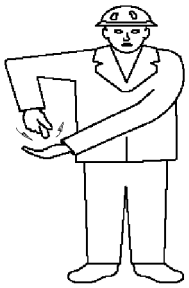

Fig.121366: Lowering slowly

Give lowering signal with one hand, do not move the other palm and hold it under the hand, pointing to the hand which gives the signal.

33.3 Horizontal movements

33.3.1 Driving / swinging in the specified direction

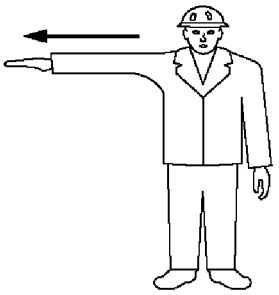

Fig.111710: Driving / swinging in the specified direction

Hold stretched out arm horizontally into the desired direction, with the hand open and the palm pointing down.

LWE/LTR 1100-009/25105-02-02/en

copyright © Liebherr-Werk Ehingen GmbH 2023

33.3.2 Moving away from me

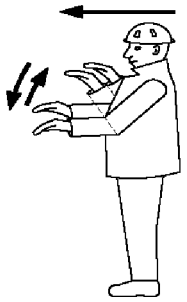

Fig.111711: Moving away from me

Stretch out both arms simultaneously with forearms in front, with both hands open and the palms pointing down. Move the forearms repeatedly between the horizontal and vertical position up and down.

33.3.3 Moving toward me

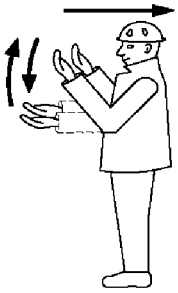

Fig.111712: Moving toward me

Stretch out both arms simultaneously with forearms vertically, with both hands open and the palms pointing to the rear. Move the forearms repeatedly up and down.

33.3.4 Moving both track chains

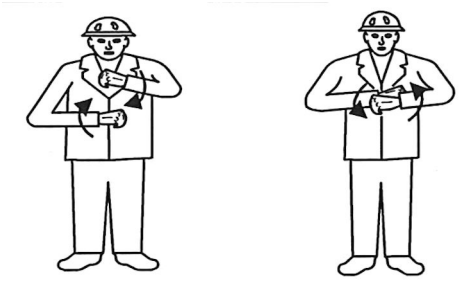

Fig.144247: Moving both track chains

Turn both fists around each other in front of the body in direction of the movement (forward or reverse).

LWE/LTR 1100-009/25105-02-02/en

copyright © Liebherr-Werk Ehingen GmbH 2023

33.3.5 Moving one crawler chain

Fig.144248: Moving one crawler chain

Lift one fist to show blockage of chain on one side. Turn the other fist vertically in front of the body to signal movement of the opposite chain.

33.3.6 Showing the horizontal distance

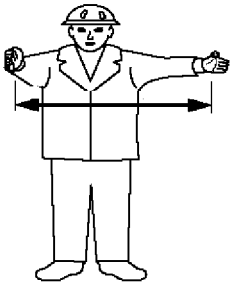

Fig.121380: Showing the horizontal distance

Keep both arms stretched out horizontally in front of the body with the palms opposite each other.

33.3.7 Transfer (between two cranes or two hooks)

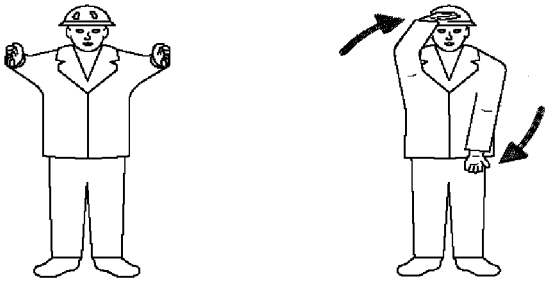

Fig.121368: Transfer (between two cranes or two hooks)

Hold both arms stretched out to the front, parallel and horizontally and turn by 90° in direction of the transfer.

WARNING
Load bearing capacity is **not** sufficient!
The crane can topple over, death, property damage.
► Make sure that the load bearing capacity of the individual crane and hook is sufficient even if the transfer of the load is suddenly asymmetric.

LWE/LTR 1100-009/25105-02-02/en

copyright © Liebherr-Werk Ehingen GmbH 2023

33.4 Machine related movements

33.4.1 Lifting with main winch

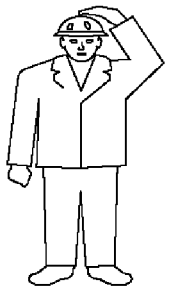

Fig.111719: Lifting with main winch

Place on hand on your head and hold the other arm on the side of the body.

After this signal, all other hand signals apply only for the main winch.

Note

► If two or more main winches are present, then the signaler can show the number of the crane by pointing to it or signal with one finger.

33.4.2 Lifting with the auxiliary winch

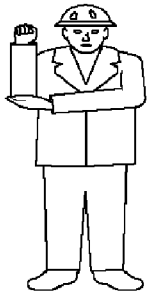

Fig.111720: Lifting with the auxiliary winch

Hold one forearm vertically with closed hand and touch the elbow of this arm with the other hand.

After this signal all other hand signals apply only for the auxiliary winch.

33.4.3 Lifting the boom

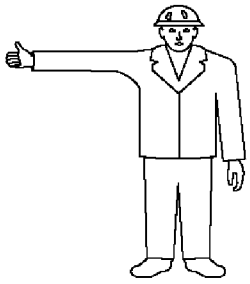

Fig.111721: Lifting the boom

Hold one arm horizontally with thumb directed upward.

LWE/LTR 1100-009/25105-02-02/en

copyright © Liebherr-Werk Ehingen GmbH 2023

33.4.4 Lowering the boom

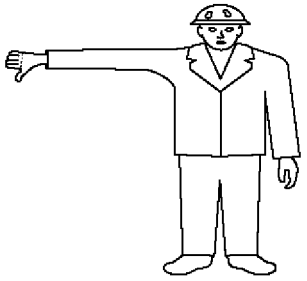

Fig.111722: Lowering the boom

Hold one arm horizontally with thumb directed downward.

33.4.5 Extending the boom

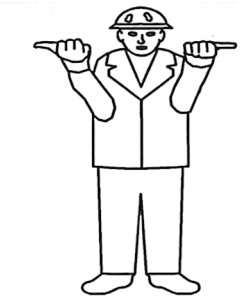

Fig.144249: Extending the boom

Hold both hands (with closed fists) stretched out to the front, with both thumbs directed away from each other.

33.4.6 Retracting the boom

Fig.144250: Retracting the boom

Hold both hands (with closed fists) stretched out to the front, with both thumbs directed toward each other.

LWE/LTR 1100-009/25105-02-02/en

copyright © Liebherr-Werk Ehingen GmbH 2023

33.4.7 Lifting the boom and lower the load at the same time

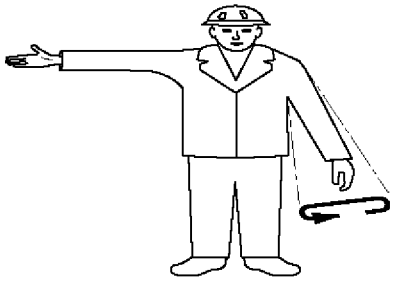

Fig.111725: Lifting the boom and lower the load at the same time

Hold one arm stretched out horizontally with thumb directed upward and stretch the other arm downward and away from the body, make small flat circles with the forearm.

33.4.8 Lowering the boom and lift the load at the same time

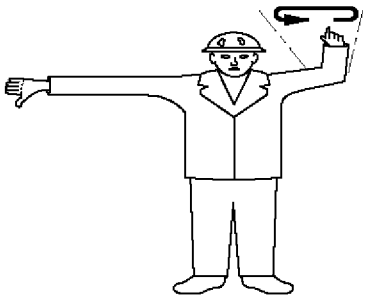

Fig.111726: Lowering the boom and lift the load at the same time

Hold one arm stretched out with thumb pointing down, stretch the other forearm upward and make small flat circles.

34 Travel operation

34.1 Starting to drive

Before starting to drive the crane
- Close all doors.
- Keep the doors closed during the travel operation.

LWE/LTR 1100-009/25105-02-02/en

copyright © Liebherr-Werk Ehingen GmbH 2023

34.2 Turning / driving in reverse

WARNING
Danger of accidents when turning or driving in reverse!
When turning or driving in reverse, personnel can be overlooked and killed.
Objects can be severely damaged.
- ► When turning or driving in reverse, the driver must act in such a way that he does not endanger other traffic participants.
- ► The driver may only drive in reverse or back up when persons or devices are **not** endangered. If this can **not** be ensured, then he must use a guide.
- ► An acoustical back up warning device will never replace the guide.
- ► Make sure that there are no persons or objects behind the vehicle when driving in reverse.
- ► Make sure that no personnel is injured or even killed.
- ► Make sure that no objects are damaged.
- ► Driving in reverse is only permissible at a slow driving speed (maneuvering speed).
- ► Adhere to the national and regional regulations.

34.3 Driving with a trailer

Driving with a trailer depends on the weight of the mobile crane. The minimum weight of the mobile crane in trailer mode is 70 percent of the permissible total weight.

Number of axles	Permissible total weight of the mobile crane	Minimum weight of the mobile crane in trailer mode
4	48000 kg	Approx. 33000 kg
5	60000 kg	Approx. 42000 kg
6	72000 kg	Approx. 50000 kg

34.3.1 Driving with a reduced load

The load of the vehicle crane has been reduced to a range between the permissible total weight and the minimum weight for trailer mode. The load of the vehicle crane can be reduced by disassembling equipment.

The vehicle crane has a different, strong braking behavior. The vehicle crane can reeve out.

34.3.2 Driving with an extremely reduced load

The load of the vehicle crane has been reduced to the minimum weight for trailer mode or less. The load of the vehicle crane can be reduced extremely for example by disassembling the telescopic boom and by disassembling other equipment.

WARNING
Driving with a trailer with an extremely reduced load!
The mobile crane has a different, strong braking behavior. The mobile crane can reeve out.
Danger of accident, death, property damage.
- ► In the case of an extremely reduced load, do **not** drive the crane vehicle with a trailer.

34.4 Stopping the mobile crane

Make sure that the following prerequisites are met:
- – The mobile crane is standing on load bearing, level and tractive ground.
- – The parking brake is applied.

LWE/LTR 1100-009/25105-02-02/en

copyright © Liebherr-Werk Ehingen GmbH 2023

WARNING
Parking brake is **not** applied!
The mobile crane can roll off, death, property damage.
► Park the mobile crane exclusively with applied parking brake.

– Turn off the ignition and pull out the ignition key.

When a battery master switch is present:
– Wait 10 seconds, turn off the battery master switch and pull out the switch cam.

WARNING
Downhill or uphill slope is too steep!
The mobile crane can roll off, death, property damage.
► Park the mobile crane at an downhill or uphill slope of no more than maximum 18 %.

Under the following conditions the mobile crane must be additionally secured with wheel chocks to prevent it from rolling off:
– The mobile crane is parked on a slope or an incline.
– The mobile crane is defective, particularly when the brake system is defective.

WARNING
Wedges incorrectly placed!
The mobile crane can roll off, death, property damage.
► So that the wedges have an immediate braking action and hold the mobile crane in park position: Place all wedges tightly directly under the wheel.
► Place all specified wedges.
► All wedges must counteract the downhill slope force.

If necessary:
– Place the wedges.

35 Crane operation

35.1 Before starting to work

Before starting to work with the crane:
– Make sure that the cylinders are free of ice.
– Close all doors.
– Keep the doors closed during crane operation.

35.2 While working with the crane

WARNING
Defective crane!
Death, severe bodily injuries, property damage.

If an erroneous function of a crane movement is recognized during crane operation:
► Telescope the boom in all the way and take it down, find the source of the problem and remedy it.

WARNING
Relapse cylinder pressure loss!
The luffing lattice jib can luff uncontrollably.

If the luffing lattice jib is assembled
► Make sure that no persons or obstacles are in the luffing range or are located below the lattice jib.

LWE/LTR 1100-009/25105-02-02/en

copyright © Liebherr-Werk Ehingen GmbH 2023

WARNING
Relapse cylinder pressure loss!
The luffing lattice jib can luff uncontrollably due to slack rope on the luffing pulley block.

If an actuated luff down movement does not take place as expected:
► Immediately stop the luff down movement.
► Make sure that no slack rope has formed.

If slack rope has formed:
► Remedy the slack rope.

NOTICE
Freezing rain!
Property damage to the cylinder seals.

If freezing rain starts when working with the crane:
► Working with the crane is prohibited.
► Make sure that all cylinders are free of ice.

35.3 Crane operation with a load

WARNING
The crane can topple over!
If the crane is in a condition that is **not** operationally safe, the crane can topple over or crane components can fall down.
Personnel can be severely injured or killed.
► Before starting to work, the crane operator must ensure that the crane is in an operationally safe condition.
► If safe crane operation cannot be ensured by the crane operator, then crane operation is prohibited until an operationally safe condition for the crane is established.
► Safety equipment, for example: Load torque limiter, hoist limit switch, brakes must be fully functioning, otherwise crane operation is prohibited.

Make sure that the following prerequisites are met:
– The load torque limiter must be adjusted according to the current set up configuration of the crane.
– The loads given in the load chart may not be exceeded.
– The crane may never be subjected to a load that exceeds what is specified in the load charts.
– The weight, center of gravity and dimensions of the load to be lifted must be known.
– Load carriers, load handling equipment and fastening equipment must be sufficient for the specified requirements.

Note
► Subtract the weight of the hook block and the weight of the fastening equipment from the load specified in the load chart, see the following chart.

Example:		
Maximum permissible load according to the chart		30.000 t
Weight of the hook block	350 kg	- 0.350 t
Weight of the fastening rope	50 kg	- 0.050 t
Actual load capacity of the crane		= **29.600 t**

The weight of the load to be lifted, in this example, may not exceed **29.6 t**.

LWE/LTR 1100-009/25105-02-02/en

copyright © Liebherr-Werk Ehingen GmbH 2023

DANGER
There is a high danger of accident if the following points are not observed!
► Comply with the following points.

There is considerable danger of accident if:
– The load torque limiter is not set in accordance with the current crane set up configuration and is therefore not able to provide proper protection.
– The load torque limiter is defective or taken out of operation.
– The hoist limit switches are defective or not functioning.
– For crawler cranes and mobile cranes with luffing lattice jib:
The angle sensor and the force test brackets are not functioning.
– For mobile cranes and crawler cranes with support:
The sliding beams of the hydraulic support are not extended to the dimensions specified in the load chart.
– On crawler cranes:
The crawlers are not supported with stable base material sufficiently large for the ground conditions.
– For mobile cranes and crawler cranes with support:
The support plates are not supported with stable materials large enough for the ground conditions.
– Angular pull is performed.
Angular pull to the side is particularly dangerous, because the boom has only minimal lateral resistance momentum.
Angular pull is prohibited.
– Load that is too heavy is attached during disassembly and hangs freely on the crane after release.
– The load hook is used to break away stuck loads.
Even if the weight of a stuck load does not exceed the permissible load capacity, the crane can topple over backwards if the load is suddenly released due to the tension of the boom, which can cause it to tip backwards.
– Working when the wind is excessively strong.
Adhere to the specifications in the load chart.
– The crane is not levelled and the load is swung in the direction of the slope.
– If improper control of crane movements cause the suspended load to swing like a pendulum.
– The loads and boom radii specified in the load charts are exceeded.
– When working in the vicinity of overhead electrical lines:
  • The overhead electrical lines are **not** turned off by authorized and trained electricians.
  • The danger zone was not covered or blocked off.

WARNING
Danger of current transfer!
If overhead electrical lines are not shut off or covered or blocked off, there is an increased danger of accident due to current transfer.
► Adhere to the safety distance according to the following chart.

If the crane becomes electrified despite having taken all necessary precautions, comply with the following points:
► Remain calm.
► Do not leave the crane cab or the driver's cab.
► Warn people outside: Stay in place and do not touch the crane.
► Move the crane away from the danger zone.

Nominal voltage	Safety distance	
Up to 50 kV	4 m	10 ft
Above 50 kV to 200 kV	5 m	15 ft
Above 200 kV to 350 kV	7 m	20 ft
Above 350 kV to 500 kV	8 m	25 ft

LWE/LTR 1100-009/25105-02-02/en

copyright © Liebherr-Werk Ehingen GmbH 2023

Nominal voltage	Safety distance	
Above 500 kV to 750 kV	11 m	35 ft
Above 750 kV to 1000 kV	14 m	45 ft
Above 1000 kV	Determination by the power supplier or an authorized and trained electrician	Determination by the power supplier or an authorized and trained electrician

Safety distance to overhead electrical lines depending on the nominal voltage

35.3.1 Counterweight and / or ballast

The type of counterweight and / or ballast required depends on the weight of the load to be lifted and the boom radius required for crane operation. The deciding factor for the selection of the counterweight and / or ballast is the specification in the corresponding load chart.

WARNING
The crane can topple over!
If the counterweight and / or ballast is not installed according to the load chart, the crane can topple over and fatally injure personnel.
► Install the counterweight and / or ballast according to the load chart.

LWE/LTR 1100-009/25105-02-02/en

copyright © Liebherr-Werk Ehingen GmbH 2023

35.3.2 Derrick ballast - suspended ballast

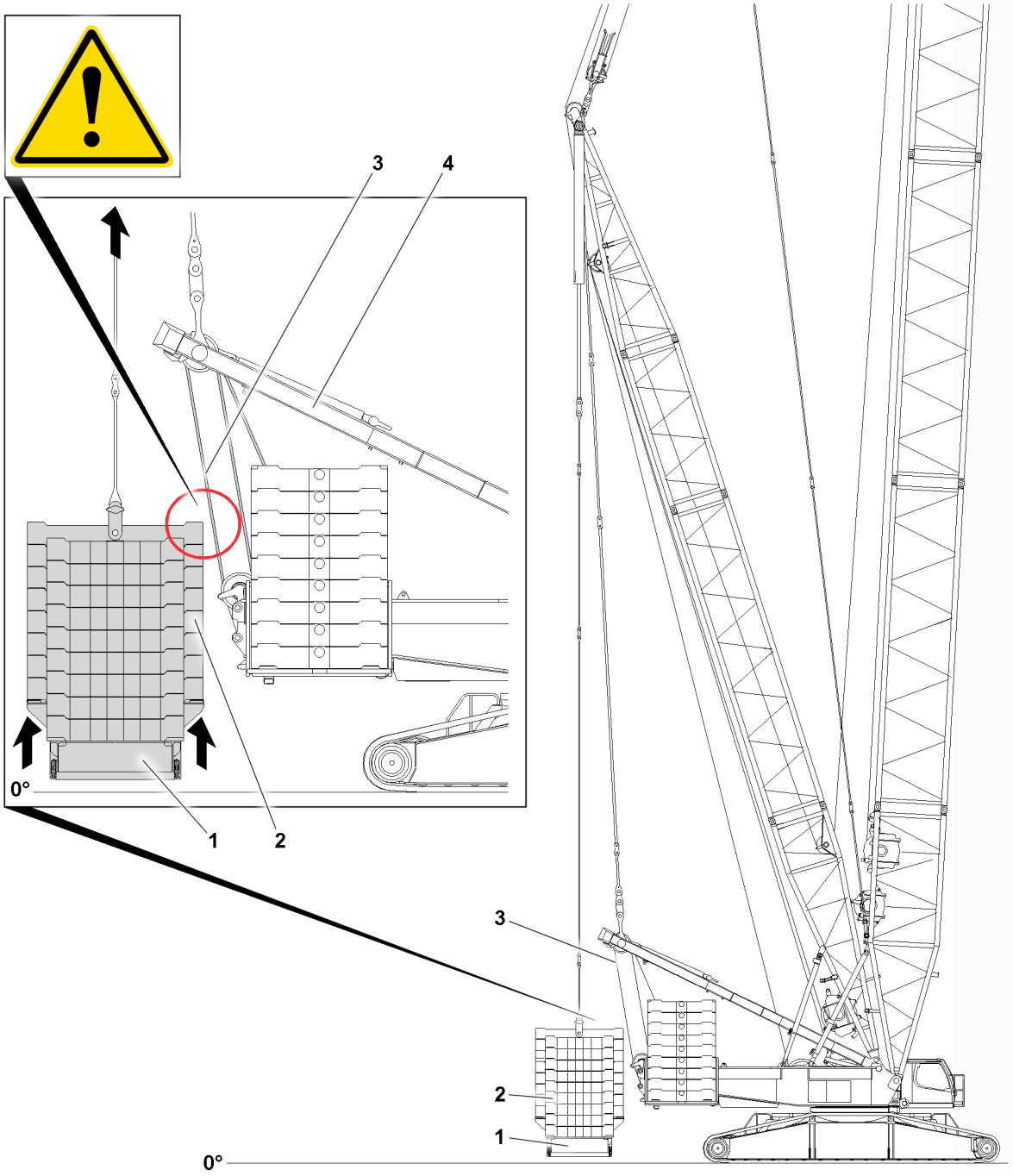

Fig.154801: Danger of collision when lifting the derrick ballast with small derrick ballast radii

1 Suspended ballast pallet

2 Derrick ballast plate

3 Winch 4 control rope

4 SA-frame

LWE/LTR 1100-009/25105-02-02/en

copyright © Liebherr-Werk Ehingen GmbH 2023

WARNING
Danger of collision!
With small derrick ballast radii, the derrick ballast plates **2** can collide with the winch 4 control rope **3** when lifting the derrick ballast up off the ground.
Death, severe bodily injuries, property damage.
► Make sure that a guide monitors the lifting of the derrick ballast up off the ground.
► Adjust the lifting height of the derrick ballast.

35.3.3 Hoist gear, hoist rope

The lifting capability of the crane depends on the pull force of the hoist gear and the number of possible hoist rope reevings. When using a single strand, the crane can only lift a load that is pulled by the hoist gear.

If the load to be lifted is heavier than the pull force of the hoist gear, then the hoist rope must be reeved as needed according to the principle of a pulley between the pulley head on the boom and the hook block.

When reeving in, observe the specifications in the load chart manual and the crane operating instructions.

WARNING
Ripping of the hoist rope!
If the maximum pull force of the hoist gear is exceeded, the hoist rope can break or the hoist gear can be damaged.
The load can fall and kill personnel.
► Observe the maximum pull force of the hoist gear.

35.3.4 Hydraulically adjustable auxiliary boom

WARNING
Impermissible luffing of the auxiliary boom!
Damage to the auxiliary boom due to collision with the ground or other objects. Component failure.
Death, severe bodily injuries, property damage.
► Do **not** luff the auxiliary boom down onto the ground or other objects by means of hydraulic adjustment.
► Do **not** luff the auxiliary boom down onto the ground or other objects by luffing the main boom down.

35.4 Interrupting crane operation

WARNING
Impermissible weather conditions!
If the crane is exposed to impermissible weather conditions during interruption of crane operation, situations can occur that could bring the crane into an unsafe condition.
Toppling crane, death, severe bodily injuries, property damage.
► Obtain the weather forecast for the entire period during which the crane is set up.

If the predicted wind speeds are above the permissible values according to the load chart and / or the wind speed chart:
► Take the boom and equipment down in time before impermissible wind speeds occur. See Crane operating instructions, wind speed charts and Erection and take down charts.

When wind conditions are present, which are above the permissible values of the wind speed chart and the boom can no longer be taken down:
► Make sure that there is no danger to persons, crane and surrounding area. Secure the crane and surrounding area of the crane far enough against access. Warn personnel in the surrounding area and bring them to safety.

LWE/LTR 1100-009/25105-02-02/en

copyright © Liebherr-Werk Ehingen GmbH 2023

A weather forecast includes information about:
- Changing weather conditions
- Wind
- Ice
- Precipitation
- Flooding
- Lightning

WARNING
Defective crane!
Death, severe bodily injuries, property damage.

If a crane movement occurs during the interruption of crane operation:
► Make sure, when an unintentional crane movement occurs, for example as a result of leak, no danger for persons, crane and surrounding is created.

Leaks can occur all on pressurized hydraulic cylinders, for example on the following cylinders:
- Support cylinder
- Luffing cylinder
- Telescoping cylinder
- Control cylinder
- Relapse cylinders

Note
► Movements can occur on hydraulic cylinders also as a result of changing oil temperature.

WARNING
Set up crane is not supervised!
Situations during interruption of crane operation may occur that could cause the crane to become unsafe if left unsupervised.
Toppling crane, death, severe bodily injuries, property damage.
► Always observe the crane and keep it under control.

If the crane is in set up condition:
► Do **not** leave the crane.

If the crane can **not** be constantly kept under control:
► Take the equipment down and telescope the boom in and take it down.
► The boom on the crane may only be placed down if the predicted wind speeds according to the wind speed charts are less than the maximum permissible wind speeds during assembly and disassembly.
► Before the crane is unsupervised: Establish an emergency plan.
► Carry out the measures listed below.

Note
► An emergency plan includes specifications regarding how the crane is brought into a safe condition if an unforeseen event occurs.

If possible:
- Take down and secure the equipment, see the erection and take-down charts.
- Telescope the boom in and secure it. The crane boom may only be telescoped when the prevalent wind speed is lower than the wind speed indicated in the load chart for the boom.
- Take the boom down and secure it. The crane boom may only be placed down if the wind speeds are lower than the maximum permitted wind speeds according to the wind speed charts or does not exceed them according to the assembly / disassembly instructions.

On mobile cranes:
- Lift the axles to the maximum position and block the hydraulic suspension.

On lattice mast cranes:
- Set the Derrick ballast, if present, down on the ground.

LWE/LTR 1100-009/25105-02-02/en

copyright © Liebherr-Werk Ehingen GmbH 2023

– Place the load completely on the ground and unhook it from the crane hook.
– Remove the fastening ropes from the hook.

– Place the load completely on the ground and unhook it from the crane hook.
– Remove the fastening ropes from the hook.

When the hook block remains installed:
– Lift the hook block into the highest position.
– Make sure that the hook block does not touch other crane parts or obstacles.

– Make sure that all measures were taken to keep the crane in a safe condition if something happens.
– If possible, turn the engines off.
– Set all control levers into neutral position or into a locked position.
– Turn all secondary systems off, except systems that are required for restart.
– Establish the energy supply and functionality of safety equipment.
– Close off all control devices, which are not in use.
– Disconnect all control devices, which are connected with cables, if possible, and secure them to prevent unauthorized use.
– Secure control devices without cables to prevent unauthorized use.
– Make sure that the batteries in control devices without cables are charged.
– Make sure that access to the crane and operation for unauthorized personnel is excluded: Lock the driver's cab and the crane cab.
– Secure all keys to prevent unauthorized access.

If the construction site has limited space:
– The decision not to take the boom down while the crane is unsupervised can only be made by an authorized and qualified crane operator, who is familiar with the construction site.
– Make sure that there is no danger to persons, the crane or its surroundings if an unforeseen event occurs.
– Make sure for the duration of the interruption of crane operation, that the predicted wind speeds do not exceed the permissible values for the respective set up configuration, see wind speed chart.
– If the wind speed charts do not provide values for the set up condition, the permissible wind speed in the load chart shall be observed.

If crane operation with a set up crane is interrupted:
– Make sure that personnel initiate measures in time to bring the crane into a safe condition if an event occurs.
– Make sure that there is no danger to persons, the crane or its surroundings if an unforeseen event occurs.

If the predicted wind speeds are above the permissible values:
– Bring the boom and equipment in time into a permissible condition before impermissible wind speeds occur, depending on the predicted wind speed, or take it down completely on the ground. See Crane operating instructions, wind speed charts and Erection and take down charts.
– Telescope the telescopic boom in and luff down to 0°. Position the boom and auxiliary boom, see the Crane operating instructions, wind speed charts and erection and take-down charts.

Situations are for example:
– Vandalism
– The ground giving way due to severe rain
– Melting ice under the supports
– Storm and thunderstorm
– Storm and wind
– Lightning
– Flooding
– Earthquakes
– Landslides
– Washouts
– For mobile cranes and crawler cranes with support:
  Yielding of support cylinders (leak, temperature changes)
– For cranes with a telescopic boom:
  Yielding of luffing cylinders (leak, temperature changes)

LWE/LTR 1100-009/25105-02-02/en

copyright © Liebherr-Werk Ehingen GmbH 2023

– Yielding of luffing lattice jib relapse cylinders (leak, temperature changes)

35.5 Resuming crane operation

Before resuming crane operation, the crane operator is obligated, among others, but not exclusively, to check the crane condition, the safety equipment, as well as the environmental conditions.

WARNING
Danger of accident!

When the crane operator leaves the crane cab:
► Before resuming work, check the operating mode setting and reset, if necessary.

35.6 Ending crane operation

Before the crane operator may leave the crane, the following prerequisites must be met:
– Place the load fully on the ground and unhook from the crane hook.
– On crane with telescopic boom: Telescope the telescopic boom in all the way and take the boom down in the boom receptacle.
– For a crane with a lattice mast boom: Take the lattice mast boom down and disassemble if necessary.
– Bring the control lever (master switch) to the 0-position.
– Apply the parking brake on the crane chassis.
– Turn the engine off and pull out the ignition key.
– When a battery master switch is present: Wait ten minutes after removing the ignition key. After these ten seconds have passed, turn off the battery master switch and pull off the switch cam.
– Lock the crane cab.
– Secure the crane to prevent unauthorized use.
– For a mobile crane: Make sure that the driver's cab is **not** occupied. Lock the driver's cab. Secure the crane to prevent it from rolling off unintentionally, see section „Parking the vehicle“.
– Make sure that there is no danger to persons, the crane or its surroundings if an unforeseen event occurs.

36 Lifting of personnel

36.1 Intended use

– The intended use of the crane is **lifting loads**.
– **Lifting personnel** is **not** part of the intended use of the crane.

Note
► These instructions do **not** apply for work platforms that are attached on the crane boom and used to lift personnel. This situation is governed by international standards for mobile aerial work platforms.

LWE/LTR 1100-009/25105-02-02/en

copyright © Liebherr-Werk Ehingen GmbH 2023

WARNING
Unintended use of the cranes!
Personnel can be severely injured or killed.
- ► The crane is **not** intended to lift personnel.
- ► Lifting persons on the variable support is prohibited.
- ► The crane may **not** be used for recreational purposes and exhibitions, such as lifting personnel for shows, bungee jumping or Dinner in the sky.
- ► The crane may **not** be used for lifting of devices with personnel on them or under the device, such as lifting of tents.
- ► Exception: If lifting of personnel for special work situations is the least dangerous possibility to carry out the work, then personnel may be lifted or brought into a suspended position when using lifting cages (cherry pickers).

36.2 Prerequisites for lifting of personnel

Make sure that the following prerequisites are met:
- – Lifting personnel with cranes is permitted by national and regional regulations of the country where this crane application is carried out.

DANGER
Lifting of personnel!
Accidents which occur when lifting personnel often result in severe injuries or even death.
- ► This exceptional application is within the scope of responsibility of the user and is only permitted if the requirements and instructions in the following sections are observed and adhered to.
- ► The operating company, a designated person for monitoring, the crane operator and other personnel must proceed especially carefully and in a safety conscious manner.
- ► Before the lifting procedure, a meeting must be held with all involved personnel.
- ► The following warning displays and safety regulations must be strictly observed.

36.2.1 Legal prerequisites

Make sure that the following prerequisites are met:
- – Special arrangements were made for the use of the safety cage according to the requirements of national and regional regulations.
- – If required by national or regional regulations: The use of the crane to lift personnel is reported to the state agency for occupational health and safety. The lifting procedure may possibly require a special permit.
- – Before the implementation of the lifting procedure a work-specific risk analysis for the possibility of rescuing personnel in emergencies was defined with the aid of the evaluation.
- – To rescue personnel in emergencies, precautionary measures must be present on the crane, if they are required by national and regional regulations.
- – The measures for safe operation near power lines, depending on the conditions on the job site and the national and regional regulations, were observed and adhered to.

36.2.2 Prerequisites for crane equipment and accessories

Make sure that the following prerequisites are met:
- – The hoist gear to lift personnel must also be able to be moved in emergency operation.
- – Before lifting personnel, the crane was inspected. No damage was found.
- – The safety cage is used according to national and regional regulations and according to the intended purpose.
- – Before lifting personnel, the safety cage was carefully inspected. No damage was found.
- – Every emergency rescue device was inspected and its operational readiness was determined, if required by national and regional regulations.
- – Any hooks in use must be equipped with a latch that prevents the hook mouth from opening. According to national and regional regulations, the latch must be manually closable or lockable or must automatically close via a spring.

LWE/LTR 1100-009/25105-02-02/en

copyright © Liebherr-Werk Ehingen GmbH 2023

36.2.3 Inspecting before start up

Make sure that the following inspections are made before starting up the lifting cage (cherry picker):
- On every new construction site and after every modification or repair: To ensure the operating safety of the lifting cage (cherry picker) and the lifting equipment, a test with 125 % of the nominal load carrying capacity of the lifting cage (cherry picker) without personnel must be carried out. During the test, the lifting cage (cherry picker) may only be lifted just above the ground.
- A test lift with loaded lifting cage (cherry picker) without personnel must be carried out. The weight in the lifting cage (cherry picker) for the test lift must be at least as large as the weight of the personnel and the weight with the work equipment carried along. For this test lift, the course of all planned movements of the lifting procedure must be simulated.
- This test lift must be carried out for every location on a construction site, where personnel must be carried.

36.2.4 Prerequisites for operation with lifting cage (cherry picker)

Make sure that the following prerequisites are met for operation with safety cage:
- The personnel and technical prerequisites for safe use and operation of the emergency control of the crane are fulfilled.
- The emergency control for emergency rescue of the person in the safety cage is operational.
- The rope pull is limited to 50 % of the maximum rope pull.
- The crane is utilized only to 50 % of its maximum load bearing capacity of the valid load chart.
- Only the hoist gear lifting / lowering, turning and luffing crane movements may be performed.

WARNING
Superimposed crane movements with hydraulic auxiliary users!
Superimposed crane movements by actuating hydraulic auxiliary users can lead to the unwanted acceleration or deceleration of the safety cage movement.
► It is prohibited to superimpose crane movements with hydraulic auxiliary users to tilt the cab, for example.

37 Securing personnel on shut off crane

37.1 Terms and abbreviations

- PSAgA: Personal protective equipment to prevent falling
- HSG: Height safety device

37.2 Intended use

Cranes are **not** designed to protect personnel against falling.

When the following prerequisites are met, personnel protection may be permissible:
- A justified individual case is present.
- A project-specific written risk assessment and work procedure for the precise case by the employer is on hand.
- The specific safety measures are strictly adhered to.

Limitations for transport and operation:
- Transporting the secured person on the crane **from** job site and **to** job site is impermissible.
- Transporting the secured person on the crane **from** the job site and **to** the job site is permissible only in case of a rescue operation.
- Operation of the crane by the secured person is impermissible.
- The crane is stopped off and secured against any movement.

LWE/LTR 1100-009/25105-02-02/en

copyright © Liebherr-Werk Ehingen GmbH 2023

37.3 Prerequisites

WARNING
Prerequisites for personnel protection are **not** met!
Danger of accident. Death, severe bodily injuries.
► Carry out the personnel protection on the shut off crane only when **all** prerequisites in this section have been met.

Make sure that the following prerequisites are met:
– The national and regional regulations are observed.
– The written risk assessment shows:
  • Technical protective measures with at least the same protective effect are **not** available.
  • The normal fastening devices can **not** be used.
  • Personnel protection on the shut off crane is the safest and most useful method to carry out this work.
– Load transport and personnel protection occur independently of each other:
  • Do **not** carry out personnel protection at the same time as load transport. Simultaneous personnel transport is impermissible.
  • Riding along on the load is impermissible.
– Determination of fastening points and rescue plan for the precise case is on hand from the employer.

37.3.1 Personnel and qualification

Make sure that the following prerequisites for personnel and qualification are met:
– The crane operator is suitable and authorized to operate the crane.
– The person who is secured must be trained in handling the fall protection PPE.
– The following persons are present on the job site and separately instructed:
  • A supervisor
  • The crane operator
  • The required number of rescue staff according to the rescue plan
– Access protection, fall protection on the shut off crane is made in accordance with the project-specific risk assessment on hand and the measures to be taken.
– The supervisor monitors the safe execution of work. He may **not** take part in the work.
– An effective communication must be ensured between crane operator and the secured person.

37.3.2 PSAgA, rescue equipment and tools

Make sure that the following prerequisites and measures are met:
– Use only the HSG (height safety device) according to EN 360 in connection with a safety harness according to EN 361 to secure the person.
– A connecting device is suited for the occurring stress on the edges, see the Manufacturer's documentation or device identification.
– Recurring inspections have been made. There are **no** visible defects.
– At least 1 m connecting device of the maximum possible extension length of the HSG (height safety device) must remain in the housing.
– Fasten the HSG (height safety device) with two separate connecting devices (for example securing on the crane hook and on the crane pulley block).
– Position the crane in such a way that the HSG (height safety device) is at least 5 m and plumb **over** the person being secured.
– Do **not** exceed the maximum permissible deflection of the HSG (height safety device)
– Keep the required clearance **below** the person being secured.
– All required objects (tools, building material) for the work are secured to prevent them from falling.

LWE/LTR 1100-009/25105-02-02/en

copyright © Liebherr-Werk Ehingen GmbH 2023

37.3.3 Crane

Make sure that the following prerequisites are met:
- The maintenance intervals and recurring crane inspections have been adhered to. There are **no** visible defects.
- The load on the crane hook in any possible position is at least 600 kg , see the Load chart (take the crane pulley block into account).
- Ensure a sufficient load bearing capacity: For the catching, pendular fall and possible angular pull load cases, adhere to the manufacturer's instructions.
- The crane is secured against movements and inadvertent movement (remote control is deactivated, crane control is activated).
- The overload protection is active.

37.4 Fastening device

Make sure that the following prerequisites are met:
- The crane hook is equipped with the hook safety.
- On the carrying device two connecting devices separated from each other can be fastened.
- HSG (height safety device) is redundantly fastened.
- Suitable fastening devices according to EN 795 Type B are on hand:
  - Round sling or fastening rope with steel core
  - Belt loop
- Textile components must be protected against greases, oils and other aggressive substances.
- Use only steel carabiners according to EN 362 with Tri-Lock function.

37.5 Rescue

An injured person must be lifted or lowered with the aid of the crane.

Carry out the following measures to ensure a safe rescue operation:
- Determine the rescue plan and rescue chain at the preparation of the mission.
- Ensure the rescue of a person involved in an accident immediately with locally available means and trained personnel.
- Have the rescue mission coordinated by another person, with visual and voice contact to the crane operator, additional personnel as well as to the person being rescued.

37.6 Additional risks

Make sure that the following risks are taken into account:
- Wind effect and environmental influences.
- Crushing and shearing points.
- Endangerment by additional cranes, for example material transport.

38 Welding work on the load

Note
► The load must also be grounded.

In case of welding work on the load, the screw clamp of the welding unit must be attached on the work piece to avoid current flow via hoist rope, crane superstructure or crane chassis.

LWE/LTR 1100-009/25105-02-02/en

copyright © Liebherr-Werk Ehingen GmbH 2023

Empty page!

LWE/LTR 1100-009/25105-02-02/en

copyright © Liebherr-Werk Ehingen GmbH 2023

2.04.10 Ladders

1	Intended use	2
2	Safety instructions	2
3	Safety signs	3
4	Ladder inspection	12
5	User guidelines	12
6	Assembling the ladder	14
7	Ladder access	25

LWE/LTR 1100-009/25105-02-02/en

copyright © Liebherr-Werk Ehingen GmbH 2023

1 Intended use

Ladders are mobile work equipment that can be used in different locations. Ladders can be used to perform minor work at heights in cases where the use of other equipment would not be appropriate.

Ladders are designated for the ascent and descent of personnel.

Ladders may only be used as described. Any other use is considered unintended use and is therefore forbidden.

The manufacturer is **not** liable for damage caused by unintended use or improper usage.

2 Safety instructions

The ladders are built according to the present level of technology and recognized safety technical regulations. Despite that, during their use dangers to life and physical condition of the user and / or third parties can occur.

Ladders may exclusively be used in a flawless technical condition and according to their missions as well as with constant awareness of safety and dangers.

Changes to the structure may exclusively be made with written approval of the manufacturer.

The ladders that are illustrated are an example. Ladders with the same functional principle may appear differently.

WARNING
Safety instructions not observed!
Personnel can fall, death, severe bodily injuries.
- ► Observe and adhere to the assembly and safety instructions for ladders.
- ► Observe and adhere to the safety signs on the ladders.
- ► Install and secure the ladders properly.
- ► Use ladders exclusively if you are healthy enough to do this.
- ► Climb up / down with the 3-point support.
- ► Use the rungs as handles.
- ► Step into the rungs deep enough.
- ► Never bring the ladder to a new position during use.
- ► Do not use damaged ladders and replace them immediately.
- ► Repair the ladder exclusively through authorized service facilities.

2.1 Ladder categories

Ladders are divided into two categories according to the most up-to-date specifications:
- – Ladders for industrial use
- – Ladders for private use

Ladders for industrial use are tested according to the strictest criteria. Only use ladders for industrial use.

Ladders are marked according to their category allocation by a corresponding pictogram. See section „Safety signs“.

LWE/LTR 1100-009/25105-02-02/en

copyright © Liebherr-Werk Ehingen GmbH 2023

2.2 Stationary stability

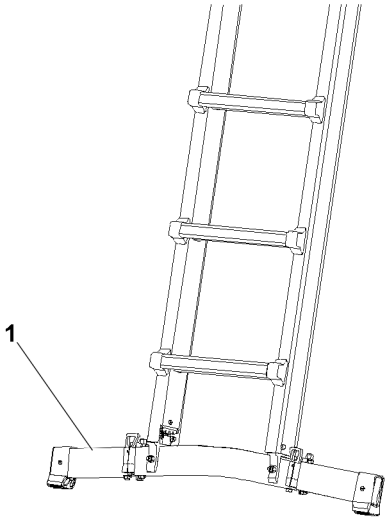

Fig.149993: Ladder with cross beam

According to the most up-to-date regulations, ladders with a length of more than 3 m must have a larger standing width. These ladders are equipped with a cross beam **1**.

2.3 Retrofitting old ladders

It is not mandatory to retrofit old ladders. It is the responsibility of the industrial user to ensure, in accordance with the operational safety regulation by means of a risk assessment, that the safety of the work equipment is ensured for all work tasks.

Older ladders that no longer corresponds with the state of technology according to current regulations, can continue to be used, **if** their safety has been checked **and** guaranteed.

3 Safety signs

Note

- ► The safety signs and instructions on the ladders must be complete and always legible.
- ► Observe and adhere to the manufacturer’s operating instructions.

LWE/LTR 1100-009/25105-02-02/en

copyright © Liebherr-Werk Ehingen GmbH 2023

3.1 Symbols until the end of 2017

Sign	Explanation
	Read the operating instructions
	Maximum number of users on one ladder
	Maximum load
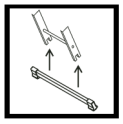	In the case of ladders that have a cross beam, the cross beam must be assembled before the first use
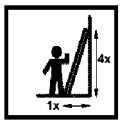	Correct set up angle 65° to 75°
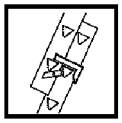	Before use: Engage the lift out safety
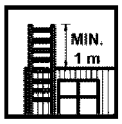	Ladder overhang above the exit level
	Secure the upper / lower end of the ladder
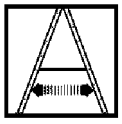	Before use: Tension the safety struts on stepladders

LWE/LTR 1100-009/25105-02-02/en

copyright © Liebherr-Werk Ehingen GmbH 2023

Sign	Explanation
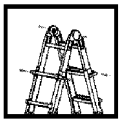	Before use: Engage the locking pin joints and pull pin locks
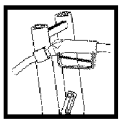	To open / close the tank cover and to ascent / descent: Insert the fuel nozzle into the retainer.
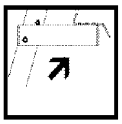	Before setting up the ladder: Fold out the platform.
	Before use: Check the ladder for damage
	Check the legs of the ladder
	Do not use the three uppermost rungs of an extension ladders as rungs to stand on
	Do not use the four uppermost rungs / steps of a stepladder without a platform to stand on
	Do not use the two uppermost rungs of a stepladder with integrated extension ladder as rungs to stand on
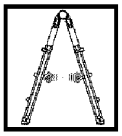	If hinged ladders are used as stepladders: Spread the ladder legs to the stop
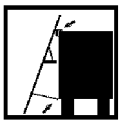	Place the upper placement angle flat. Hold the belt on tension

LWE/LTR 1100-009/25105-02-02/en

copyright © Liebherr-Werk Ehingen GmbH 2023

Sign	Explanation
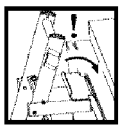	Hook the hook on the platform of the refueling ladder on the vehicle
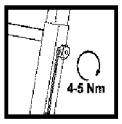	Tightening the star knob on the beam extension tightly
	Do **not** use a damaged ladder
	Preclude any contaminants on the ground
	Make sure the upper end of the ladder is placed correctly. Place the ladder only on safe surfaces
	Only one person may climb up / down on any accessible leg of the ladder
	Avoid leaning out to the side. Keep the body's center of gravity between the ladder beams
	Face the ladder when climbing up / down the ladder
	Use the ladder only with suitable shoes
	Do not use a stepladder as a leaning ladder

LWE/LTR 1100-009/25105-02-02/en

copyright © Liebherr-Werk Ehingen GmbH 2023

Sign	Explanation
	Do **not** use the inner section of multi-part hinged ladders without outer sections as a stepladder
	Crushing danger
	Set the ladder up on horizontal and solid ground
	Set the ladder up on solid ground
	Use the ladder in the correct set up direction
	Do not carry along bulky objects or objects over 10 kg on the ladder
	It is not permitted to step off the ladder to the side
	During transport, pay attention to danger due to power lines
	Do not use the ladder as a walkway
	Do not transport snow and ice shovels over the ladder Use hooks!

LWE/LTR 1100-009/25105-02-02/en

copyright © Liebherr-Werk Ehingen GmbH 2023

Sign	Explanation
	Danger due to shearing point
	Do not use the ladder with the cross beam folded in
	Do not use a ladder under the influence of drugs or alcohol
	Do not use a ladder to climb up to another lever
	Make sure that both ladder sections are opened completely and secured. Avoid an incorrect ladder position
	Only use the platform ladder with a locked spreader lock
	Only permissible ladder rungs / platforms may be used as standing and stepping surfaces. Other surfaces such as placement surfaces for cable clips or attachment hooks may **not** be used as standing and stepping surfaces
	If a crossbars is part of the delivery scope of the mobile platform ladder: Only use a mobile platform ladder with the crossbar assembled
	If auxiliary weights are part of the delivery scope of the mobile platform ladder: Only use the platform ladder with the auxiliary weights assembled

LWE/LTR 1100-009/25105-02-02/en

copyright © Liebherr-Werk Ehingen GmbH 2023

Sign	Explanation
	If a foot brake is installed on the mobile platform ladder: Use the foot brake
	Make sure that the joint is locked
	In unfavorable weather conditions, do **not** use the ladder in the open

3.2 Symbols from 2018

Sign	Explanation
	Danger of falling!
	Read the operating instructions
	Maximum load
	Ladder for professional use
	Ladder for private use
	Maximum number of users on one ladder

LWE/LTR 1100-009/25105-02-02/en

copyright © Liebherr-Werk Ehingen GmbH 2023

Sign	Explanation
	In the case of ladders that have a cross beam, the cross beam must be assembled before the first use
	Correct set up angle 65° to 75°
	Always keep a firm grip: When ascending and descending and when working on the ladder
	Ladder overhang above the exit level
	Before use: Engage the lift guards
	Do **not** use a damaged ladder
	Only use the ladder with the cross beam folded out
	Prior to use: The hinges and locks must be engaged
	Use the ladder in the correct set up direction
	Only use the ladder with appropriate footwear

LWE/LTR 1100-009/25105-02-02/en

copyright © Liebherr-Werk Ehingen GmbH 2023

Sign	Explanation
	Do **not** use the ladder if physically impaired or under the influence of drugs or alcohol.
	Do **not** use the ladder on uneven or unsteady surface
	Do **not** use the ladder on a slippery or contaminated surface
	Do **not** place the ladder on unsuitable surfaces
	Do **not** carry along bulky objects or objects over 10 kg on the ladder
	Do **not** use the top three rungs as rungs to stand on
	Avoid leaning out to the side. Keep the body's center of gravity between the ladder beams
	Avoid working with a side load
	Climb up and down the ladder while facing it
	Do **not** use a stepladder as a leaning ladder

LWE/LTR 1100-009/25105-02-02/en

copyright © Liebherr-Werk Ehingen GmbH 2023

Sign	Explanation
	Prior to use: Tension the safety struts on stepladders
	For stepladders without a platform: Do **not** use the top two rungs as rungs to stand on
	It is not permitted to step off to the side from the ladder
	When transporting or using the ladder, be aware of any danger due to overhead wires
	Do **not** use the ladder as a walkway

4 Ladder inspection

Make sure that the following conditions are met:
- All ladders are inspected at lease every 12 months. See chapter 8.17.
- The inspection may be made exclusively by authorized and trained expert personnel.
- The results of the inspection are documented.

5 User guidelines

Make sure that the following prerequisites are met before using the ladder:
- A risk evaluation had been made.
  The national legal regulations have been taken into account.
- People are physically able to use a ladder.
- The ladder is suited for the respective application.
- The ladder is complete and not damaged (visual inspection).
- The ladder is free of contaminants, such as:
  - Ice
  - Snow
  - Frost
  - Wet paint
  - Lubricants
- The legs of the ladders are not worn.
- Screws and connections have been checked for tight seating.
- The base is:

LWE/LTR 1100-009/25105-02-02/en

copyright © Liebherr-Werk Ehingen GmbH 2023

- Level
- Horizontal
- Slip-resistant
- Unmoveable

When climbing up the ladder:
- Set the ladder up in the correct set up angle.
- Secure the locking devices of the ladder.
- Tension the spreaders of the stepladder.
- Do **not** set up the ladder from above.
- Do **not** set the ladder on braces or steps.
- Avoid the risk of a collision with pedestrians, vehicles or doors.
- Place the leaning ladder only suitably stable contact surfaces with both rails.

When using the ladder:
- Make sure that no children are playing on the ladders.
- Subject the ladder to no more than maximum 150 kg.
- Use the ladder exclusively as described in section „Ladder access“.
- Do **not** use the ladder outside in strong wind.
- Do **not** subject the ladder horizontally to excessive loads in side assembly work.
- Face the ladder when climbing up or down the ladder.
- Step on the ladder with suitable shoes.
- Do not use the ladder as a walkway.
- Secure the ladder to prevent it from being knocked over inadvertently.
- For leaning ladders, do not step on the uppermost three steps / rungs, in reference to the ladder placement point.
- For stepladders, do not step on the uppermost two steps / rungs.
- Do not work too long on the ladder without pauses. Tiredness is a safety risk.
- When working on a ladder, hold on tightly with one hand.
  If this is not possible: Take additional safety measures, such as: Use the work positioning system (WPS: WORK POSITIONING SYSTEM).

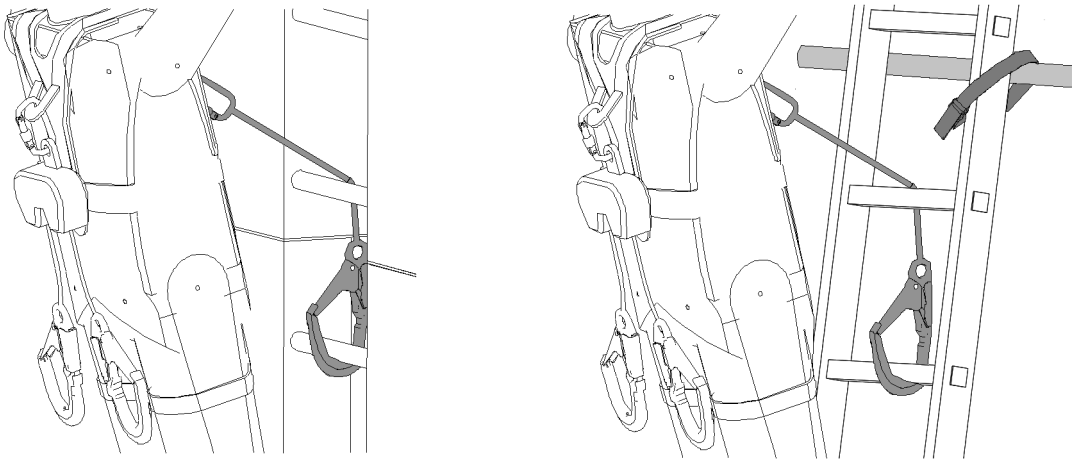

Fig.168330: Example: Use the work positioning system on the ballast ascent or secured ladder

For repair, maintenance and storage of a ladder:
- Have repairs and maintenance made by expert personnel according to the manufacturer’s instructions.
- Store the ladders according to the manufacturer’s instructions.

Before transporting the ladders:
- Lock and secure the ladders in their provided transport retainers.

LWE/LTR 1100-009/25105-02-02/en

copyright © Liebherr-Werk Ehingen GmbH 2023

6 Assembling the ladder

6.1 Supplied cross beam

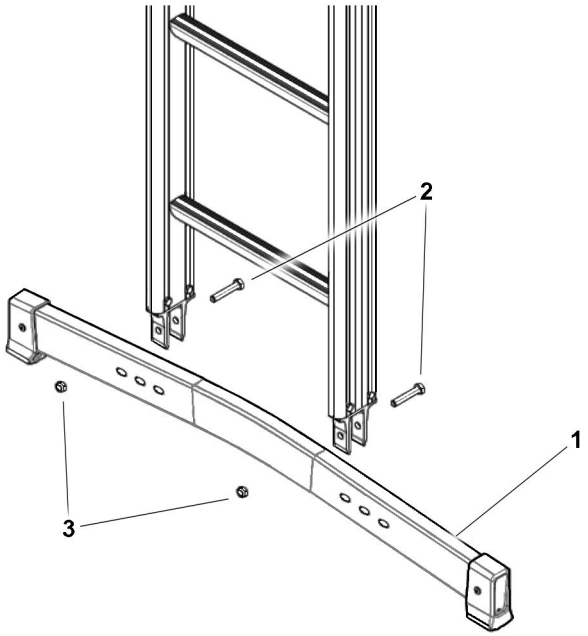

Fig.149565: Assembling the cross beam

Depending on the type of ladder and the delivery condition, the cross beam must be assembled prior to use.

Required tools:
- 2 x 13 mm wrenches
- The screws and nuts are included in the delivery scope.

Tightening torque:
- Approx. 8 Nm

► Position the cross beam **1** centrally between the cross beam fasteners.
► Secure the cross beam **1** with screws **2** and nuts **3**.
► Before using the ladder: Make sure that the screws **2** and nuts **3** are tightened correctly.

LWE/LTR 1100-009/25105-02-02/en

copyright © Liebherr-Werk Ehingen GmbH 2023

6.2 Folding cross beam

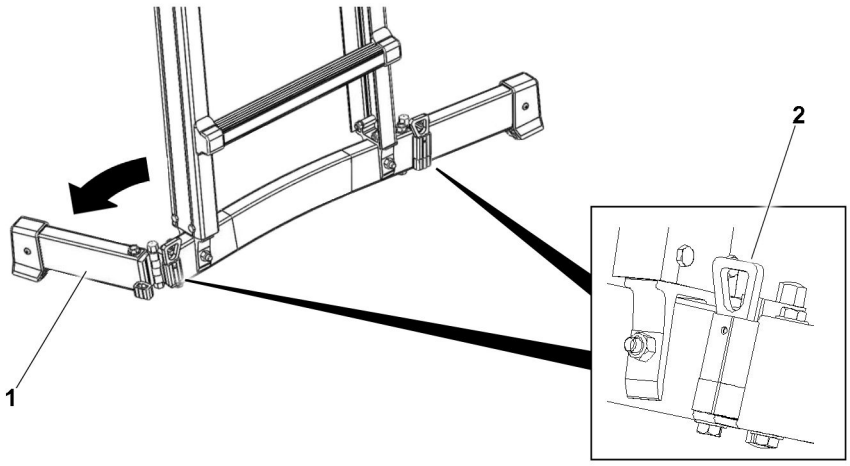

Fig.149566: Use the folding cross beam

Depending on the type of ladder, the folding cross beam must be brought into the operating position prior to use and brought to the transport position after use.

6.2.1 Bringing the cross beam into the operating position

- ► Swing the folding cross beam **1** on both sides into the operating position.
- ► Make sure that the retaining element **2** is engaged.
- ► Before using the ladder: Make sure that both retaining elements **2** have engaged.

6.2.2 Bringing the cross beam into the transport position

- ► Unlock the retaining element **2**.
- ► Swing the folding cross beam **1** on both sides into the transport position.
- ► Before storing the ladder: Make sure that both retaining elements **2** have engaged.

6.3 Cross beams for platform ladder

For platform ladders, the supplied cross beams must be assembled prior to use.

Required tools:
- – 2 x 13 mm wrenches
- – The screws and nuts are included in the delivery scope.

LWE/LTR 1100-009/25105-02-02/en

copyright © Liebherr-Werk Ehingen GmbH 2023

6.3.1 Assembling the cross beam without wheels

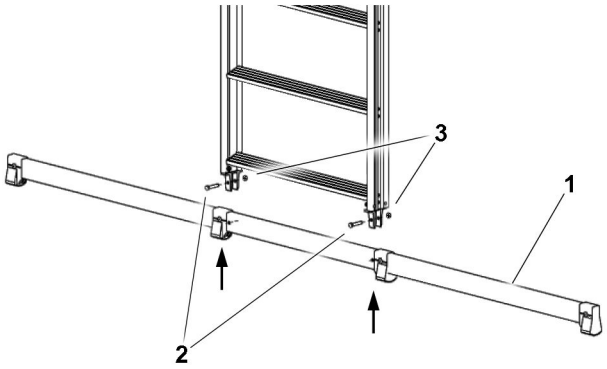

Fig.149595: Assembling the cross beam

- ► Position the cross beam **1** centrally between the cross beam fasteners.
- ► Secure the cross beam **1** with two screws **2** and two nuts **3**.
- ► Tighten the screws **2** by hand.

6.3.2 Assembling the cross beam with wheels

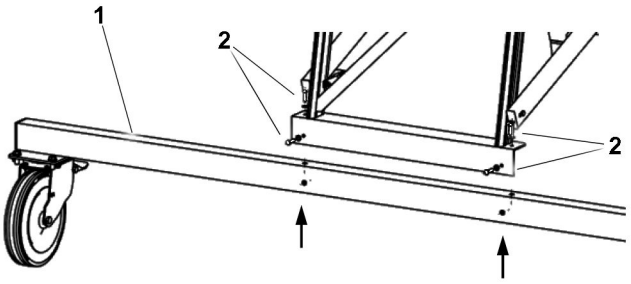

Fig.149596: Assembling the cross beam

- ► Position the cross beam **1** centrally between the cross beam fasteners.
- ► Secure the cross beam **1** with four screws **2** and four nuts.
- ► Tighten the screws **2** by hand.
- ► Before using the ladder: Make sure that all screws and nuts are correctly tightened.

6.4 Platform ladder

At least two people are required for ladder assembly and removal.

6.4.1 Assembling the platform ladder

WARNING
Platform ladder not correctly assembled!
Personnel can fall down. Death, severe bodily injuries.
- ► Before the platform ladder is correctly assembled: Do **not** step on or load the platform ladder.

LWE/LTR 1100-009/25105-02-02/en

copyright © Liebherr-Werk Ehingen GmbH 2023

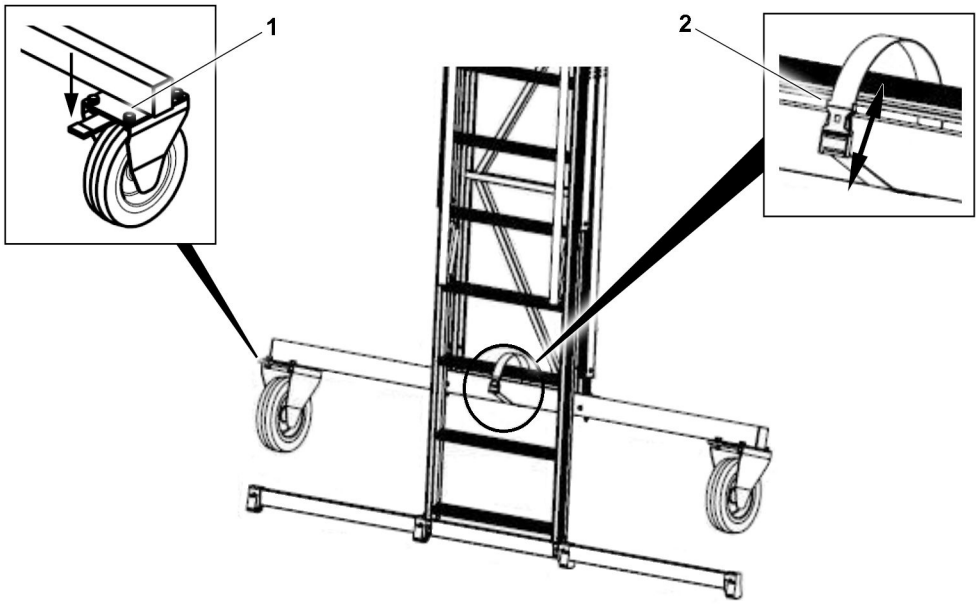

Fig.149597: Preparing the ladder

- ► Secure both pulleys **1**.
- ► Erect the ladder with two people.
- ► Release the rigging belt **2**.

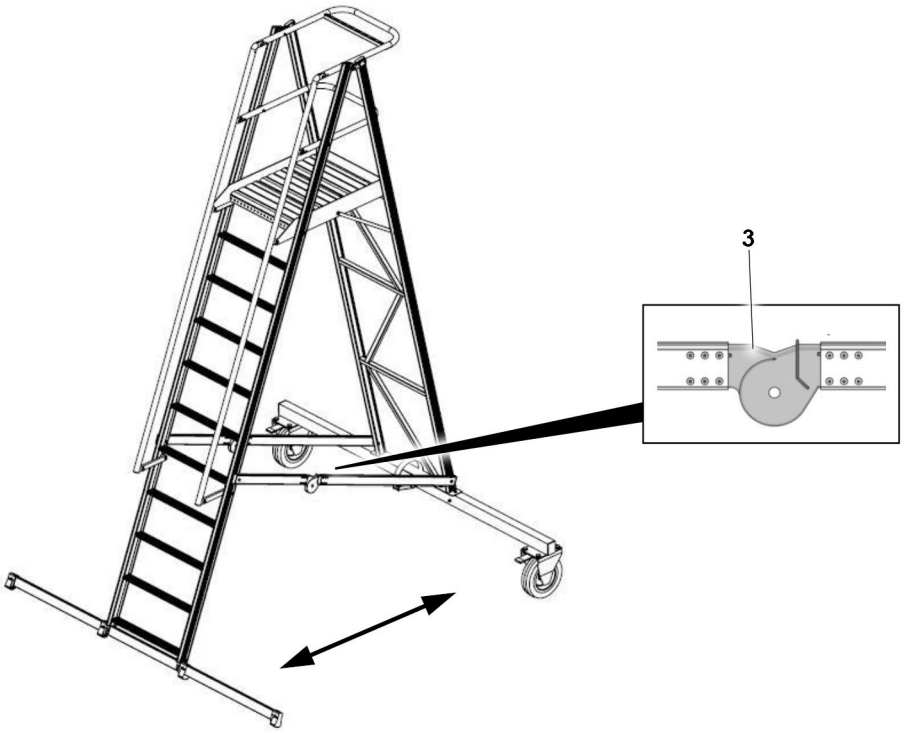

Fig.149598: Setting up the ladder

- ► Each half of the ladder is held by a person.
- ► Until both hinges **3** engage audibly: Carefully guide the ladder halves away from each other. When doing so, the platform surface will fold out automatically.

Result:

– The ladder is now assembled.

LWE/LTR 1100-009/25105-02-02/en

copyright © Liebherr-Werk Ehingen GmbH 2023

6.4.2 Dismantling the platform ladder

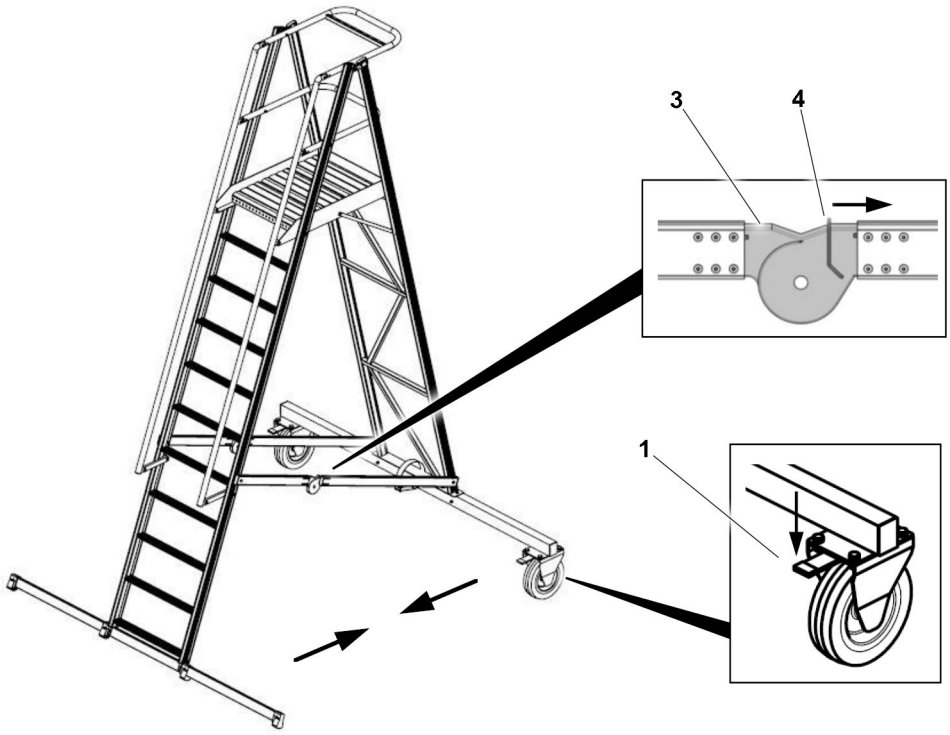

Fig.149599: Releasing the hinges

- ► Secure both pulleys **1**.
- ► Unlock the locking bracket **4** in the hinge **3** on both sides.
- ► Each half of the ladder is held by a person.
- ► Carefully guide the ladder halves toward each other. When doing so, the platform surface will fold together automatically.

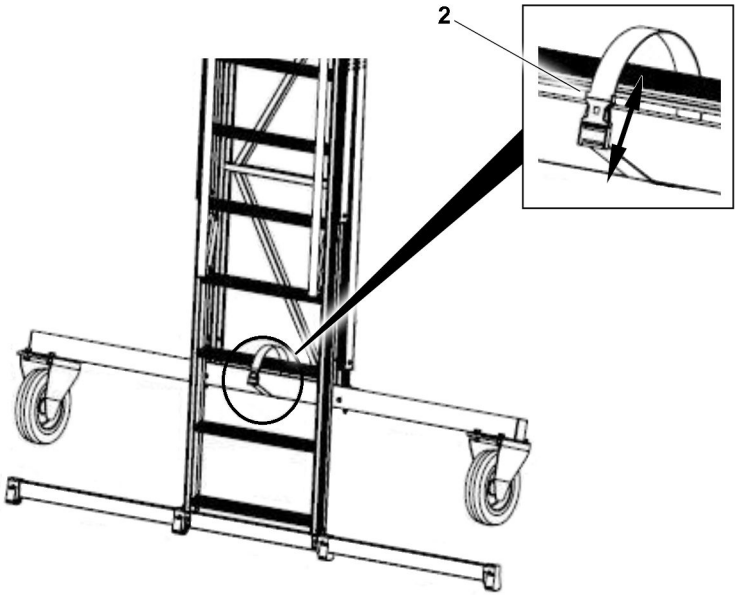

Fig.149600: Securing the ladder in the transport position

- ► Secure the rigging belt **2** on the cross beam and rung.
- ► Make sure that the clasp on the rigging belt **2** is closed.

LWE/LTR 1100-009/25105-02-02/en

copyright © Liebherr-Werk Ehingen GmbH 2023

Result:
– The ladder is dismantled and secured in the transport position.

6.5 Hinged ladders

The hinged ladder can be used as a leaning ladder or stepladder.

To adjust a part of the ladder, both hinges on opposite sides must be actuated.

6.5.1 Using a hinged ladder as a leaning ladder

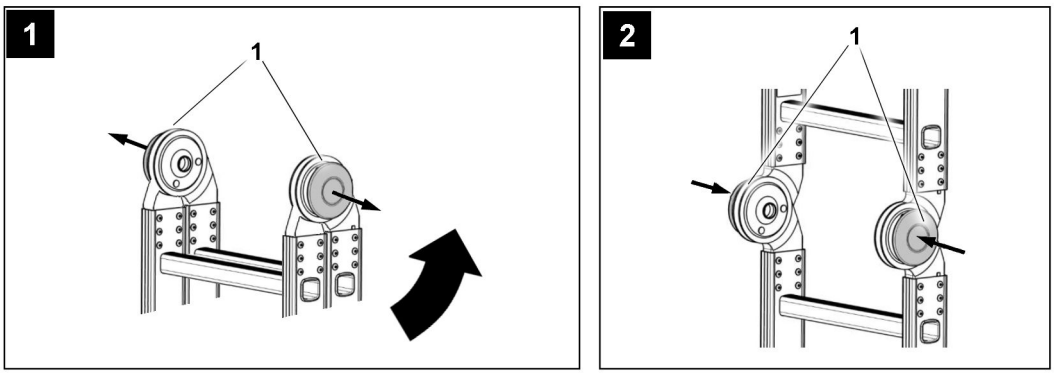

Fig.149567: Using a hinged ladder as a leaning ladder

► Release the hinges **1**.
► Until the hinges **1** engage again: Spread out the legs to the stop.
► Before using the hinged ladder as a leaning ladder: Make sure that the hinges **1** have engaged.

6.5.2 Bringing the leaning ladder into the transport position

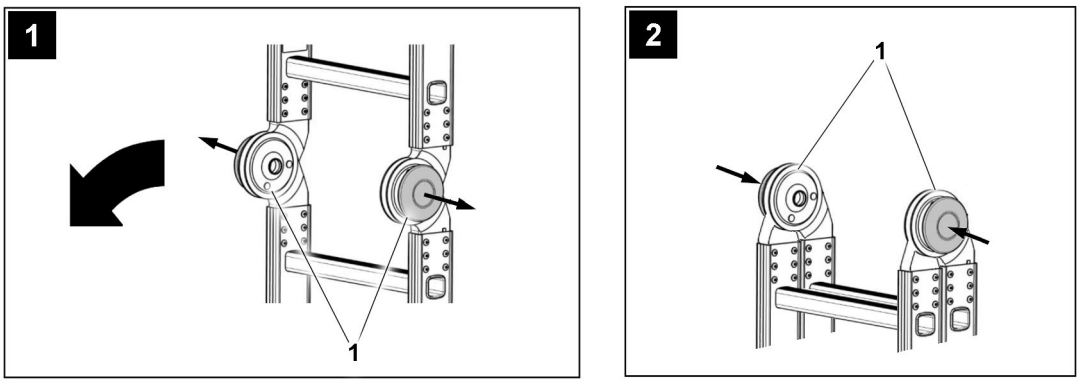

Fig.151625: Bringing the leaning ladder into the transport position

► Release the hinges **1**.
► Until the legs lie together and the hinges **1** engage: Fold the legs together.

Result:
– The hinged ladder is now in the transport position. The hinged ladder can be stored.

LWE/LTR 1100-009/25105-02-02/en

copyright © Liebherr-Werk Ehingen GmbH 2023

6.5.3 Using a hinged ladders as a stepladder

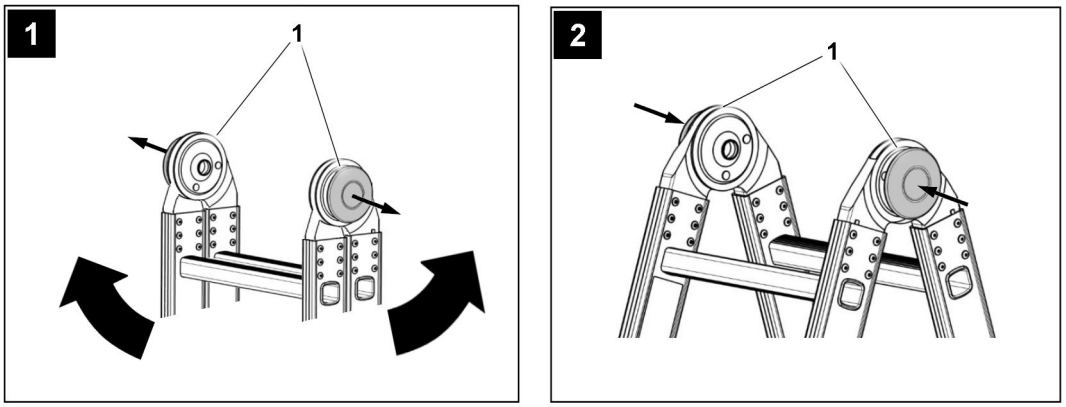

Fig.149568: Using a hinged ladders as a stepladder

- ► Release the hinges **1**.
- ► Until the hinges **1** engage again: Spread out the legs.
- ► Before using the hinged ladder as a stepladder: Make sure that the hinges **1** have engaged.

6.5.4 Bringing the stepladder into the transport position

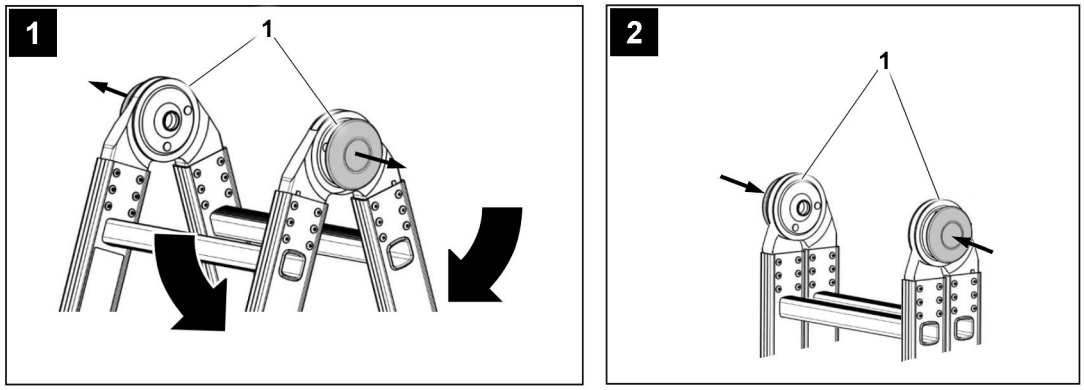

Fig.151607: Bringing the stepladder into the transport position

- ► Release the hinges **1**.
- ► Until the legs lie together and the hinges **1** engage: Fold the legs together.

Result:

– The ladder is now in the transport position. The ladder can be stored.

LWE/LTR 1100-009/25105-02-02/en

copyright © Liebherr-Werk Ehingen GmbH 2023

6.6 Multi-purpose ladder with height adjustment

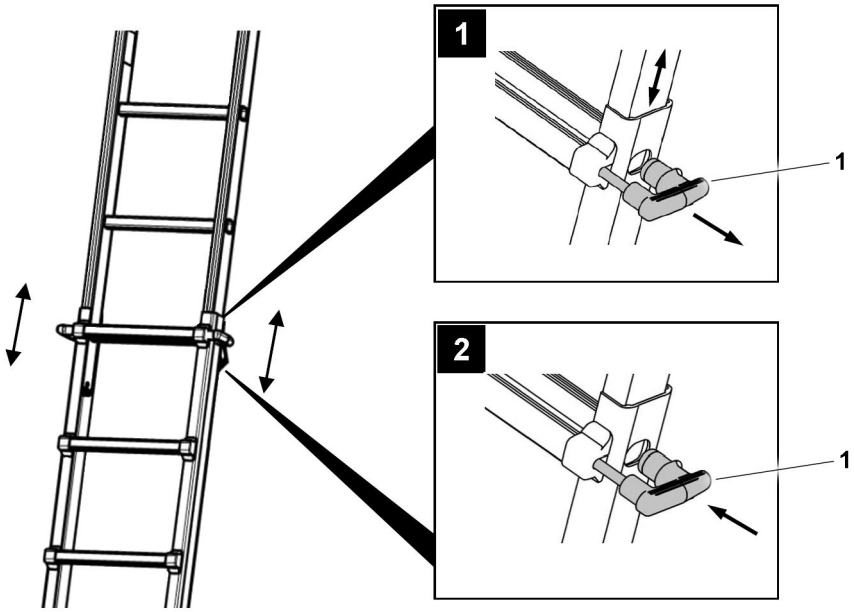

Fig.149570: Ladder with height adjustment

Multi-purpose ladders have a height adjustment device.

- ► Release the handle **1** on both sides.
- ► Pull out or push in the ladder to the desired length.
- ► Lock the ladder with the handle **1** on both sides.
- ► Before using the ladder: Make sure that both handles **1** have engaged.

6.7 Three-part multi-purpose ladder

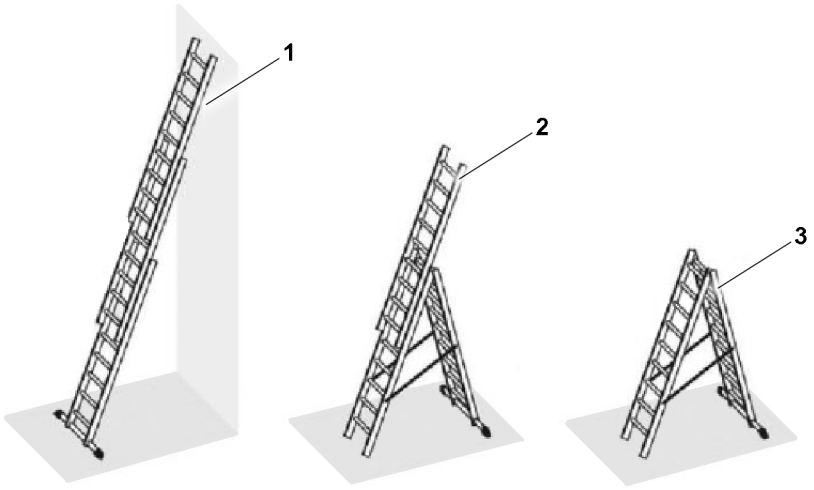

Fig.152833: Three-part multi-purpose ladder

The three-part multi-purpose ladder can be used as a leaning ladder **1**, stepladder with integrated extension ladder **2** or as a stepladder **3**.

LWE/LTR 1100-009/25105-02-02/en

copyright © Liebherr-Werk Ehingen GmbH 2023

6.7.1 Using the three-part multi-purpose ladder as a leaning ladder

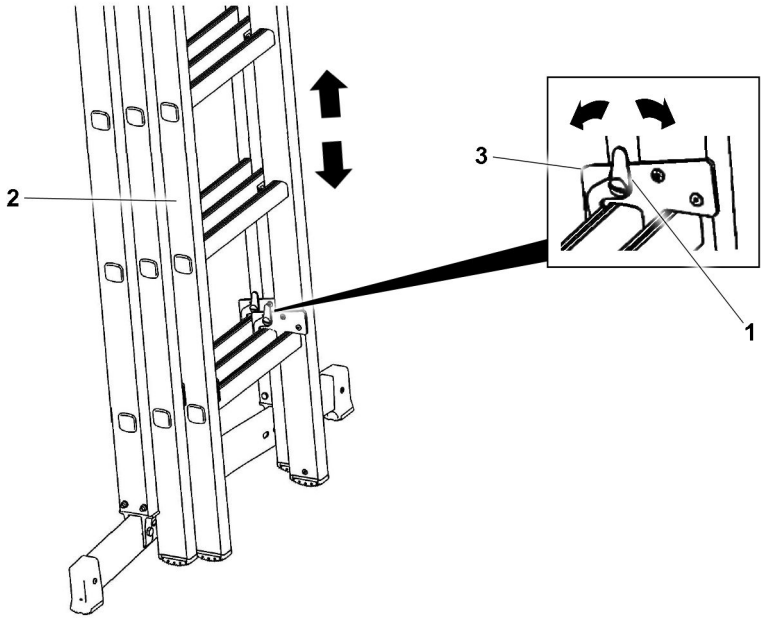

Fig.152834: Pushing out the ladder

Push out the upper ladder section **2**:

- ► Release the lock **1**. Slightly lift up the upper ladder section **2** at the same time.
- ► Swing out the upper ladder section **2** and push it out to the desired length.
- ► Refit the securing hooks **3**.
- ► Make sure that the lock **1** engages.

Push out the middle ladder section:

- ► Pull out and lock the middle ladder section in the same manner.
- ► Make sure that the lock **1** engages.

Result:
– The ladder can now be used.

Push the ladder together:

- ► Push together and lock the middle ladder section.
- ► Subsequently push together and lock the upper ladder section.
- ► Make sure that the lock **1** engages.

Result:
– The ladder is now in the transport position. The ladder can be stored.

LWE/LTR 1100-009/25105-02-02/en

copyright © Liebherr-Werk Ehingen GmbH 2023

6.7.2 Using the three-part multi-purpose ladder as a stepladder

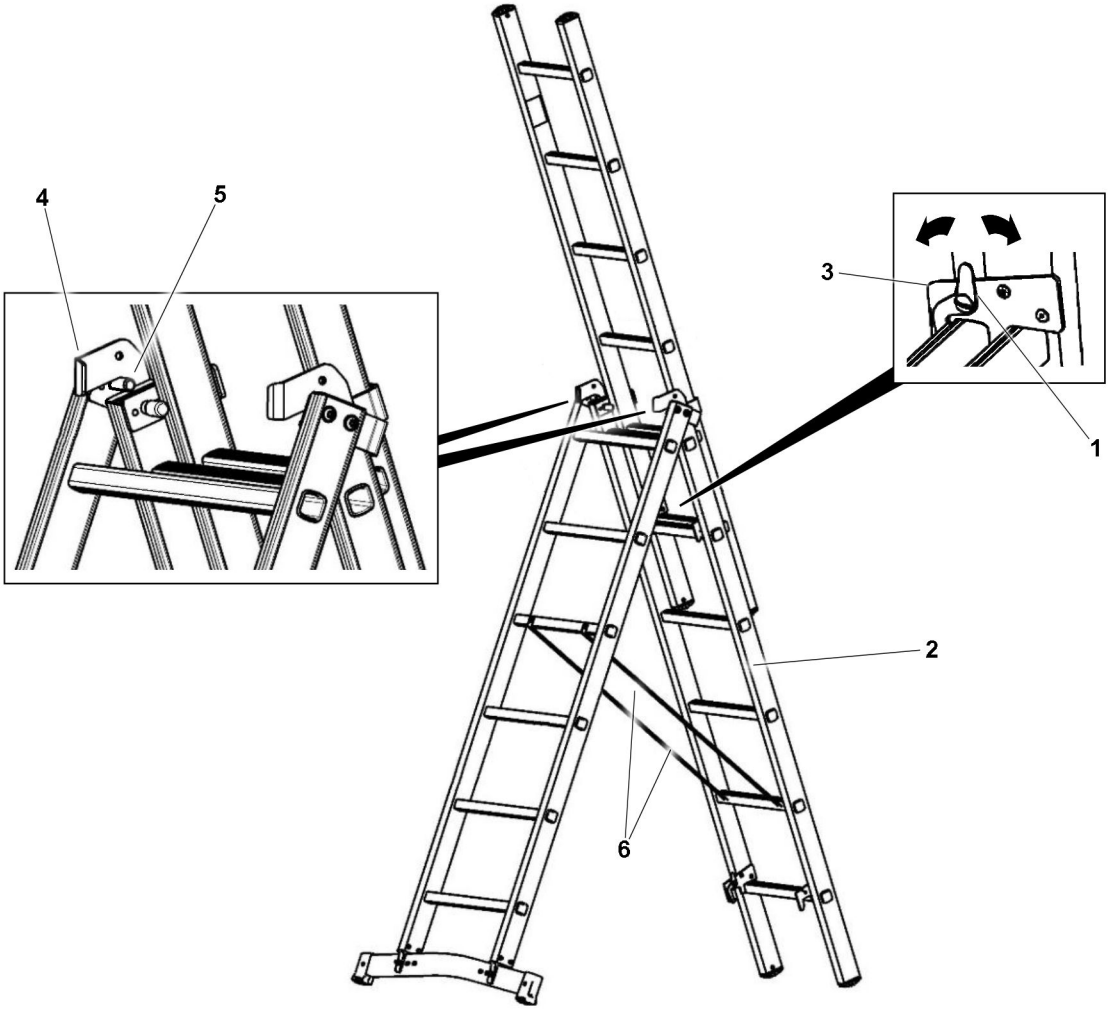

Fig.152835: Setting up the ladder

Push out the upper ladder section:

► Push out the upper ladder section to the desired length. See section „Using the three-part multi-purpose ladder as a leaning ladder“.

Swing out the middle ladder section **2**:

► Release the lock **1**. Slightly lift up the middle ladder section **2** at the same time.
► Until the contact point **5** of the bottom ladder section slides along the guide fitting **4** on both sides into the storage position: Spread out the legs.
► Make sure that the belt straps of the ladder locks **6** are tensioned.

Result:
– The ladder can now be used.

Bring the ladder into the transport position:

► Fold the middle and bottom ladder sections together.
► Push the upper ladder section together again.

Result:
– The ladder is now in the transport position. The ladder can be stored.

LWE/LTR 1100-009/25105-02-02/en

copyright © Liebherr-Werk Ehingen GmbH 2023

6.8 Extension ladder

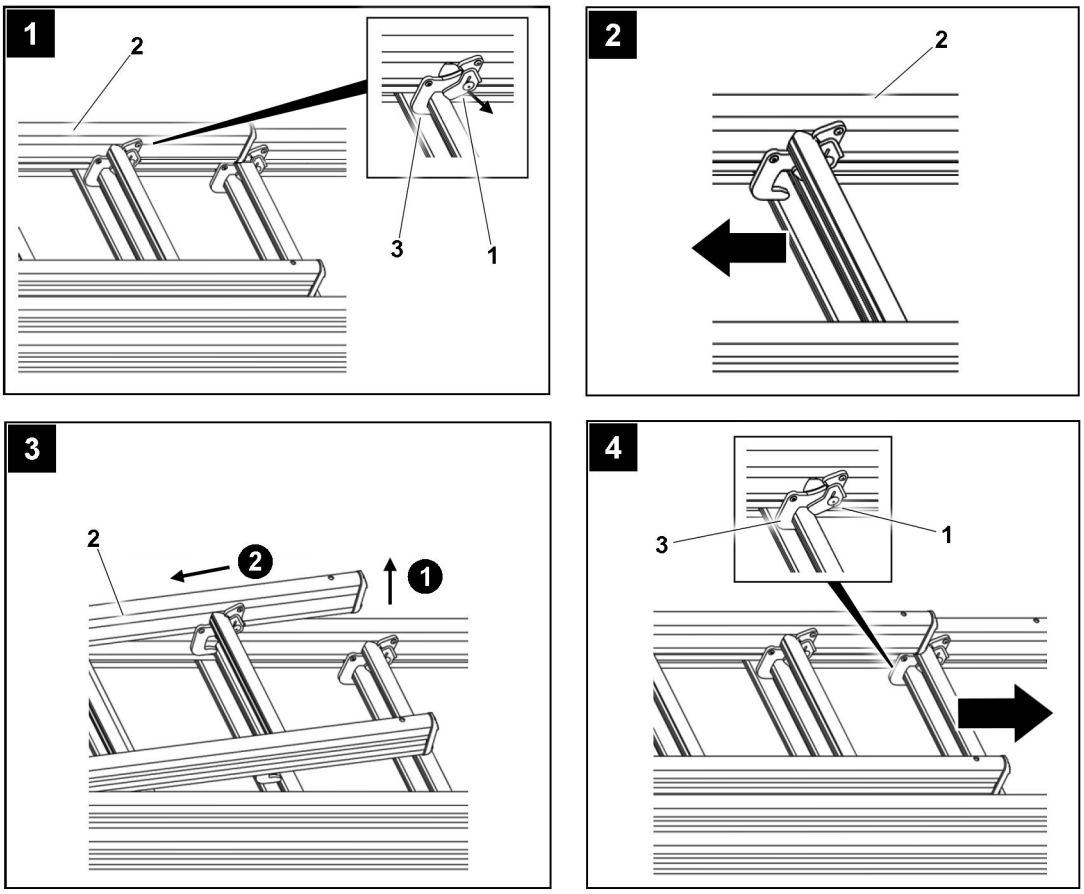

Fig.149569: Pushing out the ladder

Only pull out or push in the ladder when it is laid down.

Push out the upper ladder section:

- ► Release the lock **1** on the securing hook **3** on the upper ladder section **2**.
- ► Move the upper ladder section **2** slightly at the same time.
- ► Now swing the ladder section **2** outward and push it out to the desired length.
- ► Refit the securing hooks **3**.
- ► Make sure that the lock **1** re-engages.

Push out the middle ladder section:

- ► Pull out and lock the middle ladder section in the same manner.
- ► Make sure that the lock **1** engages.

Result:

– The ladder can now be used.

Push the extension ladder together:

- ► Push together and lock the middle ladder section.
- ► Subsequently push together and lock the upper ladder section.
- ► Make sure that the lock **1** engages.

Result:

– The ladder is now in the transport position. The ladder can be stored.

LWE/LTR 1100-009/25105-02-02/en

copyright © Liebherr-Werk Ehingen GmbH 2023

7 Ladder access

Wearing the personal protection equipment to prevent falling and the ladder safeguard depend on the type of work, among others.

7.1 Ladder safeguards

The ladder can be secured to prevent it from sliding away to the side by:
- Restraint device, for example: Tether or side stops on component
- Friction lock, for example: Rubber caps or plastic caps on the end of the ladder beam at direct placement on a surface

The ladder can be secured to prevent it from tipping to the rear by:
- The correct placement angle

7.2 3-point support

A 3-point support is ensured when:
- Two hands have a safe hold and one leg is standing safely.
- Two legs are standing safely and one hand has a safe hold.
- Two legs are standing safely in straddle position on a stepladder which can be accessed from both sides, on the third respective rungs / steps from the top. The user locks the ladder with the knees.
- Two legs are standing safely and at the same time, the body is leaned on higher rungs / steps of the leaning (extension) ladder. The center of gravity of the body must always be between the two ladder beams.
- a work positioning system (WPS: WORK POSITIONING SYSTEM) is used

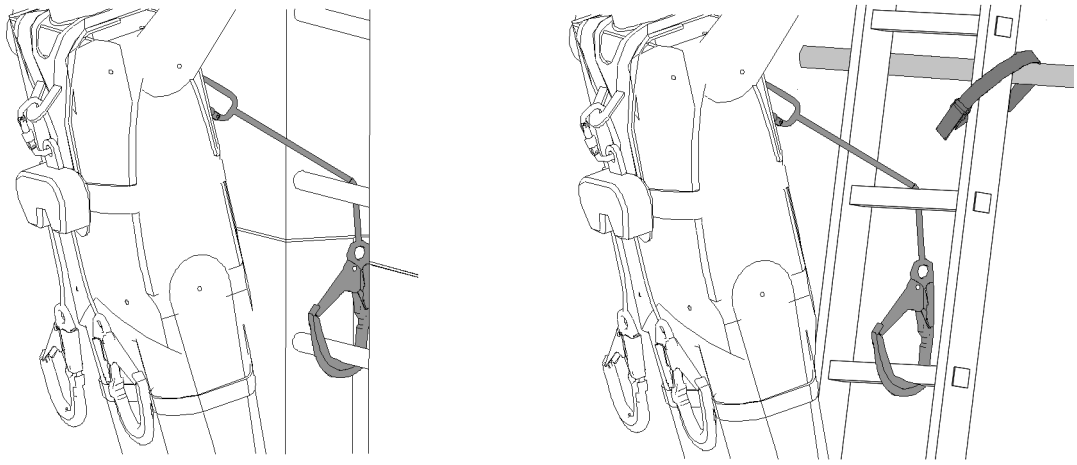

Fig.168330: Example: Use the work positioning system on the ballast ascent or secured ladder

7.3 Light and / or heavy work

The following lists various light and heavy work

Examples for light work:
- Installing / removing retaining pins or spring retainers
- Fastening components, disengaging fastening equipment
- Pushing the transition aid out / in
- Establishing / disconnecting electrical or hydraulic connection between components
- Actuating the hand pump for the folding jib
- Reeving the auxiliary winch in / out
- Setting up / taking down foldable railings
- Carrying out maintenance and inspection work

LWE/LTR 1100-009/25105-02-02/en

copyright © Liebherr-Werk Ehingen GmbH 2023

– Refueling the crane chassis and / or crane superstructure

Examples for heavy work:
– Knocking the connector pins in / out
– Installing / removing the wind warning
– Reeving the hoist rope in / out
– Installing / removing the connector pin with assembly aid (hydraulic cylinder or mechanical assembly tool)
– Assembling / disassembling the rope lock

7.4 Using the stepladder

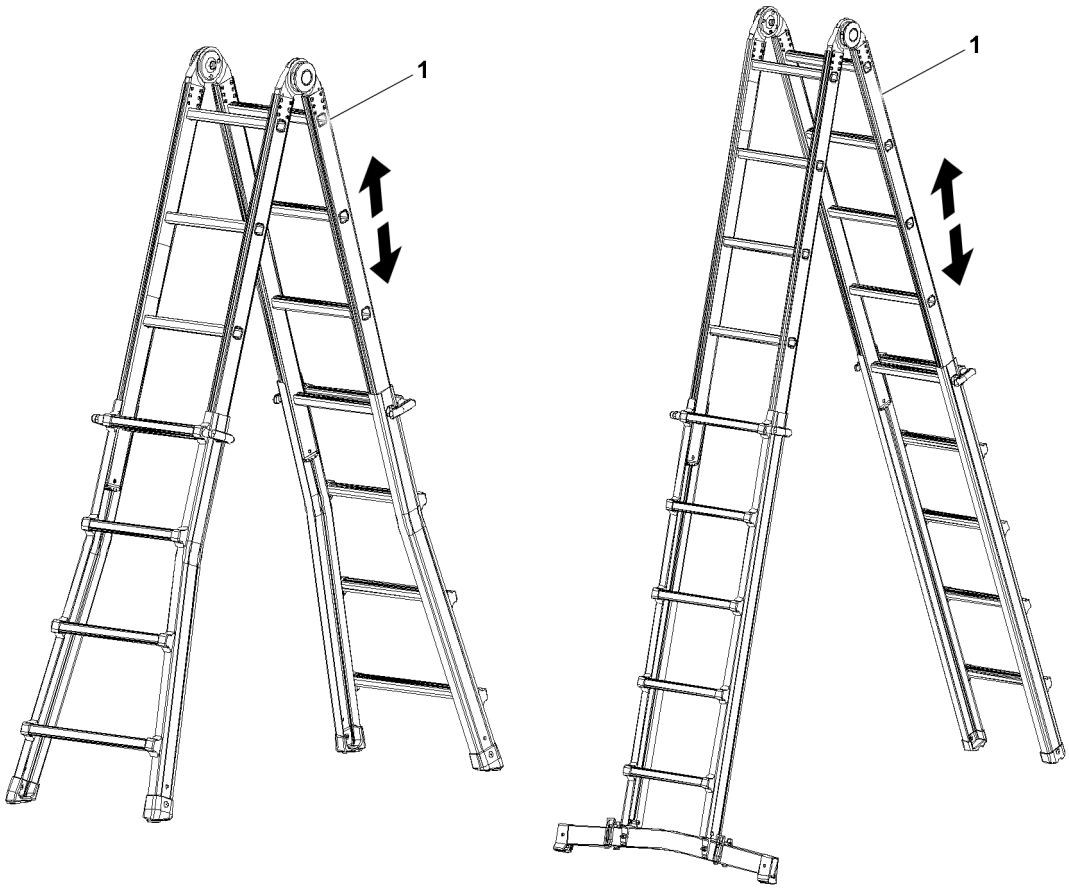

*Fig.149996: Example of stepladders **1***

WARNING
Transitioning from a stepladder to other components!
Personnel can fall, death, severe bodily injuries.
► Do **not** transition from a stepladder to other components.

WARNING
3-point support not adhered to!
Personnel can fall, death, severe bodily injuries.
► Adhere to the 3-point support.
► Adhere to the prerequisites and conditions for the use of stepladders.

Prerequisites for the use of stepladders **1**:
– Make sure that the weight of the tool carried along does not weigh more than 10 kg.
– Make sure that stepladder **1** is set up stable.

LWE/LTR 1100-009/25105-02-02/en

copyright © Liebherr-Werk Ehingen GmbH 2023

Access	Work
Maximum rise to the third rung / step from the top	Maximum rise to the third rung / step from the top
3-point support required	3-point support required
	Rise to 1 m: Personal protective equipment to prevent falling not required
	Step height above 1 m to 7 m **Light work**: Personal protective equipment to prevent falling not required
	Step height above 1 m to 7 m **Heavy work**: Personal protective equipment to prevent falling required

*Conditions for access and work on stepladders **1***

LWE/LTR 1100-009/25105-02-02/en

copyright © Liebherr-Werk Ehingen GmbH 2023

7.5 Using the Leaning ladder

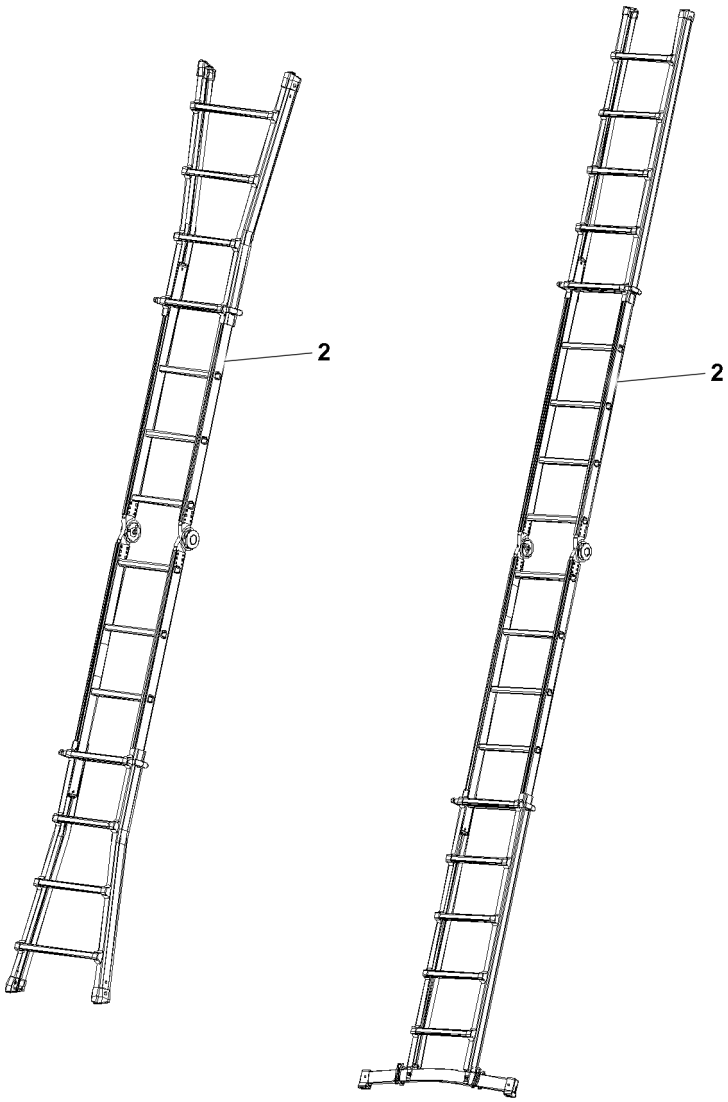

*Fig.149997: Example of leaning ladders **2***

WARNING
3-point support not adhered to!
Personnel can fall, death, severe bodily injuries.
► Adhere to the 3-point support.
► Adhere to the prerequisites and conditions for the use of leaning ladders.

Prerequisites for the use of leaning ladders **2**:
– Make sure that the 3-point support is complied with.
– Make sure that the leaning ladder **2** is positioned on a level placement surface.
– Make sure that the leaning ladder **2** is placed at an incline angle of 65° to 75° (approx. 1:4) to the horizontal.
– Make sure that the ladder overhang when leaning it on components is selected in such a way that the leaning ladder **2** is safely placed when subjected to a load / flex due to ascending persons.
– Make sure that the weight of the tool carried along does not weigh more than 10 kg.

LWE/LTR 1100-009/25105-02-02/en

copyright © Liebherr-Werk Ehingen GmbH 2023

Access	Work
Maximum rise to the fourth rung / step from the top, in reference to the placement point	Maximum rise to the fourth rung / step from the top, in reference to the placement point
3-point support required	3-point support required
	Rise to 1 m: Ladder safeguard not required Personal protective equipment to prevent falling not required
	Step height above 1 m to 7 m **Light work**: Ladder safeguard required Personal protective equipment to prevent falling not required
	Step height above 1 m to 7 m **Heavy work**: Ladder safeguard and protection to prevent it from tipping to the rear required Personal protective equipment to prevent falling required

*Conditions for access and work on leaning ladders **2***

7.5.1 Using the leaning ladder without the conical end section

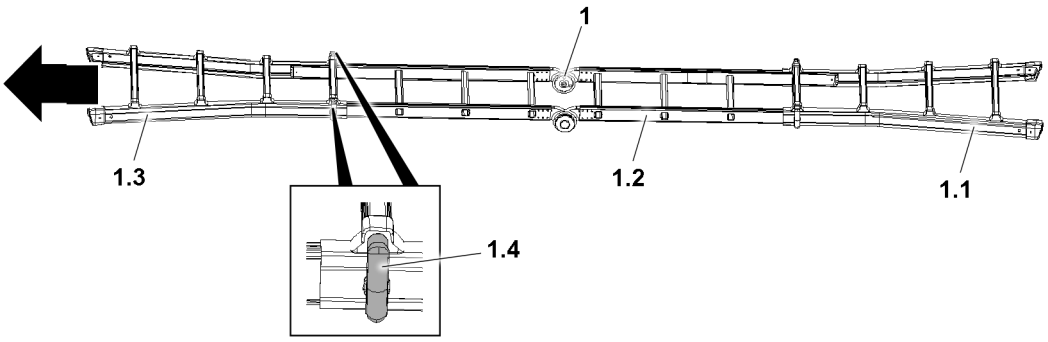

*Fig.126873: Disassemble the conical end section **1.3**.*

The leaning ladder **1** consists of the following components:
- **1.1** Base
- **1.2** Center section
- **1.3** End section
- **1.4** Locks

When the conic end section **1.3** is wider than the leaning tube on the telescopic boom or the intended placement surface, the leaning ladder **1** cannot be placed fully expanded.

In order to position the leaning ladder **1** fully expanded, the end section **1.3** must be disassembled and removed.

CAUTION
Fingers in the spring range of the lock **1.4**!
Finger crushing when locking and unlocking.
► Grip the lock **1.4** outside of the spring range.

LWE/LTR 1100-009/25105-02-02/en

copyright © Liebherr-Werk Ehingen GmbH 2023

► Release the locks **1.4** on the left and right.
► Slide the end section **1.3** out of the center section **1.2** and remove it.

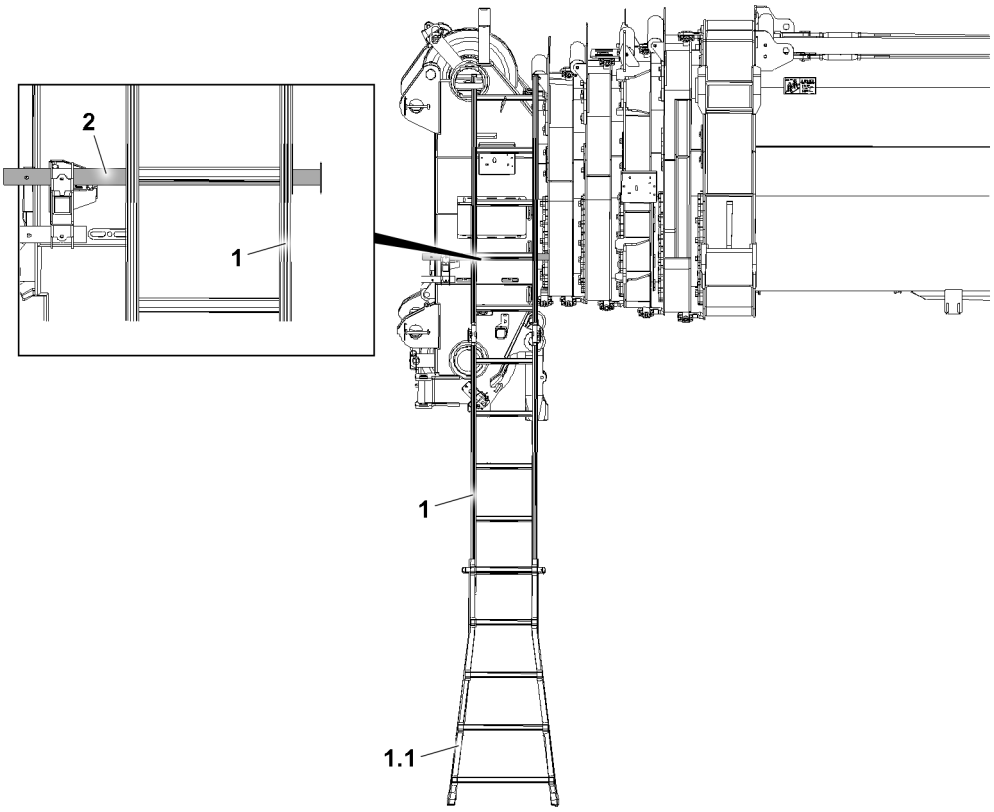

*Fig.126874: Place the leaning ladder **1** on the leaning tube **2***

When placing the leaning ladder **1**, the base **1.1** must be placed on the ground.

► Place the leaning ladder **1** on the leaning tube **2** or the intended placement surface.

WARNING
The leaning ladder **1** is wider than the leaning tube **2** or the intended placement surface!
The leaning ladder **1** can slip away when stepping on it and assembly personnel can fall down and be severely injured.
► When stepping on the leaning ladder **1** make sure that the leaning ladder **1 is not** wider than the leaning tube **2** or the intended placement surface.

► Climb on the leaning ladder **1**. Carry out the assembly work.

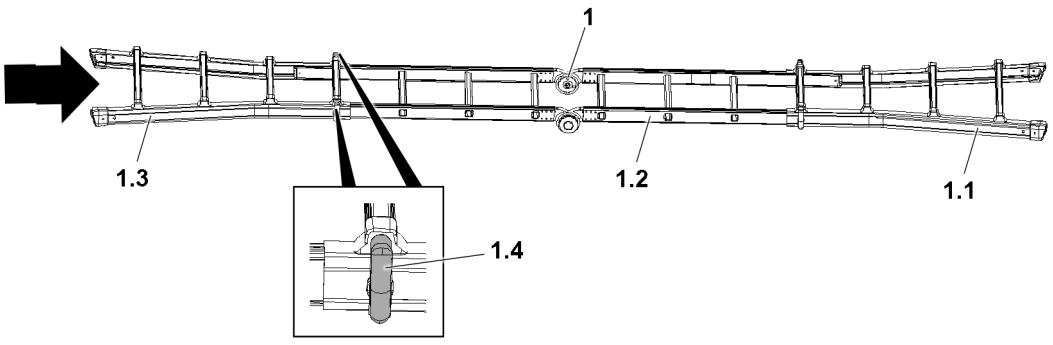

*Fig.158064: Assemble the conical end section **1.3**.*

Before leaving the jobsite, the conical end section **1.3** must be reinstalled.

LWE/LTR 1100-009/25105-02-02/en

copyright © Liebherr-Werk Ehingen GmbH 2023

CAUTION
Fingers in the spring range of the lock **1.4**!
Finger crushing when locking and unlocking.
► Grip the lock **1.4** outside of the spring range.

► Release the lock **1.4** on the left and right.
► Insert the end section **1.3** in the central section **1.2** and push them together.
► Secure the leaning ladder **1** in the transport position on the crane.

7.5.2 Using the leaning ladder as a transition

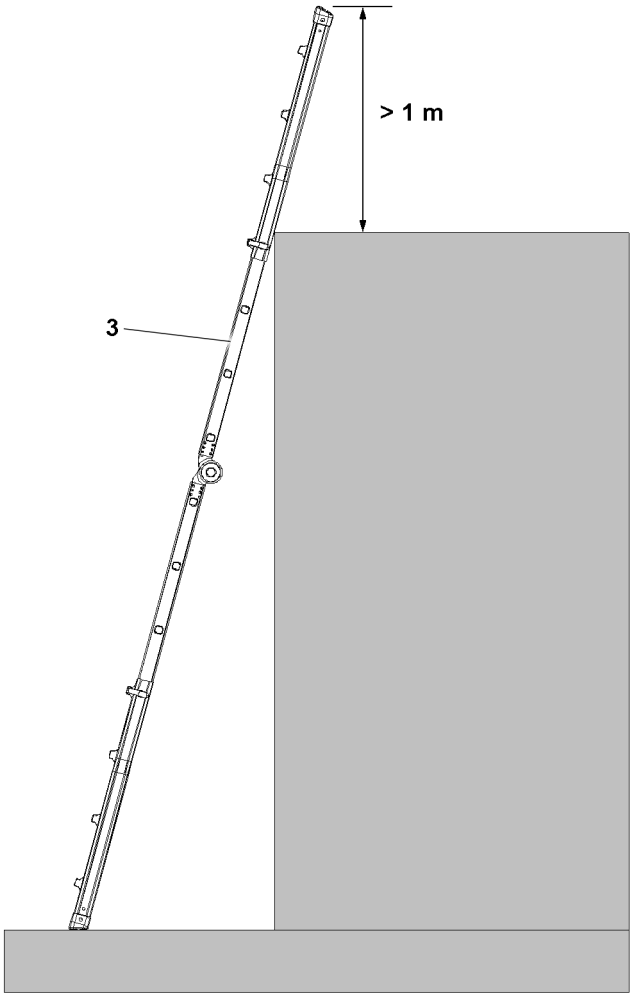

Fig.151626: Examples for leaning ladders with ladder overhang above the exit level

The leaning ladder can be used for transitioning.

WARNING
3-point support not adhered to!
Personnel can fall, death, severe bodily injuries.
► When transitioning, adhere to the 3-point support.
► Adhere to the prerequisites and conditions for the use of leaning ladders as a transition **3**.

Prerequisites for the use of leaning ladders as a transition **3**:
– Make sure that the leaning ladder **3** is positioned on a level placement surface.
– Make sure that the leaning ladder **3** is placed at an incline angle of 65° to 75° (approx. 1:4) to the horizontal.

LWE/LTR 1100-009/25105-02-02/en

copyright © Liebherr-Werk Ehingen GmbH 2023

- Make sure, for transitioning to higher work locations, when no other safehold possibilities are available, that the ladders beams of the leaning ladder go past the placement location by at least 1 m.
- Make sure that the transition area is slip-resistant.
- Make sure that the ladder position can be recognized from above.
- Make sure that the contact point of the ladder on the component is selected such that it will not be deformed or swing away due to the load of the person climbing up the ladder.
- Make sure that the weight of the tool carried along does not weigh more than 10 kg.

Access	Transition
Maximum rise to a rung / step below the placement edge	Maximum rise to a rung / step below the placement edge
3-point support required	3-point support required
Personal protective equipment to prevent falling not required	Personal protective equipment to prevent falling not required
	Rise to 1 m: Ladder safeguard not required
	Step height above 1 m to 7 m: Ladder safeguard required

*Conditions for access and transition to leaning ladders with transition **3***

LWE/LTR 1100-009/25105-02-02/en

copyright © Liebherr-Werk Ehingen GmbH 2023

7.5.3 Connecting and climbing up the leaning ladder

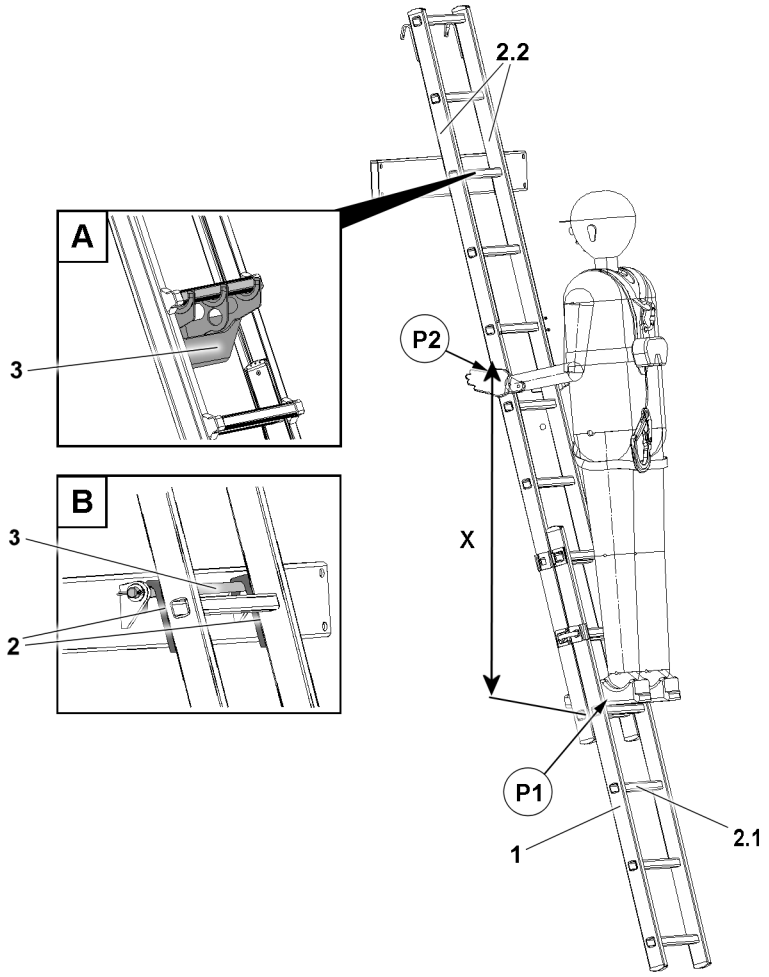

Fig.162714: Connecting the ladder to the suspension device

1	Leaning ladder	**X**	Length	**2.1**	Rung
2	Hook	**P1**	Standing position	**2.2**	Ladder beam
3	Suspension device	**P2**	Grip position		

Connected variations:
- Variation **A** rung **2.1** is connected to the suspension device **3**.
- Variation **B** hook **2** is connected to the suspension device **3**.

Prerequisites for the use of leaning ladders **1** when connected to the suspension device **3**:
- Make sure that leaning ladder **1** is set up stably.
- Make sure that the leaning ladder **1** is connected securely to the respective suspension device **3**.
- When ascending and descending: 3-point support observed.
- Make sure that the vertical mass **X** between the standing position **P1** on the rung **2.1** and the grip position **P2** on the ladder beam **2.2** is at least 1 m.
- Make sure that personnel holds the grip position **P2** on the ladder beam **2.2**.
- Do not use the rung **2.1** on the suspension device **3** as a standing position.
- Make sure that the last rung **2.1** below the suspension device **3** may only be used as a standing position if there is at least 1 m between the stopping position and the standing position.

Transition is only permissible if:
- The leaning ladder **1** is located at least 1 m above the higher work surface.
- **Or** safeholds are available when transitioning to the higher work surface.

LWE/LTR 1100-009/25105-02-02/en

copyright © Liebherr-Werk Ehingen GmbH 2023

WARNING
The leaning ladder **1** is not correctly connected and used!
Personnel can fall, death, severe bodily injuries.

When the leaning ladder **1** is connected to the suspension device **3**:
- ► Adhere to the prerequisites and conditions for the use of the leaning ladder **1** in the suspension device **3**.
- ► Adhere to the 3-point support.

Access	Work
Maximum step height up to the last free rung below the suspension device **3**	Maximum step height up to the last free rung below the suspension device **3**
3-point support required	3-point support required
	Rise to 1 m: Personal protective equipment to prevent falling not required
	Step height above 1 m to 7 m **Light work**: Personal protective equipment to prevent falling not required
	Step height above 1 m to 7 m **Heavy work**: Personal protective equipment to prevent falling required

*Conditions for access and work on the leaning ladders **1** when connected to the suspension device **3**.*

LWE/LTR 1100-009/25105-02-02/en

copyright © Liebherr-Werk Ehingen GmbH 2023

7.6 Using the vertical ladder with transition aid

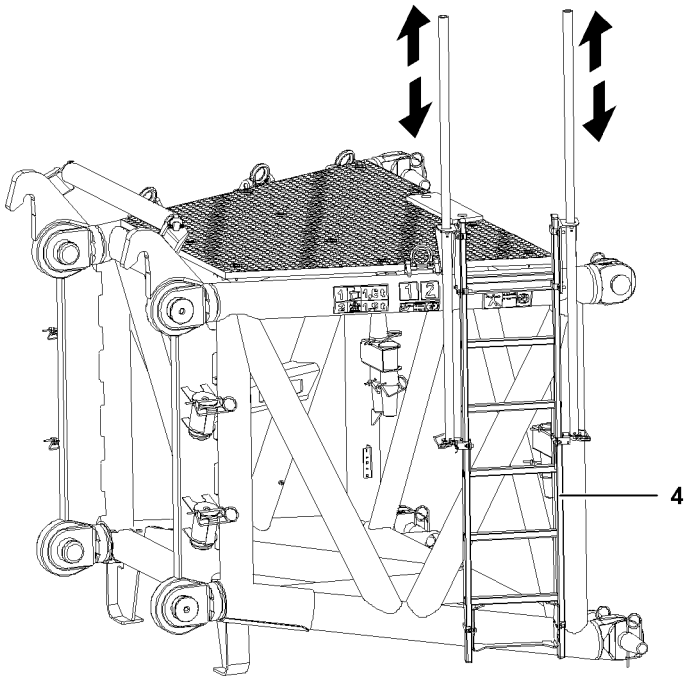

Fig.121178: Example for vertical ladder with transition aid

WARNING
Persons not secured!
Personnel can fall, death, severe injuries.

When using vertical ladders with transition aid **4**:
► Adhere to the 3-point support.

Before transitioning:
► Hook the personal protective equipment to prevent falling on a suitable location (for example: uppermost rung, safety rope or separate hook point).
► Adhere to the prerequisites and conditions for the use of vertical ladders with transition aid **4**.

Prerequisites for the use of vertical ladders with transition aid **4**:
– Make sure, a centered grip reachable from the transition edge and a possibility to support oneself with the second hand is present for transitioning.
– Make sure that the transition area is slip-resistant.
– Make sure that the ladder position can be recognized from above.
– Make sure that the weight of the tool carried along does not weigh more than 10 kg.

Access	Work
3-point support required	3-point support required
If necessary: Use a WORK POSITIONING SYSTEM (WPS) at a suitable hook point	If necessary: Use a WORK POSITIONING SYSTEM (WPS) at a suitable hook point

*Conditions for access and work on vertical ladders with transition aid **4***

LWE/LTR 1100-009/25105-02-02/en

copyright © Liebherr-Werk Ehingen GmbH 2023

Ascent	Transition
3-point support required	3-point support required
Rise to 5 m: Personal protective equipment to prevent falling not required	Rise to 1.8 m: Without transition aid: Personal protective equipment to prevent falling not required
Rise above 5 m: Fall arrest system with moving along fall arrest device or back protection required	Rise above 1.8 m: Without transition aid: Personal protective equipment to prevent falling required

*Conditions for ascent and transition to vertical ladders with / without transition aid **4***

7.7 Using the platform ladder

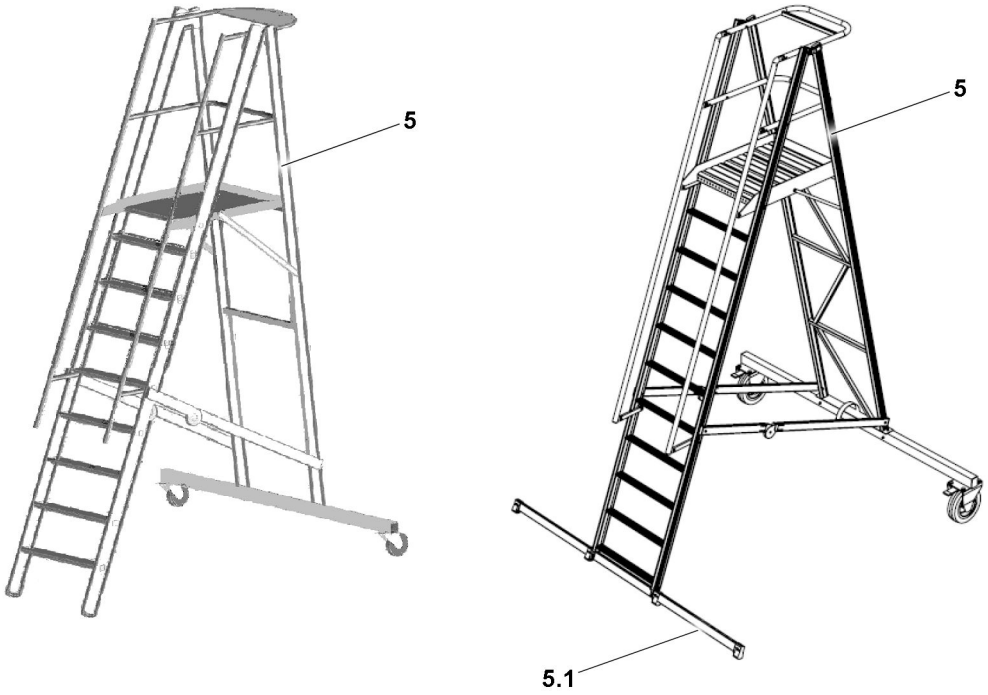

Fig.149995: Example of platform ladders

A platform ladder **5** with a cross beam **5.1** offers more stability. It is recommended to use a platform ladder with a cross beam.

WARNING
Transitioning from a platform ladder **5** to other components!
Personnel can fall, death, severe bodily injuries.
► Do **not** transition from a platform ladder **5** to other components.

WARNING
3-point support not adhered to!
Personnel can fall, death, severe bodily injuries.

When using platform ladders **5**:
► Adhere to the 3-point support.
► Adhere to the prerequisite and conditions for the use of platform ladders **5**.

Prerequisite for the use of platform ladders **5**:
– Make sure that the weight of the tool carried along does not weigh more than 10 kg.

LWE/LTR 1100-009/25105-02-02/en

copyright © Liebherr-Werk Ehingen GmbH 2023

Access	Working on the ladder	Working on the platform
Maximum rise to platform height	Maximum rise to platform height	Maximum height: Platform height
3-point support required	3-point support required	
	Rise to 1 m: Personal protective equipment to prevent falling not required	
	Step height above 1 m to 7 m **Light work**: Personal protective equipment to prevent falling not required	Platform height **Light work**: Personal protective equipment to prevent falling not required
	Step height above 1 m to 7 m **Heavy work**: Personal protective equipment to prevent falling required	Platform height **Heavy work**: Personal protective equipment to prevent falling required

*Conditions for access and work on platform ladders **5***

LWE/LTR 1100-009/25105-02-02/en

copyright © Liebherr-Werk Ehingen GmbH 2023

Empty page!

LWE/LTR 1100-009/25105-02-02/en

copyright © Liebherr-Werk Ehingen GmbH 2023

2.05 Signs on the crane

1 Signs 2

LWE/LTR 1100-009/25105-02-02/en

copyright © Liebherr-Werk Ehingen GmbH 2023

1 Signs

1.1 Note regarding the signs

All signs must be complete and always legible. Replace any damaged or missing signs immediately.

Order damaged or missing signs from Customer Service at Liebherr-Werk Ehingen GmbH.

Always provide the ID no. when ordering. For example: 11952500.

Customer-specific special equipment*: See the supplied spare parts catalog.

1.2 11952500 – California Proposition 65 Label

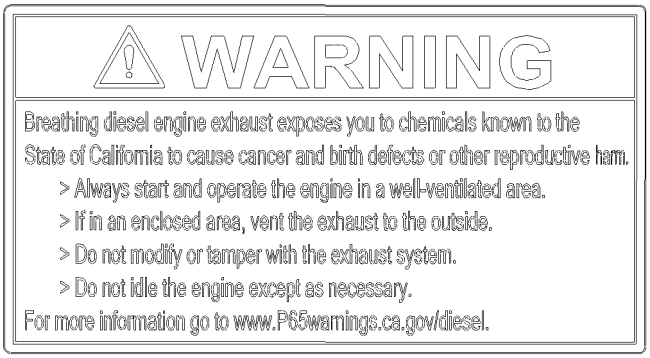

Fig.156191: California Proposition 65 Label

WARNING
Diesel engine exhaust emissions!
Damage to health such as cancer and birth defects or other reproductive harm.
- ► Always start and operate the diesel engine in properly ventilated spaces.
- ► If a diesel engine is operated in a closed space: Direct the exhaust gas to the outside.
- ► Do not convert the exhaust system or make any other changes.
- ► Do not run the engine at idle speed for longer than necessary.

1.3 772563908 – Warning of high voltage

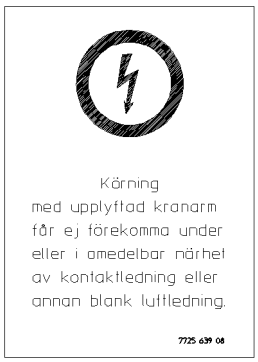

Fig.116269: Warning of high voltage

Note
- ► Only for certain countries.

LWE/LTR 1100-009/25105-02-02/en

copyright © Liebherr-Werk Ehingen GmbH 2023

1.4 772564008 – Slewing range

Fig.116270: Slewing range

Note
► Only for certain countries.

1.5 772580408 – Limitation of maximum travel speed

Fig.106035: Limitation of maximum travel speed

1.6 Vehicle height

ID no.	Vehicle height
970610408	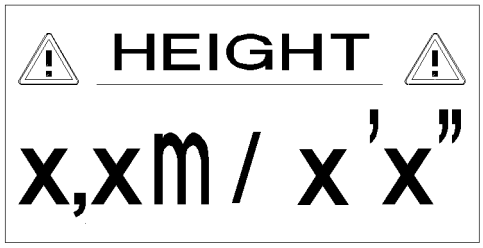
970629508	
970596108	
970608708	
979459108	

Vehicle height

LWE/LTR 1100-009/25105-02-02/en

copyright © Liebherr-Werk Ehingen GmbH 2023

Note
► Vehicle height x.x m (x.x ft).

1.7 97137170 – Luffing cylinder and counterweight collision

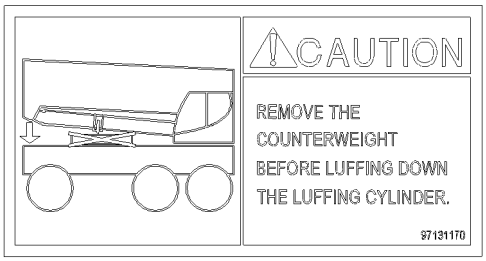

Fig.158141: Luffing cylinder and counterweight collision

NOTICE
Counterweight not disassembled from the crane chassis!
When taking the telescopic boom down, the luffing cylinder collides with the counterweight.
Damage to the luffing cylinder and counterweight.
► Before taking the luffing cylinder down: Disassemble the counterweight.

1.8 97124295 – Load stop

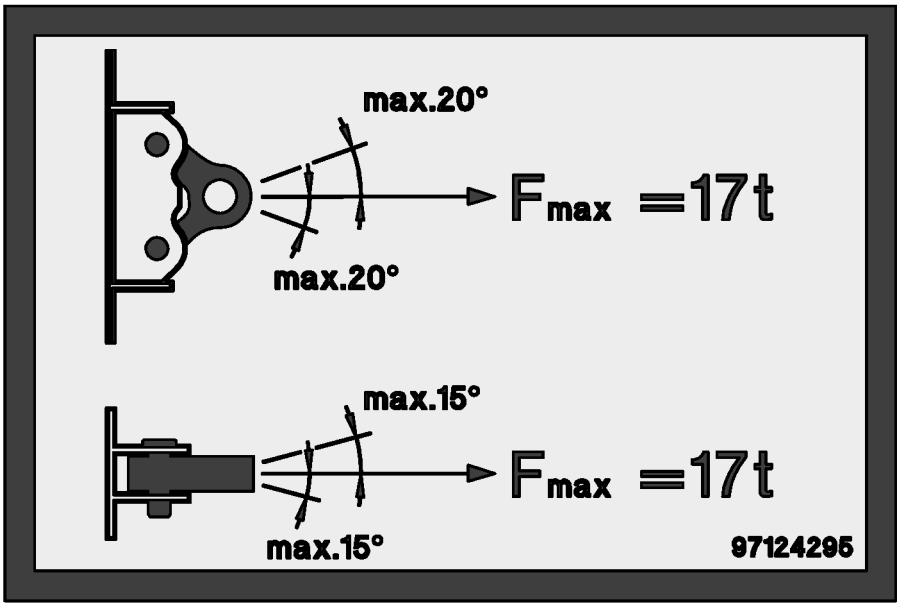

Fig.154929: Fastening the load according to the specifications on the sign

LWE/LTR 1100-009/25105-02-02/en

copyright © Liebherr-Werk Ehingen GmbH 2023

1.9 Assembly aid

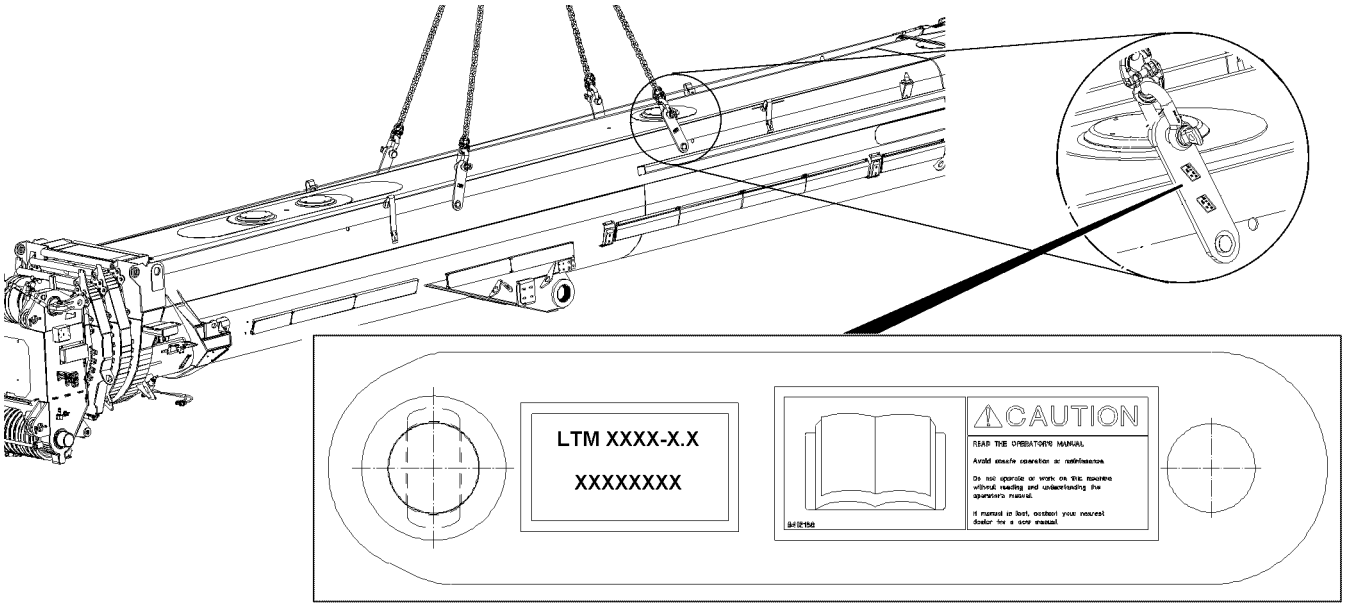

Fig.122741: Assembly aid

WARNING
Wrong assembly aids used!
The telescopic boom can fall down. Death, property damage.
► To assemble and disassemble the telescopic boom: Use solely the assembly aids that belong to the crane.

1.10 97127242 – Assembly aid

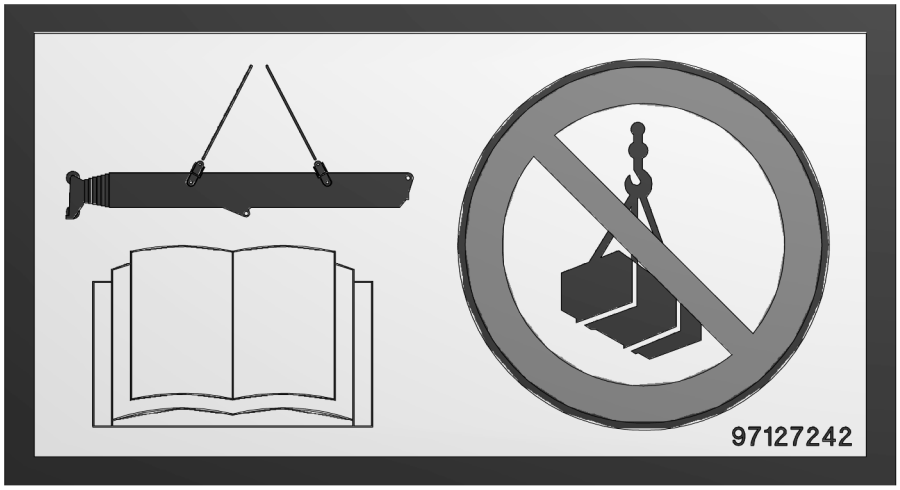

Fig.154928: Assembly aid

WARNING
Wrong assembly aids used!
The telescopic boom can fall down. Death, property damage.
► To assemble and disassemble the telescopic boom: Use solely the assembly aids that belong to the crane.
► Only use the assembly aids to assemble and disassemble the telescopic boom.

copyright © Liebherr-Werk Ehingen GmbH 2023

1.11 97151252 – Hoist device

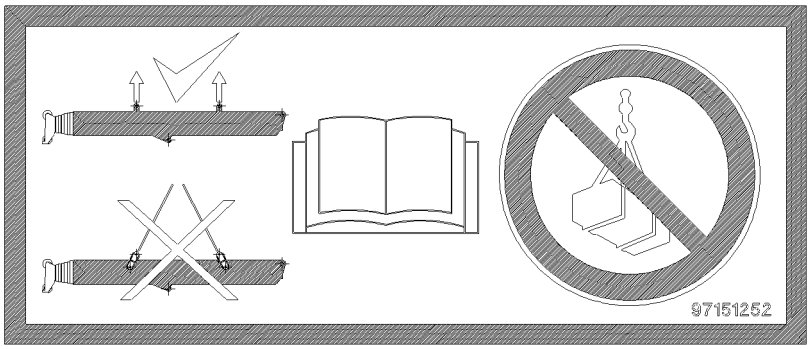

Fig.160978: Hoist device

WARNING
Faulty assembly and disassembly!
The telescopic boom can fall down. Death, property damage.
- ► Use a hoist device to assemble and disassemble the telescopic boom.
- ► To assemble and disassemble the telescopic boom: Use solely the assembly aids that belong to the crane.
- ► Only use the assembly aids to assemble and disassemble the telescopic boom.
- ► Guide the fastening equipment for the assembly aid only in a vertical position.
- ► Angular pull with the fastening equipment and the assembly aid is **prohibited**.
- ► Replace lost or incomplete operating instructions immediately.
- ► Observe and adhere to the operating instructions.

1.12 97133617 – Hydraulic connection

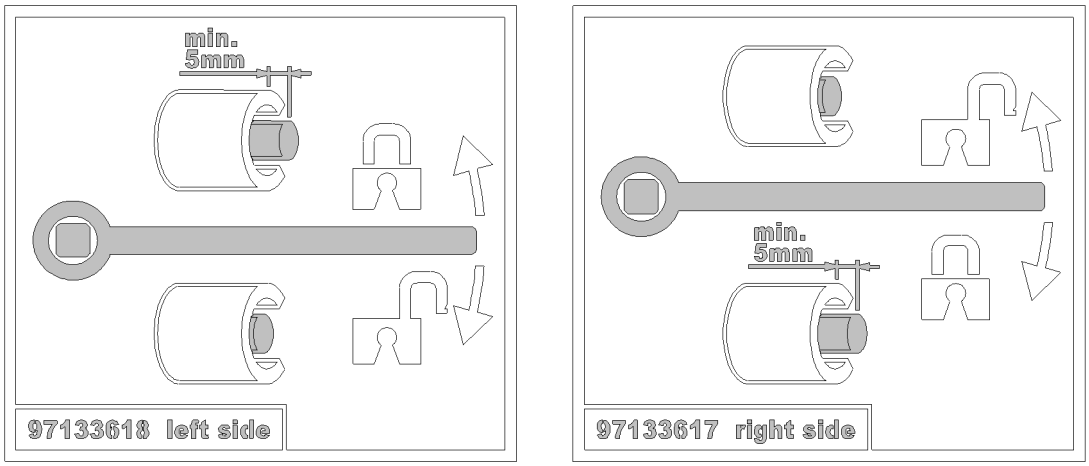

Fig.162452: Hydraulic connection

NOTICE
The crawler center section and crawler carrier hydraulic lines are not completely connected!
Emerging hydraulic oil, crawler carrier malfunction.
- ► The left and right side crawler center section and crawler carrier hydraulic lines are completely connected.
- ► After connecting the hydraulic lines: The threaded pins must project at least 5 mm over the sheath.

LWE/LTR 1100-009/25105-02-02/en

copyright © Liebherr-Werk Ehingen GmbH 2023

1.13 9412158 – Reading the operating instructions

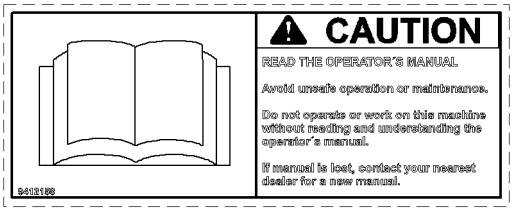

Fig.106048: Reading the operating instructions

WARNING
Danger of accident due to non-observance of operating instructions!
If the operating instructions are not read or understood, then this can lead to unsafe operation and improper maintenance.
Accidents with bodily injuries and property damage can result.
- ► Operate the crane only if the contents of the operating instructions have been read and understood.
- ► Replace lost or incomplete operating instructions immediately.

1.14 97167192 – Reading the operating instructions

Fig.167709: Reading the operating instructions

WARNING
Read the operating instructions!
If the operating instructions are not read or understood, then this can lead to unsafe operation and improper maintenance.
Accidents with bodily injuries and property damage can result.
- ► Operate the crane only if the contents of the operating instructions have been read and understood.
- ► Replace lost or incomplete operating instructions immediately.

1.15 97004046 – Safety harness, maximum two persons

Fig.115119: Safety harness, maximum two persons

copyright © Liebherr-Werk Ehingen GmbH 2023

DANGER
Danger of accidents due to overloaded safety ropes!
If safety ropes are used by more than two persons, then the safety ropes can be overloaded and fail in case of an accident.
Personnel can be severely injured or killed.
► A maximum of two people may use the safety ropes on the left and right to secure themselves against falling.

1.16 97164873 – Safety harness, maximum two persons

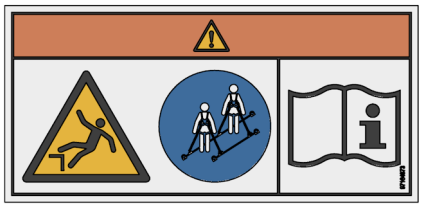

Fig.167710: Safety harness, maximum two persons

DANGER
Danger of accidents due to overloaded safety ropes!
If safety ropes are used by more than two persons, then the safety ropes can be overloaded and fail in case of an accident.
Personnel can be severely injured or killed.
► A maximum of two people may use the safety ropes on the left and right to secure themselves against falling.

1.17 97017585 – Falling telescopic boom during disassembly / assembly

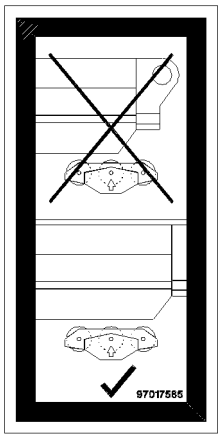

Fig.118467: Falling telescopic boom during disassembly / assembly

WARNING
Death due to falling telescopic boom!
► Make sure that all pulleys are touching and supporting during the assembly and disassembly of the telescopic boom.

LWE/LTR 1100-009/25105-02-02/en

copyright © Liebherr-Werk Ehingen GmbH 2023

1.18 97018351 – Falling telescopic boom during transport

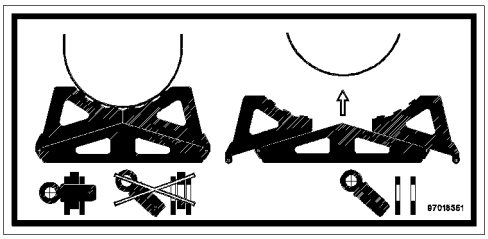

Fig.118466: Falling telescopic boom during transport

WARNING
Fatal accidents due to falling telescopic boom during transport!
► Pin and secure the transport bracket on the left and right.

1.19 97018564 – Falling telescopic boom during transport

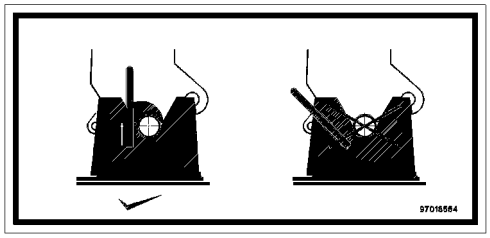

Fig.118533: Falling telescopic boom during transport

WARNING
Fatal accidents due to falling telescopic boom during transport!
► Lock the telescopic boom in the head receptacle.

1.20 97027147 – Overloading of the combi box is prohibited

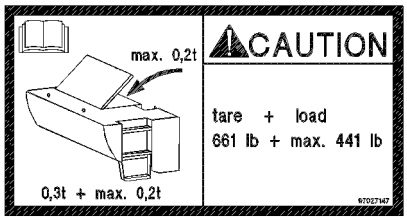

Fig.113829: Overloading of the combi box is prohibited

WARNING
Danger of overload!
If the combi box is subjected to a load of more than 0.2 t , the combi box can be damaged!
► The own weight of the combi box is 0.3 t and may be loaded with a maximum payload of 0.2 t.
► Load the combi box with a maximum weight of 0.2 t.

LWE/LTR 1100-009/25105-02-02/en

copyright © Liebherr-Werk Ehingen GmbH 2023

1.21 97036733 – Fastening point

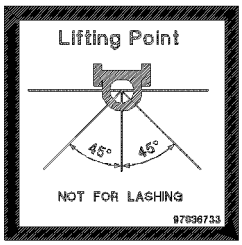

Fig.121184: Fastening point

WARNING
Damage to the fastening points!
- ► Use the fastening point solely to lift the load.
- ► Observe the maximum permissible fastening angle.

Note
- ► Fastening points and fastening angle

1.22 Suspended load fastening point

ID no.	Suspended load fastening point
97038434	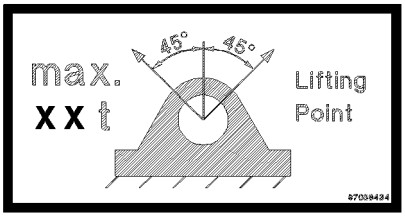 *Fastening point*
97037482	
97039068	

WARNING
Mortal danger if the load falls down!
If the maximum suspended load or the maximum fastening angle is exceeded, the load can fall down and kill personnel.
- ► Observe the maximum permissible suspended load and fastening angle.

LWE/LTR 1100-009/25105-02-02/en

copyright © Liebherr-Werk Ehingen GmbH 2023

1.23 Suspended load fastening point

ID no.	Suspended load fastening point
97037221	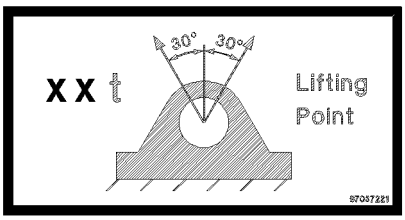 *Fastening point*
97037223	

WARNING
Mortal danger if the load falls down!
If the maximum suspended load or the maximum fastening angle is exceeded, the load can fall down and kill personnel.
► Observe the maximum permissible suspended load and fastening angle.

1.24 Suspended load fastening point

ID no.	Suspended load fastening point
97037219	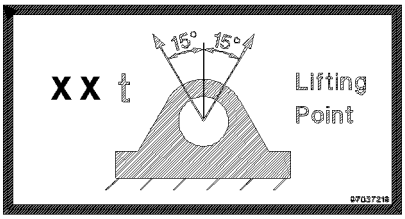 *Fastening point*

WARNING
Mortal danger if the load falls down!
If the maximum suspended load or the maximum fastening angle is exceeded, the load can fall down and kill personnel.
► Observe the maximum permissible suspended load and fastening angle.

copyright © Liebherr-Werk Ehingen GmbH 2023

1.25 97037625 – Suspended load Fastening points / rigging points

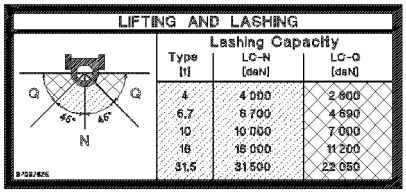

Fig.119988: Fastening points / rigging points

Note
► Fastening points and rigging points

1.26 9402377 – Fastening point / lifting point

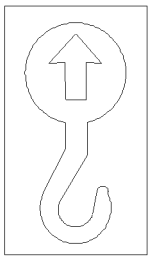

Fig.127586: Fastening point / lifting point

Note
► Fastening point / lifting point

LWE/LTR 1100-009/25105-02-02/en

copyright © Liebherr-Werk Ehingen GmbH 2023

1.27 97140080 – Assembling the fixed lattice jib

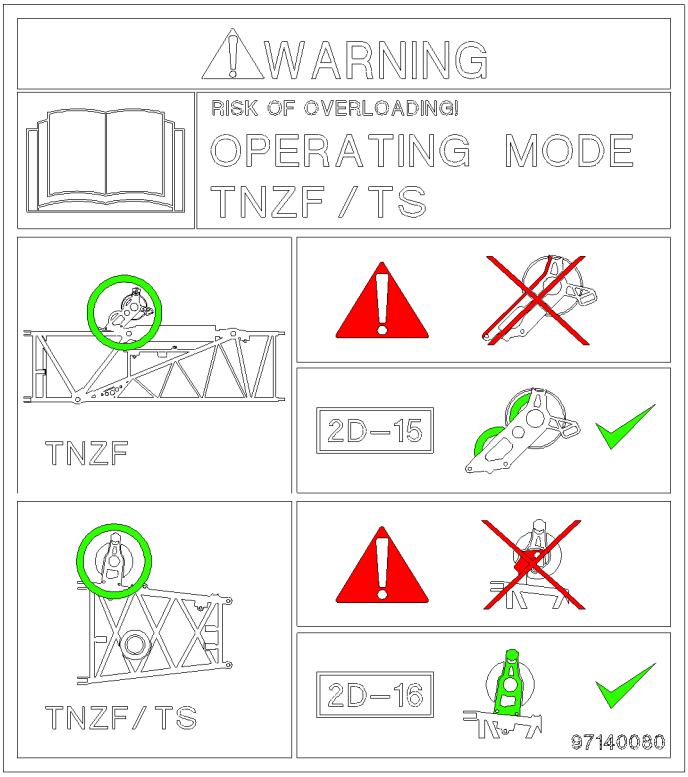

Fig.163345: Permissible components

WARNING
Incorrect assembly of the lattice sections!
The boom can break and the load can fall down.
Death or severe bodily injuries.
- ► Assemble the lattice sections according to the separately supplied assembly drawings.
- ► Any other arrangement of the lattice sections than specified in the separately supplied assembly drawings is prohibited.
- ► Assemble the lattice jib according to its descriptions.

1.28 97106824 – Installing the N-assembly unit

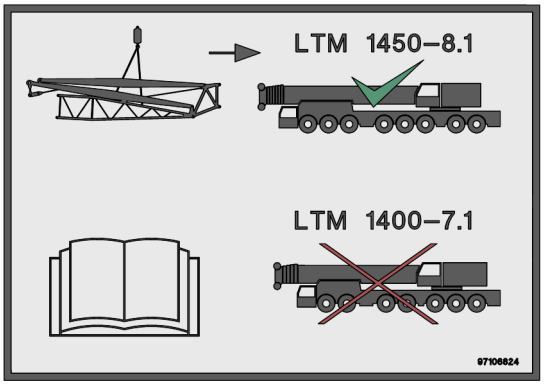

Fig.147594: Installing the N-assembly unit

LWE/LTR 1100-009/25105-02-02/en

copyright © Liebherr-Werk Ehingen GmbH 2023

WARNING
N-assembly unit installed on an impermissible crane type!
Death, severe bodily injuries, property damage.
- ► Use N-assembly units marked with this sign only for crane type LTM 1450-8.1.
- ► Observe and adhere to the operating instructions.

1.29 97096132 – Fastening points for N-assembly unit

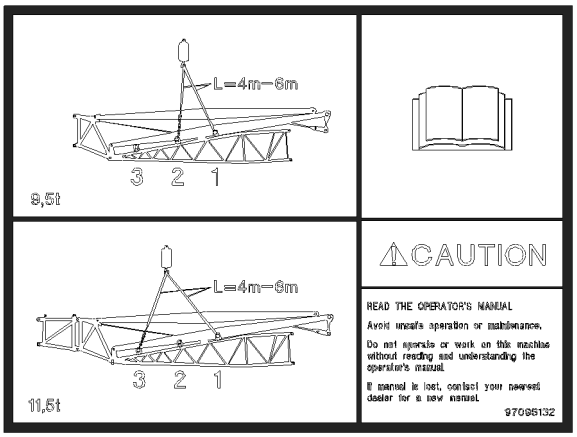

Fig.144774: N-assembly unit fastening points

WARNING
Incorrectly selected fastening points!
The N-assembly unit can tip over and kill personnel.
- ► Fasten the N-assembly unit only on the intended fastening points.
- ► Use fastening equipment with the correct strand length.
- ► Observe and adhere to the operating instructions.
- ► Replace lost or incomplete operating instructions immediately.

1.30 97036735 – Fastening point for lattice section

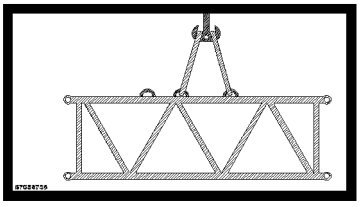

Fig.116266: Fastening point for lattice section

Note
- ► Fastening points for lattice section

LWE/LTR 1100-009/25105-02-02/en

copyright © Liebherr-Werk Ehingen GmbH 2023

1.31 97036736 – Fastening point for lattice sections

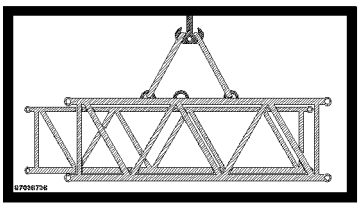

Fig.116267: Fastening point for lattice sections

Note
► Fastening points for lattice sections

1.32 97038442 – Fastening point for lattice section

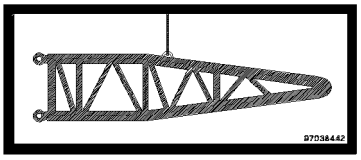

Fig.116288: Fastening point for lattice sections

Note
► Fastening point for lattice section.

1.33 97038452 – Fastening point for lattice sections

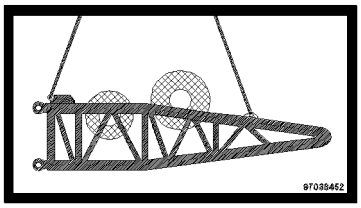

Fig.116289: Fastening point for lattice sections

Note
► Fastening points for lattice sections

LWE/LTR 1100-009/25105-02-02/en

copyright © Liebherr-Werk Ehingen GmbH 2023

1.34 97038454 – Fastening point for lattice sections

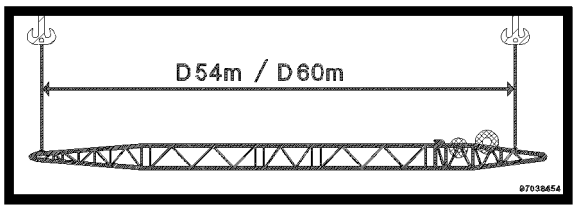

Fig.116290: Fastening point for lattice sections

Note
► Fastening points for lattice sections

1.35 97037871 – Fastening points for lattice sections

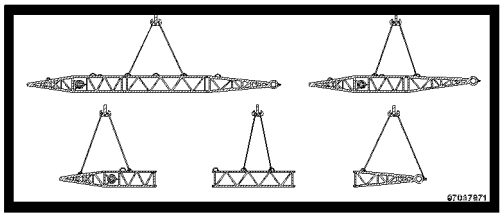

Fig.116292: Fastening points for lattice sections

Note
► Fastening points for lattice sections

1.36 97053410 – Fastening equipment

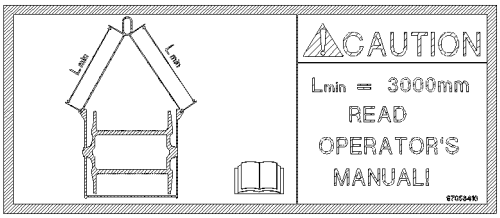

Fig.155031: Fastening equipment

NOTICE
The fastening equipment is too short!
The fastening equipment is overloaded, the load can fall down.
The assembly procedure cannot be carried out.
► Use fastening equipment with a minimum length of 3000 mm.
► Use only authorized fastening equipment with a suitable load bearing capacity.
► Observe and adhere to the operating instructions.

LWE/LTR 1100-009/25105-02-02/en

copyright © Liebherr-Werk Ehingen GmbH 2023

1.37 97057767 – Fastening points for lattice sections

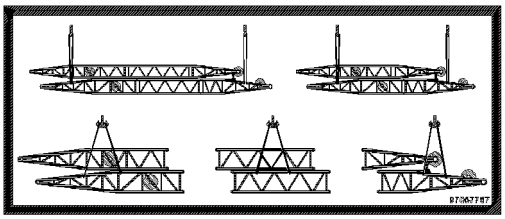

Fig.121181: Fastening points for lattice sections

Note
► Fastening points for lattice sections

1.38 97057524 – Fastening point for assembly of lattice sections

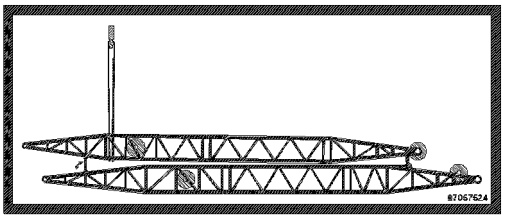

Fig.121182: Fastening point for assembly of lattice sections

Note
► Fastening point for assembly of lattice sections.

1.39 97057097 – Fastening point to turn the component

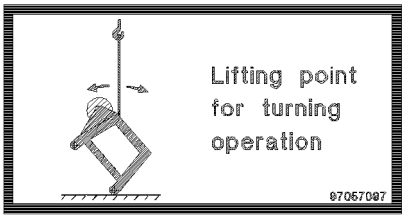

Fig.119987: Fastening point to turn the component

Note
► Fastening point to turn the component

copyright © Liebherr-Werk Ehingen GmbH 2023

1.40 97039035 – Assembly unit suspended load

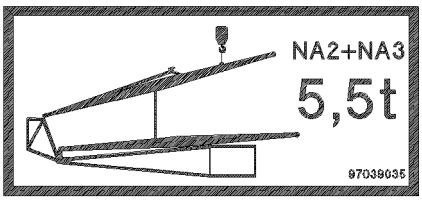

Fig.117348: Suspended load Assembly unit

Note
► Notice the suspended load.

1.41 97059339 – Suspended load Derrick pivot section

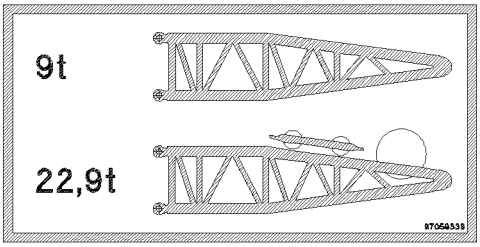

Fig.127469: Derrick pivot section suspended load

Note
► Derrick pivot section suspended load.
► Derrick pivot section suspended load with rope winch and luffing pulley block.

1.42 97068257 – Fastening point for end section

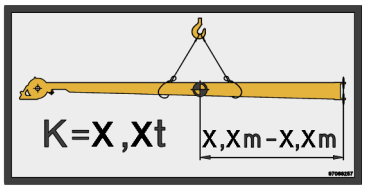

Fig.147595: Fastening point for end section

K = Weight in tons (t)

X.X to X.X = Distance of center of gravity in meters (m)

WARNING
End section improperly fastened!
The end section can tip over and fall down.
Death, severe bodily injuries, property damage.
► Fasten the end section only with two hooks.
► Select the fastening point such that the center of gravity is located within the fastening points.

LWE/LTR 1100-009/25105-02-02/en

copyright © Liebherr-Werk Ehingen GmbH 2023

1.43 97095312 – Suspended load and fastening points for counterweight frame

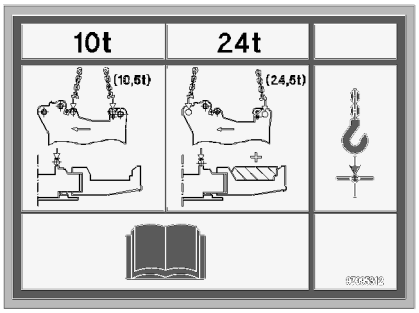

Fig.148126: Suspended load and fastening points for counterweight frame

Note
- ► Observe the suspended load and fastening points for counterweight frame.
- ► Observe and adhere to the operating instructions.

1.44 97003109 – Accessing the step ladder

Fig.109032: Accessing the step ladder

WARNING
Danger of falling!
If the step ladder is accessed before it is completely folded out, the assembly personnel can fall and be fatally injured.
- ► Before accessing the step ladder, fold the lowest step out.

1.45 97003110 – Folding the step ladder in and out

Fig.109033: Folding the step ladder in and out

LWE/LTR 1100-009/25105-02-02/en

copyright © Liebherr-Werk Ehingen GmbH 2023

WARNING
Danger of falling!
When folding the step ladder in or out or when driving the crane, no personnel may remain on the step ladder or within the entire danger zone! Personnel can fall from the step ladder or be killed as the step ladder folds in or out.
► Fold the step ladder in and out only if there are no persons in the danger zone.

1.46 97006167 – Identifying the support base

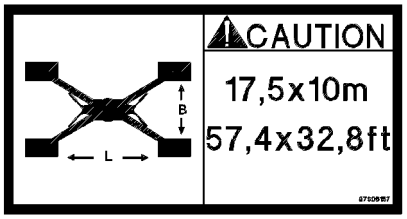

Fig.116285: Identifying the support base

Note
► The support beams are swung out / extended to a support base of 17.50 m x 10.0 m ; (57.4 ft x 32.8 ft)

1.47 97006167 – Identifying the support base

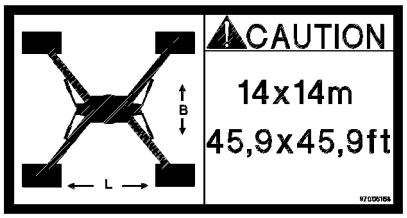

Fig.116286: Identifying the support base

Note
► The support beams are swung out / extended to a support base of 14.0 m x 14.0 m ; (45.9 ft x 45.9 ft).

1.48 97008514 – Warning of head injuries

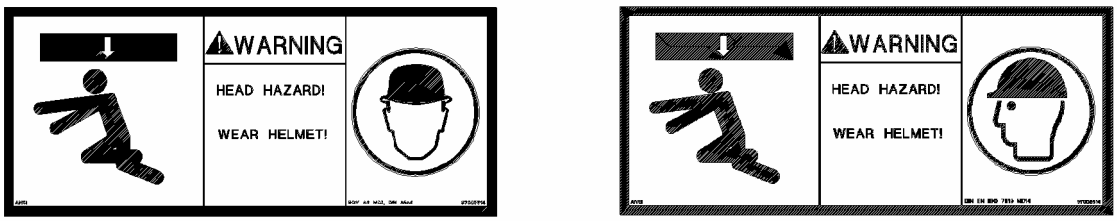

Fig.110550: Warning of head injuries

LWE/LTR 1100-009/25105-02-02/en

copyright © Liebherr-Werk Ehingen GmbH 2023

WARNING
Head injuries!
Due to falling parts, personnel can be killed or severely injured.
Hitting the head can cause injuries.
► Protect your head with a hard hat.
► Proceed in an aware and safe manner.

1.49 97009799 – Data logger

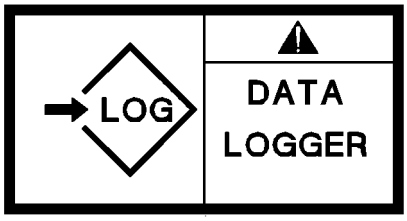

Fig.116261: Data logger

Note
► Data logger

1.50 97012949 – Maximum load

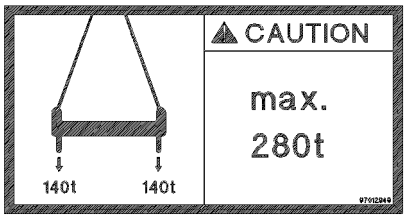

Fig.116263: Maximum load

CAUTION
Property damage due to overload!
If the cross beam is subjected to a higher load than permissible, damage can occur.
► Do not overload the cross beam.

1.51 97012095 – Maximum load

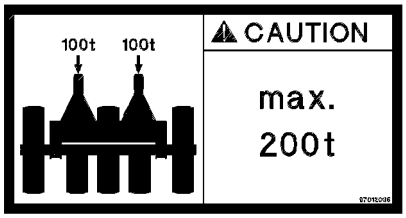

Fig.116265: Maximum load

LWE/LTR 1100-009/25105-02-02/en

copyright © Liebherr-Werk Ehingen GmbH 2023

CAUTION
Property damage due to overload!
If the roller cart is subjected to a higher load than permissible, damage can occur.
► Do not overload the roller cart.

1.52 97069053 – Storage boxes open

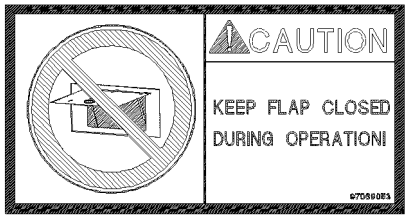

Fig.144736: Storage boxes open

NOTICE
Storage boxes open!
Damage of storage boxes.
► Before crane operation and before driving the crane, close the storage boxes.

1.53 97068370 – Closing the cab door

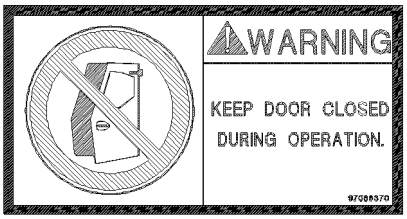

Fig.144737: Closing the cab door

WARNING
Cab door during crane operation **not** closed!
The crane operator can fall down.
Death, severe bodily injuries.
► Close the cab door during crane operation.

1.54 97053409 – Entanglement hazard during winch operation

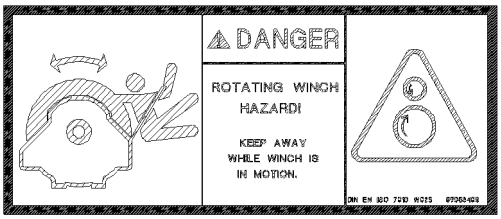

Fig.144738: Entanglement hazard during winch operation

LWE/LTR 1100-009/25105-02-02/en

copyright © Liebherr-Werk Ehingen GmbH 2023

DANGER
Entanglement hazard during winch operation!
Body parts can be caught and entangled.
Death, severe bodily injuries, property damage.
► Do **not** stand in the hazard area of the winch.

1.55 97011689 – Danger of crushing

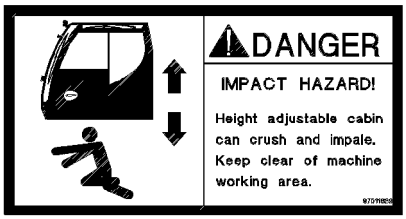

Fig.111047: Danger of crushing

DANGER
Danger of fatal injury!
► It is prohibited to remain in the danger zone of the cab.
► Stay away from the movement range of the cab.

1.56 97011690 – Overload of crane cab is prohibited

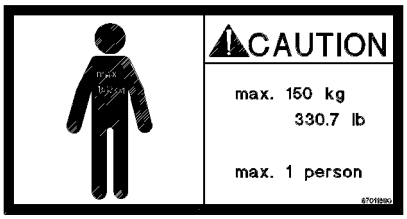

Fig.111048: Overloading the cab is prohibited

WARNING
Danger of overload!
If the crane cab is subjected to a load of more than 150 kg then the crane cab or the telescoping arm can be damaged!
► Only one person at a time may remain in the crane cab!
► Do not subject the crane cab to a weight of more than 150 kg.

1.57 97016304 – Refueling

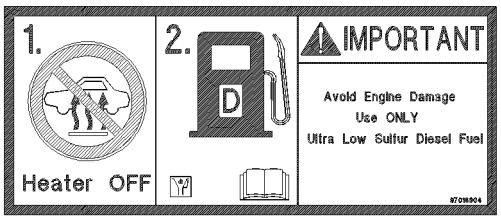

Fig.155029: Refueling

LWE/LTR 1100-009/25105-02-02/en

copyright © Liebherr-Werk Ehingen GmbH 2023

WARNING
Danger of fire and explosion!
► Turn the auxiliary heater* off approx. 3 minutes before refueling the fuel tank.
► Before refueling the fuel tank, turn the engine off.

NOTICE
Property damage to the engine!
If incorrect fuel is added, the engine can be severely damaged.
► Refuel with fuel according to the engine manufacturer's operating instructions.

1.58 97016304 – Refueling

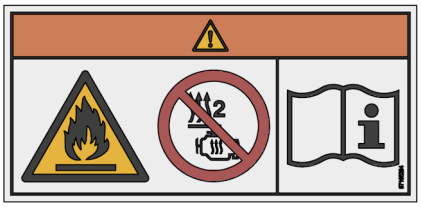

Fig.167718: Refueling

WARNING
Danger of fire and explosion!
► Turn the auxiliary heater* off approx. 3 minutes before refueling the fuel tank.
► Before refueling the fuel tank, turn the engine off.
► Observe and adhere to the operating instructions.

1.59 97016304 – Refueling

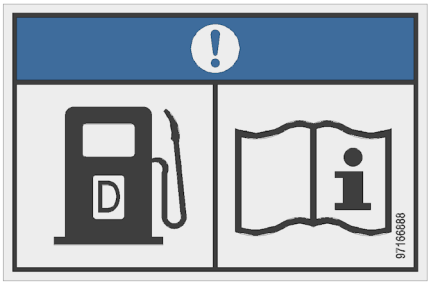

Fig.167717: Add fuel

NOTICE
Property damage to the engine!
If incorrect fuel is added, the engine can be severely damaged.
► Refuel with fuel according to the engine manufacturer's operating instructions.

LWE/LTR 1100-009/25105-02-02/en

copyright © Liebherr-Werk Ehingen GmbH 2023

1.60 97046488 – Corrosion inhibitor - antifreeze fluids

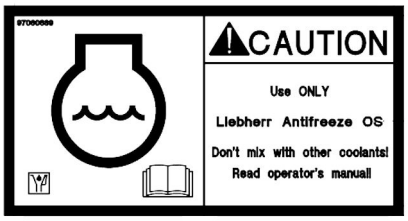

Fig.127585: Corrosion inhibitor - antifreeze fluids

NOTICE
Mixing of different corrosion inhibitor-antifreeze agents!
Damage to the cooling system.
► Fill the cooling system with corrosion inhibitor-antifreeze, see Service fill list.

1.61 97016392 – Crushing danger for feet

Fig.112474: Crushing danger for feet

WARNING
Crushing danger for feet!
Feet can be trapped or crushed.
► Keep feet away from the crushing area.

1.62 97012737 – Danger of accident

Fig.111748: Danger of accident

WARNING
Danger of accident!
► Close the windshield when driving.

copyright © Liebherr-Werk Ehingen GmbH 2023

1.63 97023034 – Disassembling

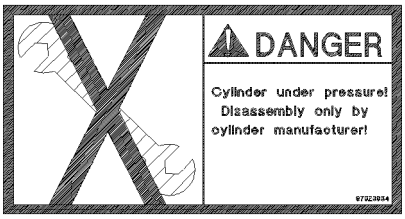

Fig.116264: Disassembling

DANGER
Danger of fatal injury due to repair!
The cylinder is pressurized.
Disassembly of the cylinder can result in death or serious injuries.
► The cylinder may only be removed by the manufacturer.

1.64 97036732 – Access via 3-point support

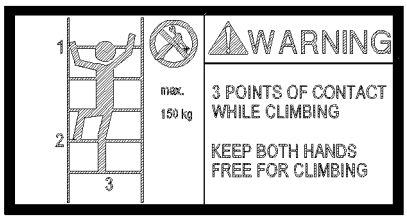

Fig.115172: Access via 3-point support

DANGER
Access via 3-point support!
While climbing up and down via a ladder, assembly personnel can fall down and be injured severely.
► When climbing up and down, a 3-point support must be ensured.
► Use ladders only up to a weight of 150 kg.
► When climbing up and down, hands must be free.

A 3-point support is ensured when:
– Two legs are standing safely and one hand has a safe hold.
– Two hands have a safe hold and one leg is standing safely.

1.65 97003112 – Maximum suspended load

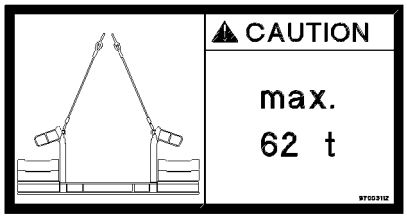

Fig.116282: Maximum suspended load

LWE/LTR 1100-009/25105-02-02/en

copyright © Liebherr-Werk Ehingen GmbH 2023

WARNING
Maximum suspended load!
If the maximum suspended load of 62 t is exceeded, the load can fall down and kill personnel.
► Observe the maximum permissible suspended load.

1.66 97036917 – Maximum suspended load

ID no.	Suspended load fastening point
97047630	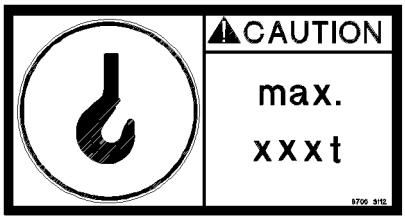
97036917	
97047630	
97077237	

WARNING
Mortal danger if the load falls down!
If the maximum suspended load is exceeded, the load can fall down and kill personnel.
► Observe the maximum permissible suspended load.

1.67 97037383 – Urea

Fig.115173: Urea

CAUTION
Property damage due to incorrect operating fluids!
When refilling urea and the urea that is specified by the engine manufacturer is not used, then damage can occur.
► Refill **exclusively** urea.
► See the engine manufacturer's operating instructions.

copyright © Liebherr-Werk Ehingen GmbH 2023

1.68 97165133 – Urea

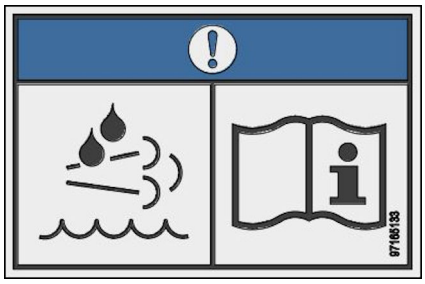

Fig.167711: Urea

CAUTION
Incorrect operating fluids!
Property damage due to filling with a urea that is different than what is specified by the engine manufacturer.
- ► Refill **exclusively** with the specified urea.
- ► See the engine manufacturer's operating instructions.

1.69 97037952 – Danger of fatal injury due to electric shock

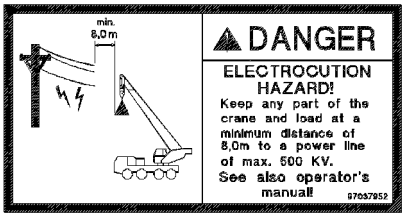

Fig.116280: Danger of fatal injury due to electric shock

DANGER
Danger of fatal injury due to electric shock!
If the boom or the hoist rope is powered with electric voltage, then death or severe injuries can occur if anyone touches the crane, the vehicle or the load.
- ► Keep a minimum distance of 8.0 m from current carrying parts.

1.70 97042730 – Falling luffing cylinder

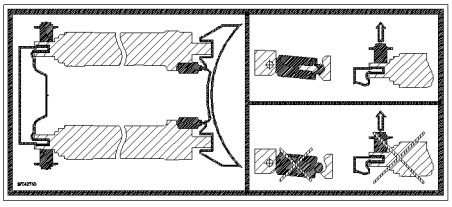

Fig.118465: Falling luffing cylinder

WARNING
Mortal danger if the luffing cylinders fall down!
- ► Make sure, before unpinning the luffing cylinder, that the erection cylinders are placed on both luffing cylinders.

LWE/LTR 1100-009/25105-02-02/en

copyright © Liebherr-Werk Ehingen GmbH 2023

1.71 97047810 – Pinning brackets

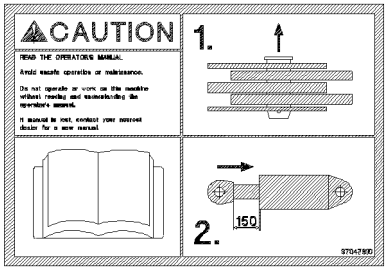

Fig.121709: Pinning brackets

NOTICE
Damage to the brackets due to collision!
► Make sure, before pinning and unpinning, that the hydraulic cylinder is set to a distance of 150 mm.

1.72 97042797 – Overload of components

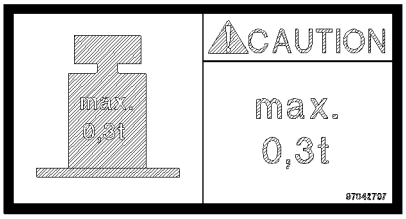

Fig.117347: Overload of components

DANGER
Danger of falling due to overload!
If a component, such as a sliding beam platform, is subjected to a weight of more than 0.3 t , then the sliding beam platform can break.
Personnel can fall down and be severely injured or killed.
► Subject the component (sliding beam platform) to no more than maximum 0.3 t.

1.73 97041305 – Overload of components

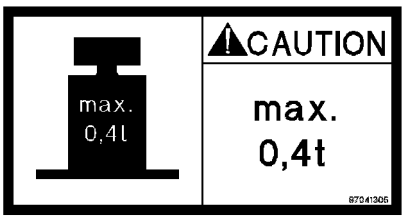

Fig.116792: Warning of overload of components

DANGER
Danger of falling due to overload!
If a component, such as a sliding beam platform, is subjected to a weight of more than 0.4 t , then the sliding beam platform can break.
Personnel can fall down and be severely injured or killed.
► Subject the component (sliding beam platform) to no more than maximum 0.4 t.

copyright © Liebherr-Werk Ehingen GmbH 2023

1.74 97070905 – Disassembling the auxiliary jib (boom nose)

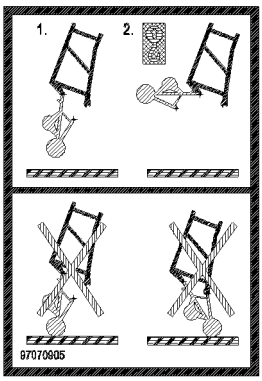

Fig.122645: Disassembling the auxiliary jib (boom nose)

NOTICE
Property damage

Before taking the N-head down:
► Disassemble the auxiliary jib (boom nose).

1.75 97077304 – Positioning the outrigger pad

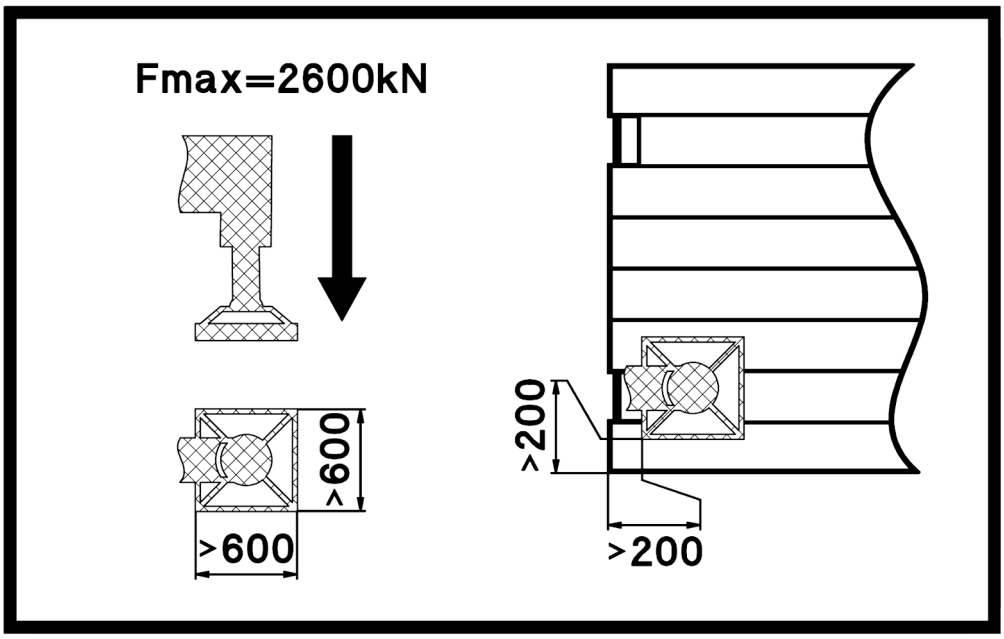

Fig.154913: Positioning the outrigger pad

WARNING
Outrigger pad incorrectly positioned!
The crane can topple over. Death, property damage.
► Position the outrigger pad **in the center** or according to the description in chapter 1.03.10 under the support plate.

LWE/LTR 1100-009/25105-02-02/en

copyright © Liebherr-Werk Ehingen GmbH 2023

1.76 9707704 – Driving with the outrigger pad

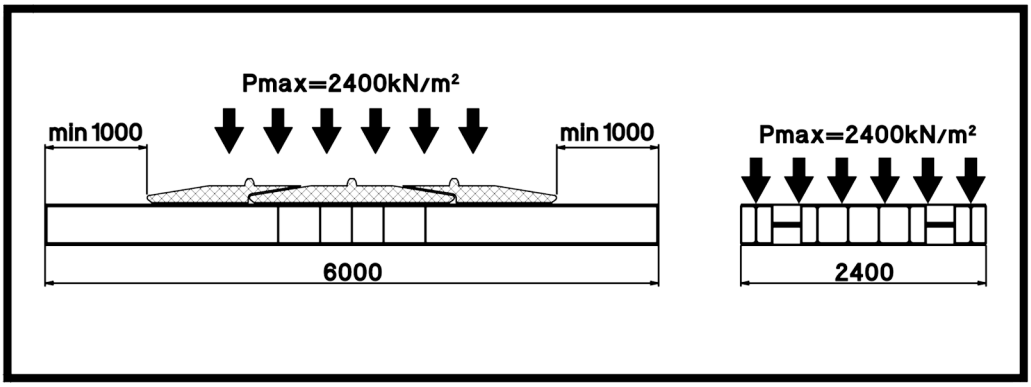

Fig.154912: Driving with the outrigger pad

WARNING
Outrigger pad incorrectly driven!
The crane can topple over. Death, property damage.
► Drive with the outrigger pad according to the specifications on the sign.

1.77 Permissible support pressures on the outrigger pad [A-B-C]

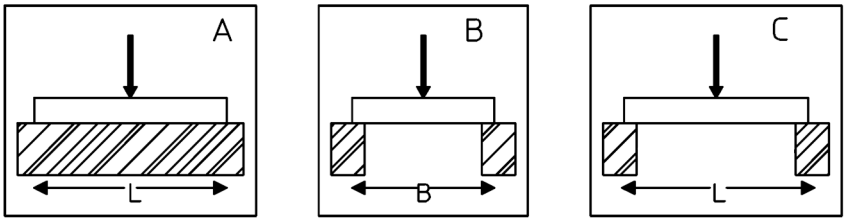

Fig.154815: Permissible support pressures on the outrigger pad for application cases [A-B-C]

1.78 Permissible support pressures on the outrigger pad [A-B-C-D]

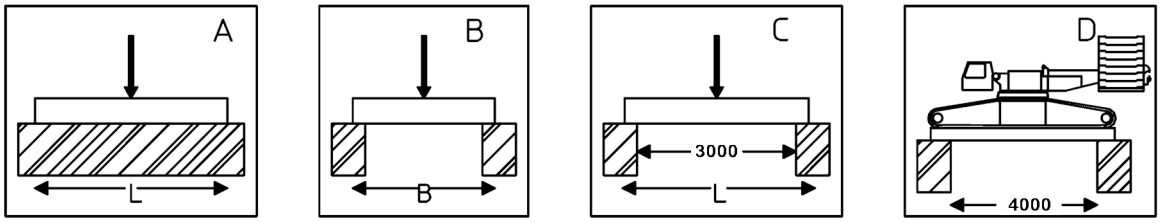

Fig.154816: Permissible support pressures on the outrigger pad for application cases [A-B-C-D]

LWE/LTR 1100-009/25105-02-02/en

copyright © Liebherr-Werk Ehingen GmbH 2023

1.79 97033982 – Assembling / disassembling the Derrick pivot section

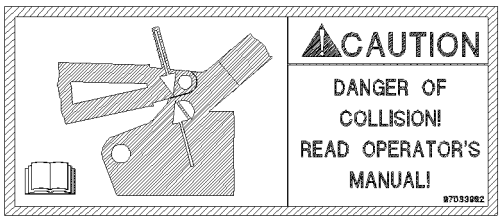

Fig.127470: Assembling / disassembling the Derrick pivot section

NOTICE
Derrick pivot section assembly procedure carried out incorrectly!

Damage to the Derrick pivot section receptacle.
► Perform the assembly procedure according to the operating instructions.

1.80 Maximum sound power level

ID no.	Maximum sound power level
975809508	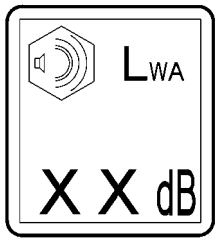 *Maximum sound power level*
971693308	
971693408	
971693508	
971693608	

Note
► The maximum sound power level can be read on the outside of the crane cab or in the CE declaration of conformity.

1.81 97097951 – Counterweight

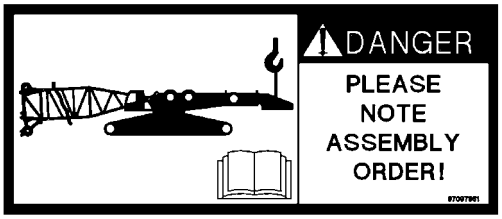

Fig.146805: Counterweight

LWE/LTR 1100-009/25105-02-02/en

copyright © Liebherr-Werk Ehingen GmbH 2023

DANGER
Counterweight not secured!
Falling counterweight death, property damage.
► Observe and adhere to the operating instructions.
► Do not remove the auxiliary crane until the counterweight is pinned and secured on both sides with the turntable.

1.82 97100047 – Retaining pins for erection rack

Fig.158614: Retaining pins for erection rack

DANGER
Retaining pins not inserted!
Falling ladder and erection rack, death, property damage.
► Before stepping on the erection rack ladder: Insert and secure the erection rack retaining pins.

1.83 97100629 – Connector pins for erection rack / guy rods

Fig.158615: Connector pins for erection rack / guy rods

DANGER
Unpin the erection rack / guy rods connector pins!
Falling ladder and erection rack, death, property damage.

Before unpinning the erection rack / guy rods:
► Insert and secure the erection rack retaining pins.

LWE/LTR 1100-009/25105-02-02/en

copyright © Liebherr-Werk Ehingen GmbH 2023

1.84 97107101 – Unlocking the telescopic boom locking pin

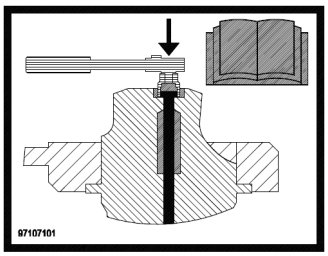

Fig.148421: Unlocking the telescopic boom locking pin

Note
- ► The locking pin may be unlocked according to the operating instructions.
- ► Observe and adhere to the operating instructions.

1.85 97107199 – Do not unlock the telescopic boom locking pin

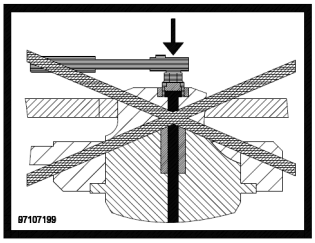

Fig.148422: Do not unlock the telescopic boom locking pin

WARNING
Impermissible telescopic boom locking pin unlocked!
The telescopic boom can retract in an uncontrolled manner.
Death, severe bodily injuries, property damage.

If a locking pin is marked with this sign:
- ► **Never** unlock the locking pin.

1.86 97128894 – Counterweight and counterweight radius

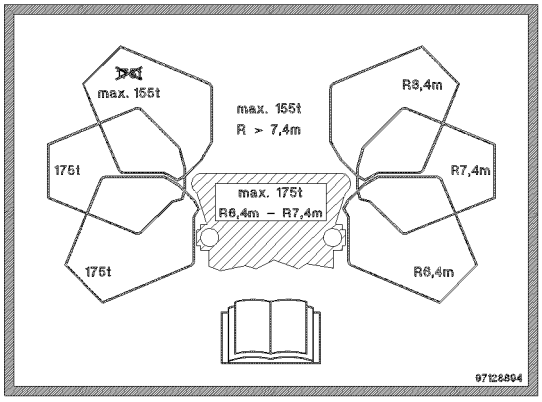

Fig.155030: Counterweight and counterweight radius

LWE/LTR 1100-009/25105-02-02/en

copyright © Liebherr-Werk Ehingen GmbH 2023

Counterweight radius	Maximum permissible counterweight
R- 6.4 m – R- 7.4 m	175.0 t
R- > 7.4 m	155.0 t

Note
- ► This notice sign indicates the maximum permissible counterweight for the different weight radii.
- ► Observe and adhere to the operating instructions.

1.87 97131530 – Reduced crawler crane track width

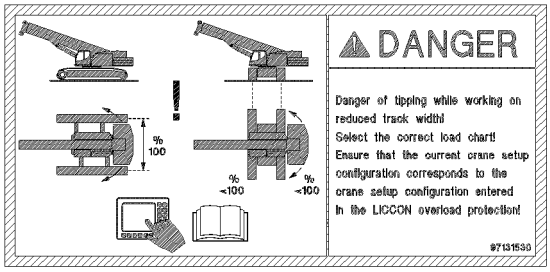

Fig.156174: Reduced crawler crane track width

DANGER
Danger of tipping when working with a reduced track width!
- ► Select the correct load chart.
- ► Make sure that the actual crane set up configuration and the set up configuration entered in the LICCON overload protection match.

1.88 977055908 – Fastening point for swingable sliding beam

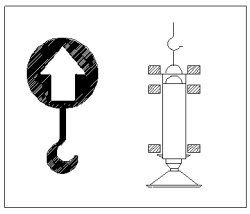

Fig.106894: Fastening point for swingable sliding beam

1.89 971494208 – Limitation of maximum travel speed

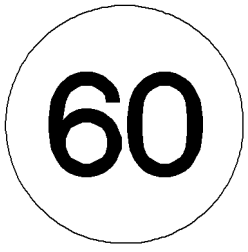

Fig.106034: Limitation of maximum travel speed

copyright © Liebherr-Werk Ehingen GmbH 2023

1.90 971539808 – Warning notice for unpinning the auxiliary boom on the pulley head

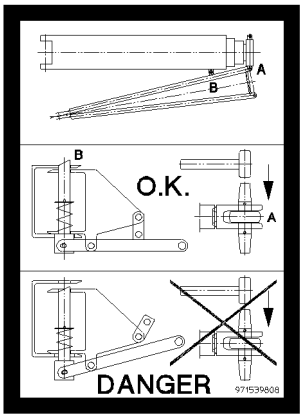

Fig.106040: Warning notice for unpinning the auxiliary boom on the pulley head

DANGER
Danger of fatal injury!
If the auxiliary boom is not locked correctly to the pivot section, it can fall down.
Personnel can be severely injured or killed.
► Unpinning the auxiliary boom on the pulley head is prohibited.

1.91 971539908 – Warning notice for unlocking the auxiliary boom

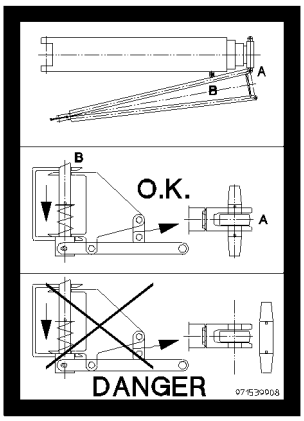

Fig.106041: Warning notice for unlocking the auxiliary boom

DANGER
Danger of fatal injury!
If the auxiliary boom is not locked correctly to the pulley head, it can fall down.
Personnel can be severely injured or killed.
► Unpinning the auxiliary boom on the pivot section is prohibited.

LWE/LTR 1100-009/25105-02-02/en

copyright © Liebherr-Werk Ehingen GmbH 2023

1.92 978673908 – Warning of suspended load

Fig.106026: Warning of suspended load

DANGER
Danger of fatal injury under suspended load!
► Standing under suspended loads is prohibited.
► Stay away from the working range of the machine.

1.93 978674008 – Access for unauthorized personnel prohibited

Fig.106037: Access for unauthorized personnel prohibited

DANGER
Danger of fatal injury!
If the crane or the working area is accessed by unauthorized personnel, life threatening injuries can occur as a result.
► It is prohibited for unauthorized personnel to enter the crane or the working area.

1.94 97167274 – Access for unauthorized personnel prohibited

Fig.167708: Access for unauthorized personnel prohibited

DANGER
Danger of fatal injury!
If the crane or the working area is accessed by unauthorized personnel, people can be fatally injured.
► It is prohibited for unauthorized personnel to enter the crane or the working area.

LWE/LTR 1100-009/25105-02-02/en

copyright © Liebherr-Werk Ehingen GmbH 2023

1.95 97039753 – Danger of stumbling

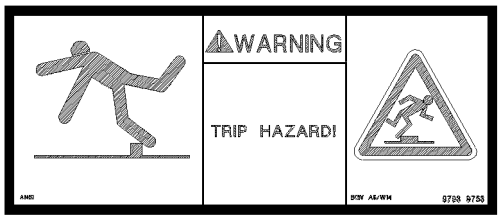

Fig.117346: Danger of stumbling

WARNING
Danger of stumbling!
► Move with caution.

1.96 978674108 – Warning of crushing danger

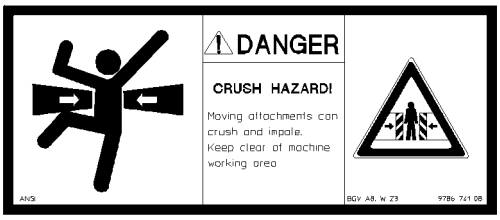

Fig.106027: Danger of crushing

DANGER
Danger of fatal injury when remaining in areas with crushing danger!
► It is prohibited for anyone to remain in areas where there is a crushing danger.
► Stay away from the working range of the machine.

1.97 97167015 - Crushing danger for body and limbs

Fig.167712: Danger of crushing

DANGER
Remaining in areas with crushing danger!
Danger of fatal injury due to crushing!
► It is prohibited for anyone to remain in areas where there is a crushing danger.
► Stay away from the working range of the machine.

LWE/LTR 1100-009/25105-02-02/en

copyright © Liebherr-Werk Ehingen GmbH 2023

1.98 97016911 – Danger of collision

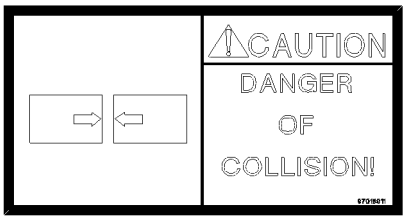

Fig.117344: Danger of collision

NOTICE
Danger of collision!
► Avoid a collision.

1.99 978674308 – Radio remote control

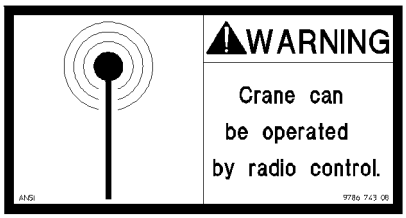

Fig.106047: Radio remote control

WARNING
Danger of injury due to crane operation with radio remote control!
► The crane can be operated with radio remote control!
► During crane operation, it is prohibited for anyone to remain in the danger zone!

1.100 978674408 – Danger of burns to hands

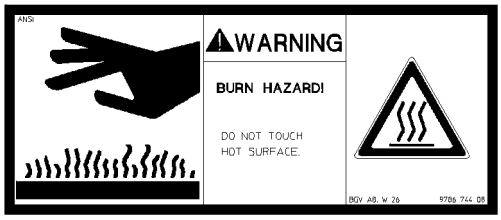

Fig.106028: Danger of burns to hands

WARNING
Danger of burns when touching hot surfaces!
► Do not touch hot surfaces.

copyright © Liebherr-Werk Ehingen GmbH 2023

1.101 978674508 – Warning of rotating parts

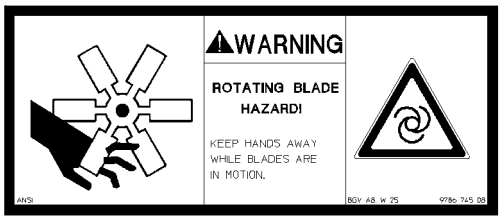

Fig.106029: Warning of rotating parts

WARNING
Rotating parts!
The rotating fan blade can cause finger and hand injuries.
► Keep your hands away from the rotating fan blade.

1.102 978674608 - Crushing danger for hands

Fig.106030: Crushing danger for hands

WARNING
Hazard area for hands!
Hands can be caught, trapped or crushed.
► Do not reach into the danger zone.

1.103 97164545 – Danger of injury for hands

Fig.167713: Danger of injury for hands

WARNING
Hazard area for hands!
Hands can be caught, trapped or crushed.
► Do not reach into the danger zone.

LWE/LTR 1100-009/25105-02-02/en

copyright © Liebherr-Werk Ehingen GmbH 2023

1.104 97167874 – Danger of injury for hands by the rope drive

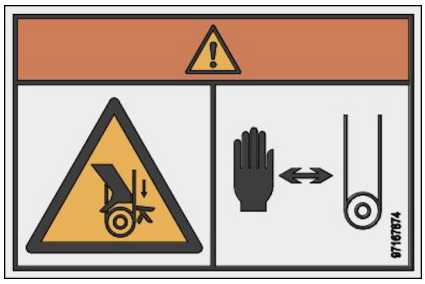

Fig.167714: Danger of injury for hands by the rope drive

WARNING
Hazard area due to the rope drive!
Hands can be caught, trapped or crushed due to the rope drive.
► Do not reached in to the hazard area of the rope drive.

1.105 978674808 – Personal protective equipment

Fig.123900: Personal protective equipment

DANGER
Working at a height!
Danger of falling
► Use personal protective equipment.

1.106 978674808 – Personal protective equipment

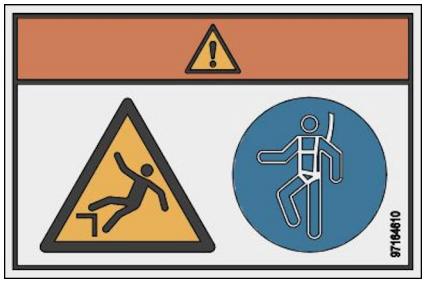

Fig.167715: Personal protective equipment

DANGER
Working at a height!
Danger of falling
► Use personal protective equipment.

copyright © Liebherr-Werk Ehingen GmbH 2023

1.107 978674908 – Accessing the area is prohibited

Fig.106038: Accessing the area is prohibited

WARNING
Danger of accident!
If the prohibited area is accessed, accidents can occur.
Personnel can be severely injured or killed.
► Do not access the prohibited area.

1.108 97167222 – Entering prohibited

Fig.167707: Accessing the area is prohibited

WARNING
Danger of accident!
If the prohibited area is accessed, accidents can occur.
Personnel can be severely injured or killed.
► Do not access the prohibited area.

1.109 978675008 – Access prohibited

Fig.106039: Access prohibited

WARNING
Danger of falling!
If the crane is accessed by unauthorized personnel, life threatening injuries can occur.
► Do not get on the crane.

LWE/LTR 1100-009/25105-02-02/en

copyright © Liebherr-Werk Ehingen GmbH 2023

1.110 97155791 – Rigging point

Fig.164359: Rigging point

WARNING
Incorrect use of the rigging point!
- ► Use the rigging point **only** for rigging.
- ► Do not lift the load on the rigging point.
- ► Observe and adhere to the operating instructions.

1.111 97165352 – Rigging point

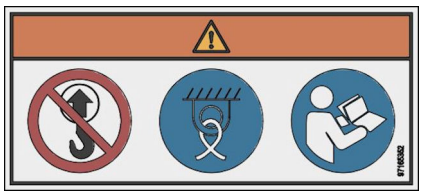

Fig.167716: Rigging point

WARNING
Incorrect use of the rigging point!
- ► Use the rigging point **only** for rigging.
- ► Do not lift the load on the rigging point.
- ► Observe and adhere to the operating instructions.

1.112 978687408 – Rigging point

Fig.112475: Rigging point

WARNING
Incorrect use of the rigging point!
- ► Use the rigging point **only** for rigging.
- ► Do not lift the load on the rigging point.
- ► Observe and adhere to the operating instructions.

copyright © Liebherr-Werk Ehingen GmbH 2023

1.113 97036734 – Rigging point

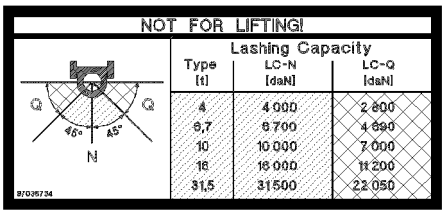

Fig.116287: Rigging point

WARNING
Incorrect use of the rigging point!
- ► Use the rigging point **only** for rigging.
- ► Do not lift the load on the rigging point.
- ► Observe and adhere to the operating instructions.

1.114 978867108 – Danger of fatal injury due to electric shock

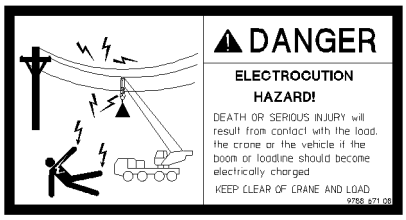

Fig.106814: Danger of fatal injury due to electric shock

DANGER
Danger of fatal injury due to electric shock!
If the boom or the hoist rope is powered with electric voltage, then death or severe injuries can occur if anyone touches the crane, the vehicle or the load.
- ► Stay away from the crane and load.

1.115 97094940 – Spark catcher

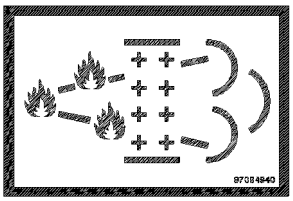

Fig.144735: Spark catcher

Note
- ► The exhaust system is equipped with an integrated spark catcher.

LWE/LTR 1100-009/25105-02-02/en

copyright © Liebherr-Werk Ehingen GmbH 2023

1.116 979383308 – Oil change

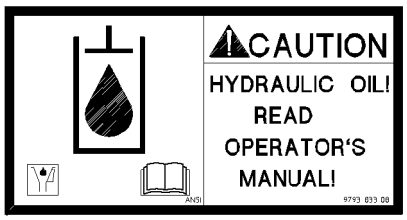

Fig.113827: Oil change

CAUTION
Property damage due to oil change!
If the oil specified in the operating instructions is not used during the oil change, it can lead to damage.
► See the Crane operating instructions, chapter 7.07.

1.117 97160549 – Oil change

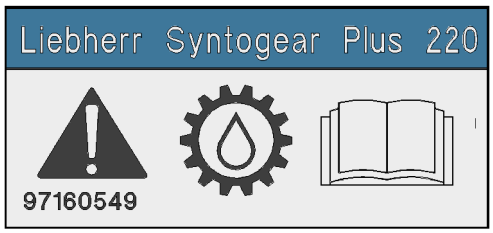

Fig.164360: Oil change

CAUTION
Property damage due to oil change!
If the oil specified in the operating instructions is not used during the oil change, it can lead to damage.
► Use the specified oil.
► See the Crane operating instructions, chapter 7.07.

1.118 979561108 – Counterweight

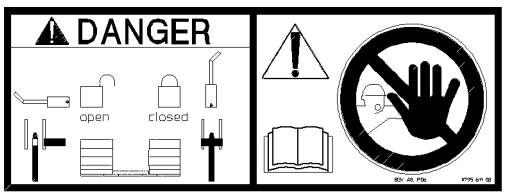

Fig.109026: Counterweight

WARNING
The counterweight can fall down!
If the auxiliary crane is removed on the counterweight before the counterweight is locked on both sides with the turntable, then the counterweight will fall down and can fatally injure assembly personnel.
► Do not remove the auxiliary crane until the counterweight is locked and secured on both sides with the turntable. See chapter 4.07.

LWE/LTR 1100-009/25105-02-02/en

copyright © Liebherr-Werk Ehingen GmbH 2023

1.119 97001802 – Falling platform

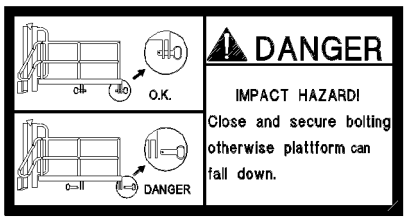

Fig.117345: Falling platform

WARNING
Falling platform!
► Pin and secure the platform in assembly / disassembly position.

1.120 973974408 - Transport weights of the components

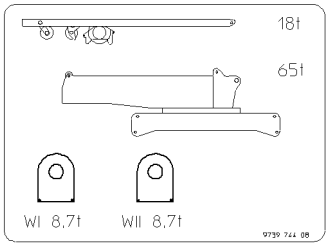

Fig.112440: Transport weights of the components

1.121 973974608 - Transport weights of the components

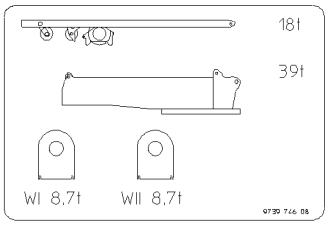

Fig.112441: Transport weights of the components

1.122 97011336 - Transport weights of the components

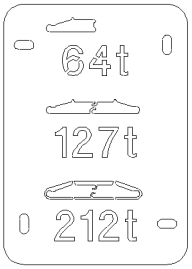

Fig.116271: Transport weights of the components

LWE/LTR 1100-009/25105-02-02/en

copyright © Liebherr-Werk Ehingen GmbH 2023

1.123 97068839 - Transport weights of the components / fastening length of the fastening equipment

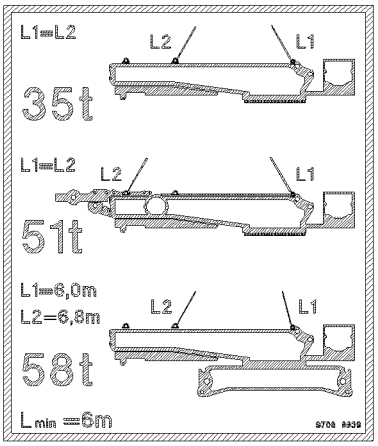

Fig.127587: Transport weights of the components / fastening length of the fastening equipment

1.124 Identification of sliding beam

ID no.	Identification of sliding beam
978675108	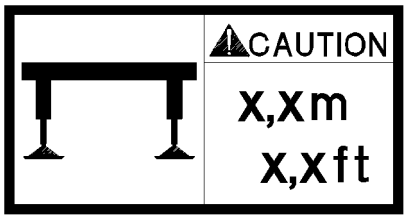 *Identification of sliding beam*
978675208	
978772808	
978772908	
978809308	
978809408	
978809508	
978818408	
978818508	
978875908	
978902608	
978903108	
97029203	
978903208	
979126008	
979126108	
979210508	

copyright © Liebherr-Werk Ehingen GmbH 2023

ID no.	Identification of sliding beam
979210608	
979210608	
979210708	
979309108	
979309208	
97019140	
97003224	
979410808	

Identification of sliding beam

Note
► Extend the sliding beams to a support width of X.X m (X.X ft).

1.125 Identification of track width retracted

ID no.	Identification of track width retracted
97009840	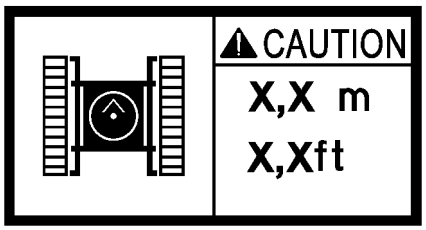 *Identification of track width*
97009841	
97017044	
97017045	
97017046	

Identification of track width

Note
► Track width retracted to x.xx m (x.x ft)

1.126 976624808 – Fastening the load

Fig.116283: Fastening the load

LWE/LTR 1100-009/25105-02-02/en

copyright © Liebherr-Werk Ehingen GmbH 2023

WARNING
Fastening the load is prohibited!
If the load is lifted in this point, the load can fall down and kill personnel.
► Lifting the load in unmarked locations is prohibited.

1.127 Note of sliding beam weight

ID no.	Weight of sliding beams
979932008	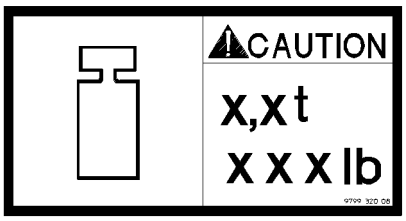 *Weight of sliding beams*
979932108	
979932708	
979932808	

Note
► Pay attention to the weight of the sliding beams.

1.128 Center of gravity of the counterweight

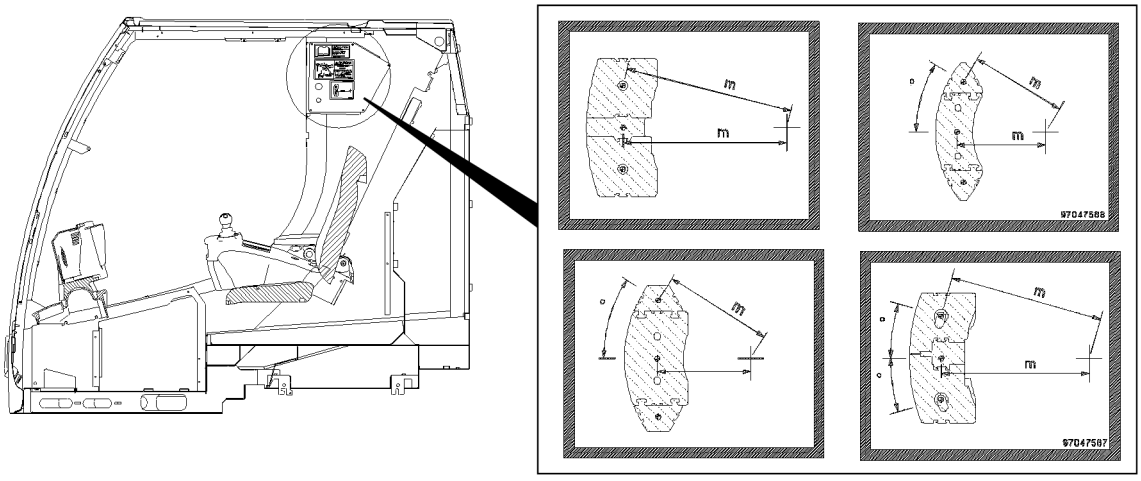

Fig.154058: Notice sign: Distance between center of gravity of counterweight and center of rotation

The depicted notice sign are only examples and can differ depending on the crane type.

The notice signs are displayed in the crane operator's cab.

Note
► This notice sign indicates the distance between the center of rotation and the center of gravity of the counterweight.

copyright © Liebherr-Werk Ehingen GmbH 2023

Notice sign: Distance between center of gravity of counterweight and center of rotation			
Crane type	ID number notice sign	Crane type	ID number notice sign
LTM 1030-2.1	97096584	LTM 1230-5.1	97103719
LTM 1040-2.1	97095218		97103720
LTM 1050-3.1	97094881	LTM 1250-5.1	97070214
LTM 1055-3.1	97047566		97070215
LTM 1060-3.1	97051053	LTM 1300-6.2	97064080
LTM 1070-4.1	97095971	LTM 1350-6.1	97128099
LTM 1090-4.1	97092106	LTM 1450-8.1	97093816
	97092109		
LTM 1095-5.1	97047565	LTC 1050-3.1	97095960
LTM 1100-4.2	97094364	LTF 1045–4.1	97095046
LTM 1100-5.2	97095763	LTF 1060–4.1	97096030
LTM 1130-5.1	97055765	LTR 1060	97128100
LTM 1160-5.2	97081129		

1.129 Minimum rope reeving / minimum hook block weight

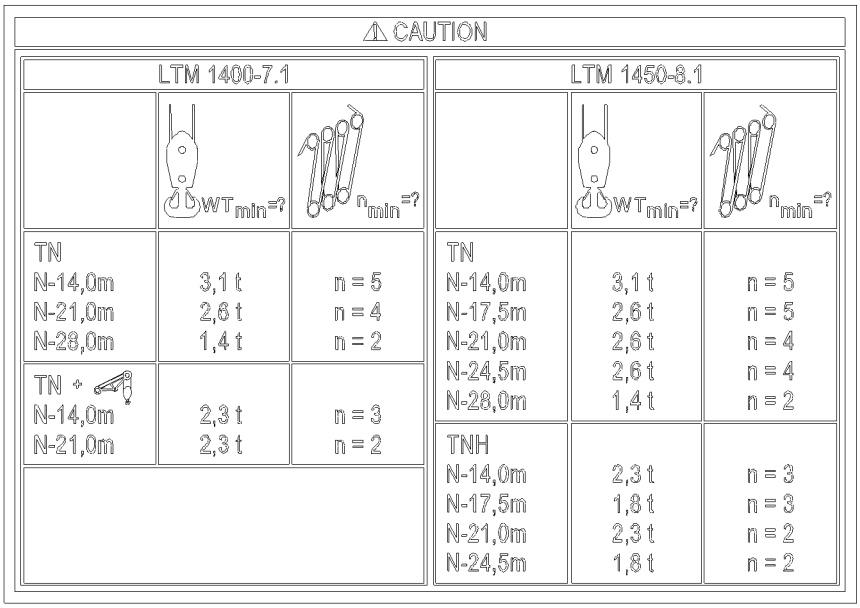

Fig.127972: Minimum rope reeving / minimum hook block weight with luffing lattice jib / boom nose

WARNING
Minimum rope reeving / minimum hook block weight not adhered to!
Too low hook block weight leads to the formation of slack rope.
Rope reeving too low, hoist rope is overloaded.
► Adhere to the hook block weight and hoist rope reeving.

Example: LTM 1400-7.1

With a luffing lattice jib TN **N-21 m**, a hook block with a weight of **2.6 t must** be installed and minimum rope reeving of **4** must be used.

LWE/LTR 1100-009/25105-02-02/en

copyright © Liebherr-Werk Ehingen GmbH 2023

With a luffing lattice jib **N-21 m** and boom nose, a hook block with a weight of **2.3 t must** be installed and minimum rope reeving of **2** must be used.

LWE/LTR 1100-009/25105-02-02/en

copyright © Liebherr-Werk Ehingen GmbH 2023

Empty page!

LWE/LTR 1100-009/25105-02-02/en

copyright © Liebherr-Werk Ehingen GmbH 2023

2.05.10 Labeling of the load carriers

1	Identifications on the hook block or load hook	3
2	Identifications on single hook or double hook	4
3	Identifications on auxiliary weights	5

LWE/LTR 1100-009/25105-02-02/en

copyright © Liebherr-Werk Ehingen GmbH 2023

LWE/LTR 1100-009/25105-02-02/en

Fig.195219

copyright © Liebherr-Werk Ehingen GmbH 2023

1 Identifications on the hook block or load hook

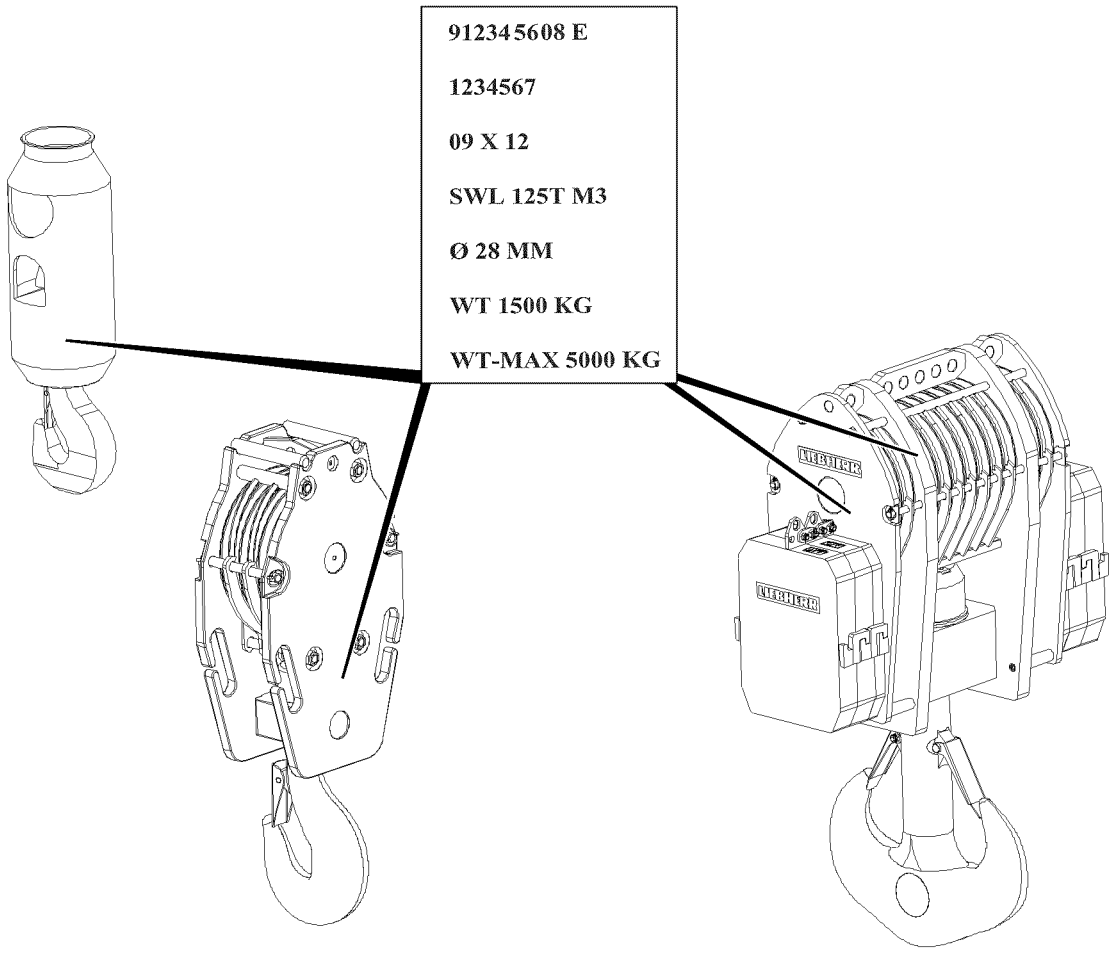

Fig.118509: Identifications on the hook block or load hook

Note

- ► The load hooks and hook blocks approved for this crane type can be found in the load chart.
- ► The hook blocks shown are examples only and can deviate from the existing hook block.

Punch mark area	Explanation
912345608 E	Liebherr ID no., „E = entschärft (deburred)“
123456	Series or factory test number
09 X 12	Month of construction / supplier marks / year of construction
SWL 125T M3	SWL (Safe Working Load) = Load carrying capacity for power train group M3
Ø 28 mm	Hoist rope diameter
WT 1500 Kg	WT (Weight Tare) = Own weight (without auxiliary weights)

LWE/LTR 1100-009/25105-02-02/en

copyright © Liebherr-Werk Ehingen GmbH 2023

Punch mark area	Explanation
WT-MAX 5000 Kg	WT-Max = Maximum permissible own weight of lower pulley block and total number of progressively installed auxiliary weights
	Limits the number of installed auxiliary weights
	Determination via addition of assembled own weights (number of auxiliary weights + hook block)

Identifications on the hook block or load hook

2 Identifications on single hook or double hook

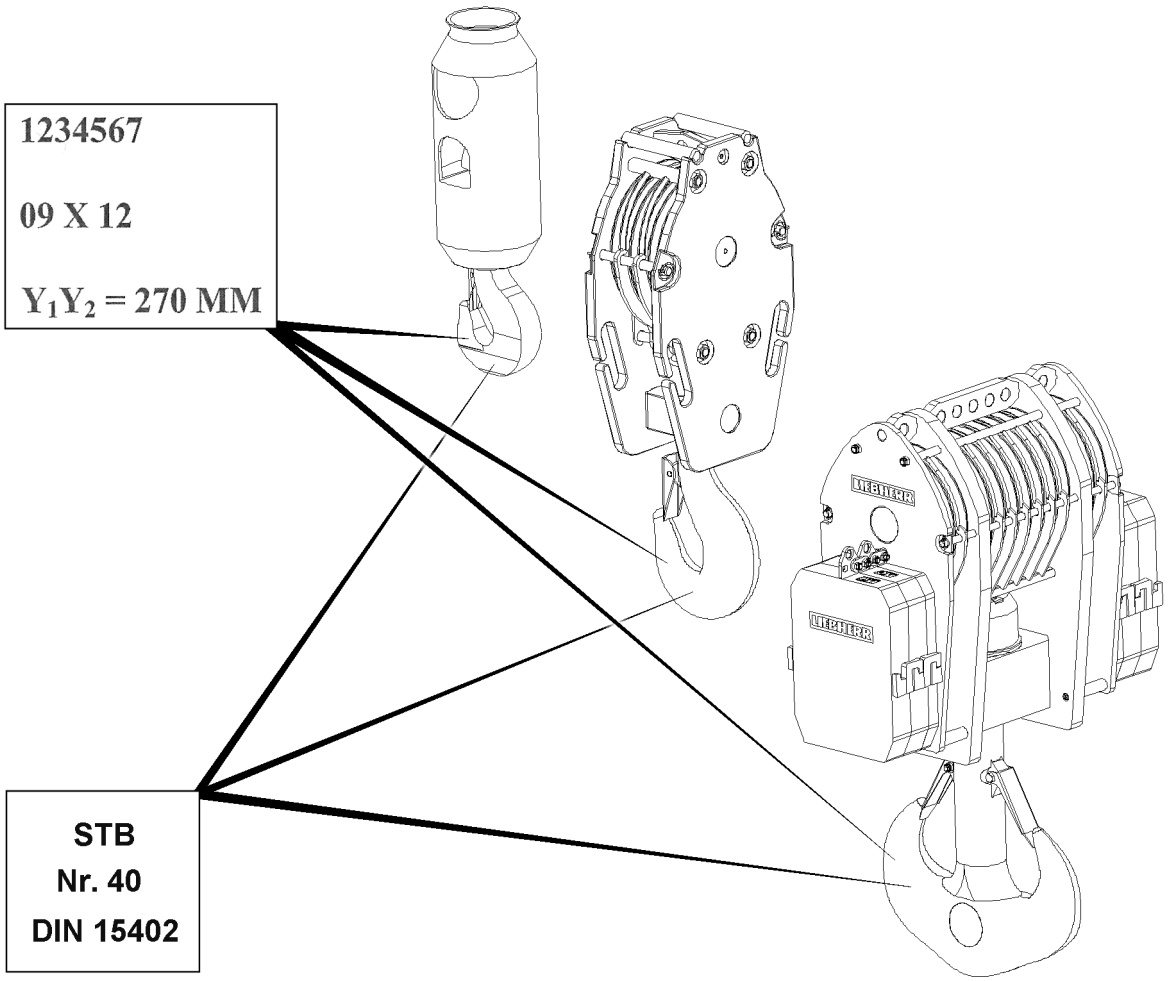

Fig.149061: Identifications on single hook or double hook

Punch mark area	Explanation
STB	Hook manufacturer
40-T	Hook number + strength class according to DIN 15 400
DIN	Hook shape according to DIN 15 401 /DIN 15 402
123456	Series or factory test number

LWE/LTR 1100-009/25105-02-02/en

copyright © Liebherr-Werk Ehingen GmbH 2023

Punch mark area	Explanation
09 X 12	Month of construction / supplier marks / year of construction
Y1Y2 = 270 mm	Dimension Y or dimension Y1 and dimension Y2 according to DIN (= Test dimensions for recurrent tests)

Identifications on single hook or double hook

3 Identifications on auxiliary weights

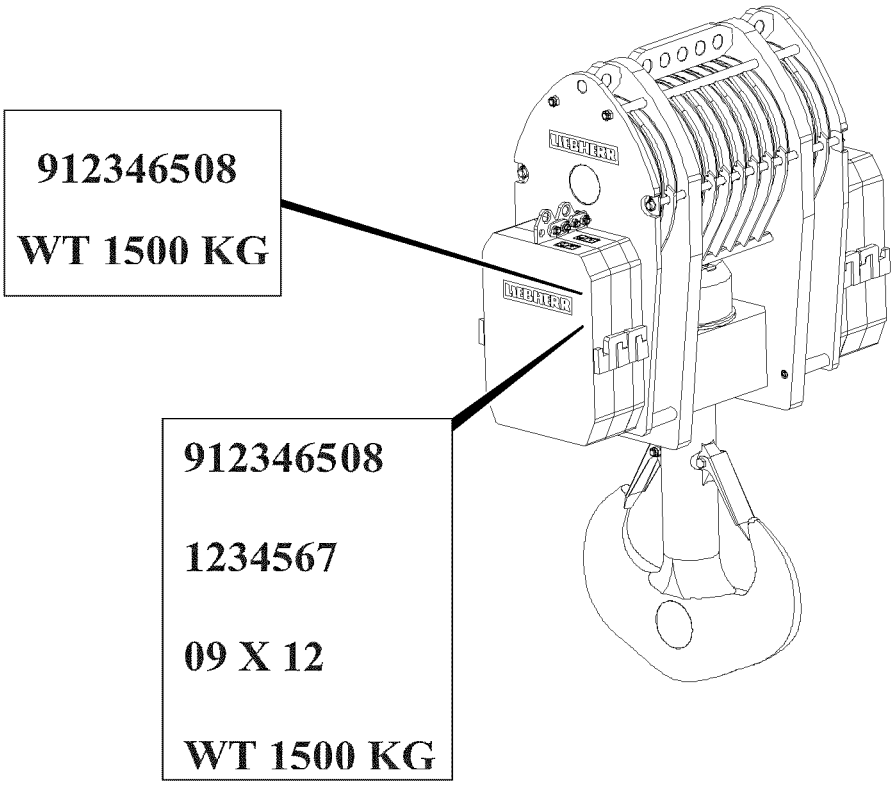

Fig.118511: Identifications on auxiliary weights

Note

► The own weight of the individual auxiliary weight is noted on the side on the respective auxiliary weight.

3.1 Identifications on auxiliary weights at delivery

Punch mark area	Explanation
912346508	Liebherr ID no.
WT 1500 Kg	WT (Weight Tare) = Own weight of individual auxiliary weight

Identifications of auxiliary weights at delivery

copyright © Liebherr-Werk Ehingen GmbH 2023

3.2 Identifications on auxiliary weights for reorder

Punch mark area	Explanation
912346508	Liebherr ID no.
123456	Series or factory test number
09 X 12	Month of construction / supplier marks / year of construction
WT 1500 Kg	WT (Weight Tare) = Own weight of individual auxiliary weight

Identifications of auxiliary weights at reorder

LWE/LTR 1100-009/25105-02-02/en

copyright © Liebherr-Werk Ehingen GmbH 2023

2.06 Fall protection equipment on the crane

1	Safety	3
2	Hook points	3
3	Telescopic boom	4
4	Auxiliary boom	6
5	Folding jib	7
6	Special folding jib	9
7	Crane cab	10
8	Turntable	13
9	Winch II	25
10	Transporting the ladder	27

LWE/LTR 1100-009/25105-02-02/en

copyright © Liebherr-Werk Ehingen GmbH 2023

LWE/LTR 1100-009/25105-02-02/en

Fig.195219

copyright © Liebherr-Werk Ehingen GmbH 2023

1 Safety

Before accessing the crane, observe the safety instructions.

- General safety information: See chapter 2.04.
- Information regarding personal protective equipment: See chapter 2.04.
- Information regarding the use of safety ropes: See chapter 2.04.
- Information regarding the use of ladders: See chapter 2.04.10.
- Information regarding accesses to the crane: See chapter 2.07.

WARNING
Assembly personnel **not** secured!
Assembly personnel can fall, death, severe bodily injuries.
► Assembly personnel must secure themselves to prevent falling.
► Move carefully and anticipatorily on the crane or components.
► Cary out all work, where there is a danger of falling with suitable aids.

If aids are not available and work cannot be carried out on the ground:
► Secure assembly personnel with the supplied fall arrest system to prevent falling.
► Attach the fall arrest system to the fastening points and hook points as well as to the safety ropes.
► Step on the aids, ladders and catwalks with clean shoes.
► Keep aids, ladders and catwalks free of heavy dirt, snow and ice.

2 Hook points

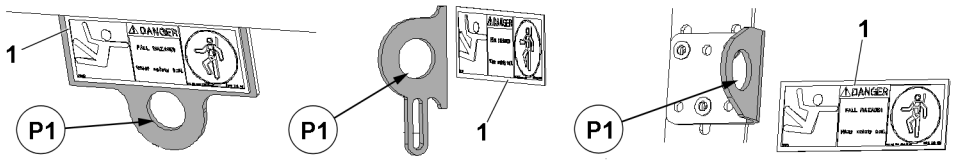

Fig.128291: Hook points shown as an example

On the various component groups, hook points **P1** are installed to which assembly personnel must secure themselves to avoid falling.

*Fig.128300: Sign **1** on the hook point*

The hook points **P1** are marked with signs **1**.

WARNING
Assembly personnel **not** secured!
Assembly personnel can fall, death, severe bodily injuries.
► Secure assembly personnel with the fall arrest system to the hook points **P1** to prevent falling.
► Only one person may be secured to each hook point **2**.

If necessary, fastening points can be used for connecting the fall arrest system to protect against falling.

copyright © Liebherr-Werk Ehingen GmbH 2023

WARNING
The hook points can be ripped off!
The load can fall down, death, severe bodily injuries, property damage.
► **Never** fasten loads or objects on the hook points.
► Do **not** use the hook points as fastening points.

3 Telescopic boom

3.1 Securing the ladder

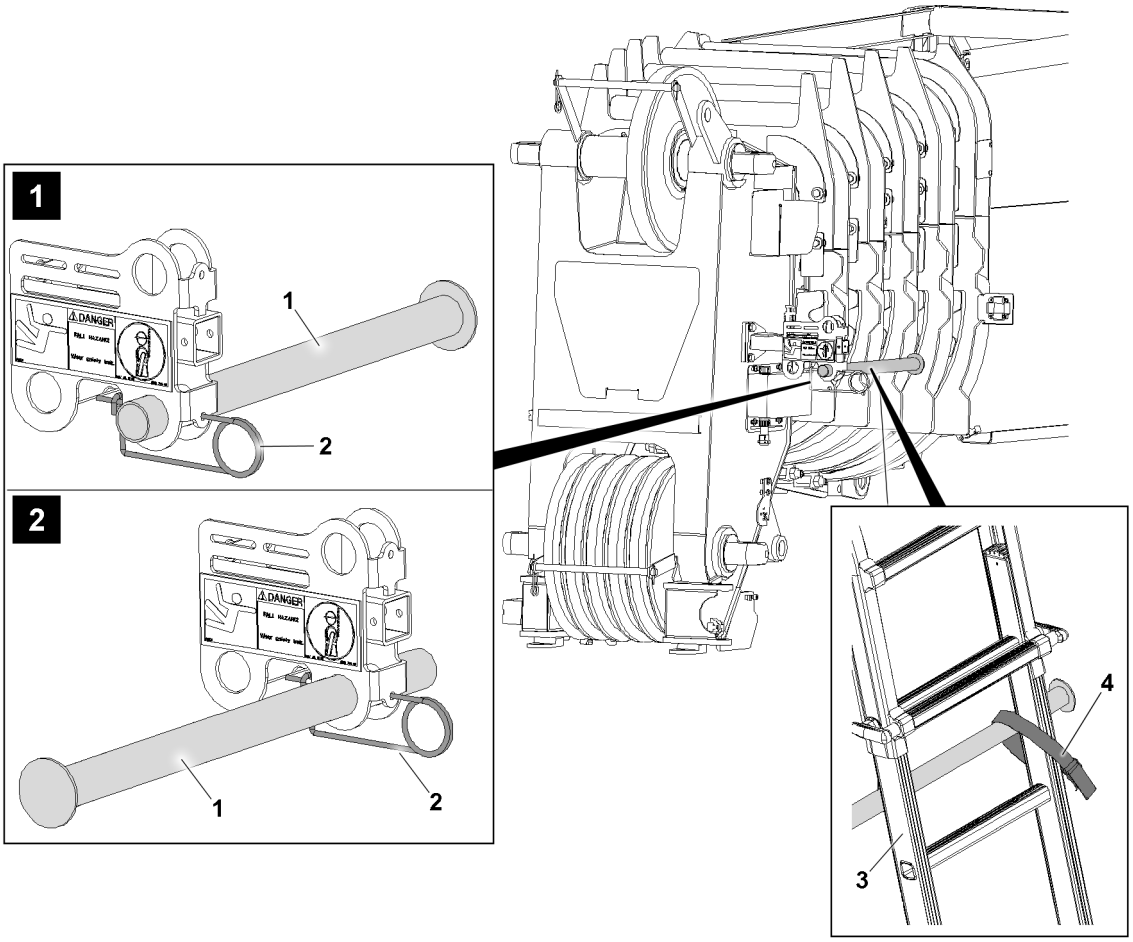

Fig.165808: Securing the ladder

The illustration is exemplary. The structure of the telescopic boom depends on the crane type.

Assemble the retainer **1** to hang the ladder:

Depending on the required ladder position:

► Assemble the retainer **1** according to the illustration **1** or illustration **2**.
► Secure the retainer **1** with the spring retainer **2**.

WARNING
Ladder **not** secured!
Assembly personnel can fall, death, severe bodily injuries.
► Secure the ladder.

LWE/LTR 1100-009/25105-02-02/en

copyright © Liebherr-Werk Ehingen GmbH 2023

WARNING
Assembly personnel **not** secured!
Assembly personnel can fall, death, severe bodily injuries.
► Secure assembly personnel to prevent falling.

► Connect the ladder **3** with the rigging belt **4** to the retainer **1**.

3.2 Hook points

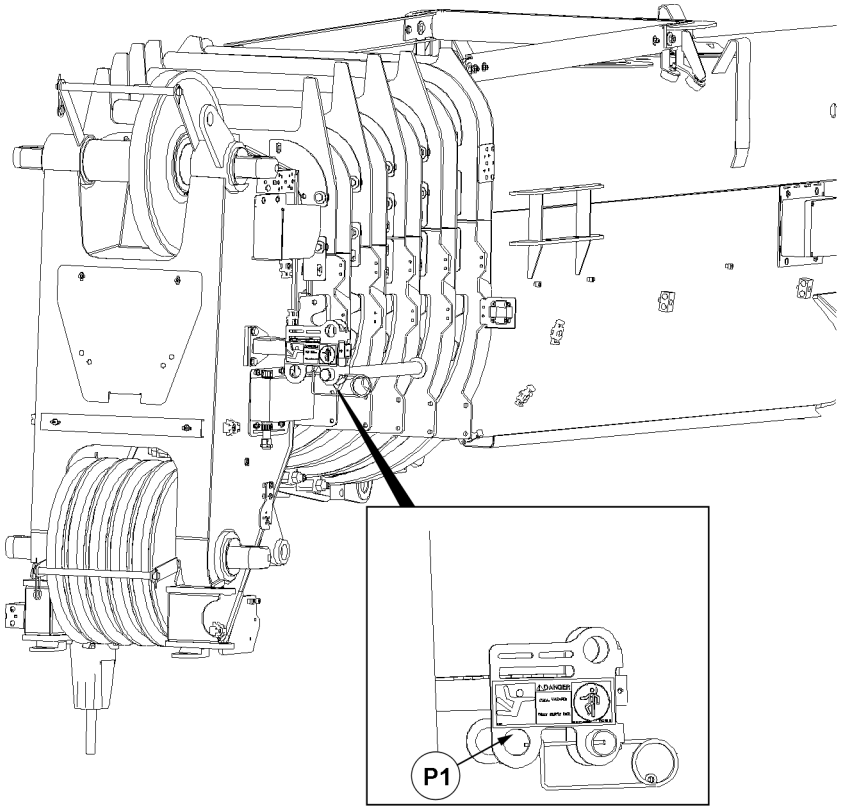

Fig.166147: Hook points on the telescopic boom

The hook point **P1** is installed on the telescopic boom.

WARNING
Assembly personnel **not** secured!
Assembly personnel can fall down. Death, severe bodily injuries.
► Secure assembly personnel to prevent falling.

► Secure assembly personnel with the fall arrest system on the hook point **P1** or hook point **P2** to prevent falling.

LWE/LTR 1100-009/25105-02-02/en

copyright © Liebherr-Werk Ehingen GmbH 2023

4 Auxiliary boom

4.1 Hook points

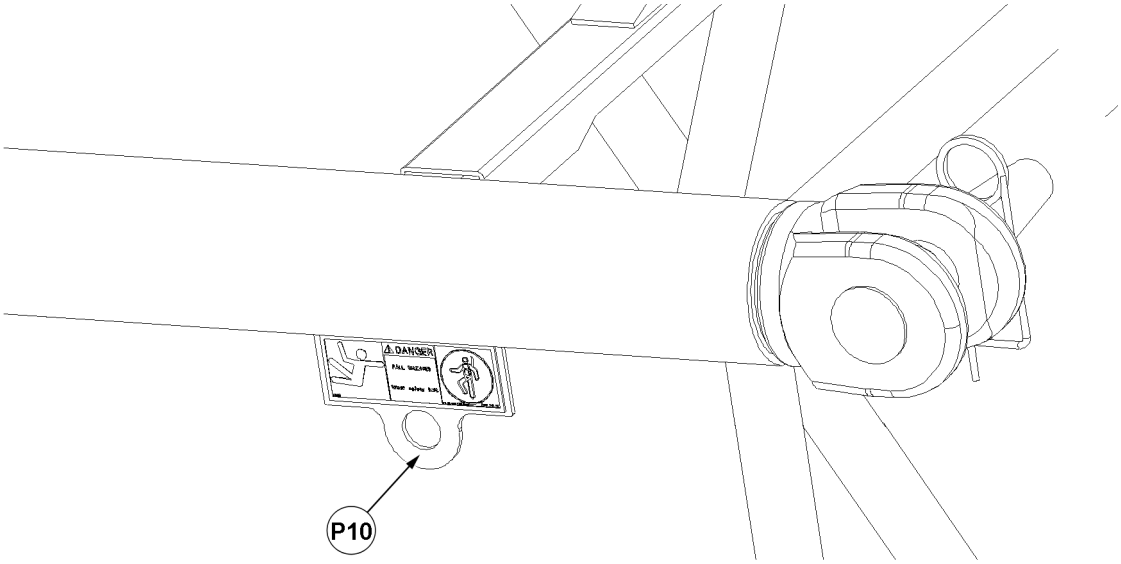

Fig.125231: Hook points on the auxiliary boom

WARNING
Assembly personnel not secured!
Assembly personnel can fall, death, severe bodily injuries.
► Secure assembly personnel to prevent falling.

► Secure assembly personnel with the fall arrest system in position **P10** to prevent falling.

LWE/LTR 1100-009/25105-02-02/en

copyright © Liebherr-Werk Ehingen GmbH 2023

5 Folding jib

5.1 Securing the ladder on the folding jib

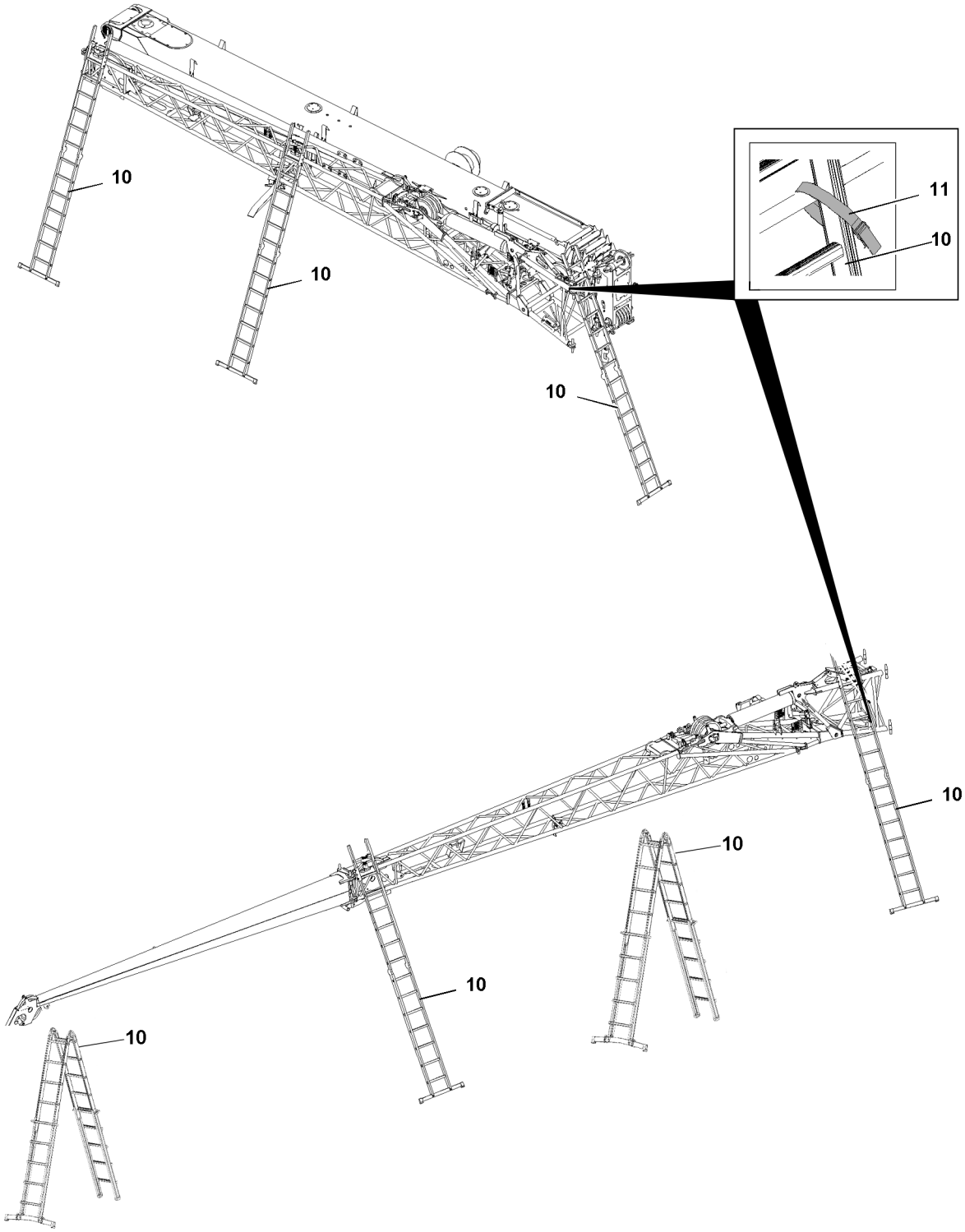

LWE/LTR 1100-009/25105-02-02/en

Fig.165310: Ladders on the auxiliary boom

The illustration is exemplary. The structure of the folding jib depends on the crane type.

copyright © Liebherr-Werk Ehingen GmbH 2023

WARNING
Ladder **not** secured!
Assembly personnel can fall, death or severe bodily injuries.
► Secure the ladder with the rigging belt **11**.

► Place the ladder **10** on the folding jib.

The ladder **10** can be secured with the rigging belt **11** on the struts.

► Secure the ladder **10** with the rigging belt **11**.

5.2 Folding jib hook points

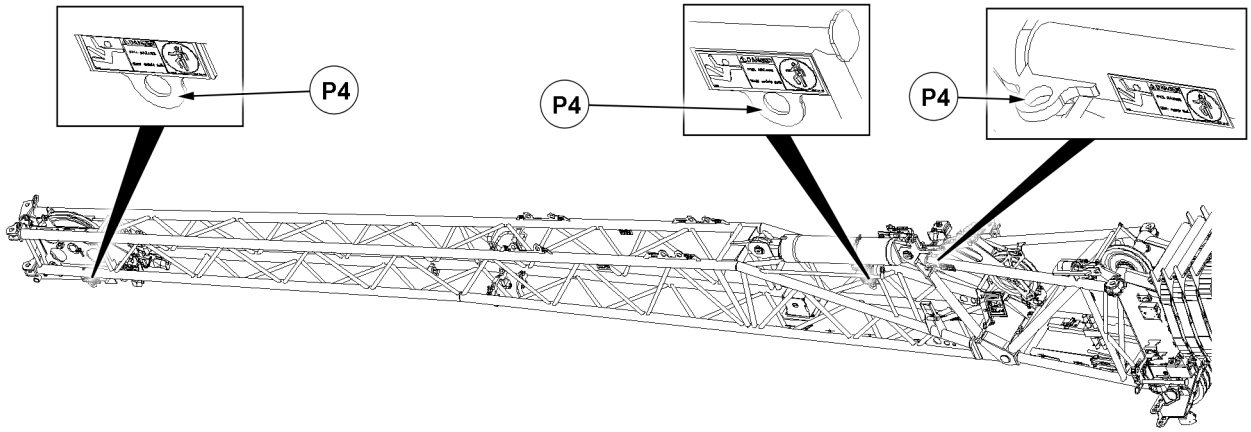

Fig.148461: Folding jib hook points

WARNING
Assembly personnel **not** secured!
Assembly personnel can fall, death, severe bodily injuries.
► Secure assembly personnel to prevent falling.

► Secure assembly personnel with the fall arrest system on the respective hook point **P4** to prevent falling.
or

If no hook points are available:
Secure assembly personnel to the struts to prevent falling.

LWE/LTR 1100-009/25105-02-02/en

copyright © Liebherr-Werk Ehingen GmbH 2023

6 Special folding jib

6.1 Placing the ladder

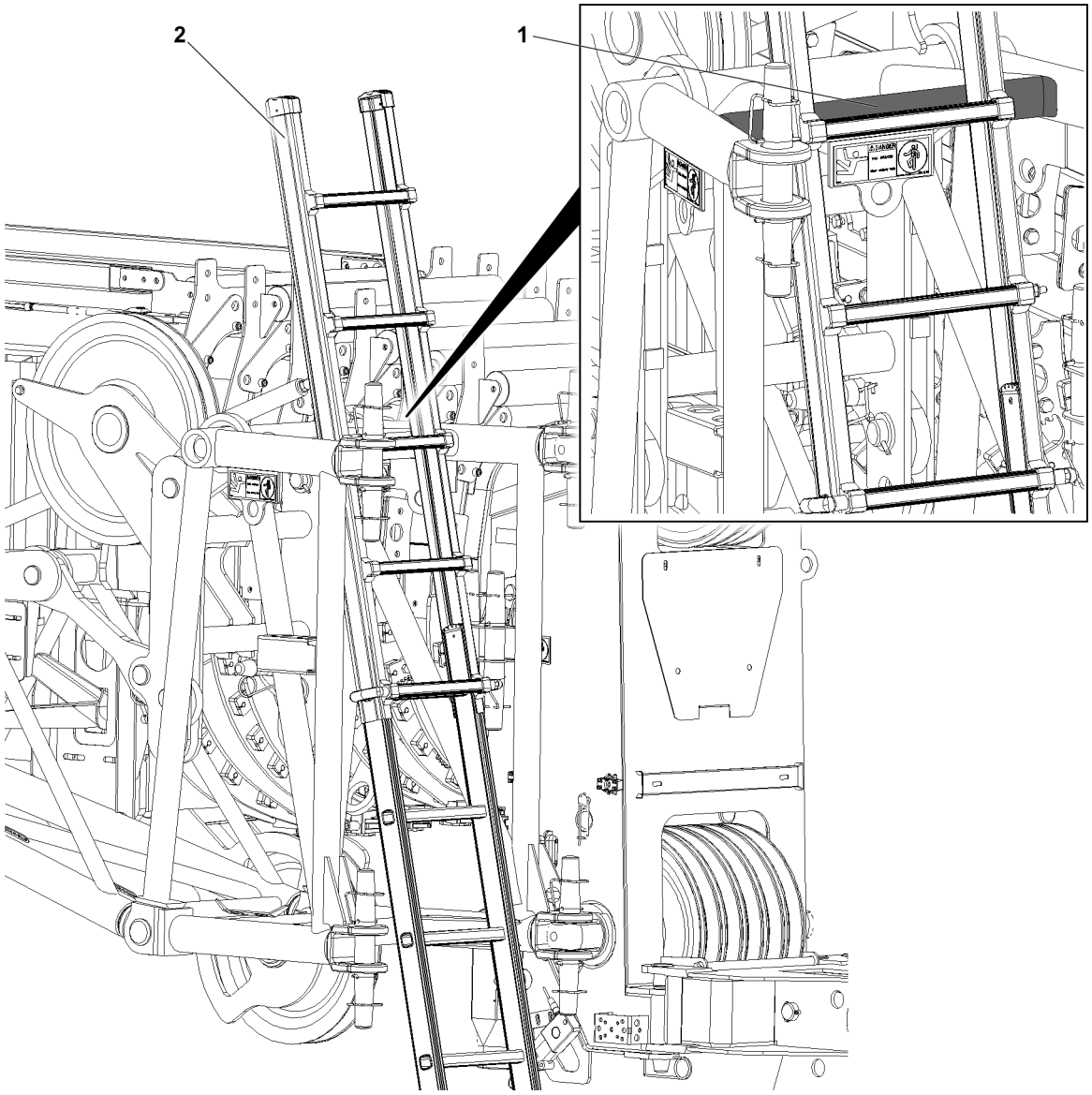

Fig.160520: Placing the ladder on the special folding jib.

► Place the ladder **2** on the pipe **1**.

LWE/LTR 1100-009/25105-02-02/en

copyright © Liebherr-Werk Ehingen GmbH 2023

6.2 Hook points

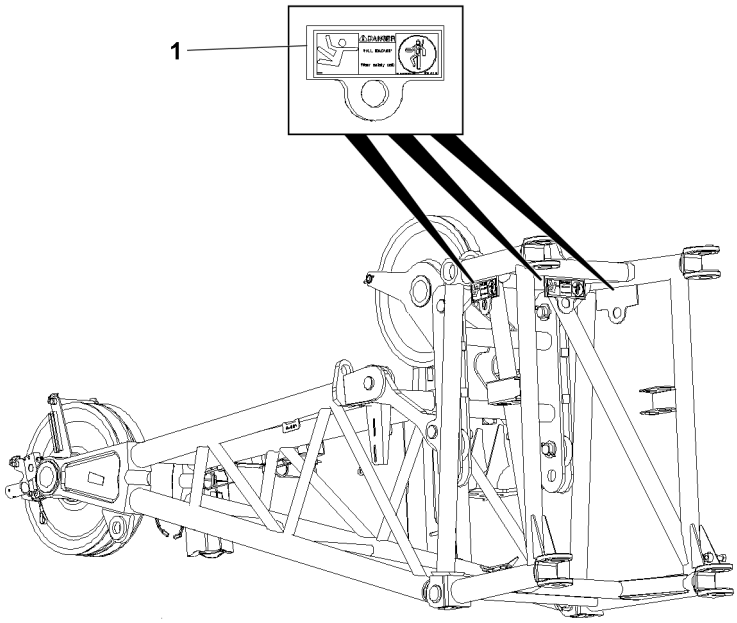

Fig.154676: Hook points

WARNING
Assembly personnel **not** secured!
Assembly personnel can fall, death, severe bodily injuries.
► Secure assembly personnel to prevent falling.

► Secure assembly personnel with the fall arrest system in the hook point **1** to prevent falling.

7 Crane cab

Note
► The extendable cab platform must be extended before the assembly of the fall protection equipment and retracted after disassembly of the fall protection equipment.

Make sure that the following prerequisites are met:
– The crane superstructure is in the 0° position (travel position) or turned 180°.
– The crane is horizontally aligned.

LWE/LTR 1100-009/25105-02-02/en

copyright © Liebherr-Werk Ehingen GmbH 2023

7.1 Bringing the cab platform into the working position

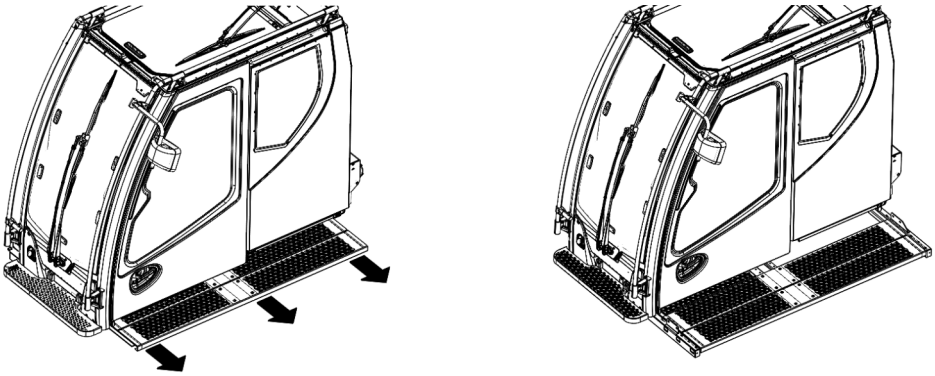

Fig.166130: Bringing the cab platform into the working position

► **Extend** the extendible cab platform.

Result:

The cab platform is in the working position.

LWE/LTR 1100-009/25105-02-02/en

copyright © Liebherr-Werk Ehingen GmbH 2023

7.2 Bringing the cab platform into the transport position

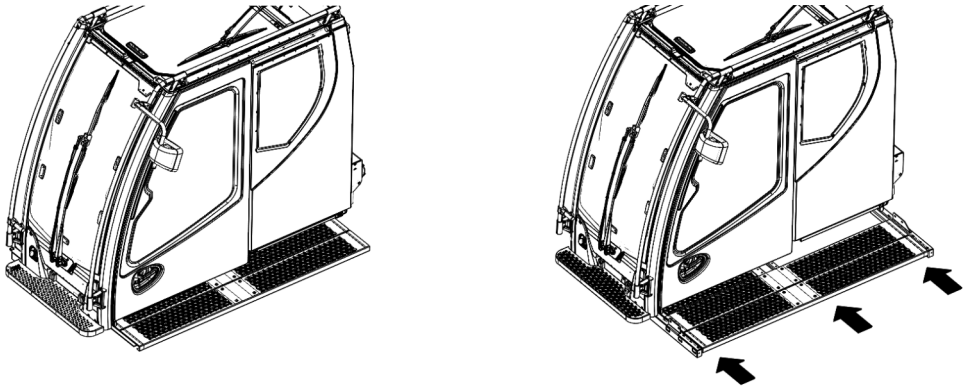

Fig.166139: Bringing the cab platform into the transport position

► **Retract** the extendible cab platform.

Result:

The cab platform is in the transport position.

LWE/LTR 1100-009/25105-02-02/en

copyright © Liebherr-Werk Ehingen GmbH 2023

8 Turntable

8.1 Hook points

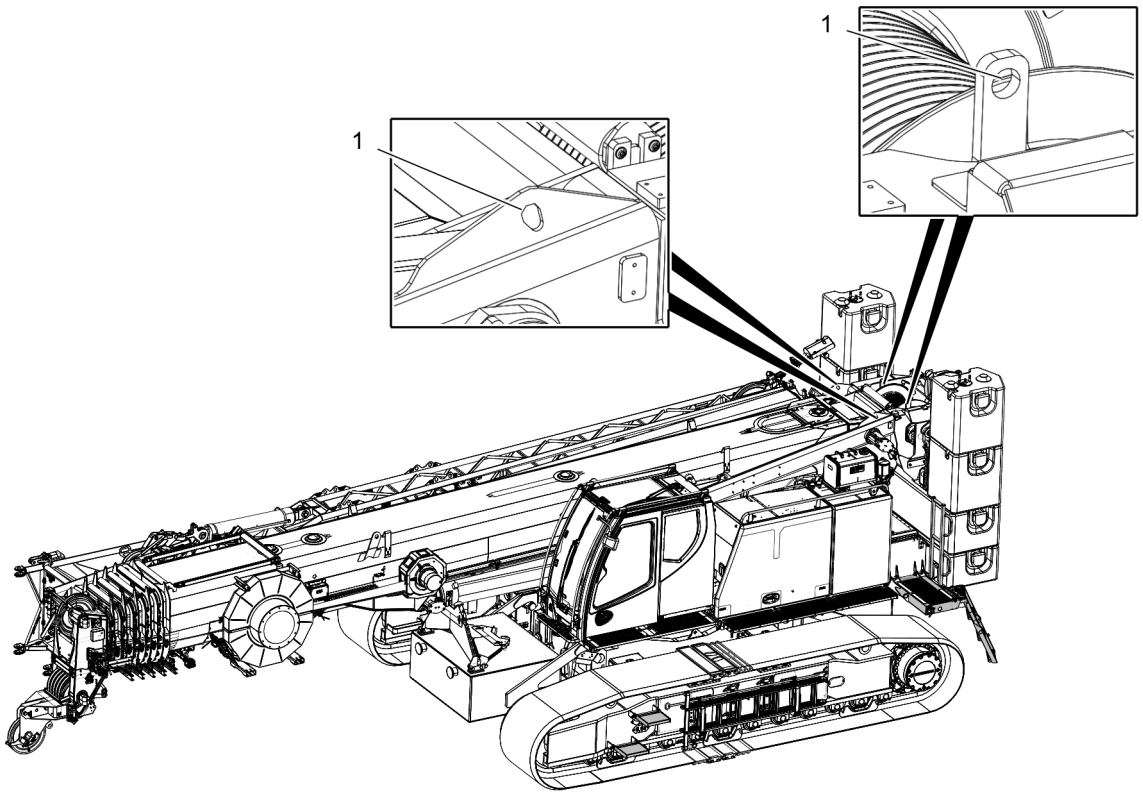

Fig.166141: Hook points

WARNING
Persons **not** secured!
Personnel can fall, death, severe bodily injuries.
► Secure personnel to prevent falling.

► Secure personnel with the fall arrest system to the hook point **1** to prevent falling.

8.2 Longitudinal platform

CAUTION
The longitudinal platform folds down uncontrolled!
Fingers and hands can be crushed.
► Do **not** reach into the hinge area.
► Fold the longitudinal platform **2** out only from the ground.

LWE/LTR 1100-009/25105-02-02/en

copyright © Liebherr-Werk Ehingen GmbH 2023

8.2.1 Bringing the longitudinal platform into the working position

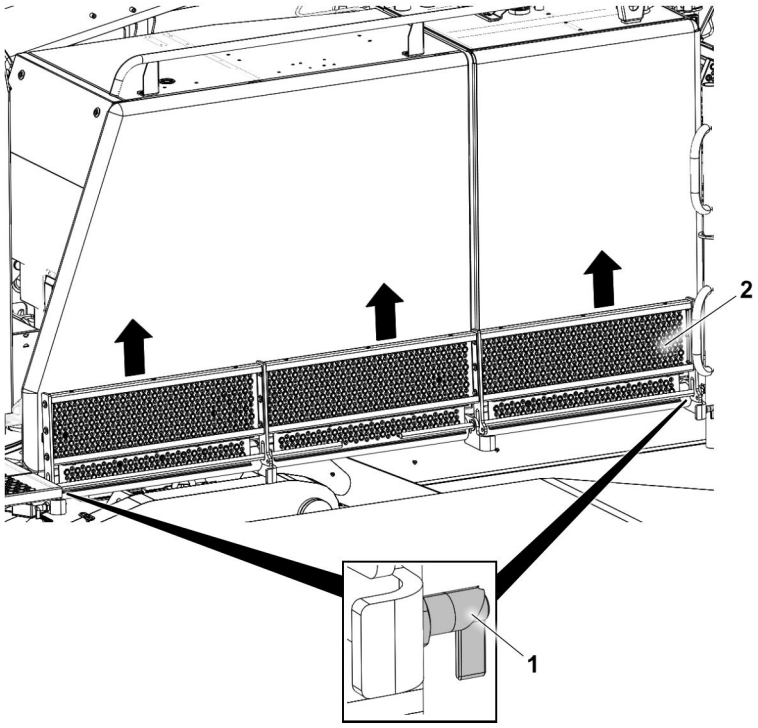

Fig.166131: Bringing the longitudinal platform into the working position

- ► Open the latch **1** on the front and rear platform end from the ground.
- ► Pull the longitudinal platform **2** up into the guide holes to the stop.

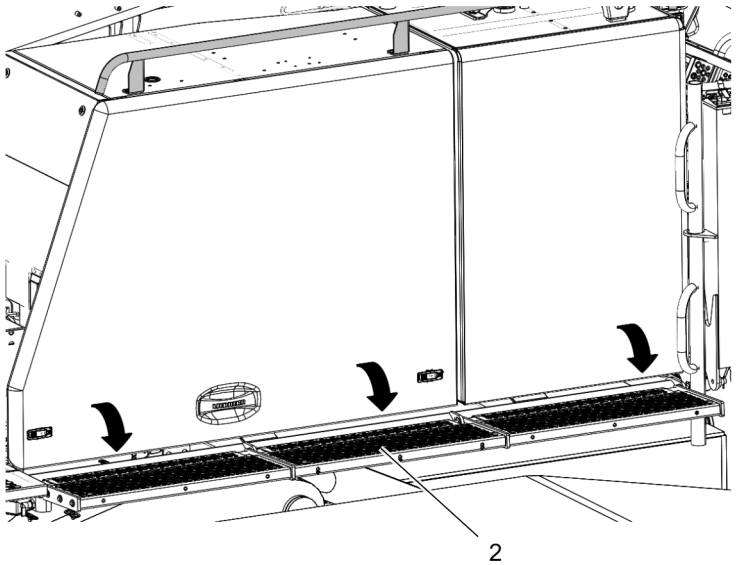

Fig.166132: Bringing the longitudinal platform into the working position

LWE/LTR 1100-009/25105-02-02/en

copyright © Liebherr-Werk Ehingen GmbH 2023

► Swing the longitudinal platform **2** down carefully. Make sure that fingers and hands are not trapped.

Result:

Longitudinal platform in the working position.

8.2.2 Bringing the longitudinal platform into the transport position

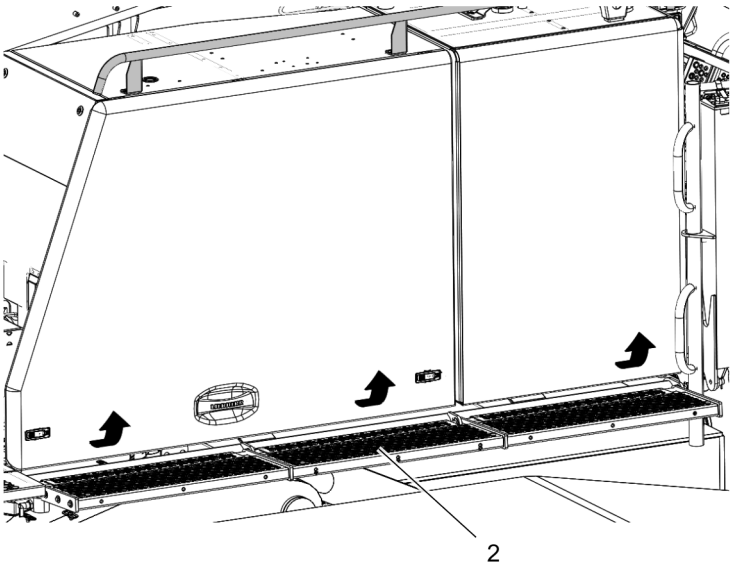

Fig.166140: Bringing the longitudinal platform into the transport position

► Swing the longitudinal platform **2** up carefully. Make sure that fingers and hands are not trapped.

LWE/LTR 1100-009/25105-02-02/en

copyright © Liebherr-Werk Ehingen GmbH 2023

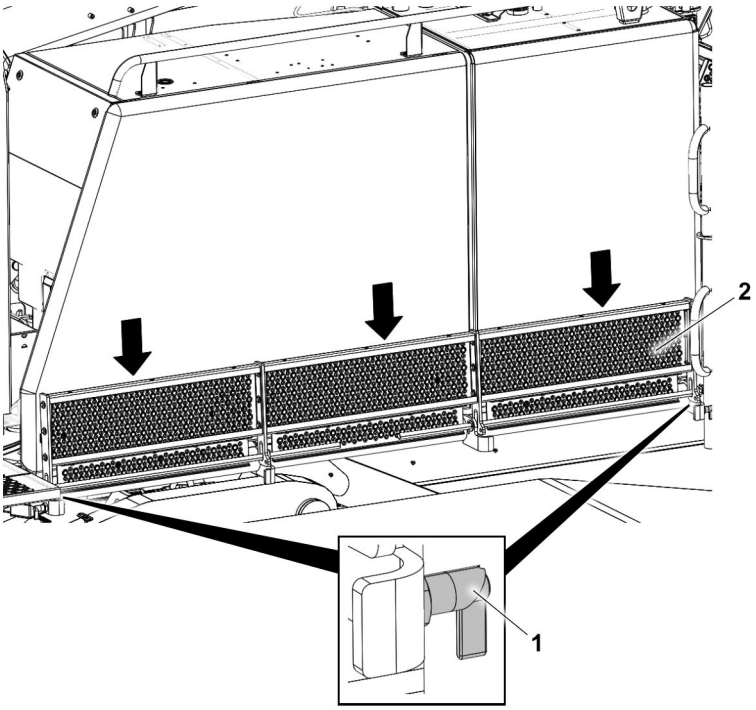

Fig.166142: Bringing the longitudinal platform into the transport position

- ► Push the longitudinal platform **2** down into the guide holes to the stop.
- ► Close the latch **1** on the front and rear platform end from the ground.

Result:

Longitudinal platform in the transport position.

8.3 Stairs with platform

CAUTION
Moving parts!
Fingers and hands can be crushed.
- ► Do **not** reach into the hinge area.
- ► Fold out the stairs with platform **2** only from the ground.

LWE/LTR 1100-009/25105-02-02/en

copyright © Liebherr-Werk Ehingen GmbH 2023

8.3.1 Bringing the stairs with platform into the working position

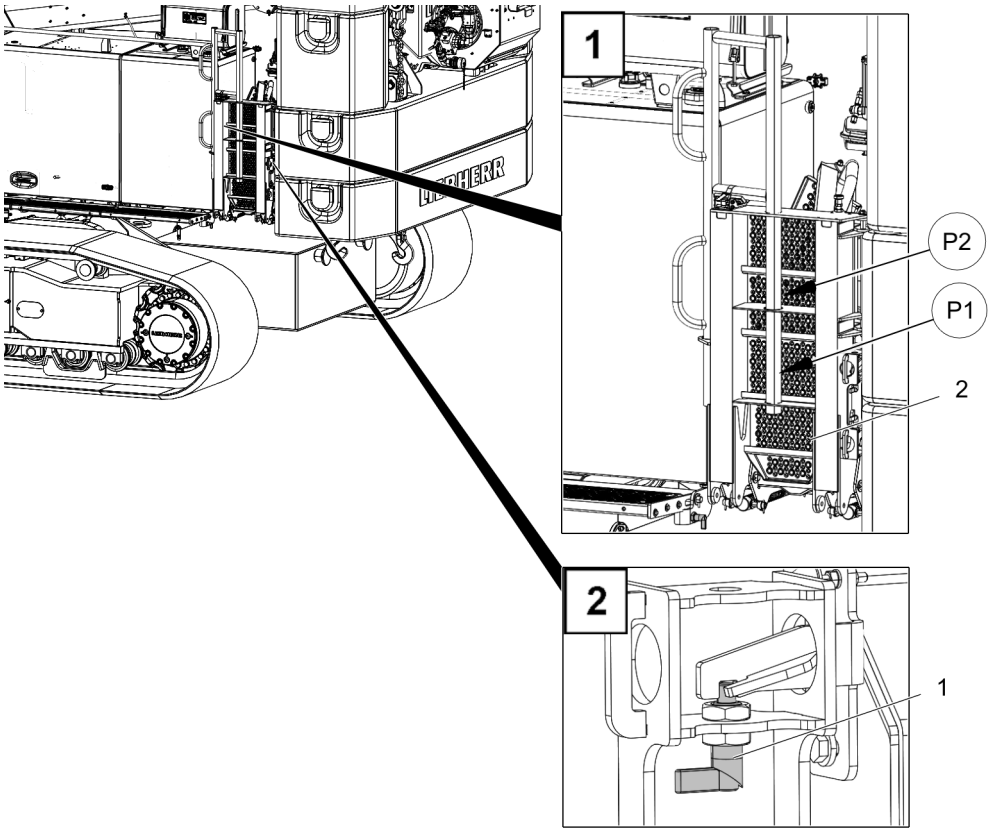

Fig.166133: Bringing the stairs with platform into the working position

- ► Grasp the stairs with platform **2** in position **P1** or position **P2** from the ground.
- ► Hold the stairs with platform **2** with one hand.
- ► Open the latch **1**.

LWE/LTR 1100-009/25105-02-02/en

copyright © Liebherr-Werk Ehingen GmbH 2023

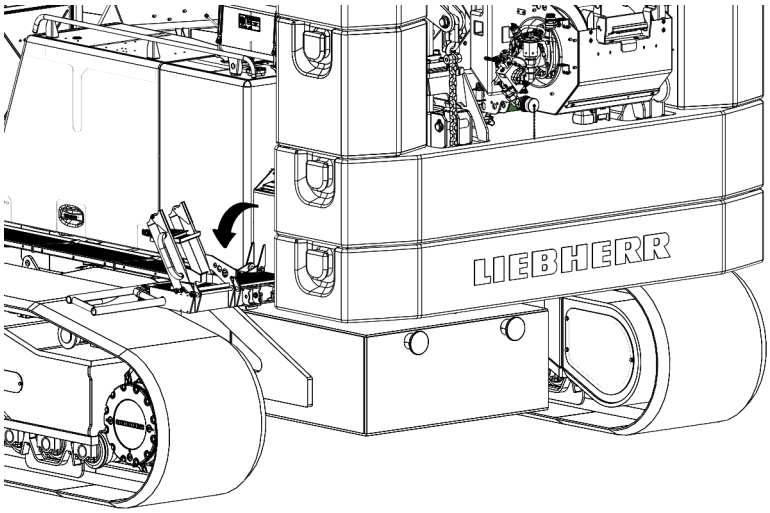

Fig.166134: Bringing the stairs with platform into the working position

► Swing the stairs with platform **2** down to the stop. Make sure that fingers and hands are not trapped.

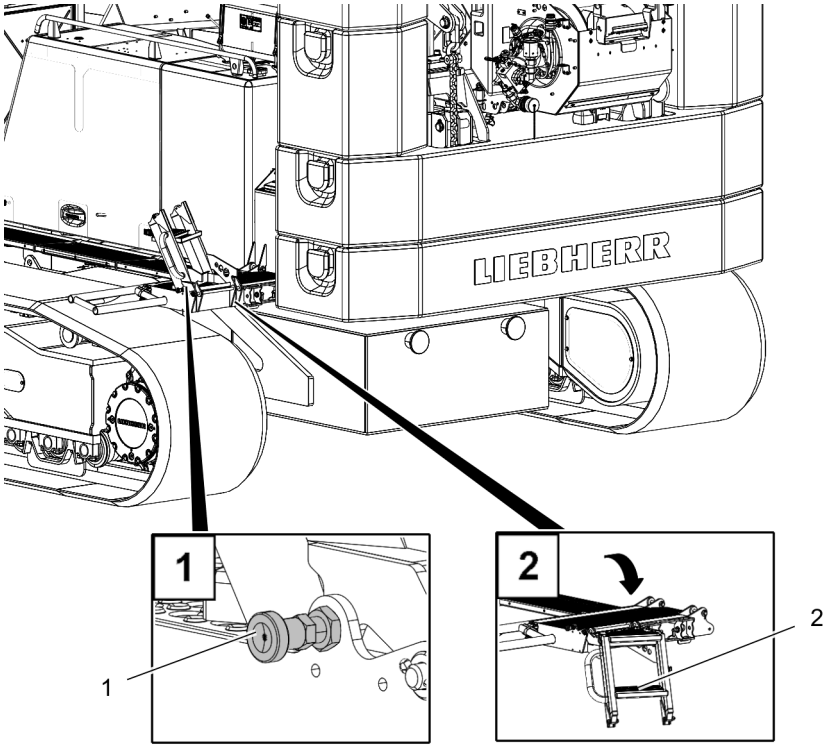

Fig.166135: Bringing the stairs with platform into the working position

LWE/LTR 1100-009/25105-02-02/en

copyright © Liebherr-Werk Ehingen GmbH 2023

- ► Grip the top step section **2** with one hand.
- ► Release the stairs **2** with the locking pin **1**.
- ► Swing the stairs **2** down carefully to the stop. Make sure that fingers and hands are not trapped.

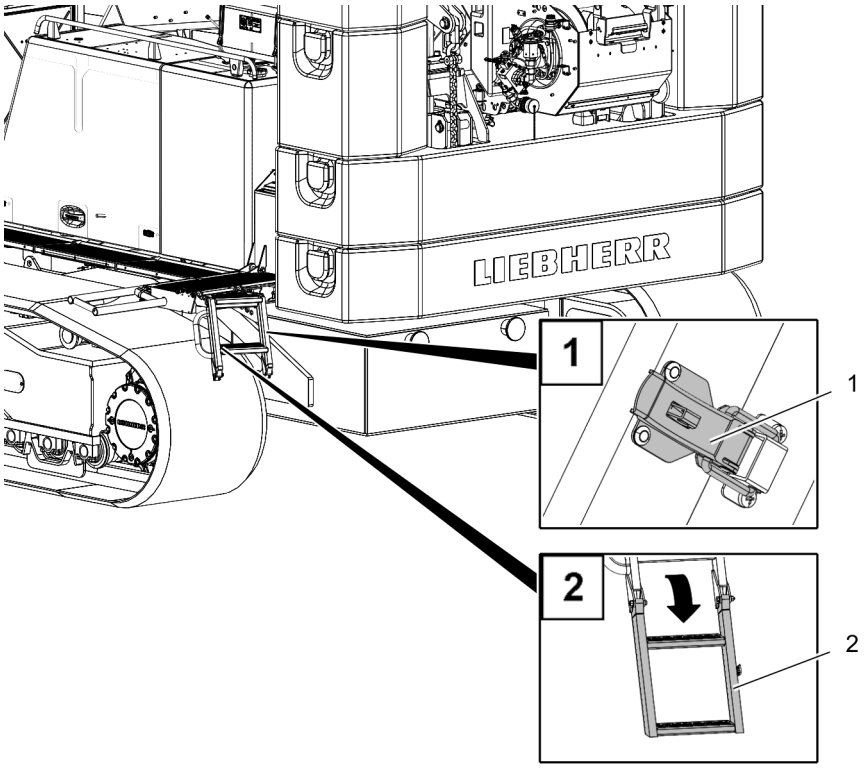

Fig.166136: Bringing the stairs with platform into the working position

- ► Grip the bottom step section **2** with one hand.
- ► Open the lock **1** between the bottom step section and between the top step section.
- ► Swing the bottom step section **2** down carefully to the stop. Make sure that fingers and hands are not trapped.

Result:

Stairs with platform in the working position.

LWE/LTR 1100-009/25105-02-02/en

copyright © Liebherr-Werk Ehingen GmbH 2023

8.3.2 Bringing the stairs with the platform into the transport position

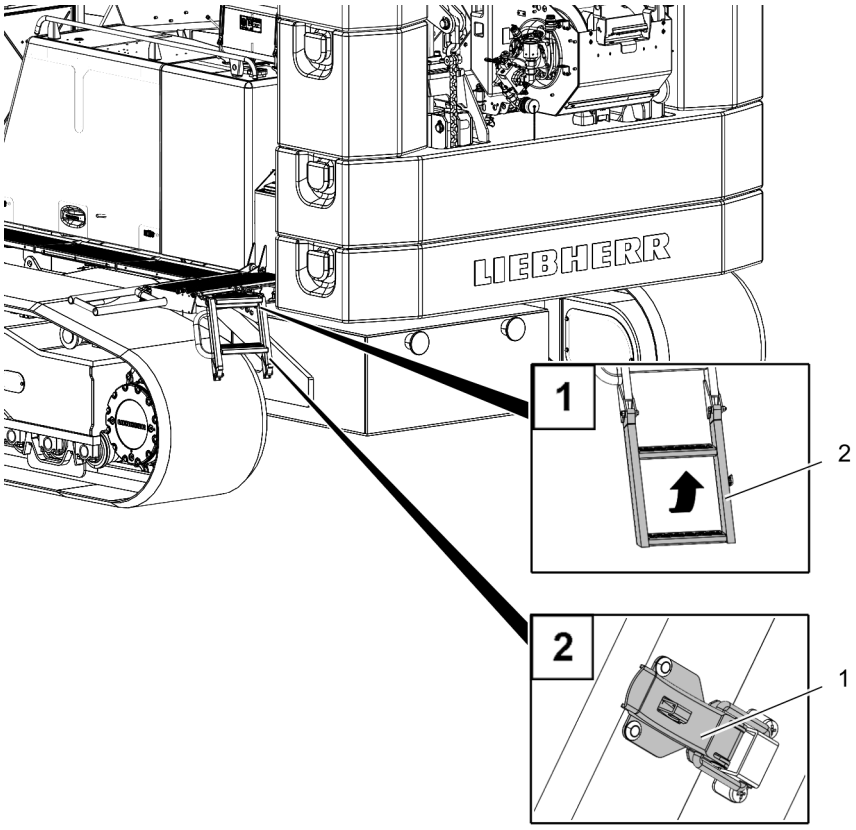

Fig.166143: Bringing the stairs with the platform into the transport position

- ► Swing the bottom step section **2** up carefully to the stop. Make sure that fingers and hands are not trapped.
- ► Hold the bottom step section **2** with one hand from the ground.
- ► Close the lock **1** between the bottom step section and between the top step section.

LWE/LTR 1100-009/25105-02-02/en

copyright © Liebherr-Werk Ehingen GmbH 2023

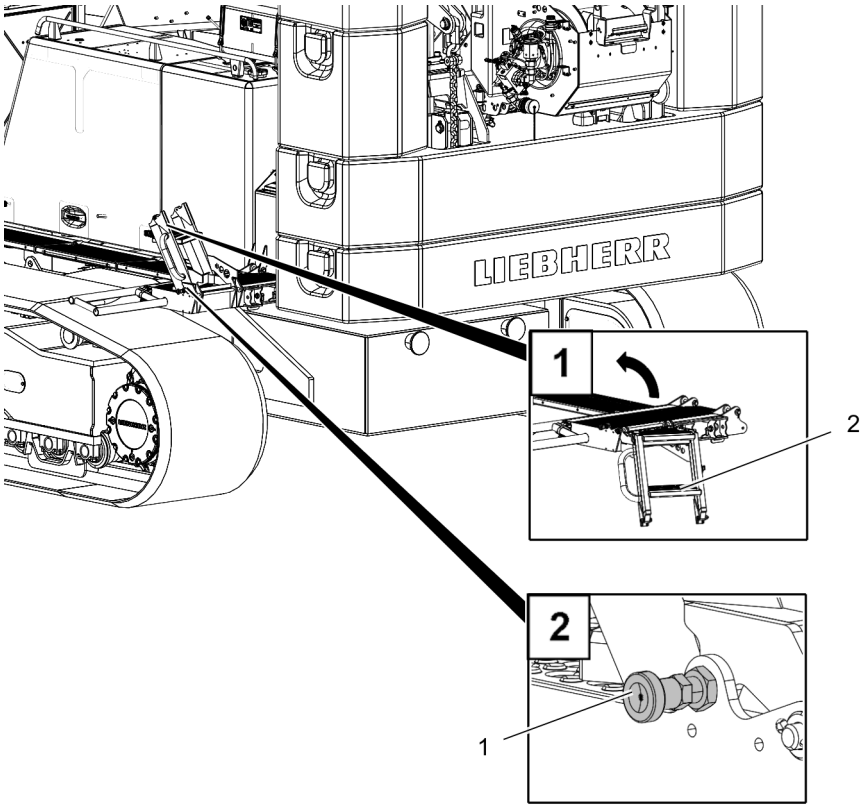

Fig.166144: Bringing the stairs with the platform into the transport position

- ► Swing the stairs **2** up carefully to the stop. Make sure that fingers and hands are not trapped.
- ► Grip the top step section **2** with one hand.
- ► Secure the stairs **2** with the locking pin **1**.

LWE/LTR 1100-009/25105-02-02/en

copyright © Liebherr-Werk Ehingen GmbH 2023

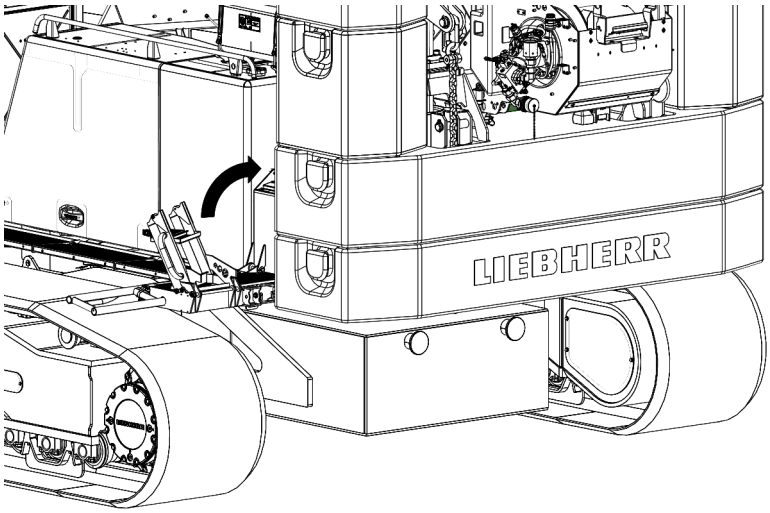

Fig.166145: Bringing the stairs with the platform into the transport position

► Swing the stairs with platform **2** up to the stop. Make sure that fingers and hands are not trapped.

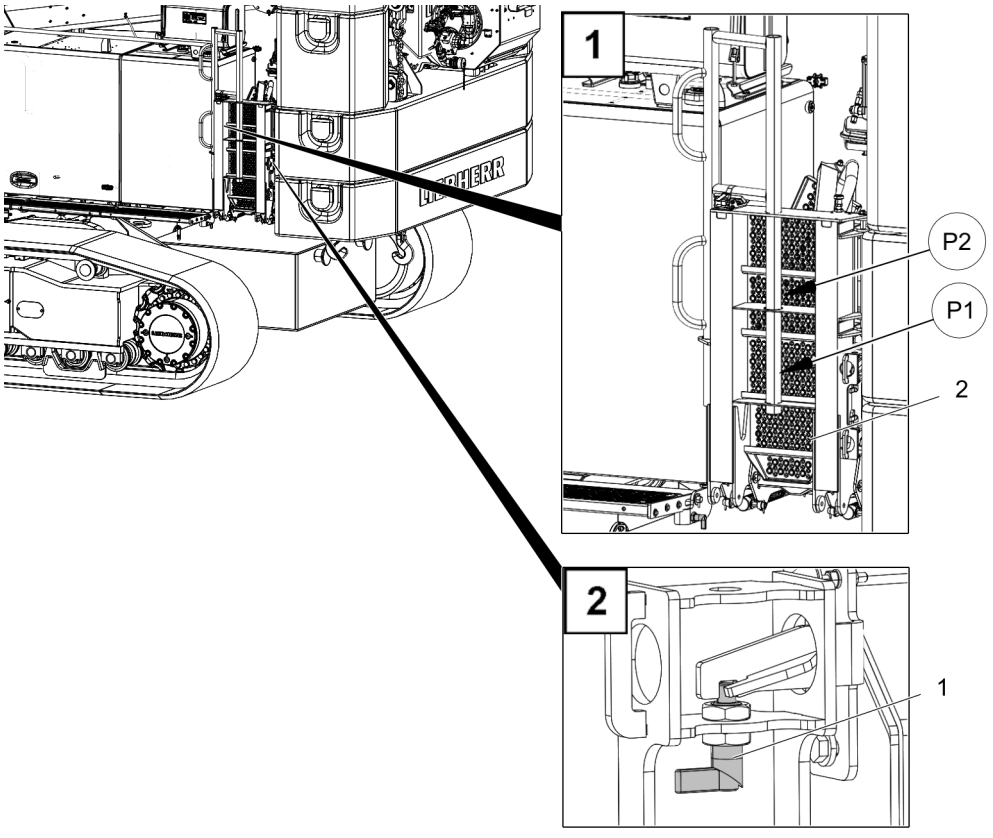

Fig.166133: Bringing the stairs with the platform into the transport position

LWE/LTR 1100-009/25105-02-02/en

copyright © Liebherr-Werk Ehingen GmbH 2023

► Hold the stairs with platform **2** with one hand in position **P1** or position **P2** from the ground.
► Close the latch **1**.

Result:

Stairs with the platform in the transport position.

8.4 Railings

CAUTION
Moving parts!
Fingers and hands can be crushed.
► Do **not** reach in between the railing **2** and platform.
► Assemble the railing **2** only from the ground.

8.4.1 Bringing the railings into the working position

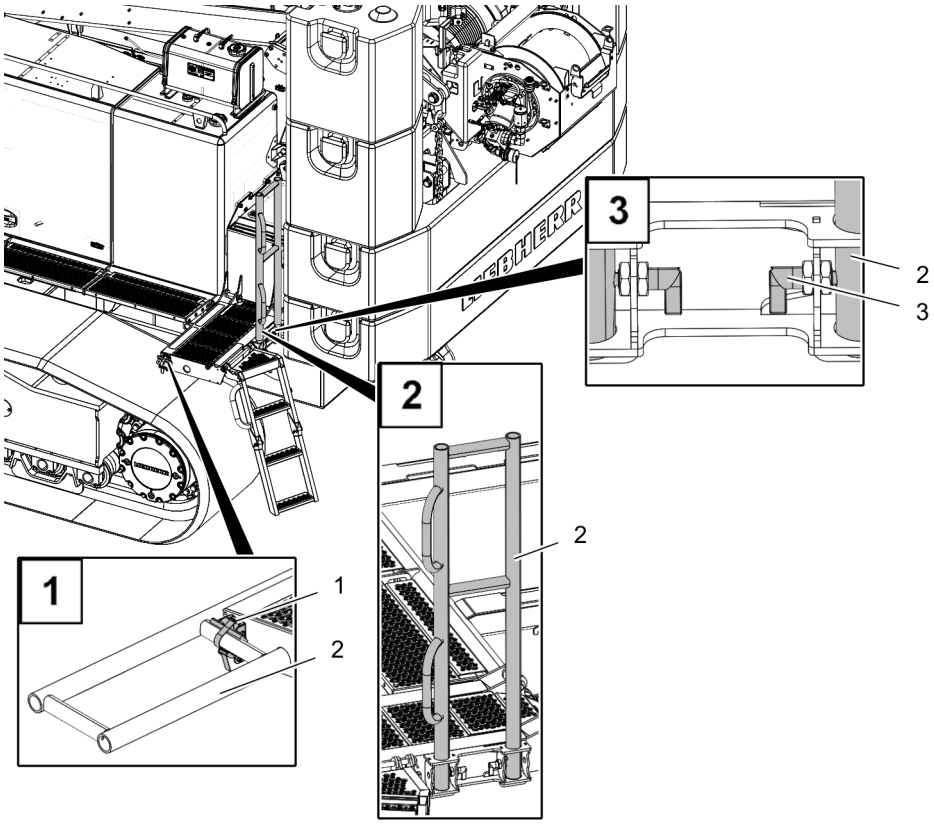

Fig.166137: Bringing the railings into the working position

► Open the rigging belt **1**.
► Pull the railing **2** out of the transport position.
► Pin the railing **2** in the working position.
► Close the latch **3** on the left and right.

Result:

The handles on the railing point toward the stairs

Railing in the working position

LWE/LTR 1100-009/25105-02-02/en

copyright © Liebherr-Werk Ehingen GmbH 2023

8.4.2 Bringing the railings into the transport position

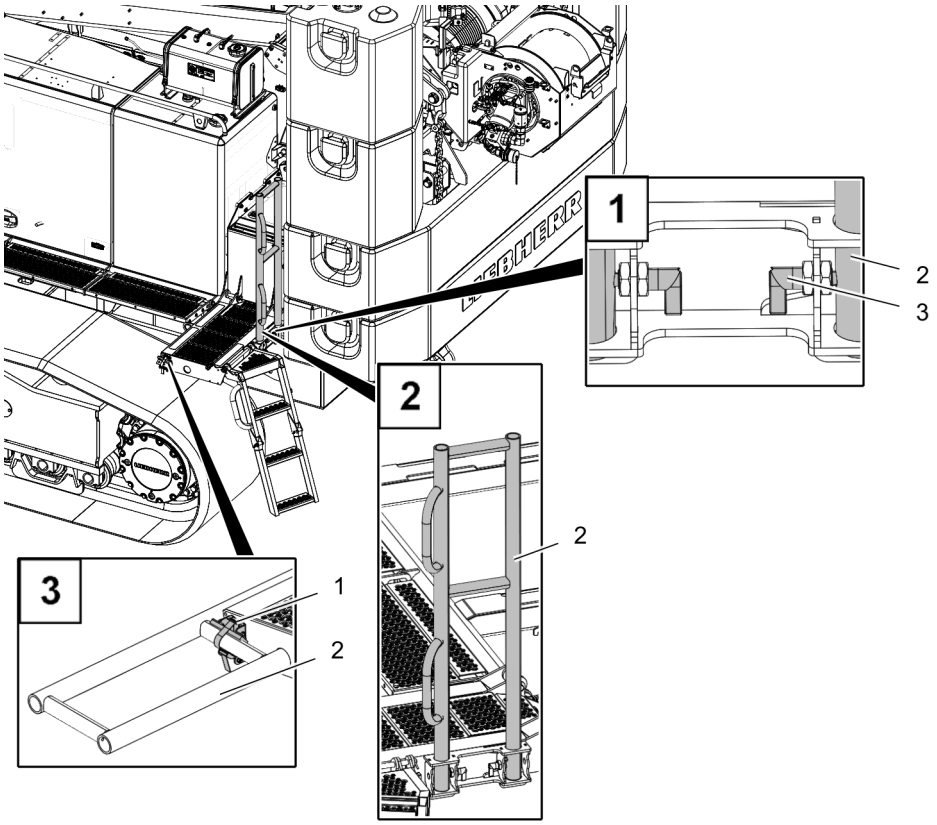

Fig.166146: Bringing the railings into the working position

- ► Open the latch **3** on the left and right.
- ► Remove the railing **2** from the working position.
- ► Push the railing **2** into the transport position.
- ► Close the rigging belt **1**.

Result:

Railings in the transport position

LWE/LTR 1100-009/25105-02-02/en

copyright © Liebherr-Werk Ehingen GmbH 2023

9 Winch II

9.1 Securing the ladder

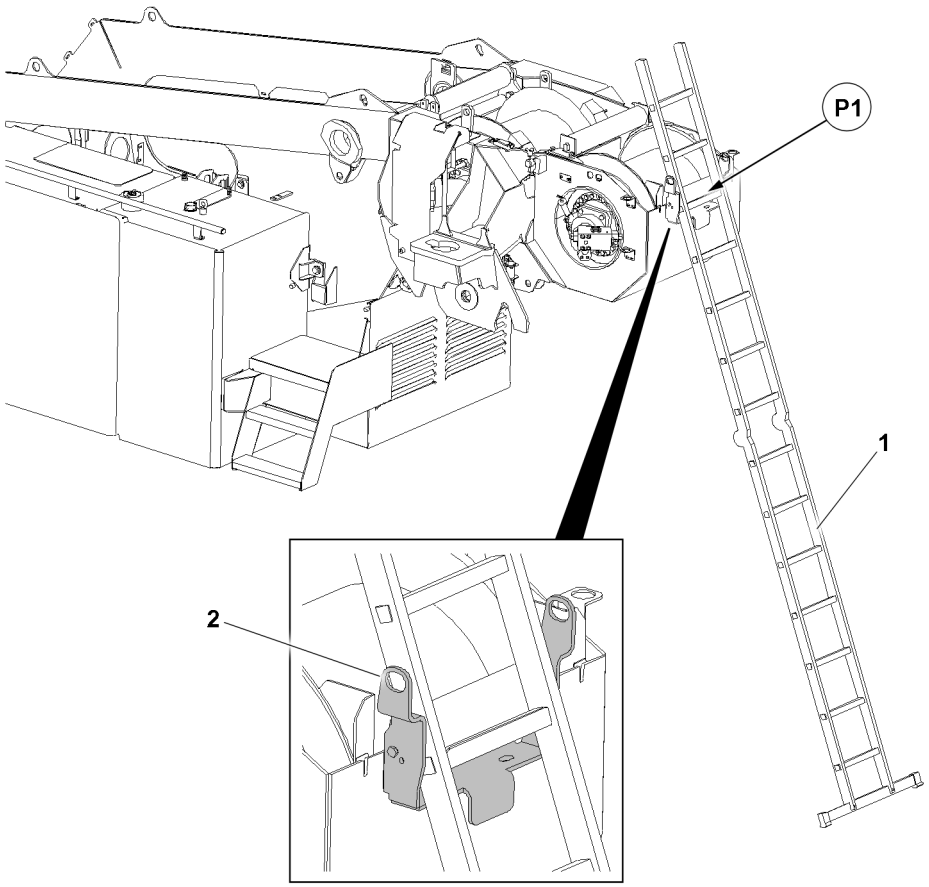

Fig.149041: Securing the ladder to winch II

WARNING
Ladder **not** secured!
Assembly personnel can fall, death, severe bodily injuries.
► Secure the ladder.

► Hang the ladder **1** with the hook device **2** in position **P1** on winch II and set it up securely.

LWE/LTR 1100-009/25105-02-02/en

copyright © Liebherr-Werk Ehingen GmbH 2023

9.2 Hook points

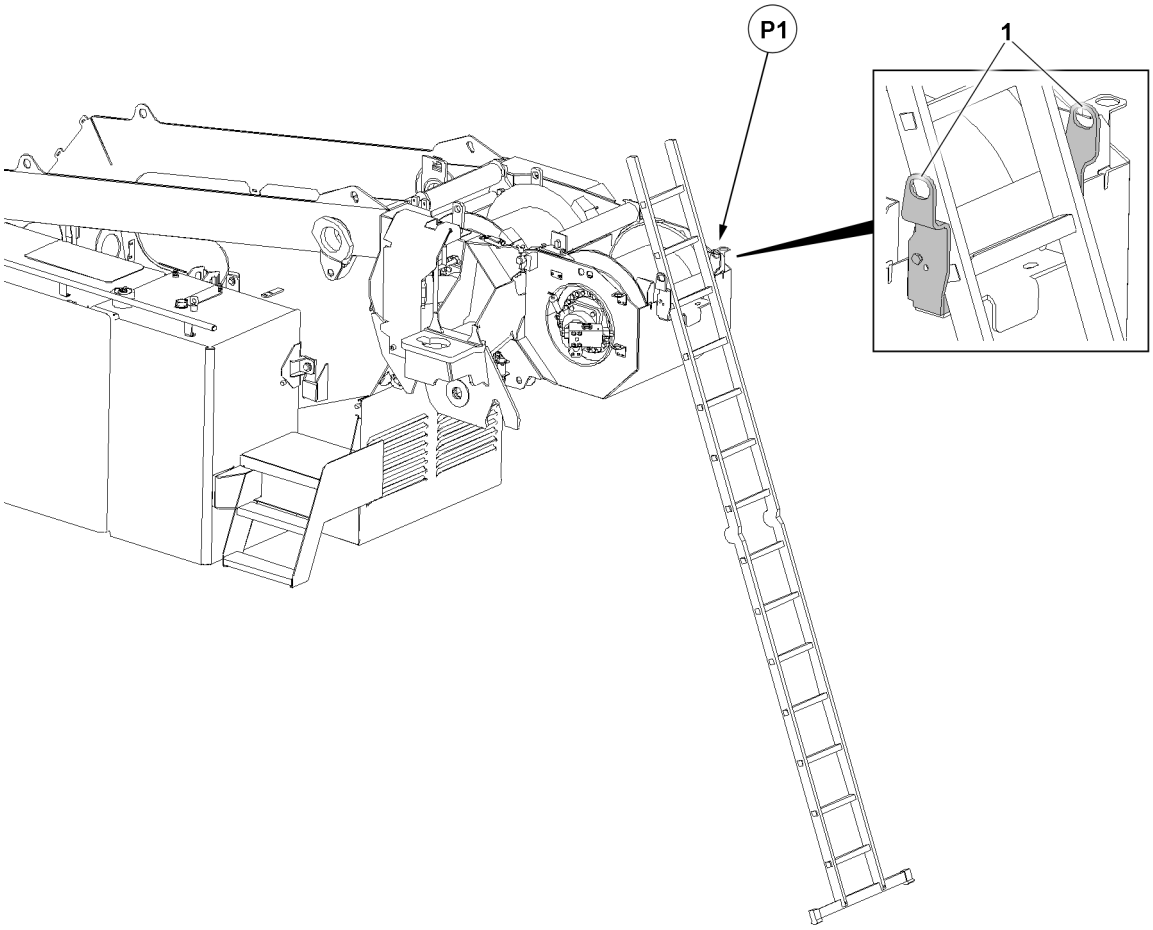

Fig.166149: Winch II hook points

WARNING
Assembly personnel not secured!
Assembly personnel can fall, death, severe bodily injuries.
► Secure assembly personnel to prevent falling.

► Secure assembly personnel with the fall arrest system in position **P1** to the hook point **1** to prevent falling.

LWE/LTR 1100-009/25105-02-02/en

copyright © Liebherr-Werk Ehingen GmbH 2023

10 Transporting the ladder

10.1 Securing the ladder in the transport position

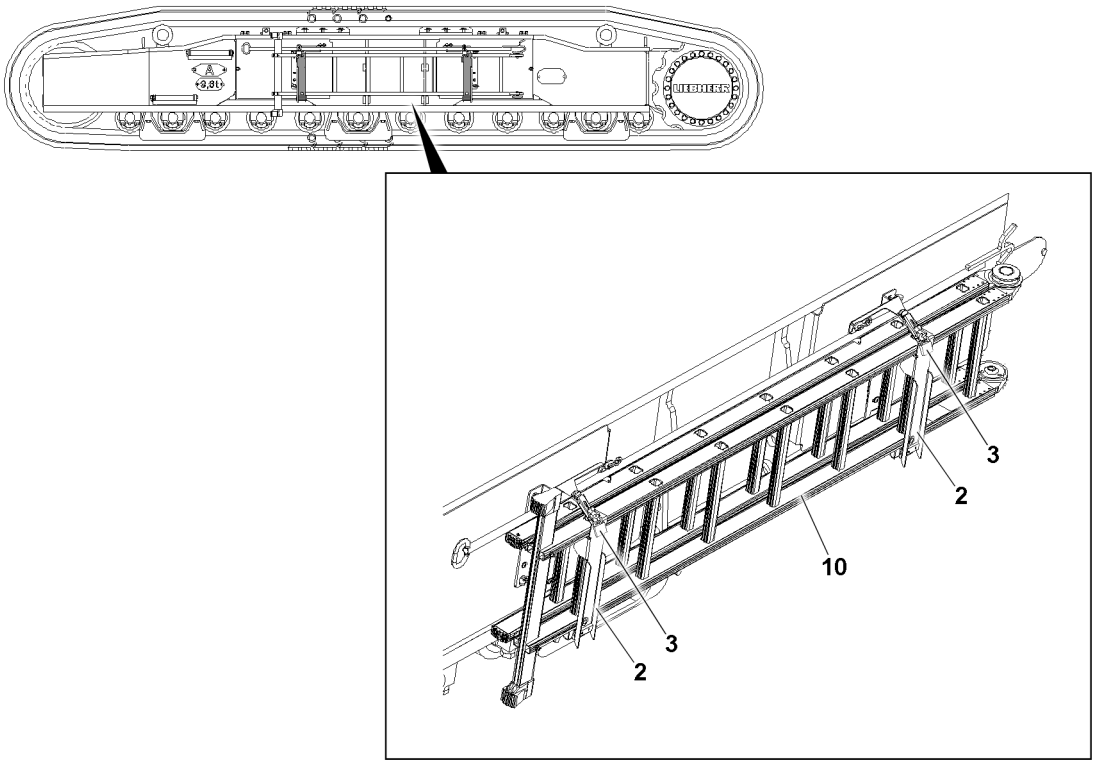

Fig.145021: Securing the ladder in the transport position

The ladder **10** must be safely installed for transport on the crawler carrier.

- ► Open the retainers **2**.
- ► Fold the ladder **10**.
- ► Take the ladder **10** down in the retainer **2** on the crawler carrier.
- ► Close the retainers **2**.
- ► Secure the retainers **2** with padlocks **3**.
- ► Before starting to travel, check if the ladder **10** is properly assembled and secured.

LWE/LTR 1100-009/25105-02-02/en

copyright © Liebherr-Werk Ehingen GmbH 2023

Empty page!

LWE/LTR 1100-009/25105-02-02/en

copyright © Liebherr-Werk Ehingen GmbH 2023

2.07 Accesses to the crane

1	Safety	3
2	Climbing up and down the crane chassis	4
3	Ascending and descending the crane superstructure	6
4	Entering and exiting the crane cab	12
5	Walking surfaces and stepping surfaces	13

LWE/LTR 1100-009/25105-02-02/en

copyright © Liebherr-Werk Ehingen GmbH 2023

LWE/LTR 1100-009/25105-02-02/en

Fig.195219

copyright © Liebherr-Werk Ehingen GmbH 2023

1 Safety

The ladders shown in the illustrations are examples and may appear differently with the same functional principle.

Before accessing the crane, observe the safety instructions.

- General safety information: See chapter 2.04.
- Information regarding personal protective equipment: See chapter 2.04.
- Information regarding the use of ladders: See chapter 2.04.10.
- Information regarding available hook points: See chapter 2.06.

WARNING
Slippery surfaces, lack of stability!
Personnel can fall down. Death, severe bodily injuries.
- ► Keep ladders, walking surfaces and stepping surfaces free of objects and obstacles.
- ► Only step on ladders, walking surfaces and stepping surfaces with a sufficiently clear height.
- ► Only step on ladders, walking surfaces and stepping surfaces with clean shoes.
- ► Keep ladders, walking surfaces and stepping surfaces free of heavy dirt, snow and ice.
- ► Stepping on ladders, walking surfaces and stepping surfaces by persons, including tools and equipment, weighing more than 150 kg is prohibited.
- ► Do **not** step on damaged ladders, walking surfaces and stepping surfaces and replace them immediately.
- ► For folding ladders: The danger zone must be kept free of personnel and objects during folding and swinging of the folding ladder.
- ► Do **not** trip over attachment parts.
- ► Personnel must wear an approved fall arrest system and protective equipment before performing any work on the crane superstructure.

If personnel are on walking surfaces and stepping surfaces that are **not** approved for access:
- ► Personnel must hook themselves to the hook points and safety ropes with an approved fall arrest system to prevent falling.

NOTICE
The handles can be ripped off.
- ► Do **not** use handles as rigging points.
- ► Subject the handles to no more than maximum 100 kg.

LWE/LTR 1100-009/25105-02-02/en

copyright © Liebherr-Werk Ehingen GmbH 2023

2 Climbing up and down the crane chassis

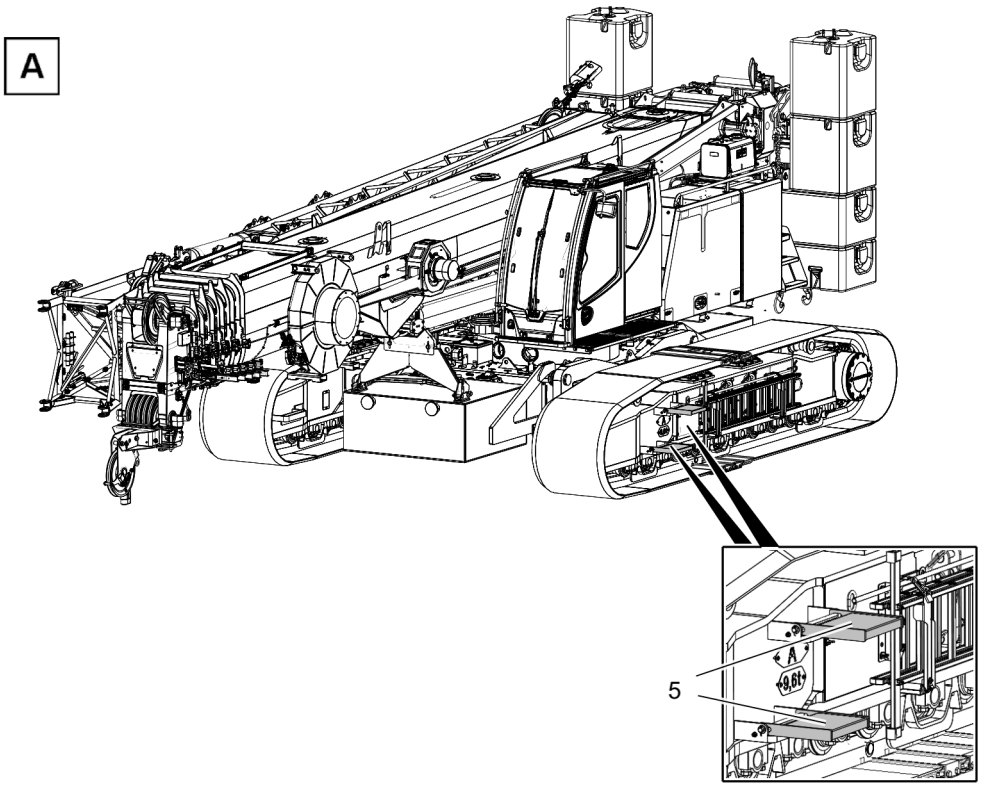

Fig.166126: Steps – Variation A

LWE/LTR 1100-009/25105-02-02/en

copyright © Liebherr-Werk Ehingen GmbH 2023

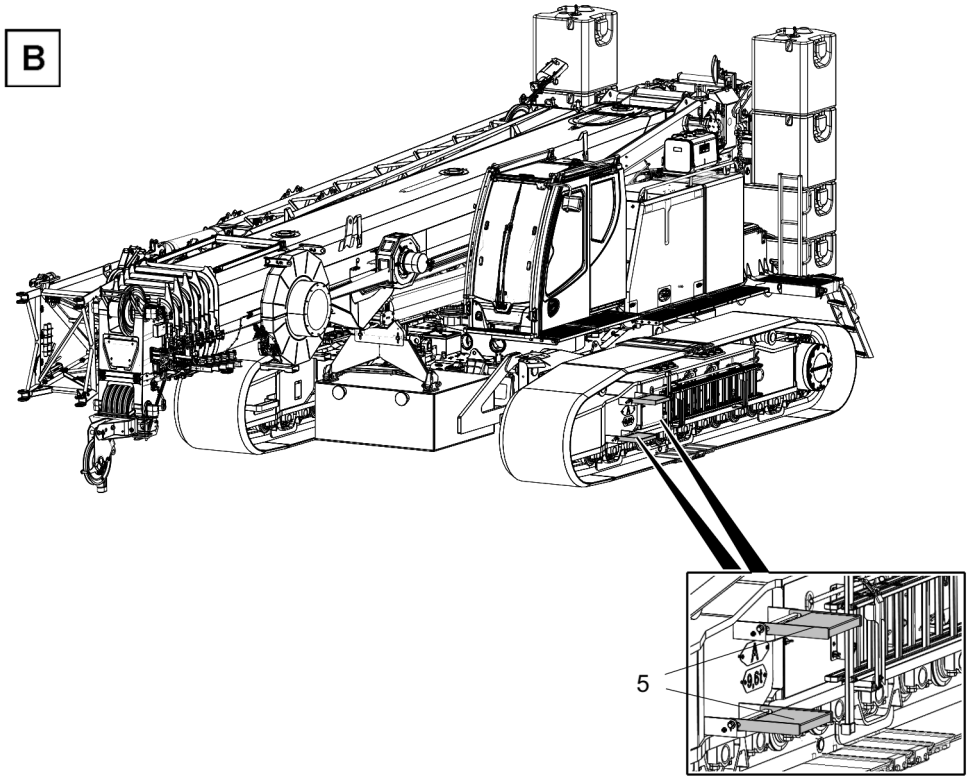

Fig.166127: Steps – Variation B

Note
- ► The access height from the ground to the first step may not exceed maximum 600 mm.
- ► When the access height is more than 600 mm , then the crane operator must ensure safe ascent and descent, for example by using a step.
- ► The steps **5** may be used for **Variation B** only for the first and last access to the crane cab during assembly and disassembly as fall protection equipment.

2.1 Assembling the steps in the access position

CAUTION
Danger of crushing!
Fingers can be crushed during assembly and disassembly of the steps **5**!
- ► Do not reach into the retainers!

- ► Fold the steps **5** down.

2.2 Assembling the steps in the transport position

CAUTION
Danger of crushing!
Fingers can be crushed during assembly and disassembly of the steps **5**!
- ► Do not reach into the retainers.

- ► Lift the steps **5** and fold them up.

LWE/LTR 1100-009/25105-02-02/en

copyright © Liebherr-Werk Ehingen GmbH 2023

3 Ascending and descending the crane superstructure

A

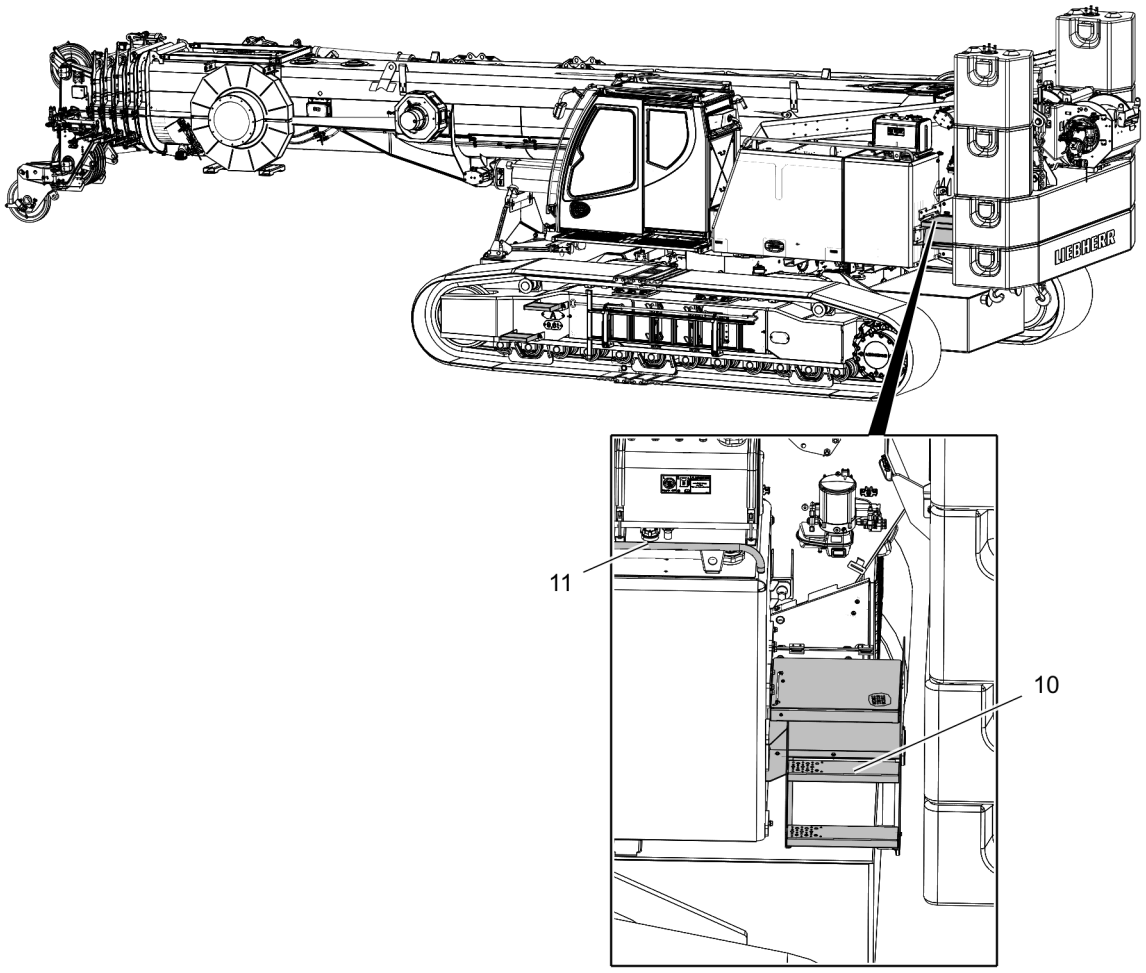

Fig.166128: Fixed integrated ascent – Variation A

LWE/LTR 1100-009/25105-02-02/en

copyright © Liebherr-Werk Ehingen GmbH 2023

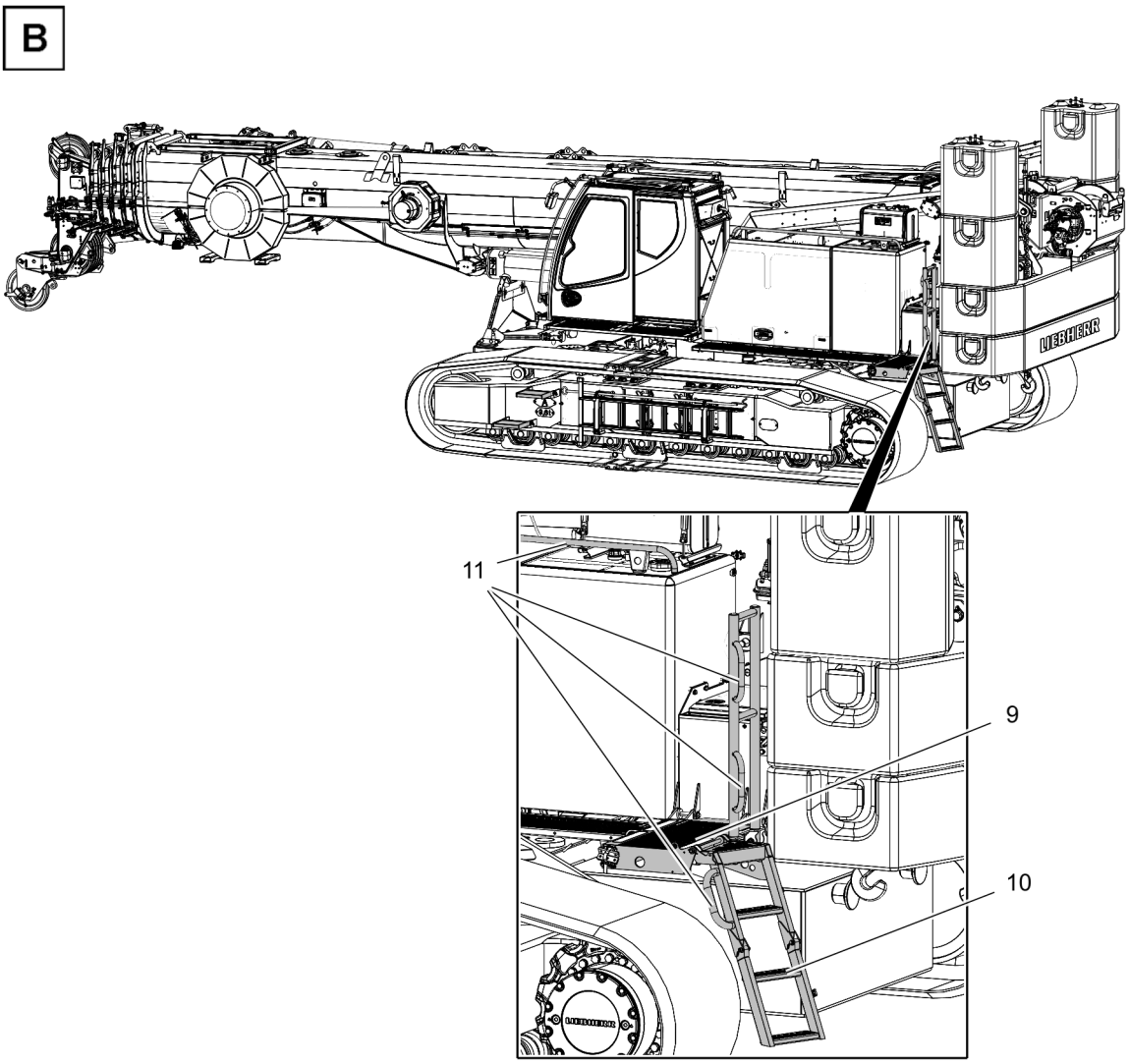

Fig.166129: Fixed integrated ascent – Variation B

WARNING
Danger of falling!
While climbing up and down via a ladder **10**, personnel can fall down and be severely injured!
- ► Adhere to the 3-point support. See chapter 2.04.10.
- ► Personnel must step deeply enough into the steps.
- ► When changing from the ladder **10** to the walking surface **9**, personnel must secure themselves with the attached handles **11** to prevent falling.
- ► When changing from the crane chassis to the ladder **10**, personnel must secure themselves with the attached handles to prevent falling.

3.1 Folding ladder

CAUTION
The ladder folds down uncontrolled!
Fingers and hands can be crushed.
- ► Do **not** reach into the hinge area.
- ► Fold the folding ladder **2** out only from the ground.

LWE/LTR 1100-009/25105-02-02/en

copyright © Liebherr-Werk Ehingen GmbH 2023

3.1.1 Folding ladder in the operating position

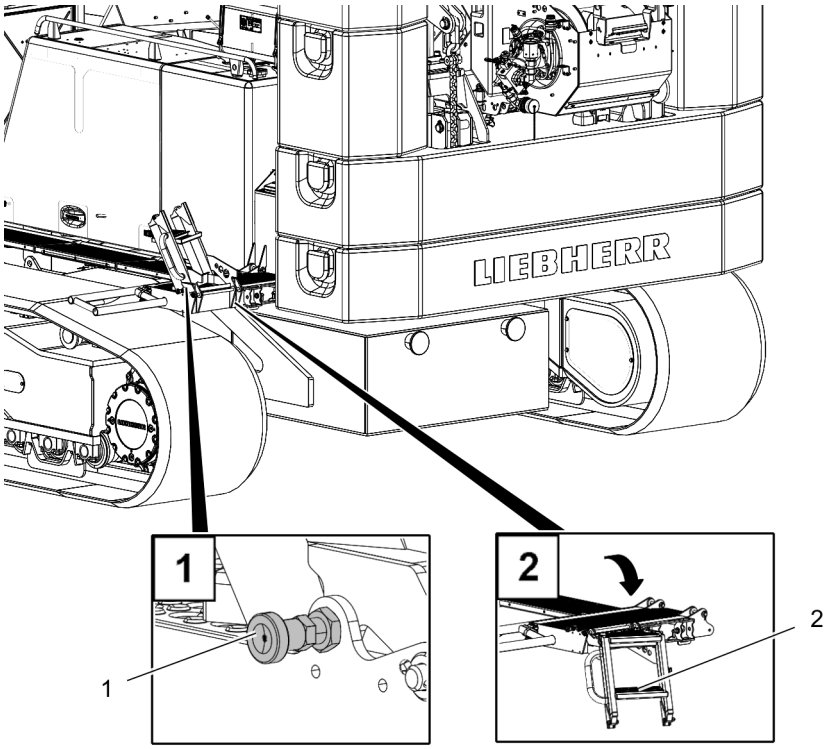

Fig.166135: Folding ladder top step section in the operating position

- ► Hold the ladder with one hand and release the locking pin **1**.
- ► Swing the top step section of the ladder **2** down carefully to the stop. Make sure that fingers and hands are not trapped.

LWE/LTR 1100-009/25105-02-02/en

copyright © Liebherr-Werk Ehingen GmbH 2023

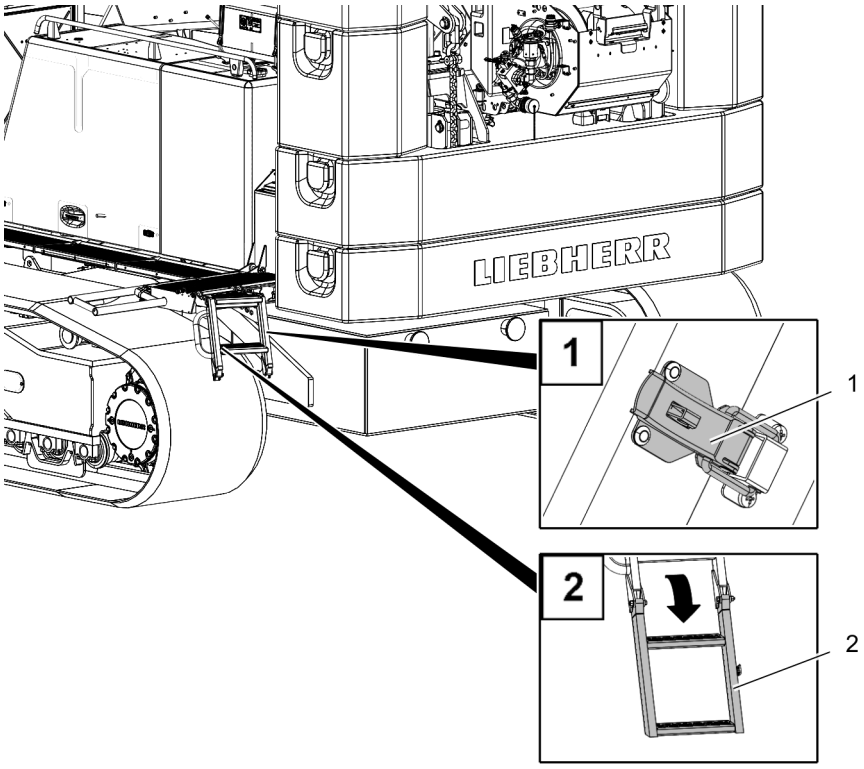

Fig.166136: Folding ladder in the operating position

- ► Hold the ladder with one hand and release the lock **1**.
- ► Swing the bottom step section of the ladder **2** down carefully. Make sure that fingers and hands are not trapped.

LWE/LTR 1100-009/25105-02-02/en

copyright © Liebherr-Werk Ehingen GmbH 2023

3.1.2 Climbing up and down using the folding ladder

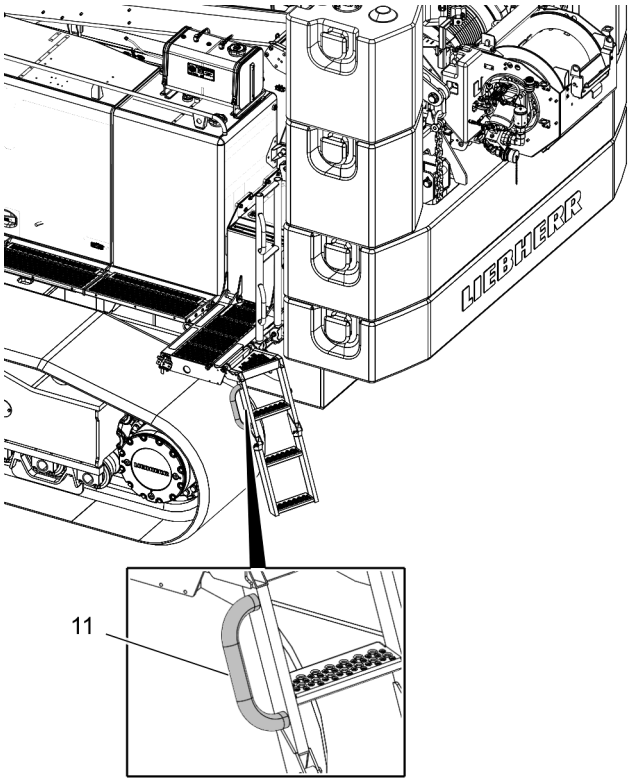

Fig.166138: Handle

Before accessing the crane, observe the safety instructions.

– For information regarding the use of ladders, see chapter 2.04.10.

Make sure that the following prerequisites are met:
– The mobile crane is located on a level surface.
– The folding ladder is in the operating position.

► Climb up / down with the 3-point support.
► When climbing up the ladder, assembly personnel must secure themselves to the handle **11** to prevent falling.

LWE/LTR 1100-009/25105-02-02/en

copyright © Liebherr-Werk Ehingen GmbH 2023

3.2 Climbing up and down with the ladder

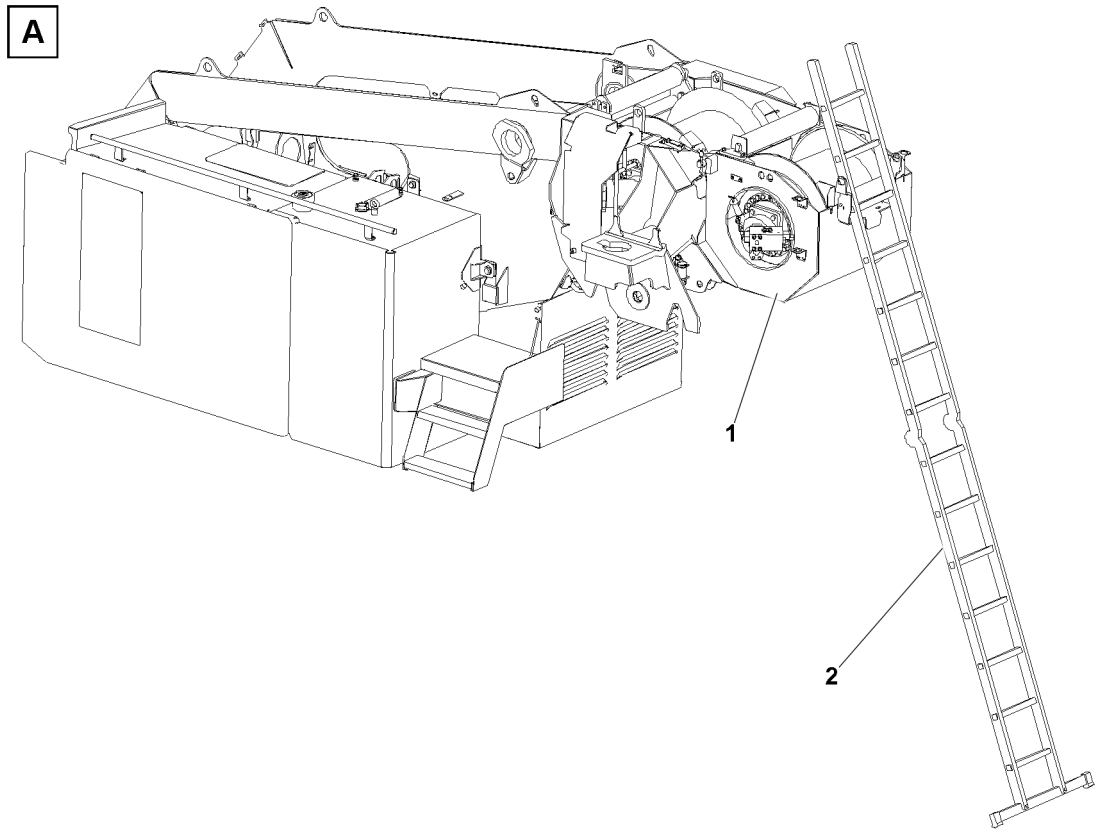

Fig.163596: Ascending / descending via the ladder – Variation A

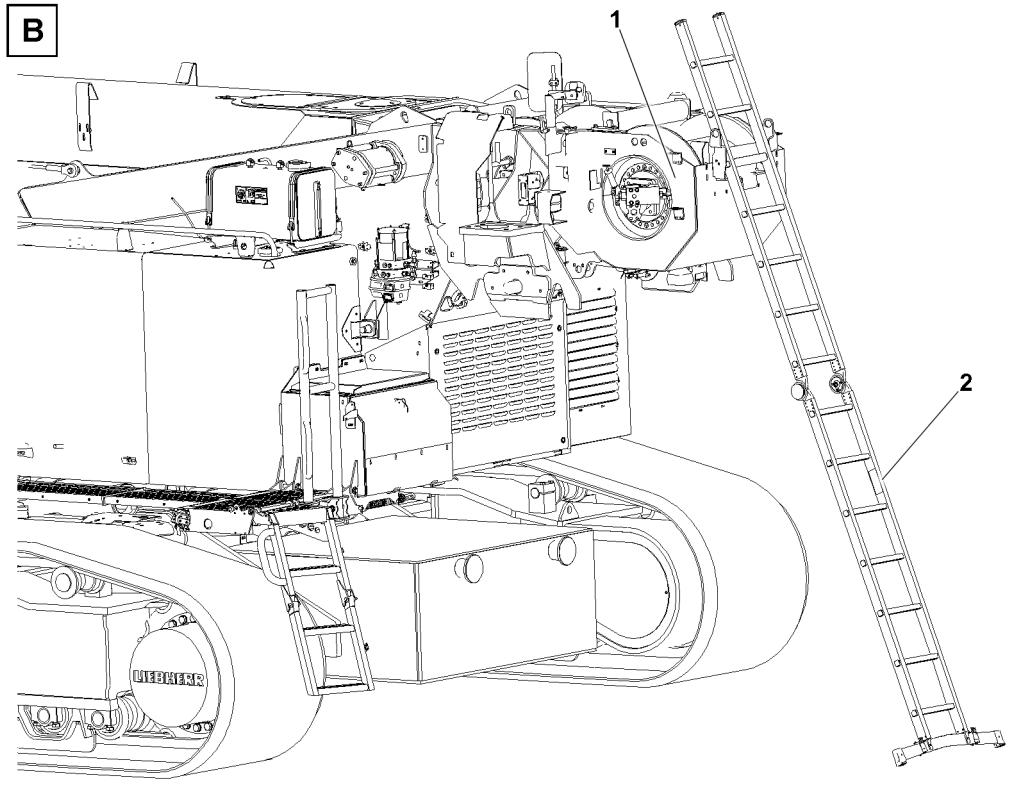

Fig.163597: Ascending / descending via the ladder – Variation B

Winch II **1** can be reached via the ladder **2**.

LWE/LTR 1100-009/25105-02-02/en

copyright © Liebherr-Werk Ehingen GmbH 2023

Ladder protection and hook points: See chapter 2.06 „Fall protection equipment on the crane“.

Make sure that the following prerequisites are met:
- The crane superstructure is aligned parallel (0° or 180° position) with the crawler travel gear.
- Personnel are wearing personal protective equipment.
- The ladder is secured.

► Ascend to and descend from winch II **1** via the ladder **2**.

4 Entering and exiting the crane cab

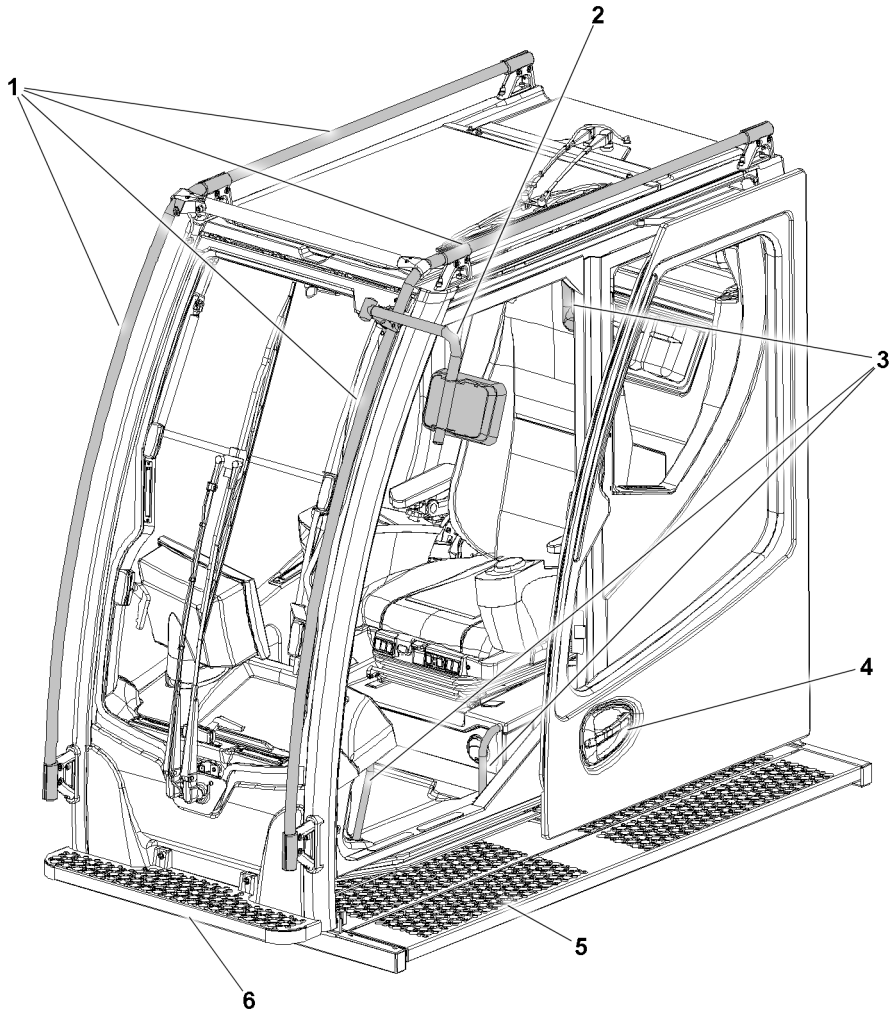

Fig.149040: Entering / exiting the crane cab

1	Handrail	**4**	Door handle (exterior)
2	Outside mirror	**5**	Extendable step (side)
3	Handle	**6**	Step (front)

Make sure that the following prerequisites are met:
- The crane superstructure is aligned parallel (0° position or 180° position) with the crawler travel gear.
- The step **5** is extended.

LWE/LTR 1100-009/25105-02-02/en

copyright © Liebherr-Werk Ehingen GmbH 2023

WARNING
Crane superstructure incorrectly aligned!
Personnel can fall when entering the crane cab. Death, severe bodily injuries.
Personnel can fall when exiting the crane cab. Death, severe bodily injuries.
► Align the crane superstructure is parallel (0° position or 180° position) with the crawler travel gear.

WARNING
Persons not secured!
Personnel can fall down. Death, severe bodily injuries.

When opening / closing the door of the crane cab and when entering the crane cab or exiting the crane cab:
► Adhere to the 3-point support. See chapter 2.04.10.

WARNING
Limbs can be trapped or crushed when opening / closing the crane cab door!
Severe bodily injuries.
► Open and close the crane cab door carefully.
► Make sure that no limbs are within the movement range of the door.

CAUTION
Hitting the outside mirror **2** of the crane cab!
Head injuries possible when entering / exiting.

Before entering / exiting:
► Pay attention to the outside mirror.
► If necessary: Fold the outside mirror **2** to the side.
► Use personal protective equipment, such as a hard hat.

When opening / closing the door of the crane cab from the outside:
► Use the door handle **4**.

When opening / closing the door of the crane cab from the inside:
► Use the inner door handle.

When entering or exiting the crane cab:
► Use the provided step **5**, step **6**, hand rails **1** and handles **3**.

5 Walking surfaces and stepping surfaces

WARNING
Slippery surfaces!
Personnel can fall down. Death or severe injuries.
► Only step on accessible surfaces.
► It is **prohibited** to step on non-accessible surfaces.
► It is **prohibited** to step on the roof of the cab.
► It is prohibited to step on surfaces with an incline of more than 5°.

WARNING
Tripping points and gaps on the crane or equipment!
People can trip and fall down. Death, severe bodily injuries, property damage.
► Move with caution on the crane and equipment.
► Secure personnel to prevent falling. See chapter 2.06.

LWE/LTR 1100-009/25105-02-02/en

copyright © Liebherr-Werk Ehingen GmbH 2023

5.1 Accessible walking surfaces and stepping surfaces

Fig.149035: Cross hatch

Accessible walking surfaces and stepping surfaces are marked with these cross hatches.

5.2 Non-accessible surfaces

Fig.114702: Cross hatch

Surfaces that are **not** approved for access are marked with these cross hatches.

5.3 Crane chassis walking surfaces and stepping surfaces

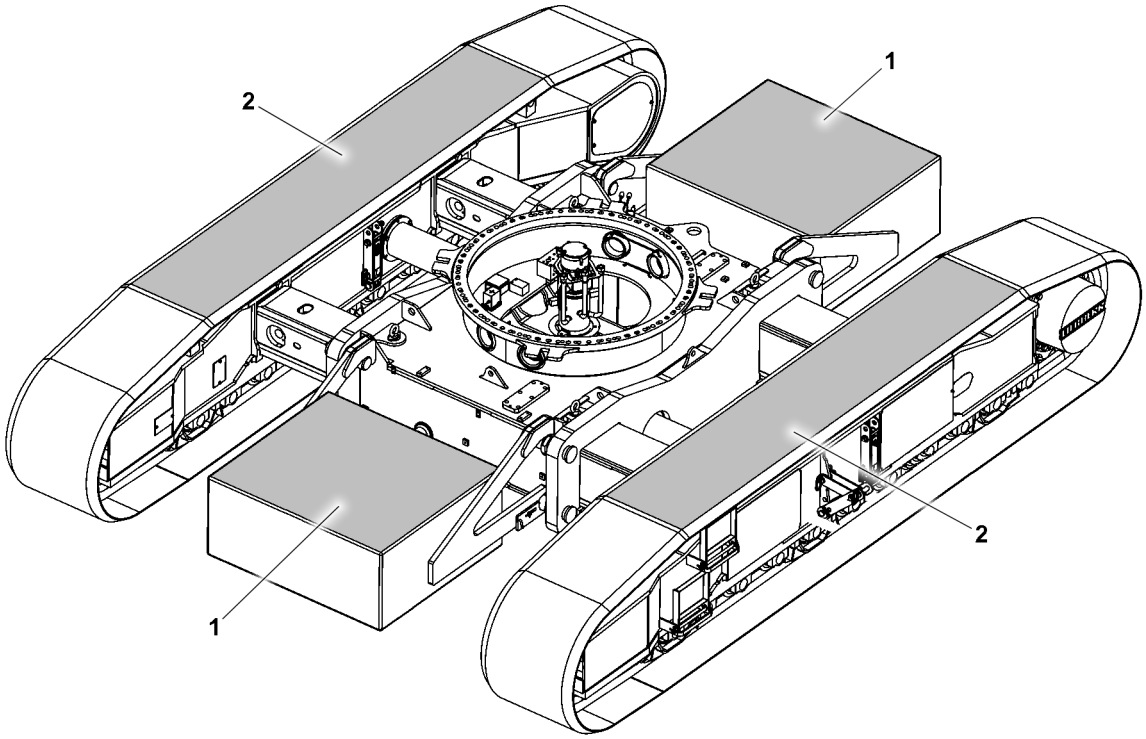

Fig.149039: Accessible walking surfaces and stepping surfaces

1 Central ballast

2 Crawler travel gear outrigger pads, 0° incline

Note

► The marked walking surfaces and stepping surfaces apply only for **variation A**.

LWE/LTR 1100-009/25105-02-02/en

copyright © Liebherr-Werk Ehingen GmbH 2023

2.08 Working in low temperatures

1	Auxiliary equipment	2
2	Safety	2
3	Environmental / component temperature below -20 °C	3
4	Maintenance	7

LWE/LTR 1100-009/25105-02-02/en

copyright © Liebherr-Werk Ehingen GmbH 2023

1 Auxiliary equipment

At ambient temperatures between -20 °C and +50 °C the crane can be operated and stored „without auxiliary equipment for working in low temperatures“.

At ambient temperatures below -20 °C , the crane must be modified and equipped with „auxiliary equipment for working at low temperatures“.

WARNING
Working at low temperatures without the corresponding auxiliary equipment!
The crane components can be damaged and fail. The load can rip off.
Death, severe bodily injuries, property damage.

If the crane is operated at an ambient temperature lower than -20 °C:
- ► Make sure that the crane is equipped with the corresponding „auxiliary equipment for working at low temperatures“.
- ► Match the operating fluids in time to the ambient temperature.

2 Safety

Temperature changes cause technological changes to material properties in the case of steel / cast steel and many other materials.

Crane components made of steel / cast steel are very sensitive to sudden movements, impacts and shocks at decreasing negative temperatures.

This effect increases if the crane compacts are impacted with a load and / or large weights.

To ensure safe operation at low temperatures, the crane structure must be checked at short intervals for cracks.

Note
- ► Observe and adhere to the instructions in chapter 8.01.

DANGER
The crane can topple over!
Due to decreasing negative temperatures, crane components reach their technological load limits much earlier.
Crane components can break.
The crane can topple over.
Death, severe bodily injuries, property damage.
- ► For safe crane operation, the **temperature of the crane components is the deciding factor** and not the ambient temperature.
- ► For safe crane operation with component temperatures **down to -40 °C** , the crane must be equipped with „auxiliary equipment for working at low temperatures“.
- ► With component temperatures **below -40 °C** , do not operate the crane. In the case of doubt, contact Customer Service at Liebherr-Werk Ehingen GmbH.

LWE/LTR 1100-009/25105-02-02/en

copyright © Liebherr-Werk Ehingen GmbH 2023

3 Environmental / component temperature below -20 °C

3.1 Winter operation

Low temperatures, as well as snow, frost and ice can impair crane operation and cause problems on the crane.

Freezing takes place often at low temperatures.

WARNING
Snow, frost and ice on the accesses!
Personnel can fall from the accesses.
Death, severe bodily injuries, property damage.
► Remove the snow, frost and ice from all accesses, steps and catwalks.
► Remove the snow, frost and ice from the crane.

NOTICE
Snow, frost and ice on the crane components!
The crane components can be damaged and fail.
Cylinder seals can be destroyed by frozen piston rods.
► Remove the snow, frost and ice from the piston rods.
► Remove the snow, frost and ice from all rope pulleys and winches.
► Remove the snow, frost and ice from the hose drums and limit switches.

WARNING
Snow, frost and ice below the support plates or the crawler carriers!
The crane can slide.
Death, severe bodily injuries, property damage.
► Remove the snow, frost and ice on top and below the support plates.
► Remove the snow, frost and ice on top and below the crawler carrier.
► Remove the snow, frost and ice from the roadway.

Prerequisites for crane start up with component temperatures below -20 °C
– The hose drums and cables are easy to move.
– All rope pulleys are easily movable.
– The view from the crane cab is free.
– The mirrors are free of snow, frost and ice.
– Fastening equipment is approved for the ambient temperatures present.
– The load fastening points are approved for the ambient temperatures present.

3.2 Preheating time

WARNING
Limited crane control during radio operation!
In the case of falling negative temperatures, the LCD displays react increasingly slowly to changes made to images and icons on the displays.
In the case of minus temperatures below -25 °C , changes made to images and icons could be displayed with a considerable delay or not at all.
This can lead to dangerous situations if warnings are displayed with a delay.
Death, severe bodily injuries, property damage.
► If the component temperature of the radio remote control is below -25 °C: Preheat the radio remote control prior to start up.
► In the case of increasing sluggishness of the LCD displays during radio operation with temperatures below -25 °C: Warm up or preheat the radio remote control occasionally.

LWE/LTR 1100-009/25105-02-02/en

copyright © Liebherr-Werk Ehingen GmbH 2023

Crane components	Preheating time
Engine preheating up to start at -40 °C component temperature	45 minutes
Preheat the hydraulic system in the crane superstructure and the crane chassis	30 minutes
Preheat the crane cab / driver's cab for start up at the same time up to 5 °C	10 minutes
Total preheating time	**75 minutes**

► To ensure safe crane operation: Adhere to the preheating times.

3.3 Engine preheating

If the components temperature is lower than -20 °C the chassis engine and / or superstructure engine must be preheated before starting.

Depending on the crane type, a chassis engine and / or a superstructure engine is installed.

Pre-warming the chassis engine is described in chapter 6.01.

Pre-warming the superstructure engine is described in chapter 6.02.

► Preheat the chassis engine and / or the superstructure engine.
► Start the chassis engine and / or the superstructure engine.

When the chassis engine and / or the superstructure engine has reached its operating temperature:
► Turn off engine preheating.

3.4 Preheating the hydraulic oil

If the ambient temperature is lower than -20 °C the hydraulic oil must be preheated prior to crane operation.

NOTICE
Hydraulic oil **not** preheated!
The hydraulic system can be damaged during crane operation.
► Before starting crane operation, preheat the hydraulic oil to at least 20 °C.
► Retract and extend all the hydraulic cylinders in an unloaded state over the entire stroke multiple times.

WARNING
Persons in the area of the hoist movement!
Death, severe bodily injuries, property damage.
► Observe the area of the hoist movement.
► Make sure that there are **no** persons in the area of the hoist movement.

3.4.1 Turning the hydraulic oil preheating on

Make sure that the following prerequisites are met:
– The engine is running.
– Hydraulic oil preheating is available.

Hydraulic oil preheating is described in chapter 4.03.

► Turn the hydraulic oil preheating on.

When the hydraulic oil is preheated:
► Turn the hydraulic oil preheating off.

3.4.2 Supporting the crane

Supporting the crane vehicle is described in chapter 3.05.

LWE/LTR 1100-009/25105-02-02/en

copyright © Liebherr-Werk Ehingen GmbH 2023

All support plates must be supported with suitable and stable materials.

If moveable support plates are not available, the support plates must be supported **on one side of the crane** with greased polyamide plates.

WARNING
No movable support plates or crane **not** supported with greased polyamide plates!
The sliding beams can bend. The support plates can suddenly move to the side.
The load can oscillate.
Death, severe bodily injuries, property damage.
► Use moveable support plates.

If there are no movable support plates available:
► Support the support plates **on one side of the crane** with greased polyamide plates.

If not sure if the crane has been equipped with support cylinders for an operating temperature down to -40 °C , contact Customer Service at Liebherr-Werk Ehingen GmbH.

If the crane is **not** equipped with support cylinders for an operating temperature down to -40 °C:
► When supporting, extend the support cylinder a maximum of 50 %.

The wheels must not come in to contact with the ground after the crane is supported.

► Support the support plates when necessary.
► Support the crane.

3.4.3 Cranes with lattice mast boom

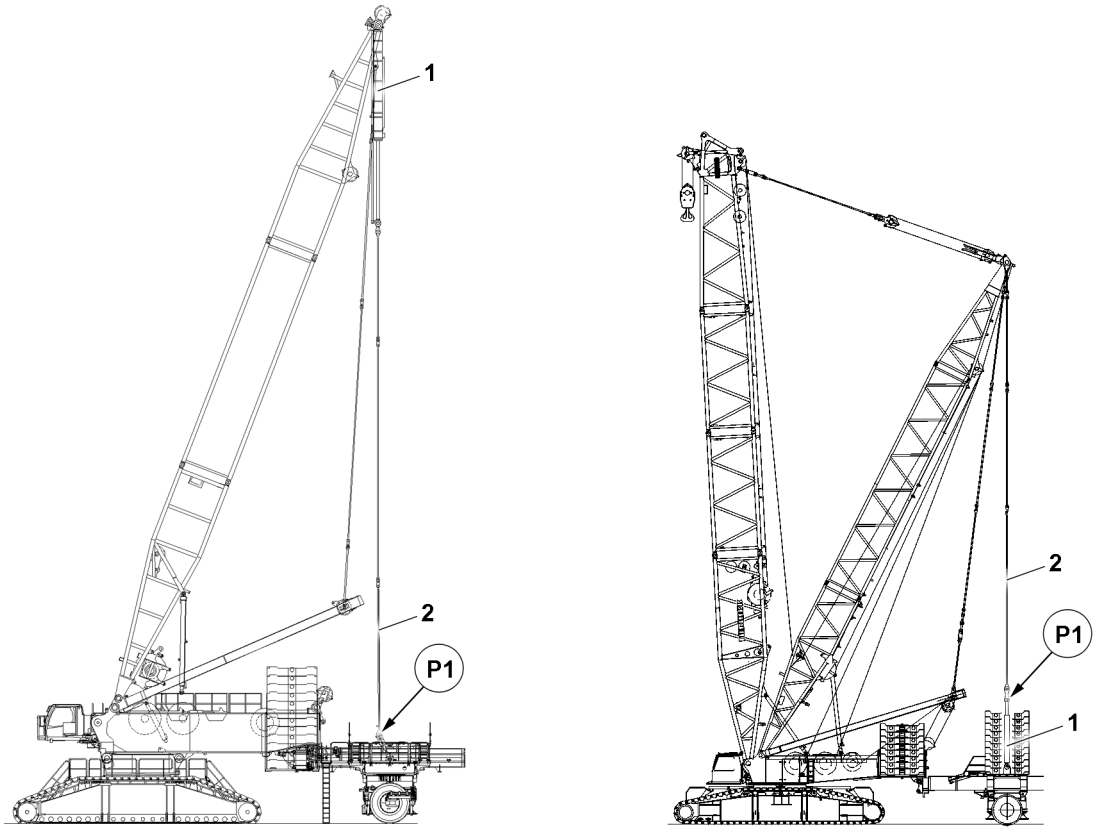

Fig.126875: Removing the guy rods on the derrick ballast

With component temperatures of less than -20 °C , the pull cylinders must be preheated by means of retraction and extension. Before the pull cylinders can be preheated, the guy rods **2** must be removed in position **P1** on the derrick ballast.

LWE/LTR 1100-009/25105-02-02/en

copyright © Liebherr-Werk Ehingen GmbH 2023

Disassembly and assembly of the guy rods **2** on the derrick ballast is described in the Crane operating instructions, chapter 5.35 and chapter 5.36.

► Remove the guy rods **2** at position **P1** on the derrick ballast.

NOTICE
Danger of collision!
Damage of the guy rods, derrick ballast or other components.
► When retracting and extending the guy rods, avoid contact with other components.

► Retract and extend the pull cylinders **1** in an unloaded state over the entire stroke multiple times.

When additional hydraulic cylinders are installed on the crane with lattice mast:
► Retract and extend the hydraulic cylinders in an unloaded state over the entire stroke multiple times.

3.4.4 Cranes with a telescopic boom

Make sure that the following prerequisites are met:
– The crane is supported and horizontally aligned.
– There is no load on the hook.

► Retract and extend the luffing cylinder in an unloaded state over the entire stroke multiple times.
► Retract and extend the telescoping cylinder in an unloaded state over the entire stroke multiple times.

3.5 Assembling / disassembling the crane components

If the component temperature is lower than -20 °C , there is an increased danger that in the case of impact and / or strong component contact that the crane components will be damaged as a result of their changed technological material properties. In particular counterweights and crane components made of cast steel are subject to a greater risk of damage due to impact at component temperatures below -20 °C .

NOTICE
Striking of the crane component during assembly or disassembly!
Crane components can be damaged.
► Do **not** strike the crane component during assembly and disassembly.
► Carry out all work slowly and with utmost caution.

3.6 Reducing rope pull

When working with rope / component temperature below -20 °C , Liebherr-Werk Ehingen GmbH recommends reducing the rope pull.

The rope pull on the hoist rope can be reduced by increasing the rope reeving.

Note
Increase of rope reeving!
Due to the increased rope reeving, the hoist rope length may not be sufficient for lowering the hook block to the ground.
► Pay attention to rope length.

NOTICE
Rope reeving higher than specified in the load chart!
Danger of slack rope formation due to a too low hook block weight. Damage to the hoist rope.
► Increase the hook block weight accordingly.

► Increase the rope reeving specified in the load chart.
► If necessary: Increase the hook block weight.

LWE/LTR 1100-009/25105-02-02/en

copyright © Liebherr-Werk Ehingen GmbH 2023

3.7 Increasing the hook block weight

The calculation of the minimum required hook block weight is described in the load chart.

Rope / component temperature	Increasing the hook block weight
-21 °C to -+30 °C	Increase the minimum required hook block weight by 10 %
-31 °C to -+40 °C	Increase the minimum required hook block weight by 15 %

- ► Increase the required hook block weight depending on the rope or component temperature.
- ► Observe and adhere to the „hook block weight“ charts.

Note

- ► Observe and comply with the permissible hook block weights for erection and take-down of the boom systems in the erection and take down charts.

3.8 Crane operation

In case of an ambient / component temperature below -20 °C , crane operation requires an anticipatory working procedure adapted to the weather conditions.

WARNING
Sudden acceleration and deceleration of crane movements!
Crane components can break.
Death, severe bodily injuries, property damage.

- ► Accelerate and decelerate crane movements sensitively and with utmost caution.

3.8.1 Reducing the maximum load

Cranes with lattice mast boom

In the case of cranes with pull cylinders in the derrick ballast guying, if the component temperature is between -30 °C and -40 °C the maximum derrick ballast must be reduced. The maximum load is also reduced due to the reduction of the maximum derrick ballast.

Note

- ► Take load reduction into account during job planning.

- ► Reduce the maximum derrick ballast by 15 % in case of component temperatures between -30 °C and -40 °C.

Cranes with a telescopic boom

Cranes with a telescopic boom: For component temperatures between -30 °C and -40 °C the maximum load must be reduced.

- ► Reduce the maximum load by 15 % in the case of component temperatures between -30 °C and -40 °C.

4 Maintenance

4.1 Load bearing crane structures

Checking the load bearing crane structure is described in Chapter 8.01.

LWE/LTR 1100-009/25105-02-02/en

copyright © Liebherr-Werk Ehingen GmbH 2023

► The load bearing crane structure must be visually inspected more often at low temperatures.

4.2 Rope pulleys and hydraulic cylinders

Checking the rope pulleys and hydraulic cylinders is described in Chapter 8.01.

► Rope pulleys and hydraulic cylinders must be visually inspected more often at low temperatures.

LWE/LTR 1100-009/25105-02-02/en

copyright © Liebherr-Werk Ehingen GmbH 2023

2.25 Crane on floating body

1	Non-intended use	2
2	Intended use	2
3	Floating device	2
4	Operating conditions	2
5	Crane transport on floating devices	3
6	Increased corrosion	4

LWE/LTR 1100-009/25105-02-02/en

copyright © Liebherr-Werk Ehingen GmbH 2023

1 Non-intended use

WARNING
Non-intended use!
The boom can break off. The crane can topple over.
Death, severe injuries, property damage.
► Use the crane only as intended.
► Comply with the operating conditions and notes in this chapter.

Liebherr mobile cranes and crawler cranes are **not** designed for special requirements according to „EN 13852-2, Cranes - Offshore cranes“ or other offshore specifications and regulations.

For a precise definition of **non**-intended use, see the preface.

2 Intended use

Liebherr mobile cranes and crawler cranes are only designed for assembly work and erection work and can only withstand a limited number of load cycles.

Liebherr mobile cranes and crawler cranes are designed for special properties and movements: Evenly distributed drive forces, only occasional operation and load conditions according to „EN 13000, Cranes - Mobile cranes“ and comparable international standards.

For a precise definition of intended use, see the preface.

3 Floating device

The term floating device includes all floating devices such as barges and ships.

The floating device must fulfil the prerequisites for crane operation.

4 Operating conditions

4.1 Areas of responsibility for operating conditions

Observe the areas of responsibility:
– The crane contractor and crane operator are responsible for ensuring that the conditions for crane operation at the job site are fulfilled. Liebherr-Werk Ehingen GmbH strongly recommends involving a shipbuilding engineer.
– The correct functional, technical and static interaction between the crane and the floating device is the sole responsibility of the crane contractor and the crane operator.
– The correct functional, technical and static interaction between the crane and the floating device must be clarified and checked before operating the crane on a floating device.

4.2 Basic requirements

Observe the following to ensure the safe operation of the crane on floating devices:
– Comply with all country-specific, legal specifications and conditions.
– Perform a risk assessment according to the Occupational Safety and Health Act to ensure safe working conditions.
– Outrigger forces or crawler pressures generated by crane operation must be safely supported by the steel construction of the floating device.
– Assemble and operate the crane according to manufacturer specifications.
– Secure the crane to prevent it from slipping and lifting up.

LWE/LTR 1100-009/25105-02-02/en

copyright © Liebherr-Werk Ehingen GmbH 2023

- The conditions when working on a floating device must correspond with the conditions on land.
- Crane operation is only permissible in very calm waters and therefore on very calmly moving floating devices.
- Comply with the maximum permissible ground incline according to the load charts.
- Implement precautions that permit the boom system to be taken down at any time, for example if the wind and sea start to be strong.

4.2.1 Floating device, supported

Observe the following additional notes to ensure the safe operation of the crane on supported floating devices:

- Design the supported floating device such that if the wind and sea start to be strong it will not cause the floating device to buoy upward.

4.2.2 Floating device, not supported

Observe the following to ensure the safe operation of the crane on a **non** supported floating device:

- Crane operation on a **non** supported floating device is only permissible in very calm waters.
- Crane operation on a **non** supported floating device is only permissible with the main boom or alternatively a boom nose. No other additions on the main boom are permissible.
- Crane operation with the main boom in combination with the derrick ballast is only permitted with one derrick ballast that is set down and secured.
  Note: The derrick ballast must be secured in all four horizontal directions (forward / backward / right / left). The height of the horizontal retainer must be implemented such that it is not possible to lift out by derrick ballast by lifting it. Keep in mind that the crane superstructure may not rotate.
- The incline of the floating device may **not** exceed the maximum permissible ground inclination of the crane according to the load chart.
- Before the crane is operated on the floating device: Calculate the incline of the floating device in the lateral direction and in the longitudinal direction in advance. The incline results from the interaction of the crane with the floating device.
- If the wind and sea start to be strong, the crane with the taken down boom system must also be secured against slipping and against oscillations.

5 Crane transport on floating devices

5.1 Areas of responsibility for crane transport on floating devices

Observe the areas of responsibility:

- The crane contractor is solely responsible for transporting the crane on a floating device.
- The crane contractor and crane operator are responsible for the assembly, securing and removal of the crane on the floating device.

5.2 Safety of crane transport on floating devices

Transport at sea can have a negative impact on the structural strength / stability and the fatigue limit of the crane.

Observe the following to ensure the safe transport of the crane on floating devices.

Secure the crane during „transport on a floating device“ so that the following is prevented:

- Damage and releasing of components on the crane
- Slipping of the crane
- Inadvertent turning (swinging) of the crane superstructure
- Capsizing of the floating device

Make sure that the following measures are carried out prior to „transport on a floating device“:

- Take the boom system down and support it using adequate means.
- With telescope cranes:
  Disassemble the counterweight plates and secure on the floating device.

LWE/LTR 1100-009/25105-02-02/en

copyright © Liebherr-Werk Ehingen GmbH 2023

Disassemble the separate counterweight brackets and secure on the floating device.
- With cranes with lattice mast / crawler cranes:
  Secure the turntable using adequate means.
  Disassemble the counterweight brackets and counterweight plates and secure on the floating device.
  Disassemble the central ballast brackets and central ballast plates and secure on the floating device.
  Support the installed counterweight brackets and counterweight plates separately using adequate means and secure against slipping.
  Support the installed central ballast brackets and central ballast plates separately using adequate means and secure against slipping.
- Observe and adhere to the specifications for transporting the crane and the crane components, see chapter 3.80.

6 Increased corrosion

Extremely salty air near the sea can cause severe corrosion on the crane.

Increased corrosion can cause premature damage to the components (for example, the hydraulic cylinder, wire ropes, electrical and electronic components, driver's cab).

Submerging the hook block in water causes damage to the hook block and the rope.

The crane contractor and the crane operator are solely responsible for preventing severe corrosion.

Measures for preventing corrosion:
- Avoid direct contact between the crane and its components with salt water.
- Do **not** submerge the hook block in water.

Measures for detecting premature damage:
- Have the crane checked regularly and extensively by a qualified person.

LWE/LTR 1100-009/25105-02-02/en

copyright © Liebherr-Werk Ehingen GmbH 2023

3 Crane assembly

LWE/LTR 1100-009/25105-02-02/en

copyright © Liebherr-Werk Ehingen GmbH 2023

LWE/LTR 1100-009/25105-02-02/en

copyright © Liebherr-Werk Ehingen GmbH 2023

3.01 Crawler carrier assembly

1	Assembling the crane	3
2	Disassembling the crane	50
3	Unloading / loading the crane from / onto an extra wide transport vehicle	77

LWE/LTR 1100-009/25105-02-02/en

copyright © Liebherr-Werk Ehingen GmbH 2023

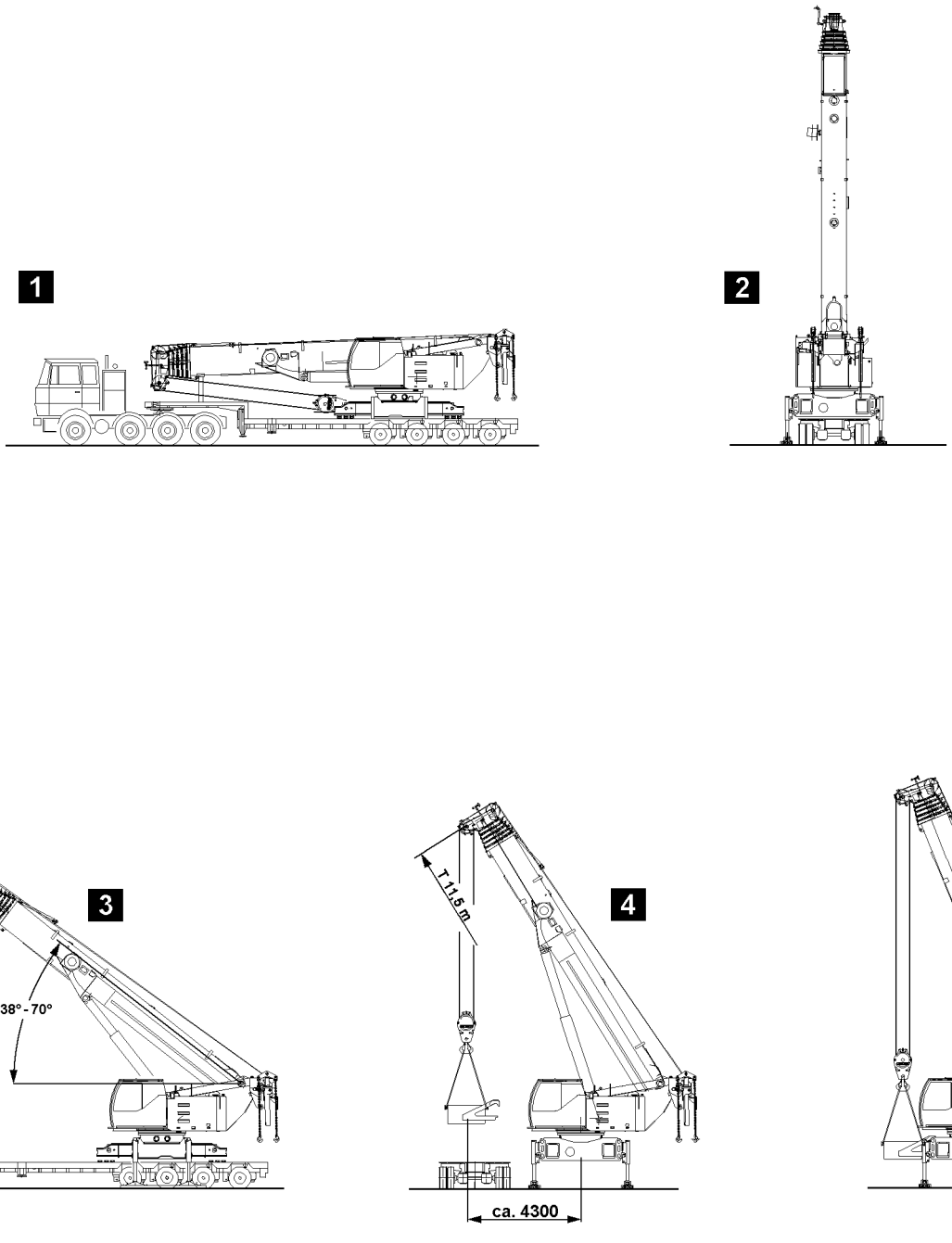

LWE/LTR 1100-009/25105-02-02/en

Fig.103767

copyright © Liebherr-Werk Ehingen GmbH 2023

1 Assembling the crane

Make sure that the following prerequisites are met:
- The location is level, smooth and provides sufficient load bearing capacity.
- Authorized and trained personnel are available to carry out the assembly and disassembly work.
- The telescopic boom is fully telescoped in and placed on the telescopic boom receptacle.
- The central ballast is disassembled.
- The counterweight on the turntable is disassembled.

DANGER
The crane can topple over!
If a counterweight is installed on the turntable when „supporting a crane with a load“, then the crane can topple over and fatally injure personnel.
- ► When „supporting the crane with a load“, no counterweight may be installed on the turntable.
- ► Do not turn the crane superstructure as long as the crane is resting on the transport vehicle.

Note
- ► For the double folding jib installed on the side of the telescopic boom, the permissible load carrying capacities in T-operation at T-11.5 (0/0/0/0/0) must be reduced by approx. 1 t. This applies especially for the central ballast and crawler carrier assembly on the support cylinders.
- ► The additional weight of the double folding jib is weighed by the overload protection, so that full utilization is reached earlier.

WARNING
Danger of falling!
During assembly / disassembly, inspection and maintenance work, assembly personnel must be secured with appropriate aids to prevent them from falling. If this is not observed, assembly personnel could fall and be killed or seriously injured.
- ► The assembly personnel must always move carefully and anticipatory on the crane, the crane components or lattice sections.
- ► All work at a height, when there is a danger of falling, must be carried out with suitable aids.
- ► If fall protection equipment is available, then it must be used.
- ► If aids are not available and work cannot be carried out from the ground, then assembly personnel must secure themselves with the permissible fall arrest system to prevent falling, see the Crane operating instructions, chapter 2.04.
- ► The fall arrest system must be attached to the fastening and hook points as well as the safety ropes.
- ► Only step on the aids, ladders and catwalks with clean shoes.
- ► Keep aids, ladders and catwalks free of heavy dirt, snow and ice.

LWE/LTR 1100-009/25105-02-02/en

copyright © Liebherr-Werk Ehingen GmbH 2023

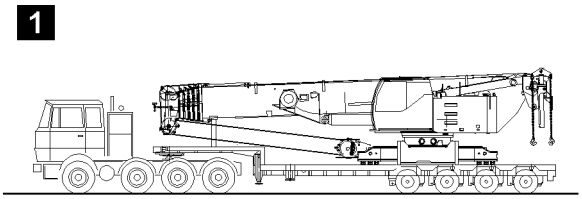

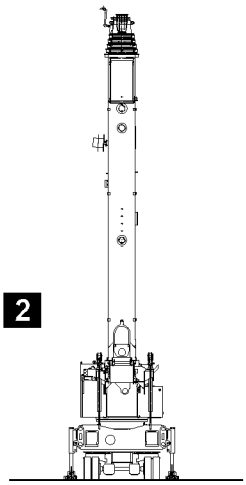

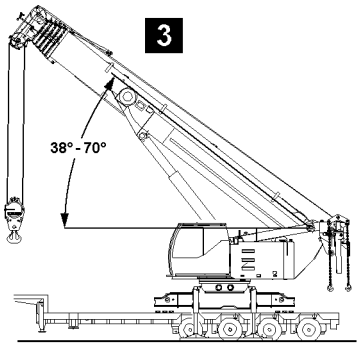

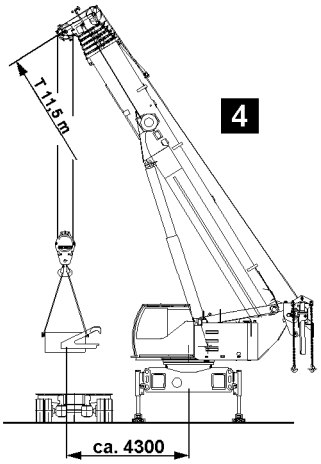

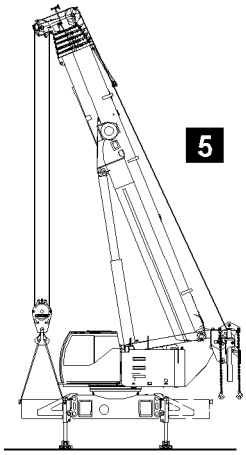

LWE/LTR 1100-009/25105-02-02/en

Fig.103767

copyright © Liebherr-Werk Ehingen GmbH 2023

1.1 Short description of the assembly procedure

Note

► The short description of the assembly procedure is only intended as an overview. In addition, the complete assembly description must be read and understood.

Preparatory work

► Swing the folding brackets into the operating position and pin.
► Place and align the support plates on the support cylinders, illustration 2.

DANGER

Danger of tipping when the auxiliary boom is in transport position on the side of the telescopic boom! If the telescopic boom, with the auxiliary boom installed on the side of the telescopic boom, is not luffed up to an angle range of 38° to 70° before supporting, then the crane can topple forward and fatally injure personnel.

► Luff the telescopic boom up, with the auxiliary boom installed on the side of the telescopic boom, to an angle range of 38° to 70° before supporting the crane.

► Support the crane and remove the transport vehicle, illustration 3.
► Extend the cross carrier „A“ completely.
► Extend cross carrier „B“.
► Level the crane and install the central ballast, see illustrations 4 and 5 and the Crane operating instructions, chapter 3.03.

LWE/LTR 1100-009/25105-02-02/en

copyright © Liebherr-Werk Ehingen GmbH 2023

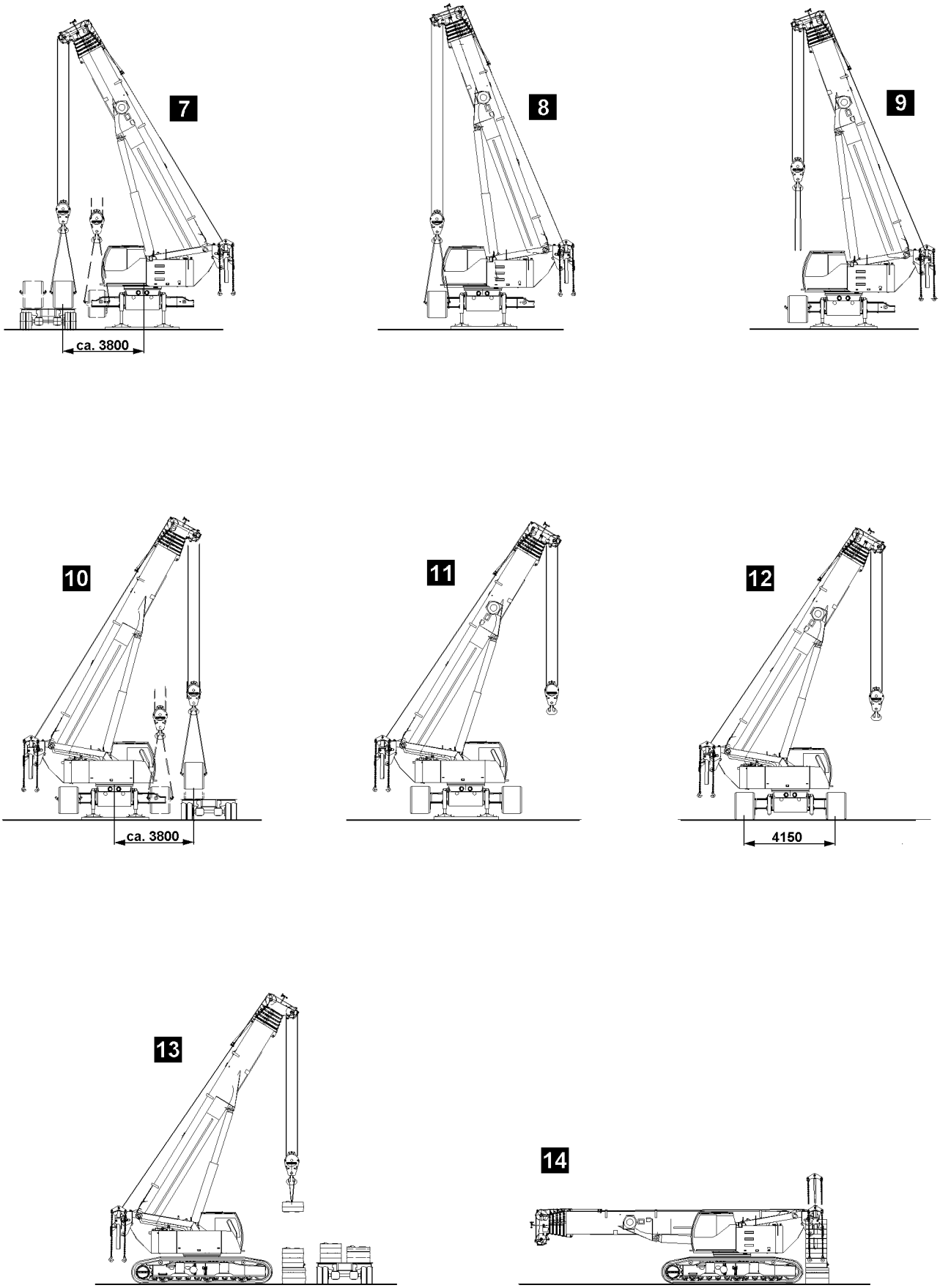

LWE/LTR 1100-009/25105-02-02/en

Fig.199152

copyright © Liebherr-Werk Ehingen GmbH 2023

Assembling the first crawler carrier, illustration 7 and illustration 8

- ► Fasten the supplied assembly suspension to the folded out transport retainers.
- ► Position the crawler carrier on the beams of the crawler center section.
- ► Slide the crawler carrier on the beams to the stop.
- ► Remove the assembly suspension.
- ► Fold in the transport retainers and pin.

Assembling the second crawler carrier, illustration 10

- ► Check and prepare the pin points for the crawler carrier.
- ► Fasten the supplied assembly suspension to the folded out transport retainers.
- ► Position the crawler carrier on the beams of the crawler center section.
- ► Slide the crawler carrier on the beams to the stop.
- ► Remove the assembly suspension.
- ► Fold in the transport retainers and pin.

Retract the support cylinders, illustration 11 and illustration 12

- ► Retract the support cylinders completely.
- ► Take the support plates down in the retainers on the crawler center section.

Start up the vehicle and install the counterweight, illustration 13 and illustration 14

- ► Establish the hydraulic connections.
- ► Retighten the locking screws.
- ► Test the travel gear.
- ► Assemble the counterweight, see the Crane operating instructions, chapter 4.07.

LWE/LTR 1100-009/25105-02-02/en

copyright © Liebherr-Werk Ehingen GmbH 2023

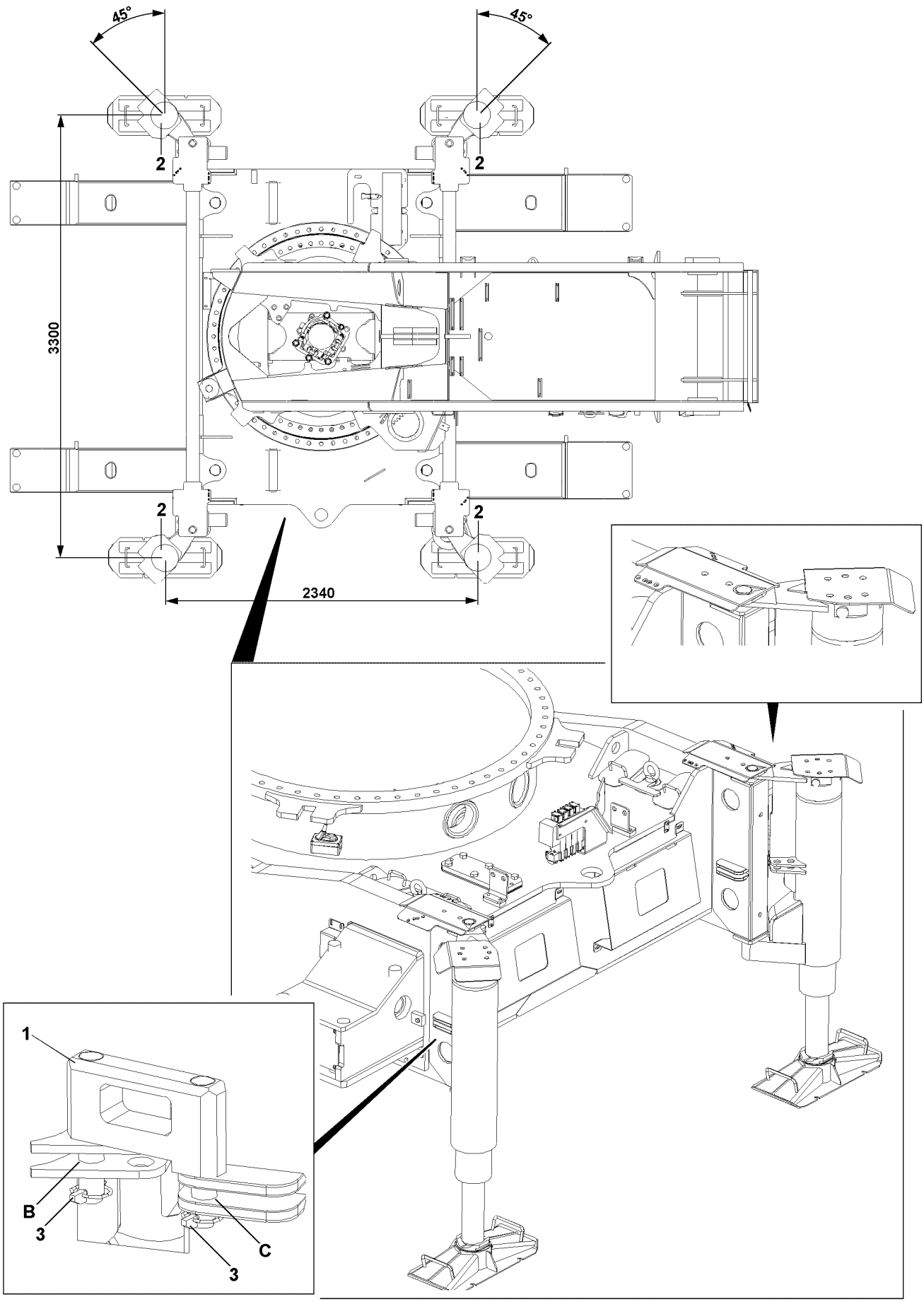

Fig.118485

LWE/LTR 1100-009/25105-02-02/en

copyright © Liebherr-Werk Ehingen GmbH 2023

1.2 Pinning the support cylinder in the assembly position

Make sure that the following prerequisites are met:
- The crane lies on the transport vehicle.
- All retaining brackets **1** have been unpinned and removed.

DANGER
The crane can topple over!
If the crane is supported without the support cylinders **2** being pinned in the assembly position, the crane can topple over and fatally injure personnel.
► Support the crane only in the assembly position (45° position of the support cylinders **2**).
► Assembly operation is only permitted at a support base of 2340 mm x 3300 mm.

► Swing the support cylinders **2** to 45°.
► Pin the retaining bracket **1** in bore **B** and bore **C** and secure with linch pins **3**.

Pin the remaining support cylinders **2** accordingly.

► Pin all four support cylinders **2** in the support base assembly position 2340 mm x 3300 mm.

1.3 Supporting and aligning the support plates

Observe the safety instructions and permissible ground pressures (see chapter 2.04).

DANGER
The crane can topple over!
The crane can topple and fatally injure personnel if the support plates are not properly supported.
► Use only suitable materials for the substructure.
► Place the substructure in the center under the support plates.
► Place the same materials under all support plates.
► Observe the track width of the flatbed trailer. The supports may not project into the driving track.

► Use stable materials such as wood, steel plates or concrete slabs of a suitable size under the support plates, depending on the ground conditions.
► Remove the support plates from the retainers on the crawler center section and place them under the support cylinders.
► Align the support plates lengthwise to the flatbed trailer.
► Align the support plates under the support cylinders as shown in the illustration on the left.

LWE/LTR 1100-009/25105-02-02/en

copyright © Liebherr-Werk Ehingen GmbH 2023

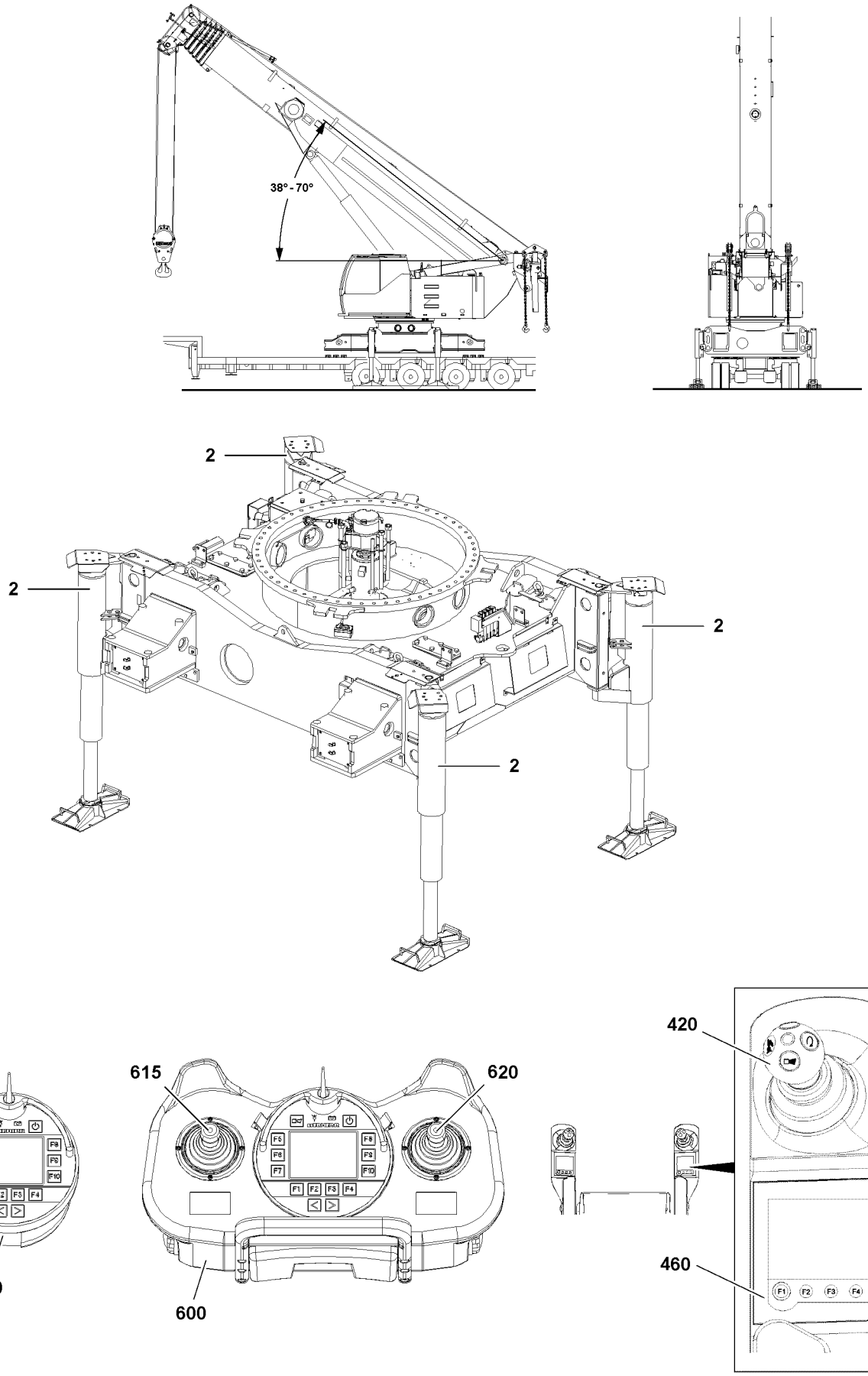

Fig.118036

LWE/LTR 1100-009/25105-02-02/en

copyright © Liebherr-Werk Ehingen GmbH 2023

1.4 Supporting the crane

Make sure that the following prerequisites are met:
- The engine is operating.
- The folding brackets with the support cylinders are pinned in the operating position.
- The LICCON overload protection has been set according to the load chart.
- The crane has been taken down on the transport vehicle.
- The beams are supported on both ends with wooden planks.
- The crane superstructure is mechanically locked with the crane chassis.

1.4.1 Preparatory work

DANGER
Danger of tipping when the auxiliary boom is in transport position on the side of the telescopic boom!
If the telescopic boom, with the auxiliary boom installed on the side of the telescopic boom, is not luffed up to an angle range of 38° to 70° before supporting, then the crane can topple forward and fatally injure personnel.
► Luff the telescopic boom up, with the auxiliary boom installed on the side of the telescopic boom, to an angle range of 38° to 70° before supporting the crane.

If an auxiliary boom is installed on the side of the telescopic boom:
► Luff the telescopic boom up to an angle range of 38° to 70°.

WARNING
Assembly support monitoring!
The assembly support is not monitored by the control.
The crane operator is obligated to check the assembly support before further assembly steps.
► Make sure that all folding brackets are swung and secured.
► Make sure that all support plates are supported.

► Check the assembly support.

LWE/LTR 1100-009/25105-02-02/en

copyright © Liebherr-Werk Ehingen GmbH 2023

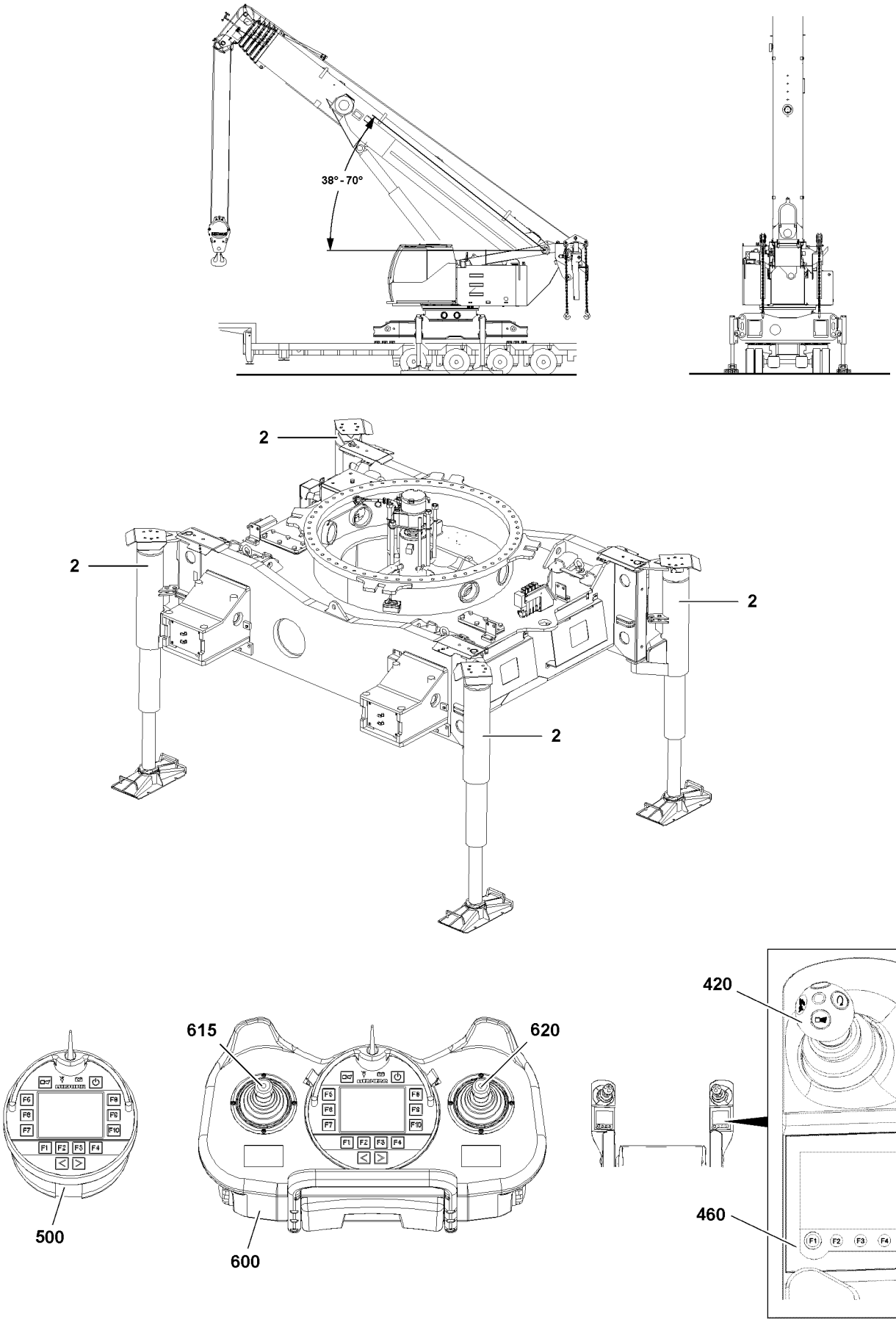

LWE/LTR 1100-009/25105-02-02/en

Fig.118036

copyright © Liebherr-Werk Ehingen GmbH 2023

1.4.2 Supporting the crane with the support cylinders

DANGER
The crane can topple over!
If the crane is not aligned horizontally, it can tip over and fatally injure personnel.
► Align the crane horizontally.

► Align the support plates precisely under the support cylinders.
► Lower all support cylinders into the support plates.
► Slowly lift and level out the crane until the desired support height is reached.
► Check the distance between the crawler center section and the transport vehicle (at least one hand's width).

1.4.3 Extending the support cylinders with the BlueTooth™ Terminal

Make sure that the following prerequisite is met:
– The menu overview is visible on the BTT display.

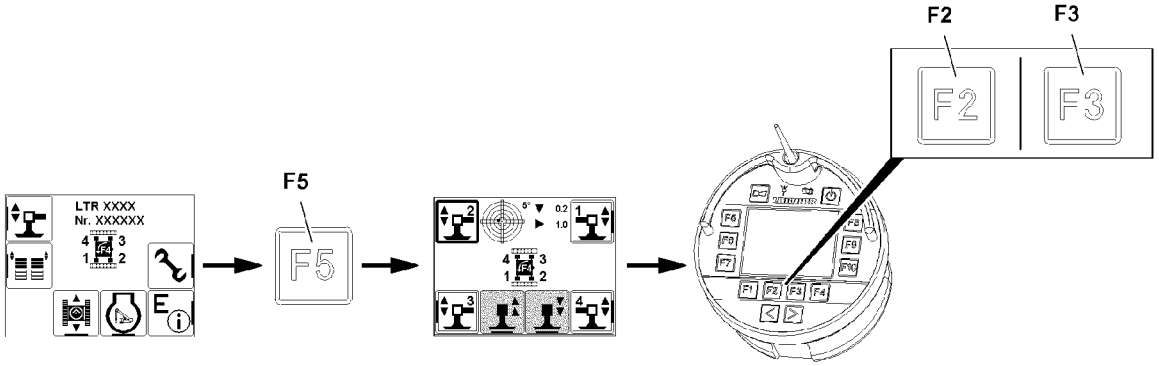

Fig.118037

► Press the function key **F5**.

Result:

– The „Support“ menu is visible.

The support cylinders are marked with numbers depending on the alignment of the BTT.

Support cylinders are selected with function keys:
– **F5** Function key
– **F7** Function key
– **F8** Function key
– **F10** Function key

Note
► The support cylinders can be extended individually or all four simultaneously.

DANGER
Danger of crushing due to extension of support cylinders!
► Make sure that there are no persons in the danger zone.

► Select the support cylinder: Press the function key.

Result:

– Selected icons are visible with filled out frames: Support cylinders are selected.
– Support cylinders are ready for extension and retraction.

LWE/LTR 1100-009/25105-02-02/en

copyright © Liebherr-Werk Ehingen GmbH 2023

When „retracting the support cylinders“:
► Press the function key **F2**.

Result:

– The support cylinder retracts.

When „extending the support cylinders“:
► Press the function key **F3**.

Result:

– The support cylinder extends.

LWE/LTR 1100-009/25105-02-02/en

copyright © Liebherr-Werk Ehingen GmbH 2023

Empty page!

LWE/LTR 1100-009/25105-02-02/en

copyright © Liebherr-Werk Ehingen GmbH 2023

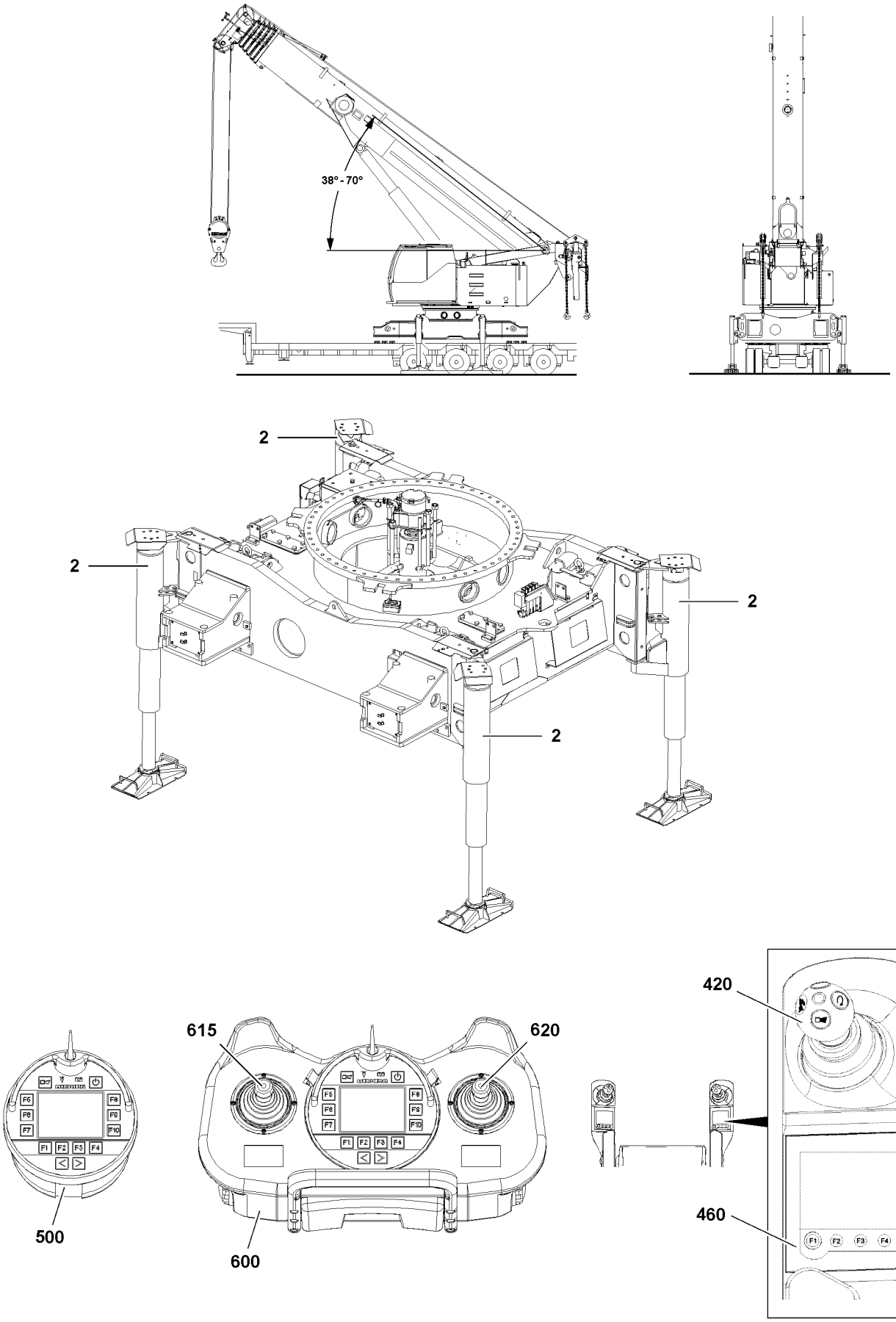

LWE/LTR 1100-009/25105-02-02/en

Fig.118036

copyright © Liebherr-Werk Ehingen GmbH 2023

1.4.4 Extending the support cylinders from the crane operator's cab

Make sure that the following prerequisite is met:
– The „master switch assignment“ menu is visible on the right touch display (TE1).

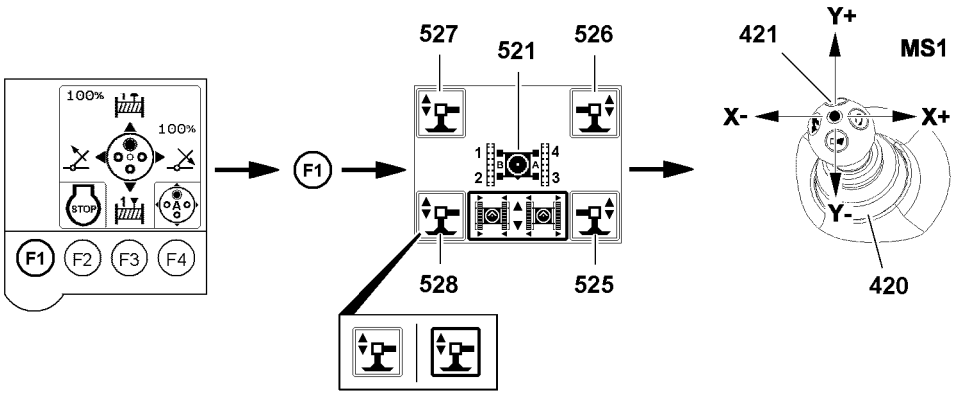

Fig.118038

► Press the function key **F1**.

Result:

– The „Support“ menu is visible.

The support cylinders are marked with numbers depending on the alignment of the turntable, see icon **521**.

Support cylinders are selected via touch functions:
– **525** Icon
– **526** Icon
– **527** Icon
– **528** Icon

Note
► The support cylinders can be extended individually or all four simultaneously.

DANGER
Danger of crushing due to extension of support cylinders!
► Make sure that there are no persons in the danger zone.

► Select the support cylinder: Select the icon („touch“).

Result:

– Selected icons are visible with filled out frames: Support cylinders are selected.
– Support cylinders are ready for extension and retraction.

When „retracting the support cylinders“:
► Deflect the manual control lever **420** in direction Y+.

Result:

– The support cylinder retracts.

When „extending the support cylinders“:
► Deflect the manual control lever **420** in direction Y-.

LWE/LTR 1100-009/25105-02-02/en

copyright © Liebherr-Werk Ehingen GmbH 2023

Result:

– The support cylinder extends.

LWE/LTR 1100-009/25105-02-02/en

copyright © Liebherr-Werk Ehingen GmbH 2023

Empty page!

LWE/LTR 1100-009/25105-02-02/en

copyright © Liebherr-Werk Ehingen GmbH 2023

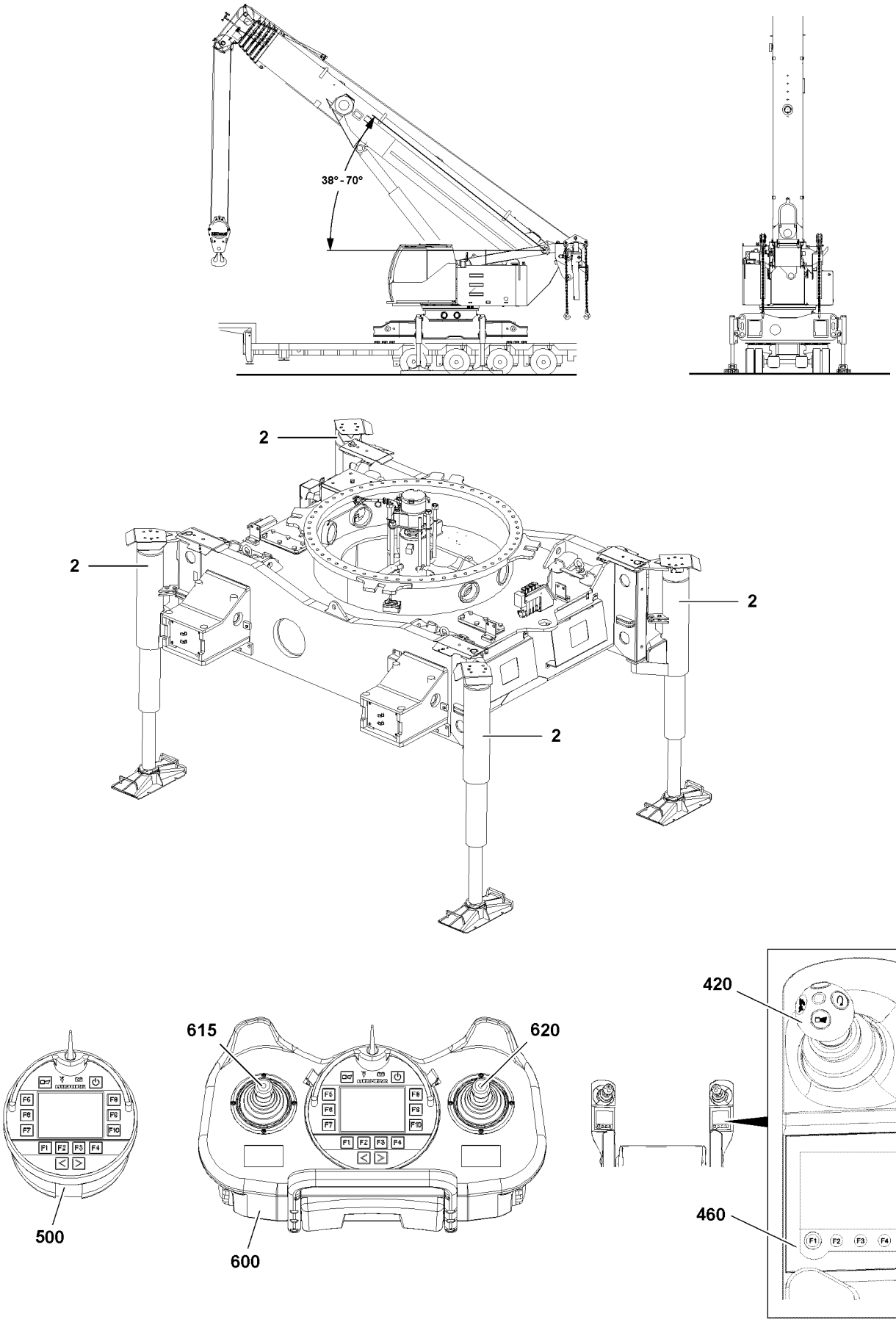

LWE/LTR 1100-009/25105-02-02/en

Fig.118036

copyright © Liebherr-Werk Ehingen GmbH 2023

1.4.5 Extending the support cylinders with the radio remote control*

Make sure that the following prerequisite is met:
– The menu overview is visible on the BTT-E display.

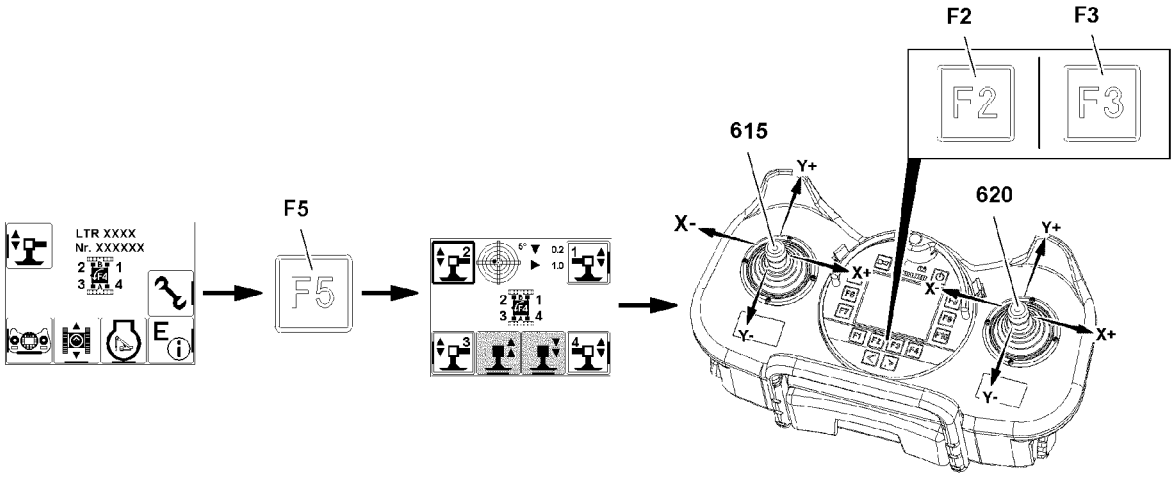

Fig.118039

► Press the function key **F5**.

Result:

– The „Support“ menu is visible.

The support cylinders are marked with numbers depending on the alignment of the radio remote control.

Support cylinders are selected with function keys:
– **F5** Function key
– **F7** Function key
– **F8** Function key
– **F10** Function key

Note
► The support cylinders can be extended individually or all four simultaneously.

► Select the support cylinder: Press the function key.

Result:

– Selected icons are visible with filled out frames: Support cylinders are selected.
– Support cylinders are ready for extension and retraction.

The support cylinders can be extended or retracted with both manual control levers.

DANGER
Danger of crushing due to extension of support cylinders!
► Make sure that there are no persons in the danger zone.

When „retracting the support cylinders“:
► Press the function key **F2**.

Result:

– The piston rod **18** retracts.

LWE/LTR 1100-009/25105-02-02/en

copyright © Liebherr-Werk Ehingen GmbH 2023

When „extending the support cylinders“:

► Deflect the manual control lever in direction Y-.
or
Press the function key **F3**.

Result:

– The piston rod **18** extends.

LWE/LTR 1100-009/25105-02-02/en

copyright © Liebherr-Werk Ehingen GmbH 2023

Empty page!

LWE/LTR 1100-009/25105-02-02/en

copyright © Liebherr-Werk Ehingen GmbH 2023

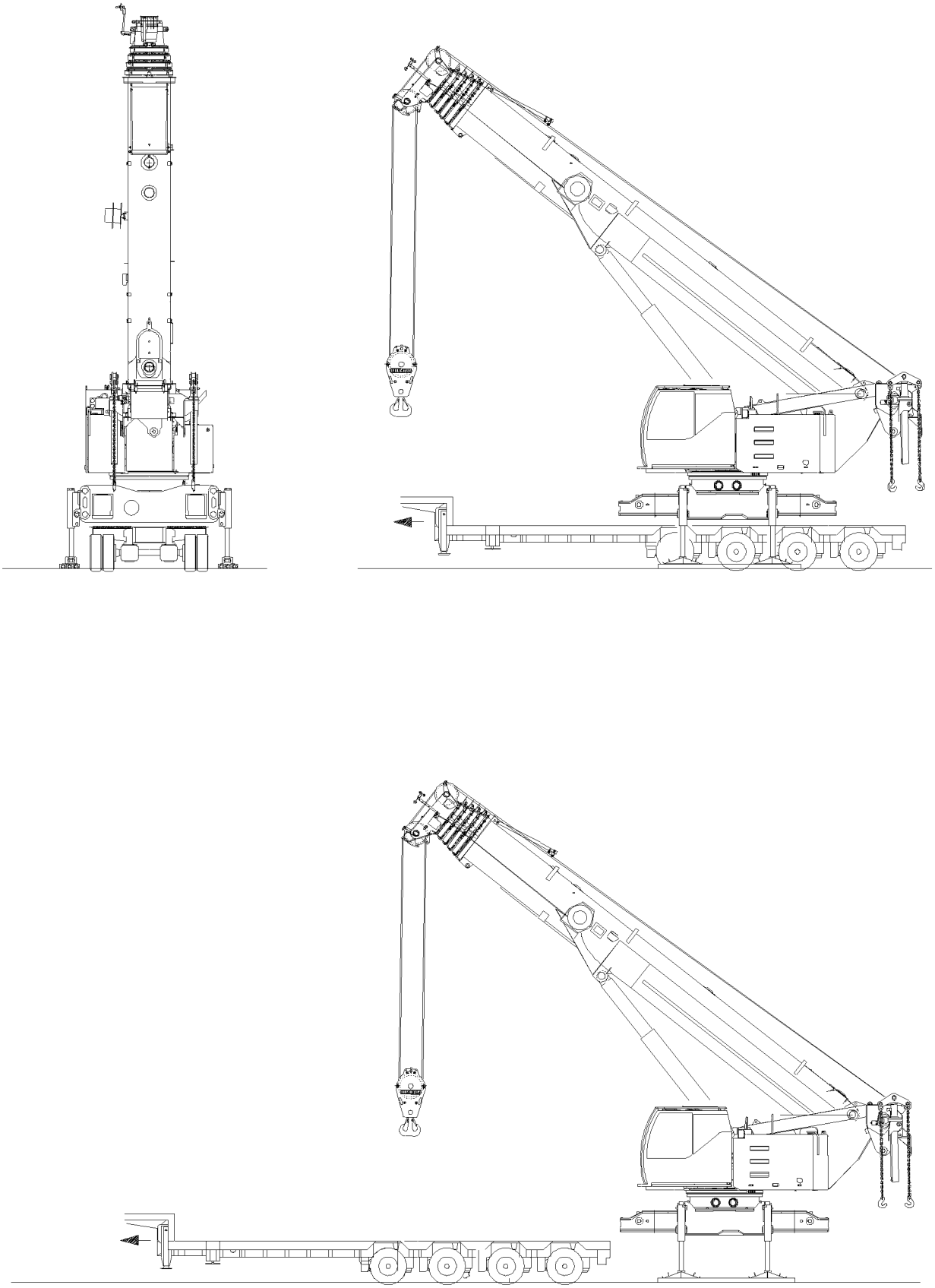

Fig.118047

LWE/LTR 1100-009/25105-02-02/en

copyright © Liebherr-Werk Ehingen GmbH 2023

1.4.6 Driving out the transport vehicle

Make sure that the following prerequisite is met:
- The crane is horizontally aligned.
- The crane is supported high enough so that the transport vehicle can drive out from under the crane.

DANGER
The crane can topple over!
When driving out, the transport vehicle can collide with a support cylinder and cause the crane to topple over.
► An assistant must guide the transport vehicle.
► Make sure that the transport vehicle does not collide with the support cylinder.

► Carefully drive the transport vehicle from under the supported crane.

LWE/LTR 1100-009/25105-02-02/en

copyright © Liebherr-Werk Ehingen GmbH 2023

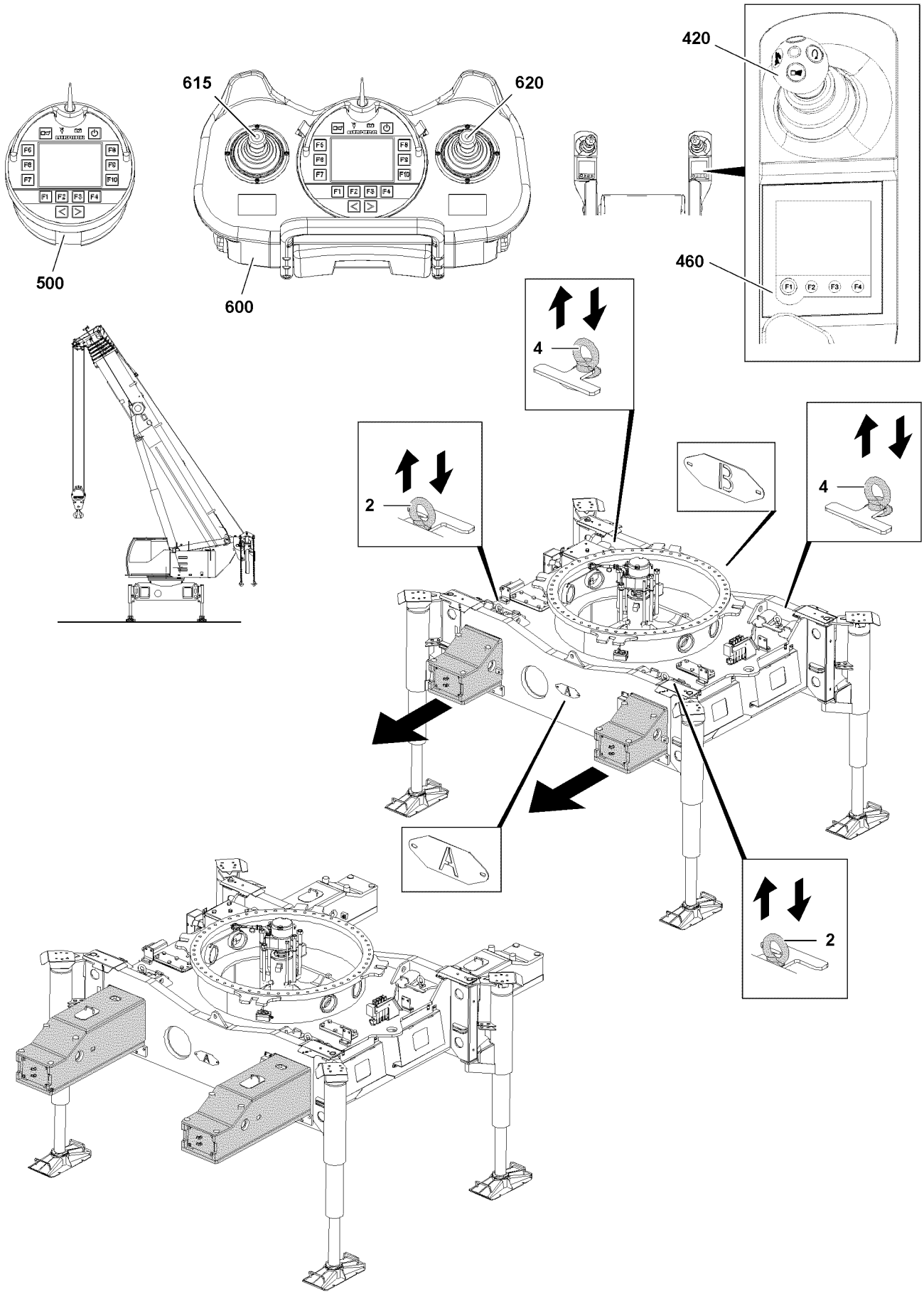

Fig.118041

LWE/LTR 1100-009/25105-02-02/en

copyright © Liebherr-Werk Ehingen GmbH 2023

1.5 Extending the cross carrier

Make sure that the following prerequisite is met:
– No personnel is in the danger zone.

Note
► The extension condition of the cross carrier is displayed as percentage on the display on the Bluetooth™ Terminal (BTT), the radio remote control (BTT-E) and the LICCON monitor.
► The cross carriers are only pinned in extension conditions of 0 %; 50 %; 100 %.
► The extension conditions of the cross carriers / crawler carriers are specified in the load chart.
► The pin points of the cross carriers are marked as percentages with tags on the cross carriers.

NOTICE
Damage of hydraulic lines due to crushing!
If the cross carriers are not extended first on side „A“ then hydraulic lines can be crushed.
► Always extend the cross carrier on side „A“ first.

1.5.1 Extending the cross carriers with the BlueTooth™Terminal

Make sure that the following prerequisite is met:
– The menu overview is visible on the BTT display.

Unpinning the cross carrier on side „A“

► Release and unpin the pins **2** on side „A“ on the front and rear.

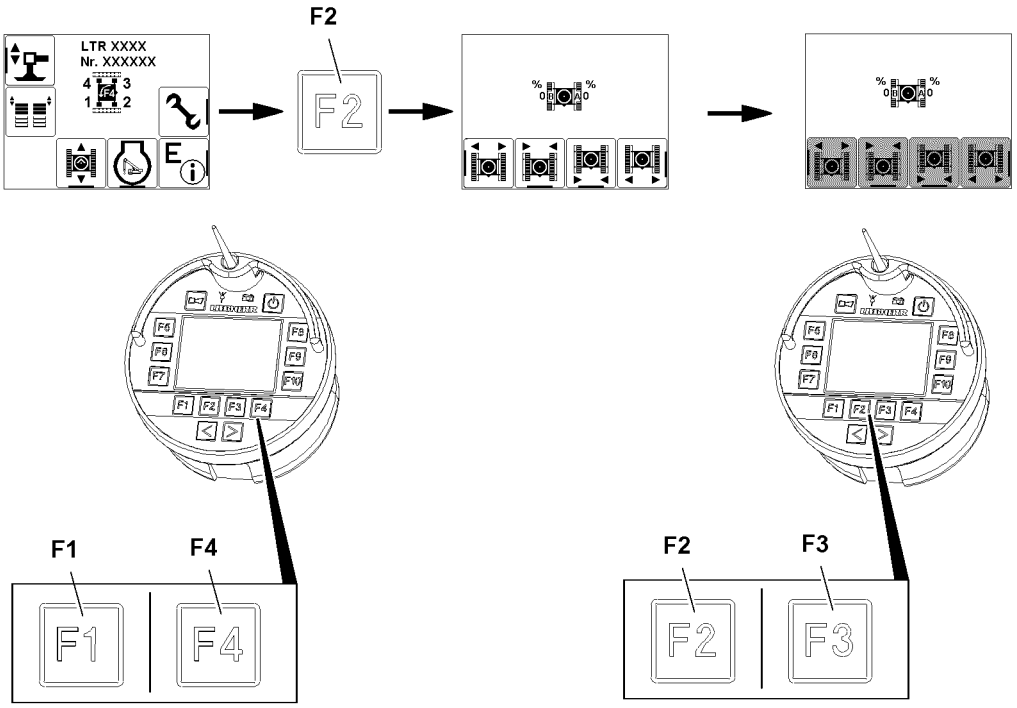

Fig.118042

LWE/LTR 1100-009/25105-02-02/en

copyright © Liebherr-Werk Ehingen GmbH 2023

Extending the cross carrier on side „A“

DANGER
Danger of crushing personnel due to movement of cross carriers!
► Make sure that no personnel is in the danger zone of the cross carriers during „track width adjustment“.

► Press the function key **F2**.

Result:

– The „Extending the cross carriers“ menu appears.

„Extending the cross carrier“
► Press the function key **F1** and function key **F4** simultaneously.

Result:

– The cross carriers on side „A“ are extended.

Note
► When adjusting the track width, there may be some tension between the cross carrier and the crawler center section.

Retracting the cross carriers
► Press the function key **F2** and function key **F3** simultaneously.

Result:

– The cross carriers on side „A“ are retracted.

Note
► When adjusting the track width, there may be some tension between the cross carrier and the crawler center section.

Problem remedy
Tension between cross carrier and crawler center section!
The cross carrier is stuck.
► Tension can be released by alternately pressing the function key **F1** and function key **F4**.

Pinning the cross carrier on side „A“

► Insert and secure the pins **2** on side „A“ on the front and rear.

Unpinning the cross carrier on side „B“

► Release and unpin the pins **4** on side „B“ on the front and rear.

LWE/LTR 1100-009/25105-02-02/en

copyright © Liebherr-Werk Ehingen GmbH 2023

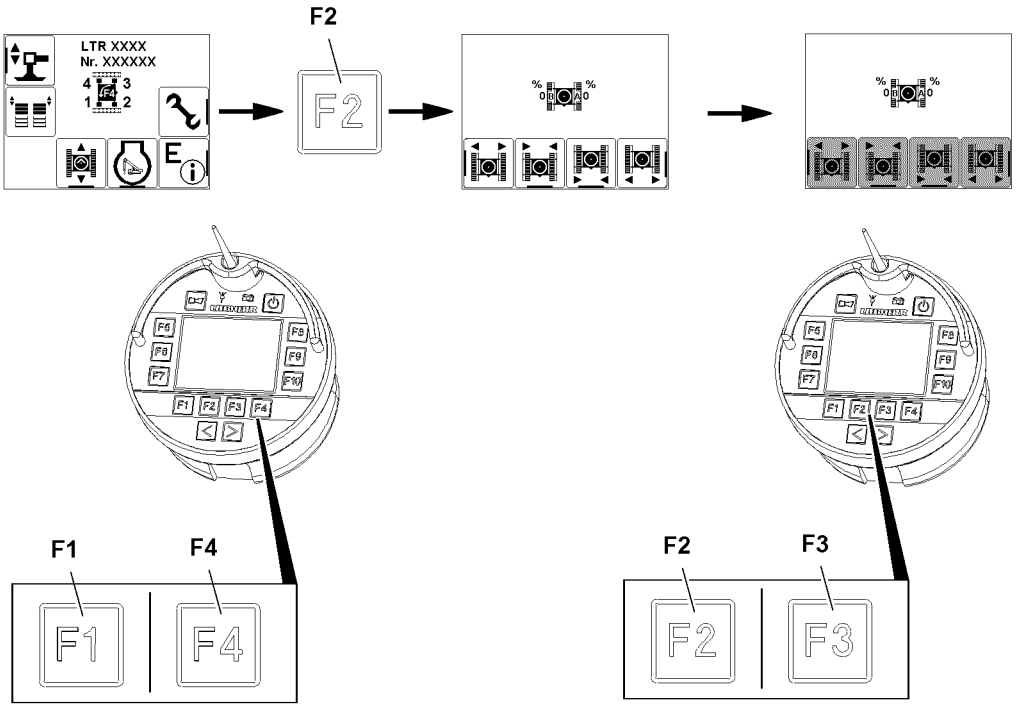

Fig.118042

Extending the cross carrier on side „B“

DANGER
Danger of crushing personnel due to movement of cross carriers!
► Make sure that no personnel is in the danger zone of the cross carriers during „track width adjustment“.

WARNING
Danger of crushing hydraulic lines due to movement of cross carriers!
► Do not extend the cross carriers more than 100 %.

► Press the function key **F2**.

Result:

– The „Extending the cross carriers“ menu appears.

„Extending the cross carrier“
► Press the function key **F1** and function key **F4** simultaneously.

Result:

– The cross carriers on side „B“ are extended.

Retracting the cross carrier on side „B“
► Press the function key **F2** and function key **F3** simultaneously.

Result:

– The cross carriers on side „B“ are retracted.

LWE/LTR 1100-009/25105-02-02/en

copyright © Liebherr-Werk Ehingen GmbH 2023

Note

► When adjusting the track width, there may be some tension between the cross carrier and the crawler center section.

Problem remedy

Tension between cross carrier and crawler center section!
The cross carrier is stuck.

► Tension can be released by alternately pressing the function key **F1** and function key **F4**.

Pinning the cross carrier on side „B“

► Insert and secure the pins **4** on side „B“ on the front and rear.

LWE/LTR 1100-009/25105-02-02/en

copyright © Liebherr-Werk Ehingen GmbH 2023

Empty page!

LWE/LTR 1100-009/25105-02-02/en

copyright © Liebherr-Werk Ehingen GmbH 2023

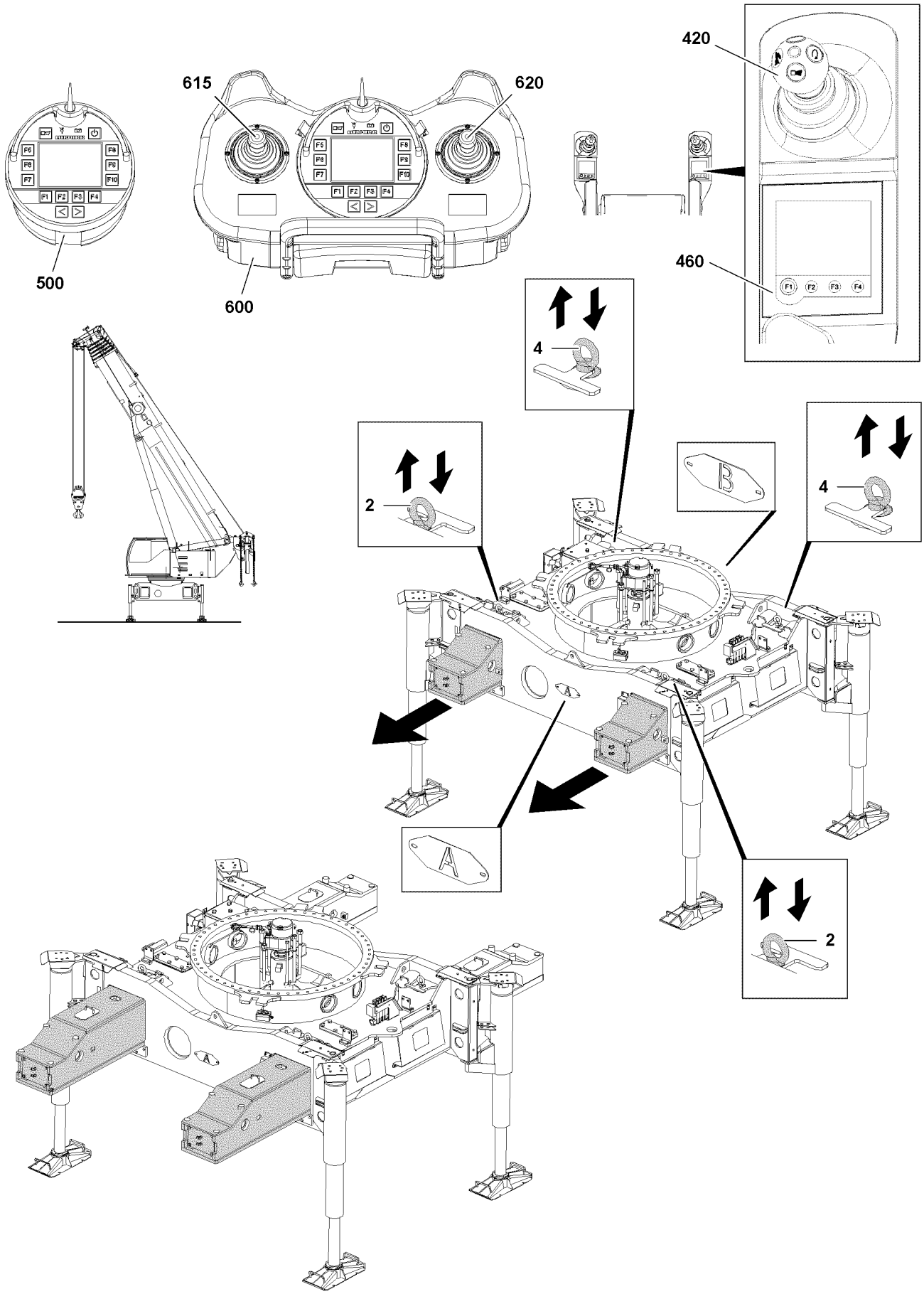

Fig.118041

LWE/LTR 1100-009/25105-02-02/en

copyright © Liebherr-Werk Ehingen GmbH 2023

1.5.2 Extending the cross carriers from the crane operator's cab

Make sure that the following prerequisite is met:
– The „Master switch configuration“ menu is visible on the TE1.

Unpinning the cross carrier on side „A“

► Release and unpin the pins **2** on side „A“ on the front and rear.

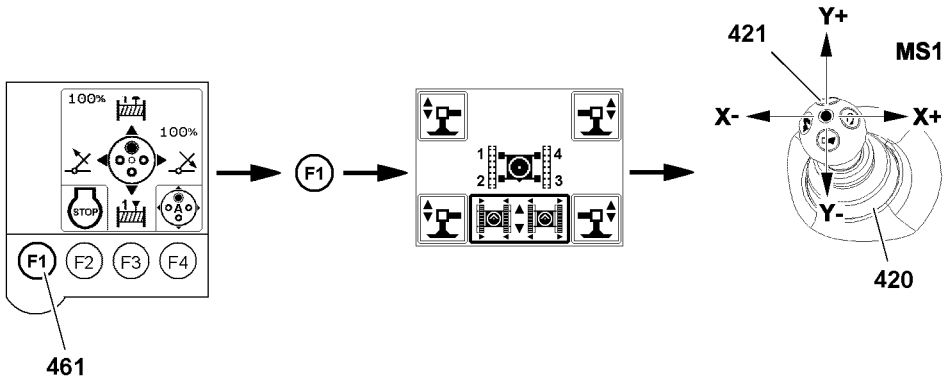

Fig.118044

Selecting the cross carrier

WARNING
Danger of crushing due to movement of cross carriers!
► Make sure that no personnel is in the danger zone of the cross carriers during „track width adjustment“.
► Differentiation of the cross carriers, see the Crane operating instructions, chapter 5.31

► Press the function key **F1**.

Result:

– The „Extending the cross carriers“ menu appears.

Extending the cross carrier on side „A“

To initiate a movement, you have to release master switch MS1 **420** with the button **421**.

► Press and hold the button **421**.

Extend the cross carriers:
► Move master switch MS1 **420** in direction X+.

Result:

– The cross carriers „A“ are extended.

Retract the cross carriers:
► Move master switch MS1 **420** in direction X-.

Result:

– The cross carriers „A“ are retracted.

LWE/LTR 1100-009/25105-02-02/en

copyright © Liebherr-Werk Ehingen GmbH 2023

Problem remedy
Tension between cross carrier and crawler center section!
The cross carrier is stuck.
► Move master switch MS1 **420** in direction X+ and alternately deflect it additionally in direction Y+ and Y- to release the tension.

Pinning the cross carrier on side „A“

► Insert and secure the pins **2** on side „A“ on the front and rear.

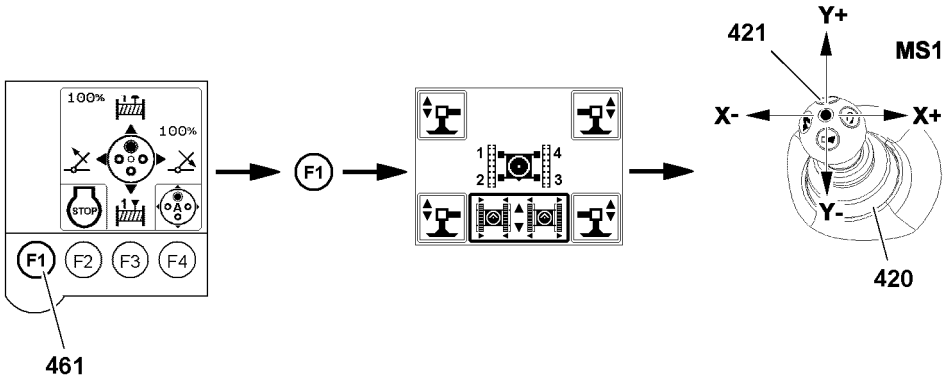

Fig.118044

Unpinning the cross carrier on side „B“

► Release and unpin the pins **4** on side „B“ on the front and rear.

Extending the cross carrier on side „B“

DANGER
Danger of crushing personnel due to movement of cross carriers!
► Make sure that no personnel is in the danger zone of the cross carriers during „track width adjustment“.

WARNING
Danger of crushing hydraulic lines due to movement of cross carriers!
► Do not extend the cross carriers more than 100 %.

To initiate a movement, you have to release master switch MS1 **420** with the button **421**.

► Press and hold the button **421**.

Extend the cross carriers:
► Move master switch MS1 **420** in direction X+.

Result:

– The cross carriers „B“ are extended.

Retract the cross carriers:
► Move master switch MS1 **420** in direction X-.

Result:

– The cross carriers „B“ are retracted.

LWE/LTR 1100-009/25105-02-02/en

copyright © Liebherr-Werk Ehingen GmbH 2023

Problem remedy
Tension between cross carrier and crawler center section!
The cross carrier is stuck.
► Move master switch MS1 **420** in direction X+ and alternately deflect it additionally in direction Y+ and Y- to release the tension.

Pinning the cross carrier on side „B“

► Insert and secure the pins **4** on side „B“ on the front and rear.

LWE/LTR 1100-009/25105-02-02/en

copyright © Liebherr-Werk Ehingen GmbH 2023

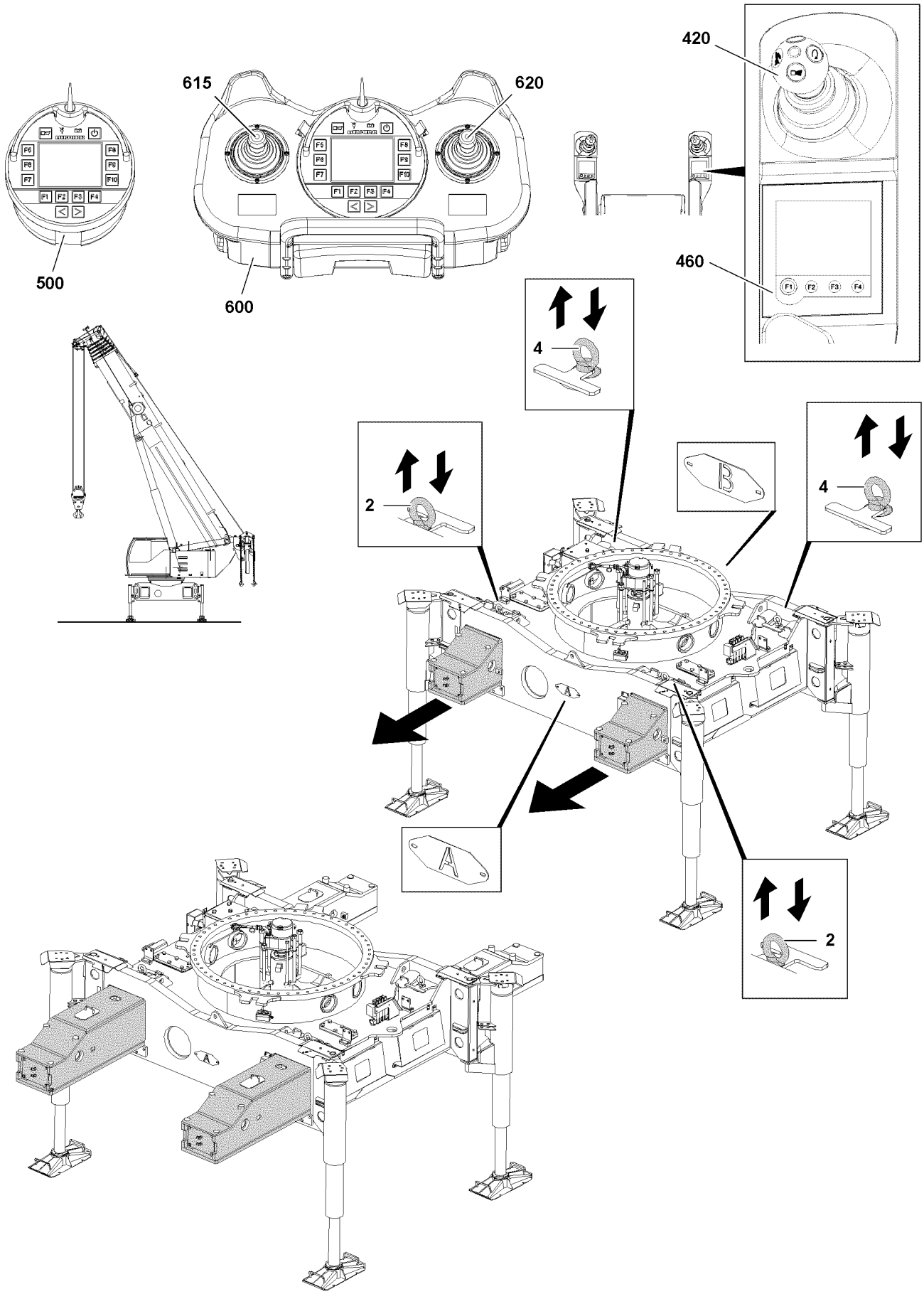

Fig.118041

LWE/LTR 1100-009/25105-02-02/en

copyright © Liebherr-Werk Ehingen GmbH 2023

1.5.3 Extending the cross carriers with the radio remote control*

Make sure that the following prerequisite is met:
– The menu overview is visible on the BTT-E display.

Unpinning the cross carrier on side „A“

► Release and unpin the pins **2** on side „A“ on the front and rear.

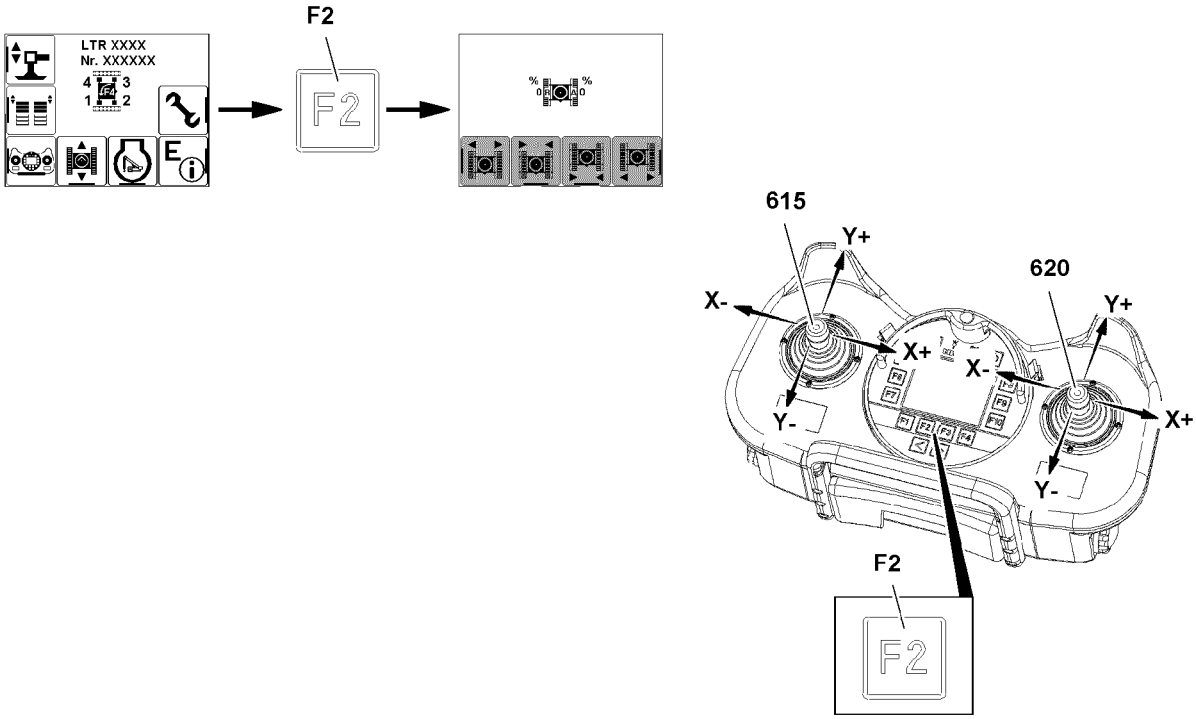

Fig.118045

Extending the cross carrier

WARNING
Danger of crushing due to movement of cross carriers!
► Make sure that no personnel is in the danger zone of the cross carriers during „track width adjustment“.
► Differentiation of the cross carriers, see the Crane operating instructions, chapter 5.31

► Press the function key **F2**.

Result:

– The „Extending the cross carriers“ menu appears.

„Extending the cross carrier“
► Move the manual control lever **615** in direction „X-“ and move the manual control lever **620** simultaneously in direction „X+“.

Result:

– The cross carriers on side „A“ are extended.

„Retracting the cross carriers“
► Move the manual control lever **615** in direction „X+“ and move the manual control lever **620** simultaneously in direction „X-“.

LWE/LTR 1100-009/25105-02-02/en

copyright © Liebherr-Werk Ehingen GmbH 2023

Result:

– The cross carriers on side „A“ are retracted.

Problem remedy
Tension between cross carrier and crawler center section!
The cross carrier is stuck.
► Tension can be released by alternately moving the manual control lever **615** and manual control lever **620** in direction „Y+ and Y-“.

Pinning the cross carrier on side „A“

► Insert and secure the pins **2** on side „A“ on the front and rear.

Unpinning the cross carrier on side „B“

► Release and unpin the pins **4** on side „B“ on the front and rear.

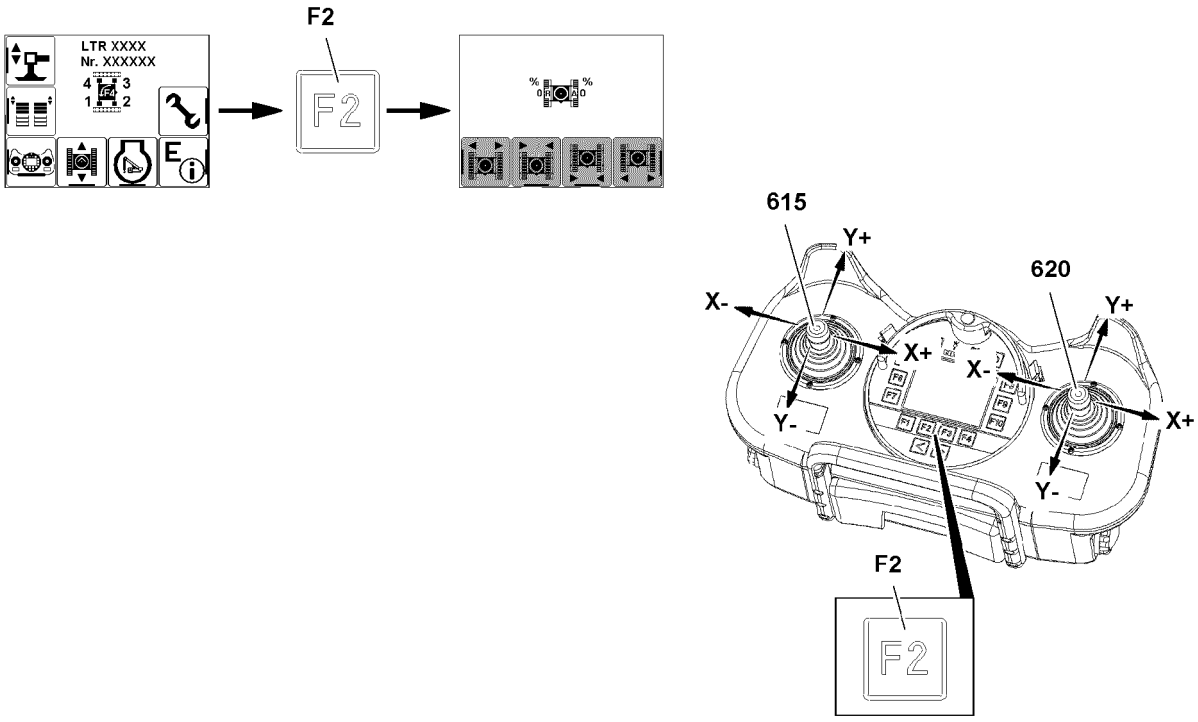

Fig.118045

Extending the cross carrier on side „B“

DANGER
Danger of crushing personnel due to movement of cross carriers!
► Make sure that no personnel is in the danger zone of the cross carriers during „track width adjustment“.

WARNING
Danger of crushing hydraulic lines due to movement of cross carriers!
► Do not extend the cross carriers more than 100 %.

► Press the function key **F2**.

Result:

– The „Extending the cross carriers“ menu appears.

LWE/LTR 1100-009/25105-02-02/en

copyright © Liebherr-Werk Ehingen GmbH 2023

„Extending the cross carrier“

► Move the manual control lever **615** in direction „X-“ and move the manual control lever **620** simultaneously in direction „X+“.

Result:

– The cross carriers on side „B“ are extended.

„Retracting the cross carriers“

► Move the manual control lever **615** in direction „X+“ and move the manual control lever **620** simultaneously in direction „X-“.

Result:

– The cross carriers on side „B“ are retracted.

Problem remedy

Tension between cross carrier and crawler center section!

The cross carrier is stuck.

► Tension can be released by alternately moving the manual control lever **615** and manual control lever **620** in direction „Y+ and Y-“.

Pinning the cross carrier on side „B“

► Insert and secure the pins **4** on side „B“ on the front and rear.

LWE/LTR 1100-009/25105-02-02/en

copyright © Liebherr-Werk Ehingen GmbH 2023

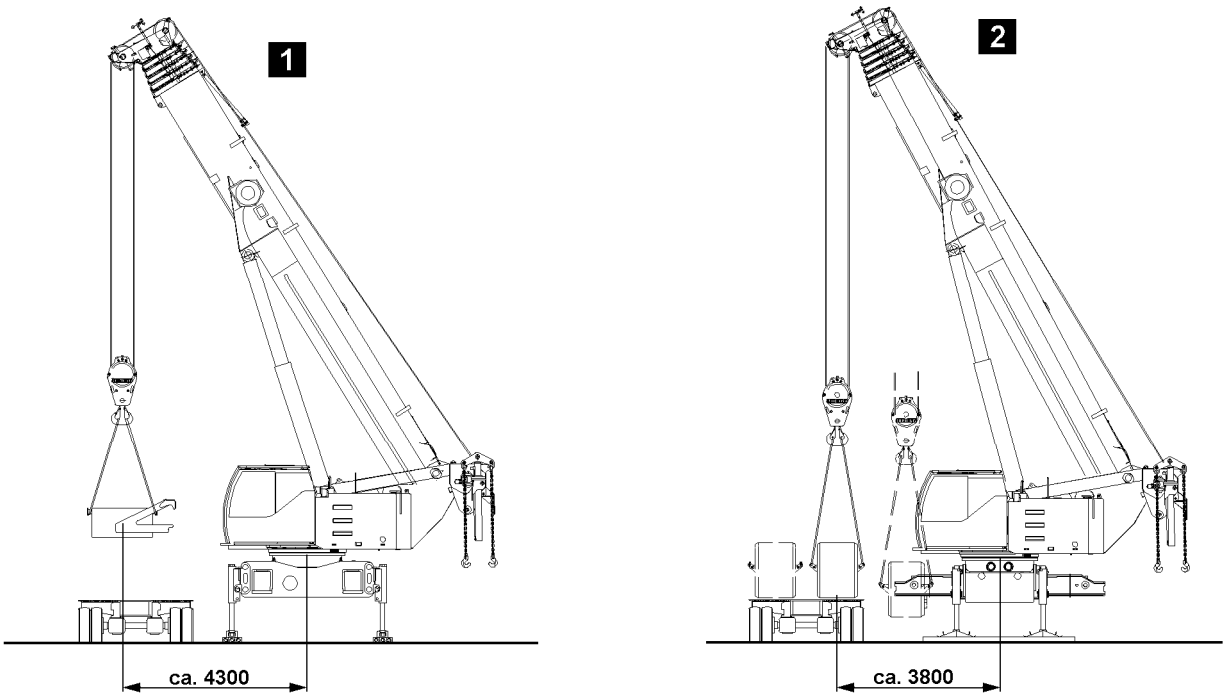

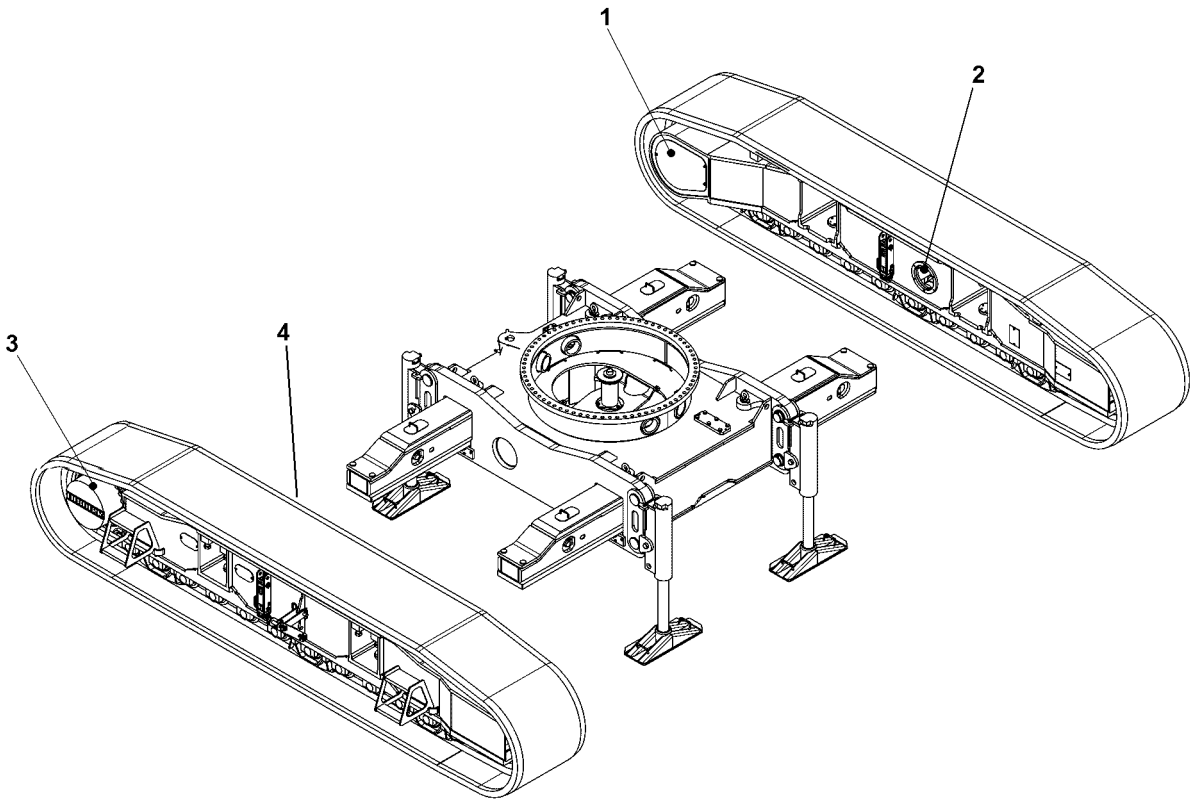

LWE/LTR 1100-009/25105-02-02/en

Fig.118040

copyright © Liebherr-Werk Ehingen GmbH 2023

1.6 Assembling the central ballast

Make sure that the following prerequisites are met:
- The crane is supported and horizontally aligned.
- The LICCON overload protection has been set according to the load chart.
- The hook block weighs maximum 0.5 t.
- The maximum permitted distance between the center of the slewing ring and the central ballast on the transport vehicle is 4300 mm.

► Assemble the central ballast on both sides, see the Crane operating instructions, chapter 3.03.
► Set the LICCON overload protection according to the load chart and the assembled central ballast.

1.7 Assembling the crawler carrier, illustration 2

Make sure that the following prerequisites are met:
- The LICCON overload protection has been set according to the load chart.
- The travel drives must always be on the side of the sight gauge.
- The order in which the crawler carriers are installed is arbitrary.
- Take into account the position of the crawler carriers on the transport vehicle.
- If possible, unload the crawler carriers from the transport vehicle directly in front of the beam ends, i.e. alongside the crane.
- Drive the crawler carriers as close as possible to the crane, maximum distance 3800 mm.

Position	Designation
1	Left travel drive
2	Left hydraulic connection
3	Right travel drive
4	Right hydraulic connection

LWE/LTR 1100-009/25105-02-02/en

copyright © Liebherr-Werk Ehingen GmbH 2023

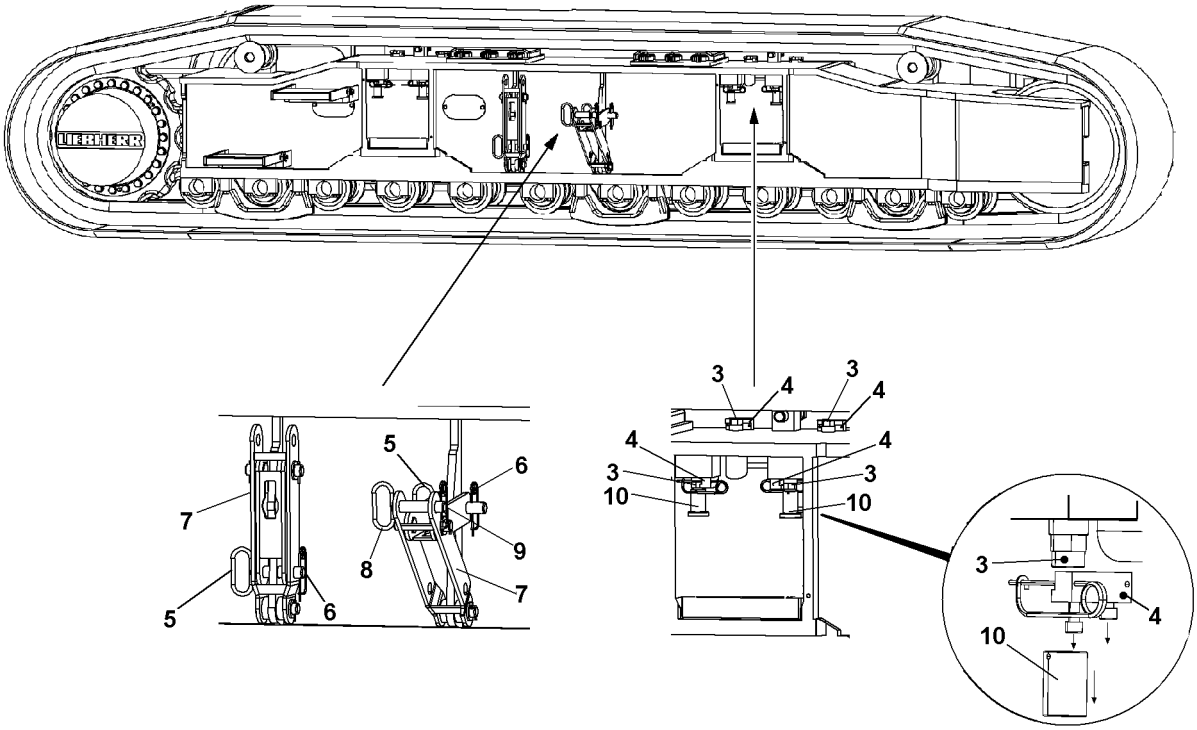

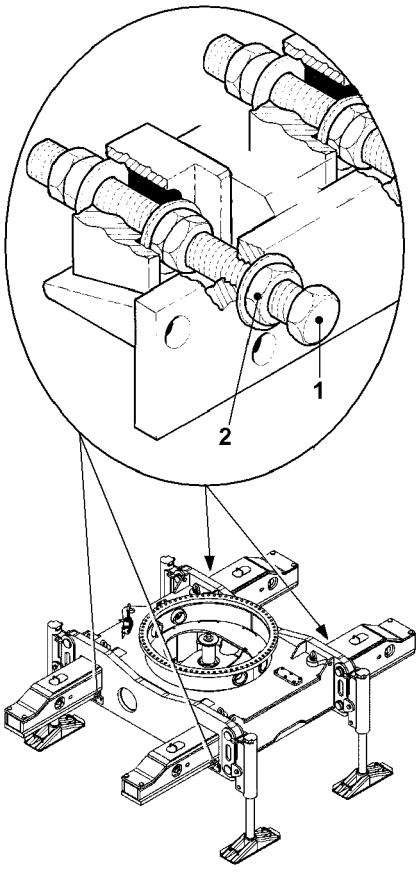

3

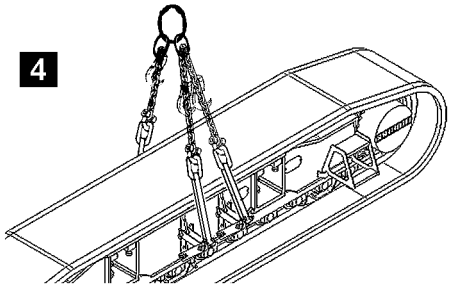

4

Fig.104732

LWE/LTR 1100-009/25105-02-02/en

copyright © Liebherr-Werk Ehingen GmbH 2023

1.7.1 Preparing the crane, illustration 3

The counter nuts **2** and locking screws **1** must be fully tightened.

► Check all the beam wedges on the crane.

If a counter nut **2** or locking screw **1** has not been fully tightened:
► Release the locking nut **2** and fully tighten the locking screw **1** and counter again with the locking nut **2**.
► Clean and grease all beams on the gliding surfaces.

1.7.2 Preparing the first crawler carrier

Make sure that the following prerequisites are met:
– The retaining bars **4** are disassembled.
– The front locking screws **3** are screwed in.
– The rear locking screws **3** are unscrewed.

► Clean the beam receptacles.

Three transport retainers **7** are installed on the crawler carriers. The transport retainers **7** must be swung out and pinned.

► Release and unpin the pin **5**.
► Swing the transport retainers **7** out and insert the pin **5** in the upper bore on the crawler carrier.
► Secure the pin **5** with the spring retainer **6**.
► Release and unpin the pin **8**.

CAUTION
Damage to the crawler carrier!
► Fasten the assembly suspension in such a way that the crawler carriers are not damaged, see illustration **4**.

► Pin the assembly suspension with pins **8**.
► Secure the pin **8** with the spring retainer **9**.
► Attach the crawler carrier to all 3 transport retainers **7**, illustration 4.

LWE/LTR 1100-009/25105-02-02/en

copyright © Liebherr-Werk Ehingen GmbH 2023

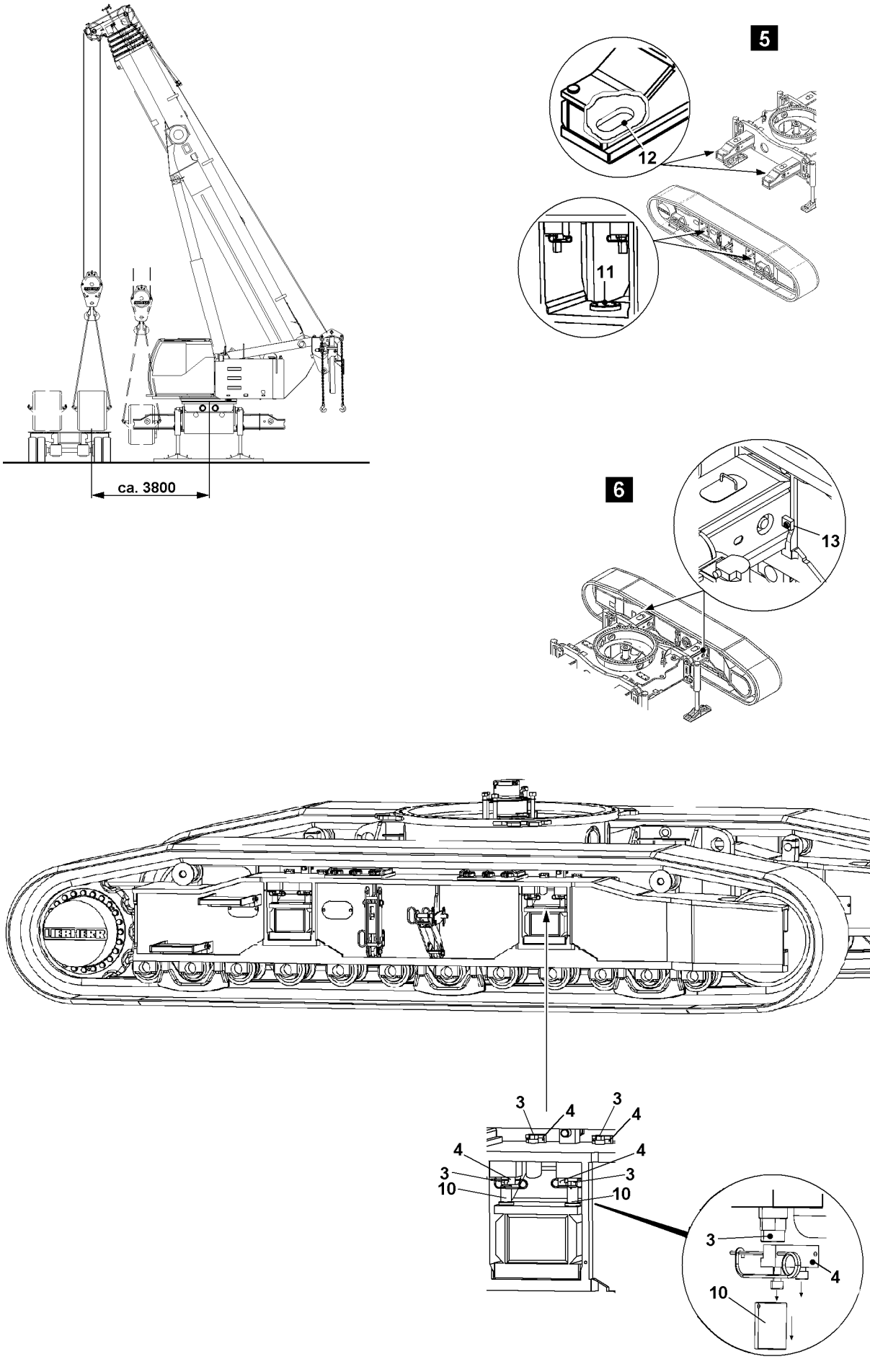

Fig.199206

LWE/LTR 1100-009/25105-02-02/en

copyright © Liebherr-Werk Ehingen GmbH 2023

1.7.3 Assembling the first crawler carrier

Make sure that the following prerequisites are met:
- The crane is supported and horizontally aligned.
- The central ballast is assembled on both sides.
- The LICCON overload protection has been set according to the load chart.
- The maximum permitted distance between the center of the slewing ring and the crawler carrier on the transport vehicle is 3800 mm.

The crawler carrier may only be installed on the **wide track**.

► Park the transport vehicle as close as possible to the crane.

DANGER
Persons may be crushed or trapped!
► Do not stand between the crawler carrier and the crawler center section during assembly of the crawler carrier.

► Lift the crawler carrier from the transport vehicle and drive the transport vehicle away.
► Align the beam receptacles precisely on the beams on the crane.

CAUTION
Risk of damage to the beams and beam receptacles!
The beams and beam receptacles can become damaged if you try to physically correct a misaligned crawler carrier.
► Slowly slide on the crawler carrier step-by-step.
► If the crawler carrier begins to twist, move it away slightly from the beam and realign.

► Thread the wedges **11** in the beam guides into the wedge notches **12** on the underside of the beams, illustration 5.
► Alternately raise and lower the crawler carrier to carefully slide it onto the beams.
► The assistants should aid the crane operator by holding and aligning both ends of the crawler carrier.
► Slide the crawler carrier in the beams to the stops **13**, illustration 6.
► Clamp the crawler carrier on both beams:
► Unscrew the front clamping screws **3** and clamp the beams with spacers **10**.
► Screw in the rear locking screws **3** and clamp the beams.
► Secure the locking screws **3** with retaining bars **4**.
► Check if the beams are clamped on all four clamping points and secured with retaining bars **4**.

LWE/LTR 1100-009/25105-02-02/en

copyright © Liebherr-Werk Ehingen GmbH 2023

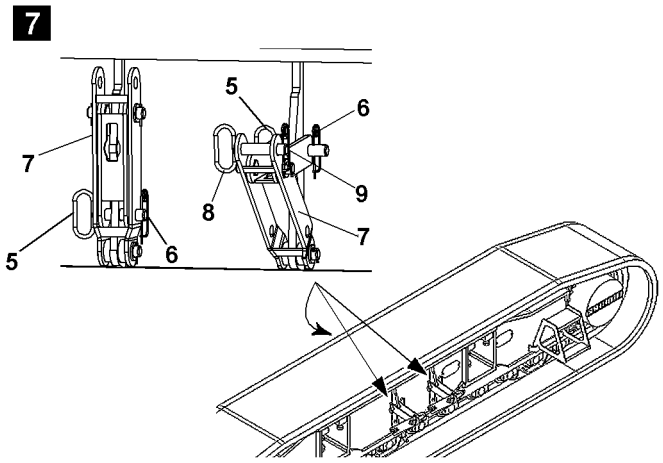

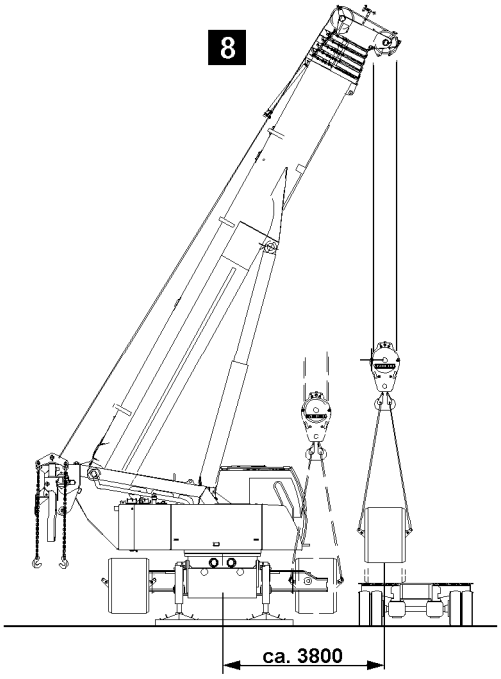

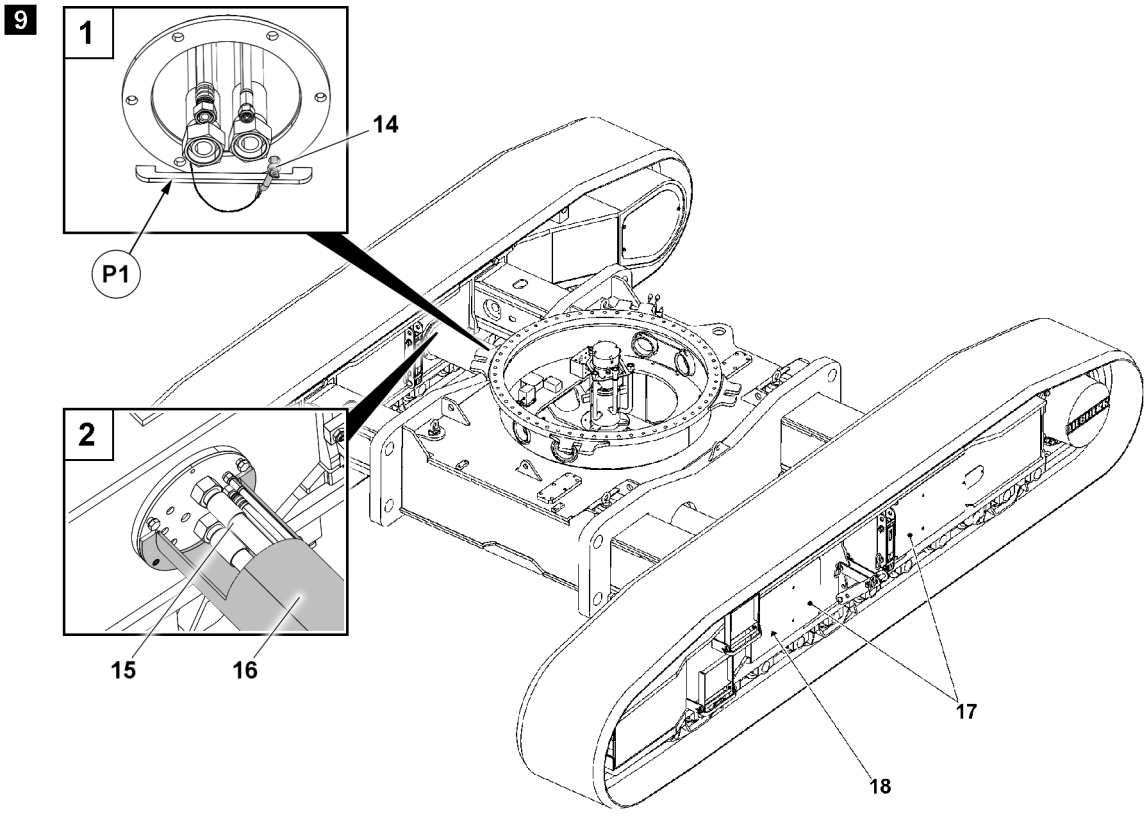

LWE/LTR 1100-009/25105-02-02/en

Fig.166124

copyright © Liebherr-Werk Ehingen GmbH 2023

1.7.4 Folding in the transport retainers, illustration 7

Make sure that the following prerequisite is met:
– The first crawler carrier has been correctly assembled.

► Release and unpin the pin **8** and detach the assembly suspension.
► Insert the pin **8** again and secure with the spring retainer **9**.
► Release and unpin the pin **5** and swing in the transport retainer **7**.
► Pin the transport retainers **7** to the crawler carrier with pins **5** and secure with spring retainers **6**.

1.7.5 Assembling the second crawler carrier, illustration 8

The procedure for assembling the second crawler carrier is identical to that for the first.

► Assemble the second crawler carrier.

1.8 Establishing the hydraulic connections, illustration 9

Make sure that the following prerequisite is met:
– Both crawler carriers are properly assembled.

DANGER
Danger of accident when connecting the hydraulic connections!
Any movement of the crane during the assembly of the hydraulic connections may cause fatal injury to the assembly personnel.
► It is prohibited to operate the travel gear pedals during assembly of the hydraulic connections.
► It is prohibited to turn the crane superstructure during assembly of the hydraulic connections.

The engine must be turned off before connecting and disconnecting hydraulic connections.

All matching hydraulic connections are labelled.

► Establish the hydraulic connections **15** for the crawler drives.
► Release the protective pipes **16** with the shackle **14** in position **P1**.
► Screw the protective pipes **16** to the crawler carriers.
► Establish the hydraulic connections **18** to the track adjustment cylinder.
► Screw on the protective cover **17**.

LWE/LTR 1100-009/25105-02-02/en

copyright © Liebherr-Werk Ehingen GmbH 2023

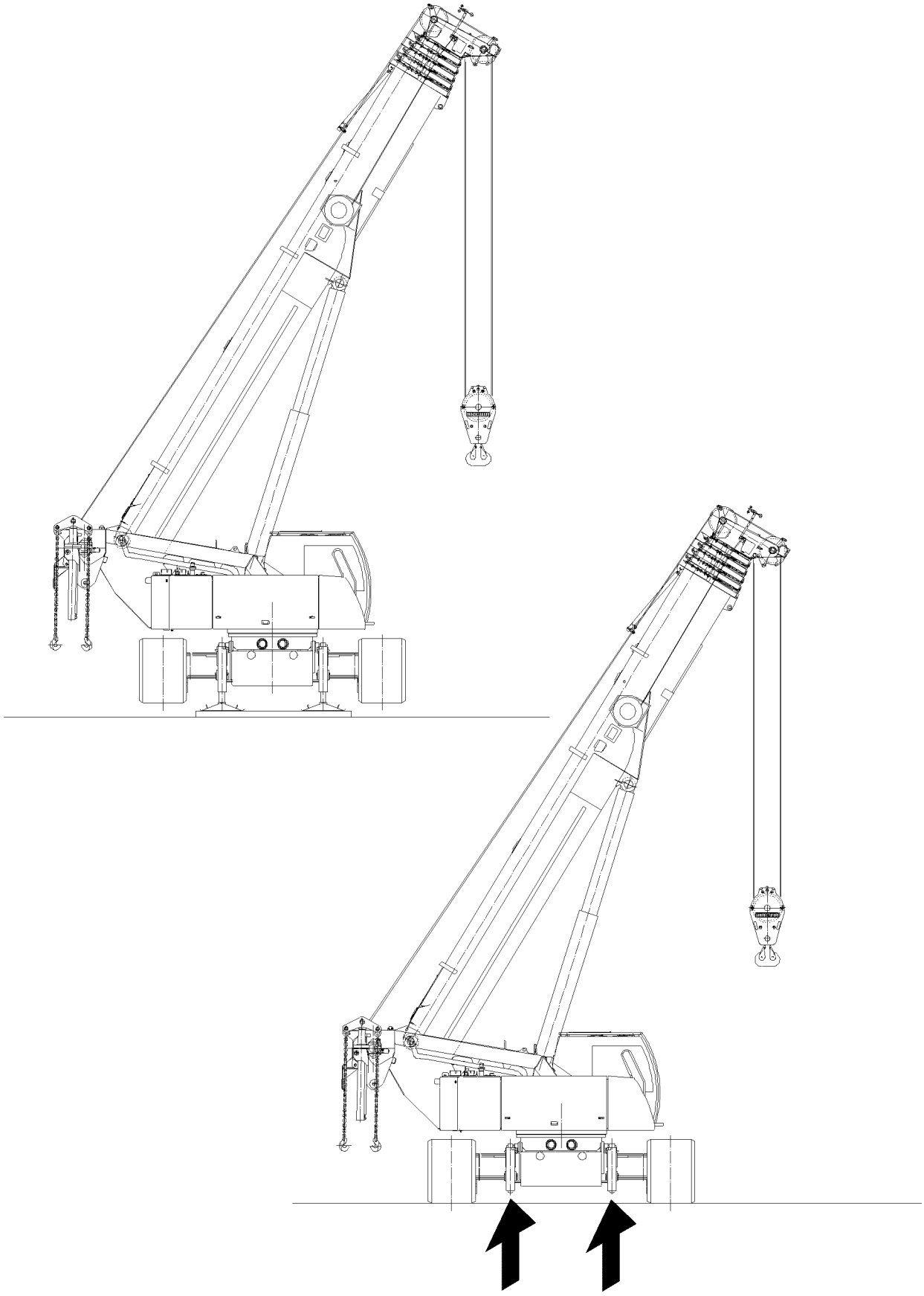

LWE/LTR 1100-009/25105-02-02/en

Fig.118043

copyright © Liebherr-Werk Ehingen GmbH 2023

1.9 Lowering the crane

Make sure that the following prerequisites are met:
- The crawler carriers are pinned and secured.
- The crawler carriers have been checked and tested for function.

WARNING
Danger of crushing!
When lowering the crane, there is an increased danger of accidents due to crushing.
Personnel can be severely injured or killed.
► Make sure that there are no persons in the danger zone.

Note
► Retract support cylinders with BTT-E, BTT and TE1, see section „Supporting the crane“.

► Retract the support cylinders completely.
► Take the support plates down in the retainers.

LWE/LTR 1100-009/25105-02-02/en

copyright © Liebherr-Werk Ehingen GmbH 2023

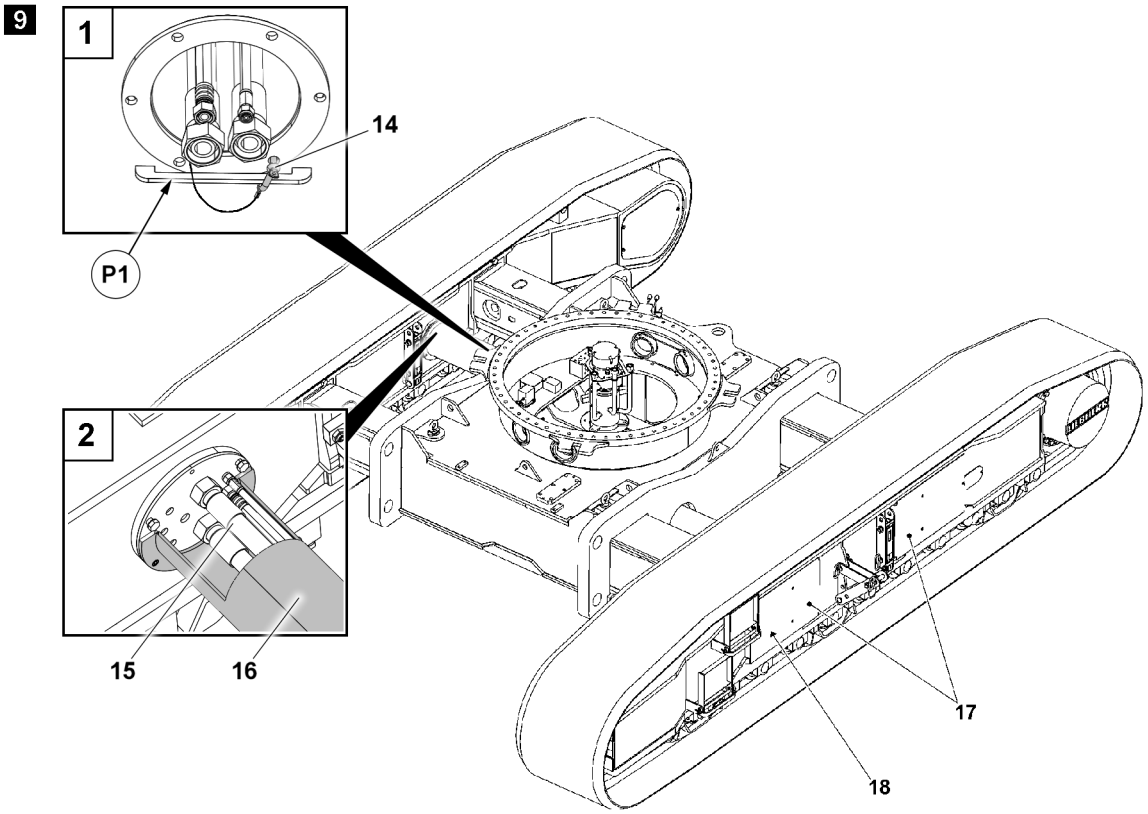

Fig.166125

2 Disassembling the crane

Make sure that the following prerequisites are met:
- The set up location is level and has sufficient load bearing capacity.
- Authorized and trained personnel are available to carry out the assembly and disassembly work.
- The telescopic boom is telescoped in all the way.
- The crawlers are assembled on the wide track.
- The counterweight on the turntable is disassembled.

DANGER
The crane can topple over!
If a counterweight is installed on the turntable when „supporting a crane with a load“, then the crane can topple over and fatally injure personnel.
► When „supporting the crane with a load“, no counterweight may be installed on the turntable.

Note
► The crawlers can only be assembled or disassembled on the wide track.

2.1 Releasing the hydraulic connections

DANGER
Danger of accident when connecting the hydraulic connections!
Any movement of the crane during the assembly of the hydraulic connections may cause fatal injury to the assembly personnel.
► It is prohibited to operate the travel gear pedals during assembly of the hydraulic connections.
► It is prohibited to turn the crane superstructure during assembly of the hydraulic connections.

LWE/LTR 1100-009/25105-02-02/en

copyright © Liebherr-Werk Ehingen GmbH 2023

► Remove the protective cover **17**.

The engine must be turned off before connecting and disconnecting hydraulic connections.

► Remove the hydraulic connection **18** for the track adjustment cylinder.
► Protect the hydraulic connections **18** against contamination with caps.
► Release the protective pipes **16** on the crawler carriers.
► Position the protective pipes **16** on the travel gear.
► Secure the protective pipes **16** in position **P1** with the shackle **14**.
► Release the hydraulic connections **15** for the crawler drives.
► Protect the hydraulic connections **15** against contamination with caps.

LWE/LTR 1100-009/25105-02-02/en

copyright © Liebherr-Werk Ehingen GmbH 2023

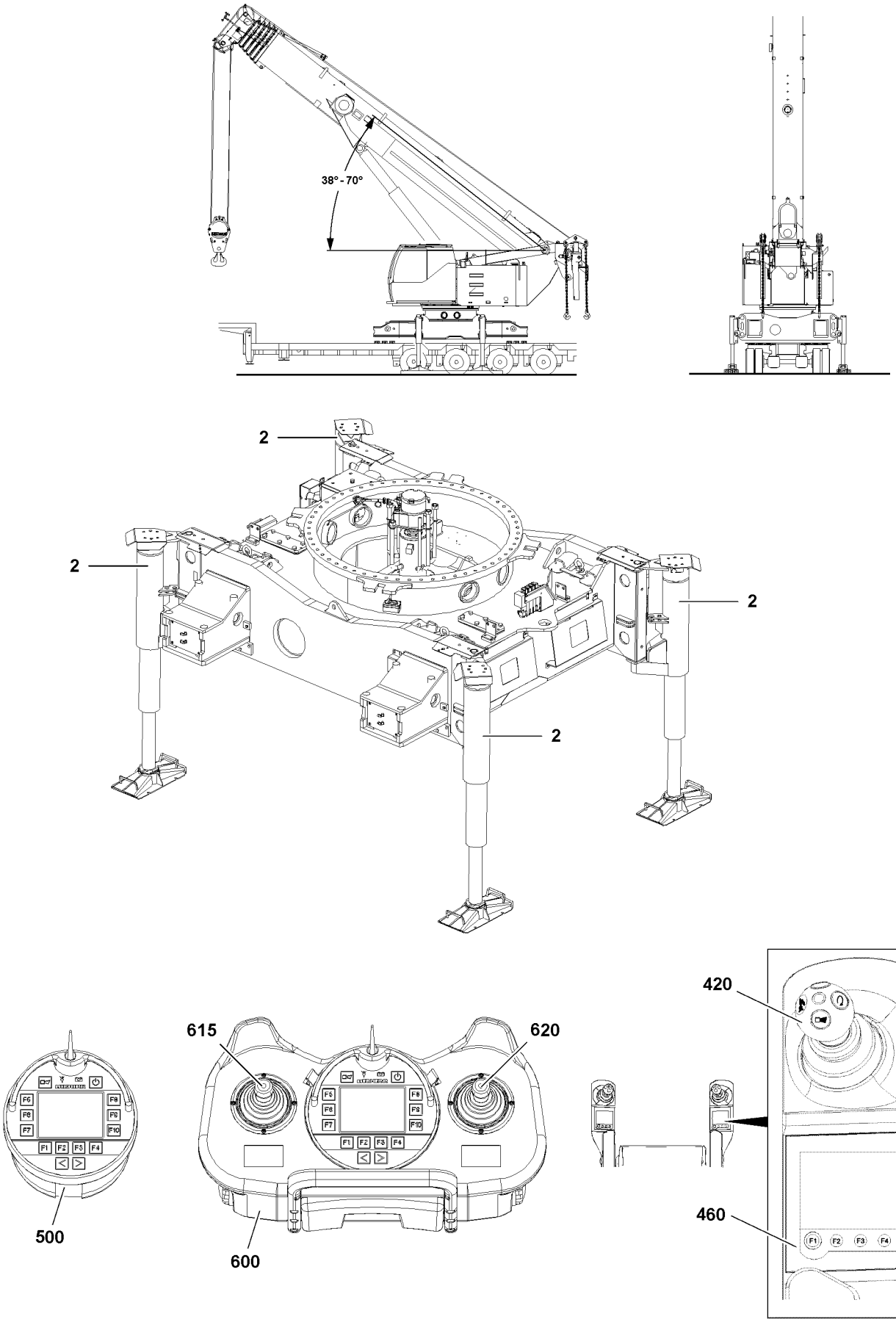

LWE/LTR 1100-009/25105-02-02/en

Fig.118036

copyright © Liebherr-Werk Ehingen GmbH 2023

2.2 Supporting the crane

Make sure that the following prerequisites are met:
- The engine is operating.
- The folding brackets with the support cylinders are pinned in the operating position.
- The LICCON overload protection has been set according to the load chart.
- The crane has been taken down on the transport vehicle.
- The support beams are supported on both ends with wooden planks.
- The crane superstructure is mechanically locked with the crane chassis.

2.2.1 Preparatory work

DANGER
Danger of tipping when the auxiliary boom is in transport position on the side of the telescopic boom!
If the telescopic boom, with the auxiliary boom installed on the side of the telescopic boom, is not luffed up to an angle range of 38° to 70° before supporting, then the crane can topple forward and fatally injure personnel.
► Luff the telescopic boom up, with the auxiliary boom installed on the side of the telescopic boom, to an angle range of 38° to 70° before supporting the crane.

If an auxiliary boom is installed on the side of the telescopic boom:
► Luff the telescopic boom up to an angle range of 38° to 70°.

WARNING
Assembly support monitoring.
The assembly support is not monitored by the control.
The crane operator is obligated to check the assembly support before further assembly steps.
► Make sure that all folding brackets are swung and secured.
► Make sure that all support plates are supported.

► Check the assembly support.

LWE/LTR 1100-009/25105-02-02/en

copyright © Liebherr-Werk Ehingen GmbH 2023

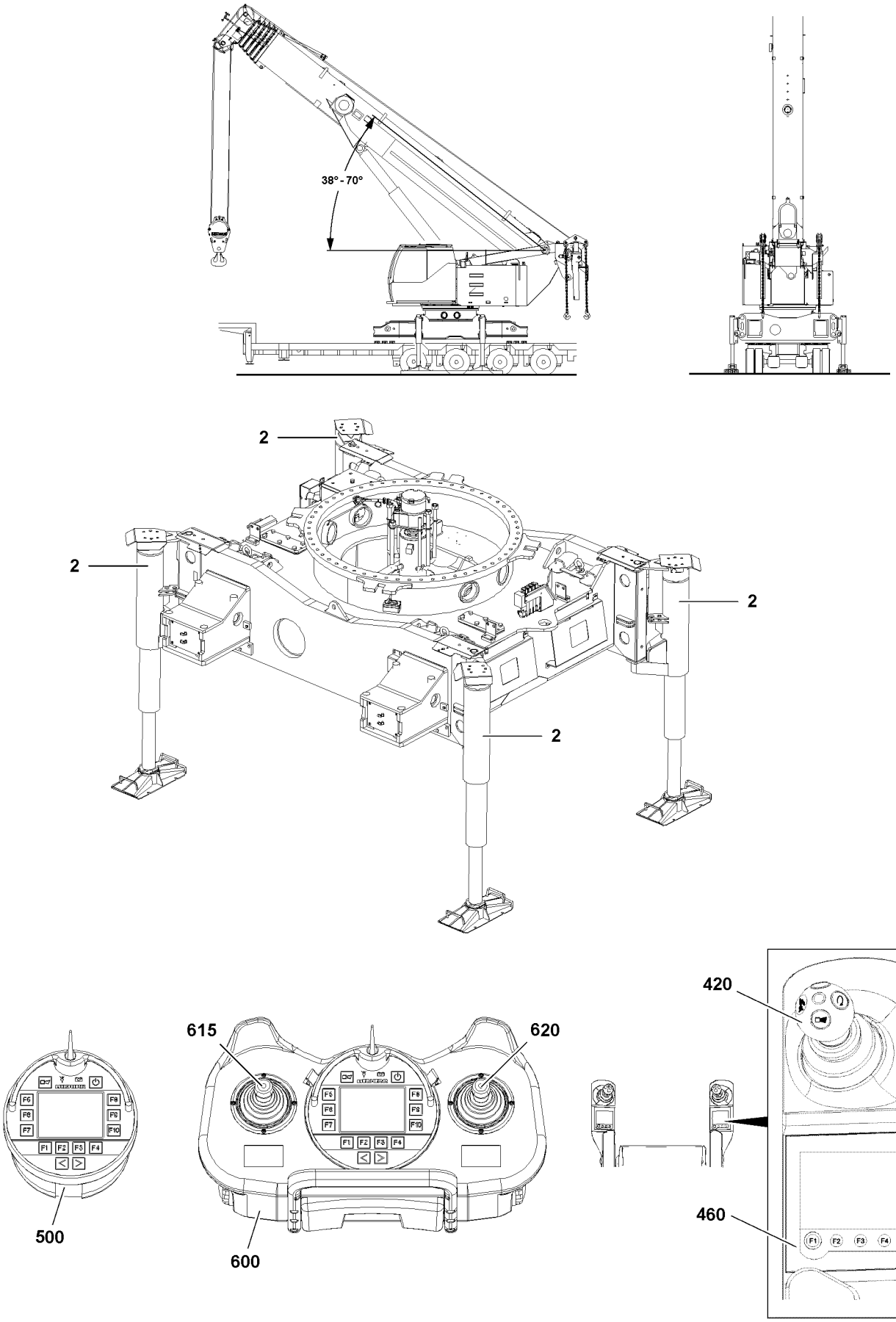

LWE/LTR 1100-009/25105-02-02/en

Fig.118036

copyright © Liebherr-Werk Ehingen GmbH 2023

2.2.2 Supporting the crane with the support cylinders

DANGER
The crane can topple over!
If the crane is not aligned horizontally, it can tip over and fatally injure personnel.
► Align the crane horizontally.

► Align the support plates precisely under the support cylinders.
► Lower all support cylinders into the support plates.
► Slowly lift and level out the crane until the desired support height is reached.
► Check the distance between the crawler center section and the transport vehicle (at least one hand's width).

2.2.3 Extending the support cylinders with the BlueTooth™ Terminal

Make sure that the following prerequisite is met:
– The menu overview is visible on the BTT display.

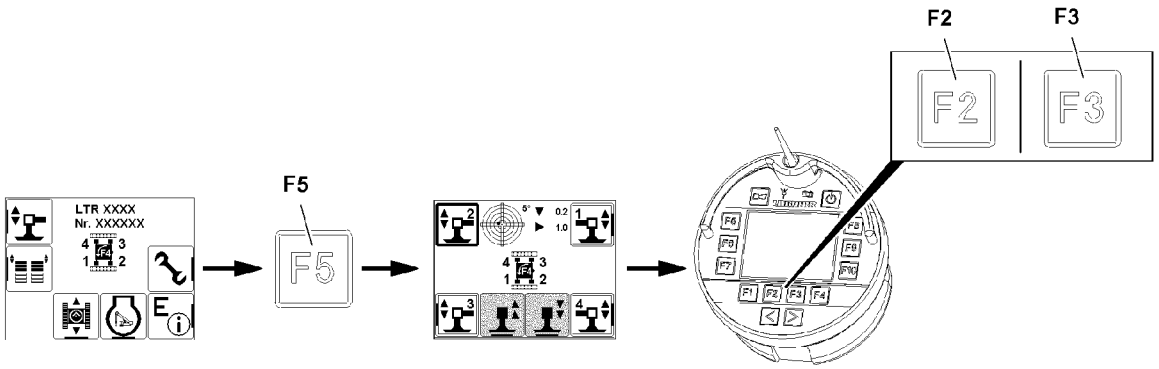

Fig.118037

► Press the function key **F5**.

Result:

– The „Support“ menu is visible.

The support cylinders are marked with numbers depending on the alignment of the BTT.

Support cylinders are selected with function keys:
– **F5** Function key
– **F7** Function key
– **F8** Function key
– **F10** Function key

Note
► The support cylinders can be extended individually or all four simultaneously.

DANGER
Danger of crushing due to extension of support cylinders!
► Make sure that there are no persons in the danger zone.

► Select the support cylinder: Press the function key.

Result:

– Selected icons are visible with filled out frames: Support cylinders are selected.
– Support cylinders are ready for extension and retraction.

LWE/LTR 1100-009/25105-02-02/en

copyright © Liebherr-Werk Ehingen GmbH 2023

When „retracting the support cylinders“:
► Press the function key **F2**.

Result:

– The support cylinder retracts.

When „extending the support cylinders“:
► Press the function key **F3**.

Result:

– The support cylinder extends.

LWE/LTR 1100-009/25105-02-02/en

copyright © Liebherr-Werk Ehingen GmbH 2023

Empty page!

LWE/LTR 1100-009/25105-02-02/en

copyright © Liebherr-Werk Ehingen GmbH 2023

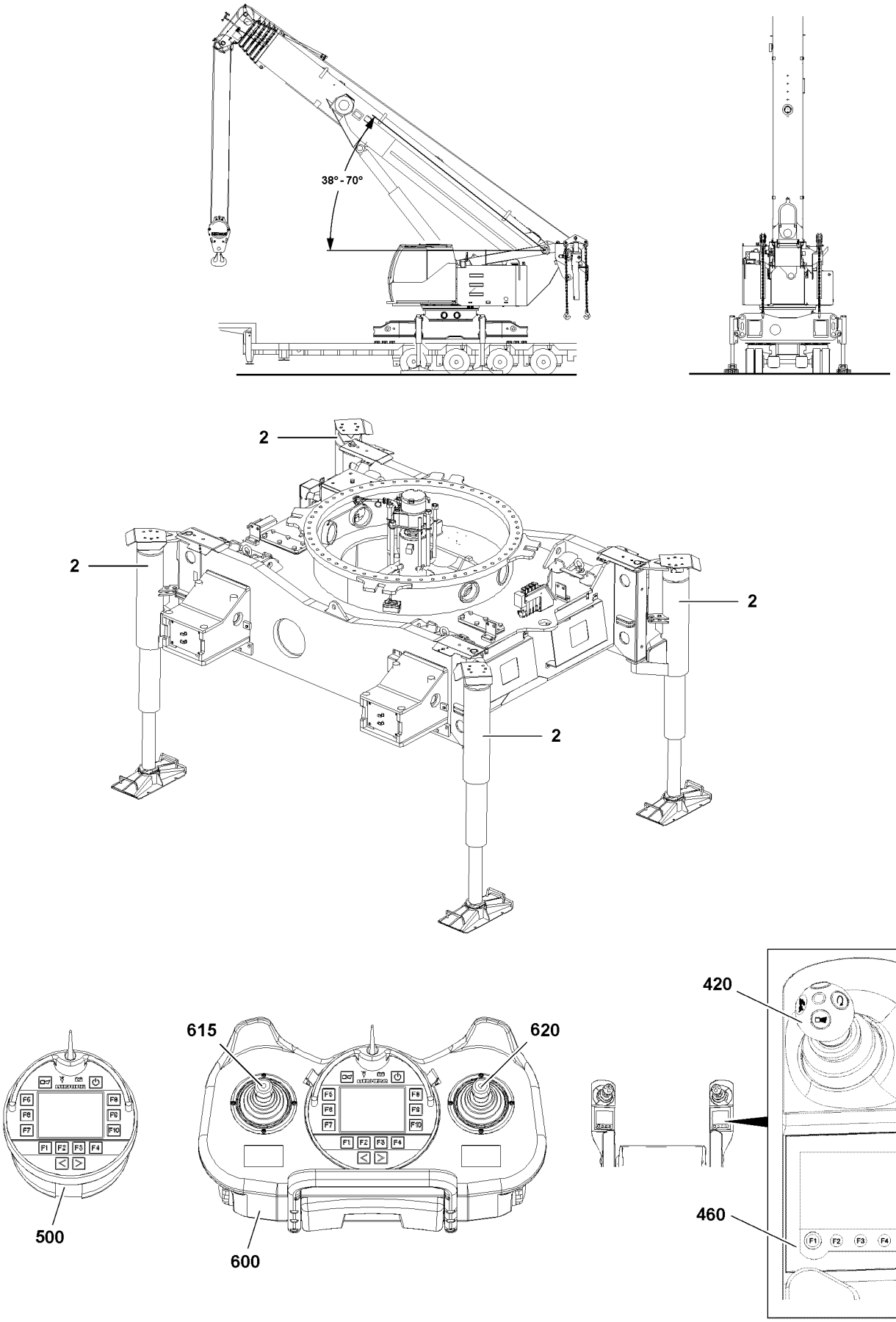

LWE/LTR 1100-009/25105-02-02/en

Fig.118036

copyright © Liebherr-Werk Ehingen GmbH 2023

2.2.4 Extending the support cylinders from the crane operator's cab

Make sure that the following prerequisite is met:
– The „master switch assignment“ menu is visible on the right touch display (TE1).

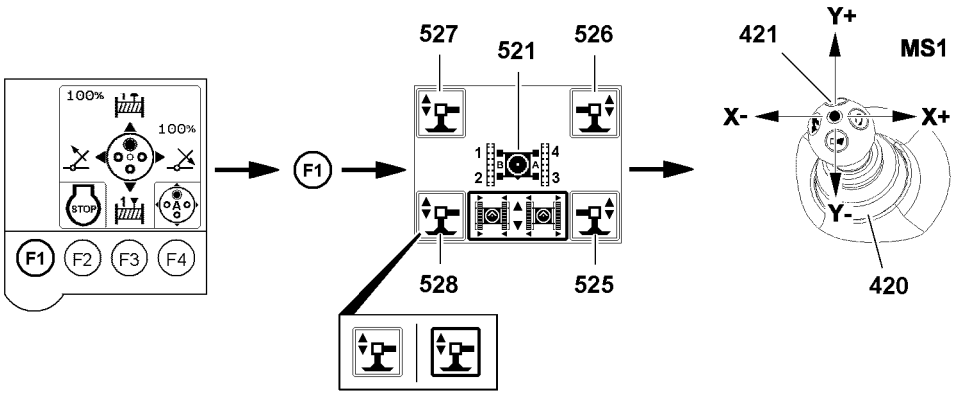

Fig.118038

► Press the function key **F1**.

Result:

– The „Support“ menu is visible.

The support cylinders are marked with numbers depending on the alignment of the turntable, see icon **521**.

Support cylinders are selected via touch functions:
– **525** Icon
– **526** Icon
– **527** Icon
– **528** Icon

Note
► The support cylinders can be extended individually or all four simultaneously.

DANGER
Danger of crushing due to extension of support cylinders!
► Make sure that there are no persons in the danger zone.

► Select the support cylinder: Select the icon („touch“).

Result:

– Selected icons are visible with filled out frames: Support cylinders are selected.
– Support cylinders are ready for extension and retraction.

When „retracting the support cylinders“:
► Deflect the manual control lever **420** in direction Y+.

Result:

– The support cylinder retracts.

When „extending the support cylinders“:
► Deflect the manual control lever **420** in direction Y-.

LWE/LTR 1100-009/25105-02-02/en

copyright © Liebherr-Werk Ehingen GmbH 2023

Result:

– The support cylinder extends.

LWE/LTR 1100-009/25105-02-02/en

copyright © Liebherr-Werk Ehingen GmbH 2023

Empty page!

LWE/LTR 1100-009/25105-02-02/en

copyright © Liebherr-Werk Ehingen GmbH 2023

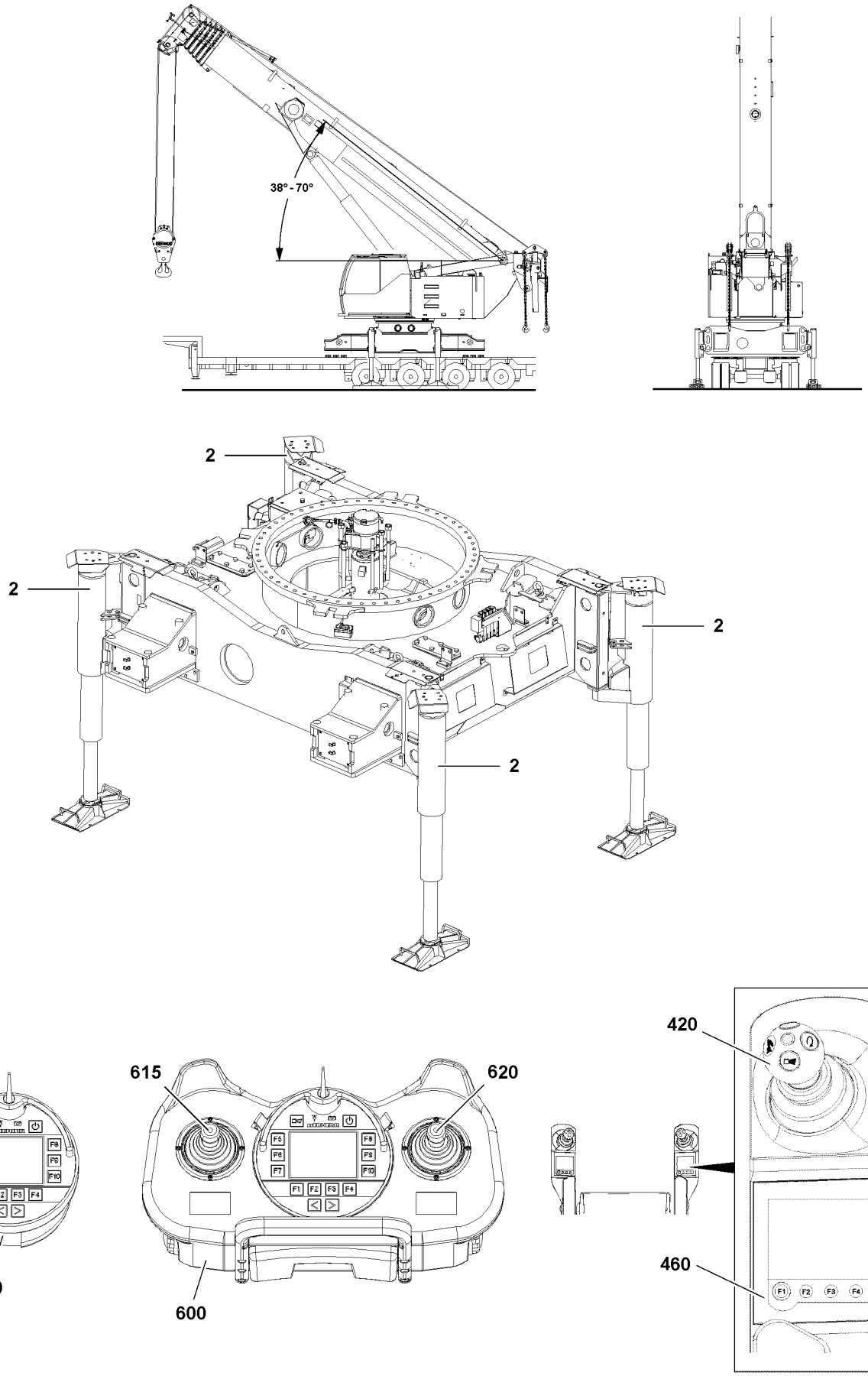

LWE/LTR 1100-009/25105-02-02/en

Fig.118036

copyright © Liebherr-Werk Ehingen GmbH 2023

2.2.5 Extending the support cylinders with the radio remote control*

Make sure that the following prerequisite is met:
– The menu overview is visible on the BTT-E display.

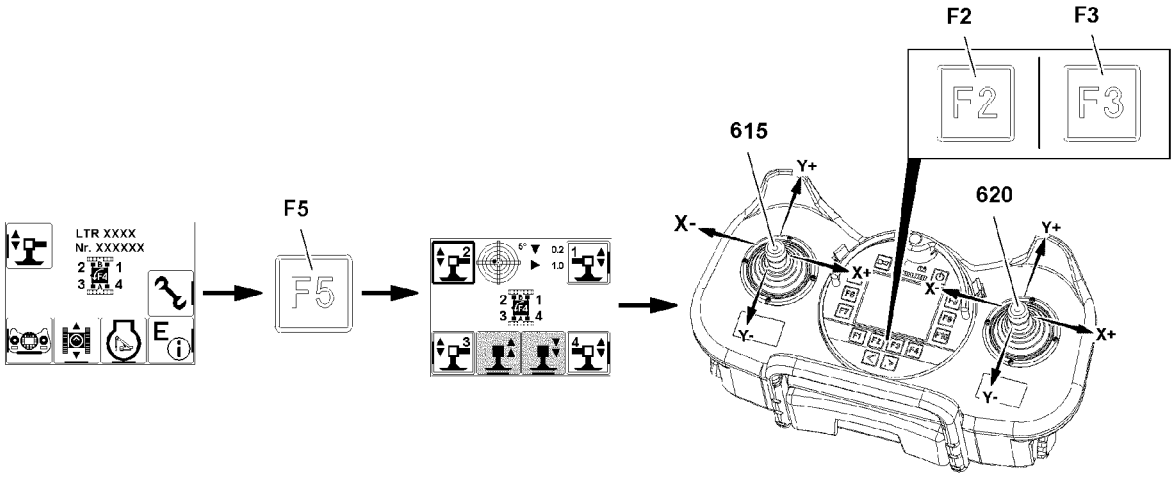

Fig.118039

DANGER
Danger of crushing due to extension of support cylinders!
► Make sure that there are no persons in the danger zone.

► Press the function key **F5**.

Result:

– The „Support“ menu is visible.

The support cylinders are marked with numbers depending on the alignment of the radio remote control.

Support cylinders are selected with function keys:
– **F5** Function key
– **F7** Function key
– **F8** Function key
– **F10** Function key

Note
► The support cylinders can be extended individually or all four simultaneously.

► Select the support cylinder: Press the function key.

Result:

– Selected icons are visible with filled out frames: Support cylinders are selected.
– Support cylinders are ready for extension and retraction.

The support cylinders can be extended or retracted with both manual control levers.

When „retracting the support cylinders“:
► Deflect the manual control lever in direction Y+.
or
Press the function key **F2**.

Result:

– The piston rod **18** retracts.

LWE/LTR 1100-009/25105-02-02/en

copyright © Liebherr-Werk Ehingen GmbH 2023

When „extending the support cylinders“:

► Deflect the manual control lever in direction Y-.
or
Press the function key **F3**.

Result:

– The piston rod **18** extends.

LWE/LTR 1100-009/25105-02-02/en

copyright © Liebherr-Werk Ehingen GmbH 2023

Empty page!

LWE/LTR 1100-009/25105-02-02/en

copyright © Liebherr-Werk Ehingen GmbH 2023

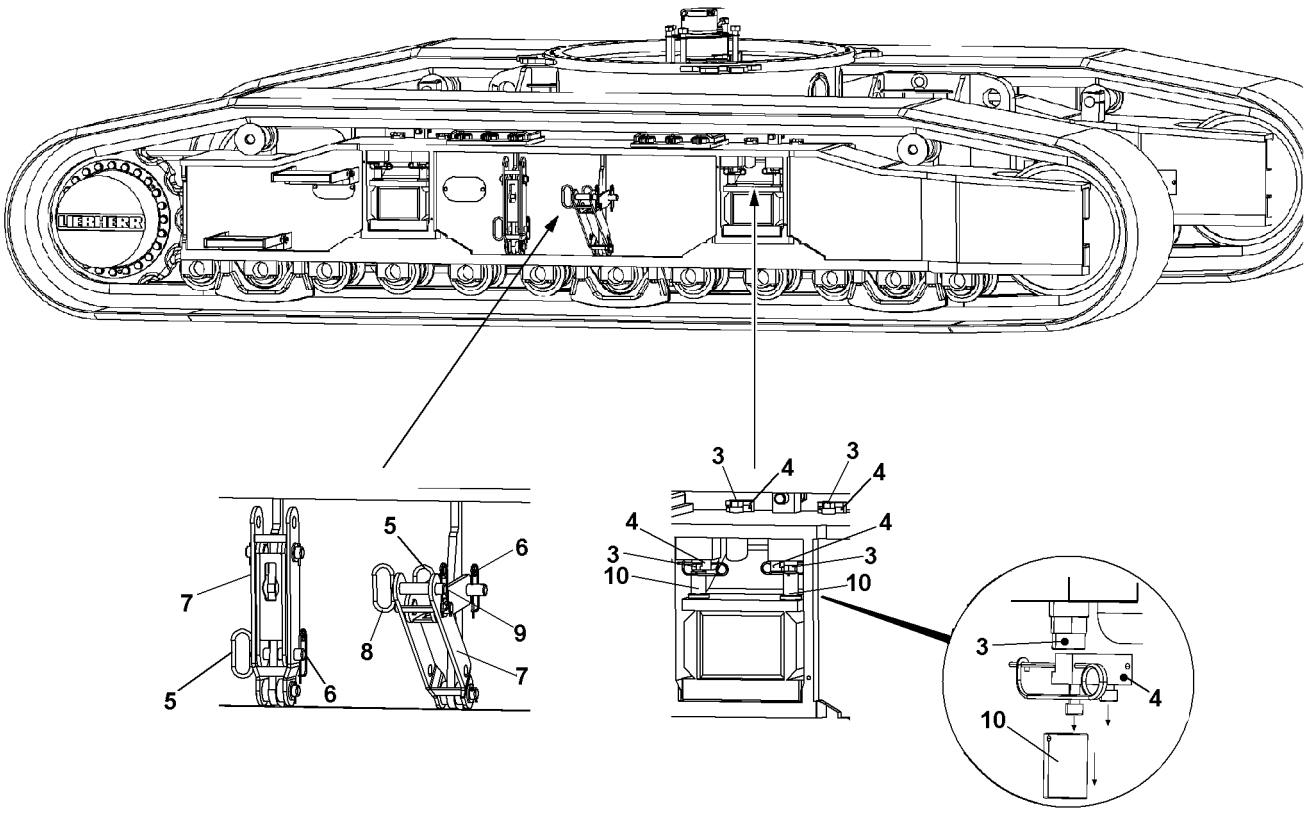

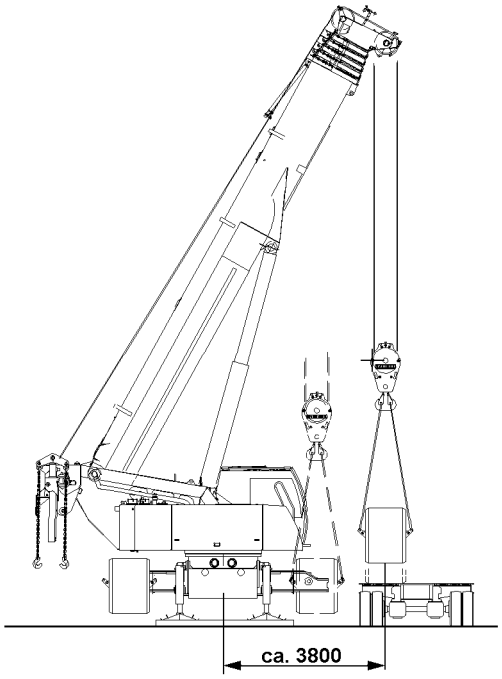

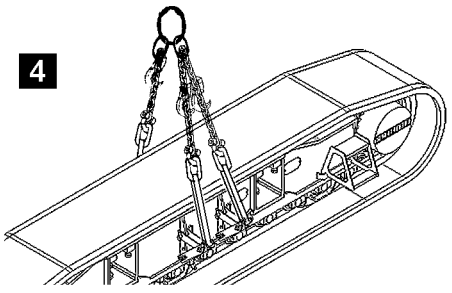

LWE/LTR 1100-009/25105-02-02/en

Fig.104733

copyright © Liebherr-Werk Ehingen GmbH 2023

2.3 Disassembling the crawler carriers

Make sure that the following prerequisites are met:
- The crane is supported and horizontally aligned.
- The central ballast is assembled on both sides.
- The LICCON overload protection has been set according to the load chart.
- The hydraulic connections are disassembled.
- The maximum permitted distance between the center of the slewing ring and the transport vehicle is 3800 mm.

2.3.1 Disassembling the first crawler carrier

Three transport retainers **7** are installed on the crawler carriers. The transport retainers **7** must be swung out and pinned.

► Release and unpin the pin **5**.
► Swing the transport retainers **7** out and insert the pin **5** in the upper bore on the crawler carrier.
► Secure the pin **5** with the spring retainer **6**.
► Release and unpin the pin **8**.

CAUTION
Damage to the crawler carrier!
► Fasten the assembly suspension in such a way that the crawler carriers are not damaged, see illustration **4**.

► Pin the assembly suspension with pins **8**.
► Attach the crawler carrier to all 3 transport retainers **7** and lightly tension the assembly suspension.
► Remove the retaining bars **4**.
► Screw in the front clamping screws **3** and store the spacers **10** in a safe place.
► Unscrew the rear locking screws **3**.

CAUTION
Risk of damage to the beams and beam receptacles!
The beams and beam receptacles can become damaged if you try to physically correct a misaligned crawler carrier.
► Slowly pull the crawler carrier off step-by-step.

► Lower the crawler carrier approximately 50 mm.
► Alternately raise and lower the crawler carrier to carefully slide it off the beams.

LWE/LTR 1100-009/25105-02-02/en

copyright © Liebherr-Werk Ehingen GmbH 2023

1

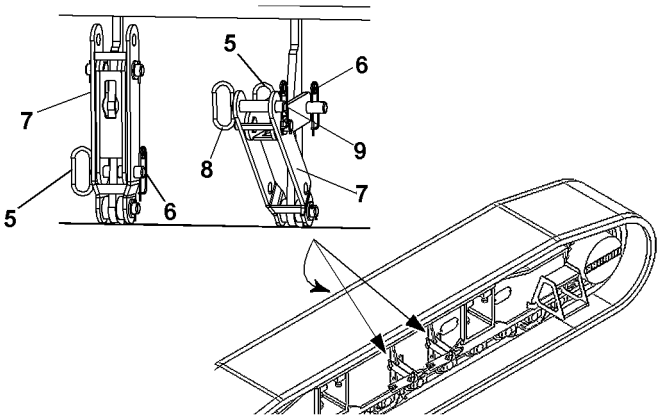

2

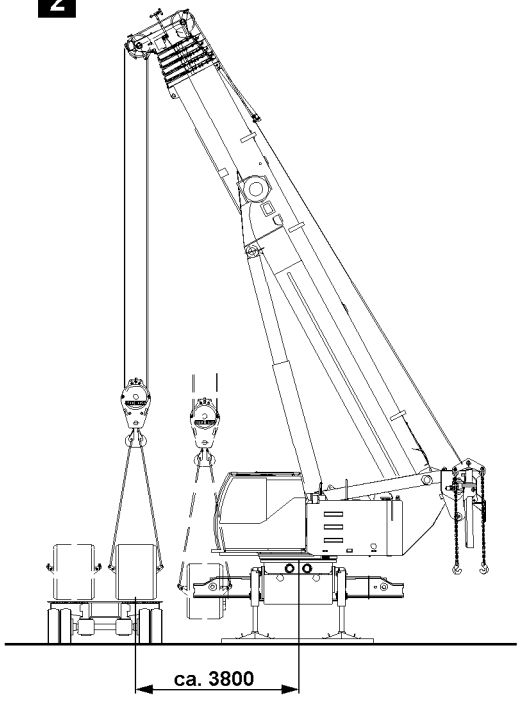

3

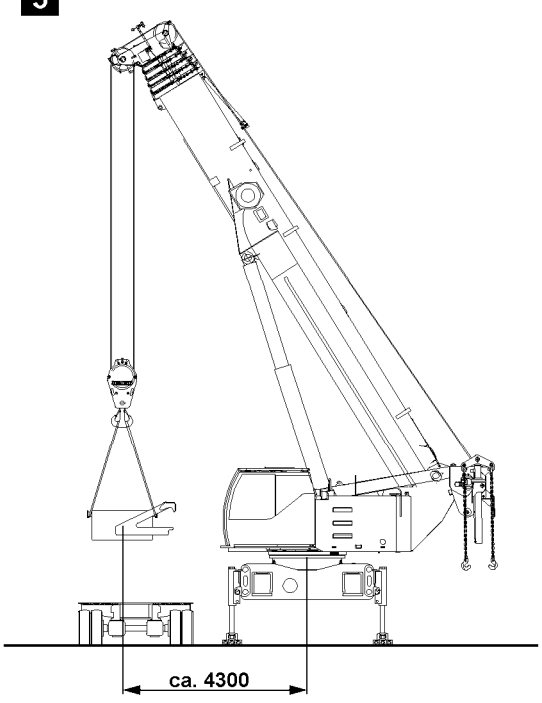

LWE/LTR 1100-009/25105-02-02/en

Fig.102929

copyright © Liebherr-Werk Ehingen GmbH 2023

DANGER
Persons may be crushed or trapped!
► Do not stand between the crawler carrier and the transport vehicle when the crawler carrier is being disassembled.

► The assistants should aid the crane operator by holding and aligning both ends of the crawler carrier.
► Load the crawler carrier onto the transport vehicle.

2.3.2 Folding in the transport retainers, illustration 1

► Release and unpin the pin **8** and detach the assembly suspension.
► Insert the pin **8** again and secure with the spring retainer **9**.
► Release and unpin the pin **5** and swing in the transport retainer **7**.
► Pin the transport retainers **7** to the crawler carrier with pins **5** and secure with spring retainers **6**.

2.3.3 Disassembling the second crawler carrier, illustration 2

The procedure for disassembling the second crawler carrier is identical to that for the first.

► Disassemble the second crawler carrier.

2.4 Disassembling the central ballast, illustration 3

Make sure that the following prerequisites are met:
– The crawler carriers on both sides have been disassembled.
– The LICCON overload protection has been set according to the load chart.
– The hook block weighs maximum 0.5 t.
– The maximum permitted distance between the center of the slewing ring and the central ballast on the transport vehicle is 4300 mm.

► Disassemble the central ballast on both sides, see the detailed description in chapter 3.03.

LWE/LTR 1100-009/25105-02-02/en

copyright © Liebherr-Werk Ehingen GmbH 2023

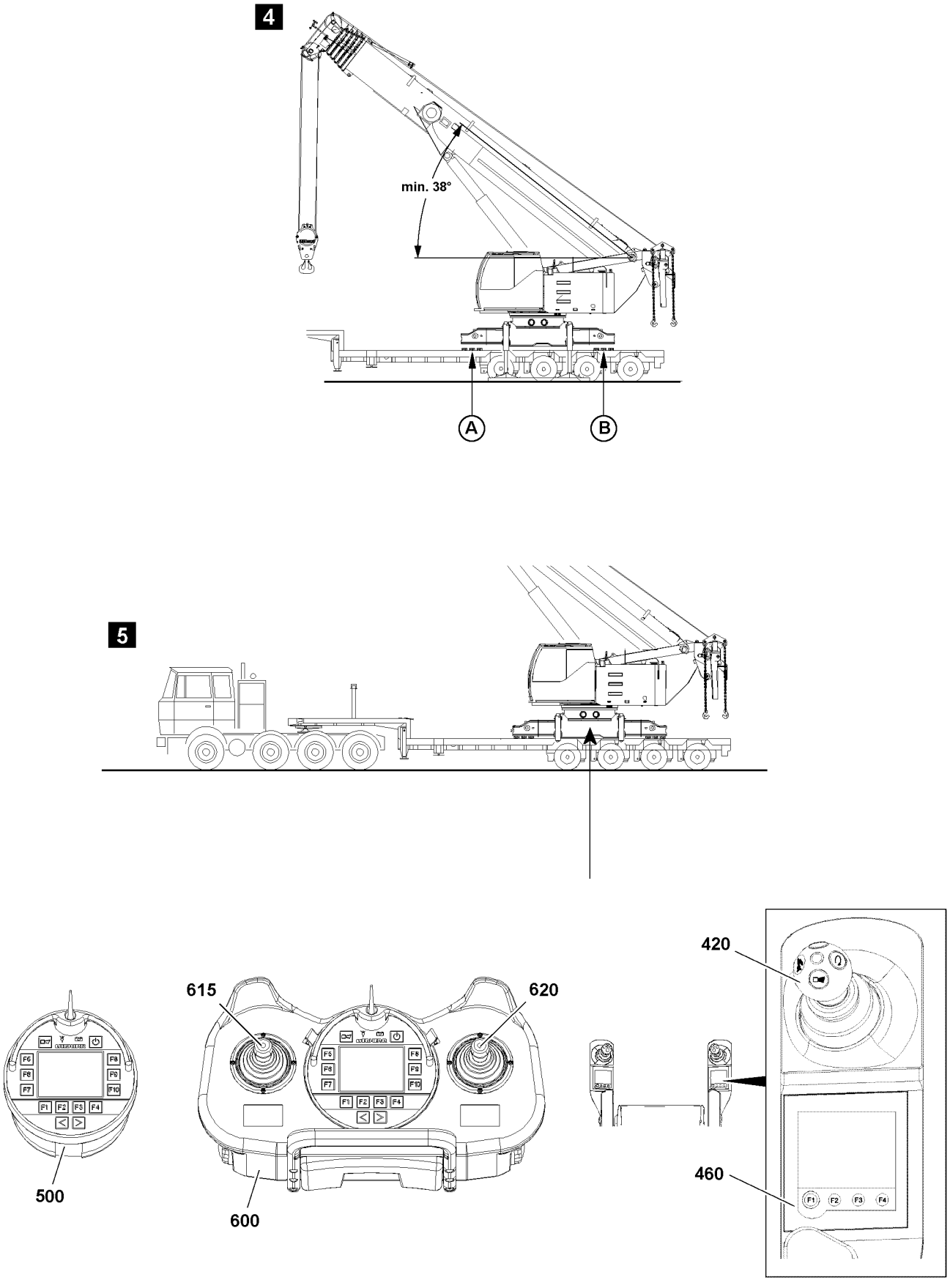

LWE/LTR 1100-009/25105-02-02/en

Fig.118051

copyright © Liebherr-Werk Ehingen GmbH 2023

2.5 Loading the crane onto the transport vehicle, illustrations 4 and 5

Make sure that the following prerequisites are met:
- The crawler carriers and central ballast on both sides have been disassembled.
- The crane is supported at a sufficient height to enable the transport vehicle to drive under the crane.
- The LICCON overload protection has been set according to the load chart.
- Wooden planks have been placed on the transport vehicle for the beam substructure.

WARNING
The crane can topple over!
The beams must be supported on both ends to ensure the stability of the crane on the transport vehicle. See illustration 4 position A and B **A** and **B**.
► Support the beams on both ends properly with wooden planks.

DANGER
The crane can topple over!
When driving below the supported crane, the transport vehicle can collide with a support cylinder, which could cause the crane to topple over.
► An assistant must guide the transport vehicle.
► As soon as the crane is resting on the transport vehicle, the crane superstructure may no longer be turned.

► Carefully drive the transport vehicle under the supported crane.

Extend and retract the support cylinder with the Bluetooth™ Terminal or from the crane operator's cab.

► Retract all supports until the crane is placed on the transport vehicle.
► Take the support plates down in the retainers.

LWE/LTR 1100-009/25105-02-02/en

copyright © Liebherr-Werk Ehingen GmbH 2023

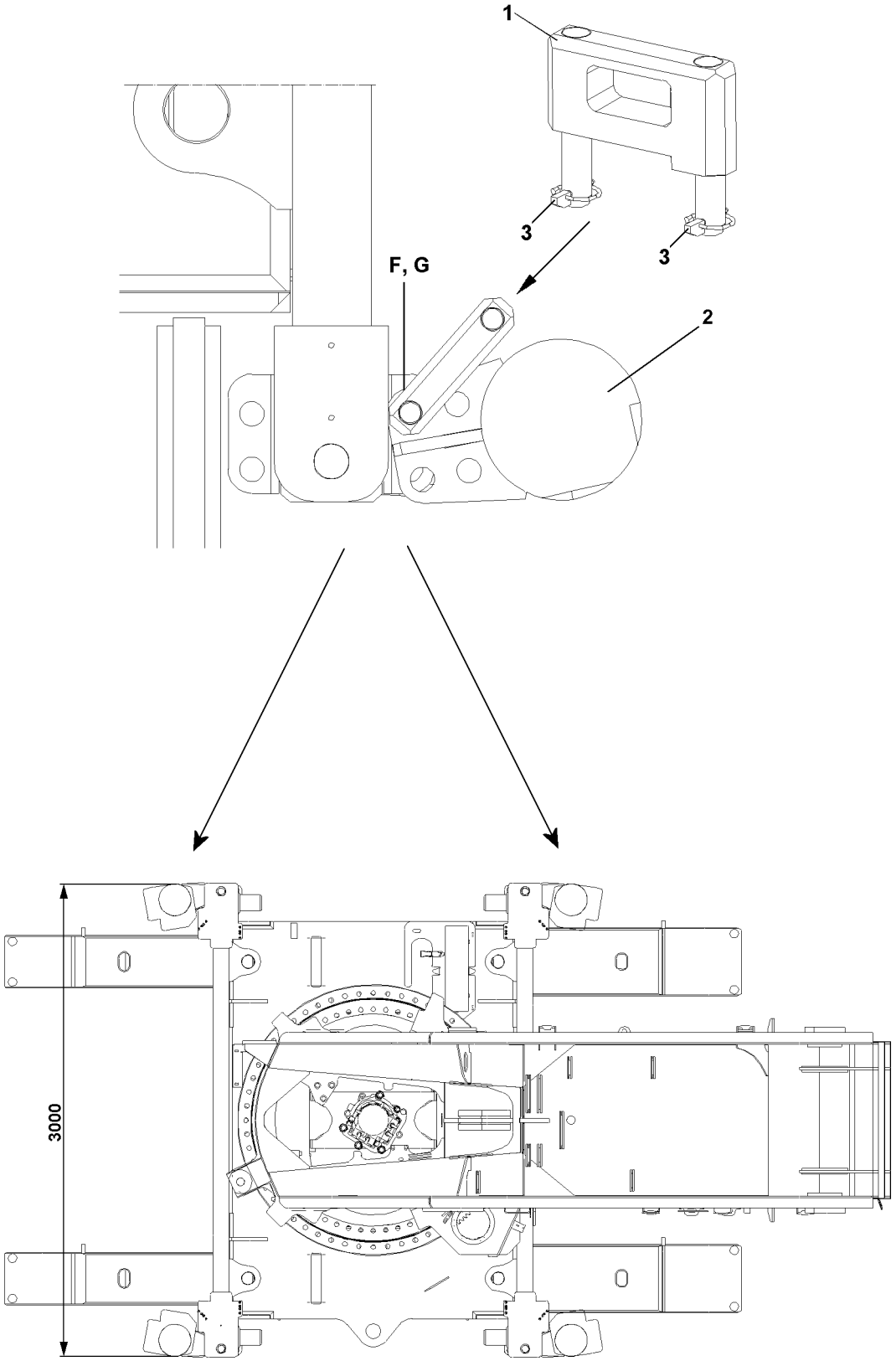

LWE/LTR 1100-009/25105-02-02/en

Fig.104730

copyright © Liebherr-Werk Ehingen GmbH 2023

2.6 Pinning the support cylinders in the transport position

Make sure that the following prerequisites are met:
- The support cylinders have been fully retracted.
- The crane has been taken down on the transport vehicle.
- The beams are supported on both ends with wooden planks.

► Release and unpin the retaining bracket **1**.
► Swing the support cylinders **2** in until the bore **F** and the bore **G** align.
► Pin the retaining bracket **3** on one side in bore **F** and bore **G** and secure with the linch pin **3**.

Pin the remaining support cylinders **2** accordingly.

► Pin all four support cylinders **2** in the transport position.

Note
► The crane has a transport width of 3000 mm when the support cylinders **2** are swung in.

LWE/LTR 1100-009/25105-02-02/en

copyright © Liebherr-Werk Ehingen GmbH 2023

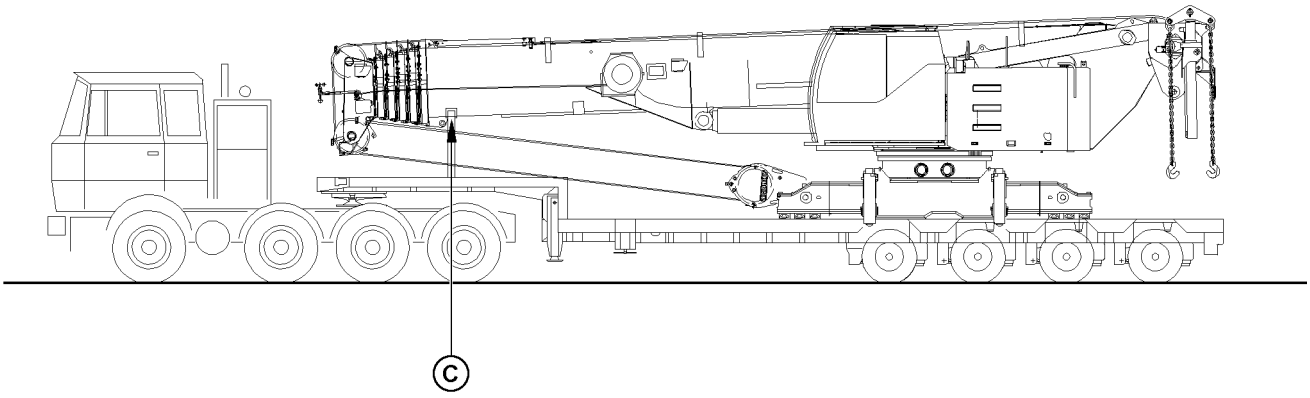

Fig.118487

LWE/LTR 1100-009/25105-02-02/en

copyright © Liebherr-Werk Ehingen GmbH 2023

2.7 Securing the crane properly on the transport vehicle

Make sure that the following prerequisites are met:
- The folding brackets are pinned in the transport position.
- The LICCON overload protection has been set according to the load chart.
- The crane has been taken down on the transport vehicle.
- The beams are supported on both ends with wooden planks.

► Lock the crane superstructure with the crane chassis.

WARNING
The crane can topple over!
The telescopic boom must be supported on the transport vehicle to ensure the stability of the crane on the transport vehicle.
► Support the telescopic boom properly on the transport vehicle with wooden planks.

► Support the telescopic boom properly, see illustration, position **C**.

Note
► To ensure the stability of the crane.

► Luff the telescopic boom down and take it down on the substructure.
► Fasten the hook block to the crawler center section and lightly tension the hoist rope.
► Secure the ballast assembly chains to avoid uncontrolled swinging.

WARNING
Falling crane if insufficiently secured!
► The crane must be rigged and secured sufficiently to survive a strong braking maneuver.

► Rig and secure the crane properly on the transport vehicle, see the Crane operating instructions, chapter 3.80.

LWE/LTR 1100-009/25105-02-02/en

copyright © Liebherr-Werk Ehingen GmbH 2023

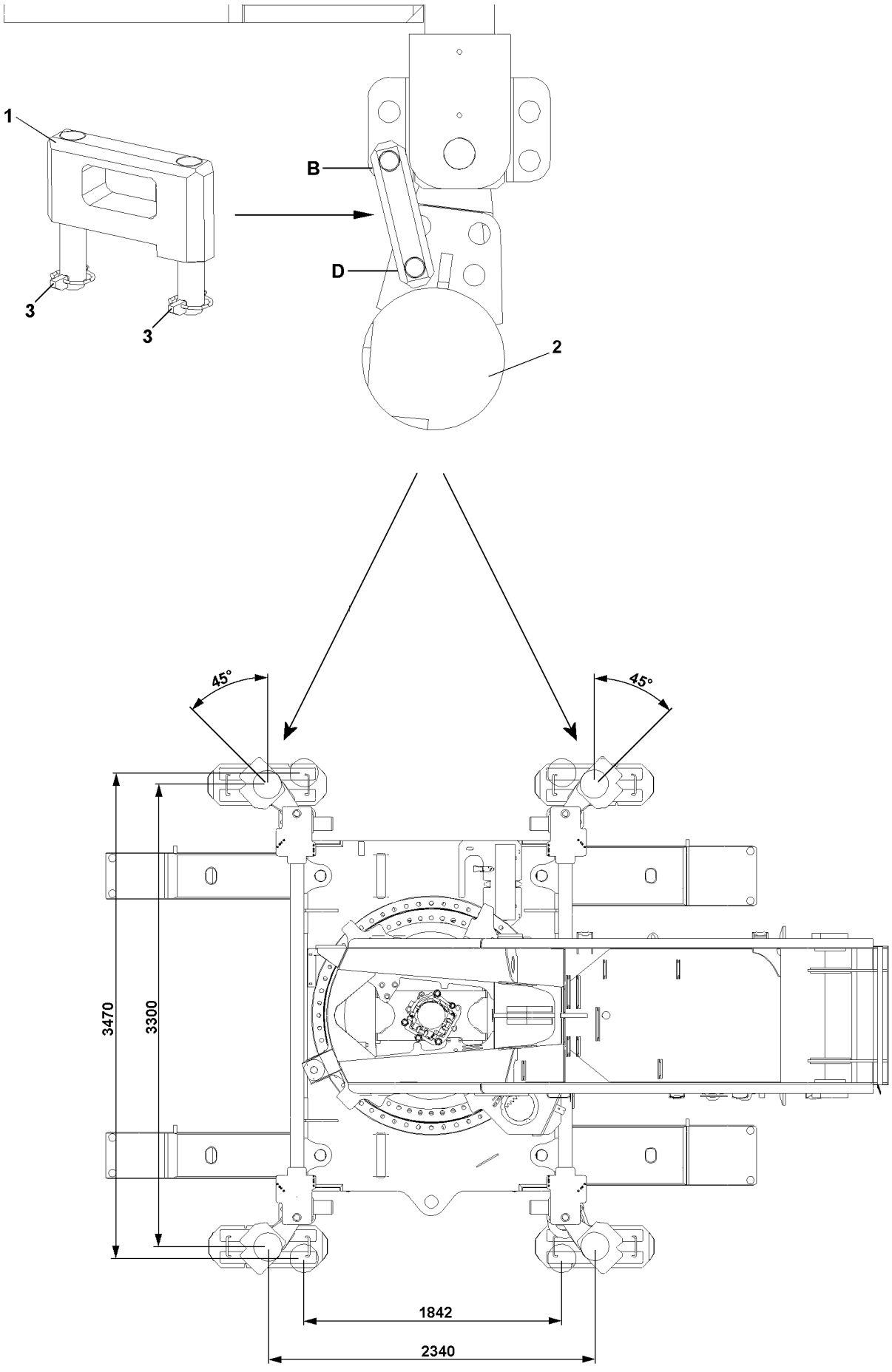

Fig.104731

LWE/LTR 1100-009/25105-02-02/en

copyright © Liebherr-Werk Ehingen GmbH 2023

3 Unloading / loading the crane from / onto an extra wide transport vehicle

3.1 Unloading the crane from an extra wide transport vehicle

Make sure that the following prerequisites are met:
- The location is level, smooth and provides sufficient load bearing capacity.
- Authorized and trained personnel are available to carry out the assembly and disassembly work.
- The telescopic boom is fully telescoped in and placed on the telescopic boom receptacle.
- The crane superstructure is locked with the crane chassis.
- The beams of the crane are supported on the transport vehicle with wooden planks.
- The retaining brackets **1** are released and unpinned.
- The central ballast is disassembled.
- The counterweight on the turntable is disassembled.

DANGER
The crane can topple over!
If a counterweight is installed on the turntable when supporting a crane, then the crane can topple over and fatally injure personnel.
► When supporting the crane, no counterweight may be installed on the turntable.

DANGER
The crane can topple over!
If the crane superstructure is turned with a support base of 1842 mm x 3470 mm , the crane can topple over and fatally injure personnel.
► Turning the crane superstructure with a support base of 1842 mm x 3470 mm is prohibited.
► The crane may only be supported at a support base of 1842 mm x 3470 mm for unloading / loading of extra wide transport vehicles.
► Assembly operation is only permitted at a support base of 2340 mm x 3300 mm.

► Swing the support cylinder **2** out.
► Pin the retaining bracket **1** in bore **B** and bore **D** and secure with linch pins **3**.

Pin the remaining support cylinders **2** accordingly.

► Pin all four support cylinders **2** on support base 1842 mm x 3470 mm.

DANGER
Danger of tipping when the auxiliary boom is in transport position on the side of the telescopic boom!
If the telescopic boom has the auxiliary boom installed on the side of the telescopic boom and is not luffed up to an angle range of 38° to 60° before supporting, then the crane can topple over and fatally injure personnel.
► Luff the telescopic boom up with the auxiliary boom installed on the side of the telescopic boom to an angle range of 38° to 60° before supporting the crane.

► Support the crane until the extra wide transport vehicle can be driven off underneath the crane.
► Carefully drive the extra wide transport vehicle away from underneath the supported crane.

LWE/LTR 1100-009/25105-02-02/en

copyright © Liebherr-Werk Ehingen GmbH 2023

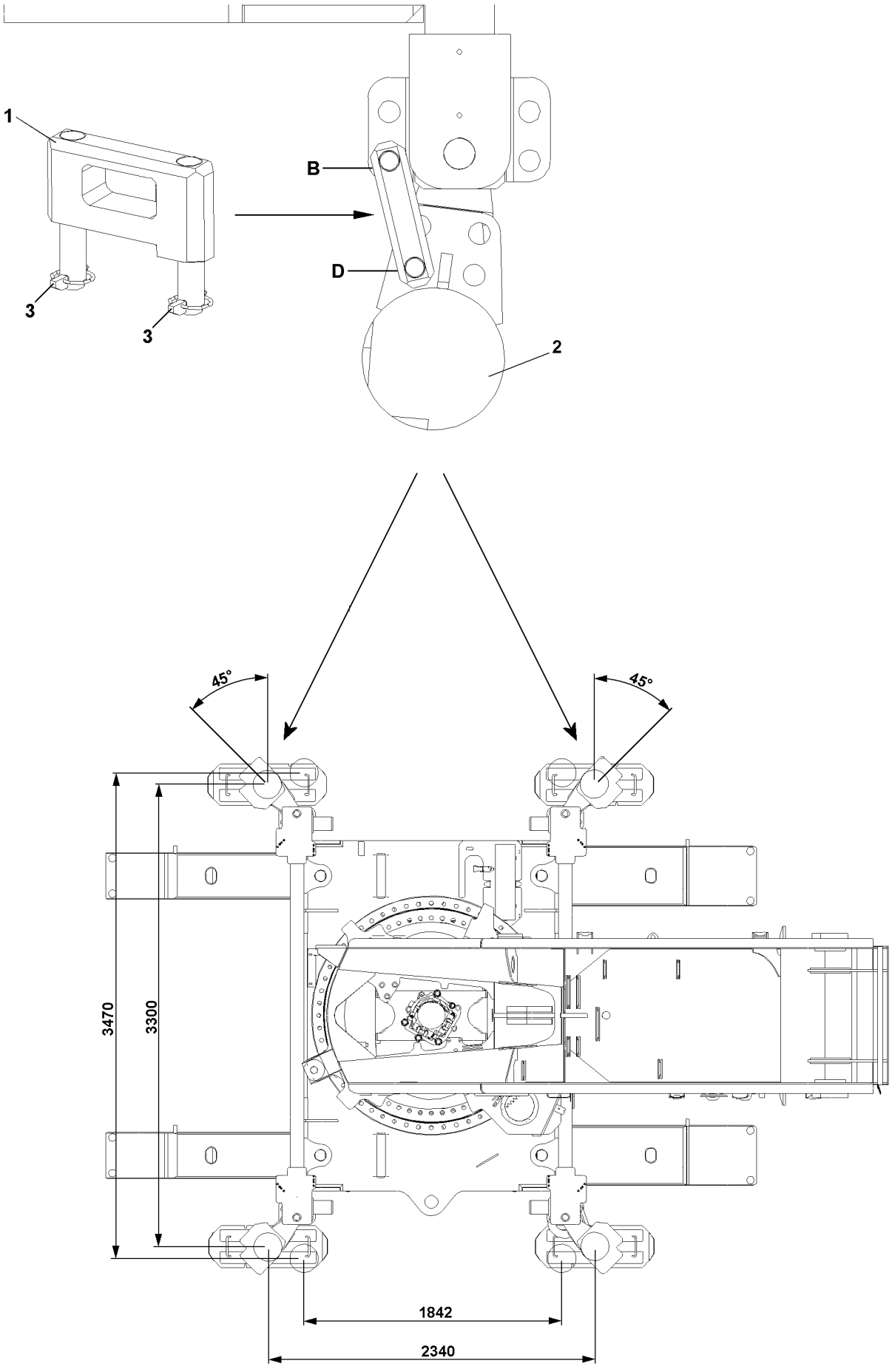

Fig.104731

LWE/LTR 1100-009/25105-02-02/en

copyright © Liebherr-Werk Ehingen GmbH 2023

DANGER
The crane can topple over!
If the crane is not properly and safely supported, the crane can topple over and fatally injure personnel.
► Support the crane properly and safely to prevent it from tipping over.

► Support the crane properly and safely to prevent it from tipping over.
► Retract the support cylinders and carefully lower the crane onto the substructure.
► Swing and pin all four support cylinders in assembly position, see section „Pinning the support cylinder in assembly position“.
► Support the crane in the support base assembly position 2340 mm x 3300 mm.
► Assemble the crane as described in the chapter.

LWE/LTR 1100-009/25105-02-02/en

copyright © Liebherr-Werk Ehingen GmbH 2023

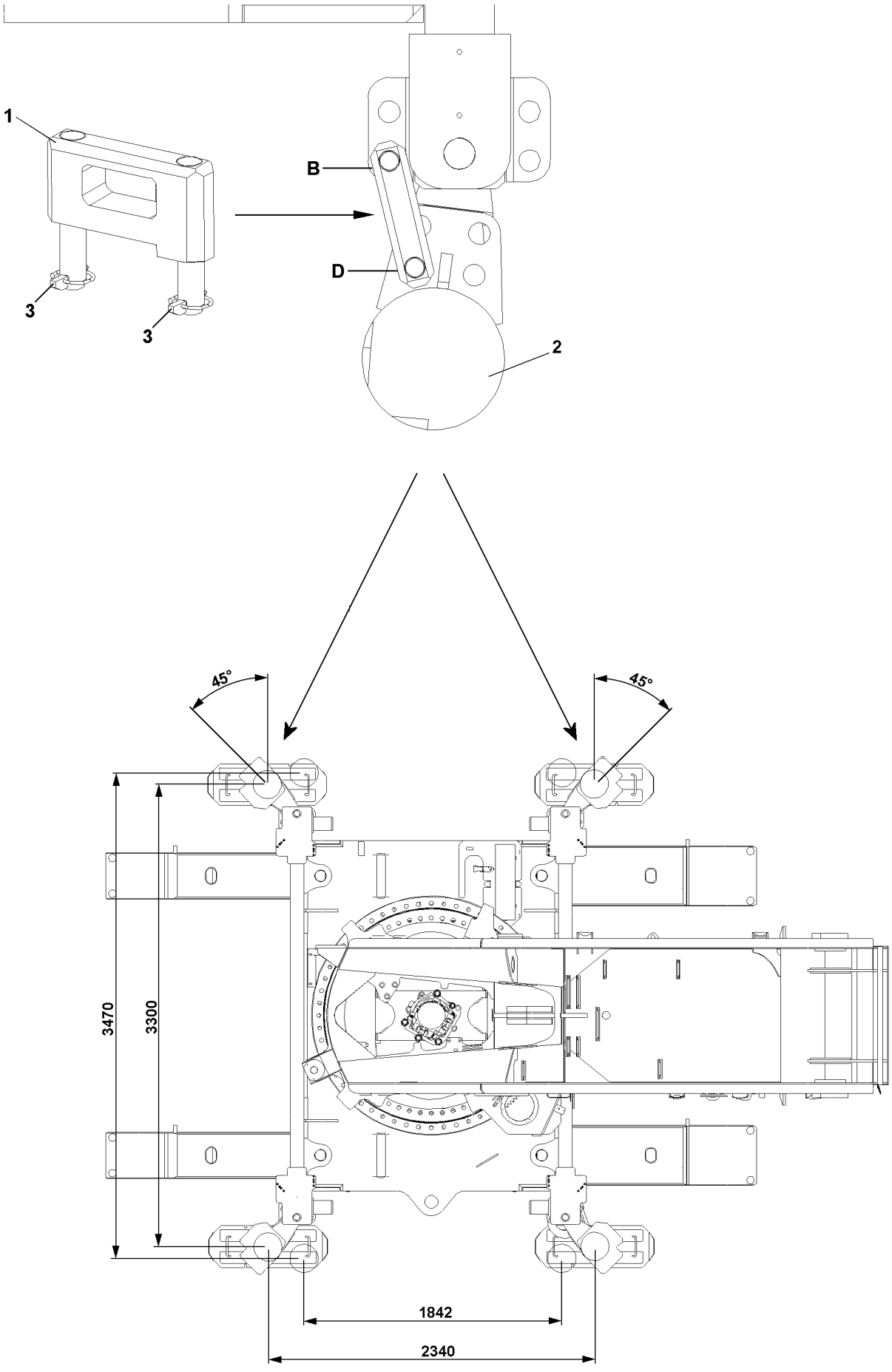

Fig.104731

LWE/LTR 1100-009/25105-02-02/en

copyright © Liebherr-Werk Ehingen GmbH 2023

3.2 Loading the crane onto an extra wide transport vehicle

Make sure that the following prerequisites are met:
- The location is level, smooth and provides sufficient load bearing capacity.
- Authorized and trained personnel are available to carry out the assembly and disassembly work.
- The counterweight on the turntable is disassembled.
- The central ballast is disassembled.
- Both crawler carriers are disassembled.
- Wooden planks for the beam substructure are placed on the extra wide transport vehicle.
- The crane superstructure is locked with the crane chassis.
- The crane is supported on a support base of 2340 mm x 3300 mm.

DANGER
The crane can topple over!
If the crane superstructure is turned with a support base of 1842 mm x 3470 mm , the crane can topple over and fatally injure personnel.
► Turning the crane superstructure with a support base of 1842 mm x 3470 mm is prohibited.
► The crane may only be supported at a support base of 1842 mm x 3470 mm for unloading / loading of extra wide transport vehicles.
► Assembly operation is only permitted at a support base of 2340 mm x 3300 mm.

DANGER
The crane can topple over!
If the crane is not properly and safely supported, the crane can topple over and fatally injure personnel.
► Support the crane properly and safely to prevent it from tipping over.

► Support the crane properly and safely to prevent it from tipping over.
► Retract the support cylinders and carefully lower the crane onto the substructure.
► Release and unpin the retaining bracket **1**.
► Swing the support cylinder **2** out.
► Pin the retaining bracket **1** in bore **B** and bore **D** and secure with linch pins **3**.

Pin the remaining support cylinders **2** accordingly.

DANGER
Danger of tipping when the auxiliary boom is in transport position on the side of the telescopic boom!
If the telescopic boom has the auxiliary boom installed on the side of the telescopic boom and is not luffed up to an angle range of 38° to 60° before supporting, then the crane can topple over and fatally injure personnel.
► Luff the telescopic boom up with the auxiliary boom installed on the side of the telescopic boom to an angle range of 38° to 60° before supporting the crane.

► Support all four support cylinders **2** on support base 1842 mm x 3470 mm.
► Carefully drive the extra wide transport vehicle under the supported crane.
► Retract the support cylinders and take the crane down on the extra wide transport vehicle.
► Disassemble the crane as described in the chapter.

LWE/LTR 1100-009/25105-02-02/en

copyright © Liebherr-Werk Ehingen GmbH 2023

Empty page!

LWE/LTR 1100-009/25105-02-02/en

copyright © Liebherr-Werk Ehingen GmbH 2023

3.03 Central ballast

1 Assembling and disassembling the central ballast 3

LWE/LTR 1100-009/25105-02-02/en

copyright © Liebherr-Werk Ehingen GmbH 2023

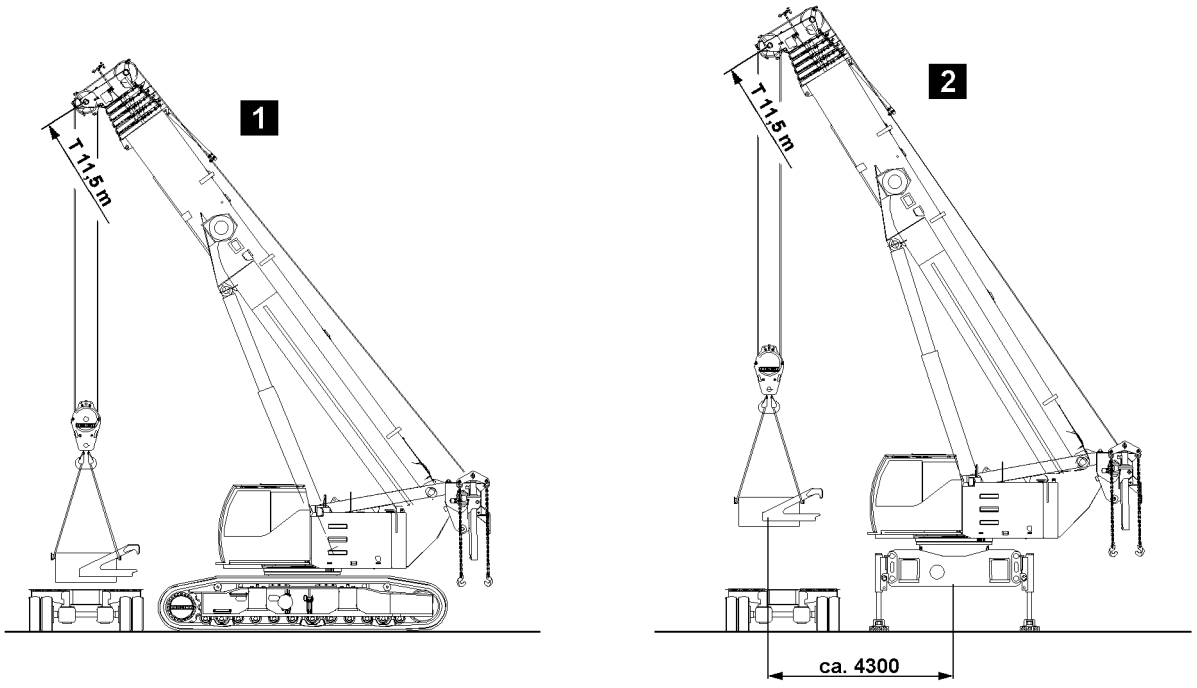

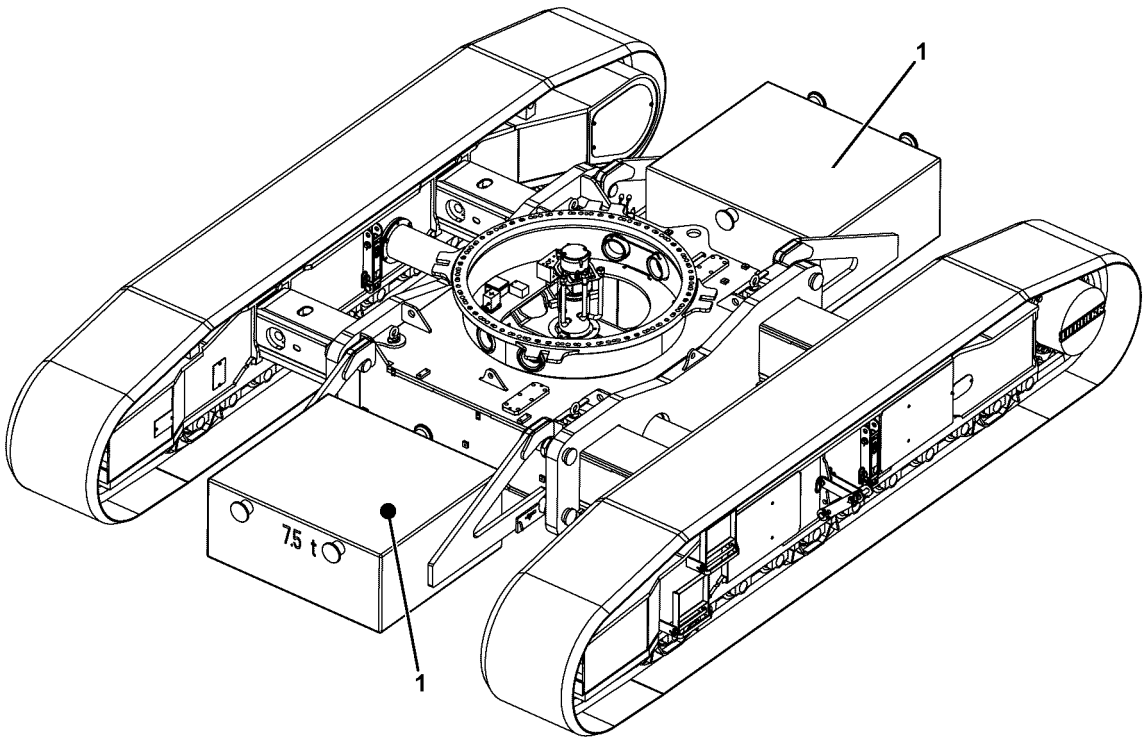

LWE/LTR 1100-009/25105-02-02/en

Fig.199148

copyright © Liebherr-Werk Ehingen GmbH 2023

1 Assembling and disassembling the central ballast

Make sure that the following prerequisites are met:
- The ground is able to carry the weight of the crane, the load and the load handling equipment.
- The crane is horizontally aligned.
- There are no persons or objects in the danger zone.
- The telescopic boom is telescoped in all the way.
- The counterweight on the turntable has been disassembled.
- The LICCON overload protection has been set according to the load chart.
- The crawler carriers are pushed out to a track width of 4.15 m (wide track), pinned and wedged, illustration 1.
- **or**, the crane is supported on the support cylinders* in accordance with the load chart, illustration 2

Note
► The maximum permitted distance between the center of the slewing ring and the central ballast on the transport vehicle is approx. 4300 mm.

1.1 Possible central ballast combinations

DANGER
The crane can topple over!
If a different central ballast is used than the one specified in the load chart, the crane may topple over and cause fatal injury!
► Use the central ballast as specified in the load chart!
► The central ballast must be fitted at the front **and** rear!

The following central ballast combinations are possible:

Central ballast	Composition	Ballast block
0	no central ballast	0.0

Central ballast	Composition	Ballast block
15 t	2x ballast blocks **1**	7.5 t

LWE/LTR 1100-009/25105-02-02/en

copyright © Liebherr-Werk Ehingen GmbH 2023

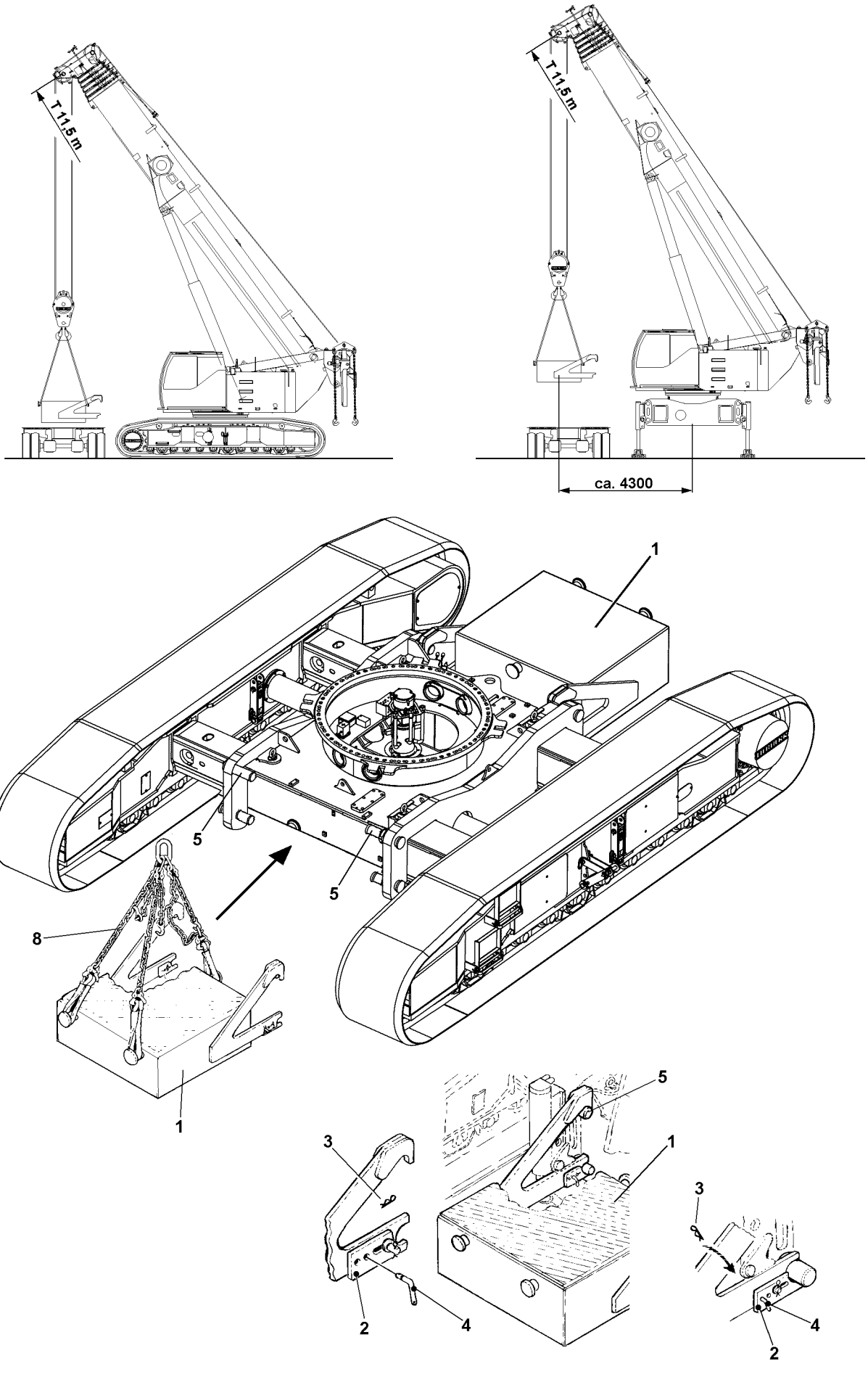

Fig.199149

LWE/LTR 1100-009/25105-02-02/en

copyright © Liebherr-Werk Ehingen GmbH 2023

1.2 Assembling the central ballast

- ► Park the transport vehicle as close as possible to the crane.
- ► Connect the ballast block **1**:
- ► Connect two strands of the supplied assembly equipment **8** to the front fastening points.

Note

- ► The front strands must be of the same length.

- ► Arrange the hook block carefully in the center of gravity of the ballast block **1**.
- ► Connect the third strand to the rear fastening point.
- ► Shorten the chain so that the ballast block **1** hangs horizontally when lifted.

Note

- ► Ensure that the ballast block **1** is hanging horizontally.
- ► Ensure that the retainer **2** has been reset.

- ► Lift the ballast block **1**.

CAUTION

Damage to the engine radiator!

The ballast blocks **1** could collide with the engine radiator during positioning!

- ► Upon assembly of the ballast blocks **1**, pay attention to the engine radiator!

- ► Connect the ballast block **1** in the upper pins **5**.
- ► Secure the ballast block **1** by sliding the lugs **2** to their end-positions on both sides.
- ► Insert the pins **4** on both sides and secure with cotter pins **3**.

The second ballast block **1** is assembled in an identical manner to the first ballast block **1**.

- ► Assemble the second ballast block **1** the same way as the first ballast block **1**.

LWE/LTR 1100-009/25105-02-02/en

copyright © Liebherr-Werk Ehingen GmbH 2023

1.3 Ballast monitoring

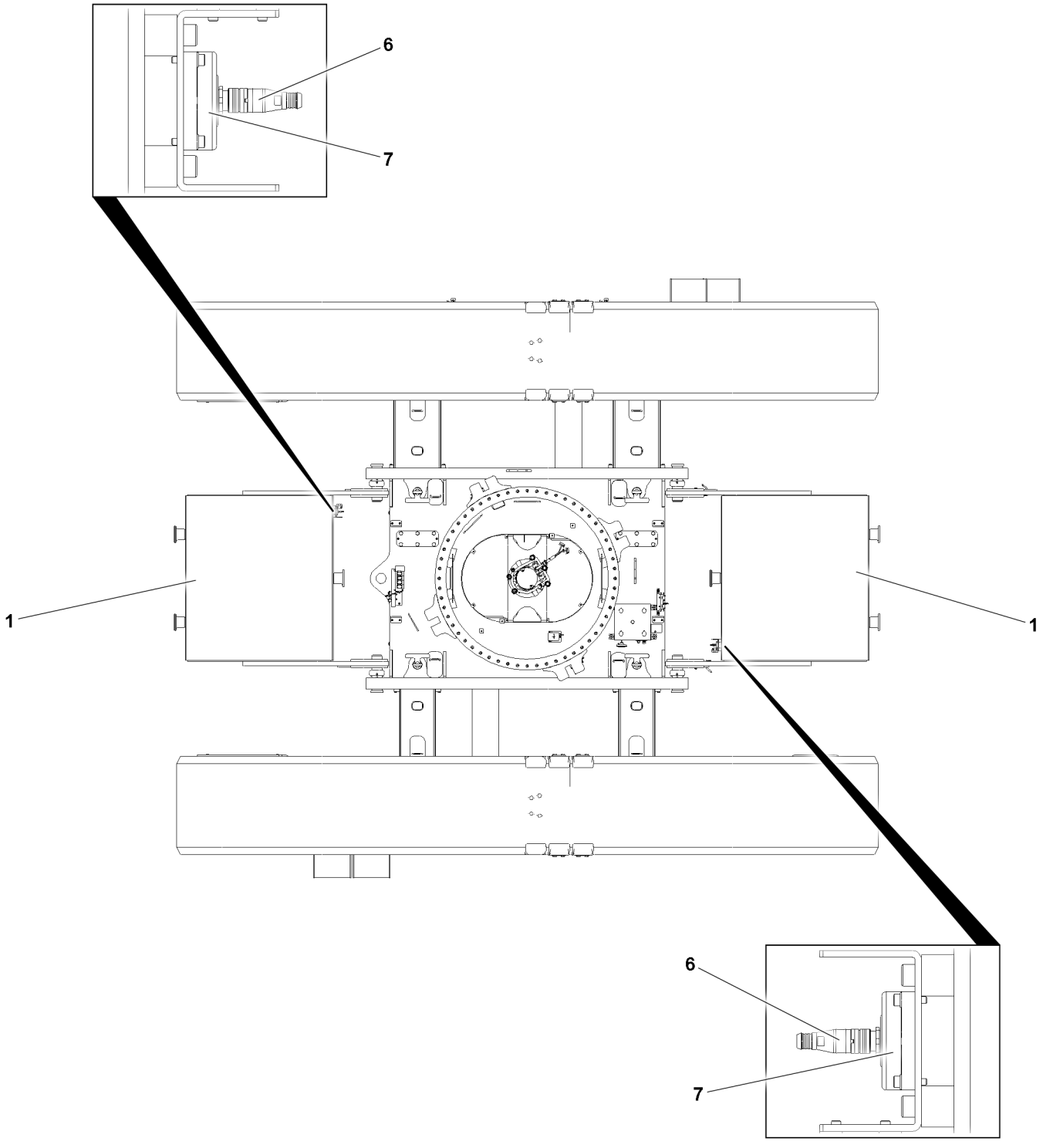

Fig.157821: Ballast monitoring

LWE/LTR 1100-009/25105-02-02/en

copyright © Liebherr-Werk Ehingen GmbH 2023

WARNING
No electrical connection established to the central ballast block **1**!
If central ballast blocks **1** are assembled on the crane and an electrical connection is not established, the central ballast blocks **1** will not be detected by the ballast monitoring*.
► When the respective central ballast **1** is assembled: Insert the plug **6** in the socket **7** on the respective central ballast block **1**.

► Insert the plug **6** in the socket **7** on the respective central ballast block **1**.
► Set the set up configuration for crane operation with central ballast on the LICCON overload protection.

Note
► For a detailed description of ballast monitoring*, see Chapter 4.07.

LWE/LTR 1100-009/25105-02-02/en

copyright © Liebherr-Werk Ehingen GmbH 2023

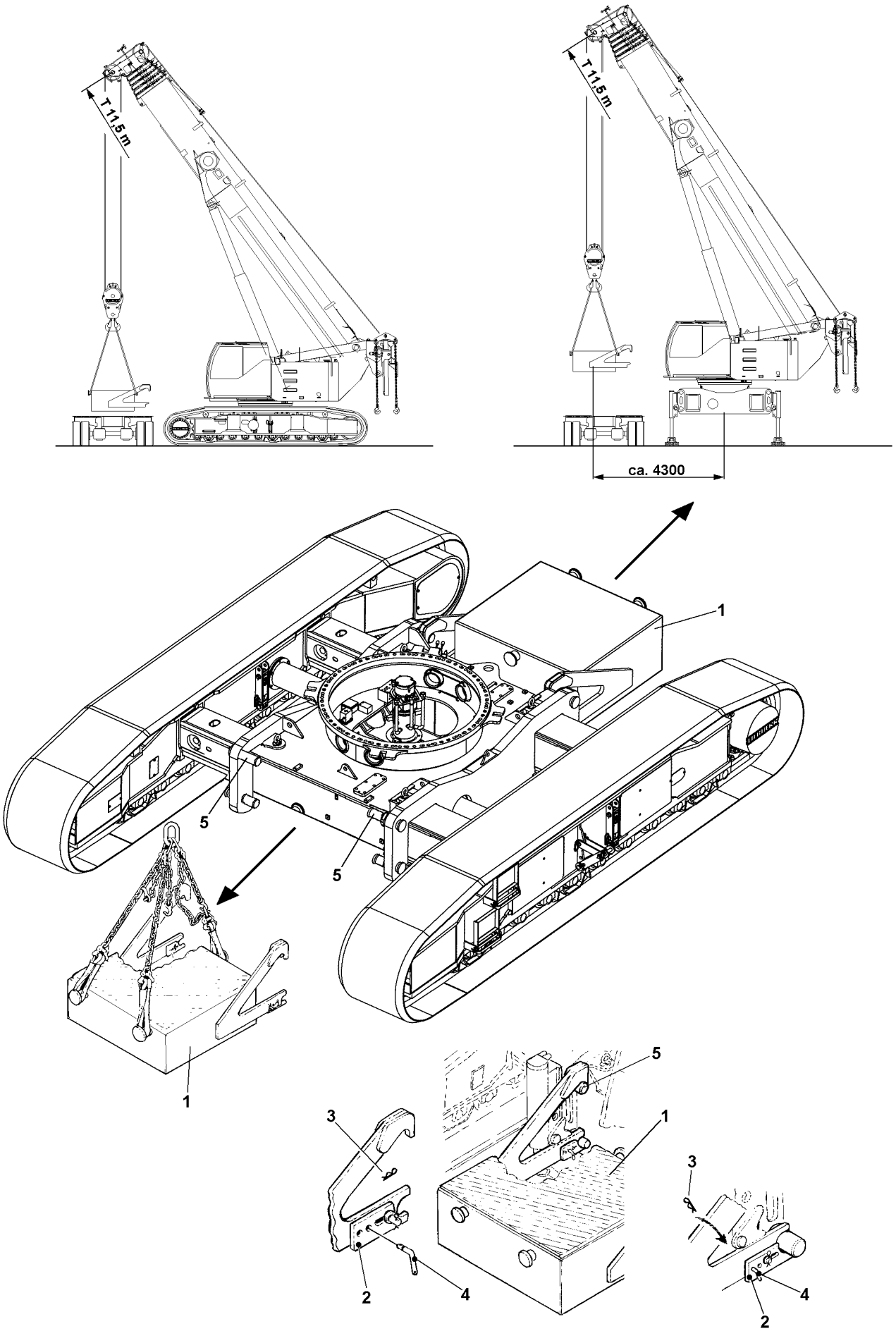

Fig.199150

LWE/LTR 1100-009/25105-02-02/en

copyright © Liebherr-Werk Ehingen GmbH 2023

1.4 Disassembling the central ballast

- ► Park the transport vehicle as close as possible to the crane.
- ► Connect the ballast block **1**:
- ► Connect two strands of the supplied assembly equipment **8** to the front fastening points.

Note

- ► The front strands must be of the same length.

- ► Arrange the hook block carefully in the center of gravity of the ballast block **1**.
- ► Connect the third strand to the rear fastening point.
- ► Shorten the chain so that the ballast block **1** hangs horizontally when lifted.
- ► Release the spring retainers **3** and unpin the pin **4** on both sides.
- ► Push the lashes **2** back on both sides and release the ballast block **1**.

CAUTION

Damage to the engine radiator!

Lifting the ballast blocks **1** out of their retainers could cause them to collide with the engine radiator!

- ► Upon disassembly of the ballast blocks **1**, pay attention to the engine radiator!

- ► Carefully lift the ballast block **1** out of the retainer and take it down on the transport vehicle.

The second ballast block **1** is disassembled in an identical manner to the first ballast block **1**.

- ► Disassemble the second ballast block **1** the same way as the first ballast block **1**.

LWE/LTR 1100-009/25105-02-02/en

copyright © Liebherr-Werk Ehingen GmbH 2023

Empty page!

LWE/LTR 1100-009/25105-02-02/en

copyright © Liebherr-Werk Ehingen GmbH 2023

3.80 Crane and crane component transport

1	Safety	3
2	Crane	4
3	Loading the crane with auxiliary cranes*	7
4	Driving the crane on / off the transport vehicle	9
5	Rigging	11
6	Securing the crane	12

LWE/LTR 1100-009/25105-02-02/en

copyright © Liebherr-Werk Ehingen GmbH 2023

LWE/LTR 1100-009/25105-02-02/en

Fig.195219

copyright © Liebherr-Werk Ehingen GmbH 2023

1 Safety

Observe and adhere to the transport safety instructions. See chapter 2.04.

1.1 Forms of transport

Observe and adhere to the specifications for the respective form of transport:
- Road transport
- Rail transport
- Ship transport
- Air transport

1.2 Transport company

The transport company is responsible for fulfilling the following prerequisites:
- Loading on the transport vehicle must be positioned taking into consideration the applicable permissible axle loads in the respective countries.
- Suitable rigging devices are provided.
- The transport location is even, level in horizontal direction and of sufficient load bearing capacity.
- A guide is present.

1.3 Rigging plans

Observe and adhere to the rigging plans, see rigging plans.

WARNING
Rigging plans **not** observed!
The mobile crane can roll off or topple over.
Death, severe bodily injuries, property damage.
- ► Fasten the tension belts or tension chains on rigging points according to the rigging plan.
- ► Adhere to the angles, radii and tension surfaces according to the rigging plan.

1.4 Rigging points

WARNING
Impermissible use of the rigging points and rigging eyehooks!
The rigging points and rigging eyehooks can fail. The crane or components can fall from the transport vehicle.
Death, severe bodily injuries, property damage.
- ► Use the eyehooks only for rigging the crane or components.
- ► Do **not** use the eyehooks to lift the crane or components.
- ► Do **not** use the eyehooks to lift loads.
- ► Observe and adhere to the maximum permissible rigging forces.
- ► Make sure that rigging eyehooks of the transport vehicle correspond at least to the load carrying capacity of the rigging device.

1.5 Transport vehicle

Observe and adhere to the following notes for safe transport:
- Use a suitable transport vehicle.
- Establish the greatest possible frictional coefficient to the transport surface: Clean the wheels before transporting.
- The loading surface must be free of snow, ice, grease and be well-swept.

LWE/LTR 1100-009/25105-02-02/en

copyright © Liebherr-Werk Ehingen GmbH 2023

1.6 Rigging device

Observe and adhere to the following notes for safe transport:
- Use a rigging device with a sufficient load capacity.
- Use the rigging belts and rigging chains in application of the respectively valid regulations for loading and load retention.

1.7 Substructure

To avoid accidents, observe the following notes regarding anti-slip mats:
- Comply with the minimum friction value, minimum load bearing capacity and minimum thickness of the anti-slip mats.
- Replace the anti-slip mats when one of the following criteria is fulfilled:
  - Permanent deformation or pressure marks
  - Cracks
  - Abrasion on the surface
  - Broken out material area
  - Swollen areas
  - Damage due to contact with aggressive materials
  - Brittleness
  - Function-impairing contaminants

To avoid accidents, observe the following notes regarding wood:
- Wood with a minimum quality of „spruce“ is to be used.

2 Crane

2.1 Rigging plans

Position in the rigging plan	Rigging point	Permissible rigging force
X	With RUD eyehook	13400 daN
1a	No RUD eyehook (rigging area marked)	10000 daN
1b	No RUD eyehook (unlimited rigging area)	13400 daN
	Area where rigging is permissible	

Rigging points, properties

Component	Weight
Crane	56.6 t

Crane weight

LWE/LTR 1100-009/25105-02-02/en

copyright © Liebherr-Werk Ehingen GmbH 2023

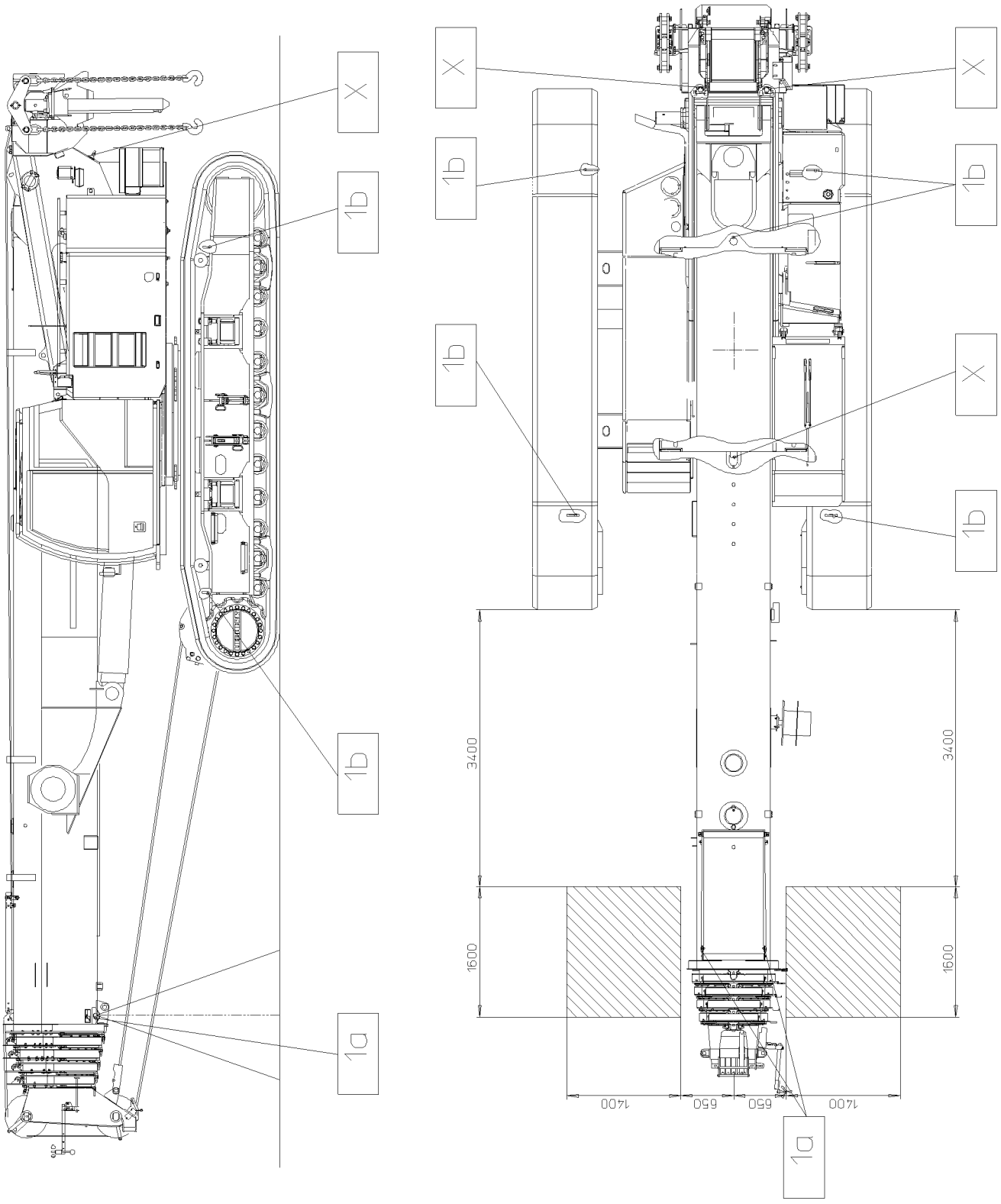

Fig.149156: Crane rigging plan

LWE/LTR 1100-009/25105-02-02/en

copyright © Liebherr-Werk Ehingen GmbH 2023

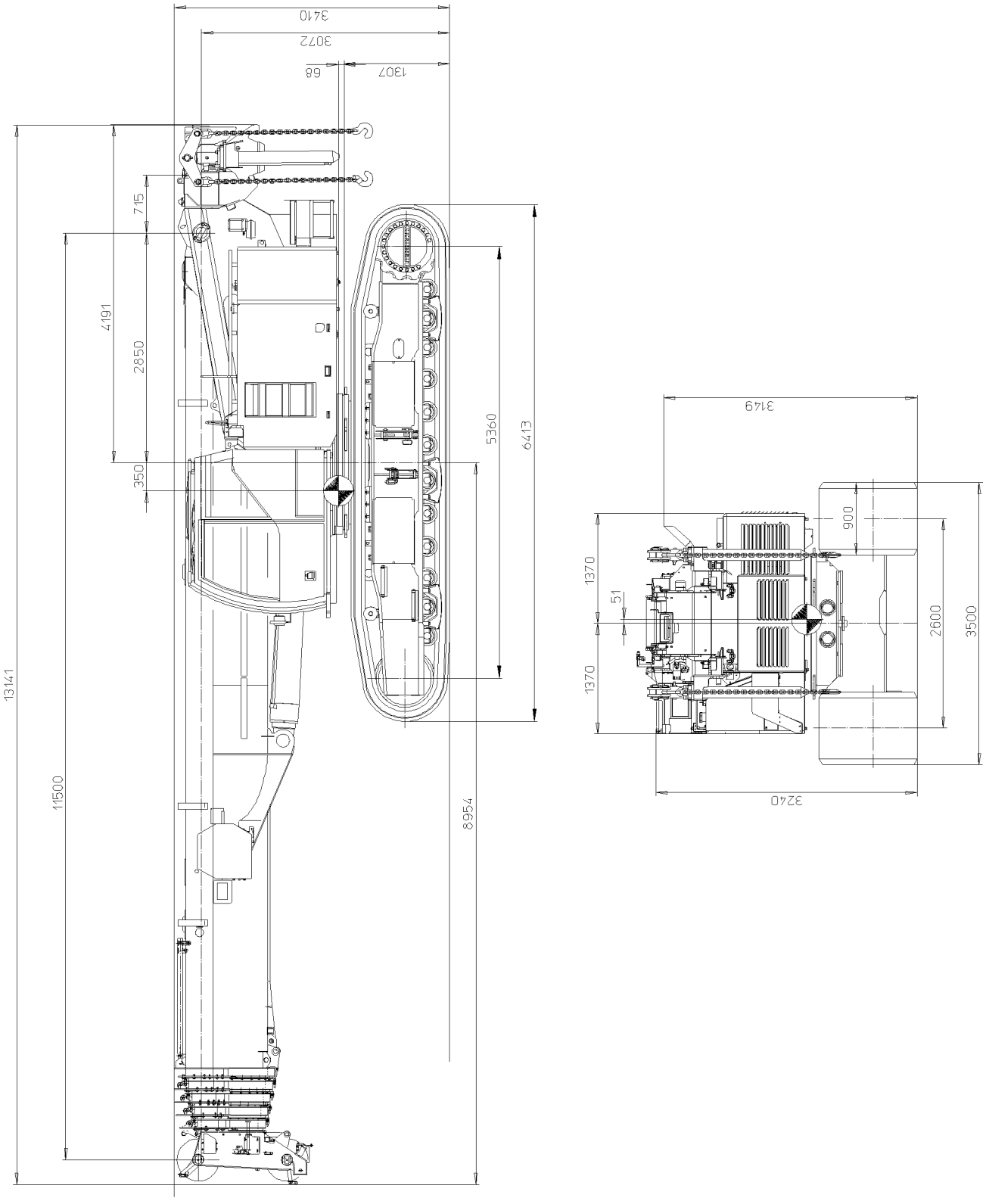

Fig.149157: Crane rigging plan

LWE/LTR 1100-009/25105-02-02/en

copyright © Liebherr-Werk Ehingen GmbH 2023

3 Loading the crane with auxiliary cranes*

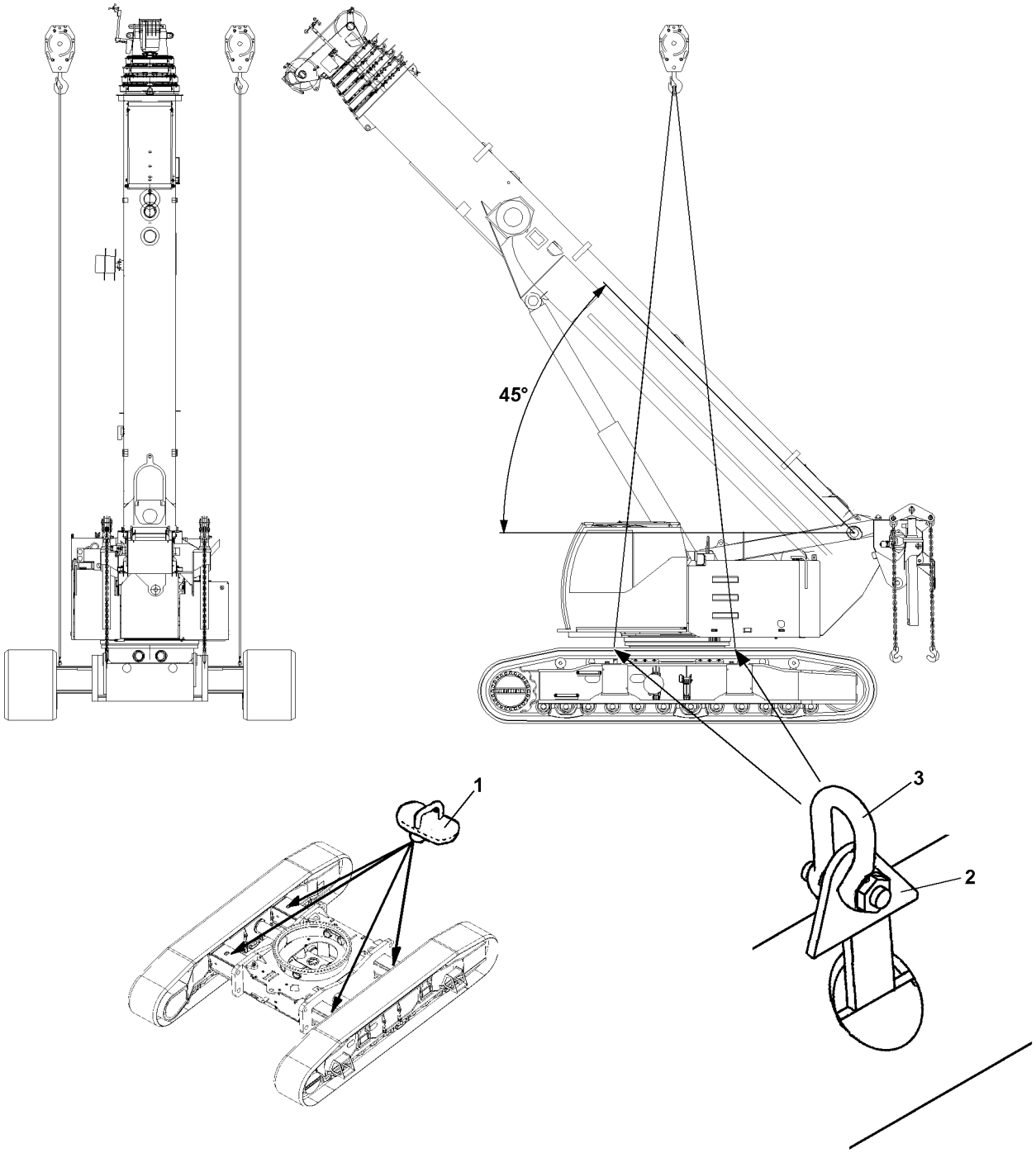

Fig.149158: Loading the crane with auxiliary cranes

LWE/LTR 1100-009/25105-02-02/en

copyright © Liebherr-Werk Ehingen GmbH 2023

3.1 Weight of components

Component	Weight
Crane superstructure	12 t
Telescopic boom with folding jib	14 t
Crane chassis	32 t
Total weight	**58 t**

3.2 Attaching the crane

Make sure that the following prerequisites are met:
- The crane is horizontally aligned and is positioned on level ground.
- The counterweight on the turntable has been disassembled.
- The central ballast on the chassis has been disassembled.
- The telescopic boom is telescoped in all the way.
- The crane superstructure is mechanically locked with the chassis.
- The crawlers are extended to wide track, pinned and wedged.
- Two auxiliary cranes are available.

DANGER
The crane can tip over!
If the prerequisites are not observed, or the telescopic boom is not luffed up to 45° before loading, the center of gravity of the crane changes, which can cause the crane to tip over.
► Observe the prerequisites and luff the telescopic boom up to 45° before loading!

► Remove the cover **1** on the 4 beams.
► Insert the suspension plates **2** properly into the 4 beams and turn 90°.
► Fasten the suspension plates **2** with shackles **3** to the left fastening ropes of the first auxiliary crane.
► Fasten the suspension plates **2** with shackles **3** to the right fastening ropes of the second auxiliary crane.
► Lightly tension the fastening ropes of the auxiliary cranes.

DANGER
The crane can fall down!
When tensioning the fastening ropes of the auxiliary cranes, the suspension plates **2** may not twist.
► Check the correct position of the suspension plates **2** after tensioning the fastening ropes of the auxiliary cranes!

► Luff the telescopic boom up to 45°.
► Load the crane with the auxiliary cranes.

LWE/LTR 1100-009/25105-02-02/en

copyright © Liebherr-Werk Ehingen GmbH 2023

4 Driving the crane on / off the transport vehicle

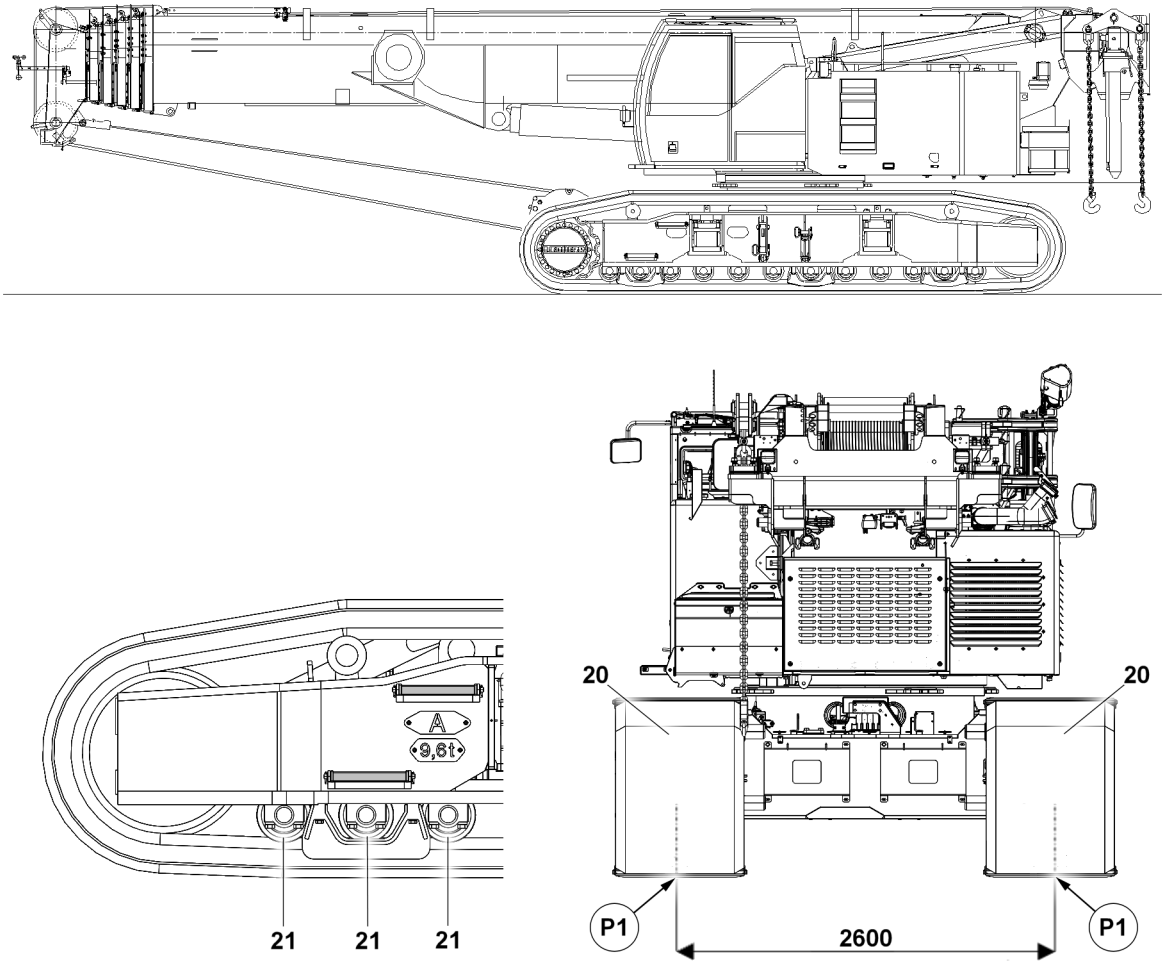

Fig.167100: Driving the crane on / off the transport vehicle

DANGER

The crane can topple over!

If the following conditions for driving the crawler crane on the transport vehicle or before driving off are not met, then the crane can topple over and severely or fatally injure personnel!

- ► The turntable must be aligned parallel with the crawler carriers and must be mechanically locked with the crane chassis!
- ► The side slope may be no more than max. 1°!
- ► The incline onto the transport vehicle may not exceed 25°!
- ► Drive slowly and avoid jerky travel movements!
- ► All acceleration and deceleration maneuvers must be initiated with extreme caution and at the lowest possible speed!
- ► The transfer from the horizontal onto an uphill slope and from the uphill slope onto the horizontal must be made evenly, i.e. there may be no edges that can cause the crane to topple over. The incline change must be made continuously!

LWE/LTR 1100-009/25105-02-02/en

copyright © Liebherr-Werk Ehingen GmbH 2023

NOTICE
Damage to the crawler travel gear!
If the following notes are not observed, then the outrigger pads on the crawler carriers **20** can tilt and the crawler carriers **20** can be damaged!
- ► Use a sufficiently wide transport vehicle!
- ► Use suitable and safe ramps.
- ► For a „narrow track width“ observe the dimension between the points **P1**, see drawing!
- ► Make sure that both crawler carriers **20** move on or off the transport vehicle with the track rollers **21** centered in points **P1**!
- ► During transport, the crawler travel gear must be placed centered in points **P1** with the track rollers **21**!

NOTICE
Damage to the crane or the transport vehicle!
- ► Have a guide check that the crane does not collide with the transport vehicle or hit it!

Make sure that the following prerequisites are met:
- – The crawler carriers are retracted to the small track width, pinned and secured.
- – The turntable is aligned parallel to the crawler carriers and is mechanically locked with the crane chassis.
- – Winch 2***** or the replacement weight for winch 2***** is installed on the turntable, see chart „Permissible angle window for the telescopic boom“.
- – All additional counterweight plates on the turntable are disassembled.
- – The telescopic boom is telescoped in all the way and is erected in the travel direction to the permissible telescopic boom angle of 0 ° to 45 °.
- – A guide is available.

Permissible angle window for the telescopic boom			
Counterweight	**Central ballast**	**Telescopic boom**	**Angle**
Winch 2***** or replacement weight	0.0 t	T-11.5 (0/0/0/0)	0° to 45°

- ► Drive the crane carefully onto the transport vehicle.
- ► Turn the engine off and pull out the ignition key.
- ► Lock the crane cab and all cover doors and hand the ignition key to an authorized person.
- ► Rig and secure the crane in the provided eyehooks **1** and rigging points **2**, see section „Rigging plan“.
- ► Support and secure the telescopic boom additionally with wood.

LWE/LTR 1100-009/25105-02-02/en

copyright © Liebherr-Werk Ehingen GmbH 2023

5 Rigging

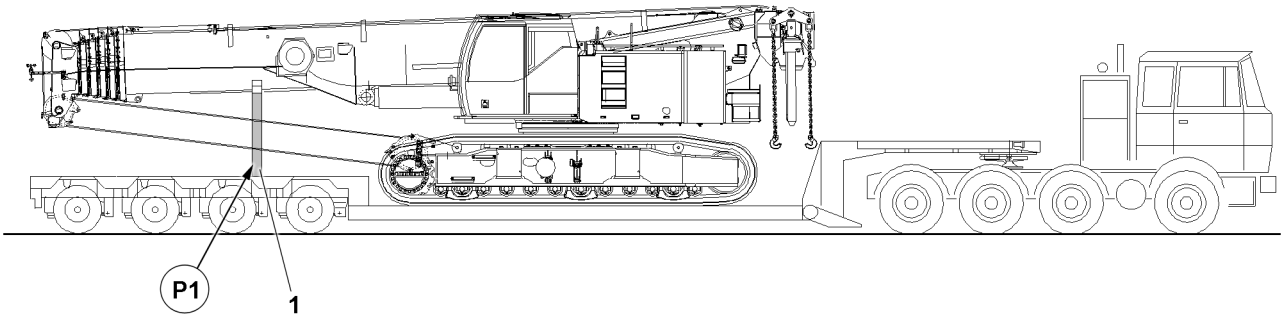

Fig.149159: Telescopic boom, transport substructure

P1 Position for the telescopic boom substructure

1 Substructure

WARNING
Telescopic boom **not** supported!
The crane's stability is endangered.
► The telescopic boom is properly supported.
► Support the crane's placement surface with anti-slip mats.

WARNING
Insufficient retainer!
The crane can fall off the transport vehicle in the case of sharp brake maneuvers.
Death, severe bodily injuries, property damage.
► Sufficiently rig and secure the crane.

Make sure that the following prerequisites are met:
– The counterweight is disassembled.
– When the crawlers are disassembled:
  Support the beams on both ends with wooden planks.
– The crane superstructure is locked with the crane chassis.
– The telescopic boom is luffed down and taken down in point **P1** onto the substructure.
– The hook block is fastened to the crawler center section and the hoist rope is slightly tensioned.
– The ballast assembly chains are secured to avoid uncontrolled swinging.

WARNING
Retainer insufficient!
The crane can fall off the transport vehicle in the case of sharp brake maneuvers.
Death, severe bodily injuries, property damage.
► Properly rig and secure the crane.

WARNING
Impermissible rigging!
The rigging points and rigging device can fail. The crane or loads can fall down.
Death, severe bodily injuries, property damage.
► Fasten tension belts or tension chains only in the permissible rigging points and rigging eyehooks, see rigging plans.
► When rigging, observe the angles, radii and tension surfaces, see rigging plans.

The rigging points are marked with a sign, see the signage plan and the Crane operating instructions, chapter 2.05.

► Secure the crane and crane components with tension belts or tension chains on the rigging points.

LWE/LTR 1100-009/25105-02-02/en

copyright © Liebherr-Werk Ehingen GmbH 2023

- ► Secure the telescopic boom with tension belts or tension chains by observing the marked tension areas on the rigging points.
- ► Fasten the tension belts or tension chains to the transport vehicle.

6 Securing the crane

The crane must be secured against unauthorized use.

Make sure that the following prerequisites are met:
- – The crane is properly rigged on the transport vehicle.

- ► Close all cover doors.
- ► Turn the engine off and pull out the ignition key.

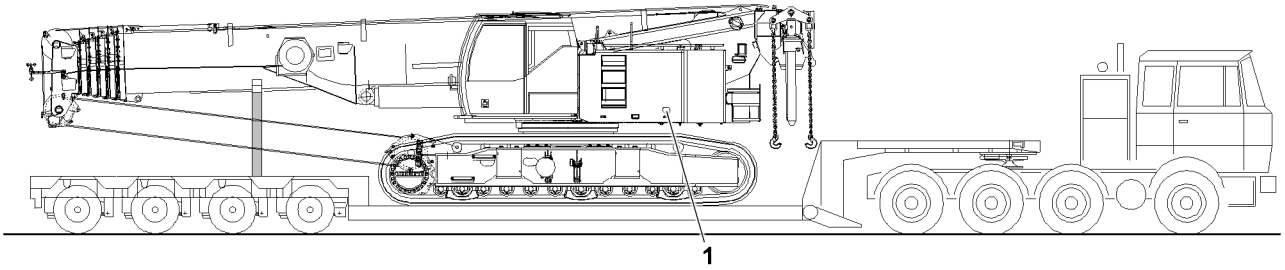

Fig.149160: Battery master switch

1 Battery master switch

When a battery master switch is present:
- ► Turn the battery master switch **1** off and remove the switch cam. Take the switch cam down in the crane cab.
- ► Lock the crane cab.

LWE/LTR 1100-009/25105-02-02/en

copyright © Liebherr-Werk Ehingen GmbH 2023

4 Operation of crane superstructure

LWE/LTR 1100-009/25105-02-02/en

copyright © Liebherr-Werk Ehingen GmbH 2023

LWE/LTR 1100-009/25105-02-02/en

copyright © Liebherr-Werk Ehingen GmbH 2023

4.01 Operating and monitoring instruments on the crane superstructure

1	Crane cab inside and outside	3
2	Control platform	5
3	Pedal carrier	7
4	LMB emergency operation	9
5	Control elements	9
6	Roof instrument panel	10
7	Side panel	11
8	Control panels	13
9	Climate control	39
10	Operating and control unit (BKE)	44

LWE/LTR 1100-009/25105-02-02/en

copyright © Liebherr-Werk Ehingen GmbH 2023

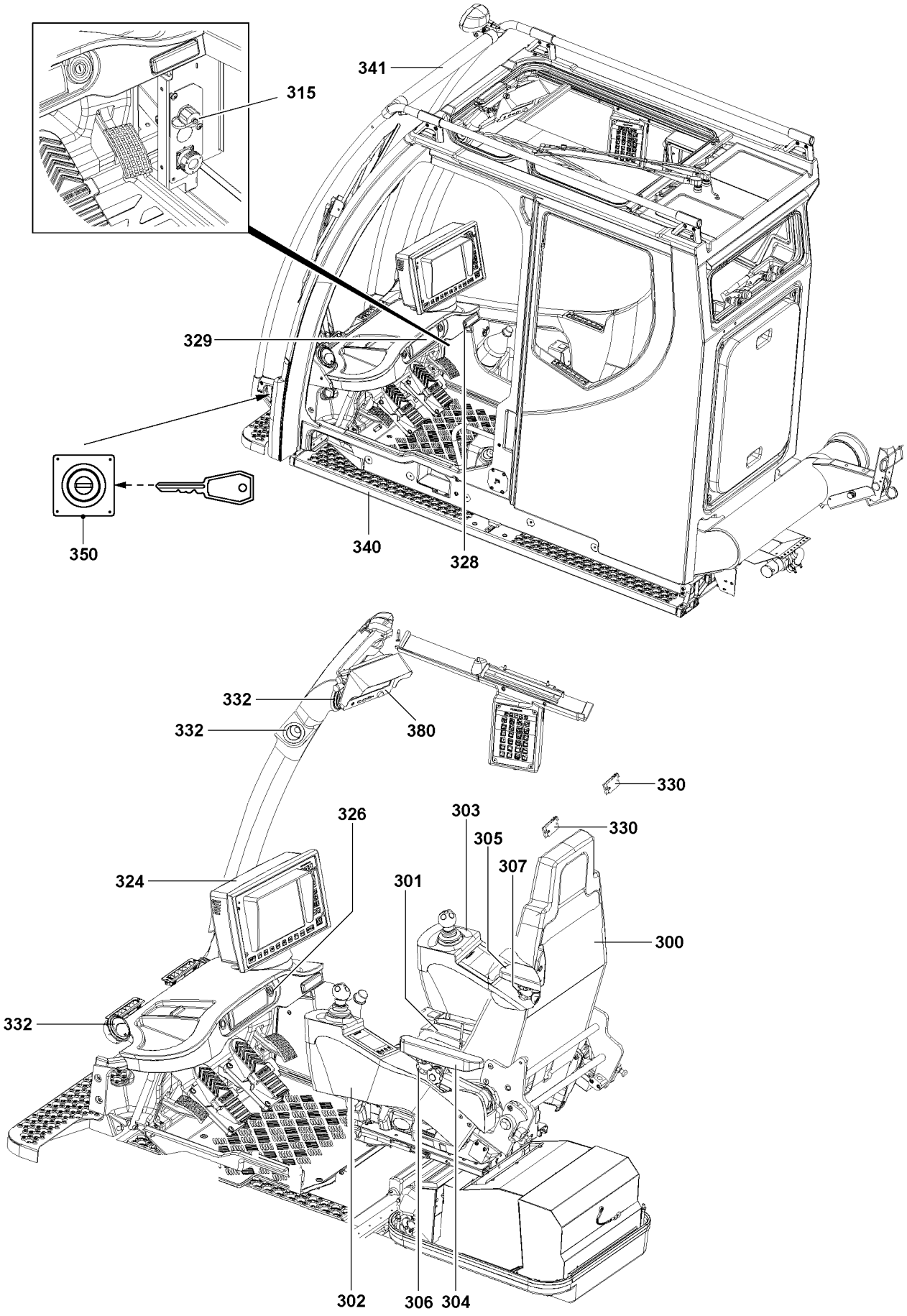

Fig.123704

LWE/LTR 1100-009/25105-02-02/en

copyright © Liebherr-Werk Ehingen GmbH 2023

1 Crane cab inside and outside

324 LICCON monitor
- Display of crane data required for **Crane operation**, see Crane operating instructions, chapter 4.02

380 TFT monitor
- Camera monitoring

326 Ignition switch

Position:
- 0 = Ignition key can be pulled out
- 1 = Ignition on
- 2 = Start the engine

328 Drink holder

329 Radio

330 LED interior lights
- Located above the crane operator's seat
- Dimmable

332 Outlet nozzles
- For heater / ventilation / Climate control system*

333 Reservoir
- Window washer fluid

340 Step
- **Note:**
  Refer to section „Operating elements on the operating and control unit (BKE)".

341 Warning light rod
- LICCON utilization display:
  - Green:
    „**Safe range**"
  - Yellow:
    Above a utilization of 90 %, the **„Safe range"** is exceeded.
  - Red:
    Above a utilization of 100 %, the **„DANGER ZONE"** is reached!
    Note:
    Once 100 % utilization is reached, the red warning light lights up and an **„LMB-Stop"** occurs.

350 EMERGENCY STOP switch
- Crane operator's cab (external)

LWE/LTR 1100-009/25105-02-02/en

copyright © Liebherr-Werk Ehingen GmbH 2023

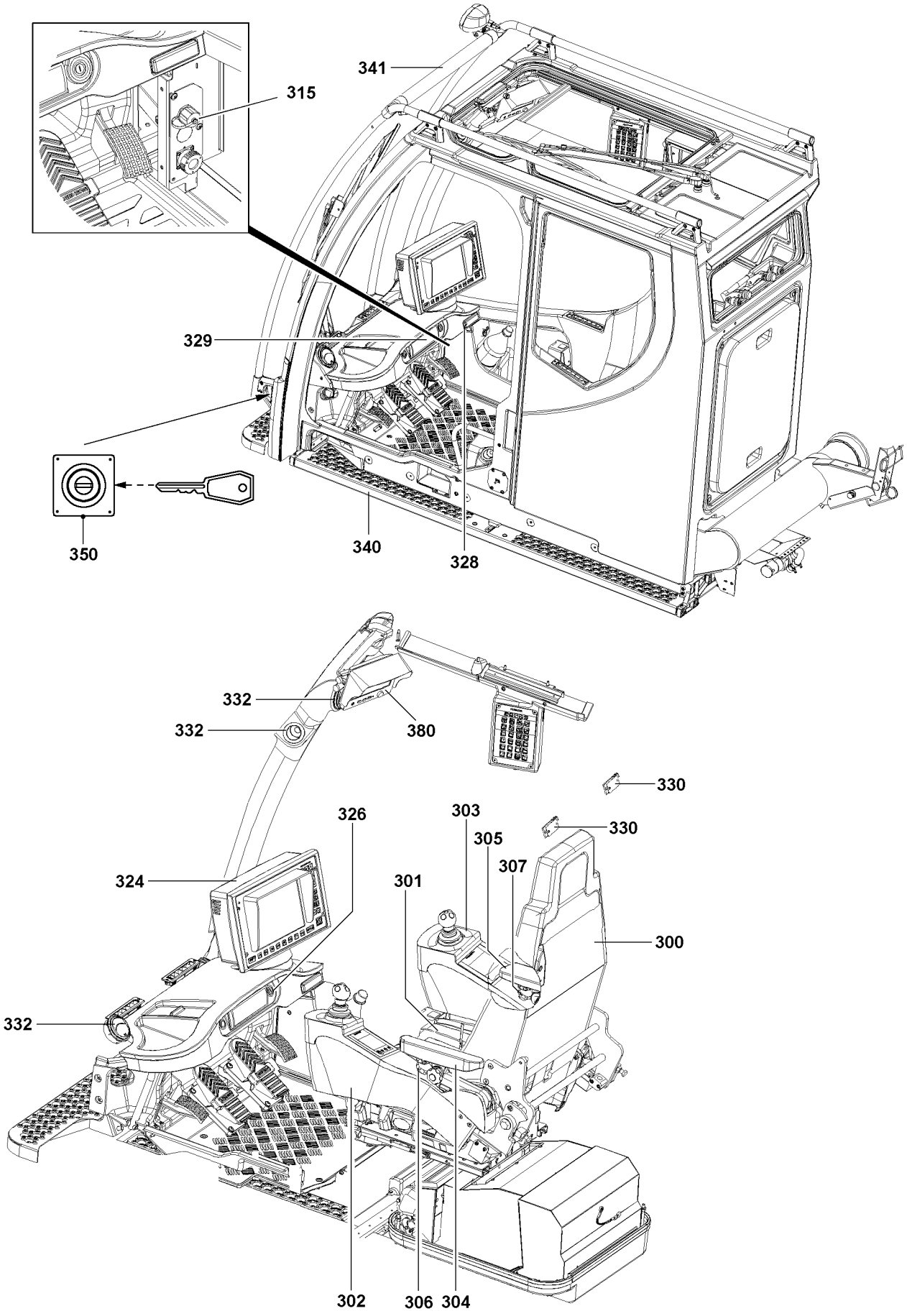

Fig.123704

LWE/LTR 1100-009/25105-02-02/en

copyright © Liebherr-Werk Ehingen GmbH 2023

2 Control platform

300 Crane operator's seat

301 Seat contact button

302 Left console
- Master switch 2 (MS2)
- Touch display

303 Right console
- Master switch 1 (MS1)
- Touch display

304 Left armrest

305 Right armrest

306 Left notch lever

307 Right notch lever

Note

► For a detailed description of the seat adjustment controls, see the Crane operating instructions, chapter 4.03.

LWE/LTR 1100-009/25105-02-02/en

copyright © Liebherr-Werk Ehingen GmbH 2023

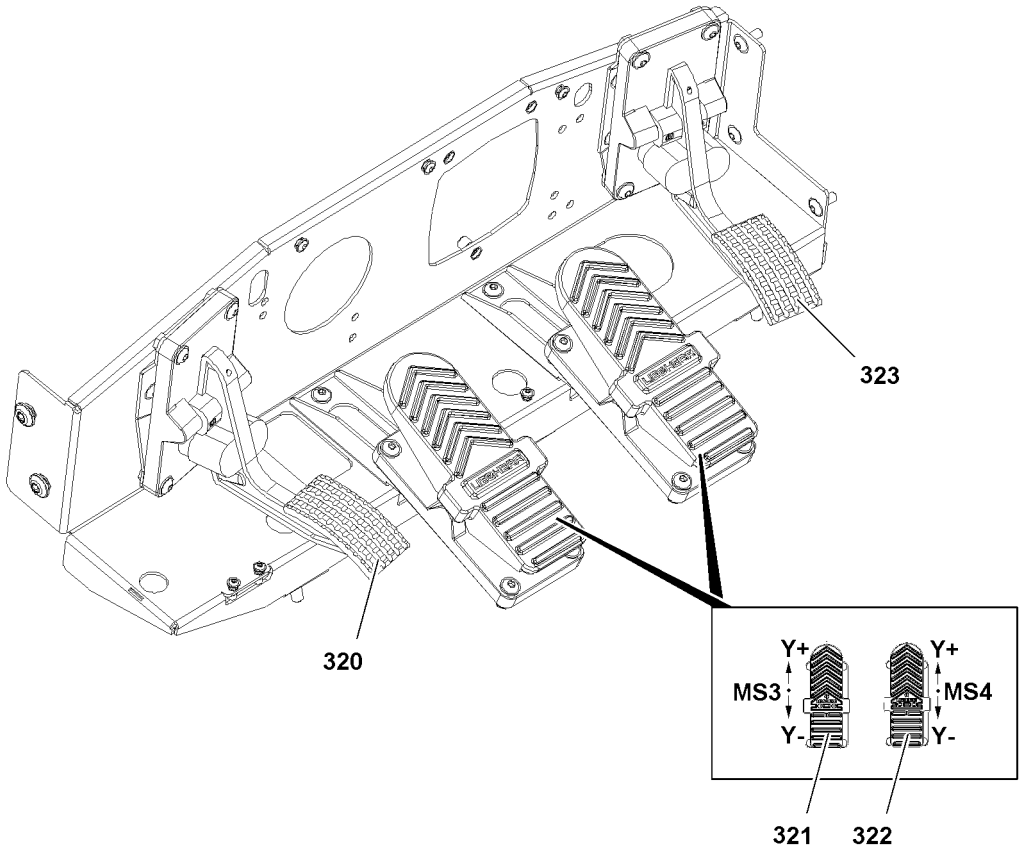

LWE/LTR 1100-009/25105-02-02/en

Fig.118022

copyright © Liebherr-Werk Ehingen GmbH 2023

3 Pedal carrier

320 Pedal
- Slewing gear brake

321 Left foot rocker (MS 3)

Drive the left crawler:
Move the foot rocker **321** in direction Y+ (forward): The left crawler drives forward.
Move the foot rocker **321** in direction Y- (backward): The left crawler drives backward.

Telescoping*:
Move the foot rocker **321** in direction Y+ (forward): The telescopic boom is telescoped out.
Move the foot rocker **321** in direction Y- (backward): The telescopic boom is telescoped in.

322 Right foot rocker (MS 4)

Drive the right crawler:
Move the foot rocker **322** in direction Y+ (forward): The right crawler drives forward.
Move the foot rocker **322** in direction Y- (backward): The right crawler drives backward.

323 Pedal
- Engine regulation

LWE/LTR 1100-009/25105-02-02/en

copyright © Liebherr-Werk Ehingen GmbH 2023

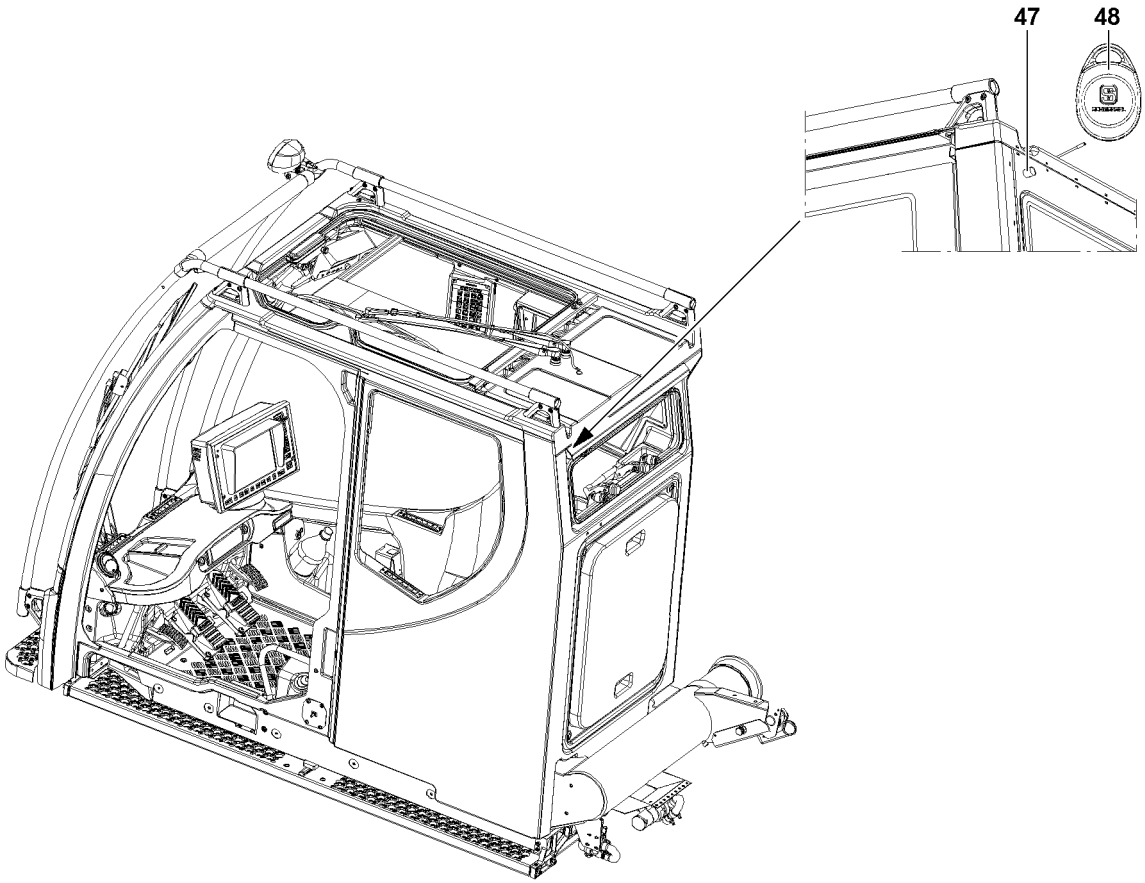

LWE/LTR 1100-009/25105-02-02/en

Fig.117628

copyright © Liebherr-Werk Ehingen GmbH 2023

4 LMB emergency operation

WARNING
Increased danger of accident during emergency operation of the LICCON overload protection!
In emergency operation, the crane movements are no longer monitored by the LICCON overload protection!

- ► If emergency operation of the LICCON overload protection is required, observe Crane operating instructions, chapter 7.15!
- ► The emergency operation may only be activated by persons who are aware of the consequences of their actions!
- ► A shut-off by the LICCON overload protection may not be circumvented by the emergency operation!
- ► If normal „crane operation“ is possible, then the emergency operation may not be activated!
- ► All crane movements must be carried out with extreme caution and anticipatorily!

4.1 LMB emergency operation for crane control „EN 13000:2010 active“

Applies only apply for cranes with crane control „EN 13000:2010 active“.

The emergency operation for the LICCON overload protection is activated by the sensor **47** via the transponder **48**.

47 Sensor
48 Transponder

5 Control elements

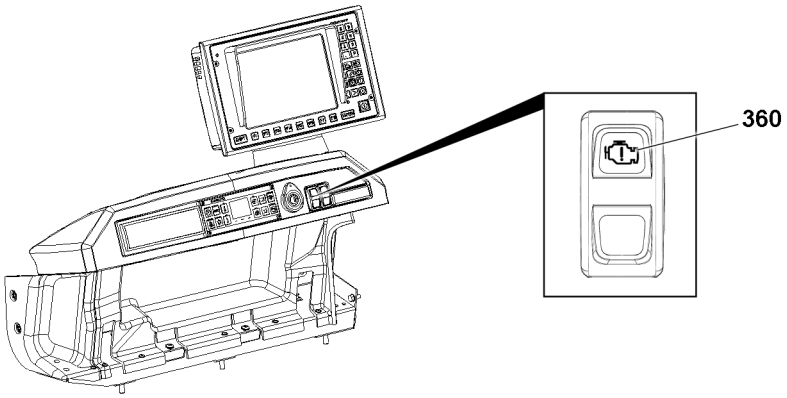

Fig.152590: Engine stop request

360 Engine stop request

Position	Indicator light	LED condition	Description
360	Engine stop request	Red blinking	Remedy the error

LWE/LTR 1100-009/25105-02-02/en

copyright © Liebherr-Werk Ehingen GmbH 2023

6 Roof instrument panel

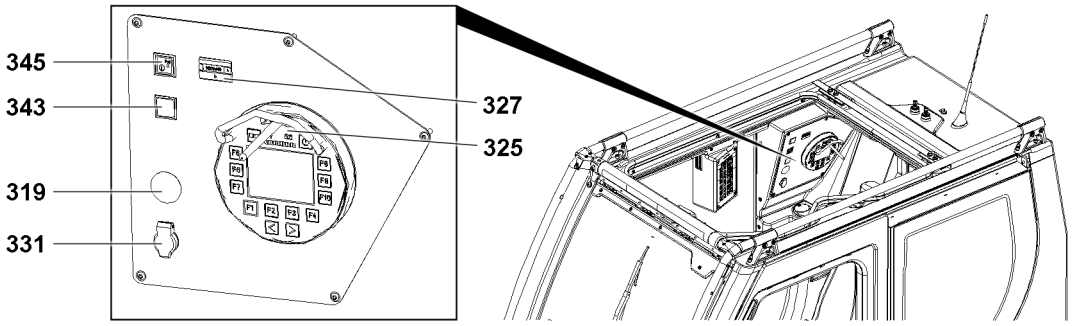

Fig.152591: Roof instrument panel

319 Integrated socket 12 V

331 Integrated socket 24 V

327 Travel gear operating hour meter*****

325 Charging cradle
BTT
Note:
For a detailed description of the „BTT“, see Crane operating instructions, chapter 5.31.

345 Turn the remote diagnostics module (GSM module)***** on

6.1 Control elements

Position	Control element	Description
327	Operating hour meter*****	„Travel gear“ operating hours display

6.2 Operating elements

Position	Key	Function	LED	Description
343	Changeover Camera	–	Lights up	Change over by pressing the button

LWE/LTR 1100-009/25105-02-02/en

copyright © Liebherr-Werk Ehingen GmbH 2023

7 Side panel

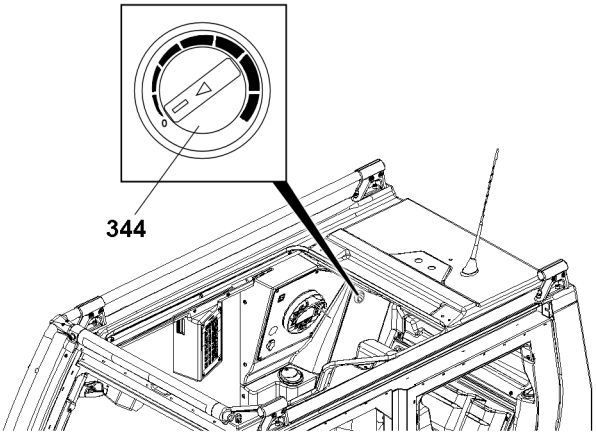

Fig.152429: Side panel

7.1 Air heater*

For description of the air heater*, see the documentation from the manufacturer.

WARNING
Danger of explosion!
Death. Severe bodily injuries. Property damage.
► For the maintenance and safety instructions for the air heater*, see the documentation from the manufacturer.

Position	Designation	Function	LED	Description
344	Air heater* rotary switch	On	Lights up	Turn the rotary switch to the right
		Off	Off	Turn the rotary switch to the left
		Error	Blinks	Error / problem

Side console rotary switch

LWE/LTR 1100-009/25105-02-02/en

copyright © Liebherr-Werk Ehingen GmbH 2023

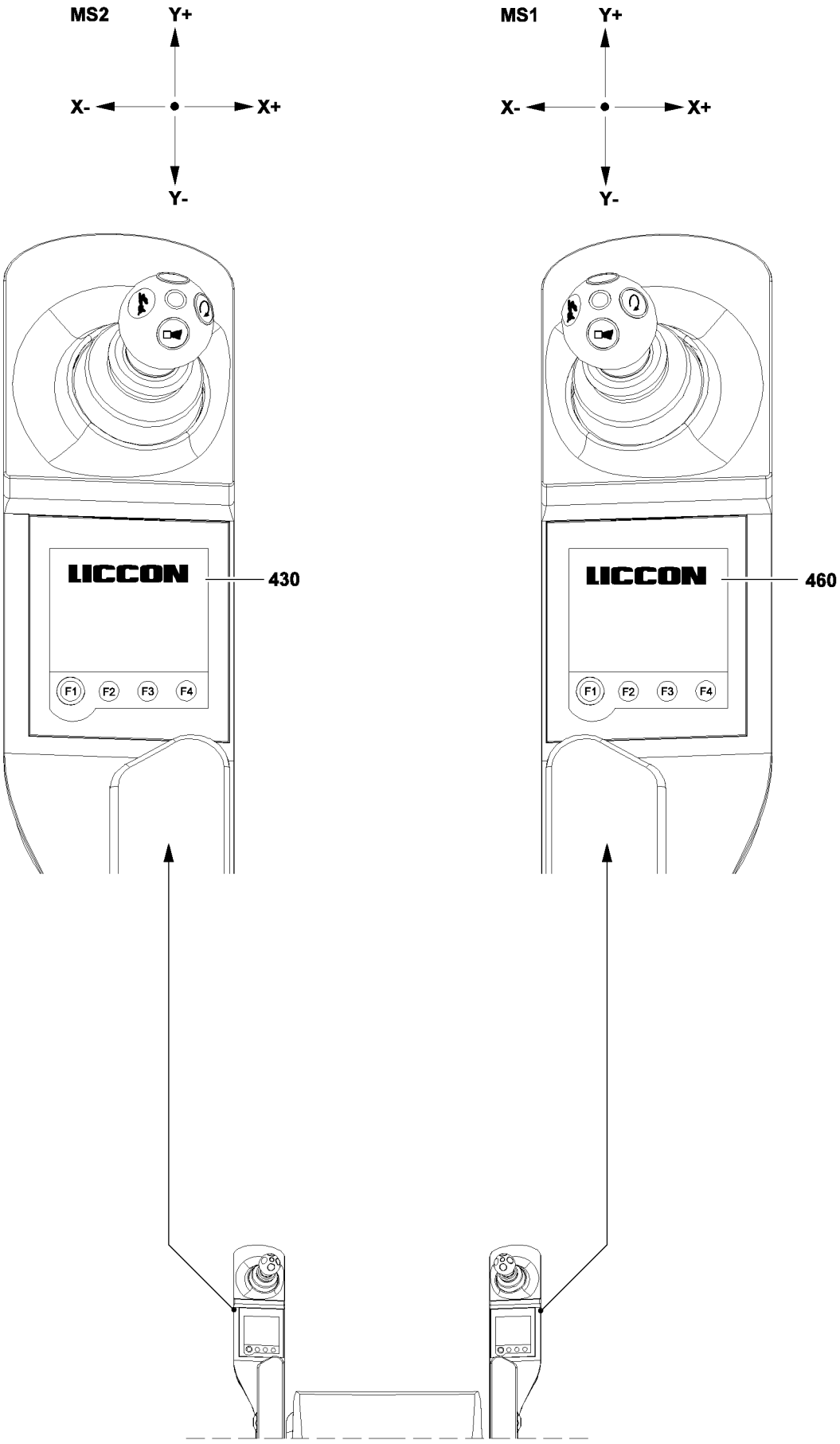

Fig.105575

LWE/LTR 1100-009/25105-02-02/en

copyright © Liebherr-Werk Ehingen GmbH 2023

8 Control panels

8.1 The touch displays

The touch displays are combined display and operating elements. The touch displays are operated using the row of function keys „F1“ to „F4“ and by direct „touch“ (fingertip) on the corresponding display icons.

Note
- ► The illustrations or icons on the touch displays are only examples.
- ► They may differ from the crane!
- ► If the function key **F1** is continuously pressed, the system shifts continuously between the existing menu points.

Via the left touch display **430** and the right touch display **460**, you can call up various menus. Various crane functions can be selected or preselected, turned on or off, or directly activated in these menus.

Note
- ► In low temperatures it is possible that the touch displays initially change to the menu items delayed and that the touch functions remain deactivated for that time.
- ► Wait a few minutes after ignition „ON“ until the menu items are shown on the touch display.

F Function keys
- The function of individual function keys depends on the menu and can vary, depending on the menu selected. Therefore the individual menus will now be described in more detail. The icons on the touch display above the row of function keys with a single border indicate the functions that will be triggered by activating the function keys below them.

460 Right touch display
- „Master switch configuration“ menu
- „Support“ menu
- „Track width adjustment“ menu

430 Left touch display
- „Master switch configuration“ menu
- „Floodlight“ menu
- Menu „Climate control settings“
- „Hydraulic oil preheating / telescopic boom disassembly“ menu

8.1.1 Starting up the LICCON Computer system and the touch displays

After turn on and correct boot up of the LICCON computer system, a static crane screen appears briefly on the left touch display **430** and the right touch display **460**. From here the system automatically switches to the master switch assignment for the relevant master switch, MS1 (right) or MS2 (left).

The touch display always displays the master switch assignment that was set or „active“ before the LICCON computer system was shut off.

LWE/LTR 1100-009/25105-02-02/en

copyright © Liebherr-Werk Ehingen GmbH 2023

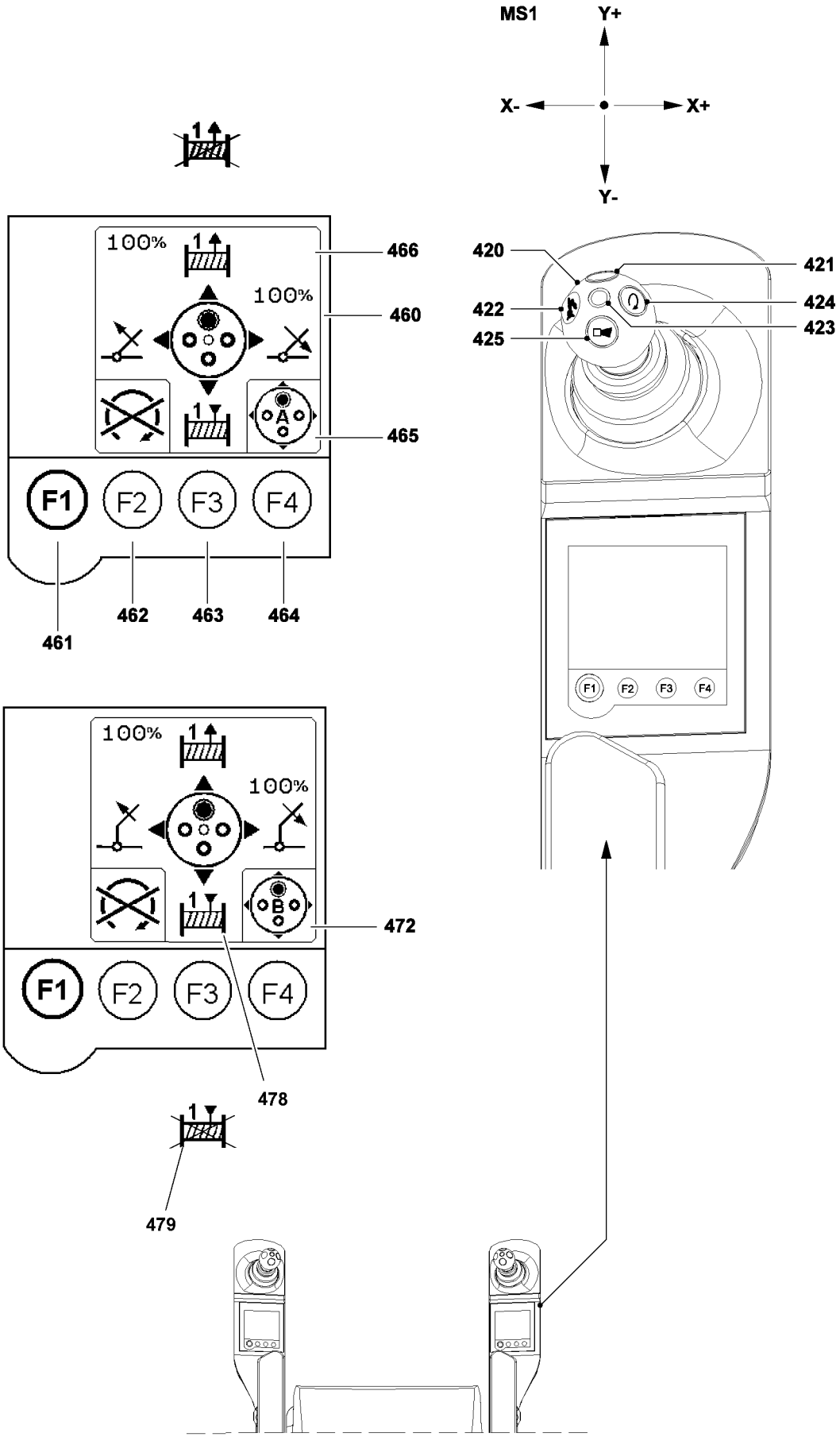

Fig.123705

LWE/LTR 1100-009/25105-02-02/en

copyright © Liebherr-Werk Ehingen GmbH 2023

8.2 Master switch assignment for machines with one winch

8.2.1 The „Master switch configuration“ menu (right touch display)

The function key line

461 Function key F1
- Switch to the next menu

462 Function key F2
- Engine STOP

463 Function key F3
- Winch changeover - Winch 1
  Activate / deactivate the winch
  Conditions:
  Neutral position master switch 1 **420** (MS1) right
  Danger of accident!
  Never activate / deactivate winch 1 while a crane movement is being actuated.
  The winch status (winch activated / deactivated) can be seen on the touch display:
  - **478** Winch 1 released
  - **479** Winch 1 blocked

464 Function key F4
- Change master switch assignment from „A“ to „B“
  Conditions:
  Neutral position master switch 1 **420** (MS1) right
  An operating mode or set up configuration with auxiliary boom must be set and confirmed on the LICCON computer system.
  Note
  If no set up configuration with auxiliary boom has been set and confirmed, the „luffing auxiliary boom“ master switch assignment is **not** available.

LWE/LTR 1100-009/25105-02-02/en

copyright © Liebherr-Werk Ehingen GmbH 2023

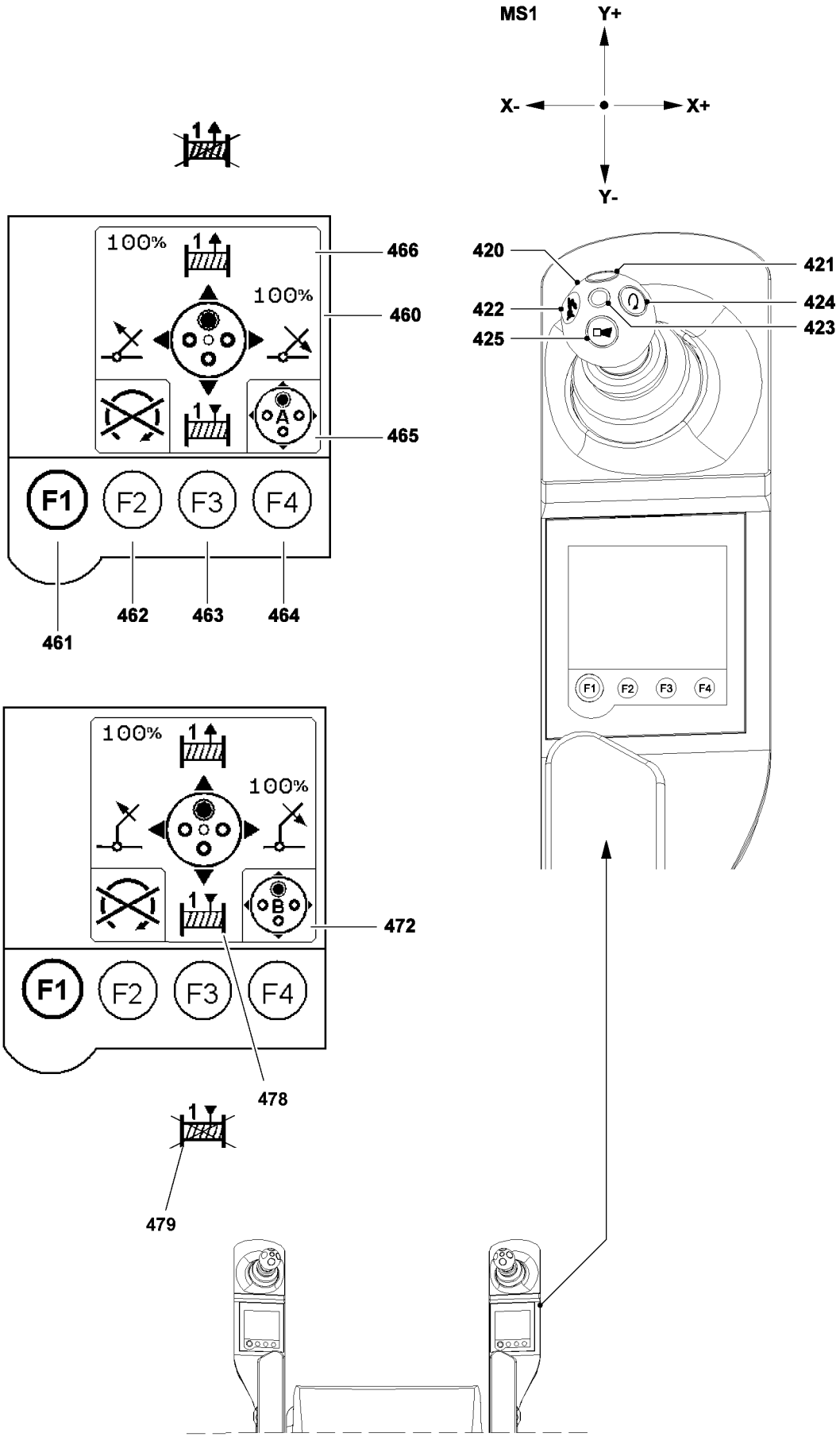

Fig.123705

copyright © Liebherr-Werk Ehingen GmbH 2023

Right master switch assignment

420 Right master switch (MS 1)

Hoist gear 1:
- Move the master switch **420** in direction Y+ (forward): Winch 1 spools out and the load is lowered
- Move the master switch **420** in direction Y- (backward): Winch 1 spools up and the load is raised

Telescopic boom luffing gear: Master switch assignment „A“ **465** is active:
- Move the master switch **420** in direction X+ (toward the right): Luff the telescopic boom down
- Move the master switch **420** in direction X- (toward the left): Luff the telescopic boom up

Luffing auxiliary boom*: Master switch assignment „B“ **472** is active:
- Move the master switch **420** in direction X+ (toward the right): Luff the auxiliary boom down
- Move the master switch **420** in direction X- (toward the left): Luff the auxiliary boom up

421 Button
- Bypass of seat contact button. **Or** if the seat contact button is actuated: Activation of the vibration sensor **423**

422 Button
- Activation of rapid gear for the hoist gear(s) and luffing up

423 Vibration sensor
- Winch turn sensor, (vibrator) winch 1

424 Button
- Lock the engine regulation of superstructure engine
  Note:
  Pressing the button **424** will lock the engine regulation in the current position.

425 Button
- Horn

LWE/LTR 1100-009/25105-02-02/en

copyright © Liebherr-Werk Ehingen GmbH 2023

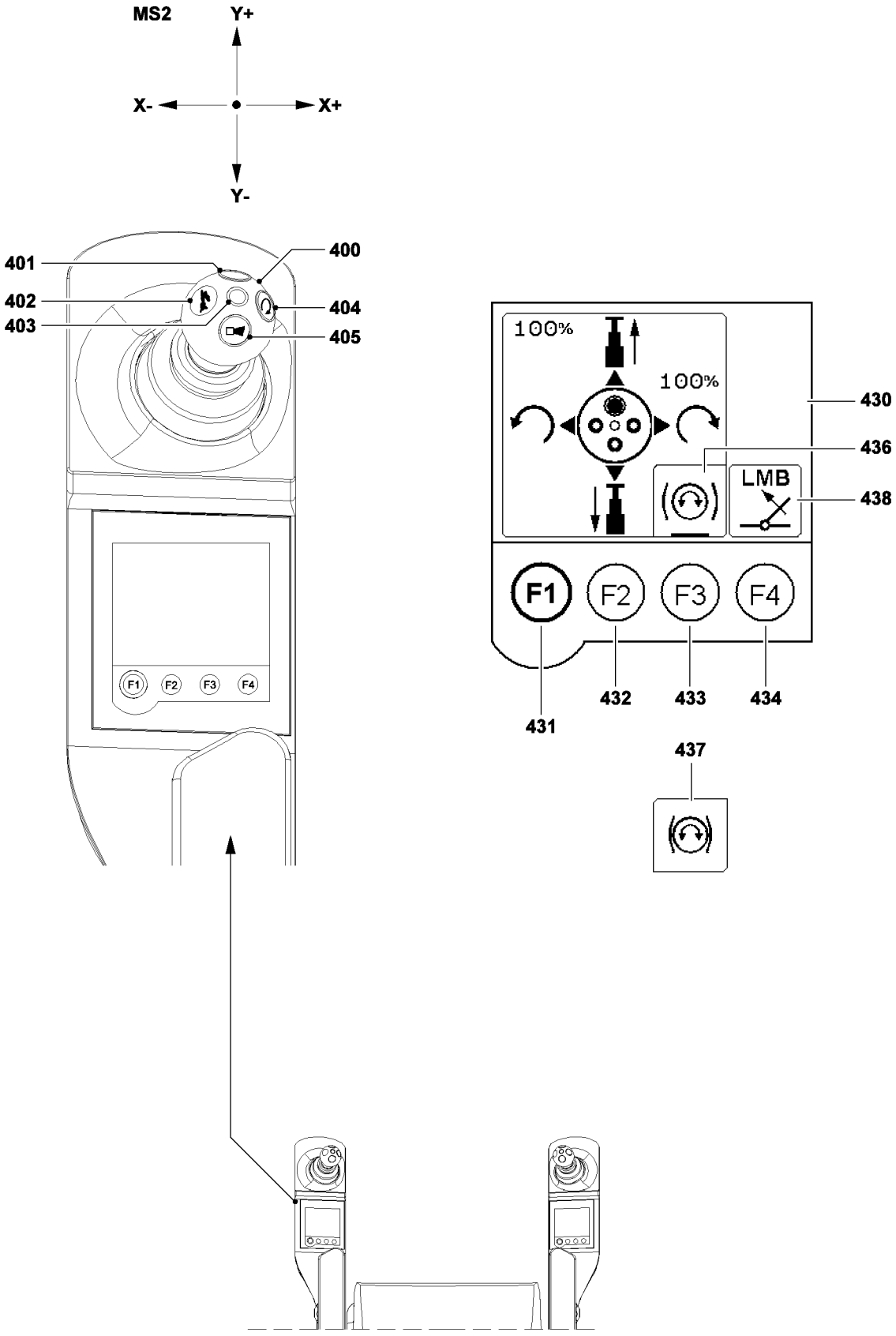

Fig.152504

LWE/LTR 1100-009/25105-02-02/en

copyright © Liebherr-Werk Ehingen GmbH 2023

8.2.2 The „Master switch configuration“ menu (left touch display)

The function key line

431 Function key F1
- Switch to the next menu

432 Function key F2
- **No** function

433 Function key F3
- Apply / release slewing gear brake
  - **436** Slewing gear brake released
  - **437** Slewing gear brake applied

434 Function key F4 (touching)
- Exceeding the overload protection (icon **438**), is used to luff in with suspended load
  Danger:
  The exceedance may only be carried out if the overload was caused by luffing down at freely suspended load and the crane operator is absolutely certain that luffing up the load will take it out of the overload range.

Left master switch assignment:

400 Left master switch (MS 2)

Telescoping gear
- Move the master switch **400** in direction Y+ (forward): Telescope out.
- Move the master switch **400** in direction Y- (backward): Telescope in.

Slewing gear:
- Move the master switch **400** in direction X+ (toward the right): The crane superstructure turns to the right.
- Move the master switch **400** in direction X- (toward the left): The crane superstructure turns to the left.

401 Button
- Bypass of seat contact button. **Or** if the seat contact button is actuated: Activation of the vibration sensor **403**

402 Button
- Switching of the rapid gear for winch(es) and luffing up.

403 Vibration sensor
- Winch turn sensor or winch 2 **or** turn sensor, (vibrator) slewing gear

404 Button
- Lock the engine regulation of superstructure engine
  Note:
  Pressing the button **404** will lock the engine regulation in the current position.
- The idling speed can be increased up to the maximum rpm.
  - Can be „overridden“ with the engine regulation (gas pedal)
  - At continued actuation of the engine regulation (gas pedal), the current rpm is taken over
  - By pressing the button **404** with the engine regulation (gas pedal) **not actuated**, the manual throttle is cancelled
  - At locked engine rpm, a **„+“** appears in the „dynamic utilization bar display“ (crane operation)

405 Button
- Horn

LWE/LTR 1100-009/25105-02-02/en

copyright © Liebherr-Werk Ehingen GmbH 2023

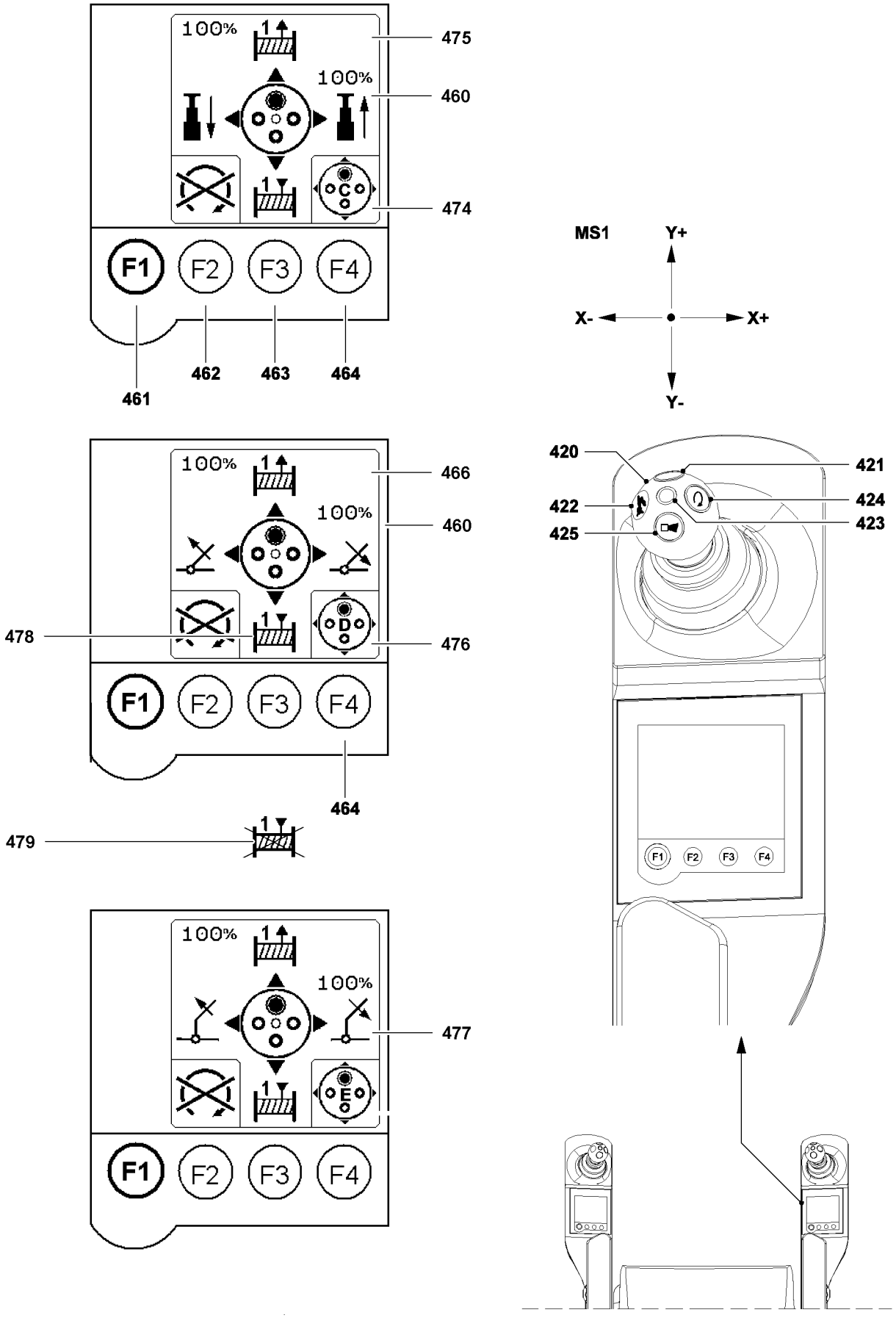

Fig.123707

LWE/LTR 1100-009/25105-02-02/en

copyright © Liebherr-Werk Ehingen GmbH 2023

8.3 Master switch assignment for machines with two winches

8.3.1 The „Master switch configuration“ menu (right touch display)

The function key line

461 Function key F1
- Switch to the next menu

462 Function key F2
- Engine STOP
  Note:
  After „Engine STOP“, the engine can be restarted by turning the ignition switch to „position 2“, also see Crane operating instructions, chapter 4.02.

463 Function key F3
- Winch changeover - Winch 1
  Activate / deactivate the winch
  Conditions:
  Neutral position master switch 1 **420** (MS1) right
  Crane driving speed = 0 km/h
  Danger of accident!
  Never activate / deactivate winch 1 while a crane movement is being actuated.
  Note:
  The winch status (winch activated / deactivated) can be seen on the touch display:
  - **478** Winch 1 released
  - **479** Winch 1 blocked

464 Function key F4
- Change master switch assignment from „C“ to „D“ or „E“.
  Conditions:
  Neutral position master switch 1 **420** (MS1) right
  For master switch assignment **E**, an operating mode or set up configuration with auxiliary boom must be selected and confirmed on the LICCON computer system.
  Note
  If no set up configuration with auxiliary boom has been set and confirmed, the „luffing auxiliary boom“ master switch assignment is **not** available.

LWE/LTR 1100-009/25105-02-02/en

copyright © Liebherr-Werk Ehingen GmbH 2023

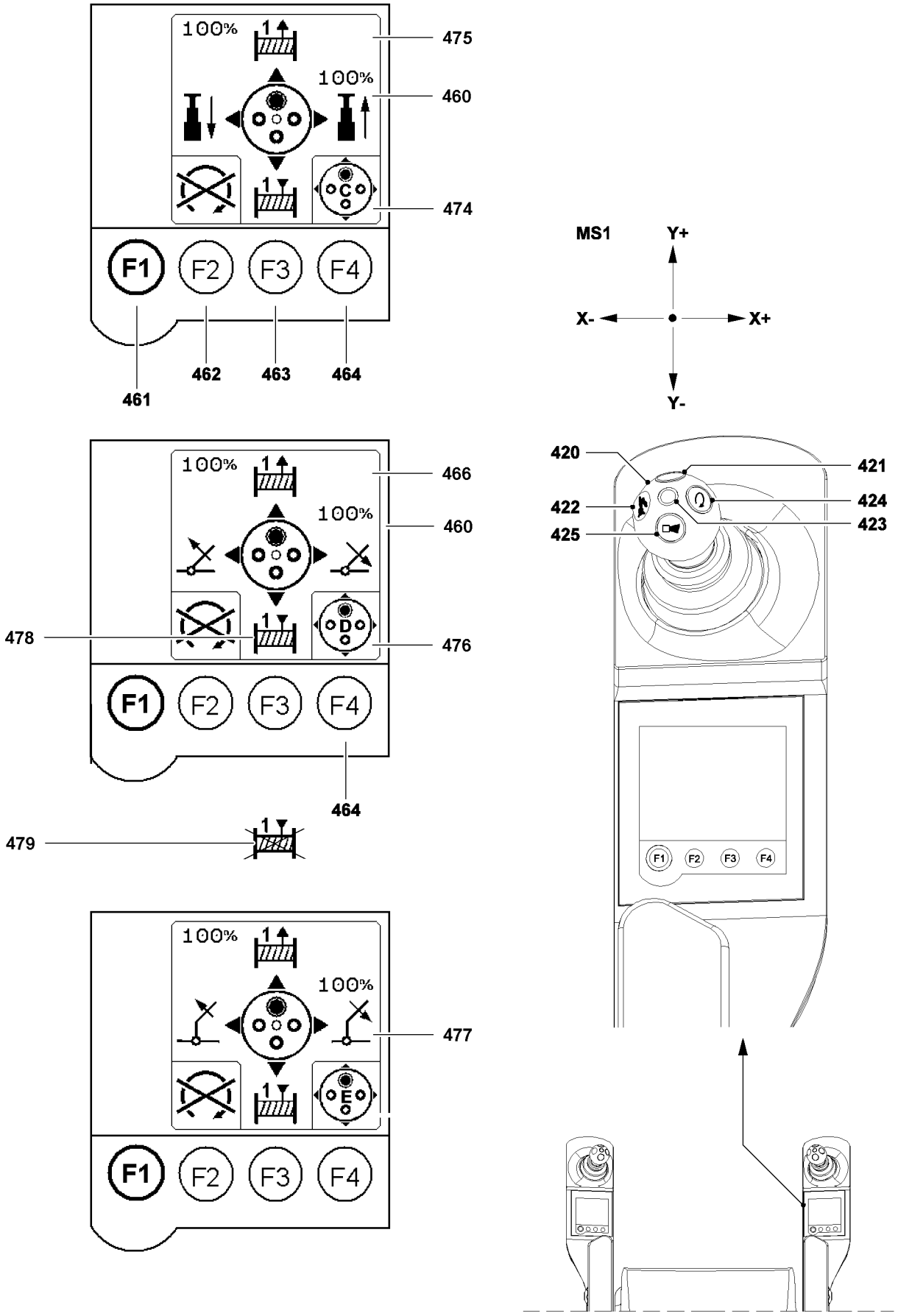

Fig.123707

LWE/LTR 1100-009/25105-02-02/en

copyright © Liebherr-Werk Ehingen GmbH 2023

Touch functions in the Travel operation and master switch configuration menu

Note

- ► To switch between the master switch configurations for one and two winch systems, press function key „F4“ **464** for longer than 3 s (continuous actuation) in the „Travel operation and master switch configuration“ menu on the right touch display.
- ► When the changeover has taken place, a short acoustic signal is heard.

Right master switch assignment

420 Right master switch (MS 1)

Hoist gear 1:
- Move the master switch **420** in direction Y+ (forward): Winch 1 spools out and the load is lowered
- Move the master switch **420** in direction Y- (backward): Winch 1 spools up and the load is raised

Telescoping gear: Master switch assignment „C“ **474** is active:
- Move the master switch **420** in direction X+ (toward the right): Telescope the telescopic boom out
- Move the master switch **420** in direction X- (toward the left): Telescoping the telescopic boom in

Telescopic boom luffing gear: Master switch assignment „D“ **476** is active:
- Move the master switch **420** in direction X+ (toward the right): Luff the telescopic boom down
- Move the master switch **420** in direction X- (toward the left): Luff the telescopic boom up

Luffing the auxiliary boom*: Master switch assignment „E“ **477** is active:
- Move the master switch **420** in direction X+ (toward the right): Luff the auxiliary boom down
- Move the master switch **420** in direction X- (toward the left): Luff the auxiliary boom up

421 Button
- Bypass of seat contact button. **Or** if the seat contact button is actuated: Activation of the vibration sensor **423**

422 Button
- Activation of rapid gear for the hoist gear(s) and luffing up

423 Vibration sensor
- Winch turn sensor, (vibrator) winch 1

424 Button
- Lock the engine regulation of superstructure engine
  Note:
  Pressing the button **424** will lock the engine regulation in the current position.

425 Button
- Horn

LWE/LTR 1100-009/25105-02-02/en

copyright © Liebherr-Werk Ehingen GmbH 2023

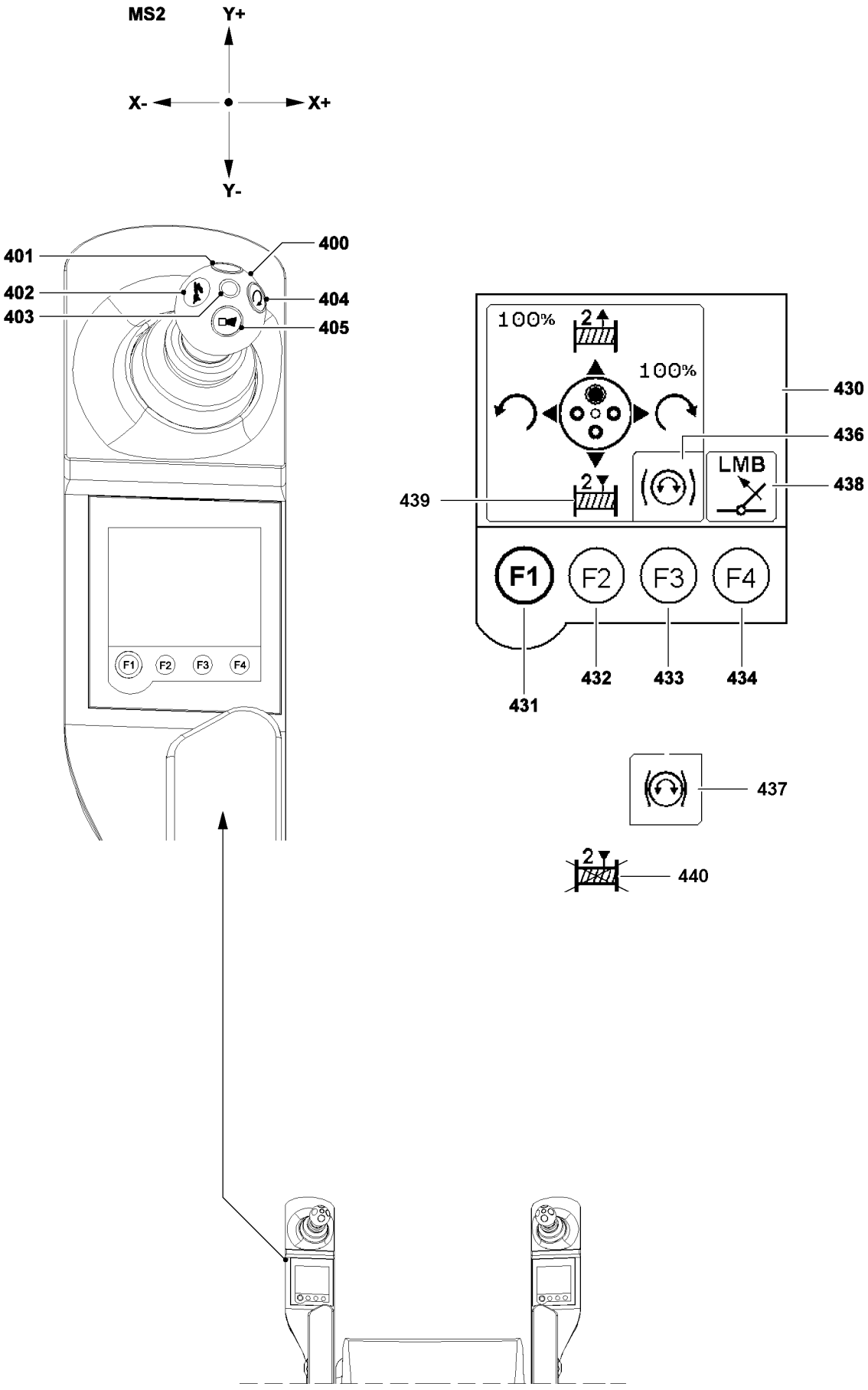

Fig.152538

LWE/LTR 1100-009/25105-02-02/en

copyright © Liebherr-Werk Ehingen GmbH 2023

8.3.2 The „Master switch configuration“ menu (left touch display)

The function key line

431 Function key F1
- Switch to the next menu

432 Function key F2
- Winch changeover - Winch 2
  Activate / deactivate the winch
  Conditions:
  Neutral position master switch 2 **400** (MS2) right
  Crane driving speed = 0 km/h
  Danger of accident!
  Never activate / deactivate winch 2 while a crane movement is being actuated.
  Note:
  The winch status (winch activated / deactivated) can be seen on the touch display:
  - **439** Winch 2 released
  - **440** Winch 2 blocked

433 Function key F3
- Open / close slewing gear brake (with freely rotating slewing gear)
  - **436** Slewing gear brake released
  - **437** Slewing gear brake applied

434 Function key F4 (touching)
- Exceeding the overload protection (icon **438**), is used to luff in with suspended load
  Danger:
  The exceedance may only be carried out if the overload was caused by luffing down at freely suspended load and the crane operator is absolutely certain that luffing up the load will take it out of the overload range.

LWE/LTR 1100-009/25105-02-02/en

copyright © Liebherr-Werk Ehingen GmbH 2023

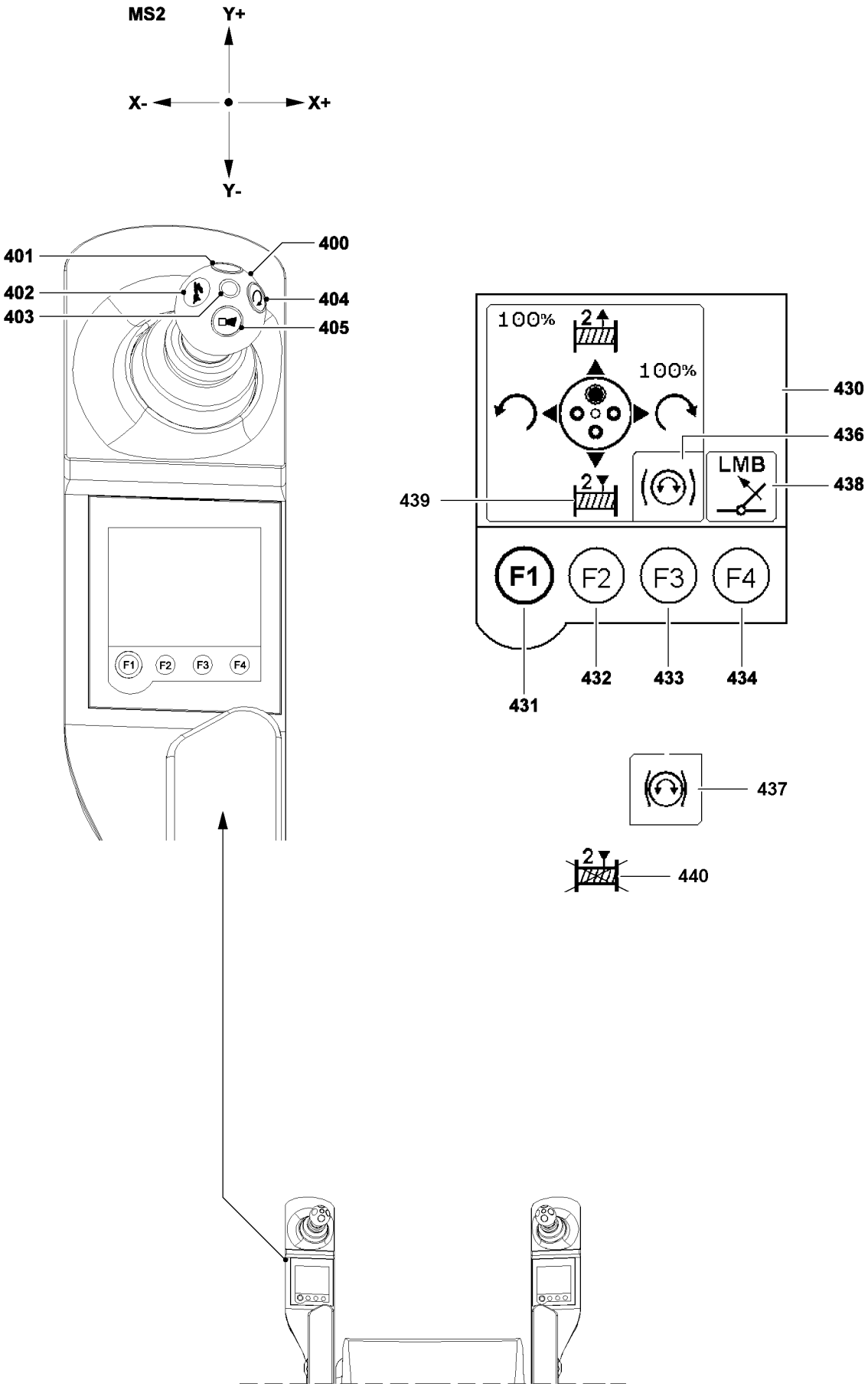

Fig.152538

LWE/LTR 1100-009/25105-02-02/en

copyright © Liebherr-Werk Ehingen GmbH 2023

Left master switch assignment:

400 Left master switch (MS 2)

Hoist gear 2:
- Move the master switch **400** in direction Y+ (forward): Winch 2 spools out and the load is lowered
- Move the master switch **400** in direction Y- (backward): Winch 2 spools up and the load is raised

Slewing gear:
- Move the master switch **400** in direction X+ (toward the right): Slewing gear turns to the right
- Move the master switch **400** in direction X- (toward the left): Slewing gear turns to the left

401 Button
- Bypass of seat contact button. **Or** if the seat contact button is actuated: Activation of the vibration sensor **403**

402 Button
- Switching of the rapid gear for winch(es) and luffing up.

403 Vibration sensor
- Winch turn sensor, (vibrator) winch 1 or winch 2 **or** turn sensor, (vibrator) slewing gear

404 Button
- Lock the engine regulation of superstructure engine
  Note:
  Pressing the button **404** will lock the engine regulation in the current position.
  The idling speed can be increased up to the maximum rpm.
- Can be „overridden“ with the engine regulation (gas pedal)
- At continued actuation of the engine regulation (gas pedal), the current rpm is taken over
- By pressing the button **404** with the engine regulation (gas pedal) **not actuated**, the manual throttle is cancelled
- If the engine rpm is locked, the „dynamic engine rpm display“ (travel operation) and the „dynamic load utilization bar display“ (crane operation) contain a **„+“**

405 Button
- Horn

LWE/LTR 1100-009/25105-02-02/en

copyright © Liebherr-Werk Ehingen GmbH 2023

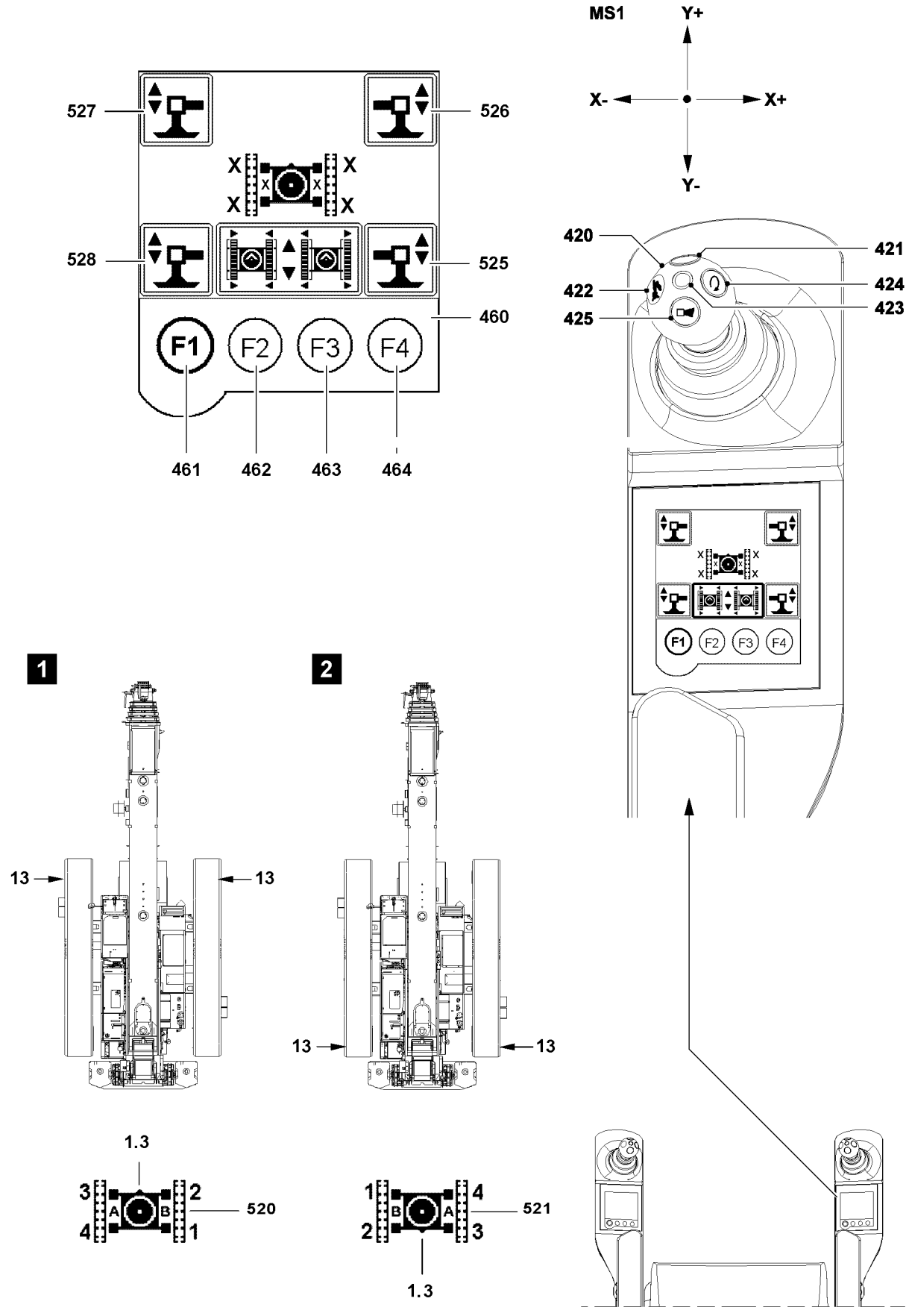

Fig.152546

LWE/LTR 1100-009/25105-02-02/en

copyright © Liebherr-Werk Ehingen GmbH 2023

8.4 The menus (operating functions)

8.4.1 The „Support“ menu (right touch display)

Note
Assignment of working direction, support cylinder and crawler carrier!
Illustration **1** and illustration **2** show the assignment.

- ► The rear and front on the crawler travel gear can be determined by the chain tension device **13** (chain tension side). The chain tension device **13** is on the front on the crawler travel gear.
- ► In the „Support“ menu the assignment of the support cylinders and the crawler carriers on the touch display depends on the working direction of the crane. If the working direction of the crane is changed by turning the turntable from working direction „forward“ to working direction „backward“, then the crane icon **520** changes to crane icon **521** - or vice versa.
- ► Crane icon **520**, turntable turned „to the front“: The triangle **1.3** shows the front of the crane chassis; assignment of the support cylinders and the crawler carriers as seen by the crane operator in the crane operator’s cab.
- ► Crane icon **521**, turntable turned „to the rear“: The triangle **1.3** shows the front of the crane chassis; assignment of the support cylinders and the crawler carriers as seen by the crane operator in the crane operator’s cab.

The function key line

461 Function key F1
- Switch to the next menu

462 Function key F2
- **No** function

463 Function key F3
- **No** function

464 Function key F4
- **No** function

Touch functions in the Support menu

525 Support cylinder
- Select support

526 Support cylinder
- Select support

527 Support cylinder
- Select support

528 Support cylinder
- Select support

Right master switch assignment

420 Right master switch (MS 1)

Manual support:
- Move the master switch **420** in direction Y+ (forward): The selected support cylinders extend.
- Move the master switch **420** in direction Y- (backward): The selected support cylinders retract.

421 Button
- Release of master switch **420**, to retract / extend the support cylinders

LWE/LTR 1100-009/25105-02-02/en

copyright © Liebherr-Werk Ehingen GmbH 2023

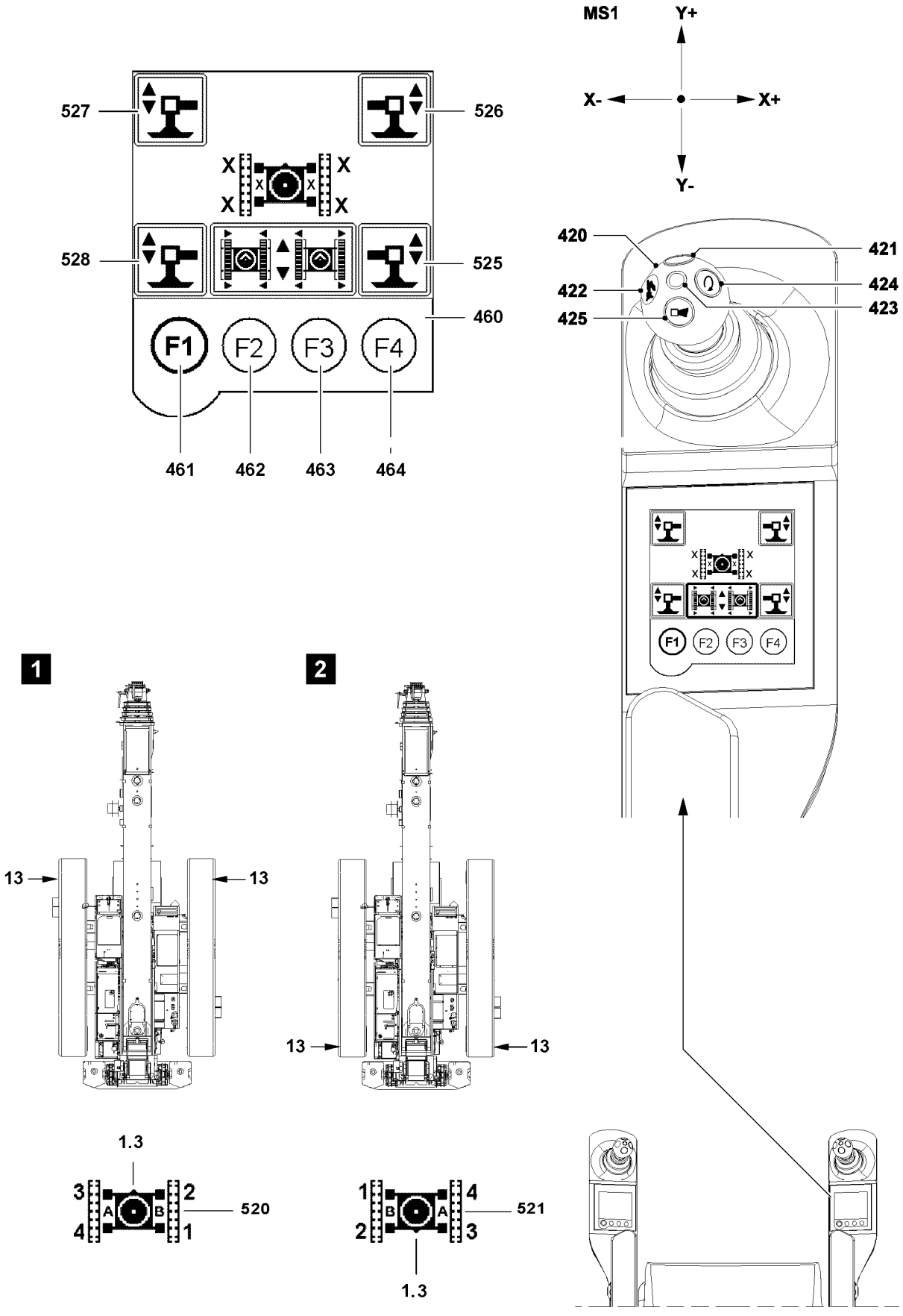

Fig.152546

LWE/LTR 1100-009/25105-02-02/en

copyright © Liebherr-Werk Ehingen GmbH 2023

Support cylinder

In the „Support“ menu, the following functions depend on the deflection of the master switch:
- Extension / retraction speed of the support cylinders
- Manual support

Two extension / retraction speeds of the support cylinders are available:

Master switch deflection < 80 % = slow

Master switch deflection ≥ 80 % = fast

Note
- ► Release support movement: Press the button **421** (bypass seat contact) and hold it.
- ► Retract or extend the support cylinders: Deflect the right master switch (MS1) **420** in direction Y+ or Y-.

Note

If the master switch deflection is changed from Y+ or Y- to X+ or X- when the selected support cylinders are being retracted or extended, the current movement is shut off.
- ► Move the right master switch (MS1) **420** to the neutral position.
- ► Now you can extend / retract the support cylinders to the required position with the master switch.

Supporting manually

0 - 4 supports can be selected on the touch display („touch“) simultaneously and „extended / retracted“ using the master switch (MS1).

Note
- ► The extension / retraction of the support cylinders is „coupled“ with the Y+ and Y- deflection direction of the right master switch (MS1) **420**.
- ► Moving the MS1 in direction Y+ extends the support cylinder / support cylinders.
- ► Moving the MS1 in direction Y- retracts the support cylinder / support cylinders.

LWE/LTR 1100-009/25105-02-02/en

copyright © Liebherr-Werk Ehingen GmbH 2023

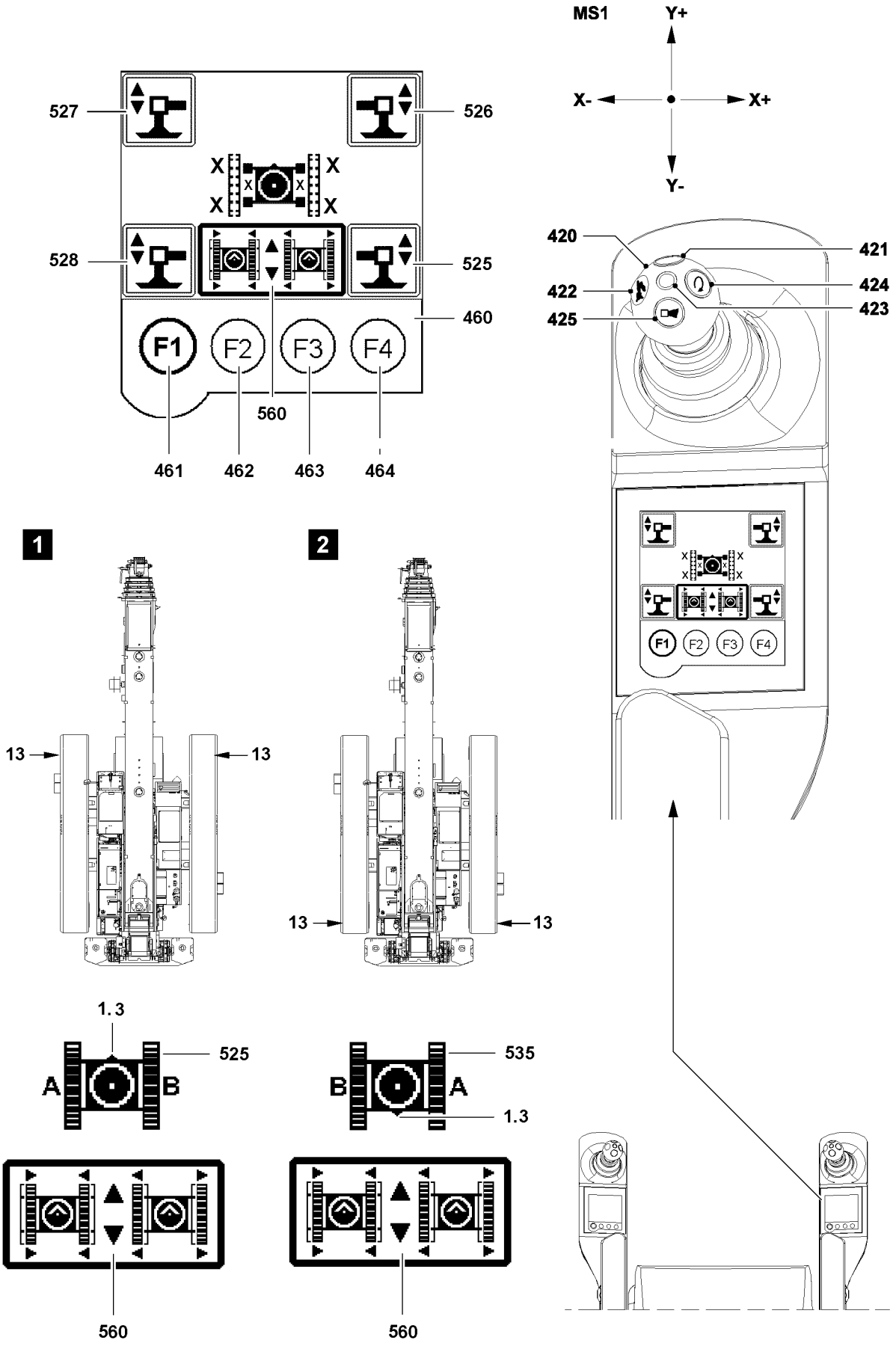

Fig.118034

LWE/LTR 1100-009/25105-02-02/en

copyright © Liebherr-Werk Ehingen GmbH 2023

8.4.2 The „Track width adjustment“ menu (right touch display)

In the „Track width adjustment“ menu, the crane driver has the possibility to extend the track width of the crawlers to a larger track width or retract them to a smaller track width.

Note
Assignment of working direction and crawler carrier!
Illustration **1** and illustration **2** show the assignment.

- ► The rear and front on the crawler travel gear can be determined by the chain tension device **13** (chain tension side). The chain tension device **13** is on the front on the crawler travel gear.
- ► In the „Track width adjustment“ menu the assignment of the crawler carriers on the touch display depends on the working direction of the crane. If the working direction of the crane is changed by turning the turntable from working direction „forward“ to working direction „backward“, then the crane icon **525** changes to crane icon **535** - or vice versa.
- ► The arrow **12** shows the direction of view of the crane operator in the crane operator’s cab: icon **560**, icon **561**, icon **565** and icon **566**.
- ► Crane icon **525**, turntable turned „to the front“: The triangle **1.3** shows the front on the crane chassis; assignment of the crawler carriers as seen by the crane operator in the crane operator’s cab.
- ► Crane icon **535**, turntable turned „to the rear“: The triangle **1.3** shows the front on the crane chassis; assignment of the crawler carriers as seen by the crane operator in the crane operator’s cab.

The function key line

461 Function key F1
- Switch to the next menu

462 Function key F2
- **No** function

463 Function key F3
- **No** function

464 Function key F4
- **No** function

Touch functions in the Track width adjustment menu

560 Extend / retract the crawler
- Select / deselect extend / retract the crawler

Right master switch assignment

420 Right master switch (MS 1)
- Move the master switch **420** in direction X+ (toward the right): The selected crawler carriers extend.
- Move the master switch **420** in direction X- (toward the left): The selected crawler carriers retract.

421 Button
- Release of the master switch **420** to retract / extend the crawler carriers.

LWE/LTR 1100-009/25105-02-02/en

copyright © Liebherr-Werk Ehingen GmbH 2023

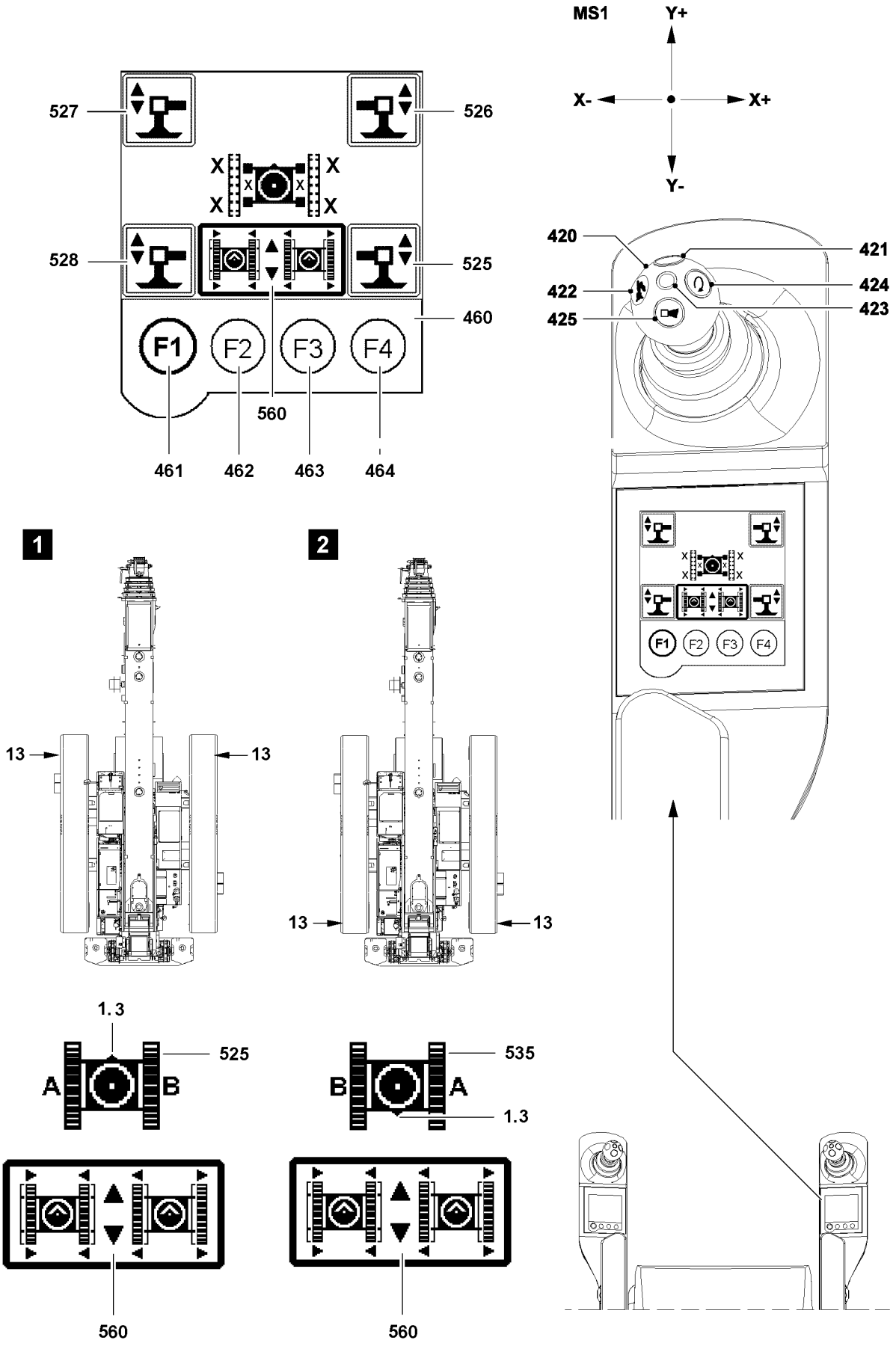

Fig.118034

LWE/LTR 1100-009/25105-02-02/en

copyright © Liebherr-Werk Ehingen GmbH 2023

Extending / retracting the crawler carrier

Note

- ► The extension / retraction of the crawlers is „coupled“ with the X+ and X- deflection direction of master switch (MS1) **420**.
- ► Release support movement: Press the button **421** (bypass seat contact) and hold it.
- ► Retract or extend the crawler carriers: Move master switch (MS1) **420** in direction X+ or X-.

Note

- ► When adjusting the track width, there may be some tensioning between the cross carrier and the crawler center section. By additionally deflecting the master switch (MS1) **420** in direction Y+ or Y- the tension can be released.
- ► Adjustment of track width, see Crane operating instructions, chapter 4.03.50.

LWE/LTR 1100-009/25105-02-02/en

copyright © Liebherr-Werk Ehingen GmbH 2023

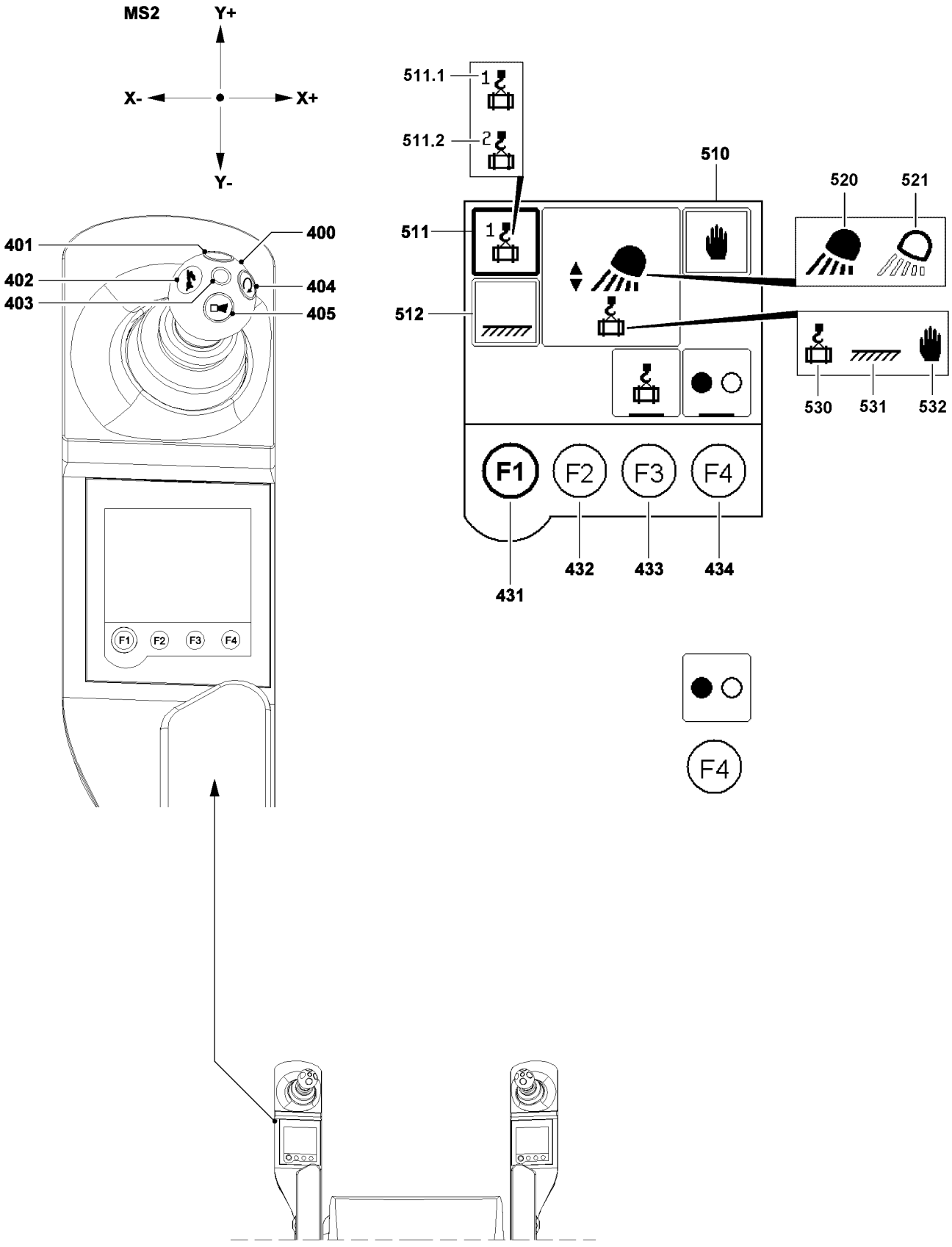

Fig.121279

LWE/LTR 1100-009/25105-02-02/en

copyright © Liebherr-Werk Ehingen GmbH 2023

8.4.3 The „floodlight“ menu* (left touch display)

In the floodlight „menu“*****, the crane driver has the opportunity to manually align the floodlights to suit the current load or the planned working range. In crane operation, the previously aligned floodlight changes its position according to the movement direction of the load (load-following) or the working range (fixed to working range).

Note

- ► The floodlight menu***** is only available if the floodlight is installed and connected.
- ► „Touching“ the desired floodlight function does not directly activate this function, instead it only **selects the function**.
- ► Only if a floodlight function has been selected, can function key F4 **434** be used to turn it on or off.

The function key line

431 Function key F1
- Switch to the next menu

432 Function key F2
- **No** function

433 Function key F3
- Load position preselection for 2-hook operation
  - When selecting the main boom, the icon **511.1** appears
  - When selecting the auxiliary boom, the icon **511.2** appears

434 Function key F4
- Turn the floodlight on / off

Touch functions

510 Floodlight
- Select „Manually“

511 Floodlight
- Select „Load following“

512 Floodlight
- Select „Fixed to working range“

Icons

520 Floodlight
- Turned on

521 Floodlight
- Turned off

530 Floodlight
- „Load following“ selected

531 Floodlight
- „Fixed to working range“ selected

531 Floodlight
- „Manually“ selected

Note

- ► Before the required operating mode of the floodlight is selected, the „starting position“ of the floodlight must be manually selected in „Floodlight manual“ operating mode by moving the Master switch 2 **400** (MS2) left in direction Y+ or Y-.

LWE/LTR 1100-009/25105-02-02/en

copyright © Liebherr-Werk Ehingen GmbH 2023

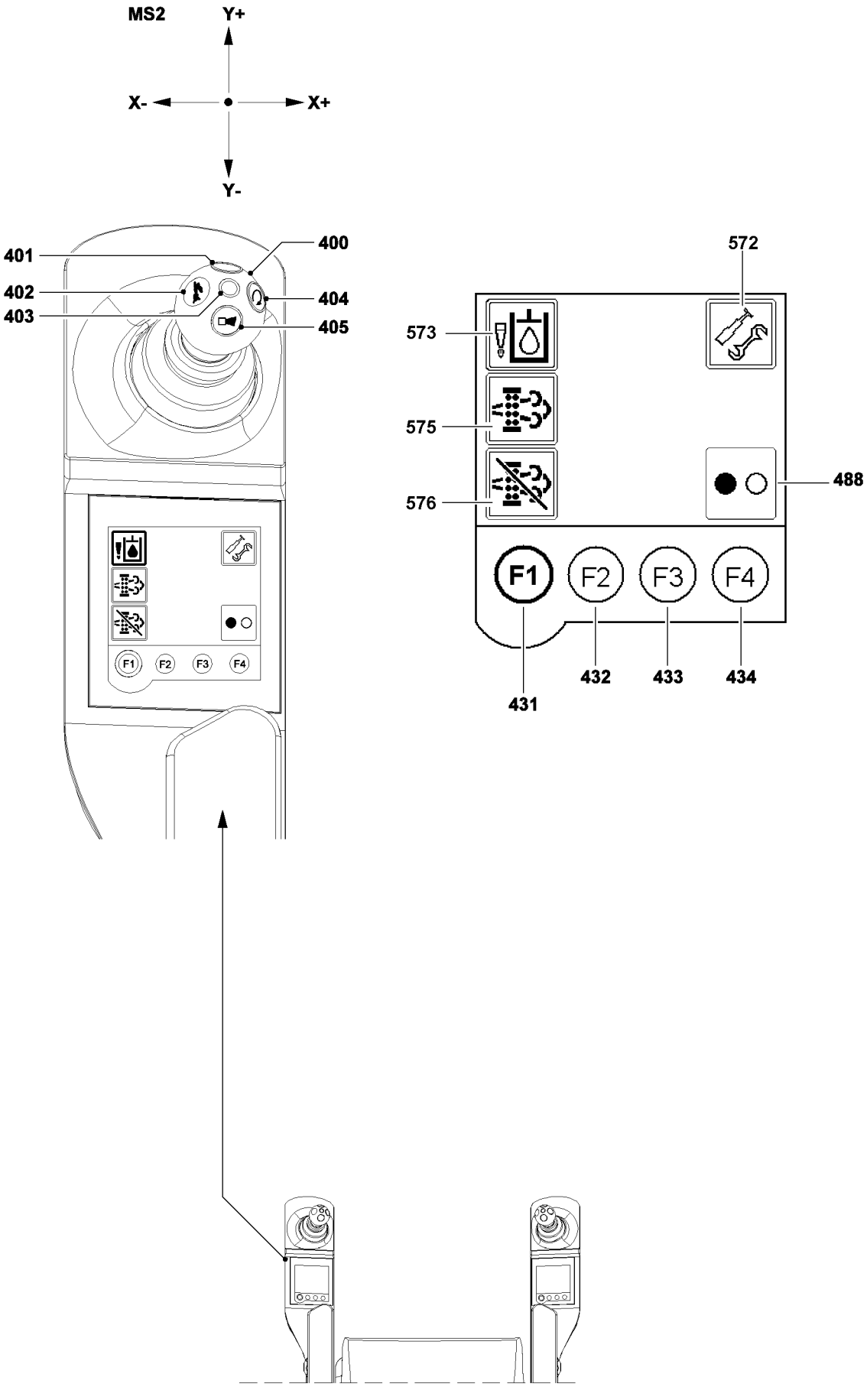

Fig.152539

LWE/LTR 1100-009/25105-02-02/en

copyright © Liebherr-Werk Ehingen GmbH 2023

8.4.4 The „Hydraulic oil preheating / telescopic boom disassembly“ menu* (left touch display)

The function key line

431 Function key F1
- Switch to the next menu

432 Function key F2
- **No** function

433 Function key F3
- **No** function

434 Function key F4
- Turn the hydraulic oil preheating on / off
  Turn telescopic boom disassembly on / off

Touch functions

572 Telescopic boom disassembly
- Select / deselect telescopic boom disassembly

573 Hydraulic oil preheating
- Select / deselect hydraulic oil preheating

575 Triggering diesel particle filter (DPF) regeneration
- Select / deselect triggering diesel particle filter (DPF) regeneration

576 Disabling diesel particle filter (DPF) regeneration
- Select / deselect disabling diesel particle filter (DPF) regeneration

488 Changeover ON / OFF
- Changeover ON / OFF is made by pressing **F4**
  Can only be applied to the selected or preselected functions.

9 Climate control

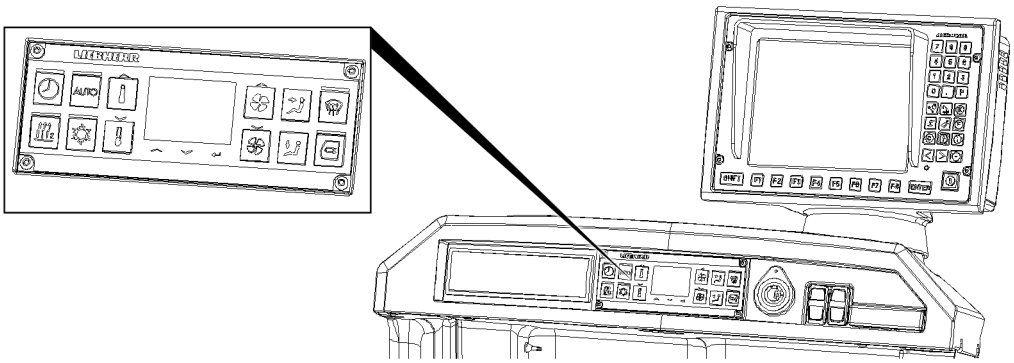

Fig.147625: Climate control

LWE/LTR 1100-009/25105-02-02/en

copyright © Liebherr-Werk Ehingen GmbH 2023

9.1 Climate control button

Position	Icon	Designation	Description
1		Button	Timer
2		Button	Automatic operation
3		Button	Crane cab auxiliary heater / engine preheating*
4		Button	Climate control system*
5		Button	Increase temperature
6		Button	Decrease temperature
7		Button	Increase blower stage
8		Button	Decrease blower stage
9		Button	Air distribution for head area

LWE/LTR 1100-009/25105-02-02/en

copyright © Liebherr-Werk Ehingen GmbH 2023

Position	Icon	Designation	Description
10		Button	Air distribution for floorboard area
11		Button	Defrost front window
12		Button	Recirculating air

Climate control button

9.2 Display*

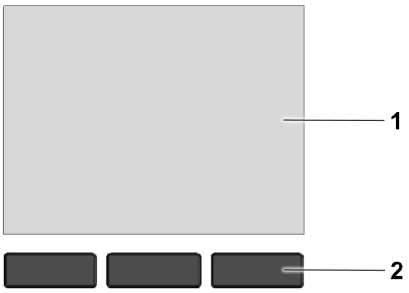

Fig.145596: Display with buttons

1 Display

2 Set the timer button, select crane cab auxiliary heater / engine preheating*

9.3 Displays

9.3.1 Fan stage

This section describes the fan stage icons. Each bar in the icon represents a switch level. Five switch levels are available.

Position	Icon	Description
1	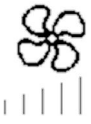	Fan turned off
2		Fan turned on (1 to 5 switch levels)

Fan stage

LWE/LTR 1100-009/25105-02-02/en

copyright © Liebherr-Werk Ehingen GmbH 2023

9.3.2 Air distribution for head area

This section describes the head area air distribution icons. Each bar in the icon represents a switch level. Six switch levels are available.

Position	Icon	Description
1		Head area air distribution turned off
2		Head area air distribution turned on (1 to 6 switch levels)

Head area

9.3.3 Air distribution for floorboard area

This section describes the floorboard area air distribution icons. Each bar in the icon represents a switch level. Six switch levels are available.

Position	Icon	Description
1		Floorboard area air distribution turned off
2		Floorboard area air distribution turned on (1 to 6 switch levels)

Floorboard area

9.3.4 Temperature display

The temperature display can be shown in [°C] or [°F].

Fig.145906: Temperature display

9.3.5 Time

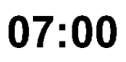

Fig.145107: Time

9.3.6 Timer

Fig.145907: Timer

LWE/LTR 1100-009/25105-02-02/en

copyright © Liebherr-Werk Ehingen GmbH 2023

9.3.7 Auxiliary heater / engine preheating*

This section describes the auxiliary heater / engine preheating* icons.

Position	Icon	Description
1		Crane cab auxiliary heater
2		Crane cab auxiliary heater engine preheating*
3		Engine preheating*

*Auxiliary heater / engine preheating**

LWE/LTR 1100-009/25105-02-02/en

copyright © Liebherr-Werk Ehingen GmbH 2023

10 Operating and control unit (BKE)

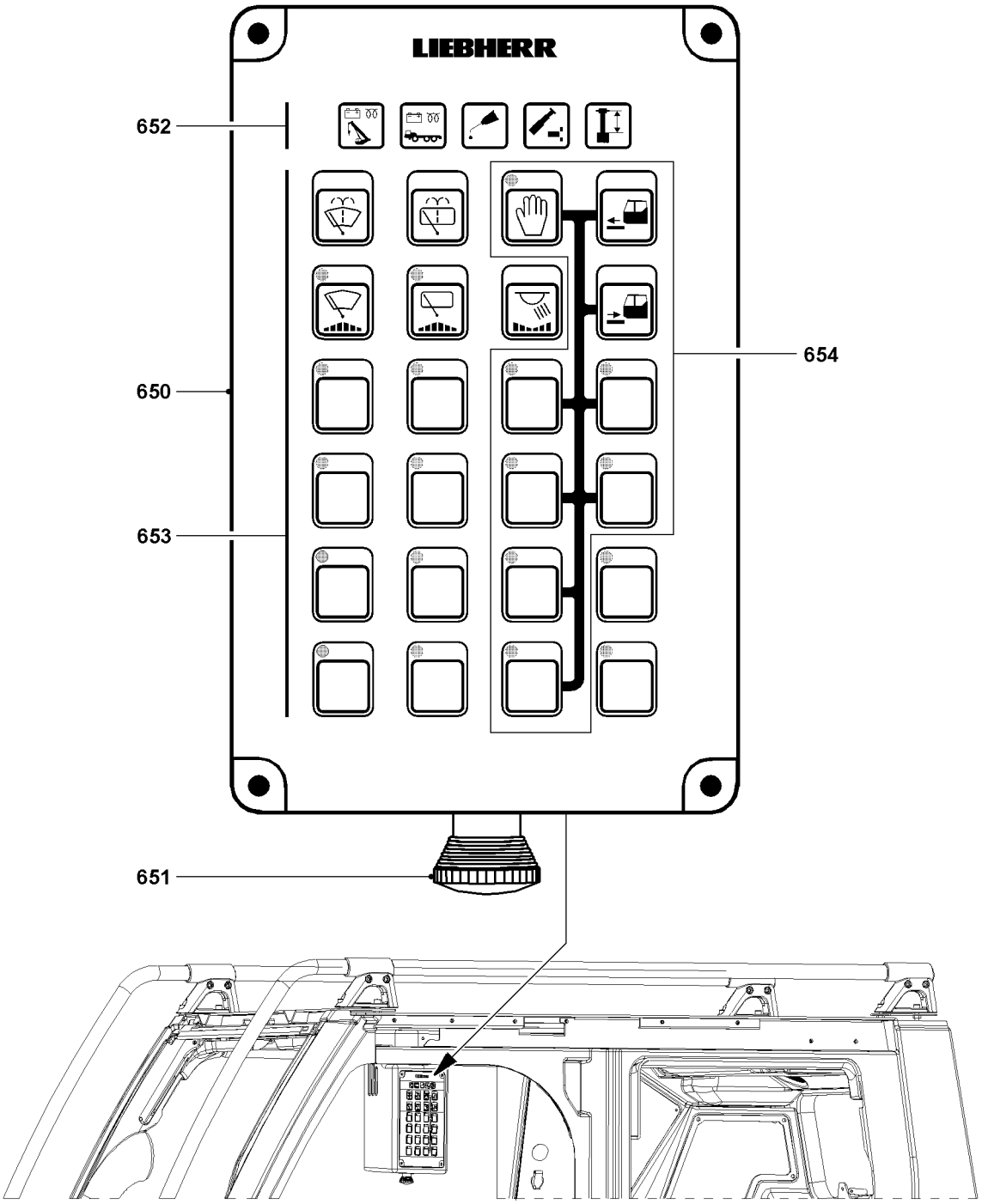

Fig.117632

10.1 Operating console

Note
► The indicator lights as well as the operating buttons are described in detail in the following sections.

650 Operating console
- Housing with indicator lights and buttons

LWE/LTR 1100-009/25105-02-02/en

copyright © Liebherr-Werk Ehingen GmbH 2023

651 EMERGENCY OFF switch*
- Impact switch

652 Indicator lights on the BKE

653 Operating buttons on the BKE
- Standard assignment

654 Operating buttons on the BKE for release actuations
- Standard assignment

10.2 Indicator lights on the BKE „652“

Position	Indicator light	LED condition	Description
660	Superstructure engine monitoring	Yellow:	Engine preheating active
		Yellow blinking (slow)	Engine ready to start
		Yellow blinking (fast)	Engine preheating Error / problem
		Off:	Engine is running (after engine has been started)
		Red:	The engine is running, the alternator does not charge
661	Engine monitoring chassis	**Note:**	Indicator light **not** assigned!
662	Central lubrication	Yellow + red (orange)	Functional readiness (shown after engine start for 1.5 s)
		Yellow:	Lubrication active
		Red:	Error / problem
		Off:	Central lubrication not active
663	Pinning tele / cylinder	Yellow	Unpin cylinder
		Green	Tele unpinned
664	Cylinder in position	Yellow	Gripper in position

10.3 Operating buttons on the BKE „653“

Note

► With the LEDs in the operating buttons, the operating conditions and problems can be recognized quickly and reliably by the crane driver.

LWE/LTR 1100-009/25105-02-02/en

copyright © Liebherr-Werk Ehingen GmbH 2023

Position	Key	Function	LED	Description
670		„On“	–	Clean the window: By pressing and holding the „Front“ or „Roof“ button
	Front window washer system		**Note:**	After releasing the „Front“ or „Roof“ button, three additional wipe movements are carried out before the wiper blades return to their original position.
671		„Off“	–	By releasing the „Front“ or „Roof“ button
	Window washer system Roof			
672			**Note:**	There are three different wipe stages.
	Front window wiper			1. Wiper „On“: Continuous operation 2. Intermittent 1: Wipe with long pauses 3. Intermittent 2: Wipe with short pauses 4. Wiper „Off“
673				
	Window wiper, roof			Every time the „Front“ or „Roof“ button is pressed, the wipe stages change incrementally
		„On“	Lights up	By pressing the „Front“ or „Roof“ button
		„Off“	Off	By pressing the button „Front“ or „Roof“ longer than one second until a „beep“ sounds **or** By pressing the button „Front“ or „Roof“ until the LED is off **or** Ignition „Off“

LWE/LTR 1100-009/25105-02-02/en

copyright © Liebherr-Werk Ehingen GmbH 2023

Position	Key	Function	LED	Description
674	Interior light cab			**Note**: The interior lighting can also be turned on when the ignition is „off“, by pressing the button longer than 1 s.
		„On“ (100 %)	–	By opening the door **or** By pressing the button
		Dim	–	There are three different dimmer stages: 1. 75 % 2. 50 % 3. 25 % 4. „Interior light Off“ When the interior light is turned on: Each time the button is pressed, the brightness is reduced incrementally.
		„Off“	–	By pressing the button for longer than one second **or** By pressing the button until the lighting turns „Off“ **or** If the following conditions are present simultaneously for longer than 30 s: - The driver’s seat is not occupied - The door is closed - The engine is „Off“
679	Airplane warning			**Note**: The airplane warning can also be actuated when the ignition is „Off“, by pressing the button longer than 1 s.
		„Off“	Off	By pressing the button
		„On“	Lights up	By pressing the button
		„On“	Blinks	Error / problem
680	Crawler operation	„Off“	Off	By pressing the button
		„On“	Lights up	Crawler operation is turned on.
		„On“	Blinks	Error / problem
681	Rapid gear „crawlers“	„Off“	Off	By pressing the button
		„On“	Lights up	Rapid gear for crawler operation is turned on
		„On“	Blinks	Error / problem

LWE/LTR 1100-009/25105-02-02/en

copyright © Liebherr-Werk Ehingen GmbH 2023

Position	Key	Function	LED	Description
682	Floodlight on front of turntable	„Off“	Off	By pressing the button
		„On“	Lights up	By pressing the button
		„On“	Blinks	Error / problem
683	Floodlight on rear of turntable	„Off“	Off	By pressing the button
		„On“	Lights up	By pressing the button
		„On“	Blinks	Error / problem
684	Floodlight on turntable side	„Off“	Off	Button **not** assigned, **no function**!
		„On“	Lights up	Button **not** assigned, **no function**!
		„On“	Blinks	Error / problem
685	Telescopic boom head floodlight	„Off“	Off	By pressing the button
		„On“	Lights up	By pressing the button
		„On“	Blinks	Error / problem
686	Low beam	„Off“	Off	By pressing the button
		„On“	Lights up	Button **not** assigned, **no function**!
		„On“	Blinks	Transmission error to chassis
687	Parking light	„Off“	Off	By pressing the button
		„On“	Lights up	Button **not** assigned, **no function**!
		„On“	Blinks	Transmission error to chassis
688	Floodlight camera*****	„Off“	Off	By pressing the button
		„On“	Lights up	By pressing the button
		„On“	Blinks	Error / problem

LWE/LTR 1100-009/25105-02-02/en

copyright © Liebherr-Werk Ehingen GmbH 2023

Position	Key	Function	LED	Description
695	Crawler „Parallel control“	„Off“	Off	By pressing the button
		„On“	Lights up	Parallel control for crawler operation is turned on
		„On“	Blinks	Error / problem

10.4 Operating buttons on the BKE for release actuations „654“

Note

- ► The following functions require the activation of the „release button“.
- ► The „release button“ is active for 30 s. If an operating button is pressed during this time, the release time is reset to 30 s. The release stops after 30 s.
- ► A function is triggered by activation of the „release button“ and then pressing the corresponding operating button.
- ► For the listed key combinations, hold the corresponding operating button until the desired end position is reached.

Position	Key combination	Function	LED	Function
675	Release button			**Note**: After pressing the release button, the functions, which require a release can be activated. The release is indicated by the green LED on the release button.
		„On“	Lights up	Press the release button
		„Off“	Off	By pressing the button **or** As long as no button is pressed, which requires a release: Automatically after 30 s
676	Extend the step	„On“		Activate „release button“ and press „Extend step“ button
677	Retract the step	„On“		Activate „release button“ and press „Retract step“ button
688	Unpin the turntable lock	„Off“	Off	Function inactive
		„On“	Blinks slowly	The unpinning procedure „runs“
		„On“	Blinks fast	Error / problem
		„On“	Lights up	The „top“ end position has been reached, an acoustic signal will sound when the end position is reached

LWE/LTR 1100-009/25105-02-02/en

copyright © Liebherr-Werk Ehingen GmbH 2023

Position	Key combination	Function	LED	Function
689	Pin the turntable lock	„Off“	Off	Function inactive
		„On“	Blinks slowly	The pinning procedure „is running“
		„On“	Blinks fast	Error / problem
		„On“	Lights up	The „bottom“ end position has been reached, an acoustic signal will sound when the end position is reached
692	Tilting the cab upward	„Off“	Off	Function inactive
		„On“	Blinks	Error / problem
		„On“	Lights up	The cab is raised
693	Tilting the cab downward	„Off“	Off	Function inactive
		„On“	Blinks	Error / problem
		„On“	Lights up	The cab is lowered

LWE/LTR 1100-009/25105-02-02/en

copyright © Liebherr-Werk Ehingen GmbH 2023

4.02 LICCON computer system

1	General	2
2	System start of the LICCON computer system	4
3	Operating elements of the LICCON computer system	5
4	The set up program	7
5	Crane operation program	15
6	The Telescoping program	65
7	The working range limitation program*	74
8	Speed reduction master switch	78
9	Setting the operating mode of the slewing gear	82
10	Track width monitoring without shut-off of crane movement	84
11	Track width monitoring with shut off of crane movement*	85
12	ECO-Mode	88
13	Power-save mode and Stand-by mode in the LICCON computer system	94

LWE/LTR 1100-009/25105-02-02/en

copyright © Liebherr-Werk Ehingen GmbH 2023

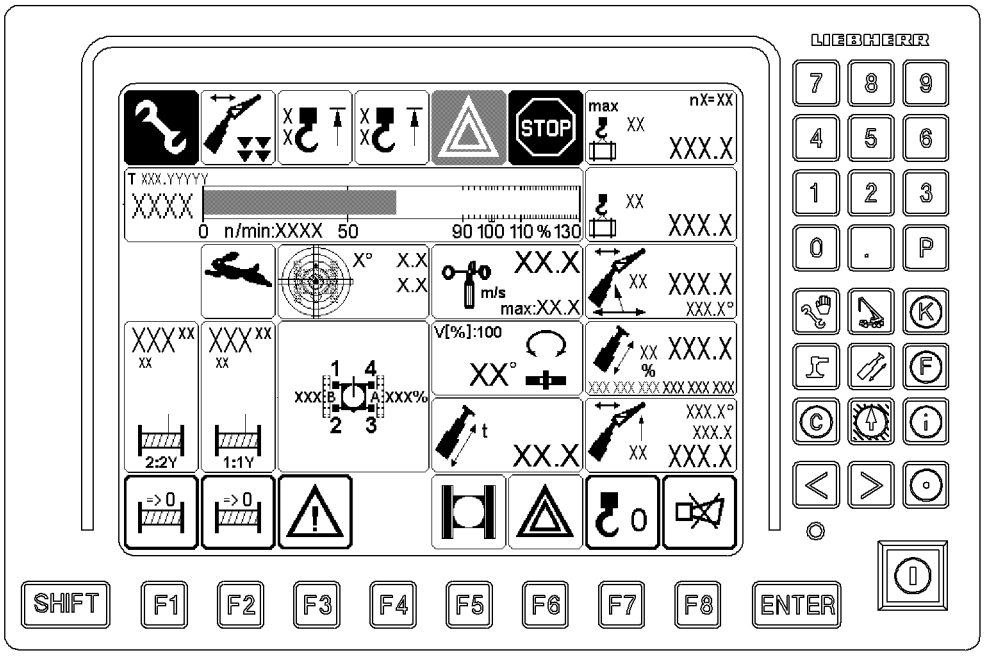

Fig.122533: Exemplary illustration of displays in a LICCON computer system program

1 General

Note

- ► The illustrations and monitor illustrations in this chapter are only examples.
- ► The numerical values in the individual icons and charts do not have to necessarily match the crane exactly.
- ► Numbers and letters can be replaced by place holders.
- ► The display and assignment of the icons can deviate, depending on the set up configuration, operating status and configuration of the crane.
- ► In addition, many of the illustrations show the maximum configuration of the LICCON monitor with icons.
- ► In crane operation, an identical display will **not** appear on the LICCON monitor.

The LICCON computer system is a computer system for controlling and monitoring mobile and crawler cranes. In addition to the use of overload protection and load capacity display there are a number of application programs that can be used for controlling and monitoring the crane movements.

The electrical and electronic components are linked via data bus transmission technology (Liebherr System Bus = LSB).

1.1 Overload protection

The overload protection includes limiters and displays (for example load bearing capacity displays), which also alert to danger conditions via acoustic and optical warning signals.

The computer controlled part of the overload protection is called the LICCON overload protection. The LICCON overload protection is set by entering the set up configuration in the LICCON computer system.

The LICCON overload protection works, among others, on the principle of comparing the current and actual load with the maximum load according to the load chart and reeving.

LWE/LTR 1100-009/25105-02-02/en

copyright © Liebherr-Werk Ehingen GmbH 2023

1.1.1 Acoustic and optical warning signals

The crane is equipped with acoustical and optical warning device to warn crane operator, auxiliary personnel and any person nearby.

Overview of acoustic / optical warnings, see Crane operating instructions, chapter 4.20.

1.1.2 Actual load

The actual load is determined by recording changing dimensions, the set up configuration and situational influences.

The **load on the crane** results from the load momentum, boom momentum as well as environmental and mechanical influences. The occurring moments and forces are measured and processed by the LICCON computer system.

The **load momentum** results from load and boom radius. The load includes load, fastening equipment and hook block / load hook. The boom radius is calculated with aid of the angle sensor information (boom angle) and the length of the boom system. This also takes into account the boom flexation due to its own weight and the weight of the load.

The **boom momentum** is calculated from the length of the boom system, the crane data (boom weights) and angle sensor information (boom angle).

Environmental and mechanical influences are recorded, determined and taken into account individually.

1.1.3 Maximum load according to load chart and reeving

The crane data such as load charts (also called load capacity charts), boom weights and geometry data are stored in the central data memory of the LICCON computer system.

The *maximum load according to the load chart and reeving* is constantly determined, based on the load charts, for the set up configuration, the calculated boom radius and additional influences.

1.1.4 Comparison

The actual load and the *maximum load according to the load chart and reeving* are compared. When they approach the specified limit, an advance warning is issued by the overload protection. If this limit is exceeded, the overload protection turns the load moment increasing crane movements off.

1.2 Error messages

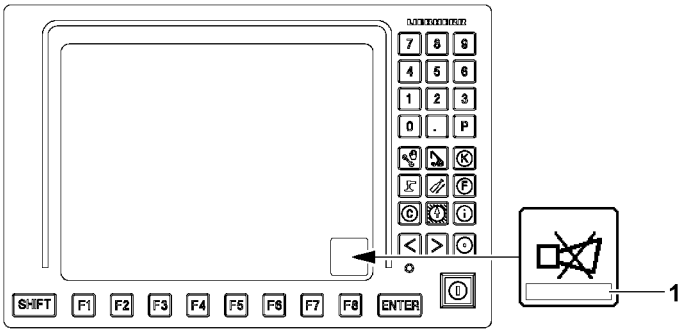

Fig.121805: Display location Error message

The LICCON computer system monitors the crane permanently for operating and system errors.

If an operating error or system error occurs, an error code is generated and issued as an error message. Error messages **1** appear on a fixed display location in the *horn* icon of the LICCON monitor.

LWE/LTR 1100-009/25105-02-02/en

copyright © Liebherr-Werk Ehingen GmbH 2023

Note
- ► Always pay attention to error messages **1**.
- ► For procedure in case of error messages, see Diagnostics manual and the respective chapter in the Crane operating instructions.

2 System start of the LICCON computer system

There are two operating modes for the LICCON computer system:
- The LICCON computer system in normal mode (crane engine turned on).
- The LICCON computer system in stand-by mode (crane engine turned off).

Starting in normal mode:
- System start of LICCON computer system in connection with a started crane engine.

Starting in stand-by mode:
- See section „Power-Save and Stand-by mode in the LICCON computer system“

2.1 LICCON monitor at system start

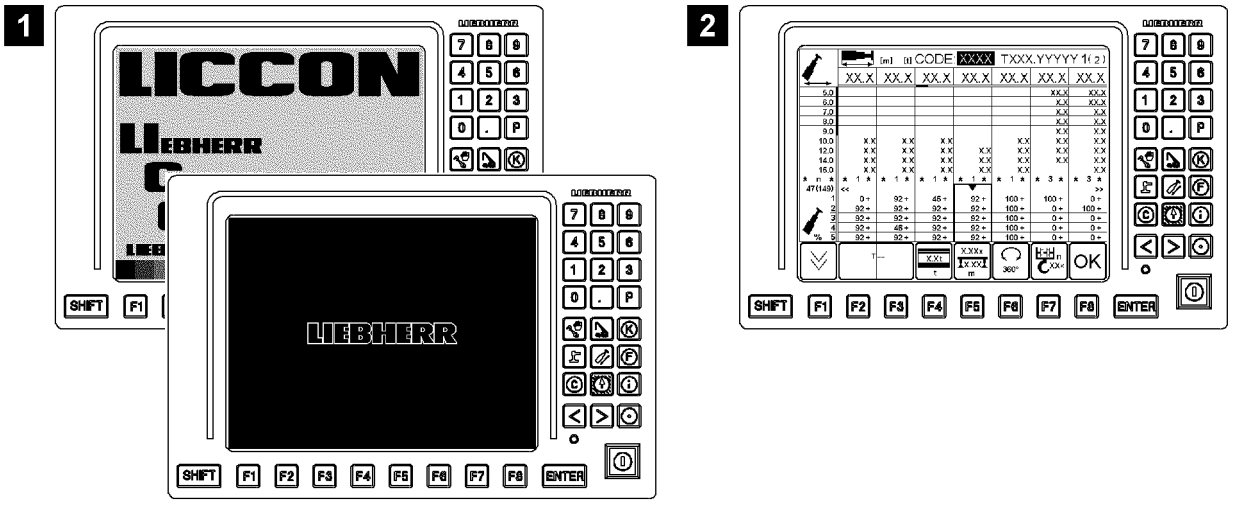

Fig.156208: Self test / set up screen after completed self test

At the beginning of the self test, the start screen appears, see sample illustration **1**.

When the last set up configuration that was set appears (see example illustration **2**), then system start on the LICCON monitor is completed.

Note
Error during the system start of the LICCON computer system.
If an error is detected during the system start, an error message appears on the LICCON monitor .
- ► Consult Liebherr Service if an error occurs during system start.

The existing set up configuration or a newly entered set up configuration must be confirmed, see section „The set up program“. Subsequently one can work with the other programs.

LWE/LTR 1100-009/25105-02-02/en

copyright © Liebherr-Werk Ehingen GmbH 2023

3 Operating elements of the LICCON computer system

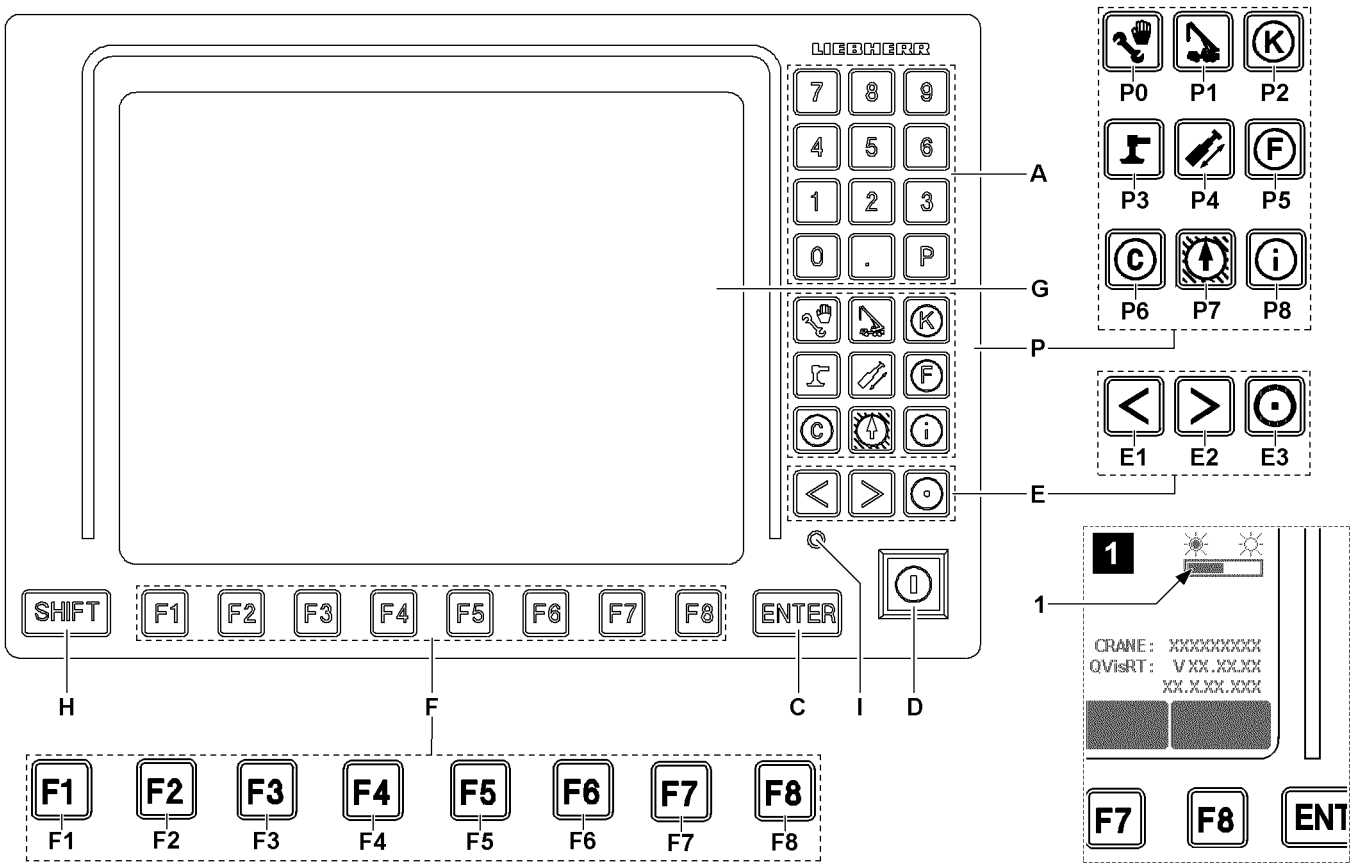

Fig.121803: LICCON computer system operating elements

A Keypad
- Function is program dependent

P Program keys
- Selection of the individual LICCON programs

P0 Set up
- Call up the Set up program

P1 Crane operation
- Call up the crane operation program

P2 -
- Program key not assigned.

P3 -
- Program key not assigned.

P4 Telescoping
- Call up the Telescoping program
  Note: Only for crane types with the TELEMATIK telescoping system.

P5 Job planner*
- Call up the Job Planner* program
  Note: Only available for certain crane types.

P6 -
- Program key not assigned.

P7 Working range limitation*
- Call up the Working range limitation* program

P8 BSE test system
- Call up the BSE test system program

LWE/LTR 1100-009/25105-02-02/en

copyright © Liebherr-Werk Ehingen GmbH 2023

- **Note:** For a description of the BSE test system program, see the Diagnostics manual.

C **ENTER** key
- Confirmation of changes in the running program

D Set up key

Has the following function only in certain programs:
- Zero position (not actuated):
  Normal operation.
- Touching:
  Special functions LICCON overload protection released, see section „Special functions LICCON overload protection“
  Special function TELEMATIK Emergency operation* released, see section „Special function TELEMATIK emergency operation“

E Special function keys
- Functions of the special function keys are program-dependent and are further explained in the description of the individual LICCON programs.
- **Monitor brightness adjustment:**
  - Press **E3** (hold down) and **E1**: 6-stage night design.
  - Press **E3** (hold down) and **E2**: Brightness setting in 7 stages
    The brightness adjustment can be made from all available programs (for example: Set up, Crane operation).

Note
Automatic brightness adjustment of the LICCON monitor
The brightness of the LICCON monitor can be matched to the existing light conditions automatically or manually.
The current brightness setting of the LICCON monitor can be seen via the bar display **1** on the starting screen of the BSE test system program (illustration **1**)
► Press the button BSE test system **P8** to call up the BSE test system program.
► With the *medium brightness* brightness setting the automatic brightness adjustment is **activated.**
► In brightness setting *lowest brightness* the automatic brightness adjustment is **inactive.**
► In brightness setting *highest brightness* the automatic brightness adjustment is **inactive.**

F Function keys
- The function keys should always be viewed in conjunction with the function key icon line displayed on the display **G**.

G Display
- In the display appears a program-dependent operating screen

H **SHIFT** key
- Second-level key assignments, for example Supervisory function

I LED display
- Indicator light for the supply voltage of the monitor

LWE/LTR 1100-009/25105-02-02/en

copyright © Liebherr-Werk Ehingen GmbH 2023

4 The set up program

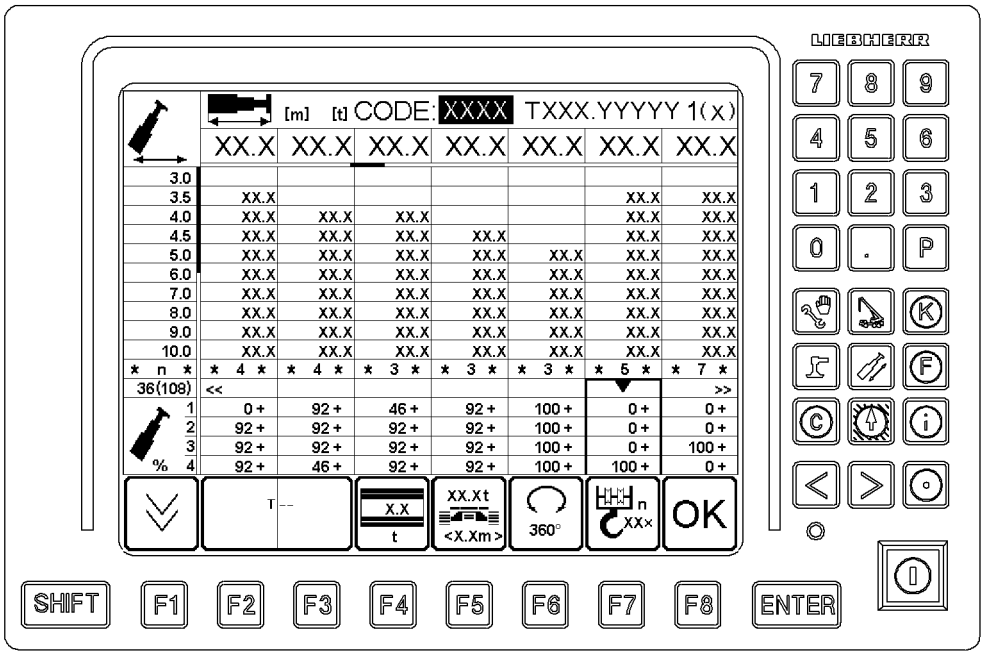

Fig.122537: Exemplary illustration of display in the Set up program

After turning the LICCON computer system on and after correct boot up, the Set up program appears automatically.

Note
Adjustment and display of set up configuration and reeving.
► Normally, after booting up the LICCON computer system, the most recently used set up configuration and the reeving used at that time will be automatically set and displayed.

You can see the programmed load charts in the Set up program.

You can set the desired operating mode and the desired set up configuration for the crane in the Configuration program to be able to operate the crane.

4.1 Setting the operating mode and set up configuration

The crane operator can select the operating mode and the set up configuration using the function keys or by entering a short code.

4.1.1 Setting the operating mode and set up configuration via the function keys

The function keys are explained in section „Function key line (Set up)“ in this chapter.

► Select the respective function keys.
► Press the **ENTER** key to confirm and accept the settings.

Result:

– The data of the selected load chart can be viewed.

4.1.2 Setting the operating mode and set up configuration with the short code

The function keys are explained in section „Function key line (Set up)“ in this chapter.

► Enter the short code with the keypad on the LICCON monitor.
► Press the **ENTER** key to confirm and accept the settings.

LWE/LTR 1100-009/25105-02-02/en

copyright © Liebherr-Werk Ehingen GmbH 2023

Result:

– The data of the selected load chart can be viewed.

4.2 Display areas in the Set up program

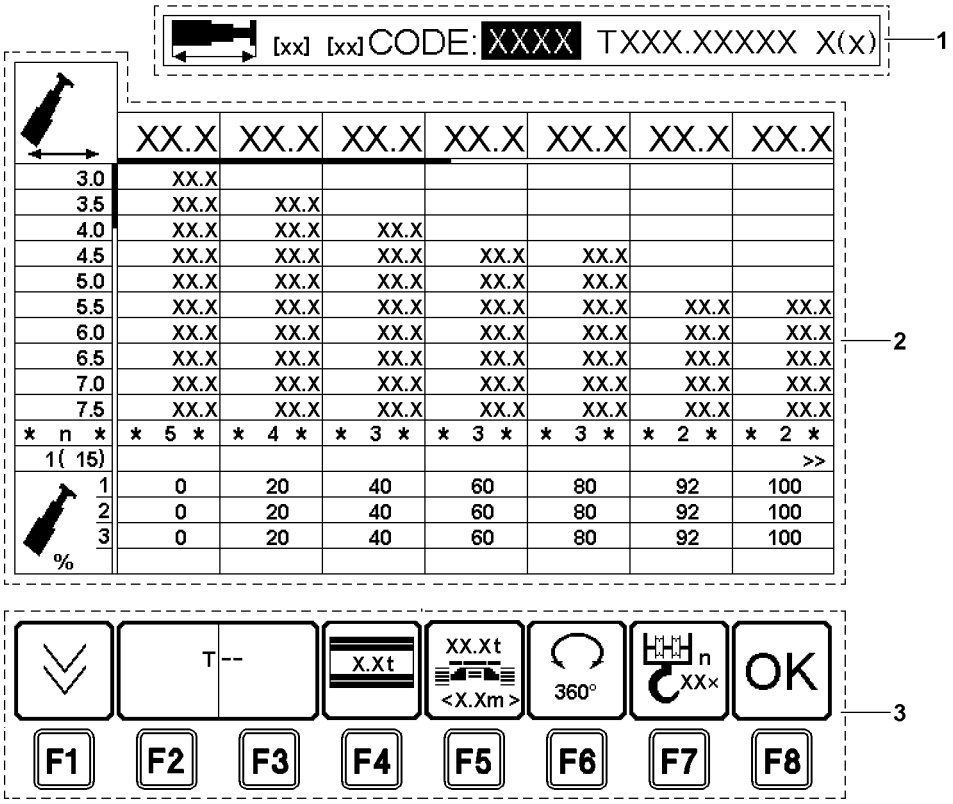

Fig.122534: Display areas in the Set up program

The monitor is divided into three areas in the set up program:
– **1** General information line
– **2** Display area of load chart values
– **3** Function key line (set up)

4.2.1 General information line

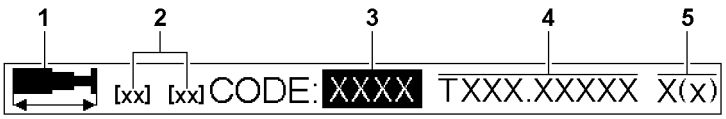

Fig.121819: General information line

1 *Telescopic boom length* icon
- **Note:** The icon is identical for all operating modes.

2 Abbreviations
- For the programmed length units (LE) and weight units (GE)
  Possible length units are [m] and [ft]
  Possible weight units are [t] and [lbs]

3 4-digit short code
- Stands next to the word **CODE**

LWE/LTR 1100-009/25105-02-02/en

copyright © Liebherr-Werk Ehingen GmbH 2023

- Each short code uniquely identifies a crane set up configuration. The valid set up configuration and their associated short code numbers for the crane can be found in the load chart manual of the crane.
- If, via the function key line:
  - An invalid set up configuration is selected, then the „CODE 0000“ is shown in white on a red background.
  - A valid set up configuration is selected, then the short code is shown in white on a blue background. The values are entered into the load value field only after pressing the **ENTER** key.

4 Organization number
- For internal Liebherr load chart administration

5 Page counter
- The number of the displayed page of this load chart is located in front of the parenthesis
- The total number of pages in this load chart is in parentheses

4.2.2 Display areas of load chart values

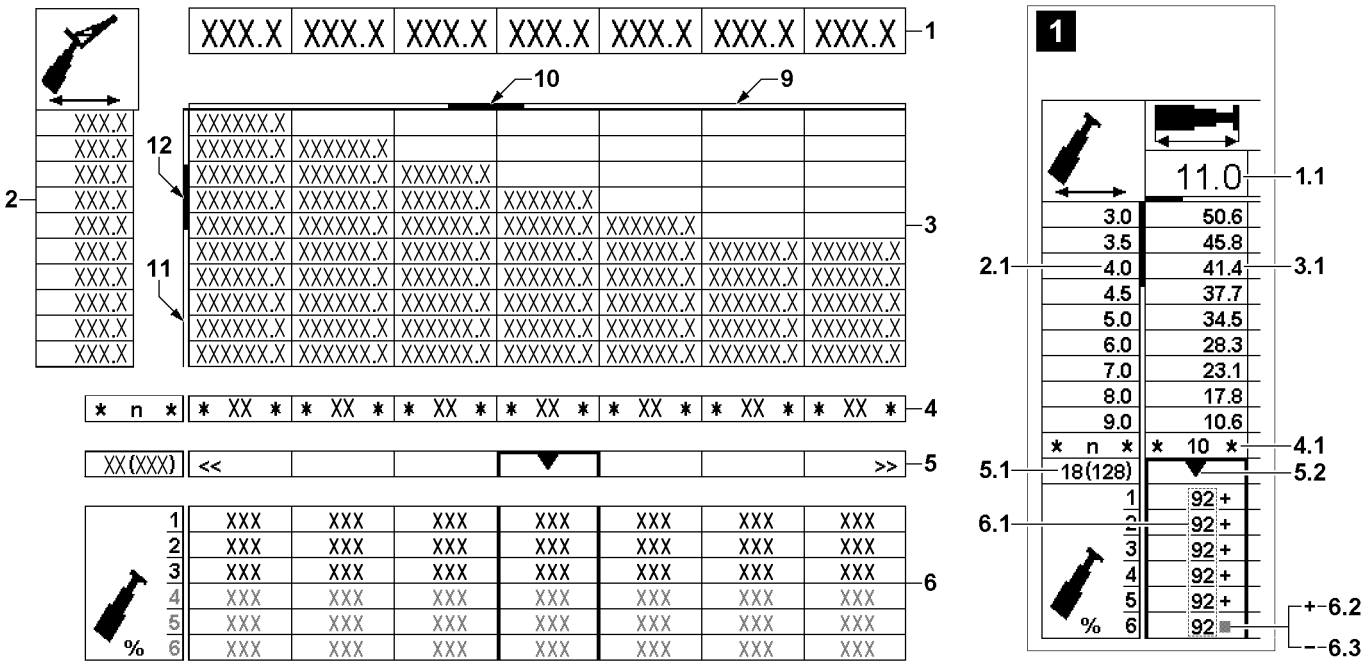

Fig.121820: Display areas of load chart values

1 Telescopic boom lengths
- In [m] or [ft]
- Maximum of 7 columns per display page
- Displayed as the horizontal axis of the load value field

2 *Boom radius* icon
- Operating mode dependent
- In [m] or [ft]
- Maximum 10 lines of radius values
- Displayed as the vertical axis of the load value field

3 Load value field
- Columns under the telescopic boom lengths and in the lines to the right of the radius values
- Load values depending on boom length and boom radius

4 Hoist rope reeving number
- * n *

LWE/LTR 1100-009/25105-02-02/en

copyright © Liebherr-Werk Ehingen GmbH 2023

n = Reeving number of the hoist rope between the boom head and hook block, in order to be able to lift the maximum load in the corresponding load chart column
Note: If an exclamation mark („**!**“) is next to the reeving number, then an auxiliary device is required for at least one load value in the column, see Crane operating instructions, chapter 4.06 / 4.15.

5 *Special displays* line
- If a load chart consists of more than seven columns, it cannot be fully displayed because of the size of the monitor. In that case, marking arrows in the first or the seventh field indicate that there are additional columns to the left or right of the displayed chart. Press the button **E1** or button **E2** to switch to the left or right.
  As supporting information, the currently selected column number and the number of columns in the chart are shown, for example 18(128) means the 18th of 128 columns.

6 Extension condition of telescopic sections
- In percent [%]
- In the first column is a boom icon
  Next to that are the lines for the extension condition of the telescopic sections. The number in the icon column describes the respective telescopic section. The value in the boom length column displays the extension condition of the telescope in percentages, which must be maintained for the corresponding boom length.
- **Only for crane types with the TELEMATIK telescoping system**:
  The status indicator „**-**“ next to the percentage extension status value means that the telescope can be telescoped to the percentage extension condition value under load (according to the load chart).
  The status indicator „**+**“ next to the percentage extension condition values means that the telescope must be pinned.

9 Horizontal orientation display
- The horizontal orientation display **9** shows the crane driver by the display element **10** (color red), where he is in the load chart in a horizontal direction.
  Note: If the display element **10** in the horizontal orientation display **9** is displayed on the left edge, then it is in the first column of page 1 in the load chart of the set operating mode.

11 Vertical orientation display
- The vertical orientation display **11** shows the crane driver by the display element **12** (color red), where he is in the load chart in a vertical direction.
  Note: If the display element **12** in the vertical orientation display **11** is displayed at the top, then it is in the first row of the maximum number of available rows in the load chart of the set operating mode.

Note
Example illustration **1**:
► Column for Telescopic boom length **1.1** for 11.0 m is selected.
► With a boom radius **2.1** of 4.0 m a maximum load **3.1** of 41.4 t is possible. Reeving **4.1** of n=10 is required for this.
► As column number **5.1** column 18 of 128 available columns is called up.
► All telescopes require for that the extension condition **6.1** of 92 %.

Only for crane types with the TELEMATIK telescoping system:
► If the status display **6.2** „**+**“ appears behind the value for the extension condition **6.1**, then the telescope must be pinned.
► If the status display **6.3** „**-**“ appears behind the value for the extension condition **6.1**, then the telescope does not have to be pinned.

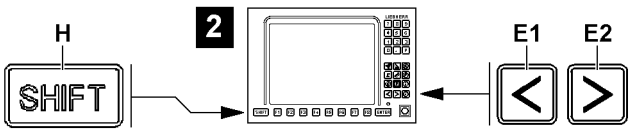

Fig.121821: Paging within the load chart columns

LWE/LTR 1100-009/25105-02-02/en

copyright © Liebherr-Werk Ehingen GmbH 2023

Note

Paging within the load chart columns, illustration **2**

- ► By pressing the special function key **E1** or special function key **E2** once, page by one load chart column to the left or right.
- ► By pressing special function key **E1** or special function key **E2** twice in quick succession, you can browse left or right by seven load chart columns (equals the display area of the LICCON monitor).
- ► Press the **SHIFT** button **H** (hold down) and the special function key **E1**: Jump to the first column in the load chart.
- ► Press the **SHIFT** button **H** (hold down) and the special function key **E2**: Jump to last column in load chart.

4.2.3 Function key line (Set up)

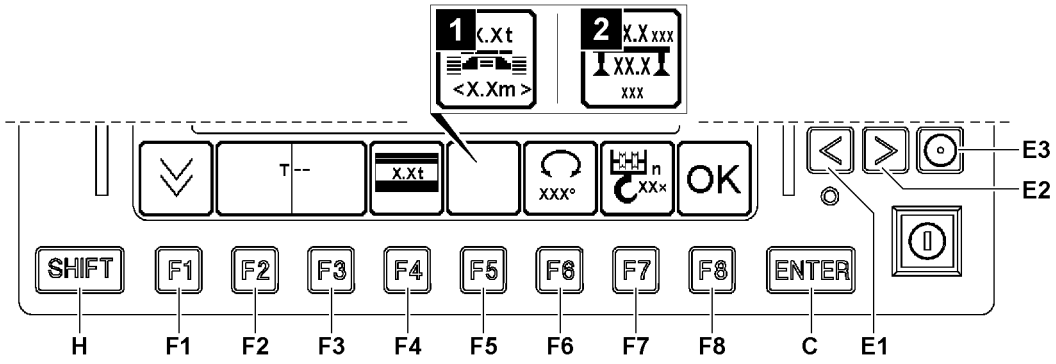

Fig.122535: Function key line in the Set up program

The function key line consists of function keys **F1** to **F8** and the icon line above them. The function keys correspond to the various function key icons above them.

Various functions are indicated by the function key icons, or they may refer to changes of operating mode and crane set up configuration.

Depending on the crane type and set up configuration, fewer function key icons may be present.

Not all function keys have icons / functions assigned to them. This depends on the program selection.

Pressing a function key can change the appearance of the icon above, its meaning, or its textual content.

Note

- ► By simultaneously pressing the special function key **E3** and the function key **F3** it is possible to switch by groups through the accessories. This allows quicker access to the operating mode required for crane application.
- ► See also description „**E3** and **F3**“ as well as „**E3** and **SHIFT** and **F3**“.

F1 Vertical paging

- Depending on the size of the monitor, up to 10 load chart lines can be displayed at once. If a chart consists of more than 10 lines, then the display is spread over several pages.
- Press the button to show the next page of the load chart - the page counter counts up one page.
- The function key icons always show the functions that are activated by pressing a button.
- The function is called up after pressing a button. In addition, the icon above it can change its display, its meaning or its text.

SHIFT and **F1**

- Press the button to show the previous page of the load chart - the page counter counts down one page.

LWE/LTR 1100-009/25105-02-02/en

copyright © Liebherr-Werk Ehingen GmbH 2023

F2 Main geometry status
- Options for setting the different main geometry conditions of the crane (if available). The types are described by abbreviations and length data in the icon.
  Example: „T“ for Telescopic boom

SHIFT and **F2**
- Previous main geometry condition (if present)

F3 Accessories
- Options for selecting the different accessory geometry conditions of the crane (if available). The types are described using abbreviations, angle and length data in the icon.
  Example: „TK“ for Crane operation with mechanically adjustable folding jib
- **Note:** Pressing the function key **F2** and / or the function key **F3** deletes all operating mode and configuration dependent data from the monitor and sets the short code in the general information line to a new value. The „CODE 0000“ is displayed in white on a red background if the entered set up configuration for function keys **F4**, **F5** and / or **F6** does not exist or has not been programmed. For the existing set up configuration, the short code, more than 0, appears in white on a blue background.
- **Operating mode dependent data:**
  - Icons
  - Length units and weight units
  - Load chart organization number
  - Telescopic boom lengths
  - Percentage extension condition of telescopic sections, with status indicator if applicable
- **Set up dependent data:**
  - Radius values in length units
  - Load values in weight units

SHIFT and **F3**
- Previous accessory geometry condition

E3 and **F3**
- Select the accessories in groups forward („K*****“, „HK*****“) by pressing key combination **E3** (hold down) and then pressing function key **F3**
  Note: After actuation, the first accessory configuration for the next accessory group is set.

E3 and **SHIFT** and **F3**
- By pressing the key combination **E3** and **SHIFT** (hold down both) and then pressing the function key **F3**, the accessories can be selected in groups in reverse („HK*****“, „K*****“).
  Note: After actuation, the first accessory configuration for the previous accessory group is set.

F4 Counterweight
- Adjustment option for the current counterweight, which must be on the superstructure in order to achieve the values in the current chart. When pressing a key, the following icon appears with additional text in the counterweight icon.
- In addition only for crane types with an adjustable counterweight radius:
  Adjustment option for the corresponding counterweight radius that must be set on the superstructure in order to reach the value in the current chart. When pressing a key, the following icon appears with additional text in the counterweight icon.

SHIFT and **F4**
- Set the previous counterweight

F5 Crane chassis set up configuration
- When working with the present load chart, then the set up configuration of the crane chassis must match.
- Crawler travel gear, illustration **1**: Setting possibility for the extension status of the cross carriers, the track width of the crawler and the current central ballast.
- Support (only for crane types with extra load charts on support), illustration **2**: Setting possibility for the support width and the current central ballast.

SHIFT and **F5**
- Previous crane chassis set up configuration

LWE/LTR 1100-009/25105-02-02/en

copyright © Liebherr-Werk Ehingen GmbH 2023

F6 Superstructure slewing range
- Adjustment option for slewing range

Example:
- 360° slewing range: Unlimited turning is possible.
- 0° slewing range: Toward the rear (locked).

SHIFT and **F6**
- Set the previous slewing range

F7 Hoist rope reeving
- Adjustment possibility for the number of hoist rope strands, which are reeved to reach a certain load carrying capacity on the boom.
  The displayed number of hoist rope strands (reeving) in the icon will be increased by one with every keystroke, up to a fixed maximum value for the respective operating mode. After that the counter restarts from a fixed minimum value.
  If the set value is still within the minimum and maximum values when switching to another operating mode within that range, it remains valid. Otherwise it will be set to the minimum value for the new operating mode.
  Note: For certain operating modes, for example THKH the hoist rope reeving is specified and cannot be otherwise set.

SHIFT and **F7**
- Reduce the reeving number by 1

WARNING
Danger of accident due to incorrectly entered set up configuration!
The following prerequisites must be met before pressing the function key *OK* **F8**:
- ► The configuration mode setting must be completed, i.e. a valid short code is displayed and load capacity values are in the chart field.
- ► The external conditions for this set up configuration, if specified, must be fulfilled (e.g. locking the superstructure, hoist rope reeving).
- ► The crawler carriers must be extended to the track width specified in the selected load chart.
- ► If these prerequisites are met, then the *OK* function key **F8** confirms that the selected set up configuration and the selected reeving are correct and transfers the parameters to the Crane operation program.

F8 *OK* function key
- Accept the selected set up configuration and automatic change over in the operating screen.
  Note: Make sure that after switching to the operating screen, the selected set up configuration (short code) and the hoist rope reeving(s) have been accepted correctly.

  If the active set up configuration is to be changed:
  - The utilization bar must be blue.
  - The crane may not be utilized too much (20 % utilization or less, load not heavier than 0.5 t)

LWE/LTR 1100-009/25105-02-02/en

copyright © Liebherr-Werk Ehingen GmbH 2023

4.2.4 Control elements in the set up program

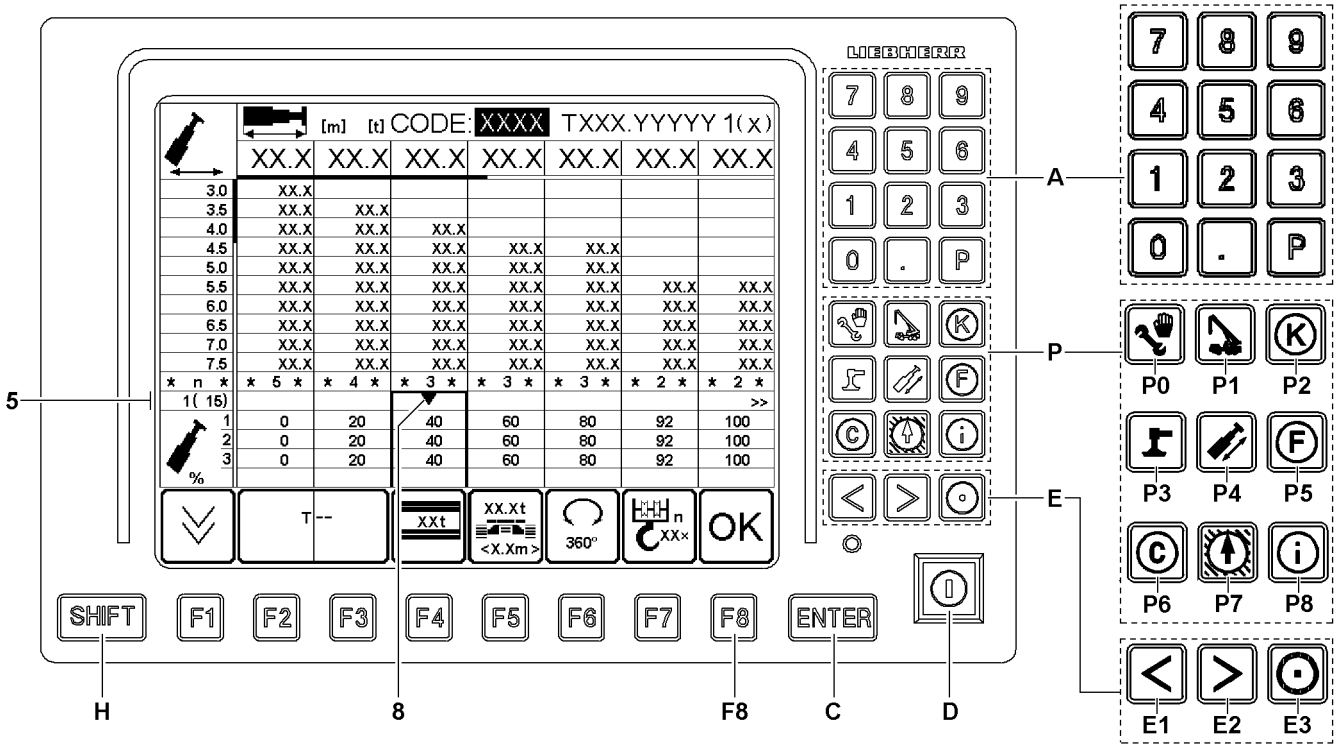

Fig.122536: Control elements in the set up program

A Numeric keypad
- The keys **0** to **9** on the keypad can be used to enter the short code directly into the LICCON monitor. During entry, the short code is displayed in green.
- The key **P** and the key **.** have no function in the Set up program.
- **Note**: Pressing the keypad deletes all operating mode and set up configuration dependent data from the display.

P Program keys
- Selection among the individual programs. The settings in the set up program are discarded and the set up configuration and reeving, which were last confirmed with the function key *OK* **F8** are continued to be used.

C **ENTER** key
- Confirmation of input both for short codes and for any change in the set up configuration using the function keys.
  - **ENTER** after entering the short code searches for the short code in the programmed load charts. If the relevant load chart has been programmed, it is displayed in full. If the relevant load chart has **not** been programmed, the short code is displayed in white on a red background and an acoustic signal from the LICCON monitor is heard.
  - **ENTER** after a changing the operating mode using the function key **F2** and / or the function key **F3** displays the load chart (if the chart exists) plus the short code on the LICCON monitor.
  - **ENTER** after a change in the set up configuration using the function key **F4**, the function key **F5** and the function key **F6**, displays the load chart (if the chart exists) plus the short code on the LICCON monitor.
- **Note:** If no load chart is defined or available for the changed operating mode, then, after pressing the **ENTER** key, the first available set up configuration in this operating mode with the appropriate load chart and short code will be displayed in the set up screen.

D Set up key
- Has no function in the set up program

LWE/LTR 1100-009/25105-02-02/en

copyright © Liebherr-Werk Ehingen GmbH 2023

E Horizontal paging
- The key **E1** and key **E2** only have a function if this is indicated in the line *special displays* **5**.
  If a load chart consists of more than 7 columns, the first display of the set up configuration only shows columns the first seven columns in this line.
  - With the key **E1**, the cursor **8** can be moved to the left.
  - With the key **E2**, the cursor **8** can be moved to the right.

  The double arrow at the right edge of the line points to additional columns in either direction. If the cursor **8** (movement mark) is moved to an edge marked with arrows, then, for example, when pressing the key **E2** again, the chart columns are moved by 3 columns to the left.
- **Note:** By pressing key **E1** or key **E2** twice in quick succession, you can page to the left or right by 7 load chart columns (equals the display area of the LICCON monitor).

H **SHIFT** key
- **SHIFT** (hold down) and **E1**: Jump to the first column in the load chart.
- **SHIFT** (hold down) and **E2**: Jump to last column in load chart.

5 Crane operation program

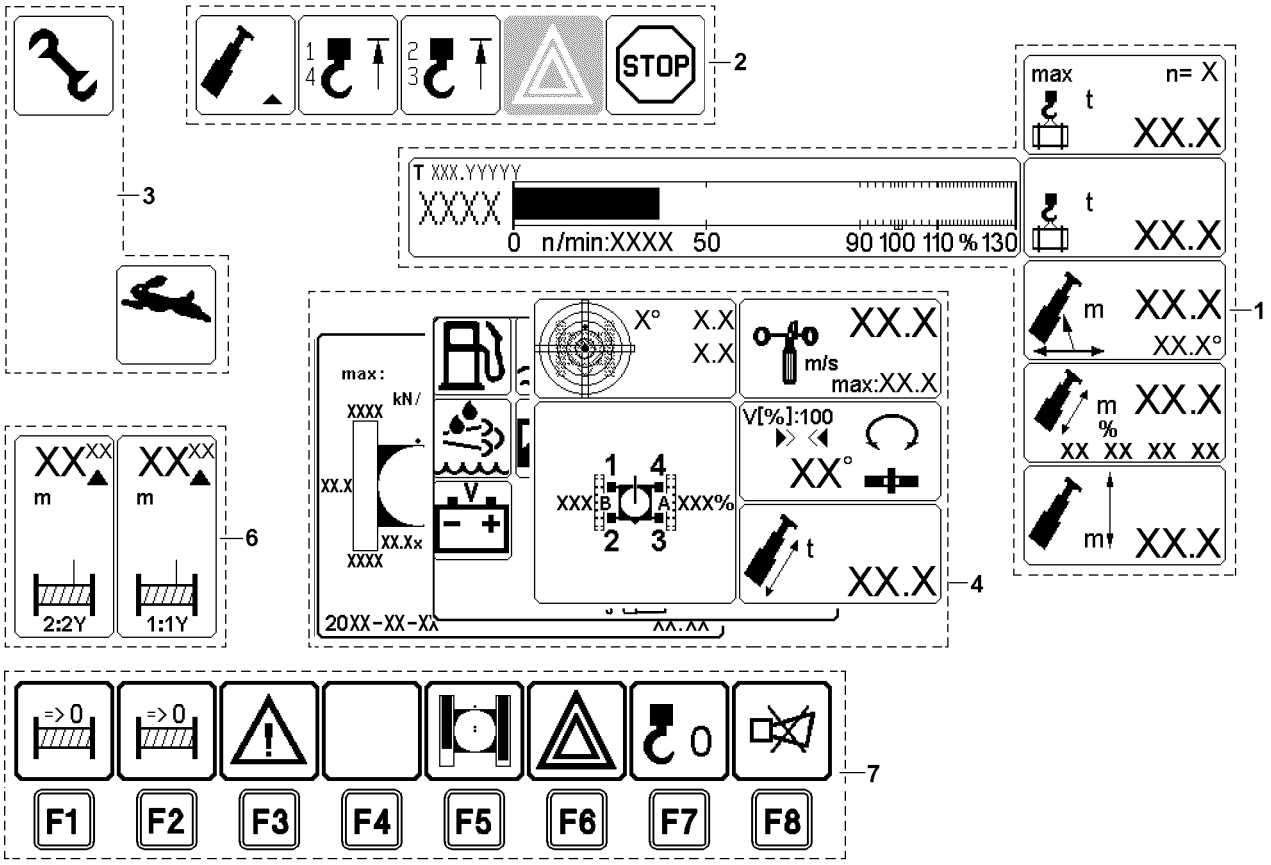

Fig.122528: Exemplary illustration of displays in the Crane operation program

The Crane operation LICCON program assists the crane driver by clearly displaying the data needed for crane operation on the monitor. An acoustic signal accompanies all critical displays. Depending on the equipment, a range of other icons may also be turned on as additional displays, either as required by the crane operator or automatically in the event of a problem.

It also alerts the crane operator to imminent overload conditions. In the event of overload and many error conditions, which could be hazardous, the system shuts off.

LWE/LTR 1100-009/25105-02-02/en

copyright © Liebherr-Werk Ehingen GmbH 2023

The monitor is divided into seven areas in the Crane operation program:
- **1** Crane geometry and load information
- **2** Alarm functions
- **3** Special functions
- **4** Monitoring functions
  - Monitoring functions during crane operation
  - Monitoring the surface pressure and center of gravity
  - Monitored auxiliary functions
- **6** Winch display
- **7** Function key line (crane operation)

Note
- ► The monitor illustrations in this chapter are only examples. The display values in the individual icons and charts do not have to necessarily match the crane exactly. The configuration of the LIC-CON monitor with icons is only descriptive.
- ► An identical icon display will **not** appear during crane operation.

5.1 Crane geometry and load information

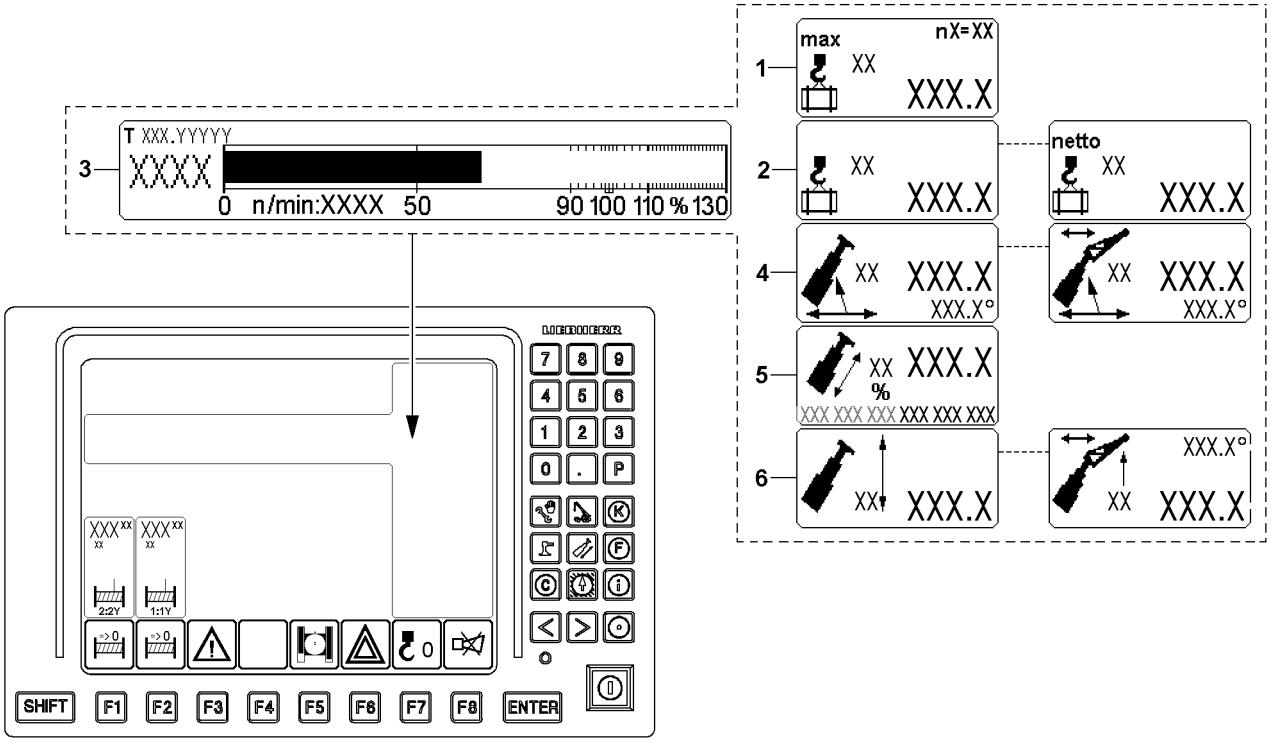

Fig.123733: Crane geometry and load information

Note
- ► The crane illustrations in this section are only examples and are generalized.
- ► They may differ from the crane type and equipment.

The information regarding crane geometry and load involves six icons:

1 Maximum load

2 Actual load / net load
- **Note:** The actual load display can be changed over to the net load display.

3 Utilization bar diagram

LWE/LTR 1100-009/25105-02-02/en

copyright © Liebherr-Werk Ehingen GmbH 2023

4 Boom radius
- **Note:** For crane types with auxiliary boom* the illustration of the icon can change depending on the set up configuration.

5 Boom length

6 Pulley head height
- **Note:** For crane types with auxiliary boom* the illustration of the icon can change depending on the set up configuration.

Note
► A question mark („?“) is shown instead of values when no load chart value can be accessed. Example: The crane is not in the range of the load chart.
► A question mark („?“) is shown instead of values if the value cannot be calculated / determined. Example: A sensor error can be present - pay attention to the error messages.

5.1.1 Maximum load

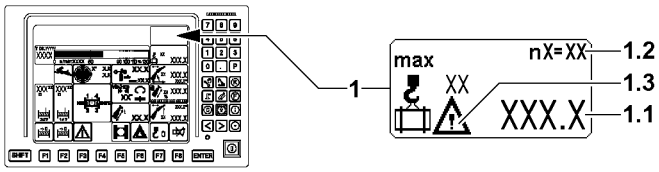

Fig.122529: Display Maximum load

1 *Maximum load* icon
- With text for measurement unit

1.1 Maximum load
- Maximum load according to load chart
- In [t] or [lbs]

1.2 Reeving
- Reeving according to settings from the Set up program

1.3 Warning icon
- When the warning icon **1.3** appears:
  - Check the displays / display values on the LICCON monitor
  - Pay attention to error messages

WARNING
Danger of accident!
► If the warning icon **1.3** appears on the LICCON monitor, crane operation is prohibited.
► Pay attention to the error message: Call up the BSE-Test system and evaluate the error message, see the Diagnostics manual.
► Initiate measures to counteract the warning message and to put the crane in a safe operating condition.

5.1.2 Actual load (current load) / net load

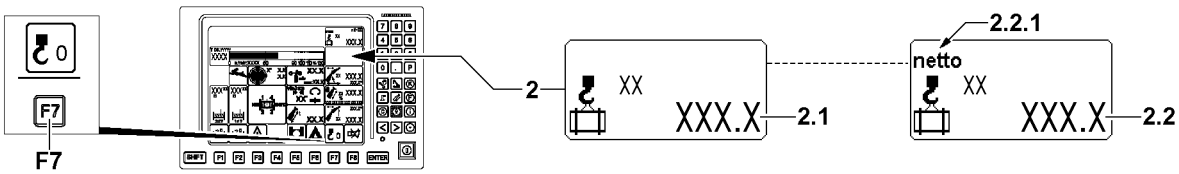

Fig.122530: Display Actual load / net load

2 *Actual load / net load* icon
- With text for MU [t] or [lbs]

copyright © Liebherr-Werk Ehingen GmbH 2023

2.1 Actual load display
- Actual load display = load in [t] or [lbs] that is currently suspended from the boom
- Display of the calculated total load including the weights of the load carrying, load taking on and / or fastening equipment.

2.2 Net load
- Net load display = the actual load display **2.1** can be changed at any time to net load **2.2** (tared) by pressing the function key **F7**.
- After pressing the function key **F7** the display value is set to zero and the word net **2.2.1** is shown.
- As long as net load is set, the icon above the function key **F7** is shown in red.
- If the taring is cancelled, the word net **2.2.1** disappears from the icon and the gross load value is displayed.

  The change to net load is cancelled by each of the following actions:
  - By pressing the function key **F7** again.
  - By telescoping the boom by more than three LE (LE= 1 decimeter or 1/10 ft).
  - By luffing by more than ±4°.
- **Note**: This makes it possible to eliminate the weights of the load handling, load taking on and / or fastening equipment in the display value. The maximum load is not increased / adjusted.

WARNING
Incorrectly determined weight of the load!
Due to operating errors or tolerances, deviations can occur for the displayed values in the *Actual load / net load* icon **2**.
► The actual load display / net load display is no calibrated weighing device.
► Always observe the actual weight of the load in connection with the load charts and the set up configuration of the crane.

5.1.3 Utilization bar diagram (dynamic utilization bar display)

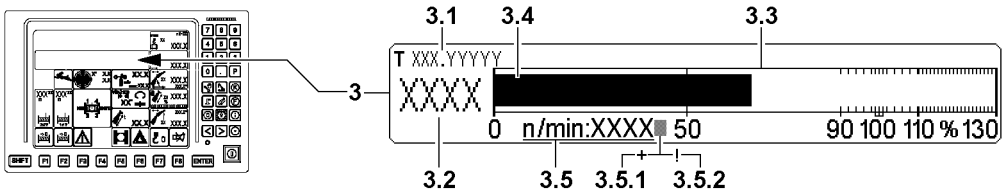

Fig.122531: Utilization bar diagram

3 *Bar diagram of utilization* icon

3.1 Chart names
- Note to the set chart name (chart number) with associated operating mode

3.2 Short code
- Identifies the selected set up configuration

3.3 Utilization scale
- Marking from a utilization of 90 % [1]: **Advance warning**
- Marking at a utilization of 100 % [1]: **STOP shut-off**
- **Note**: 1) Factory settings, observe section „Setting the limit values for the load torque limiter for advance warning and shut-off“

3.4 Crane utilization bar
- Current utilization of crane according to load chart and reeving
- Displayed as bar diagram
- Appears in blue, green, yellow and red, depending on the situation
- Utilization bar **3.4** blue: Utilization in permissible range, set up change of crane in this utilization is permissible
- Utilization bar **3.4** green: Utilization in permissible range

LWE/LTR 1100-009/25105-02-02/en

copyright © Liebherr-Werk Ehingen GmbH 2023

- Utilization bar **3.4** yellow: **Advance warning!** Utilization just before impermissible range
- Utilization bar **3.4** red: **Warning!** Utilization in impermissible range

Utilization of crane according to load chart and reeving		
Current utilization of the crane	=	$\frac{\text{Actual load}}{\text{Maximum load}}$

Note

► The set up configuration of the crane may only be changed if the utilization bar **3.4** is blue or if there is no load on the hook (load hook / hook block).

3.5 Engine rpm
- In revolutions per minute [rpm]
- **NOTICE:**
  If the display is in red, an error is present.
- **Note:** Question marks („?“) instead of a numeric value appear if there is an error in the rpm recording.
  Then the rpm specified by the control for the diesel engine is set for the output regulation of the drives.
  The rpm specified by the control is shown blinking.
  An error message is issued.

3.5.1 Engine rpm lock
- The engine rpm can be locked on the master switch. If the engine rpm has been locked, the „**+**“ sign appears behind the rpm display.

3.5.2 ECO-Mode engine rpm limitation
- The engine rpm can be limited in ECO-Mode, see section „ECO-Mode“. If the engine rpm is limited, the „**!**“ character appears behind the rpm display.

5.1.4 Boom radius

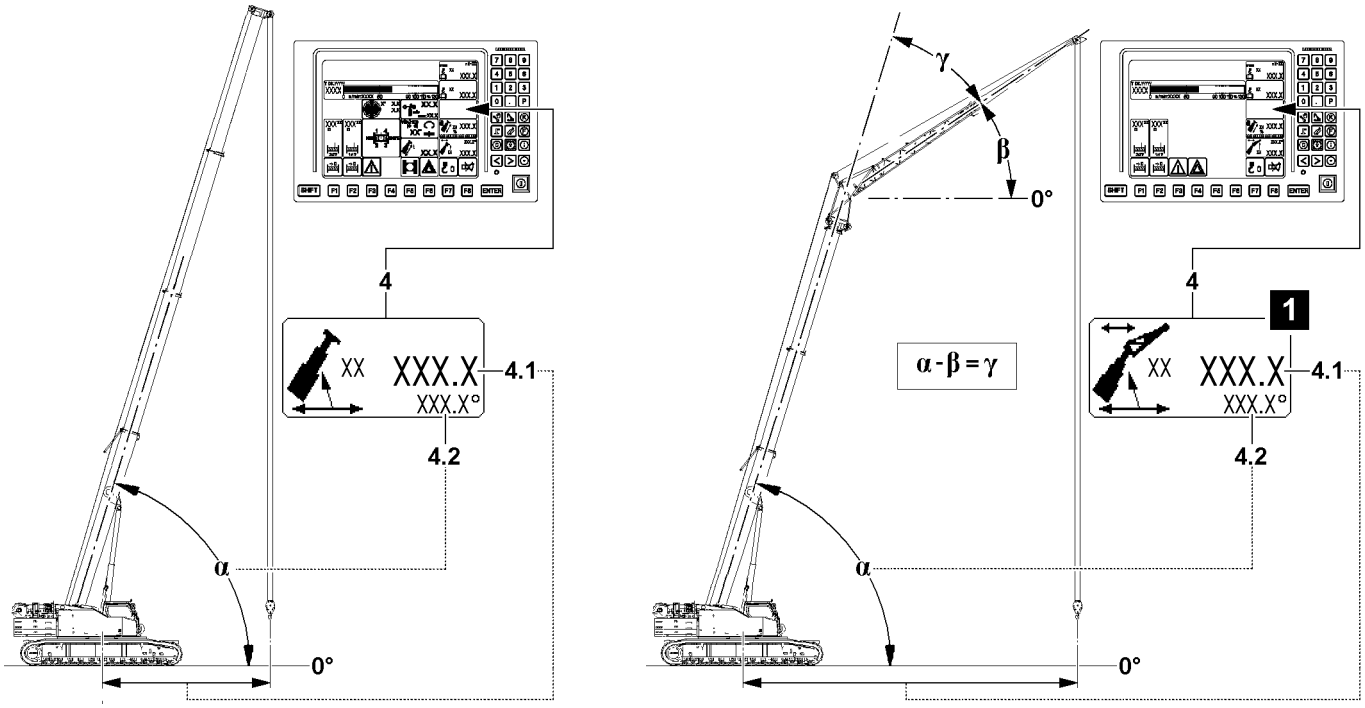

Fig.122526: Boom radius display

LWE/LTR 1100-009/25105-02-02/en

copyright © Liebherr-Werk Ehingen GmbH 2023

Note

► For crane types with an auxiliary boom*, the illustration of the icon can change depending on the set up configuration, see example illustration **1**.

4 *Boom radius* icon

4.1 Boom radius
- In [m] or [ft]
  Denotes the horizontal distance of the load hook from the rotation axis of the crane superstructure. This also takes into account the boom flexation due to its own weight and the suspended weight of the load.

4.2 Main boom angle
- In [°]
- Displayed is the angle of the main boom to the horizontal (angle **α**)

5.1.5 Main boom length

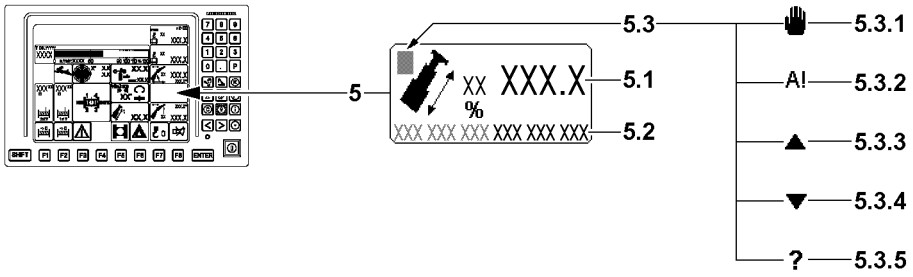

Fig.122532: Main boom length display

5 *Main boom length* icon

5.1 Length of the main boom
- In [m] or [ft]

5.2 Extension conditions of individual telescopic sections
- In [%]
- The extension conditions of telescope 1, telescope 2 etc. are shown from the left to the right.
  Note: Depending on the crane type, up to seven extension conditions can be displayed

5.3 TELEMATIK
- **Note**: Only for crane types with the TELEMATIK telescoping system
- **5.3.1** Manual telescoping active
- **5.3.2** Preselected telescoping target reached
- **5.3.3** Up arrow: Telescope out request
- **5.3.4** Down arrow: Telescope in request
- **5.3.5** Error in system, observe error message

Note

► In the icon *boom length* **5** all required information is shown to allow an experienced crane operator to telescope the telescopic boom to the desired length.

► For a detailed description for telescoping, see Chapter 4.05.

LWE/LTR 1100-009/25105-02-02/en

copyright © Liebherr-Werk Ehingen GmbH 2023

5.1.6 Pulley head height

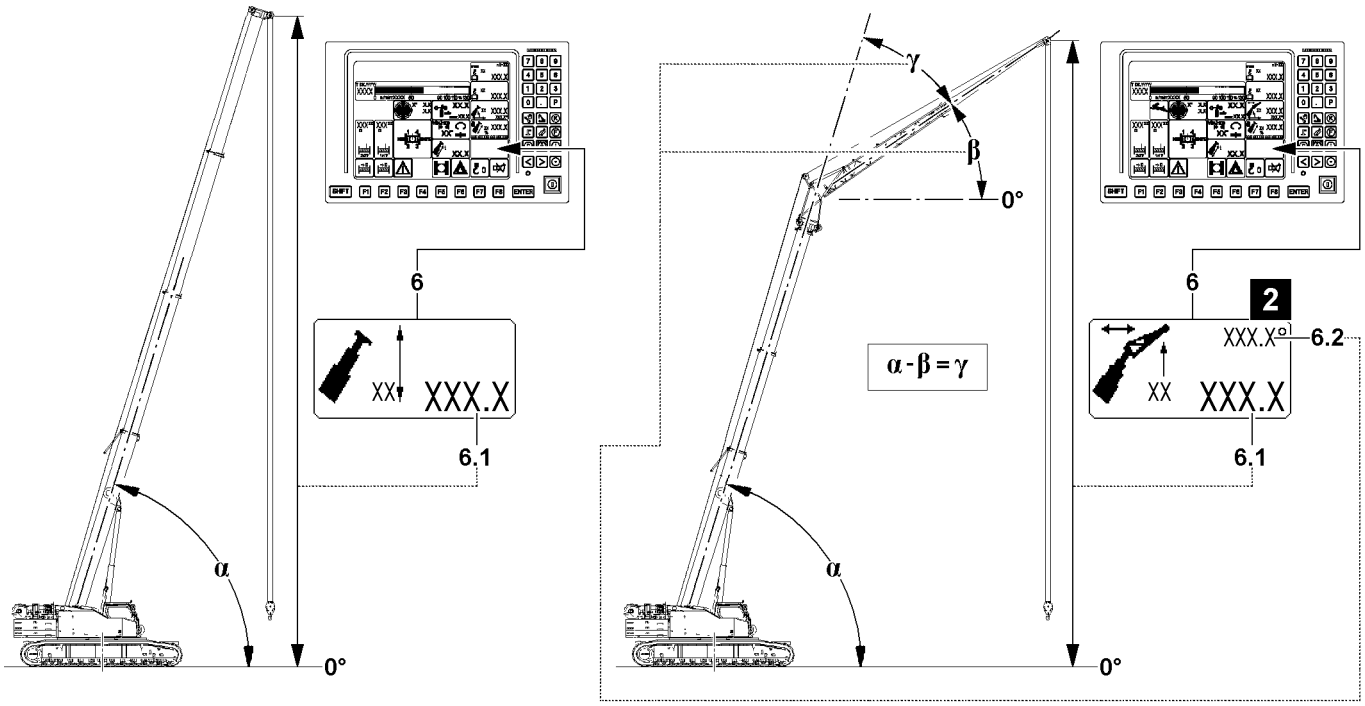

Fig.122527: Pulley head height display

Note

► For crane types with an auxiliary boom*, the illustration of the icon can change depending on the set up configuration, see example illustration **2**.

6 *Pulley head height* icon

6.1 Pulley head height
- In [m] or [ft]
- Identifies the vertical distance from the crane base to the selected pulley head axle, for which the displayed maximum load applies

6.2 Auxiliary boom / accessory angle
- In [°]

Note

► Depending on the set up configuration and the load chart, a differentiation is made between an absolute angle display or a relative angle display. Position of angle, see example Illustration **2**.

β Auxiliary boom / accessory absolute angle
- The angle of the auxiliary boom / accessory to the horizontal in [°]
- Display absolute angle: For operating modes with load chart for specified angles of the main boom.

  or

γ Relative angle auxiliary boom / accessory
- Angle between the main boom and the auxiliary boom / accessory in [°]
- Display relative angle: For operating modes with load chart for specified angles of the auxiliary boom / accessory.

LWE/LTR 1100-009/25105-02-02/en

copyright © Liebherr-Werk Ehingen GmbH 2023

5.2 Alarm functions

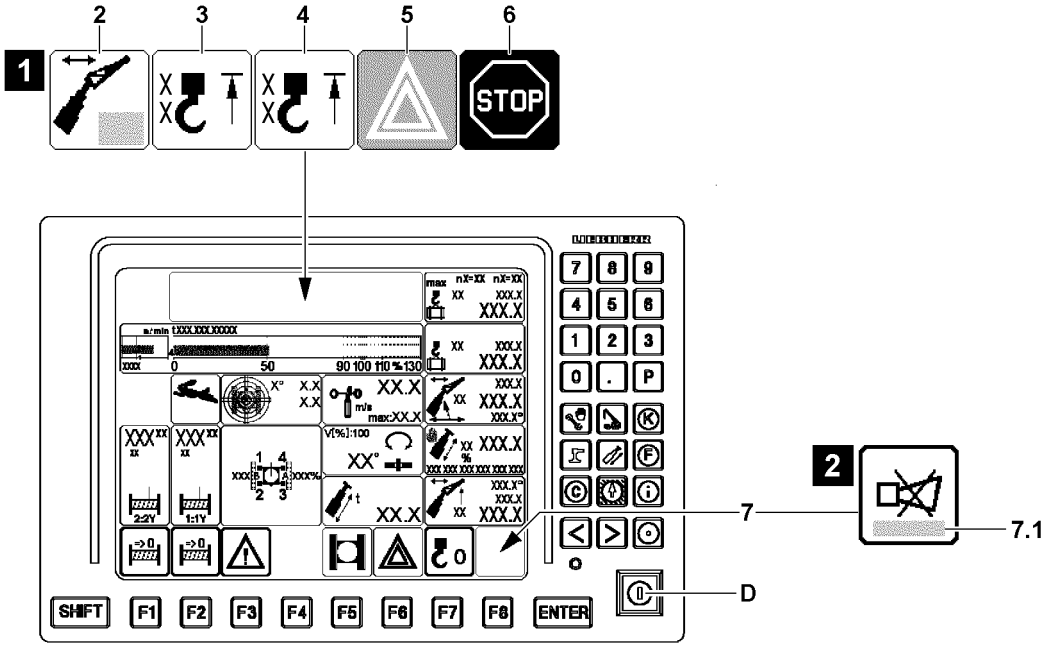

Fig.123723: Exemplary illustration of alarm functions

NOTICE
Triggered alarm function!
If an alarm function is triggered (for example an advance warning occurrence or shut off of crane movement), the cause must be determined.
► Always pay attention to triggered alarm functions.

The limit ranges of the crane movements are monitored. When the limit ranges are reached, the crane operator is warned by the alarm functions.

The alarm functions are shown by the LICCON monitor via:

– Icons, shown optically, see illustration **1**.
– A warning sound is acoustically reported.

If a warning occurs, an error message **7.1** is issued in the *horn* icon **7**, see illustration **2**.

The alarm functions include:

2 Boom limitation
- See section „Boom limitations“

3 Hoist limit switch
- Hoist limit switch of first load position
- See section „Hoist limit switch“

4 Hoist limit switch
- Hoist limit switch of second load position*
- See section „Hoist limit switch“

5 Occurrence of an advance warning
- See section „Occurrence of advance warning“

6 Shut off the crane movement
- See section „Shut off the crane movement“

as well as

7 Acoustic warnings
- See section „Acoustic warnings on the LICCON monitor“

LWE/LTR 1100-009/25105-02-02/en

copyright © Liebherr-Werk Ehingen GmbH 2023

5.2.1 Boom limitations

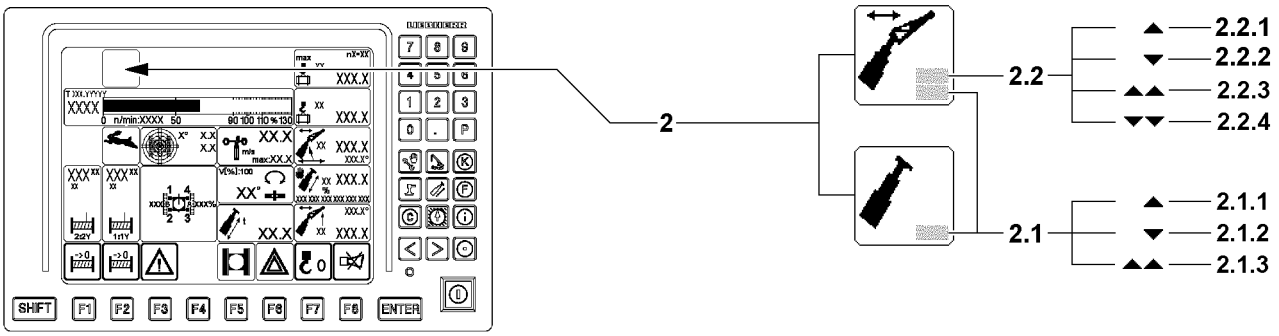

Fig.123724: Exemplary illustration of boom limitations

Limit signs main boom

Note

- ► The *Boom limitation* icon **2** can change in different operating modes, but it is shown always in the same position on the LICCON monitor.
- ► The field **2.1** refers to the main boom.
- ► The field **2.2** refers to the auxiliary boom / accessory.

2.1 *Boom limitation Main boom* icon

- The luffing range of the main boom is limited both upward and downward.
- This icon appears if an end position determined by the load chart is reached when luffing the boom or when luffing the boom is disabled by a proximity switch.

Position	Icon	Description
2.1.1	▲	The shut-off *Luffing up the main boom* is made by running against the upper load chart limit. **Note:** Luffing down the main boom is still possible.
2.1.2	▼	The *Luffing down the main boom* shut-off is made by running against the lower load chart limit. **Note:** Luffing up the main boom is still possible.

WARNING
Alarm function deactivated!
When the set up key **D** is actuated, there is no shut-off of crane movement via position **2.1.1** and position **2.1.2**.

- ► Observe chapter 4.20.

Position	Icon	Description
2.1.3	▲▲	The shut-off *Luffing up the main boom* is made by triggering the proximity switch (boom steep). **Note:** Luffing down the main boom is still possible.

LWE/LTR 1100-009/25105-02-02/en

copyright © Liebherr-Werk Ehingen GmbH 2023

Limit sign auxiliary boom / accessory

Note
- ► The *Boom limitation* icon **2** can change in different operating modes, but it is shown always in the same position on the LICCON monitor.
- ► The field **2.1** refers to the main boom limitation sign.
- ► The field **2.2** refers to the limitation signs auxiliary boom / accessory.

2.2 *Auxiliary boom / accessory boom limitation* icon
- The luffing range of the auxiliary boom / accessory is limited both upward and downward.
- This icon appears if an end position determined by the load chart is reached when luffing the auxiliary boom / accessory or when luffing is disabled by a limit switch.

Position	Icon	Description
2.2.1	▲	The *Luffing up the auxiliary boom / accessory* shut-off is triggered by running against the upper load chart limit. **Note:** Luffing down the auxiliary boom / accessories remains possible.
2.2.2	▼	The *Luffing down the auxiliary boom / accessory* shut-off is triggered by running against the lower load chart limit. **Note:** Luffing up the auxiliary boom / accessories remains possible.

WARNING
Alarm function deactivated!
When the set up key **D** is actuated, there is no shut-off of crane movement via position **2.2.1** and position **2.2.2**.
- ► Observe chapter 4.20.

Position	Icon	Description
2.2.3	▲▲	The *Luffing up the auxiliary boom / accessory* shut-off was triggered by reaching a proximity switch (*Jib on top block* or *Jib on top flap*). **Note:** Luffing down the auxiliary boom / accessories remains possible.
2.2.4	▼▼	The *Luffing down the auxiliary boom / accessory* shut-off is triggered by running against one of the block limit switches (*jib bottom*). **Note:** Luffing up the auxiliary boom / accessories remains possible.

Failure of sensor / limit switch

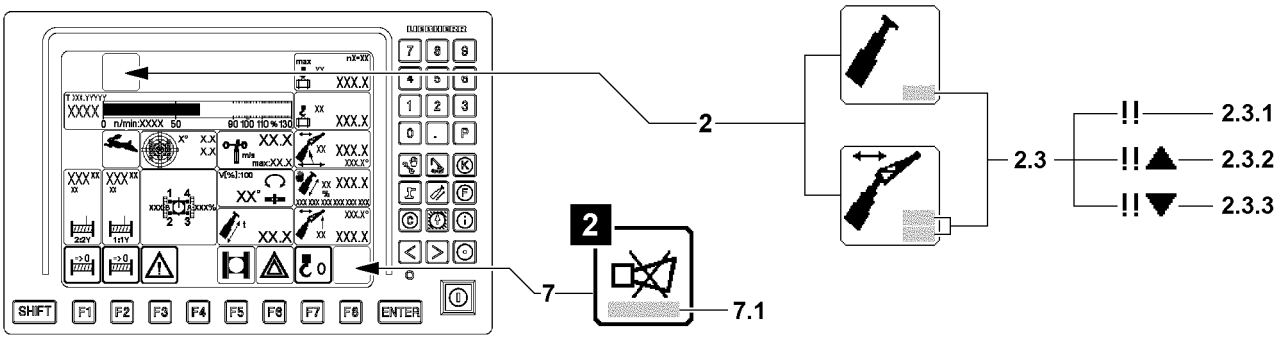

Fig.123725: Exemplary illustration of failure of sensor / limit switch

LWE/LTR 1100-009/25105-02-02/en

copyright © Liebherr-Werk Ehingen GmbH 2023

NOTICE
Failure of sensor / limit switch!
Depending on the classification of the sensor / limit switch, the crane can continue to be operated with limitation or is shut off by the control.
An error message **7.1** is issued in the *Horn* icon **7**, see illustration **2**.
The error message shows defective sensors / limit switches, see Diagnostics manual.
- ► The error must be remedied immediately.
- ► Crane movements after a failure of a sensor / limit switch must be carried out anticipatorily and with extreme caution.

Position	Icon	Description
2.3.1	!!	On the auxiliary boom / accessory, at least one associated sensor / limit switch is defective / missing. If an alarm function occurs at the same time, then the icon can be shown differently, see position **2.3.1**, position **2.3.2** or position **2.3.3**.
2.3.2	!!▲	
2.3.3	!!▼	**Note:** Not every failure of a sensor / limit switch on the boom is shown in the *Boom limitation* icon **2**. Observe the error message in the *Horn* icon **7**.

Note
- ► Depending on the classification of the sensor / limit switch, the respective crane movement is shut off in case of a failure and **cannot be bypassed**. An emergency operating mode may be required for subsequent steps.
- ► When deflecting the master switch, an operating error message is issued in the *Horn* icon **7**. The operating error message shows defective sensors / limit switches.
- ► If the error cannot be remedied by yourself, contact Liebherr Service.

5.2.2 Hoist limit switch

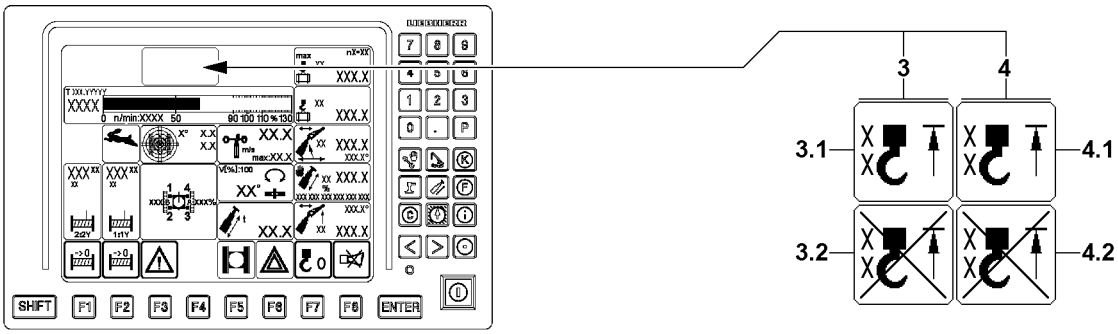

Fig.123726: Exemplary illustration of hoist limit switch triggered / bypassed

In order to prevent the crane from being operated without hoist limit switches (HES), the minimum hoist limit switch configuration is continuously monitored to ensure it is present. If a hoist limit switch required for a particular operating mode is not plugged in, therefore not active on the LSB bus system, corresponding crane movements can be disabled and an operating error message is also issued.

The identification of the triggered hoist limit switch HES1 to HES6 appears in the respective icon.

3 *Hoist top* icon
- *Hoist top* icon **3** for the first load position
  Note: Appears only when a hoist limit switch is active for the first load position on the LSB bus system.

LWE/LTR 1100-009/25105-02-02/en

copyright © Liebherr-Werk Ehingen GmbH 2023

3.1 *Hoist top triggered* icon
- The *Hoist top triggered* icon **3.1** appears when:
  - The hook block is pulled against the hoist limit switch.
  - The minimum weight on the hoist limit switch is not attached (for example on a taken down boom).
  - The hoist limit switch is not active, although it must be present on the bus.
  - The hoist limit switch has an internal error.
- **Note:** Spool up hoist winches is turned off.
  Additional crane movements can be turned off.

3.2 *Hoist top bypassed* icon
- The *hoist top bypassed* icon **3.2** appears if the hoist limit switch is bypassed, see section „Special functions“.

4 *Hoist top* icon
- *Hoist top* icon **4** for the second load position
  Note: Appears only when a hoist limit switch is active for the second load position on the LSB bus system.

4.1 *Hoist top triggered* icon
- The *Hoist top triggered* icon **4.1** appears when:
  - The hook block is pulled against the hoist limit switch.
  - The minimum weight on the hoist limit switch is not attached (for example on a taken down boom).
  - The hoist limit switch is not active, although it must be present on the bus.
  - The hoist limit switch has an internal error.
- **Note:** Spool up hoist winches is turned off.
  Additional crane movements can be turned off.

4.2 *Hoist top bypassed* icon
- The *hoist top bypassed* icon **4.2** appears if the hoist limit switch is bypassed, see section „Special functions“.

5.2.3 Occurrence of an advance warning

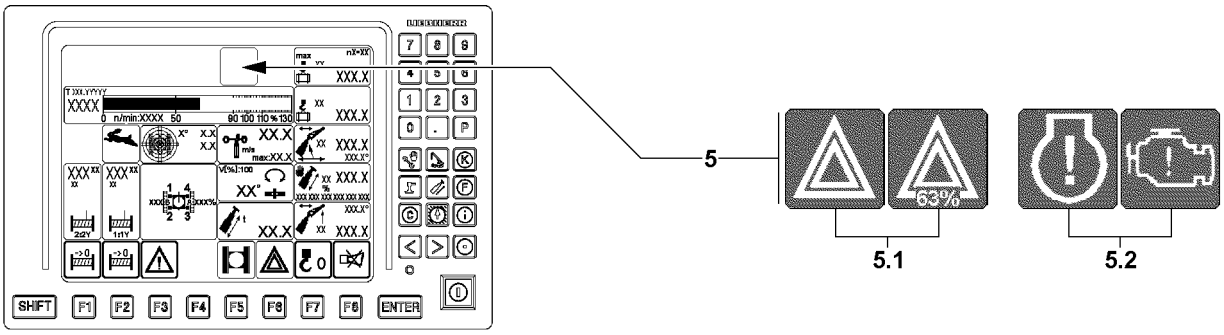

Fig.152664: Exemplary illustration of possible advance warnings

5 *Advance warning* icon

5.1 Advance warning
- The current utilization of the crane results from the actual load and the maximum load.
- The *Advance warning* icon appears if:
  - The current utilization of the crane exceeds the limit programmed for the advance warning (standard value **90 percent**).
    or
    The current utilization of the crane exceeds the limit set for the advance warning (sample value 63 percent).

5.2 Engine monitoring advance warning
- an advance warning for one or more monitoring functions in the engine monitoring occurs
  or

LWE/LTR 1100-009/25105-02-02/en

copyright © Liebherr-Werk Ehingen GmbH 2023

- a load reduction is triggered by the exhaust aftertreatment (only for engines with an SCR system for exhaust aftertreatment)
- **NOTICE:** If the Advance warning engine monitoring **5.2** appears, the monitoring functions must be checked.
- **Note:** Only for certain crane types.

WARNING
Non-observance of advance warnings!
If advance warnings are not observed, then this can result in a sudden shut-off of the crane movement.
A sudden shut off of the crane movement can result in high stress and strain for crane and load.
High stress and strain for crane and load can cause accidents.
► Operate the crane in such a way that there is no shut off of crane movements by the crane control.
► Pay attention to advance warnings and approach a possible shut off of crane movements extremely cautiously.

NOTICE
Shut off engine monitoring!
Outside of the crane operation program, the engine monitoring is turned off.
When the engine monitoring is turned off, problems and warning occurrences are not recognized.
This could result in crane failure.
► If work is not carried out in the crane operation program, then turn the crane engine off and operate the LICCON computer system in stand-by mode, see section „Power-Save mode and Stand-by mode on the LICCON computer system“.
► If work has to be carried out for a longer period outside of the Crane operation program, with the crane engine running, then switch regularly to the engine monitoring screen.

5.2.4 Shutting off the crane movement

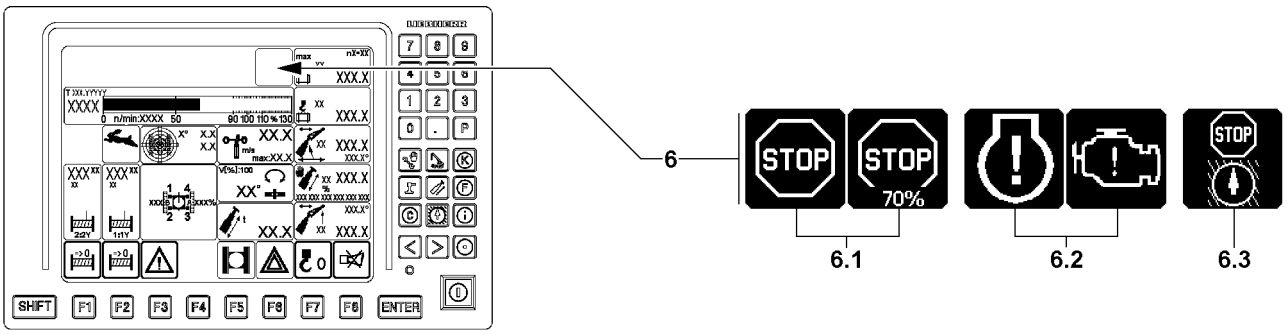

Fig.152665: Exemplary illustration of possible shut-offs

6 *STOP* icon

6.1 *LMB-STOP* icon
- The *LMB-STOP* icon appears when the crane movement is turned off by the overload protection.

Possible causes:
- **Utilization of the crane**:
  - The *LMB-STOP* icon appears when the current utilization of the crane exceeds the programmed limit for the overload protection (Standard 100 percent).
    or
    The *LMB-STOP* icon appears when the current utilization of the crane exceeds the limit set for the overload protection (Standard 70 percent).
- **Sensor error**: The *LMB-STOP* icon appears when a sensor which is required to monitor the load chart has an error (LMB-STOP is actuated).
- **No load chart**: The *LMB-STOP* icon appears if no load chart is available (LMB-STOP is triggered).

LWE/LTR 1100-009/25105-02-02/en

copyright © Liebherr-Werk Ehingen GmbH 2023

WARNING
Crane movements at *LMB-STOP*!
If the *LMB-STOP* icon **6.1** appears, not all crane movements are necessarily turned off. In certain circumstances, load moment decreasing crane movements are still possible.
► Always determine the exact cause for the *LMB-STOP* **6.1** first.
► Carry out any crane movements which are still possible with extreme caution.

6.2 Engine STOP
- The *Engine-STOP* icon appears if:
  - A STOP event takes place in engine monitoring.
    or
  - a load reduction is triggered by the exhaust aftertreatment (only for engines with an SCR system for exhaust aftertreatment)

6.3 Working range STOP
- Appears if a STOP event takes place in the working range limitation
- **Note**: Appears only on crane types with Working range limitation*

WARNING
Shut off of the crane movement!
A sudden shut off of the crane movement can result in high stress and strain for crane and load.
High stress and strain for crane and load can cause accidents.
► Operate the crane in such a way if possible that there is no shut off of crane movements by the crane control.
► Monitor the display instruments constantly.
► If not otherwise possible, approach a possible shut off of crane movements with extreme caution.

NOTICE
Shut off engine monitoring!
Outside of the crane operation program, the engine monitoring is turned off.
When the engine monitoring is turned off, problems and warning occurrences are not recognized.
This could result in crane failure.
► If work is not carried out in the crane operation program, then turn the crane engine off and operate the LICCON computer system in stand-by mode, see section „Power-Save mode and Stand-by mode on the LICCON computer system“.
► If work has to be carried out for a longer period outside of the Crane operation program, with the crane engine running, then switch regularly to the engine monitoring screen.

5.2.5 Acoustic warnings on the LICCON monitor

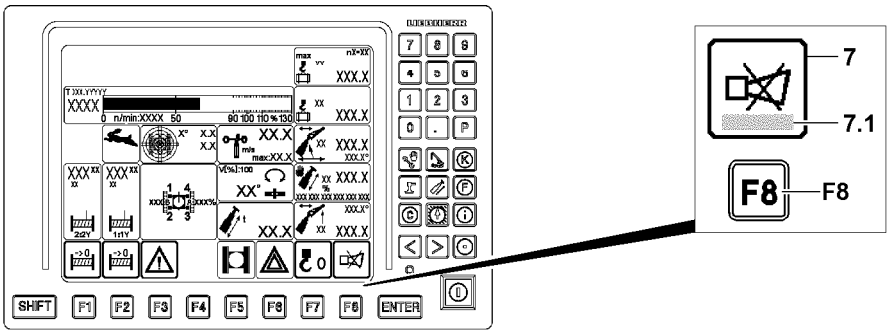

Fig.123729: Acoustic warnings on the LICCON monitor

Acoustic warnings on the LICCON monitor are indicated by a warning sound.

The warning sound is divided into two categories:
– Warning sound *Horn* is a beeping sound of a duration of approximately 0.5 seconds, which is repeated in a second cycle.

LWE/LTR 1100-009/25105-02-02/en

copyright © Liebherr-Werk Ehingen GmbH 2023

– Warning sound *Short horn* is a beeping sound of a duration of approximately 0.1 seconds, which is repeated in a second cycle.

7 *Horn* icon
- When the *horn* icon is shown on the LICCON monitor, any acoustic signals which will occur can be shut off by pressing the function key **F8**.
- If an error message is shown in the *Horn* icon **7** in field **7.1**, then the present error can be determined through it. Pressing the function key **F8** twice automatically changes to the error determination screen of the BSE test system. The error is displayed in documentary form.

***Horn* warning sound**

1. Sounds in addition to the visual display of an error message in field **7.1** in case of operational errors are found, which lead to a shut-off of a crane movement.
   Operational errors are:
   - Overload
   - Boom outside of the angle / boom radius range of the load chart
   - Extension condition of telescopes not in accordance with the load chart
2. In case of application errors with error number (LICCON-Error-Code - LEC). For example sensor errors, which occur due to insufficient sensor signals or a defective sensor.
   The following sensors are monitored:
   - Length sensors
   - Angle sensor
   - Pressure sensor
   - Pull test brackets (force test boxes)
   - Inductive sensors
   - Hoist limit switch
   - Wind sensor
   - Battery voltage

***Short horn* warning sound**

Sounds in addition to the visual display of error messages without an error number and that do not lead directly to crane movement shut-off by the LICCON overload protection
Monitored error messages are:
- Maximum permissible wind speed exceeded (only with an activated wind sensor*****)
- Support force exceeded / fallen below (only in activated support force monitoring*****)
- Crane utilization value for advance warning (90 %) reached or exceeded

Priority acoustic signal

– The warning sound *Horn* has higher priority than the *Short horn* warning sound, which means the *Horn* warning sound takes preference over the *Short horn* warning sound.

Turning the warning sound off

– The warning sound can be turned off by pressing the function key **F8**.
– The *Horn* warning sound as well as the *Short horn* warning sound immediately become active again if a new error occurs.

5.3 Special functions

With the special functions the special cases for the operation of the LICCON overload protection (special cases for the overload protection EN 13000:2010) can be operated, see Crane operating instructions, chapter 4.20.

LWE/LTR 1100-009/25105-02-02/en

copyright © Liebherr-Werk Ehingen GmbH 2023

5.3.1 Special functions LICCON overload protection

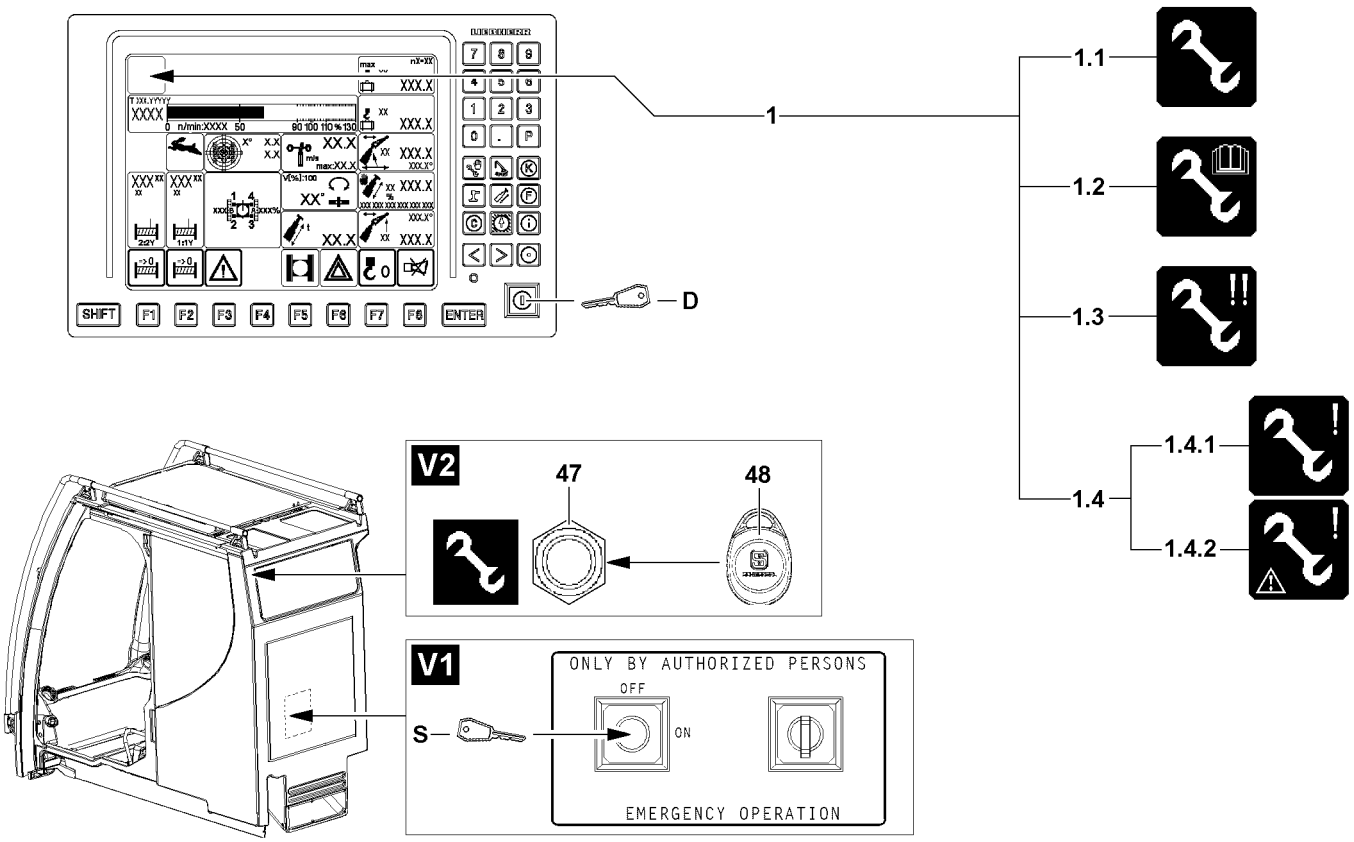

Fig.123730: Exemplary illustration of the displays for special functions of the LICCON overload protection with operating elements

If the shut off limits of the LICCON overload protection are exceeded, the LICCON overload protection shuts the crane movements off.

These shut off limits can be exceeded by the set up key **D** in the *right touching* position. To do so, chapter 4.20 in the Crane operating instructions must be observed.

WARNING
Danger of accident due to the *Exceedance of shut-off limits of the LICCON overload protection* function!
If the shut off limits of the LICCON overload protection are exceeded, there is no additional protection against crane overload.
Due to erroneous operation or deliberate misuse, the crane could collapse, the boom can break off or the crane can topple over.
Personnel can be severely injured or killed.

- ► The function *Exceedance of shut off limits of the LICCON overload protection* is only permissible in emergencies and for assembly purposes.
- ► The set up key **D** may only be actuated when the specifications of the crane documentation in this regard are adhered to.
- ► The set up key **D** may only be actuated by persons who are aware of the effects of their acts regarding the function *Exceedance of shut off limits of the LICCON overload protection*.
- ► The *Exceedance of shut off limits of the LICCON overload protection* function requires the presence of an authorized person and must be performed with utmost caution.
- ► Crane operation with the *Exceedance of shut-off limits of the LICCON overload protection* function activated is prohibited.

LWE/LTR 1100-009/25105-02-02/en

copyright © Liebherr-Werk Ehingen GmbH 2023

Note
Double function set up key
If the crane control *EN 13000:2010 not active* is programmed, the shut offs are deactivated by the LICCON overload protection when the set up key **D** is pressed.
► If the crane control *EN 13000:2010 not active* is programmed, when actuating the set up key **D**, the function *Emergency operation LICCON overload protection* is automatically also released.

Before pressing the set up key **D** make sure that:
– Conditions and specifications to use the set up key **D** are known to the crane operator, were understood and adhered to, see also Crane operating instructions, chapter 4.20.

Note
► The various *Assembly* icons **1** are shown on the same position in the LICCON monitor, depending on the situation. Two icons **1** variations cannot appear simultaneously.

Note
► The actuation of the set up key **D** is recorded in the data logger.
► The actuation of the key button **S** is recorded in the data logger.
► The application of the transponder **48** on the sensor **47** is recorded in the data logger.

Exceeding the shut off limits of the LICCON overload protection

1.1 Assembly
- The icon appears when a special case for operation of the LICCON overload protection was activated, for example the shut off limits of the LICCON overload protection were bypassed by the set up key **D**.

No load chart is available

1.2 Assembly - no load chart
- The icon appears when the shut off limits of the LICCON overload protection are bypassed via the set up key **D and** no load chart is available.
- The crane may solely be operated according to the specifications in the crane documentation.
- **Note:** By actuating the set up key **D**, all erection / take down procedures can be carried out within the erection / take down charts, for which no load charts are available!

Emergency operation LICCON overload protection (EN 13000:2010 active)

WARNING
Increased danger of accident during emergency operation of the LICCON overload protection!
In emergency operation, the crane movements are no longer monitored by the LICCON overload protection.
► The emergency operation may only be activated by persons who are aware of the consequences of their actions.
► A shut-off by the LICCON overload protection may not be circumvented by the emergency operation.
► If normal crane operation is possible, then the emergency operation may not be activated.
► All crane movements must be carried out with extreme caution and anticipatorily.

1.3 Emergency operation activated
- The icon appears:
  - when the emergency operation of the LICCON overload protection is activated via the key button **S** or by actuation of the transponder **48** on the sensor **47**.

LWE/LTR 1100-009/25105-02-02/en

copyright © Liebherr-Werk Ehingen GmbH 2023

Note
Activating emergency operation
► If emergency operation of the LICCON overload protection is activated via the key button **S** or by actuation of the transponder **48** on the sensor **47** depends on the crane type. Observe the Crane operating instructions, chapter 4.01.

LICCON overload protection emergency operation (EN 13000:2010 not active)

Note
If the crane control *EN 13000:2010 not active* is programmed, then the function *Emergency operation of the LICCON overload protection* is activated by the set up key **D**.
► If the emergency operation LICCON overload protection is needed, press the set up key **D**.

1.3 LMB emergency operation **1.3** activated
- The icon appears:
  - when the LMB emergency operation is activated via the set up key **D**.
  - **Note:** Depending on the reason for the LMB emergency operation, the icon for no load chart available **1.2** can also appear.

Additional emergency operating modes

WARNING
Improper crane operation!
If one of the icons for additional emergency operating modes **1.4** appears, then there is a high danger of accident due to erroneous operation of the crane.
Safety equipment could be deactivated.
Personnel can be killed or injured.
This could result in property damage.
► Deactivate additional operating modes **1.4** again or contact Liebherr Service and coordinate further procedure.

1.4 Additional emergency operating modes
- Icon **1.4.1** or icon **1.4.2** appears if additional emergency operating modes were activated.

5.3.2 Bypass of hoist limit switch

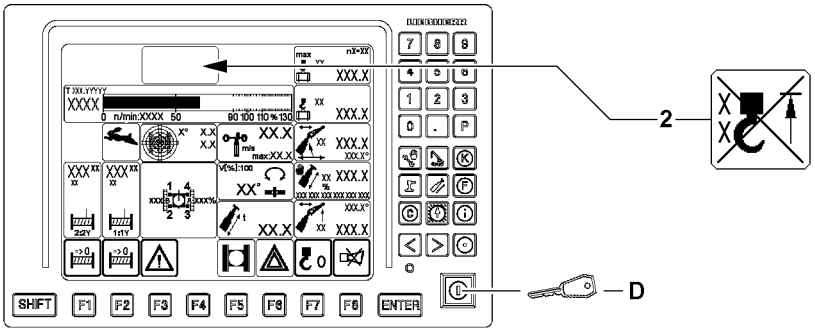

Fig.123731: Bypass of hoist limit switch

If the hook block touches the hoist limit switch weight during upward movement, the hoist limit switch is activated. The *Spool up winches*, *Luff telescopic boom down* and Telescope telescopic boom out crane movements are shut off. This shut-off can be bypassed by the set up key **D** in the *right touching* position. To do so, chapter 4.20 in the Crane operating instructions must be observed.

2 *Hoist top bypassed* icon
- The icon appears when the hoist limit switch is bypassed by pressing the set up key **D**.

LWE/LTR 1100-009/25105-02-02/en

copyright © Liebherr-Werk Ehingen GmbH 2023

Note: All hoist limit switches are always bypassed together.

5.3.3 Rapid gear

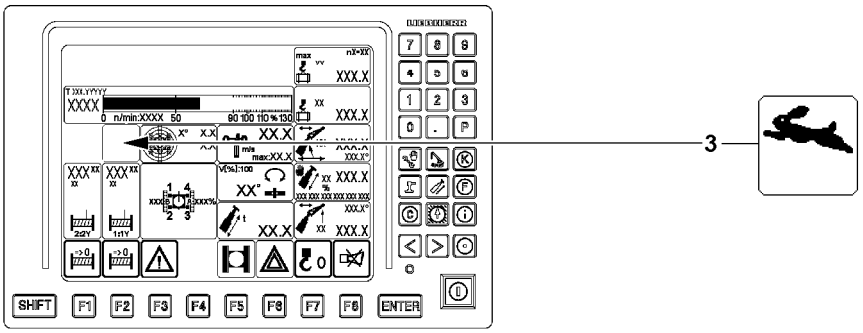

Fig.123732: Rapid gear turned on

3 *Rapid gear* icon
- The icon appears if the rapid gear is enabled during a crane movement
- This is possible, for example, for the following crane movements:
  - Lift / lower hoist gears
  - Luff the boom up

5.4 Crane operation monitoring functions

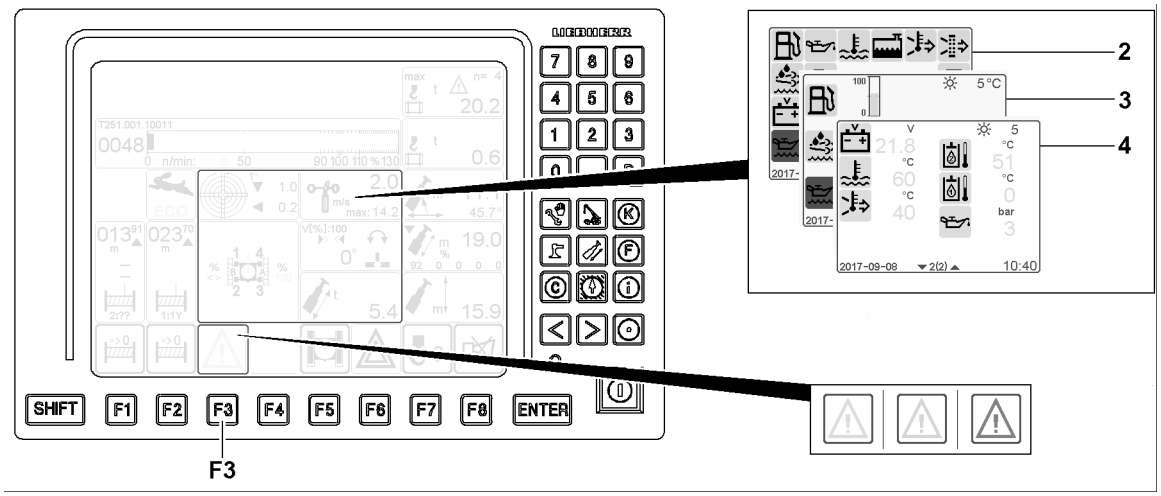

Fig.152672: Crane operation monitoring functions

The crane operation monitoring functions include the following displays:
- **2** Monitoring function icons
- **3** *Fill level* individual control displays
- **4** *Actual value displays* individual control displays

The monitoring functions are always active and can be displayed in the monitoring field, if necessary. Due to the color of the icon over the function key **F3** the crane operator is automatically alerted in case of a warning occurrence.

Meaning of the color of the warning icon over the function key **F3**:
- Warning icon green: All monitoring functions are ok.
- Warning icon yellow: Advance warning for one or several monitoring functions.
- Warning icon red: Warning for one or several monitoring functions.

LWE/LTR 1100-009/25105-02-02/en

copyright © Liebherr-Werk Ehingen GmbH 2023

NOTICE
Danger of severe crane engine damage!
If the monitoring functions report a problem and / or warning occurrence, then you must react immediately and remedy the problem.
► React to problems and / or warning occurrences immediately and remedy the problem.
► If necessary, stop crane operation and turn the crane engine off.

NOTICE
Shut off engine monitoring!
Outside of the crane operation program, the monitoring functions are turned off.
When the engine monitoring is turned off, problems and warning occurrences are not recognized.
This could result in crane failure.
► If work is not carried out in the crane operation program, then turn the crane engine off and operate the LICCON computer system in stand-by mode, see section „Power-Save mode and Stand-by mode on the LICCON computer system“.
► If work has to be carried out for a longer period outside of the crane operation program, with the crane engine running, then switch continuously to the engine monitoring screen and check the display values.
► Register changes in the display values mindfully and proceed anticipatorily, for example, refuel in time.

5.4.1 Order of the displays in the crane operation monitoring functions

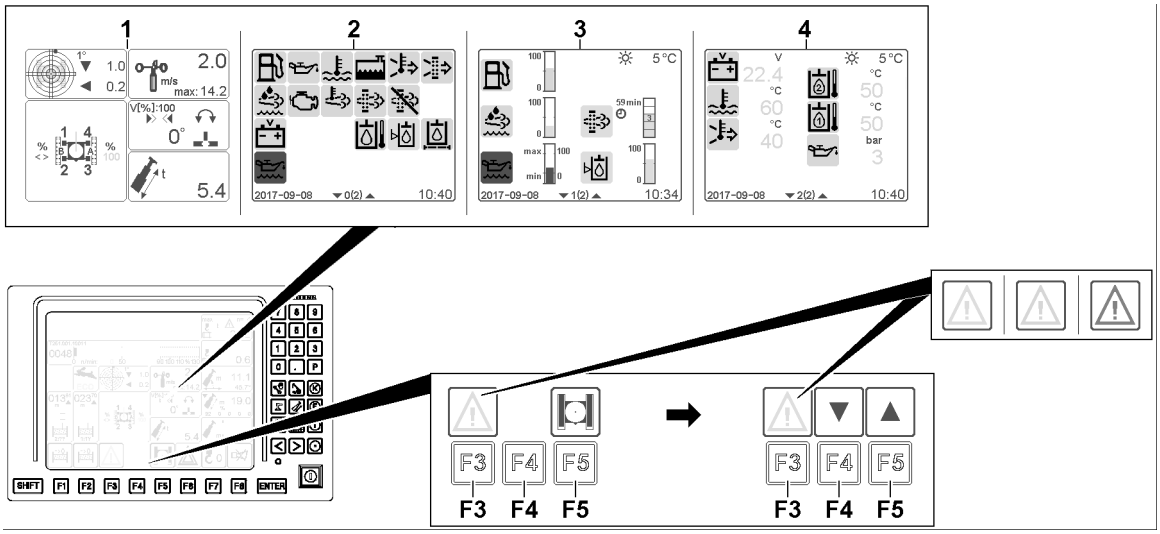

Fig.152674: Displays in the crane operation monitoring functions

The order of the displays in the crane operation monitoring functions depends is specified by the LICCON computer system according to the current situation.

– By pressing the function key **F3**, the monitored auxiliary functions **1** are masked, the crane operation monitoring functions are displayed. The function assignments of the function keys **F4-F5** change.
– By pressing the function key **F4** and function key **F5**, it is possible to switch between the following displays:
  • **2** Monitoring function icons
  • **3** *Fill level* individual control displays
  • **4** *Actual value displays* individual control displays
– By pressing the function key **F3** again, the crane operation monitoring functions are masked again. The monitored auxiliary functions **1** are displayed again.

LWE/LTR 1100-009/25105-02-02/en

copyright © Liebherr-Werk Ehingen GmbH 2023

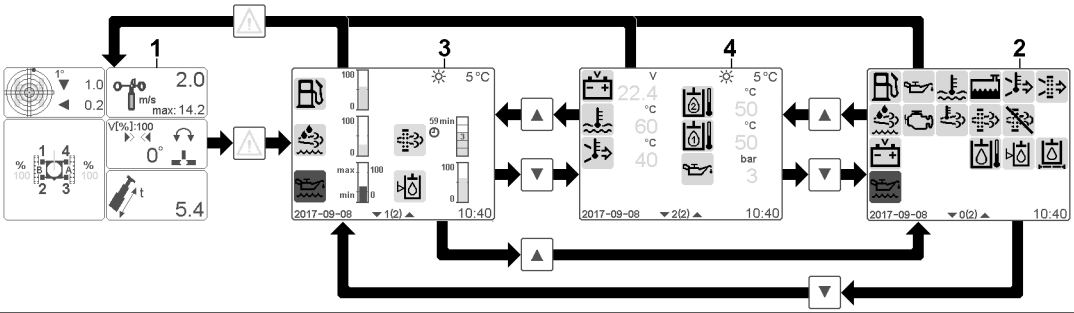

Fig.156232: Example for the order of the displays, when the warning icon over function key F3 is green

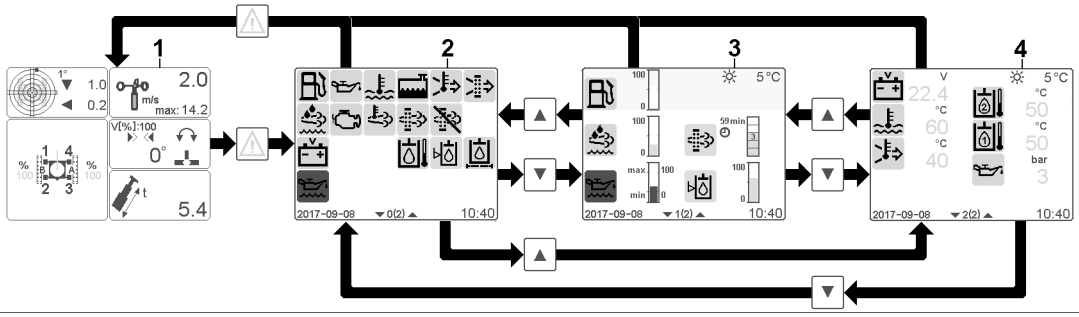

Fig.156236: Example for the order of the displays, when the warning icon over function key F3 is yellow

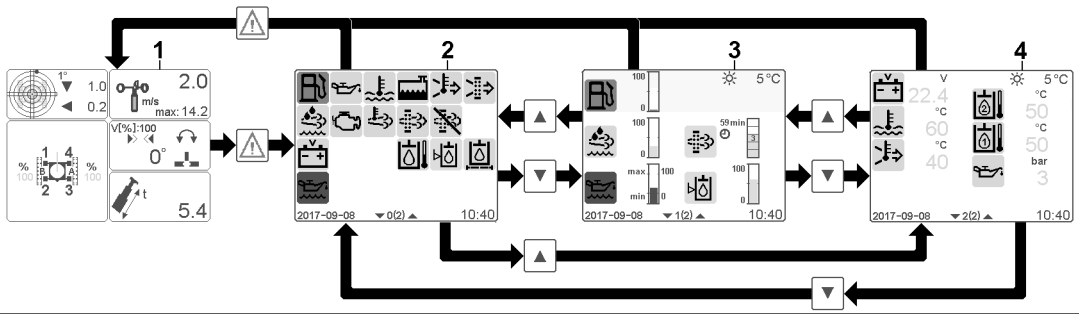

Fig.156240: Example for the order of the displays, when the warning icon over function key F3 is red

► Press the function keys in the corresponding order.

LWE/LTR 1100-009/25105-02-02/en

copyright © Liebherr-Werk Ehingen GmbH 2023

5.4.2 Calling up / masking the crane operation monitoring functions

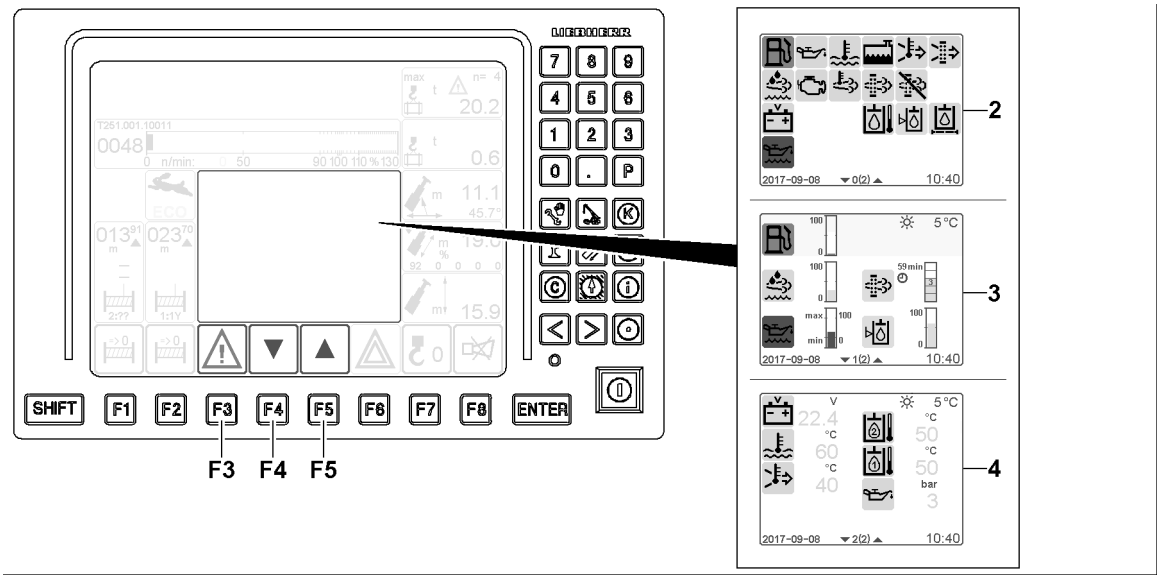

Fig.152682: Example for the Fuel reserve low / depleted warning event

If a warning event occurs on one or on several monitoring functions, then this is indicated by the color of the warning icon over the function key **F3**. The warning icon is displayed statically and in the color of the monitoring function that triggered the warning event.

Example for the fuel reserve low / depleted warning event:
- The icon above the function key **F3** is red
- In the monitoring functions icon **2**, the *fuel reserve* icon appears in red
- In the *fill level* individual control displays **3**, the *fuel reserve* icon appears in red and the assigned bar graph shows an empty fill level.
- The *actual value displays* individual control displays **4** do not provide any further information regarding this warning event.

To call up / mask the crane operation monitoring functions:
► Press the function keys in the corresponding order, see section „Order of the displays in the crane operation monitoring functions“

Result:

- By pressing the function key **F4** and function key **F5**, it is possible to switch between the displays.
- By pressing the function key **F3** again, the crane operation monitoring functions can be immediately masked again.
- For a description of the monitoring function icons **2**, see the following section „Overview of icons for monitoring functions“.
- Description of the *fill level* individual control displays **3**, see the following section „Overview of the individual control displays“.
- Description of the *actual value displays* individual control displays **4**, see the following section „Overview of individual control displays“.

LWE/LTR 1100-009/25105-02-02/en

copyright © Liebherr-Werk Ehingen GmbH 2023

5.4.3 Overview of icons for monitoring functions

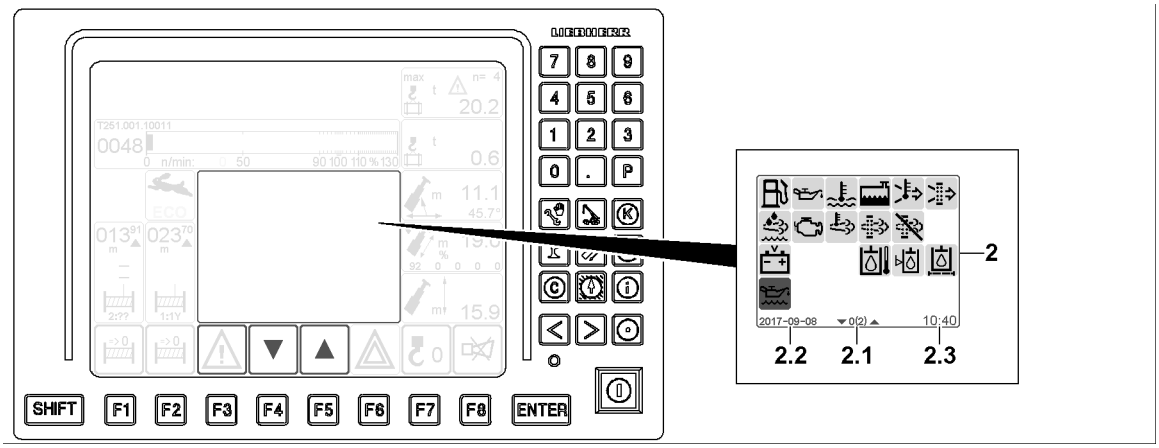

Fig.152684: Monitoring function icons

– **2** Monitoring function icons

  • In addition to the monitoring function icons, the following appears:

    • **2.1** Page counter
    • **2.2** Date
    • **2.3** Time

Note
The scope of the monitoring function icons **2** depends on the crane type and crane configuration.
► Not all crane types have all listed monitoring functions.

	Fuel reserve
Green:	Fuel reserve sufficient
Yellow:	Fuel reserve is short
Red:	Fuel reserve low / depleted / system error **NOTICE!** Add fuel immediately / Immediately bring the crane to a standstill, turn the crane engine off and remedy the problem. Pay attention to the error message.

	Engine oil pressure
Green:	Engine oil pressure OK (engine on)
Red:	Engine oil pressure too low (engine on) / system error **NOTICE!** Immediately bring the crane to a standstill, turn the engine off and remedy the problem. Pay attention to the error message.

copyright © Liebherr-Werk Ehingen GmbH 2023

	Coolant temperature
Green:	Coolant temperature OK
Red:	Coolant temperature too high / system error **NOTICE!** Immediately bring the crane to a standstill, turn the engine off and remedy the problem. Pay attention to the error message.

	Coolant level
Green:	Coolant level OK
Red:	Coolant level too low / system error **NOTICE!**: Immediately bring the crane to a standstill, turn the engine off and remedy the problem. Pay attention to the error message.

	Charge air temperature
Green:	Charge air temperature OK
Red:	Charge air temperature too high / system error **NOTICE!**: Immediately bring the crane to a standstill, turn the engine off and remedy the problem. Pay attention to the error message.

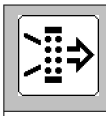	**Air filter Engine**
Green:	Air intake opening / air filter OK (engine on)
Yellow	Air intake opening / Air filter dirty (engine on) / system error **NOTICE!** Immediately bring the crane to a standstill, turn the engine off and remedy the problem. Pay attention to the error message.

LWE/LTR 1100-009/25105-02-02/en

copyright © Liebherr-Werk Ehingen GmbH 2023

	Urea tank / exhaust aftertreatment [1]
Green:	Urea reserve sufficient
Yellow:	The urea reserve is low or erroneous function of exhaust aftertreatment[2] **Advance warning!** Add urea or remedy the erroneous function of the exhaust aftertreatment. Pay attention to the error message.
Red:	Urea level too low / depleted or erroneous function of exhaust aftertreatment system [2] / system error **NOTICE!** Add urea or remedy the erroneous function of the exhaust aftertreatment / immediately bring the crane to a standstill, turn the engine off and remedy the problem. Pay attention to the error message.

1) Applies only for engines with the SCR system.
2) Under some circumstances a power reduction or start block of the engine is triggered. The type and scope of a power reduction or start block of the engine depends on the respectively valid national / regional regulations and the vehicle configuration.

	Exhaust aftertreatment [1]
Green:	Exhaust aftertreatment OK
Yellow / red:	Urea level too low / depleted or erroneous function of exhaust aftertreatment system [2] / system error **NOTICE!** Add urea or remedy the erroneous function of the exhaust aftertreatment. Under some circumstances a power reduction or start block of the engine [2] is triggered, pay attention to the error message.

1) Applies only for engines with the SCR system.
2) Under some circumstances a power reduction or start block of the engine is triggered. The type and scope of a power reduction or start block of the engine depends on the respectively valid national / regional regulations and the vehicle configuration.

	Exhaust gas temperature [4]
Green:	Normal exhaust gas temperature
Yellow	High exhaust gas temperature, diesel particle filter regeneration is carried out **Note**: Engine noise may change slightly during regeneration. After generation is complete, the icon turns green again.

4) Only for engines with a diesel particle filter (DPF).

LWE/LTR 1100-009/25105-02-02/en

copyright © Liebherr-Werk Ehingen GmbH 2023

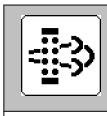	**Diesel particle filter** [4)]
Green:	Diesel particle filter [4] OK
Yellow	Diesel particle filter [4] reports an advance warning
	Note: Call up the individual control displays and check the load condition of the diesel particle filter [4]. Pay attention to the error message.
Red:	Diesel particle filter [4] reports a warning / problem **NOTICE!** Call up the individual control displays and check the load condition of the diesel particle filter [4]. Remedy the problem. Pay attention to the error message.

4) Only for engines with a diesel particle filter (DPF).

	Disabling diesel particle filter regeneration [4)]
Green:	Automatic regeneration of the diesel particle filter is not disabled
Yellow	Automatic regeneration of the diesel particle filter is disabled **NOTICE!** If automatic regeneration of the diesel particle filter is disabled for too long, damage can occur to the crane engine and the exhaust gas system

4) Only for engines with a diesel particle filter (DPF).

	Battery voltage
Green:	Battery voltage OK
Red:	Overvoltage or undervoltage in on-board power supply / system error **NOTICE!**: Immediately bring the crane to a standstill, turn the engine off and remedy the problem. Pay attention to the error message.

	Torque converter temperature
Green:	Torque converter temperature OK
Red:	Torque converter temperature not OK / system error **NOTICE!**: Immediately bring the crane to a standstill, turn the engine off and remedy the problem. Pay attention to the error message.

	Hydraulic oil temperature
Green:	Hydraulic oil temperature OK
Red:	Hydraulic oil temperature too high / system error **NOTICE!**: Immediately bring the crane to a standstill, turn the engine off and remedy the problem. Pay attention to the error message.

LWE/LTR 1100-009/25105-02-02/en

copyright © Liebherr-Werk Ehingen GmbH 2023

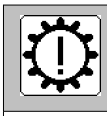	**Transmission / torque converter**
Green:	Transmission and torque converter OK
Yellow / red:	Problem in transmission or torque converter / system error **NOTICE!**: Immediately bring the crane to a standstill, turn the engine off and remedy the problem. Pay attention to the error message.

	Transmission temperature
Green:	Transmission temperature OK
Red:	Transmission temperature not OK / system error **NOTICE!**: Immediately bring the crane to a standstill, turn the engine off and remedy the problem. Pay attention to the error message.

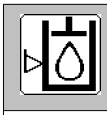	**Hydraulic oil level** [3)]
Green:	Hydraulic oil level OK
Yellow / red:	Hydraulic oil level too low / error / system error **NOTICE!**: Immediately bring the crane to a standstill, turn the engine off and remedy the problem. Pay attention to the error message.

3) Only for certain crane types.

	Leak oil filter
Green:	Leak oil filter OK (engine on)
Red:	Leak oil filter dirty (engine on) / system error **NOTICE!** Immediately bring the crane to a standstill, turn the engine off and remedy the problem. Pay attention to the error message.

	Engine oil level
Blue	The engine oil level can not be checked here on the display, call up the individual indicator light

LWE/LTR 1100-009/25105-02-02/en

copyright © Liebherr-Werk Ehingen GmbH 2023

	Charge control display (alternator) [5]
Green:	Charge control OK (engine on)
Red:	Charge control has a problem (engine on) / system error **NOTICE!**: Immediately bring the crane to a standstill, turn the engine off and remedy the problem. Pay attention to the error message.

5) Alternatively, the charge control display is located on the BKE, see the Crane operating instructions, chapter 4.01.

5.4.4 Overview of the individual control displays

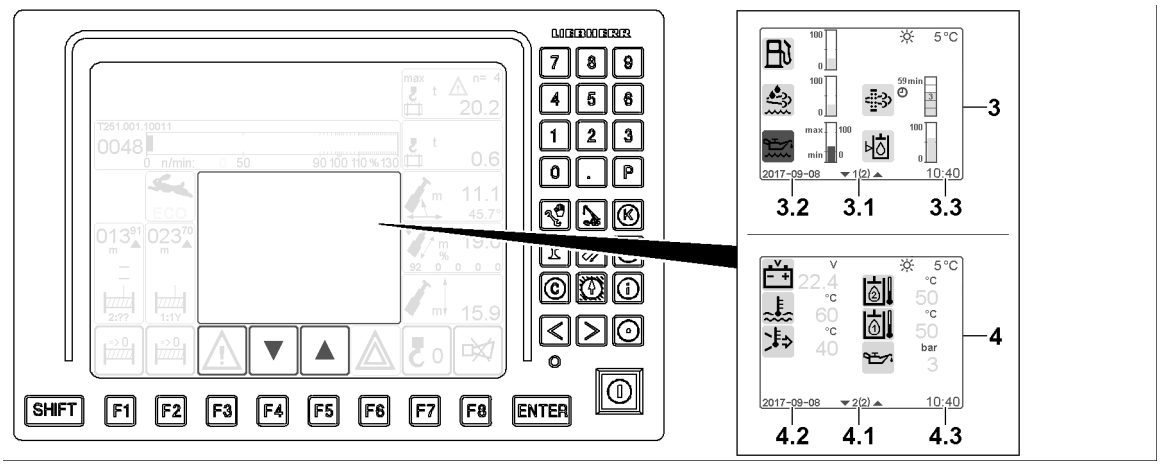

Fig.152686: Overview of the individual control displays

– **3** *Fill level* individual control displays
  - The following also appears:
    - **3.1** Page counter
    - **3.2** Date
    - **3.3** Time
– **4** *Actual value displays* individual control displays
  - The following also appears:
    - **4.1** Page counter
    - **4.2** Date
    - **4.3** Time

Note
► For some monitoring functions, detailed individual control displays can be displayed.
► The display values in the depicted individual indicator displays are examples.

Fuel reserve individual control display

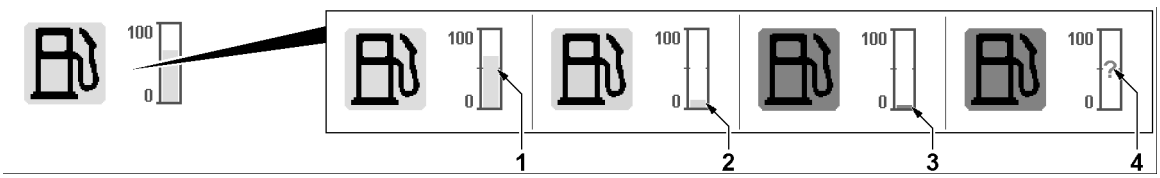

Fig.148375: Fuel reserve, bar graph

– Icon and bar **1** green: Fuel reserve sufficient

LWE/LTR 1100-009/25105-02-02/en

copyright © Liebherr-Werk Ehingen GmbH 2023

– Icon and bar **2** yellow: Fuel reserve is short
– Icon and bar **3** red: Fuel reserve low / depleted
– Icon and question mark **4** red: System error, the fill level cannot be determined

NOTICE! Add fuel immediately before it is depleted / Immediately bring the crane to a standstill, turn the crane engine off and remedy the problem. Pay attention to the error message.

The exact fill level can be read on the scale of the bar chart:
– Scale value 100: The tank is completely full
– Scale value 0: The tank is completely empty

Urea tank individual control displays

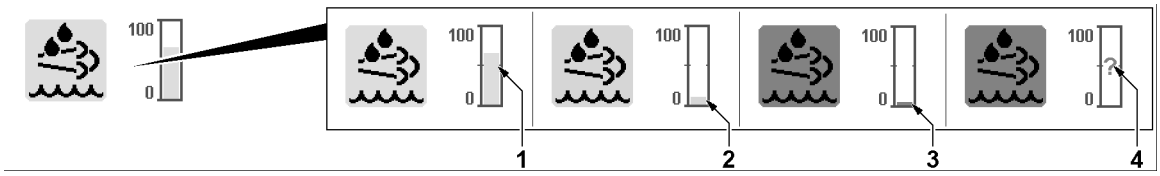

Fig.148377: Urea reserve, bar graph

– Icon and bar **1** green: Urea reserve sufficient
– Icon and bar **2** yellow: Urea reserve is short
– Icon and bar **3** red: Urea reserve low / depleted
– Icon and question mark **4** red: System error, the fill level cannot be determined, erroneous function of the exhaust aftertreatment

NOTICE! Add urea immediately before it is depleted / Immediately bring the crane to a standstill, turn the crane engine off and remedy the problem. Pay attention to the error message.

The exact fill level can be read on the scale of the bar chart:
– Scale value 100: The tank is completely full
– Scale value 0: The tank is completely empty

Engine oil level individual control display

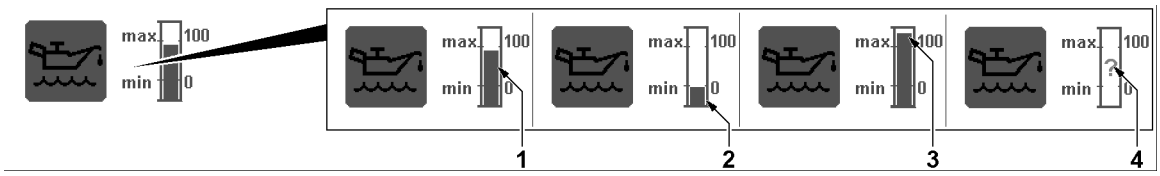

Fig.148379: Engine oil level, bar graph

– Icon and bar **1** blue, bar height between 0 and 100: Normal engine oil level
– Icon and bar **2** blue, bar height below 0: Engine oil underfilled
– Icon and bar **3** blue, bar height above 100: Engine oil overfilled
– Icon blue and question mark **4** red: faulty measurement value, fill level cannot be determined
Note: When the engine is running an erroneous test value appears, to check the engine oil level align the crane horizontally and turn the engine off.

NOTICE!: Do not start the engine if the engine oil is underfilled or overfilled. Remedy the problem and observe the error message.

The exact fill level can be read on the scale of the bar chart:
– Scale value 100: Engine oil fill level upper limit
– Scale value 0: Engine oil fill level lower limit

LWE/LTR 1100-009/25105-02-02/en

copyright © Liebherr-Werk Ehingen GmbH 2023

Diesel particle filter individual control display

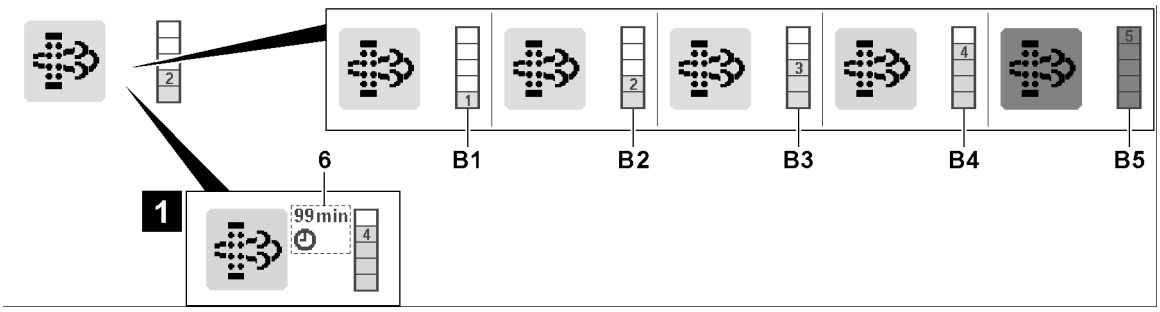

Fig.152688: Diesel particle filter load condition, bar graph

– **B1** Load condition 1 (green)
  • Load condition OK, diesel particle filter minimally loaded
– **B2** Load condition 2 (green)
  • Load condition OK, diesel particle filter lightly loaded
– **B3** Load condition 3 (green)
  • Load condition OK, diesel particle filter half loaded
– **B4** Load condition 4 (yellow)
  • Load condition increased, diesel particle filter strongly loaded
– **B5** Load condition 5 (red)
  • Load condition critical, diesel particle filter with maximum load
– **6** Regeneration time
  • This appears only when regeneration at a standstill of the diesel particle filter has started, see illustration **1**
  • The remaining time (regeneration time) of regeneration at a standstill of the diesel particle filter is displayed continuously.
  • **Note**: Start regeneration at a standstill of the diesel particle filter, see the Crane operating instructions, chapter 4.03.

If load condition 4 **B4** appears, Liebherr-Werk Ehingen GmbH recommends carrying out regeneration at a standstill as soon as possible (during the work day).

If load condition 5 **B5** appears and regeneration at a standstill is no longer possible:
– Stop engine operation.
– Contact Customer Service at Liebherr-Werk Ehingen GmbH.

Note
Load condition 5 **B5**
► The engine torque is reduced to protect the engine against damage.

Hydraulic oil level individual control display

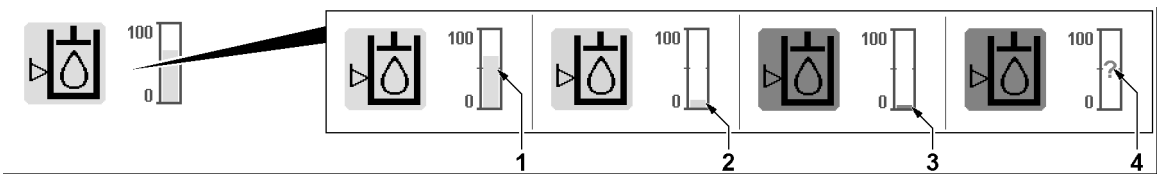

Fig.152690: Hydraulic oil level, bar graph

– Icon and bar **1** green: Hydraulic oil level OK
– Icon and bar **2** yellow: Hydraulic oil level low
– Icon and bar **3** red: Hydraulic oil level too low
– Icon and question mark **4** red: System error, the hydraulic oil level cannot be determined

LWE/LTR 1100-009/25105-02-02/en

copyright © Liebherr-Werk Ehingen GmbH 2023

NOTICE!: Stop crane operation if the hydraulic oil level is too low. Remedy the problem and observe the error message.

The exact fill level can be read on the scale of the bar chart:
- Scale value 100: The tank is completely full
- Scale value 0: The tank is completely empty

Battery voltage individual control display

Fig.148382: Battery voltage icon, display value and unit of measure

Icon and display value
- Green: Battery voltage OK
- Red: Overvoltage or undervoltage in on-board power supply / system error
  NOTICE!: Immediately bring the crane to a standstill, turn the crane engine off and remedy the problem. Pay attention to the error message.

Coolant temperature individual control display

Fig.148383: Coolant temperature icon, display value and unit of measure

Icon and display value
- Green: Coolant temperature OK
- Red: Charge air temperature too high / system error
  NOTICE! Immediately bring the crane to a standstill, turn the crane engine off and remedy the problem. Pay attention to the error message.

Charge air temperature individual control display

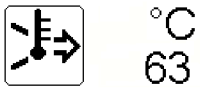

Fig.148384: Charge air temperature icon, display value and measuring unit

Icon and display value
- Green: Charge air temperature OK
- Red: Charge air temperature too high / system error
  NOTICE!: Immediately bring the crane to a standstill, turn the crane engine off and remedy the problem. Pay attention to the error message.

Individual control display of the transmission temperature

Fig.148385: Transmission temperature icon, display value and unit of measure

Icon and display value
- Green: Transmission temperature OK
- Red: Transmission temperature not OK

LWE/LTR 1100-009/25105-02-02/en

copyright © Liebherr-Werk Ehingen GmbH 2023

NOTICE!: Immediately bring the crane to a standstill, turn the crane engine off and remedy the problem. Pay attention to the error message.

Hydraulic oil temperature individual control display

Fig.156249: Hydraulic oil temperature icon, display value and measuring unit

Icon and display value
- Green: Hydraulic oil temperature OK
- Red: Hydraulic oil temperature too high
  NOTICE!: Immediately bring the crane to a standstill, turn the crane engine off and remedy the problem. Pay attention to the error message.

Individual control display of the hydraulic oil temperature, hydraulic circuit 1

Fig.148386: Hydraulic oil temperature, hydraulic circuit 1 icon, display value and unit of measure

Icon and display value
- Green: Hydraulic temperature in hydraulic circuit 1 OK
- Red: Hydraulic temperature in hydraulic circuit 1 too high
  NOTICE!: Immediately bring the crane to a standstill, turn the crane engine off and remedy the problem. Pay attention to the error message.

Individual control display of the hydraulic oil temperature, hydraulic circuit 2

Fig.148387: Hydraulic oil temperature, hydraulic circuit 2 icon, display value and unit of measure

Icon and display value
- Green: Hydraulic temperature in hydraulic circuit 2 OK
- Red: Hydraulic temperature in hydraulic circuit 2 too high
  NOTICE!: Immediately bring the crane to a standstill, turn the crane engine off and remedy the problem. Pay attention to the error message.

Engine oil pressure individual control display

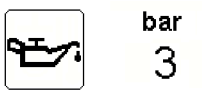

Fig.148388: Engine oil pressure, display value and unit of measure

Icon and display value
- Green: Engine oil pressure OK
- Red: Engine oil pressure too low
  NOTICE!: Immediately bring the crane to a standstill, turn the crane engine off and remedy the problem. Pay attention to the error message.

LWE/LTR 1100-009/25105-02-02/en

copyright © Liebherr-Werk Ehingen GmbH 2023

Individual control display of the torque converter temperature

Fig.148389: Torque converter temperature icon, display value and unit of measure

Icon and display value
- Green: Torque converter temperature OK
- Red: Torque converter temperature not OK
  NOTICE!: Immediately bring the crane to a standstill, turn the crane engine off and remedy the problem. Pay attention to the error message.

5.5 Monitoring the surface pressure and center of gravity

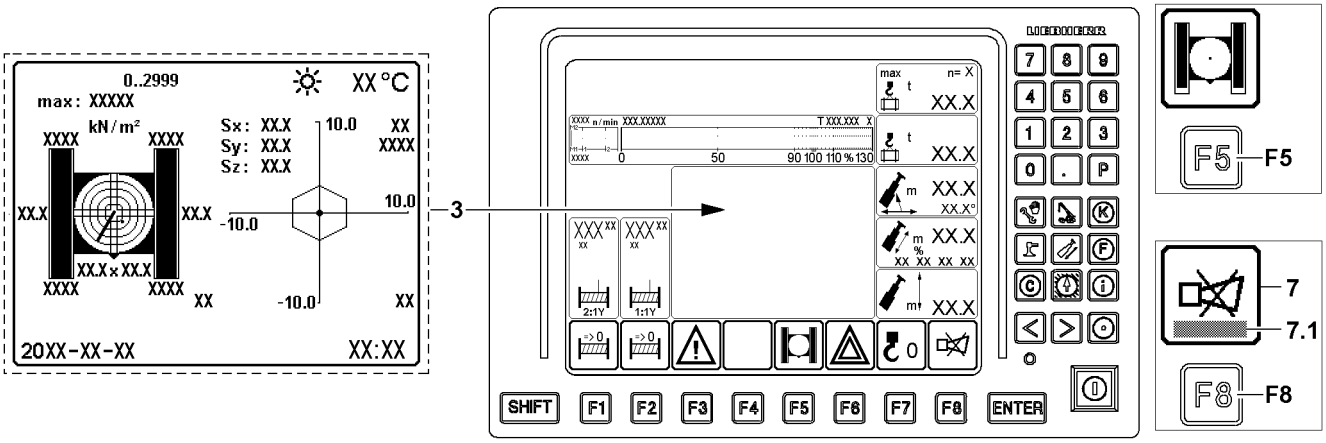

Fig.122538: Exemplary illustration of monitoring of surface pressure and center of gravity

WARNING
The crane can topple over!
When the programmed limit values are reached in the monitoring of surface pressure and center of gravity, there is no automatic shut-off of crane movements.
The displayed values are calculated and are informative. Calculated values are below the tolerances and unpredictable influences, for example crane control, surrounding and environmental influences.
Due to the resulting tolerance field of the values, the monitoring of surface pressure and center of gravity may not be used to determine the limit values of the crane.
If this is disregarded, then the crane can topple over.
Personnel can be severely injured or killed.
- ► Do not use the displayed values to determine the limit values of the crane and to utilize the crane to its tipping limit or until it sinks in.
- ► Make sure that all values are within the programmed limit values.

WARNING
Increased surface pressure!
The calculation of the values for the display of the surface pressure in the LICCON monitor are based on ideal assumptions.
- ► Side deformations of the boom system due to wind, incline position and elastic resilience of the steel structure are not taken into account but they can lead to an increase of the surface pressure.

LWE/LTR 1100-009/25105-02-02/en

copyright © Liebherr-Werk Ehingen GmbH 2023

WARNING
Shifting of the center of gravity!
The calculation of the values for the display of the center of gravity in the LICCON monitor are based on ideal assumptions.
► Side deformations of the boom system due to wind, incline position and elastic resilience of the steel structure are not taken into account but they can lead to a shifting of the center of gravity.

WARNING
The crane can topple over!
If the permissible incline of the crane is exceeded, the crane can topple over.
► Do not exceed the permissible incline from the load chart.
► Do not exceed the permissible incline for driving the crane, see Crane operating instructions, chapter 4.10.

The monitoring of surface pressure and center of gravity **3** is always active and can be displayed in the monitoring field, if necessary. Due to the color of the icon over the function key **F5** the crane driver is automatically alerted in case of a warning event.

The monitoring field has its fixed position on the LICCON monitor and can be hidden or assigned with other functions.

By pressing the function key **F5**, the surface pressure and center of gravity monitoring **3** is displayed in the monitoring field.

Note
Turned off monitoring of surface pressure and center of gravity.
► Outside of the crane operation program, the monitoring of surface pressure and center of gravity is turned off.
► When the monitoring of surface pressure and center of gravity is turned off, warning events are not recognized.

Warning icon color key above the function key **F5**
– Blue warning icon: Monitoring the surface pressure and center of gravity is ok.
– Crawler carrier in warning icon red: Warning for monitoring of surface pressure and center of gravity.
  If a warning occurs, an error message **7.1** is displayed in the *Horn* icon **7**.
  The error message **7.1** includes an acoustic signal through the LICCON monitor and an error description.
  Press the function key **F8** once: The acoustic signal is turned off.
  Press the function key **F8** twice: The error description for the error message **7.1** which occurred last is called up.

3 *Monitoring of surface pressure and center of gravity* display
• The values are calculated depending on the set up configuration of the crane and the load.

LWE/LTR 1100-009/25105-02-02/en

copyright © Liebherr-Werk Ehingen GmbH 2023

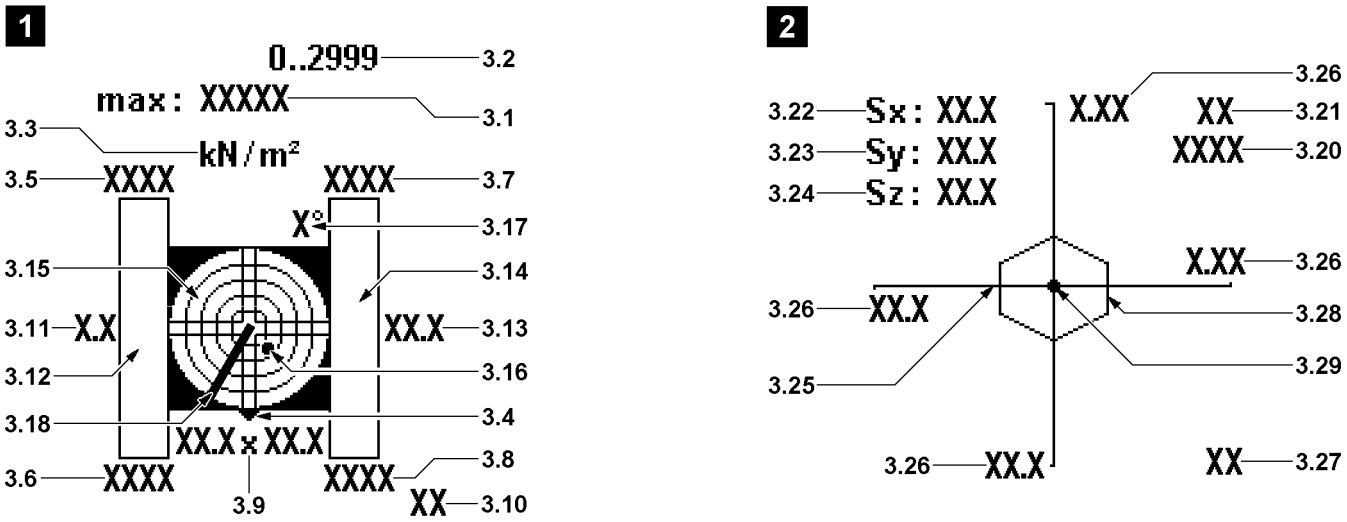

Fig.122539: Exemplary illustration of the surface pressure and center of gravity display

Surface pressure icon display, illustration **1:**

3.1 Permissible surface pressure
- The value is entered by the crane operator via the keypad.

3.2 Input area
- Input area for the permissible surface pressure **3.1**.

3.3 Measuring unit for surface pressure
- Measuring unit for the pressure data in the *Surface pressure* icon (illustration **1**).

3.4 Direction specification
- The triangle symbolizes where the front of the crawler travel gear is in the illustration.
- **Note:** The front of the track is always on the side where the chain tension devices for the crawler carriers are located.

3.5 Surface pressure
- Calculated actual value of surface pressure on the crawler travel gear, left rear.

3.6 Surface pressure
- Calculated actual value of surface pressure on the crawler travel gear, left front.

3.7 Surface pressure
- Calculated actual value of surface pressure on the crawler travel gear, right rear.

3.8 Surface pressure
- Calculated actual value of surface pressure on the crawler travel gear, right front.

3.9 Track width / support base
- Display of equipped track width / support base

3.10 Length data measuring unit
- Measuring unit for the measuring data in the *surface pressure* icon

3.11 Placement surface
- Calculated placement surface of crawler carrier right as value.

3.12 Placement surface
- Calculated placement surface of crawler carrier right as graphic.

3.13 Placement surface
- Calculated placement surface of crawler carrier left as value.

3.14 Placement surface
- Calculated placement surface of crawler carrier left as graphic.

3.15 Incline indicator
- The graphic display is in the form of a spirit level, with a moving dot **3.16** representing the air bubble.
- **Note**: Incline display with number values, see section „Monitored auxiliary functions“.

3.16 Point
- The center of the dot **4.2** shows the incline.

LWE/LTR 1100-009/25105-02-02/en

copyright © Liebherr-Werk Ehingen GmbH 2023

3.17 Display resolution
- This value describes the resolution of the graphic view. The resolution is matched automatically to the inclination

3.18 Boom direction
- Current boom direction of the crane, in reference to the displayed icon.

Center of gravity icon display, illustration **2:**

3.20 Weight data
- Calculated total weight of the crane including load.

3.21 Weight unit
- Weight unit for the weight data **3.20** in the *center of gravity* icon (illustration **2**).

3.22 Center of gravity position
- Calculated center of gravity position in direction „Sx“

3.23 Center of gravity position
- Calculated center of gravity position in direction „Sy“

3.24 Center of gravity position
- Calculated center of gravity position in direction „Sz“

3.25 Axis of coordinates
- The axis of coordinates **3.25** is aligned according to the direction of the *surface pressure* icon (illustration **1**) centered to the slewing ring on the placement surface of the crane.

3.26 Scale value
- Scale value on the axis of coordinates **3.25**

3.27 Measuring unit
- Measuring unit in the *center of gravity* (illustration **2**)

3.28 Core area
- Calculated core area of the crane according to the set up configuration, load and ground conditions.
- **Note:** The core area is an important reference point for the center of gravity of the crane.

3.29 Center of gravity Sx/Sy
- Calculated center of gravity displayed graphically in direction Sx/Sy
- **Note:** The actual position is in direct relation to the values center of gravity position **3.22** and center of gravity position **3.23**

Note
Additional display values in the Display *Monitoring of surface pressure and center of gravity* **3**
► Date, time and outside temperature are also displayed.

LWE/LTR 1100-009/25105-02-02/en

copyright © Liebherr-Werk Ehingen GmbH 2023

5.6 Monitored auxiliary functions

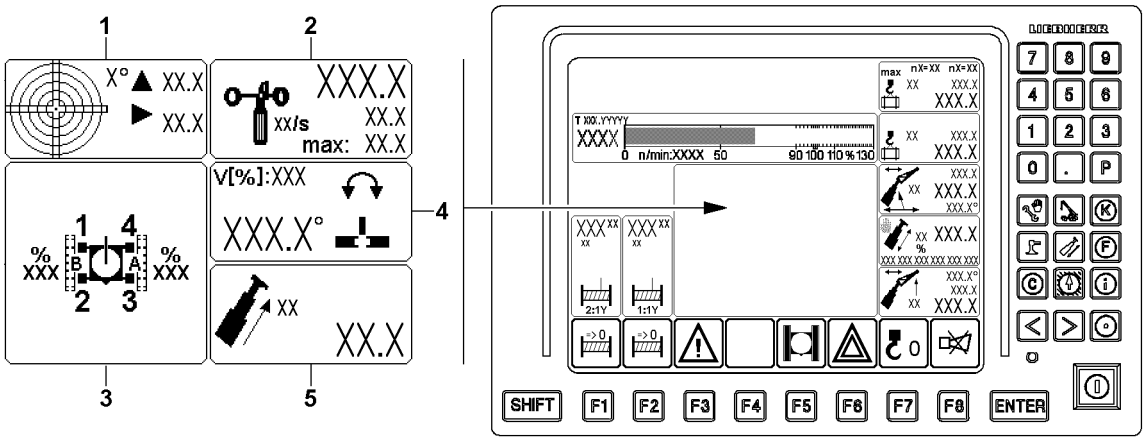

Fig.122521: Exemplary illustration of monitored auxiliary functions

There are several monitored auxiliary functions, which can be displayed when needed or automatically.

The monitoring of all auxiliary functions is always active during normal crane operation, only the icons may be hidden. The icons of the monitored auxiliary functions have their fixed place on the LICCON monitor.

Using the function key **F4**, you can show the icons for the monitored auxiliary functions.

Auxiliary functions:

1 Crane incline
2 Wind speed
3 Crawler travel gear
4 Slewing range
5 Telescopable load

The display changes depending if the monitored auxiliary functions are turned on or off:

Monitored auxiliary functions turned off:

– No error:
  Icons are not shown.
– Error in one function:
  Icon with error message is shown.

Monitored auxiliary functions turned on:

– Optional icons (customer request) are displayed permanently.

LWE/LTR 1100-009/25105-02-02/en

copyright © Liebherr-Werk Ehingen GmbH 2023

5.6.1 Crane incline

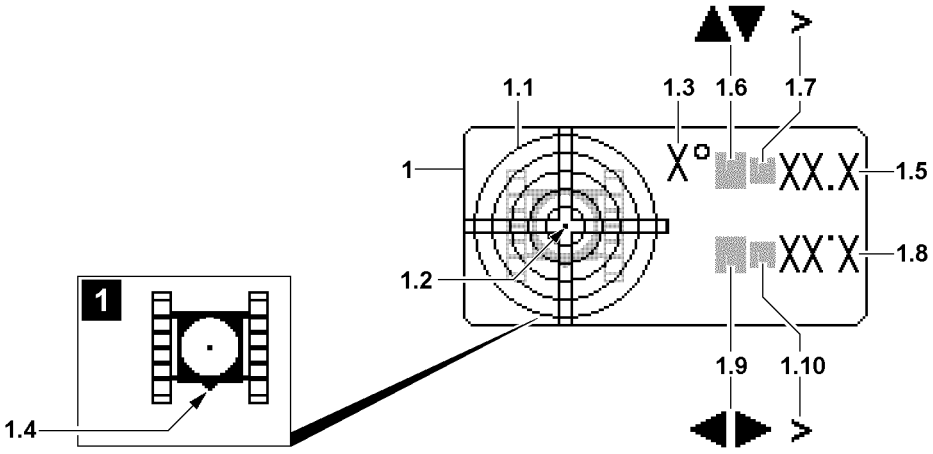

Fig.122522: Display Crane incline

WARNING
The crane can topple over!
If the permissible incline from the load chart is exceeded, the crane can topple over.
The *larger than* icon shows that the crane is inclined further than can be shown.
The exact incline can then not be read.
► Do not exceed the permissible incline from the load chart.

1 *Incline* icon
- Display of the inclination of the crane to the horizontal in the longitudinal and lateral direction. The display is graphic as well as numeric.
- The display is divided in a graphic section and a numeric section.
- The direction notes refer to the crawler travel gear.

Graphic part:

1.1 Graphic display
- The graphic display is in the form of a spirit level, with a moving dot **1.2** representing the air bubble.

1.2 Point
- The dot **1.2** shows the incline position.

1.3 Display resolution
- This value describes the resolution of the graphic view. The resolution is matched automatically to the inclination

1.4 Crawler travel gear front side
- To the graphic view **1.1** the overhead view of the imitated crawler travel gear is provided, see illustration **1**. The position of the front side of the crawler travel gear **1.4** provides the orientation aid in the sight gauge.

Numeric part:

1.5 Longitudinal direction
- Incline of crane in the longitudinal direction in [°].

1.6 Direction arrow
- The direction arrow shows the direction of the incline

1.7 Display range exceeded
- If the *larger than* icon appears, then the display range is exceeded.
- **Note:** The crane is inclined further than can be shown.

1.8 Lateral direction
- Incline of crane in lateral direction in [°]

1.9 Direction arrow
- The direction arrow shows the direction of the incline

LWE/LTR 1100-009/25105-02-02/en

copyright © Liebherr-Werk Ehingen GmbH 2023

1.10 Display range exceeded
- If the *larger than* icon appears, then the display range is exceeded.
- **Note:** The crane is inclined further than can be shown.

Note
Orientation of the crane in *Incline* icon **1**.
► Observe the position of the front side of the crawler travel gear **1.4**: The chain tension devices of the crawler carriers are located on the front side of the crawler travel gear.

5.6.2 Wind speed

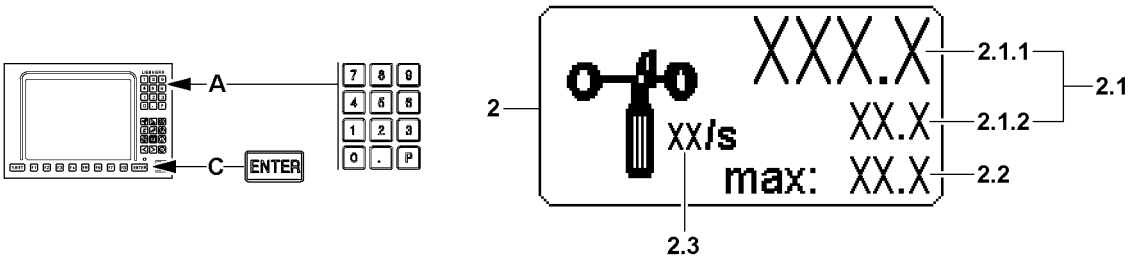

Fig.122523: Wind speed display

WARNING
Wind speed too high!
If the maximum permissible wind speed is exceeded with an erected boom system, there is a danger of accident.
Dangerous situations can arise, such as oscillating load or shaking crane.
The crane can topple over, personnel can be severely injured or killed.
► **The crane movements will not be shut-off.**
► The boom system must be taken down in time before exceeding the maximum permissible wind speed of the crane.

WARNING
Crane operation without wind speed display value!
If question marks („?“) appear in the *wind speed* icon **2** instead of display values, then a wind sensor which must be present is missing or there is an error in the wind sensor.
► Before starting to work with the crane, make sure that all wind sensors which must be present are present and functioning.
► Remedy the error immediately.
► If an error cannot be remedied, then it must be ensured that the wind speed is monitored otherwise.

2 *Wind speed* icon

2.1 *Current wind speed* icon
- **Note:** If a wind sensor is connected, then the wind speed appears at **2.1.1**.
  If two wind sensors are connected (example: Crane operation with auxiliary boom / accessory), then a second wind speed appears additionally at **2.1.2**.
- **2.1.1** current wind speed WG1
- **2.1.2** current wind speed WG2

Note
► If several wind sensors are connected, the installation location of the wind sensor determines the corresponding display in the *Wind speed* icon **2**.
► The priority depends on the installation location of the wind sensor, from outside (auxiliary boom / accessory) to inside (main boom). The wind speed for the outside wind sensor is shown independent from the inside wind sensor.

LWE/LTR 1100-009/25105-02-02/en

copyright © Liebherr-Werk Ehingen GmbH 2023

2.2 Maximum permissible wind speed
- The value depends on the operating mode and the set up configuration.
- If the current wind speed value exceeds the displayed maximum value, the maximum value starts to blink and an acoustic warning sounds.

Note
► If access to a load chart is not possible, then the maximum value starts to blink and an acoustic warning sounds.

2.3 Measuring unit icon
- [m/s] or [ft/s]
- On some crane types additionally: [km/h] or [mph]*

Reducing the maximum permissible wind speed*

Note
► This function is not available for all crane types.

The value for the maximum permissible wind speed **2.2** can possibly be reduced.

Ensure that the following prerequisite is met:
– The *Wind speed* icon **2** is shown.

Reduce the wind speed:
1. Press the **ENTER** key **C**.
2. As soon as the value for the maximum permissible wind speed **2.2** is highlighted in blue, enter the new value via the keypad **A**.
3. Press the **ENTER C** key again. The changed value for the maximum permissible wind speed **2.2** is shown in red.

Cancel reduce the wind speed:
1. Press the **ENTER** key **C**.
2. As soon as the value for the maximum permissible wind speed **2.2** is highlighted in blue, enter 0 (zero) as the new value via the keypad **A**.
3. Press the **ENTER C** key again. The original value from the load chart is taken over again.

Note
► If you try to enter a value for the maximum permissible wind speed **2.2** which is too high, then the highest possible value is taken over.

5.6.3 Crawler travel gear

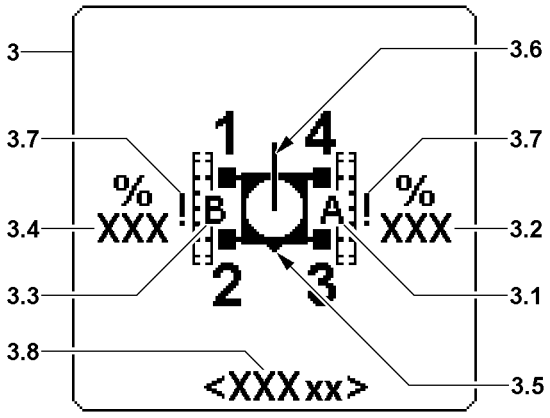

Fig.122520: Crawler travel gear display

3 *Crawler travel gear* icon

LWE/LTR 1100-009/25105-02-02/en

copyright © Liebherr-Werk Ehingen GmbH 2023

3.1 Crawler carrier A
- Marked crawler carrier A in the icon

3.2 Extension condition A
- Extension condition of crawler carrier A in percent

3.3 Crawler carrier B
- Marked crawler carrier B in the icon

3.4 Extension condition B
- Extension condition of crawler carrier B in percent

3.5 Front on crawler travel gear
- Shows where the front side of the crawler travel gear is in the icon.

3.6 Telescopic boom alignment
- The bar shows the direction of the telescopic boom in reference to the crawler travel gear.
  In the example, the telescopic boom extends to the rear past the crawler travel gear.

3.7 Exclamation mark
- Appears if the track width monitoring is bypassed.

3.8 Track width / support base*
- **Note**: Only present for certain crane types
- Display of equipped track width / support base
- In [m] or [ft]

Note
► The large numbers 1 - 4 correspond to the numbering on the crawler travel gear.
► The letters A and B correspond to the signs on the crawler carriers.

5.6.4 Slewing range

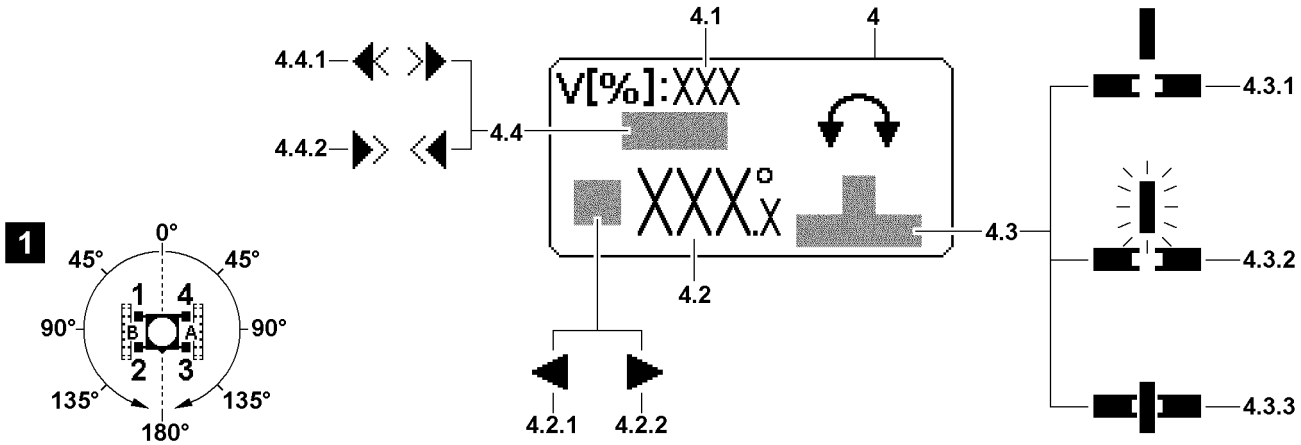

Fig.152693: Display Slewing range

4 *Slewing range* icon

WARNING
Danger of accident due to excessive slewing speed!
► Make the preselection of the maximum slewing speed according to the specifications in the load chart manual, see section „Speed reduction master switch“.
► The following applies: The longer the boom and / or the greater the load, the lower the maximum slewing speed must be.
► **Never** deflect the master switch for the slewing gear to the stop with a long boom and / or great load.

4.1 Maximum slewing speed
- Maximum slewing speed *V* in [%]

LWE/LTR 1100-009/25105-02-02/en

copyright © Liebherr-Werk Ehingen GmbH 2023

- Marks the set maximum slewing speed of the slewing gear at fully deflected master switch.
  100 % correspond to the largest possible slewing speed of the slewing gear.
  This value can be infinitely preselected, see section „Speed reduction master switch“.

4.2 Slewing angle
- Slewing angle of the superstructure in relation to the working direction to the rear (0 [°])
  increases on both sides to the maximum value of 180°, see illustration **1**
- The direction arrow in front of the value shows the direction of rotation of the superstructure.
- **4.2.1** (Left arrow): The superstructure is turned to the left from the zero point.
- **4.2.2** (Right arrow): The superstructure is turned to the right from the zero point.

4.3 Turntable pinning
- Current status of turntable pinning between turntable and crane travel gear

4.3.1 The lock is unpinned and static **4.3.1**
- Locking pin on top: Turntable unpinned

4.3.2 Lock is unpinned and blinking
- Locking pin in intermediate position: Error

4.3.3 Lock is pinned and static
- Locking pin on the bottom, turntable pinned

Note
► The turntable pinning is controlled with the operating and control unit (BKE), see chapter 4.01.

4.4 Operating mode of the slewing gear*
- **Note**: Only present for certain crane types:
  The operating mode of the slewing gear can only be set for crane types that are not equipped with a foot button* for the freewheeling of the slewing gear. For a description of the foot button* for the freewheeling of the slewing gear, see the Crane operating instructions, chapter 4.01 and 4.05.

4.4.1 Flexible slewing gear *freely rotating*

4.4.2 Flexible slewing gear *fixed*

Note
► To set the operating mode of the slewing gear, see section „Setting the operating mode of the slewing gear“.
► In certain situations the operating mode of the slewing gear can be specified by the crane control. If this is the case, the setting via the crane control is used, even if a deviating settings is set by the crane operator.

5.6.5 Telescopable load

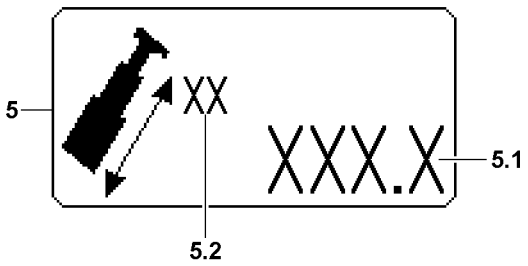

Fig.122525: Telescopable load display

5 *Telescopable load* icon
- The maximum load with which the boom can be telescoped is shown in the icon.

LWE/LTR 1100-009/25105-02-02/en

copyright © Liebherr-Werk Ehingen GmbH 2023

5.1 Telescopable load
- The maximum load with which the boom can be telescoped.
- If the current load on the hook is higher (display value in icon *Actual load* is higher), then the value is shown blinking.

Note
- ► The *Telescopable load* icon **5** is automatically displayed with a blinking value, when the telescopeable load **5.1** is smaller than the display value in the actual load display.
- ► The *Telescopable load* icon **5** cannot be masked as long as the telescopeable load **5.1** is smaller than the display value in the actual load display.

5.2 Weight unit
- Weight unit of telescopable load
- In [t] or [kips]

WARNING
Danger of accident if the telescopable load is exceeded!
Exceeding the telescopable load does not shut off crane movements.
- ► Do not exceed the telescopable load.

5.7 Winch display

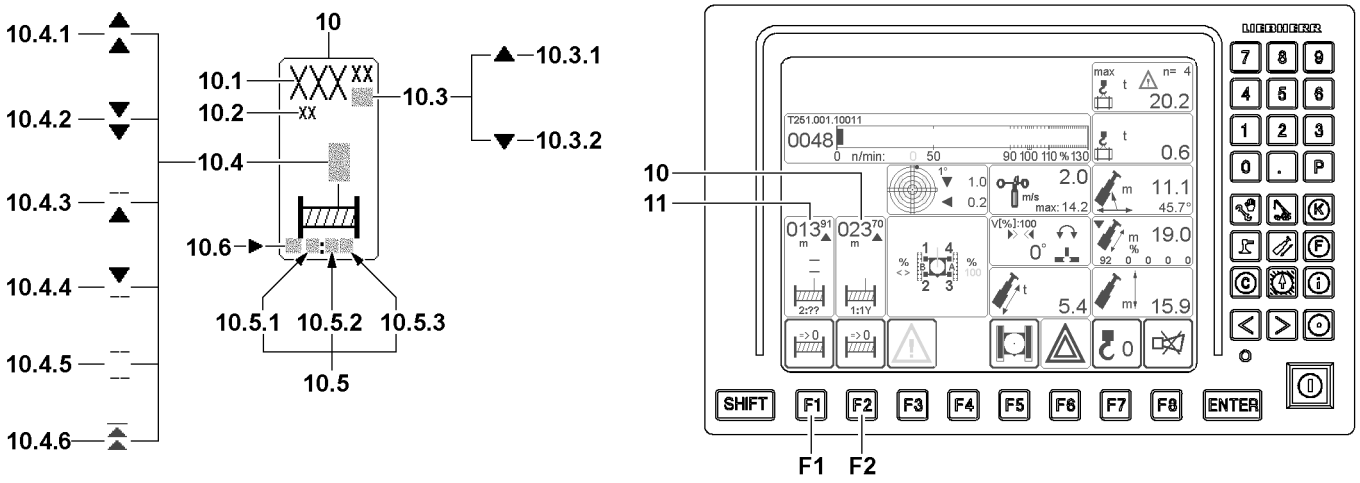

Fig.152696: Display for winch 1 and winch 2

The displays for winch 1 and winch 2 have a fixed space on the LICCON monitor.

The current position of each winch can be set as zero point:
- Hoist winch: The completed hook path is calculated with the reeving set in the Set up program. A prerequisite for a correct display is that the value entered matches the entered reeving and the actual number of rope strands between the boom head and the hook block.
- Control winch: Rope length of winch spooled out / up

F1 Function key
- Above the function key **F1** appears the icon *Reset winch display*. Pressing on the button sets the display of the rope measurement to zero. Path measurement starts here.

F2 Function key
- Above the function key **F2** appears the icon *Reset winch display*. Pressing on the button sets the display of the rope measurement to zero. Path measurement starts here.

10 Winch 1
- Icon for winch 1 (WI)

11 Winch 2
- Icon for winch 2 (WII)

LWE/LTR 1100-009/25105-02-02/en

copyright © Liebherr-Werk Ehingen GmbH 2023

Note

► The displays for winch 1 and winch 2 are identical and are explained on one icon element.

10.1 Rope measurement
- In [m] or [ft], see Measuring unit **10.2**
  From a zero point to be determined
- As hoist winch with the reeving set in the Set up program: completed hook path. A prerequisite for a correct display is that the reeving value entered equals the actual number of rope strands between the boom head and the hook block.
- The positions before the decimal point are displayed with a maximum of three large digits. The digits after the decimal point are displayed with small digits.

Note

Display area winch displays.

► The *rope measurement* **10.1** display has only three positions before the comma, any positions before that are cut off. The crane operator must evaluate for himself if, for example 200 m rope are spooled up on a winch or 1200 m. **The display in both cases would be identical with 200 m.**

► The hook path calculation only works accurately if the load is suspended freely and is not luffed or telescoped during the lifting procedure. Not taken into account are flexation and rope expansion.

► The length display (hook path display) is only correct when the winch is calibrated.

10.2 Measuring unit
- Measuring unit of hook path display: [m] or [ft]

10.3 Direction of hook movement
- The arrows on the length value show the direction of the hook movement in relation to the zero point
- **10.3.1** (Up arrow:): Hook moves upward from the zero point
- **10.3.2** (Down arrow): Hook moves downward from the zero point

10.4 Winch status display
- There are five winch condition icons, all blinking
- **Note:** If no winch status icon appears, the activated winch is inactive and is neither spooled up nor spooled out.

10.4.1 Spool out
- Winch is spooled out

10.4.2 Spool up
- Winch is spooled up

10.4.3 Spooled out
- Additional spooling out of the winch is blocked

10.4.4 Spooled up
- Additional spooling up of the winch is blocked

10.4.5 Winch deactivated
- Winch is deactivated or unplugged
- **Note:** Winch cannot be controlled.

10.4.6 Winch turned off in emergency
- Spooling out of the winch is blocked
- Pay attention to the error message

10.5 Master switch assignment
- **10.5.1** First digit
  - First digit: Winch number, every winch icon is permanently assigned to a winch
- **10.5.2** Second digit
  - Master switch number, according to the assigned master switch
  - ? : No master switch assigned
- **10.5.3** Letter
  - Actuation direction of the master switch, see illustration
  - ? : No actuation direction assigned

LWE/LTR 1100-009/25105-02-02/en

copyright © Liebherr-Werk Ehingen GmbH 2023

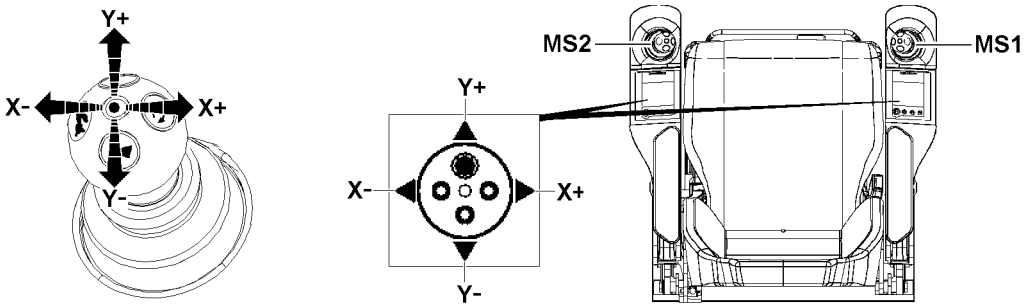

Fig.122441: Actuation directions Master switch

MS1 Master switch 1
MS2 Master switch 2
X+ To the right
X- To the left
Y+ To the front
Y- To the rear

10.6 Vibration sensor
- If the vibration sensor for a winch is added on the master switch, then an arrow appears in this winch icon for the added vibration sensor.
- **Note:** The vibration sensor is added at the first actuated crane function.

5.8 Function key line (crane operation)

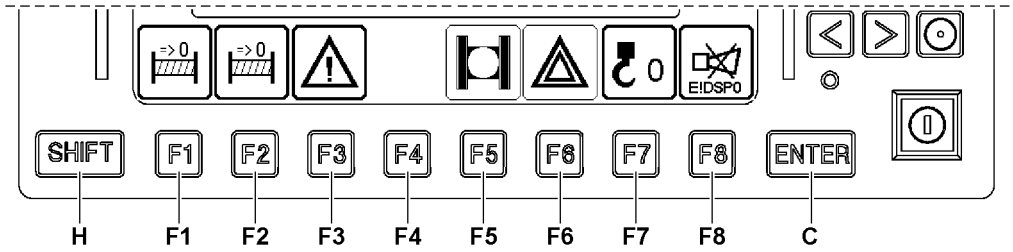

Fig.122540: Function key line in the Crane operation program

The function key line consists of function keys **F1** to **F8** and the icon line above them. The function keys correspond to the various function key icons above them.

The function key icons may trigger a function or they change their appearance upon the push of a key (function keys) and thereby their definition.

Depending on the crane type and set up configuration, fewer function key icons may be present.

Not all function keys have icons or functions assigned to them. This depends on the program selection.

Pressing a function key can change the appearance of the icon above, its meaning, or its textual content.

F1 Function key
- Set the current hook position as the zero point for the Winch 2***** hook path display.
- Pressing the function key **F1** causes the *Reset winch display* icon to appear, i.e. the winch 2***** hook path display in the winch icon above is set to „000.00“ when the key is pressed. Path measurement starts here.

F2 Function key
- Set the current hook position as the zero point for the Winch 1 hook path display.
- Pressing the function key **F2** causes the *Reset winch display* icon to appear, i.e. the winch 1 hook path display in the winch icon above is set to „000.00“ when the key is pressed. Path measurement starts here.

F3 Function key
- Displaying monitoring functions during crane operation
- Using the function key **F3**, the *monitoring functions in crane operation* displays can be displayed.

LWE/LTR 1100-009/25105-02-02/en

copyright © Liebherr-Werk Ehingen GmbH 2023

Note
- ► The monitoring functions in crane operation are always active; however, they can be hidden.
- ► If a warning event occurs, there is an acoustic warning (horn) and the *monitoring function in crane operation* displays are displayed on the LICCON monitor, even if they were previously hidden.

F4 Function key
- Not assigned

F5 Function key
- Display or hide surface pressure and center of gravity monitoring
- Using the function key **F5**, the monitoring of the surface pressure and center of gravity can be displayed or hidden.

F6 Function key
- Fading monitored auxiliary functions in or out
- The function key **F6** can be used to display or hide all monitored auxiliary functions in the crane.

F7 Function key
- Taring Actual load display: The actual load display can be changed at any time to net load (tare) by pressing the function key **F7**.
- As long as net load is set, the icon above the function key **F7** is shown in red.
- For a detailed description of the actual load display, see section „Information regarding crane geometry and load“.
- The change to net load is cancelled by each of the following actions:
  1.By pressing the function key **F7** again.
  2.By telescoping the boom by more than 3 LE (dm or 1/10 ft.).
  3.By luffing by more than ±4°.

F8 Function key
- Shut-off of acoustic warning / error diagnostics
- For a detailed description of acoustic warnings on the LICCON monitor, see section „Acoustic warnings on LICCON monitor“

5.9 Operating elements in the Crane operation program

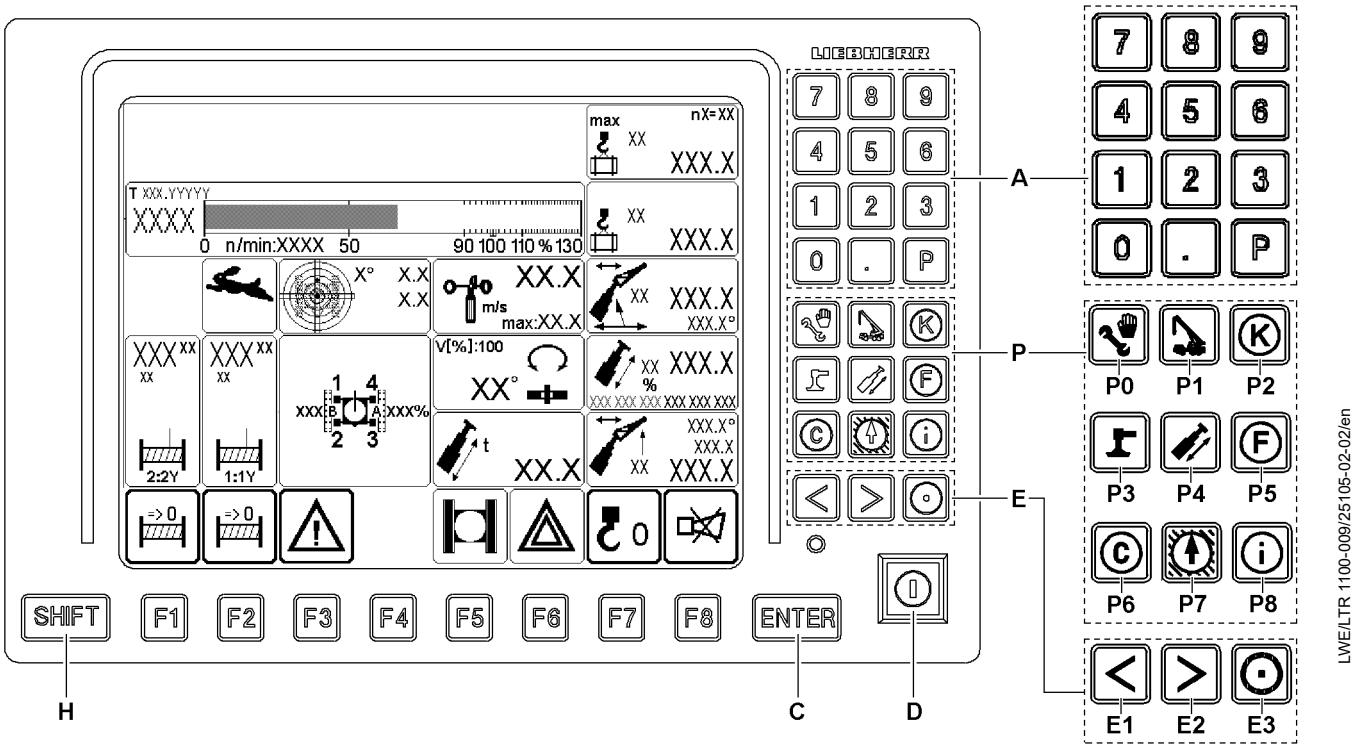

Fig.122541: Operating elements in the Crane operation program

copyright © Liebherr-Werk Ehingen GmbH 2023

The following functions are assigned to the other operating elements of the display and operating unit of the LICCON computer system in the Crane operation program.

A Numeric keypad
- For entry of numeric values (if required)

P Program keys
- The program keys are used to select individual programs. The program specific peculiarities must be observed, see respective sections of programs in this chapter.
  Note: Some programs can only be called up with the program key when no functions are activated via the set up key **D** at the same time.

C **ENTER** key
- For confirmation of entry (if required)

D Set up key
- Zero position (not actuated):
  Normal operation.
- Touching:
  Special functions LICCON overload protection released, see section „Special functions LICCON overload protection“

E Special function keys
- Monitor brightness adjustment (see section „Operating elements of the LICCON computer system“)

Note

► Additional functions of the special function keys **E** are program-dependent and are further explained in the description of the individual LICCON programs.

H **SHIFT** key
- Second level key assignments

5.10 Setting the limit values for the load torque limiter for advance warning and shut-off

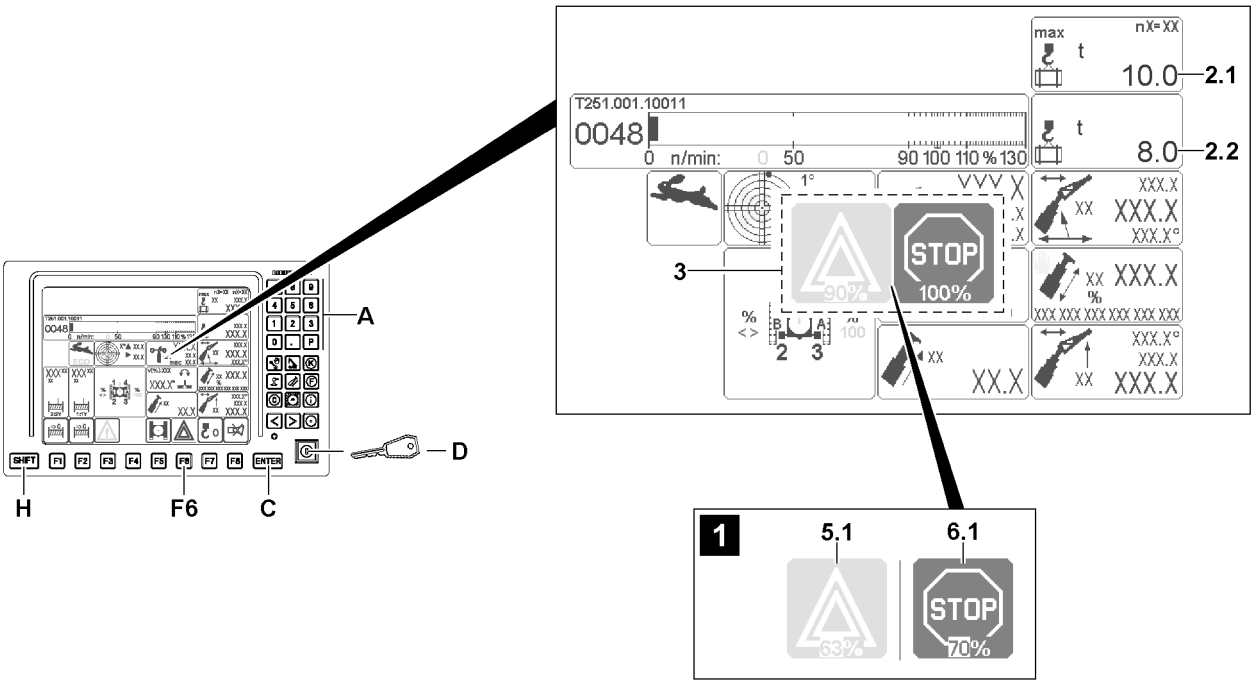

Fig.152692: Setting the limit values for the load torque limiter for advance warning and shut-off

LWE/LTR 1100-009/25105-02-02/en

copyright © Liebherr-Werk Ehingen GmbH 2023

The crane driver can reduce the factory set limit values of the load torque limiter for advance warning and shut-off.

Factory settings:
– The advance warning limit value is 90%
– The shut-off limit value is 100%

If the limit values for the load torque limiter for advance warning and shut-off are reduced:
– the displayed maximum load **2.1** cannot be lifted without exceeding the shut-off limits of the LICCON overload protection
– the crane movements are shut off earlier by the crane control

WARNING
Crane possibilities additionally limited!
If the shut-off limit value is reduced, the crane possibilities are additionally reduced.
The maximum load **2.1** can only be lifted by exceeding the shut-off limits of the LICCON overload protection.
The maximum boom radius of the crane can be reduced.
For crane operation on a variable support, the slewing range can be significantly limited.
► Select the shut-off limit value such that crane operation is possible without exceeding the shut off limits of the LICCON overload protection.
► Before exceeding the shut off limits of the LICCON overload protection, it is recommended to reset the factory set shut-off limit value.
► When transferring the crane to another crane operator: Inform the following crane operator about the changed limit value of the load torque limiter for advance warning and shut-off.

Note
► In order to not limit crane performance, it is advisable to only reduce the advance warning limit value.

Note
Crane control EN13000:2010 active
Exceeding the shut off limits of the LICCON overload protection.
► By pressing the set up key **D** the shut-off limit value can be exceeded only 1/10.
► Example: If the shut-off limit value is set to 70%, the set up key **D** can be used to exceed crane utilization to maximum 77%.
► In order to bypass the shut-off limit value beyond that, the emergency operation LICCON overload protection must be activated.

Note
Crane control EN13000:2010 not active
Exceeding the shut off limits of the LICCON overload protection.
► By pressing the set up key **D** the shut-off limit value is bypassed.

Ensure that the following prerequisite is met:
– The shut-off limit value is selected such that crane operation is possible without exceeding the shut-off limits of the LICCON overload protection.

5.10.1 Displaying the set limit values

► Press the SHIFT key **H** and function key **F6** at the same time.

Result:

– The settings window **3** opens.
– The advance warning limit value can be read on the *advance warning* setting icon **5.1**.
– The shut-off limit value can be read on the *STOP* settings icon **6.1**.

Close the settings window **3**:

LWE/LTR 1100-009/25105-02-02/en

copyright © Liebherr-Werk Ehingen GmbH 2023

► Press the SHIFT key **H** and function key **F6** at the same time.
or
Wait for ten seconds.

5.10.2 Setting the limit value

Note
If you try to set a limit value that is too high, the highest possible value is taken over.
If you try to set a limit value that is too low, the lowest possible value is taken over.
The difference between the limit values is at least 1/10 of the shut-off limit value.
► Select the advance warning limit value between 18 and 90.
► Select the shut-off limit value between 20 and 100.

► Press the SHIFT key **H** and function key **F6** at the same time.

Result:

– The settings window **3** opens.
– The advance warning limit value is highlighted in white in the *advance warning* settings icon **5.1** and can be set, see illustration **1**.

Note
► It is possible to switch between the adjustable limit values by pressing the Enter key **C**.

Set a new advance warning limit value:

► Enter the required advance warning limit value (for example 63) using the keys (0 to 9) on the keypad **A**.

Result:

– The new advance warning limit value is displayed on the *advance warning* setting icon **5.1**.

Problem remedy
The set advance warning limit value is always rejected?
The difference between the limit values must be at least 1/10 of the shut-off limit value. If the advance warning limit value is increased, the shut-off limit value must be correspondingly high.
► First increase the shut-off limit value.

► Press the Enter key **C** until the shut-off limit value is highlighted in white in the *STOP* settings icon **6.1**, see illustration **1**.

Set a new shut-off limit value:

► Enter the required shut-off limit value (for example 70) using the keys (0 to 9) on the keypad **A**.

Result:

– The new shut-off limit value is displayed on the *STOP* setting icon **6.1**.

End the settings:

► Press the SHIFT key **H** and function key **F6** at the same time.
or
Wait for ten seconds.

Result:

– The settings window **3** closes.
– The limit values are set.

Example 1: Occurrence of an advance warning with reduced advance warning limit value

LWE/LTR 1100-009/25105-02-02/en

copyright © Liebherr-Werk Ehingen GmbH 2023

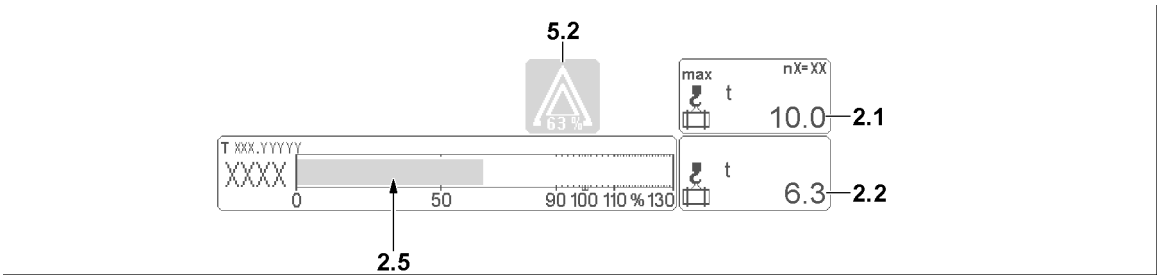

Fig.148397: Advance warning limit value set to 63%, crane utilization 63%

– The *actual load* value **2.2** reaches 63% of the *maximum load* value **2.1**
– Utilization bar **2.5** turns yellow
– The *advance warning* icon **5.2** appears with the set advance warning limit value (in the example, 63%)

Example 2: Occurrence of a shut-off with reduced shut-off limit value

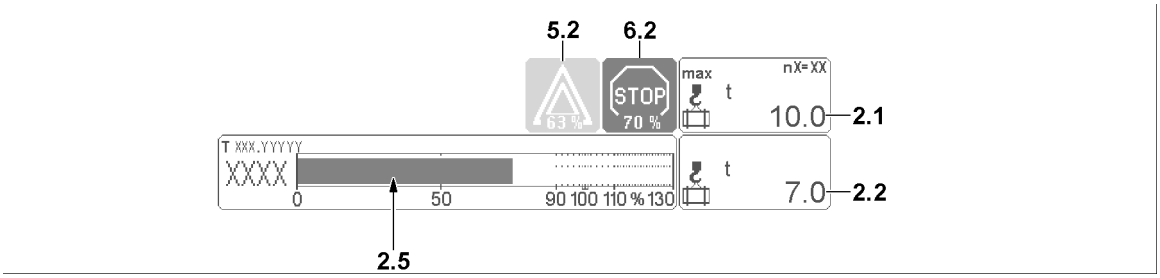

Fig.148398: Shut-off limit value set to 70%, crane utilization 70%

– The *actual load* value **2.2** reaches 70% of the *maximum load* value **2.1**
– Utilization bar **2.5** turns red
– The *advance warning* icon **5.2** appears with the set advance warning limit value (in the example, 63%)
– The *STOP* icon **6.2** appears with the set shut-off limit value (in the example, 70%)
– Load moment increasing crane movements are shut off

► When transferring the crane to another crane operator: Inform the following crane operator about the changed limit value of the load torque limiter for advance warning and shut-off.

LWE/LTR 1100-009/25105-02-02/en

copyright © Liebherr-Werk Ehingen GmbH 2023

6 The Telescoping program

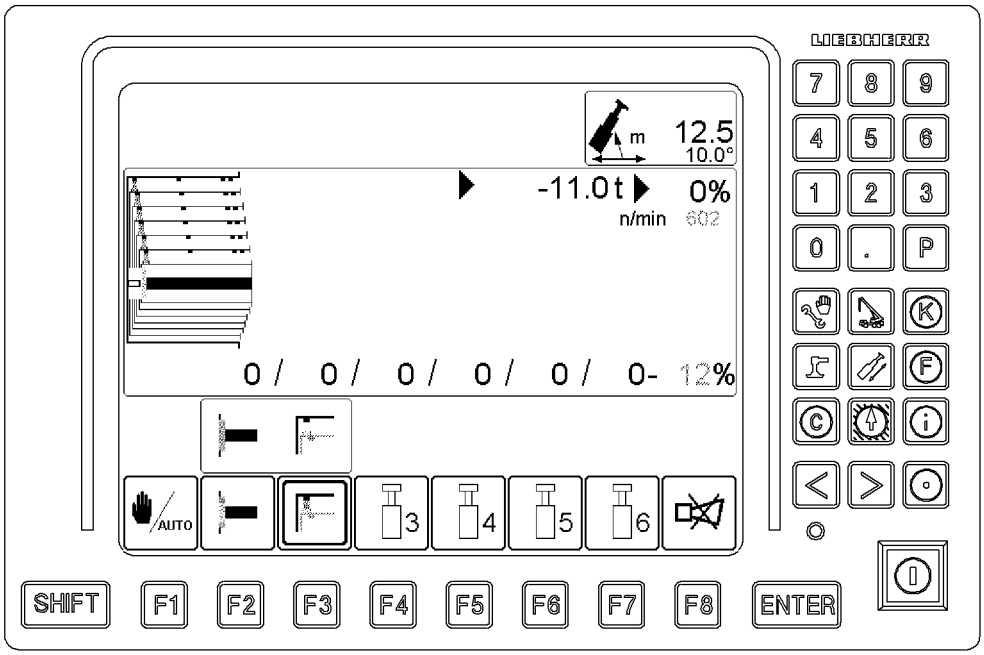

Fig.122469: Exemplary illustration of displays in the Telescoping program

Note

► Only for crane types with the TELEMATIK telescoping system.

LWE/LTR 1100-009/25105-02-02/en

copyright © Liebherr-Werk Ehingen GmbH 2023

6.1 Display areas in the Telescoping program

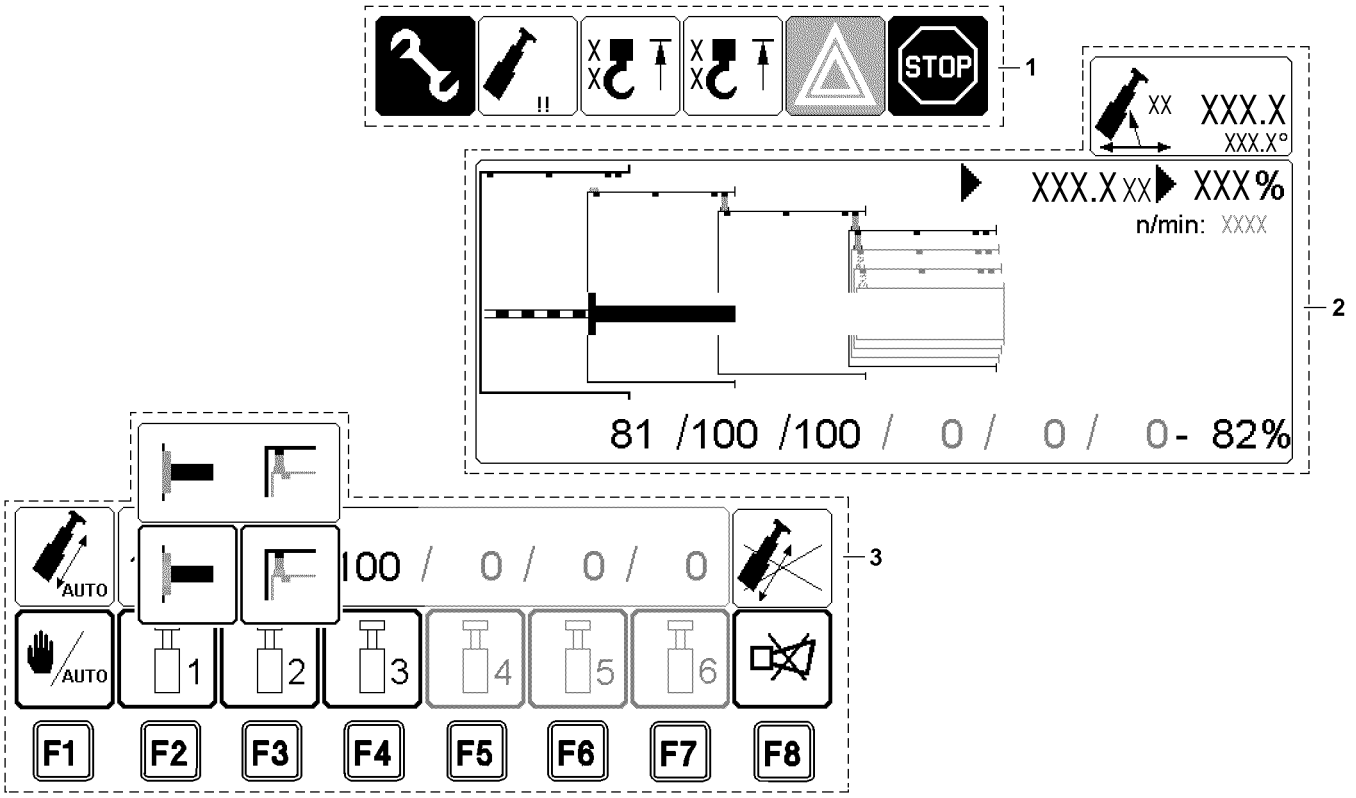

Fig.152701: Display areas in the Telescoping program

In the Telescoping program, the following areas are shown:

1 Alarm functions

2 Telescoping screen

3 Function key line

Note

► For a detailed description of the alarm functions **1**, see section „The Crane operation program“.

The telescoping screen **2** shows the crane operator in a dynamic view:
- The pin condition of the telescopic boom.
- The position of the individual telescopes to each other.
- The extension condition of telescoping cylinder.

The function key line **3** consists of function keys F1 to F8 and the icon line above them:
- The function keys correspond to the various function key icons above them.
- The function key icons always show the functions that are activated by pressing a button.
- The function is called up after pressing a button. In addition, the icon above it can change its display, its meaning or its text.
- Not all function keys must have assigned icons. This depends on the active program selection.

Note

► For a detailed description for the telescoping procedure, see Chapter 4.05.

► In the *Boom length* icon of the crane operating screen, information about the telescoping procedure is also shown, see section „The Crane operation program“.

LWE/LTR 1100-009/25105-02-02/en

copyright © Liebherr-Werk Ehingen GmbH 2023

6.2 Starting the Telescoping program

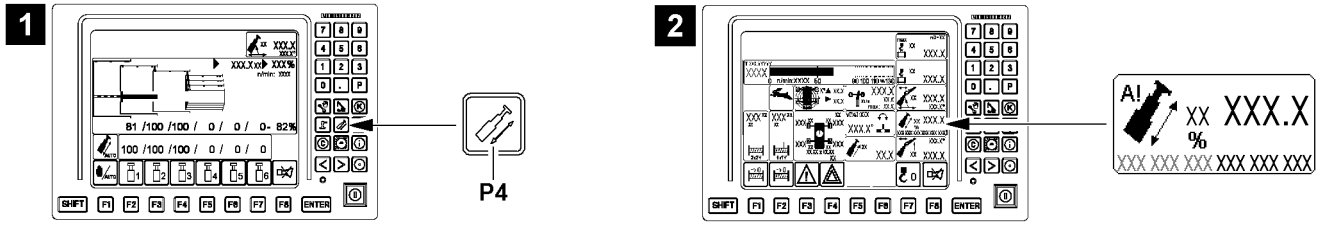

Fig.122462: Starting the Telescoping program

► Press the program key **P4**, see illustration **1**.
or
Automatic start from the Crane operation program: When the telescoping target is reached (illustration **2**) deflect the respective master switch in direction telescope in / telescope out.

6.3 Operating interface

6.3.1 Alarm functions

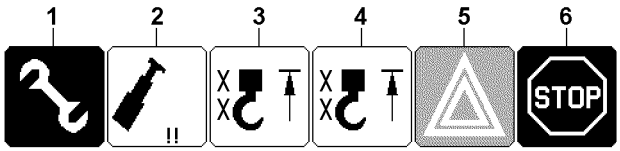

Fig.152702: Operating interface: Alarm functions

For a detailed description of the alarm functions **1**, see section „The Crane operation program“.

1 Assembly
- The icon appears if:
  - A special case was activated upon operation of the LICCON overload protection, see section „LICCON overload protection special functions“
  - TELEMATIK emergency operation was activated (only for certain crane types)

2 Boom limitation
- The icon appears when a boom system limitation occurred

3 *Hoist top* icon
- The icon appears when the hoist limit switch for the first load position was triggered.
- The icon appears crossed out when the concerned hoist limit switch is bypassed.

4 *Hoist top* icon
- The icon appears when the hoist limit switch for the second load position was triggered.
- The icon appears crossed out when the concerned hoist limit switch is bypassed

5 *Advance warning* icon
- The icon appears when an advance warning was triggered.

6 *STOP* icon
- The icon appears when the crane movements were turned off by the LICCON computer system.

LWE/LTR 1100-009/25105-02-02/en

copyright © Liebherr-Werk Ehingen GmbH 2023

6.3.2 Telescoping screen

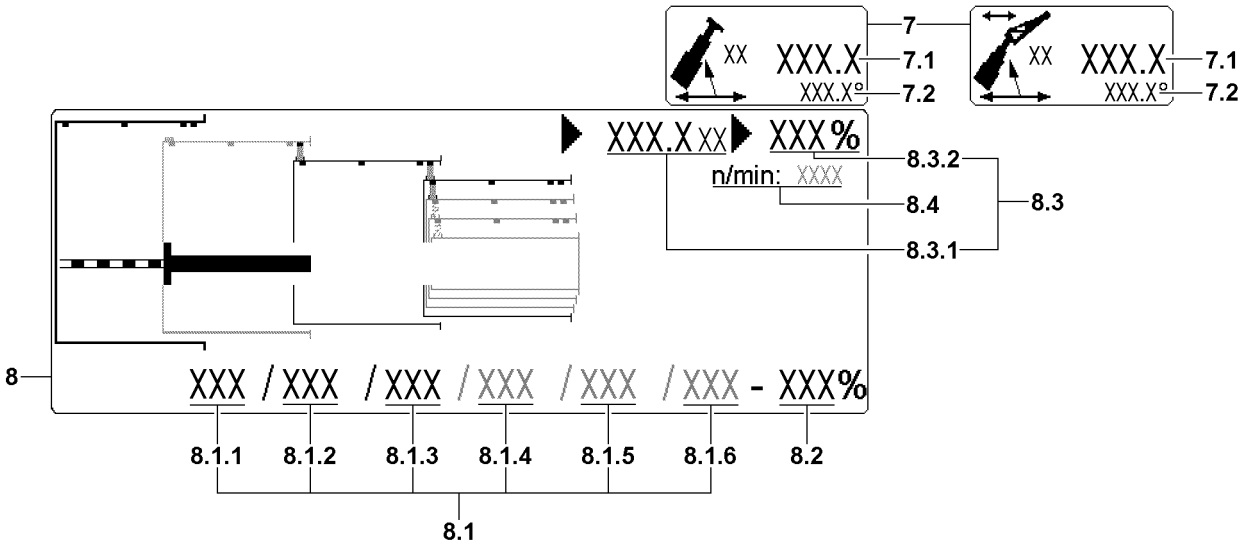

Fig.122464: Operating interface: Telescoping screen upper screen area

7 *Boom radius* icon

7.1 Boom radius
- Boom radius of the crane
- In [m] or [ft]

7.2 Main boom angle
- In [°]

8 View of the telescopic boom
- Stylized illustration of the telescopic boom
- **Note:** The illustration refers to a telescopic boom with six telescopeable slide-in modules, for crane types with other telescopic booms the illustration is adjusted.

8.1 Extension condition of telescopes
- Current extension condition of the telescopes
- In [%]
- **8.1.1** Telescope 1 (T1)
- **8.1.2** Telescope 2 (T2)
- **8.1.3** Telescope 3 (T3)
- **8.1.4** Telescope 4 (T4)
  Note: Only for crane types with corresponding telescopic boom.
- **8.1.5** Telescope 5 (T5)
  Note: Only for crane types with corresponding telescopic boom.
- **8.1.6** Telescope 6 (T6)
  Note: Only for crane types with corresponding telescopic boom.

8.2 Extension condition of telescoping cylinder
- Current extension condition of telescoping cylinder
- In [%]

NOTICE
Damage to hydraulic pumps!
If the telescoping cylinder is not telescoped in before turning the superstructure engine off, then the hydraulic pumps can be damaged. This applies especially at low temperatures.
► Before turning the superstructure engine off, set the extension condition of the telescoping cylinder **8.2** to between 0 % and 15 %, see Crane operating instructions, chapter 4.05.

8.3 Load display
- Display of actual load and utilization of crane in percentages

LWE/LTR 1100-009/25105-02-02/en

copyright © Liebherr-Werk Ehingen GmbH 2023

8.3.1 Actual load
- Current load
- In [t] or [lbs]

8.3.2 Crane utilization
- Current utilization of the crane
- In [%]

8.3.3 Utilization bar
- **Note**: Only present for certain crane types.
- Utilization bar blue / green: Utilization in permissible range
- Utilization bar yellow:
  Advance warning! - Utilization just before impermissible range
- Utilization bar red:
  Warning! - Utilization in impermissible range

8.4 Engine rpm
- In revolutions per minute
- When the engine rpm is locked, a „**+**“ is displayed behind the rpm value.
- When the engine rpm is limited, a „**!**“ is displayed behind the rpm value (see eco mode).

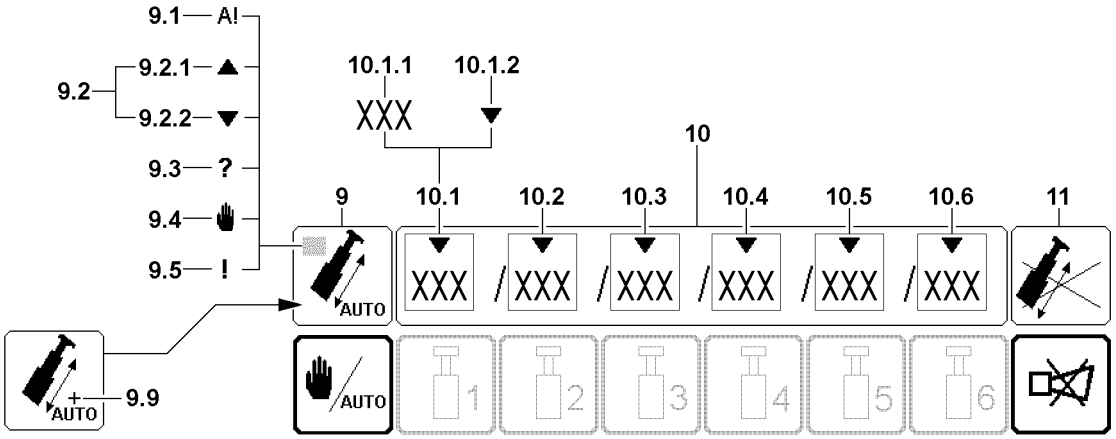

Fig.152703: Operating interface: Telescoping screen lower screen area

9 TELEMATIK
- Icon appears only in automatic operation telescoping
- **9.1** Preselected telescoping target reached
- **9.2** Direction specification telescoping
- **9.2.1** Up arrow: Telescope out request
- **9.2.2** Down arrow: Telescope in request
- **9.3** Error in system, observe error message
- **9.4** Manual telescoping
- **9.5** TELEMATIK emergency operation control
  Note: Only for certain crane types.
- **9.9** Telescoping with automatic carrying along of auxiliary boom / accessory
  Note: Only for certain crane types.

10 Telescoping targets
- Selected telescoping targets of telescopes

10.1 Telescope 1 target selection
- **Note:** Valid as an example for all target selections for telescopes.
- **10.1.1** Telescoping target Telescope
- **10.1.2** Notification arrow: As a warning in the event of incorrect operation, target already reached or enter new target.

10.2 Telescope 2 target selection

10.3 Telescope 3 target selection

10.4 Telescope 4 target selection

LWE/LTR 1100-009/25105-02-02/en

copyright © Liebherr-Werk Ehingen GmbH 2023

Note: Only for crane types with corresponding telescopic boom.

10.5 Telescope 5 target selection
Note: Only for crane types with corresponding telescopic boom.

10.6 Telescope 6 target selection
Note: Only for crane types with corresponding telescopic boom.

11 Telescoping procedure disabled
- Disabling further telescoping procedure due to expected exceeding of maximum load in unpinned condition
- **Note**: See section “Monitored auxiliary functions”.

6.4 The function key line (Telescoping program)

6.4.1 Function key line: Telescoping automatic operation

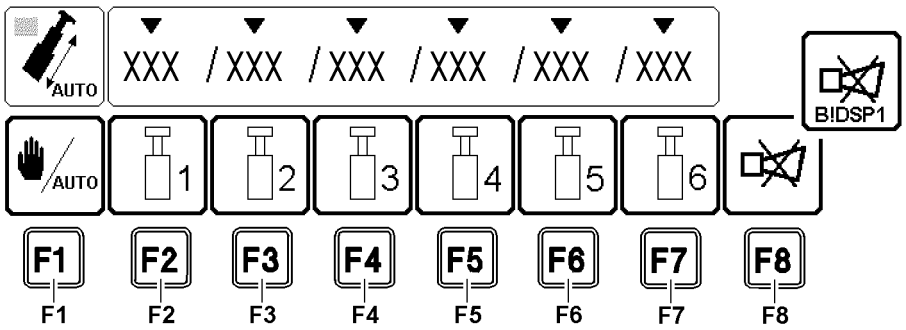

Fig.122466: Function key line in Telescoping program, automatic operation telescoping

F1 Function key

Change over between:
- Telescoping automatic operation
- Telescoping automatic operation with carrying lattice jib along
  Note: Only for certain crane types
- Manual telescoping

F2 Function key
- Telescope 1 target selection

F3 Function key
- Telescope 2 target selection

F4 Function key
- Telescope 3 target selection

F5 Function key
- Telescope 4 target selection
  Note: Only for crane types with telescope 4

F6 Function key
- Telescope 5 target selection
  Note: Only for crane types with telescope 5

F7 Function key
- Telescope 6 target selection
  Note: Only for crane types with telescope 6

F8 Function key
- Possibly shut off of acoustic warning and calling up of error messages:
  - Press the function key **F8** once: The acoustic signal is turned off.
  - Press the function key **F8** twice: The error description for the error message which occurred last is called up.
- **Note:** A new error turns the acoustic warning on again.

LWE/LTR 1100-009/25105-02-02/en

copyright © Liebherr-Werk Ehingen GmbH 2023

6.4.2 Function key line: Manual telescoping

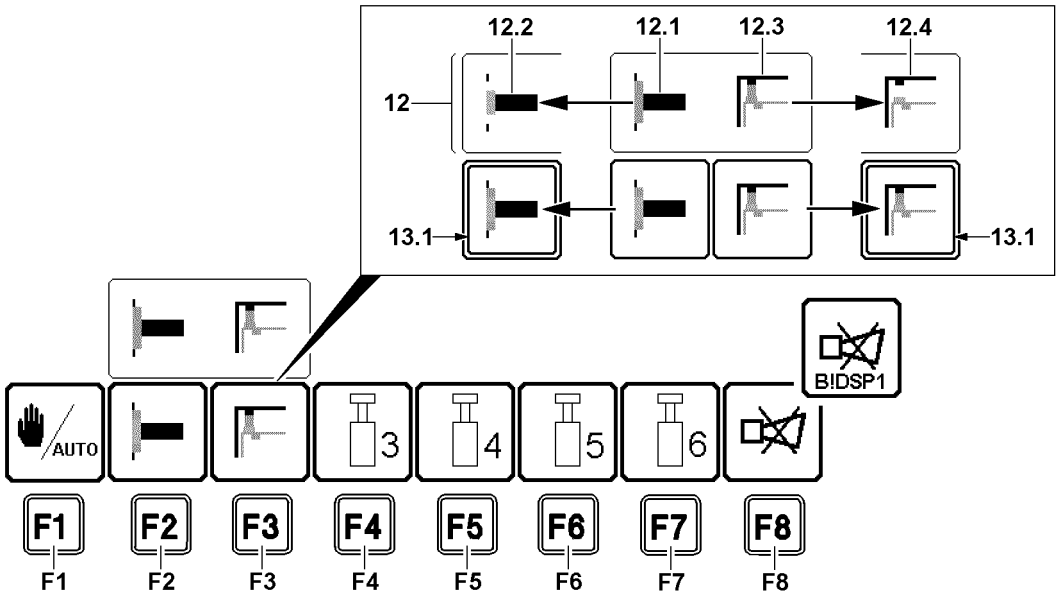

Fig.122467: Function key line in Telescoping program, manual telescoping

F1 Function key

Change over between:
- Manual telescoping
- Telescoping automatic operation
- Telescoping automatic operation with carrying lattice jib along
  Note: Only for certain crane types.

F2 Function key
- Telescoping cylinder unpinned / pinned
  Note: If the function is activated by pressing the function key **F2** then a red frame **13.1** appears

F3 Function key
- Telescopic pinning unpinned / pinned
  Note: If the function is activated by pressing the function key **F3** then a red frame **13.1** appears

F4 Function key
- No function in manual telescoping

F5 Function key
- No function in manual telescoping

F6 Function key
- No function in manual telescoping

F7 Function key
- No function in manual telescoping

F8 Function key
- Possibly shut off of acoustic warning and calling up of error messages:
  - Press the function key **F8** once: The acoustic signal is turned off.
  - Press the function key **F8** twice: The error description for the error message which occurred last is called up.
- **Note:** A new error turns the acoustic warning on again.

12 Manual telescoping status icons

Active process is shown in icon:
- **12.1** Telescoping cylinder pinned
- **12.2** Telescoping cylinder unpinned
- **12.3** Telescopic pinning pinned

LWE/LTR 1100-009/25105-02-02/en

copyright © Liebherr-Werk Ehingen GmbH 2023

- **12.4** Telescopic pinning unpinned

6.5 TELEMATIK emergency operation special function

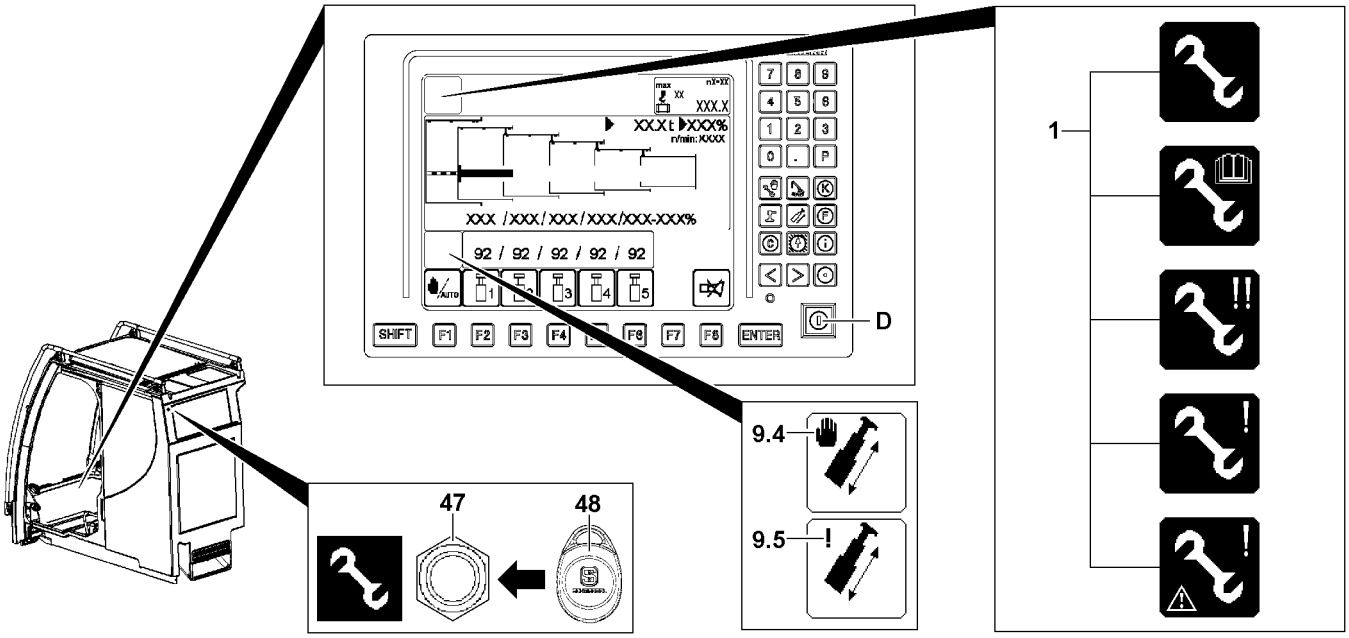

Fig.148666: TELEMATIK Emergency operation special function*

Note
► Only for certain crane types.

WARNING
Shut off safety equipment!
In TELEMATIK emergency operation the LICCON overload protection is totally deactivated.
The crane movements are no longer monitored by the LICCON overload protection.
Due to erroneous operation or deliberate misuse, the crane could collapse, the boom can break off or the crane can topple over.
Personnel can be severely injured or killed.
► The emergency operation may only be activated by persons who are aware of the consequences of their actions.
► A shut-off by the LICCON overload protection may not be circumvented by the emergency operation.
► If normal crane operation is possible, then the emergency operation may not be activated.
► All crane movements must be carried out with extreme caution and anticipatorily.

In TELEMATIK emergency operation the opening of the tele pin is ensured.

The following shut offs are bypassed:
– Retract / extend telescoping cylinder is made possible with placed cylinder pin.
– Maximum push out length of telescoping cylinder reached (extend cylinder possible).
– Collision with folding jib (telescoping out is made possible).

Make sure that the following prerequisites are met:
– An error in the TELEMATIK system is present.
– The Telescoping program is called up.
– Manual telescoping is called up.

6.5.1 TELEMATIK emergency operation (EN 13000:2010 not active)

Activate TELEMATIK emergency operation:

LWE/LTR 1100-009/25105-02-02/en

copyright © Liebherr-Werk Ehingen GmbH 2023

► Press the set up button **D**.

Result:

– Special function TELEMATIK emergency operation is activated.
– One of the assembly icons **1** appears.
– The Control TELEMATIK emergency operation icon **9.5** appears.

Note
When the set up key **D** was actuated:
► If no crane movement occurs, then the special function TELEMATIK emergency operation is deactivated after ten seconds.
► The actuation of the set up key **D** is recorded in the data logger.

Turn TELEMATIK emergency operation off:

► Press the set up key **D** again.

Result:

– The TELEMATIK emergency operation special function is turned off.
– The Control TELEMATIK emergency operation icon **9.5** turns off.

6.5.2 TELEMATIK emergency operation (EN 13000:2010 active)

Activate TELEMATIK emergency operation:

► Place the transponder **48** on the sensor **47**.

Result:

– Special function TELEMATIK emergency operation is activated.
– One of the assembly icons **1** appears.
– The Control TELEMATIK emergency operation icon **9.5** appears.

Note
When the transponder **48** was placed on the sensor **47**:
► If no crane movement occurs, then the special function TELEMATIK emergency operation is deactivated after thirty minutes.
► The application of the transponder **48** on the sensor **47** is recorded in the data logger.

Turn TELEMATIK emergency operation off:

► Place the transponder **48** on the sensor **47**.

Result:

– The TELEMATIK emergency operation special function is turned off.
– The Control TELEMATIK emergency operation icon **9.5** turns off.

LWE/LTR 1100-009/25105-02-02/en

copyright © Liebherr-Werk Ehingen GmbH 2023

7 The working range limitation program*

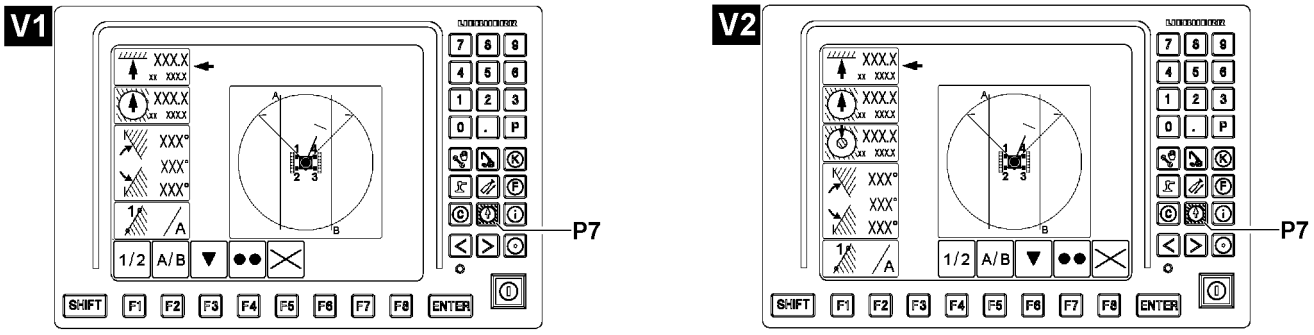

Fig.122542: Exemplary illustration of operating interfaces in the Working range limitation program

On the operating interface two variations are available of the Working range limitation program:
- **V1** Variation
- **V2** Variation

Note

► For a detailed description of Working range limitation program, see Operating instructions for Working range limitation.

7.1 Calling up the Working range limitation program

The working range limitation program runs in the background, crane movements are only shut off when the respective icon for the limitation is active (not crossed out).

► Press the program key **P7**.

LWE/LTR 1100-009/25105-02-02/en

copyright © Liebherr-Werk Ehingen GmbH 2023

7.2 Operating interface Working range limitation program

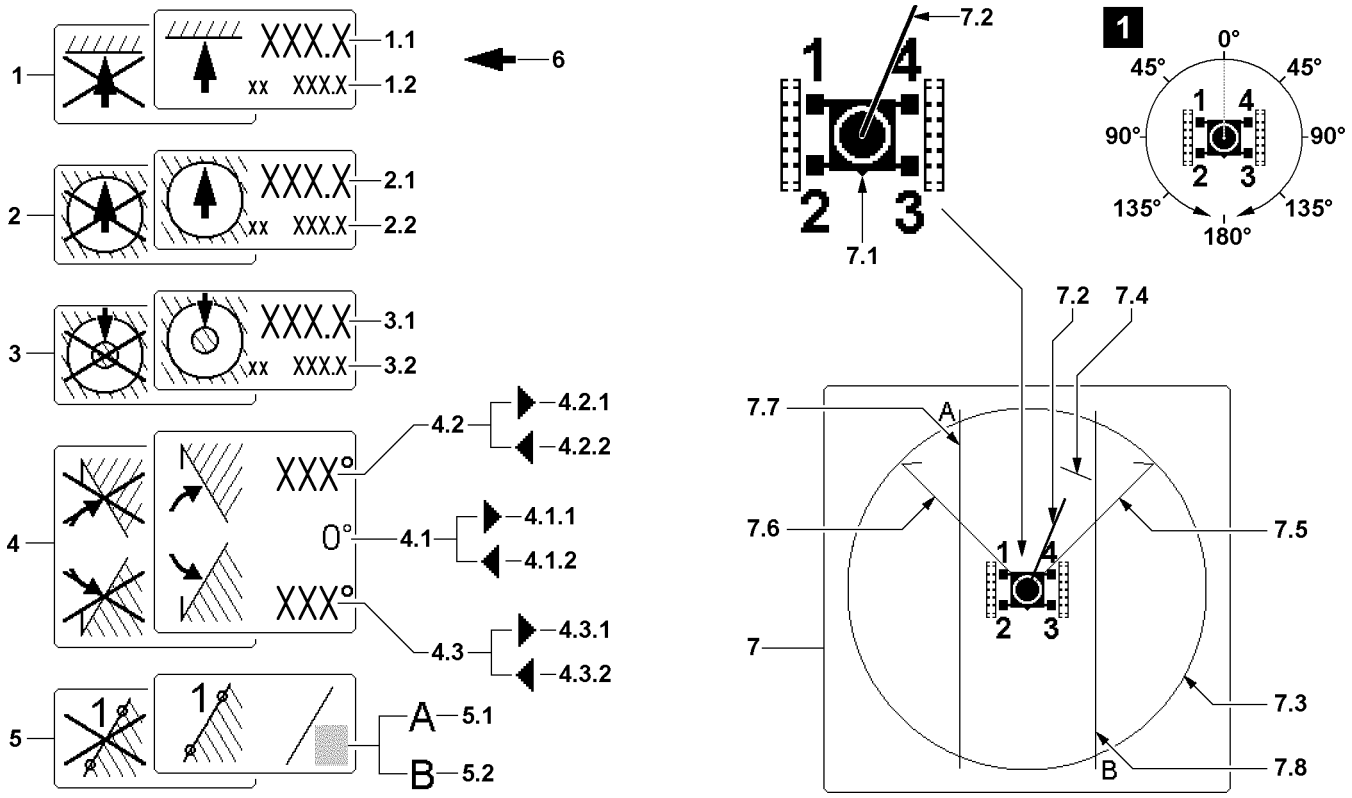

Fig.122543: Operating interface Working range limitation program

Note

► The limit function icons are shown crossed out if they are inactive.

1 Pulley head height
- Limitation of pulley head height
- Limits the height of the load pulley to a predetermined dimension

1.1 Limit value
- The limitation is made by reaching the limit value of the pulley head height

1.2 Actual value
- Current pulley head height

2 Working radius$_{max}$
- Limitation of maximum working radius (maximum boom radius)
- Limits the working radius of the load hook to a predetermined upper limit

2.1 Limit value
- The limitation is made by reaching the limit value for the maximum working radius

2.2 Actual value
- Current working radius

3 Working radius$_{min}$
- **Note**: Only present for certain crane types.
- Limitation of minimum working radius (minimum boom radius)
- Limits the working radius of the load hook to a predetermined lower limit

3.1 Limit value
- The limitation is made by reaching the limit value for the minimum working radius

3.2 Actual value
- Current working radius

4 Turning limitation
- Limitation of slewing range

LWE/LTR 1100-009/25105-02-02/en

copyright © Liebherr-Werk Ehingen GmbH 2023

- Limits the slewing range of the turntable to a predetermined angle range.
- Each consists of one right limit angle **4.2** and one left limit angle **4.3**.

4.1 Slewing angle
- Current slewing angle of the turntable
- Main working direction of the crane = slewing angle 0°
  The slewing angle 0° is displayed when the turntable points exactly to the rear
- The slewing angle increases on both sides up to 180° when the turntable is turned. When turning past 180°, the display changes sides and the slewing angle starts to decrease (for scale see illustration **1**).
- Arrow to the right **4.1.1**: Range *Turntable turned to the right*
- Arrow to the left **4.1.2**: Range *Turntable turned to the left*

4.2 Right limit angle
- The limitation is made by reaching this right limit angle
- Arrow to the right **4.2.1**: Limit angle is in range *Turntable turned to the right*
- Arrow to the left **4.2.2** Limit angle is in range *Turntable turned to the left*

4.3 Left limit angle
- The limitation is made by reaching this left limit angle
- Arrow to the right **4.3.1**: Limit angle is in range *Turntable turned to the right*
- Arrow to the left **4.3.2** Limit angle is in range *Turntable turned to the left*

5 Edge limitation
- Limitation of freely selectable edges (limitations)
- Consists of up to two edges („edge A **5.1**“ and „edge B **5.2**“), which do not have to run through the center of the slewing ring.

Note

► Due to the edge limitation it is possible to determine the working range limits, which allow turning 360° compared to the slewing angle limitation. If necessary, the boom radius must be shorted for turning.

6 Function selector
- To select the limitation functions (Position **1** to **5**)

7 Graphic display
- Graphic display of programmed working range limits viewed from above.
  The crawler travel gear is shown in the center.
- The triangle **7.1** shows where the front is on the crawler travel gear.
- The green bar **7.2** shows the current direction and boom radius of the boom. The longer the green bar, the larger the boom radius of the crane.

7.3 Crane working radius
- Graphic illustration of the maximum working radius (maximum boom radius) of the crane under ideal conditions.
- **Note:** Setting cannot be changed in the program.

7.4 Working radius$_{max}$
- Graphic illustration of maximum working radius (maximum boom radius).
- Based on the limit value **2.1** from *Working radius$_{max}$* icon **2**
- **Note:** If the green bar **7.2** crosses the red line of the working radius$_{max}$ **7.4**, a shut-off occurs.

7.5 Right limit angle
- Graphic illustration of the right limit angle.
- Based on the limit angle right **4.2** from *Turning limit* icon **4**
- **Note:** If the green bar **7.2** and the orange line of the limit angle right **7.5** are superimposed, a shut-off occurs.

7.6 Left limit angle
- Graphic illustration of the left limit angle.
- Based on the limit angle left **4.3** from *Turning limit* icon **4**
- **Note:** If the green bar **7.2** and the red line of the limit angle left **7.6** are superimposed, a shut-off occurs.

LWE/LTR 1100-009/25105-02-02/en

copyright © Liebherr-Werk Ehingen GmbH 2023

7.7 Edge A
- Graphic illustration *Edge A*
- Based on edge A **5.1** from the *edge limitation* icon **5**
- **Note:** If the green bar **7.2** crosses the red line of the edge A **7.7**, a shut-off occurs.

7.8 Edge B
- Graphic illustration *Edge B*
- Based on the edge B **5.2** from *Edge limitation* icon **5**
- **Note:** If the green bar **7.2** crosses the orange line of the edge B **7.8**, a shut-off occurs.

7.3 Function key line (working range limitation)

7.3.1 Function key line (working range limitation) for variation V1

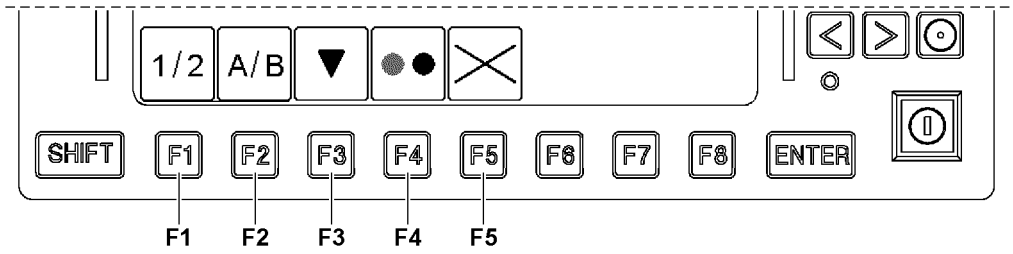

Fig.122437: Function key line in Working range limitation program, variation V1

F1 Function key
- Selection of point 1 or 2 of selected edge A (red) or B (orange)

F2 Function key
- Selection of edge A (red) or B (orange) that is being programmed

F3 Function key
- The function selector is moved down by one limit function

F4 Function key
- ON / OFF
  The limit function selected with the function selector changes its status. If previously active, it will now be inactive when the function key **F4** is pressed, and vice versa. An inactive limit function is identified by a crossed out icon. If the function selector shows a slewing limit to the left or the right, then both limits will always be switched.
  Note: For the edge limit, only the preselected edge will be switched. The edge that is not displayed can be active or inactive at the same time.

Note

► Limit functions can only be added via the function key **F4** when the boom is in the respective permissible range.

F5 Function key
- All limit functions become inactive

LWE/LTR 1100-009/25105-02-02/en

copyright © Liebherr-Werk Ehingen GmbH 2023

7.3.2 Function key line (working range limitation) for variation V2

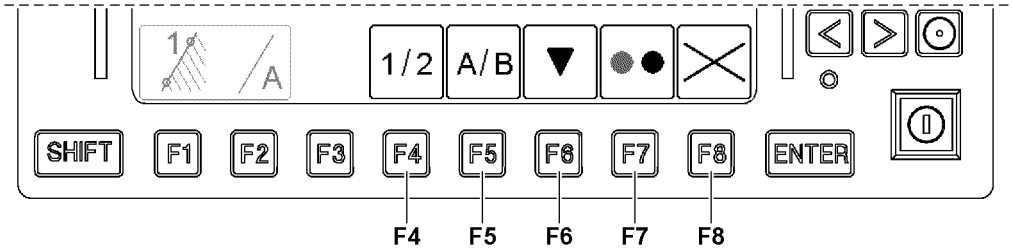

Fig.122436: Function key line in Working range limitation program, variation V2

F4 Function key
- Selection of point 1 or 2 of selected edge A (red) or B (orange)

F5 Function key
- Selection of edge A (red) or B (orange) that is being programmed

F6 Function key
- The function selector is moved down by one limit function

F7 Function key
- ON / OFF
  The limit function selected with the function selector changes its status. If previously active, it will now be inactive when the function key **F7** is pressed, and vice versa. An inactive limit function is identified by a crossed out icon. If the function selector shows a slewing limit to the left or the right, then both limits will always be switched.
  Note: For the edge limit, only the preselected edge will be switched. The edge that is not displayed can be active or inactive at the same time.

Note
► Limit functions can only be added via the function key **F7** when the boom is in the respective permissible range.

F8 Function key
- All limit functions become inactive

7.4 Occurrence of a shut-off in the working range limitation

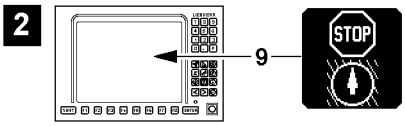

Fig.122438: Occurrence of a shut-off in the working range limitation

If the programmed working range limitation is actuated, then this status is shown in the crane operating screen by a *STOP* icon **9**, see illustration **2**.

8 Speed reduction master switch

The speed reduction of master switches is made in the settings window. The speeds of the displayed crane movements / crane functions can be limited steplessly to the desired value.

Speed reduction of master switches is the speed of the crane function reduced to the speed set in the settings window.

LWE/LTR 1100-009/25105-02-02/en

copyright © Liebherr-Werk Ehingen GmbH 2023

WARNING
Danger of accident!
- ► Make the preselection of the slewing speed according to the specifications in the load chart manual.
- ► The following applies: The longer the boom and / or the greater the load, the lower the set maximum slewing speed must be.
- ► **Never** deflect the master switch for the slewing gear to the stop with a long boom and / or great load.

WARNING
Deactivated speed reduction of master switches!
When the rapid gear is engaged, the speed reductions of the master switches can be ineffective / limited.
Too high a crane speed can cause accidents.
- ► Turn the rapid gear off when a speed reduction of the master switches is necessary.

8.1 Operating elements at speed reduction of master switches

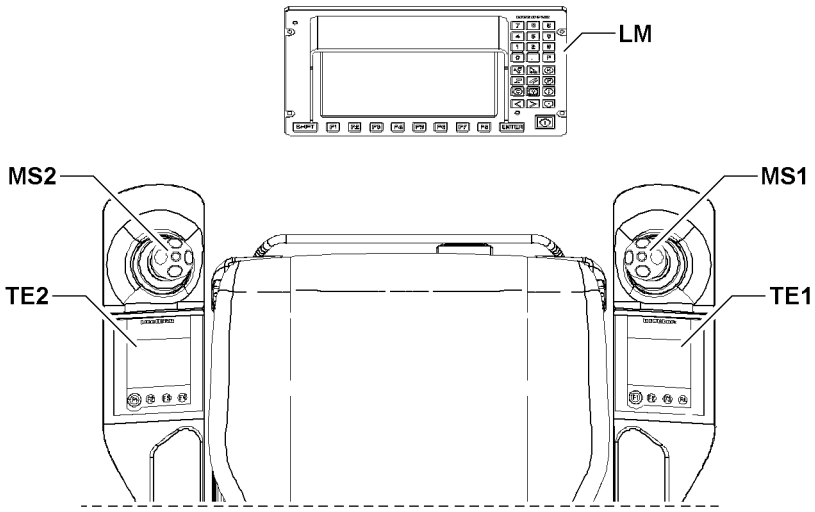

Fig.122445: Operating elements at speed reduction of master switches

LM LICCON monitor
MS1 Master switch 1
TE1 Touch display 1
MS2 Master switch 2
TE2 Touch display 2

LWE/LTR 1100-009/25105-02-02/en

copyright © Liebherr-Werk Ehingen GmbH 2023

8.2 Operating interface in the settings window for speed reduction of master switches

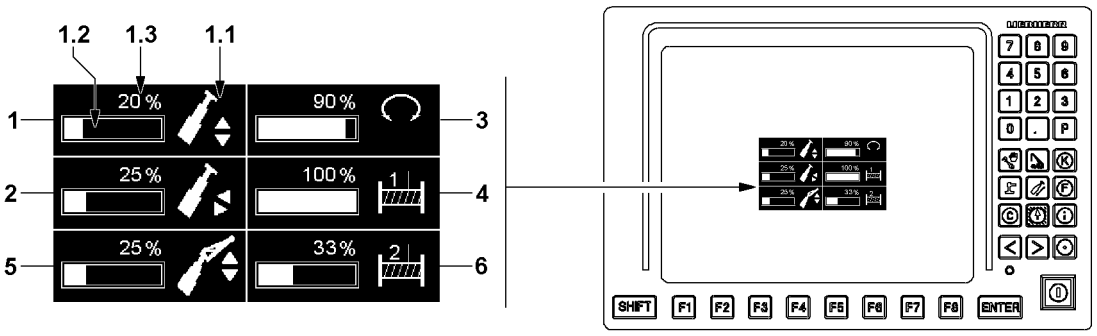

Fig.122446: Operating interface in the settings window for speed reduction of master switches

Note

► The structure of the individual settings windows is always the same. The structure is explained via the first settings window (luffing).

1 Luffing **1** settings window

1.1 *Assignment* icon
- Icon of assigned crane movement / crane function

1.2 Bar display
- Graphic illustration of current speed reduction

1.3 Display value
- Numeric display of the current speed reduction in [%]

2 Telescoping **2** settings window

3 Slewing gear **3** settings window

4 Winch 1 **4** settings window
- **Note:** Appears only when the winch is active.

5 Settings window Auxiliary boom **5**
- Display field for auxiliary boom
- **Note:** Appears only when an auxiliary boom is installed and entered in the Set up program.

6 Winch 2 settings window
- Display field for winch 2
- **Note:** Appears only if winch 2 is installed and active.

LWE/LTR 1100-009/25105-02-02/en

copyright © Liebherr-Werk Ehingen GmbH 2023

8.3 Editing the speed reduction

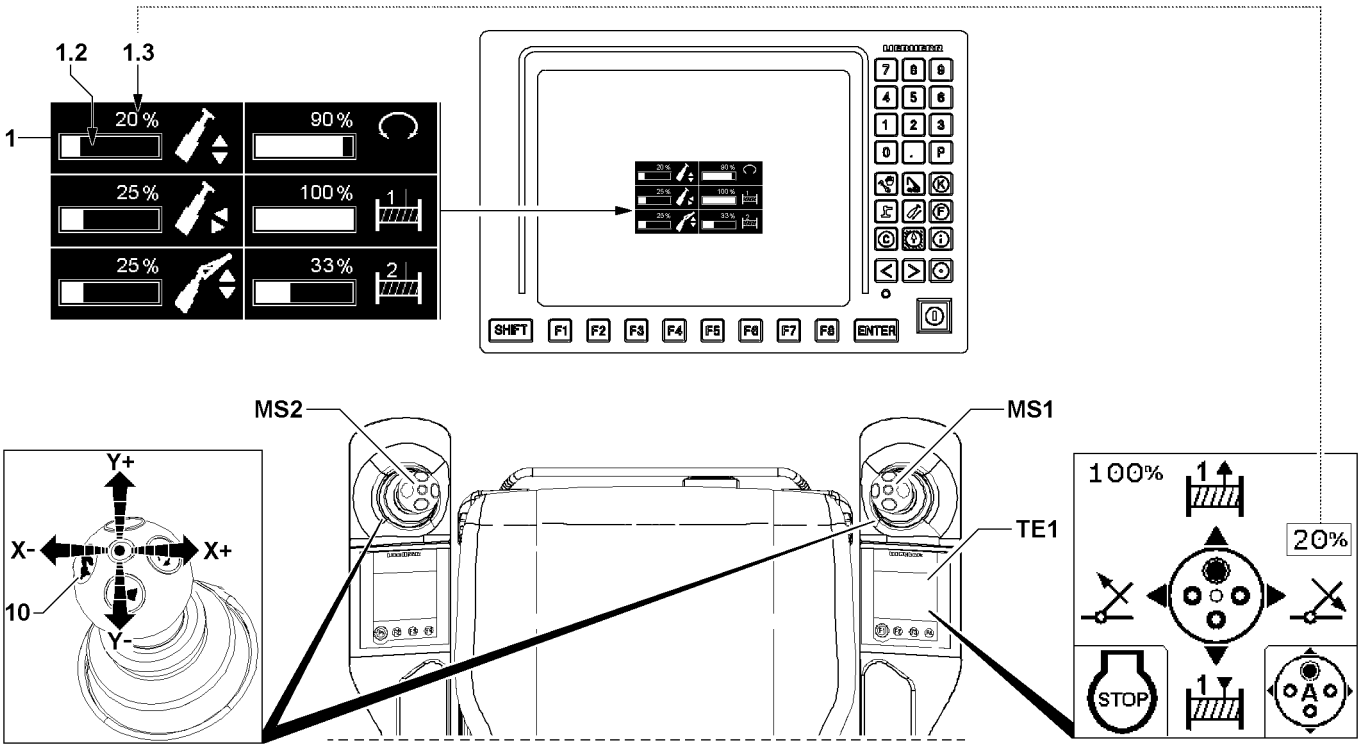

Fig.122447: Example of editing the speed reduction

The procedure in the settings window *Speed reduction master switch* is identical for all crane functions.

Using the example Setting crane movement *Luffing*, the individual steps are explained.

Note
Only the settings for the displayed crane movements / crane functions can be carried out.
► If necessary, activate required crane movements / crane functions before calling up the settings windows.

8.3.1 Displaying the settings window

► Press the button **10** on master switch **MS1** or master switch **MS2** for at least two seconds.

Result:

– The settings window for the speed reduction of the master switches is shown.

Note
The settings window is automatically hidden after ten seconds if during that time there is no access to the speed reduction of a crane function.
► Continue in time with the next steps.

8.3.2 Procedure

The speed reduction is always set via the master switch which controls the crane movement.

Note
► If the master switch is deflected lightly, the value is slowly increased / reduced.
► If the master switch is deflected strongly, the value is quickly increased / reduced.

LWE/LTR 1100-009/25105-02-02/en

copyright © Liebherr-Werk Ehingen GmbH 2023

Example: Set the *Luffing* crane movement. The crane movement is carried out via the master switch **MS1**.

Reducing the value of the speed reduction:
► Move the master switch **MS1** in direction X- (to the left).

Result:

– The bar in the bar display **1.2** gets shorter.
– The display value **1.3** is reduced.
– The speed for crane movement *luffing* is set to the new display value **1.3**.
– The new display value for the crane movement *luffing* is shown in the touch display **TE1**.

Increasing the value of the speed reduction:
► Move the master switch **MS1** in direction X+ (to the right).

Result:

– The bar on the bar display **1.2** becomes longer.
– The display value **1.3** is increased.
– The speed for crane movement *luffing* is set to the new display value **1.3**.
– The new display value for the crane movement *luffing* is shown in the touch display **TE1**.

8.3.3 Closing the settings window

Make sure that the following prerequisite is met:
– All speed reductions are set.

► Press the button **10** on master switch **MS1** or master switch **MS2** for at least two seconds.
or
Wait ten seconds without further steps.

Result:

– The settings window for the speed reduction of the master switches closes.

9 Setting the operating mode of the slewing gear

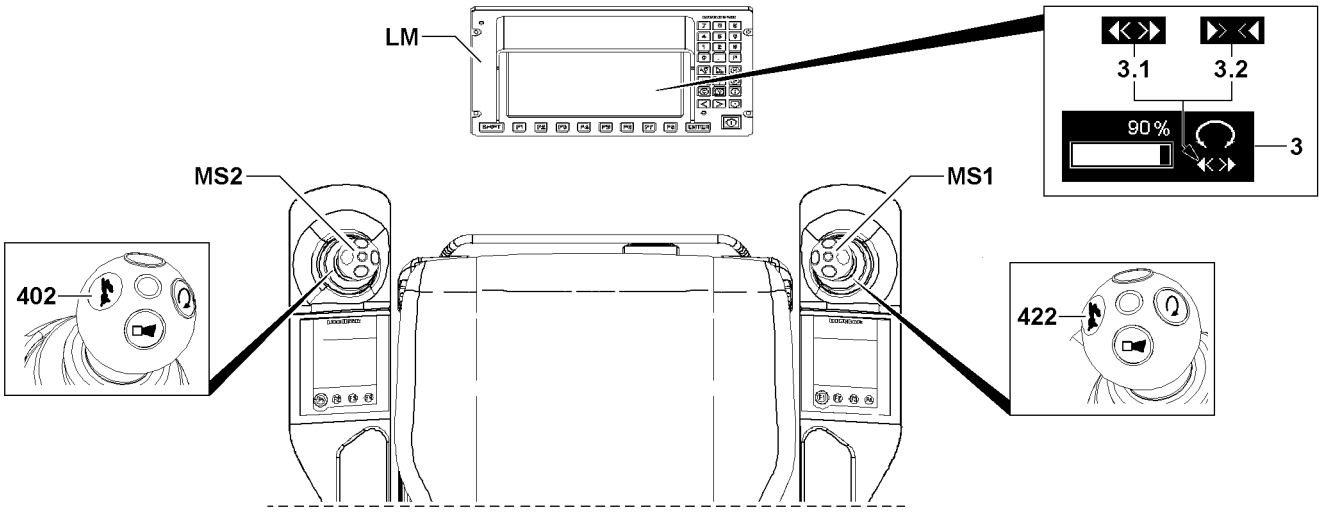

Fig.123810

LWE/LTR 1100-009/25105-02-02/en

copyright © Liebherr-Werk Ehingen GmbH 2023

Note
- ► Only for certain crane types.
- ► The operating mode of the slewing gear can only be set for crane types that are not equipped with a foot button* for the freewheeling of the slewing gear. For a description of the foot button* for the freewheeling of the slewing gear, see the Crane operating instructions, chapter 4.01 and 4.05.

9.1 Icons for setting the slewing gear operating mode

3 *Slewing gear* settings window

3.1 Slewing gear freely rotating
- Flexible slewing gear freely rotating / coasting switched

3.2 Slewing gear fixed
- Flexible slewing gear fixed switched

9.2 Setting the operating elements for operating mode of the slewing gear

MS1 Master switch 1

MS2 Master switch 2

402 *Rapid gear* button
- Button Rapid gear on MS2

422 *Rapid gear* button
- Button Rapid gear on MS1

LM LICCON monitor

9.3 Carrying the setting out

► Press the *rapid gear* button **422** on master switch 1 **MS1** for longer than 2 seconds.
or
Press the *rapid gear* button **402** on master switch 2 **MS2** for longer than 2 seconds.

Result:

– The settings window is displayed.

Note
- ► The settings window is automatically hidden after 10 s when no setting is made within this time.

► Press button *Rapid gear* **402** on master switch 2 **MS2**.

Result:

The status of the slewing gear changes between:
– **3.1** Slewing gear freely rotating
– **3.2** Slewing gear fixed

Note
- ► In certain situations the operating mode of the slewing gear is specified by the crane control. If this is the case, the setting via the crane control is used, even if a deviating settings is set by the crane operator.

LWE/LTR 1100-009/25105-02-02/en

copyright © Liebherr-Werk Ehingen GmbH 2023

10 Track width monitoring without shut-off of crane movement

The track width monitoring monitors the extension conditions of the crawler carriers. The measured extension conditions are compared hereby with the specifications in the set load chart.

If the extension conditions of a crawler carrier are wrong or in case of a defect in the monitoring system, track width monitoring issues an optical and acoustic warning. Track width monitoring does **not** shut the crane movements off.

Make sure that the following prerequisites are met:
- The crawler carriers are extended to the width required for crane operation.
- The crawler carriers are pinned and secured.
- The extension conditions for crawler carriers (support base), load chart and settings in the Set up program match.
- The crane operation screen is displayed.

10.1 Crawler carrier in an incorrect position

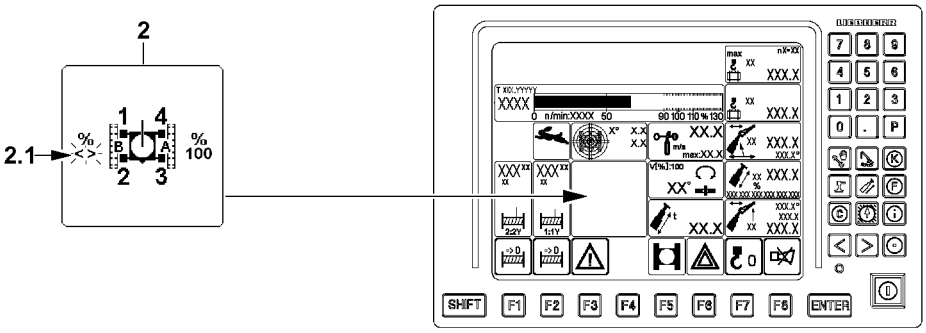

Fig.122544: Crawler carrier in an incorrect position

Example of a crawler carrier in an incorrect position:
- In the *Crawler travel gear* icon **2** either:
  - the incorrect extension condition **2.1** is shown blinking in red
    or
  - the *intermediate position* sign **<>** appears blinking red
- A signal tone sounds.

WARNING
Crawler carrier in an incorrect position!
Toppling crane, death, property damage.
► Prior to crane operation, set the crawler carrier in the correct position according to the load chart.

LWE/LTR 1100-009/25105-02-02/en

copyright © Liebherr-Werk Ehingen GmbH 2023

10.2 Defect during track width monitoring

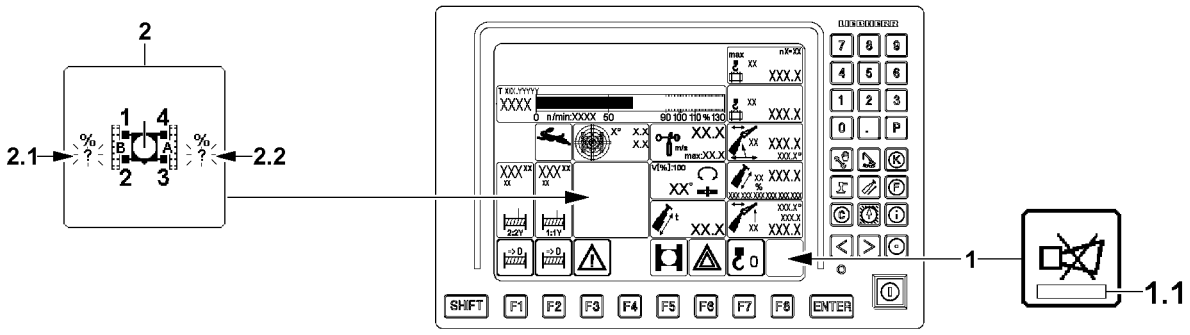

Fig.122545: Defect during track width monitoring

Example for a defect in the monitoring system for track width monitoring:
- An error message **1.1** is displayed in the *Horn* icon **1**.
- Red blinking question marks appear in the *crawler travel gear* icon **2** instead the of the values for the extension condition **2.1** / extension condition **2.2**.
- A signal tone sounds.

WARNING
Defect in the monitoring system for track width monitoring!
Toppling crane, death, property damage.
► Before crane operation, fix the track width monitoring.

11 Track width monitoring with shut off of crane movement*

The track width monitoring monitors the extension conditions of the crawler carriers. The measured extension conditions are compared hereby with the specifications in the set load chart.

Optionally, track width monitoring can be equipped with a shut off function. In cases of an incorrect extension condition of the crawler carriers or a defect in the track width monitoring, track width monitoring turns selected crane movements off.

The shut-off of the crane movement can be bypassed. When track width monitoring is bypassed, the crane driver bears the sole responsibility for the correct extension condition of the crawler carriers (support base) of the crane.

Make sure that the following prerequisites are met:
- The crawler carriers are extended to the width required for crane operation.
- The crawler carriers are pinned and secured.
- The extension condition (support base), load chart and settings in the Set up program match.
- The crane operation screen is displayed.

LWE/LTR 1100-009/25105-02-02/en

copyright © Liebherr-Werk Ehingen GmbH 2023

11.1 Crawler carrier in an incorrect position

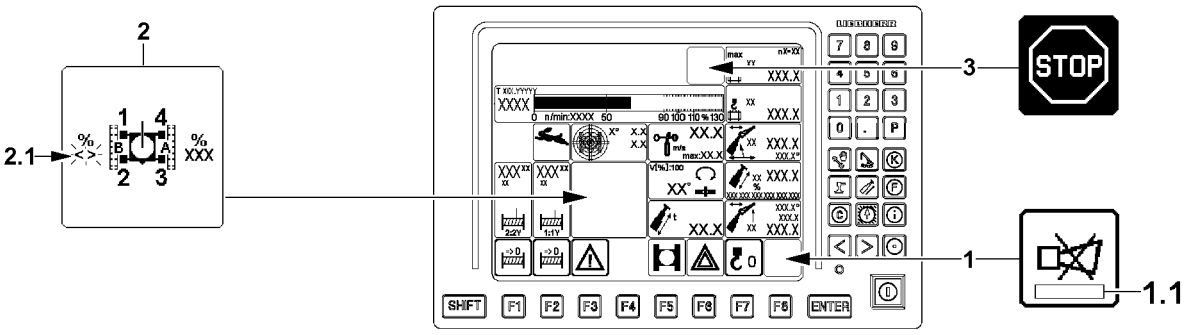

Fig.122546: Crawler carrier in an incorrect position

Example of a crawler carrier in an incorrect position:
- As soon as a crane movement is actuated, an error message **1.1** appears in the *Horn* icon **1**.
- In the *Crawler travel gear* icon **2**:
  - the incorrect extension condition **2.1** is shown blinking in red
    or
  - the *intermediate position* sign **<>** appears blinking red
- A signal tone sounds.
- The *LMB-STOP* icon **3** appears.

WARNING
Crawler carrier in an incorrect position!
Toppling crane, death, property damage.
► Prior to crane operation, set the crawler carrier in the correct position according to the load chart.

11.2 Defect during track width monitoring

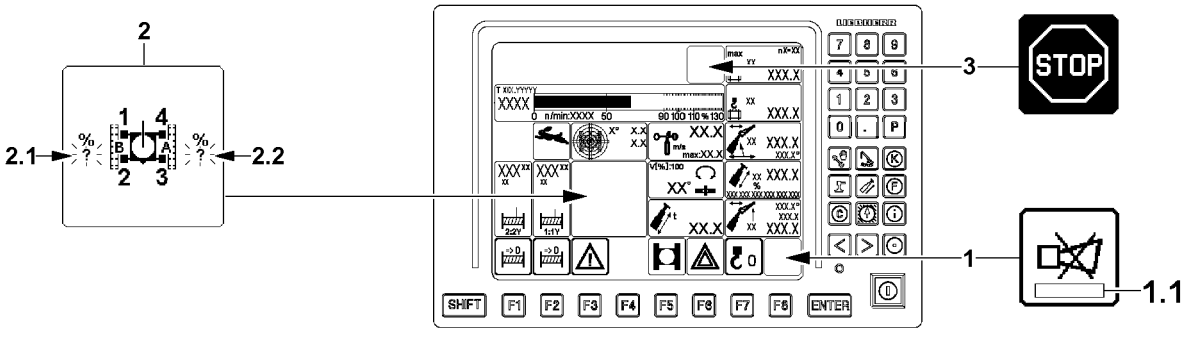

Fig.122547: Defect during track width monitoring

Example for a defect in the monitoring system for track width monitoring:
- An error message **1.1** is displayed in the *Horn* icon **1**.
- Red blinking question marks appear in the *crawler travel gear* icon **2** instead the of the values for the extension condition **2.1** / extension condition **2.2**.
- A signal tone sounds.
- The *LMB-STOP* icon **3** appears.

WARNING
Defect in the monitoring system for track width monitoring!
Toppling crane, death, property damage.
► Before crane operation, fix the track width monitoring.

LWE/LTR 1100-009/25105-02-02/en

copyright © Liebherr-Werk Ehingen GmbH 2023

11.3 Bypassing track width monitoring

WARNING
Erroneous operation with bypassed track width monitoring!
Toppling crane, death, property damage.
► Before crane operation, fix the track width monitoring.
► Before crane operation, set the crawler carriers in the correct position according to the load chart.

A defect in track width monitoring causes an *LMB-STOP* **3**, selected crane movements are turned off.

To be able to carry out crane movements in case of a defect in track width monitoring, track width monitoring can be bypassed.

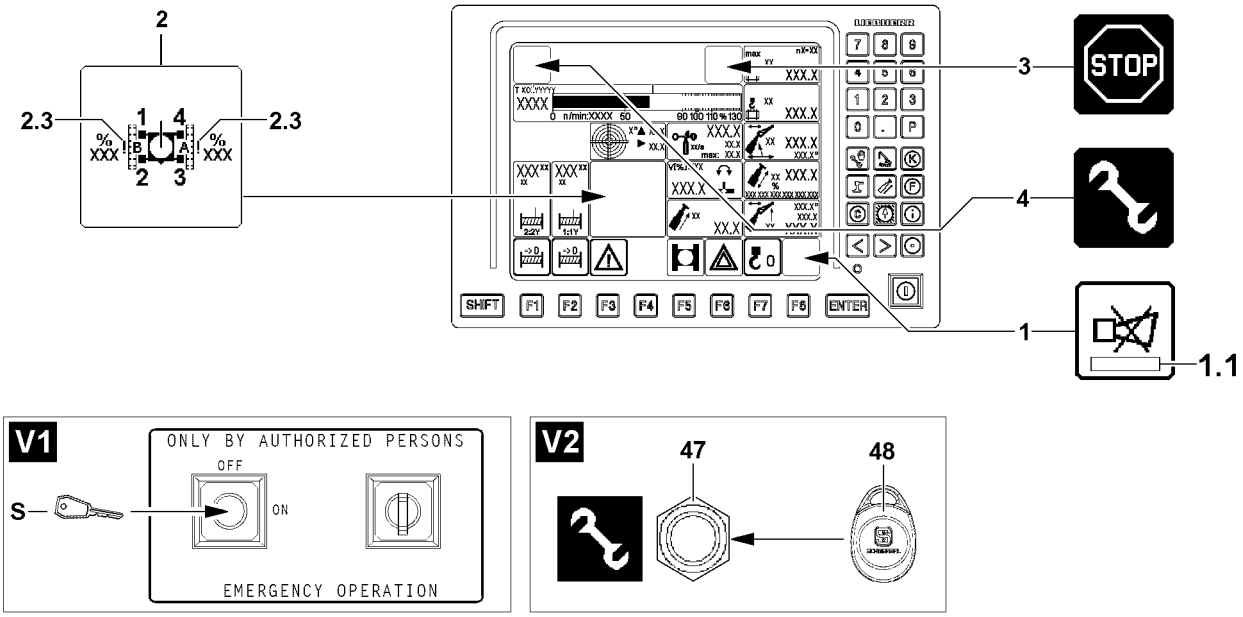

Fig.123721: Bypass track width monitoring on the crane with EN 13000:2010 active

On cranes with *EN 13000:2010 active* the crane driver has 30 minutes time after activation of the bypass to initiate a crane movement. After 30 minutes, the bypass is deactivated. To initiate another crane movement after that period of time, the bypass must be activated again.

Note
► Depending on the crane type, either the key button **S** (variation **V1**) or a sensor **47** with transponder **48** (variation **V2**) are present on the crane, see Crane operating instructions, chapter 4.01.

On cranes with *EN 13000:2010* active:
► Activate the sensor **47** by actuating it with the transponder **48**.
or

If no sensor **47** is installed on the crane:
Actuate the key button **S**.

Result:

– The *Crawler travel gear* icon **2** contains two *exclamation marks* **2.3**.
– The *Assembly* icon **4** appears.
– Crane movements with a reduced speed are possible.
– Track width monitoring is bypassed.

LWE/LTR 1100-009/25105-02-02/en

copyright © Liebherr-Werk Ehingen GmbH 2023

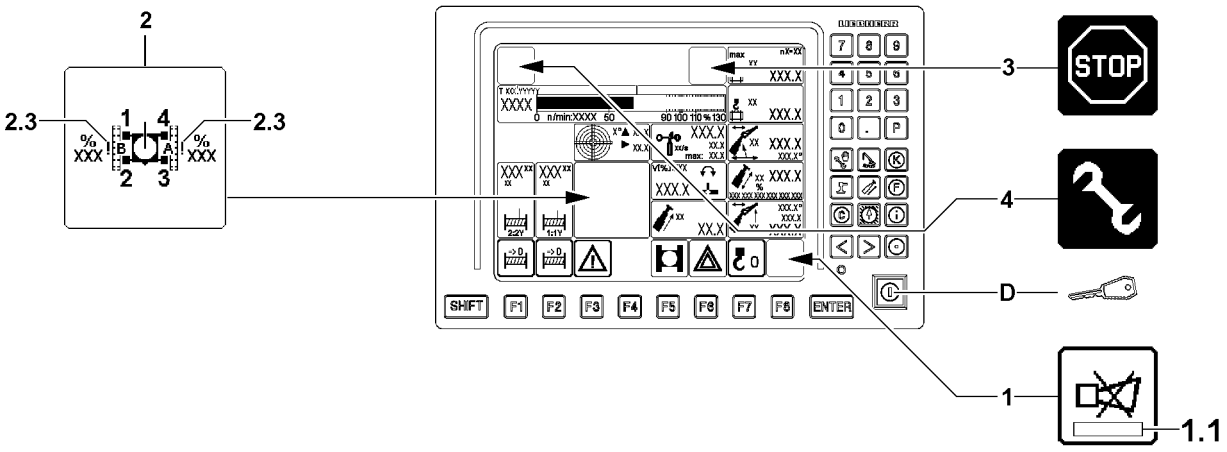

Fig.123722: Bypass track width monitoring on the crane with EN 13000:2010 not active

On cranes with *EN 13000:2010 not active* the crane driver has 10 seconds time after activation of the bypass to initiate a crane movement. After 10 seconds, the bypass is deactivated. To initiate another crane movement after that period of time, the bypass must be activated again.

On cranes with *EN 13000:2010* not active:
► Press the set up button **D**.

Result:

– The *Crawler travel gear* icon **2** contains two *exclamation marks* **2.3**.
– The *Assembly* icon **4** appears.
– Track width monitoring is bypassed.

12 ECO-Mode

Note
► Only present for certain crane types.

In ECO mode, the optimum engine rpm is calculated for the respective crane movement and the engine is regulated accordingly. Fuel consumption and noise emission are reduced.

LWE/LTR 1100-009/25105-02-02/en

copyright © Liebherr-Werk Ehingen GmbH 2023

12.1 Operating elements in ECO-Mode

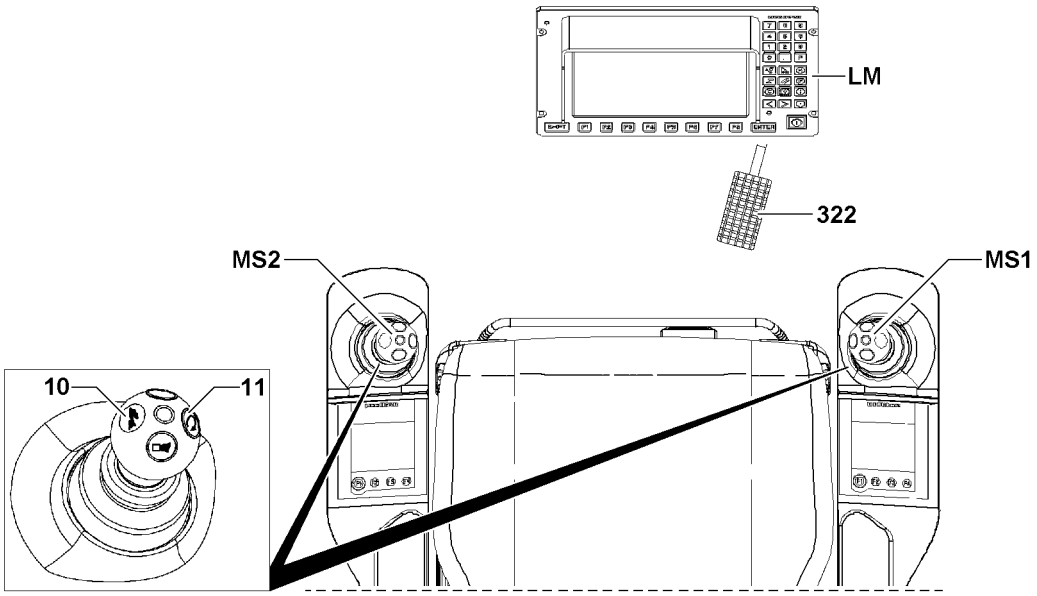

Fig.122450: Operating elements in ECO-Mode

MS1 Master switch 1
- Rapid gear **10** button
- Rpm lock **11** button

MS2 Master switch 2
- Rapid gear **10** button
- Rpm lock **11** button

322 Engine regulation

LM LICCON monitor

12.2 Operating interface in ECO-Mode

12.2.1 Displays ECO-Mode in settings window

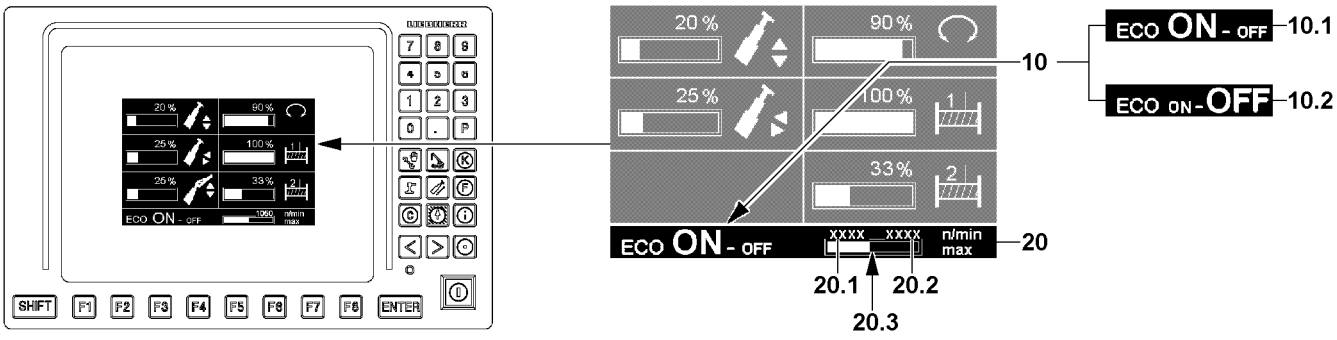

Fig.122449: Displays ECO-Mode in settings window

10 ECO-Mode status

10.1 ECO-Mode ON
- ECO-Mode is turned on

10.2 ECO-Mode OFF
- ECO-Mode is turned off

20 ECO-Mode rpm settings
- Information for current rpm settings

LWE/LTR 1100-009/25105-02-02/en

copyright © Liebherr-Werk Ehingen GmbH 2023

20.1 Setting rpm
- Appears only when actuating engine regulation

20.2 Highest rpm
- Maximum possible rpm of crane engine in ECO-Mode

20.3 Bar diagram
- The bar diagram shows the ratio of the setting rpm **20.1** to the highest rpm **20.2**

12.2.2 ECO-Mode in crane operating screen displays

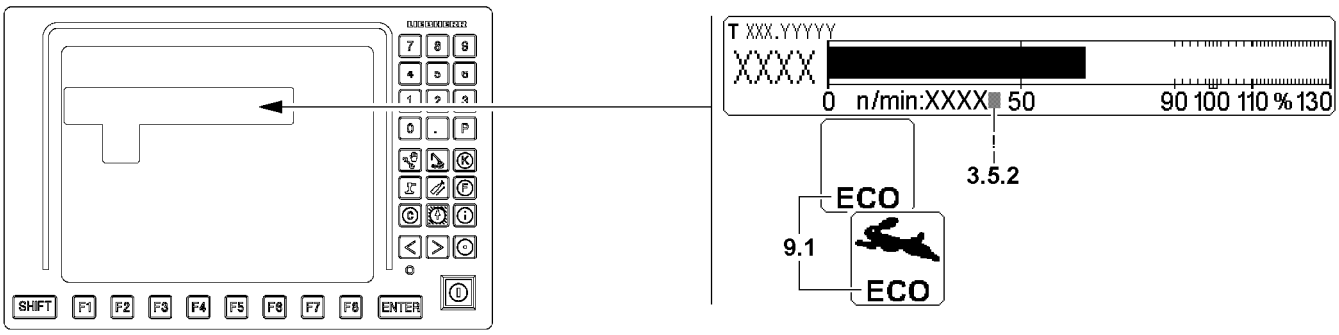

Fig.122451: ECO-Mode in crane operating screen displays

9.1 Status display
- The status display is made in the *Rapid gear* icon:
  - The word ECO is *green*: ECO-Mode is turned on and active.
  - The word ECO is *yellow*: ECO mode is turned on but inactive
  - No ECO word shown: ECO-Mode is turned off

3.5.2 Rpm limited
- If the „**!**“ appears behind the rpm display, then the engine rpm is limited in ECO mode

LWE/LTR 1100-009/25105-02-02/en

copyright © Liebherr-Werk Ehingen GmbH 2023

12.3 Operating ECOMode

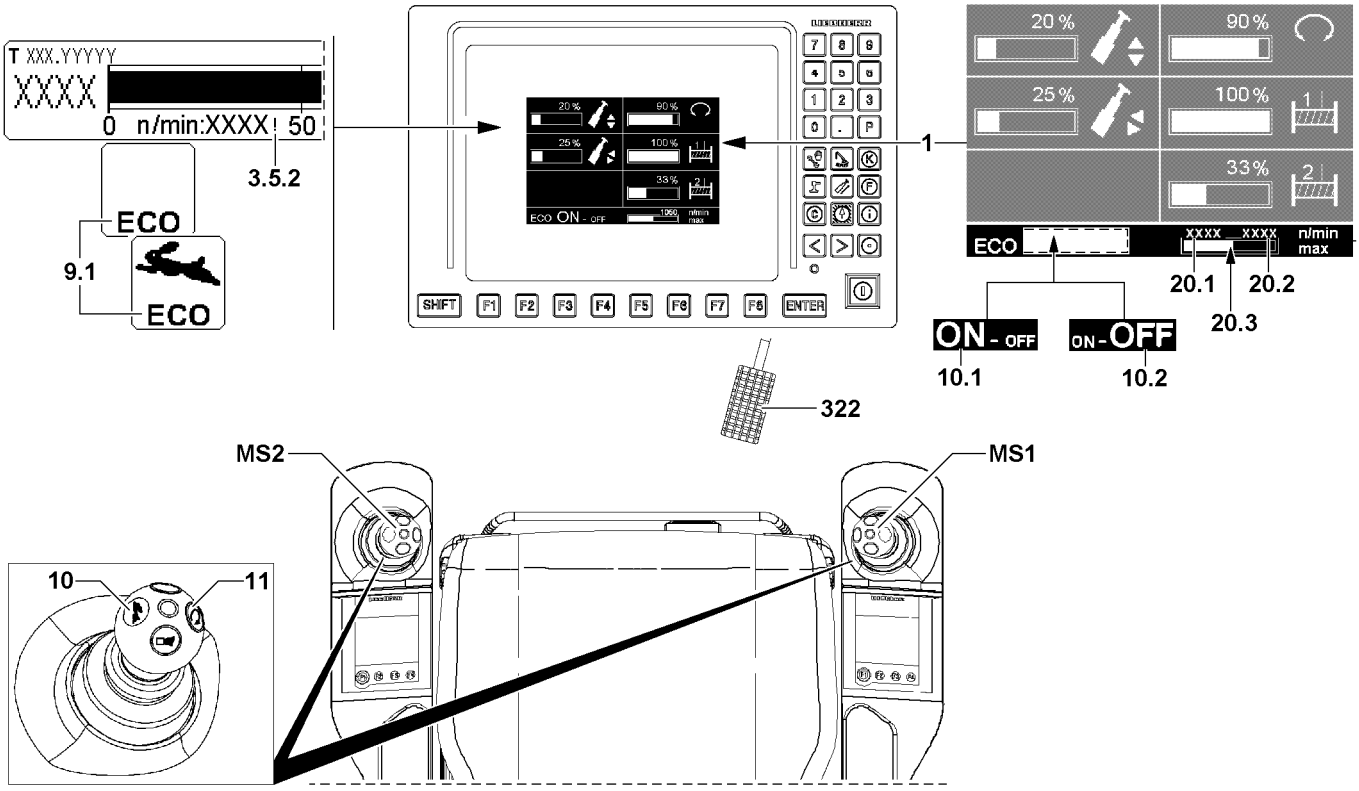

Fig.156266: Example of illustration Operating ECO-Mode

12.3.1 Displaying the settings window

Note
The setting window can be called up from every program in which the crane can be controlled.

If the settings window cannot be called up from the currently selected program:

► Select a program from which the crane can be controlled using the master switches, for example the *crane operation* program.

► Press the rapid gear **10** button on the master switch **MS1** or master switch **MS2** for at least two seconds.

Result:

– The settings window **1** is displayed.

Note
The settings window **1** is turned off again after ten seconds if no subsequent step is carried out within this time frame.

► Continue in time with the next steps.

12.3.2 Turning ECO-Mode on

Make sure that the following prerequisites are met:

– The settings window **1** is shown.
– The engine regulation **322** is not actuated.
– The master switches are not actuated.
– No auxiliary user is activated.
– The radio remote control is not activated.
– The engine regulation **322** is not actuated.

LWE/LTR 1100-009/25105-02-02/en

copyright © Liebherr-Werk Ehingen GmbH 2023

► Press the rpm lock **11** button on the master switch **MS1** or master switch **MS2**.

Result:

– ECO-Mode **ON 10.1** appears in the settings window.
– ECO-Mode is turned on and active.
– As soon as the settings window **1** is masked, the status display **9.1** appears in green

Note
► When master switch **MS1** and master switch **MS2** are in the neutral position, then engine rpm is automatically reduced when ECO mode is turned on.
► If master switch **MS1** or master switch **MS2** is deflected or an auxiliary user is added, then the engine rpm is automatically adjusted when ECO-Mode is turned on.
► The engine rpm can be increased by actuating the engine regulation **322** when ECO-Mode is turned on. ECO mode is then still turned on but inactive - the status display **9.1** appears in yellow.
► As long as the status display **9.1** is yellow, there is no adjustment of the engine rpm for the respective crane movement.
► In the following additional cases, the status display **9.1** also appears in yellow: Rpm lock active, idling speed is automatically reduced, rpm is specified with the radio remote control.

12.3.3 Limiting engine rpm in ECO-Mode

Make sure that the following prerequisites are met:
– The settings window **1** is shown.
– ECO-Mode is turned on.

► Activate the engine regulation **322**.

Result:

– The learning mode is activated:
– The setting rpm **20.1** is displayed and the bar diagram **20.3** appears in purple for the duration of the procedure
– The degree of actuation of the engine regulation **322** changes the value for the setting rpm **20.1**.

► Actuate the engine regulation **322** until the desired setting rpm **20.1** is reached.
► Press the rpm lock **11** button on the master switch **MS1** or master switch **MS2**.

Result:

– The setting rpm **20.1** is taken over as the highest rpm **20.2**.

► Do no longer actuate the engine regulation **322**.

Result:

– The learning mode is deactivated.
– The setting rpm **20.1** is hidden and the bar diagram **20.3** appears in white again

Note
Limited engine rpm
► In the operating screen, behind the display of the engine rpm appears the icon **3.5.2** (exclamation mark), when the ECO-Mode with limited engine rpm is turned on.
► To reset the maximum engine rpm, the maximum setting rpm **20.1** must be set during the setting procedure and taken over as described.

12.3.4 Turning ECO-Mode off

Make sure that the following prerequisite is met:
– ECO-Mode is turned on.

► Press the rapid gear **10** button on the master switch **MS1** or master switch **MS2** for at least two seconds.

LWE/LTR 1100-009/25105-02-02/en

copyright © Liebherr-Werk Ehingen GmbH 2023

Result:

– The settings window **1** is displayed.

As long as the settings window is displayed:
► Press the rpm lock **11** button on the master switch **MS1** or master switch **MS2**.

Result:

– ECO-Mode **OFF 10.2** appears in the settings window
– ECO-Mode is turned off

► Press the rapid gear **10** button on the master switch **MS1** or master switch **MS2** for at least two seconds.
or
Wait ten seconds without further steps.

Result:

– The settings window is hidden.
– The status display **9.1** no longer appears.

12.3.5 ECO-Mode inactive

Various tasks cause ECO-Mode to become inactive. In this case, the ECO mode is not turned off, just remains in stand-by operation.

► For example, actuating the engine regulation **322** or turning on an auxiliary user.

Result:

– ECO-Mode is inactive
– The status display **9.1** appears in yellow.

Remedy the reason for inactivity:

► For example, stop actuating the engine regulation **322** or turn off an auxiliary user.

Result:

– ECO-Mode is active again.
– The status display **9.1** appears in green.

LWE/LTR 1100-009/25105-02-02/en

copyright © Liebherr-Werk Ehingen GmbH 2023

13 Power-save mode and Stand-by mode in the LICCON computer system

13.1 Power-Save mode

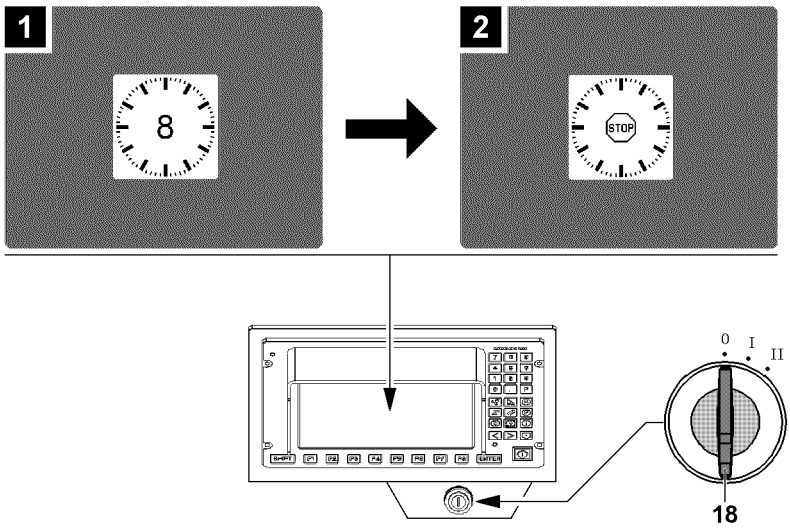

Fig.122440: Power-Save mode

If the crane engine - by turning the ignition switch **18** - is turned off to position 0 (ignition **OFF**), the LICCON computer system changes to the Power-Save mode.

The Power-Save mode enables the crane driver - within eight seconds of turning the ignition off - to start the crane engine again without having to start the LICCON computer system again.

If the crane engine is not restarted within eight seconds, then the LICCON computer system shuts off completely.

Note
► In the Power-Save mode, no crane movements are possible.

Procedure of Power-Save mode

► Turn the ignition switch **18** to position 0 (ignition **OFF**).

Result:

– The crane engine is turned off.
– The Power-Save mode is active.
– The clock with remaining run time of the Power-Save mode (approx. eight seconds) appears, illustration **1**.

Note
► After completion of the remaining run time, a clock appears briefly with an integrated *STOP* icon (illustration **2**), which displays the complete shut-off of the LICCON computer system.

– The clock with an integrated *STOP* icon appears for a few seconds, illustration **2**.
– All processes on the LICCON computer system are stopped.
– The LICCON computer system turns off completely.

Press any key in Power-save mode once

Note
► Pressing a button in Power-Save mode once shortens the run time to five seconds.

LWE/LTR 1100-009/25105-02-02/en

copyright © Liebherr-Werk Ehingen GmbH 2023

► Press any key.

Result:

– The remaining run time is shortened to five seconds.

Press any key twice in Power-save mode

► Press any key twice in succession.

Result:

– The remaining run time is set to zero.
– The clock with an integrated *STOP* icon appears for a few seconds, illustration **2**.
– All processes on the LICCON computer system are stopped.
– The LICCON computer system is turned off completely, the LICCON monitor does not display anything.

13.2 Stand-by mode

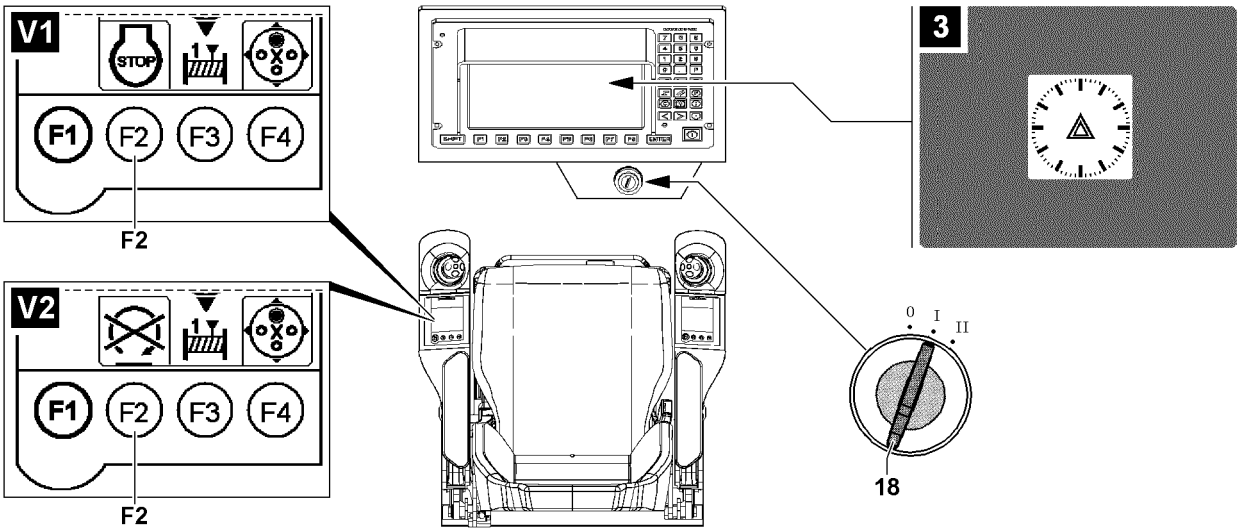

Fig.122439: Stand-by mode

After pressing the engine *STOP* button **F2** (depending on the crane type variation **V1** or variation **V2**) - the crane engine is turned off - on the LICCON monitor, the operating interface of the most recently active application program continues to be displayed for an additional ten minutes.

After these ten minutes are over, the Stand-by mode is reached. The Stand-by mode is displayed on the screen by the *Stand-by clock with warning icon* (illustration **3**) on the LICCON monitor and by a repeated acoustic signal (rhythmic horn).

Note

► In the Stand-by mode, no crane movements are possible.

Initiate the Stand-by mode in the LICCON computer system:

► Press the engine *STOP* button **F2**.
► Leave the ignition key **18** in position „**I**“.

Result:

– The crane engine is turned off.
– The operating interface of the last active application program is shown further.
– The ten minute time frame starts to run down.

► Within the ten minute time frame, press **any key**.

LWE/LTR 1100-009/25105-02-02/en

copyright © Liebherr-Werk Ehingen GmbH 2023

Result:

– The ten minute time frame is reset and starts to run down again.

► Within the ten minute time frame, press **no key**.

Result:

– After the time is over, the **Stand-by mode** is reached.
– The display area on the LICCON monitor turns black.
– The stand-by clock with a warning icon is shown, illustration **3**.
– Every half a minute a repeating acoustic signal from the LICCON monitor sounds.

Note

► The Stand-by mode does not lead to any automatic shut-off of the LICCON computer system.

Turn the LICCON computer system off from the Stand-by mode

► Turn the ignition switch to position 0.

Result:

– The Power-Save mode becomes active for eight seconds, then the LICCON computer system is turned off by itself.

LWE/LTR 1100-009/25105-02-02/en

copyright © Liebherr-Werk Ehingen GmbH 2023

4.03 Start up and shut down of crane

1	Inspections	2
2	Monitoring functions	5
3	Diesel particle filter (DPF)*	6
4	*Exhaust system* cleaning procedure	11
5	Crane driver's seat Version 1	12
6	Crane driver's seat Version 2	17
7	Control platform	19
8	Step	21
9	Crane cab	23
10	Hydraulic oil preheating*	26
11	LICCON computer system	27
12	Disengaging / engaging the coupling control on the pump distributor gear	30
13	Starting the engine	32
14	Turning the engine off	33
15	Indicator lights	35
16	Window wiper / window washer system	35
17	Hook block	36

LWE/LTR 1100-009/25105-02-02/en

copyright © Liebherr-Werk Ehingen GmbH 2023

1 Inspections

The illustrations in this chapter are examples and may differ from the crane.

Various inspections must be carried out prior to crane start-up.

The inspection and maintenance of the components of the crane superstructure are described in chapter 7.05.

The inspection and maintenance of the components of the crane chassis are described in chapter 7.04.

The fill quantities of the components are listed in the Service fill. Additionally observe and adhere to the instructions in chapter 7.06 and chapter 7.07.

WARNING
Defective function of the crane!
Defects on components, missing quantities or dirty filters affect the operating safety of the crane.

If a defect is found in a component:
► Rectify the defect.

If an incorrect quantity is found:
► Replenish or reduce the quantity to the normal level.

If a very dirty filter is found:
► Clean or replace the filter.

WARNING
Hot surfaces of components!
Severe burns.
► Let any components to be serviced or inspected cool off.
► Keep a sufficient distance from hot components.

WARNING
Emergency devices not operational!
Death, severe bodily injuries, property damage.
► Check emergency devices for accessibility and operational readiness.
► Open or remove anti-theft device!

WARNING
Operating fluids not suitable for ambient temperature!
Death, severe bodily injuries, property damage.
► Adjust the operating fluids in time to the ambient temperatures.

Make sure that the following prerequisites are met:
– The engine is off.
– The respective components are at ambient temperature.

1.1 Engine

► For crane types without an electric engine oil level display, the oil level can be checked on the dipstick.

1.2 Hydraulic tank

► Check the oil level on the sight gauge.
► Check the filter.

LWE/LTR 1100-009/25105-02-02/en

copyright © Liebherr-Werk Ehingen GmbH 2023

1.3 Coolant

WARNING
The cooling system is pressurized!
When the coolant reservoir is opened, hot coolant can escape explosively.
Severe scalding.

When the engine is warm:
- ► Do **not** open the cover of the coolant reservoir.
- ► To protect face, hands and arms from hot steam or hot coolant, cover the cap with a large rag when opening.

- ► Check the coolant level.

1.4 Central lubrication system

- ► Check the grease level on the grease tank.

1.5 Window washer fluid

Note
- ► The window cleaning fluid must be adapted to the prevalent ambient temperatures.

- ► Check the level of the window washer fluid.

1.6 Displaying the lubricants, operating fluids and fill levels on the LIC-CON monitor

Replenish lubricants and operating fluids in time.

Regenerate the diesel particle filter* in time

Make sure that the following prerequisites are met:
- – The ignition switch in the crane cab is in position „I“.
- – The engine is turned off.
- – The LICCON computer system is in the „Crane operation“ program.

1.6.1 Displaying the fuel reserve

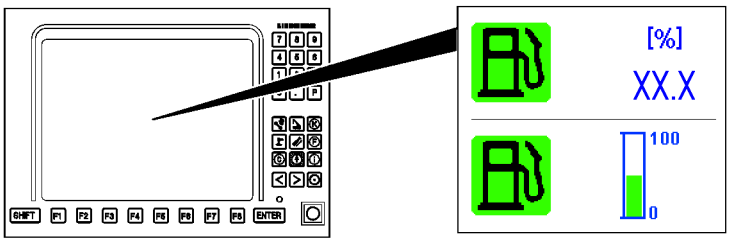

Fig.147669: Fuel reserve display - both variations

Note
If the fuel tank has run dry, then the fuel system must be bled!
- ► Refuel in time.

Depending on the crane type, the fuel reserve is displayed as a percentage value or a bar graph.

- ► Call up the monitoring functions, see chapter 4.02.
- ► Check the fuel reserve.

LWE/LTR 1100-009/25105-02-02/en

copyright © Liebherr-Werk Ehingen GmbH 2023

1.6.2 Displaying the urea reserve

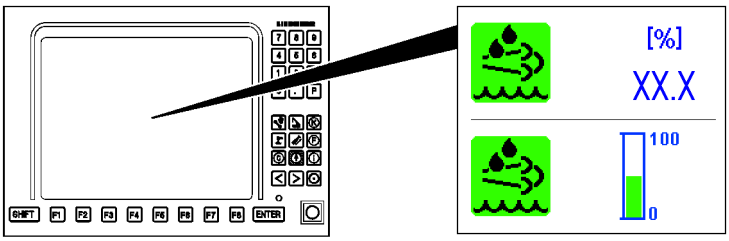

Fig.147670: Urea reserve display - both variations

Note
► Valid only for engines which are equipped with an SCR exhaust aftertreatment system.

Depending on the crane type, the urea reserve is displayed as a percentage value or a bar graph.

► Call up the monitoring functions, see chapter 4.02.
► Check the urea reserve.

1.6.3 Displaying the engine oil level

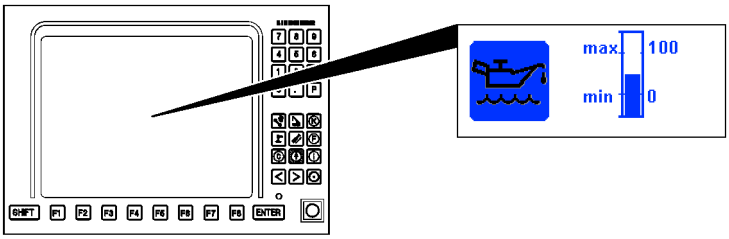

Fig.147671: Engine oil level display, example for engine oil level between min and max

The engine oil level is displayed as a bar graph.

Explanation of the bar graph:
– Under *min*: Engine oil level too low
– Between *min* and *max*: Engine oil level OK
– Over *max*: Engine oil level overfilled

Note
► The engine oil level can only be displayed when the engine is turned off.

► Call up the monitoring functions, see chapter 4.02.

Before starting the engine:
► Check the engine oil level.

1.6.4 Display the diesel particle filter load condition (DPF)

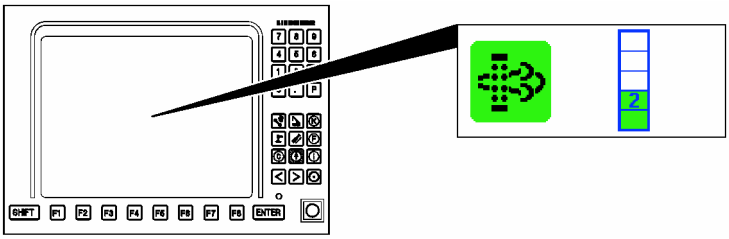

Fig.152660: Diesel particle filter load condition, example for load condition 2 (green)

LWE/LTR 1100-009/25105-02-02/en

copyright © Liebherr-Werk Ehingen GmbH 2023

Note
► Applies only for engines with a diesel particle filter (DPF).

The load condition of the diesel particle filter is displayed as a bar graph.

Explanation of the bar graph:
– Load condition 1 (green): Load condition OK, diesel particle filter minimally loaded
– Load condition 2 (green): Load condition OK, diesel particle filter slightly loaded
– Load condition 3 (green): Load condition OK, diesel particle filter half loaded
– Load condition 4 (yellow): Load condition increased, diesel particle filter strongly loaded
  Note: Prompt need for action required regarding the load condition of the diesel particle filter.
– Load condition 5 (red): Load condition critical, diesel particle filter with maximum load
  Note: Immediate need for action required regarding the load condition of the diesel particle filter.

► Call up the monitoring functions, see chapter 4.02.

Before starting the engine:
► Check the diesel particle filter load condition.

1.7 Crane condition

WARNING
Impermissible crane condition!
Death, severe bodily injuries, property damage.
► Observe and adhere to the following prerequisites.

Make sure that the following prerequisites are met:
– All safety equipment is functioning.
– The crane is positioned on a level and load-bearing surface.
– The crane is supported and horizontally aligned.
– The gear ring of the slewing ring connection is clean and greased.
– The air supply for the oil cooler and the water cooler is clear.
– All covers are closed and locked.
– No persons or objects are within the danger zone of the crane.
– The cable drum, rope drum and limit switches are free of snow and ice.
– There are no loose parts on the boom and crane.

2 Monitoring functions

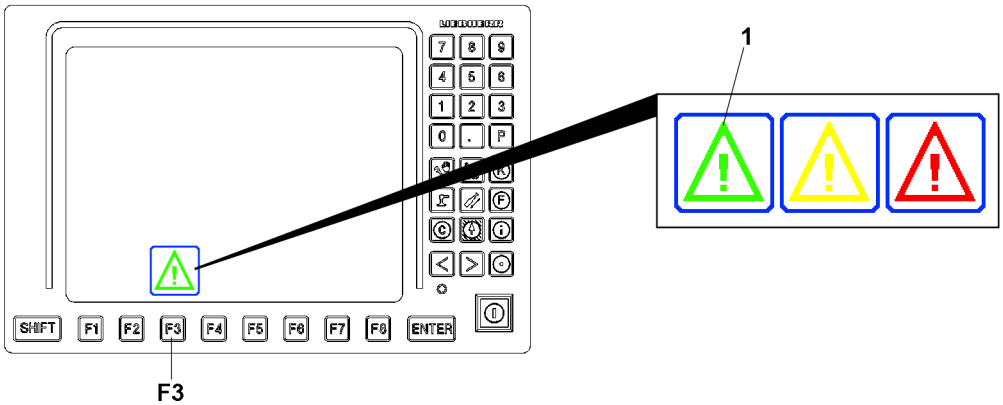

Fig.147668: Monitoring function warning icon

The monitoring functions are described in detail in chapter 4.02.

LWE/LTR 1100-009/25105-02-02/en

copyright © Liebherr-Werk Ehingen GmbH 2023

The crane components and operating conditions are monitored in the LICCON computer system. The warning icon **1** above the function key **F3** is displayed in green when all monitoring functions are ok. If a control value reached a limit range, or if there is a malfunction or warning, the warning icon **1** above the function key **F3** is displayed in yellow or red.

NOTICE
The warning icon **1** is displayed in yellow or red - malfunction / warning!
Damage to components.
► End crane movement.
► Turn the engine off.
► Remedy the cause of the error.
► Observe and adhere to the instructions in chapter 4.02.

3 Diesel particle filter (DPF)*

Note
► Applies only for engines with a diesel particle filter (DPF).

3.1 Calling up the diesel particle filter load condition

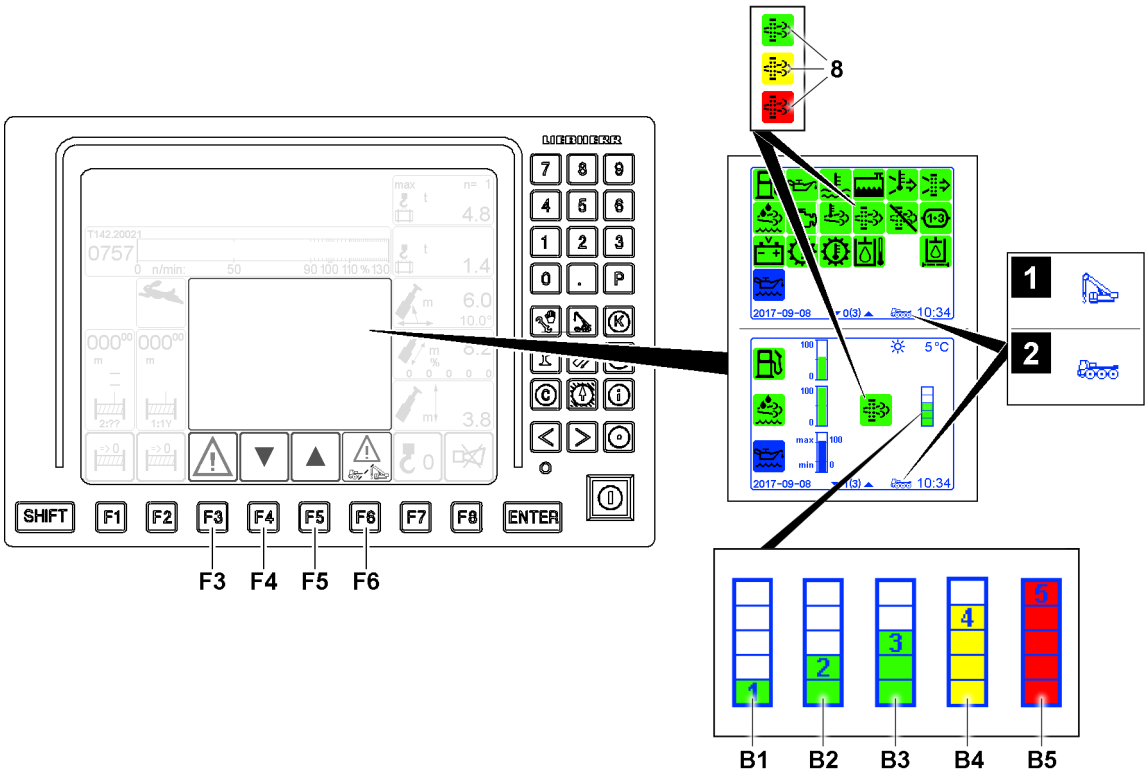

Fig.151825: Calling up the diesel particle filter load condition

Make sure that the following prerequisites are met:
– The ignition is turned on.
– The *Crane operation* program is active.

► Press the function key **F3**.

Result:

– The monitoring functions / individual control displays are displayed on the LICCON monitor, see illustration **1**.

LWE/LTR 1100-009/25105-02-02/en

copyright © Liebherr-Werk Ehingen GmbH 2023

In the case of crane types with a separate engine for the crane chassis and crane superstructure, observe the following:
– Illustration **1**: *Crane superstructure assignment* icon
  • The monitoring functions / individual control displays are assigned to the crane superstructure
– Illustration **2**: *Crane chassis assignment* icon
  • The monitoring functions / individual control displays are assigned to the crane chassis

Note
► By pressing the function key **F4** / function key **F5**, it is possible to switch between the monitoring functions / individual control displays.

When the crane chassis ignition is turned on:
► By pressing the function key **F6**, it is possible to switch between the monitoring functions / individual control displays of the crane superstructure and the crane chassis.

There are five load conditions for the diesel particle filter.

Read the load condition on the LICCON monitor:
– Load condition 1 **B1** (green): Load condition OK, diesel particle filter minimally loaded.
– Load condition 2 **B2** (green): Load condition OK, diesel particle filter lightly loaded.
– Load condition 3 **B3** (green): Load condition OK, diesel particle filter half loaded.
– Load condition 4 **B4** (yellow): Load condition increased, diesel particle filter strongly loaded.
– Load condition 5 **B5** (red): Load condition critical, diesel particle filter with maximum load.

If the icon **8** appears / blinks yellow or red, the load condition must be checked immediately.

Observe the error messages and have it evaluated in the BSE test system.

If the load condition 4 **B4** icon appears, Liebherr-Werk Ehingen GmbH recommends carrying out regeneration at a standstill as soon as possible (during the work day).

If the load condition 5 **B5** icon appears and regeneration at a standstill is no longer possible:
► Stop engine operation.
► Contact Liebherr-Werk Ehingen GmbH Customer Service.

Note
Load condition 5 **B5**
► The engine torque is reduced to protect the engine against damage.

3.2 Automatic regeneration of the diesel particle filter

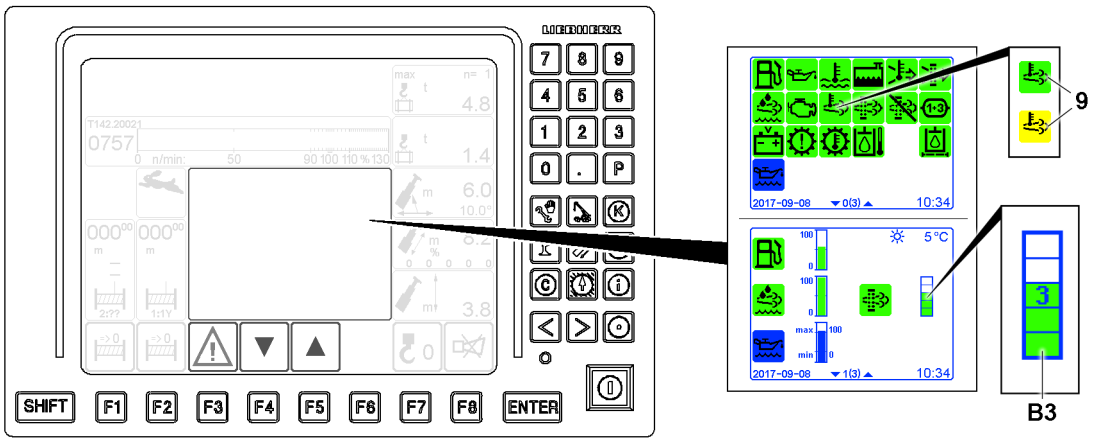

Fig.152143: Displays during automatic regeneration of the diesel particle filter

From load condition 3 **B3**, automatic regeneration is carried out automatically during engine operation. This means no limitations for crane operation. Engine noise may change slightly during regeneration.

copyright © Liebherr-Werk Ehingen GmbH 2023

Regeneration is triggered when the ambient conditions (load profile) of the engine permit regeneration. The engine must be operated for at least one hour to complete regeneration.

While the diesel particle filter is being regenerated, the icon **9** in the crane operation monitoring functions turns yellow. When generation is complete, the icon **9** turns green.

3.3 Disabling automatic regeneration of the diesel particle filter

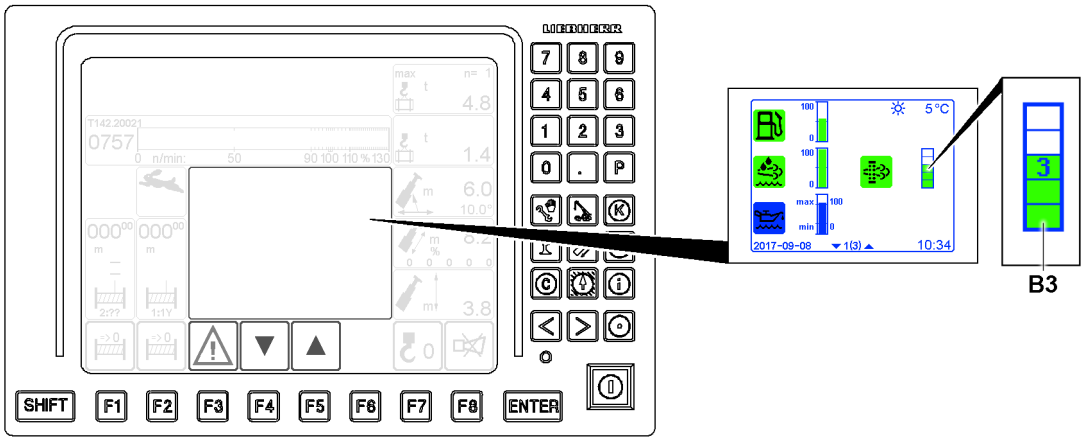

Fig.151823: Displays for load condition 3

From load condition 3 **B3**, automatic regeneration is carried out automatically during engine operation.

If needed, automatic regeneration can be:
- disabled as a precaution,
- interrupted and disabled while it is being carried out

Make sure that the following prerequisites are met:
- The crane is at a standstill.
- The monitoring functions are displayed on the LICCON monitor.

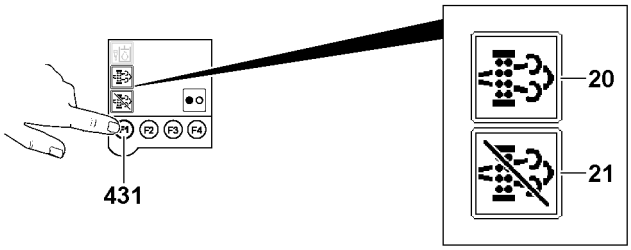

Fig.151820: Diesel particle filter regeneration / disabling diesel particle filter regeneration at a standstill icons

► Press the F1 key **431** on the left touch display (TE2) until the *Diesel particle filter regeneration at a standstill* **20** icon and *Disable diesel particle filter regeneration at a standstill* icon **21** are displayed, see illustration.

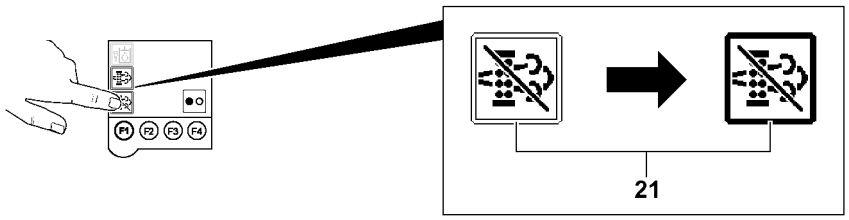

Fig.151821: Selecting disabling regeneration at a standstill of the diesel particle filter

► Tap the *disable diesel particle filter regeneration at a standstill* icon **21** to select it.

LWE/LTR 1100-009/25105-02-02/en

copyright © Liebherr-Werk Ehingen GmbH 2023

Result:

– The frame of the *disable diesel particle filter* icon **21** is displayed in bold.
– Disabling automatic regeneration of the diesel particle filter is selected.

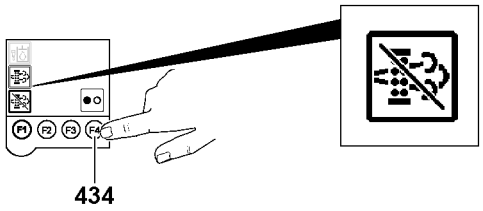

Fig.152573: Activating disabling regeneration at a standstill of the diesel particle filter

► Press the F4 key **434**.

Result:

– Automatic regeneration of the diesel particle filter is disabled.

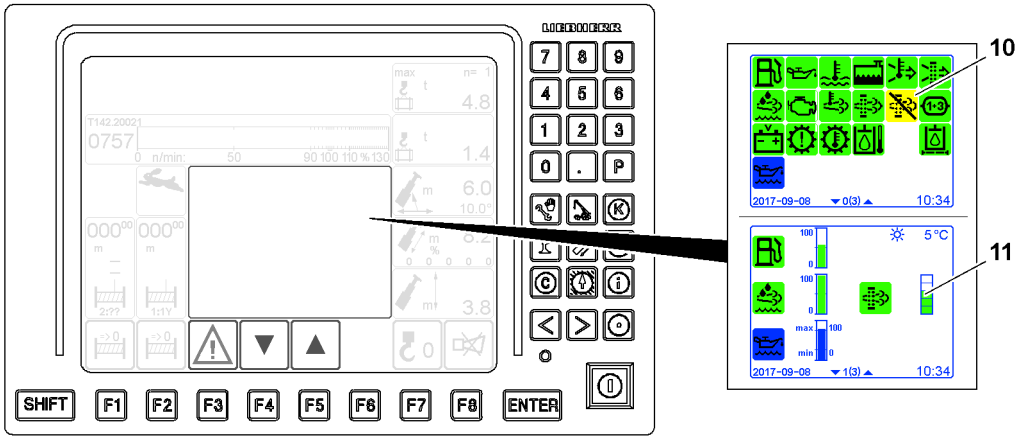

Fig.151824: Displays during disabling automatic regeneration of the diesel particle filter

As long as the automatic regeneration of the diesel particle filter is disabled, the *disable diesel particle filter regeneration at a standstill* icon **10** appears yellow.

If automatic regeneration of the diesel particle filter is disabled:
► Monitor the *load condition* display **11**. As soon as the load condition becomes critical (yellow), Liebherr-Werk Ehingen GmbH recommends carrying out regeneration at a standstill as soon as possible (during the work day).

3.4 Regenerating at a standstill of the diesel particle filter

DANGER
Regeneration of the diesel particle filter*!
High exhaust gas temperature. Danger of fire.
► In an environment with a fire hazard, disable or stop active regeneration.

Note
High temperatures at the exhaust outlet!
► Only if necessary: Carry out regeneration at a standstill.

Regeneration at a standstill of the diesel particle filter must be initiated on touch display 2. Regeneration at a standstill can be carried out at the earliest from load condition 2 and at the latest by load condition 4.

copyright © Liebherr-Werk Ehingen GmbH 2023

NOTICE
Engine stop during regeneration at a standstill!
Interrupting the regeneration at a standstill by stopping the engine destroys the diesel particle filter (DPF).
► Do **not** interrupt regeneration at a standstill by stopping the engine.

Note
► Do **not** carry out any crane operation or travel operation during regeneration at a standstill!

Make sure that the following prerequisites are met:
– The crane is at a standstill.
– The load condition of the diesel particle filter is displayed on the LICCON monitor.
– Load condition 2, load condition 3 or load condition 4 is reached.

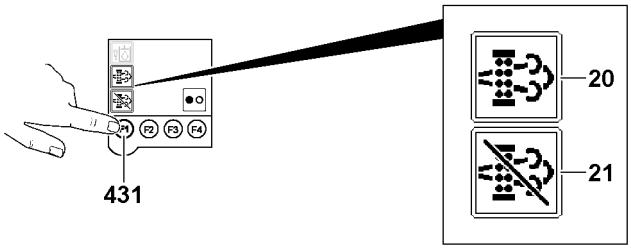

Fig.151820: Diesel particle filter regeneration / disabling diesel particle filter regeneration at a standstill icons

► Press the F1 key **431** on the left touch display (TE2) until the *Diesel particle filter regeneration at a standstill* **20** icon and *Disable diesel particle filter regeneration at a standstill* icons **21** are displayed, see illustration.

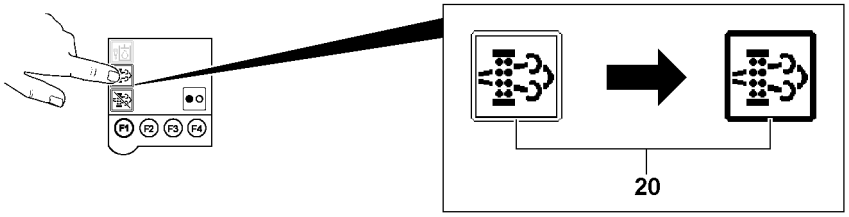

Fig.151822: Selecting regeneration at a standstill of the diesel particle filter

► Tap the *diesel particle filter regeneration at a standstill* icon **20** to select it.

Result:

– The frame of the Symbol *diesel particle filter regeneration at a standstill* icon **20** is displayed in bold.
– Regeneration at a standstill of the diesel particle filter is selected.

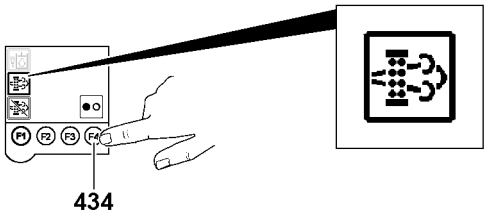

Fig.151826: Activating regeneration at a standstill of the diesel particle filter

► Press the F4 key **434**.

LWE/LTR 1100-009/25105-02-02/en

copyright © Liebherr-Werk Ehingen GmbH 2023

Result:

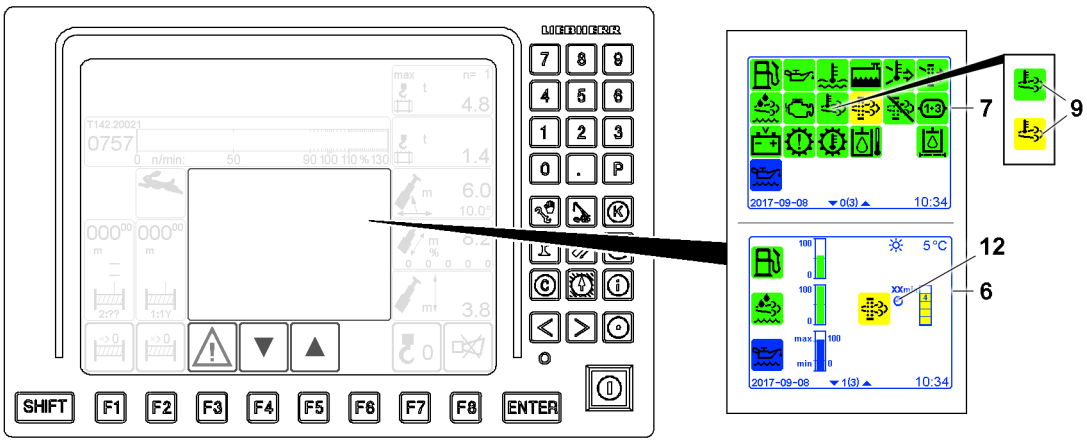

*Fig.152142: Example of carrying out the regeneration at a standstill of the diesel particle filter with load condition **B4***

– Regeneration at a standstill of the diesel particle filter has started.
– The crane operation monitoring functions **7** icon **9** turns yellow.
– The remaining regeneration time **12** is displayed on the individual control displays **6**.

► Wait until the regeneration time **12** has elapsed.

Result:

– The icon **9** turns green.
– After successful regeneration, a permissible load condition is reached.

4 *Exhaust system* cleaning procedure

The automatic cleaning procedure for the *exhaust system* prevents damaging the exhaust system.

Prior to the *exhaust system* cleaning procedure, the engine rpm is increased for 10 to 20 minutes by the crane control. A message **1** is displayed.

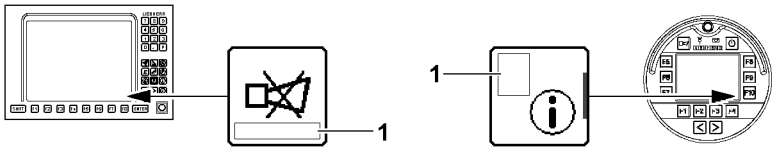

*Fig.154108: Note regarding the message **1** in the display field*

If the engine is turned off during the cleaning procedure, the cleaning procedure restarts the next time the engine is started.

NOTICE
Exhaust system cleaning procedure active!
Hot exhaust system. Property damage.

If the *exhaust system* cleaning procedure active message is displayed:
► Do **not** turn the engine off.

If the *exhaust system* cleaning procedure active message disappears:
► The engine can be turned off.

LWE/LTR 1100-009/25105-02-02/en

copyright © Liebherr-Werk Ehingen GmbH 2023

5 Crane driver's seat Version 1

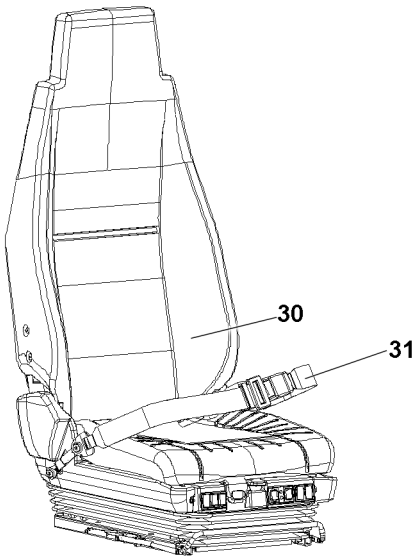

*Fig.162851: Crane driver's seat **30** with seatbelt **31***

The crane driver's seat **30** can be adjusted to suit any body size.

WARNING
Sudden backward movement of the crane driver's seat when the crane cab is tilted!
Danger of crushing.
► Adjust the seat position only when the crane cab is in the horizontal position.

5.1 Horizontal adjustment

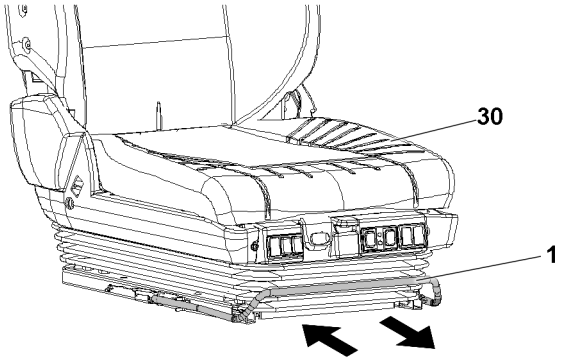

Fig.147579: Adjusting the crane driver's seat horizontally

► Pull the lever **1** up.
► Push the crane driver's seat **30** forward / backward.
► Engage the lever **1**.

Result:
– The crane driver's seat **30** is horizontally adjusted.

LWE/LTR 1100-009/25105-02-02/en

copyright © Liebherr-Werk Ehingen GmbH 2023

5.2 Backrest adjustment

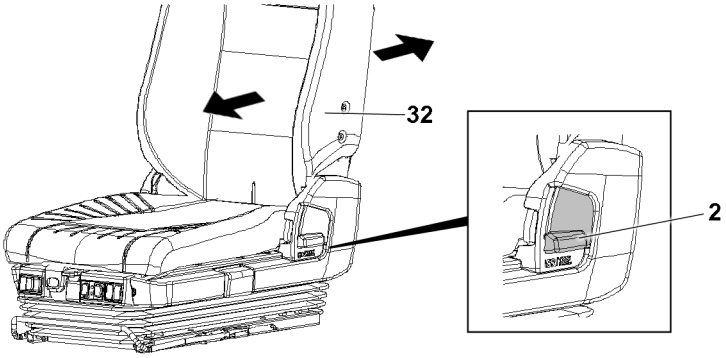

Fig.147580: Adjusting the backrest

- ► Pull the lever **2** up completely.
- ► Bring the backrest **32** into the desired position using body weight.
- ► Engage the lever **2**.

Result:
– The desired backrest position is adjusted.

5.3 Integrated pneumatic system (IPS)

The „Integrated pneumatic system“ (IPS) makes it possible to optimally adapt the backrest contour to the body.

5.3.1 „Lower“ lumbar area support

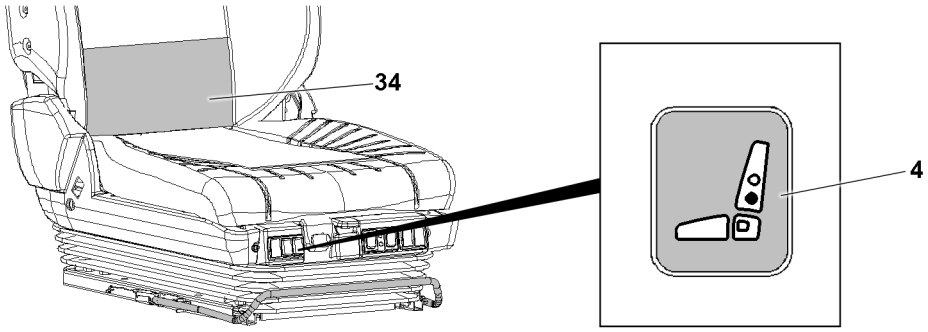

Fig.147581: Lower lumbar area support

- ► Press the button **4**.

Result:
– The air chamber **34** for the „lower lumbar area support“ is inflated.

- ► Press the button **4**.

Result:
– The air chamber **34** for the „lower lumbar area support“ is deflated.

LWE/LTR 1100-009/25105-02-02/en

copyright © Liebherr-Werk Ehingen GmbH 2023

5.3.2 „Upper“ lumbar area support

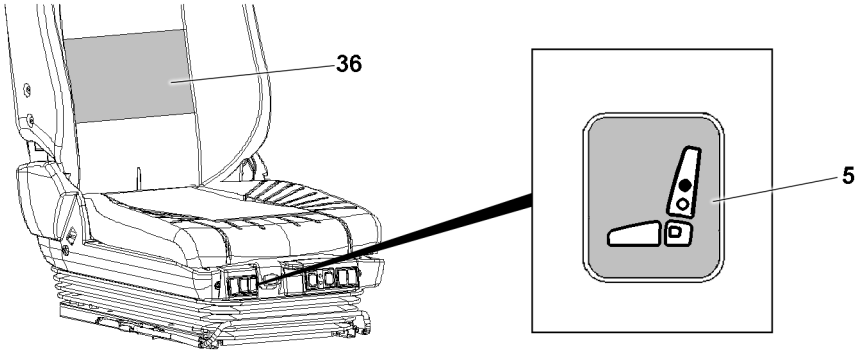

Fig.147582: Upper lumbar area support

► Press the button **5** forward.

Result:
– The air chamber **36** for the „upper lumbar area support“ is inflated.

► Press the button **5** backward.

Result:
– The air chamber **36** for the „upper lumbar area support“ is deflated.

5.4 Incline adjustment

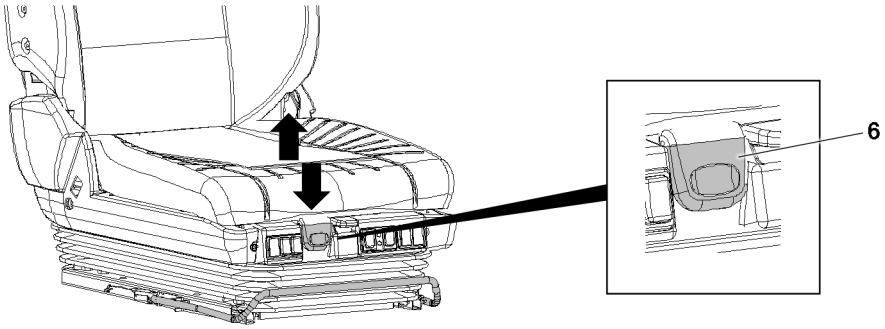

Fig.147583: Incline adjustment

► Pull the lever **6** up.
► Adjust the seat incline by inflating or releasing the front of the seat cushion.
► Engage the lever **6**.

Result:
– The incline adjustment has been set.

LWE/LTR 1100-009/25105-02-02/en

copyright © Liebherr-Werk Ehingen GmbH 2023

5.5 Seat cushion adjustment

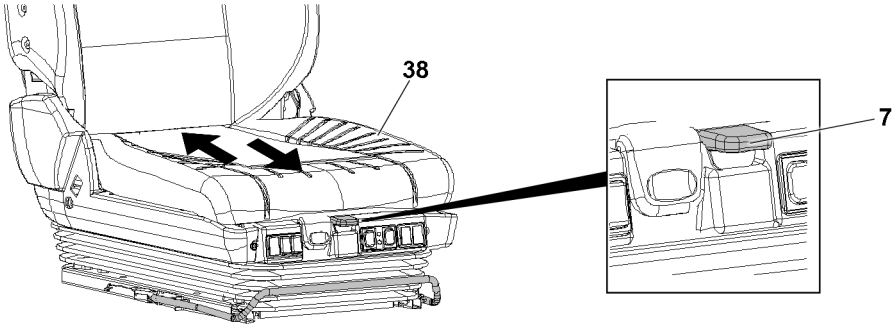

Fig.147584: Adjusting the seat cushion

- ► Pull the lever **7** up.
- ► Push the seat cushion **38** forward / backward.
- ► Engage the lever **7**.

Result:
- – The seat cushion **38** is adjusted.

5.6 Height adjustment

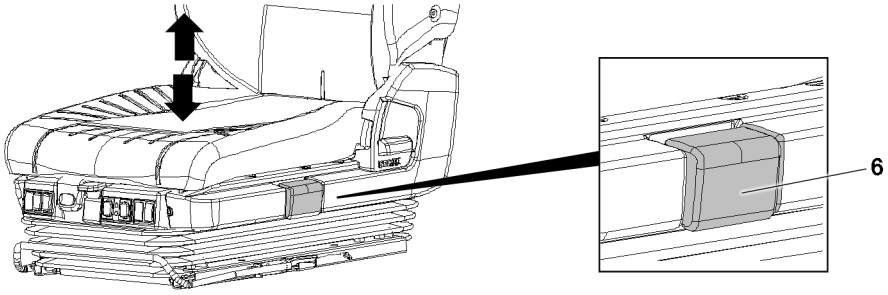

Fig.147585: Adjusting the seat height

NOTICE
Crane driver's seat adjusted too low!
No seat suspension is available.
- ► Before starting to work: Adjust the crane driver's seat so that there is headroom and the pedals can be pressed down fully.

- ► Adjust the seat height: Pull or press the handle **6**.
- ► Release the handle **6**.

Result:
- – The desired seat height is adjusted.

LWE/LTR 1100-009/25105-02-02/en

copyright © Liebherr-Werk Ehingen GmbH 2023

5.7 Heater / climate control

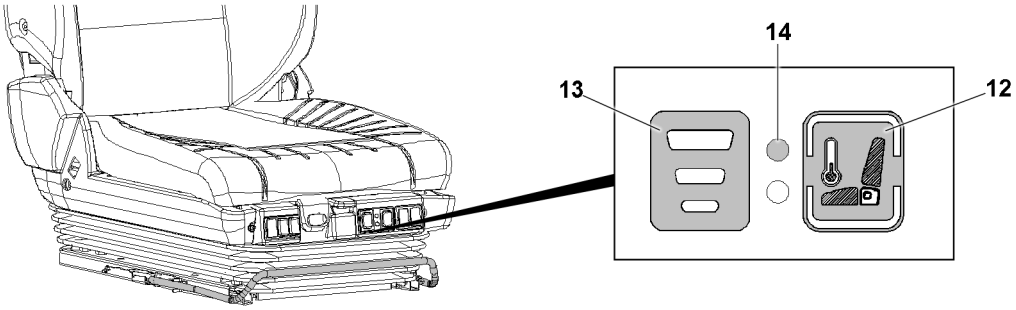

Fig.147586: Heater / climate control

NOTICE
Anomalous use of the heater / climate control!
Overheating, damage to the seat.
► Do **not** dry wet clothing.
► Do **not** place objects such as clothing, cushions, bags on the seat.
► Do **not** use seat covers on the seat.
► If the seat is not occupied, use of the heater / climate control is prohibited.

WARNING
Continuous operation of the climate control!
Undercooling.
► Avoid the continuous operation of the climate control.

5.7.1 Heater / climate control

The button **12** has three switch positions.

Switch position neutral (center position): No function, switch position „OFF“.
Switch position up: Heater turned on.
Switch position down: Fan on.

► Button **12** in the „OFF“ switch position.

Result:
– The heater / climate control is turned off.

► Push the button **12** upward.

Result:
– Heater turned on.

► Press the button **12** downward.

Result:
– Fan on.

5.7.2 Heater / fan stages

The button **13** has three switch stages. The switch stages can be selected from low to high.

► Select the switch stage: Press the button **13**.

Result:
– The heater / fan stage is set.

5.7.3 Heater / climate control indicator light

If the red indicator light **14** blinks, a problem is displayed.

LWE/LTR 1100-009/25105-02-02/en

copyright © Liebherr-Werk Ehingen GmbH 2023

► The red indicator light **14** blinks: Switch the button **12** to the neutral switch position (center position).

Result:
– The heater / climate control is turned off.

► Remedy the problem.

6 Crane driver's seat Version 2

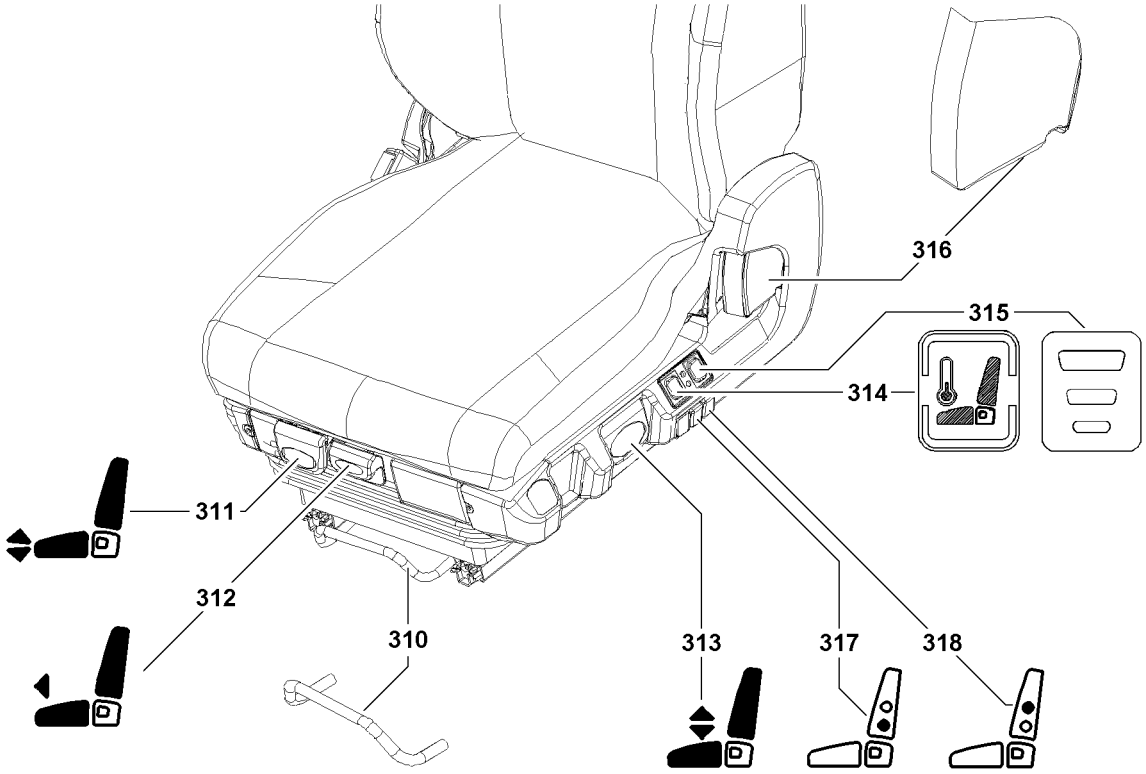

Fig.122070: Crane driver's seat

6.1 Horizontal adjustment

WARNING
Sudden backward movement of the crane driver's seat when the crane cab is tilted!
Danger of crushing.
► Adjust the seat position only when the crane cab is in the horizontal position.

► Pull the lever **310** up.
► Position the seat.
► Engage the lever **310**.

Result:
– The horizontal adjustment is adjusted.

6.2 Incline adjustment

► Pull the lever **311** up.
► Adjust the seat incline by inflating or releasing the front of the seat cushion.
► Engage the lever **311**.

LWE/LTR 1100-009/25105-02-02/en

copyright © Liebherr-Werk Ehingen GmbH 2023

Result:
– The incline adjustment is adjusted.

6.3 Seat cushion adjustment

► Pull the lever **312** up.
► Push the seat cushion forward / backward.
► Engage the lever **312**.

Result:
– The seat cushion is adjusted.

6.4 Height adjustment

► Pull or press the lever **313**.
► Adjust the desired seat height.
► Engage the lever **313**.

Result:
– The seat height is adjusted.

6.5 Seat heater / seat climate control*

► Set the switch **314** upward.

Result:
– Seat cushion and backrest heater turned on. The seat cushion and backrest heater are thermostatically controlled.

► Set the switch **314** to neutral (middle position).

Result:
– Seat heater / seat climate control turned off.

► Set the switch **314** downward.

Result:
– Seat cushion and backrest climate control turned on.

6.6 Fan*

Note: The fan is only available in combination with the seat heater / climate control*****.

► Operate the lever **315**.
► Adjust the fan stage.

Result:
– The fan stage is adjusted.

6.7 Backrest adjustment

► Pull the lever **316** up.
► Bring the backrest into the desired position using body weight.
► Engage the lever **316**.

Result:
– Backrest adjustment set.

6.8 Upper lumbar area support*

► Operate the lever **317**.
► Until the desired support is adjusted: Inflate or vent the air chamber in the „upper lumbar area support“.

LWE/LTR 1100-009/25105-02-02/en

copyright © Liebherr-Werk Ehingen GmbH 2023

Result:
– Upper lumbar area support adjusted.

6.9 Side support*

► Operate the lever **318**.
► Until the desired support is adjusted: Inflate or vent the air chamber in the „side support“.

Result:
– The side support is adjusted.

7 Control platform

7.1 Folding the control helm

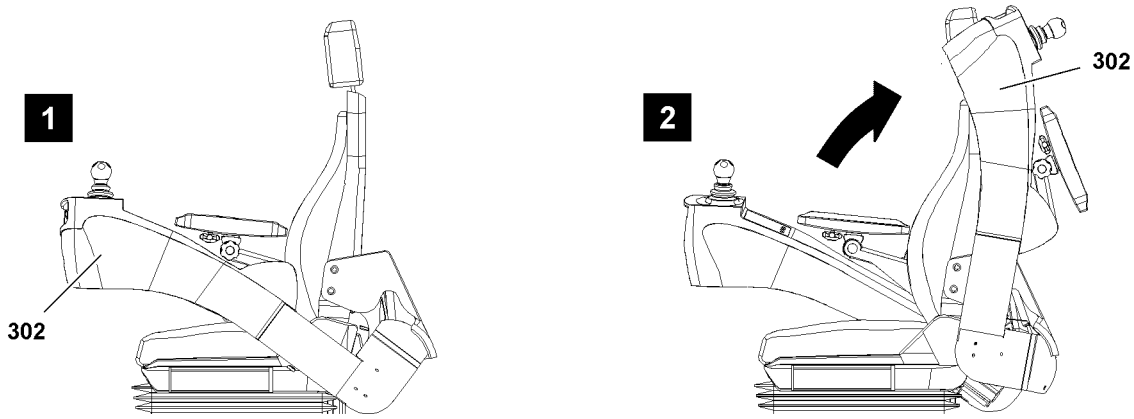

Fig.122071: Folding the control helm

The control helm **302** can be folded up or down.

– Operating position: Control helm **302** is folded down, illustration **1**
– Entry / exit position: Control helm **302** is folded up, illustration **2**

WARNING
Sudden fold down of control helm!
Danger of crushing.

After entering and exiting:
► Fold the control helm **302** down.

Before entering and exiting:
► Fold the control helm **302** up.

LWE/LTR 1100-009/25105-02-02/en

copyright © Liebherr-Werk Ehingen GmbH 2023

7.2 Adjusting the control helm

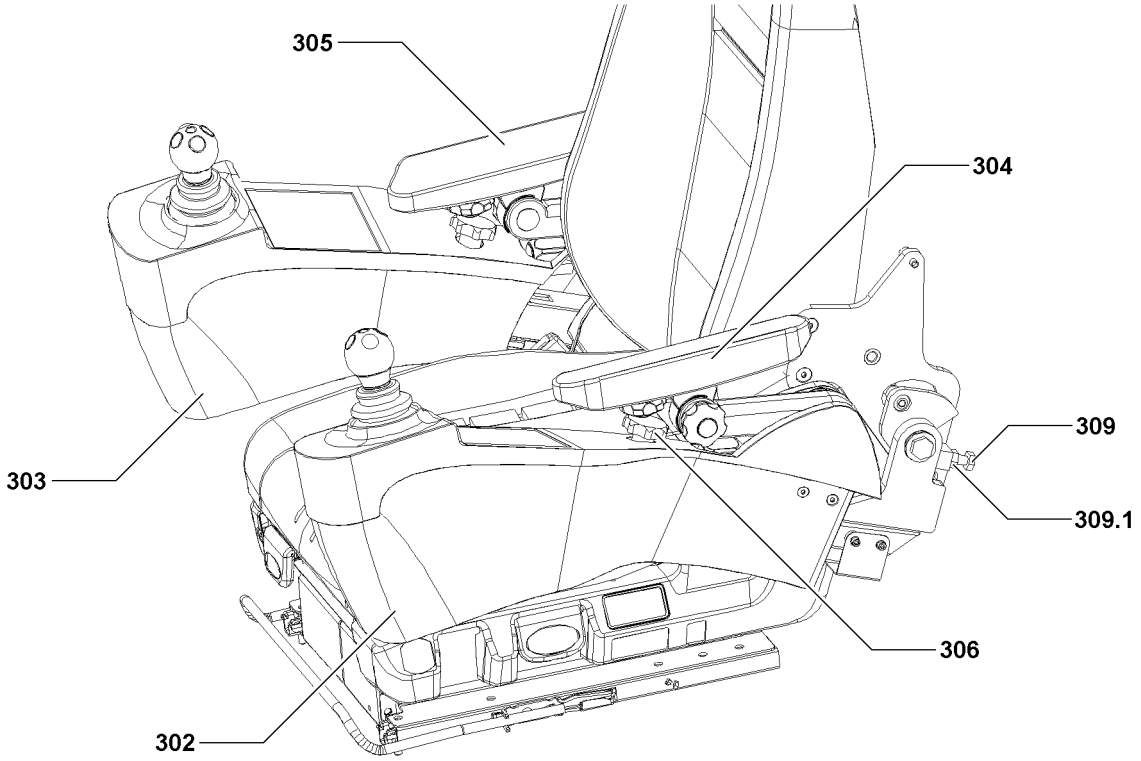

Fig.122072: Adjusting the control helm

The control helms can be adjusted individually to suit. Every crane operator can set his work place optimally to his body size.

The control helms can be adjusted to suit the crane driver as described for the left control helm **302**. The adjustment of the right control helm **303** functions the same way.

Adjust the incline

► Release the nut **309.1**.

Until the control helm **302** has reached the desired incline:
► Turn the stop screw **309**.
► Secure the stop screw **309** with the nut **309.1**.

Move horizontally.

► Fold the armrest **304** up.
► Pull the locking pin **306**.
► Set the horizontal position by sliding the control helm **302**.
► Release the locking pin **306** and let it engage.
► Fold the armrest **304** down.

LWE/LTR 1100-009/25105-02-02/en

copyright © Liebherr-Werk Ehingen GmbH 2023

7.3 Armrests

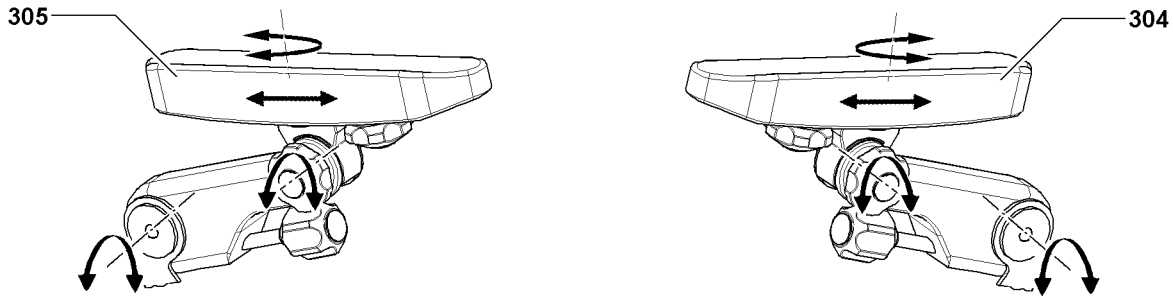

Fig.122073: Armrests

By releasing the adjustment screws, the armrests can be adjusted individually. To operate the master switches comfortably, set the armrests to the size of the crane driver.

- ► Release the adjustment screws.
- ► Adjust the left armrest **304** and right armrest **305**.
- ► Close the adjustment screws.

8 Step

The step is only present on certain crane types.

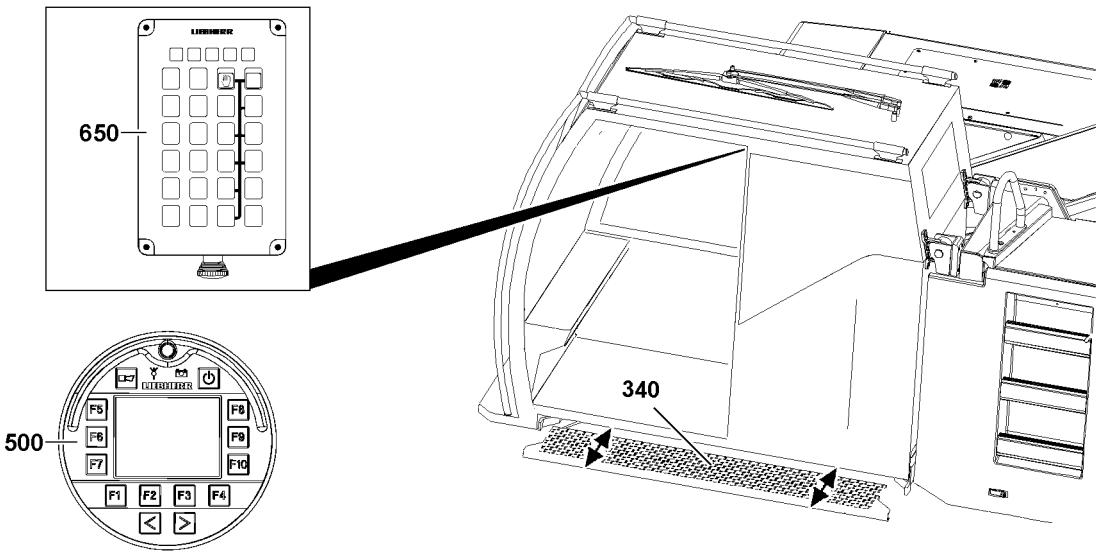

Fig.152551: Operating the step with the BKE / BTT

To be able to get into the crane cab easier, the step **340** can be extended / retracted.

WARNING
Step **340 not** fully retracted or extended!
Danger of falling, death, severe bodily injuries.
- ► Retract or extend the step completely!

Only when the step is extended completely:
- ► Step on the step.

LWE/LTR 1100-009/25105-02-02/en

copyright © Liebherr-Werk Ehingen GmbH 2023

WARNING
Personnel can be caught by the step!
Personnel can fall, death, severe bodily injuries.
► When extending and retracting the steps, make sure that there are no persons within the extension range.

WARNING
Danger of collision!
The step **340** protrudes over the crane contour.
► Before driving the crane, retract the step completely.

There are up to two ways to operate the step **340**:

Operating the step from the crane cab
– There are operating buttons on the BKE **650**.

Operating the step with the BTT **500**
– **Note: Operating the step with the BTT is only possible on certain crane types.**
– The step can be operated from the *Crane superstructure assembly function* menu.

8.1 Operating the step from the crane cab

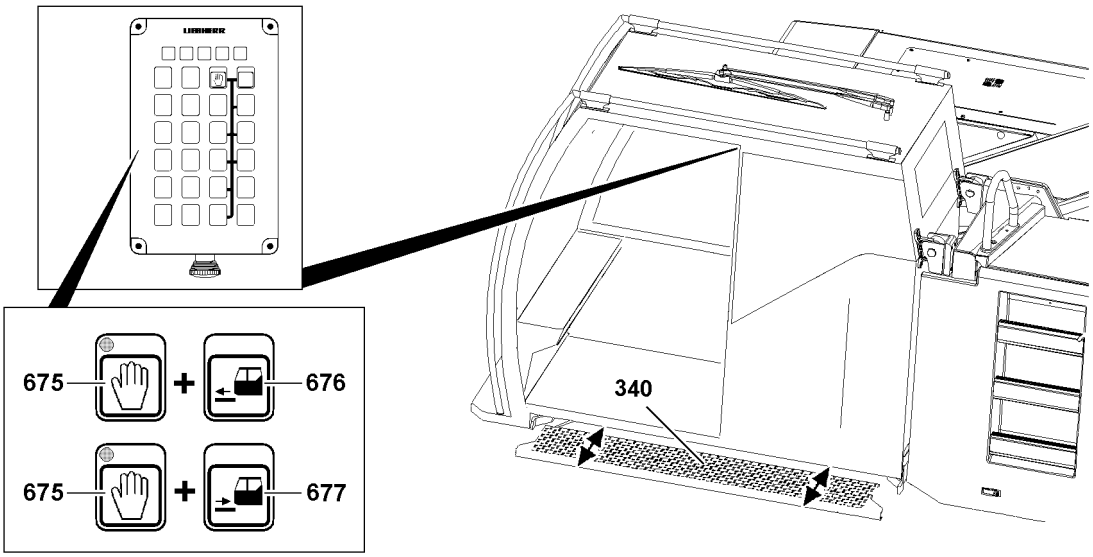

Fig.152552: Operating the step from the crane cab

Make sure that the following prerequisite is met:
– The crane superstructure ignition is turned on.

Extend the step:

► Press the button **675** and the button **676**.

Result:

– The step **340** is extended.

Retract the step:

► Press the button **675** and the button **677**.

Result:

– The step **340** is retracted.

LWE/LTR 1100-009/25105-02-02/en

copyright © Liebherr-Werk Ehingen GmbH 2023

9 Crane cab

9.1 Tilting the crane cab

Tilting the crane cab is only possible on certain crane types.

To give the crane driver a better field of vision, the crane cab can be tilted upward.

When you have finished working with the crane, always set the crane cab to horizontal position.

WARNING
Persons on step with inclined crane operator's cab!
Danger of falling, death, severe bodily injuries.

Before stepping on the step:
► Align the crane cab horizontally.
► Do not step on the stop when the crane cab is tilted!

WARNING
Door suddenly moves back when the crane cab is inclined!
Crushing of hands.
► Set the crane cab in the horizontal position, then open the door!

WARNING
Persons under the crane cab!
Danger of crushing.
► Make sure that there are no persons below the crane cab.

Make sure that the following prerequisite is met:
– The engine is running.

9.1.1 Tilting the crane cab upward

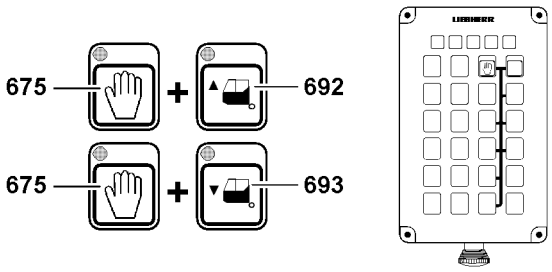

Fig.152550: Tilting the crane cab

► Press the button **675** and the button **692**.

Result:

– The crane cab swings up.

copyright © Liebherr-Werk Ehingen GmbH 2023

9.1.2 Aligning the crane cab horizontally

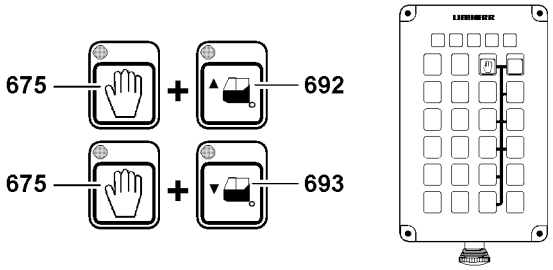

Fig.152550: Tilting the crane cab

► Press the button **675** and the button **693**.

Result:

– The crane cab swings down.

9.2 Windows

WARNING
Danger of crushing!
► When closing the front or roof window, do **not** crush hands.

NOTICE
Property damage!

Before driving the crane:
► Close windows and door!

9.2.1 Opening / closing the front window of the crane cab

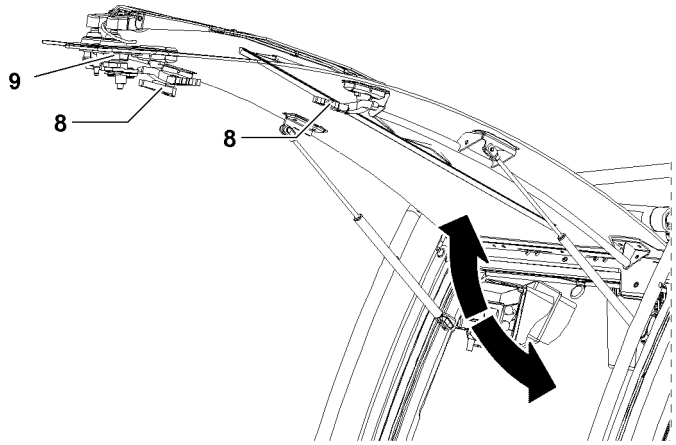

Fig.116425: Opening / closing the front window

A nitrogen gas cylinder provides help to lift the front window.

Open the front window:

► Unlock the turn handle **8** and turn handle **9** on both sides.
► Open the front window.

Close the front window:

► Pull the front window closed.
► Lock the turn handle **8** and turn handle **9** on both sides.

LWE/LTR 1100-009/25105-02-02/en

copyright © Liebherr-Werk Ehingen GmbH 2023

9.2.2 Opening / closing the roof window

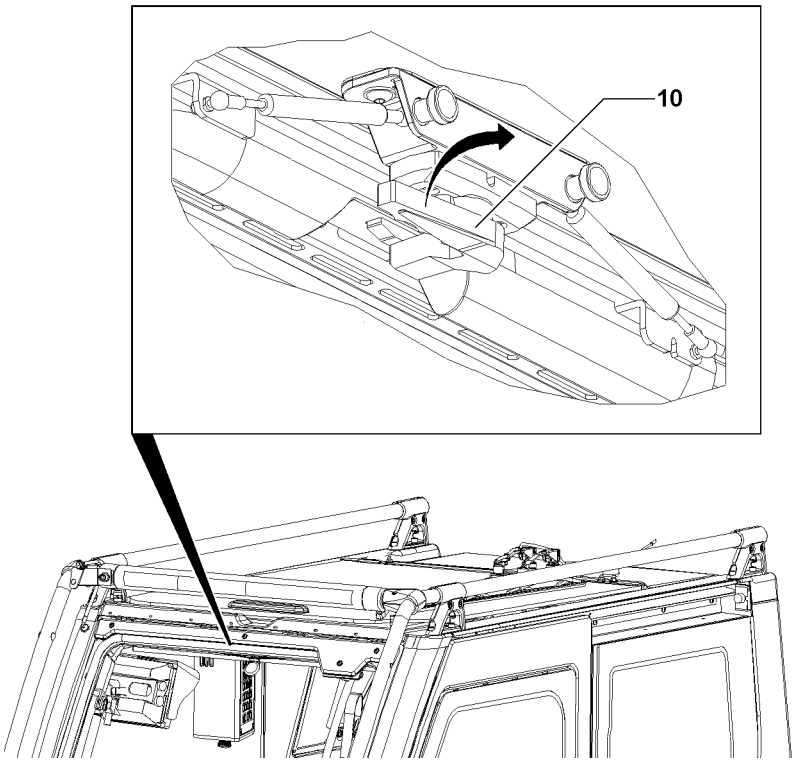

Fig.116426: Opening / closing the roof window

Use the rotary handle **10** to open / close the roof window.

Open the roof window:

► Release the rotary handle **10** and press the roof window up.

Close the roof window:

► Pull the roof window closed and lock with the rotary handle **10**.

9.3 Horn

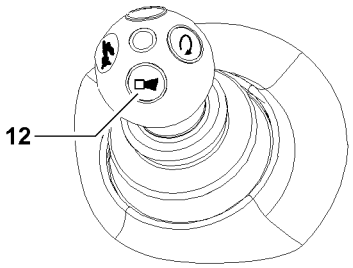

Fig.115322: Horn

If the horn is used outside of danger situations, then the horn can loose its warning effect.

LWE/LTR 1100-009/25105-02-02/en

copyright © Liebherr-Werk Ehingen GmbH 2023

WARNING
Improper use of horn!
Loss of signal effect.

When the horn is checked:
► Announce it to all persons who are present.

When the horn test is completed:
► Announce it to all persons who are present.
► Do **not** actuate the horn wrongly.

Before starting to crane work, check that the horn is functioning.

► Press the button **12** on the master switch.

Result:

– The horn sounds.

Problem remedy
The horn does not sound?
The horn is defective.
► Repair the horn before starting to work with the crane.

9.4 Climate control

Climatizing the crane cab is described in chapter 6.02.

► Climatize the crane cab.

10 Hydraulic oil preheating*

The hydraulic oil can be preheated with the Hydraulic oil preheating*.

Note
► At low ambient temperatures, preheat the hydraulic oil.

From a hydraulic oil temperature above 25 °C:
► Do **not** turn the hydraulic oil preheating* on.

Make sure that the following prerequisite is met:
– The engine is running.

10.1 Displaying the hydraulic oil temperature

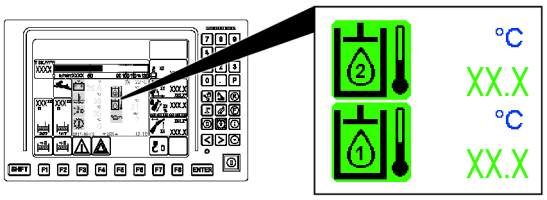

Fig.147667: Hydraulic oil temperature

The current hydraulic oil temperature can be displayed on the LICCON monitor.

► Call up the monitoring functions, see chapter 4.02.
► Check the hydraulic oil temperature.

LWE/LTR 1100-009/25105-02-02/en

copyright © Liebherr-Werk Ehingen GmbH 2023

10.2 Turning the hydraulic oil preheating* on

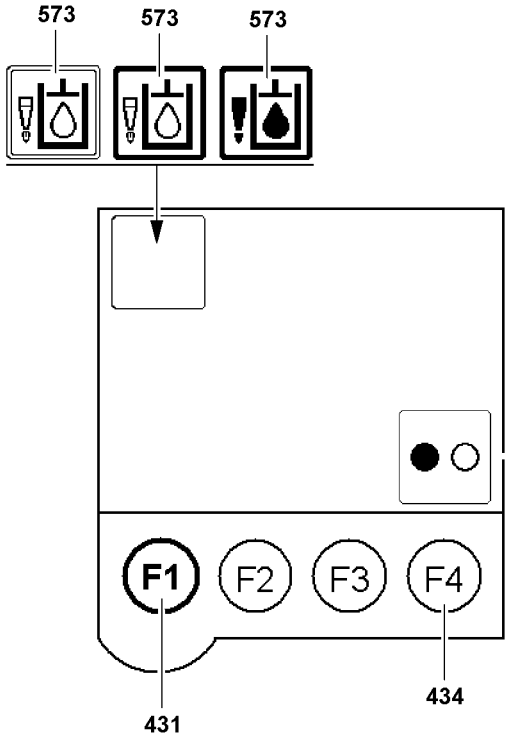

Fig.122075: Turning the hydraulic oil preheating on*

Note
When the Hydraulic oil preheating* is turned on, various crane movements are turned off.
► If necessary, turn Hydraulic oil preheating* off.

► Press the function key **431** on the left touch display until the *Auxiliary supply* menu appears.
► „Touch“ the Hydraulic oil preheating **573** function to select it.

Result:

– The icon Hydraulic oil preheating **573** is bordered in black.

► Press the function key **434**.

Result:

– The hydraulic oil preheating is turned on.
– The icon Hydraulic oil preheating **573** is filled.

When the hydraulic oil has reached operating temperature:
► Press the function key **434** again.

Result:

– Hydraulic oil preheating is turned off.
– The Hydraulic oil preheating **573** icon is **not** filled.

To preheat the hydraulic components:
► Actuate all hydraulic crane functions without a load for 15 minutes.

11 LICCON computer system

The LICCON computer system is described in chapter 4.02.

LWE/LTR 1100-009/25105-02-02/en

copyright © Liebherr-Werk Ehingen GmbH 2023

LICCON computer system operating modes:
- LICCON computer system in stand-by mode (engine turned off)
- LICCON computer system in normal mode (engine turned on)

11.1 System start

After turning the ignition on, the LICCON computer system boots up and carries out a self test.

► Do not actuate any operating elements during system start.

Problem remedy
System start is aborted?
Operating element was actuated.

After an abort at system start:
► Turn off the engine and the ignition.
► Start the ignition and engine again.

► Wait for the boot up phase.

Result:

- Set up screen appears on the LICCON monitor.
- The last set up configuration is shown.

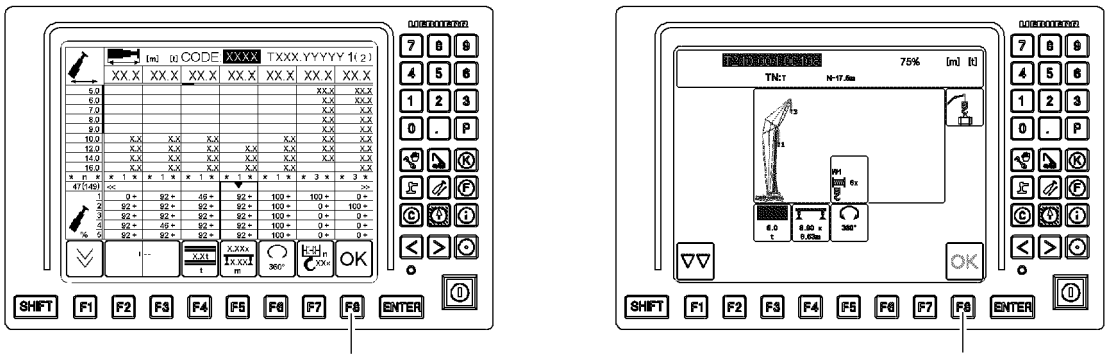

Fig.122082

► Check the set up configuration.

When entries and settings do not match the set up configuration of the crane:
► Enter the correct entries and settings.

Problem remedy
Does an error message appear on the LICCON monitor?
► Turn off the engine and the ignition.
► Start the ignition and engine again.

When an error message appears again:
► Contact Customer Service at Liebherr-Werk Ehingen.

LWE/LTR 1100-009/25105-02-02/en

copyright © Liebherr-Werk Ehingen GmbH 2023

11.2 Accepting the set up configuration

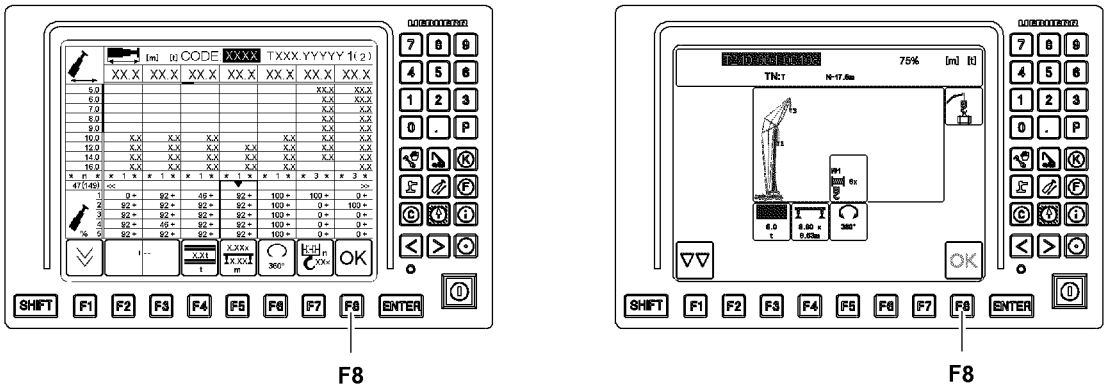

Fig.122082

Make sure that the following prerequisite is met:
– The entries and settings in the set up program match the actual set up configuration of the crane.

When the entries and settings in the Set up program are correct:
► Press the function key **F8**.

Result:

– The entries and settings are taken over and the *Set up* program is ended.
– The *Crane operation* program is called up.

11.3 Changing the set up configuration

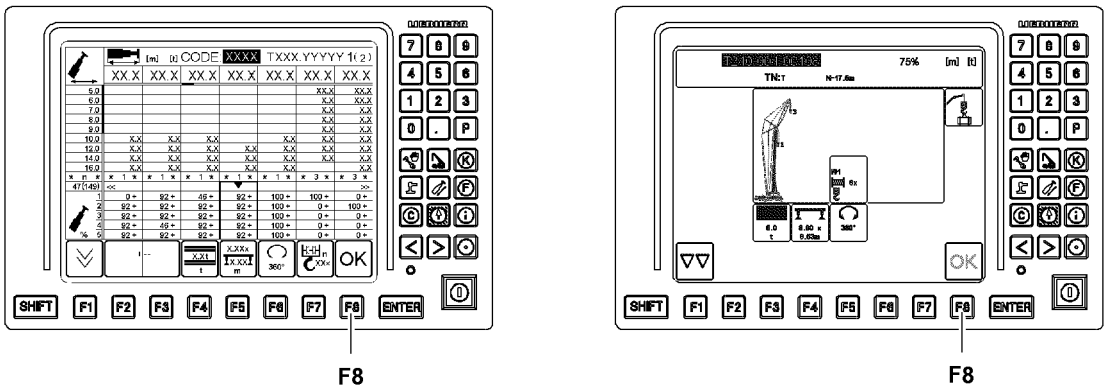

Fig.122082

The entries and settings can be changed in the Set up program.

Changing the entries and settings in the *Set up* program is described in chapter 4.02.

Make sure that the following prerequisite is met:
– The *Set up* program is called up in the LICCON computer system.

► Enter the correct entries and settings.

When the entries and settings in the *Set up* program are correct:
► Press the function key **F8**.

Result:

– The entries and settings are taken over and the *Set up* program is ended.

LWE/LTR 1100-009/25105-02-02/en

copyright © Liebherr-Werk Ehingen GmbH 2023

– The *Crane operation* program is called up.

12 Disengaging / engaging the coupling control on the pump distributor gear

The coupling control is only present on certain crane types.

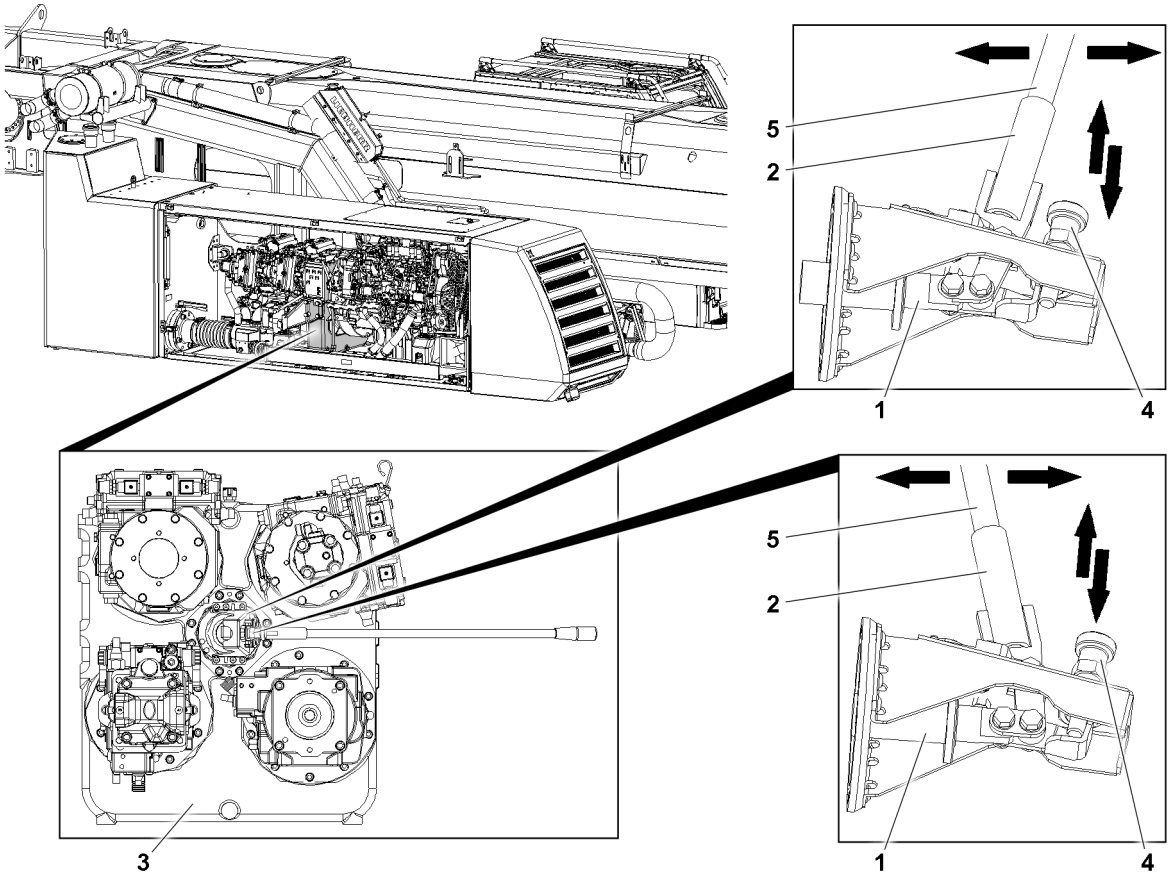

Fig.152556: Disengaging / engaging the coupling control

Note

- ► In high altitude application and at low ambient temperatures it may be necessary to disengage the coupling control **1** of the pump distributor gear **3** before starting the engine.
- ► The cold start behavior of the engine is thereby improved.

NOTICE

Danger of damaging the engine!

When the coupling control **1** is disengaged and the engine temperature is not constantly monitored, the engine can overheat.

This can result in significant property damage.

- ► Monitor the engine temperature constantly while the engine is running.
- ► Make sure that the engine does not overheat.
- ► If there is any doubt, turn the engine off.

LWE/LTR 1100-009/25105-02-02/en

copyright © Liebherr-Werk Ehingen GmbH 2023

12.1 Disengage the coupling control

Make sure that the following prerequisites are met:
– The engine is turned off.
– The coupling control is engaged.

► Take the lever extension **5** out of the park position.
► Set the lever extension **5** on the linkage **2**.
► Release and turn the locking pin **4**.
► Actuate the linkage **2** with the lever extension **5** to the stop.

Result:

– The coupling control **1** is disengaged.
– The pumps on the pump distributor gear **3** are **not** driven at engine start.

► Secure the coupling control **1**: Engage the locking pin **4**.
► Remove the lever extension **5** and store it in the park position.

WARNING
Danger of accident due to rotating parts!
► Make sure that there are no persons within the danger zone of the engine.

► Start the engine, see section „Starting the engine“.

Result:

▷ The engine is warmed up.

12.2 Engaging the coupling control

NOTICE
Property damage on the pump distributor gear!
► Make sure that the coupling control **1** is engaged when the engine is at a standstill.

Make sure that the following prerequisites are met:
– The engine is turned off.
– The coupling control is disengaged.

When the engine has reached operating temperature:
► Turn the engine off.

When the engine has come to a complete standstill:
► Release and turn the locking pin **4**.
► Engage the coupling control **1** with the lever extension **5**.

Problem remedy
Can the coupling control **1** not be engaged on the pump distributor gear **3**?
► Start the engine for a short time and turn it off again until the coupling control **1** can be engaged.

When the coupling control **1** is completely engaged:
► Secure the coupling control **1**: Engage the locking pin **4**.
► Remove the lever extension **5** and store it in the park position.

Result:

– At engine start, the hydraulic pumps on the pump distributor gear **3** are driven.

LWE/LTR 1100-009/25105-02-02/en

copyright © Liebherr-Werk Ehingen GmbH 2023

13 Starting the engine

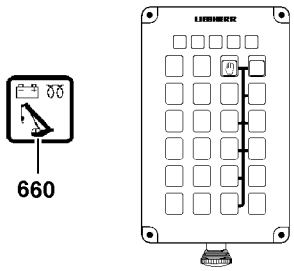

Fig.152522: Indicator light

NOTICE
Increased wear on the engine!
Engine damage.

Solely when the indicator light **660** blinks yellow:
► Start the engine.
► Do not put a full load on the engine until the operating temperature is reached.

Make sure that the following prerequisites are met:
– The transmission is in the neutral position „N“.
– The ignition in the chassis is turned off.

13.1 Starting procedure

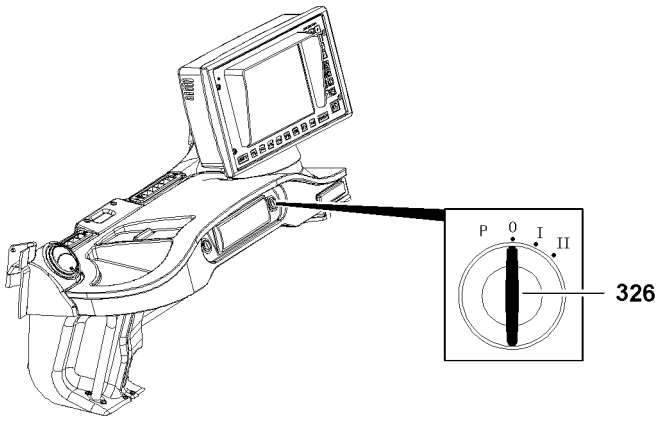

Fig.122259: Starting the engine

► Turn the ignition switch **326** to position „I“.

Result:

– The indicator light **660** lights up yellow.

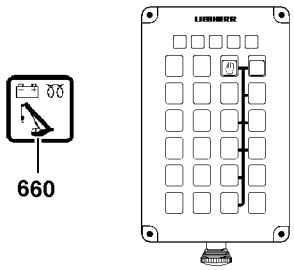

Fig.152522: Indicator light

LWE/LTR 1100-009/25105-02-02/en

copyright © Liebherr-Werk Ehingen GmbH 2023

When the indicator light **660** blinks yellow, the engine is ready to start:
► Turn the ignition switch **326** to position „II“.

Result:

– The engine starts.

NOTICE
The engine does not start after three start attempts!
The starter motor can be damaged after more than three start attempts.
► Interrupt the starting procedure.

Before a new start attempt:
► Observe a break of 20 minutes.

13.2 For an ambient temperature above -18 °C

► Start the engine.

Problem remedy
The engine does not start after a maximum of 30 seconds?
► Wait for 30 seconds.
The starter motor can be operated three times for 30 seconds per starting procedure, with a 30 second break in between.
► Start the engine again.

13.3 For ambient temperatures of -18 °C and lower

► Start the engine.

Problem remedy
The engine does not start after a maximum of 30 seconds?
► Wait for 120 seconds.
The starter motor can be operated three times for 30 seconds per starting procedure, with a 120 second break in between.
► Start the engine again.

13.4 Maintaining the battery charge

The capacity of the battery is significantly reduced at low temperatures.

When the engine is turned off:
► Store that batteries in a heated area, if possible.

14 Turning the engine off

NOTICE
Engine with malfunction!
Engine damage.
► In case of malfunction, turn the engine off immediately.

Malfunctions are:
– Dropping or significantly fluctuating oil pressure
– Reducing power without changing the gas pedal
– Reducing rpm without changing the gas pedal
– Significant smoke development
– Increasing coolant temperature
– Abnormal engine noises

LWE/LTR 1100-009/25105-02-02/en

copyright © Liebherr-Werk Ehingen GmbH 2023

NOTICE
Increased engine wear!

If the crane has been operated at full engine output or if the coolant temperature is above 95 °C:
► Allow the engine to run without a load at idling speed for 1 to 2 minutes.

14.1 Turning off procedure

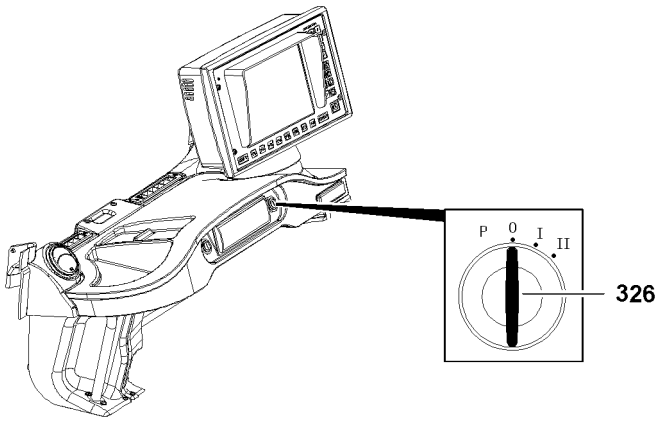

Fig.122259: Turning the engine off

► Turn the ignition switch **326** back to the stop.
► Pull the ignition switch **326** out and store it.

14.2 Turning the engine off with the engine stop button

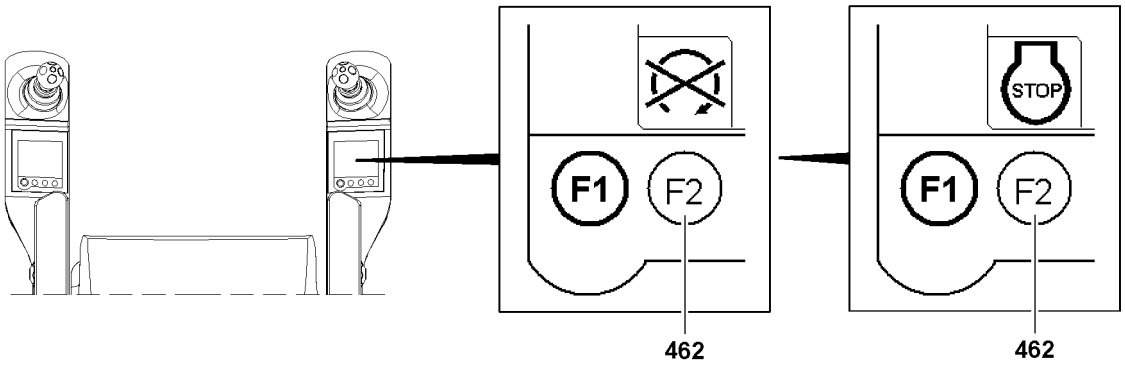

Fig.116432: Turning the engine off with the engine stop button

► Press the function key **462** on the right touch display and turn the engine off.

14.3 Turning off the engine in case of danger

The EMERGENCY STOP switches are described in chapter 4.04.

NOTICE
Incorrect use of the EMERGENCY STOP switches!
Oscillation of load.
Increased wear of crane components.
► Actuate the EMERGENCY STOP switch only in emergency situations.

If an emergency situation occurs:
► Actuate the EMERGENCY STOP switch.

LWE/LTR 1100-009/25105-02-02/en

copyright © Liebherr-Werk Ehingen GmbH 2023

Result:

– The crane is turned off.

15 Indicator lights

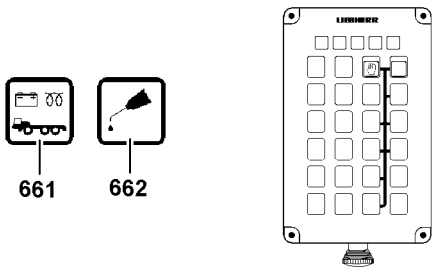

Fig.152526: Indicator lights

The indicator lights are described in detail in chapter 4.01.

When an indicator light lights up red, then an erroneous function or warning is present.

NOTICE
Erroneous function / warning!
Damage to components.
► End crane movement.
► Turn the engine off.
► Remedy the cause of the error.

16 Window wiper / window washer system

The window wiper / window washer system on the front and roof window can be operated via the function buttons on the Operating and control unit (BKE). Each window has a button assigned to it.

16.1 Turning the window wiper on

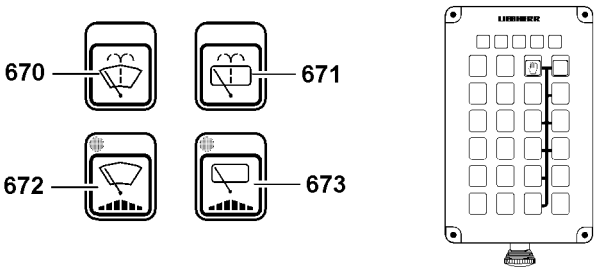

Fig.152525: Button

There are three different wipe stages

Pressing the button **672** or button **673** (less than 0.5 seconds) reduces the wiper speed incrementally.

Wipe speeds:
1. Continuous operation
2. Short interval
3. Long interval
4. Wiper off
   When the wipe stage *Wiper off* is reached, a signal sounds.

copyright © Liebherr-Werk Ehingen GmbH 2023

To turn on the window wiper on the front window:
► Press the button **672** until the desired wipe stage is reached.

To turn on the window wiper on the roof window:
► Press the button **673** until the desired wipe stage is reached.

16.2 Turning the window wiper off

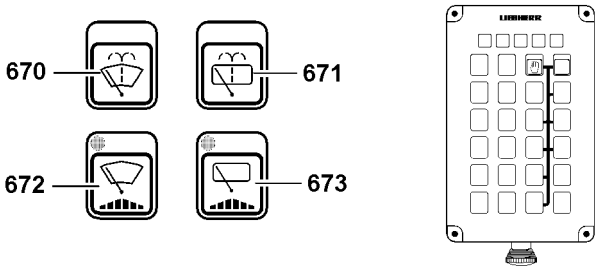

Fig.152525: Button

► Press the button **672** or button **673** for at least one second.
or

Until a signal sounds:
Press the button **672** or button **673**.

16.3 Window washer system

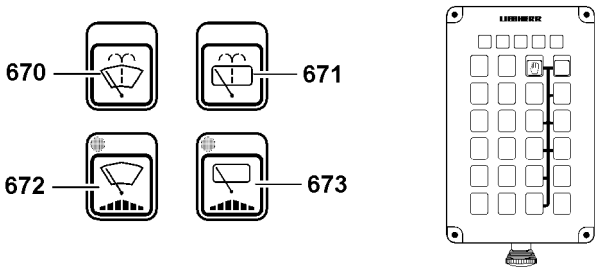

Fig.152525: Button

The window washer system runs as long as the button **670** or button **671** is pressed.

After pressing the button **670** or button **671** momentarily, three wipe movements are made.

To turn on the window washer system on the front window:
► Press the button **670**.

To turn on the window washer system on the roof window:
► Press the button **671**.

17 Hook block

Connecting / disconnecting the hook block is only possible for certain crane types.

Depending on the travel condition, a hook block or only a rope lock can be carried along. Detaching and attaching functions accordingly. Observe and adhere to the travel conditions in chapter 3.04.

The connecting and disconnecting procedure is described using the BTT. Alternatively, crane movements can be controlled with the help of a guide from the crane cab.

LWE/LTR 1100-009/25105-02-02/en

copyright © Liebherr-Werk Ehingen GmbH 2023

17.1 Switching on crane control from the crane superstructure

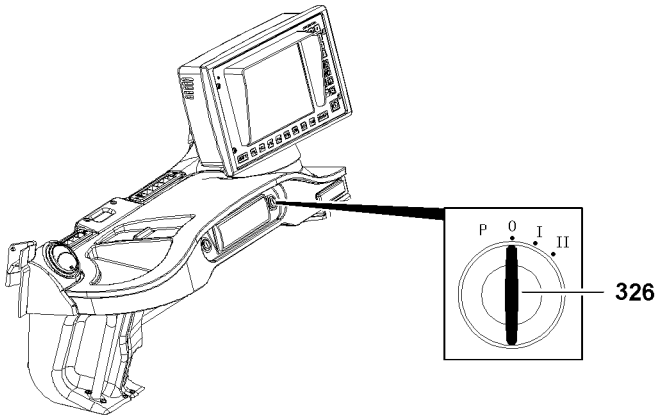

Fig.122259: Crane superstructure ignition

► Turn on the crane superstructure ignition: Turn the ignition switch **326** to position „II“.

Result:

– The engine starts.
– The LICCON computer system starts.

► As soon as the set up program is displayed on the LICCON monitor: Enter a valid set up configuration and confirm.

Result:

– The crane control is turned on from the crane superstructure.

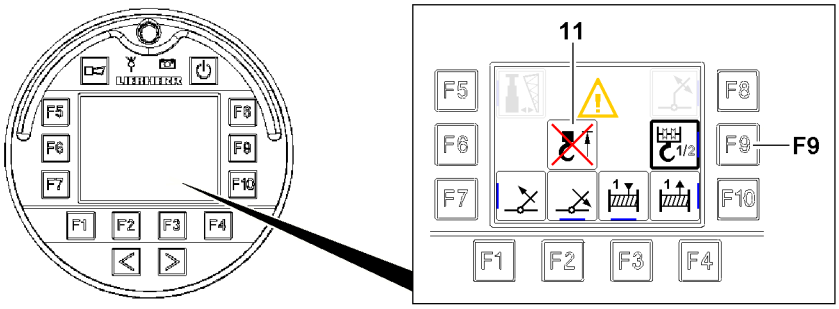

Fig.149645: Crane superstructure ignition

► Call up the *Crane superstructure assembly function* menu on the BTT.
► Press the function key **F9**: Select operating the hook block on the BTT.

Result:

– If the *hoist limit switch bypassed* icon **11** appears, the hoist limit switch is bypassed.

copyright © Liebherr-Werk Ehingen GmbH 2023

17.2 Detaching the hook block

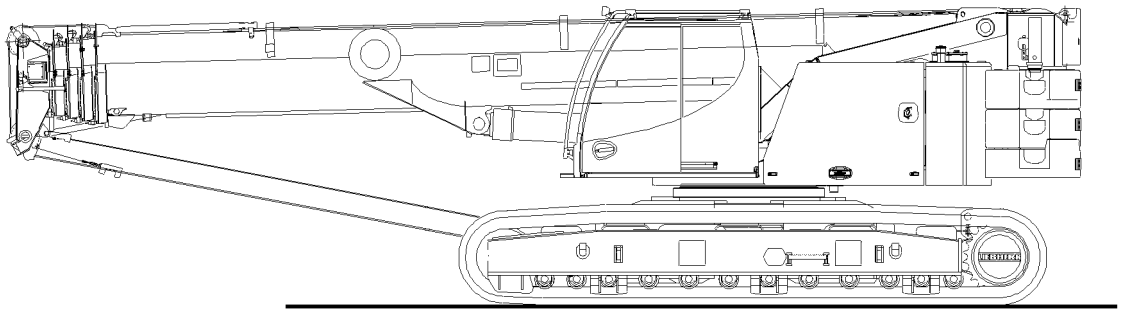

Fig.152559: Hook block attached

Select a location where the danger zone can be seen safely and well visibly.

WARNING
Sudden swinging of hook block!
Danger of crushing!
► Select a safe location.

Make sure that the following prerequisites are met:
– The crane is horizontally aligned.
– The crane superstructure is pinned forward with the crane chassis.
– The telescopic boom is telescoped in all the way and pinned.
– No load is hanging on the hook.
– The crane control is switched on for BTT operation.
– The *Crane superstructure assembly function* menu is selected on the BTT.

When assembling the hook block with the BTT, the hoist limit switch is bypassed up to a boom angle of 10°.

NOTICE
Hoist limit switch bypassed!
Collision Hook block with pulley head.
► Do not pull the hook block against the pulley head.

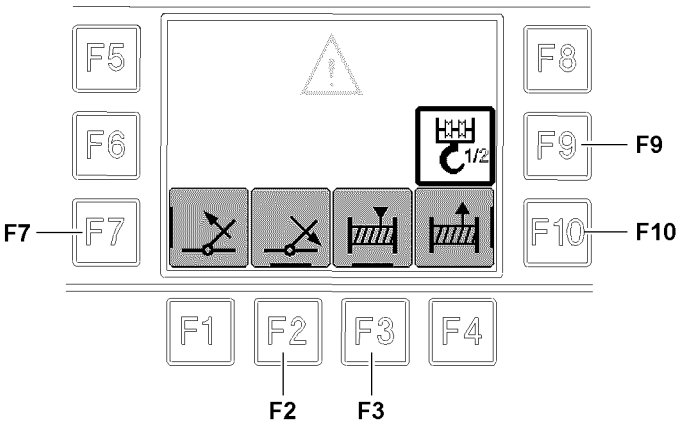

Fig.121578: Crane superstructure assembly function menu

► Press the function key **F9** and select the reeved in hoist winch.

Result:

– Icons for hook block assembly are displayed.
– The hoist limit switch is bypassed.

LWE/LTR 1100-009/25105-02-02/en

copyright © Liebherr-Werk Ehingen GmbH 2023

The function key **F2**, function key **F3**, function key **F7** and function key **F10** have two speed stages.

For example, if the function key **F10** is actuated lightly, the hoist rope is spooled out at reduced speed (70 % speed). If the function key **F10** is actuated harder, the hoist rope is spooled out quickly (100 % speed).

► Press the function key **F10** and spool the hoist rope out slightly.

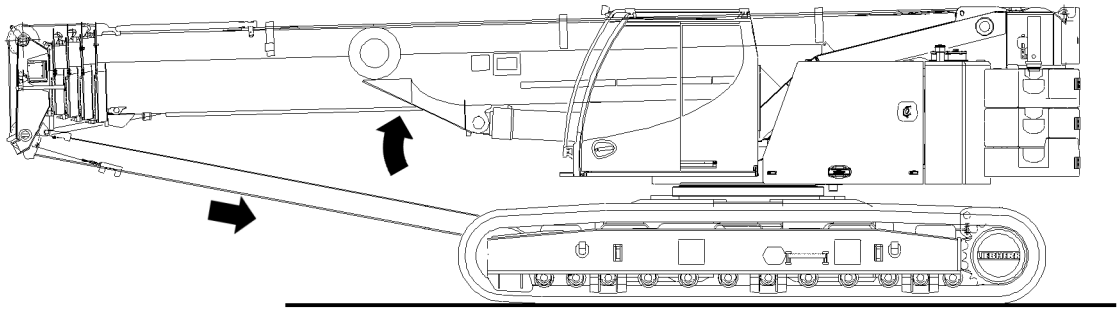

Fig.152557: Disconnecting the hook block

NOTICE
Collision Hook block with driver's cab!
Property damage.
► Monitor the position of the hook block.

Before the hook block collides:
► Adjust the hoist rope length.

Until the hook block can be detached:
► Continue to spool the hoist rope out and **simultaneously** luff the telescopic boom up via the function key **F7**.
► Unhook the hook block on the transport retainer.

copyright © Liebherr-Werk Ehingen GmbH 2023

17.3 Attaching the hook block

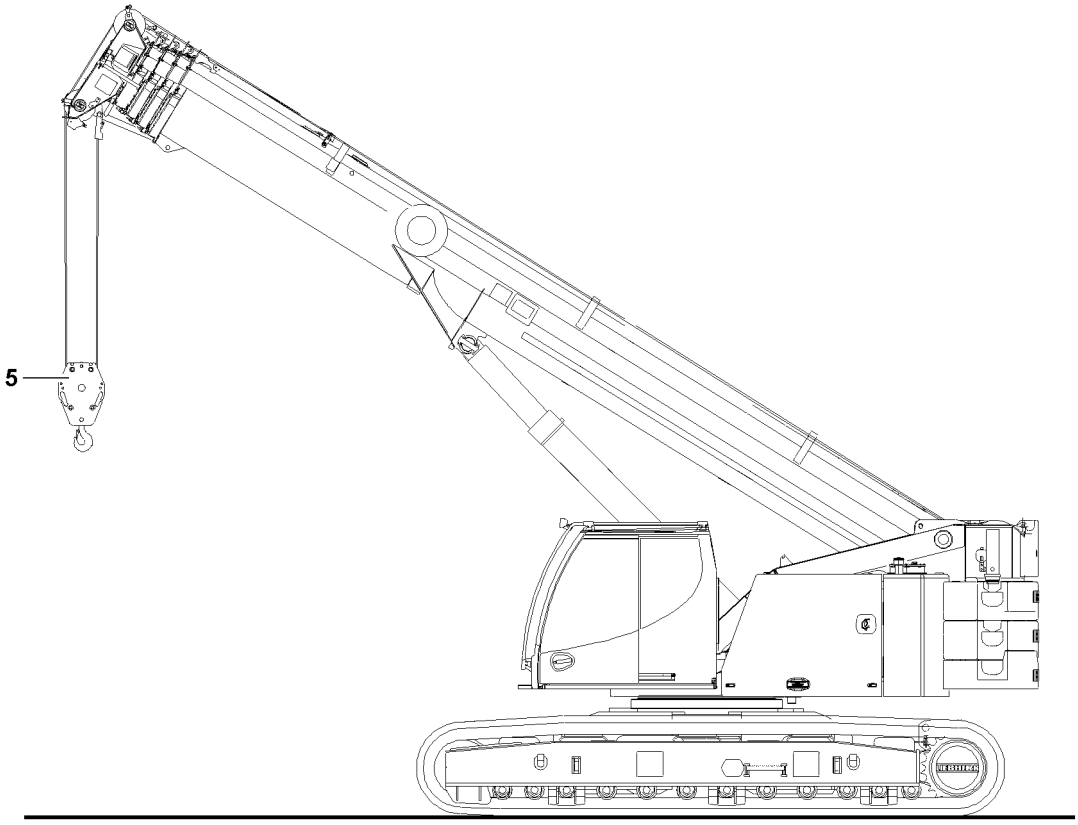

Fig.152558: Hook block detached

For transport, the hook block **5** must be connected in the transport retainer.

Select a location where the danger zone can be seen safely and well visibly.

WARNING
Sudden swinging of hook block!
Danger of crushing!
► Select a safe location.

Make sure that the following prerequisites are met:
- The crane is horizontally aligned.
- The crane superstructure is pinned forward with the crane chassis.
- The telescopic boom is telescoped in all the way and pinned.
- The telescopic boom is luffed up so that the hook block **5** can be connected to the eyehook on the crane chassis.
- No load is hanging on the hook.
- The central ballast is disassembled.
- The crane control is switched on for BTT operation.
- The *Crane superstructure assembly function* menu is selected on the BTT.

When assembling the hook block with the BTT, the hoist limit switch is bypassed up to a boom angle of 10°.

NOTICE
Hoist limit switch bypassed!
Collision Hook block with pulley head.
► Do not pull the hook block **5** against the pulley head.

LWE/LTR 1100-009/25105-02-02/en

copyright © Liebherr-Werk Ehingen GmbH 2023

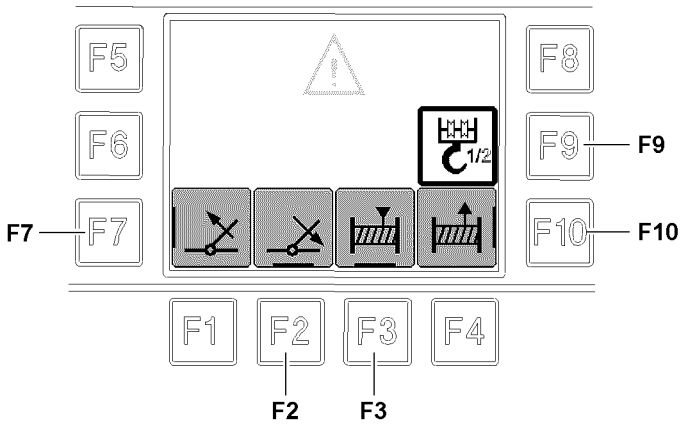

Fig.121578: Crane superstructure assembly function menu

► Press the function key **F9** and select the reeved in hoist winch.

Result:

– Icons for hook block assembly are displayed.
– The hoist limit switch is bypassed.

The function key **F2**, function key **F3**, function key **F7** and function key **F10** have two speed stages.

For example, if the function key **F10** is actuated lightly, the hoist rope is spooled out at reduced speed (70 % speed). If the function key **F10** is actuated harder, the hoist rope is spooled out quickly (100 % speed).

NOTICE
Collision Hook block with driver's cab!
Property damage.
► Monitor the position of the hook block.

Before the hook block collides:
► Adjust the hoist rope length.

Until the hook block **5** can be detached comfortably:
► Luff the telescopic boom up via the function key **F7** and **simultaneously** spool the hoist rope out via the function key **F10**.
► Attach the hook block **5** to the fastening point.

If the hoist rope is tensioned too much, then the rope pulleys, trailer coupling or hoist rope can be damaged.

If the hoist rope is not tensioned enough, then the driver's cab can be damaged.

NOTICE
The hoist rope is incorrectly tensioned!
Property damage!
► Tighten the hoist rope properly.

copyright © Liebherr-Werk Ehingen GmbH 2023

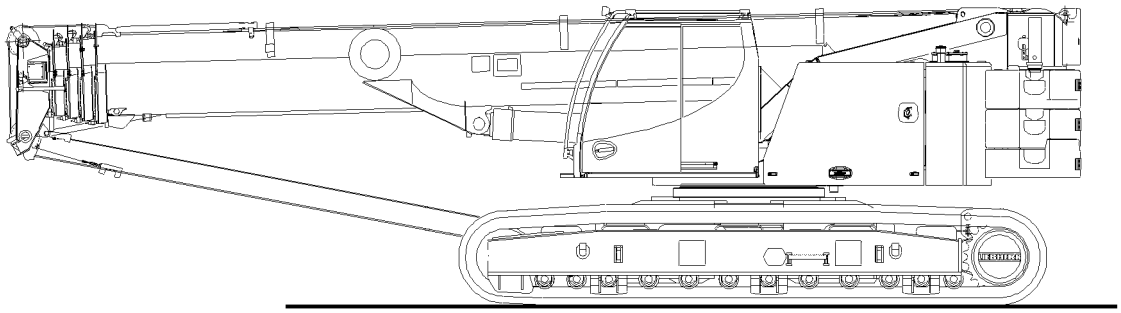

Fig.152559: Hook block attached

Until the telescopic boom is taken down in the receptacle and the hoist rope is properly tensioned:

► Luff the telescopic boom down using the function key **F2** and **simultaneously** spool the hoist rope up using the function key **F3**.

LWE/LTR 1100-009/25105-02-02/en

copyright © Liebherr-Werk Ehingen GmbH 2023

4.03.50 Adjustment of the track width

1	Track adjustment through crawler carrier relief	3
2	Adjusting the track width with the master switch	15
3	Adjusting the track width with the Bluetooth Terminal	27
4	Adjusting the track width with the radio remote control*	37

LWE/LTR 1100-009/25105-02-02/en

copyright © Liebherr-Werk Ehingen GmbH 2023

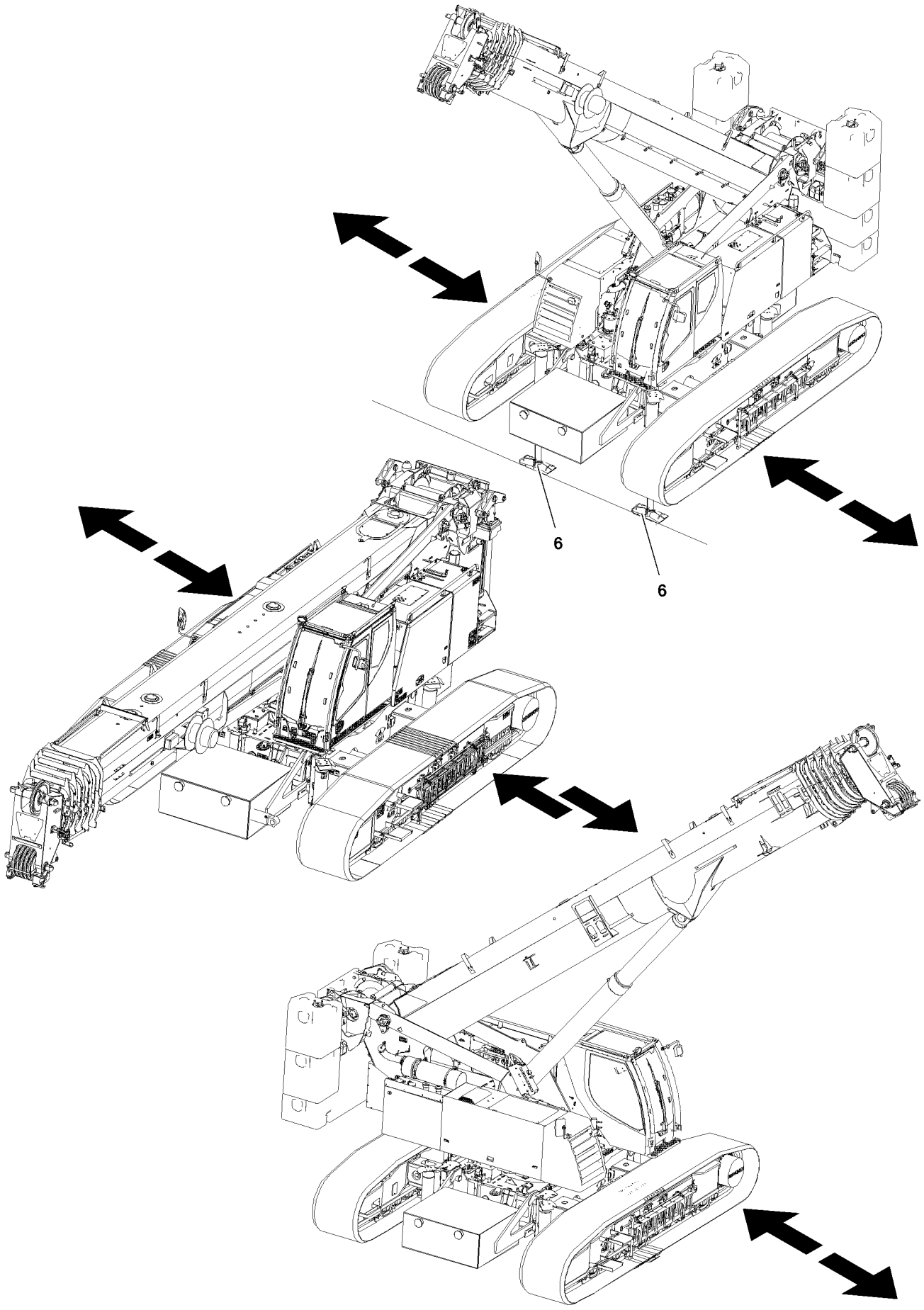

Fig.118054

LWE/LTR 1100-009/25105-02-02/en

copyright © Liebherr-Werk Ehingen GmbH 2023

1 Track adjustment through crawler carrier relief

For simpler track adjustment, the crawler carrier can be relieved by means of various operating conditions / set up configurations:

- Adjustment with supported crawler carriers
- **or** Adjustment through unloaded crawler carrier
- **or** Adjustment without counterweight

WARNING
The crane can topple over!
A reduced or worn track reduces the stability of the crawler crane. Due to operational errors during crane operation or driving, the crawler crane can topple over and fatally injure personnel.

► Crane operation and „driving the crawler with load“ is permitted for a reduced or retracted track, if **extra load charts** are programmed for this case.
► Crane operation and „driving the crawler with load“ is strictly prohibited for a reduced or retracted track, if **no extra load charts are programmed for this case**.

WARNING
Danger of accidents when moving out the crawler carrier!
For track adjustment, the crawler carrier „A“ must be moved out first.
This can double the space requirement on one side.
Persons and objects standing too close can be caught by the crawler carrier.
In case of insufficient ground condition and ground contact, the crane can topple over.

► To extend the crawler on both sides, plan for the double sliding range as space requirement.
► In the adjustment range the ground condition and ground contact must be sufficient.

NOTICE
Danger of corrosion!
If the gliding surfaces of the cross carriers are not sufficiently greased, there is a danger of corrosion.

► If needed, clean and grease the gliding surfaces of the track adjustment beams, see chapter 7.06.

NOTICE
Damage to the crawler carrier!
If the folding brackets **6** are not swung in before reducing the track width, then the crawler carriers will be damaged during retraction.

► Make sure that the folding brackets **6** are swung in before reducing the track width, see chapter 3.01.

LWE/LTR 1100-009/25105-02-02/en

copyright © Liebherr-Werk Ehingen GmbH 2023

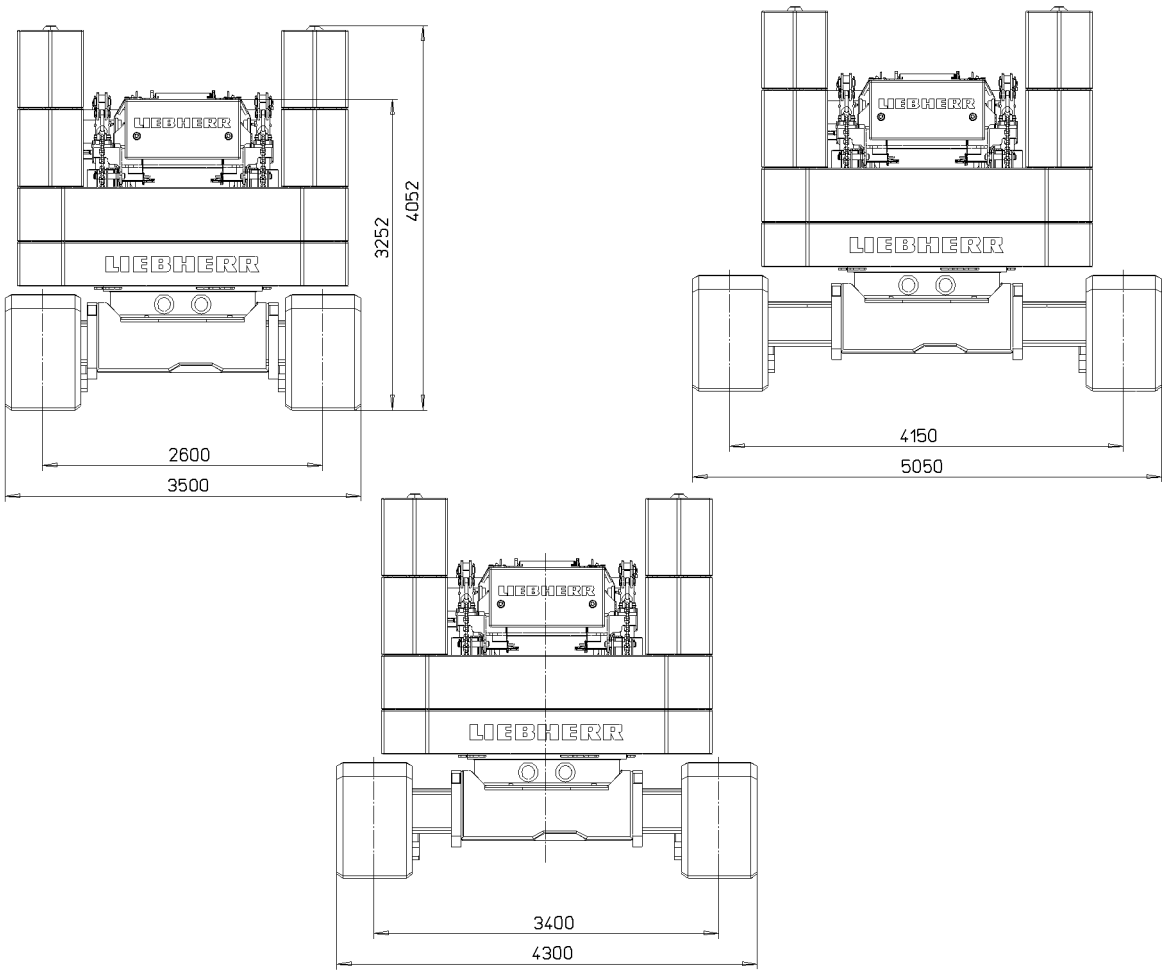

Fig.118055

1.1 Track widths and extension conditions

Track width	Track width on LICCON monitor		Extension conditions BTT / LICCON monitor	
			Crawler carrier A	Crawler carrier B
Retracted	2.6 m	8.5 ft	0 %	0 %
Reduced	3.4 m	11.2 ft	50 %	50 %
Wide	4.15 m	13.6 ft	100 %	100 %

Definition of track width and extension conditions

Note
- ► The extension conditions of the crawler carrier is displayed as percentage on the display on the Bluetooth Terminal (BTT), the radio remote control and on the LICCON monitor.
- ► The crawler carriers are only pinned on extension conditions of 0 %; 50 %; 100 %.
- ► The extension conditions of the crawler carriers are specified in the load chart.
- ► The pin points of the crawler carriers are marked in percentages with tags.

1.2 Prerequisites for track adjustment

Make sure that the following prerequisites are met:
- – The crane is within the permissible inclination range.
- – The crawler carriers may not sink into the ground.

LWE/LTR 1100-009/25105-02-02/en

copyright © Liebherr-Werk Ehingen GmbH 2023

- The ground is sufficiently level and has a sufficient load bearing capacity over the entire adjustment range.
- The ground is free of obstacles, such as rock edges or ground upheavals over the entire adjustment range.
- The telescopic boom is fully telescoped in.
- All loads and load handling equipment have been set down.
- The engine is running.

LWE/LTR 1100-009/25105-02-02/en

copyright © Liebherr-Werk Ehingen GmbH 2023

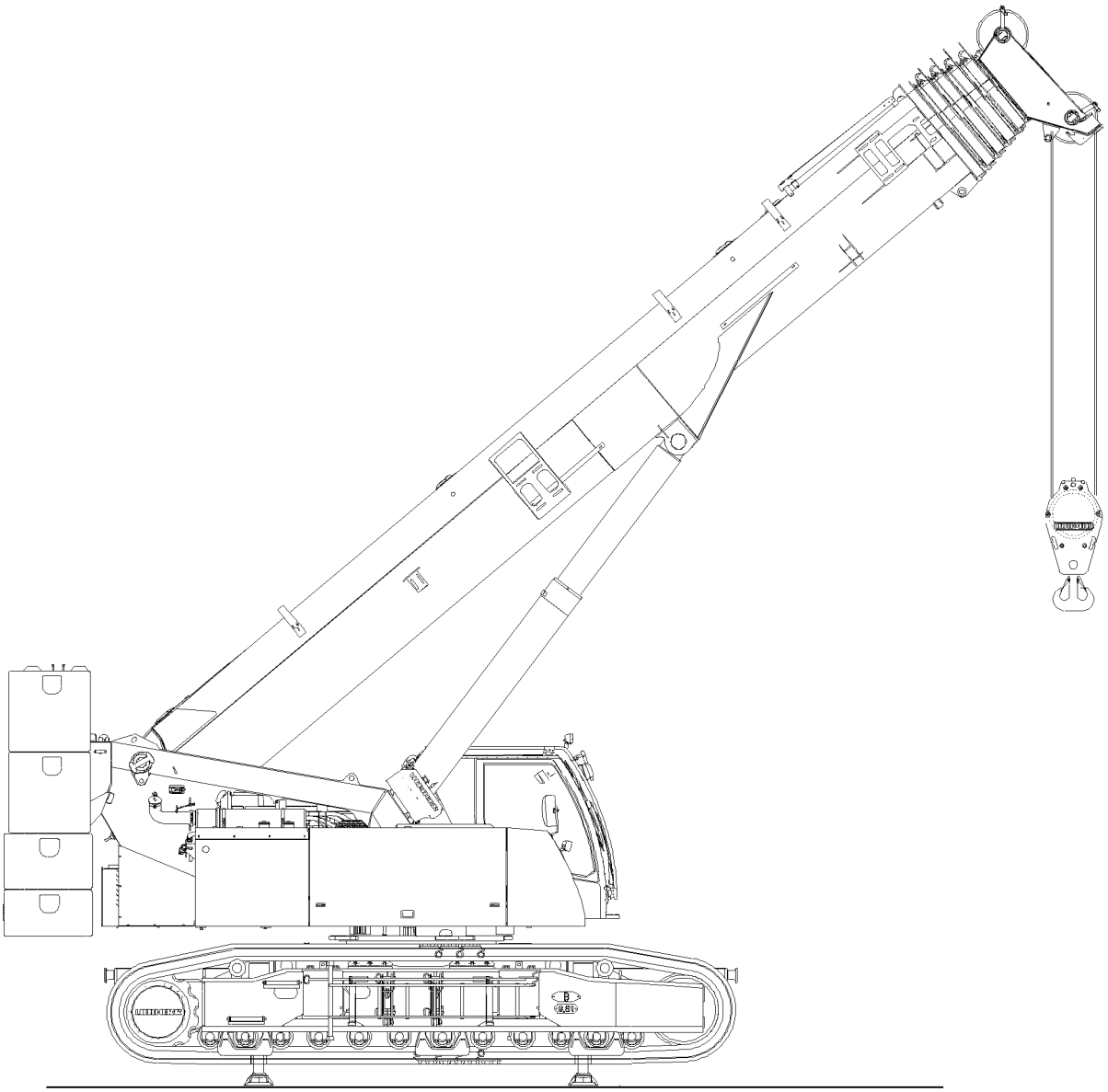

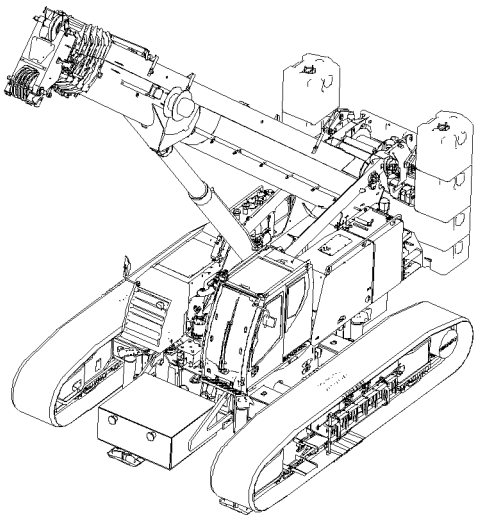

LWE/LTR 1100-009/25105-02-02/en

Fig.118060

copyright © Liebherr-Werk Ehingen GmbH 2023

1.3 Track adjustment through support

This crane can be supported on the support cylinders for simpler track adjustment in equipped condition (with crawler carriers and counterweight). To do so, the telescopic boom without load must be held within the angle ranges specified in the following chart.

Make sure that the following prerequisites are met:
- The crane is standing on wide track 4.15 m **or** reduced track 3.40 m.
- The crane superstructure is locked with the crane chassis, in the travel direction to the front or rear (0° or 180°).
- The support base 2.34 m x 3.30 m (45°) **or** 1.84 m x 3.47 m (0°) is set.
- The ground is horizontal (maximum 2.5° ground inclination) and of sufficient load bearing capacity.
- The folding jib is installed in the transport position on the side on the telescopic boom.
- The jib boom K- 2.9 m is installed in the transport position or in the operating position.

DANGER
The crane can topple over!
If the prerequisites are not observed, the crane can topple over and fatally injure personnel or the support cylinders can be overloaded!
► Adhere to the prerequisites!
► Support the crane only according to the data in the chart, „permissible angle window for the telescopic boom“!

WARNING
Property damage due to collision of the crawler carriers with the support cylinders!
► The retracted track of 2.60 m cannot be set in a supported condition.

Note
► If all conditions are observed, support forces up to maximum 350 kN may occur.

Permissible angle window for the telescopic boom					
Counterweight	**Central ballast**	**T-11.5 (0/0/0/0/0)**	**T-15.2 (0/46/0/0/0)**	**T-19.0 (46/46/0/0/0)**	**T-22.7 (92/46/0/0/0)**
32.0 t	15.0 t				36° up to 34°
26.0 t	15.0 t			39° up to 12°	52° up to 39°
22.0 t	15.0 t		36° up to 8°	52° up to 22°	61° up to 43°
20.0 t	15.0 t		45° up to 8°	57° up to 26°	65° up to 44°
16.0 t	15.0 t	48° up to 10°	60° up to 8°	68° up to 31°	73° up to 47°
10.0 t	15.0 t	65° up to 10°	71° up to 8°	75° up to 38°	78° up to 51°
0.0 t	15.0 t	65° up to 10°	71° up to 29°	75° up to 48°	78° up to 57°
0.0 t	0.0 t	65° up to 10°	71° up to 29°	75° up to 48°	78° up to 57°

Lift the crane only until all track rollers are cleared.

► Support the crane and align it horizontally.
► Adjust the track, see section „Adjusting the track width“.

LWE/LTR 1100-009/25105-02-02/en

copyright © Liebherr-Werk Ehingen GmbH 2023

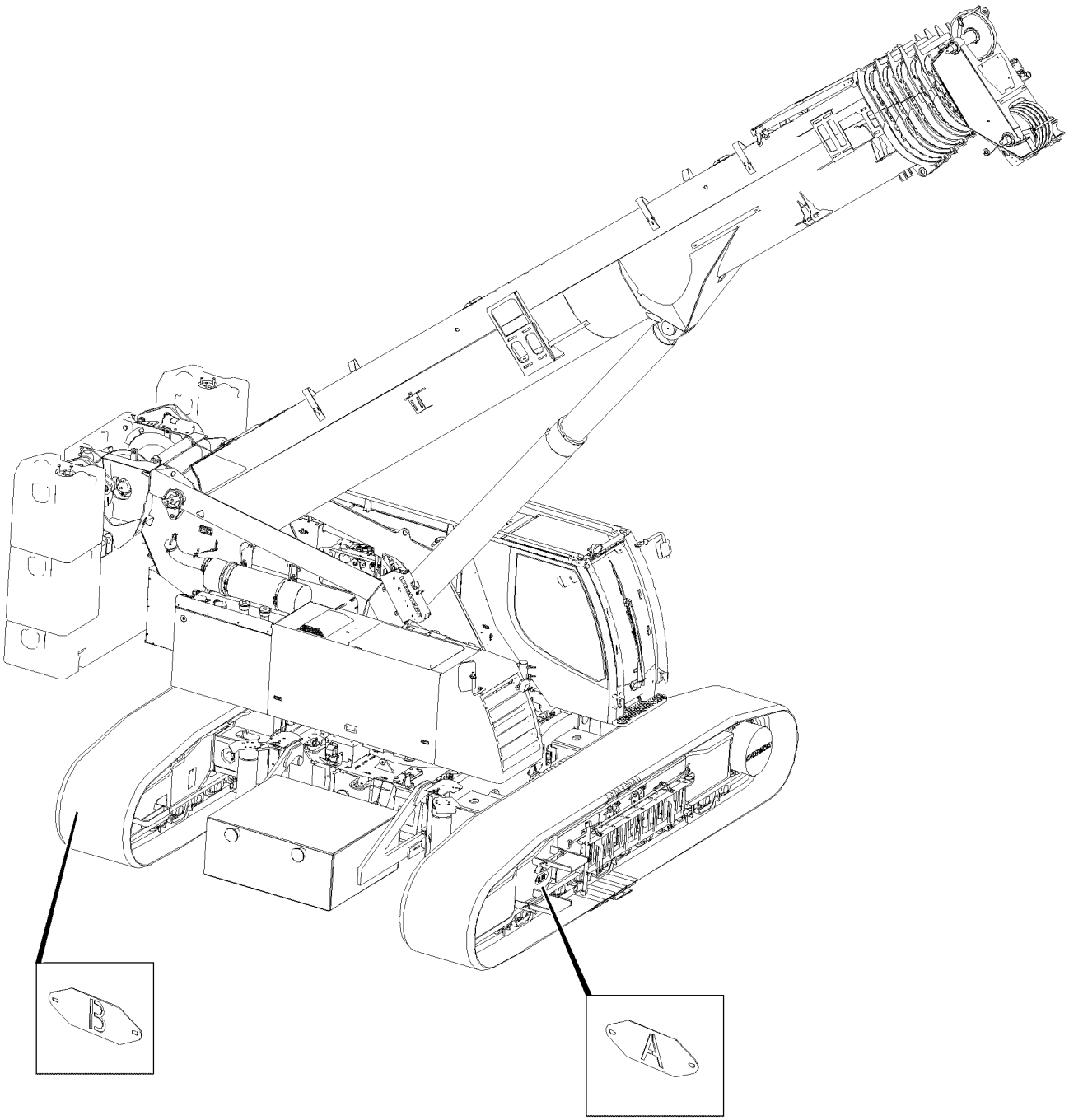

LWE/LTR 1100-009/25105-02-02/en

Fig.118483

copyright © Liebherr-Werk Ehingen GmbH 2023

1.4 Track adjustment through crawler carrier relief

The crawler carriers are relieved when the center of gravity is changed.

The following movements change the center of gravity of the crane:
- Luffing the boom up
- Turning the crane superstructure

WARNING
Load chart values not adhered to!
Toppling crane.
► For swinging, the 360° load chart with smaller track width must be selected by taking the installed counterweight and the inclination of the ground into account.

Make sure that the following prerequisites are met:
- The crane is standing on the crawlers.
- The ground has a permissible inclination, see the load chart.
- The ground is of sufficient load bearing capacity.
- The central ballast is installed.
- Set the LICCON overload protection according to the load chart.

► Adjust the track width and the slewing range in the Set up program, see „Chart for track adjustment“.

Chart for track adjustment					
Initial track width		**Target track width**		**Adjustment in Set up program**	
				360° Slewing range	
Retracted	2.6 m	Reduced	3.40 m	Set up configuration retracted track	2.6 m
0 %	8.5 ft	50 %	11.2 ft		8.5 ft
Retracted	2.6 m	Wide	4.15 m	Set up configuration retracted track	2.6 m
0 %	8.5 ft	100 %	13.6 ft		8.5 ft
Reduced	3.4 m	Wide	4.15 m	Set up configuration reduced track	3.4 m
50 %	11.2 ft	100 %	13.6 ft		11.2 ft
Reduced	3.4 m	Retracted	2.6 m	Set up configuration retracted track	2.6 m
50 %	11.2 ft	0 %	8.5 ft		8.5 ft
Wide	4.15 m	Reduced	3.40 m	Set up configuration reduced track	3.40 m
100 %	13.6 ft	50 %	11.2 ft		11.2 ft
Wide	4.15 m	Retracted	2.60 m	Set up configuration retracted track	2.60 m
100 %	13.6 ft	0 %	8.5 ft		8.5 ft

Chart for track adjustment

LWE/LTR 1100-009/25105-02-02/en

copyright © Liebherr-Werk Ehingen GmbH 2023

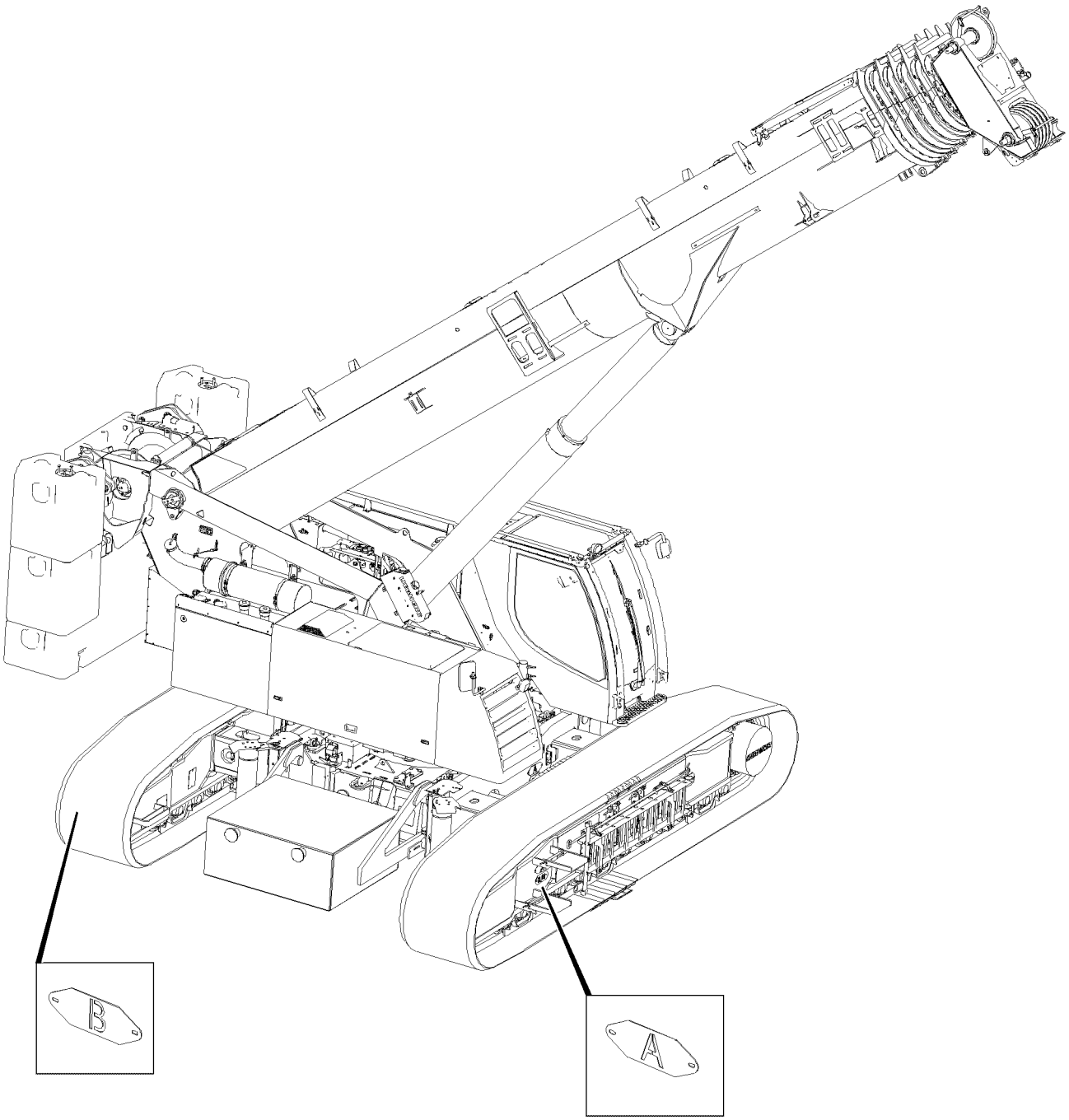

LWE/LTR 1100-009/25105-02-02/en

Fig.118483

copyright © Liebherr-Werk Ehingen GmbH 2023

► Accept set up configuration.

Problem remedy
Set up configuration cannot be accepted!
► Change set up configuration until the adjustment with the new track width can be confirmed.

WARNING
Danger of accident due to obstacles when swinging and luffing up!
► Make sure that there are no obstacles within 360° of the slewing range of the crane.
► Make sure that the telescoped in boom cannot collide with obstacles when luffing it up.

► Luff the telescopic boom up until the steepest permissible position is reached.

NOTICE
Damage of hydraulic lines due to crushing!
If the crawler carrier is not extended first on side „A“ then hydraulic lines can be crushed.
► Extend the crawler carrier on side „A“ first.

Relieve the crawler carrier **A** by turning the counterweight over the crawler travel gear **B**.

► Turn the crane superstructure until the counterweight is positioned vertically over the crawler travel gear **B**.
► Extend or retract the crawler carrier **A**, see section „Adjusting the track width“.

Relieve the crawler carrier **B** by turning the counterweight over the crawler travel gear **A**.

► Turn the crane superstructure until the counterweight is positioned vertically over the crawler travel gear **A**.
► Extend or retract the crawler carrier **A**, see section „Adjusting the track width“.

LWE/LTR 1100-009/25105-02-02/en

copyright © Liebherr-Werk Ehingen GmbH 2023

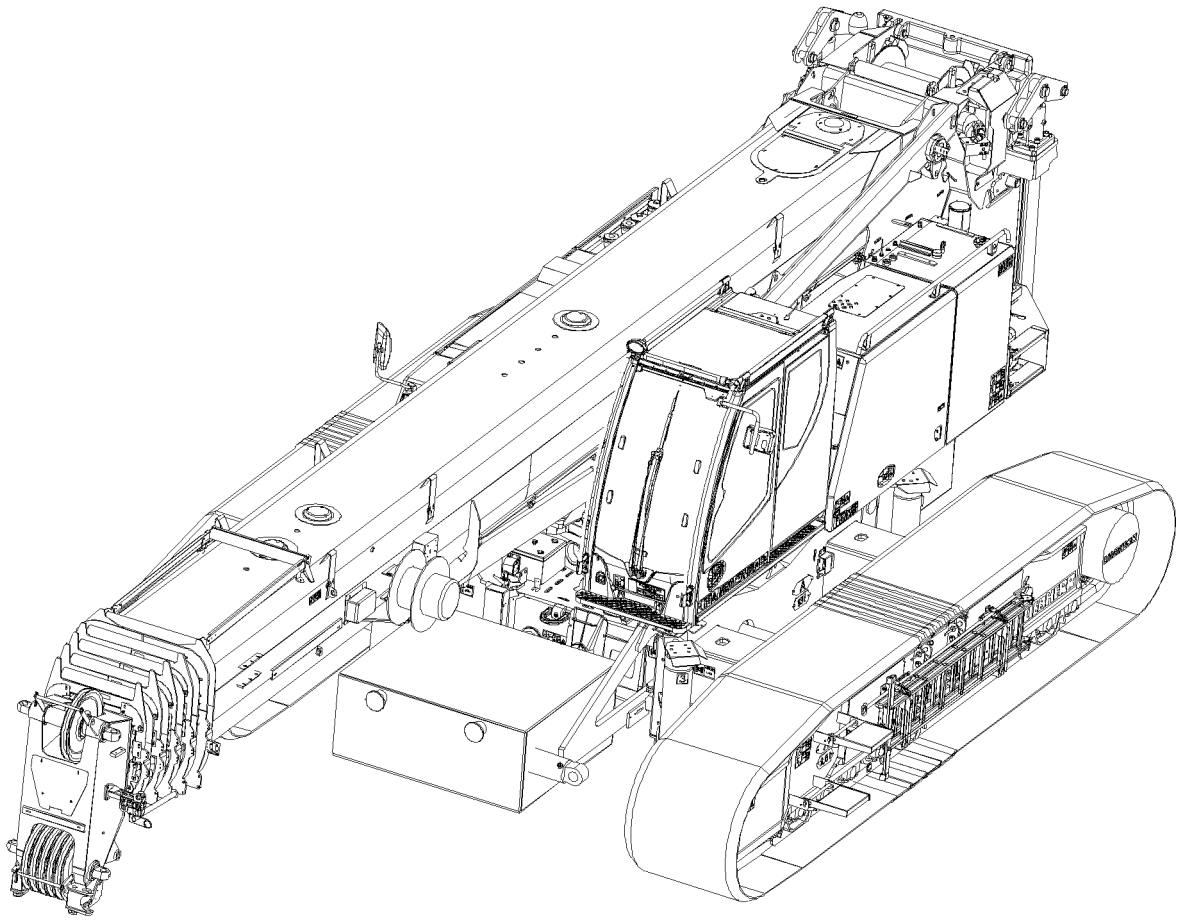

LWE/LTR 1100-009/25105-02-02/en

Fig.118484

copyright © Liebherr-Werk Ehingen GmbH 2023

1.5 Track adjustment without counterweight

When the crane is fully equipped, the track adjustment can be carried out more easily if the counterweight is removed.

Make sure that the following prerequisites are met:
- The crane is standing on wide track 4.15 m **or** reduced track 3.40 m **or** retracted track 2.60 m.
- The central ballast is installed.
- No counterweight is installed on the superstructure.
- The crane superstructure is locked with the crane chassis, in the travel direction to the front or rear (0° or 180°).
- The ground is horizontal (maximum 2.5° ground inclination) and of sufficient load bearing capacity.
- Set the LICCON overload protection according to the load chart.
- The telescopic boom T-11.5 is luffed up to an approximate angle of 45°.
- No load on the hook.

DANGER
Permissible telescopic boom angles not observed!
Toppling crane.
► Observe the permissible telescopic boom angle when picking up the counterweight!
► Swing the crane only according to the data in the load charts.

► Pick up / take down the counterweight, see Crane operating instructions, chapter 4.07.
► Adjust the track, see section „Adjusting the track width“.

LWE/LTR 1100-009/25105-02-02/en

copyright © Liebherr-Werk Ehingen GmbH 2023

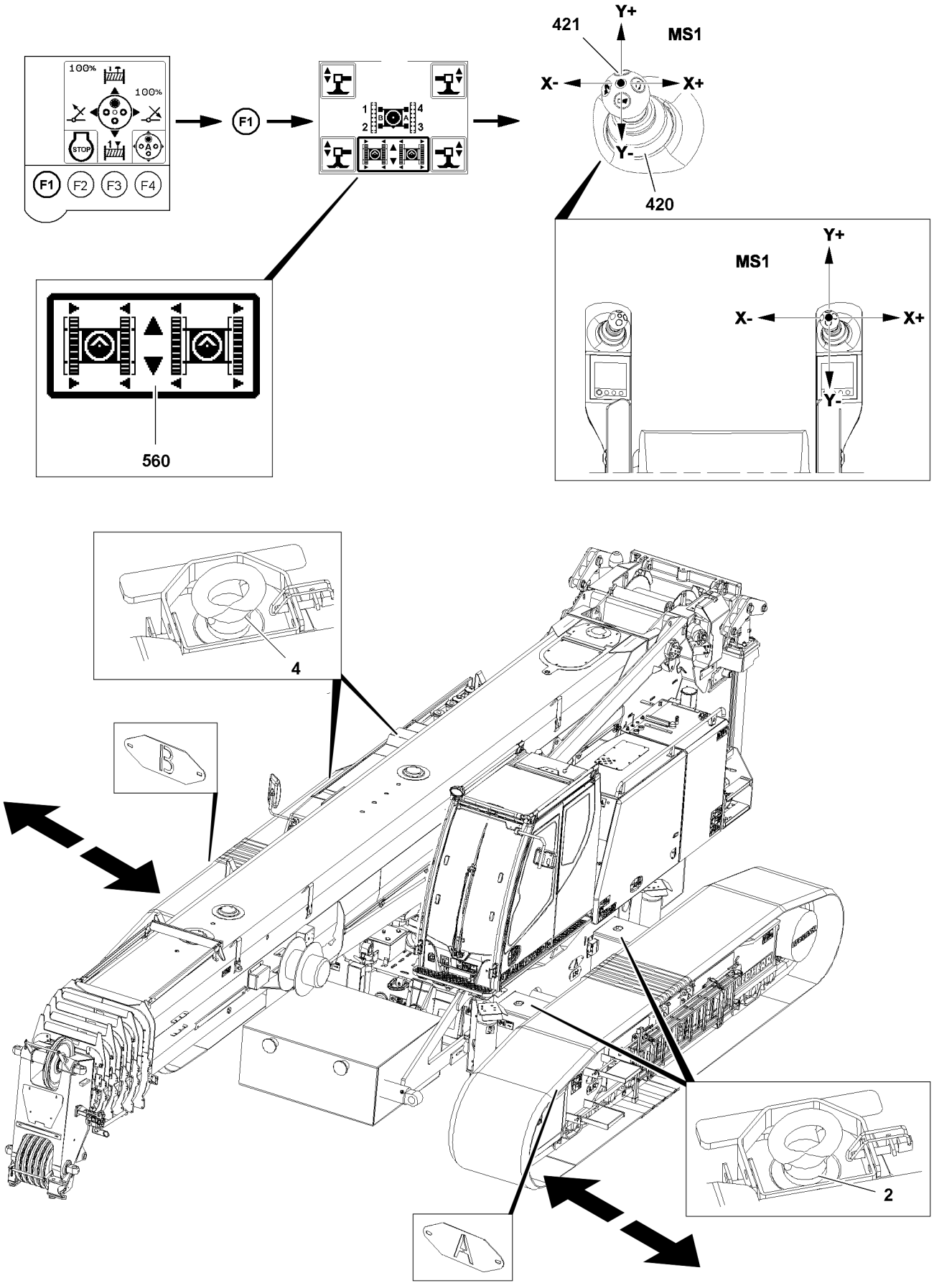

Fig.118056

LWE/LTR 1100-009/25105-02-02/en

copyright © Liebherr-Werk Ehingen GmbH 2023

2 Adjusting the track width with the master switch

NOTICE
Property damage!
If the crawler carriers are pushed out further than the outer pin points (100 %) then the crawler travel gear can be damaged.
- ► Push the crawler carriers out only to the point where they can be pinned on the outer pin points (100 %).
- ► Pay attention to the marks for the track width on the crawler carriers.
- ► Unpin the crawler carriers individually and push them out to the desired position.
- ► First push out crawler carrier A, then crawler carrier B.

NOTICE
Damage of hydraulic lines due to crushing!
If the crawler carrier is not extended first on side „A“ then hydraulic lines can be crushed.
- ► Extend the crawler carrier on side „A“ first.

Note
- ► If the crane is driven from the crane operator's cab, the track width can be adjusted simultaneously, see chapter 4.10.

LWE/LTR 1100-009/25105-02-02/en

copyright © Liebherr-Werk Ehingen GmbH 2023

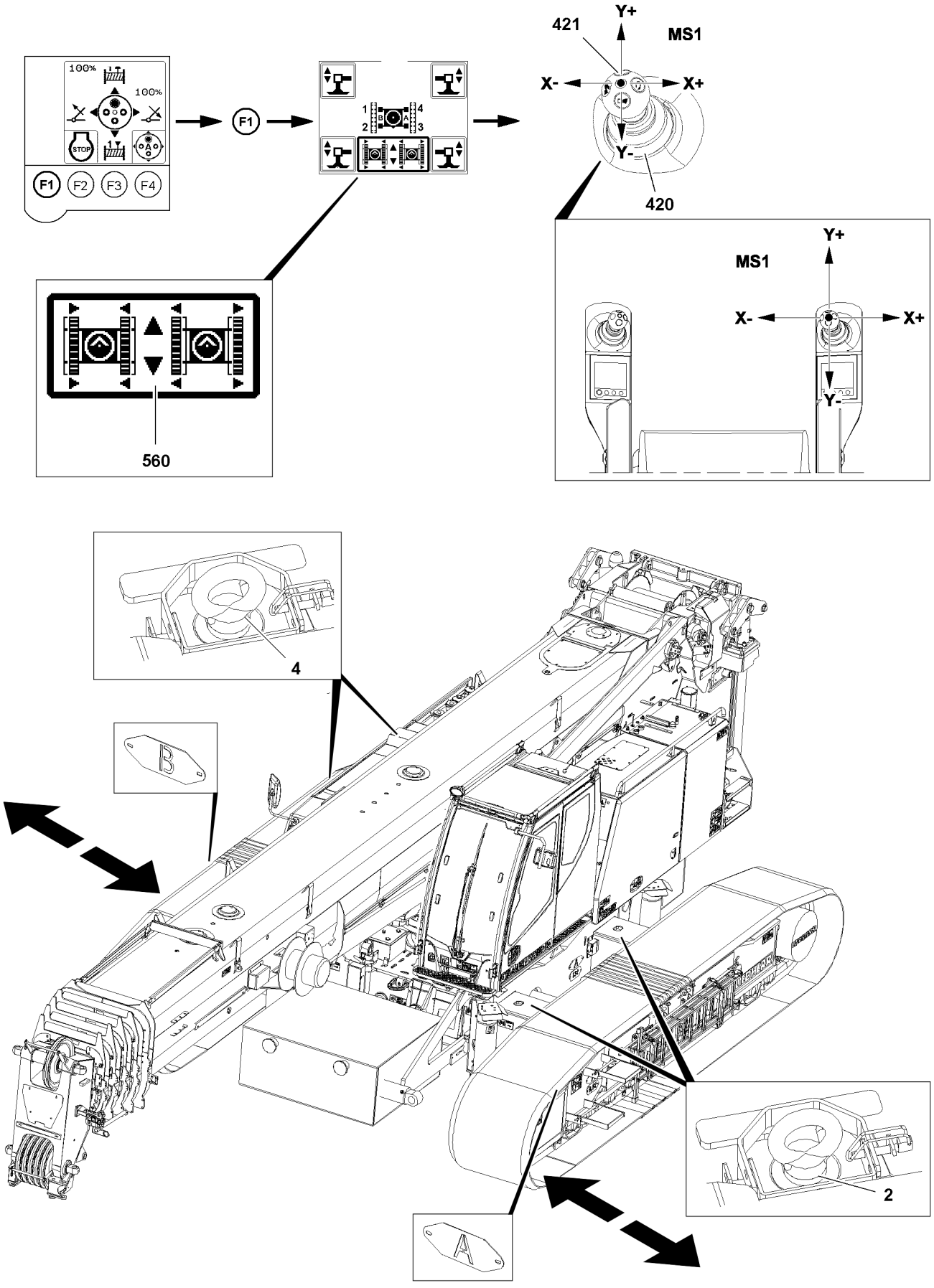

Fig.118056

LWE/LTR 1100-009/25105-02-02/en

copyright © Liebherr-Werk Ehingen GmbH 2023

Note
Assignment of working direction and crawler carrier!
- ► The rear and front on the crawler track can be determined by the chain tension device (chain tension side). The chain tension device is on the front on the crawler travel gear.
- ► In the „Crawler travel gear“ menu the assignment of the crawler carriers on the touch display depends on the working direction of the crane. If the working direction of the crane is changed by turning the turntable from working direction „forward“ to working direction „backward“, then the crane icon **525** changes to crane icon **535** - or vice versa.
- ► The arrow **12** shows the direction of view of the crane operator in the crane operator's cab.
- ► Crane icon **525**, turntable turned „to the front“: The triangle **1.3** shows the front on the crane chassis; assignment of the crawler carriers as seen by the crane operator in the crane operator's cab.
- ► Crane icon **535**, turntable turned „to the rear“: The triangle **1.3** shows the front on the crane chassis; assignment of the crawler carriers as seen by the crane operator in the crane operator's cab.

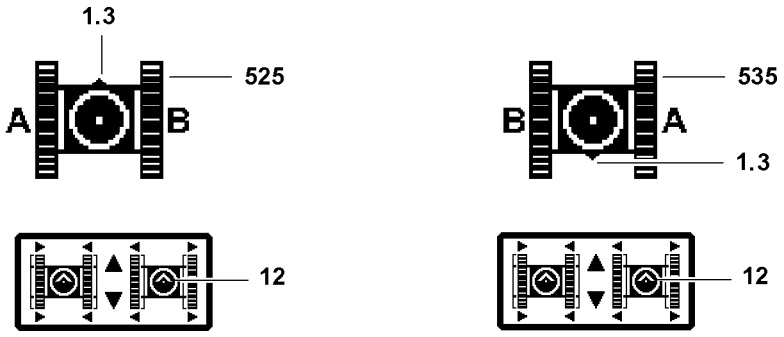

Fig.118057

Note
Select / deselect icons in the touch display
- ► Touch functions are identified by the double border (empty frame) of the touch display icons. The function in the icon is selected / deselected with the press of a finger („touch“) on the icon.

LWE/LTR 1100-009/25105-02-02/en

copyright © Liebherr-Werk Ehingen GmbH 2023

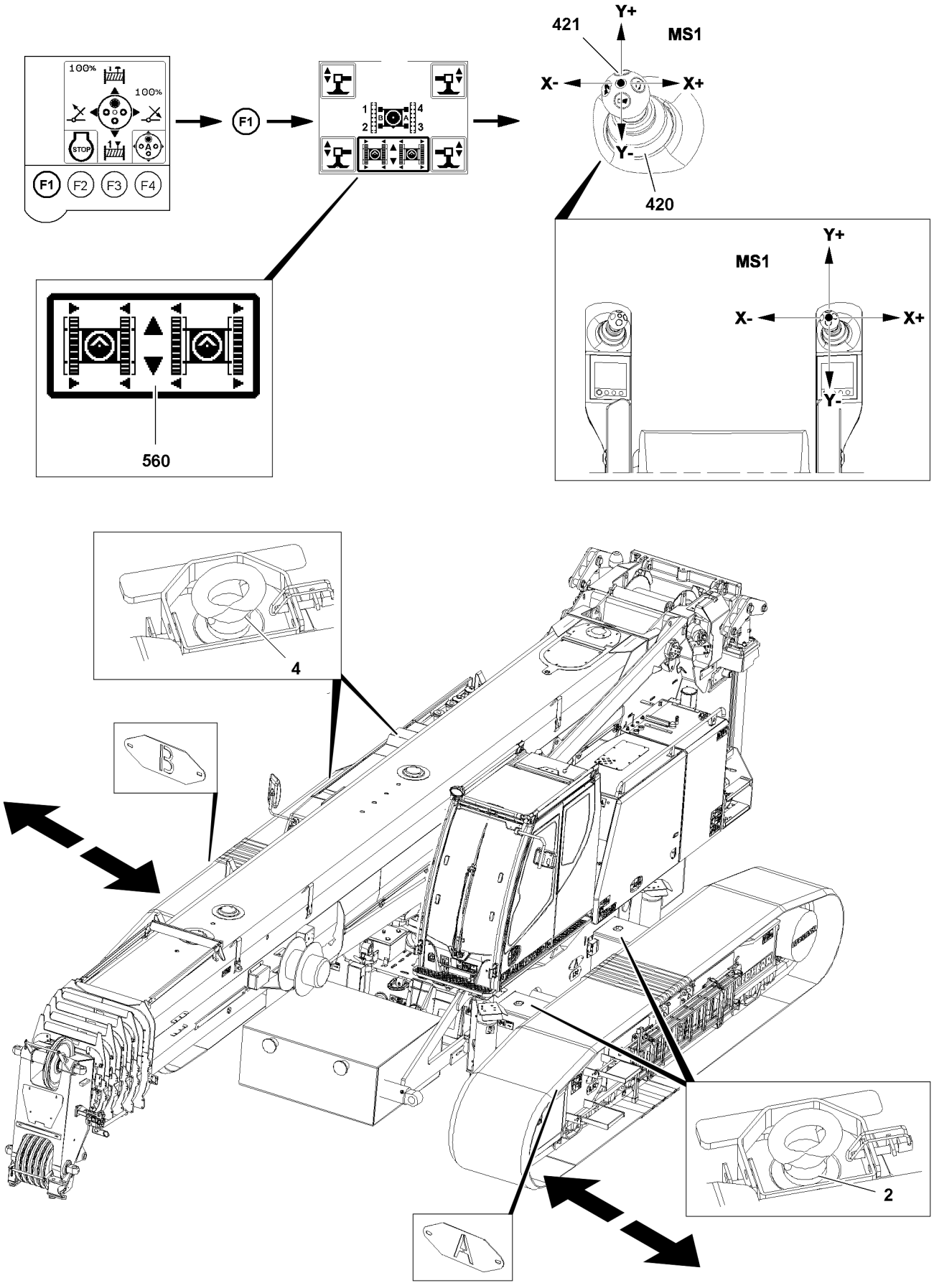

Fig.118056

LWE/LTR 1100-009/25105-02-02/en

copyright © Liebherr-Werk Ehingen GmbH 2023

2.1 Extending the crawler carriers from the crane operator's cab

Make sure that the following prerequisite is met:
– TE1 can be seen in the „Master switch configuration“ menu.

2.1.1 Extending the crawler carrier

DANGER
Crushing danger to personnel due to movement of the crawler carriers!
► Make sure that no personnel is within the danger zone of the crawler carriers during „track width adjustment“.

Unpinning the crawler carrier on side „A“

► Release and unpin the pins **2** on side „A“ on the front and rear.

Extending the crawler carrier on side „A“

To initiate a movement: Release master switch MS1 **420** with the button **421**.

► Press the button **421** and hold.
► Extend the crawler carrier: Move master switch MS1 **420** in direction X+.

Result:

– Crawler carrier „A“ is extended.

Problem remedy
Tensioning between the crawler carrier and crawler center section!
Crawler carrier clamped.
► Deflecting the master switch MS1 **420** in direction X+ and alternately deflecting it additionally in direction Y+ and Y- releases the tension.

Pinning the crawler carrier on side „A“

When extension condition 0 % or 50 %, 100 % is reached:
► Insert and secure the pins **2** on side „A“ on the front and rear.

LWE/LTR 1100-009/25105-02-02/en

copyright © Liebherr-Werk Ehingen GmbH 2023

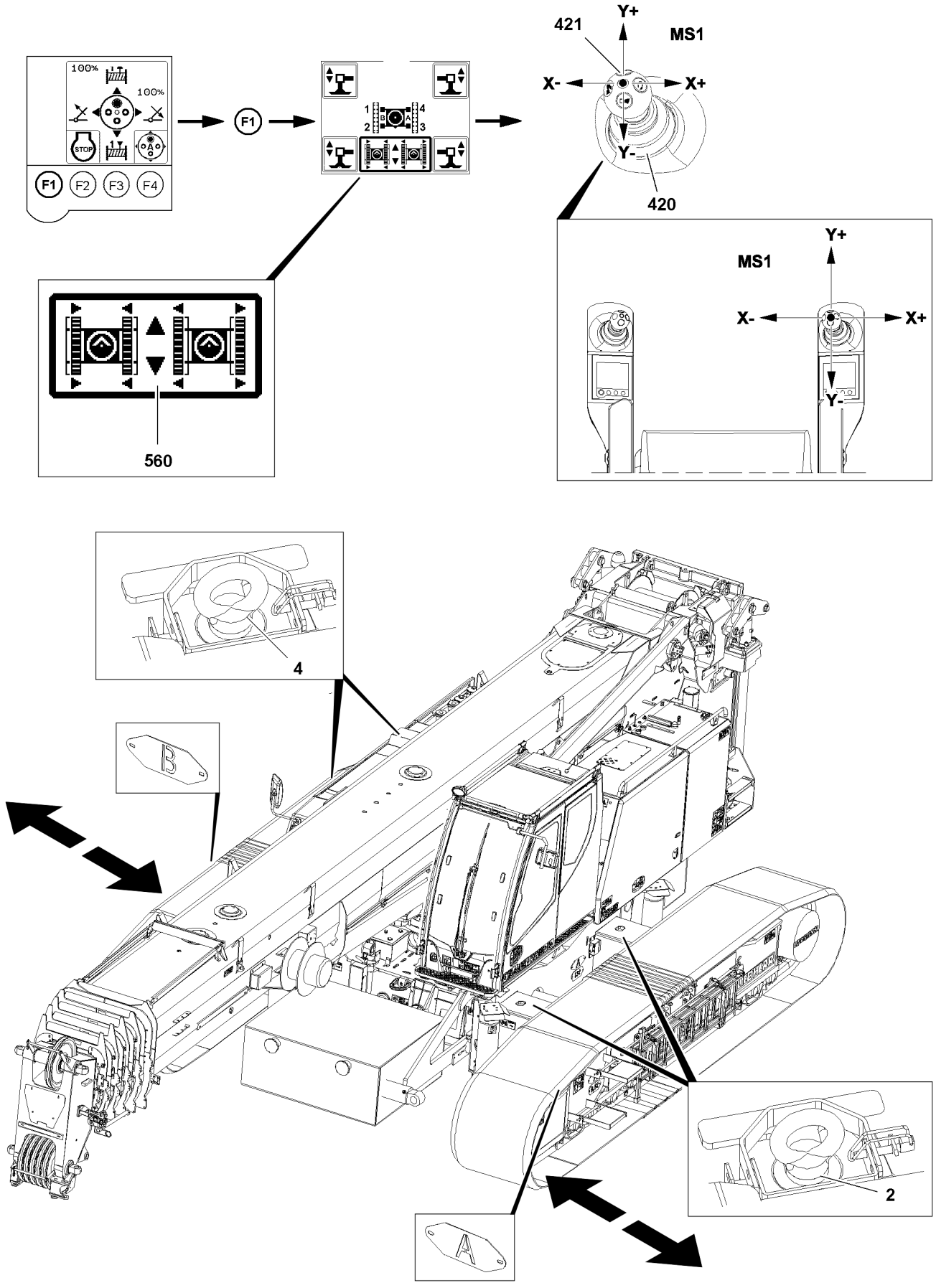

Fig.118056

LWE/LTR 1100-009/25105-02-02/en

copyright © Liebherr-Werk Ehingen GmbH 2023

Unpinning the crawler carrier on side „B“

► Release and unpin the pins **4** on side „B“ on the front and rear.

Extending the crawler carrier on side „B“

DANGER
Crushing danger to personnel due to movement of the crawler carriers!
► Make sure that no personnel is within the danger zone of the crawler carriers during „track width adjustment“.

WARNING
Crushing danger of hydraulic lines due to movement of crawler carriers!
► Do not extend the crawler carriers more than 100 %.

To initiate a movement, release master switch MS1 **420** with the button **421**.

► Press the button **421** and hold.
► Extend the crawler carrier: Move master switch MS1 **420** in direction X+.

Result:

– Crawler carrier „B“ is extended.

Problem remedy
Tensioning between the crawler carrier and crawler center section!
Crawler carrier clamped.
► Deflecting the master switch MS1 **420** in direction X+ and alternately deflecting it additionally in direction Y+ and Y- releases the tension.

Pinning the crawler carrier on side „B“

When extension condition 0 % or 50 %, 100 % is reached:
► Insert and secure the pins **2** on side „B“ on the front and rear.

LWE/LTR 1100-009/25105-02-02/en

copyright © Liebherr-Werk Ehingen GmbH 2023

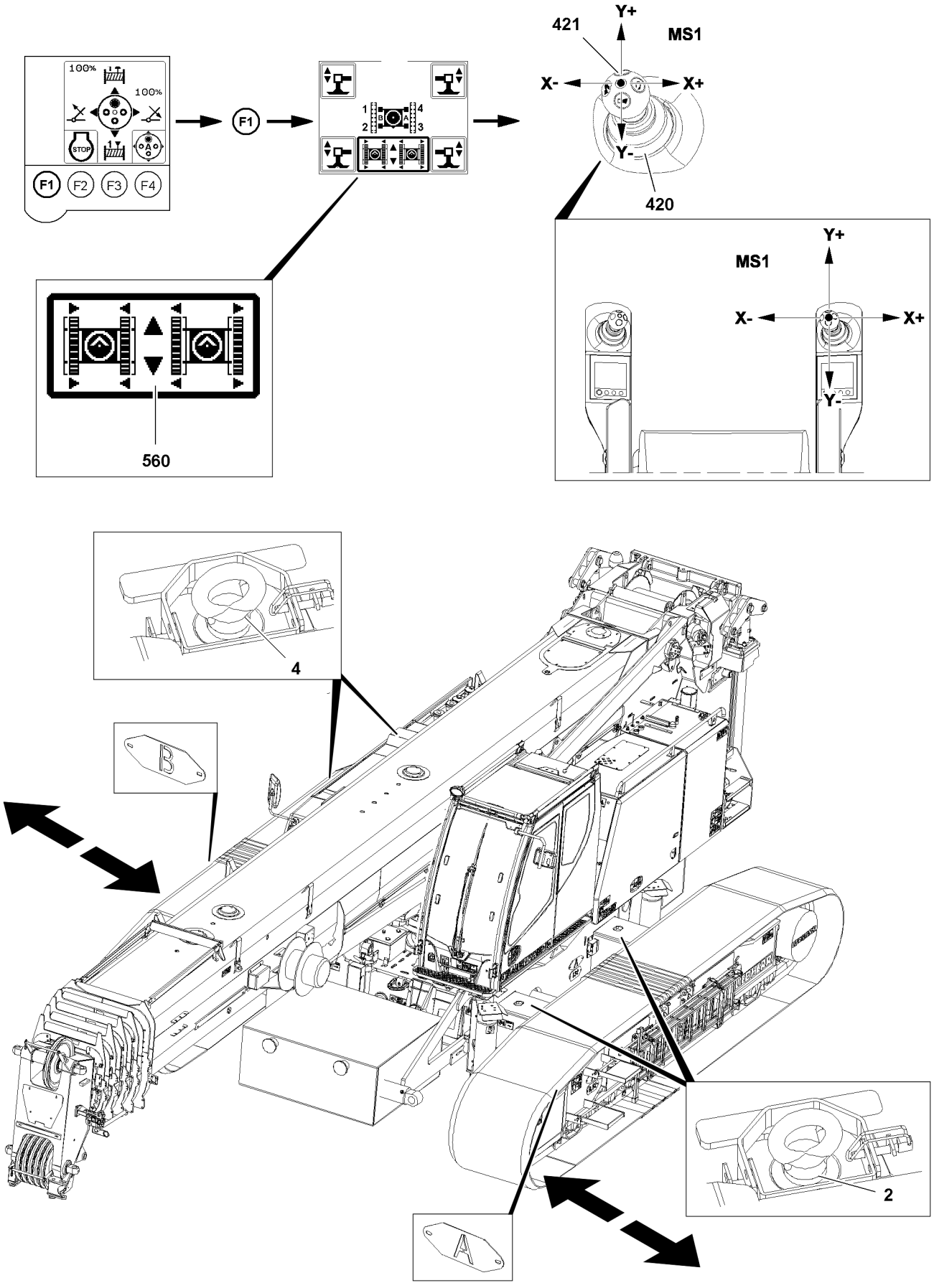

Fig.118056

LWE/LTR 1100-009/25105-02-02/en

copyright © Liebherr-Werk Ehingen GmbH 2023

2.1.2 Retracting the crawler carrier

NOTICE
Retracting of the crawler carrier!
- ► Retract the left crawler carrier „B“ **first**.
- ► Pay attention to the marks for the track width on the crawler carriers.

Unpinning the crawler carrier on side „B“

- ► Release and unpin the pins **4** on side „B“ on the front and rear.

Retracting the crawler carrier on side „B“

DANGER
Crushing danger to personnel due to movement of the crawler carriers!
- ► Make sure that no personnel is within the danger zone of the crawler carriers during „track width adjustment“.

To initiate a movement, release master switch MS1 **420** with the button **421**.

- ► Press the button **421** and hold.
- ► Retract the crawler carrier: Move master switch MS1 **420** in direction X-.

Result:

– Crawler carrier „B“ is retracted.

Problem remedy
Tensioning between the crawler carrier and crawler center section!
Crawler carrier clamped.
- ► Deflect the master switch MS1 **420** in direction X- and alternately deflect it additionally in direction Y+ and Y- to release the tension.

Pinning the crawler carrier on side „B“

When extension condition 0 % or 50 %, 100 % is reached:
- ► Insert and secure the pins **4** on side „B“ on the front and rear.

LWE/LTR 1100-009/25105-02-02/en

copyright © Liebherr-Werk Ehingen GmbH 2023

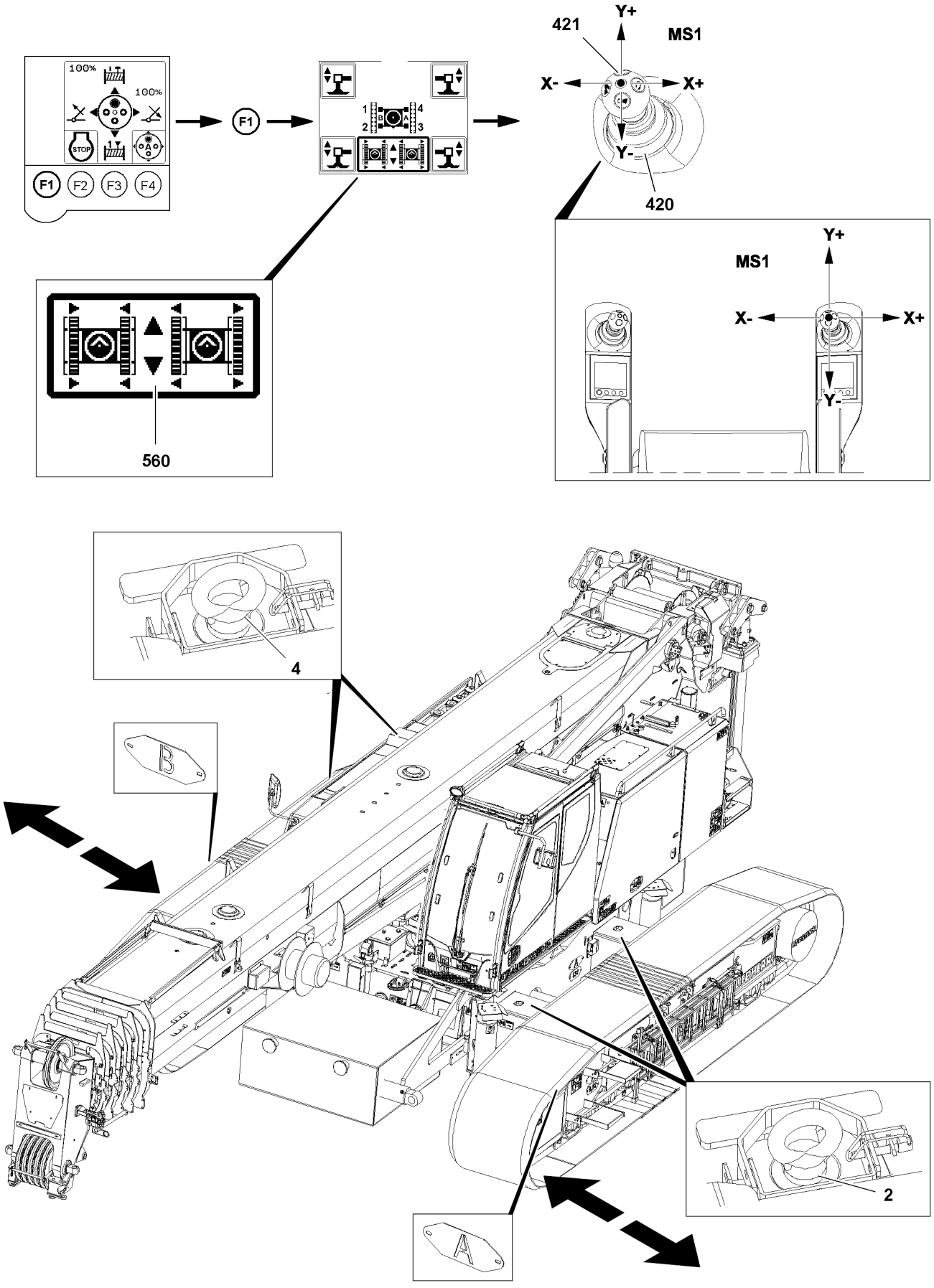

Fig.118056

LWE/LTR 1100-009/25105-02-02/en

copyright © Liebherr-Werk Ehingen GmbH 2023

Unpinning the crawler carrier on side „A“

► Release and unpin the pins **2** on side „A“ on the front and rear.

Retracting the crawler carrier on side „A“

DANGER
Crushing danger to personnel due to movement of the crawler carriers!
► Make sure that no personnel is within the danger zone of the crawler carriers during „track width adjustment“.

To initiate a movement, release master switch MS1 **420** with the button **421**.

► Press the button **421** and hold.
► Extend the crawler carrier: Move master switch MS1 **420** in direction X+.

Result:

– Crawler carrier „A“ is extended.

Problem remedy
Tensioning between the crawler carrier and crawler center section!
Crawler carrier clamped.
► Deflecting the master switch MS1 **420** in direction X+ and alternately deflecting it additionally in direction Y+ and Y- releases the tension.

Pinning the crawler carrier on side „A“

When extension condition 0 % or 50 %, 100 % is reached:
► Insert and secure the pins **2** on side „A“ on the front and rear.

LWE/LTR 1100-009/25105-02-02/en

copyright © Liebherr-Werk Ehingen GmbH 2023

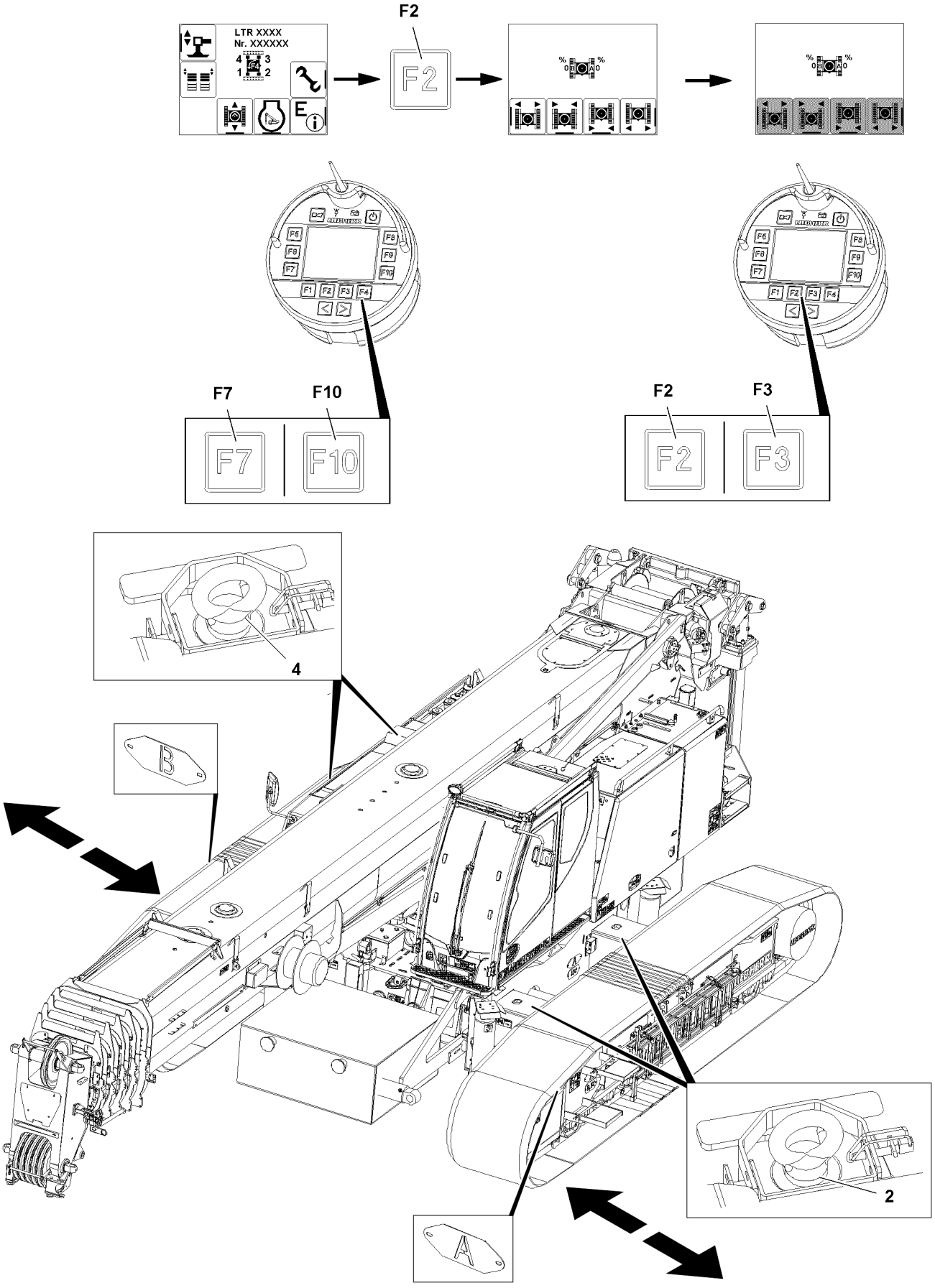

Fig.143113

LWE/LTR 1100-009/25105-02-02/en

copyright © Liebherr-Werk Ehingen GmbH 2023

3 Adjusting the track width with the Bluetooth Terminal

NOTICE
Property damage!
If the crawler carriers are pushed out further than the outer pin points (100 %) then the crawler travel gear can be damaged.
- ► Push the crawler carriers out only to the point where they can be pinned on the outer pin points (100 %).
- ► Pay attention to the marks for the track width on the crawler carriers.
- ► Unpin the crawler carriers individually.

NOTICE
Damage of hydraulic lines due to crushing!
If the crawler carrier is not extended first on side „A“ then hydraulic lines can be crushed.
- ► Extend the crawler carrier on side „A“ first.

3.1 Extending the track width with the Bluetooth Terminal

Note
- ► To be able to carry out the individual functions, the 2-Hand keypad on the rear of the BTT must be pressed simultaneously.

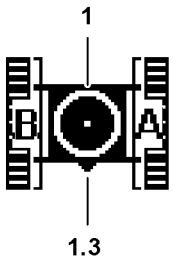

Fig.143112

Note
Assignment of working direction and crawler carrier!
- ► The rear and front on the crawler track must determined by the chain tension device (chain tension side). The chain tension device is on the front on the crawler travel gear.
- ► The illustration of the crane icon **1** is **independent** of the crane superstructure position. The triangle **1.3** shows the position of the front side of the crane chassis in the crane icon **1**.

Make sure that the following prerequisites are met:
- – The menu overview is shown on the BTT display.
- – The BTT is aligned with the crane according to the triangle **1.3** in the crane icon **1**.

LWE/LTR 1100-009/25105-02-02/en

copyright © Liebherr-Werk Ehingen GmbH 2023

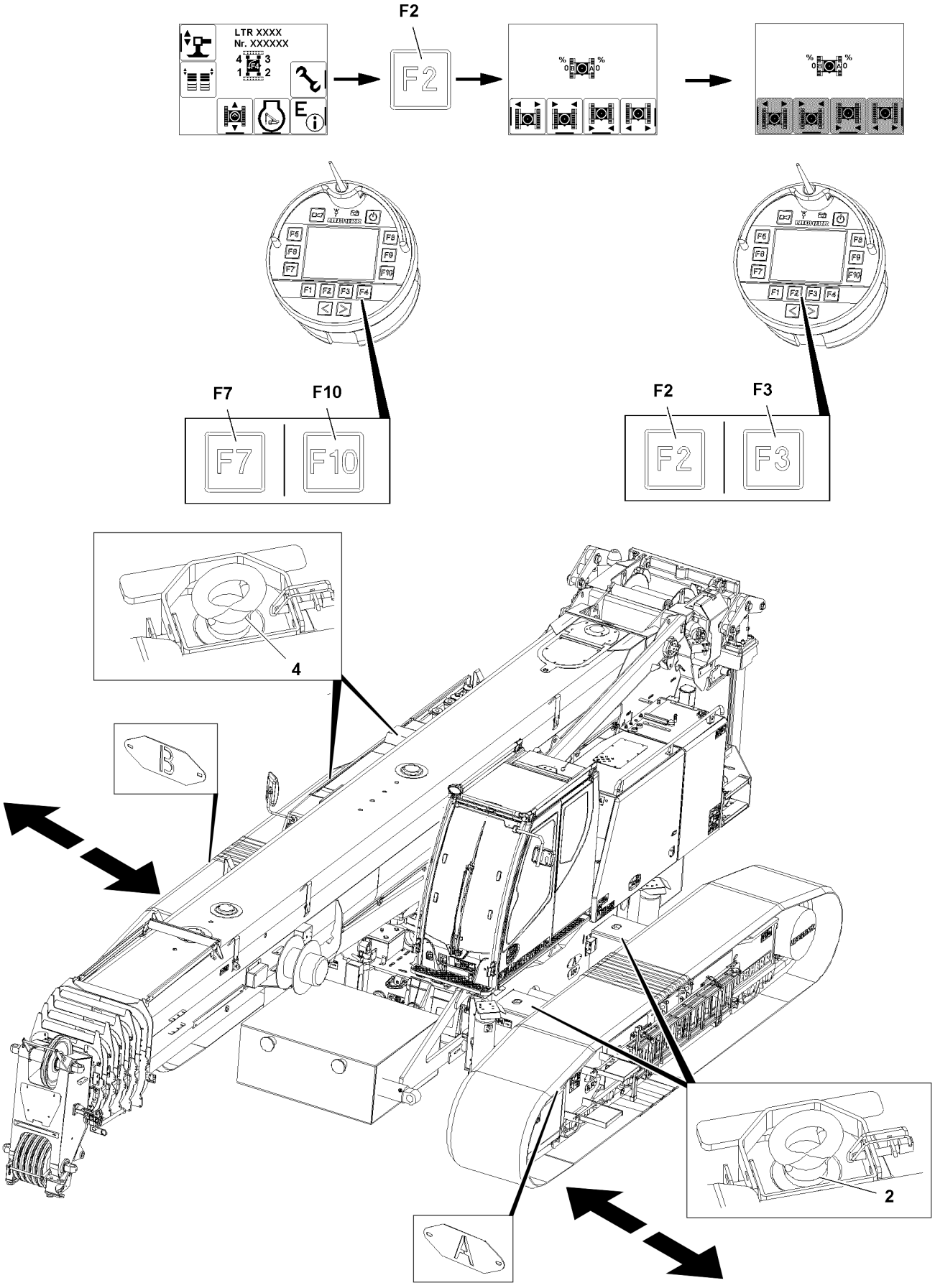

Fig.143113

LWE/LTR 1100-009/25105-02-02/en

copyright © Liebherr-Werk Ehingen GmbH 2023

3.1.1 Unpinning the crawler carrier on side „A“

► Release and unpin the pins **2** on side „A“ on the front and rear.

3.1.2 Extending the crawler carrier on side „A“

DANGER
Crushing danger to personnel due to movement of the crawler carriers!
► Make sure that no personnel is within the danger zone of the crawler carriers during „track width adjustment“.

► Press the function key **F2**.

Result:

– The „Crawler travel gear“ menu appears.

► Press the function key **F7** and function key **F10** simultaneously.

Result:

– The crawler carrier on side „A“ is extended.

Problem remedy
Tensioning between the crawler carrier and crawler center section!
Crawler carrier clamped.
► By alternately pressing the function key **F7** and function key **F10** the tension is released.

3.1.3 Pinning the crawler carrier on side „A“

When extension condition 0 % or 50 %, 100 % is reached:
► Insert and secure the pins **2** on side „A“ on the front and rear.

LWE/LTR 1100-009/25105-02-02/en

copyright © Liebherr-Werk Ehingen GmbH 2023

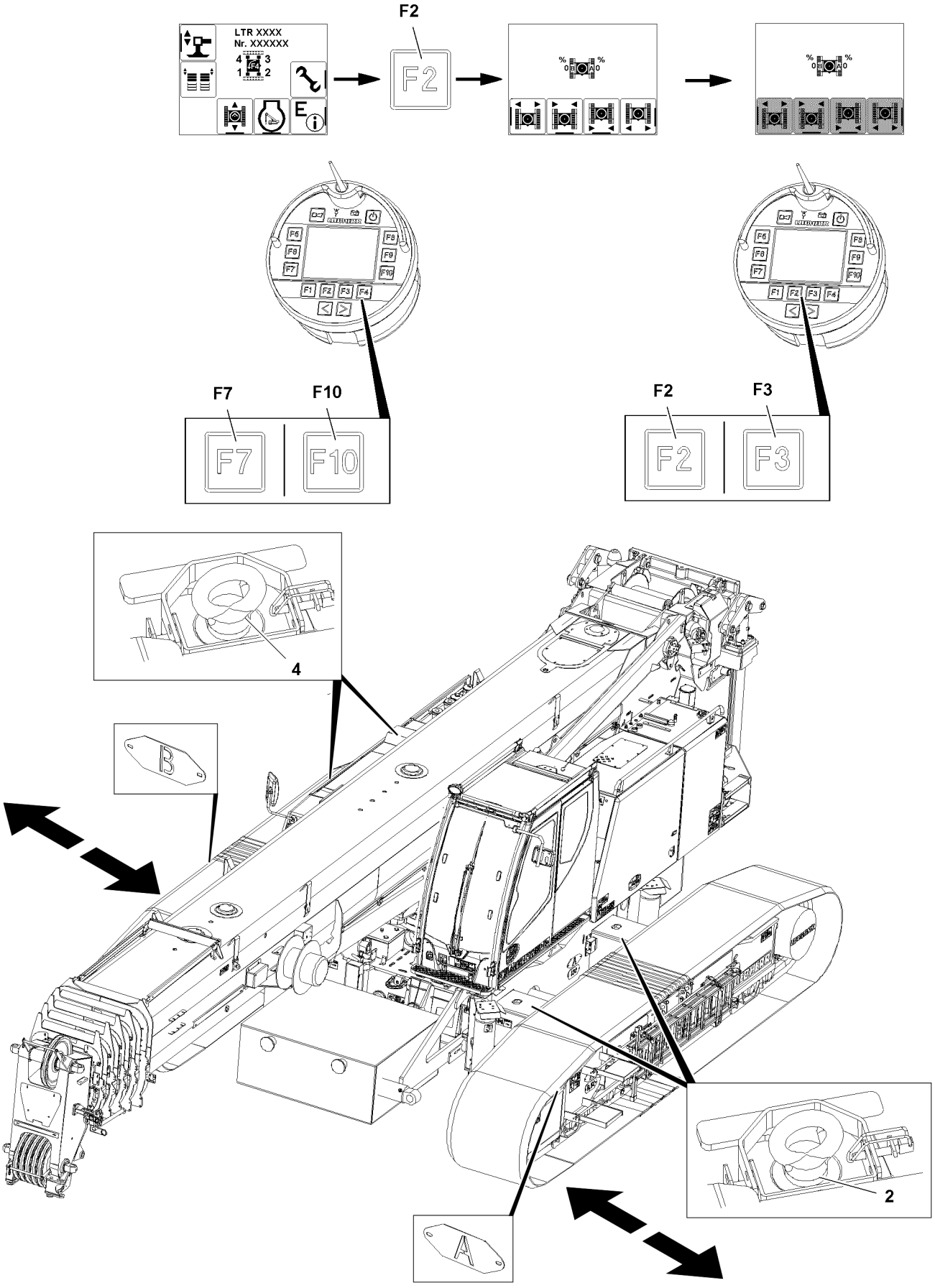

Fig.143113

LWE/LTR 1100-009/25105-02-02/en

copyright © Liebherr-Werk Ehingen GmbH 2023

3.1.4 Unpinning the crawler carrier on side „B“

► Release and unpin the pins **4** on side „B“ on the front and rear.

3.1.5 Extending the crawler carrier on side „B“

NOTICE
Retracting of the crawler carrier!
► Retract the left crawler carrier „B“ **first**.
► Pay attention to the marks for the track width on the crawler carriers.

DANGER
Crushing danger to personnel due to movement of the crawler carriers!
► Make sure that no personnel is within the danger zone of the crawler carriers during „track width adjustment“.

WARNING
Crushing danger of hydraulic lines due to movement of crawler carriers!
► Do not extend the crawler carriers more than 100 %.

► Press the function key **F2**.

Result:

– The „Crawler travel gear“ menu appears.

► Extend the crawler carrier: Press the function key **F7** and function key **F10** simultaneously.

Result:

– The crawler carrier on side „B“ is extended.

Note
► When adjusting the track width, there may be some tensioning between the crawler carrier and the crawler center section. By additionally deflecting the master switch (MS1) **420** in direction Y+ or Y- the tension is released.

Problem remedy
Tensioning between the crawler carrier and crawler center section!
Crawler carrier clamped.
► By alternately pressing the function key **F7** and function key **F10** the tension is released.

3.1.6 Pinning the crawler carrier on side „B“

When extension condition 0 % or 50 %, 100 % is reached:
► Insert and secure the pins **4** on side „B“ on the front and rear.

3.2 Retracing the track width with the Bluetooth Terminal

NOTICE
Retracting of the crawler carrier!
► Retract the left crawler carrier „B“ **first**.
► Pay attention to the marks for the track width on the crawler carriers.

LWE/LTR 1100-009/25105-02-02/en

copyright © Liebherr-Werk Ehingen GmbH 2023

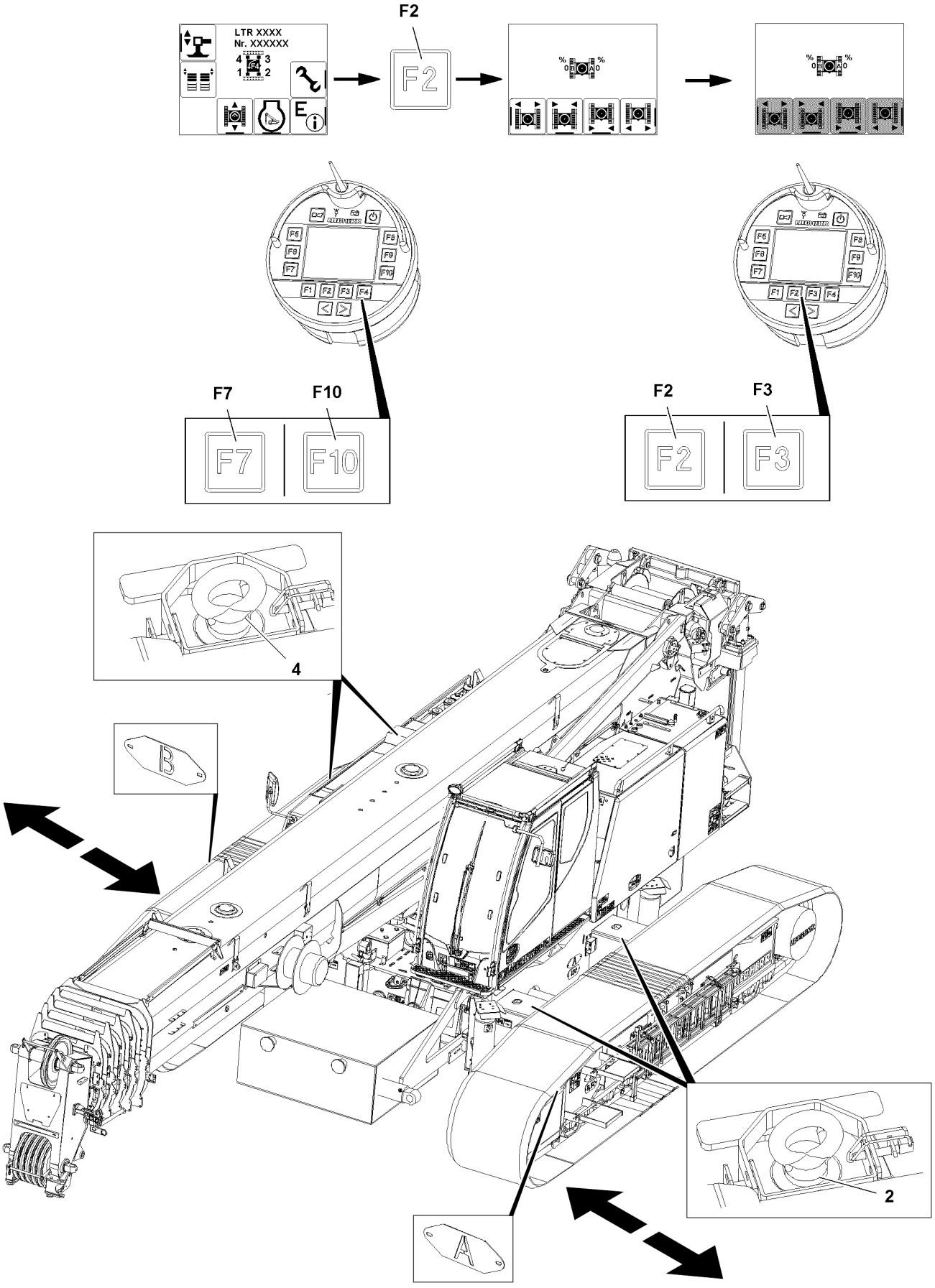

Fig.143113

LWE/LTR 1100-009/25105-02-02/en

copyright © Liebherr-Werk Ehingen GmbH 2023

3.2.1 Unpinning the crawler carrier on side „B“

► Release and unpin the pins **4** on side „B“ on the front and rear.

3.2.2 Retracting the crawler carrier on side „B“

DANGER
Crushing danger to personnel due to movement of the crawler carriers!
► Make sure that no personnel is within the danger zone of the crawler carriers during „track width adjustment“.

WARNING
Crushing danger of hydraulic lines due to movement of crawler carriers!
► Do not extend the crawler carriers more than 100 %.

► Press the function key **F2**.

Result:

– The „Crawler travel gear“ menu appears.

„Extending the crawler carrier“
► Press the function key **F2** and function key **F7** simultaneously.

Result:

– The crawler carrier on side „B“ is retracted.

Note
► When adjusting the track width, there may be some tensioning between the crawler carrier and the crawler center section. By additionally deflecting the master switch (MS1) **420** in direction Y+ or Y- V the tension is released.

Problem remedy
Tensioning between the crawler carrier and crawler center section!
Crawler carrier clamped.
► By alternately pressing the function key **F2** and function key **F3** the tension is released.

3.2.3 Pinning the crawler carrier on side „B“

When extension condition 0 % or 50 %, 100 % is reached:
► Insert and secure the pins **4** on side „B“ on the front and rear.

LWE/LTR 1100-009/25105-02-02/en

copyright © Liebherr-Werk Ehingen GmbH 2023

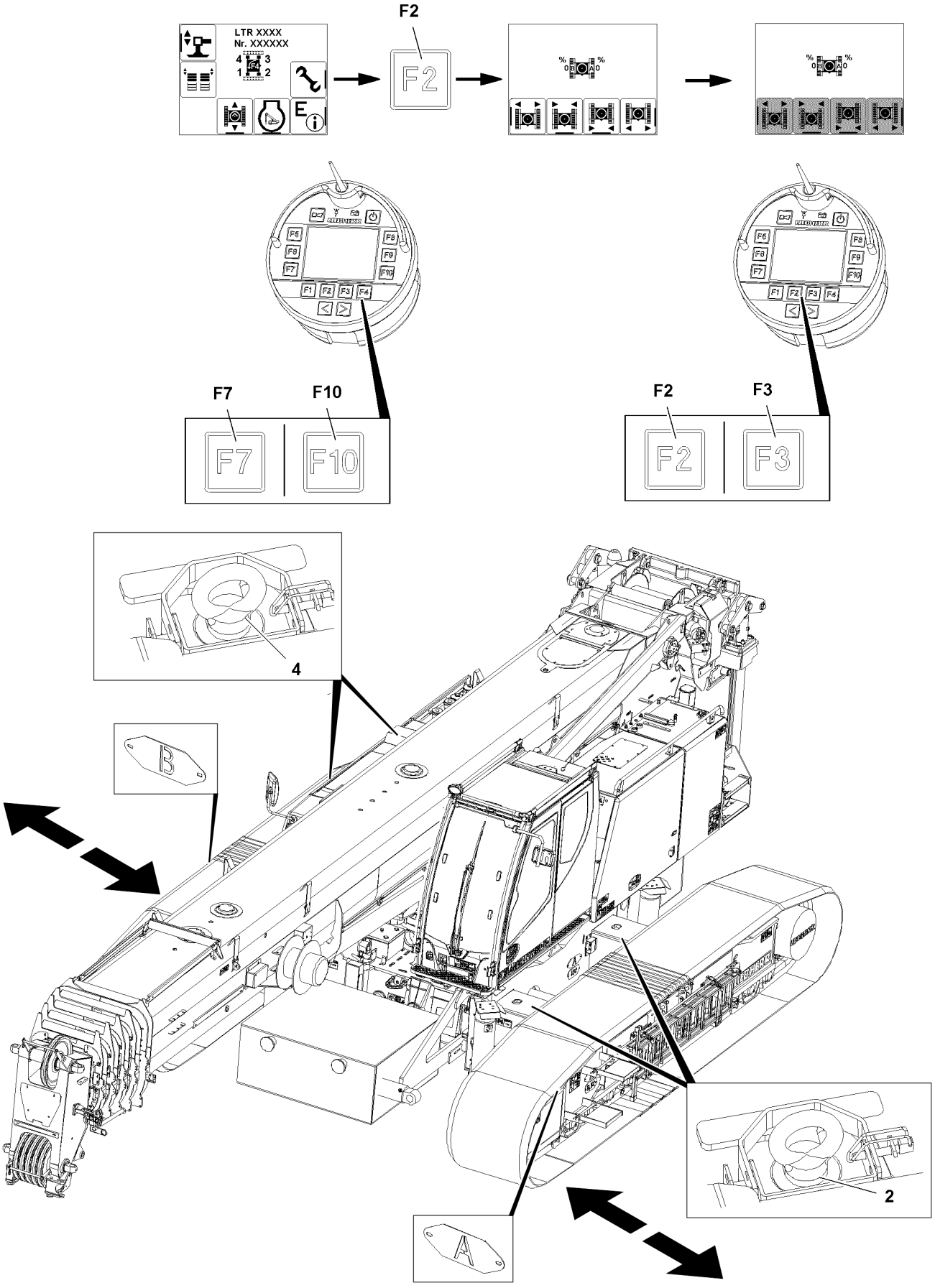

Fig.143113

LWE/LTR 1100-009/25105-02-02/en

copyright © Liebherr-Werk Ehingen GmbH 2023

3.2.4 Unpinning the crawler carrier on side „A“

► Release and unpin the pins **2** on side „A“ on the front and rear.

3.2.5 Retracting the crawler carrier on side „A“

DANGER
Crushing danger to personnel due to movement of the crawler carriers!
► Make sure that no personnel is within the danger zone of the crawler carriers during „track width adjustment“.

► Press the function key **F2**.

Result:

– The „Crawler travel gear“ menu appears.

► Press the function key **F7** and function key **F10** simultaneously.

Result:

– The crawler carrier on side „A“ is retracted.

Problem remedy
Tensioning between the crawler carrier and crawler center section!
Crawler carrier clamped.
► By alternately pressing the function key **F2** and function key **F3** the tension is released.

3.2.6 Pinning the crawler carrier on side „A“

When extension condition 0 % or 50 %, 100 % is reached:
► Insert and secure the pins **2** on side „A“ on the front and rear.

LWE/LTR 1100-009/25105-02-02/en

copyright © Liebherr-Werk Ehingen GmbH 2023

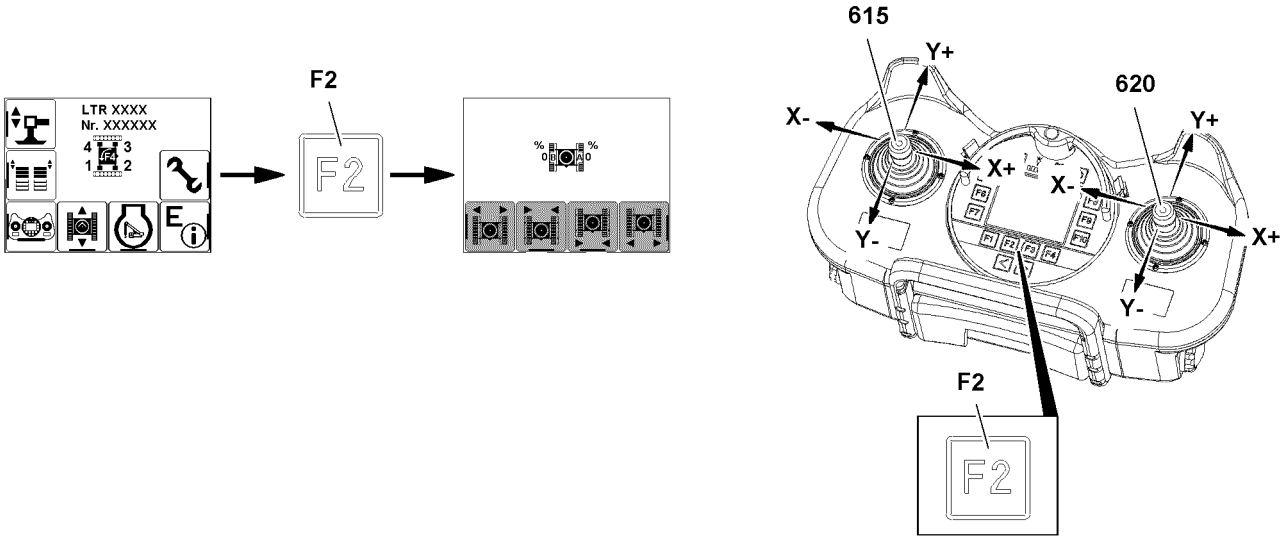

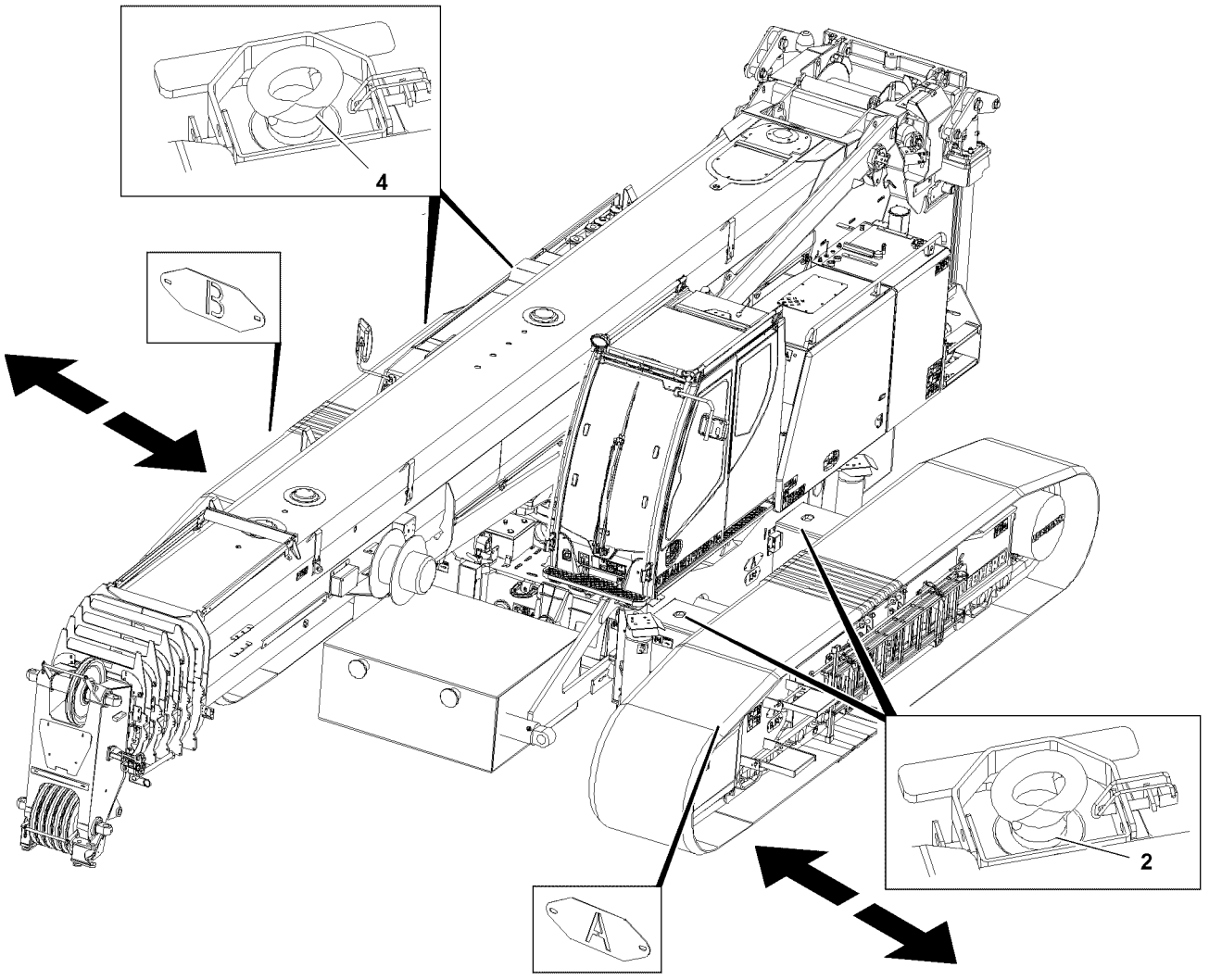

Fig.118059

LWE/LTR 1100-009/25105-02-02/en

copyright © Liebherr-Werk Ehingen GmbH 2023

4 Adjusting the track width with the radio remote control*

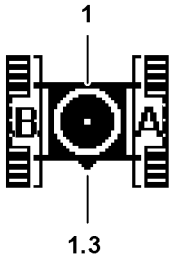

Fig.143112

Note
Assignment of working direction and crawler carrier!
- ► The rear and front on the crawler travel gear can be determined by the chain tension device **13** (chain tension side). The chain tension device **13** is on the front on the crawler travel gear.
- ► The illustration of the crane icon **1** is **independent** from the working direction. The triangle **1.3** shows the front of crane chassis.
- ► Crawler carrier **B** is in the „front“ right direction of view.
- ► Crawler carrier **A** is in the „front“ left direction of view.

NOTICE
Property damage!
If the crawler carriers are pushed out further than the outer pin points (100 %) then the crawler travel gear can be damaged.
- ► Push the crawler carriers out only to the point where they can be pinned on the outer pin points (100 %).
- ► Pay attention to the marks for the track width on the crawler carriers.

NOTICE
Damage of hydraulic lines due to crushing!
If the crawler carrier is not extended first on side „A“ then hydraulic lines can be crushed.
- ► Extend the crawler carrier on side „A“ first.

4.1 Extending the track width with the radio remote control*

Make sure that the following prerequisites are met:
- – The menu overview of BTT-E is visible on the display.
- – The BTT-E is aligned with the crane according to the triangle **1.3** in the crane icon **1**.

LWE/LTR 1100-009/25105-02-02/en

copyright © Liebherr-Werk Ehingen GmbH 2023

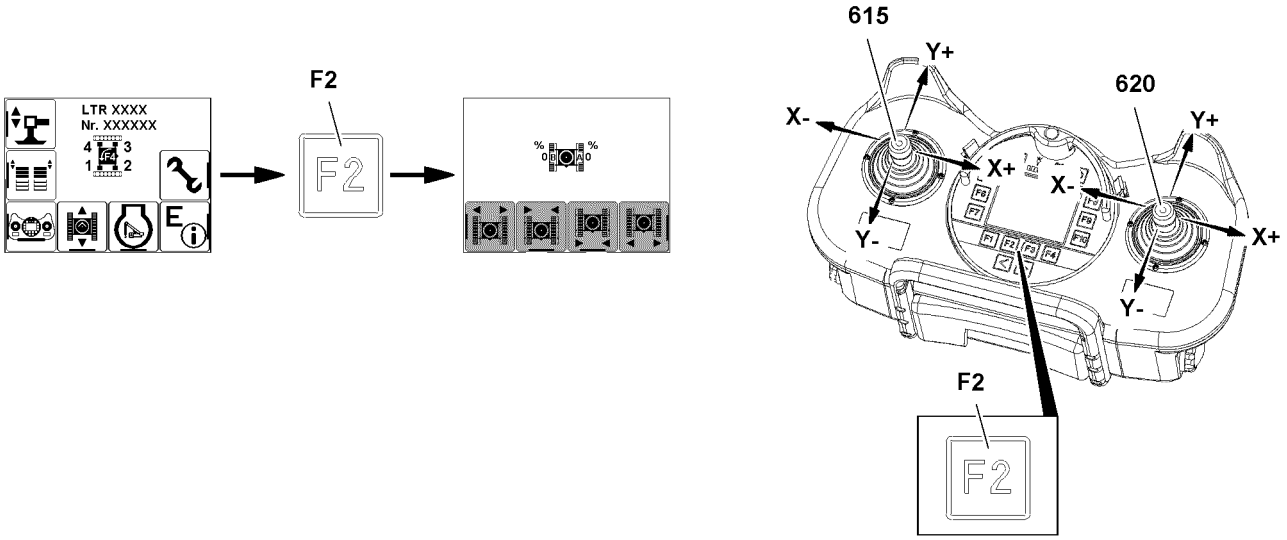

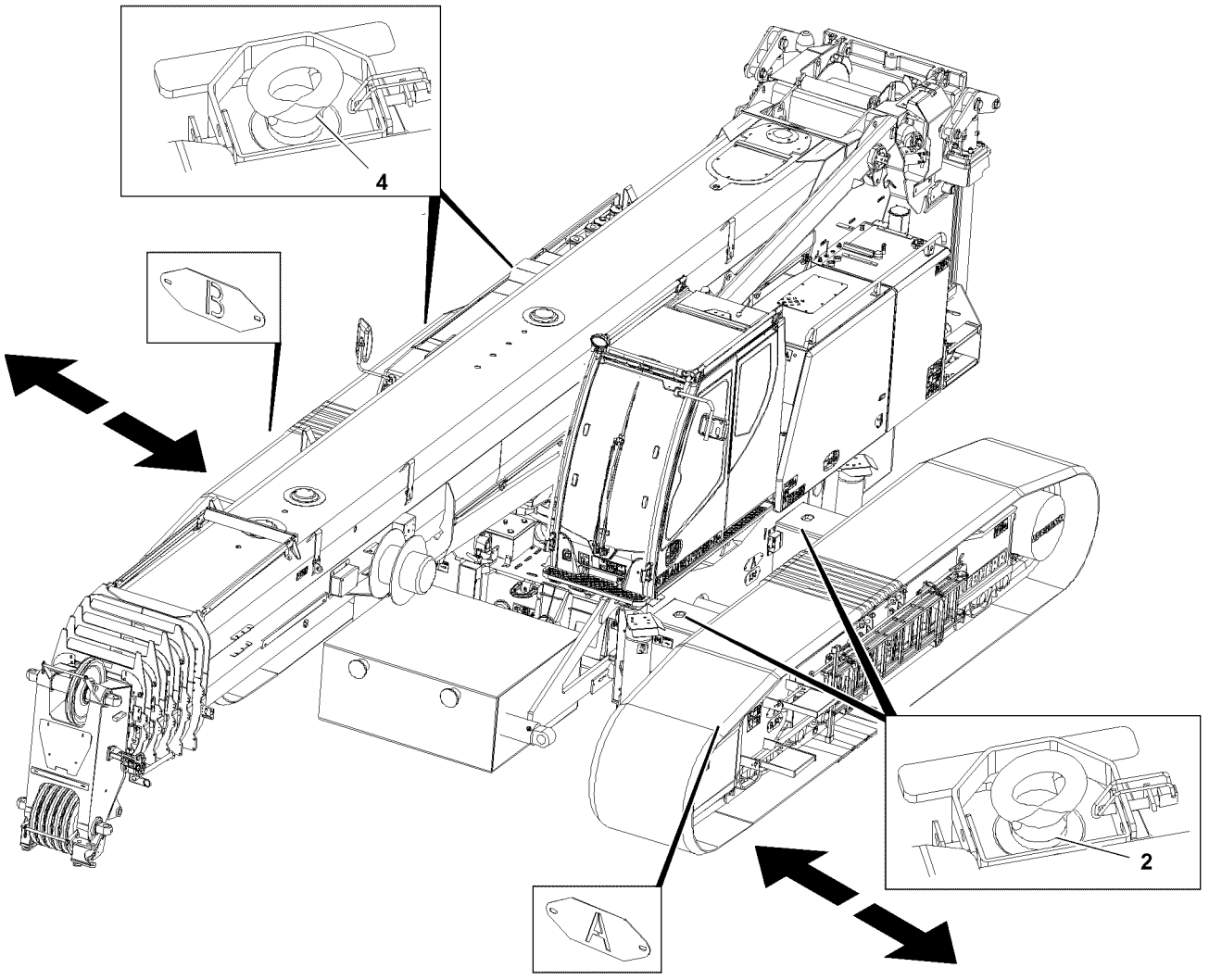

Fig.118059

LWE/LTR 1100-009/25105-02-02/en

copyright © Liebherr-Werk Ehingen GmbH 2023

4.1.1 Unpinning the crawler carrier on side „A“

► Release and unpin the pins **2** on side „A“ on the front and rear.

4.1.2 Extending the crawler carrier

DANGER
Crushing danger to personnel due to movement of the crawler carriers!
► Make sure that no personnel is within the danger zone of the crawler carriers during „track width adjustment“.

► Press the function key **F2**.

Result:

– The „Crawler travel gear“ menu appears.

► Extend the crawler carrier: Move the manual control lever **615** in direction „X-“ and move the manual control lever **620** simultaneously in direction „X+“.

Result:

– The crawler carrier on side „A“ is extended.

Problem remedy
Tensioning between the crawler carrier and crawler center section!
Crawler carrier clamped.
► By additionally actuating the manual control lever **615** and manual control lever **620**, the tension is released.

4.1.3 Pinning the crawler carrier on side „A“

► Insert and secure the pins **2** on side „A“ on the front and rear.

LWE/LTR 1100-009/25105-02-02/en

copyright © Liebherr-Werk Ehingen GmbH 2023

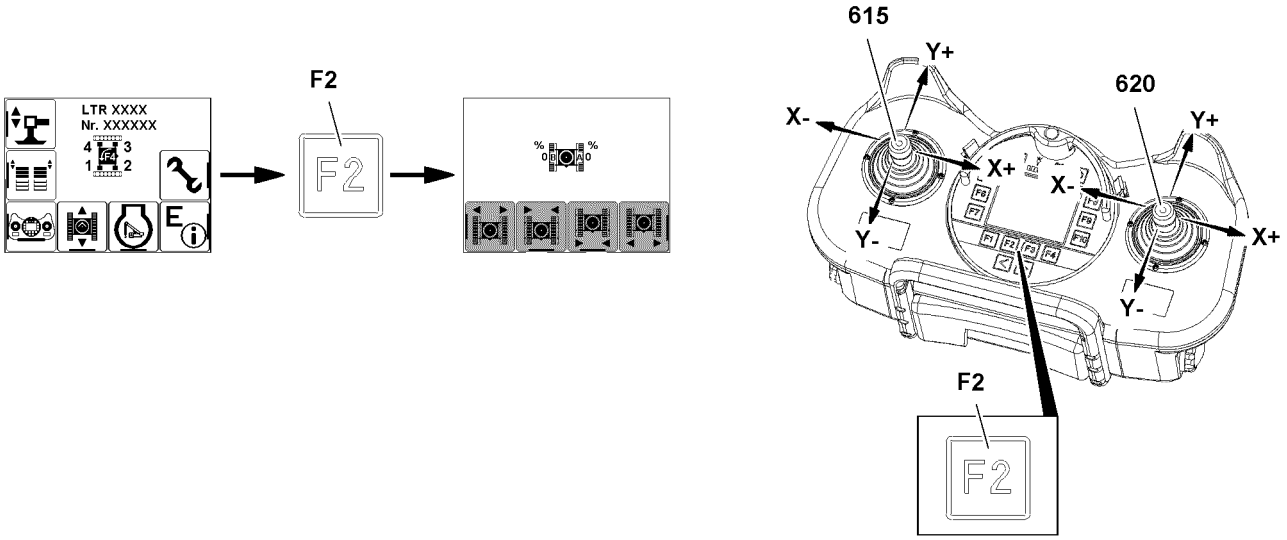

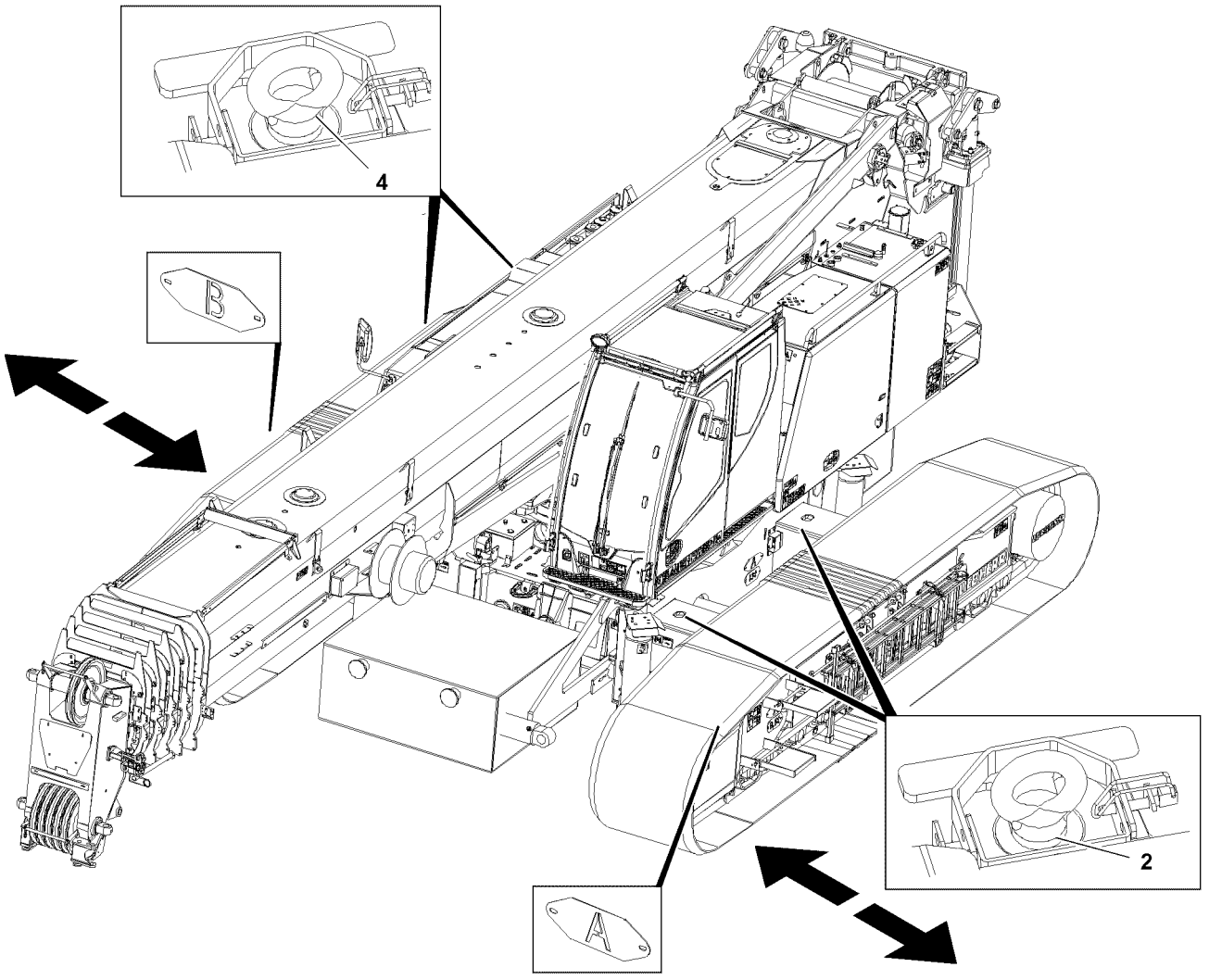

Fig.118059

LWE/LTR 1100-009/25105-02-02/en

copyright © Liebherr-Werk Ehingen GmbH 2023

4.1.4 Unpinning the crawler carrier on side „B“

► Release and unpin the pins **4** on side „B“ on the front and rear.

4.1.5 Extending the crawler carrier on side „B“

DANGER
Crushing danger to personnel due to movement of the crawler carriers!
► Make sure that no personnel is within the danger zone of the crawler carriers during „track width adjustment“.

WARNING
Crushing danger of hydraulic lines due to movement of crawler carriers!
► Do not extend the crawler carriers more than 100 %.

► Press the function key **F2**.

Result:

– The „Crawler travel gear“ menu appears.

► Extend the crawler carrier: Move the manual control lever **615** in direction „X-“ and move the manual control lever **620** simultaneously in direction „X+“.

Result:

– The crawler carrier on side „B“ is extended.

► Retract the crawler carrier: Move the manual control lever **615** in direction „X+“ and move the manual control lever **620** simultaneously in direction „X-“.

Result:

– The crawler carrier on side „B“ is retracted.

Problem remedy
Tensioning between the crawler carrier and crawler center section!
Crawler carrier clamped.
► By additionally actuating the manual control lever **615** and manual control lever **620**, the tension is released.

4.1.6 Pinning the crawler carrier on side „B“

When extension condition 0 % or 50 %, 100 % is reached:
► Insert and secure the pins **4** on side „B“ on the front and rear.

LWE/LTR 1100-009/25105-02-02/en

copyright © Liebherr-Werk Ehingen GmbH 2023

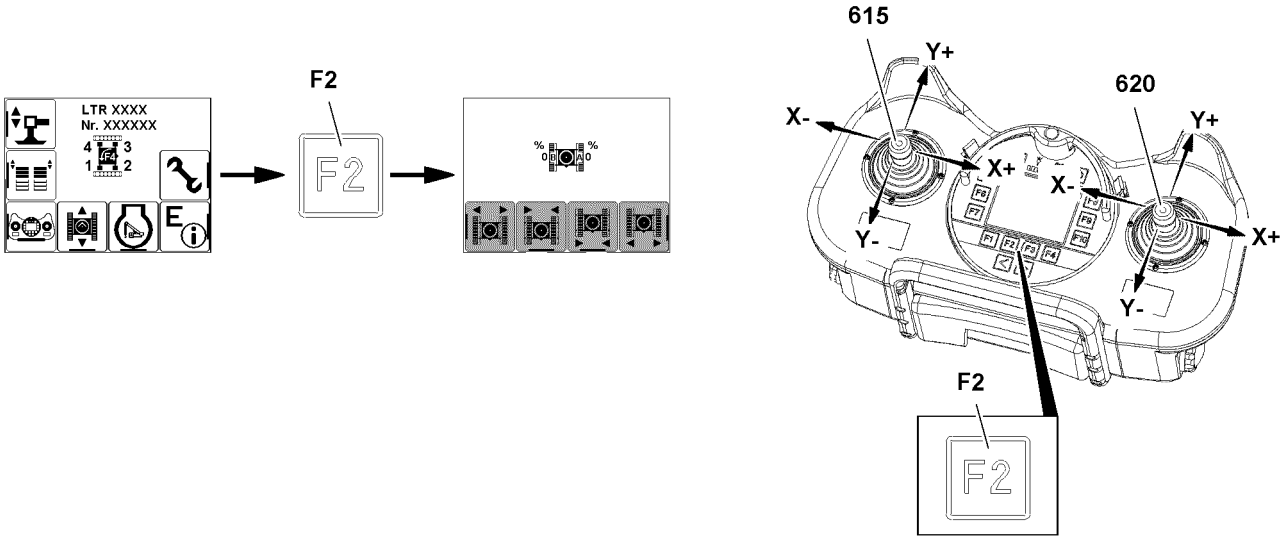

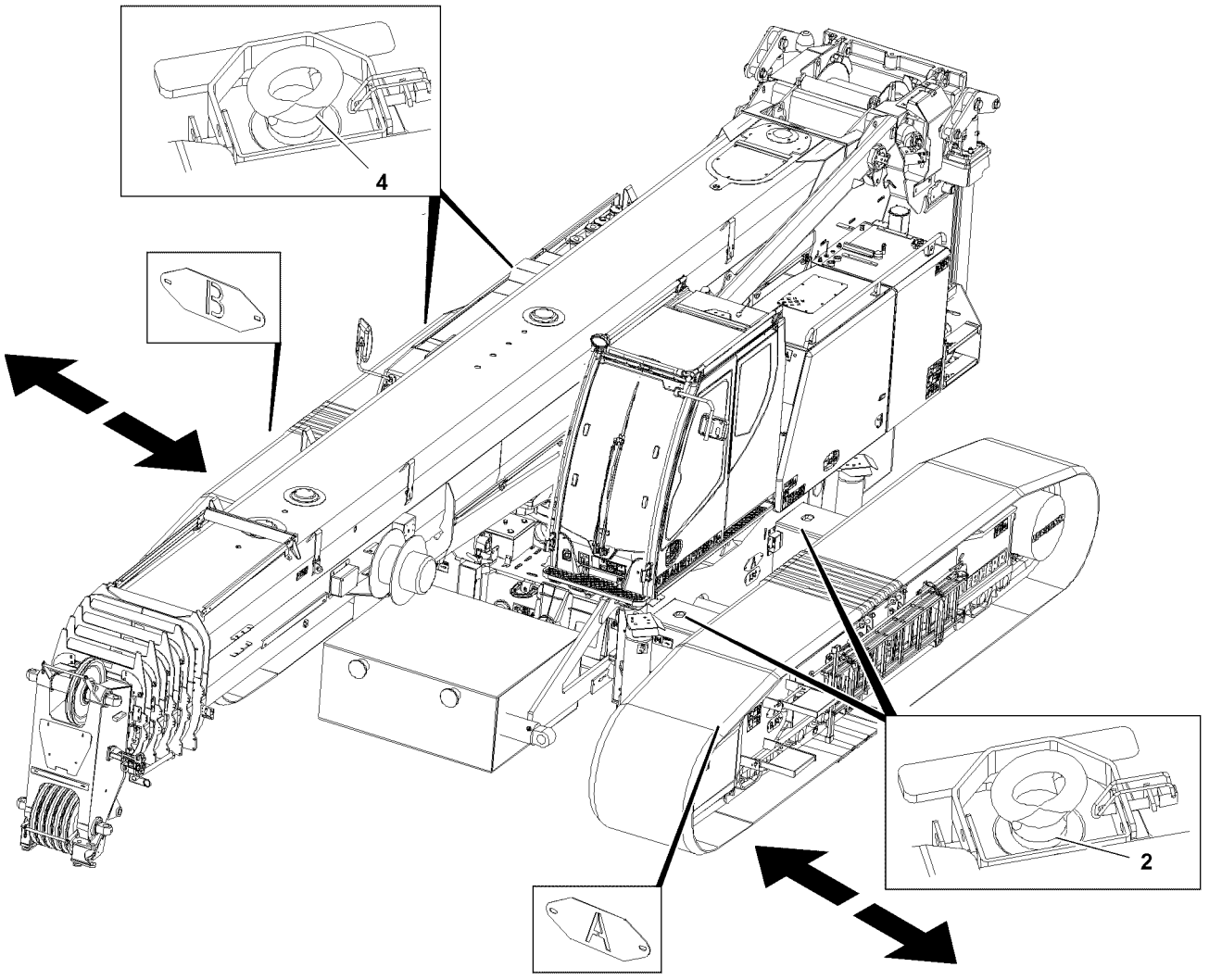

Fig.118059

LWE/LTR 1100-009/25105-02-02/en

copyright © Liebherr-Werk Ehingen GmbH 2023

4.2 Retracting the track width with the radio remote control*

NOTICE
Property damage!
If the crawler carriers are pushed out further than the outer pin points (100 %) then the crawler travel gear can be damaged.
► Push the crawler carriers out only to the point where they can be pinned on the outer pin points (100 %).
► Pay attention to the marks for the track width on the crawler carriers.

4.2.1 Retracting the crawler carrier on side „B“

NOTICE
Retracting of the crawler carrier!
► Retract the left crawler carrier „B“ **first**.
► Pay attention to the marks for the track width on the crawler carriers.

Unpinning the crawler carrier on side „B“

► Release and unpin the pins **4** on side „B“ on the front and rear.

LWE/LTR 1100-009/25105-02-02/en

copyright © Liebherr-Werk Ehingen GmbH 2023

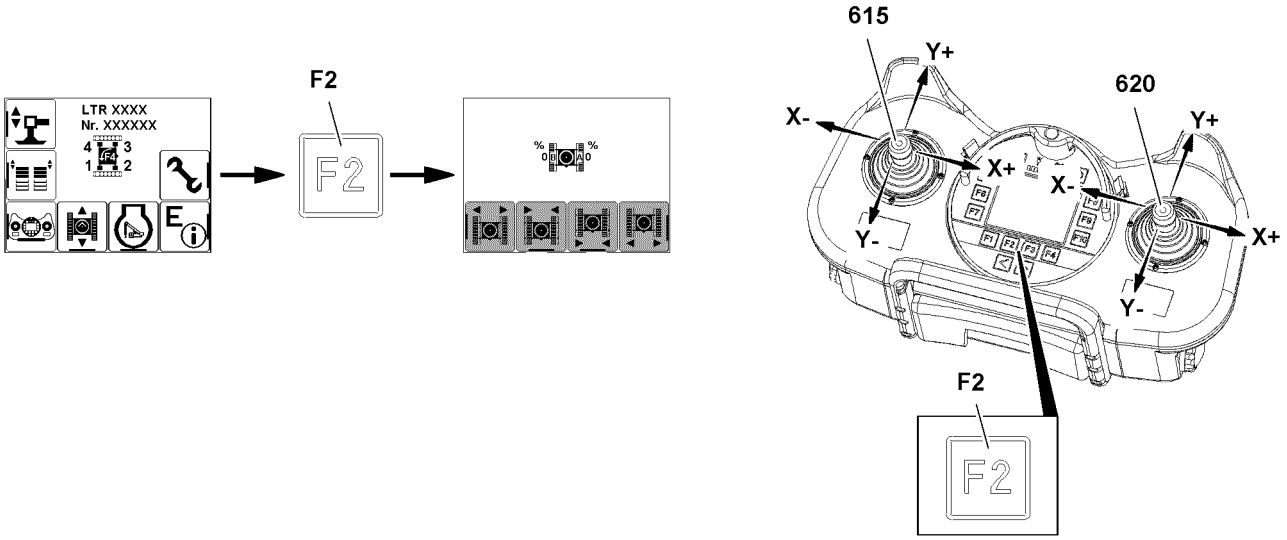

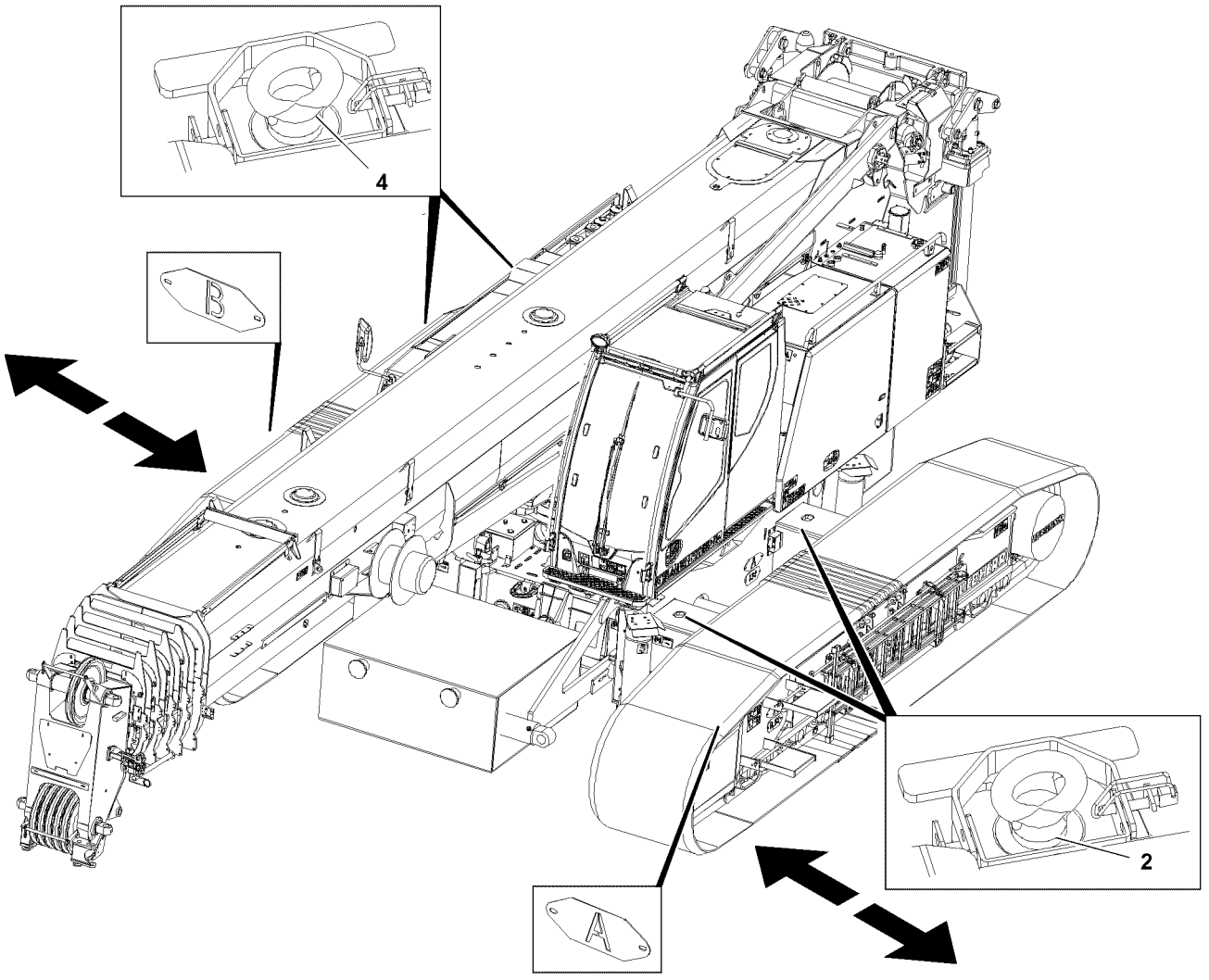

Fig.118059

LWE/LTR 1100-009/25105-02-02/en

copyright © Liebherr-Werk Ehingen GmbH 2023

Retracting the crawler carrier on side „B“

DANGER
Crushing danger to personnel due to movement of the crawler carriers!
► Make sure that no personnel is within the danger zone of the crawler carriers during „track width adjustment“.

WARNING
Crushing danger of hydraulic lines due to movement of crawler carriers!
► Do not extend the crawler carriers more than 100 %.

► Press the function key **F2**.

Result:

– The „Crawler travel gear“ menu appears.

► Retract the crawler carrier: Move the manual control lever **615** in direction „X+“ and move the manual control lever **620** simultaneously in direction „X-“.

Result:

– The crawler carrier on side „B“ is retracted.

Problem remedy
Tensioning between the crawler carrier and crawler center section!
Crawler carrier clamped.
► By additionally actuating the manual control lever **615** and manual control lever **620**, the tension is released.

Pinning the crawler carrier on side „B“

When extension condition 0 % or 50 %, 100 % is reached:
► Insert and secure the pins **4** on side „B“ on the front and rear.

LWE/LTR 1100-009/25105-02-02/en

copyright © Liebherr-Werk Ehingen GmbH 2023

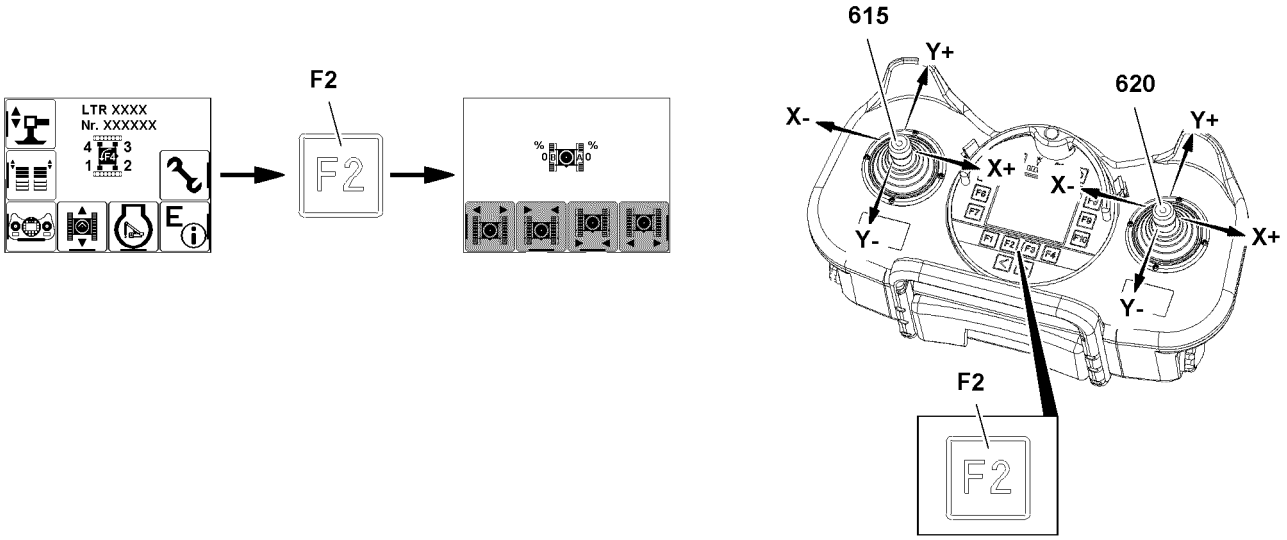

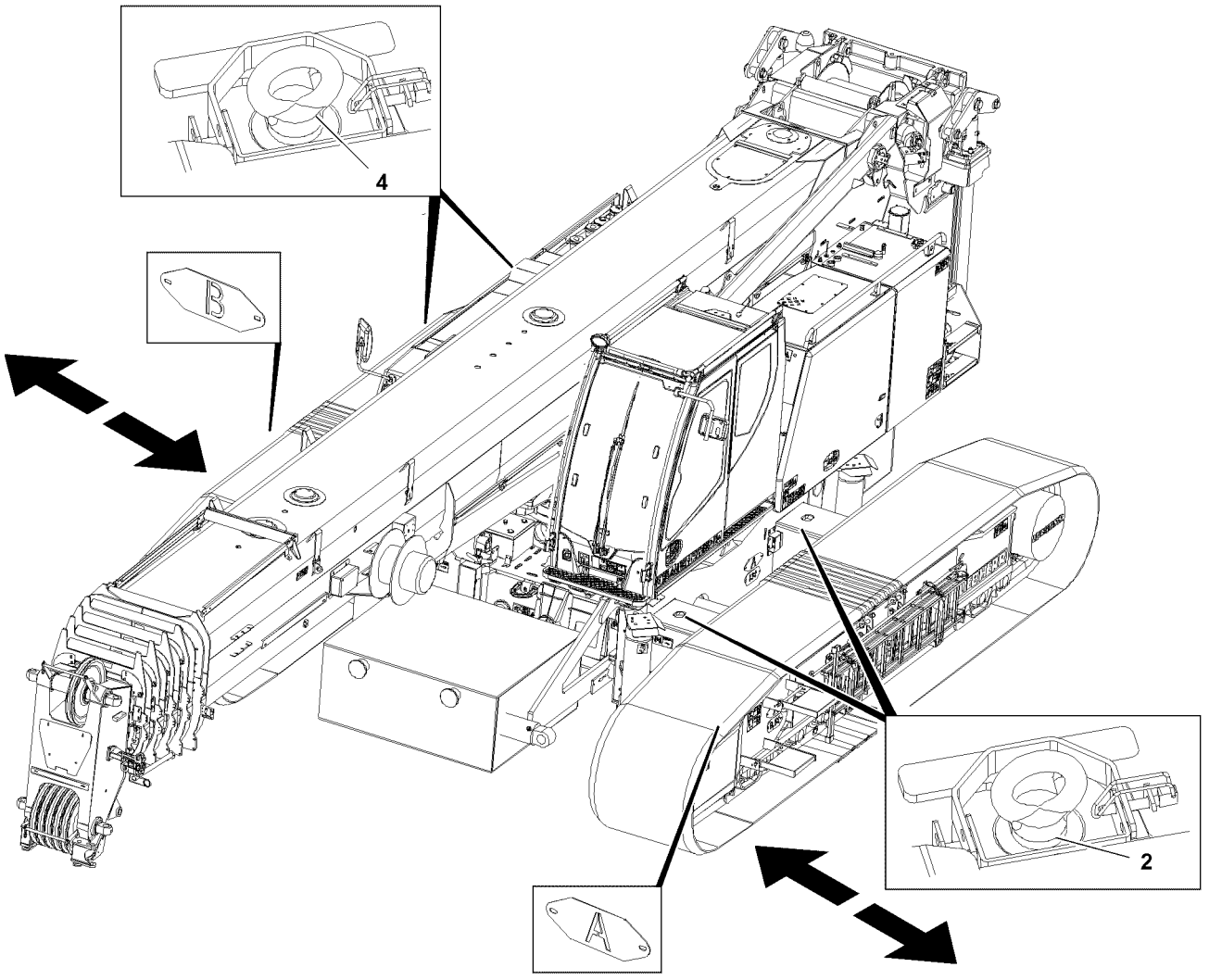

Fig.118059

LWE/LTR 1100-009/25105-02-02/en

copyright © Liebherr-Werk Ehingen GmbH 2023

4.2.2 Retracting the crawler carrier on side „A“

Unpinning the crawler carrier on side „A“

► Release and unpin the pins **2** on side „A“ on the front and rear.

Retracting the crawler carrier

DANGER
Crushing danger to personnel due to movement of the crawler carriers!
► Make sure that no personnel is within the danger zone of the crawler carriers during „track width adjustment“.

► Press the function key **F2**.

Result:

– The „Crawler travel gear“ menu appears.

► Retract the crawler carrier: Move the manual control lever **615** in direction „X+“ and move the manual control lever **620** simultaneously in direction „X-“.

Result:

– The crawler carrier on side „A“ is retracted.

Problem remedy
Tensioning between the crawler carrier and crawler center section!
Crawler carrier clamped.
► By additionally actuating the manual control lever **615** and manual control lever **620**, the tension is released.

Pinning the crawler carrier on side „A“

► Insert and secure the pins **2** on side „A“ on the front and rear.

LWE/LTR 1100-009/25105-02-02/en

copyright © Liebherr-Werk Ehingen GmbH 2023

Empty page!

LWE/LTR 1100-009/25105-02-02/en

copyright © Liebherr-Werk Ehingen GmbH 2023

4.04 Safety equipment

1	General	3
2	Crane geometry quick test	3
3	Overload protection quick test	3
4	LICCON computer system	3
5	Safety equipment on the crane	9

LWE/LTR 1100-009/25105-02-02/en

copyright © Liebherr-Werk Ehingen GmbH 2023

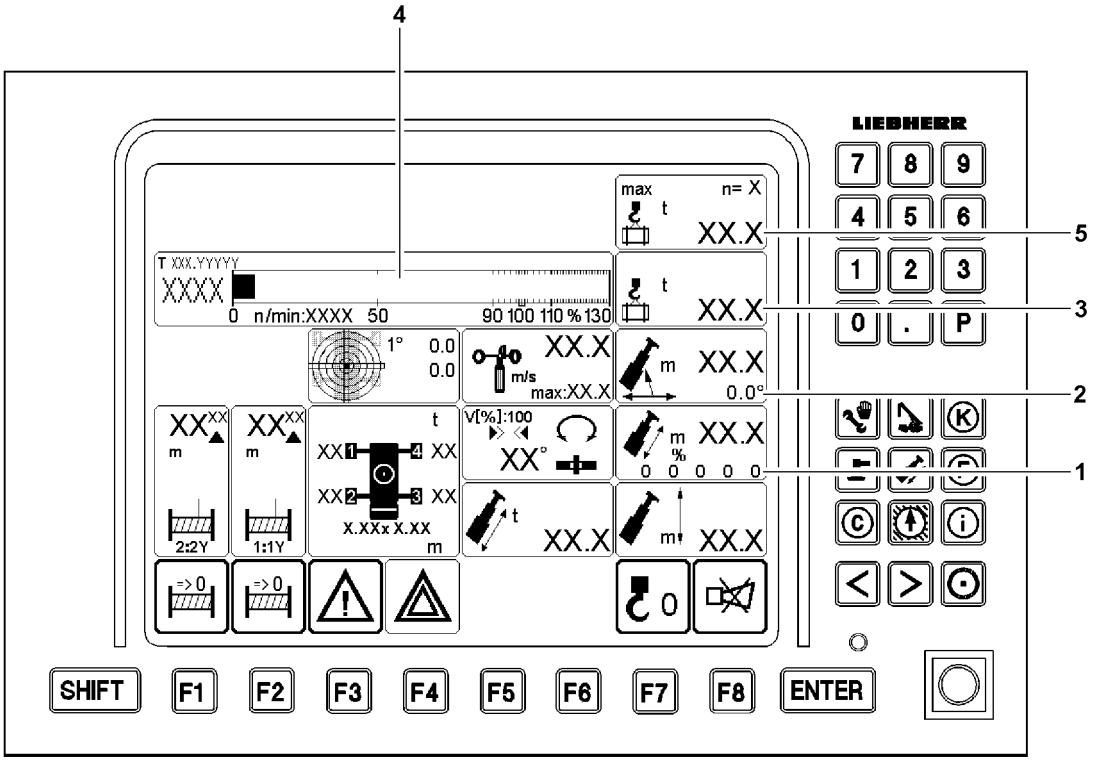

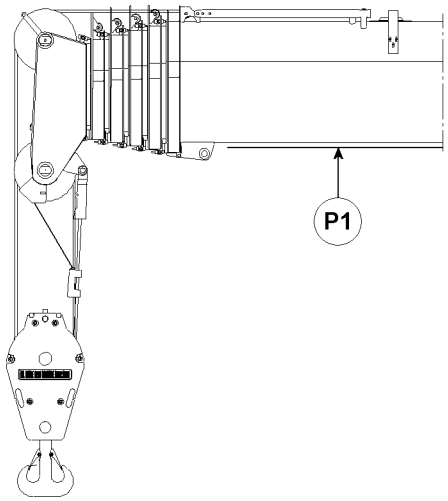

LWE/LTR 1100-009/25105-02-02/en

Fig.112697

copyright © Liebherr-Werk Ehingen GmbH 2023

1 General

The crane operator is obligated before every crane operation to ensure that the warning and safety equipment are functioning.

WARNING
Danger of accident due to defective warning and safety equipment!
Death, severe bodily injury, property damage!
► Make sure that **all** warning and safety equipment is functioning.
► Make sure that the overload protection is functioning.

2 Crane geometry quick test

Make sure that the following prerequisites are met:
– The crane is properly supported and horizontally aligned.
– No load on the hook.

Note
► The horizontal alignment of the telescopic boom can be checked with a spirit level in point **P1**.

When the telescopic boom is telescoped in all the way and horizontally aligned, the LICCON computer system must show the following:
– Telescope extension condition **1** display: all values to 0 %
– Telescopic boom angle **2** display: 0°

3 Overload protection quick test

Lift a known weight completely, such as the hook block or a counterweight plate and then set it down.

Make sure that the following prerequisite is met:
– The crane is properly supported and horizontally aligned.

The respective displayed values must be plausible:
– **3** Actual load display
– Utilization bar **4** (ratio of the actual load display **3** value to the maximum load value **5**)

4 LICCON computer system

The LICCON computer system is a system for controlling and monitoring mobile cranes. In addition to the LICCON overload protection (Load torque limiter = LMB), there are a number of application programs that can be used for controlling and monitoring the crane movements. For a detailed description see the Crane operating instructions, chapter 4.02 and chapter 4.20.

4.1 LICCON overload protection

The LICCON overload protection is programmed to **shut off** the crane movements if the permissible load momentum is exceeded (LMB-STOP).

The LICCON overload protection may not be used as an operational shut-off device for crane movements of any kind.

An overload protection cannot detect all occurring conditions by itself. Careful and diligent crane operation by the crane operator is important.

LWE/LTR 1100-009/25105-02-02/en

copyright © Liebherr-Werk Ehingen GmbH 2023

The basis for the calculation of the utilization of the crane is:
- The current data and values recorded by the crane control.
- The set up configuration entered by the crane operator.

Direct influence has, for example:
- Failure of a test device (for example: length sensor, angle sensor, pressure sensor).
- A set up configuration incorrectly entered by the crane operator.
- Environmental influences not considered (such as wind influence, ground with insufficient load bearing capability).
- Assembly and operating errors.

WARNING
Danger of accident due to assembly and operating errors!
Due to assembly and operating errors it is possible that the overload protection is not effective or shut-off is delayed!
A set up configuration that deviates from the load chart cannot be detected by the overload protection!
Environmental influences that are not considered cannot be detected by the overload protection!
Dangerous situations and accidents can result!
Personnel can be killed or seriously injured!
This can result in property damage!
► Always assemble and operate the crane carefully!

WARNING
Operational utilization of the overload protection!
If the LICCON overload protection is utilized as an operational shut-off device for crane movements, then there is a danger of accident!
For example, crane movements can be shut off abruptly or uncontrolled!
The behavior of the load and crane cannot be predicted in such a case!
Personnel can be killed or seriously injured!
This can result in property damage!
► Do not use the LICCON overload protection as an operational shut-off device for crane movements!

WARNING
Lifting of unknown loads!
The presence of the overload protection does not relieve the crane operator of his obligation for care and attention!
The crane may not be operated only according to the displays of the LICCON overload protection!
Lifting of loads with an unknown weight and unknown properties can lead to accidents!
Personnel can be killed or seriously injured!
This can result in property damage!
► Before lifting a load, its weight and properties must be known to the crane operator!
► The crane operator must check with the load chart if the crane is able to carry out the work safely!

The LICCON computer system detects various values, which result in optical and acoustical warnings if exceeded:

Within the crane operator's cab:
- Acoustic warning „Horn / short horn“ on the LICCON monitor
- Optical warning „Blinking value / display“ on the LICCON monitor

Outside the crane operator's cab:
- Acoustic warning via the horn on the turntable
- Optical warning via the warning light on the turntable

All warnings, even those that do not lead to an immediate shut-off must be noted by the crane operator and personnel within the danger zone.

The overload protection can **not** detect (examples of cases):
- The hooking of the load or the load handling equipment
- Excessive retarding forces

LWE/LTR 1100-009/25105-02-02/en

copyright © Liebherr-Werk Ehingen GmbH 2023

- Loads falling onto the rope
- Angular pull
- Driving the crane on ground that is excessively sloped
- Collapsing ground

4.1.1 Failure of the overload protection

WARNING
Crane operation without overload protection!
If the LICCON overload protection is no longer functioning properly because of one or more errors, then there is a danger of accident if crane operation is continued!
Due to operation of the crane with failed LICCON overload protection, the crane can be overloaded and collapse!
Personnel can be killed or seriously injured!
This can result in property damage!
► Crane operation without overload protection is prohibited!
► Do not restart crane operation again until the overload protection is functioning again!

A failed overload protection:
- Must be repaired before the crane can be operated again.
- May only be bypassed in emergency cases or emergency situations.

4.2 Bypassing the overload protection

The overload protection can be bypassed in case of:
- Failure of the overload protection
- In an emergency situation (according to EN 13000)

4.2.1 Bypassing the overload protection: Failure of the overload protection

Note
► This does **not** apply for cranes with a CE-mark and configuration according to EN 13000!

To bring the crane to a safe condition after failure of a component required for the overload protection, it may be necessary to bypass the overload protection.

WARNING
Bypassed overload protection!
If the overload protection is bypassed, crane movements are no longer monitored!
The crane can be overloaded and collapse!
Personnel can be killed or seriously injured!
This can result in property damage!
► Only carry out crane movements within the range of the load chart as well as the erection / take-down charts!

4.2.2 Bypassing the overload protection: Overload protection failure (according to EN 13000)

To bring the crane to a safe condition after failure of a component required for the overload protection, it may be necessary to bypass the overload protection.

With the specification that:
- The bypass is automatically reset at engine stop.
- The bypass is automatically reset after no later than 30 minutes.
- The bypass of the overload protection limits the working speed to no more than maximum 15 %.

LWE/LTR 1100-009/25105-02-02/en

copyright © Liebherr-Werk Ehingen GmbH 2023

WARNING
Bypassed overload protection!
If the overload protection is bypassed, crane movements are no longer monitored!
The crane can be overloaded and collapse!
Personnel can be killed or seriously injured!
This can result in property damage!
► Only carry out crane movements within the range of the load chart as well as the erection / take-down charts!

4.2.3 Bypassing the overload protection: Emergency situation (according to EN 13000)

In an emergency situation, it may be necessary to bypass the overload protection.

With the specification that:
– The bypass is automatically reset at engine stop.
– The bypass is automatically reset after no later than 30 minutes.
– The bypass of the overload protection limits the working speed to no more than maximum 15 %.

DANGER
Overload of the crane!
After a bypass of the overload protection, the crane movements are no longer shut off in case of a danger of overload of the crane!
An overload of the crane can result in severe damage or collapse!
Personnel can be killed or seriously injured!
This can result in property damage!
► Do not subject the crane to such a load that it collapses!
► Clear and secure the danger zone of the crane!

Note
► Location of the bypass device, see the Crane operating instructions, chapter 4.01 and chapter 4.02.

LWE/LTR 1100-009/25105-02-02/en

copyright © Liebherr-Werk Ehingen GmbH 2023

Empty page!

LWE/LTR 1100-009/25105-02-02/en

copyright © Liebherr-Werk Ehingen GmbH 2023

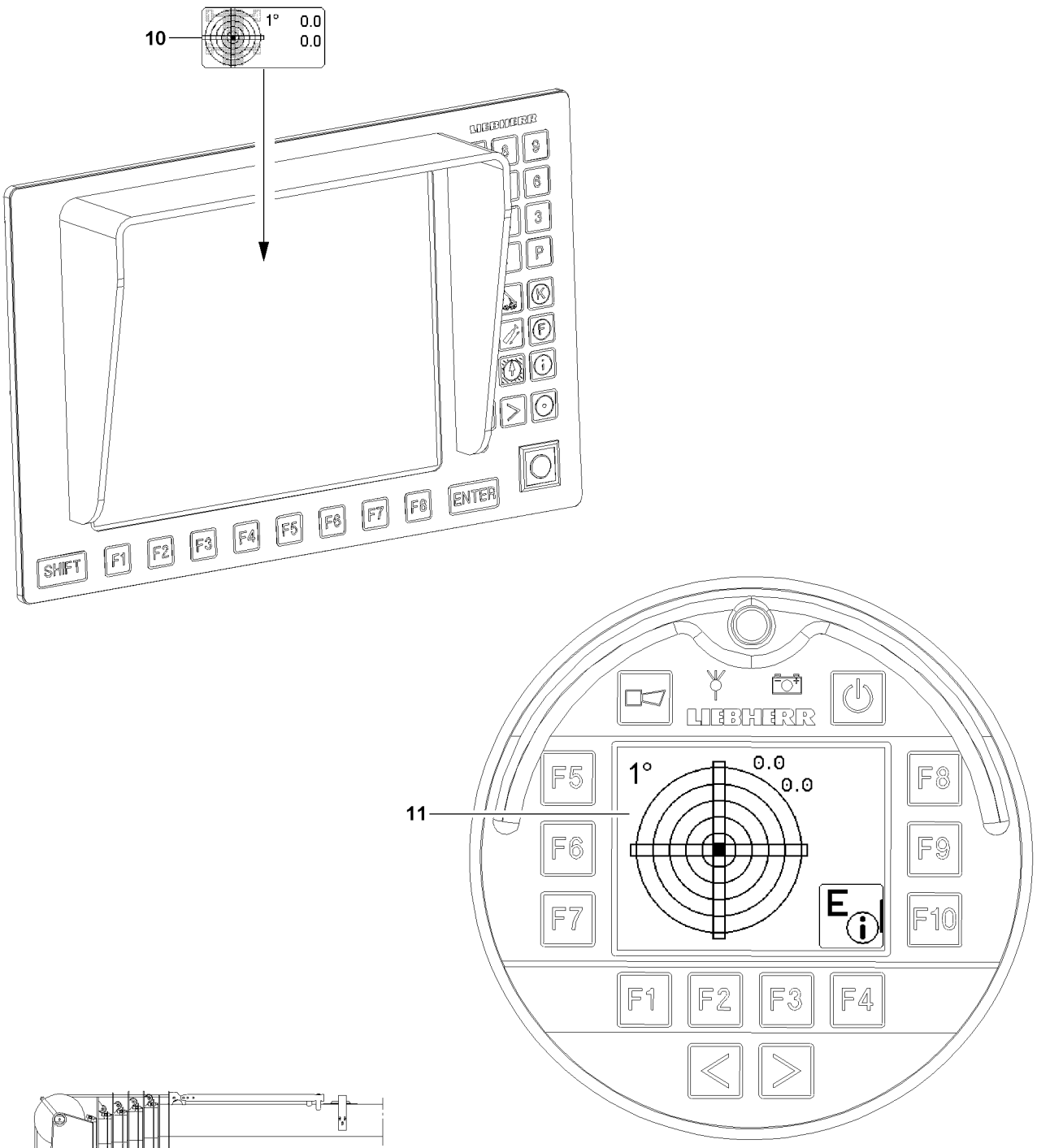

Fig.112699

LWE/LTR 1100-009/25105-02-02/en

copyright © Liebherr-Werk Ehingen GmbH 2023

5 Safety equipment on the crane

5.1 Leveling instruments

To ensure the working safety of the crane, the crane must be aligned horizontally on level ground with a sufficient load bearing capacity. Alignment of the crane, see the Crane operating instructions, chapter 3.05.

The current values are displayed continuously in the leveling instruments, see the Crane operating instructions, chapter 4.02 and chapter 5.31.

WARNING
Defective leveling instruments!
If the leveling instruments are defective, there is a danger that the crane is not horizontally aligned.
The crane can topple over.
Death, severe bodily injuries, property damage.
► Fix or replace the defective leveling instruments.
► Align the crane horizontally to 0.0° during the support procedure.

5.1.1 Leveling instruments in the LICCON monitor

The incline of the crane is shown in the Incline icon **10** graphically as well as numerically, see the Crane operating instructions, chapter 3.05 and 4.02.

5.1.2 Leveling instrument in the BTT

The incline of the crane is shown in the Incline display menu **11** graphically as well as numerically, see the Crane operating instructions, chapter 3.05 and 5.31.

5.1.3 Leveling instrument quick test

Make sure that the following prerequisites are met:
– The crane is properly supported and horizontally aligned.
– No load on the hook.

For a horizontally aligned crane:
– The telescopic boom must be aligned horizontally at telescopic boom angle 0° over the entire slewing range of the turntable.

Note
► The horizontal alignment of the telescopic boom can be checked with a spirit level in point **P1**.

LWE/LTR 1100-009/25105-02-02/en

copyright © Liebherr-Werk Ehingen GmbH 2023

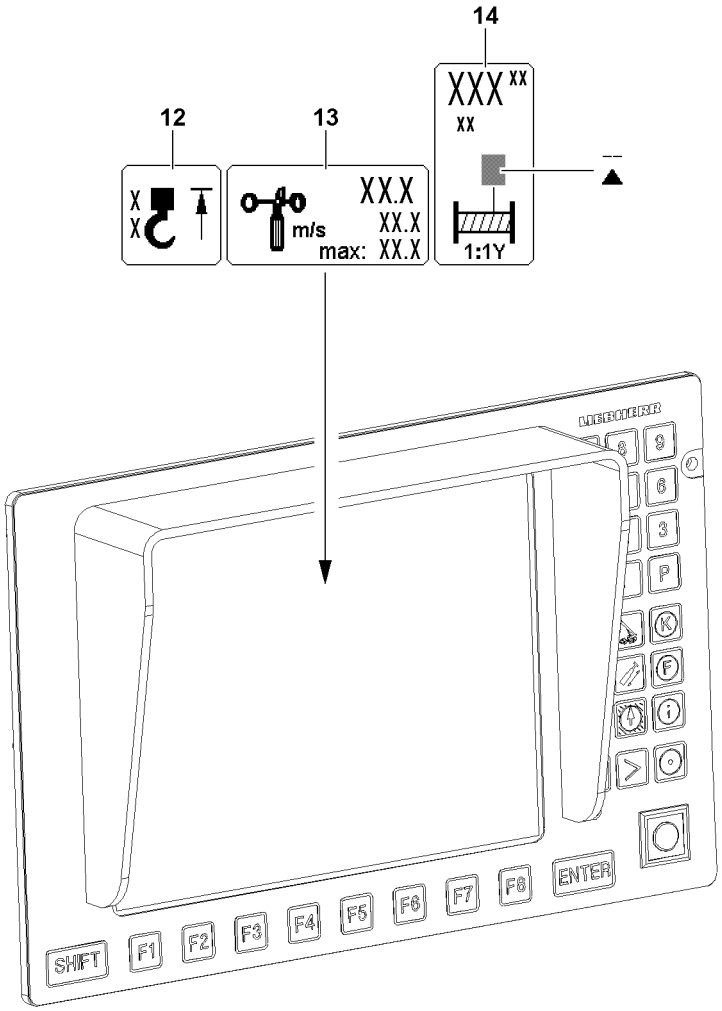

LWE/LTR 1100-009/25105-02-02/en

Fig.112700

copyright © Liebherr-Werk Ehingen GmbH 2023

5.2 Acoustic and optical warning devices

Note
► Overview of acoustic and optical warnings, see the Crane operating instructions, chapter 4.20.

– The acoustic and optical warning devices must be functioning and operational.
– Take care of any possible detriments in function, such as snow on the warning lights.

5.3 „Hoist top“ hoist limit switch

The hoist limit switch is intended to prevent the hook block from running against the boom head.

Before every crane operation, the function of the hoist limit switch must be checked by running up against the switch weight with the hook block.

For assembly purposes and in emergency cases, the hoist limit switch can be bypassed, see the Crane operating instructions, chapter 4.20.

WARNING
Falling load and property damage!
If the hoist limit switch is defective, there is danger that the hook block or the load hook is pulled against the pulley head!
Falling load and property damage can result!
Personnel can be severely injured or killed!
► Crane operation without or with a defective hoist limit switch is prohibited!
► Repair or replace a defective hoist limit switch!

The hoist limit switch must actuate when the hoist limit switch weight is lifted by the load hook / hook block:
– When the hoist limit switch is actuated, the „Hoist top“ icon **12** appears on the operating screen. The „Spool up winch“, „Luff telescopic boom down“ and „Telescope the telescopic boom out“ crane movements are shut off.

5.3.1 Hoist limit switch quick test

When the hoist limit switch weight is lifted:
– The „Hoist top“ icon **12** must appear on the operating screen.
– The actuated crane movement must be shut off.

LWE/LTR 1100-009/25105-02-02/en

copyright © Liebherr-Werk Ehingen GmbH 2023

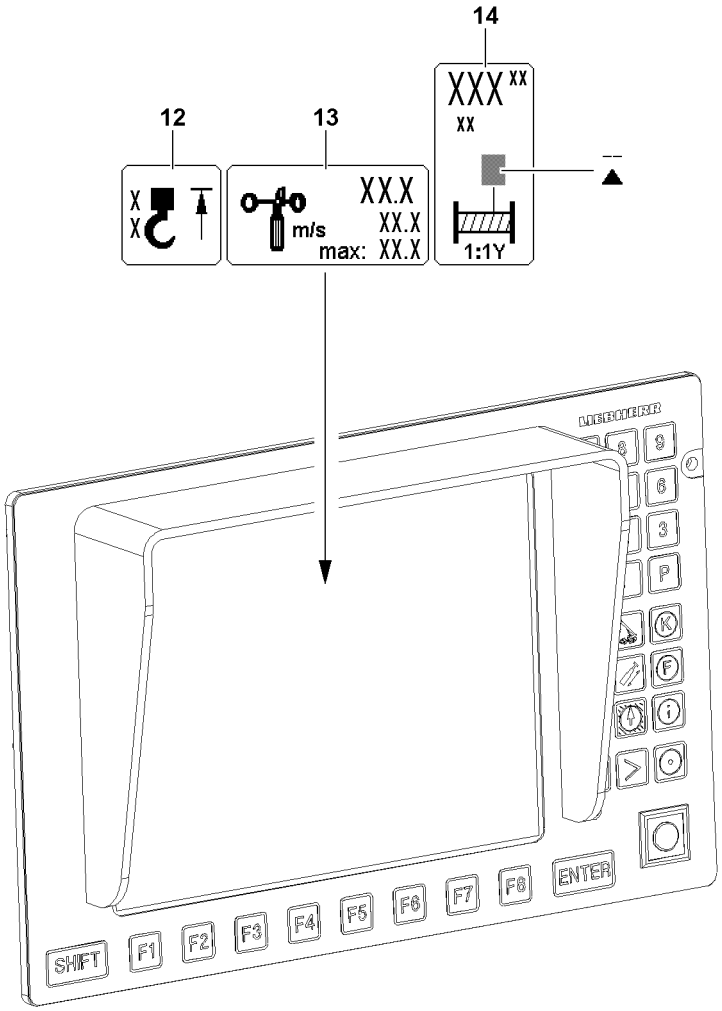

LWE/LTR 1100-009/25105-02-02/en

Fig.112700

copyright © Liebherr-Werk Ehingen GmbH 2023

5.4 Wind speed sensor

The wind warning by the wind speed sensor appears on the operating screen of the LICCON computer system.

WARNING
The crane can topple over!
If the crane is operated with a defective wind speed sensor, then there is the danger that excessively high wind speeds are not recognized!
The crane can topple over!
Personnel can be killed or seriously injured!
This can result in property damage!
► Crane operation with a defective wind speed sensor is prohibited!
► Repair / replace a defective wind speed sensor!

If wind occurs, then the wind speed sensor must report its speed:
– If the actual wind speed value exceeds the displayed maximum value, the value in the „Wind speed“ icon **13** starts to blink and the „Short horn“ acoustic alarm sounds on the LICCON monitor. But there is **no shut-off** of crane movements.

5.4.1 Wind speed sensor quick test

When blowing in the cups:
– The wind speed sensor must start to move.
– An actual value must be displayed in the „Wind speed“ icon **13**.

5.5 Winch spooled out limit switch

The winch speed sensor is adjusted in the factory. If used properly, the winch speed sensor will not need readjustment.

Note
Minimum rope coils on the shut off point!
► For the winches, a minimum of 4 rope coils are set on the winch speed sensor.

WARNING
The load can fall off!
If the winch speed sensor does not turn off when four minimum rope coils are reached, then there is the danger that the rope lock is pulled out and the load falls down when the rope is spooled out further!
Falling load can cause the crane to sway and / or topple over!
Personnel can be severely injured or killed!
This can result in property damage!
► Crane operation with an incorrectly or non-adjusted winch is strictly prohibited!
► If the winch falls below the four minimum rope coils, have the winch speed sensor readjusted by **Liebherr Customer Service**!

LWE/LTR 1100-009/25105-02-02/en

copyright © Liebherr-Werk Ehingen GmbH 2023

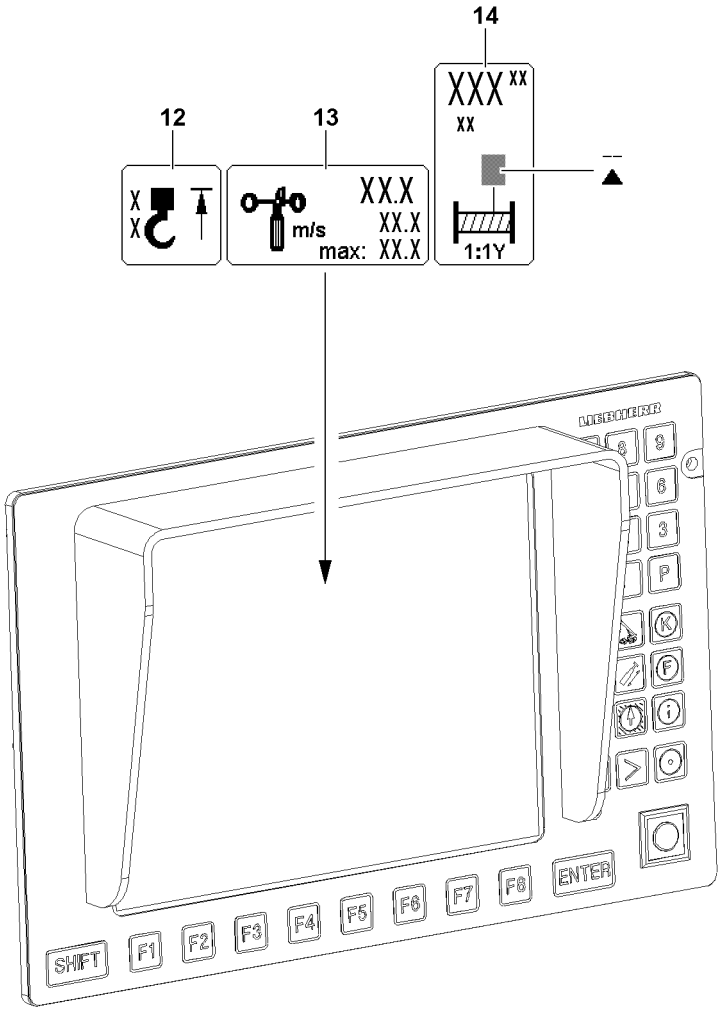

LWE/LTR 1100-009/25105-02-02/en

Fig.112700

copyright © Liebherr-Werk Ehingen GmbH 2023

WARNING
The load can fall off!
If the rope is not spooled up or out properly, then the adjustment of the winch speed sensor is changed!
If the adjustment of the winch speed sensor has changed, there is the danger that the minimum rope coils are fallen below!
The load call fall down!
Falling load can cause the crane to sway and / or topple over!
Personnel can be severely injured or killed!
This can result in property damage!
- ► **Never** pull the end of rope under the winch by spooling up the rope winch!
- ► **Never** pull the rope from the „stationary“ winch!
- ► If you suspect that the winch speed sensor adjustment has changed: Check the shut-off without a load on the hook!

The Winch spooled out limit switch must shut off when the minimum rope coils for the winch are reached:
- – When the minimum rope coil for the winch is reached, then the „Winch spooled out“ display appears in the winch icon **14**. The „spool winch out“ spool out crane movement is shut off.

5.5.1 Winch limit switch quick test

When the minimum rope coil is reached:
- – The „Winch spooled out“ display must appear in the winch icon **14**.
- – The „Spool winch out“ crane movement must be shut off.

LWE/LTR 1100-009/25105-02-02/en

copyright © Liebherr-Werk Ehingen GmbH 2023

5.6 EMERGENCY OFF switch

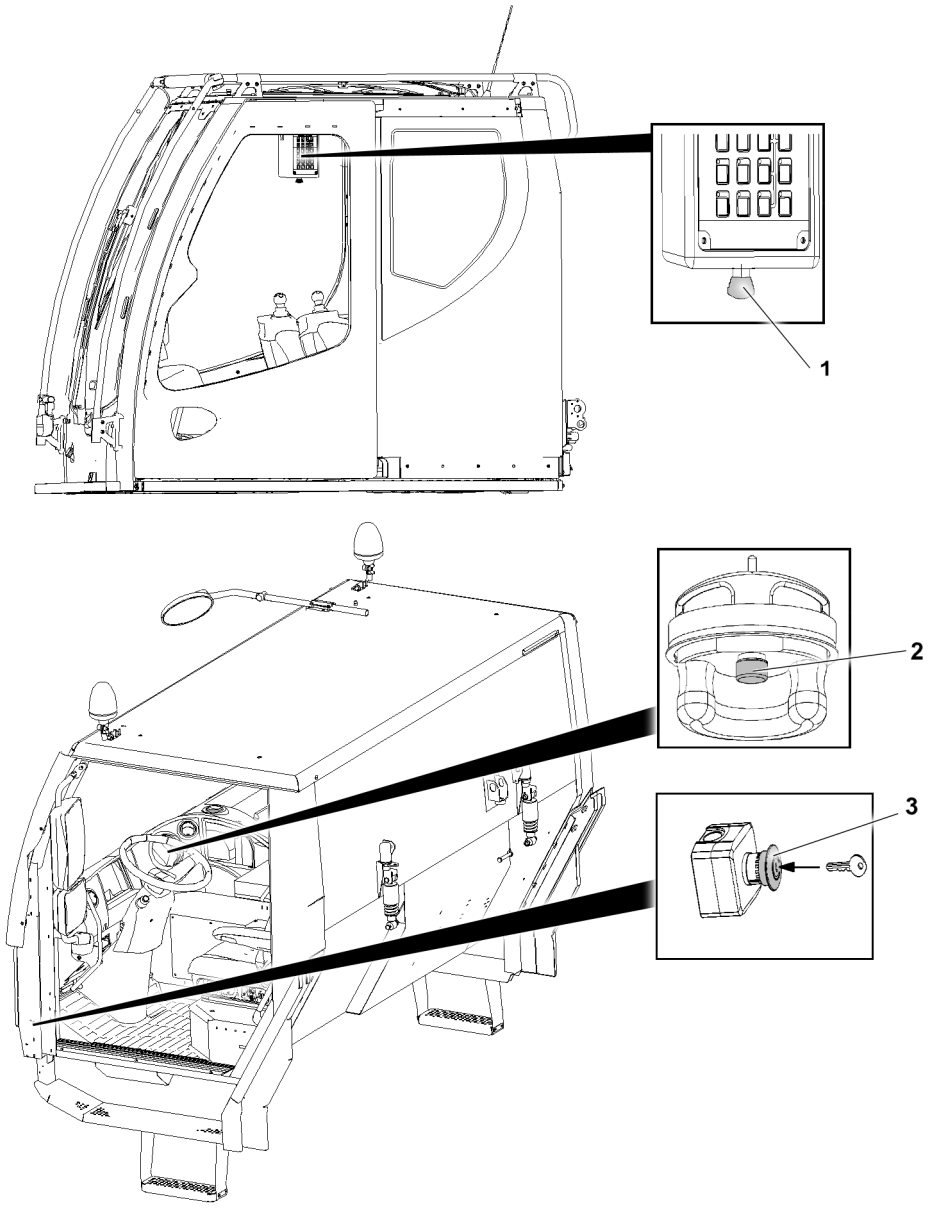

Fig.162713: EMERGENCY OFF switch

1 Crane cab EMERGENCY OFF switch
2 BTT EMERGENCY OFF switch
3 Driver's cab EMERGENCY OFF switch

By pressing the EMERGENCY OFF switch, every performed movement is stopped immediately.

The EMERGENCY OFF switch **2** is activated only when working with the BTT.

DANGER
EMERGENCY OFF switch defective!
The movement can **not** be stopped by pressing the EMERGENCY OFF switch.
► Only perform the operation with an operational EMERGENCY OFF switch.

LWE/LTR 1100-009/25105-02-02/en

copyright © Liebherr-Werk Ehingen GmbH 2023

DANGER
Extreme load of the machine under load with emergency stop!
The crane can topple over, failure of the structure.
► Use the emergency stop only for the emergency shut-off of the machine.
► Perform a visual inspection of the damage to the crane.

DANGER
Impermissible unlocking of the emergency stop!
The crane can topple over, failure of the structure.
► Clarify and remedy the cause of the emergency stop before unlocking.

NOTICE
Impermissible pressing of the emergency stop!
Damage to the exhaust aftertreatment system.
► Use the emergency stop only for the emergency shut-off of the machine.

After actuating an EMERGENCY OFF switch on the driver's cab **3** the release is reached with a key and subsequently by briefly turning the ignition „Off-on".

After actuation of the EMERGENCY OFF switch on the BTT **2**, the release is obtained by turning and unlocking the knob and subsequently turning the ignition „Off - On" momentarily.

After actuation of the EMERGENCY OFF switch on the crane cab **1**, the release is obtained by turning and unlocking the knob and subsequently turning the ignition „Off - On" momentarily.

5.7 Control release

The control release can be made via three switches:
– **301** Seat contact button
– Master switch **MS1** button **401** (right control panel)
– Master switch **MS2** button **421** (left control panel)

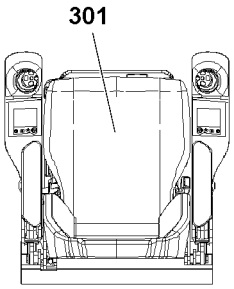

Fig.124225: Seat contact button

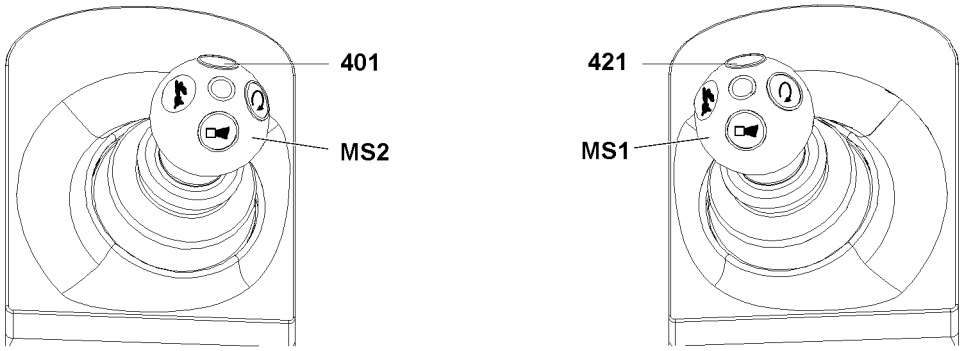

Fig.124227: Button 401 and button 421

copyright © Liebherr-Werk Ehingen GmbH 2023

The seat contact button **301** shuts down the crane control as soon as the crane operator gets up from the seat.

This prevents unintended crane movements by accidentally touching the master switch, for example when getting in or out of the cab.

The button **401** and button **421** bypass the seat contact button **301** if it becomes necessary for the operator to work standing up.

5.8 Catch bar system

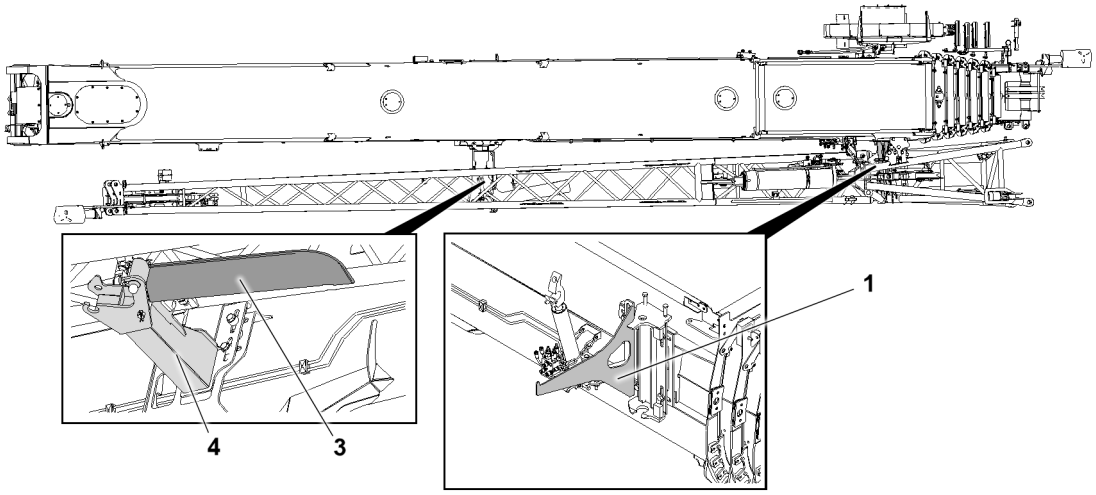

Fig.162711: Catch bar system

Only for certain cranes.

The catch bar system prevents the folding jib from falling down in case of an assembly error or a disassembly error.

The catch bar system consists of
- **1** Catch bar
- **3** Swing bracket
- **4** Bracket

Make sure that the catch bar **1** system is available and is **not** damaged.

WARNING
Defective or unavailable catch bar system!
The folding jib can fall down.
► Assemble the folding jib only if the catch bar system is fully functional.

After a catch procedure with the catch bar system, contact customer service of Liebherr-Werk Ehingen GmbH to coordinate further procedure.

LWE/LTR 1100-009/25105-02-02/en

copyright © Liebherr-Werk Ehingen GmbH 2023

5.9 Catch bar-plus system

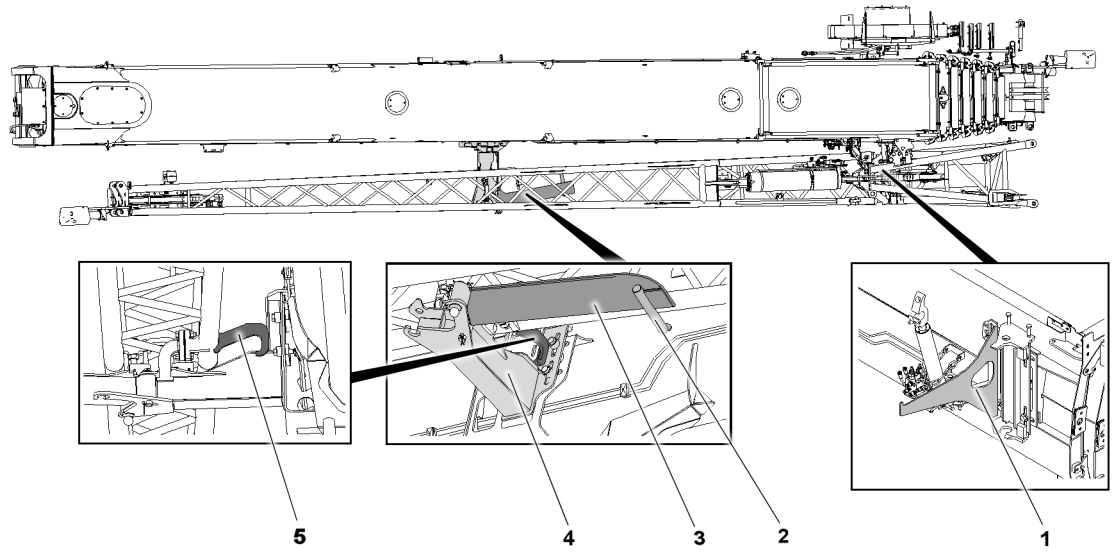

Fig.162712: Catch bar-plus system

Only for certain cranes.

The catch bar plus system prevents the folding jib from falling down in case of an assembly error or a disassembly error.

The catch bar plus system consists of
- **1** Catch bar
- **2** Rod
- **3** Swing bracket
- **4** Bracket
- **5** Hook

The catch bar plus system consists of the following in addition to the catch bar system
- **2** Rod
- **5** Hook

Make sure that the catch bar plus system is available and is **not** damaged.

WARNING
Defective or unavailable catch bar plus system!
The folding jib can fall down.
► Assemble the folding jib only if the catch bar plus system is fully functional.

After a catch procedure with the catch bar plus system, contact customer service of Liebherr-Werk Ehingen GmbH to coordinate the further procedure.

5.10 Hydraulic safety valves

A differentiation is made between three types:
- Pressure limiting valves
  - Prevent pipe and hose bursts due to excessive pressure.
- Shut off valves
  - Control and secure the luffing cylinder and the support cylinders.
- Check valves
  - Control and secure the flow direction.

LWE/LTR 1100-009/25105-02-02/en

copyright © Liebherr-Werk Ehingen GmbH 2023

5.11 Boom system limit switch

WARNING
Crane movement stopped by block limit switch!
The load forces cannot be shut down and calculated by the control!
The crane can be overloaded and topple over!
Death, severe bodily injury, property damage!
► Do **not** use the hoist limit switch as an operational shut off device!
► Do not actuate the block limit switches!

5.12 Telescopic boom limit switch

On the telescopic boom, the limit switches monitor the „steepest position“ and the „lowest position“.

5.13 Luffing accessory limit switch

Note
► Only for cranes with a luffing accessory.

For operation with a luffing accessory (for example a luffing lattice jib), limit switches monitor the „steepest position“ and the „lowest position“.

5.14 Gravity actuated relapse retainer

Note
► Only for cranes with a luffing accessory.

The gravity actuated relapse retainer (oscillation guard / flap / relapse support) prevents the luffing accessory from tipping to the rear in the „steepest position“.

WARNING
Hard to move gravity actuated relapse retainer (oscillation guard / flap / relapse support)!
Shut-off and limit functions can be disabled!
The crane can topple over!
Death, severe bodily injury, property damage!
► Before erecting the crane, check the relapse retainer for easy movement!
► Crane operation with a hard to move relapse retainer is prohibited!

LWE/LTR 1100-009/25105-02-02/en

copyright © Liebherr-Werk Ehingen GmbH 2023

4.05 Crane operation

1	Description	2
2	Safety instructions	2
3	Prerequisites for crane operation	3
4	Master switch	3
5	Pinning the crane superstructure	8
6	Master switch assignment	10
7	Luffing	10
8	Lifting / lowering	12
9	Turning	16
10	Telescoping	22

LWE/LTR 1100-009/25105-02-02/en

copyright © Liebherr-Werk Ehingen GmbH 2023

1 Description

With the crane various crane movements can be carried out. Through these crane movements, the load can be taken up, positioned and placed down exactly.

The following crane movements are possible:
- Luffing
- Lifting / lowering
- Turning
- Telescoping

The crane movements are described in the following sections.

2 Safety instructions

WARNING
Operating condition on crane is **not** safe!
Crane can topple over, death, severe property damage in crane.

Only when the crane is in a safe operating condition:
► Start crane operation.

Solely when all safety equipment is functioning:
► Start crane operation.

The safety equipment is described in the Crane operating instructions, chapter 2.04.

Additional notes and danger notes for crane operation are described in Crane operating instructions, chapter 2.04 and chapter 4.08.

Note
► Observe and adhere to the data in Crane operating instructions, chapter 2.04 and chapter 4.08.

WARNING
Personnel in the danger zone!
Crushing danger, death, severe bodily injuries.
► Monitor the danger zone.
► Make sure that there is **no** personnel in the danger zone.
► Before initiating a crane movement, give a warning signal (horn).

WARNING
Obstacle in working range!
Property damage on crane and on obstacle.
► Monitor the working range.
► Make sure that there are **no** obstacles within the working area of the crane and the crane components.

The crane movements have a direct effect on the hoist rope.

NOTICE
Collision of the hook block with the boom head!
► Equalize the crane movements by spooling the hoist winch.

The crane driver must evaluate constantly if the displayed values shown on the LICCON monitor can be correct. The crane driver may not rely blindly on the LICCON computer system but must think for himself and must recognize a possibly occurring error or overload condition.

LWE/LTR 1100-009/25105-02-02/en

copyright © Liebherr-Werk Ehingen GmbH 2023

WARNING
Error on the LICCON monitor display!
Death, severe bodily injury, property damage.
► Monitor the displays in LICCON monitor.
► Monitor the utilization conditions and forces.
► Observe and adhere to the data in the Crane operating instructions, chapter 4.02.

3 Prerequisites for crane operation

Make sure that the following prerequisites are met:
– The ground is able to carry the weight of the crane and the load handling equipment.
– The crane is supported and horizontally aligned according to the data in the load chart.
– The counterweight is installed and secured according to the data in the load chart.
– The hook block is correctly reeved in according to the reeving plan.
– The step at the entry of the crane operator's cab is moved out.
– The engine is running.
– The set up configuration has been entered in the LICCON computer system. All displays are within a permissible range.
– All safety equipment has been set according to the data in the load chart.
– **No** persons are in the danger zone.
– **No** obstacles are in the working range.

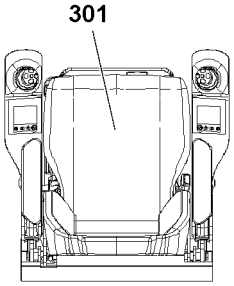

Fig.124225: Seat contact button

To release a crane movement, the seat contact button **301** must be actuated. As soon as the crane driver sits down on the crane seat, the seat contact button **301** is actuated.

► Sit down on the driver's seat and actuate the seat contact button **301**.

Result:

– Crane movements can be carried out.

4 Master switch

Master switch **MS1** and master switch **MS2** each have four buttons and a vibration sensor. The buttons on the master switch **MS1** and master switch **MS2** have the same functions.

The following functions can be regulated with the buttons:
– Vibration sensor
– Warning signal
– Bypassing the seat contact button
– Rapid gear
– Engine rpm lock

LWE/LTR 1100-009/25105-02-02/en

copyright © Liebherr-Werk Ehingen GmbH 2023

4.1 Giving a warning signal

Fig.124226: Giving a warning signal

► Press the button **425** on the master switch **MS1**.
or
Press the button **405** on the master switch **MS2**.

Result:

– Warning signal (horn) sounds.

4.2 Bypassing the seat contact button

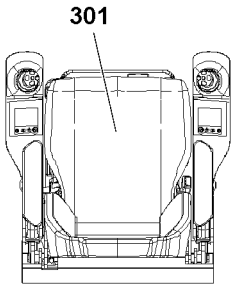

Fig.124225: Seat contact button

If the crane driver must work while standing, the seat contact button **301** must be bypassed.

Make sure that the following prerequisite is met:
– The seat contact button **301** is **not** actuated.

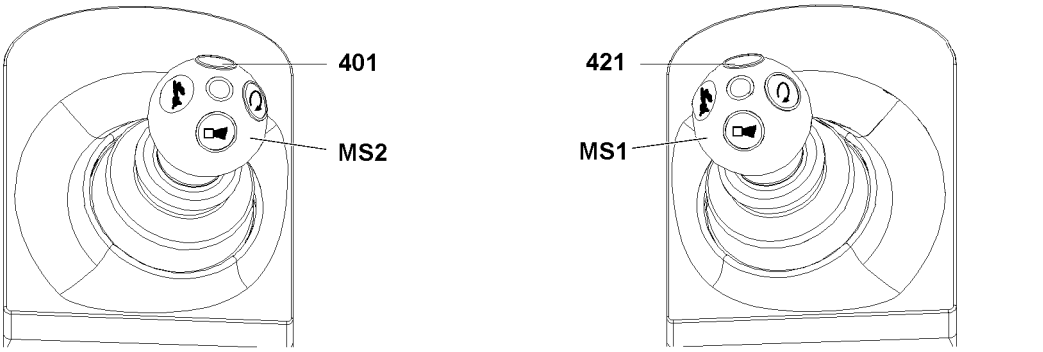

Fig.124227: Bypassing the seat contact button

► Press the button **421** on the master switch **MS1**.
or
Press the button **401** on the master switch **MS2**.

LWE/LTR 1100-009/25105-02-02/en

copyright © Liebherr-Werk Ehingen GmbH 2023

Result:

– The seat contact button **301** is bypassed.
– Crane movements can be carried out.

4.3 Turning the vibration sensor on / off

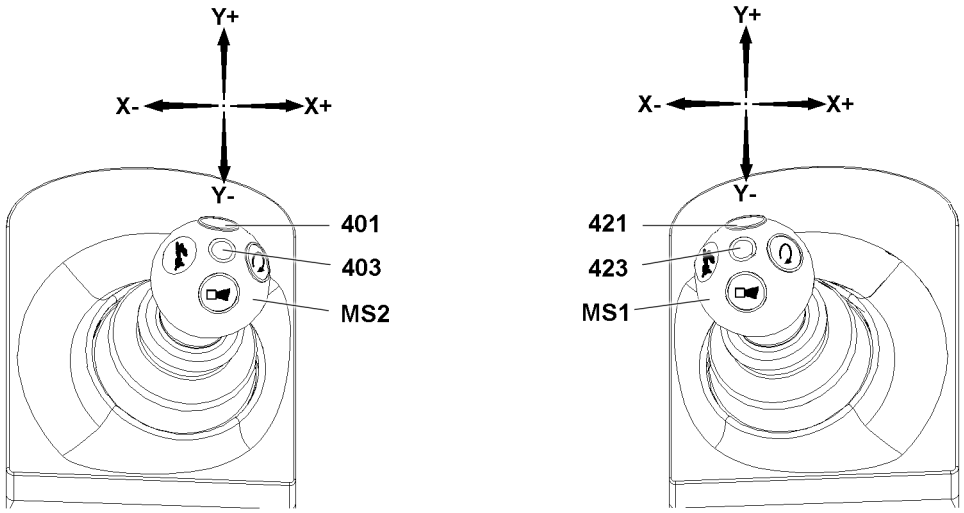

Fig.125241: Vibration sensor

By engaging the vibration sensor, a crane movement can be detected through the vibration of the master switch. The vibration sensor is only actuated when the movement is carried out. The further the master switch is deflected, the faster cycles the vibration sensor.

The vibration sensor can only be assigned to one deflection axis (X-axis or Y-axis). To activate the vibration sensor for the other deflection axis, the vibration sensor must be turned off first. Then the vibration sensor can be assigned to the other deflection axis.

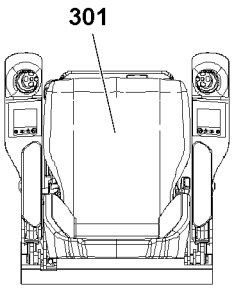

Fig.124225: Seat contact button

The vibration sensor can only be engaged when the seat contact button **301** is actuated.

Make sure that the following prerequisite is met:
– The seat contact button **301** is actuated.

4.3.1 Winch 1

► Press the button **421**.

Result:

– Vibration sensor **423** is turned on.

► Deflect the master switch **MS1** in Y-axis.

LWE/LTR 1100-009/25105-02-02/en

copyright © Liebherr-Werk Ehingen GmbH 2023

Result:

– Vibration sensor winch 1 is activated.

If the vibration sensor is to be turned off:
► Press the button **421** again.

Result:

– Vibration sensor **423** is turned off.

4.3.2 Winch 2 or slewing gear

► Press the button **401**.

Result:

– Vibration sensor **403** is turned on.

► Deflect the master switch **MS2** in Y-axis.

Result:

– Vibration sensor winch 2 is activated.

► Deflect the master switch **MS2** in X-axis.

Result:

– Vibration sensor slewing gear is activated.

If the vibration sensor is to be turned off:
► Press the button **401** again.

Result:

– Vibration sensor **403** is turned off.

4.4 Rapid gear

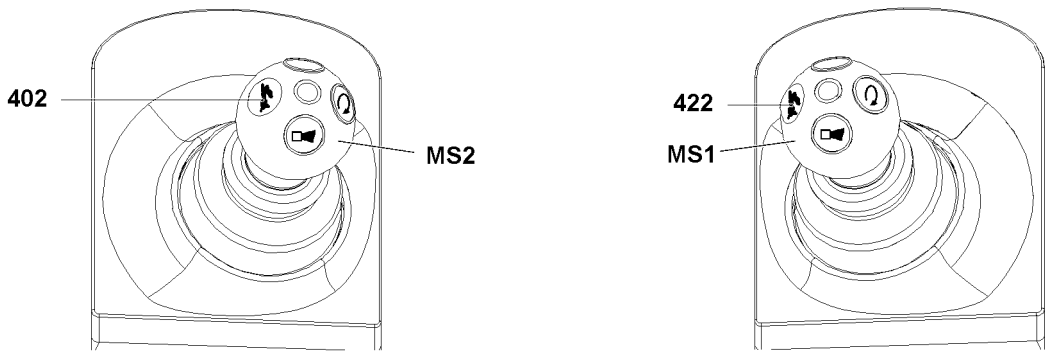

Fig.124229: Rapid gear

Using the button **402** or the button **422** will increase the speed of the crane movement for luffing, telescoping and lifting / lowering.

WARNING
Rapid gear engaged at 1-strand to 3-strand reeving!
Load can oscillate.

If the crane is loaded to more than 50 % of its maximum permitted load carrying capacity for the respective boom radius:
► Do **not** engage the rapid gear.

LWE/LTR 1100-009/25105-02-02/en

copyright © Liebherr-Werk Ehingen GmbH 2023

4.4.1 Engaging the rapid gear

► Press the button **422** on the master switch **MS1**.
or
Press the button **402** on the master switch **MS2**.

Result:

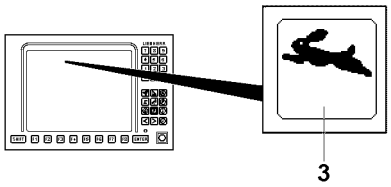

*Fig.124536: Rapid gear icon **3***

– Rapid gear is engaged.
– The Rapid gear **3** icon appears on the LICCON monitor.

4.4.2 Turning the rapid gear off

When the rapid gear is turned on:
► Press the button **422** on the master switch **MS1**.
or
Press the button **402** on the master switch **MS2**.

Result:

– Rapid gear is turned off.
– The Rapid gear **3** icon turns off in the LICCON monitor.

4.5 Engine rpm

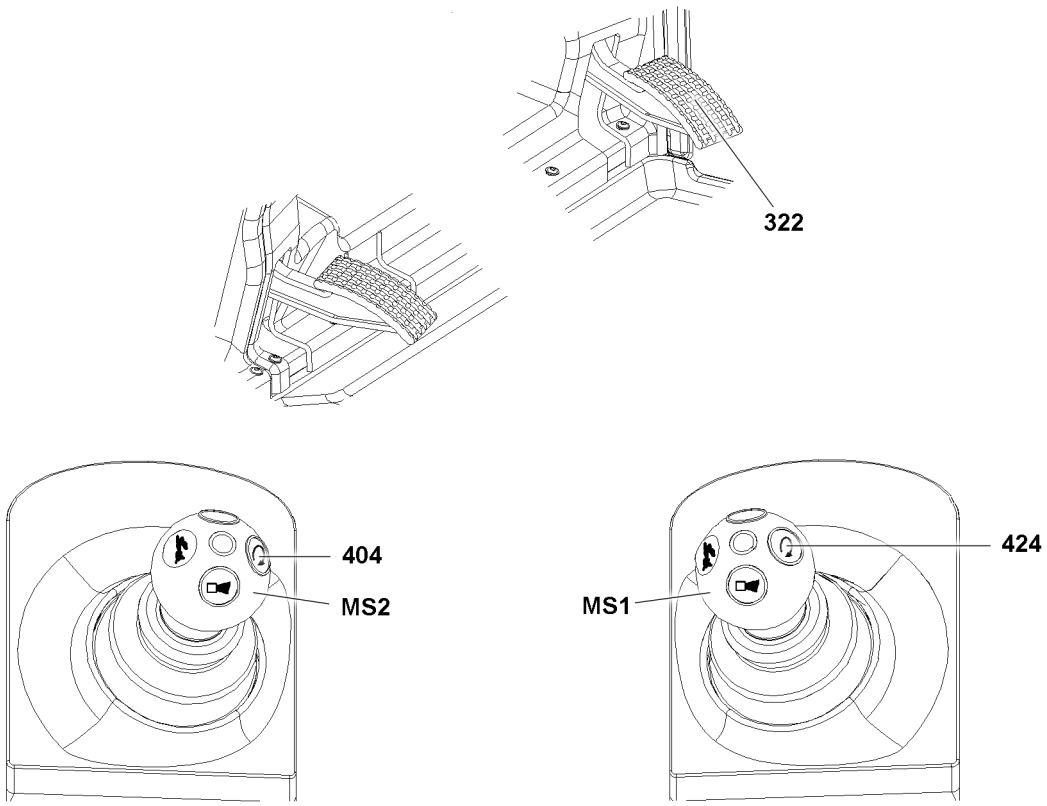

Fig.124230: Engine rpm

LWE/LTR 1100-009/25105-02-02/en

copyright © Liebherr-Werk Ehingen GmbH 2023

Locking the engine rpm relieves the crane operator if he must work for an extended period with constant rpm. Every permissible engine rpm can be locked.

Make sure that the following prerequisite is met:
– The engine is running.

4.5.1 Locking the engine rpm

► Until the desired engine rpm is reached: Actuate the engine regulation (gas pedal) **322**.
► Press the button **404** on the master switch **MS1**.
or
Press the button **424** on the master switch **MS2**.

Result:

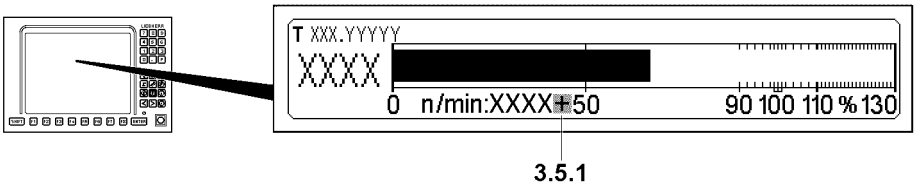

*Fig.124537: „+“ symbol **3.5.1***

– The engine rpm is locked.
– The „+“ symbol **3.5.1** appears behind the rpm display in the LICCON monitor.

The locked engine rpm can be overridden with the engine regulation (gas pedal) **322**. By pressing the button **404** or the button **424** the new engine rpm can be taken over.

► When necessary, change the engine rpm.

4.5.2 Releasing the engine rpm lock

Make sure that the following prerequisite is met:
– The engine regulation (gas pedal) **322** is **not** actuated.

► Press the button **404**.
or
Press the button **424**.

Result:

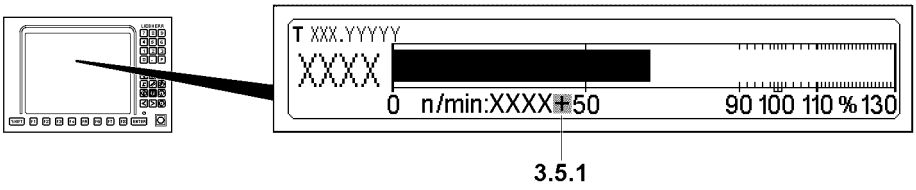

*Fig.124537: „+“ symbol **3.5.1***

– The engine rpm lock is released.
– The „+“ symbol **3.5.1** turns off.

5 Pinning the crane superstructure

The crane superstructure must be pinned in certain operating conditions with the crane chassis.

In the following situations, the crane superstructure must be pinned with the crane chassis:
– Driving the crane vehicle
– Driving with the equipment in place
– Ballasting the counterweight

LWE/LTR 1100-009/25105-02-02/en

copyright © Liebherr-Werk Ehingen GmbH 2023

– Load charts, where the crane superstructure must be locked with the crane chassis.

The crane superstructure can be pinned in 0° position or in 180° position.

5.1 Pinning the crane superstructure

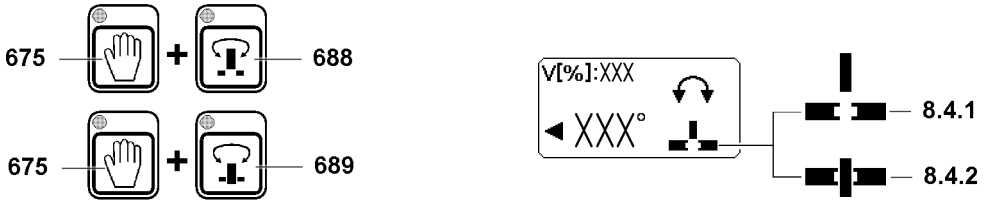

Fig.124538: Pinning the crane superstructure

Make sure that the following prerequisite is met:
– The crane superstructure is in a 0° position or 180° position.

► Activate the release button **675** by pressing it.
► Until the LED lights statically on the button **689** and an acoustic signal sounds: Press the button **689**.

Result:

– The crane superstructure is pinned with the crane chassis.
– The „Crane superstructure pinned“ icon **8.4.1** appears in the LICCON monitor.

5.2 Unpinning the crane superstructure

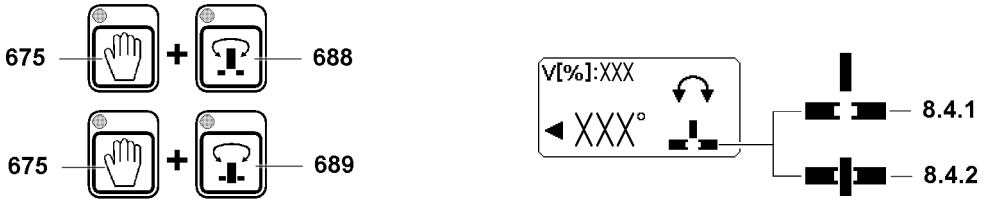

Fig.124538: Unpinning the crane superstructure

Make sure that the following prerequisite is met:
– The crane superstructure is pinned.

► Activate the release button **675** by pressing it.
► Until the LED lights statically on the button **688** and an acoustic signal sounds: Press the button **688**.

Result:

– The crane superstructure is unpinned.
– The „Crane superstructure unpinned“ icon **8.4.2** appears in the LICCON monitor.

LWE/LTR 1100-009/25105-02-02/en

copyright © Liebherr-Werk Ehingen GmbH 2023

6 Master switch assignment

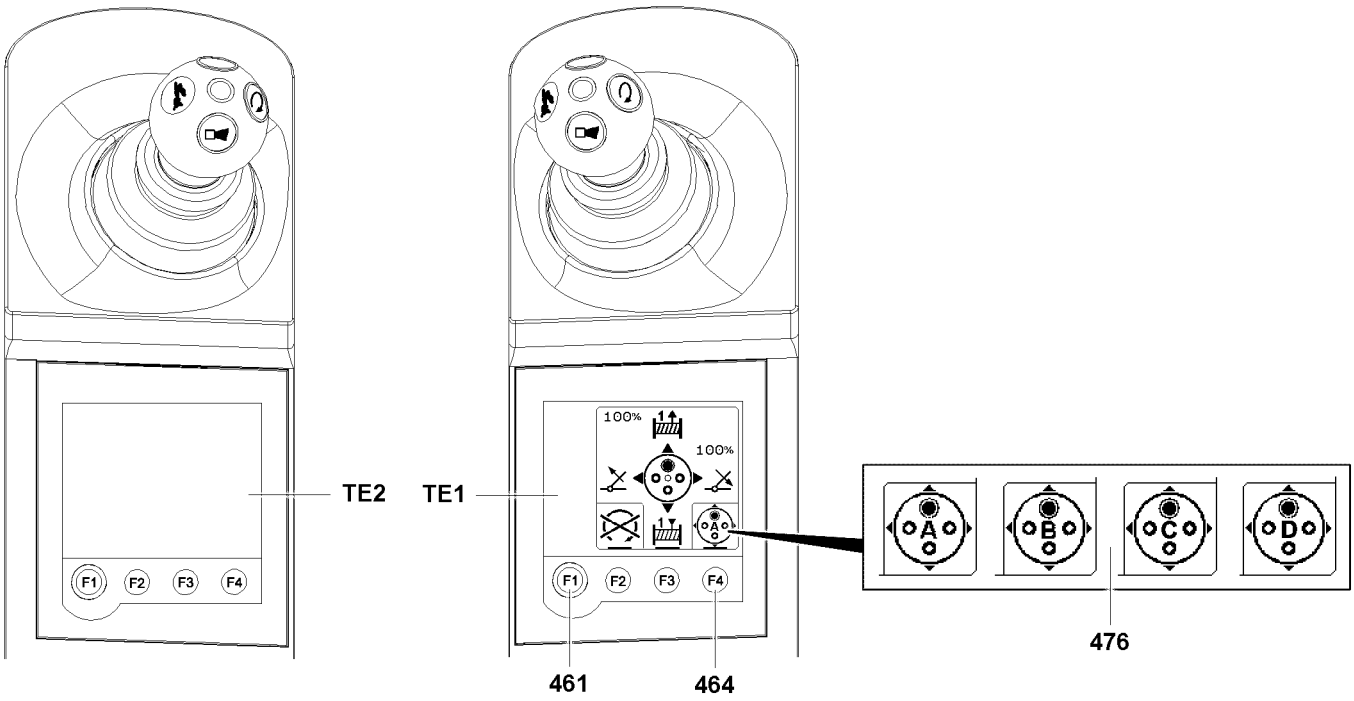

Fig.124539: Master switch assignment

Before starting crane operation, the master switch assignment must be matched to the set up configuration of the crane. The various master switch assignments are displayed with code letters **476**, for example **A**, **B**, **C**, **D...** on the touch display **TE1**.

The touch display **TE1** and touch display **TE2** are described in the Crane operating instructions, chapter 4.01.

Note

► Observe and adhere to the data in operating instructions, chapter 4.01.

6.1 Changing the master switch assignment

Make sure that the following prerequisites are met:

– Both master switches are in the neutral position.

► Until the „Master switch assignment“ menu appears: Press the F1 key **461** on the touch display **TE1**.

► Until the required master switch assignment is active: Press the F4 key **464**.

Result:

– The active master switch assignment is displayed on the touch display **TE1** and on the touch display **TE2**.

7 Luffing

The speed of the luffing movement is controlled by:

– Deflection of the master switch.

– Actuation of the engine regulation (gas pedal).

– Rapid gear engaged / turned off.

LWE/LTR 1100-009/25105-02-02/en

copyright © Liebherr-Werk Ehingen GmbH 2023

WARNING
Lift the load by luffing up the boom!
The crane can topple over, death, property damage.

When the LICCON overload protection turns off when lifting a load:
► Do **not** lift the load by luffing up.
► Lift the load solely with the hoist gear.

7.1 Luffing the telescopic boom

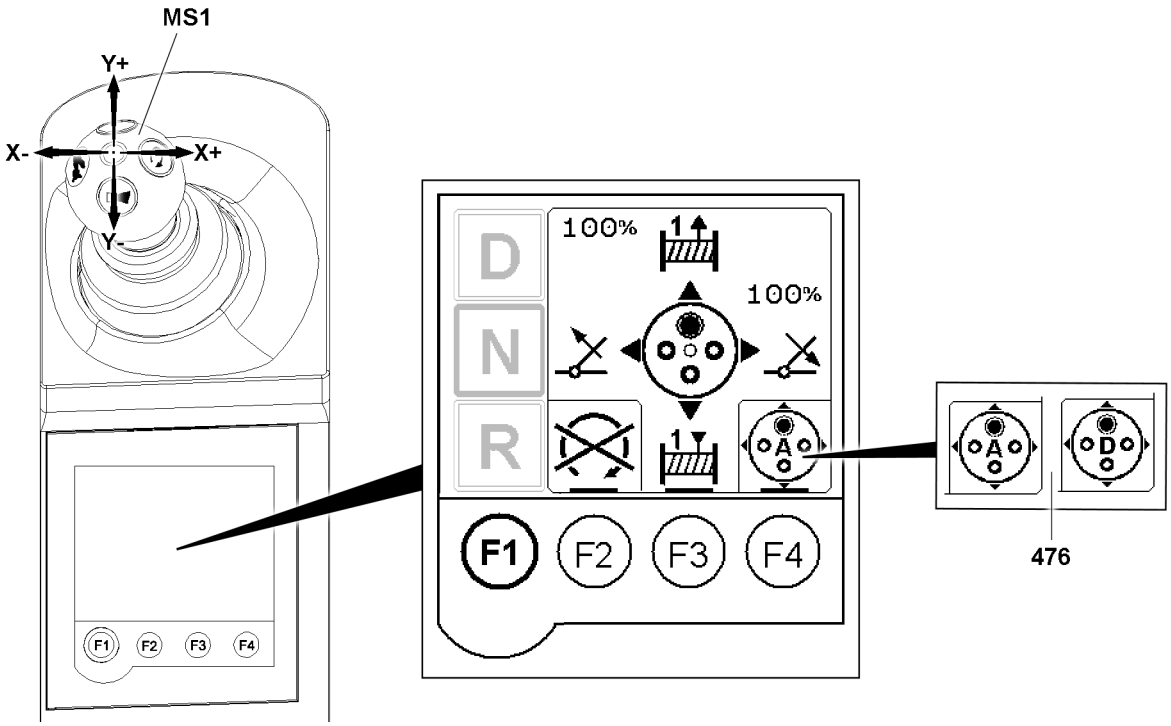

Fig.124540: Luffing the telescopic boom

Depending on the set up configuration of the crane, various master switch assignments are available to luff the telescopic boom.

Depending on the set up configuration, not all master switch assignments are always available.

The telescopic boom is luffed with master switch **MS1** in direction of the X-axis.

Make sure that the following prerequisites are met:
– If the crane is equipped with one winch:
Master switch assignment **476 A** is active.
– If the crane is equipped with two winches:
Master switch assignment **476 A** or **D** is active.

► Deflect the master switch **MS1** in direction X-.

Result:

– The telescopic boom is luffed up.

► Deflect the master switch **MS1** in direction X+.

Result:

– Telescopic boom is luffed down.

LWE/LTR 1100-009/25105-02-02/en

copyright © Liebherr-Werk Ehingen GmbH 2023

7.2 Luffing the hydraulic auxiliary boom*

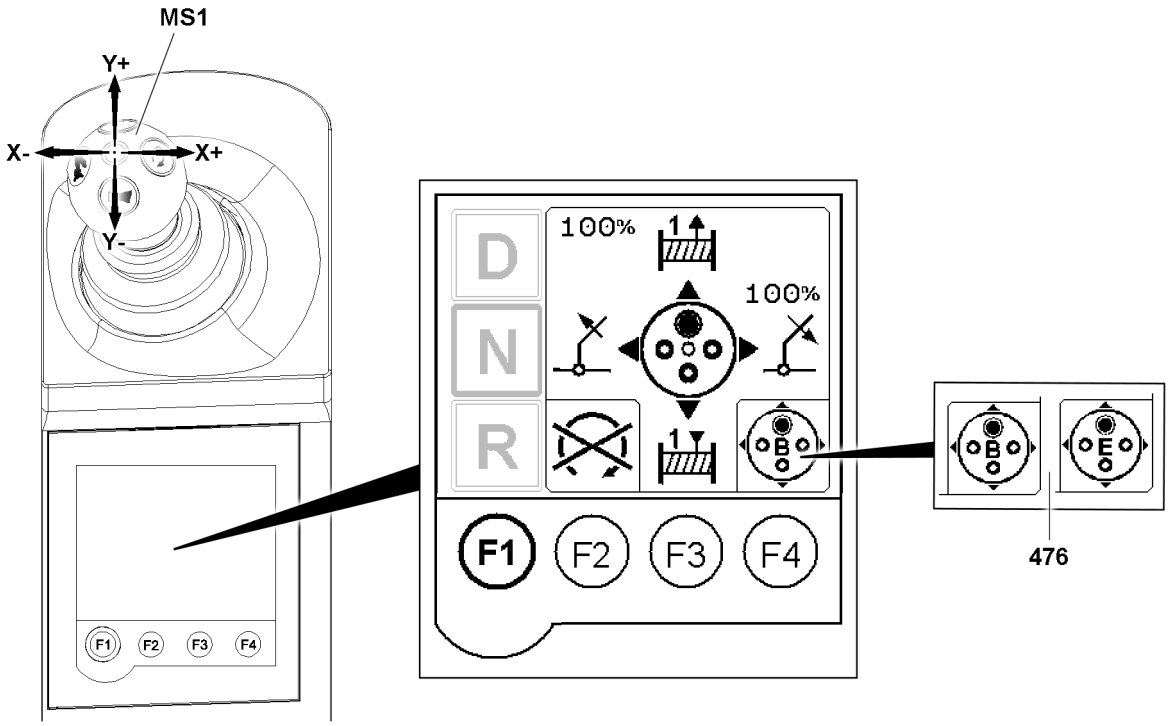

*Fig.124541: Luffing the hydraulic auxiliary boom**

Luffing the hydraulic auxiliary boom* is only possible for certain crane types.

Depending on the set up configuration of the crane, various master switch assignments are available to luff the hydraulic auxiliary boom*.

Depending on the set up configuration, not all master switch assignments are always available.

The hydraulic auxiliary boom* is luffed with master switch **MS1** in direction of the X-axis.

Make sure that the following prerequisites are met:
- The set up configuration with hydraulic auxiliary boom is set on the LICCON computer system.
- If the crane is equipped with one winch:
  Master switch assignment **476 B** is active.
- If the crane is equipped with two winches:
  Master switch assignment **476 B** or **E** is active.

► Deflect the master switch **MS1** in direction X-.

Result:

- Hydraulic auxiliary boom* is luffed up.

► Deflect the master switch **MS1** in direction X+.

Result:

- Hydraulic auxiliary boom* is luffed down.

8 Lifting / lowering

The lifting / lowering speed is controlled by:
- Deflection of the master switch.
- Actuation of the engine regulation (gas pedal).
- Rapid gear engaged / turned off.

LWE/LTR 1100-009/25105-02-02/en

copyright © Liebherr-Werk Ehingen GmbH 2023

NOTICE
Slack rope formation!
The hoist rope can be damaged.
► Do not allow slack rope formation.

8.1 Activating / deactivating winch 1

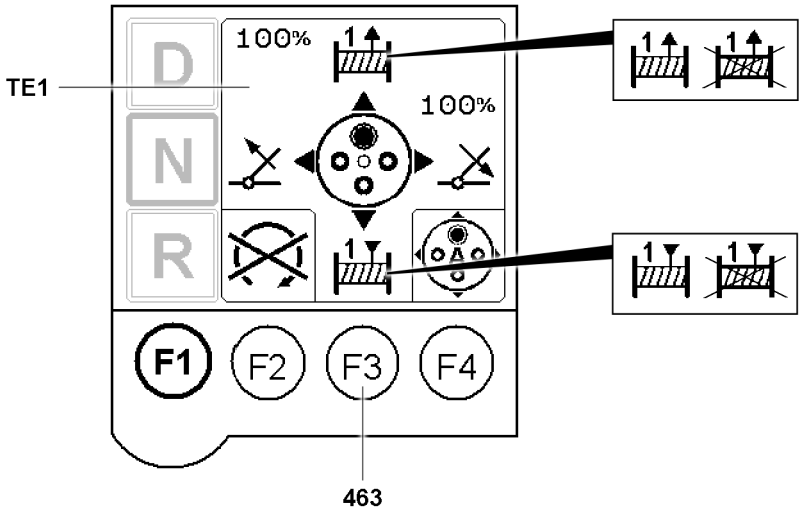

Fig.124542: Activating / deactivating winch 1

Winch 1 can be activated or deactivated with the F3 key **463**.

Make sure that the following prerequisite is met:
– Winch 1 is not actuated.

If winch 1 is deactivated:
► Press the F3 key **463** on the touch display **TE1** for 3 seconds.

Result:

– Winch 1 is activated.
– Winch 1 icon is no longer shown crossed out.

When winch 1 is activated:
► Press the F3 key **463** on the touch display **TE1** for 3 seconds.

Result:

– Winch 1 is deactivated.
– Winch 1 icon is shown crossed out.

8.2 Lifting / lowering with winch 1

Depending on the set up configuration of the crane, there are various master switch assignments for lifting / lowering with winch 1.

Depending on the set up configuration, not all master switch assignments are always available.

LWE/LTR 1100-009/25105-02-02/en

copyright © Liebherr-Werk Ehingen GmbH 2023

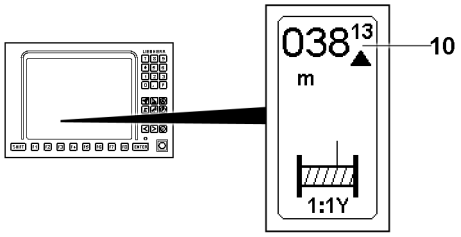

*Fig.124546: Icon **10***

As soon as winch 1 turns, this is shown in the icon **10**.

The lifting and lowering movements are controlled with the master switch **MS1** in direction of the Y-axis.

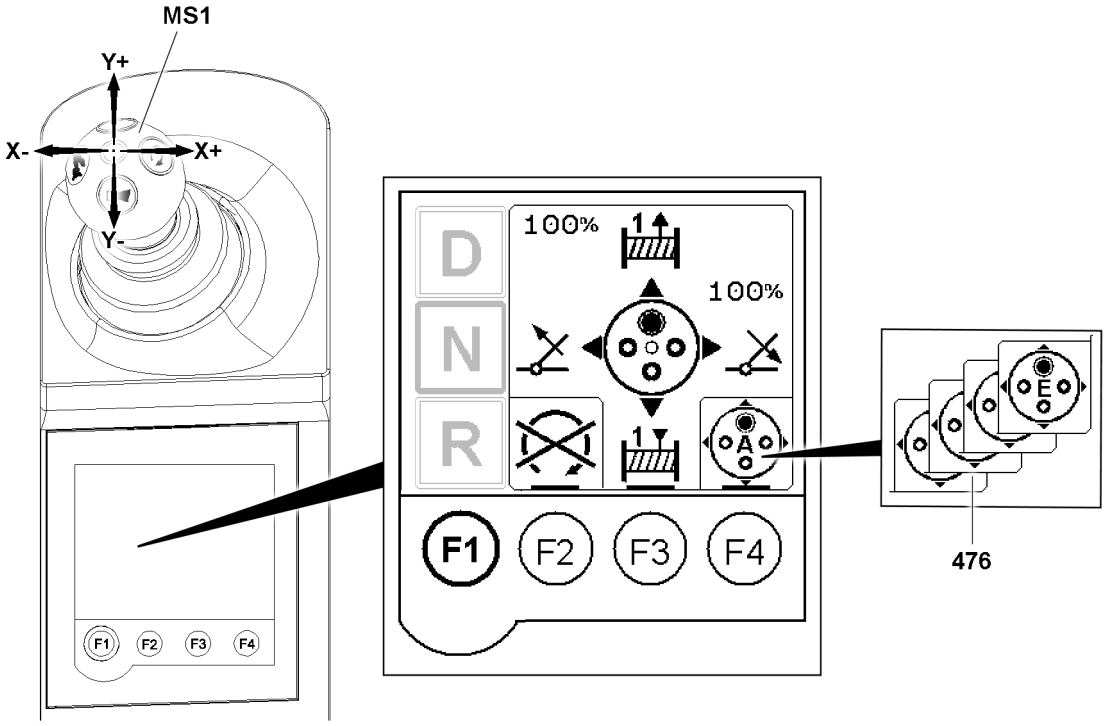

Fig.151535: Lifting / lowering with winch 1

Make sure that the following prerequisites are met:
- If the crane is equipped with one winch:
  Master switch assignment **476 A** or **B** is active.
- If the crane is equipped with two winches:
  Master switch assignment **476 A**, **B**, **C**, **D** or **E** is active.

► Deflect the master switch **MS1** in direction Y+.

Result:

– Winch 1 spools out and the load is lowered.

► Deflect the master switch **MS1** in direction Y-.

Result:

– Winch 1 spools up and the load is lifted.

LWE/LTR 1100-009/25105-02-02/en

copyright © Liebherr-Werk Ehingen GmbH 2023

8.3 Activating / deactivating winch 2*

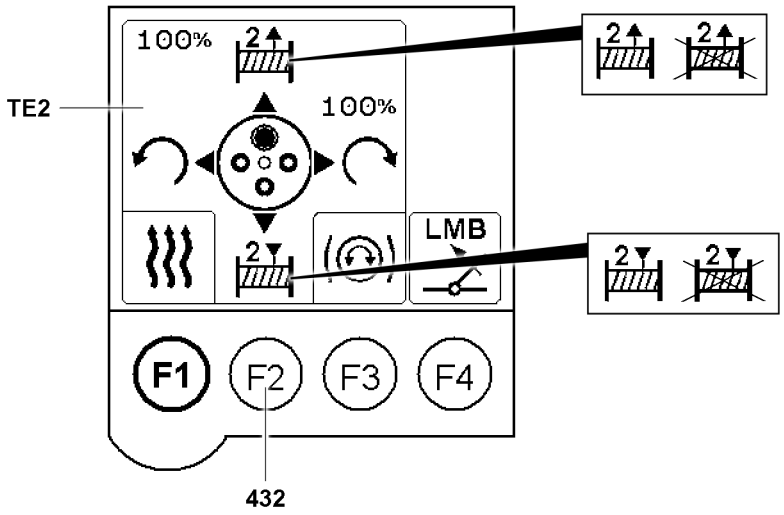

*Fig.124544: Activating / deactivating winch 2**

Winch 2 can be activated or deactivated with the F2 key **432**.

Make sure that the following prerequisite is met:
– Winch 2 is not actuated.

If winch 2 is deactivated:
► Press the F2 key **432** on the touch display **TE2** for 3 seconds.

Result:

– Winch 2 is activated.
– Winch 2 icon is no longer shown crossed out.

When winch 2 is activated:
► Press the F2 key **432** on the touch display **TE2** for 3 seconds.

Result:

– Winch 2 is deactivated.
– Winch 2 icon is shown crossed out.

8.4 Lifting / lowering with winch 2*

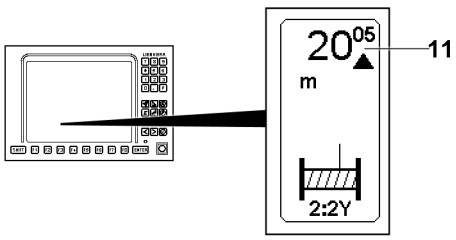

*Fig.124547: Icon **11***

As soon as winch 2***** turns, this is shown in the icon **11**.

The lifting and lowering movements are controlled with the master switch **MS2** in direction of the Y-axis.

copyright © Liebherr-Werk Ehingen GmbH 2023

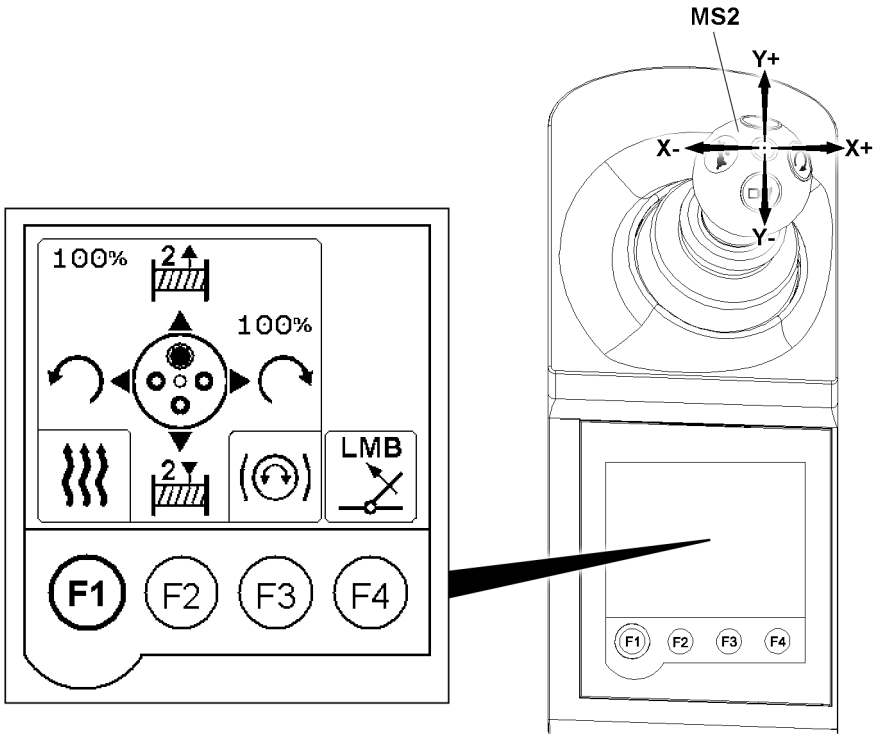

*Fig.124545: Lifting / lowering with winch 2**

► Deflect the master switch **MS2** in direction Y+.

Result:

– Winch 2 spools out and the load is lowered.

► Deflect the master switch **MS2** in direction Y-.

Result:

– Winch 2 spools up and the load is lifted.

9 Turning

The speed of the turning movement is controlled by:
– Deflection of the master switch.
– Actuation of the engine regulation (gas pedal).

WARNING
Persons in the slewing range!
Crushing danger, death, severe bodily injuries.
► Monitor the slewing range.
► Make sure that there are **no** persons within the slewing range.
► Before initiating a turning movement, give a warning signal (horn).

WARNING
Obstacle in the slewing range!
Property damage on crane and on obstacle.
► Make sure that there are **no** obstacles within the turning range of the crane and the crane components.

LWE/LTR 1100-009/25105-02-02/en

copyright © Liebherr-Werk Ehingen GmbH 2023

9.1 Monitoring the turning range

On certain crane types, one or two mirrors are installed on the right side of the turntable. This makes it easier to view the turning range.

► Monitor the turning range.

Problem remedy
Can the turning range **not** be viewed using the mirror?
► Until the turning range can be viewed using the mirror: Bend your upper body or tilt the crane cab.

9.2 Maximum slewing speed

The load chart manual lists the maximum slewing speeds in percentages.

The setting of the maximum slewing speed is described in the Crane operating instructions, chapter 4.02.

Note
► For a longer boom and larger load, turn the crane superstructure at a slower speed.

WARNING
Slewing speed set too high!
The crane can topple over, death, property damage.
► Observe and adhere to the slewing speeds which are specified in the load chart manual and the crane documentation.
► Do **not** exceed the maximum permissible slewing speeds.
► Initiate and brake a turning movement extremely sensitively.

► Determine the maximum slewing speed and set it on the LICCON overload protection.

9.3 Actuating the slewing gear brake

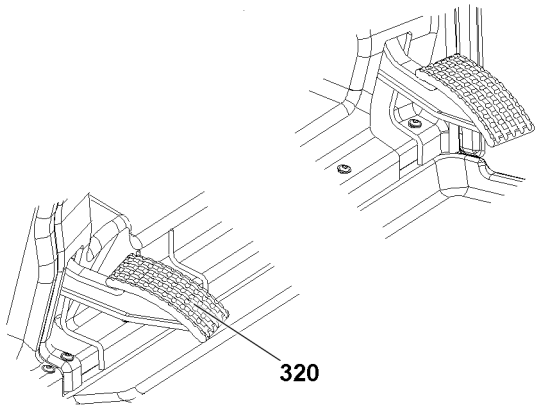

Fig.124549: Slewing gear brake

The slewing gear can be additionally slowed down with the pedal **320**.

The harder the pedal **320** is actuated, the greater the braking force.

NOTICE
Wear of slewing gear brake!
► Do not actuate the pedal **320** for longer periods time with simultaneous actuation of a turning movement.
► Actuate the slewing gear brake carefully.

► Actuate the pedal **320** and brake the turning movement.

LWE/LTR 1100-009/25105-02-02/en

copyright © Liebherr-Werk Ehingen GmbH 2023

9.4 Parking brake slewing gear

The parking brake for the slewing gear can be applied or released at *freely rotating* and *fixed* slewing gear.

9.4.1 Releasing the parking brake

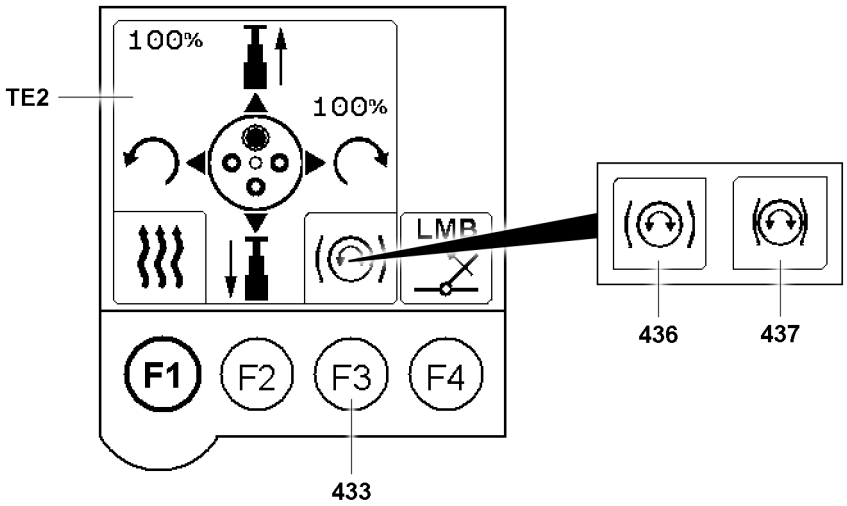

Fig.124550: Releasing the parking brake

Make sure that the following prerequisites are met:
- The parking brake is applied.
- The icon **437** is shown on the touch display **TE2**.

► Press the F3 key **433**.

Result:

- The parking brake is released.
- The Icon **436** appears on the touch display **TE2**.

9.4.2 Applying the parking brake

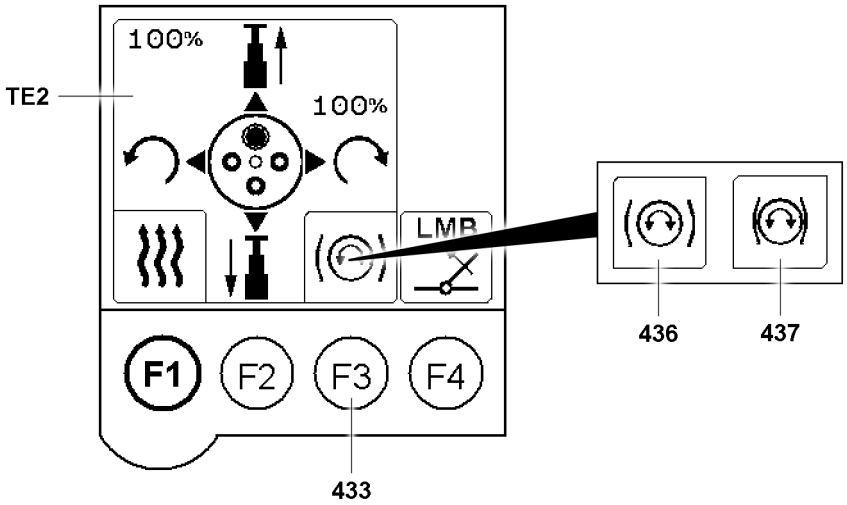

Fig.124550: Applying the parking brake

Make sure that the following prerequisites are met:
- The crane superstructure is **not** turning.
- The parking brake is released.
- The icon **436** is shown on the touch display **TE2**.

LWE/LTR 1100-009/25105-02-02/en

copyright © Liebherr-Werk Ehingen GmbH 2023

► Press the F3 key **433**.
or
Turn the engine off.
or
Do **not** actuate the seat contact button or the bypass button for the seat contact button.

Result:

– The parking brake is applied.
– The Icon **437** appears on the touch display **TE2**.

9.5 Slewing gear

As long as the *parking brake of the slewing gear* is released, the crane superstructure can turn by itself due to wind or incline position.

WARNING
Crane superstructure turns without actuated turning movement!
► Apply the *parking brake slewing gear*.

With this slewing gear it is possible to select between a *freely rotating* and *fixed* slewing gear.

The change over between a *freely rotating* and *fixed* slewing gear is described in the Crane operating instructions, chapter 4.02.

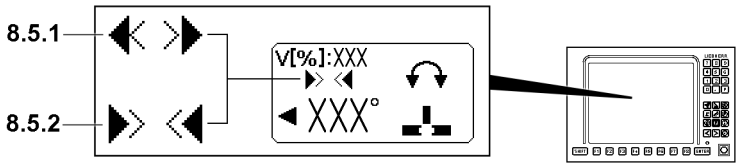

*Fig.124551: Icon **8.5.1** and icon **8.5.2***

For the *freely rotating slewing gear* the icon **8.5.1** is shown on the LICCON monitor.

For the *fixed slewing gear* the icon **8.5.2** is shown on the LICCON monitor.

LWE/LTR 1100-009/25105-02-02/en

copyright © Liebherr-Werk Ehingen GmbH 2023

9.5.1 Freely rotating slewing gear

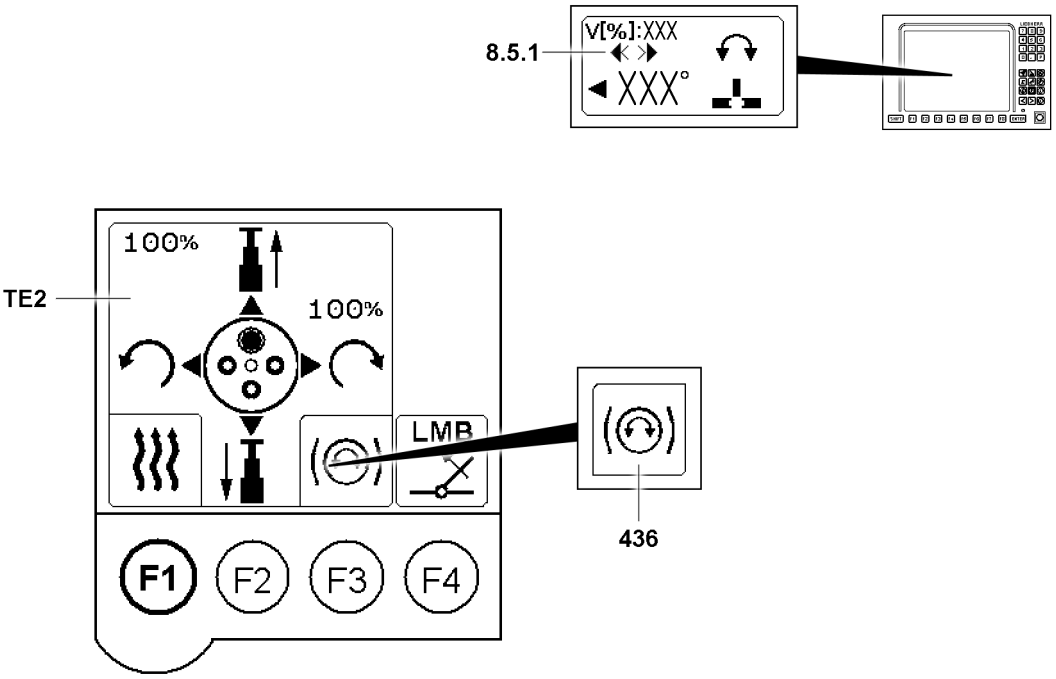

Fig.124552: Freely rotating slewing gear

The slewing gear can **not** be switched to *freely rotating slewing gear* if:
- Variable support is installed.
- The radio remote control is being used.
- The working range limitation is active.
- Load charts which are **not** approved are selected.

To be able to turn the crane superstructure with a *freely rotating slewing gear* the *parking brake slewing gear* must be released.

Make sure that the following prerequisites are met:
- The slewing gear is switched to *freely rotating slewing gear*.
- The icon **8.5.1** is displayed on the LICCON monitor.
- The *slewing gear parking brake* is released.
- The icon **436** is shown on the touch display **TE2**.

9.5.2 Fixed slewing gear

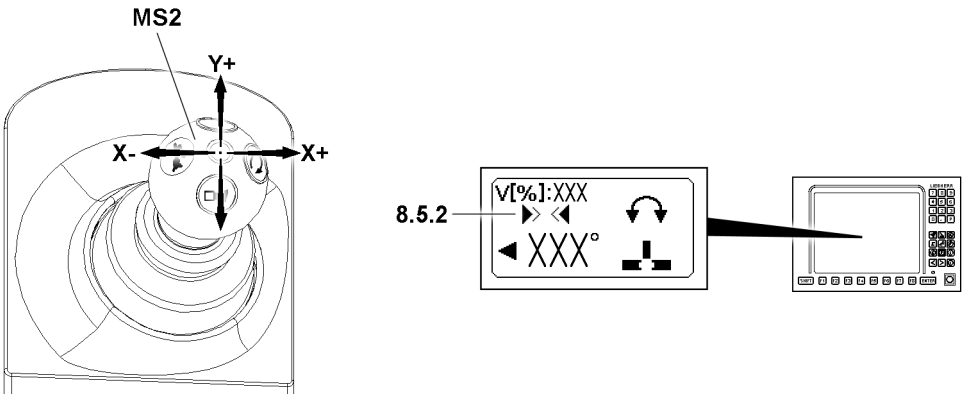

Fig.124553: Fixed slewing gear

The *fixed slewing gear* can be turned with the parking brake released or applied.

LWE/LTR 1100-009/25105-02-02/en

copyright © Liebherr-Werk Ehingen GmbH 2023

With **released** parking brake, the parking brake is released permanently. Regardless if the slewing gear is actuated with the master switch **MS2**. This prevents a sudden stop.

If the parking brake is **applied**, the parking brake is released as soon as the master switch **MS2** is deflected. The parking brake is applied again as soon as the master switch **MS2** is moved to the neutral position and the slewing gear is no longer actuated.

Make sure that the following prerequisites are met:
- The slewing gear is switched to *fixed slewing gear*.
- The icon **8.5.2** is displayed on the LICCON monitor.

9.6 Turning the crane superstructure

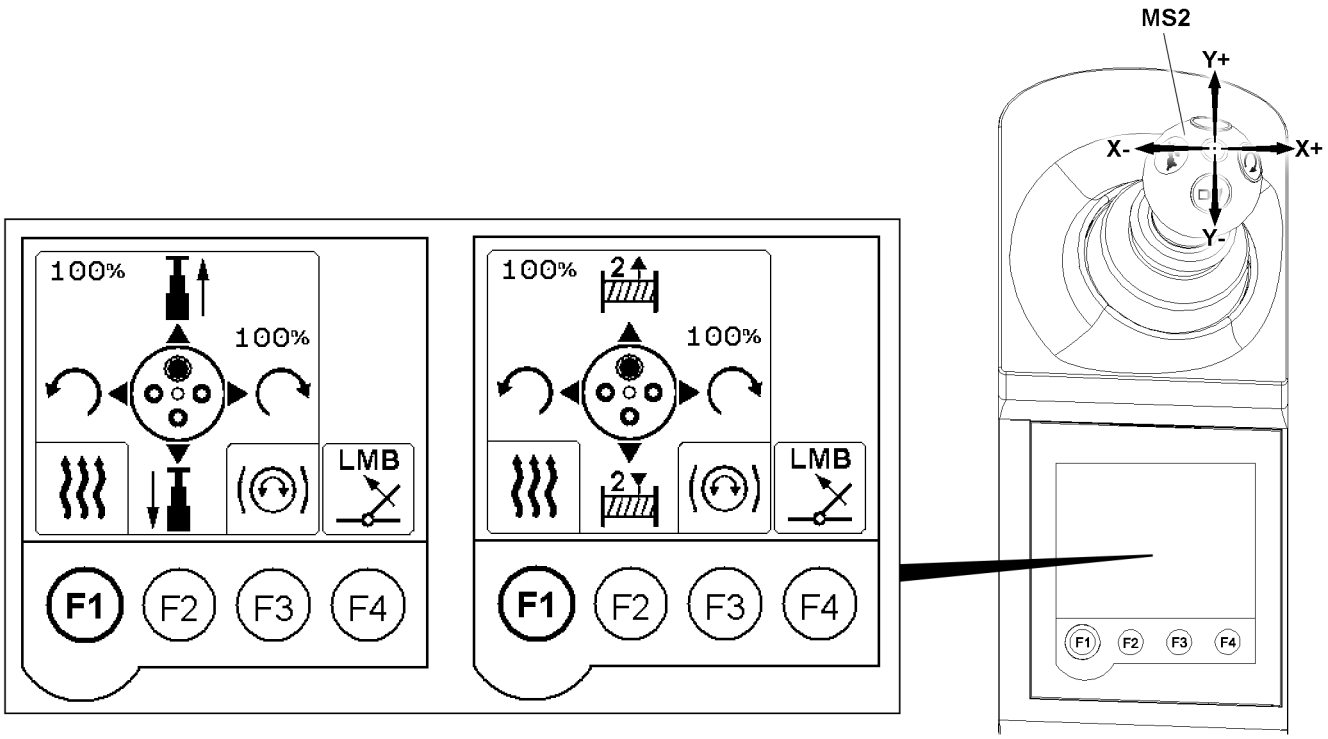

Fig.124548: Turning the crane superstructure

Depending on the set up configuration of the crane, various master switch assignments are available to turn the crane superstructure.

Depending on the set up configuration, not all master switch assignments are always available.

The crane superstructure is turned with the master switch **MS2** in direction of the X-axis.

Make sure that the following prerequisites are met:
- Master switch assignment Turning the crane superstructure is active.
- Crane superstructure **not** pinned with the crane chassis.

► Deflect the master switch **MS2** in direction X+.

Result:

– The crane superstructure turns to the right.

► Deflect the master switch **MS2** in direction X-.

Result:

– The crane superstructure turns to the left.

LWE/LTR 1100-009/25105-02-02/en

copyright © Liebherr-Werk Ehingen GmbH 2023

10 Telescoping

10.1 Safety

If the case of problems with the Telematik system, crane operation must be stopped immediately and the customer service at Liebherr-Werk Ehingen GmbH must be contacted.

If operation must be continued due to an emergency situation, this may only be carried out by persons who are aware of the effects of their acts in compliance with all necessary safety precautions.

WARNING
Telematik system problem!
The telescopic boom can telescope in by itself.
► First telescope in all the way the telescope locked in the telescoping cylinder.
► If the telescoping cylinder is extended and locked in a telescope: Never release the cylinder pinning in case of a problem.
► Continue working with the Telematik system only after the error has been rectified.

The speed of the telescoping movement is controlled by:
– Deflection of the master switch.
– Actuation of the engine regulation (gas pedal).
– Rapid gear engaged / turned off.

Telescoping has a direct effect on the hoist rope.

NOTICE
Collision of the hook block with the boom head!
► The movement of the hook block when telescoping by spooling the hoist winch.

Telescoping the telescopic boom under load is determined by the friction of the bearing shoes and the existing tension lengths of the telescopes.

NOTICE
Damage to the telescopic boom when telescoping under load!

When telescoping under load:
► Do **not** exceed the load shown on the LICCON monitor.
► We recommend: Telescope the telescopic boom out without a load and then pick up the load.

In case of an overlap of unfavorable ancillary conditions the telescopic boom can swing up during telescoping.

In case of increased friction between the telescopic sections, an excessive elastic system-dependent pretension of the push out mechanism occurs. Due to this elastic pretension of the push out mechanism, a „stick-slip effect“ can be created, which then leads to the upswing of the telescopic boom.

These swing movements can be created due to the elasticity of the crane, especially when working in 90°position or 270° position.

NOTICE
Upswing of telescopic boom when telescoping „stick-slip effect“!
► Before crane operation, lubricate the boom glide bearings sufficiently.

When the telescopic boom swings up:
► Stop the telescoping movement.
► Wait until the telescopic boom swings no longer.
► Continue telescoping.

When telescoping out, then it can happen that the individual telescopes get pulled apart due to friction and the bore play of the pinning.

LWE/LTR 1100-009/25105-02-02/en

copyright © Liebherr-Werk Ehingen GmbH 2023

When telescoping in or luffing up, the telescopes can retract suddenly. This is system inherent and is not a sign of an erroneous function.

NOTICE
Friction and bore play in pinning!
Telescopic boom can retract jerkily.
► Prevent oscillation of the load.

If a load is set down, it can cause the telescopes to telescope out suddenly due to a compressed oil column in the telescoping cylinder.

WARNING
The oil column in the telescoping cylinder is relieved after a telescoped load is set down!
The telescopic boom can telescope out by itself.
► When setting down the load: Telescope the telescopic boom in briefly or luff up briefly.

If the telescopic boom is telescoped out and a load is lifted after a delay, the oil column that cooled down in the meantime in the telescoping cylinder could cause the telescopic boom to telescope in suddenly.

WARNING
Telescoping the telescopic boom out and lifting a load with a delay!
The telescopic boom can telescope in suddenly.
► Before lifting a load: Telescope the telescopic boom out slightly.

In the case of a large boom radius and heavy pinned loads, the telescopic boom can sag considerably. If the telescoping cylinder is retracted or extended with a pinned telescope, the telescoping cylinder can collide with components of the telescope.

NOTICE
Considerable telescopic boom sagging. The telescoping cylinder is retracted or extended with a pinned telescope!
The telescoping cylinder can collide with components of the telescope.
► If the telescopic boom is sagging considerably, do **not** retract or extend the telescoping cylinder.
► Set down the load. Then move the telescoping cylinder.

In the case of sun exposure on one side, the telescopic boom can deform considerably on one side. If the telescoping cylinder is retracted or extended with a pinned telescope, the telescoping cylinder can collide with components of the telescope.

NOTICE
The telescopic boom distorts too much on the side. The telescoping cylinder is retracted or extended with a pinned telescope!
The telescoping cylinder can collide with components of the telescope.
► If the telescopic boom is deformed considerably on the side, do **not** retract or extend the telescoping cylinder.
► Until both sides of the boom are heated up equally: Turn the crane superstructure.
► Then move the telescoping cylinder.

WARNING
Do **not** take the crane out of service with the telescopic boom pinned!
The telescopic boom can retract by itself.
► Cranes with a Telematik system may only be taken out of service with the telescopic boom pinned.

Make sure that the following prerequisites are met before telescoping:
– The mobile crane is supported and horizontally aligned.
– The telescopic boom is **not** sagging considerably.
– The telescopic boom is **not** deformed on one side due to sun exposure.
– There is **no** strong side wind.

LWE/LTR 1100-009/25105-02-02/en

copyright © Liebherr-Werk Ehingen GmbH 2023

10.2 Telescoping with master switch MS2

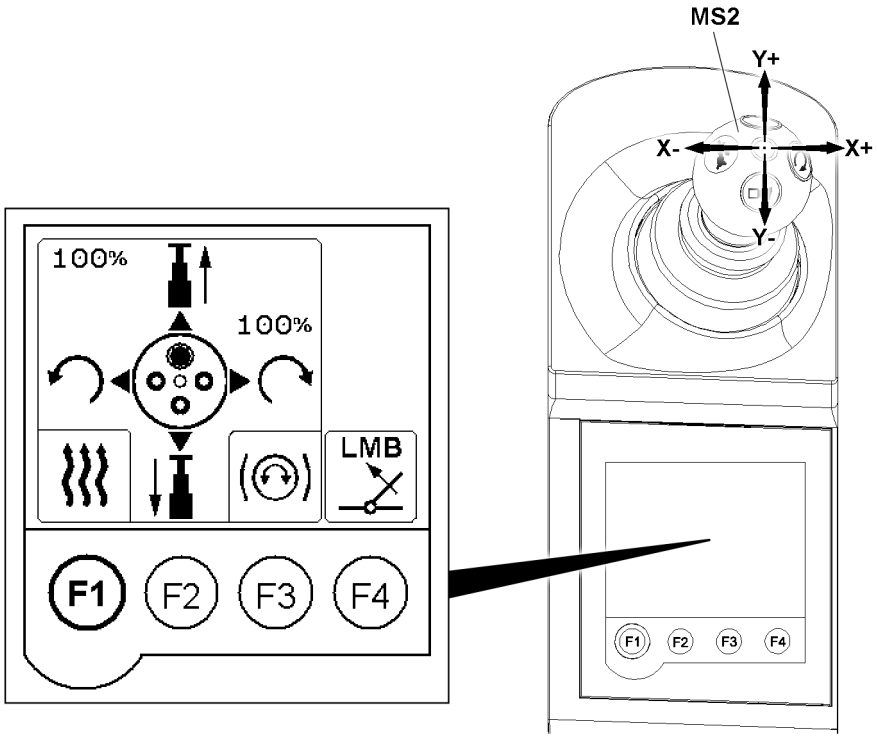

Fig.124554: Telescoping with cranes with one hoist gear

The telescopic boom on cranes with one hoist gear is telescoped with the master switch **MS2** in direction of the Y-axis.

► Move the master switch **MS2** in direction Y+.

Result:

– The telescopic boom is telescoped out.

► Move the master switch **MS2** in direction Y-.

Result:

– The telescopic boom is telescoped in.

LWE/LTR 1100-009/25105-02-02/en

copyright © Liebherr-Werk Ehingen GmbH 2023

10.3 Telescoping with master switch MS1

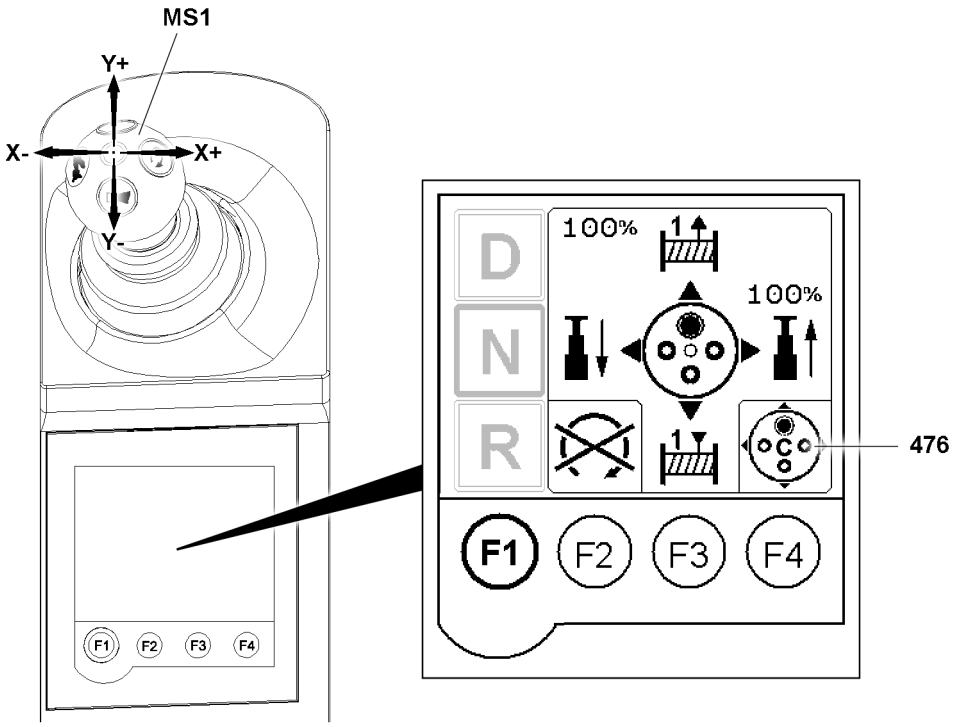

Fig.124555: Telescoping with cranes with two hoist gears

The telescopic boom on cranes with two hoist gears is telescoped with master switch **MS1** in direction of the X-axis.

Make sure that the following prerequisites are met:
– If the crane is equipped with two winches:
Master switch assignment **476 C** is active.

► Move the master switch **MS1** in direction X+.

Result:

– The telescopic boom is telescoped out.

► Move the master switch **MS1** in direction X-.

Result:

– The telescopic boom is telescoped in.

LWE/LTR 1100-009/25105-02-02/en

copyright © Liebherr-Werk Ehingen GmbH 2023

10.4 Telescoping with master switch MS3

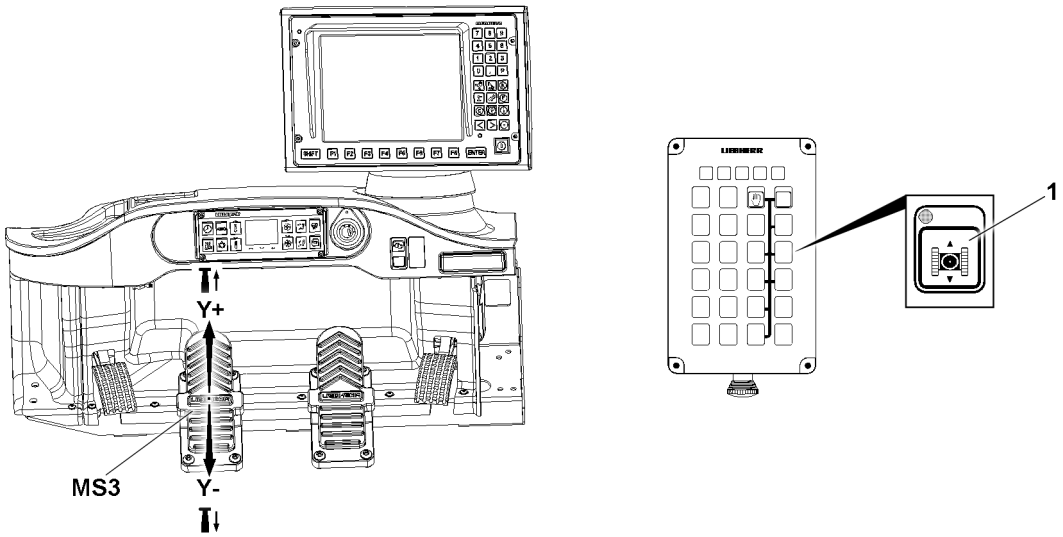

Fig.155684: Telescoping with foot rocker

Note

► The telescoping function on the master switch **MS3** is only available for certain cranes.

The telescopic boom on cranes with a foot rocker is telescoped in direction of the Y-axis.

Make sure that the following prerequisites are met before telescoping:
- Crawler operation is turned off.
- The indicator light on the button **1** is **not** illuminated.

► Move the master switch **MS3** in direction Y+.

Result:

– The telescopic boom is telescoped out.

► Move the master switch **MS3** in direction Y-.

Result:

– The telescopic boom is telescoped in.

LWE/LTR 1100-009/25105-02-02/en

copyright © Liebherr-Werk Ehingen GmbH 2023

10.5 Telematik system

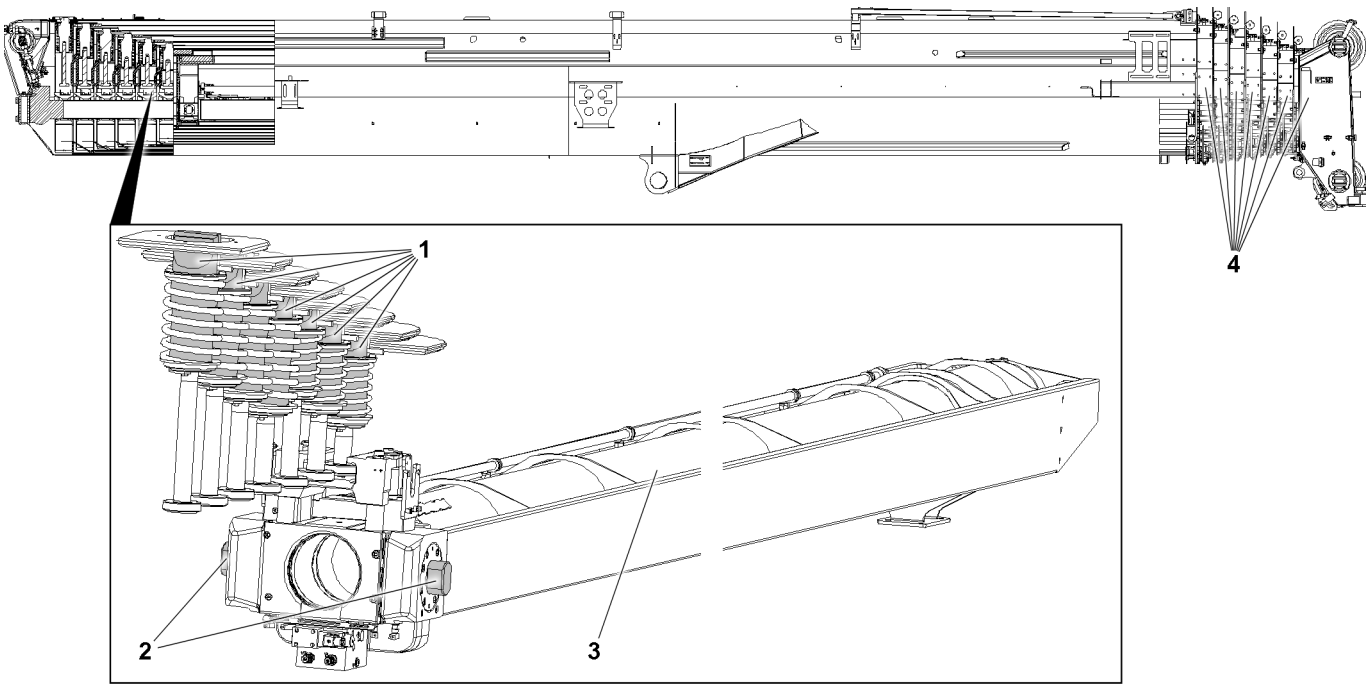

Fig.151521: Telematik system

1 Telescopic pinning
2 Cylinder pinning
3 Telescoping cylinder
4 Telescopes

The illustration is exemplary. The structure of the telescopic boom depends on the crane type.

The cylinder pinning **2** and telescopic pinning **1** are mechanically interlinked, which means a telescopic section can only be unpinned when the cylinder pinning **2** is locked simultaneously with this telescopic section.

In the LICCON telescoping screen the crane operator can see, in dynamic graphics, the pinning state of the telescopic boom, the position of the individual telescopes **4** in relation to each other and the extension condition of the telescoping cylinder **3**.

Due to the automatic telescoping procedure, the crane operator can telescope the telescopic boom easily. He does not have to deal with pinning and unpinning the telescoping cylinder **3** or the telescopes **4**. The LICCON Telescope control thus simplifies telescoping. The crane driver only has to enter the desired telescoping target into the system.

The control decides the sequence in which the individual telescopes **4** will be moved in order to achieve the desired end state. After specifying the desired telescoping target, all telescoping movements are automatically carried out.

The following procedures are carried out by the system:
- Locking and unlocking of the telescoping cylinder **3**.
- Pinning and unpinning of the telescopes **4**.
- Sequence of telescopes **4**.

The telescoping movement is only carried out as long as the master switch is deflected.

The master switch determines the direction and the speed of the telescoping movement. In this way the crane operator has continuous control over the crane.

The direction of the cylinder movement is set by the LICCON computer system.

If the telescopic boom is telescoped out, whereby currently unreachable telescopes **4** must be moved, then they must first be telescoped in until the last telescope **4** to be moved is reached. In this case telescope in first for telescoping out.

LWE/LTR 1100-009/25105-02-02/en

copyright © Liebherr-Werk Ehingen GmbH 2023

The LICCON computer system displays the direction in which the next telescoping must be done. The master switch must also be pressed in correspondence of this direction setting. In this way the connection between the direction of movement of the appropriate master switch and the telescope **4** continues.

10.6 Selecting the telescoping target

The telescoping target can be selected in two programs:
- Set up program
- Telescoping program

10.6.1 Selecting the telescoping target in the Set up program

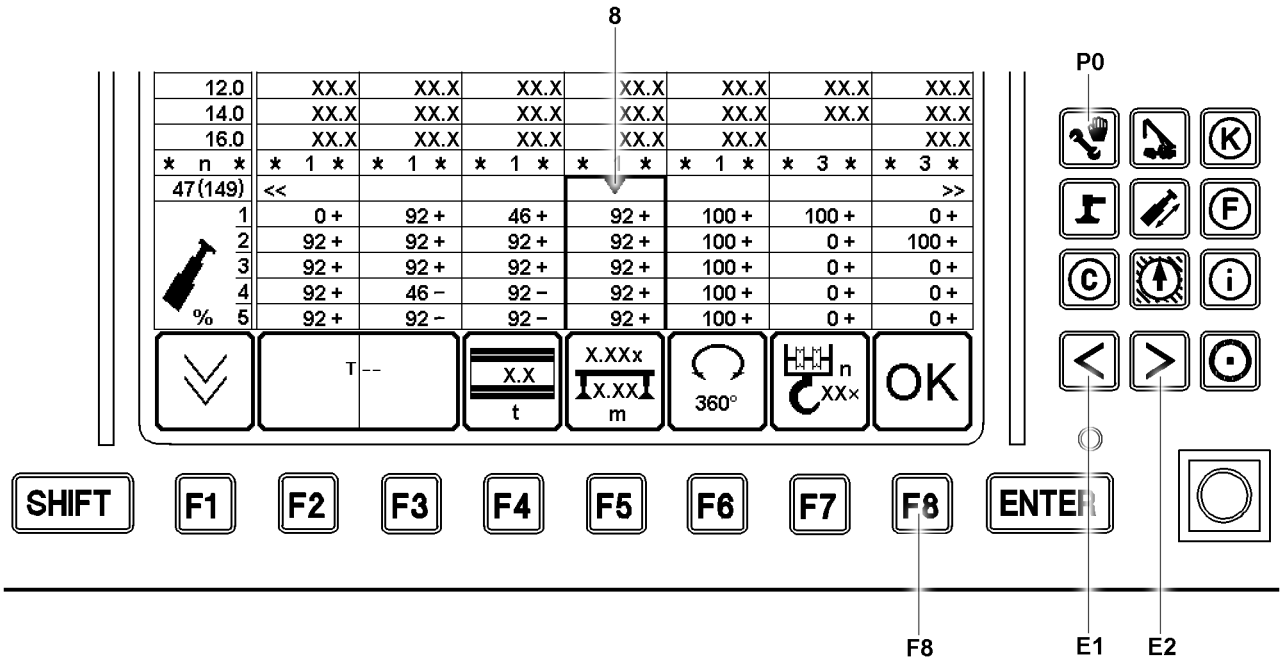

Fig.124556: Selecting the telescoping target in the Set up program

The *Set up program* is described in the Crane operating instructions, chapter 4.02.

► Press the program key **P0**.

Result:

– The *Set up* program is called up in the LICCON monitor.

The required telescopic boom length can be selected with the arrow key **E1** and the arrow key **E2**. To do so, the cursor **8** must be moved to the column with the required telescopic boom length.

If the cursor **8** touches an edge marked with arrows, then the next movement in this direction will display the next load chart column(s).

The status indicator (±) next to the extension condition means:
„+“ Telescopic section must be pinned.
„-“ Telescopic section must **not** be pinned.

► With the arrow key **E1** and arrow key **E2** move the marker **5.2** to the column with the required telescopic boom length.
► Press the function key **F8**.

Result:

– Set up configuration is taken over.
– The LICCON overload protection changes into the *Crane operation* program.

LWE/LTR 1100-009/25105-02-02/en

copyright © Liebherr-Werk Ehingen GmbH 2023

► Check the set up configuration in the *Crane operation* program.

10.6.2 Selecting the telescoping target with the Telescoping program

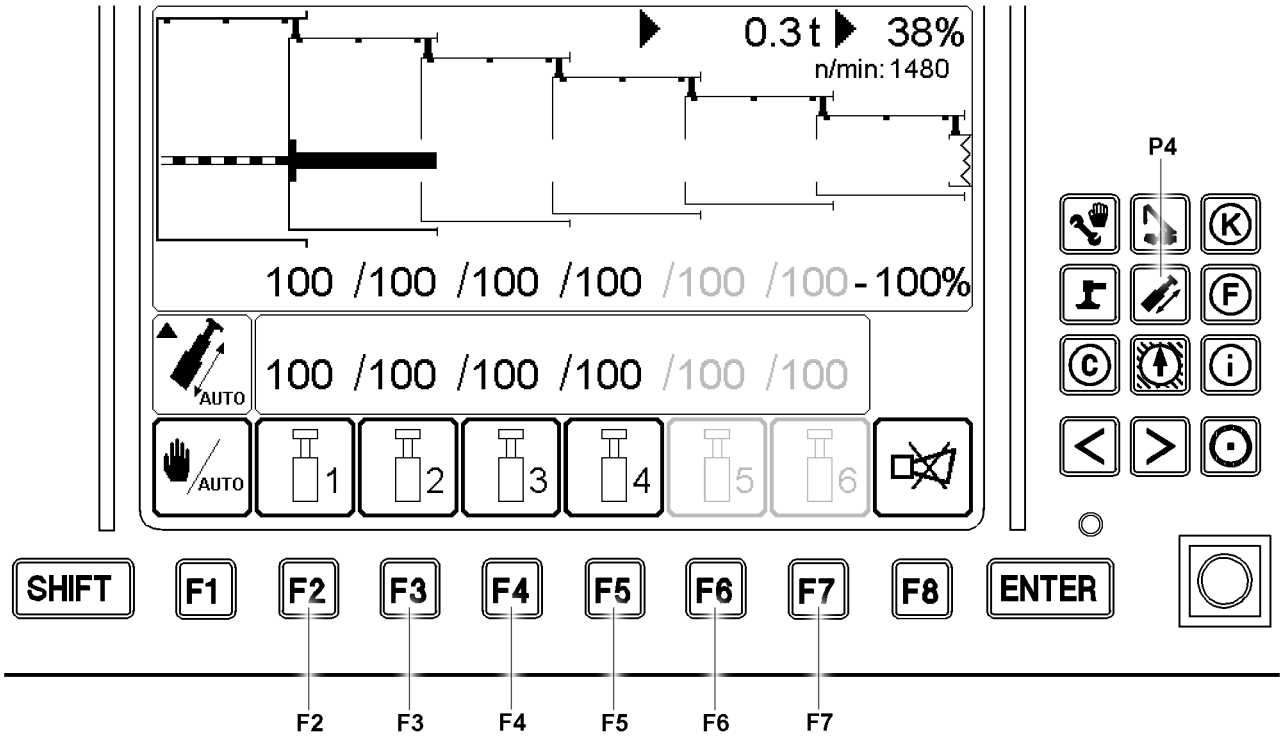

Fig.124557: Selecting the telescoping target with the Telescoping program

The *Telescoping program* is described in the Crane operating instructions, chapter 4.02.

► Press the program key **P4**.

Result:

– The *Telescoping* program is called up in the LICCON monitor.

The telescoping target is selected by pressing the function key several times. After every key press, the desired extension condition for the associated telescope changes to the next percentage value.

In contrast to the set up screen, the telescoping length is displayed immediately as a target as soon as the function key is pressed. No confirmation is required, as the assigned function keys do not have any other functions.

► Press the function key **F2**.

Result:

– On telescope 1 appears: 0 %, 46 %, 92 %, or 100 %.

► Press the function key **F3**.

Result:

– On telescope 2 appears: 0 %, 46 %, 92 %, or 100 %.

► Press the function key **F4**.

Result:

– On telescope 3 appears: 0 %, 46 %, 92 %, or 100 %.

► Press the function key **F5**.

LWE/LTR 1100-009/25105-02-02/en

copyright © Liebherr-Werk Ehingen GmbH 2023

Result:

– On telescope 4 appears: 0 %, 46 %, 92 %, or 100 %.

Telescope 5 is only present on certain crane types.

► Press the function key **F6**.

Result:

– On telescope 5 appears: 0 %, 46 %, 92 %, or 100 %.

Telescope 6 is only present on certain crane types.

► Press the function key **F7**.

Result:

– On telescope 6 appears: 0 %, 46 %, 92 %, or 100 %.

10.7 Telescoping to the telescoping target

The telescoping target can be telescoped in two programs:
– Crane operation program
– Telescoping program

10.7.1 Telescoping in the Crane operation program

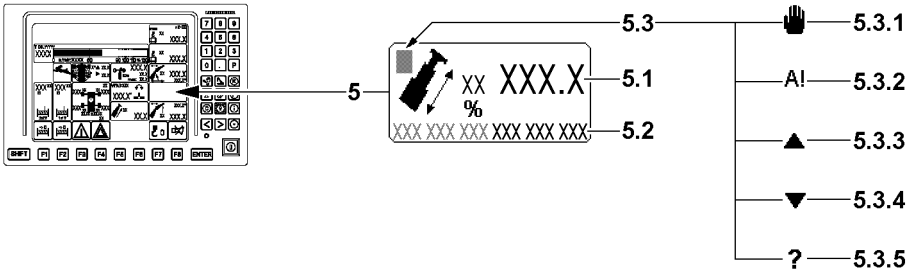

Fig.121831: Telescoping in the Crane operation program

The *Crane operation program* is described in the Crane operating instructions, chapter 4.02.

The crane driver receives information about the direction in which the master switch must be moved from the arrows in the icon **5**.

If the master switch is moved against the specified direction, the telescope remains stationary. The specified direction remains visible as an error criterion.

If the crane driver tries to continue to telescope when the telescoping target is reached, then the system switches from the *Crane operation program* into the *Telescoping program*. If the master switch is still being deflected, then the markings on the set telescoping target blink. This means that the telescoping target has been reached.

Make sure that the following prerequisite is met:
– The *Crane operation program* is active.

If the arrow **5.3.3** appears in the icon **5**:
► Telescope the telescopic boom out.

If the arrow **5.3.4** appears in the icon **5**:
► Telescope the telescopic boom in.

Once the telescoping target is reached, icon A! **5.3.2** appears.

When the icon A! **5.3.2** appears:
► End the telescoping operation.

LWE/LTR 1100-009/25105-02-02/en

copyright © Liebherr-Werk Ehingen GmbH 2023

10.7.2 Telescoping in the Telescoping program

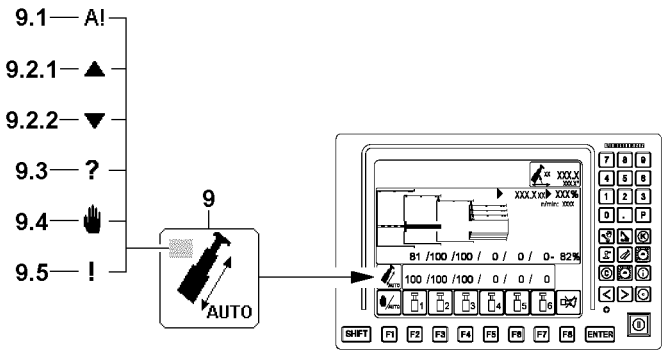

Fig.124558: Telescoping in the Telescoping program

The *Telescoping program* is described in the Crane operating instructions, chapter 4.02.

The crane driver receives information about the direction in which the master switch must be moved from the arrows in the icon **9**.

If the master switch is moved against the specified direction, the telescope remains stationary. The specified direction remains visible as an error criterion.

If the set telescoping target is reaches, then the markings on the set telescoping target blink. This means that the telescoping target has been reached.

Make sure that the following prerequisite is met:
– The *Telescoping program* is active.

If the arrow **9.2.1** appears in the icon **9**:
► Telescope the telescopic boom out.

If the arrow **9.2.2** appears in the icon **9**:
► Telescope the telescopic boom in.

Once the telescoping target is reached, icon A! **9.1** appears.

When the icon A! **9.1** appears:
► End the telescoping operation.

10.8 Telescoping the telescopic boom manually

Manual telescoping is regarded as an exception mode, as automatic mode makes it possible to reach any chosen extension condition.

During manual telescoping, pinning and unpinning of the telescoping cylinder and telescoping must be carried out manually.

The marking on the telescoping screen will indicate in which telescope the pinning equipment of the telescoping cylinder is currently located.

The proximity to a telescope pin bore can be seen on the telescoping screen to an accuracy of 1 %.

The crane driver must be familiar with all functions of the extension system. The crane driver is responsible for damage to the telescoping system or the boom system.

LWE/LTR 1100-009/25105-02-02/en

copyright © Liebherr-Werk Ehingen GmbH 2023

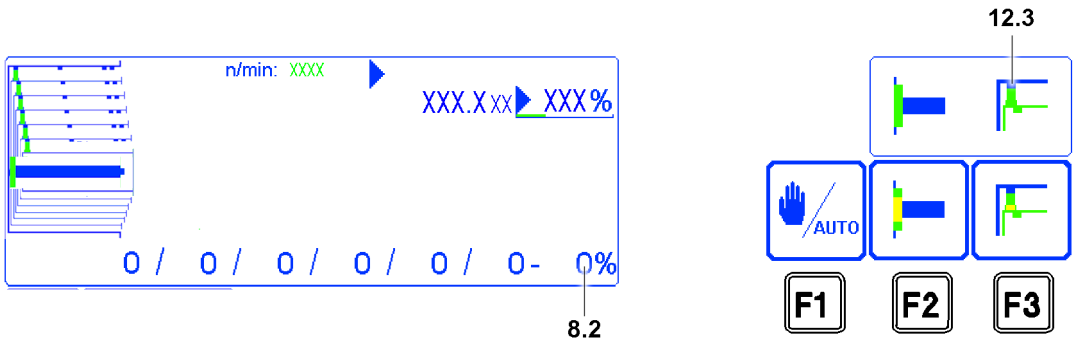

Fig.145144: Extension conditions

NOTICE
The pinning procedure cannot be completed! The pin in icon **12.3** is yellow.
The pin position must be searched for.
The telescopic boom can be damaged.
- ► Approach the pin points slowly and carefully.
- ► Complete the manual telescoping procedure and pin the telescope. The pin in icon **12.3** must be green.

NOTICE
After ending the telescoping procedure: The telescopic boom is **not** tensioned!
The telescopic boom can be damaged.

When the telescoping procedure is completed and the telescope is pinned:
- ► Tension the telescopic boom: Actuate the telescoping cylinder for 8 seconds with maximum master switch deflection to telescoping in. During this period of time, the extension condition of the telescoping cylinder **8.2** may **not** change.

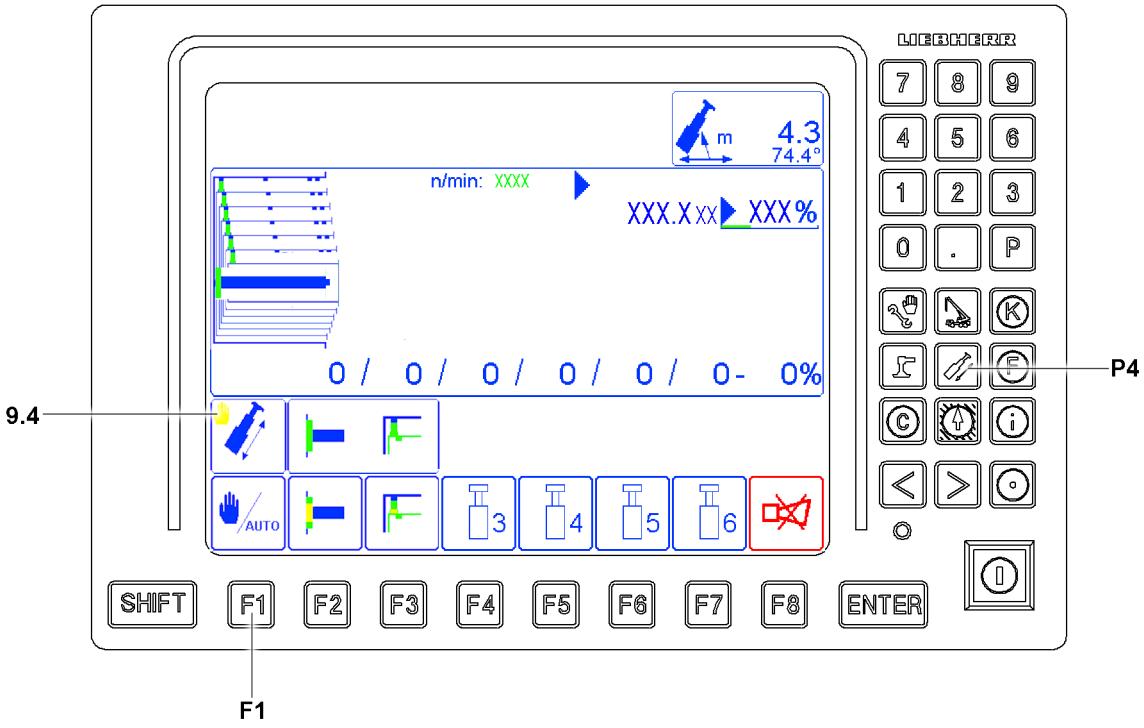

Fig.124559: Activating manual telescoping

- ► Press the program key **P4**.

LWE/LTR 1100-009/25105-02-02/en

copyright © Liebherr-Werk Ehingen GmbH 2023

Result:

– The *Telescoping program* is called up.

► Until manual telescoping is active: Press the function key **F1**.

Result:

– The icon **9.4** is displayed.

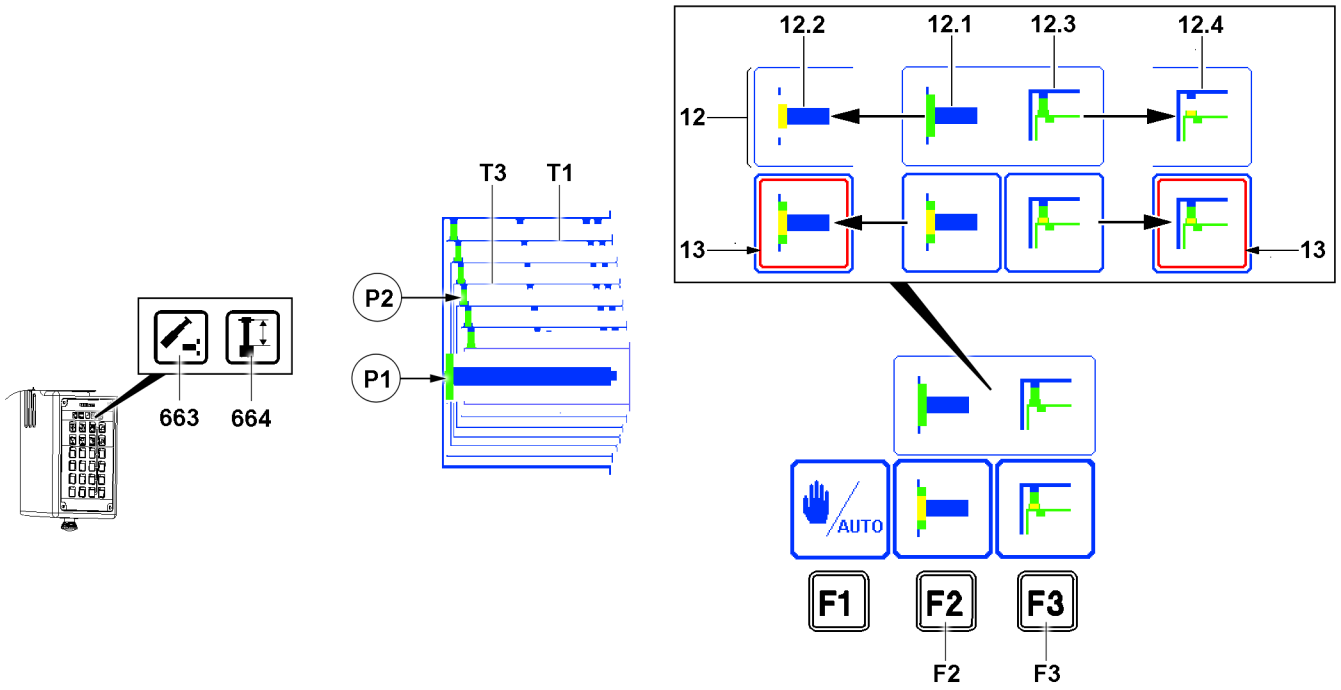

Fig.145141: Telescoping the telescopic boom manually

In this description is it assumed that all telescopes are telescoped in and the telescope **T1** is selected and pinned.

Example: The telescope **T3** should be telescoped out and pinned.

– Manual telescoping is activated.
– Telescoping cylinder is pinned. The cylinder pinning in the icon **12.1** is green.
– The telescope **T1** is pinned. Pin in icon **12.3** is green.

► Press the function key **F2**.

Result:

– The icon with a red frame **13** appears above the function key **F2**.
– Telescoping cylinder will be unpinned. The cylinder pinning in the icon **12.2** turns yellow.
– Display of the cylinder pinning in position **P1** turns yellow.
– The indicator light **663** lights up yellow.

► Until the telescope **T3** appears green on the LICCON monitor and the indicator light **664** lights up yellow: Extend the telescoping cylinder.
► Press the function key **F2**.

Result:

– The telescoping cylinder is pinned on the telescope **T3** and the cylinder pinning in the icon **12.1** turns green.
– Display of the cylinder pinning in position **P1** turns green.

LWE/LTR 1100-009/25105-02-02/en

copyright © Liebherr-Werk Ehingen GmbH 2023

Problem remedy
Display of the cylinder pinning in position **P1** is yellow?
Telescoping cylinder **not** audibly pinned.
Cylinder pinning is not in position. Pinning is stuck.
► Until the display of the cylinder pinning in position **P1** is green: Carefully extend and retract the telescoping cylinder.

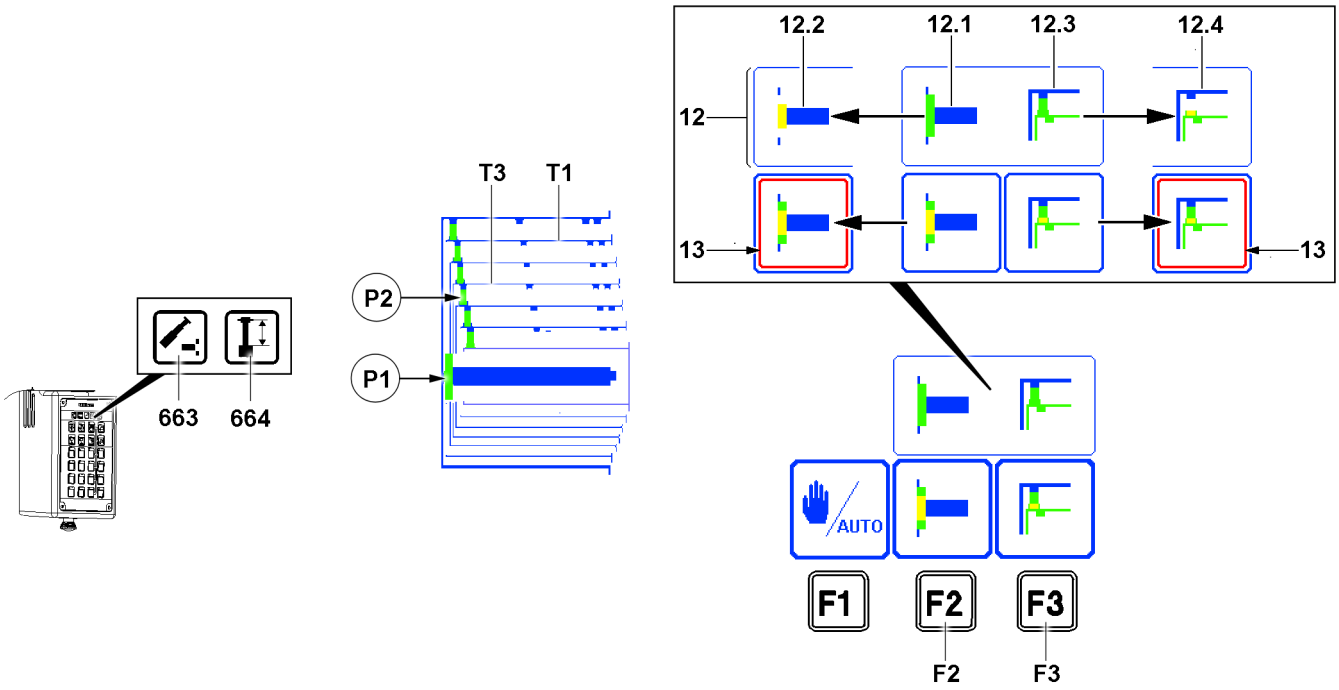

Fig.145141: Telescoping the telescopic boom manually

► Press the function key **F3**.

Result:

– The icon with a red frame **13** appears above the function key **F3**.
– The telescope **T3** is unpinned. Pin in icon **12.4** turns yellow.
– The indicator light **663** lights up green.

Problem remedy
Pin in position **P2** is extended and yellow?
The pin is stuck.
► Until the pin in icon **12.3** is moved in and is yellow: Carefully extend and retract the telescoping cylinder.

NOTICE
The telescope is **not** pinned!
Damage to the telescopic boom pinning.
► Pin the telescoping cylinder in the specified pin points.
► The telescopic boom pinning must pin audibly.

LWE/LTR 1100-009/25105-02-02/en

copyright © Liebherr-Werk Ehingen GmbH 2023

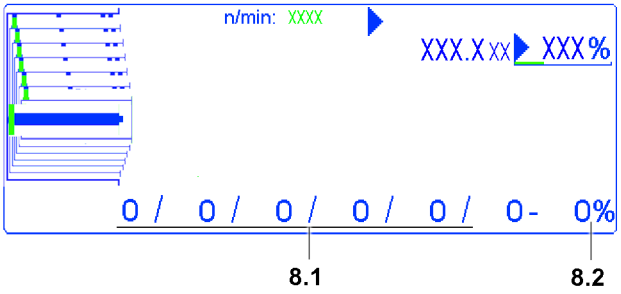

Fig.124561: Extension conditions

Display Extension status of telescopes **8.1** ascending from left to right in percentages. Beginning with Telescope **T1**. The pin points are at 0%, 50% and 100%.

Telescoping cylinder extension condition display **8.2** in percentages.

Pin points can also be accessed via the graphic illustration in the LICCON monitor.

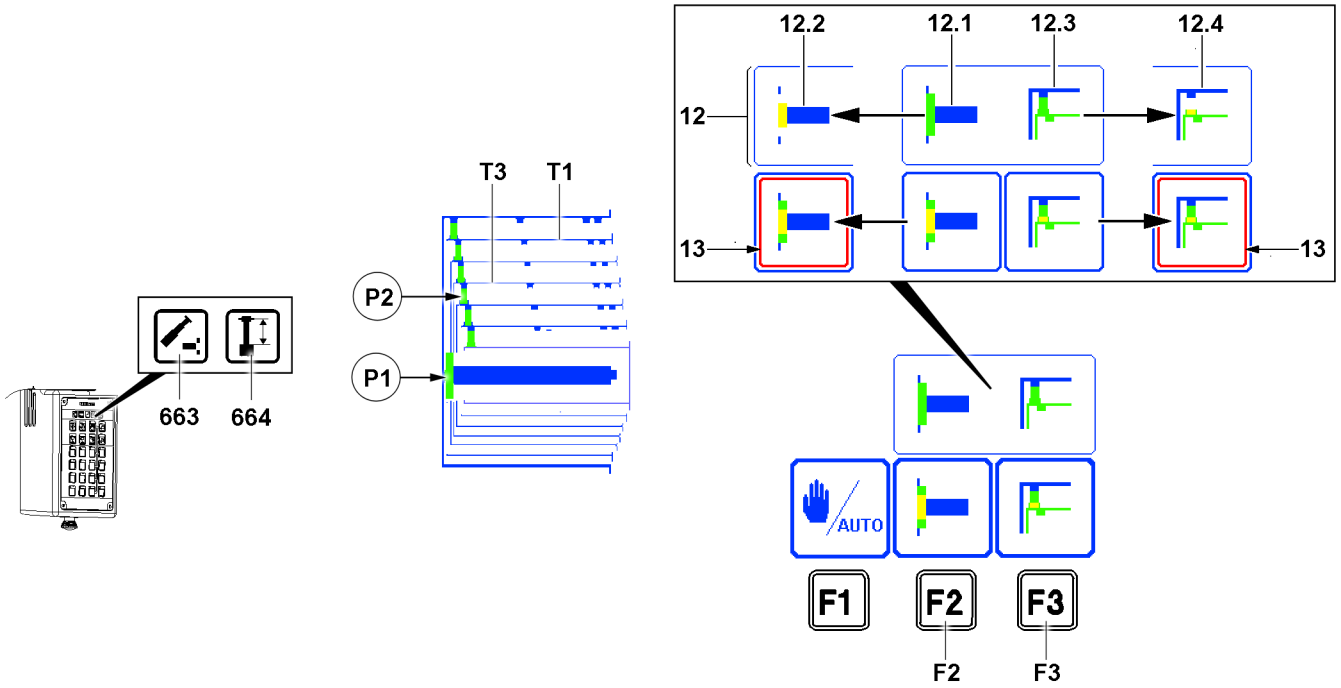

Fig.145141: Telescoping the telescopic boom manually

Apply telescopic pinning exclusively to an area of 2% in front of or after the pin point.

For example, this means that at the 50% pin point:
– When telescoping out, apply telescopic pinning in the 48% area.
– When telescoping in, apply telescopic pinning in the 52% area.

► Telescope the telescope **T3** to an area of 2% in front of the pin point.
► Press the function key **F3**.

Result:

– The telescopic pinning is applied.

► Telescope the telescope **T3** out to the pin point.

Result:

– Telescope 3 is pinned.
– The pin in the icon **12.3** turns green.

LWE/LTR 1100-009/25105-02-02/en

copyright © Liebherr-Werk Ehingen GmbH 2023

Problem remedy
Pin in position **P2** is extended and yellow?
Pin is next to the pin point.
► Until the pin on position **P2** is moved out and green: Carefully extend and retract the telescoping cylinder.

Note
► Adhere to the sequence during telescoping.

Example: Telescope out telescope 3 and telescope 4: Telescope out telescope 4 first and then telescope 3. Telescope out in descending order.

Example: Telescope in telescope 3 and telescope 4: Telescope in telescope 3 first and then telescope 4. Telescope in in ascending order.

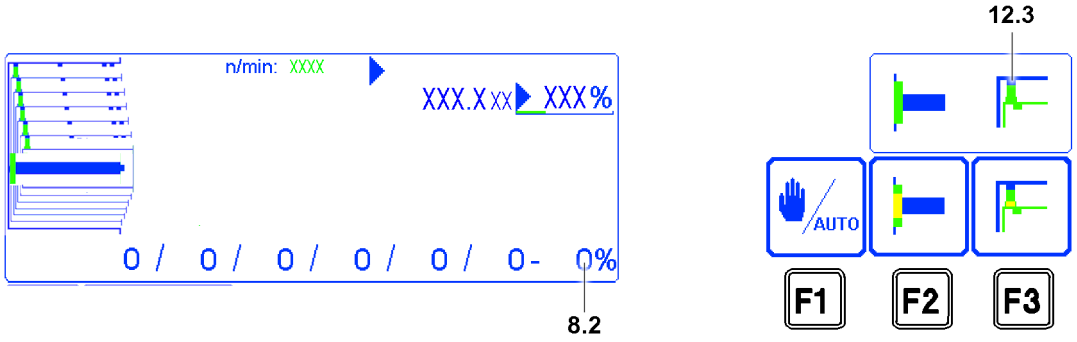

Fig.145144: Extension conditions

NOTICE
The pinning procedure cannot be completed! The pin in icon **12.3** is yellow.
The pin position must be searched for.
The telescopic boom can be damaged.
► Approach the pin points slowly and carefully.
► Complete the manual telescoping procedure and pin the telescope. The pin in icon **12.3** must be green.

NOTICE
After ending the telescoping procedure: The telescopic boom is **not** tensioned!
The telescopic boom can be damaged.

When the telescoping procedure is completed and the telescope is pinned:
► Tension the telescopic boom: Actuate the telescoping cylinder for 8 seconds with maximum master switch deflection to telescoping in. During this period of time, the extension condition of the telescoping cylinder **8.2** may **not** change.

► Telescope the remaining telescopes as described.

10.9 Telescoping under load

If the crane is equipped with telescopable load charts, then loads can also be telescoped.

Telescoping under load is possible when:
– The „Telescoping under load“ load charts are available.
– The bearing shoes are sufficiently greased.

LWE/LTR 1100-009/25105-02-02/en

copyright © Liebherr-Werk Ehingen GmbH 2023

%	1	46 -	92 -	0 +	0 -	46 -	92 -	0 +	0 +	0 +	0 +	0 -	46 -	92 -	0 +
	2	46 +	46 +	92 -	92 +	92 +	92 +	0 +	0 -	46 -	92 -	92 +	92 +	92 +	0 +
	3	46 +	46 +	46 +	46 +	46 +	46 +	92 -	92 +	92 +	92 +	92 +	92 +	92 +	0 +
	4	46 +	46 +	46 +	46 +	46 +	46 +	46 +	46 +	46 +	46 +	46 +	46 +	46 +	92 -
	5	46 +	46 +	46 +	46 +	46 +	46 +	46 +	46 +	46 +	46 +	46 +	46 +	46 +	46 +
	6	46 +	46 +	46 +	46 +	46 +	46 +	46 +	46 +	46 +	46 +	46 +	46 +	46 +	46 +

Fig.145142: Set up 1 load chart

%	1	0+	0+	46-	92-	0+	0+	0+	0+	0+	0+	0+	0+
%	2	46-	92-	92+	92+	0+	0+	0+	0+	0+	0+	0+	0+
%	3	92+	92+	92+	92+	0+	0+	0+	0+	0+	0+	0+	46-
%	4	92+	92+	92+	92+	0+	0+	0+	0+	46-	92-	100-	100+
%	5	92+	92+	92+	92+	0+	46-	92-	100-	100+	100+	100+	100+
%	6	92+	92+	92+	92+	100-	100+	100+	100+	100+	100+	100+	100+
n	EST1	3x	3x	3x	2x	7x	8x	6x	5x	5x	4x	4x	3x

Fig.145143: Set up 2 load chart

The extension conditions of the individual telescopes are indicated as a percentage in the load chart. A „-“ sign next to the percentage value means that the corresponding telescopic section can be telescoped to the extension condition percentage under load (according to the load chart).

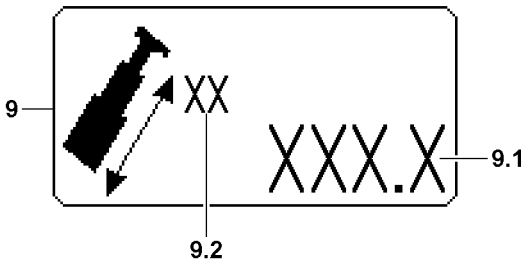

Fig.122430: Telescopable load

The maximum load that the telescopic boom can telescope can be read on the LICCON overload protection in the „telescopable load“ icon **9.1**.

The „Telescopable load“ icon **9.1** is displayed with a blinking value, when the telescopable load is smaller than the display value on the ACTUAL load display. In manual telescoping operation, the „telescopable load“ icon **9.1** is displayed continuously with a flashing value. In automatic operation, the „telescopable load“ icon **9.1** is only displayed with a flashing value if telescoping target is not reached.

Telescoping under load is possible in two ways:
- Telescoping in automatic operation
- Telescoping in automatic operation and manual operation

10.9.1 Telescoping in automatic operation

Telescoping in automatic operation under load has the disadvantage that the telescoping target must always be reselected.

► Select telescoping in automatic operation.
► Telescoping under load in automatic operation to the telescoping target.

LWE/LTR 1100-009/25105-02-02/en

copyright © Liebherr-Werk Ehingen GmbH 2023

10.9.2 Telescoping in automatic operation and manual operation

The pinning of the telescoping cylinder and the telescope is carried out in automatic operation. The subsequent telescoping of the boom under load takes place in manual operation.

Example: The telescopic boom is telescoped to telescope condition 0/**46**/92/92/92/92 and should be telescoped out under load to telescope condition 0/**92**/92/92/92/92.

- ► In automatic operation, pin the telescoping cylinder in telescope 2 and telescope out telescope 2 approx. 5 percent.
- ► Select manual telescoping.
- ► Telescope telescope 4 under load to telescoping target 0/**92**/92/92/92/92.

LWE/LTR 1100-009/25105-02-02/en

copyright © Liebherr-Werk Ehingen GmbH 2023

4.06 Rope reeving

1	Wire ropes and rope end connections	2
2	Hoist rope lug*	3
3	Moveable back pulley*	6
4	Hoist rope	7
5	Hook block	16
6	Load hook	19
7	Two-part hoist limit switch weight	22
8	One-part hoist limit switch weight	25
9	Assembling / disassembling the wedge lock	27
10	Auxiliary pulley*	39
11	Rope reeving	40

LWE/LTR 1100-009/25105-02-02/en

copyright © Liebherr-Werk Ehingen GmbH 2023

1 Wire ropes and rope end connections

1.1 Wire ropes

Rotation-resistant or **non-rotating** ropes are used for crane operation. Check if a **rotation-resistant** or a **non-rotating** rope is required for the application. The selected type of rope requires the corresponding rope end connections, see chapter 8.04.

Note
► Correct choice and use of the wire rope and the rope end connections are a decisive precondition for proper and accident-free crane operation.

DANGER
Incorrect rope type!
Death, severe bodily injury, property damage.
► **Never** use rotation-resistant ropes with a rotating rope end connection.
► **Never** install a twist compensator / swivel.

1.2 Rope end connections

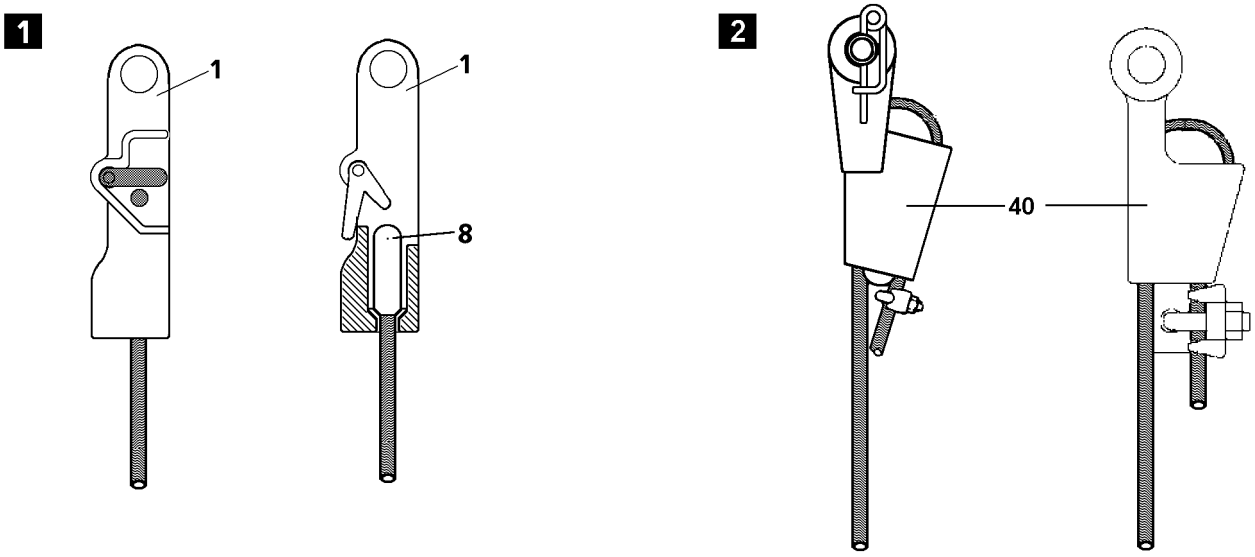

Fig.122724: Rope end connections

Rope end connections are grouped into:
– Rope end connection with locking clamp **8** or locking cast sleeve **8**
  In this case, use a rope lock **1**, see illustration **1**
– Rope end connection **without** locking clamp **8** or locking cast sleeve **8**
  In this case, use a wedge lock **40**, see illustration **2**

Note
► The locking clamp **8** is pressed on the rope.
► The locking cast sleeve **8** is cast with the rope.

LWE/LTR 1100-009/25105-02-02/en

copyright © Liebherr-Werk Ehingen GmbH 2023

2 Hoist rope lug*

If a hoist rope lug **30** is installed on the telescopic boom, then the hoist rope **31** is guided through the hoist rope lug **30**. Depending on the operating mode, the hoist rope **31** must be reeved through the hoist rope lug **30** or over the hoist rope lug **30**.

On the LTM 1400/1 and LTM 1400-7.1 the hoist rope **31** must be reeved on the hoist rope lug **30** according to chapter 4.06.10.

NOTICE
Incorrect reeving in!
Damage to the hoist rope.

On the LTM 1400/1 and LTM 1400-7.1:
► Reeve the hoist rope **31** on the hoist rope lug **30** according to chapter 4.06.10.

2.1 Hoist rope guide for telescopic boom operation

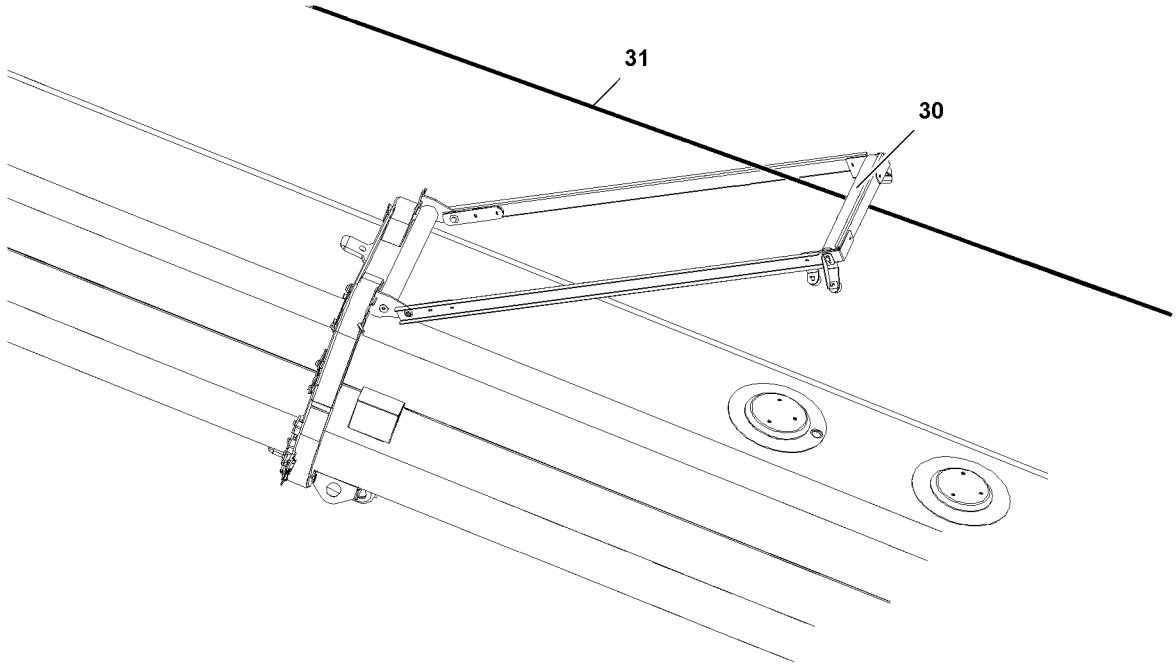

*Fig.121112: Hoist rope routing under the hoist rope lug **30***

When a hoist rope lug is installed on the telescopic boom:
► Reeve the hoist rope **31** in under the hoist rope lug **30**.

LWE/LTR 1100-009/25105-02-02/en

copyright © Liebherr-Werk Ehingen GmbH 2023

2.2 Folding jib / fixed lattice jib / strong lattice jib hoist rope guide

2.2.1 Hoist rope guide with one hoist rope

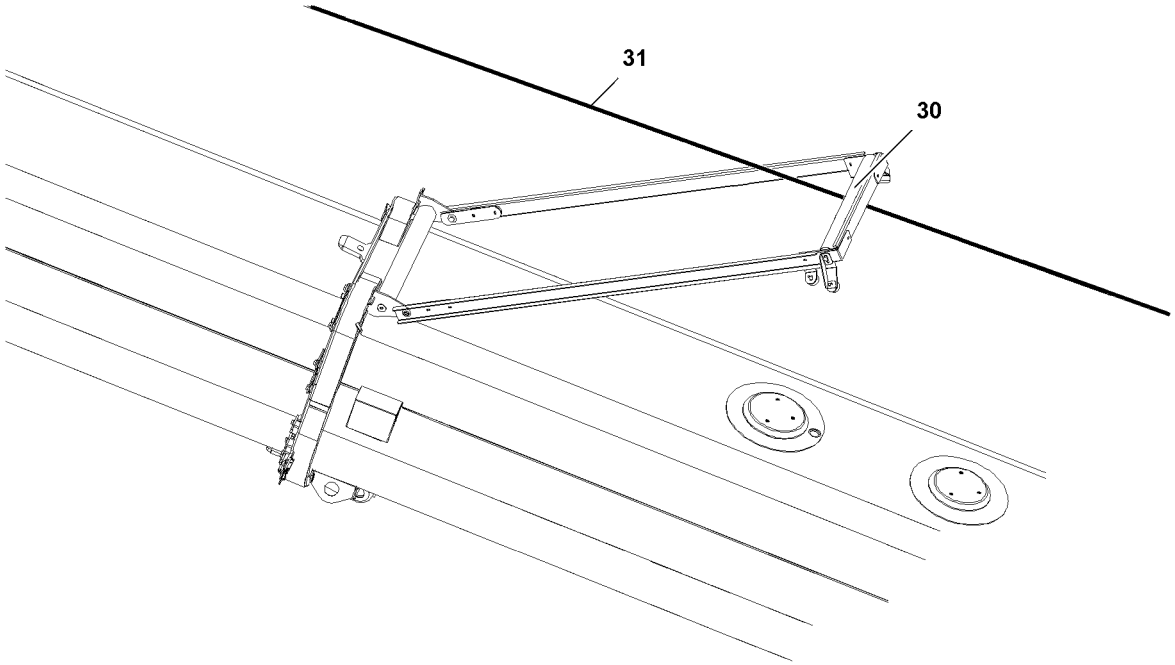

*Fig.122742: Hoist rope routing under the hoist rope lug **30***

When a hoist rope lug is installed on the telescopic boom:
► Reeve the hoist rope **31** in under the hoist rope lug **30**.

2.2.2 Hoist rope guide with two hoist ropes

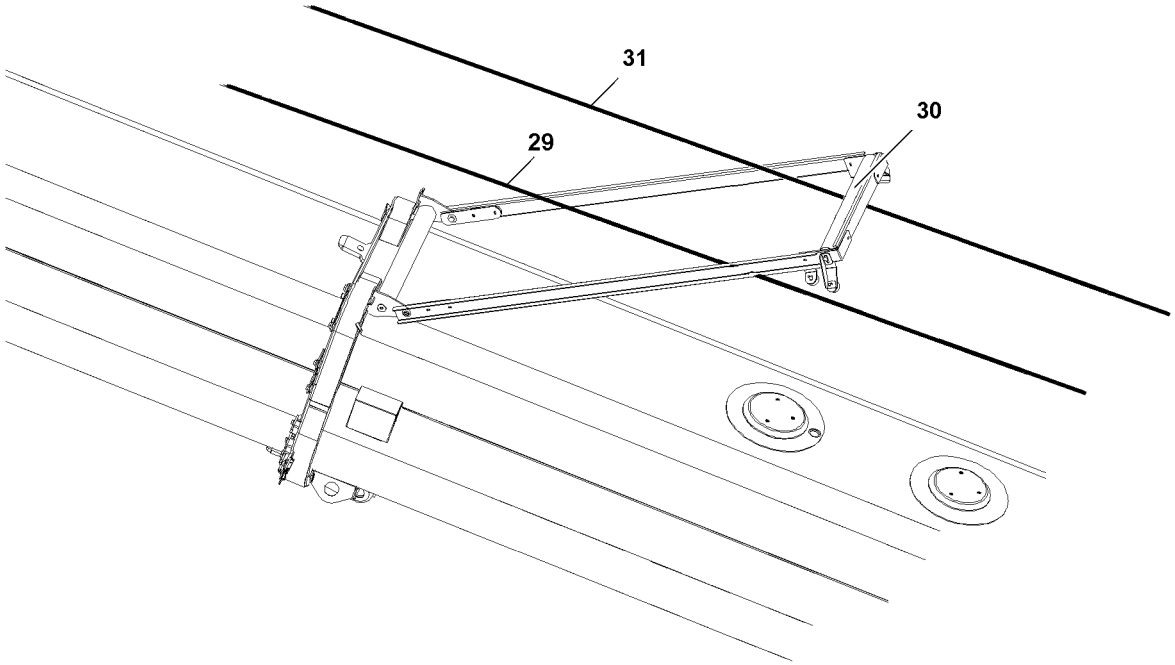

*Fig.122743: Hoist rope routing under the hoist rope lug **30***

LWE/LTR 1100-009/25105-02-02/en

copyright © Liebherr-Werk Ehingen GmbH 2023

When a hoist rope lug is installed on the telescopic boom:
► Reeve the hoist rope **29** and hoist rope **31** under the hoist rope lug **30**.

2.3 Hoist rope guide for operation with luffing lattice jib

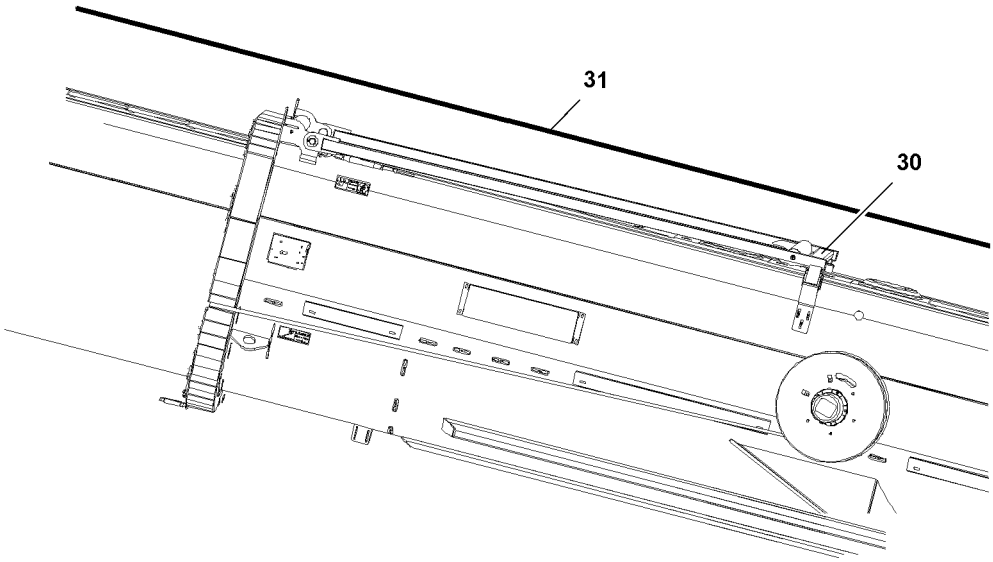

*Fig.121113: Hoist rope routing over the hoist rope lug **30***

For operation with luffing lattice jib:
► Reeve the hoist rope **31** over the hoist rope lug **30**.

LWE/LTR 1100-009/25105-02-02/en

copyright © Liebherr-Werk Ehingen GmbH 2023

3 Moveable back pulley*

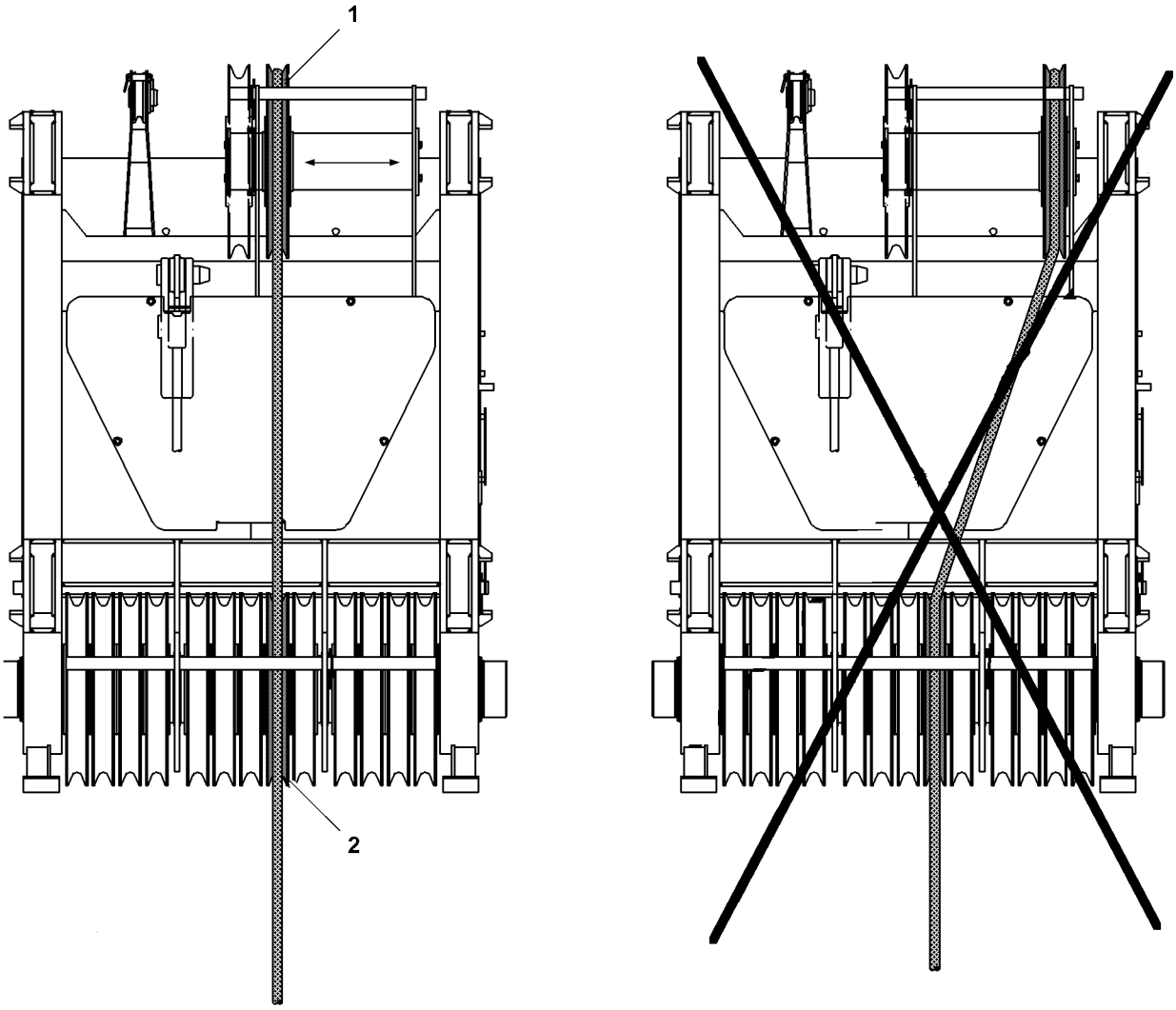

Fig.122732: Boom head with moveable back pulley

If a moveable back pulley **1** is installed on the crane, then it must be aligned before reeving.

3.1 Aligning the moveable back pulley

NOTICE
Angular pull of hoist rope!
Damage to the moveable back pulley.

► Move the moveable back pulley **1** to the side in such a way that the moveable back pulley **1** aligns with the run-in pulley **2**.

► Align the moveable back pulley **1** with the run-in pulley **2**.

LWE/LTR 1100-009/25105-02-02/en

copyright © Liebherr-Werk Ehingen GmbH 2023

4 Hoist rope

WARNING
Slipping during assembly work!
Danger of falling.
Death, severe injury, property damage.
- ► The telescopic boom may only be accessed if assembly personnel is protected with suitable safety measures to prevent them from falling and an assembly winch is used for rope reeving.
- ► If safety ropes are present on the telescopic boom, then assembly personnel must hook themselves with the supplied fall arrest system on the safety ropes of the telescopic boom on the left and right with both snap hooks and secure themselves against falling.
- ► Without appropriate safety measures, it is **strictly** prohibited to step on the telescopic boom.
- ► If railings are present for the crane, then they must be brought into the corresponding position and secured for assembly / disassembly.
- ► Carry out all assembly work from a safe location.
- ► Observe the assembly specifications in chapter 5.01.

Make sure that the following prerequisites are met:
- – The crane is properly supported and horizontally aligned.
- – The counterweight is installed according to the load chart.
- – The LICCON overload protection has been set according to the load chart.
- – The telescopic boom is telescoped in all the way.
- – The telescopic boom has been swung to the rear or the side.
- – The telescopic boom is luffed down to the 0° position.
- – The hoist rope is free of dirt.

4.1 Reeving in the hoist rope with the auxiliary reeving rope

- ► Only use the provided fall arrest system and protective equipment.

WARNING
Ladder **not** properly secured!
The ladder can topple over. Personnel can be fatally injured.
- ► Secure the ladder on the hoist gear and on the telescopic boom so that it cannot fall over.

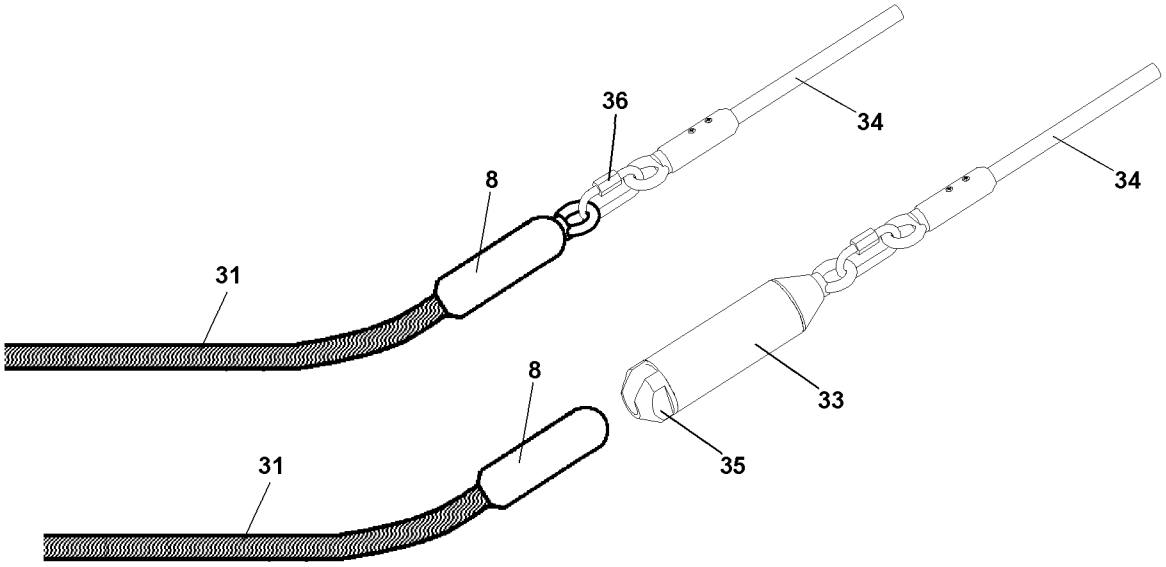

*Fig.146776: Auxiliary reeving rope **34***

LWE/LTR 1100-009/25105-02-02/en

copyright © Liebherr-Werk Ehingen GmbH 2023

If **no** railing is installed on the crane superstructure:
► Set up the ladder on the hoist gear in a stable manner and secure.

If a railing is installed on the crane superstructure:
► Place the railing on the crane superstructure in the assembly / disassembly position, see chapter 2.06.
► Secure assembly personnel to prevent them from falling: Hook the assembly personnel with fall arrest system in the respective fastening points.

When **one** intake sleeve **33** is installed on the auxiliary reeving rope **34**:
► Connect the auxiliary reeving rope **34** with the hoist rope **31**: Slide the intake sleeve **33** onto the locking clamp **8** and close off with the sleeve plug **35**.

When **no** intake sleeve **33** is installed on the auxiliary reeving rope **34**:
► Connect the auxiliary reeving rope **34** with the hoist rope **31**: Open the chain lock **36**, connect it with the eyehook of the lock clamp **8** and close the chain lock **36**.

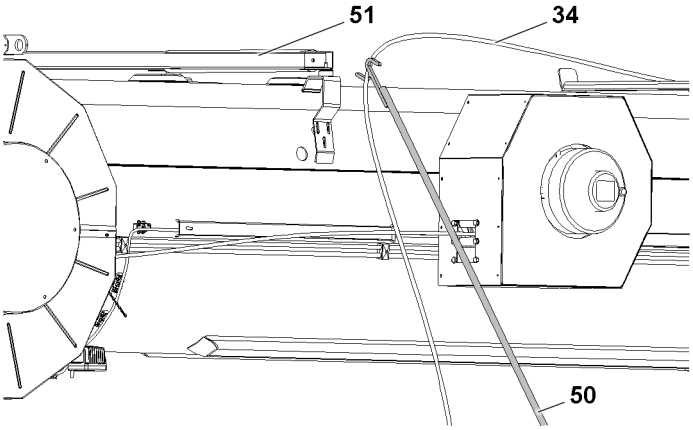

Fig.157599: Guiding the auxiliary rope with the assembly rod

► Throw the auxiliary reeving rope **34** to the front.
► Route the auxiliary reeving rope **34** with assembly rod **50** to the hoist rope lug **51**.
► Guide the auxiliary reeving rope **34** through below the hoist rope lug **51**. See section „Hoist rope guide for telescopic boom operation“.
► Set up the ladder on the telescopic boom in a stable manner and secure.
► Secure assembly personnel to prevent them from falling: Hook the assembly personnel with fall arrest system in the respective fastening points.

LWE/LTR 1100-009/25105-02-02/en

copyright © Liebherr-Werk Ehingen GmbH 2023

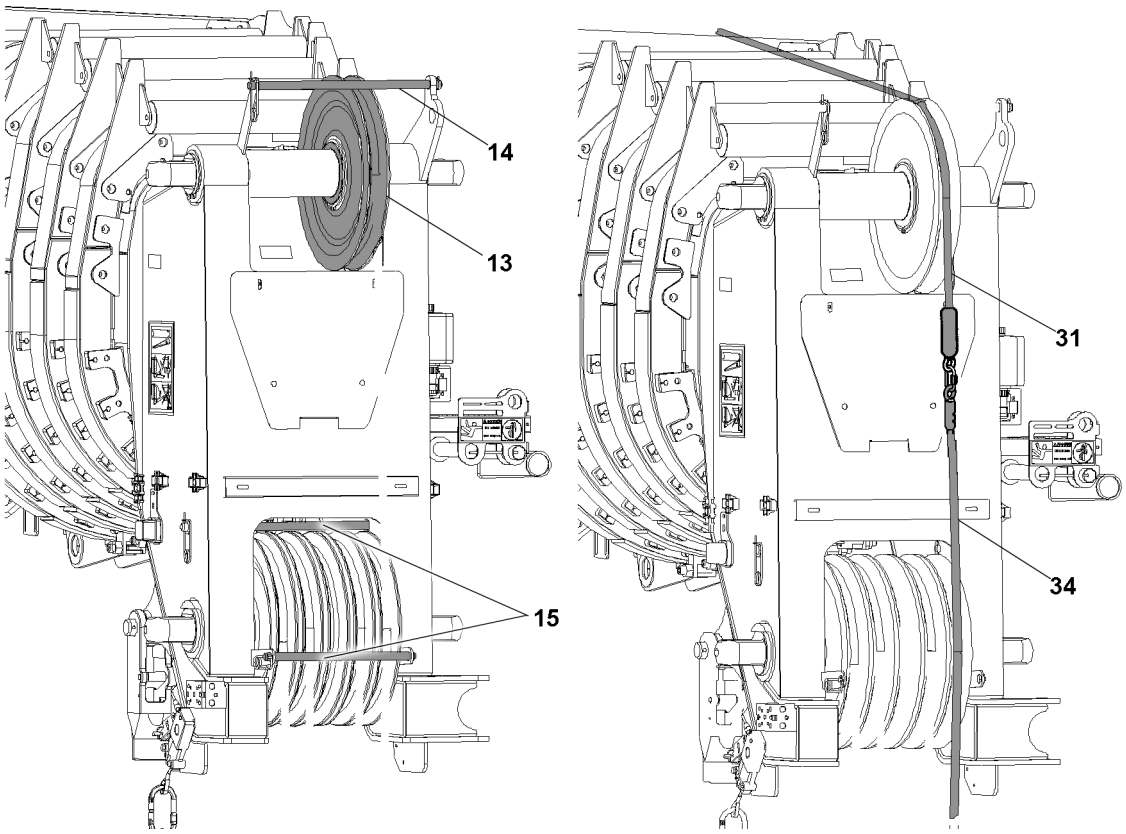

Fig.146777: Reeving in the hoist rope with the auxiliary reeving rope

- ► Remove the rope retaining pipe **14** and rope retaining pipe **15** on the pulley head.
- ► Place the auxiliary reeving rope **34** over the upper rope pulley **13**.

NOTICE
Hoist rope tension too low!
Slack rope formation.
- ► Do not permit slack rope on the hoist winch.

- ► Spool out the winch slowly and pull the auxiliary reeving rope **34** with the hoist rope **31** over the upper rope pulley **13**.
- ► Remove the auxiliary reeving rope **34** from the hoist rope **31**.

LWE/LTR 1100-009/25105-02-02/en

copyright © Liebherr-Werk Ehingen GmbH 2023

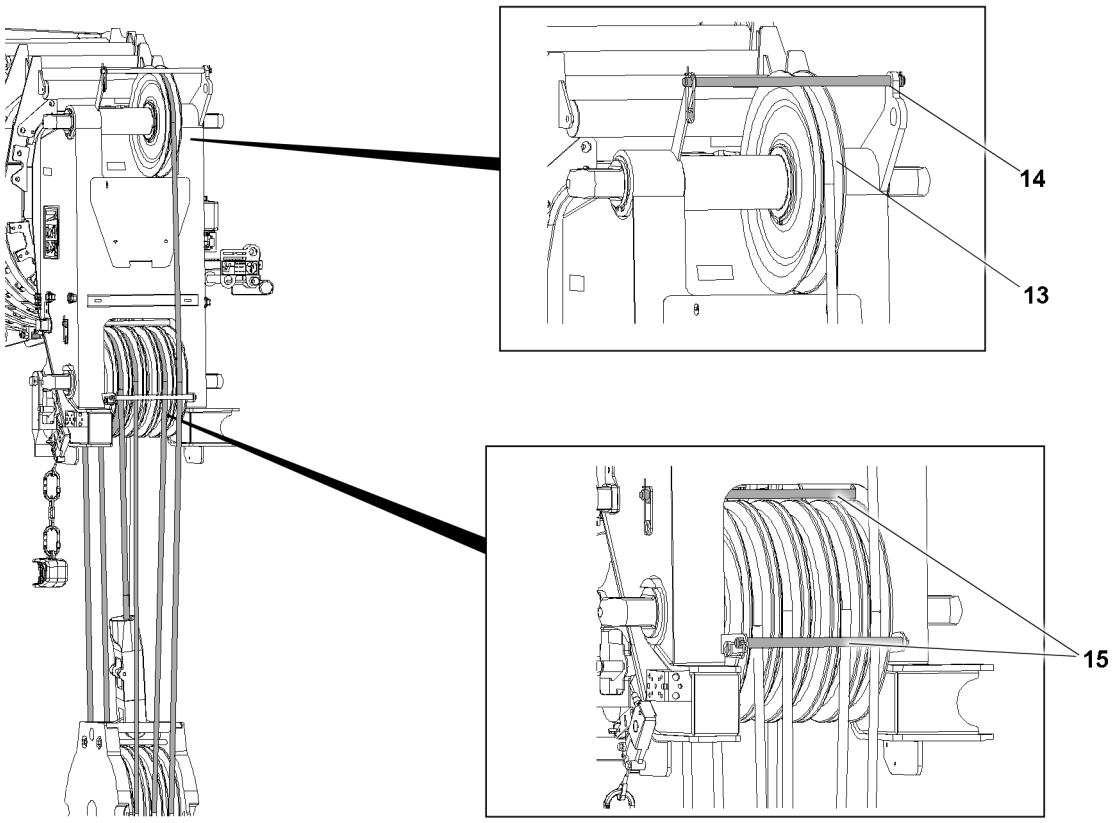

*Fig.146781: Reeve the hoist rope **31** in.*

- ► Reeve the hoist rope **31** in to the hook block.
- ► Pin and secure the rope retaining pipe **14** and the rope retaining pipe **15** on the pulley head.

4.2 Reeving in the hoist rope with the assembly winch

Depending on the crane type, the assembly winch auxiliary rope is reeved in **from the top** or **from the bottom**.

A distinction is made between the following reeving options:
- Reeving the assembly winch auxiliary rope in from the top
- Reeving the assembly winch auxiliary rope in from the bottom

LWE/LTR 1100-009/25105-02-02/en

copyright © Liebherr-Werk Ehingen GmbH 2023

4.2.1 Reeving the assembly winch auxiliary rope in from the top

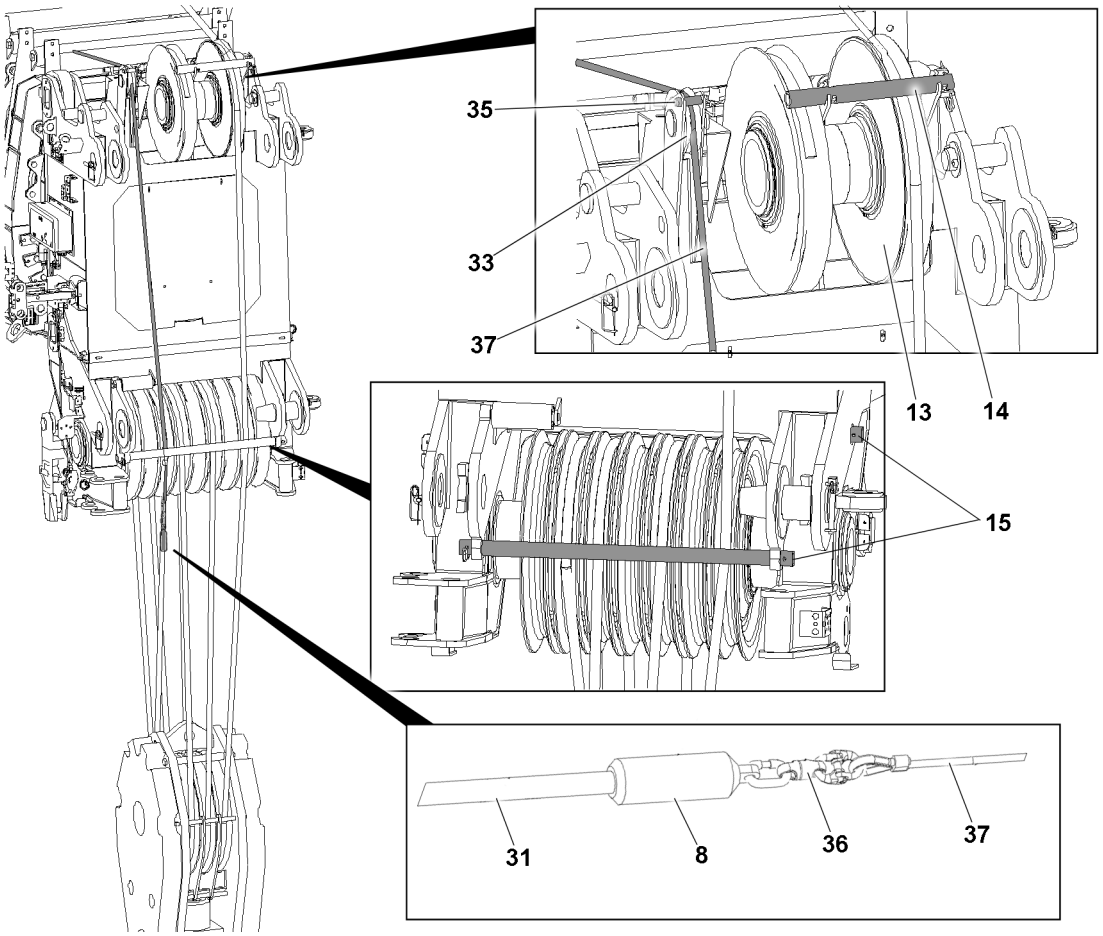

Fig.146778: Reeving the assembly winch hoist rope in from the top

► Attach the approved fall arrest system and protective equipment.

WARNING
Ladder **not** properly secured!
The ladder can topple over. Personnel can be fatally injured.
► Secure the ladder on the telescopic boom so that it cannot fall over.

If **no** railing is installed on the crane superstructure:
► Set up the ladder on the hoist gear in a stable manner and secure.
► Place the railing on the crane superstructure in the assembly / disassembly position, see chapter 2.06.
► Switch the assembly winch to freewheeling.
► Pull the auxiliary rope **37** forward to the change over pulley **33**.
► Set up the ladder on the telescopic boom in a stable manner and secure.
► Secure assembly personnel to prevent them from falling: Hook the assembly personnel with fall arrest system in the respective fastening points.
► Release and unpin the rope retaining pipe **35**, the rope retaining pipe **14** and the rope retaining pipe **15**.
► Place the auxiliary rope **37** over the change over pulley **33**.
► Pin the rope retaining pipe **35** and secure.
► Connect the auxiliary rope **37** with the auxiliary reeving rope (hemp rope).
► Reeve in the auxiliary rope **37** in the reverse direction between the hook block and the pulley head.
► Bring the auxiliary rope **37** with the auxiliary reeving rope (hemp rope) upward over the rope pulley **13**.
► Release the auxiliary reeving rope (hemp rope) from the auxiliary rope **37**.

LWE/LTR 1100-009/25105-02-02/en

copyright © Liebherr-Werk Ehingen GmbH 2023

- ► Pull the auxiliary rope **37** to the rear to the hoist winch.
- ► Connect the auxiliary rope **37** with the hoist rope **31**: Open the connecting link **36**, connect it with the eyehook of the lock clamp **8** and close the connecting link **36**.
- ► Turn freewheeling off on the assembly winch.

NOTICE
Hoist rope tension too low!
Slack rope formation.
- ► Do not permit slack rope on the hoist winch and the assembly winch.

- ► Reeve the hoist rope **31** in: Spool the hoist rope **31** out from the hoist winch and at the same time spool the auxiliary rope **37** up on the assembly winch.

When the hoist rope **31** is reeved in on the hook block:
- ► Stop the hoist winch and the assembly winch.
- ► Remove the rope retaining pipe **35**.
- ► Release the auxiliary rope **37** from the hoist rope **31** and spool up.
- ► Spool the auxiliary rope **37** up on the assembly winch and secure.
- ► Pin and secure the rope retaining pipe **35**, the rope retaining pipe **14** and the rope retaining pipe **15**.

4.2.2 Reeving the assembly winch auxiliary rope in from the bottom

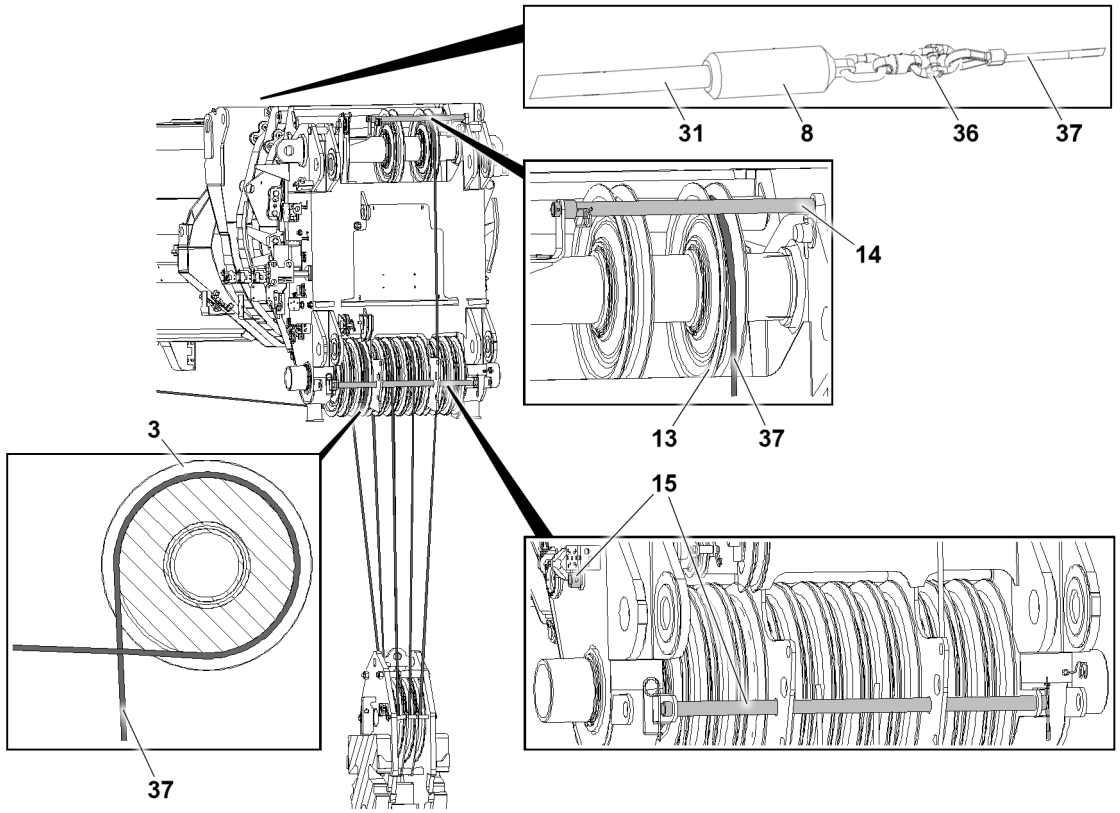

Fig.163210: Reeving the assembly winch auxiliary rope in from the bottom

- ► Attach the approved fall arrest system and protective equipment.

WARNING
Ladder **not** properly secured!
The ladder can topple over. Personnel can be fatally injured.
- ► Secure the ladder on the telescopic boom so that it cannot fall over.

- ► Switch the assembly winch to freewheeling.

LWE/LTR 1100-009/25105-02-02/en

copyright © Liebherr-Werk Ehingen GmbH 2023

- ► Auxiliary rope **37** in Reeving the change over pulley in on the turntable, see chapter 5.11.50.
- ► Pull the auxiliary rope **37** forward to the telescopic boom head.
- ► Set up the ladder on the telescopic boom in a stable manner and secure.
- ► Secure assembly personnel to prevent them from falling: Hook the assembly personnel with fall arrest system in the respective fastening points.
- ► Release and unpin the rope retaining pipe **14** and the rope retaining pipe **15**.
- ► Place the auxiliary rope **37** around the rope pulley **3**.
- ► Connect the auxiliary rope **37** with the auxiliary reeving rope (hemp rope).
- ► Reeve in the auxiliary rope **37** in the reverse direction between the hook block and the pulley head.
- ► Bring the auxiliary rope **37** with the auxiliary reeving rope (hemp rope) upward over the rope pulley **13**.
- ► Release the auxiliary reeving rope (hemp rope) from the auxiliary rope **37**.
- ► Pull the auxiliary rope **37** to the rear to the hoist winch.
- ► Connect the auxiliary rope **37** with the hoist rope **31**: Open the connecting link **36**, connect it with the eyehook of the lock clamp **8** and close the connecting link **36**.
- ► Turn freewheeling off on the assembly winch.

NOTICE
Hoist rope tension too low!
Slack rope formation.
- ► Do not permit slack rope on the hoist winch and the assembly winch.

- ► Reeve the hoist rope **31** in: Spool the hoist rope **31** out from the hoist winch and at the same time spool the auxiliary rope **37** up on the assembly winch.

When the hoist rope **31** is reeved in on the hook block:
- ► Stop the hoist winch and the assembly winch.
- ► Release the auxiliary rope **37** from the hoist rope **31**.
- ► Spool the auxiliary rope **37** up on the assembly winch and secure.
- ► Pin and secure the rope retaining pipe **14** and the rope retaining pipe **15**.

4.3 Reeving the hoist rope out

Make sure that the following prerequisites are met:
- – The hoist rope **31** is reeved out of the hook block.

- ► Only use the provided fall arrest system and protective equipment.

WARNING
Ladder **not** properly secured!
The ladder can topple over. Personnel can be fatally injured.
- ► Secure the ladder on the hoist gear and on the telescopic boom so that it cannot fall over.

- ► Set up the ladder on the telescopic boom in a stable manner and secure.
- ► Remove the rope retaining pipe **14** and rope retaining pipe **15** on the pulley head.
- ► Reeve the hoist rope **31** out on the hook block.

LWE/LTR 1100-009/25105-02-02/en

copyright © Liebherr-Werk Ehingen GmbH 2023

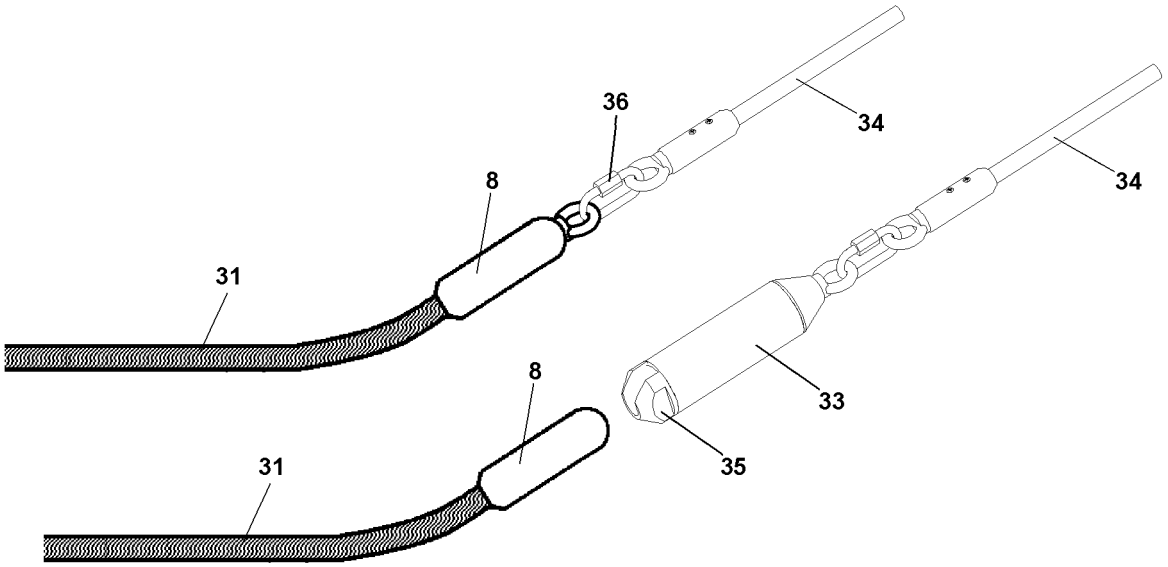

*Fig.146776: Auxiliary reeving rope **34***

When **one** intake sleeve **33** is installed on the auxiliary reeving rope **34**:

► Connect the auxiliary reeving rope **34** with the hoist rope **31**: Slide the intake sleeve **33** onto the locking clamp **8** and close off with the sleeve plug **35**.

When **no** intake sleeve **33** is installed on the auxiliary reeving rope **34**:

► Connect the auxiliary reeving rope **34** with the hoist rope **31**: Open the chain lock **36**, connect it with the eyehook of the lock clamp **8** and close the chain lock **36**.

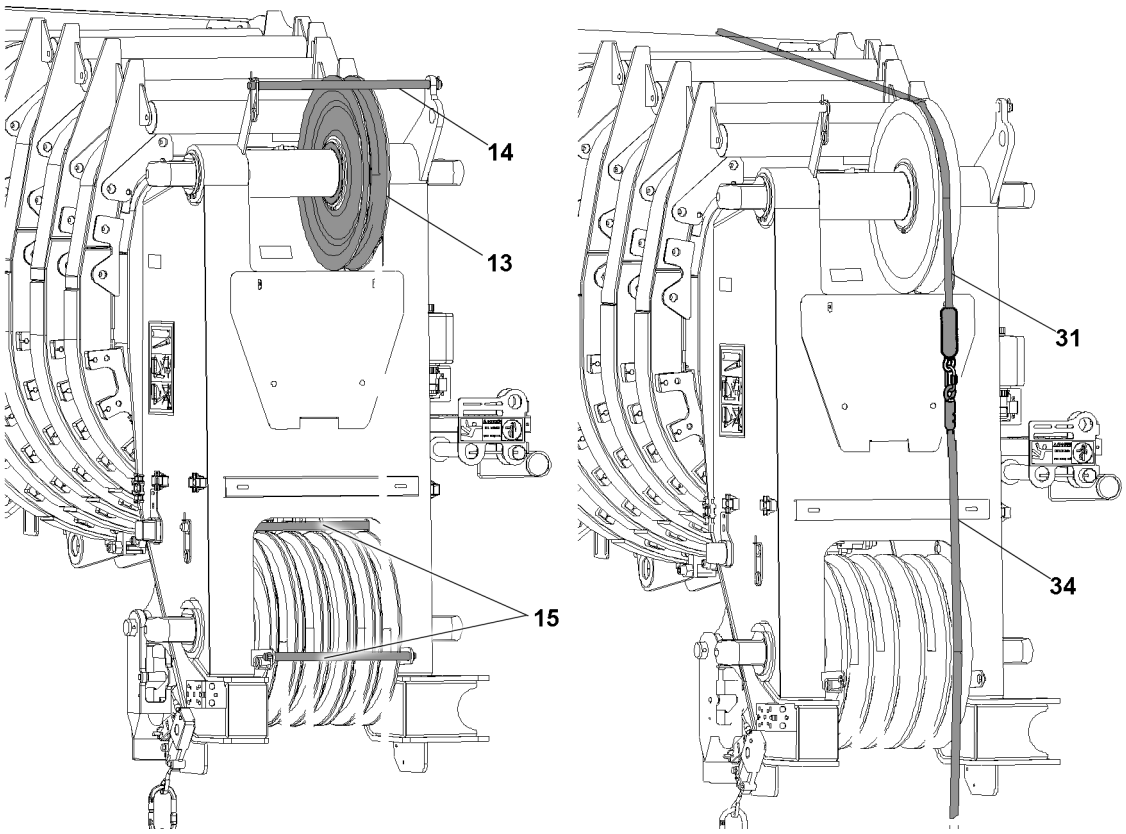

Fig.146777: Reeving out the hoist rope with the auxiliary reeving rope

LWE/LTR 1100-009/25105-02-02/en

copyright © Liebherr-Werk Ehingen GmbH 2023

WARNING
Danger of crushing due to rotating rope pulleys!
Arms and legs can be caught and crushed or severed between the rope pulley and the rope due to rotating rope pulleys.
- ► It is prohibited to touch the hoist ropes or the rope pulleys during operation.
- ► Adhere to the safety distance to ropes and rotating rope pulleys.

NOTICE
Hoist rope tension too low!
Slack rope formation.
- ► Do not permit slack rope on the hoist winch.

- ► Spool up the winch slowly and tension the hoist rope **31** with the auxiliary reeving rope **34**.
- ► When the hoist rope **31** is spooled up: Stop the winch movement.
- ► Pin and secure the rope retaining pipe **14** and the rope retaining pipe **15** on the pulley head.

If **no** railing is installed on the crane superstructure:
- ► Set up the ladder on the hoist gear in a stable manner and secure.

If a railing is installed on the crane superstructure:
- ► Place the railing on the crane superstructure in the assembly / disassembly position, see chapter 2.06.
- ► Secure assembly personnel to prevent them from falling: Hook the assembly personnel with fall arrest system in the respective fastening points.
- ► Remove the auxiliary reeving rope **34** from the hoist rope **31**.
- ► Fasten the hoist rope **31** to the hoist winch.

LWE/LTR 1100-009/25105-02-02/en

copyright © Liebherr-Werk Ehingen GmbH 2023

5 Hook block

5.1 Reeving the hook block in

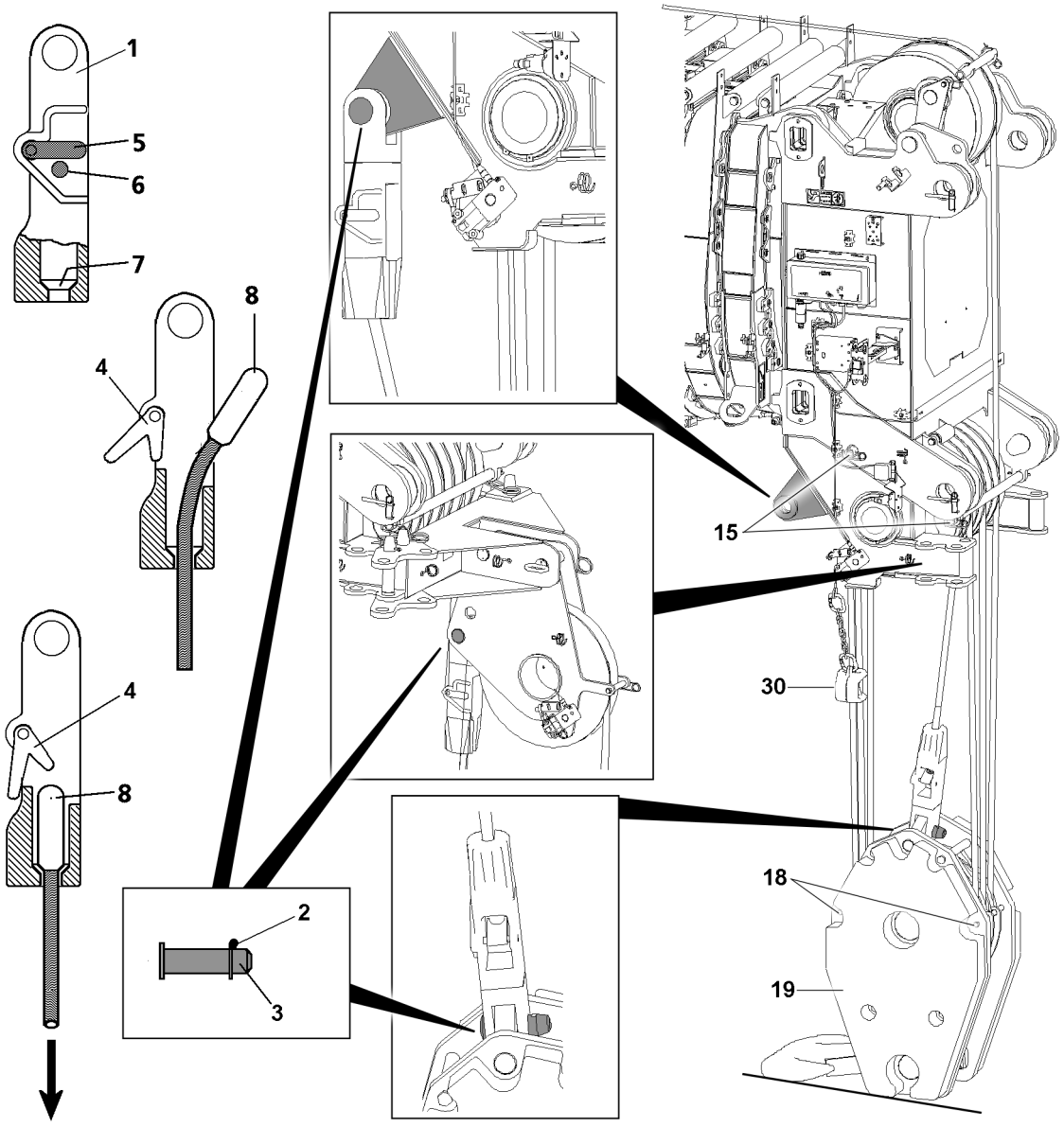

Fig.146779: Reeving the hook block in

To reeve in the hook block, also observe and adhere to the section „Reeving in the hoist rope“.

5.1.1 Preparing the hook block

Make sure that the following prerequisites are met:
- The crane is horizontally aligned.
- The required hook block is located below the boom head.
- The hook block is positioned securely on the ground.
- The boom is luffed down to the point where the boom head is above the hook block.
- An assistant is present to guide the hoist rope.

LWE/LTR 1100-009/25105-02-02/en

copyright © Liebherr-Werk Ehingen GmbH 2023

NOTICE
Hook block incorrectly reeved!
Damage to the hoist rope.
► Carry out the reeving of the hoist rope according to the reeving plan.
► Select the rope fixed point on the hook block is in such a way that the last strand runs parallel to the remaining rope strands, as much as possible.

► Release and unpin both rope retaining pipes **18** on the hook block **19**.

WARNING
Slipping during assembly work!
Danger of falling.
Death, severe injury, property damage.
► The telescopic boom may only be accessed if assembly personnel is protected with suitable safety measures to prevent them from falling.
► If safety ropes are present on the telescopic boom, then assembly personnel must hook themselves with the supplied fall arrest system on the safety ropes of the telescopic boom on the left and right with both snap hooks and secure themselves against falling.
► Without appropriate safety measures, it is **strictly** prohibited to step on the telescopic boom.
► If railings are present for the crane, then they must be brought into the corresponding position and secured for assembly / disassembly.
► Carry out all assembly work from a safe location.
► Observe the assembly specifications in chapter 5.01.

► Reeve the hook block **19** in.
► Insert the rope retaining pipes **18** again and secure.

5.1.2 Connecting the hoist rope to the rope lock

The attachment of the hoist rope with the locking clamp **8** or the locking cast sleeve **8** is identical.

NOTICE
The hoist rope is incorrectly installed!
Damage to the hoist rope.
► Always insert the pin **3** from the „inside to the outside“ and secure from the outside.

► The rope lock **1** must be pinned either on the pulley head or on the hook block and secured with the retaining element **2**, depending on reeving.
► Push the retaining element pin **6** in on the rope lock **1**.
► Swing the lever **5** „down“ and hold it in this position.

Result:

– The locking pawl **4** is swung „downward“.

► Attach the rope end with the locking clamp **8** in the rope lock **1** and pull „down“ firmly (in direction of the arrow), until the locking clamp **8** is touching in the cone **7**.

WARNING
Locking clamp is incorrectly assembled!
Death, severe injuries, property damage.
► The locking clamp **8** must touch the cone **7** after connecting it to the rope lock **1** and must be secured by the locking pawl **4**.

► Release the lever **5**.

Result:

– The lever **5** returns to the initial position and is locked by the retaining element pin **6**.

► Check the rope retainer. Perform a visual inspection.
► Attach the hoist limit switch weight **30**.

LWE/LTR 1100-009/25105-02-02/en

copyright © Liebherr-Werk Ehingen GmbH 2023

5.2 Reeving the hook block out

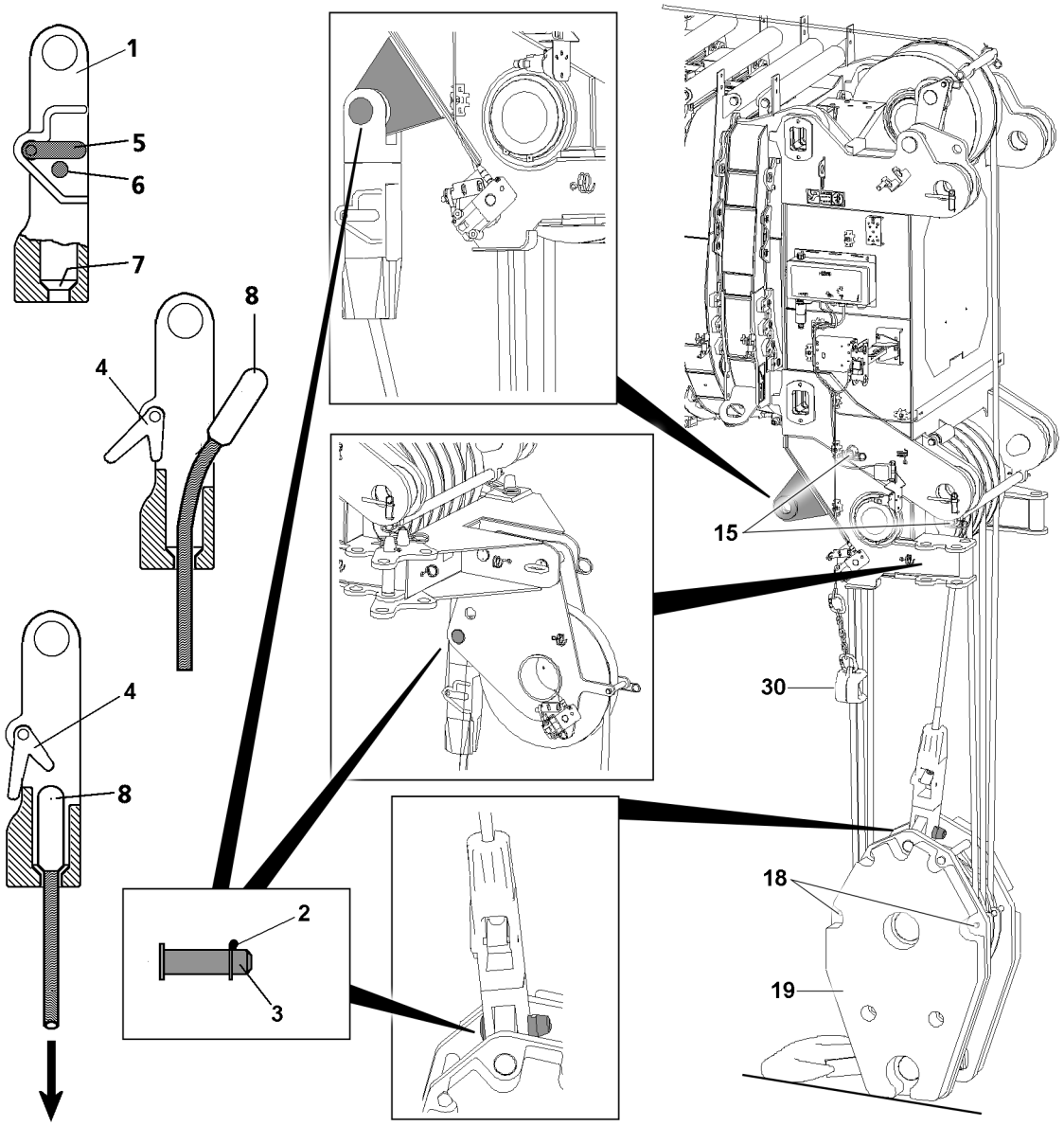

Fig.146779: Reeving the hook block out

Make sure that the following prerequisites are met:
- The crane is properly supported and horizontally aligned.
- The counterweight is installed according to the load chart.
- The LICCON overload protection has been set according to the load chart.
- The telescopic boom is telescoped in all the way.
- The telescopic boom has been swung to the rear or the side.
- The telescopic boom is luffed down to the 0° position.
- The ground is level and of sufficient load bearing capacity.

WARNING
Crushing of hands!
When reeving out the hook block **19**, it can topple over.
Death, severe injury, property damage.
► Use the handles in the safe area of the hook block **19**.
► Make sure the hook block **19** is safely positioned.

► Lower the hook block **19** and place it on the ground.

LWE/LTR 1100-009/25105-02-02/en

copyright © Liebherr-Werk Ehingen GmbH 2023

► Remove the hoist limit switch weight **30**.
► Push the retaining element pin **6** in on the rope lock **1**.
► Swing the lever **5** „down“ and hold it in this position.

Result:

– The locking pawl **4** is swung downward.
– The locking clamp **8** is released.

► Push the hoist rope up and detach the locking clamp **8**.
► Release and unpin the rope retaining pipes **15** on the pulley head.
► Release and unpin the rope retaining pipes **18** on the hook block **19**.
► Reeve the hoist rope out from the hook block **19**.
► Insert the rope retaining pipes **18** again and secure.

6 Load hook

6.1 Assembling the load hook

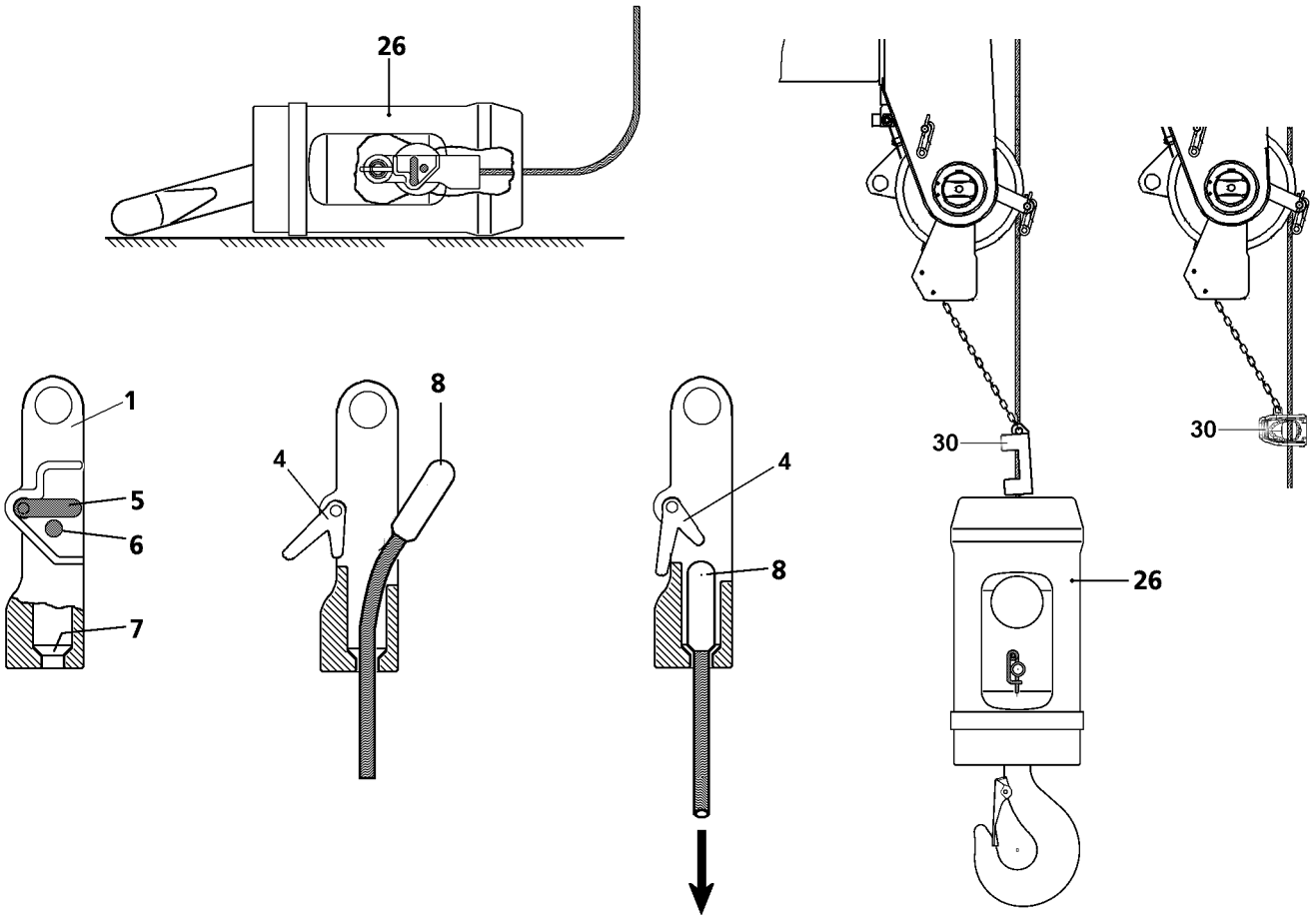

Fig.127730: Assembling the load hook

Make sure that the following prerequisites are met:
– The crane is horizontally aligned.
– The hoist rope is reeved in on the boom head.
– The required load hook lies below the boom head.
– The boom is luffed down to the point where the boom head is above the load hook.
– An assistant is present to guide the hoist rope.

► Push the retaining element pin **6** in on the rope lock **1**.

LWE/LTR 1100-009/25105-02-02/en

copyright © Liebherr-Werk Ehingen GmbH 2023

► Swing the lever **5** „down“ and hold it in this position.

Result:

– The locking pawl **4** is swung „downward“.

► Attach the rope end with the locking clamp **8** in the rope lock and pull „down“ firmly (in direction of the arrow), until the locking clamp **8** is touching in the cone **7**.

WARNING
Locking clamp is incorrectly fastened!
Damage to locking clamp.
Death, severe injuries, property damage
► The locking clamp **8** must touch the cone **7** after connecting it to the rope lock **1** and must be secured by the locking pawl **4**.

► Release the lever **5**.

Result:

– The lever **5** returns back to the initial position and is locked by the retaining element pin **6**.

► Pin the rope lock **1** in the load hook **26** and secure with the retaining element.
► Check the rope retainer. Perform a visual inspection.
► Attach the hoist limit switch weight **30**.

6.2 Disassembling the load hook

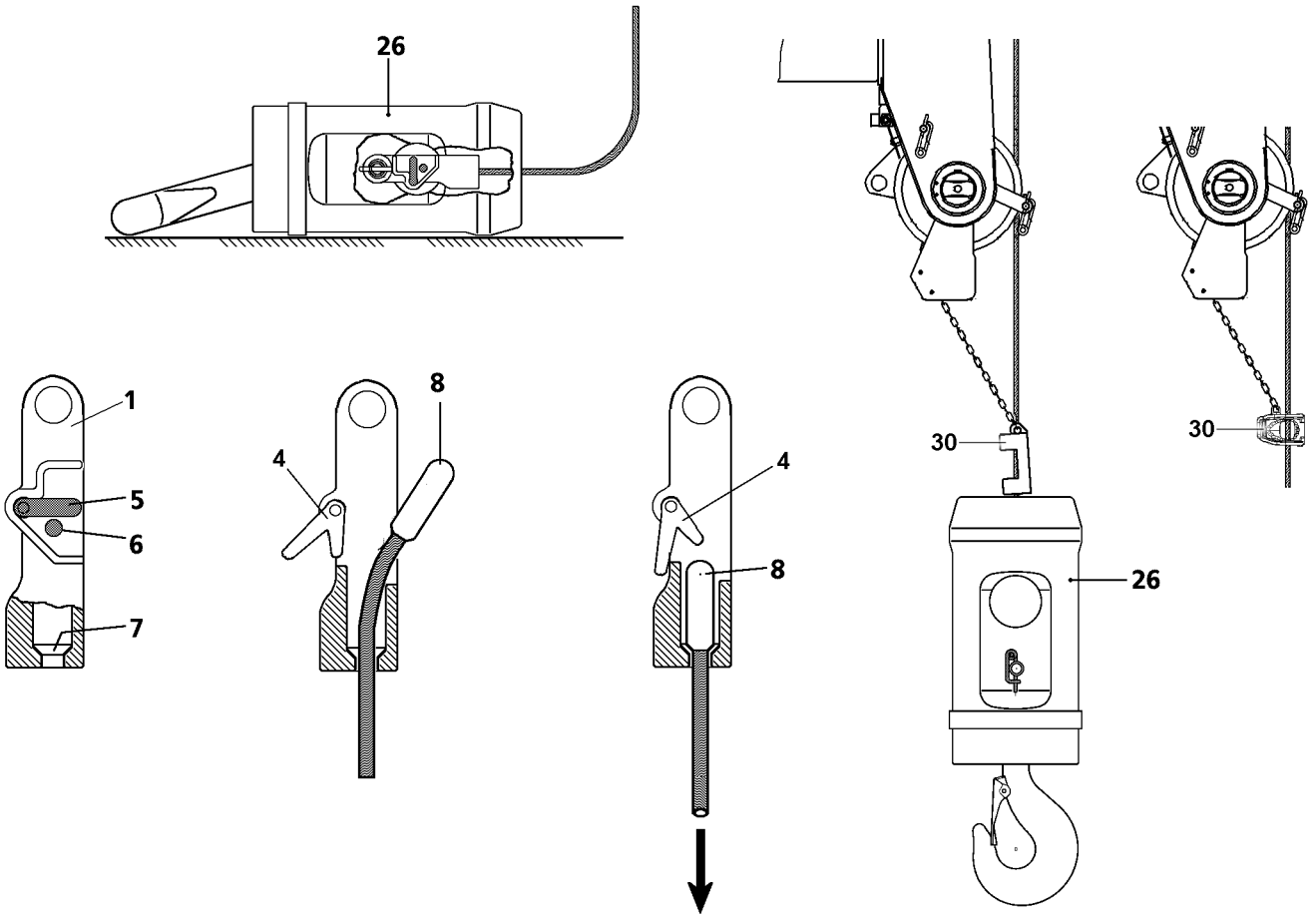

Fig.127730: Disassembling the load hook

LWE/LTR 1100-009/25105-02-02/en

copyright © Liebherr-Werk Ehingen GmbH 2023

Make sure that the following prerequisites are met:
- The crane is properly supported and horizontally aligned.
- The counterweight is installed according to the load chart.
- The LICCON overload protection has been set according to the load chart.
- The telescopic boom is telescoped in all the way.
- The telescopic boom has been swung to the rear or the side.
- The telescopic boom is luffed down to the 0° position.
- The ground is level and of sufficient load bearing capacity.

► Take the load hook **26** down on the ground.
► Remove the hoist limit switch weight **30**.
► Push the retaining element pin **6** into the rope lock **1**, swing the lever **5** to the side and hold it in this position.

Result:

- The locking pawl **4** is moved to the side and the locking clamp **8** is released.

► Push the hoist rope in the direction of the load hook and detach the locking clamp **8**.
► Unpin the rope lock **1** on the load hook **26** and remove.

LWE/LTR 1100-009/25105-02-02/en

copyright © Liebherr-Werk Ehingen GmbH 2023

7 Two-part hoist limit switch weight

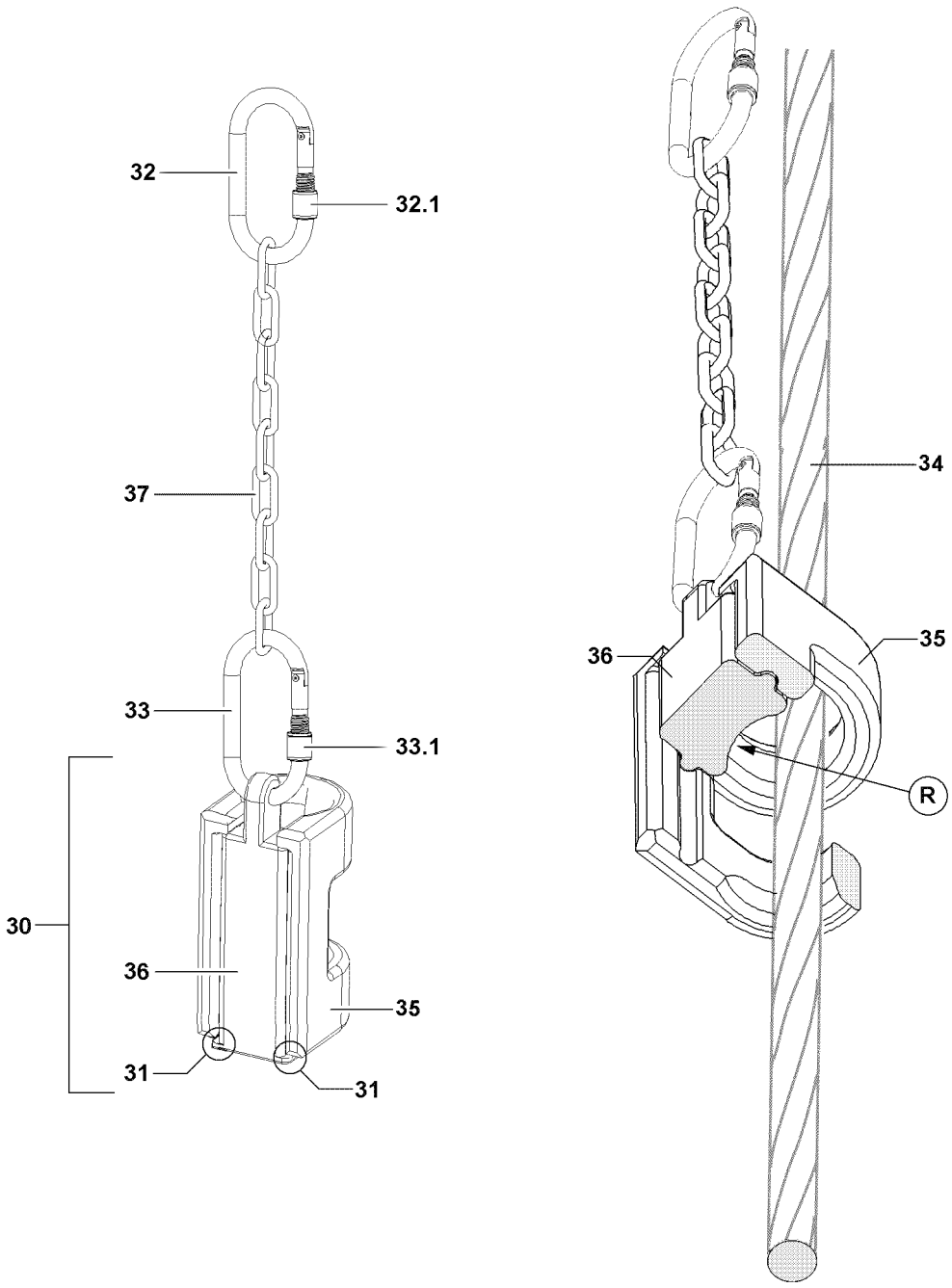

Fig.156691: Two-part hoist limit switch weight

The two-part hoist limit switch weight is only available on certain crane types.

The hoist limit switch weight is connected to the hoist limit switch. By connecting the hoist limit switch weight **30** to the hoist limit switch, the *Spool winch up* crane movement is released. As soon as the hoist limit switch weight **30** is lifted, the hoist limit switch switches off the *Spool winch up* crane movement.

The following parts are required:
- **30** Hoist limit switch weight
- **32** Upper carabiner
- **33** Lower carabiner
- **37** Chain

LWE/LTR 1100-009/25105-02-02/en

copyright © Liebherr-Werk Ehingen GmbH 2023

The hoist limit switch weight **30** consists of two parts, which are pushed into each other:
– The weight **35**
– The carrier section **36**

WARNING
Incorrect parts installed!
The crane movement is **not** switched off or is switched off too late.
Death, severe bodily injuries, property damage.
► Do **not** replace the hoist limit switch weight **30**, carabiner and chain **37** with other parts.

The chain **37** must be attached with its full length during crane operation and may not be shortened.

WARNING
Chain **37** shortened!
The crane movement is **not** switched off or is switched off too late.
Death, severe bodily injuries, property damage.
► Do **not** shorten the chain **37**.

7.1 Attaching the hoist limit switch weight

WARNING
Hoist limit switch weight is incorrectly installed!
The hoist limit switch weight can fall down. Death, severe injuries.
► When detaching or attaching the hoist limit switch weight **30** make sure that the weight **35** and the carrier section **36** do not fall down.
► Make sure that the curvature **R** of the carrier section **36** points to the hoist rope **34**.
► Make sure that the noses **31** of the carrier section **36** is placed on the weight **35**.

WARNING
Knurled nut installed closing upward!
The carabiner could loosen up itself by itself. The hoist limit switch weight **30** can fall down.
Death or severe bodily injuries.
► **Assemble the knurled nut closing downward.**

► Connect the chain **37** to the upper carabiner **32** on the hoist limit switch.
► Secure the upper carabiner **32** with the knurled nut **32.1**.

The attachment of the hoist limit switch weight **30** depends on the position of the rope fixed point.

Rope fixed point on the pulley head:
– In the event of multiple hoist rope reeving, the hoist limit switch weight **30** must always be laid around the „stationary rope strand“, in other words around the rope strand that leads directly to the cable lock.

Rope fixed point on the hook block:
– The hoist limit switch weight **30** is laid around the outer strand that has the least angular pull, i.e. the one with the smallest angle between the connected hoist limit switch weight and the hoist rope.

► Release and unscrew the knurled nut **33.1** from the lower carabiner **33**.
► Push the weight **35** with one hand on the hoist rope **34** and hold.
► With the other hand, guide the carrier section **36** behind the hoist rope **34** and under the weight **35**. The curvature **R** of the carrier section **36** must point to the hoist rope **34**.
► Push the weight **35** on the carrier section **36**.
► Fit the hoist limit switch weight **30** with the carrier section **36** in the lower carabiner **33**.
► Secure the lower carabiner **33** with the knurled nut **33.1**.

LWE/LTR 1100-009/25105-02-02/en

copyright © Liebherr-Werk Ehingen GmbH 2023

7.2 Removing the hoist limit switch weight

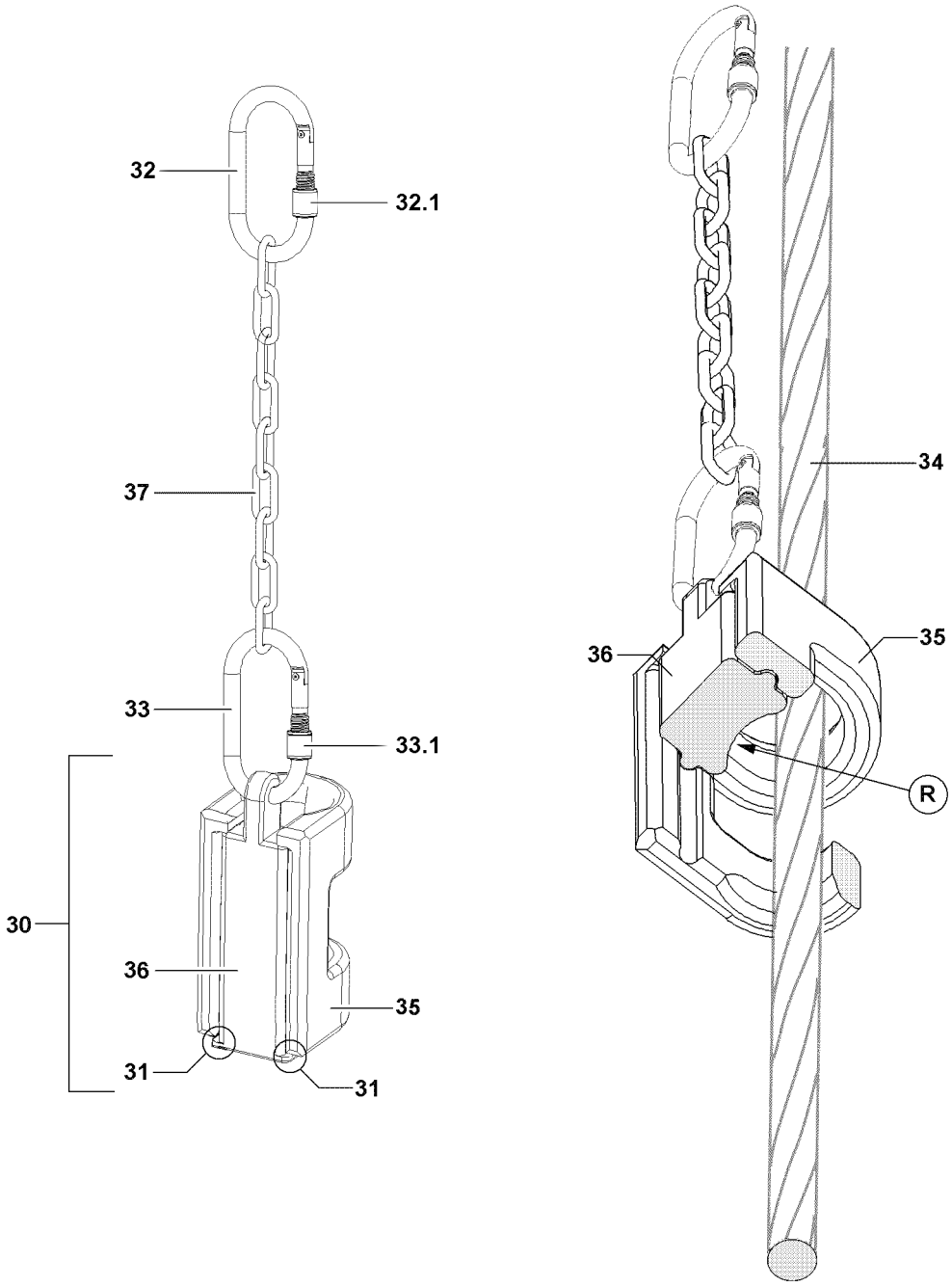

Fig.156691: Detailed view of the hoist limit switch weight

WARNING
Hoist limit switch weight is incorrectly installed!
The hoist limit switch weight can fall down. Death, severe injuries.
- ► When detaching or attaching the hoist limit switch weight **30** make sure that the weight **35** and the carrier section **36** do not fall down.
- ► It is prohibited to remain in the danger zone.

- ► Release and unscrew the knurled nut **33.1** on the lower carabiner **33**.
- ► Detach the hoist limit switch weight **30** from the lower carabiner **33**.
- ► Hold the weight **35** with one hand and with the other hand, push the carrier section **36** out of the weight **35**.

LWE/LTR 1100-009/25105-02-02/en

copyright © Liebherr-Werk Ehingen GmbH 2023

► Remove the chain **37** with the upper carabiner **32** on the hoist limit switch.
► Store the weight **35**, carrier section **36** and chain **37** with the carabiner safely.

8 One-part hoist limit switch weight

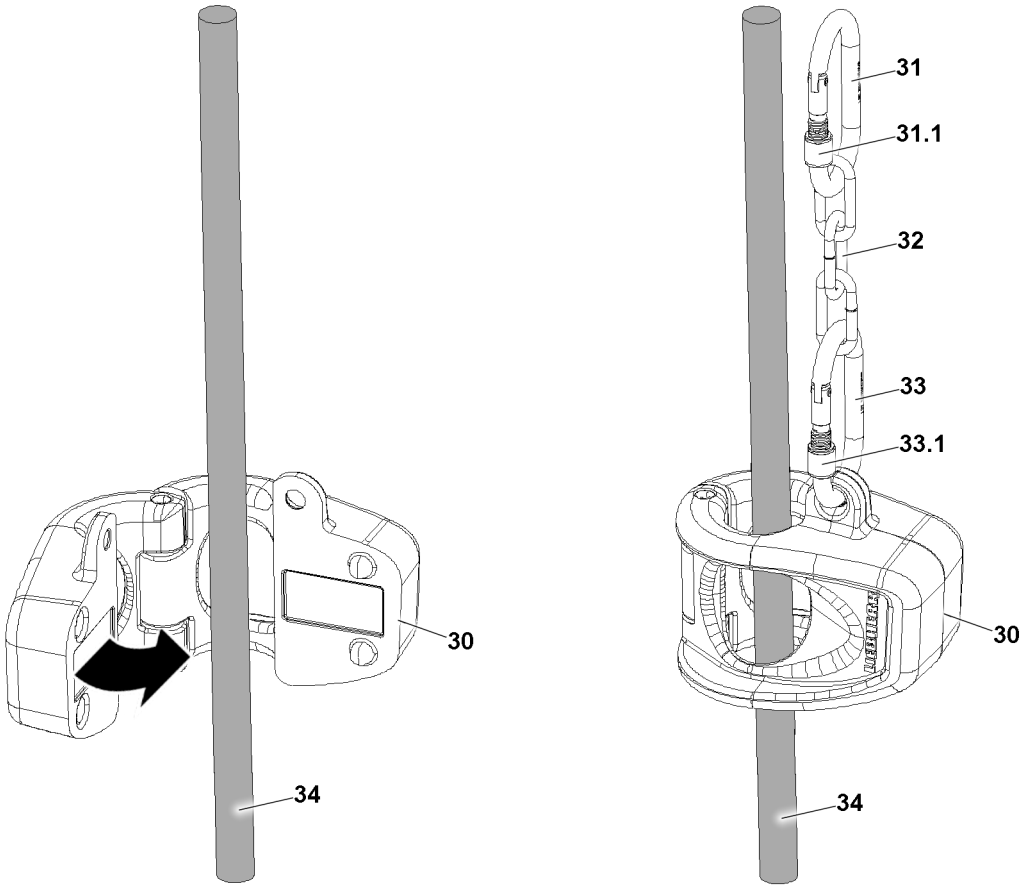

Fig.127727: Hoist limit switch weight

The one-part hoist limit switch weight is only available on certain crane types.

The hoist limit switch weight is connected to the hoist limit switch. By connecting the hoist limit switch weight **30** to the hoist limit switch, the crane movement *Spool winch up* is released. As soon as the hoist limit switch weight **30** is lifted, the hoist limit switch switches off the *Spool winch up* crane movement.

The following parts are required:
– **30** Hoist limit switch weight
– **31** Upper carabiner
– **32** Chain
– **33** Lower carabiner

WARNING
Incorrect parts installed!
The crane movement is **not** switched off or is switched off too late.
Death, severe bodily injuries, property damage.
► Do **not** replace the hoist limit switch weight **30**, carabiner and chain **32** with other parts.

The chain **32** must be attached with its full length during crane operation and may not be shortened.

LWE/LTR 1100-009/25105-02-02/en

copyright © Liebherr-Werk Ehingen GmbH 2023

WARNING
Chain **32** shortened!
The crane movement is **not** switched off or is switched off too late.
Death, severe bodily injuries, property damage.
► Do **not** shorten the chain **32**.

8.1 Attaching the hoist limit switch weight

WARNING
Hoist limit switch weight is incorrectly installed!
The hoist limit switch weight can fall down.
Death or severe bodily injuries.
► Makes sure that the hoist limit switch weight **30**, carabiner and chain **32** do not scrape against the hoist rope **34** after assembly.
► Do **not** let the hoist limit switch weight **30** fall down.

WARNING
Knurled nut installed closing upward!
The carabiner could loosen up itself by itself. The hoist limit switch weight **30** can fall down.
Death or severe bodily injuries.
► **Assemble the knurled nut closing downward.**

► Connect the chain **32** to the upper carabiner **31** on the hoist limit switch.
► Secure the upper carabiner **31** with the knurled nut **31.1**.

The attachment of the hoist limit switch weight **30** depends on the position of the rope fixed point.

Rope fixed point on the pulley head:
– In the event of multiple hoist rope reeving, the hoist limit switch weight **30** must always be laid around the „stationary rope strand“, in other words around the rope strand that leads directly to the cable lock.

Rope fixed point on the hook block:
– The hoist limit switch weight **30** is laid around the outer strand that has the least angular pull, i.e. the one with the smallest angle between the connected hoist limit switch weight **30** and the hoist rope **34**.

► Place the hoist limit switch weight **30** around the hoist rope **34**.
► Close the hoist limit switch weight **30**.
► Connect the chain **32** to the lower carabiner **33** on the hoist limit switch weight **30**.
► Secure the lower carabiner **33** with the knurled nut **33.1**.

Result:
– The hoist limit switch weight **30** is assembled and secured.

LWE/LTR 1100-009/25105-02-02/en

copyright © Liebherr-Werk Ehingen GmbH 2023

8.2 Removing the hoist limit switch weight

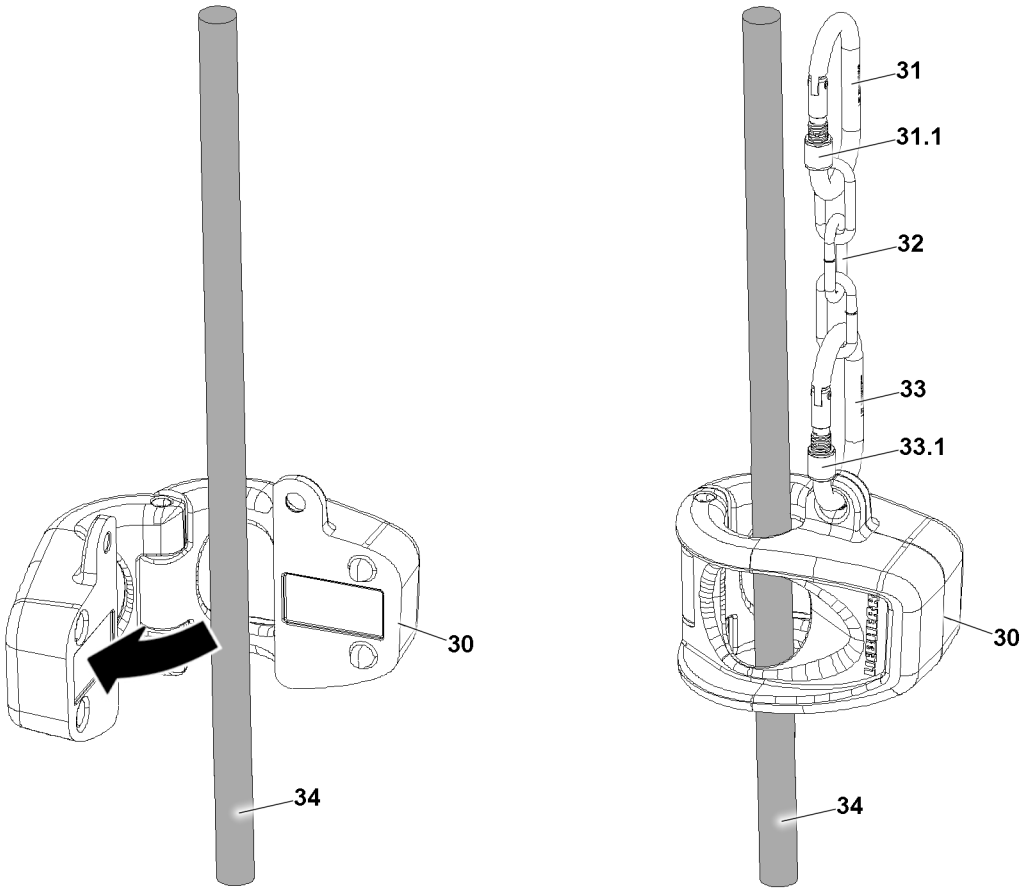

Fig.127728: Removing the hoist limit switch weight

WARNING
Hoist limit switch weight **not** secured during disassembly!
The hoist limit switch weight can fall down.
► Do **not** let the hoist limit switch weight **30** fall down during disassembly.

► Release and unscrew the knurled nut **33.1** on the lower carabiner **33**.
► Hold the hoist limit switch weight **30** with one hand and with the other hand, disconnect the lower carabiner **33** on the hoist limit switch weight **30**.
► Remove the chain **32** with the upper carabiner **31** on the hoist limit switch.
► Store the hoist limit switch weight **30**, chain **32** with the carabiner **31** and carabiner **33** safely.

9 Assembling / disassembling the wedge lock

Liebherr-Werk Ehingen GmbH does not have any safety concerns regarding the use of a wedge lock as a replacement for the lock. The wedge lock must be released by Liebherr-Werk Ehingen GmbH for use on the corresponding rope type. However, when using a wedge lock in connection with rotation-resistant hoist ropes, they do not have some of the positive characteristics of the lock, which can lead to a reduced service life of the rope. If a wedge lock is disassembled and then assembled again on the rope, the previously clamped part of the rope must first be cut off.

The utilized wedge lock can only be installed and assembled by authorized and trained personnel.

Make sure that the following prerequisites are met:
– The wedge lock is released for the rope diameter and rope type.
– The lock clamp / locking case sleeve has been properly disconnected.

LWE/LTR 1100-009/25105-02-02/en

copyright © Liebherr-Werk Ehingen GmbH 2023

9.1 Safety

DANGER
The rope is not suitable for the wedge lock!
If an unsuitable rope is used with a wedge lock as an end connection, the end connection will fail and lead to breakage.
- ► Do not provide unsuitable ropes, such as fiber ropes, plastic coated ropes or spiral ropes, with a wedge lock as an end connection.
- ► Only provide suitable wire ropes with a wedge lock as an end connection.
- ► The wedge lock must be released by Liebherr-Werk Ehingen GmbH for use on the corresponding rope type.
- ► The wire rope diameter must match the wedge lock.
- ► In case of lack of clarity, contact Liebherr Service.

WARNING
Faulty assembly / disassembly of a wedge lock!
- ► The utilized wedge lock can only be installed, assembled and disassembled by authorized and trained personnel.
- ► Wear protective clothing.
- ► In case of lack of clarity, contact Liebherr Service.

WARNING
Wrong components on the wedge lock!
If the housing and wedge do not match, a correct end connection with the wedge lock is not possible. Incorrect components on the wedge lock can lead to the failure of the end connection and to breakage.
- ► Only use housing with an appropriate wedge.
- ► Keep all components of the wedge lock so that they can’t be mixed up.
- ► If there are uncertainties regarding the composition of the wedge lock, the wedge lock may not be used.
- ► Only use the wedge lock with unchanged original components.

WARNING
Damaged wedge lock!
The use of a damaged wedge lock can lead to the failure of the end connection and to breakage.
- ► Check all components for damage prior to assembly.
- ► A wedge lock with damaged components may not be installed or used.
- ► Do not use a wedge lock with an illegible manufacturer’s mark or nominal size.

WARNING
Reuse of a jammed area!
If a rope is used a second time in the same position with a wedge lock, the end connection will fail and lead to breakage.
If a rope in a previously jammed area is provided with a locking clamp or locking cast sleeve, the end connection can fail and lead to breakage.
- ► Do not use the previously jammed area of the rope again and cut it off completely.

LWE/LTR 1100-009/25105-02-02/en

copyright © Liebherr-Werk Ehingen GmbH 2023

WARNING
Unsuitable position for attaching a wedge lock!
If a wedge lock is installed in an unsuitable position of the rope, the end connection can fail and lead to breakage.
- ► Pressure marks in the clamping area on the rope and wedge lock can lead to the failure of the wedge lock.
- ► The wedge lock may not be clamped on an annealing separated area or a trimming of the rope.
- ► The surface of the clamping area on the rope and wedge lock must be free of dirt and rust.
- ► The clamping area may not have rope breakage.

WARNING
The wedge lock releases!
If there is a collision on the side of the dead rope side while using the wedge lock, the wedge lock can release.
- ► Secure the wedge lock against collisions.
- ► Do not let the dead rope end stick out such that it rises or can get caught. Secure the dead rope end with a soft tie with tape or a soft binding wire.
- ► Stop the spool up movements of the winch before the wedge runs against the hoist limit switch weight.

WARNING
The rope end turns up!
If the rope end turns up, the rope can slide through the wedge lock. The end connection can fail and lead to breakage.
- ► Secure the rope end against untwisting and jumping up, for example injecting, welding or soldering.
- ► Comply with the specified length of the dead rope end.

NOTICE
The rope jumps up when shortening!
If the rope is not secured against jumping up when shortened, the rope can be damaged and become unusable.
- ► Secure the rope against jumping up and untwisting before shortening.

Note
Rope too short.
In the case of fixed rope lengths, pay attention to further usability after shorting.
- ► Each use of a wedge lock makes a section of the rope unusable.
- ► Do not replace missing wedge locks / locking case sleeves too often with a wedge lock.
- ► Contact Liebherr Customer Service for a proper rope repair with a locking cast sleeve.

Note
Minimum tensile strength of the rope decreased.
The minimum tensile strength of the rope is reduced 80 % by an end connection with a wedge lock.
- ► This reduction is permitted on an otherwise intact rope if the wedge lock is used correctly.

LWE/LTR 1100-009/25105-02-02/en

copyright © Liebherr-Werk Ehingen GmbH 2023

9.2 Nominal dimensions when assembling the wedge lock

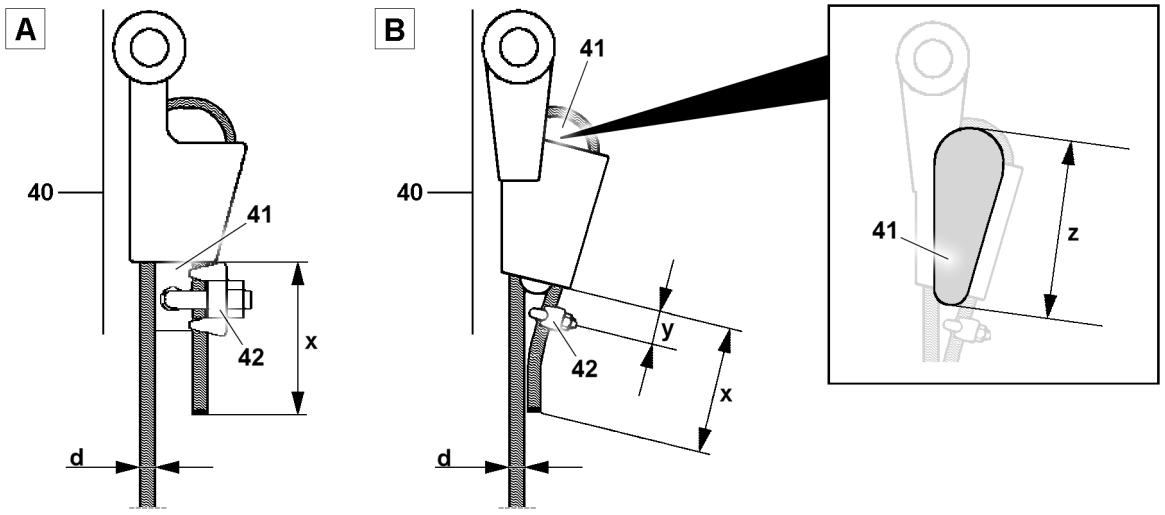

Fig.160488: Exemplary presentation of wedge locks

40 Wedge lock
41 Wedge
42 Clamp
d Rope diameter
x Dead rope end length
y Distance
z Wedge length

– Variation **A**, Wedge lock **40 with** bore for a Clamp **42** in the wedge **41**
– Variation **B**, wedge lock **40 without** a bore for a clamp **42** in the wedge **41**

► Provide the long dead rope end **x** with the twentyfold rope diameter **d**. With a small rope diameter **d** not less than 150 mm.

For wedge locks **without** a bore for a clamp **42** in the wedge **41** (seevariation **B**) additionally:
► Distance **y** from the rope clamp to the housing with the double rope diameter **d**. When doing so, do not exceed 75% of the wedge length **z**.

WARNING
Nominal dimensions when assembling the wedge lock not complied with!
The end connection can fail and lead to breakage.
► Comply with the specified length **x**.

With a wedge lock **40 without** a bore for a clamp **42** additionally:
► Observe the specified distance **y**.

► Mark the dead rope end length **x** and distance **y** on the rope.

9.3 General notes for assembly

Observe the differences in the exemplary illustrations:
– Wedge lock **with** a bore for a clamp
– Wedge lock **without** a bore for a clamp

LWE/LTR 1100-009/25105-02-02/en

copyright © Liebherr-Werk Ehingen GmbH 2023

9.3.1 Wedge lock with a bore for a clamp

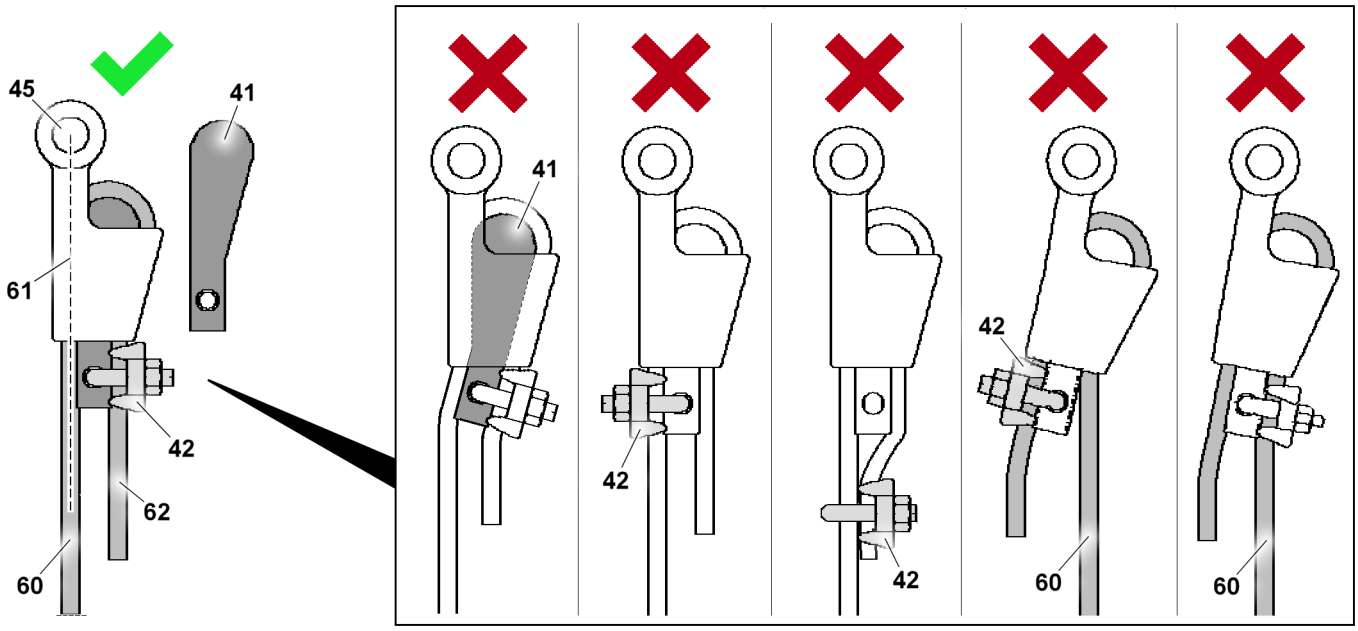

*Fig.160493: Exemplary illustration with a correctly and incorrectly assembled wedge lock **with** a bore for a clamp*

41 Wedge
42 Clamp
45 Pin bore
60 Rope strand, load bearing
61 Pull axle
62 Dead rope end

- Assemble the wedge **41** in the correct position. Position the wide side with a radius in the direction of the pin bore **45**. Position the long straight side toward the pull axle **61**.
- Assemble the clamp **42** in the correct position with the correct tightening torque. Screw the clamp on via the dead rope end **62** through the wedge bore.
- Run the load bearing rope strand **60** in the pull axle **61** of the wedge lock. The long axis of the load bearing rope strand **60** is perpendicular to the long axis of the pin bore **45**.

Diameter Rope	Nominal size Clamp size	Tightening torque Clamp [1)]
9 mm to 10 mm	⅜	61 Nm
11 mm to 13 mm	½	88 Nm
14 mm to 16 mm	⅝	129 Nm
18 mm to 19 mm	¾	176 Nm
20 mm to 22 mm	⅞	305 Nm
24 mm to 26 mm	1	305 Nm
28 mm	1⅛	305 Nm

1) Threads and support surfaces are clean, dry and free of lubricants.

Control bore auxiliary function*

Note
► Only for wedge locks with control bore auxiliary function*.

copyright © Liebherr-Werk Ehingen GmbH 2023

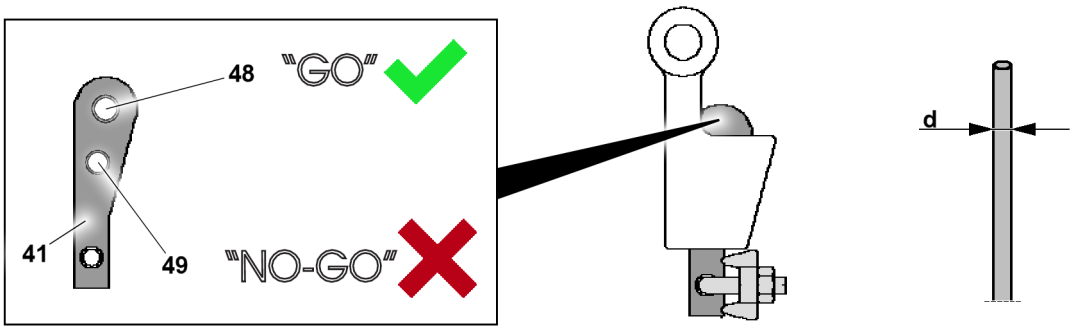

Fig.160497: Wedge lock with control bore auxiliary function .*

41 Wedge
48 Bore“GO”
49 Bore“NO-GO”
d Rope diameter

The wedge and rope diameter **d** match when all of the following criteria are met:
– The rope diameter **d** passes through the bore “GO” **48**.
– The rope diameter **d** does **not** pass through the bore “NO-GO” **49**.

9.3.2 Wedge lock without a bore for a clamp

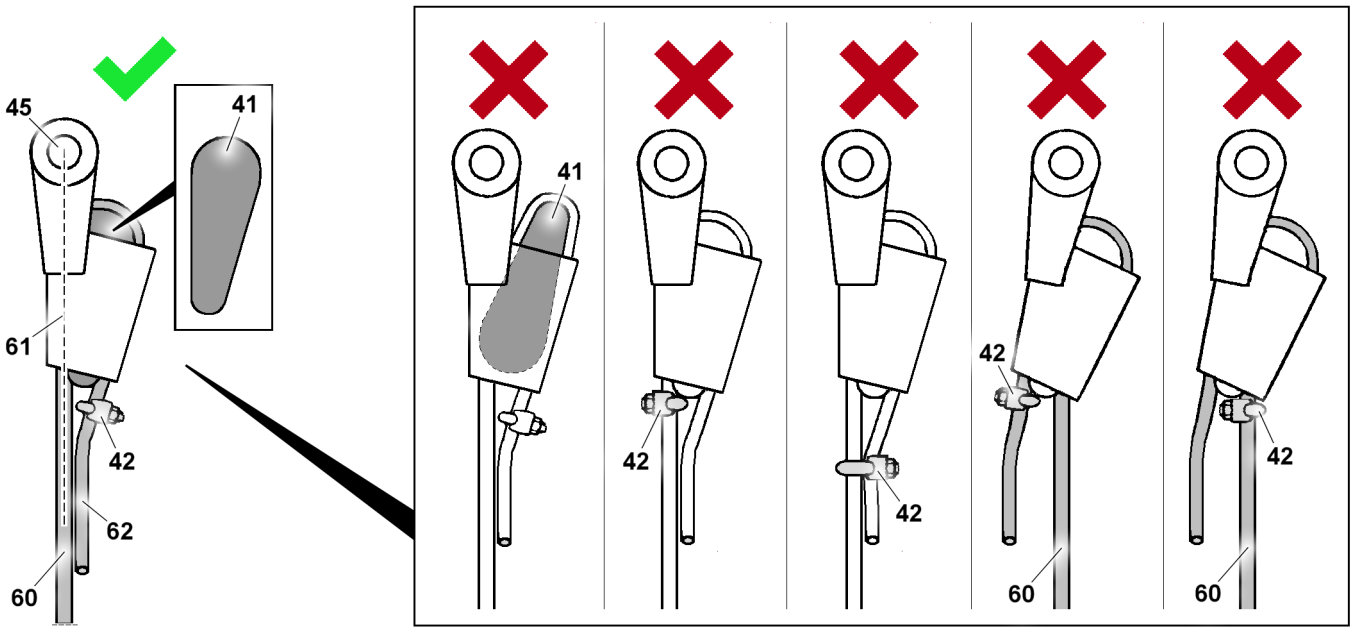

*Fig.160492: Exemplary illustration with a correctly and incorrectly assembled wedge lock **without** a bore for a clamp*

41 Wedge
42 Clamp
45 Pin bore
60 Rope strand, load bearing
61 Pull axle
62 Dead rope end

– Assemble the wedge **41** in the correct position. The wide side with a radius must point in the direction of the pin bore **45**.
– Assemble the clamp **42** in the correct position with the correct tightening torque. Screw on with the correct distance over the dead rope end **62**.
– Run the load bearing rope strand **60** in the pull axle **61** of the wedge lock. The long axis of the load bearing rope is perpendicular to the long axis of the pin bore **45**.

LWE/LTR 1100-009/25105-02-02/en

copyright © Liebherr-Werk Ehingen GmbH 2023

Nominal size Wedge lock / wedge	Nominal size Clamp	Tightening torque Clamp [1)]
8/7	8	6 Nm
8/8	8	6 Nm
10/9	10	9 Nm
10/10	10	9 Nm
13/11	12	20 Nm
13/12	12	20 Nm
13/13	14	33 Nm
17/13	14	33 Nm
17/15	16	49 Nm
17/17	16	49 Nm
19/16	16	49 Nm
19/18	19	68 Nm
23/19	19	68 Nm
23/21	22	107 Nm
26/23	26	147 Nm
26/25	26	147 Nm
29/27	30	212 Nm
33/30	30	212 Nm
33/32	34	296 Nm

1) Threads and support surfaces are lubricated, rust-free and clean.

LWE/LTR 1100-009/25105-02-02/en

copyright © Liebherr-Werk Ehingen GmbH 2023

9.4 Assembling the wedge lock

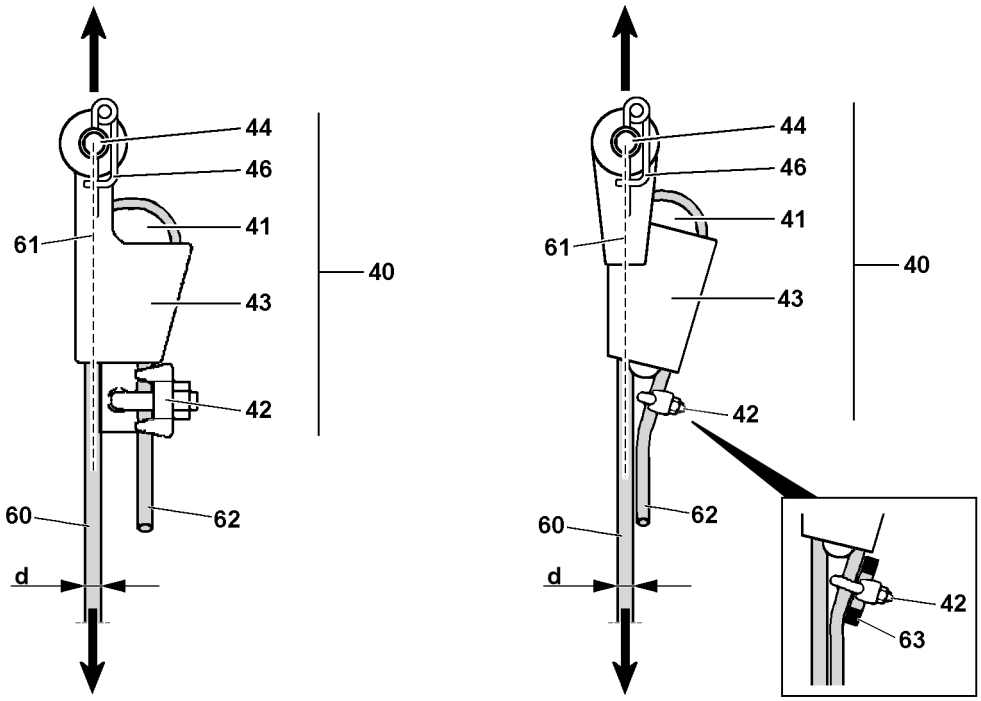

Fig.160494: Exemplary presentation, assembling the wedge lock

40 Wedge lock
41 Wedge
42 Clamp
43 Housing
44 Pin
46 Retaining element
60 Rope strand, load bearing
61 Pull axle
62 Dead rope end
63 Rope section
d Rope diameter

WARNING
Incorrect handling of the wedge lock!
An incorrectly or incompletely assembled wedge lock **40** can lead to an inadvertent releasing of the end connection.
An incorrectly used wedge lock **40** can lead to failure and an inadvertent releasing of the end connection.
The crane can lose stability! Persons are in the danger zone are greatly endangered.
Hook blocks, load or components can fall down. Death, severe injuries, property damage.

- ► Use only a wedge lock **40** approved by Liebherr-Werk Ehingen GmbH.
- ► The wedge lock **40** must match the rope diameter.
- ► Do not use a wedge lock **40** with an operation temperature of below -40 °C.
- ► Assemble the wedge lock **40** correctly.
- ► Place the rope with the wedge **41** into the housing **43** in such a way that the load bearing rope strand **60** runs in the pull axle **61** of the wedge lock **40**.
- ► Install the wedge **41** in the correct position.
- ► The clamp **42** must secure the dead rope end **62** from being pulled through.
- ► The clamp **42** must be tightened with the correct tightening torque.
- ► The clamp **42** may not be assembled on a trimming or an annealing separated area of the dead rope end **62**.
- ► The clamp **42** may not be assembled over both strands or on the load bearing rope strand **60**.
- ► The support surfaces of the clamp **42** must be rust-free and clean.
- ► When assembling the dead rope end **62**, secure it from jumping out of the housing **43**.
- ► Wear protective clothing.
- ► It is prohibited for personnel to remain in the danger zone.

LWE/LTR 1100-009/25105-02-02/en

copyright © Liebherr-Werk Ehingen GmbH 2023

- ► Select the matching wedge lock **40** for the rope diameter **d**.
- ► Observe the nominal dimensions when assembling the wedge lock.
- ► Insert the rope with the wedge **41** in the housing **43**. Observe the dead rope end length **62**

Note
- ► If applicable, insert the rope and wedge deeper into the housing by striking them carefully with a rubber hammer.

Assemble the clamp **42** depending on the wedge lock **40** version:

- ► Assemble the clamp **42** through the bore in the wedge **41** on the dead rope end **62**.
  or
  Assemble the clamp **42** with the specified distance from the housing **43** on the dead rope end **62**.

Note
- ► If the thread length of the clamp **42** is not sufficient, place a short, intact rope section **63** with tied ends parallel to the dead rope end **62** and assemble them together.
- ► The tightening torque for the clamp **42** depends on the nominal size.

NOTICE
Rope damage!
If the pin **44** has been assembled incorrectly, the rope may rub against the pin **44** or on the retaining element **46**.
- ► Always insert the pin **44** from the „inside to the outside“ and secure from the outside with a retaining element **46**.

When the pin point of the wedge lock **40** matches the fixed point:
- ► Pin and secure the wedge lock **40** in the fixed point depending on the reeving plan.

When the pin point of the wedge lock **40** does not match the fixed point:
- ► Use the supplied adapter, see the following section „Assembling / disassembling the adapter on the wedge lock“.

9.5 Additional work

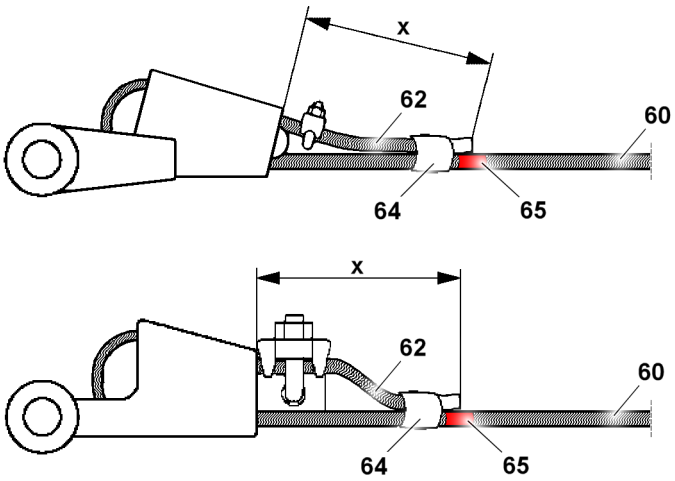

Fig.163420: Additional work: Applying the tie and marking

60 Rope strand, load bearing
62 Dead rope end
64 Tie
65 Color marking
x Dead rope end length

- ► Also secure the dead rope end **62** with a soft tie **64** with tape or a soft binding wire.

LWE/LTR 1100-009/25105-02-02/en

copyright © Liebherr-Werk Ehingen GmbH 2023

► Permanently and clearly mark the dead rope end length **x**. Apply the color marking **65** on the load bearing rope strand **60** at the same height, see illustration.

Note
Use a well-visible signal color for the color marking **65**.
► The color marking **65** can be used to continuously identify the dead rope end length **x**.

9.6 Assembling / disassembling the adapter on the wedge lock

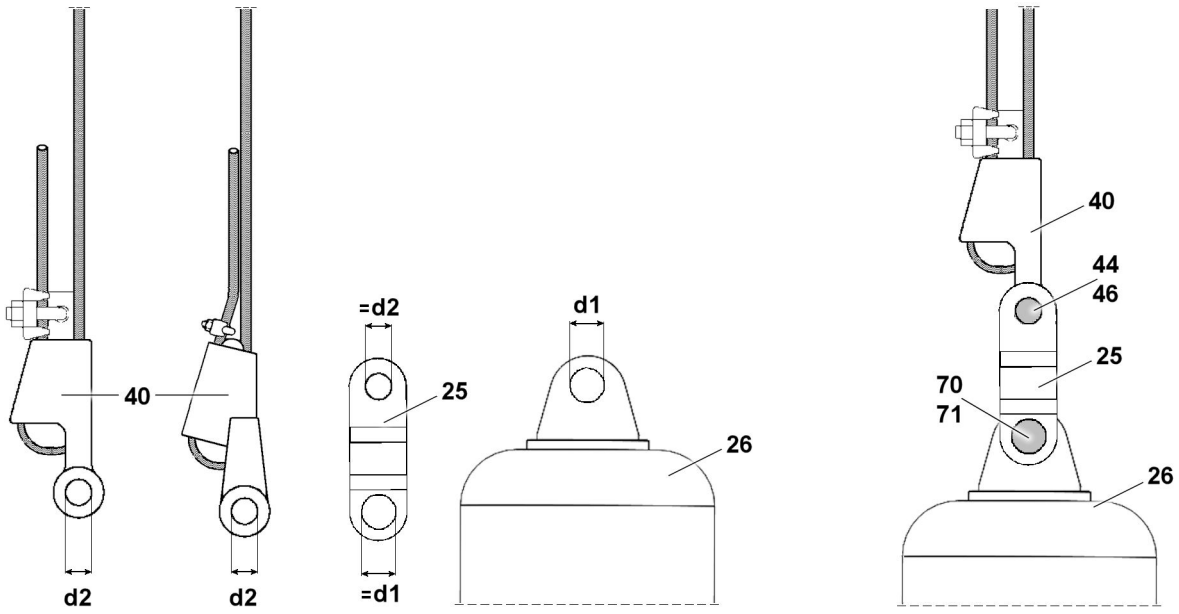

Fig.161444: Wedge lock with adapter, load hook example

25 Adapter
26 Load hook (example)
40 Wedge lock
44 Pin
46 Retaining element
70 Pin (rope lock)
71 Retaining element (rope lock)
d1 Fixed point diameter (example)
d2 Wedge lock diameter
=d1 Fixed point side diameter
=d2 Wedge lock side diameter

Note
The fixed point for the wedge lock can be on the pulley head, hook block or load hook.
► In the shown example, the fixed point is on the load hook **26**.

If the assembled wedge lock **40** matches the rope diameter, but the wedge lock diameter **d2** does not match the fixed point diameter **d1**, the adapter **25** must be used. The pin **70** and retaining element **71** of the unutilized rope lock is needed for the adapter.

WARNING
Impermissible use of the adapter **25**!
If the adapter **25** is used with a rope lock, the end connection can fail and lead to breakage.
An L-shaped rope lock cannot be replaced by a wedge lock **40**. Also not with the aid of an adapter **25**.
Death, severe bodily injuries, property damage.
► Use the adapter **25** only with a wedge lock **40**.

If a wedge lock **40** is needed as a replacement for an L-shaped rope lock:
► Increase / reduce the reeving by one rope strand to the extent necessary. In this way, a rope end point can be used that does not require an L-shaped rope lock.

LWE/LTR 1100-009/25105-02-02/en

copyright © Liebherr-Werk Ehingen GmbH 2023

9.6.1 Assembling the adapter on the wedge lock

Make sure that the following prerequisites are met:
– The rope is assembled properly on the wedge lock **40**.

If the wedge lock diameter **d2** does not match the fixed point diameter **d1**:
► Pin and secure the adapter **25** with the fixed point side diameter **=d1** to the hook block / load hook **26** or fixed point pin. To do so, use the pin **70** and retaining element **71** of the unutilized rope lock.
► Pin and secure the adapter **25** with the wedge lock side diameter **=d2** to the wedge lock **40**. To do so, use the pin **44** and retaining element **46** of the wedge lock.

Result:
– Wedge lock **40** pinned and secured via the adapter **25** with the fixed point.

9.6.2 Disassembling the adapter on the wedge lock

Note
If a retaining split that cannot be reused was used, it must be disposed of after a single assembly and disassembly.
► Replace the retaining splint with a reusable retaining element.

Make sure that the following prerequisites are met:
– The rope is not tensioned

Disassemble the adapter **25**:
► Unpin the adapter **25** from the hook block / load hook **26** or the fixed point. Feed the pin **70** and retaining element **71** again in the unused rope lock.
► Unpin the adapter **25** from the wedge lock **40**.Feed the pin **44** and retaining element **46** again in the wedge lock **40**.

Result:
– The adapter **25** is disassembled.

9.7 Using a wedge lock

WARNING
The end connection can loosen up inadvertently!
An incorrectly or incompletely assembled wedge lock can lead to an inadvertent releasing of the end connection.
► It is prohibited for personnel to remain in the danger zone.
► Supervise from a safe position when loading.

Make sure that the following prerequisites are met:
– The rope is assembled properly on the wedge lock.
– The rope is not tensioned
– The wedge lock is pinned in a permissible fixed point.

► Load the wedge lock under supervision with 10% of the minimum tensile strength of the rope.
► Wait for a two-minute setting time.
► Make sure after the setting time that there is no relative movement between the wedge and the rope.

LWE/LTR 1100-009/25105-02-02/en

copyright © Liebherr-Werk Ehingen GmbH 2023

WARNING
Wedge lock used incorrectly!
An incorrectly used wedge lock can lead to an inadvertent releasing of the end connection.
- ► Falling loads, shock loads and exceeding the permissible load bearing capacity are prohibited.
- ► Continuously check the components. In the case of damage, do not continue their use and replace them immediately.
- ► Side loads and angular pull are prohibited.
- ► Make sure the rope, wedge and pinning are positioned correctly.
- ► Check the positioning and tightening torque of the clamp at regular intervals.
- ► If tensile strength is lost, check that the wedge is positioned securely.

- ► Check all wedge lock components at regular intervals for high loads and loss of tensile strength. At least once a month.

9.8 Disassembling the wedge lock

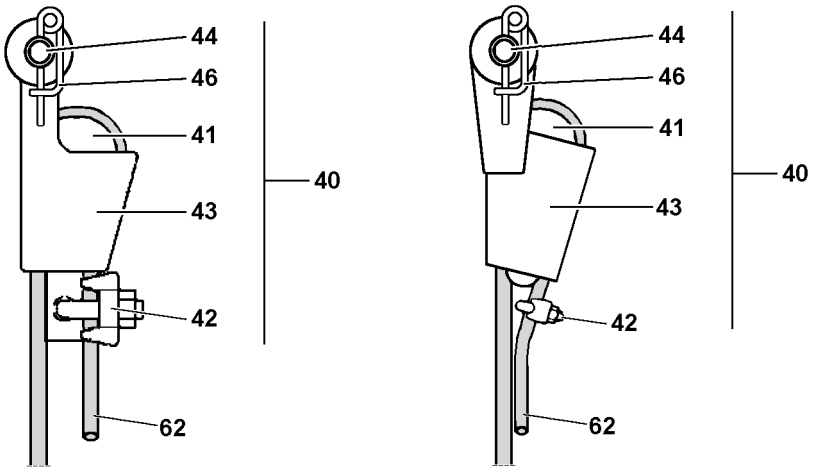

Fig.160491: Exemplary presentation of wedge locks

40 Wedge lock
41 Wedge
42 Clamp
43 Housing
44 Pin
46 Retaining element
62 Dead rope end

WARNING
The wedge lock is incorrectly disassembled!
- ► Wear protective clothing.
- ► Disassemble the wedge lock **40** correctly. Check for wear and damage. In the case of damage, do not continue their use and replace them immediately.
- ► When disassembling the dead rope end **62**, secure it from lashing out.
- ► Do not use the previously jammed area of the rope again and cut it off completely.

- ► Unpin the wedge lock **40** in the fixed point.

Note
If a retaining split that cannot be reused was used to secure the pin **44**, it must be disposed of after a single assembly and disassembly.
- ► Replace the retaining splint with a matching reusable retaining element **46**.

Note
- ► Store all parts of the wedge lock **40** together so they cannot be mixed up.

- ► Disassemble the clamp **42**. Pull the rope together with the wedge **41** out of the housing **43**.

LWE/LTR 1100-009/25105-02-02/en

copyright © Liebherr-Werk Ehingen GmbH 2023

10 Auxiliary pulley*

10.1 Crane operation with auxiliary pulley*

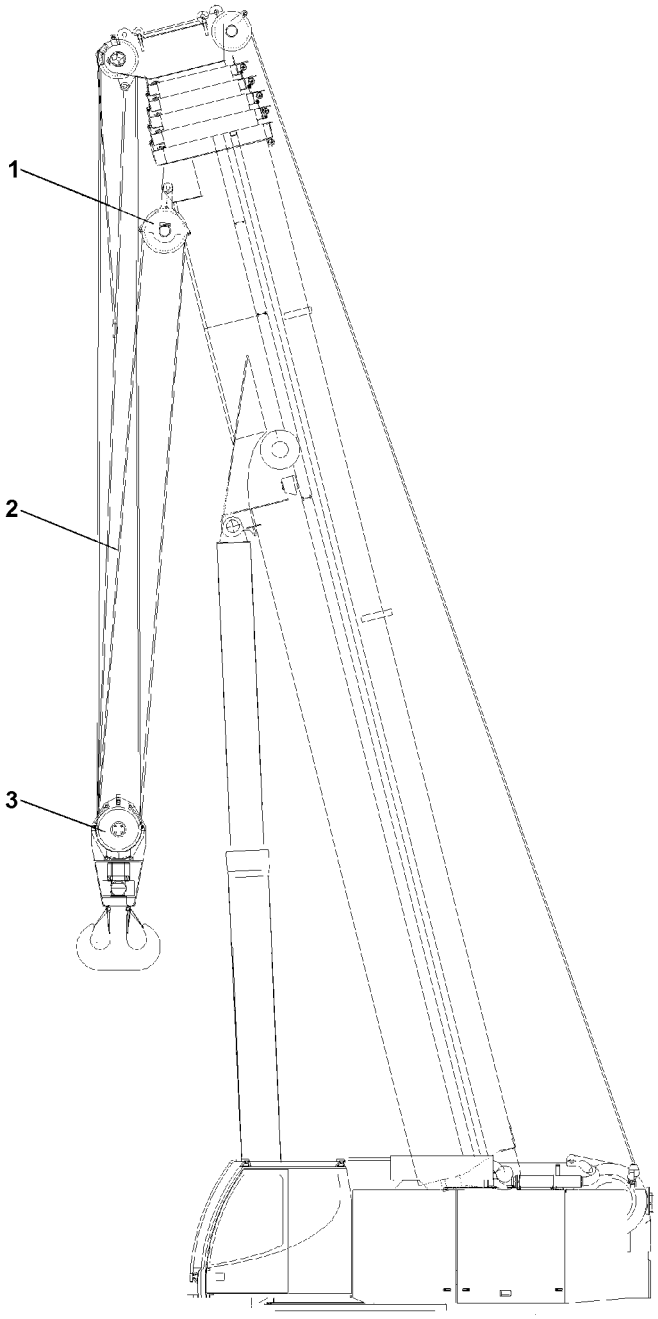

*Fig.122730: Telescopic boom with auxiliary pulley **1***

Make sure that the following prerequisites are met:
- The TY-guying has been disassembled (if present).
- The floodlights on the telescopic boom have been disassembled.

Note
- ► For crane operation with auxiliary pulley **1** on the telescopic boom, move only to the boom radius ranges that are present in the load chart.
- ► The use of the auxiliary pulley is prohibited for cranes with dolly preparation.

LWE/LTR 1100-009/25105-02-02/en

copyright © Liebherr-Werk Ehingen GmbH 2023

NOTICE
Hoist limit switch chain too short!
Damage to the hook block, auxiliary pulley or hoist rope.
- ► Before crane operation with the auxiliary pulley **1**, assemble the longer hoist limit switch chain.
- ► Before crane operation with the auxiliary pulley **1**, remove the rope protection pipes on the hook block **3**.
- ► When the hook block **3** is on the ground, ensure that the hoist rope **2** remains in the pulleys.
- ► For crane operation with auxiliary pulley **1**, do **not** telescope the telescopic boom out and run only the boom radius ranges that are specified in the load chart.

► Carry out crane operation with auxiliary pulley **1** carefully.

11 Rope reeving

Note
► Observe and adhere to the separate reeving plans.

LWE/LTR 1100-009/25105-02-02/en

copyright © Liebherr-Werk Ehingen GmbH 2023

4.07 Counterweight

1	Safety	2
2	Description	5
3	Counterweight combinations	7
4	Checking the counterweight plates	8
5	Permissible telescopic boom angle when picking up the counterweight	8
6	Permissible incline for ballasting	8
7	Assembling	10
8	Ballast monitoring	21
9	Counterweight error message	25
10	Disassembling	28

LWE/LTR 1100-009/25105-02-02/en

copyright © Liebherr-Werk Ehingen GmbH 2023

1 Safety

Observe the safety instructions prior to assembly / disassembly.

- General safety information: See chapter 2.04.
- Information regarding personal protective equipment: See chapter 2.04.
- Information regarding the use of ladders: See chapter 2.04.10.
- Information regarding fall protection equipment: See chapter 2.06.
- Information regarding accesses to the crane: See chapter 2.07.
- Information for assembly and disassembly: See chapter 5.01.

Maintain a safe distance when assembling, disassembling or ballasting the counterweight.

The crane driver and slinger must be in visual and audio connection.

For assembly tasks, the crane driver may only initiate crane movements when the responsible guide has explicitly released the movement.

WARNING
Assembly personnel **not** secured with suitable aids to prevent them from falling!
Assembly personnel can fall, death, severe bodily injuries.
► Cary out all overhead work, where there is a danger of falling with suitable aids.

When fall protection equipment is available:
► Use the fall protection equipment.

When there are railings on the crane components:
► Move the railings to the assembly / disassembly position and secure.

If aids are **not** available and work **cannot** be carried out on the ground:
► Secure assembly personnel with the supplied fall arrest system to prevent falling.
► Fasten the supplied fall arrest system to the fastening and hook points as well as to the safety ropes.
► Only step on the aids*, ladders and catwalks with clean shoes.
► Keep aids, ladders and catwalks free of heavy dirt, snow, frost and ice.

WARNING
Oscillating load!
Danger of impact and crushing.
Death, severe bodily injuries, property damage.

When taking down / lifting the replacement ballast:
► Do **not** put limbs in the danger zone.
► Do **not** remain in the danger zone.

WARNING
Moving components!
Death, crushing by components.
► Make sure that personnel cannot be caught by components.

To protect limbs:
► Guide the components with suitable aids.

1.1 Checking the counterweight

WARNING
Damaged counterweight!
The fit of the counterweight is not ensured.
► Replace a damaged counterweight.

LWE/LTR 1100-009/25105-02-02/en

copyright © Liebherr-Werk Ehingen GmbH 2023

Before assembly or disassembly of the counterweight, perform a visual check for damage and foreign matter.

When taking the counterweight plates down on other counterweight plates, no foreign particles may get between the counterweight plates.

LWE/LTR 1100-009/25105-02-02/en

copyright © Liebherr-Werk Ehingen GmbH 2023

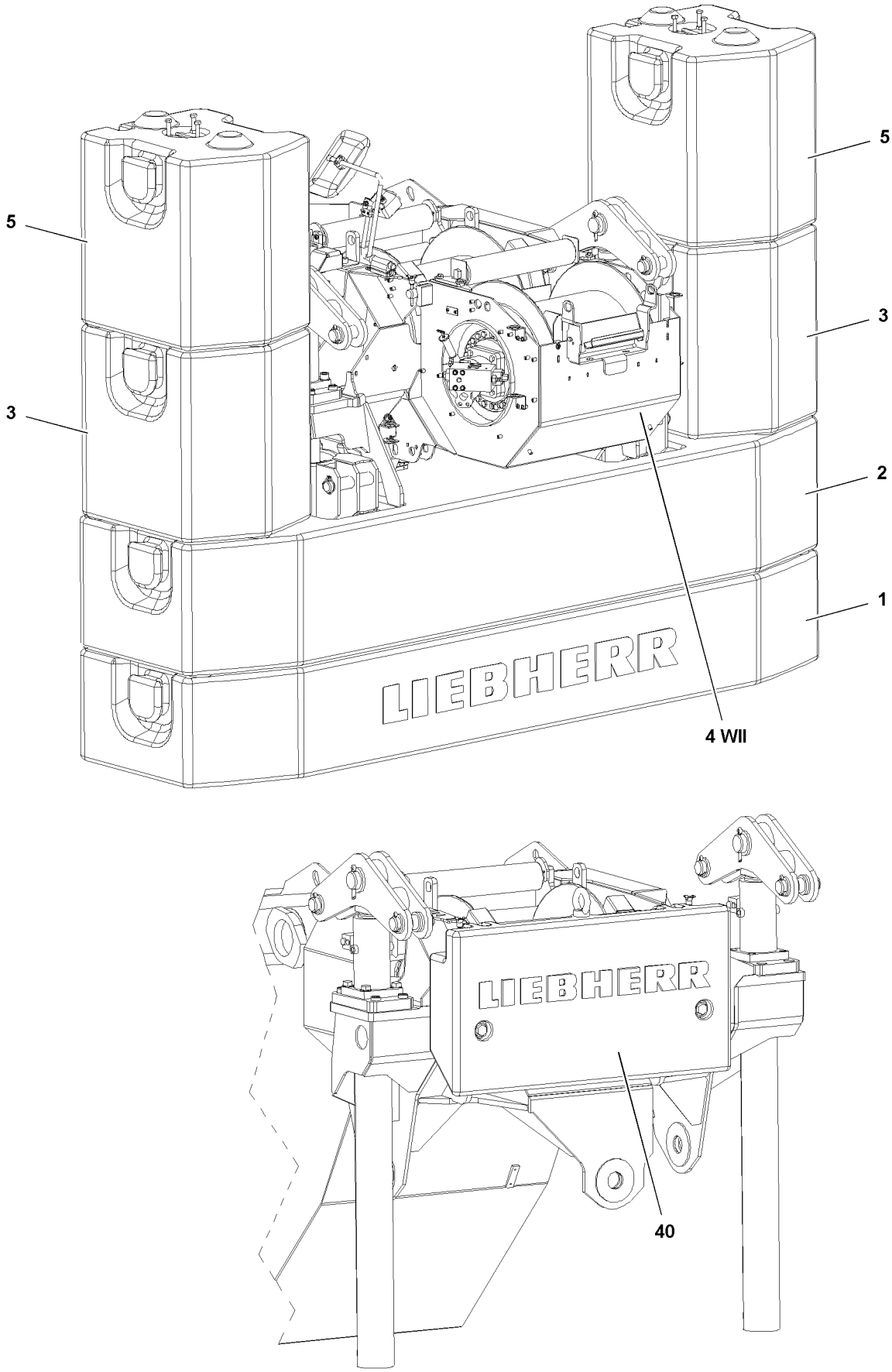

Fig.165806

LWE/LTR 1100-009/25105-02-02/en

copyright © Liebherr-Werk Ehingen GmbH 2023

2 Description

The illustration is exemplary. The structure depends on the crane type.

The counterweight consists of a **maximum** of:

Name	Quantity	Individual weight
Receptacle plate **1**	1	10 t
Counterweight plate **2**	1	10 t
Counterweight plate **3**	2	3.0 t
Replacement ballast **40**	1	0.9 t
Auxiliary ballast **5**	2	3.0 t

LWE/LTR 1100-009/25105-02-02/en

copyright © Liebherr-Werk Ehingen GmbH 2023

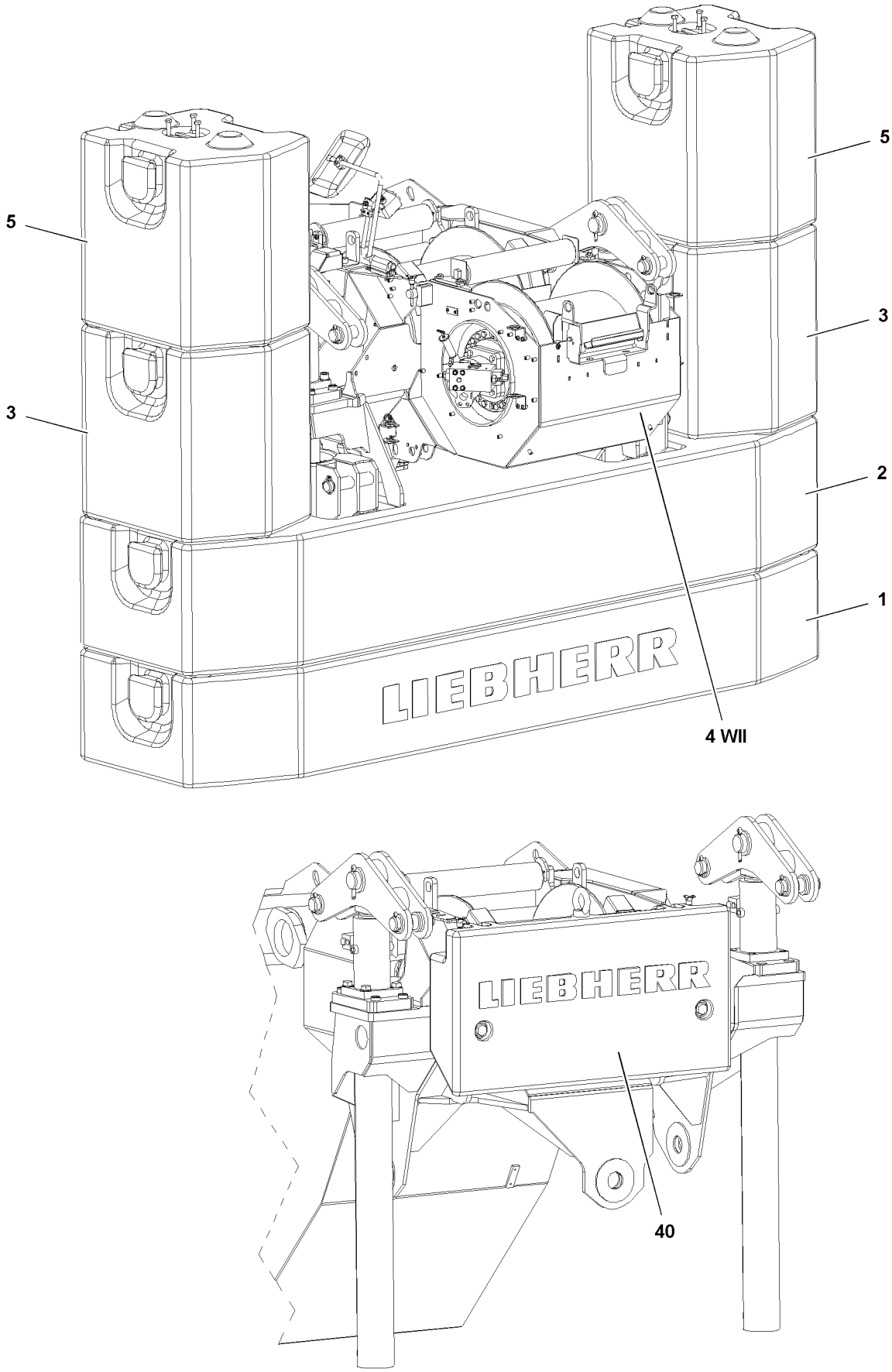

Fig.165806

LWE/LTR 1100-009/25105-02-02/en

copyright © Liebherr-Werk Ehingen GmbH 2023

3 Counterweight combinations

Before travel operation on public roads, the counterweight distribution must be made as described in chapter 3.04.

The counterweight plates are marked with their own weights.

Note
- ► The counterweight plates are marked with their respective own weights.
- ► The replacement ballast **40** is designed as the replacement weight for winch 2*** WII**: Either counterweight plate **40 or** winch 2*** WII** is installed.

DANGER
The crane can topple over!
If a different counterweight than the one listed in the load chart is used, the crane may be damaged or topple over.
- ► The installed counterweight must correspond to the data in the load chart!

WARNING
The crane can topple over!
If any other counterweight combination than the one noted in the charts is used, the crane can topple over.
- ► Counterweight combinations specified in the following charts must be used!

The following counterweight combinations are possible:

Counterweight	Composition	Individual weight
0 t	No counterweight	0 t

Counterweight	Composition	Individual weight
0.9 t	Winch 2***4 WII** / replacement ballast **40**	0.9 t

Counterweight	Composition	Individual weight
10 t	Receptacle plate **1**	10 t

Counterweight	Composition	Individual weight
16 t	Base plate **1**	10 t
	2x counterweight plates **3**	3 t

Counterweight	Composition	Individual weight
20 t	Base plate **1**	10 t
	Counterweight plate **2**	10 t

Counterweight	Composition	Individual weight
22 t	Base plate **1**	10 t
	4x counterweight plates **3**	3 t

LWE/LTR 1100-009/25105-02-02/en

copyright © Liebherr-Werk Ehingen GmbH 2023

Counterweight	Composition	Individual weight
26 t	Base plate **1**	10 t
	Counterweight plate **2**	10 t
	2x counterweight plates **3**	3 t

Counterweight	Composition	Individual weight
32 t	Base plate **1**	10 t
	Counterweight plate **2**	10 t
	4x counterweight plates **3**	3 t

4 Checking the counterweight plates

DANGER
Danger of accident due to damaged counterweights!
If damaged counterweights are ballasted, the stable seating of the counterweights can no longer be ensured.
► Replace damaged counterweights immediately!

Before assembly or disassembly of the counterweight plates, perform a visual check for damage and foreign matter.

5 Permissible telescopic boom angle when picking up the counterweight

Make sure that the following prerequisites are met:
- The crane is standing on crawlers at a terrain incline of maximum 1°.
- The central ballast is installed.
- The telescopic boom is telescoped in all the way and luffed down.
- There is no load on the hook.
- The crane superstructure is locked with the crane chassis in the 0° or 180° position.
- The LICCON overload protection has been set according to the load chart and the set up configuration.

6 Permissible incline for ballasting

DANGER
The crane can topple over!
If the incline for ballasting is larger than +/- 1°, the crane can topple over and fatally injure personnel!
► Do not exceed nor fall below an incline of +/- 1° for ballasting!

LWE/LTR 1100-009/25105-02-02/en

copyright © Liebherr-Werk Ehingen GmbH 2023

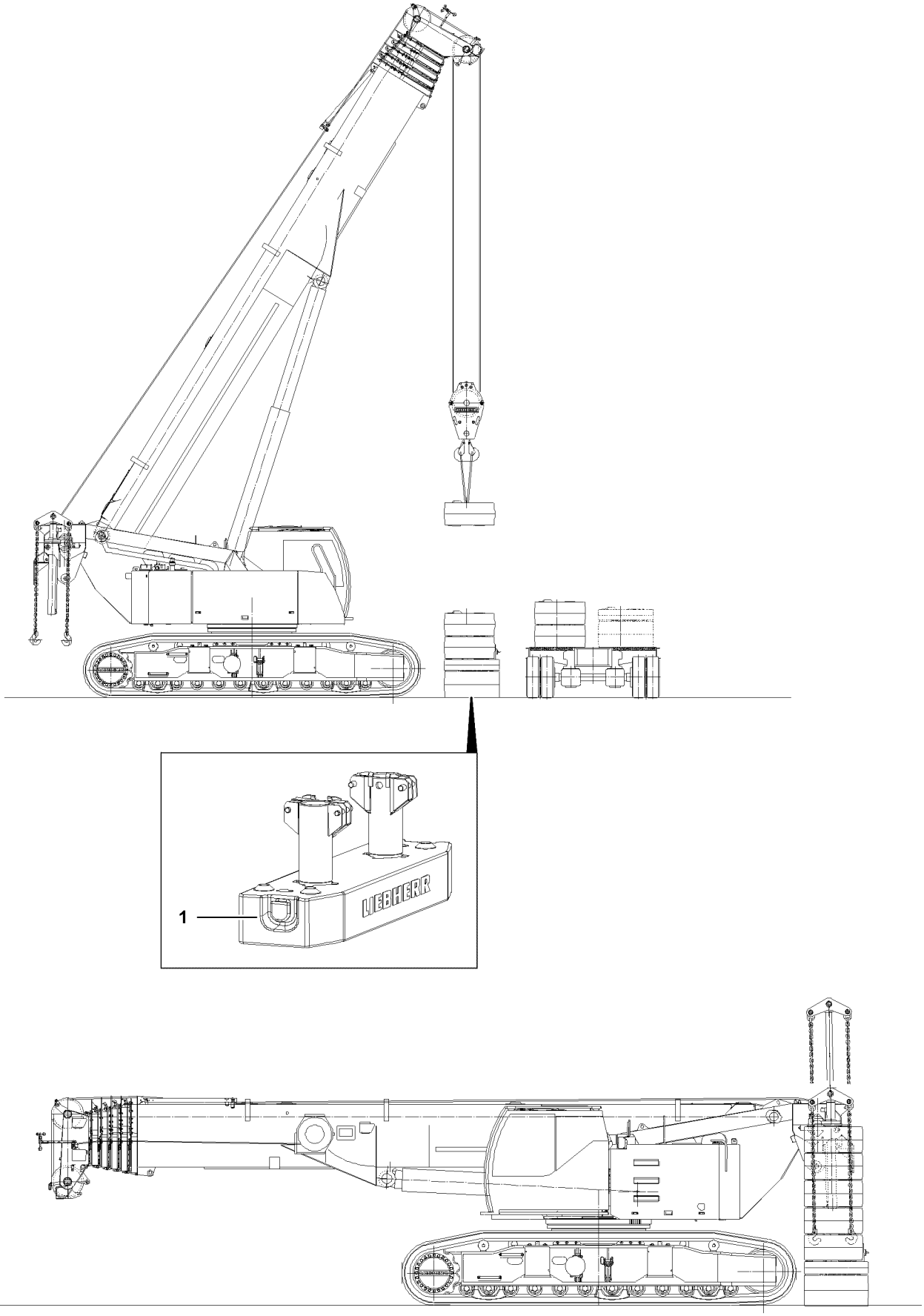

LWE/LTR 1100-009/25105-02-02/en

Fig.118498

copyright © Liebherr-Werk Ehingen GmbH 2023

7 Assembling

7.1 General

Make sure that the following prerequisites are met:
- The crane is horizontally aligned.
- The central ballast is installed.
- The crane with installed crawler carriers is operational as assembly crane.
- The transport vehicle with the counterweight plates is in the immediate vicinity of the crane.
- The ground is level and of sufficient load bearing capacity.

DANGER
Collapsing ground!
For assembly or disassembly of the counterweight, make sure that the ground is of sufficient load carrying capacity, otherwise the counterweight can sink in and topple over.
► If the ground gives way, select an assembly location with a sufficient load bearing capacity!

DANGER
The crane can topple over!
With steep boom positions for which no loads are specified in the load charts, there is a danger of the crane superstructure toppling when swinging backwards, i.e. towards the counterweight side! There is a particular danger if the supporting base has been reduced or if the crane is supported with the sliding beams retracted.
► The specifications in the load charts must be strictly adhered to!

LWE/LTR 1100-009/25105-02-02/en

copyright © Liebherr-Werk Ehingen GmbH 2023

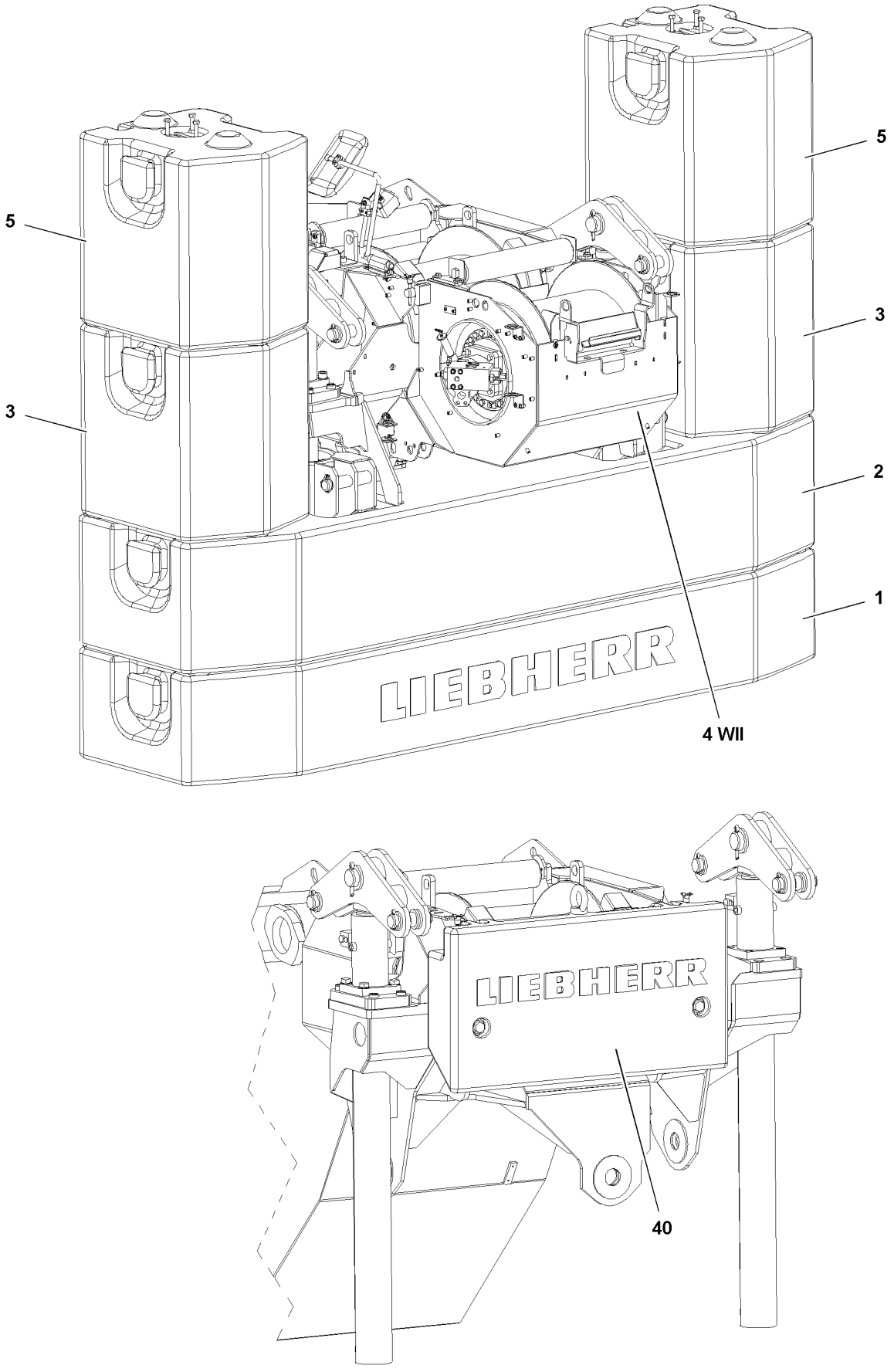

Fig.165806

LWE/LTR 1100-009/25105-02-02/en

copyright © Liebherr-Werk Ehingen GmbH 2023

7.2 Unloading the base plate and the counterweight

WARNING
Incorrectly fastened counterweights!
Death, severe bodily injuries, property damage.
► Fasten the counterweight to the respective bitts.
► Use only the supplied and specifically approved grommets.
► Always maintain a sufficient distance from the suspended load.
► Carry out all crane movements with a suspended load precisely and with caution.

WARNING
Overload of bitts!
Death, severe bodily injuries, property damage.
► Only fasten counterweight assemblies in accordance with the following descriptions.

DANGER
The crane can topple over!
Before the boom is raised, the LICCON overload protection must be set according to the valid load chart!
► Adhere to the data in the load chart!

► Set the LICCON overload protection according to the load chart.
► Fasten the receptacle plate **1** to the suspension bitts.
► Lift the receptacle plate **1** with the own crane and set in down on the assembly location.

When a counterweight plate **2** is required:
► Take the counterweight plate **2** down on the receptacle plate **1**.

WARNING
Counterweight plate **3** and / or auxiliary ballast **5**installed asymmetrically!
The crane can topple over, death, property damage.
► Install the counterweight plates **3** and auxiliary ballast **5** on the right **and** left.

WARNING
Reballast (counterweight connected to the turntable)!
If the counterweight plate **3** is re-ballasted, the crane can topple over and fatally injure personnel.
► Reballasting (counterweight connected to the turntable) is prohibited.
► Before installing the counterweight plate **3**, take the counterweight down in the assembly location.

When counterweight plates **3** are required:
► Install the counterweight plates **3** on the right and left.

When the auxiliary ballast **5** is required:
► Install the auxiliary ballast **3** on the counterweight plates **5** on the right and left.

LWE/LTR 1100-009/25105-02-02/en

copyright © Liebherr-Werk Ehingen GmbH 2023

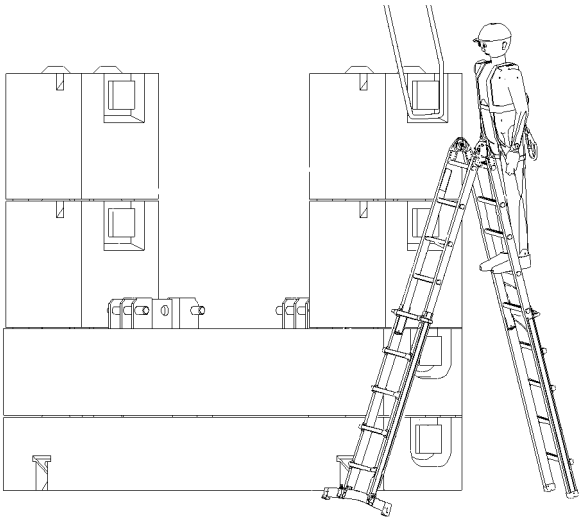

Fig.165807: Structure of the counterweight

The illustration is exemplary. The structure depends on the crane type.

To be able to connect or disconnect the grommets of the upper counterweight, make sure that the following prerequisites are met:
– Use a ladder.
– Set up the stepladder securely. See chapter 2.04.10.

LWE/LTR 1100-009/25105-02-02/en

copyright © Liebherr-Werk Ehingen GmbH 2023

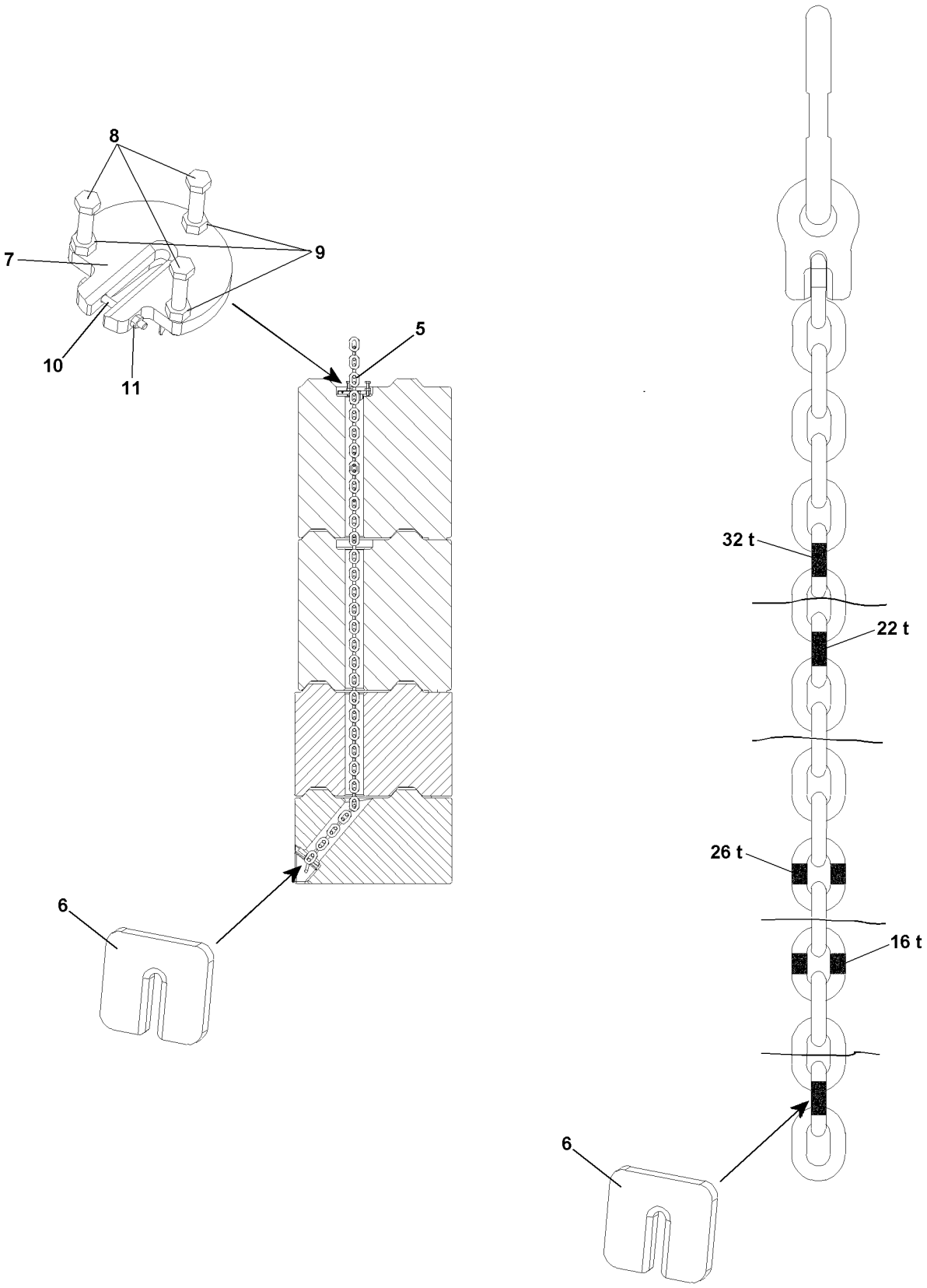

LWE/LTR 1100-009/25105-02-02/en

Fig.103203

copyright © Liebherr-Werk Ehingen GmbH 2023

7.3 Securing the counterweight

DANGER
Danger of accident when tensioning the counterweight plates!
An increased danger of accident exists if the following notes are not observed.
► To pretension, use only the supplied safety chains **5**, chain receptacles **6** and retaining plates **7**!
► For larger ballasting, use a non-skid ladder to thread the safety chains **5**!
► Secure the counterweights before starting with crane operation!

Red and blue marks are applied to the safety chains **5**. The chain receptacles **6** and retaining plates **7** must be attached on these marks. For various counterweight combinations, chain links with different marks must be used to attach the retaining plates **7**.

Chain links with the following marks must be used:
– To attach the chain receptacles **6**, the lowest chain links with a red mark.
– To attach the retaining plates **7** for the 16 t counterweight, the lower chain links with a blue mark.
– To attach the retaining plates **7** for the 26 t counterweight, the lower chain links with a red mark.
– To attach the retaining plates **7** for the 22 t counterweight, the upper chain links with a blue mark.
– To attach the retaining plates **7** for the 32 t counterweight, the upper chain links with a red mark.

► Push the retaining plates **7** on both sides on the marked chain links onto the safety chains **5**.
► Secure the retaining plates **7** on both sides with screws **10**.
► Secure the screws **10** with nuts **11**.

The crane can be used to lift and link the safety chains **5**.

► Link the safety chains **5** on both sides from the top to the bottom through the counterweight assembly.
► Push the chain receptacles **6** on both sides on the lowest red mark onto the safety chains **5**.

Note
► The tensioning screws **8** of the retaining plates **7** must be tightened with a tightening torque of 63 Nm.

► Tension the safety chains **5** with tensioning screws **8** and then counter with nuts **9**.

Note

PPE is required for pretensioning the safety chains **5**.
► Connect the PPE to the belt loops fastened on the crane hook.

LWE/LTR 1100-009/25105-02-02/en

copyright © Liebherr-Werk Ehingen GmbH 2023

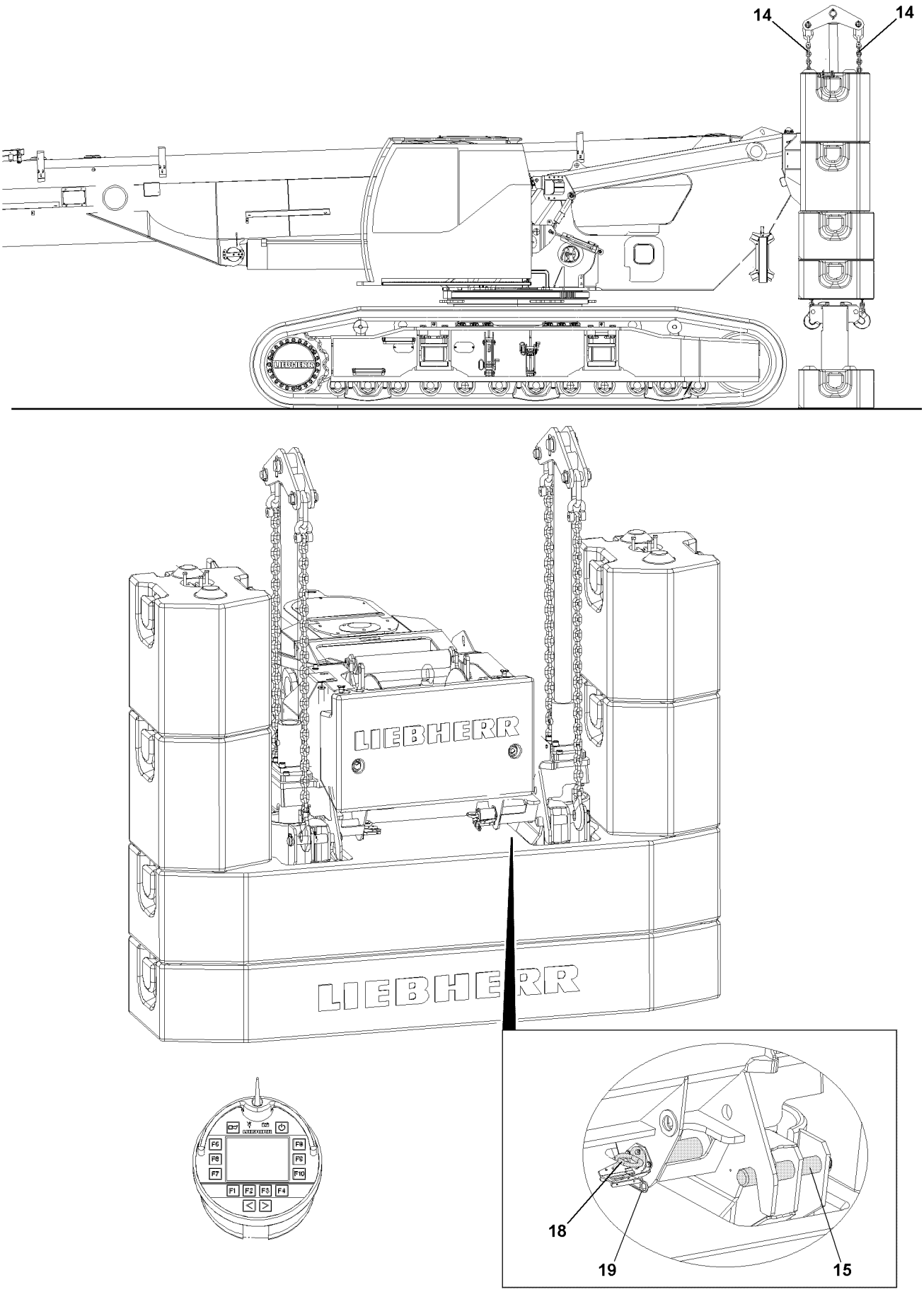

Fig.118048

LWE/LTR 1100-009/25105-02-02/en

copyright © Liebherr-Werk Ehingen GmbH 2023

7.4 Picking up the counterweight with the BTT

Make sure that the following prerequisites are met:
- The crane is horizontally aligned.
- The central ballast is installed.
- The respective counterweight has been placed and secured on the base plate.
- The pins **15** to engage the ballast assembly chains **14** are pinned and secured with linch pins **16**.
- The crane superstructure is mechanically locked with the crane chassis.
- The telescopic boom is telescoped in all the way.
- The telescopic boom is luffed down.
- A guide for reverse travel is available.

CAUTION
The counterweight may oscillate when pulled up!
If the crane is not aligned in lengthwise or crosswise direction exactly over the counterweight, then oscillating movements can occur when the counterweight is lifted, which can cause damage to the ballast cylinders or the crane.
► Align the crane exactly over the counterweight!

The crane is aligned exactly if the ballast assembly chains **14** are above the corresponding pins **15** on the base plate.

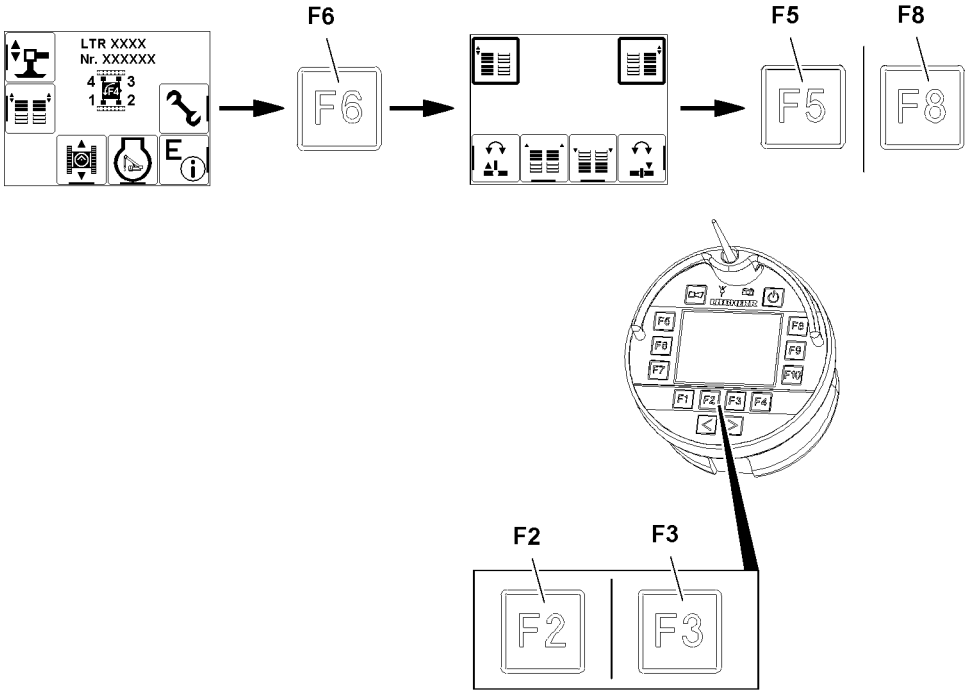

Fig.118049

LWE/LTR 1100-009/25105-02-02/en

copyright © Liebherr-Werk Ehingen GmbH 2023

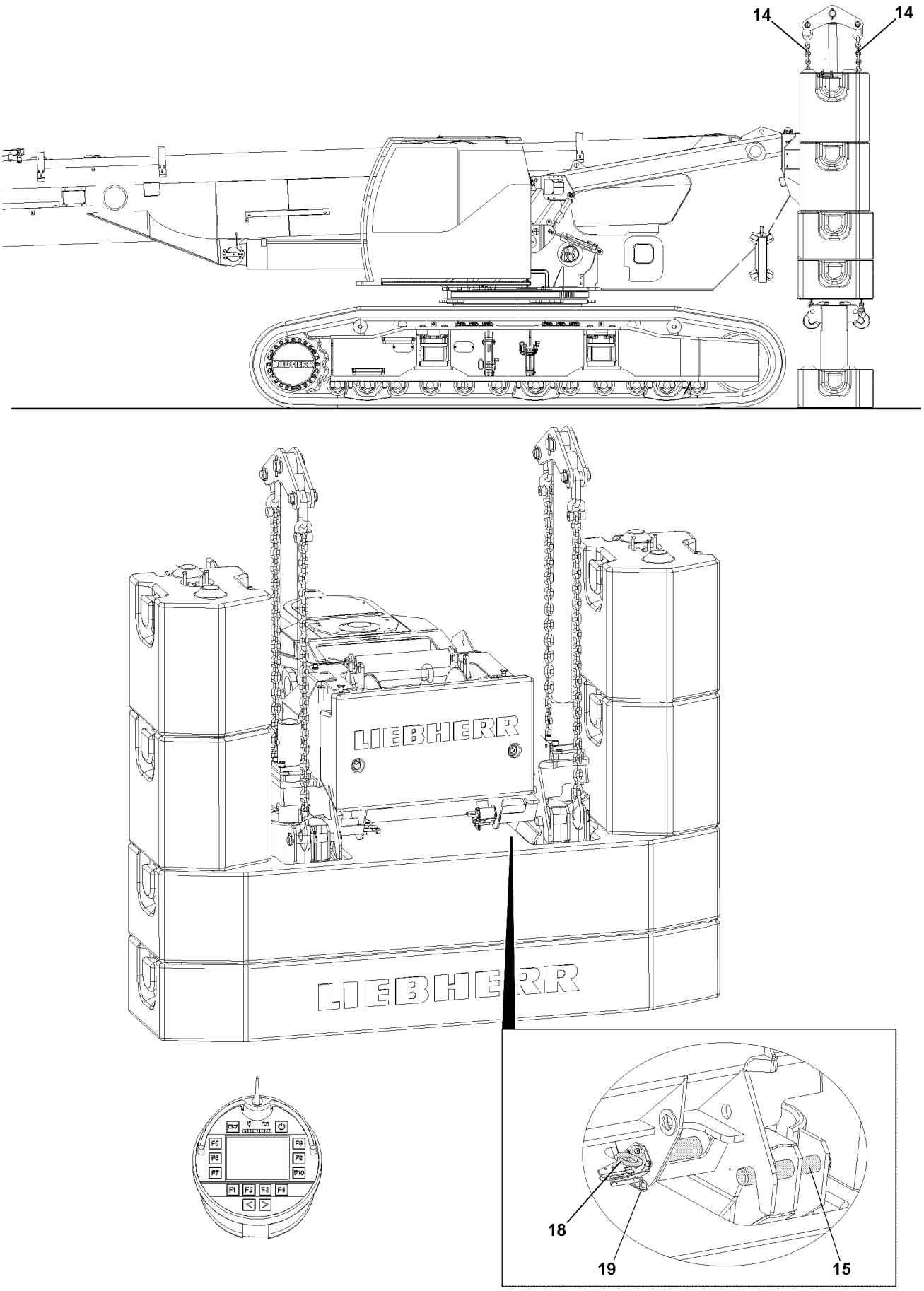

Fig.118048

LWE/LTR 1100-009/25105-02-02/en

copyright © Liebherr-Werk Ehingen GmbH 2023

DANGER
Danger of crushing personnel due to the counterweight!
► Make sure that no personnel is within the danger zone when installing the counterweight.

► Drive the crane backwards with the turntable between the ballast stacks until the ballast assembly chains **14** are above the corresponding pins **15**.
► Press the function key **F6**.

Result:

– The „Ballasting“ menu is visible.

► Select the ballast cylinder: Press the function key **F5** and the function key **F8**.

Result:

– Selected icons are visible with filled out frames: The ballast cylinders are selected.
– Ballast cylinders are ready for extension and retraction.

► Press the function key **F3**.

Result:

– The „ballast cylinders“ retract, the ballast assembly chains **14** are lowered.

► Engage the ballast assembly chains **14** on the pins **15**.
► Release the spring retainers **19** and unpin the pin **18** on both sides.

DANGER
The counterweight can fall down!
Due to an assembly error, the counterweight could fall down and fatally injure personnel!
► As long as the counterweight is not properly pinned and secured on the turntable, it is prohibited for anyone to remain under the counterweight as well as within the entire danger zone!

► Press the function key **F2** and evenly tension the ballast assembly chains **14**.
► Press the function key **F2** and lift the counterweight somewhat off the ground and let it stop swinging.
► Press the function key **F2** and extend the ballast cylinder completely.

Problem remedy
The counterweight is hanging unevenly on the turntable!
If the counterweight is hanging unevenly on the turntable, then the incline position can be equalized by blocking the corresponding ballast cylinder.
► Press the function key **F5** and block the ballast cylinder on the left.
► **Or** press the function key **F8** and block the ballast cylinder on the right.
► Equalize the incline position by extending or retracting the corresponding ballast cylinder.

LWE/LTR 1100-009/25105-02-02/en

copyright © Liebherr-Werk Ehingen GmbH 2023

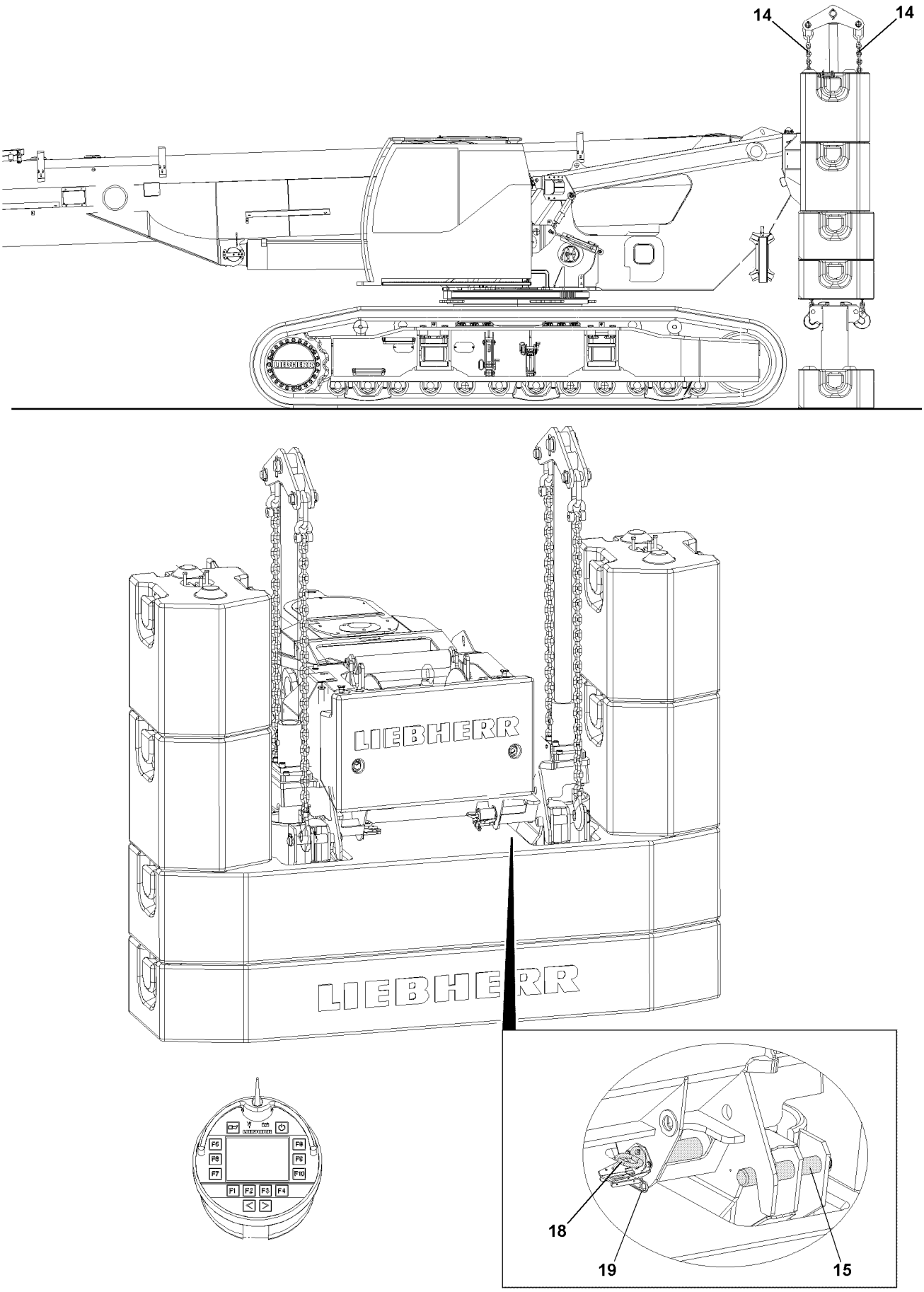

Fig.118048

LWE/LTR 1100-009/25105-02-02/en

copyright © Liebherr-Werk Ehingen GmbH 2023

7.5 Pinning the counterweight with the turntable

Make sure that the following prerequisites are met:
- The counterweight is horizontally aligned.
- The pin points on the turntable and the counterweight align.

DANGER
The counterweight can fall down!
Due to an assembly error, the counterweight could fall down and fatally injure personnel!
► As long as the counterweight is not properly pinned and secured on the turntable, it is prohibited for anyone to remain under the counterweight as well as within the entire danger zone!

► Insert the pin **18** on both sides and secure with spring retainers **19**.
► Check if the pins **18** are fully inserted and secured with spring retainers **19**.

Problem remedy
The pin **18** cannot be inserted.
The pin points on the turntable and the counterweight are not aligned.
► Unpin the other pin **18**.
► Lower the counterweight somewhat and raise it again.
► Align the pin points on the turntable and the counterweight exactly until they align.

Note
► After assembly, the ballast assembly chains **14** remain engaged on the pins **15** and rest on the base plate.

► Press the function key **F3**.

Result:

– The „ballast cylinders“ retract, the ballast assembly chains **14** are lowered.

8 Ballast monitoring

When ballast monitoring is **activated** on the crane, the installed counterweight is recognized and compared with the counterweight settings in the set up program.

When ballast monitoring is **not activated** on the crane, the crane operator must independently compare the installed counterweight with the counterweight settings in the set up program.

WARNING
Change to the counterweight!
If the counterweight is changed without updating the counterweight settings in the set up program, the crane can topple over and fatally injure personnel!
► Changes to the counterweight without updating the counterweight settings in the set up program are prohibited.
► Ballast monitoring does not automatically update incorrect counterweight settings in the set up program.

A differentiation is made between the following procedures with ballast monitoring:
- **Detecting the counterweight with a pressure sensor in the ballast cylinders**
  Through ballasting, the counterweight is determined via the pressure sensor and compared with the set up counterweight.
- **Detecting the counterweight with sensors on the counterweight plates**
  By plugging the plug into the sensors, the counterweight is determined and compared with the set up counterweight. Observe and comply with section „Establishing an electrical connection for ballast monitoring“.
- **Detecting the swing angle with sensors on the turntable***

LWE/LTR 1100-009/25105-02-02/en

copyright © Liebherr-Werk Ehingen GmbH 2023

With certain types of cranes, the swing angle is detected by means of sensors and compared with the set up counterweight radius.

8.1 Establishing an electrical connection for ballast monitoring

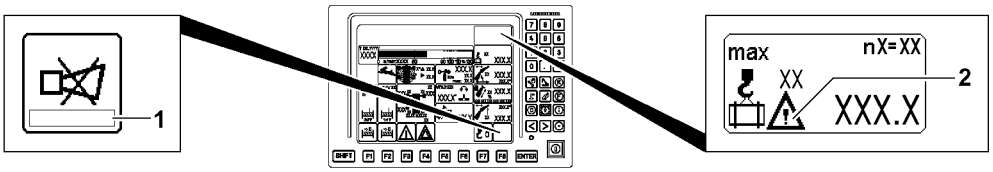

Fig.147403: Ballast monitoring error message display

After establishing the electrical connection for ballast monitoring, the previous weighing of the counterweight is deleted by ballast monitoring. An error message **1** or the warning icon **2** appears on the LICCON monitor.

In order for the installed counterweight to be detected and compared with the settings of the LICCON overload protection, the counterweight must be ballasted again.

► Take the counterweight down on the crane chassis.

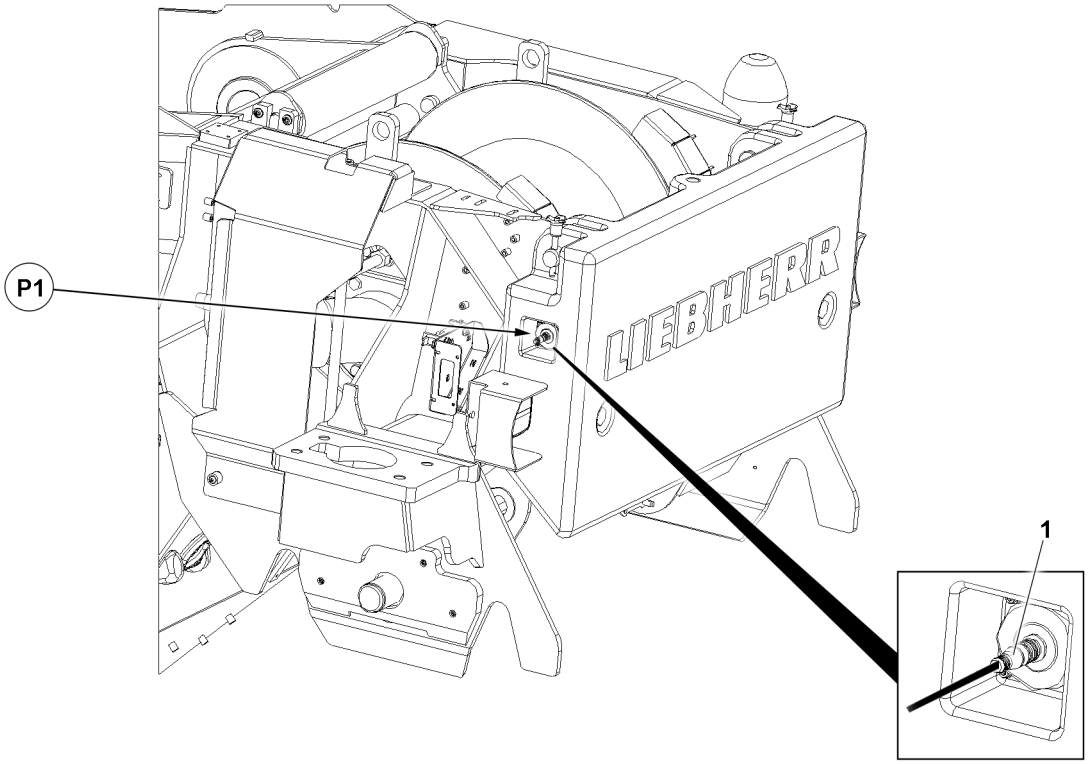

Fig.157822: Ballast monitoring

► Insert the plug **1** in position **P1** in the socket.
► Establish the electrical connections to the central ballast blocks, see chapter 3.03.

Result:

– The electrical connection for ballast monitoring is established.
– The new counterweight is detected, an error message is displayed on the LICCON monitor.

► Perform the ballasting procedure **after** establishing the electrical connections.

LWE/LTR 1100-009/25105-02-02/en

copyright © Liebherr-Werk Ehingen GmbH 2023

8.2 Ballast weighing via the ballasting procedure

WARNING
The wrong counterweight is set in the LICCON overload protection!
The crane can topple over, death, property damage.
- ► Changes to the counterweight without updating the counterweight settings in the set up program are prohibited.
- ► Ballast monitoring does not automatically update incorrect counterweight settings in the set up program.
- ► Weigh the ballast only after completely installing the counterweight.

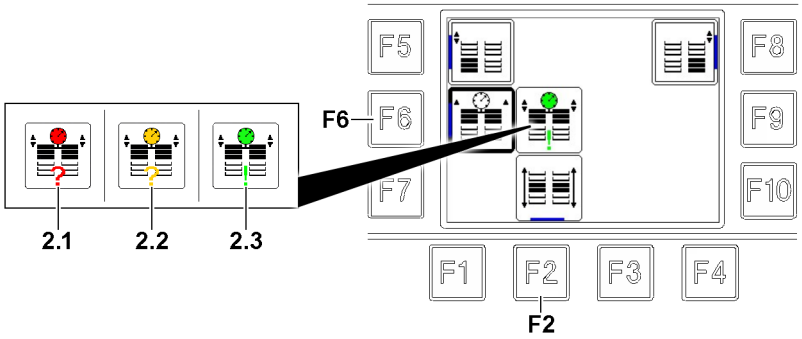

Fig.158509: Ballast weighing function

Make sure that the following prerequisites are met:
- – The counterweight is on top and the left and right retaining pins are not inserted.
- – The electrical connections have been established.

► Selection / deselection of ballast weighing: Press the function key **F6** and select ballast weighing.

Result:

- – The icon is bordered in bold.
- – The *red* icon **2.1** appears.
- – The icon over the function key **F2** appears.

Note
► Pressing the function key **F6** again deselects ballast weighing again.

► Control release: Touch the 2-hand keypad on the rear of the BTT.

Result:

- – The icon over the function key **F2** is highlighted in purple.

Note
► To control the functions, a control release must be issued: The corresponding icons must be highlighted in purple.

► Start ballast weighing: Press and hold the function key **F2**.

Result:

- – For the duration of ballast weighing, the *yellow* icon **2.2** appears

When the *green* icon **2.3** appears:
► Ballast weighing successfully completed.
► Stop pressing the function key **F2**.

LWE/LTR 1100-009/25105-02-02/en

copyright © Liebherr-Werk Ehingen GmbH 2023

Problem remedy

Does the error message not turn off?

The error message is displayed on the LICCON monitor.

► Check if the set up configuration that is set matches the counterweight installed on the crane.

► Perform ballast weighing again.

Result:

– The error message on the LICCON monitor turns off.

LWE/LTR 1100-009/25105-02-02/en

copyright © Liebherr-Werk Ehingen GmbH 2023

9 Counterweight error message

Only for crane types with ballast monitoring* / counterweight radius monitoring*.

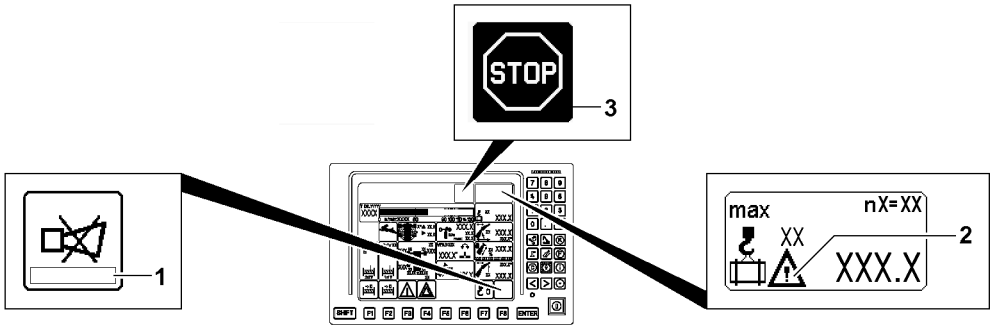

Fig.149635: Counterweight error message display

If the ballast monitoring* / counterweight radius monitoring* reports an error, a corresponding error message **1** and / or the warning icon **2** or icon **3** is displayed on the LICCON monitor.

Note
The ballast monitoring* provides no feedback if the correct counterweight is measured / detected. The counterweight radius monitoring* provides no feedback if the correct counterweight radius is measured / detected.
► If no error is detected, no message appears.

Examples for the reason of an error message		
1. Example	Error message during set up, for example when the counterweight or hoist gear 2 is installed / removed / changed. For crane types with ballast monitoring shut-off*, the shut-off acts on the selected crane movements. The retracting and extending of the ballast cylinders and hoist gear lowering are not shut off. For crane types with an adjustable counterweight radius, there may be an overlap with further shut-offs if the correct counterweight radius is not yet set.	
	Next steps:	Set and accept the target counterweight in the set up program. After acceptance, there may be a new error message. Properly install the counterweight / hoist gear 2. Normally, the last ballast weighing will be discarded. A new error message may be issued. In the case of crane types with an adjustable counterweight radius, set the correct counterweight radius. Perform ballast weighing again.

LWE/LTR 1100-009/25105-02-02/en

copyright © Liebherr-Werk Ehingen GmbH 2023

Examples for the reason of an error message		
2. Example	Error message during crane operation / error message after ballast weighing For crane types with ballast monitoring shut-off*, the shut-off acts on the selected crane movements. The retracting and extending of the ballast cylinders are not shut off. In the case of crane types with an adjustable counterweight radius, crane movements will be shut off if the correct counterweight radius is not detected.	
	Next steps:	Compare the settings from the Set up program with the installed counterweight. Make sure that all counterweight plates and hoist gear 2 or, if applicable, the replacement weight are correctly installed and connected. In the case of crane types with an adjustable counterweight radius, set the correct counterweight radius. Perform ballast weighing again.
	Note 1:	If the ballast weighing of the checked counterweights leads to a new error message, there may be an error within ballast monitoring. If an error is detected with ballast monitoring in crane types with ballast monitoring* shut-off, certain crane movements may only be possible in emergency operation or with the overload protection bypassed. A special case when operating of the LICCON overload protection has occurred, observe the Crane operating instructions, chapter 4.20.
	Note 2:	If the error message / shut-off regarding the counterweight radius continues, there may be an error regarding the monitoring or recording of the counterweight radius. If an error is detected, certain crane movements may only be possible in emergency operation or with the overload protection bypassed. A special case during operation of the LICCON overload protection has occurred, observe the Crane operating instructions, chapter 4.20.

LWE/LTR 1100-009/25105-02-02/en

copyright © Liebherr-Werk Ehingen GmbH 2023

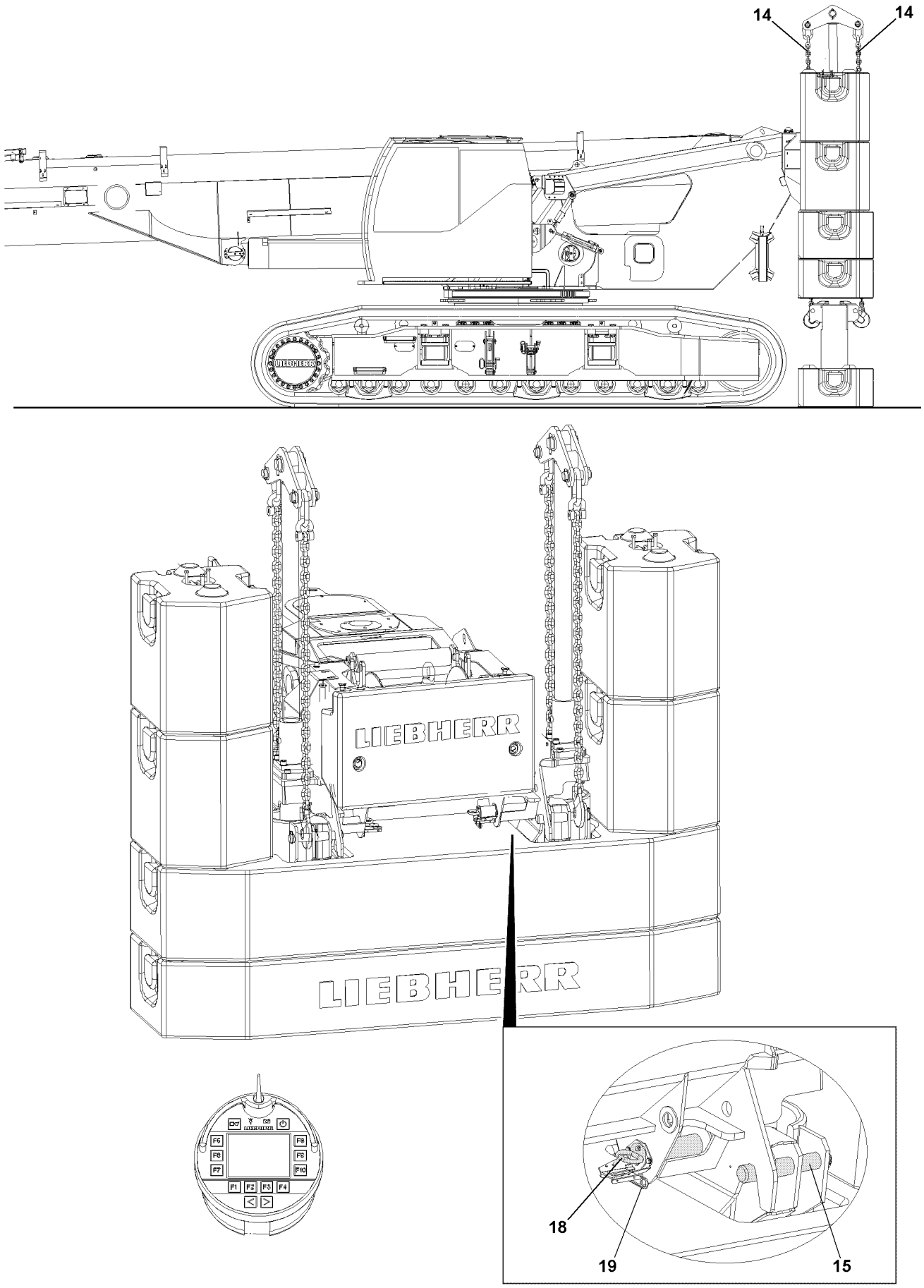

Fig.118048

LWE/LTR 1100-009/25105-02-02/en

copyright © Liebherr-Werk Ehingen GmbH 2023

10 Disassembling

10.1 General

Make sure that the following prerequisites are met:
- The ground is level and of sufficient load bearing capacity.
- The crane is horizontally aligned.
- The crane superstructure is locked with the crane chassis in the 0° or 180° position.
- The central ballast is installed.
- The ballast assembly chains **14** are engaged on all four pins **15**.
- The telescopic boom is telescoped in all the way.
- The telescopic boom is luffed down.

DANGER
Collapsing ground!
For assembly or disassembly of the counterweight, make sure that the ground is of sufficient load carrying capacity, otherwise the counterweight can sink in and topple over.
► If the ground gives way, select an assembly location with a sufficient load bearing capacity!

10.2 Taking the counterweight down

For the stroke of the ballast cylinder to be sufficient, the counterweight must be properly supported from below by 100 mm to 200 mm.

► Establish a proper substructure for the counterweight.
► Press the function key **F2** to extend the ballast cylinder.
► Tension the ballast assembly chains **14** evenly until the pin points of the counterweight and the turntable align.

DANGER
The counterweight can fall down!
Due to a disassembly error, the counterweight could fall down and fatally injure personnel!
► The ballast assembly chains **14** must be engaged on all four pins **15** and must be tensioned!
► During and after releasing the counterweight, it is prohibited for anyone to remain under the counterweight as well as within the entire danger zone!

► Release the spring retainers **19** and unpin the pins **18** completely on both sides.

LWE/LTR 1100-009/25105-02-02/en

copyright © Liebherr-Werk Ehingen GmbH 2023

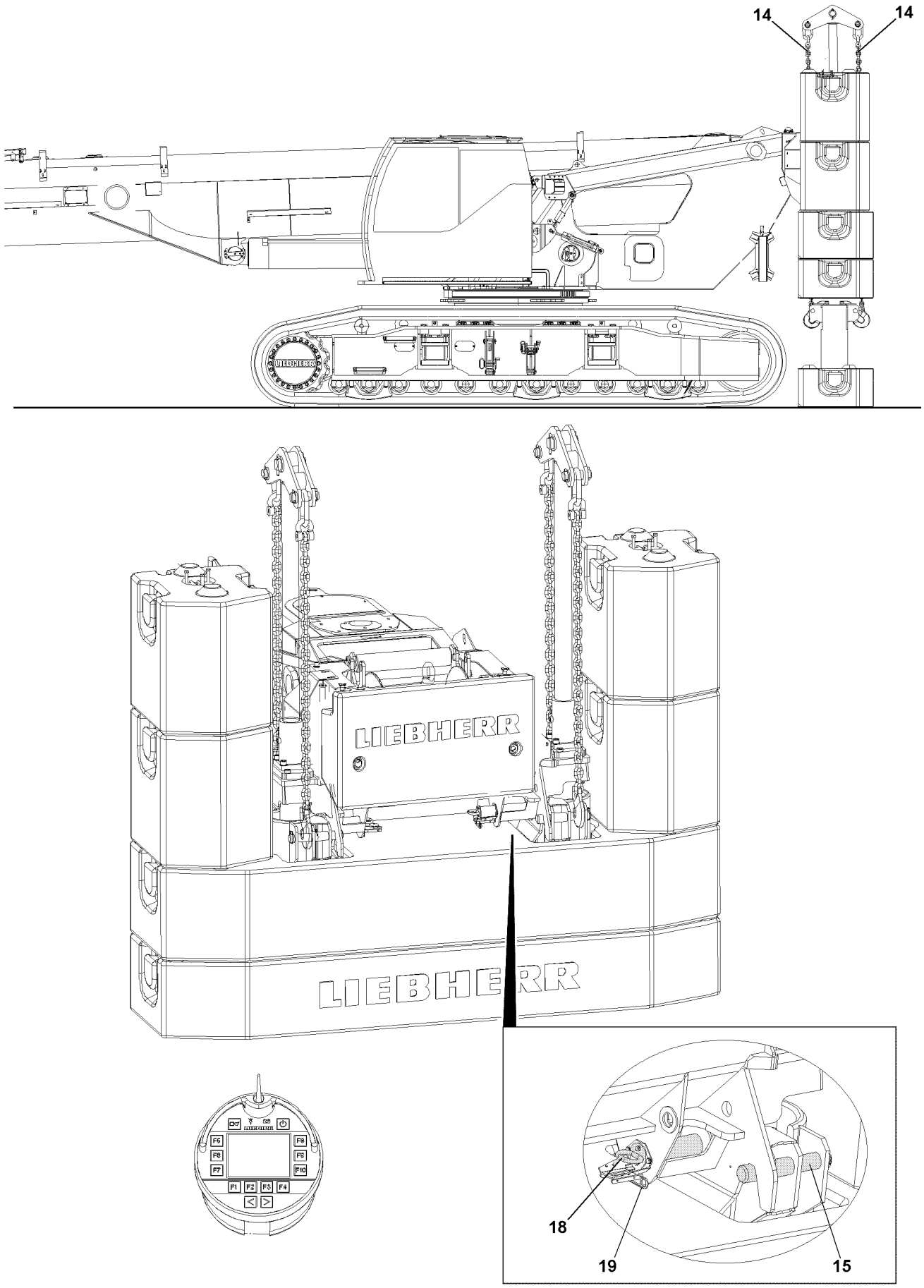

Fig.118048

LWE/LTR 1100-009/25105-02-02/en

copyright © Liebherr-Werk Ehingen GmbH 2023

► Select the ballast cylinder: Press the function key **F5** and the function key **F8**.

Result:

– Selected icons are visible with filled out frames: The ballast cylinders are selected.
– Ballast cylinders are ready for extension and retraction.

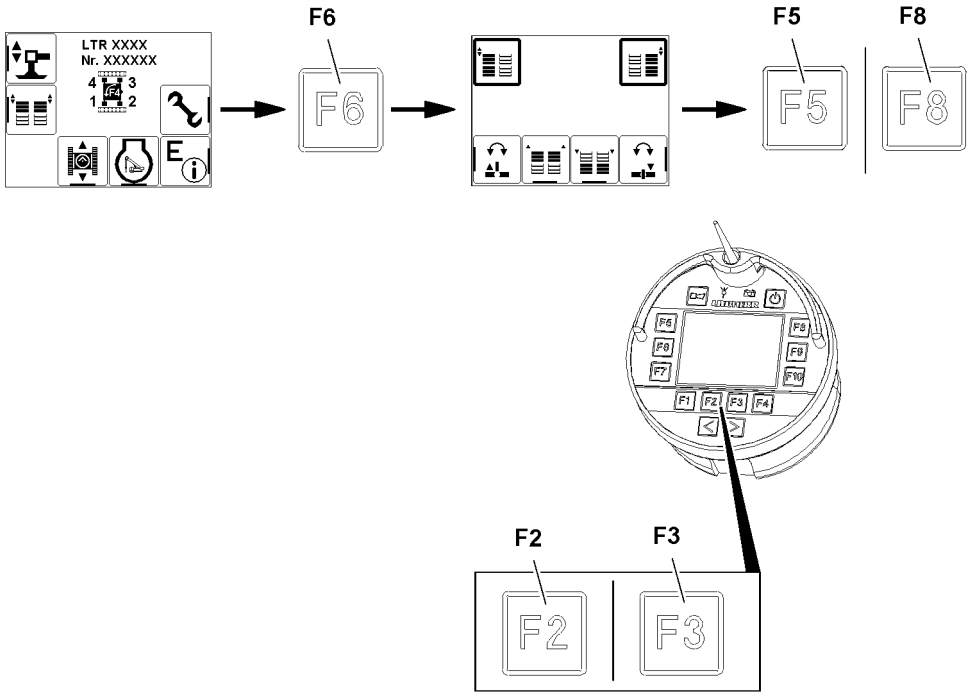

Fig.118049

► Press the function key **F3**.

Result:

– The „ballast cylinders“ retract, the ballast assembly chains **14** are lowered.

When the counterweight has been lowered to the ground:
► Press the function key **F3** and retract the ballast cylinder completely.
► Disengage the ballast assembly chains **14** from the pins **15**.
► Drive the crawler crane away from the counterweight.

LWE/LTR 1100-009/25105-02-02/en

copyright © Liebherr-Werk Ehingen GmbH 2023

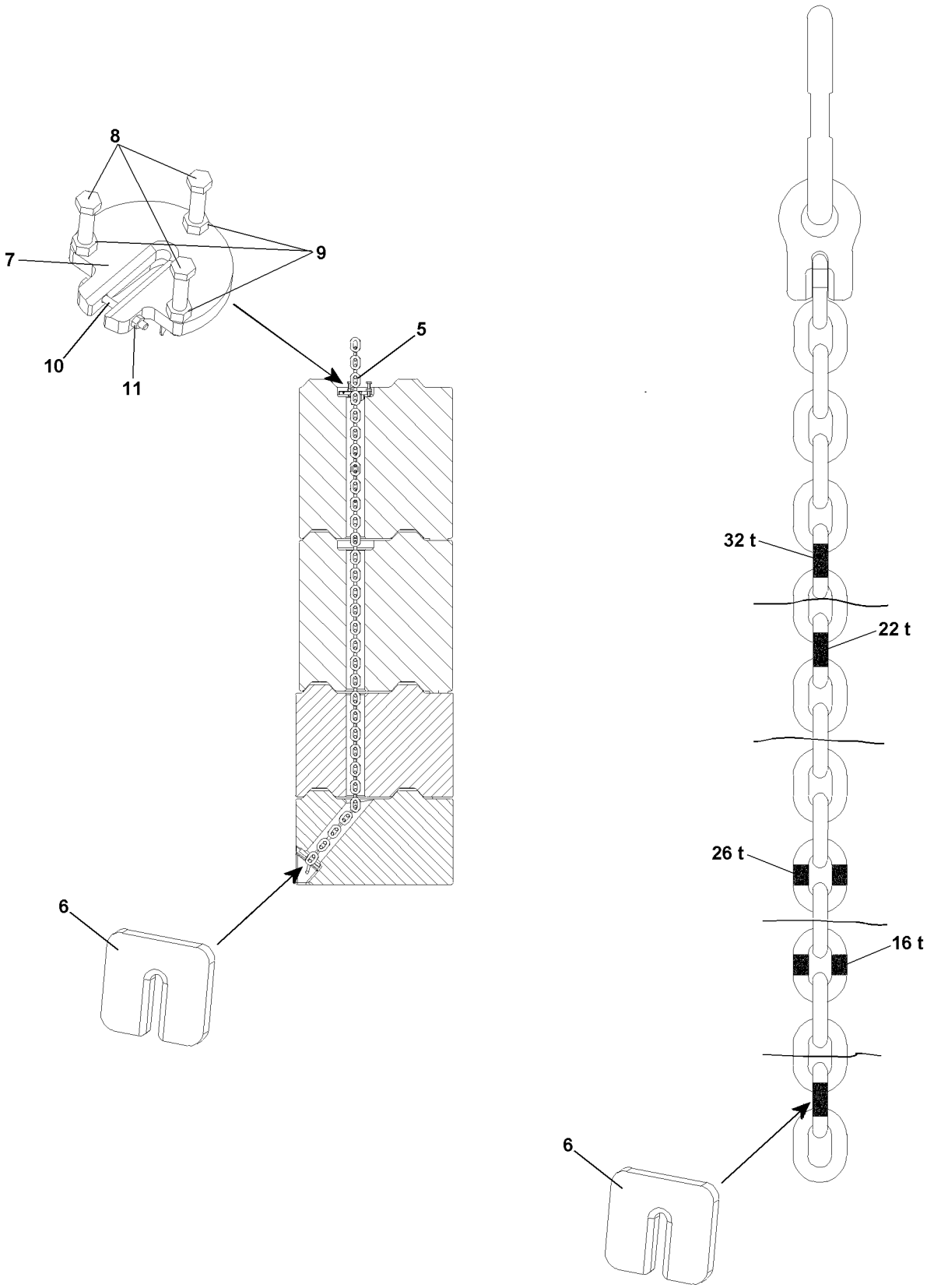

LWE/LTR 1100-009/25105-02-02/en

Fig.103203

copyright © Liebherr-Werk Ehingen GmbH 2023

10.3 Releasing and loading the counterweight

DANGER
Danger of accidents when releasing the safety chains!
► For larger ballasting, use a non-skid ladder to disengage the safety chains **5**!

► Release the nuts **9** and unscrew the tensioning screws **8** somewhat.
► Release the chain receptacles **6** on both sides.
► Pull out the retaining chains **5** through the top.
► Loosen the nuts **11** and unscrew the screws **10** on the retaining plates **7**.
► Remove the retaining plates **7** on the safety chains **5**.
► Store the safety chains **5**, chain receptacles **6** and retaining plates **7**.
► Set the LICCON overload protection according to the load chart.

DANGER
The crane can topple over!
The boom lengths and boom radii specified in the load chart may not be exceeded. If this is not observed, the crane can topple over fatally injure personnel!
► The boom lengths and boom radii noted in the load chart must be strictly observed!

► Take down the counterweight plates on the transport vehicle.

LWE/LTR 1100-009/25105-02-02/en

copyright © Liebherr-Werk Ehingen GmbH 2023

4.08 Working with a load

1	Safety instructions	3
2	Checks before starting to work with the crane	4
3	Telescoping crane movement	5
4	Taking on a load	7
5	Load weighing and load display	13
6	Crane operation	18
7	Ram work or pulling sheet piles	19
8	Crane rope pretension	20

LWE/LTR 1100-009/25105-02-02/en

copyright © Liebherr-Werk Ehingen GmbH 2023

LWE/LTR 1100-009/25105-02-02/en

Fig.195219

copyright © Liebherr-Werk Ehingen GmbH 2023

1 Safety instructions

In addition, observe the general technical safety instructions in chapter 2.04.

In steep boom positions for which no loads are specified in the load charts, there is a danger of tipping to the rear to the counterweight side.

The danger of tipping to the rear exists especially in case of:
- Crane operation on tires
- Supported, with retracted sliding beams
- Reduced support base

WARNING
Crane operation in steep boom positions for which no loads are specified in the load charts!
The crane can tip to the rear and fatally injure personnel.
► Comply with the boom radius specified in the load chart.
► Crane operation outside the permissible set up configurations, boom radii and slewing ranges according to the load chart is prohibited.

WARNING
Incorrect reeving number set up!
If the reeving number on the pulley head is less than the reeving number set on the LICCON computer system, it can result in an overload of the hoist rope.
The hoist rope can rip. The load can fall down and fatally injure personnel.
► Comply with the reeving numbers specified in the load chart for maximum loads.
► Make sure that the reeving on the pulley head and the reeving set on the LICCON computer system match.

The minimum rope coils must remain on the rope winches. The number of minimum rope coils depends on if the rope winch is equipped with a cam limit switch or a winch speed sensor.

WARNING
Minimum rope coils fallen below!
The rope will be ripped out. The load falls down.
Personnel can be killed.
► Make sure that the minimum rope coils remain on the rope winch.
► Observe and comply with the number of the minimum rope coils in chapter 5.01.

WARNING
Lift the load by luffing up!
The crane can topple over and fatally injure personnel.
► Lift the load with the hoist gear.

Always comply with the maximum loads specified in the load chart.

The weight of the hook block according the load chart must be taken into account. Subtract the weight of the hook block from the load chart value. The minimum hook block weight must be determined according to the reeving number and the data in the load charts.

For the stroke, use the hook block which is suited best for the existing set up configuration in connection with the load chart.

Initiate all crane movements carefully. Also brake the crane movements carefully. That way you can avoid a swinging or pendulum motion in the suspended load.

LWE/LTR 1100-009/25105-02-02/en

copyright © Liebherr-Werk Ehingen GmbH 2023

2 Checks before starting to work with the crane

Before starting work with the crane, the crane operator must carry out a further inspection to satisfy himself about the crane's operational safety:
- Check that the crane is properly supported and level.
- Check that the set up configuration set in the control matches the actual set up configuration.
- Check that all values in the load chart that apply to the current equipment configuration have been entered and met.
- Ensure that there are no people or objects within the danger zone of the crane.

WARNING
Persons in the slewing range!
Crushing danger, death, severe bodily injuries.
- ► Monitor the slewing range.
- ► Make sure that there are **no** persons within the slewing range.
- ► Block off the slewing range if necessary.

WARNING
Obstacle in the slewing range!
Property damage on crane and on obstacle.
- ► Make sure that there are **no** obstacles within the turning range of the crane and the crane components.

2.1 Visual check for damage

WARNING
Danger of accident!
If the crane is operated despite existing defects, personnel can be severely injured or killed.
- ► In the event of deficiencies which threaten operational safety, stop crane operation immediately.

The following deficiencies threaten the crane's operational safety:
- Damage to load-bearing parts of the crane design, such as booms, supports etc.
- Failure of the hoist gear brake and consequent slipping of the load
- Functional failures in the crane control system
- Functional defects in the indicator and warning lights
- Damage to the hoist ropes
- Safety defects in the safety equipment
- Leaks on safety relevant components of the crane hydraulic

Inform the appropriate supervisor about the deficiencies on the crane and also inform your relief when crane operators are changed.

2.2 Operating with telescopic boom and auxiliary boom

When operating with a telescopic boom and auxiliary boom in the 0° position and with a steep luffed up telescopic boom, the hook blocks can collide with the telescopic boom or the auxiliary boom.

LWE/LTR 1100-009/25105-02-02/en

copyright © Liebherr-Werk Ehingen GmbH 2023

NOTICE
Operation with the telescopic boom and auxiliary boom in the 0° position and steep luffed up telescopic boom!
The hook block can collide with the telescopic boom or auxiliary boom.
► Make sure that the hook block is always at a sufficient distance from the crane structure.

Before collision of the hook block with the telescopic boom or the auxiliary boom:
► Stop spooling up the winch or end luffing up the boom.

With a hydraulic auxiliary boom:
► Increase the freedom of movement of the hook block with respect to the auxiliary boom by luffing down the auxiliary boom.

2.3 Telescopic boom distortion because of sunshine on one side

A temperature difference occurs between the side facing the sun and the side facing away from the sun for cranes with telescopic booms. This causes telescopic boom side distortion, which can reduce the load bearing capacity of the telescopic boom.

For example, a temperature difference between the two boom sides of 30 °C and a boom length of 60 m results in a length difference caused by the temperature difference between the two sides of the telescopic boom of approximately 22 mm. With narrow boom parts, this causes the profiles to bend sideways.

If the maximum load is being utilized during operation with a telescopic boom extension such as a fixed lattice jib, luffing lattice jib or folding jib, then it must be ensured through a visual inspection before picking up the load that the boom is not showing signs of side deformation due to one-sided sun exposure.

WARNING
Danger of accident due to component overload!
If the telescopic boom has become distorted because of one-sided sunlight, this can cause component overload and therefore accidents.
► Turn the crane so that both sides of the boom are heated up equally, eliminating side deformation due to temperature difference.

3 Telescoping crane movement

If the telescopic boom is telescoped with the jib boom or telescopic boom extension, before the telescoping procedure, ensure that:
– The crane is properly supported and horizontally aligned.
– The telescopic boom is evenly warmed up by solar radiation.
– There is no strong side wind.

WARNING
Damage to the telescopic boom or the hoist rope!
If these 3 factors are not adhered to, damage of the telescopic boom or the hoist rope can occur and lead to accidents.
► Support the crane properly and align it horizontally.
► Keep both sides of the boom at about the same temperature.
► Telescope only to the permissible wind speed according to the load chart.
► If the actual wind speed is higher than the permissible wind speed noted on the load chart, telescoping is prohibited.

LWE/LTR 1100-009/25105-02-02/en

copyright © Liebherr-Werk Ehingen GmbH 2023

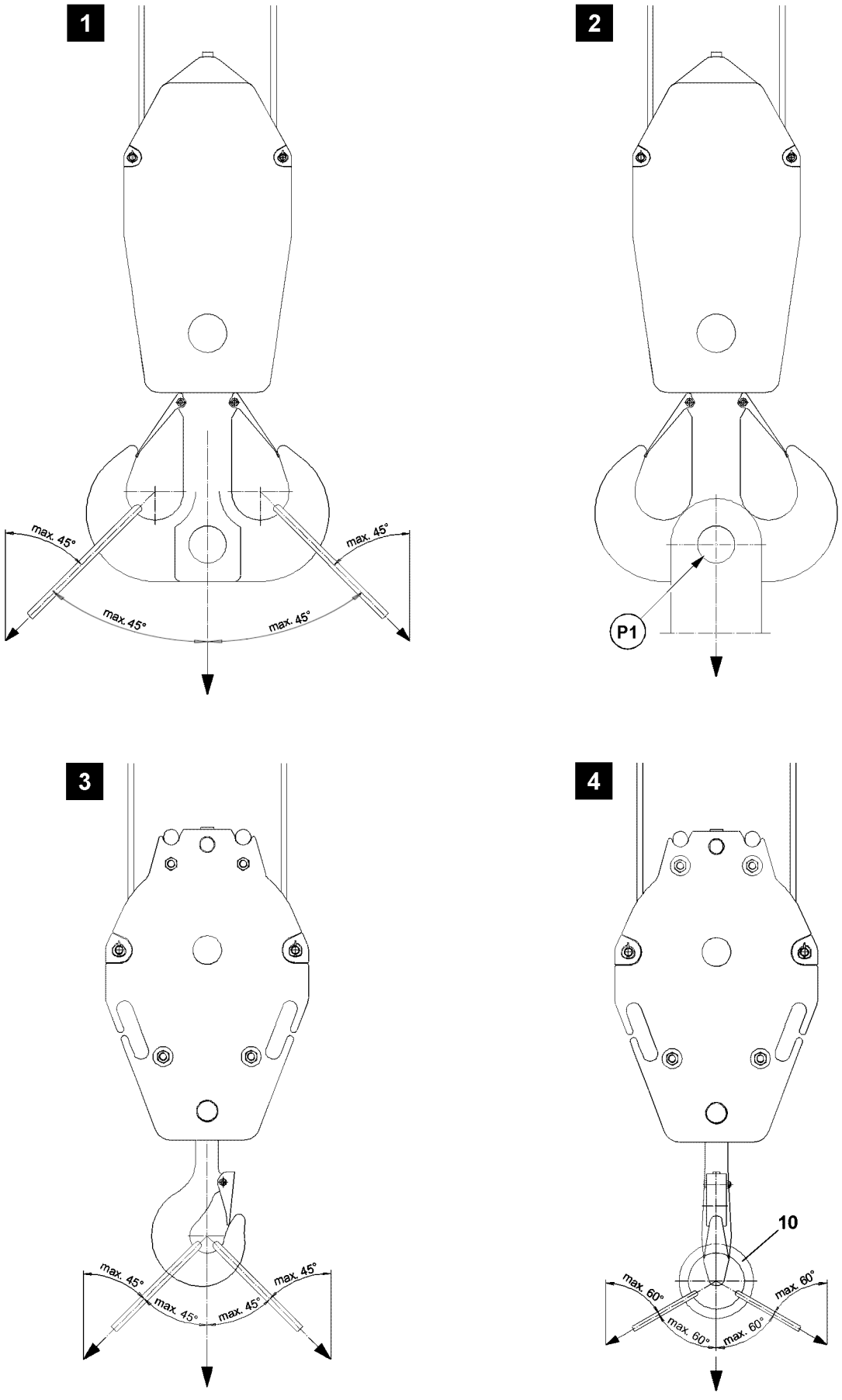

Fig.145147

LWE/LTR 1100-009/25105-02-02/en

copyright © Liebherr-Werk Ehingen GmbH 2023

4 Taking on a load

The crane must always be operated in such a way that its load-bearing parts are not destroyed or damaged and its stability is ensured.

Make sure that the following prerequisites are met:
- The crane is supported and horizontally aligned.
- The LICCON overload protection has been set according to the load chart and the set up configuration.
- The LICCON overload protection is active.
- In the case of cranes with central ballast: The central ballast is installed according to the load chart.
- The counterweight is installed according to the load chart.
- In the case of cranes with derrick ballast: The derrick ballast is installed according to the load chart.
- The hook block or the load hook is correctly reeved.

4.1 Fastening the load

WARNING
Load can be ripped off!
If impermissible fastening and / or load handling equipment is used when taking on a load on the centric bore on the double hook at point **P1** (illustration **2**), then the double hook as well as the hook block can be damaged.
The load can rip off and fall down.
Personnel can be severely injured or killed.
► Lift the load via the centric bore on the double hook (point **P1**): For the technical requirements and the technical design of the fastening and / or load handling equipment contact the hook block manufacturer.

WARNING
The crane can topple over!
If the following conditions are not met, the crane can topple over.
Personnel can be severely injured or killed.
This could result in significant property damage.
► Pay attention to the own weight of the load handling equipment.
► Pay attention to the load bearing capacity of the load handling equipment.
► The maximum permissible incline of the strands fastened on the single or double hook in the hook jaws is 45°. See illustration **1** and illustration **3**.

If necessary for the single hook:
► Use fastening equipment with a suspension link **10**. The maximum permissible incline in this case is 60°. See illustration **4**.
► Load a single and double hook symmetrically. A maximum deviation of ±3° from the direction of the center of gravity is permissible.

If necessary:
► Use cross beam or two cranes for taking on the load.

LWE/LTR 1100-009/25105-02-02/en

copyright © Liebherr-Werk Ehingen GmbH 2023

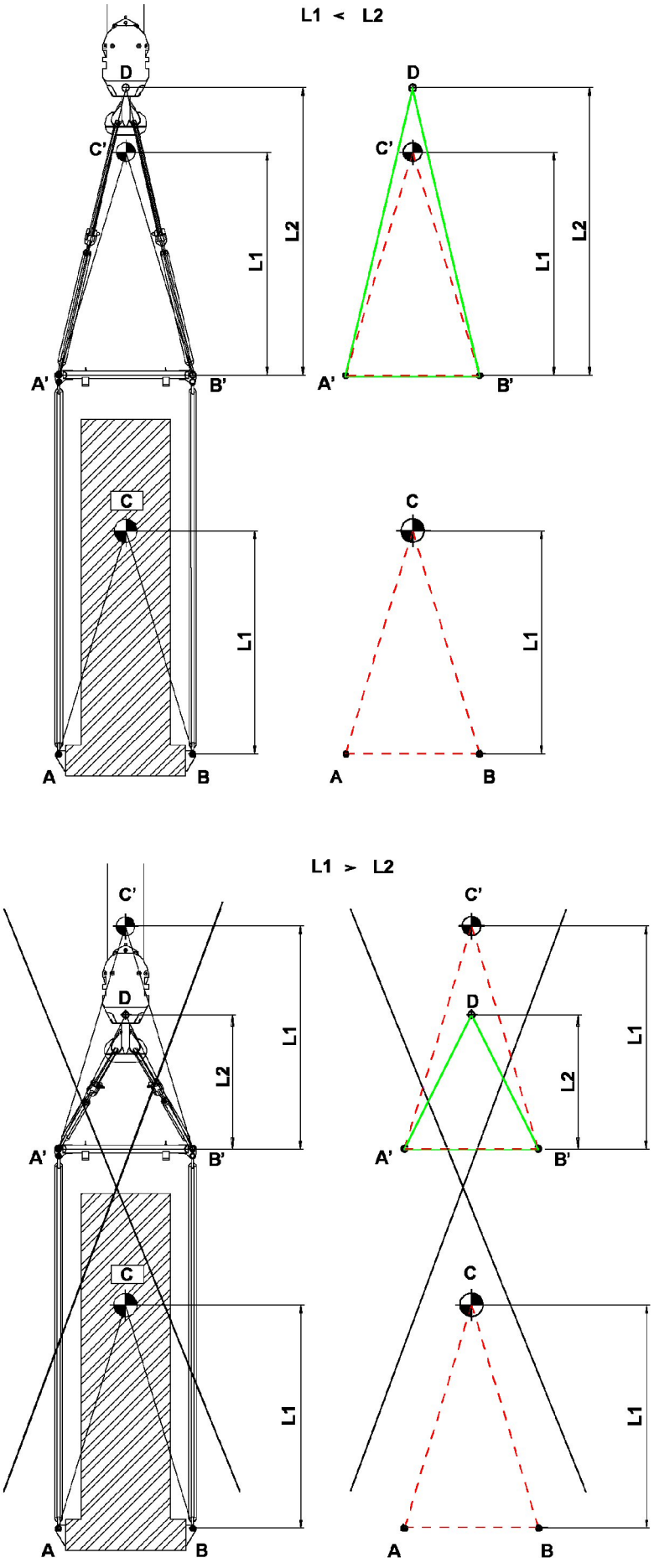

Fig.116274

LWE/LTR 1100-009/25105-02-02/en

copyright © Liebherr-Werk Ehingen GmbH 2023

4.2 Taking on a load with cross beam

Cross beam are load handling equipment between crane hook and load.

The distance of the center of gravity **L1** is the vertical dimension from the fastening point of the load to the center of gravity of the load.

The cross beam height **L2** is the vertical dimension from the point of rotation of the crane hook to the next lower linkage point of the cross bar.

WARNING
Tipping of load to the side!
If fastening ropes are used which are too short, so that the load center of gravity is above the fastening point, then there is a danger of the load tipping to the side.
Personnel can be severely injured or killed.
- ► The load center of gravity must be below the crane hook.
- ► The distance of the center of gravity **L1** must be smaller than the cross beam height **L2** (L1 < L2).
- ► The triangle **A'B'C'** must be within the triangle **A'B'D**.

4.3 Transporting the hook block

WARNING
Danger of accident!
If a hook block is fastened incorrectly for transport, personnel can be injured.
- ► Fasten the hook block for transport on the fixed point in the center.
- ► Fastening the complete hook block on the auxiliary weights is prohibited.
- ► When setting down, secure the hook block against falling over.
- ► Prevent the load hook from rolling away.

LWE/LTR 1100-009/25105-02-02/en

copyright © Liebherr-Werk Ehingen GmbH 2023

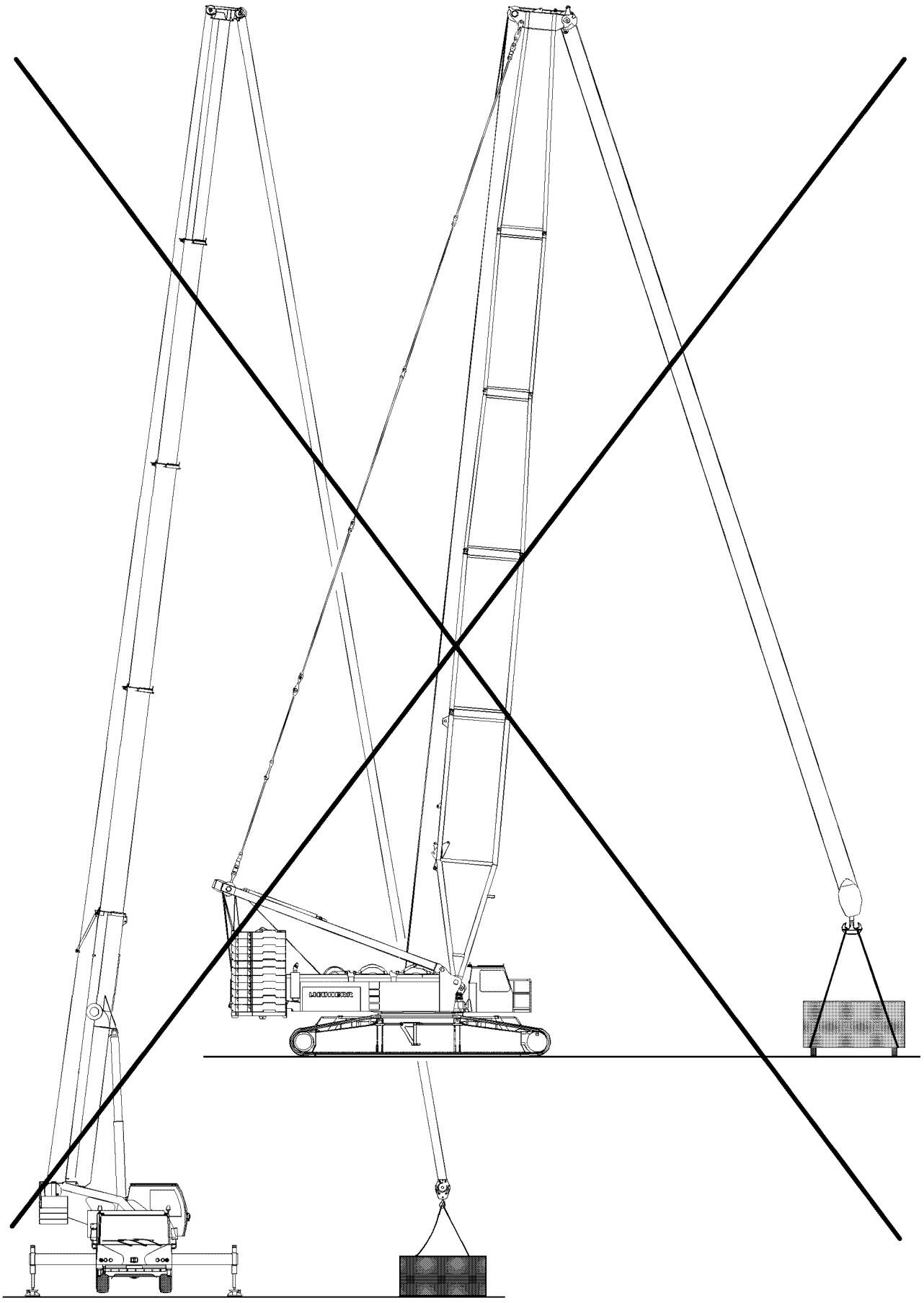

Fig.102716

LWE/LTR 1100-009/25105-02-02/en

copyright © Liebherr-Werk Ehingen GmbH 2023

4.4 Lifting the load

WARNING
Danger of crushing for people in the load zone!
If personnel is located between the load to be lifted and a possible interfering edge (such as a wall of a building or similar) when the load is lifted, personnel can be severely injured or killed.
- ► Before lifting the load it must be ensured that there are no persons within the danger zone.
- ► It is prohibited to remain in the danger zone.
- ► It is prohibited for anyone to be under the load. Maintain a safe distance.
- ► Swinging the load is prohibited.
- ► Exercise extreme caution when lifting a load.

WARNING
The crane can topple over!
If an attempt to lift a load over the hoist gear causes the LICCON overload protection to turn off, then the load may not be lifted by luffing up the boom. This causes overload or toppling the crane.
Personnel can be severely injured or killed.
- ► Do not lift the load by luffing up the boom off the ground.

Note
When using the assembly winch*, observe the following:
- ► Use the assembly winch* only for assembly and not for lifting loads.
- ► Lifting of loads with the auxiliary winch is prohibited.

If the fastening rope is manually attached by an assistant to the load to be lifted:
- – Make sure that the assistant's hands are not crushed by the tightened ropes between the load and the fastening rope.
- – Make sure that the assistant's body parts (hands, legs etc.) are not crushed by a swaying movement of the load during lifting.

4.5 Angular pull

WARNING
The crane can topple over!
Angular pulling can destroy the crane or cause it to topple over.
Personnel can be severely injured or killed.
- ► Fasten (hang) the hook block always vertically over the center of gravity of the load to be lifted.
- ► Do not use the slewing gear to pull and set up loads.
- ► When lifting, compensate for boom deflection.
- ► Angular pull is prohibited.

The crane is designed only to lift loads vertically. During angular pulling, regardless of whether this is done in the same direction as the boom or laterally, horizontal forces are generated from the load in addition to the vertical forces, for which the boom is not designed.

LWE/LTR 1100-009/25105-02-02/en

copyright © Liebherr-Werk Ehingen GmbH 2023

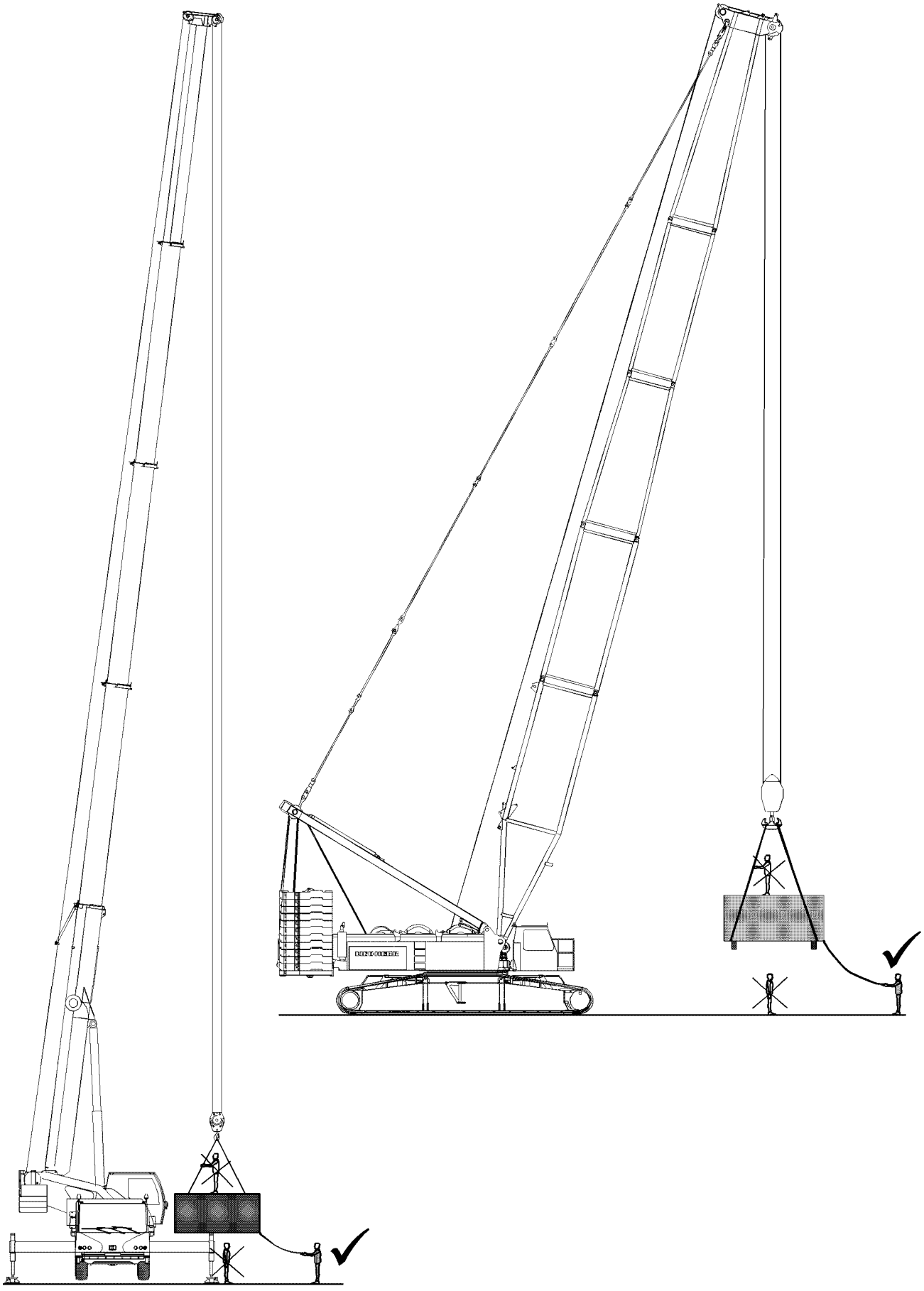

Fig.102717

LWE/LTR 1100-009/25105-02-02/en

copyright © Liebherr-Werk Ehingen GmbH 2023

4.6 Breaking away fixed loads

WARNING
The crane can topple over!
Ripping stuck loads free can destroy the crane or cause it to topple over.
Personnel can be severely injured or killed.
► Ripping stuck loads free is prohibited.

5 Load weighing and load display

Load weighing and load display are described based on the example of a crane with a telescopic boom. The situation is the same for a crane with a telescopic boom and lattice mast boom.

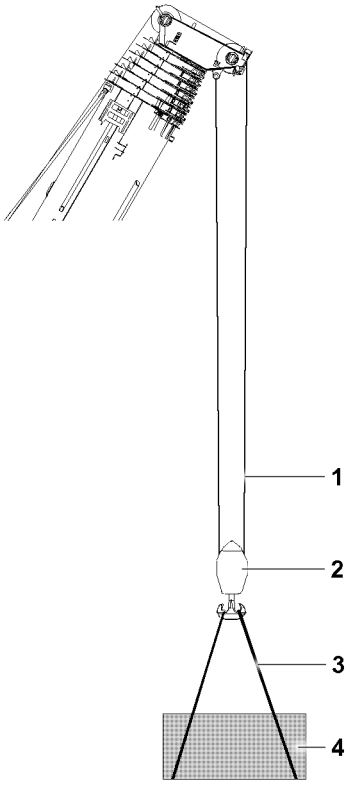

Fig.157473

1 Hoist rope
2 Hook block 1.5 t
3 Fastening equipment 0.5 t
4 Actual load capacity 48 t

The loads indicated in the load chart take the weight of the hoist rope into account at nominal reeving.

The weight of the hook block and the weights of the fastening equipment must be subtracted from the load indicted in the load chart and are displayed as a load

Calculation of the actual load capacity of the crane	Load
Maximum permissible load according to the load chart	50 t
Hook block weight	- 1.5 t
Fastening equipment weight	- 0.5 t
Actual load capacity	= 48 t

LWE/LTR 1100-009/25105-02-02/en

copyright © Liebherr-Werk Ehingen GmbH 2023

The weight of the actual load capacity (the component being lifted) may be not exceed **48 t** in this example.

5.1 Load weighing

Make sure that the following prerequisites are met:
- The angle sensors are functioning.
- The incline sensors are functioning.
- The turn sensor in the turntable is functioning.
- The pressure sensors are functioning.
- The length sensors are functioning.
- The pull sensors are functioning.

WARNING
The sensor is defective.
Load display and load weighing are not exact.
An error message is displayed.
► Stop crane operation. Replace the sensor.

5.1.1 Possible weighing errors

Exact sensor signals are required for precise load weighing.

Since all sensor values are always within a certain tolerance, a weighing error can occur.

The weighing error is increasingly larger if:
- The reeving is small.
- The boom, on which the load is suspended, is short.
- The boom, on which the load is suspended, is steep.

WARNING
Weighing error!
The crane can be overloaded.
► Plan and carry out the crane operation very carefully.

5.1.2 Adjusting the reeving

The number of reevings must be correctly set on the LICCON overload protection. If the reevings are higher than what is considered in the load chart, either the max load for LICCON 2 cranes are reduced or the actual load for LICCON 1 cranes is increased for the crane.

LWE/LTR 1100-009/25105-02-02/en

copyright © Liebherr-Werk Ehingen GmbH 2023

5.2 Actual load display

5.2.1 Hoist rope length

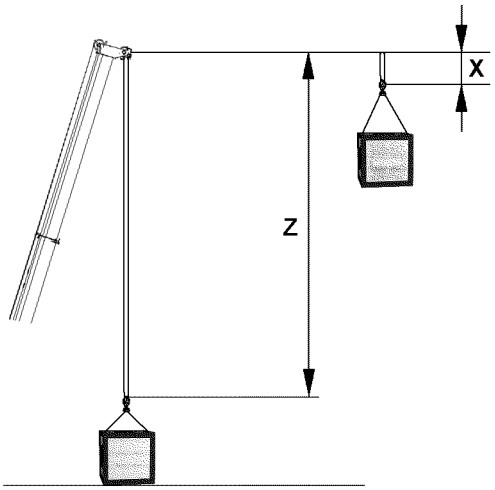

Fig.157474

Z Hoist rope length

X Hoist rope length

For the calculation of the displayed actual load, the hoist rope weight of the hoist rope length **Z** is deducted from the total load.

In that case, the number of the reevings set on the LICCON overload protection are taken into account, but no more than the nominal reeving.

If the load is raised far above the ground, (hoist rope length **X**), then the actual load display is smaller by the hoist rope weight of the load to the ground.

LWE/LTR 1100-009/25105-02-02/en

copyright © Liebherr-Werk Ehingen GmbH 2023

5.2.2 Lifting the load

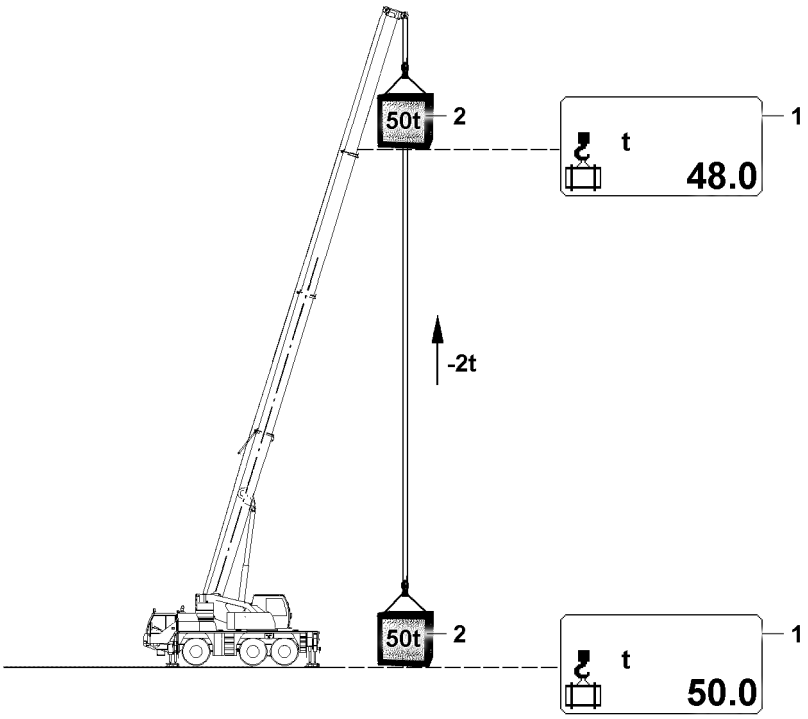

Fig.157503: Lifting the load

1 Actual load display **2** Load

The load consists of:
- Hook block
- Fastening equipment
- Actual load capacity (the component that is lifted)

When the load is lifted above the crane level, then the hoist rope to the ground is deducted on the actual load display **1**, therefore the load **2** seems increasing lighter when lifting than it did on the ground.

Therefore, a somewhat larger load can be lifted at great heights than on the ground, without triggering the LMB overload shut off.

LWE/LTR 1100-009/25105-02-02/en

copyright © Liebherr-Werk Ehingen GmbH 2023

5.2.3 Lowering the load

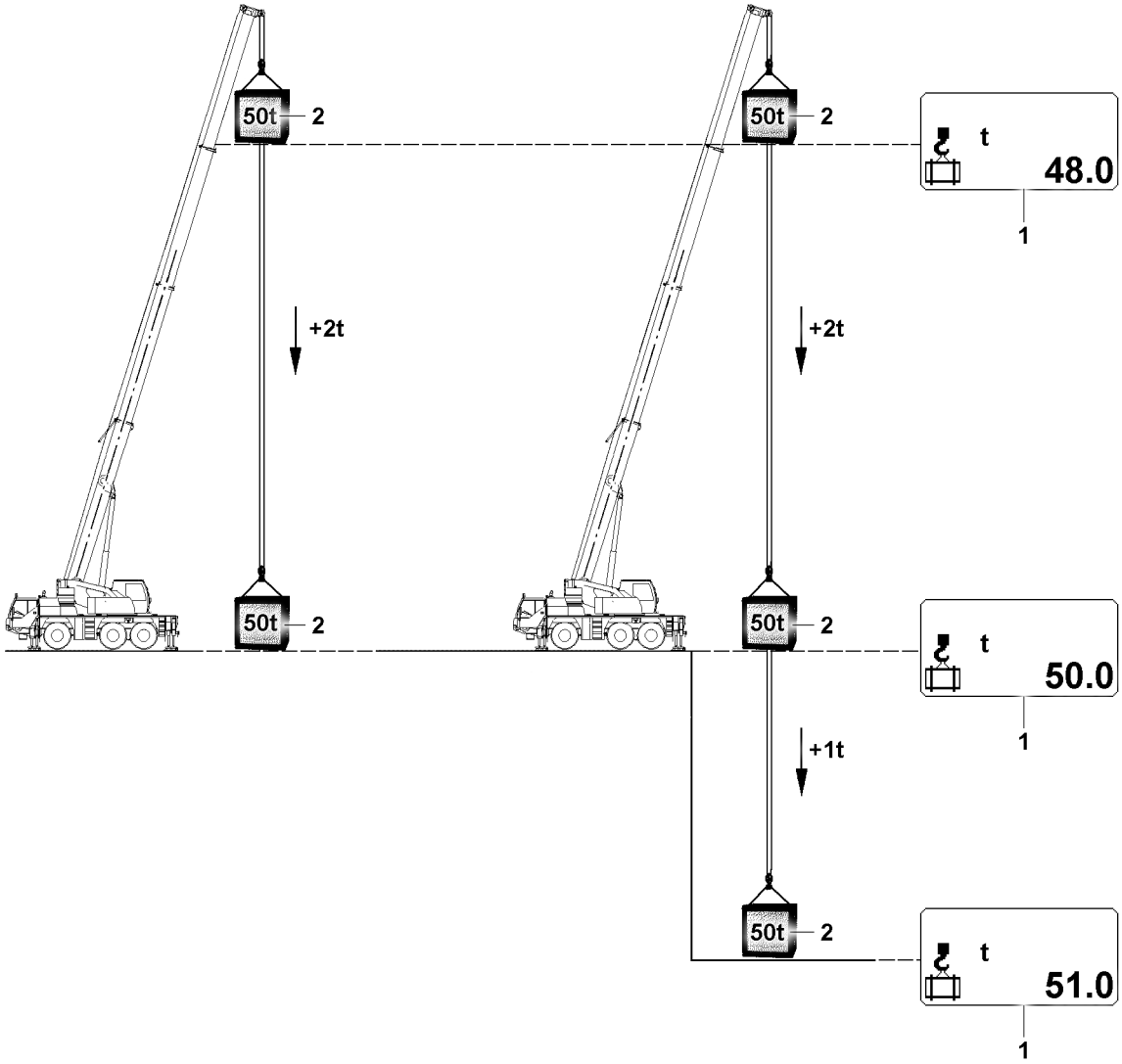

Fig.157502: Lowering the load

1 Actual load display **2** Load

The load consists of:
- Hook block
- Fastening equipment
- Actual load capacity (the component that is lifted)

When a load **2** with 100 percent utilization is picked up and then lowered, the weight of the hoist rope is calculated as the load and displayed. The utilization is then higher than 100%.

DANGER
When the load is lowered, the higher percentage of the hoist rope weight is **not** observed!
The crane is overloaded. Death, property damage

When a load **2** is lowered:
- ► When taking on a load, do **not** utilize the crane 100%.
- ► During job planning, add the higher percentage of the hoist rope weight to the load **2**.

When lowering the load **2**, make sure that the actual load display **1** is correct and the crane overload is also displayed in the utilization bar, but the lowering movement is not shut off. In the case of an LMB overload, all crane movements are shut off, which would increase the danger of overload, however

LWE/LTR 1100-009/25105-02-02/en

copyright © Liebherr-Werk Ehingen GmbH 2023

load **2** lowering remains possible because the control assumes that the overload takes place due to lifting the load **2**.

However, the crane can also be overloaded by lowering the load **2**, especially in case of high reevings with a large hoist rope weight on the pulley head. The crane driver must observe this, so that he can relieve the crane by careful lifting again in this special case, even though the lifting and not the lowering of the load **2** is automatically shut off.

6 Crane operation

The maximum load capacity of the crane is not just limited by the stability, but in many cases a load-bearing component breaks when the crane is overloaded **before** the crane topples over. Components that are susceptible to buckling, such as the telescopic boom, may fail suddenly **without showing signs of distortion beforehand** if the crane is overloaded.

WARNING
Danger of accidents for cranes with luffing cylinders!
When the luffing cylinder is in the block position, the overload protection is not functioning.
► Crane operation at block position of luffing cylinders is prohibited.

6.1 General

WARNING
Load rip-off!
If the load accidentally detaches from the crane, there is a danger of fatal injury for personnel present in danger zone.
The falling load and flying debris can catch personnel.
In the event of a load rip-off, the boom system may shoot backwards, shake the crane severely or cause it to topple.
► Make sure that there is no personnel in the danger zone of the load and the crane.

A suspended load must always be kept under control. A fundamental requirement for this is the safe and delicate control of the crane's functions.

WARNING
Danger of accident due to swaying loads!
A swaying load can damage the crane and cause it to topple.
► All crane movements must be executed slowly and delicately.
► Initiate all crane movements slowly.
► Apply the brakes slowly in all crane movements.
► Crane operation with swaying load is prohibited.

NOTICE
Damage of rope pulleys!
► Place down hook blocks, booms, folding jibs, jib booms and boom noses in such a way that the rope pulleys do not lie on the ground and are damaged.

6.2 Guiding the load

The use of guide ropes is recommended to help the crane operator manage the load more precisely and to prevent the load from swaying. This will prevent undesirable movements of the load and consequent damage.

LWE/LTR 1100-009/25105-02-02/en

copyright © Liebherr-Werk Ehingen GmbH 2023

6.3 Danger of crushing

WARNING
Danger of fatal injury!
Extreme caution is needed when lowering a load. Danger of fatal injury exists for personnel in the immediate area of the load being lowered.
Personnel can be severely injured or killed.
- ► Standing under a suspended loads is strictly prohibited.
- ► Observe the danger of tipping when setting down the load. For example, small support surfaces or unsuitable ground.

6.4 Danger of falling

WARNING
Danger of fatal injury!
If persons are on the suspended load, then they can fall down and be severely injured or killed.
- ► Remaining on a suspended load is strictly prohibited.
- ► Remaining on or within crane components (for example: during assembly of boom sections, lattice sections) which are moved during lifting, lowering, turning or closing procedures is strictly prohibited.

6.5 Working in the vicinity of overhead electrical lines

If there are electricity transmission lines in the immediate vicinity of the building site, then the electrical transmission lines must be turned off by qualified electricians. If this is not possible, the danger area must be covered over or cordoned off.

WARNING
Danger of current transfer!
If overhead electrical lines are not shut off nor covered nor blocked off, then there is an increased danger of accident due to current transfer.
- ► For rated voltages up to 500 kV AC: Adhere to a safety distance of 8 m.

If the crane becomes electrified despite having taken all necessary precautions, proceed as follows:
- ► Remain calm.
- ► Do not leave the crane cab.
- ► Warn people outside: Stay in place and do not touch the crane.
- ► Move the crane away from the danger zone.

7 Ram work or pulling sheet piles

The cranes from Liebherr Werk Ehingen GmbH have been designed to lift loads. When working with a free-riding vibrating unit for ramming and pulling operations, vibrations may be transmitted to the load bearing steel structure even if a vibration damper is used. This vibration can cause premature fatigue of the material and therefore cracks in the supporting steel structure. Furthermore, the components can loosen and fall down due to the vibrations. This work should only be performed on the mobile crane in exceptional situations or when the use of machines built specially for this work is not possible.

Before performing this work, a risk assessment must be carried out that concerns the particular risks when driving and pulling the sheet piles and handling them.

Following higher loads on the crane, shorter inspection intervals for the mobile crane and the hook block must be defined by an authorized inspector. Before and after performing the work on the free-riding jogging unit, the crane, hook block and fastening equipment as well as the vibrating unit must be inspected for damage.

LWE/LTR 1100-009/25105-02-02/en

copyright © Liebherr-Werk Ehingen GmbH 2023

The free-riding vibrating unit must be equipped with vibration dampers. Rigid connections for this equipment to the crane are prohibited!

The following vibrating unit and vibration damper combinations are permissible:
- Free-riding vibrating unit with integrated vibration dampers.
- Free-riding jogging unit combined with a vibration damper designed for this equipment.

Specifications for working with the free-riding vibrator:
- Slack rope and angular pull on the hoist rope are prohibited.
- The vibrator may only be switched on if the vibrator is connected correctly with the ramming element and the ramming element is lying flush on the ground or is partially in the ground.
- Starting or stopping the vibrating unit must take place with an eccentric moment of zero (no vibrator vibration), in order to avoid peak vibration amplitudes and resonances due to the possibility of running through the natural frequency band of the vibrator. Only after reaching the nominal speed and the operating pressure of the unit may the eccentric moment be set to the desired value or amplitude.

NOTICE
No vibration dampers used!
The boom or the crane can be damaged.
► Use piling equipment and pulling equipment with vibration dampers.
► The ramming equipment and pulling equipment may **not** pass on vibrations to the boom.

When pulling sheet piles, the maximum permissible pull force must be limited to 50% of the load chart value for the corresponding crane boom radius. The utilization of the hook block load may not exceed 50%.

Note
► When pulling sheet piles, **only** work in main boom operation or telescopic boom operation.
► Do **not** use operating modes with a derrick, auxiliary boom or boom extensions.

NOTICE
Maximum permissible pull force exceeded when pulling sheet piles!
The boom or the crane can be damaged.
► Limit the maximum permissible pull force to 50% of the load chart value for the corresponding crane boom radius.
► Additionally check the pull force by measuring it.
► Do not limit the maximum pull force of the crane **exclusively** by means of the overload protection.

NOTICE
Hook block load utilization exceeded when pulling sheet piles!
The hook blocks or the crane can be damaged.
► Limit the utilization of the hook block load to maximum 50%.

Liebherr Werk Ehingen GmbH shall not be held liable for damage caused to the machine, to the used ramming and pulling equipment, on the piling element or in the surroundings (for example adjacent buildings) due to the installation and use of the free-riding vibrator.

8 Crane rope pretension

Damage that can occur with multi layer spooling:
- Abrasion
- Broken wires and loop formation
- Flattenings, deformations

LWE/LTR 1100-009/25105-02-02/en

copyright © Liebherr-Werk Ehingen GmbH 2023

NOTICE
Crane rope pretension too low!
Loosely coiled rope layers.
Rope damage. Reduced service life of the crane rope.
Cutting of the crane rope into the lower rope layers. The load can not be lowered any further.
► To maximize the service life of the crane rope, carry out the measures in the following sections.

Note
► Liebherr recommends to shorten crane ropes with damage in the cross over area of the coils, in order to lengthen the service life. Shortening the crane rope, see Crane operating instructions, chapter 7.05.50.

8.1 Working with a high rope pull

If multiple lifts are performed with a high rope pull, loosen the lower rope layers that are rarely or never spooled out.

NOTICE
Loosely spooled out rope layers!
Rope damage.
Upper rope layers with a high rope pull deform the lower rope layers in the cross over area of the crane rope.
Spooling deformed rope sections over rope pulleys reduces the service life of the crane rope.
► Place a shorter crane rope.

When the lower rope layers are **not** used during repeat work:
► Increase the pretension of the lower rope layers: Spool out the entire rope length and then spool back up with the highest rope pull possible. See section „Increasing the hoist rope pretension“.

8.1.1 Placing a shorter crane rope

Note
► Liebherr recommends using the entire rope length.

Unused rope sections cause the loosening of the lower rope layers.

When only a part of the crane rope length is used for a longer period of time:
► Place a shorter crane rope.

8.1.2 Reducing rope unwinding

Telescopic boom

When telescoping out less, then the smallest amount of fixed coiled up crane rope is spooled out.

► Telescope out as little as possible.

Picking up the fastening equipment

If the fastening equipment with a flat boom system must be picked up, then the smallest possible amount of crane rope is spooled up loose.

► Establish a flat boom system: Telescope out or luff up the boom.
► Pick up the fastening equipment.

LWE/LTR 1100-009/25105-02-02/en

copyright © Liebherr-Werk Ehingen GmbH 2023

8.1.3 Restoring hoist rope pretension

Brief description

If a multi-pulley hook block is reeved, then the entire hoist rope length can be spooled out from the rope drum.

► Spool the hoist rope out until three safety coils.
► Create 10 % maximum strand pull: Attach the load.

While the hoist rope is spooled up:
– Hold the load just off the ground.
– In the permissible range of the load chart of the relevant set up configuration: Increase the load radius by luffing down.

► Spool the hoist rope up.

Description using the example LR 1600-2, SL3F

This section explains the procedure with the help of the set up configuration for LR 1600-2 with boom system SL3F.

The crane-specific parameters ensure that rope is spooled out until four rope coils and as many rope coils with pretension as possible can be spooled up.

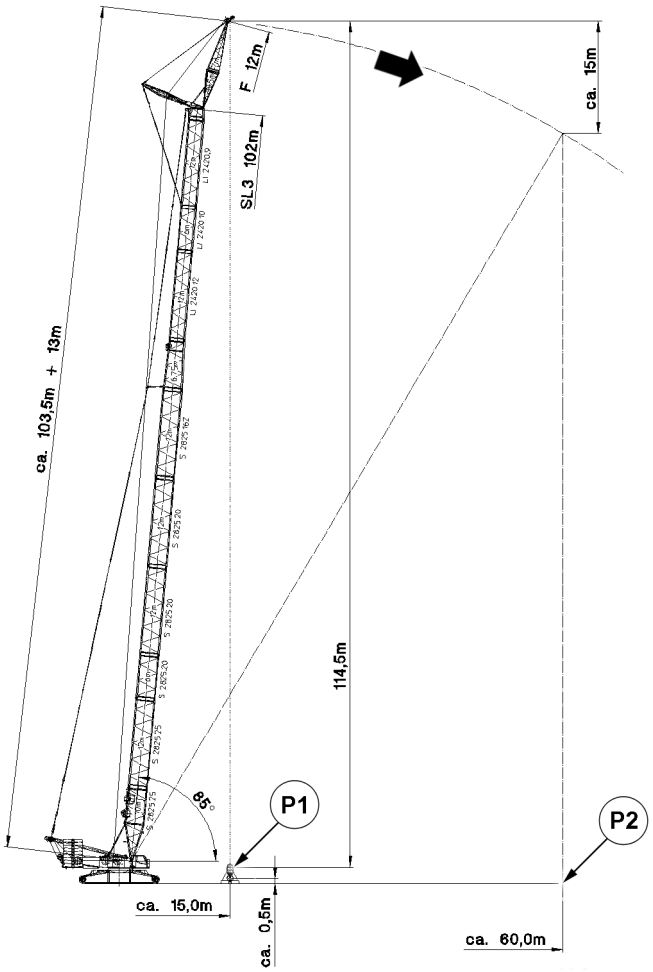

Fig.127131: LR 1600-2, SL3F: Spooling up hoist rope with pretension

LWE/LTR 1100-009/25105-02-02/en

copyright © Liebherr-Werk Ehingen GmbH 2023

Boom radius	Load	10 % of maximum strand pull
60 m	14.4 t	1.8 t

Load example: LR 1600-2, SL3 102, F12, according to the load chart

Hoist rope for this example:
– Hoist rope with a length of 1050 m

Hook block for this example:
– Hook block 200 DM, 5-pulley, reeved 8 times
– The weight of the hook block with ten auxiliary weights is 7.0 t

Make sure that the following prerequisites are met when hanging the load:
– Load is hung as short as possible.
– For a boom radius of 15.0 m , the hoist rope can be spooled out on the winch until four coils.

To reach sufficient rope pull, another load must be hung in addition to the hook block.

The additional load of 7.4 t is calculated from the difference between the load 14.4 t and the weight of the hook block 7.0 t.

► Fasten the load with 7.4 t.
► Until the load is 0.5 m above the ground: Lift the load.
► Set the boom system to boom radius 15.0 m.
► Spool the hoist rope out.

Result:
– In position **P1** there are 9 m of hoist rope (four coils) on the hoist winch:

Spooled out rope section	Length
8-way reeving, distance of ground to the F-jib with boom radius 15 m	8 x 114.5 m = 916.0 m
Winch to FA-frame	103.5 m
F-head	13.0 m
Rope pulleys	7.5 m
Total of spooled out hoist rope	1040.0 m

*Rope lengths in position **P1***

While the hoist rope is spooled up:
– Hold the load just off the ground.
– In the permissible range of the load chart of the relevant set up configuration: Increase the load radius by luffing down.

► Until a boom radius of 60.0 m is reached: Spool up the hoist rope and luff down the boom at the same time.
► Set down the load.

Result:

– The pretension of the first and second position of the rope coils is restored.
– In position **P2** there are 130 m of hoist rope (23 coils) on the hoist winch:

Spooled up rope section	Length
Four coils initial situation	9 m
8-way reeving, F-jib height difference with boom radius 60 m	8 x 15 m = 120 m
Total of spooled up hoist rope	130 m

*Rope lengths in position **P2***

LWE/LTR 1100-009/25105-02-02/en

copyright © Liebherr-Werk Ehingen GmbH 2023

► Make sure that the hoist rope on the winch remains pretensioned: Reeve out the hook block and reeve in with slower reeving. See Reeving plan.

8.2 Picking up and lowering overhead loads

The load is picked up overhead in the following application examples:
– Repowering wind power plants
– Disassembly of slewing tower cranes

NOTICE
Load picked up overhead with loosely coiled rope layers!
The rope pull increases when the load is picked up. The rope coils in the lower rope layers move laterally and are compressed. The hoist rope can cut into the lower rope layers.
► Spool up the hoist rope without a load only with rope pretension.

NOTICE
Load lowered with cut in rope layers!
The hoist rope is pulled jerkily from the lower rope layers. Vibrations are introduced into the crane system.
Cut in hoist rope clamped between the lower rope layers. The load can **not** be lowered any further.
► To prevent the cutting in of the hoist rope, carry out the measures in the following sections.

8.2.1 Increasing the reeving number

NOTICE
Higher reeving number than indicated on the load chart!
Slack rope formation.
The crane load drops due to additional weight from the rope strands and hook block.
If a higher reeving number is not considered in the set up configuration, the load display on the LICCON monitor no longer corresponds.
► Redetermine the hook block weight according to the load chart manual and adjust if necessary.
► Check if the crane load is sufficient for higher reeving.
► After telescoping out, check if the hook block can still reach the desired position for putting down the load.

A higher reeving number reduces the rope pull. A lower rope pull prevents the cutting in of the hoist rope in the lower rope layers.

► Select the highest reeving number possible for the hoist rope.

8.2.2 Increasing the hook block weight

NOTICE
Lift the hook block without a load!
The hoist rope is spooled up with a low rope pull. The rope layers are spooled up loose on the rope pulley.
► Increase the rope pull: Increase the hook block weight.

A higher hook block weight increases the rope pull.

► Increase the hook block weight.

If the crane load is sufficient:
► Attach an auxiliary weight between the load and hook block.

8.2.3 Pretensioning the hoist rope with pretensioning ballast with two hook operation

The pretensioning ballast is **not** included in the Liebherr delivery scope.

LWE/LTR 1100-009/25105-02-02/en

copyright © Liebherr-Werk Ehingen GmbH 2023

NOTICE
Lift the hook block without a load!
The hoist rope is spooled up with a low rope pull. The rope layers are spooled up loose on the rope drum.
► Pretension the hoist rope with pretensioning ballast with two hook operation.

Make sure that the following prerequisites are met:
– The crane is equipped for two hook operation.
– The pretensioning ballast is present.

Properties of the pretensioning ballast:
– Developed by Liebherr.
– The weight is 4 t.
– Special tow coupling

► Fasten the pretensioning ballast on the main hook and on the auxiliary hook.

The pretensioning ballast is lifted with the main hook, the auxiliary hook is carried along without a load.

► Lift the pretensioning ballast.

When the main hook has reached the required height:
► Stop the main hook.

After the load is completely transferred to the auxiliary hook, the main hook fastening ropes release automatically.

► Lift the auxiliary hook until the pretensioning ballast hangs completely on the auxiliary hook.

When the main hook fastening ropes have released:
► Lower the pretensioning ballast with the auxiliary hook and place it on the ground.

Result:

– The full load is present on the main hook.

LWE/LTR 1100-009/25105-02-02/en

copyright © Liebherr-Werk Ehingen GmbH 2023

Empty page!

LWE/LTR 1100-009/25105-02-02/en

copyright © Liebherr-Werk Ehingen GmbH 2023

4.10 Driving from the crane cab

1	Prerequisites for driving the crane (crawler operation)	2
2	Displays for center of gravity, surface pressure and incline on the LICCON monitor	6
3	Preparing for crane driving	13
4	Driving the crane: Load chart available	15
5	Driving the crane: No load chart is available	17
6	Crawler crane in crawler operation	20

LWE/LTR 1100-009/25105-02-02/en

copyright © Liebherr-Werk Ehingen GmbH 2023

1 Prerequisites for driving the crane (crawler operation)

For driving the crane (crawler operation) the conditions of the travel route are the deciding factor.
- For **ground inclinations within the area of a valid load chart Driving with load** is possible at a slow speed. The ground must be sufficiently level and capable of supporting the load. The supplements to the load charts for driving the crane must be observed.
- For **ground inclinations outside the area of a valid load chart Driving without load** is possible at a slow speed up to certain inclination ranges. The ground must be sufficiently level and capable of supporting the load.

Driving the crane: Load chart available:
- Valid and regular load chart available
- With load on the hook
- Without load on the hook

Driving the crane: No load chart is available:
- Only without load on the hook
- With specifications and limitations for the set up configuration of the crane

WARNING
The crane can topple over!
If the permissible inclinations of the crane are exceeded, the crane can topple over.
If the permissible surface pressures of the travel route are exceeded, the crane can topple over.
Personnel can be severely injured or killed.
- ► Do not exceed the permissible inclinations of the crane.
- ► Do not exceed the permissible surface pressures for the travel route.

WARNING
The crane can topple over!
If the following specifications, instructions and prerequisites are not observed, then the crane can topple over or be overloaded.
Personnel can be severely injured or killed.
- ► The crane operator is responsible for adhering to all specifications, instructions and prerequisites in the crane documentation.
- ► The crane operator may not drive the crane if not all specifications, instructions and prerequisites in the crane documentation can be adhered to.
- ► The crane operator is responsible for the correct and complete entry of data in the LICCON computer system.
- ► All drive movements (starting, steering, acceleration, deceleration, stopping etc.) must be initiated sensitively, smoothly, with utmost caution and at the lowest speed.
- ► Depending on the situation, additional observers, who are acoustically or visually in contact with the crane operator (for example by radio or sight), may have to support the crane operator with shared responsibility.

Make sure that the following prerequisites are met:
- No personnel or obstacles are within the danger zone.
- The crane is in an operational condition.
- The crane is in a set up configuration permitted for travel operation.
- The installed ballast (central ballast and counterweight) is properly installed and secured.
- There are no loose objects on the crane.

LWE/LTR 1100-009/25105-02-02/en

copyright © Liebherr-Werk Ehingen GmbH 2023

1.1 Travel route

WARNING
The crane can topple over!
If the following specifications, instructions and prerequisites are not observed, then the crane can topple over or be overloaded.
Personnel can be severely injured or killed.
- ► The transition from the horizontal to an uphill slope and from an uphill slope to the horizontal must be made evenly, i.e.: There may be no edges that can cause the crane to topple over. Any inclination changes must be made continuously.
- ► If the travel route cannot safely absorb the surface pressure, then measures must be taken to be able to safely transfer the forces to the ground.
- ► If measures were taken to transfer the forces to the ground, then they must be checked by an expert before starting to drive for proper execution and sufficient supportability.
- ► An insufficient ground condition can cause accidents, for example the crane can slide away to the side and as a result get into an impermissible incline position.

Make sure that the following prerequisites are met:
- – Before starting to drive, the travel route was determined.
- – Before starting to drive, the condition of the ground has been checked.
- – The entire travel route can safely absorb the surface pressure.
- – All inclinations occurring on the travel route can be driven safely by the crane.
- – The entire travel route is free of obstacles.
- – The friction coefficient between the track and ground is sufficiently large to absorb the occurring drive forces or to prevent the crane from slipping away in an incline position.
- – Possible environmental influences for driving the crane (including precipitation and wind) were taken into account for the travel route.
- – The travel route was selected and prepared in such a way that the boom system can be taken down at any time.
- – Select the travel route in such a way that no steering movements are required, if possible.
- – With a load on the hook: setting down the load is possible at any time.
- – The entire travel route is secured as a danger zone.
- – The travel route has been selected in such a way that a sufficient distance to local facilities (among others power lines) can be retained.

For ground outside the range of a valid load chart, the following applies additionally:
- – Before starting to drive, the travel route was checked in connection with the actual set up configuration of the crane on the LICCON job planner.
- – Before starting to drive, the optimum positions for the boom system were determined to obtain as even a surface pressure as possible - the LICCON job planner can be used for this purpose.

Note
- ► For a detailed description of the LICCON job planner on the crane*, see the LICCON Job planner operating instructions.
- ► For a detailed description of the LICCON job planner computer program, see the separate description.

LWE/LTR 1100-009/25105-02-02/en

copyright © Liebherr-Werk Ehingen GmbH 2023

1.1.1 Optimizing measures for the travel route

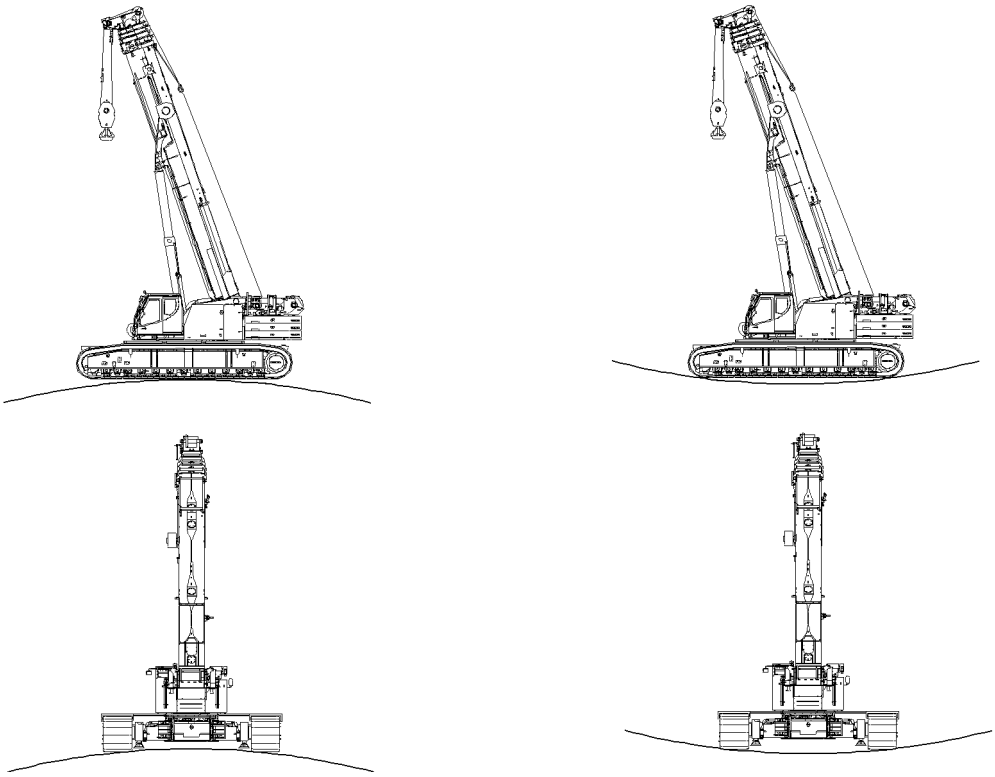

Fig.117927: Depressions, crests, track grooves and other uneven areas of the travel route cause localized pressure on the crawler travel gear

NOTICE
Damage to the crawler travel gear!
Continuous localized pressure on the crawler travel gear causes increased wear. Continuous increased wear can cause damage to the crawler travel gear.
- ► Set up the travel routes in such a way that the crawler travel gear is not subjected to continuous localized pressure.
- ► For extended travel operation shorten the maintenance intervals.

Through the following configuration features of the travel route, wear on the crawler travel gear can be minimized:
- – Deformations in the travel route (such as depressions, crests, track grooves) have been eliminated via suitable measures.
- – Select the travel route in such a way that few steering movements are required.

1.2 Calculating the required length of transitions on uphill / downhill slopes

The required length **L** for transfers results from the existing uphill angle **α** and the length of the crawlers **LC**.

LWE/LTR 1100-009/25105-02-02/en

copyright © Liebherr-Werk Ehingen GmbH 2023

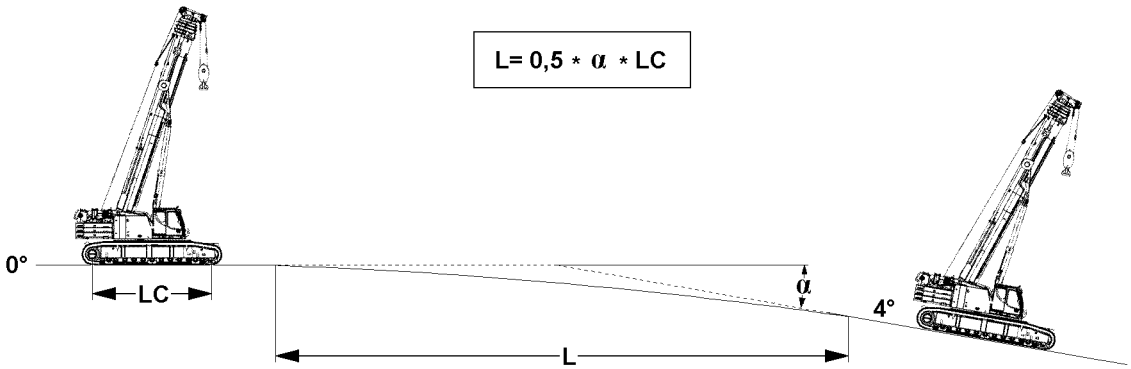

Fig.121101: The illustration is an example

Abbreviation	Description
L	Required length of transfers
α	Angle rising / falling inclines in degrees
LC	Length of crawlers between drive wheels / steering wheels

1.2.1 Calculation example

Given:

α = 4°

LC = 8.0 m (use only the actual value of the crane!)

Wanted:

L = ?

Calculation formula						
L	=	0.5	*	**α**	*	**LC**
L	=	0.5	*	4	*	8.0 m
L	=	16.0 m				

1.3 Travel gear / hydraulic motors / track rollers

NOTICE
Damage to the travel gear, hydraulic motors and track rollers!
On longer travel routes and / or when driving uphill / downhill, the travel gears, hydraulic motors and / or track rollers can be overheated and damaged.

- ► Make sure that the travel gears - before driving the crane - have the maximum fill level.
- ► With suitable measuring devices make sure that the maximum permissible temperature of the travel gears, hydraulic motors and / or track rollers in travel operation over longer distances is below 90 °C. For a short time (**maximum** 10 minutes), the temperature may increase to a value between 90 °C and 100 °C.
- ► As soon as the maximum permissible temperature in one position is exceeded, take a break from driving for cooling down.
- ► The crane operator is responsible for any damage to travel gears, hydraulic motors and / or track rollers.

LWE/LTR 1100-009/25105-02-02/en

copyright © Liebherr-Werk Ehingen GmbH 2023

When the maximum permissible temperature range on a travel gear and / or hydraulic motor is reached:

► Take a break until the temperature on travel gear(s), hydraulic motor(s) and / or track rollers had dropped considerably.

Maximum permissible temperature range on travel gear(s) / hydraulic motor(s)		
	to 90 °C	**between 90 °C and 100 °C**
Duration of exposure	Continuous	Not longer than 10 minutes

When the temperature of all travel gears / hydraulic motors has dropped below 90 °C:

► Travel operation is permissible again.

1.4 Using insertion plates in the crawler chains

If insertion plates are used in the crawler chains:

– The ground can be protected against damage.
– It is possible that the friction coefficient between the track and the ground changes.

WARNING
If the friction coefficient is too low between the track and the ground then there is a danger of accident!
In unfavorable ground characteristics, such as snow or ice, the friction coefficient between the track and the ground is reduced.
The drive forces can no longer be absorbed.
The crane can slide off.

► Use insertion plates only when a sufficient friction coefficient between the track with insertion plates and the ground is ensured.

2 Displays for center of gravity, surface pressure and incline on the LICCON monitor

WARNING
Danger of accident due to deviating set up configuration!
If the actual set up configuration of the crane deviates from the entries and settings in the Set up program, then the overload protection is not correctly set.
An incorrectly set overload protection calculates the actual load incorrectly and transmits faulty display values.
The crane can be overloaded without noticing it and topple over or collapse as a result.
Personnel can be severely injured or killed.

► The entries and settings in the set up program must match the actual set up configuration of the crane.

WARNING
Incorrect display values!
If the display values do not increase correspondingly when lifting known weights, an erroneous display value may be present.
If the crane is operated with erroneous display values, then the crane can be overloaded.
This could result in serious accidents.

► When lifting the hook block off the ground check if the display value for the actual load increases correspondingly.
► When lifting the load off the ground check if the display value for the actual load increases correspondingly.

LWE/LTR 1100-009/25105-02-02/en

copyright © Liebherr-Werk Ehingen GmbH 2023

Make sure that the following prerequisites are met:
- The actual set up configuration of the crane matches the entries and settings in the set up program.
- The assignment of the crane to the displays on the LICCON monitor is clear.
- All displays function perfectly.

Note
- ► For a detailed description of the displays on the LICCON monitor, see the Crane operating instructions, chapter 4.02.
- ► For a detailed description of the safety equipment, see Crane operating instructions, chapter 4.04.

2.1 Center of gravity display on the LICCON monitor

WARNING
Shifting of the center of gravity!
The calculation of the values for the display of the center of gravity in the LICCON monitor are based on ideal assumptions.
- ► Side deformations of the boom system due to wind, inclined position and elastic resilience of the steel structure are not taken into account but they can lead to a shifting of the center of gravity.

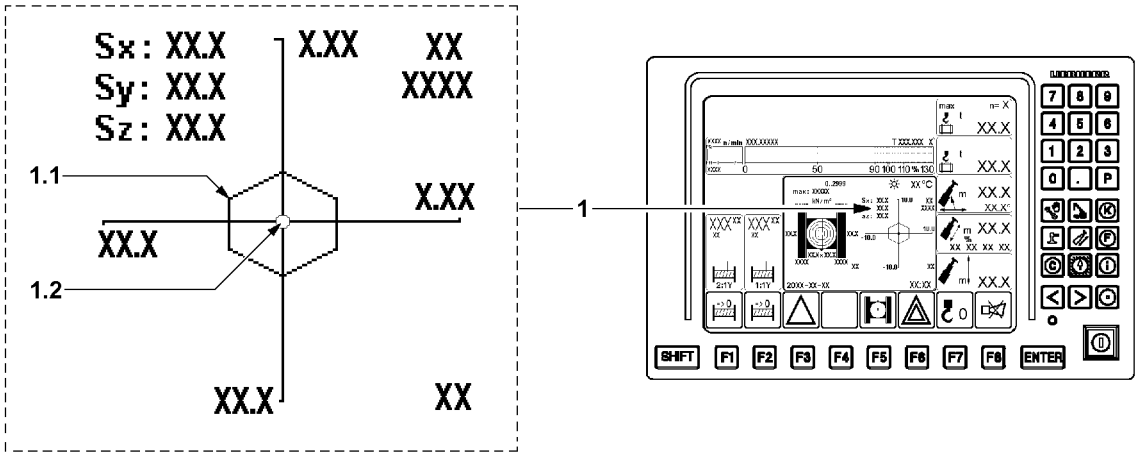

Fig.117916

Center of gravity **1 display**	
Position	**Name**
1.1	Core area
1.2	Center of gravity

WARNING
The center of gravity of the crane is outside the core area!
If the center of gravity **1.2** of the crane is outside the core area **1.1**, then the crane can topple over.
Personnel can be severely injured or killed.
- ► To drive the crane, the center of gravity **1.2** must always be within the core area **1.1**.
- ► If the center of gravity **1.2** is outside of the core area **1.1**, then it is prohibited to drive the crane.

The following specifications and instructions must be observed:
- By luffing the boom system up and down, the position of the center of gravity **1.2** must be corrected in such a way that the overall center of gravity remains within the core area **1.1**.

LWE/LTR 1100-009/25105-02-02/en

copyright © Liebherr-Werk Ehingen GmbH 2023

2.2 Display for surface pressure and inclination on the LICCON monitor

WARNING
Increased surface pressure!
The calculation of the values for the display of the surface pressure in the LICCON monitor are based on ideal assumptions.
► Side deformations of the boom system due to wind, inclined position and elastic resilience of the steel structure are not taken into account but they can lead to an increase of the surface pressure.

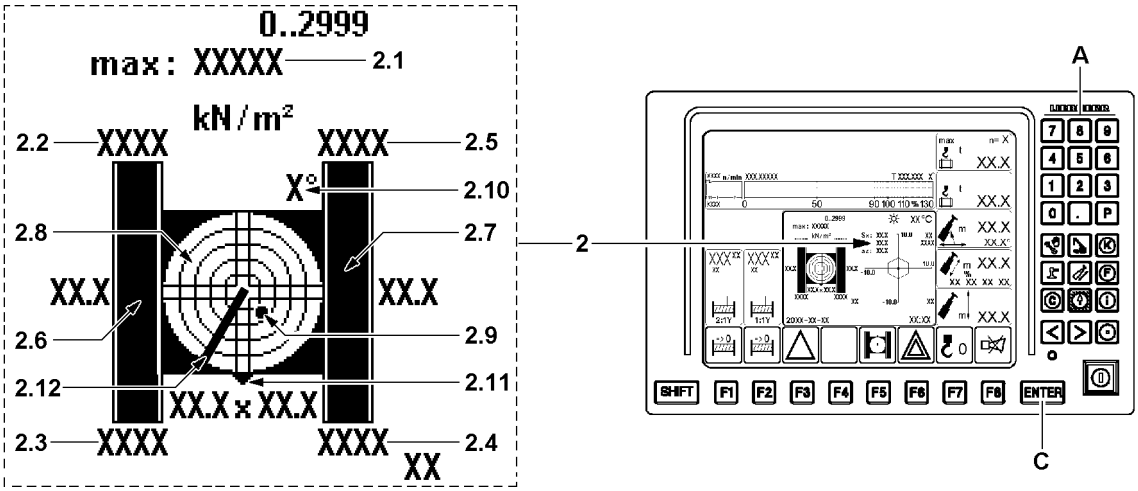

Fig.117917

Display Surface pressure **2**	
Position	**Name**
2.1	Maximum surface pressure
2.2	Surface pressure right rear
2.3	Surface pressure right front
2.4	Surface pressure left front
2.5	Surface pressure left rear
2.6	Right crawler placement surface
2.7	Left crawler placement surface
2.8	Incline indicator[1)]
2.9	Point
2.10	Display resolution[2)]
2.11	„Front side of crawler carrier“[3)] marker
2.12	Boom direction[4)]

1) The graphic display is in the form of a spirit level with a moving dot **2.9** representing the air bubble.
2) This value describes the resolution of the graphic view. The resolution is matched automatically to the inclination
3) The front of the track is always on the side where the chain tension devices for the crawler carriers are located.
4) Current boom direction in reference to the displayed icon.

LWE/LTR 1100-009/25105-02-02/en

copyright © Liebherr-Werk Ehingen GmbH 2023

WARNING
Surface pressure too high!
If the maximum surface pressure is exceeded, the crane can topple over.
Personnel can be severely injured or killed.
► Do not exceed the maximum surface pressure.
► The value entered in the LICCON computer system for the maximum surface pressure **2.1** must match the actual conditions of the travel route.

WARNING
The crane can topple over!
If the permissible incline of the crane is exceeded, the crane can topple over.
► Do not exceed the permissible incline from the load chart.
► Do not exceed the permissible inclination for driving the crane, see the following sections.

Note
► The placement surface of the crawler is graphically shown in the display of the surface pressure.
► If the resulting surface pressure can be distributed so that the maximum surface pressure of the travel route is not exceeded **and** the resulting forces can be transferred safely into the ground, then the stability of the crane is ensured.
► Incline indicator **2.8** with number values, see section „Display of incline in LICCON monitor“.

The following specifications and instructions must be observed:
– The maximum surface pressure that may be reached must be entered as the maximum surface pressure **2.1**.
– By luffing the boom system up and down, the resulting surface pressure must be distributed in such a way that the maximum surface pressure of the travel route is not exceeded.
– The inclinations that are reached on the travel route are known and are taken into account.
– As soon as the crane shows the tendency that the permissible incline could be exceeded, the load must be set down. If necessary, driving the crane must be interrupted.

2.2.1 Entering the maximum permissible surface pressure

Make sure that the following prerequisites are met:
– The *Crane operation* program is called up.
– The maximum permissible surface pressure of the travel route is known.

► Press the enter key **C**.

Result:

– The value for the maximum surface pressure **2.1** can be changed.

► Enter the value for the maximum permissible surface pressure via the keypad **A**.
► Press the enter key **C**.

Result:

– The new value for the maximum surface pressure **2.1** appears.

► Check the value for the maximum permissible surface pressure.

2.3 Display for the inclination on the LICCON monitor

The display of the incline is additional shown at the monitored auxiliary functions.

There is the display of the incline of the crane to the horizontal in the longitudinal and lateral direction. The display is graphic as well as numeric.

LWE/LTR 1100-009/25105-02-02/en

copyright © Liebherr-Werk Ehingen GmbH 2023

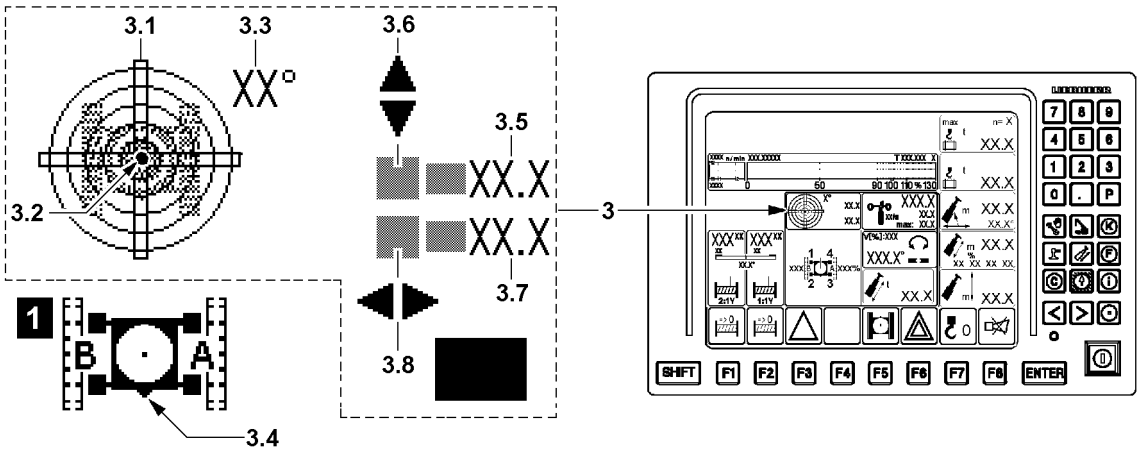

Fig.117918

Incline **3 display**	
Position	**Name**
3.1	Sight gauge
3.2	Bubble
3.3	Display resolution
3.4	Front side of crawler carrier[1)] marker
3.5	Incline in longitudinal direction
3.6	Incline direction
3.7	Incline in lateral direction
3.8	Incline direction

1) The track is highlighted in the sight gauge **3.1** as an orientation aid. The front side of the crawler travel gear **3.4** is in the display below, see detail **1**. The front of the track is always on the side where the chain tension devices for the crawler carriers are located.

WARNING
The crane can topple over!
If the permissible incline of the crane is exceeded, the crane can topple over.
► Do not exceed the permissible incline from the load chart.
► Do not exceed the permissible inclination for driving the crane, see the following sections.

The following specifications and instructions must be observed:
– The inclinations that are reached on the travel route are known and are taken into account.
– As soon as the crane shows the tendency that the permissible incline could be exceeded, the load must be set down.

LWE/LTR 1100-009/25105-02-02/en

copyright © Liebherr-Werk Ehingen GmbH 2023

Empty page!

LWE/LTR 1100-009/25105-02-02/en

copyright © Liebherr-Werk Ehingen GmbH 2023

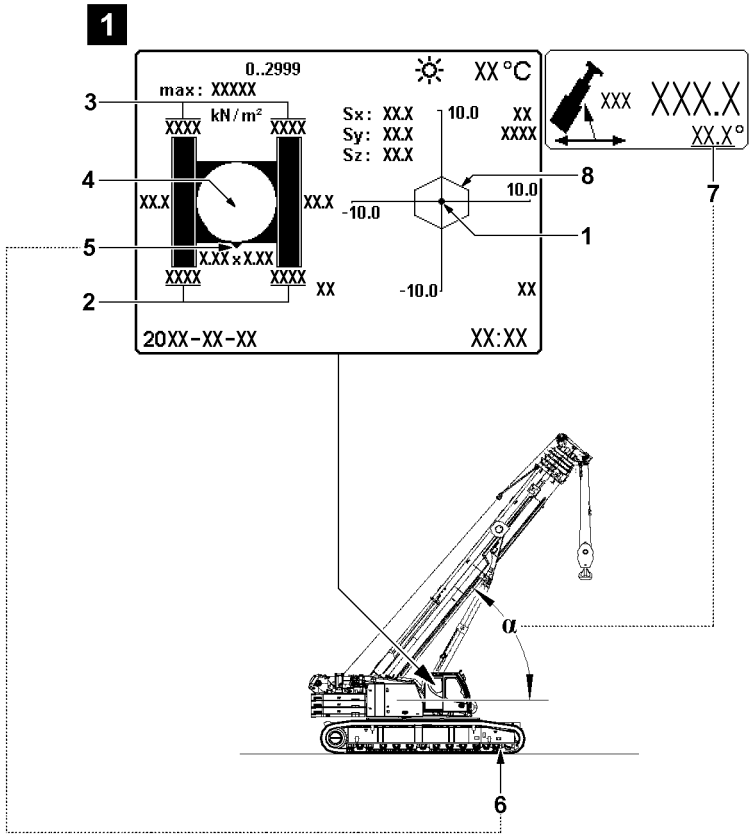

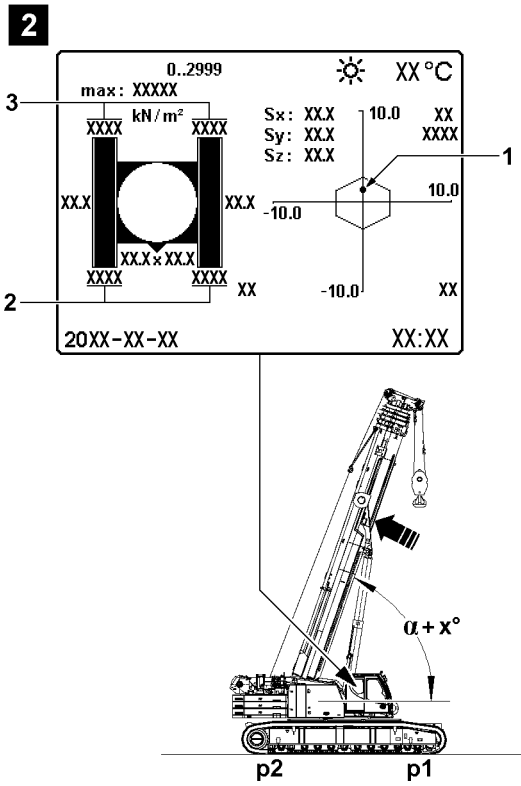

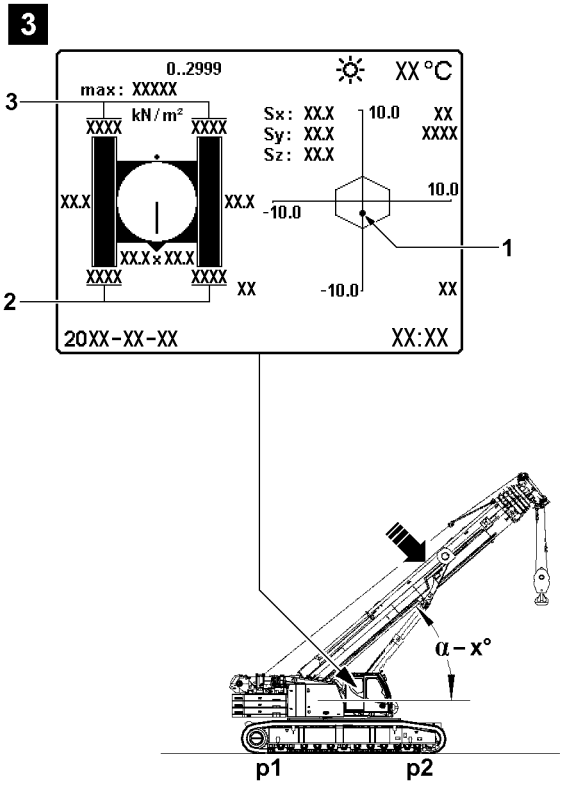

Fig.121102

LWE/LTR 1100-009/25105-02-02/en

copyright © Liebherr-Werk Ehingen GmbH 2023

3 Preparing for crane driving

3.1 Distribution of the surface pressure

While driving, pay attention in all driving conditions to the ratio of the surface pressure between the front and the rear sides of both crawlers.

In the following examples it is assumed that the crawler travel gear and the turntable are oriented to the front.

Distribution of the surface pressure	
Position	**Name**
1	Center of gravity
2	Surface pressure on the front
3	Surface pressure on the rear
4	Incline indicator[1)]
5	„Front side of crawler carrier“[2)] marker
6	Crawler carrier chain tension device
7	Main boom angle display
8	Core area
α	Main boom angle

1) The angle display always refers to the crawler travel gear. As an orientation aid, the front side of the crawler travel gear **5** is optically highlighted.
2) The side where the chain tension device for the crawler carriers is located is always at the front on the track.

Before driving the crane is it required to position the boom in such a way that a suitable distribution of surface pressure for driving is obtained.

3.1.1 Examples for the distribution of surface pressure

The center of gravity **1** is in the center, illustration **1**
- The surface pressure on the front **2** is the same as the surface pressure on the rear **3**.

The center of gravity **1** is in the rear, illustration **2**
- The boom was luffed up.
- The surface pressure on the rear **3** is higher.

The center of gravity **1** is in the front, illustration **3**
- The boom was luffed down.
- The surface pressure on the front **2** is higher.

LWE/LTR 1100-009/25105-02-02/en

copyright © Liebherr-Werk Ehingen GmbH 2023

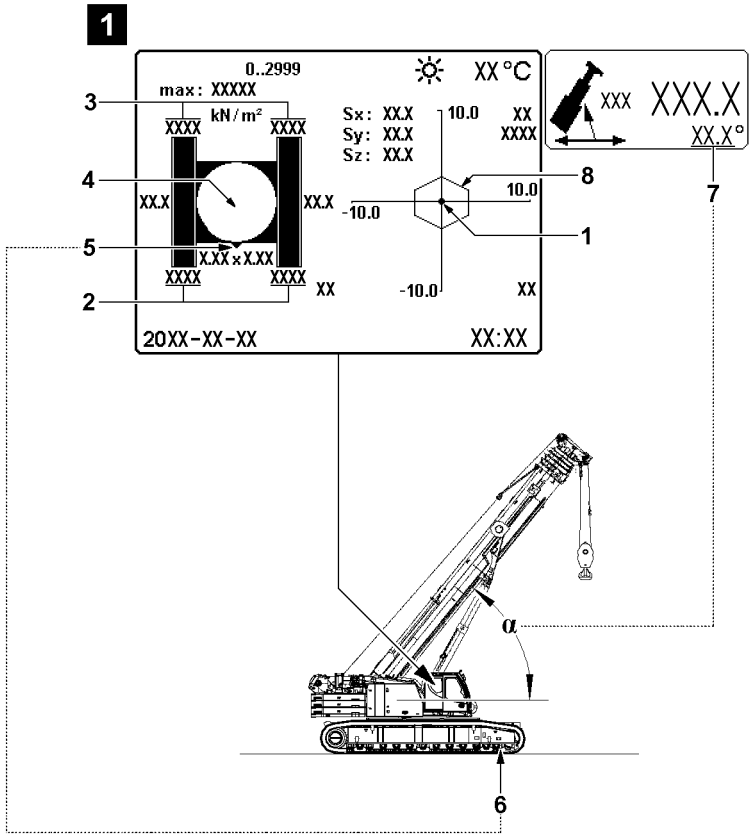

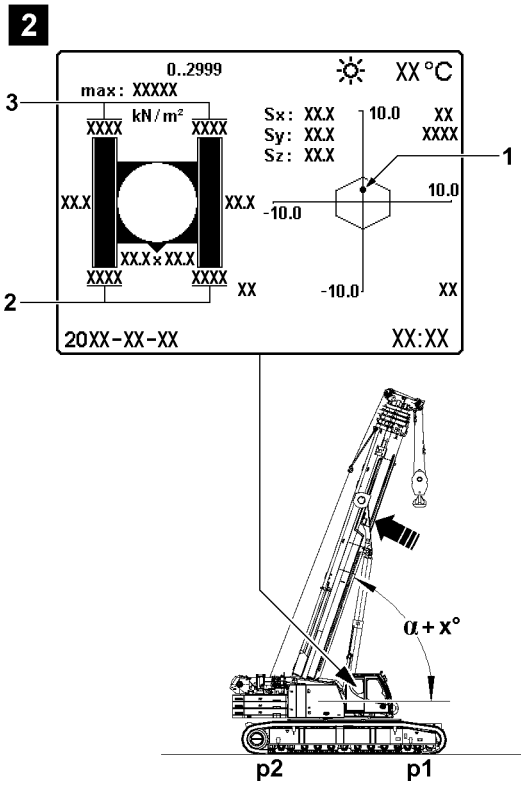

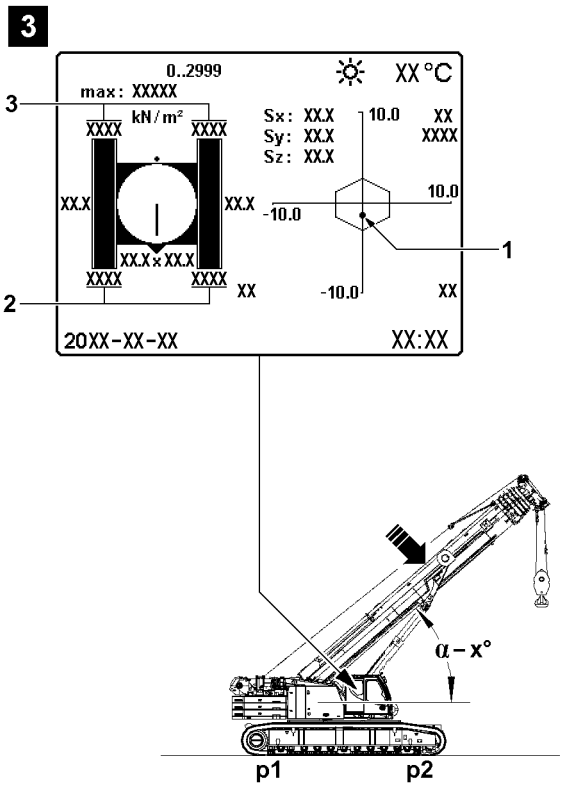

Fig.121102

LWE/LTR 1100-009/25105-02-02/en

copyright © Liebherr-Werk Ehingen GmbH 2023

3.2 Suitable distribution of the surface pressure

For the suitable distribution of the surface pressure, the following applies:
– p1 = Surface pressure on the side of the crawler travel gear with the lower load
– p2 = Surface pressure on the side of the crawler travel gear with the higher load

Distribution of surface pressure p1 to p2				
p1	/	**p2**	=	Should be greater than 0.3

In case of unfavorable distribution of surface pressure it is required to position the boom system in such a way that a suitable distribution of the surface pressure is reached for driving.

► The turntable should be turned while at a standstill: The boom system should be luffed in such a way that the crawlers are subjected to a load as evenly as possible.
► Driving uphill: The boom system should be luffed in such a way that the side of the crawler travel gear which has less of a load is on the rear.
► Driving downhill: The boom system should be luffed in such a way that the side of the crawler travel gear which has less of a load is on the front.

3.3 Steering ability

Note
High load on the crane
When driving the crane, steering movements cause a high load on the crane travel gear.
► If possible, do not make any steering movements with a load on the hook.
► Select the travel route in such a way that no steering movements are required.
► If not otherwise possible, before initiating a steering movement, set down the load.

The steering ability depends on the following factors:
– Friction conditions under the chains
– Evenness of the ground:
  • Steering is not possible if the track is only making contact with the ground in the front and rear.
– Load bearing capacity of the ground:
  • If the crawler travel gear sinks into the ground, then the steering ability is significantly restricted.
– Position of the total center of gravity:
  • If the total center of gravity - taking the suspended load into account - is at the center of the crane, then steering is hard or not possible at all.

Steering ability can be improved by:
– Placing metal sheeting, scattered sand or gravel, slight application of water.
– By taking the load bearing capacity of the ground and the position of the center of gravity into account: Changing the center of gravity.

4 Driving the crane: Load chart available

WARNING
The crane can topple over!
If the following conditions are not observed, the crane can topple over.
Personnel can be severely injured or killed.
► The ground must be sufficiently level and within the range of the permissible inclination.
► The ground must be able to safely absorb the maximum occurring surface pressure.

LWE/LTR 1100-009/25105-02-02/en

copyright © Liebherr-Werk Ehingen GmbH 2023

WARNING
The crane can topple over!
If the permissible inclinations of the load charts are exceeded when driving the crane, then the crane can topple over or be overloaded.
If the permissible wind speeds of the load charts are exceeded when driving, then the crane can topple over or be overloaded.
Personnel can be severely injured or killed.
► If the inclinations are too large then driving the crane is prohibited.
► If the wind speeds are too high then driving the crane is prohibited.

Permissible inclinations	
Overall inclination	See load charts

Permissible wind speeds	
Wind speed	See load charts

Driving with a load is possible under specifications of the load chart:
– The permissible inclinations from the load charts apply for driving.
– Take the maximum permissible wind speeds from the load charts.
– Take the maximum permissible driving speed from the following sections.

WARNING
Driving the crane with an active LMB stop!
If the crane is driven with an active LMB-Stop, then the crane can topple over or be overloaded.
► Drive the crane only when no LMB-Stop is active.

Make sure that the following prerequisite is met:
– No LMB stop (shut-off due to load momentum limitation) is active.

4.1 Driving with a load on the hook

WARNING
The crane can topple over!
If the load on the hook collides with the crane, the ground or obstacles when driving, then the crane can be damaged and topple over.
Personnel can be severely injured or killed.
► Make sure that the load does not collide with anything when driving.

WARNING
Danger of accident!
If the suspended load starts to swing, then the crane operator can loose control of the crane.
If the following prerequisites are not observed, the crane can topple over.
This could result in serious accidents.
► Do not exceed the maximum permissible driving speed.
► Avoid jerky driving movements.
► The attached load must be secured to prevent it from swinging. If oscillating movements should occur, set the load down on the ground as fast as possible. Observe the limit values of the load moment display while doing so.

LWE/LTR 1100-009/25105-02-02/en

copyright © Liebherr-Werk Ehingen GmbH 2023

Make sure that the following prerequisites are met:
- The permissible inclinations from the load charts are adhered to.
- The maximum permissible wind speeds from the load charts are adhered to.
- The travel speed may **not** exceed 0.1 m/s or 0.36 km/h.
- The attached load hangs freely.
- The attached load must be secured to prevent it from swinging up / back and forth.
- Keep the attached load close to the ground.
- Keep the attached load with a small boom radius.
- The boom length is reduced as much as the load case permits.

4.2 Driving without a load on the hook

Make sure that the following prerequisites are met:
- The crane is driving according to the inclinations from the load charts.
- Take the maximum permissible wind speeds from the load charts.
- The maximum travel speed is matched to the local conditions.
- The hook block is secured to prevent it from swinging back and forth.
- The boom is telescoped in as far as possible.

5 Driving the crane: No load chart is available

WARNING
The crane can topple over!
If the following note is not observed, the crane can topple over.
Personnel can be severely injured or killed.
- ► Driving uphill and downhill must always be anticipatory, with utmost caution and at the slowest speed.
- ► Drive at a right angle at the beginning of uphill and downhill inclines (for example ramps), so that both crawler carriers evenly drive into the uphill or downhill incline.
- ► It is prohibited to let the crane tip over an edge.

WARNING
The crane can topple over!
If the permissible incline of the crane is exceeded, the crane can topple over.
- ► Do not exceed the permissible incline for driving the crane.

WARNING
The crane can topple over!
If the crane is driven outside the load chart with a load, accidents can occur.
The crane can topple over or be overloaded.
Personnel can be severely injured or killed.
- ► Driving the crane with a load outside the load chart is prohibited.

Make sure that the following prerequisites are met:
- There is no load on the hook.
- The boom is telescoped in as far as possible.
- The oil level of the crane engine is at the maximum fill level.
- The travel speed may **not** exceed 0.1 m/s or 0.36 km/h.
- The turntable is aligned and pinned parallel to the track, 0° or 180° position.
- The track is moved out and locked in the largest track width.
- The permissible lateral incline when driving without a load is adhered to.
- The permissible longitudinal inclination when driving without a load is adhered to.

LWE/LTR 1100-009/25105-02-02/en

copyright © Liebherr-Werk Ehingen GmbH 2023

Permissible incline		
Longitudinal incline less than / equal to 25°	at	Lateral incline less than / equal to 1°
Longitudinal incline less than / equal to 10°	at	Lateral incline less than / equal to 4°

5.1 Driving uphill / downhill

WARNING
The crane can topple over!
If the following notes are not observed, the crane can topple over.
Personnel can be severely injured or killed.
- ► The deciding factor for driving on inclines is the exact knowledge of the operational conditions at the job site.
- ► Specifications, instructions and prerequisites in this chapter must be adhered to.
- ► Driving uphill / downhill must always be anticipatory, with utmost caution and at the slowest speed.
- ► Uphill / downhill inclines must be driven in the direction of the dip, never angularly to the incline.

WARNING
The crane can topple over!
If the crane is driven with a load on uphill / downhill inclines, the crane can topple over.
If the crane is turned on uphill / downhill inclines, the crane can topple over.
If the angle of the boom system is not matched to the incline when driving the crane on inclines, then the crane can topple over.
- ► Match the angle of the boom system to the incline.
- ► Do not turn the crane on uphill / downhill inclines.
- ► Driving uphill with a load is prohibited.

WARNING
The crane can topple over!
If the turntable is not parallel to the crawler travel gear when driving the crane on uphill or downhill inclines, then the crawler crane can topple over or be overloaded.
- ► For downhill inclines outside the load charts, make sure that the turntable is aligned parallel to the track (0° or 180° position) and pinned before moving the crawler crane.

Make sure that the following prerequisites are met:
- – The turntable is aligned and pinned parallel to the track, 0° or 180° position.
- – The track is moved out and locked in the largest track width.

There are two different possibilities for driving crawler cranes on uphill / downhill slopes:
- – By adjusting the angle of the boom system.
- – Without adjusting the angle of the boom system.

5.1.1 Maximum climbing ability

The maximum climbing ability of the crawler crane is limited by the following criteria:
- – The location of the center of gravity for the complete crawler crane
- – The friction coefficient between the road and track pads
- – The transition between the horizontal and the uphill slope

LWE/LTR 1100-009/25105-02-02/en

copyright © Liebherr-Werk Ehingen GmbH 2023

5.1.2 Driving uphill / downhill by adjusting the angle of the boom system

WARNING
The crane can topple over!
If the limit values for the center of gravity and the surface pressure are exceeded, then the crane can topple over or be overloaded.
► Driving without display values for the center of gravity and the surface pressure is only permissible when the center of gravity and the surface pressure are otherwise monitored and ensured.

Note
Driving without display values for center of gravity and surface pressure!
► On level ground, set the optimum angle of the boom system regarding the center of gravity and the surface pressure.
► When driving into an uphill incline, during the transition between the horizontal into the incline, the original angle of the boom system must be changed continuously in such a way that the same angle ratio always remains between the boom system and the horizontal. This angle must be retained in the uphill incline.
► When driving out from an uphill incline, at the transition from incline to the horizontal, change the angle of the boom system continuously so that the same angle ratio is always retained.
► As a rule, the center of gravity and the surface pressure of the crane must be taken into account.

Make sure that the following prerequisites are met:
– On level ground, set the optimum angle of the boom system regarding the center of gravity and the surface pressure.
– If the telescopic boom must be telescoped out to do so, then in flattest boom position possible.
– On uphill / downhill inclines, as soon as the value of the displays for the center of gravity and the surface pressure become more unfavorable, match the boom angle in the permissible range.

Positive longitudinal incline

Note
► When driving on positive longitudinal inclinations (uphill), the main boom must usually be luffed down.

Status	Transition	Boom angle
Driving horizontally	To the uphill incline	match
Driving on the uphill incline		
Driving on the uphill incline	To the horizontal	match
Driving horizontally		

Negative longitudinal inclination

Note
► When driving on negative longitudinal inclinations (downhill), the main boom must usually be luffed up.

Status	Transition	Boom angle
Driving horizontally	To downhill	match
Driving downhill		
Driving downhill	To the horizontal	match
Driving horizontally		

LWE/LTR 1100-009/25105-02-02/en

copyright © Liebherr-Werk Ehingen GmbH 2023

5.1.3 Prerequisites for driving uphill / downhill without adjusting the angle of the boom system

The following specifications and instructions must be observed:
– Make sure that with the selected position of the boom system, the center of gravity and the surface pressure are within the permissible range. Possibly telescope the telescopic boom out in a flat position.

WARNING
The crane can topple over!
If the limit values for the center of gravity and the surface pressure are exceeded, then the crane can topple over or be overloaded.
Personnel can be severely injured or killed.
► Before driving onto uphill and downhill slopes, check the change of the center of gravity and the surface pressure and ensure that it is permissible.
► Before driving the crane, determine if the crane may drive on the intended route without adjusting the boom system.
► If the intended uphill / downhill slope cannot be driven without adjusting the angle of the boom system, then the boom angle must be adjusted to be able to drive on the uphill / downhill slope.

Make sure that the following prerequisites are met:
– With the selected position of the boom system, the center of gravity and the surface pressure is within the permissible range.
– If the telescopic boom must be telescoped out to do so, then in flattest boom position possible.

6 Crawler crane in crawler operation

WARNING
The crane can topple over!
The worn track reduces the stability of the crawler crane. Due to operational errors during crane operation or driving, the crawler crane can topple over and fatally injure personnel.
► Crane operation and „driving with a load on the hook“ is permitted for a retracted or asymmetric track if **extra load charts** are programmed for this case.
► Crane operation and „driving with a load on the hook“ is permitted for a retracted or asymmetric track if **no extra load charts are programmed for this case** is strictly prohibited.

WARNING
The crane can topple over!
If the permissible incline of the crane is exceeded, the crane can topple over.
In impermissible inclines, the LICCON computer system does **not** turn the travel operation off.
The crane driver carries the sole responsibility for possible risks or dangers when working with impermissible inclines.
► Do not exceed the permissible incline from the load chart.
► Do not exceed the permissible incline for driving the crane.
► While driving the crane, monitor the displays for center of gravity, surface pressure and inclination on the LICCON monitor constantly.

Make sure that the following prerequisites are met:
– The set up configuration of the crane has been entered correctly in the LICCON computer system.
– The displays for inclination, surface pressure and center of gravity are shown.
– There are no persons or objects in the danger zone.

LWE/LTR 1100-009/25105-02-02/en

copyright © Liebherr-Werk Ehingen GmbH 2023

Empty page!

LWE/LTR 1100-009/25105-02-02/en

copyright © Liebherr-Werk Ehingen GmbH 2023

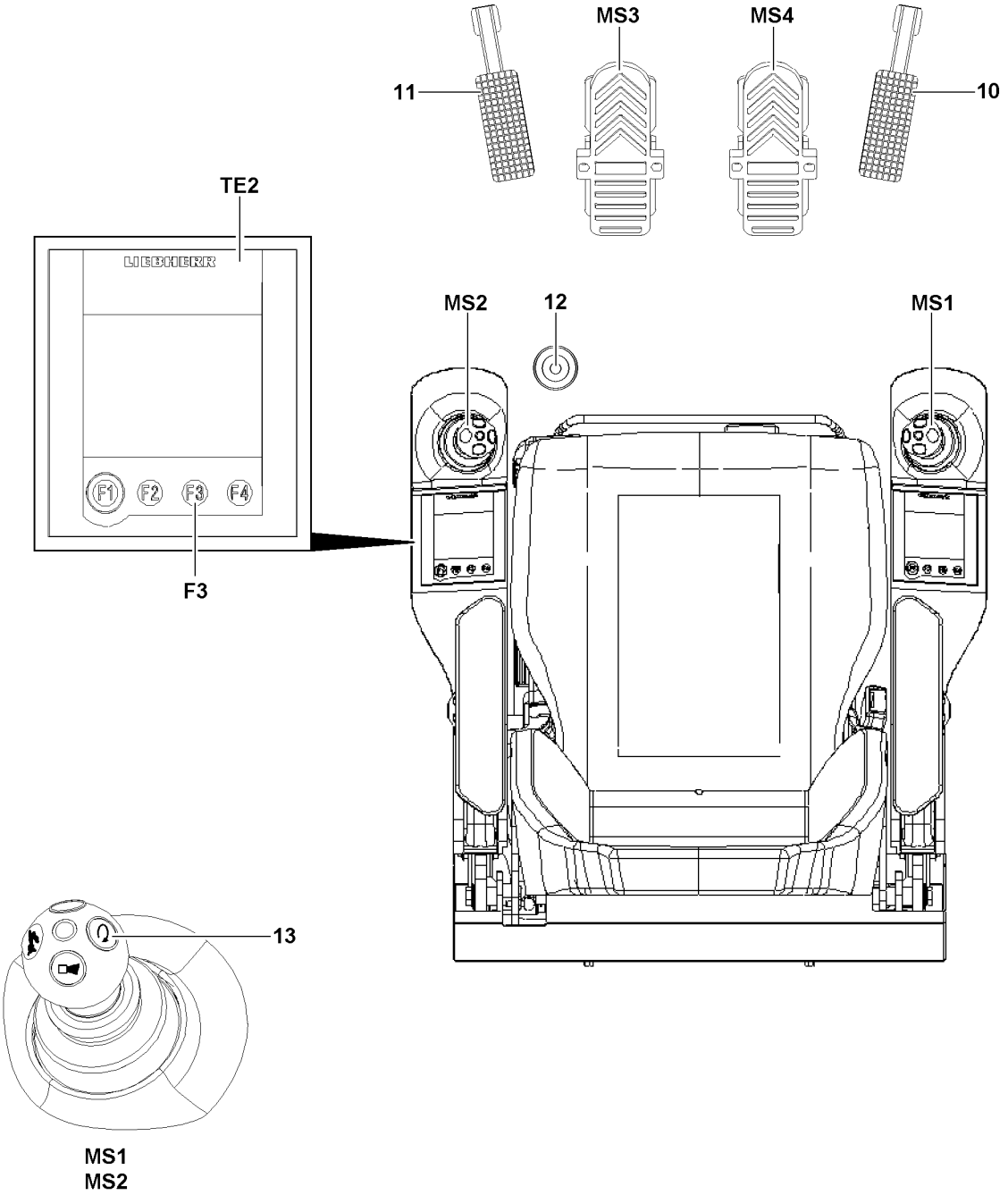

LWE/LTR 1100-009/25105-02-02/en

Fig.117921

copyright © Liebherr-Werk Ehingen GmbH 2023

6.1 Operating elements for the crawler operation

Note
Variable low idle rpm (only present on certain crane types)
► If no hydraulic power is required, the engine rpm is automatically reduced to approx. 600 rpm. If hydraulic power is required, the engine rpm is automatically increased to at least 850 rpm.

6.1.1 Pedal carrier

– **10** Pedal for engine regulation
– **11** Slewing gear brake pedal
– **12** Foot button for freewheeling slewing gear
  • **Note**: The foot button for freewheeling slewing gear **12** is only available on certain crane types.
– **MS3** Foot rocker
– **MS4** Foot rocker

Crawler operating mode	Pedal carrier	
	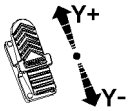 *Foot rocker **MS3***	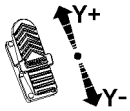 *Foot rocker **MS4***
Normal travel	Left crawler forward / backward: **MS3** direction **Y+ / Y-**	Right crawler forward / backward: **MS4** direction **Y+ / Y-**
Parallel travel	Steer both crawlers: **MS3** direction **Y+ / Y-**	Forward / backward both crawlers: **MS4** direction **Y+ / Y-**

6.1.2 Engine regulation

The rpm of the crane engine is controlled with the engine regulation pedal **10**. For crawler operation, a certain rpm can be locked in, see the Crane operating instructions, chapter 4.05.

► Lock the current rpm of the crane engine: Press the button **13** on master switch **MS1** or master switch **MS2**.

Result:

– A „+“ appears on the LICCON monitor behind the rpm display.
– The current rpm of the crane engine is locked.
– The rpm can be increased further via the engine regulation pedal **10**.

► Release the rpm lock: Press the button **13** on master switch **MS1** or master switch **MS2** again.

Result:

– The „+“ behind the rpm display turns off.

LWE/LTR 1100-009/25105-02-02/en

copyright © Liebherr-Werk Ehingen GmbH 2023

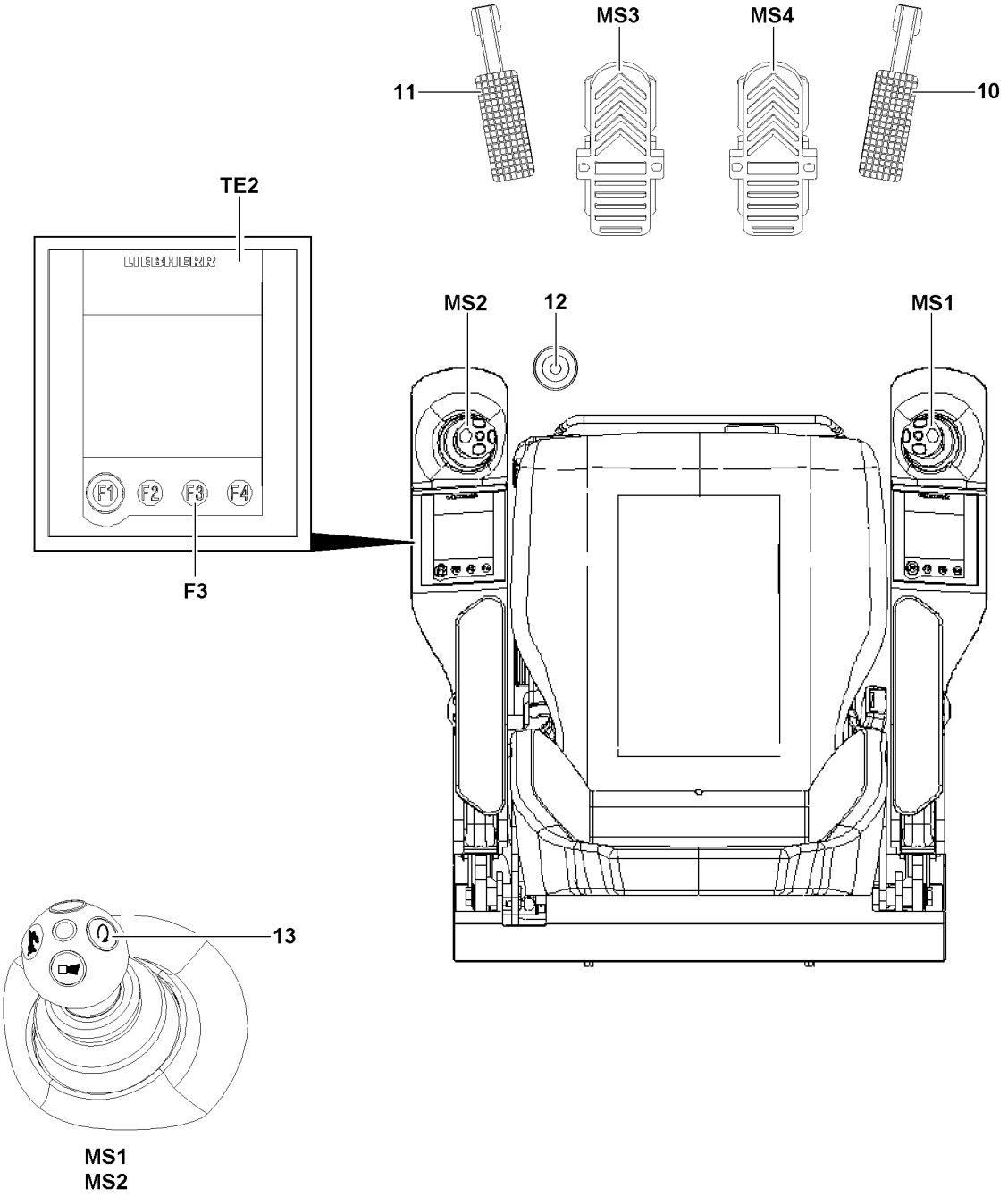

LWE/LTR 1100-009/25105-02-02/en

Fig.117921

copyright © Liebherr-Werk Ehingen GmbH 2023

6.1.3 Slewing gear brake

Slewing gear brake operating elements:
- **11** Slewing gear brake pedal
- **12** Foot button for freewheeling slewing gear
  - Note: The foot button for freewheeling slewing gear **12** is only available on certain crane types.
- Key **F3**: Slewing gear brake in TE2 (parking brake)

► Regulate the slewing gear brake steplessly: Press down the slewing gear brake pedal **11**.

Result:

– The slewing gear brake is regulated according to the pedal position: The further the pedal is pressed down, the stronger the slewing gear brake brakes.

► Adding the freewheeling for the slewing gear (only on crane types with respective foot button): Actuate the foot button for freewheeling the slewing gear **12**.

Result:

– Freewheeling the slewing gear is engaged as long as the foot button for freewheeling the slewing gear **12** is pressed down.

Icon	Assignment TE2 main menu: Slewing gear
	Nominal status slewing gear brake released, icon remains even when the slewing gear brake is applied with the slewing gear brake pedal **11**
	Nominal status slewing gear applied, icon remains even when the slewing gear brake is automatically released by the control

► Apply the slewing gear brake (parking brake): Press the button **F3** on touch display 2 **TE2**.

Result:

– The „Slewing gear brake applied“ icon appears.

► Release the slewing gear brake (parking brake): Press the button **F3** on touch display 2 **TE2** again.

Result:

– The „slewing gear brake released“ icon appears.

LWE/LTR 1100-009/25105-02-02/en

copyright © Liebherr-Werk Ehingen GmbH 2023

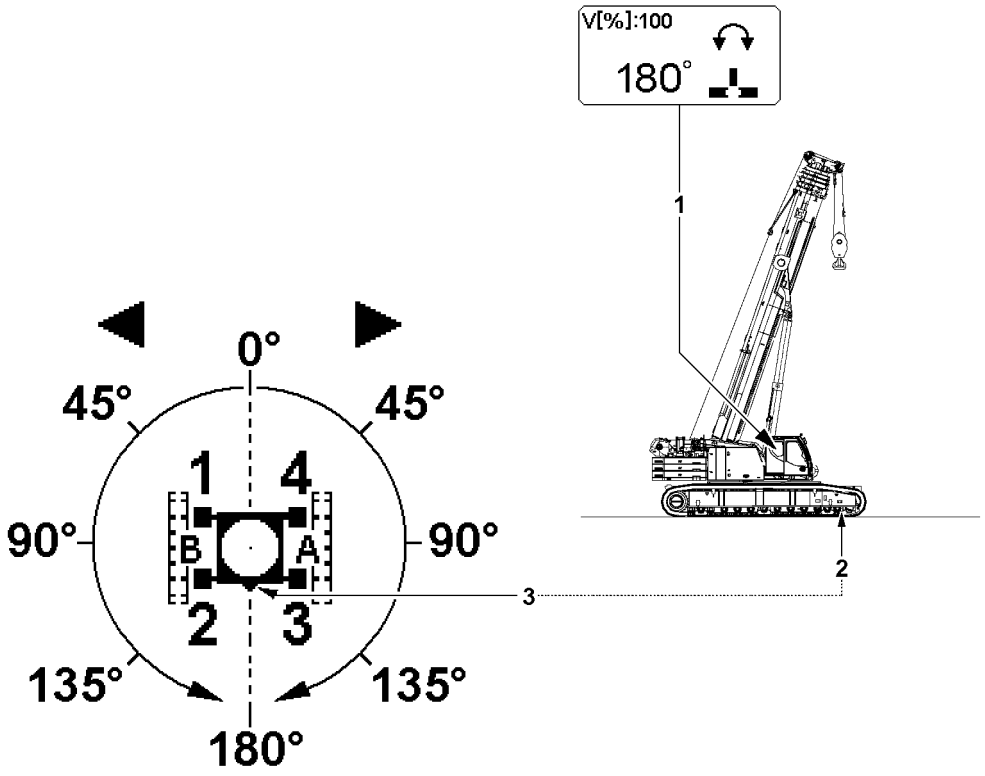

LWE/LTR 1100-009/25105-02-02/en

Fig.117923

copyright © Liebherr-Werk Ehingen GmbH 2023

6.2 Assignment of the crane superstructure to the travel direction

The travel direction of the crane is continuously assigned to the position of the crane superstructure.

The position of the crane superstructure with respect to the crawler travel gear can be read with one glance on the slewing range icon **1**:

- At display value 180° in slewing range icon **1** the crane superstructure is exactly in the „forward“ position, see illustration.
  Note: The front on the crawler travel gear is always on the side where the chain tension device **2** for the crawler carriers is located. In the LICCON view of the crawler travel gear, the front side is marked by a directional triangle **3**.
- With display value 0° in the slewing range icon **1** the crane superstructure is exactly in position „to the rear“.
- The apex for the assignment of the crane superstructure is at display value 90° in the slewing range icon **1**. At display values from 0° to 90° the crane superstructure is positioned „to the rear“. At display values from 90° to 180° the crane superstructure is positioned „to the front“.
- If the crane superstructure is swung over / under the display value 90° in the slewing range icon **1**, then the running direction of the crawler carriers changes to actuation direction of the foot rockers. The change happens only when the foot rockers are in position 0 (not actuated).
- If the crane superstructure is swung while driving over / under the display value 90° in the slewing range icon **1**, then the running direction of the crawler carriers and therefore the travel direction remains until the respective foot rocker is „returned“ to the zero position.
  The new assignment of the travel direction becomes only active after the foot rockers are next time in position 0 (not actuated).

WARNING
Change of travel direction after turning the crane superstructure!
If the crane superstructure is swung while driving over / under the display value 90° in the slewing range icon **1**, then the running direction of the crawler carriers only remains until the respective foot rocker is „returned“ to the zero position. If the foot rocker is actuated again in the same direction, the crane is driven in the opposite direction.

- ► When performing turning movements of the crane superstructure in connection with driving the crane, pay attention to the assignment of the crane superstructure to the travel direction.
- ► After turning the crane superstructure, check the travel route in both directions for persons and obstacles. Initiate travel movements with utmost caution.

LWE/LTR 1100-009/25105-02-02/en

copyright © Liebherr-Werk Ehingen GmbH 2023

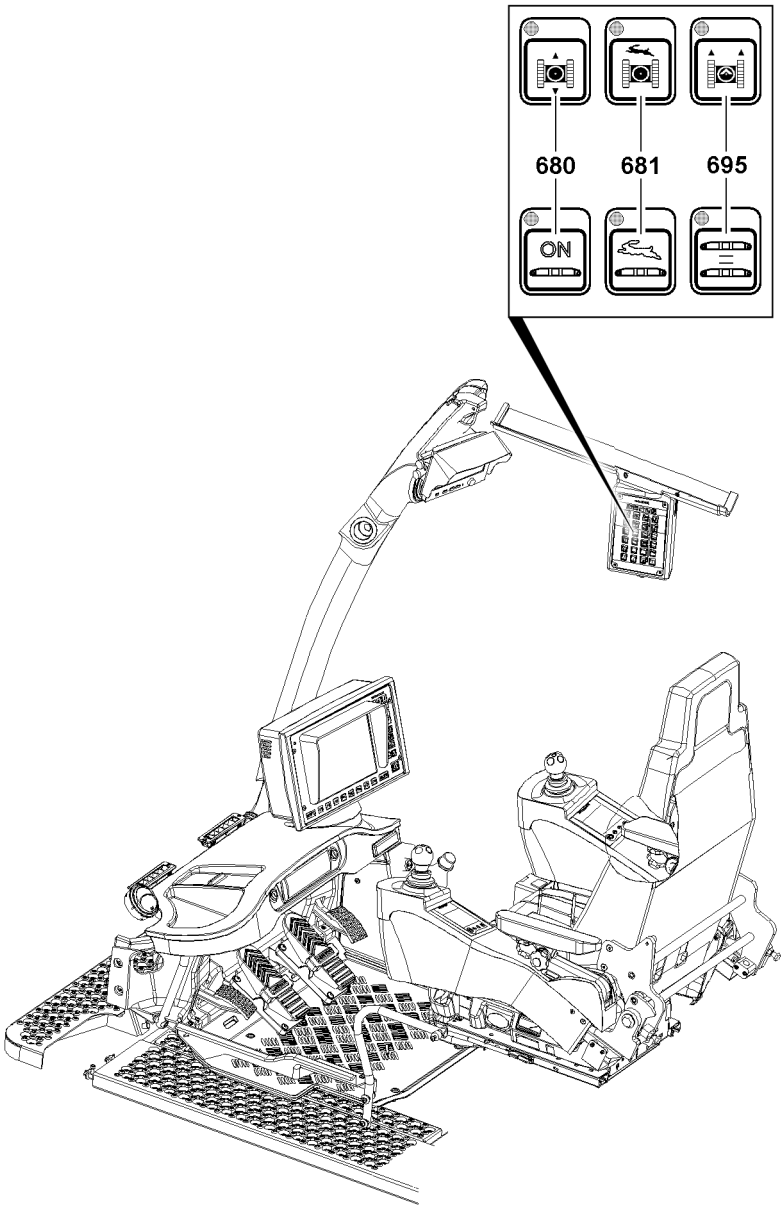

LWE/LTR 1100-009/25105-02-02/en

Fig.155682

copyright © Liebherr-Werk Ehingen GmbH 2023

6.3 Turning crawler operating modes on / off

The crawler crane can be driven with various crawler operating modes:
- Normal travel crawler operation.
  - Classic crawler operation, every crawler is controlled via a separate foot pedal.
- Parallel travel crawler operation
  - The steering movement is controlled by a separate foot pedal.
  - The travel direction is controlled by a separate foot pedal

To obtain a higher travel speed, the rapid gear can be activated.

6.3.1 Turning normal travel crawler operation on / off

Normal travel crawler operation is the prerequisite to drive the crane and must generally be activated.

► Press the operating button **680**.

Result:

– The LED on the operating button **680 lights up**.
  Normal travel crawler operation is activated.

If the normal travel crawler operation is to be turned off:
► Press the operating button **680** again.

Result:

– The LED on the operating button **680 does not light up**.
  The crawler operation is turned off, the crane can no longer be driven.

6.3.2 Turning parallel travel crawler operation on / off

Make sure that the following prerequisites are met:
- Normal travel crawler operation is activated.
- The tracks are at a standstill.

► Press the operating button **695**.

Result:

– The LED on the operating button **695 lights up**.
  The parallel travel crawler operation is turned on.

If the parallel travel crawler operation is to be turned off:
► Press the operating button **695** again.

Result:

– The LED on the operating button **695 does not light up**.
  Parallel travel is turned off, normal travel crawler operation remains on.

LWE/LTR 1100-009/25105-02-02/en

copyright © Liebherr-Werk Ehingen GmbH 2023

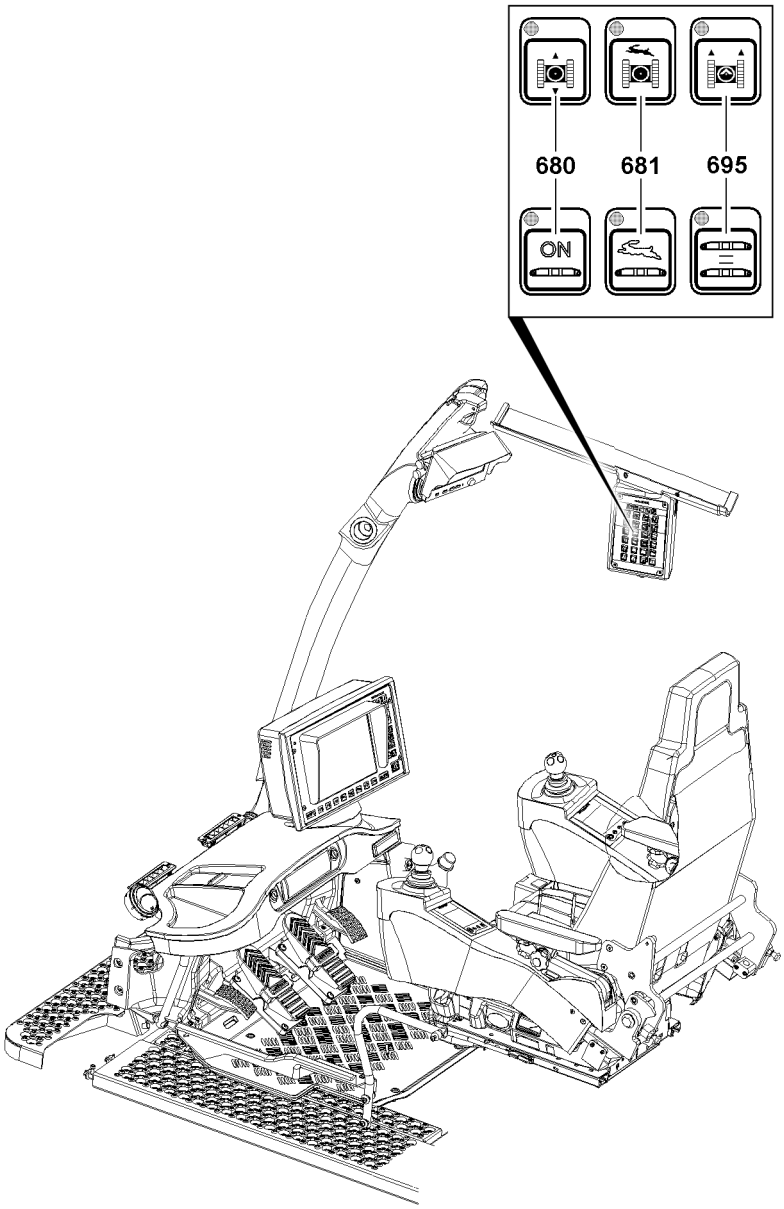

LWE/LTR 1100-009/25105-02-02/en

Fig.155682

copyright © Liebherr-Werk Ehingen GmbH 2023

6.3.3 Turning the rapid gear on / off

WARNING
The crane can topple over!
If the crane is driven in rapid gear with a load, then the crane can topple over. Personnel can be severely injured or killed.
► Observe the permissible highest speeds for driving the crawler crane.

Make sure that the following prerequisite is met:
– Normal travel crawler operation is activated
or
– the parallel travel crawler operation is turned on.

► Press the operating button **681**.

Result:

– The LED on the operating button **681 lights up**.
The rapid gear is turned on, no higher travel speeds can be obtained.

If the rapid gear is to be turned off:
► Press the operating button **681** again.

Result:

– The LED on the operating button **681 does not light up**.
The rapid gear is turned off, the normal travel crawler operation or parallel travel crawler operation remains activated.

LWE/LTR 1100-009/25105-02-02/en

copyright © Liebherr-Werk Ehingen GmbH 2023

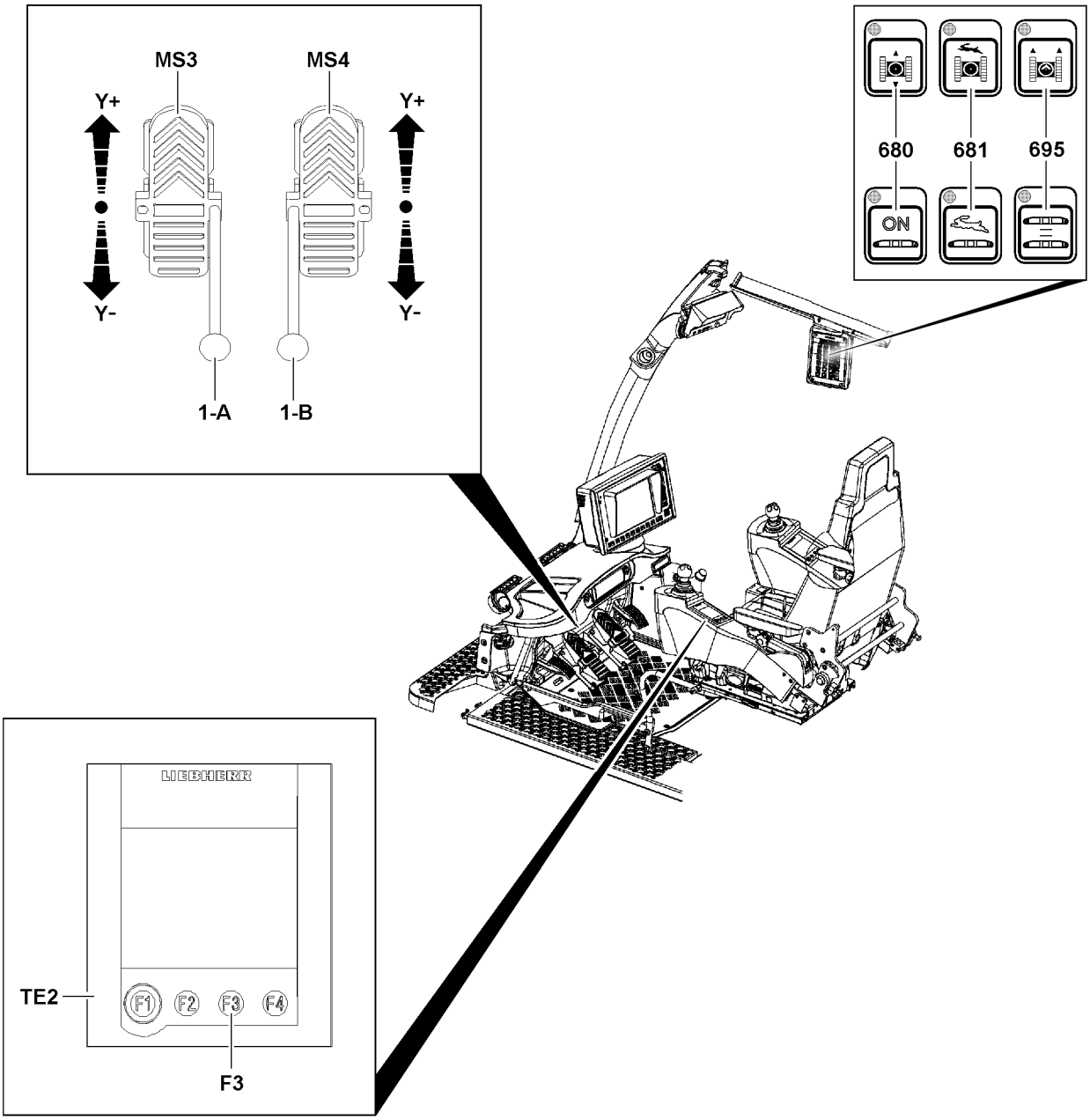

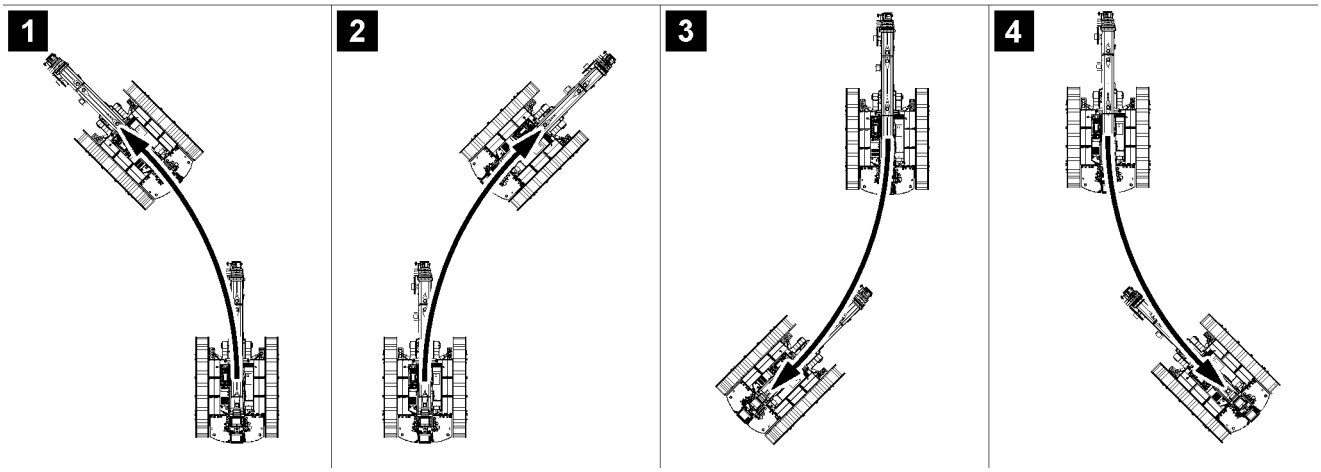

Fig.155683

LWE/LTR 1100-009/25105-02-02/en

copyright © Liebherr-Werk Ehingen GmbH 2023

6.4 Driving the crawler crane in normal travel

NOTICE
Increased wear on the crawler travel gear!
When steering in small radii, high friction forces are created that lead to increased wear.
- ► If possible, always drive in curves with large radii.
- ► Avoid turning over a stationary track, if possible.
- ► Avoid turning on the spot, if possible.

Make sure that the following prerequisites are met:
- – A travel direction change may only be done from the standstill.
- – The desired rpm of the crane engine is set.
- – Normal travel crawler operation is selected.

Note
- ► The special hand lever **1-A** and hand lever **1-B** can be inserted into the foot rockers. These hand levers **1-A** and hand levers **1-B** are used for delicate driving maneuvers.
- ► Hand lever **1-A** and hand lever **1-B** are placed in the transport retainer on the left of the crane operator's seat.
- ► The technical version of the hand lever **1-A** and the hand lever **1-B** is completely identical. The differentiation of the two hand levers refers only in their assignment to the corresponding foot rockers in the assembled (connected) condition.

6.4.1 Driving forward

- ► Deflect the left foot rocker **MS3** and the right foot rocker **MS4** synchronously to the front (direction **Y+**).

Result:

- – The crane drives forward.

6.4.2 Driving in reverse

- ► Deflect the left foot rocker **MS3** and the right foot rocker **MS4** synchronously to the rear (direction **Y-**).

Result:

- – The crane drives backward.

LWE/LTR 1100-009/25105-02-02/en

copyright © Liebherr-Werk Ehingen GmbH 2023

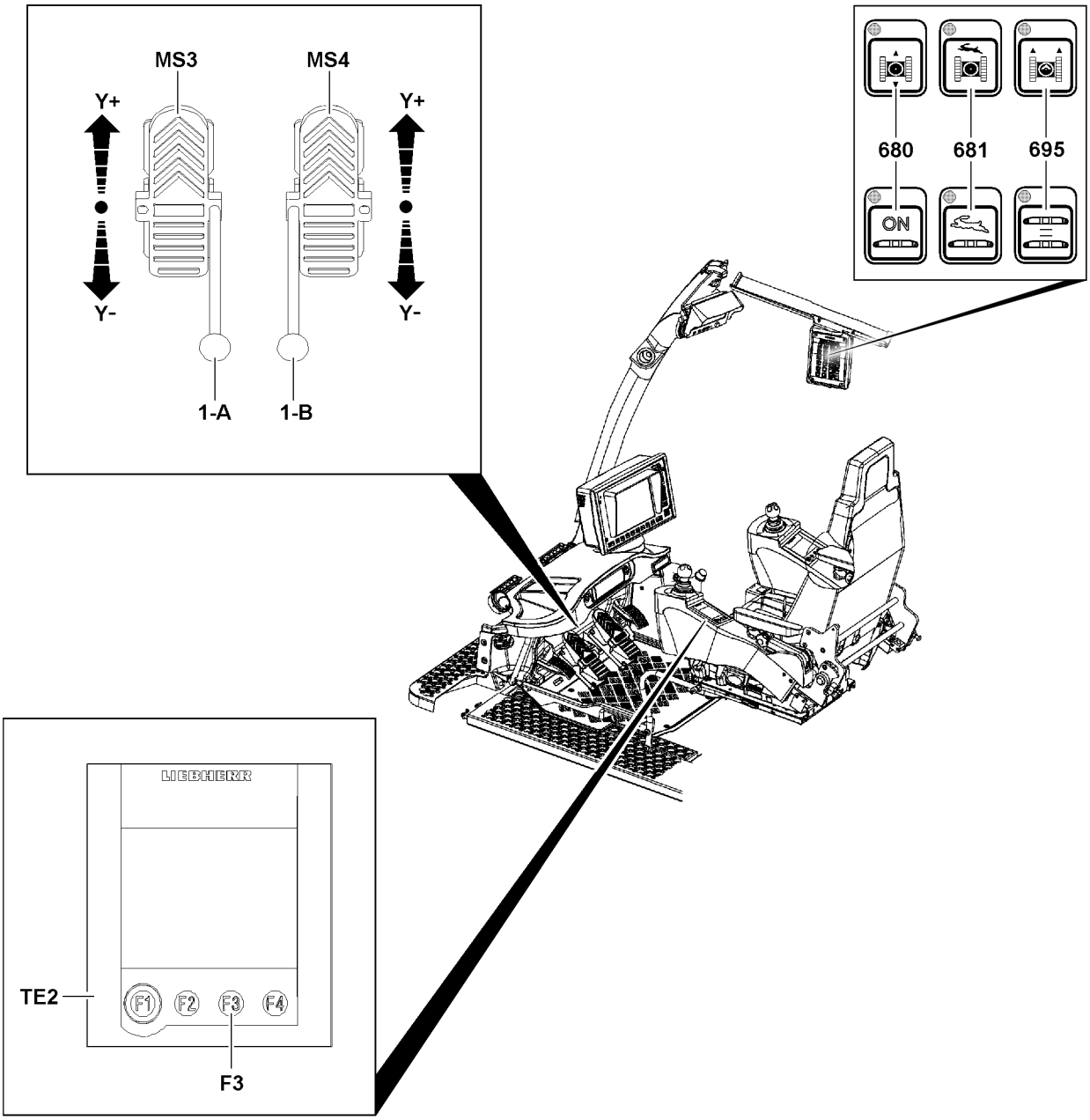

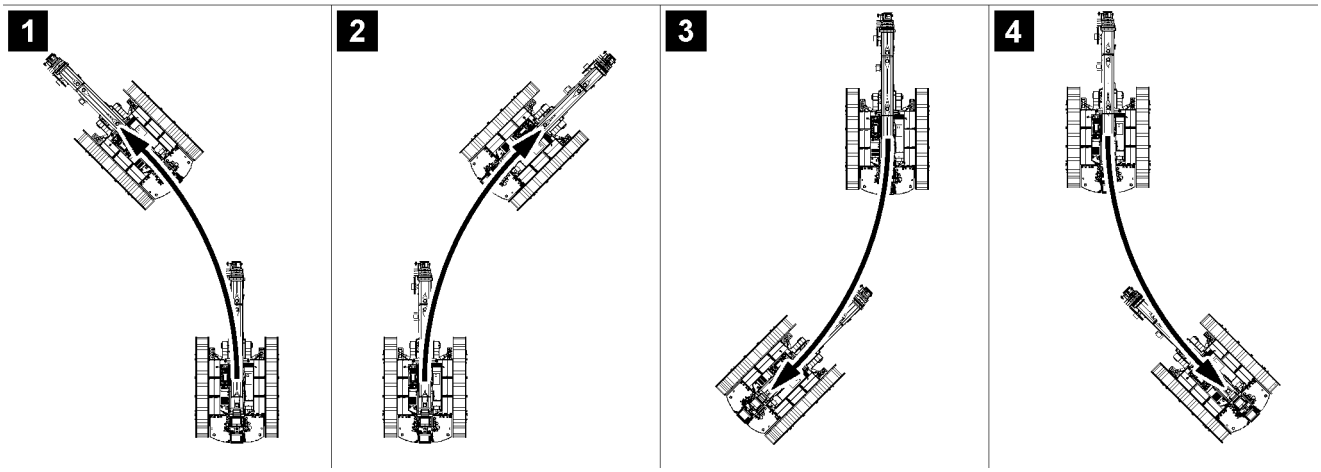

Fig.155683

LWE/LTR 1100-009/25105-02-02/en

copyright © Liebherr-Werk Ehingen GmbH 2023

6.4.3 Driving in curves forward to the left

See illustration **1**.

► Actuate the left foot rocker **MS3** reduced to the front (direction **Y+**) and the right foot rocker **MS4** stronger to the front (direction **Y+**).

Result:

– The crane drives a forward curve to the left.

6.4.4 Driving in curves forward to the right

See illustration **2**.

► Actuate the left foot rocker **MS3** stronger to the front (direction **Y+**) and the right foot rocker **MS4** reduced to the front (direction **Y+**).

Result:

– The crane drives a forward curve to the right.

6.4.5 Driving in curves in reverse to the left

See illustration **3**.

► Actuate the left foot rocker **MS3** reduced to the rear (direction **Y-**) and the right foot rocker **MS4** stronger to the rear (direction **Y-**).

Result:

– The crane drives a reverse curve to the left.

6.4.6 Driving in curves in reverse to the right

See illustration **4**.

► Actuate the left foot rocker **MS3** stronger to the rear (direction **Y-**) and the right foot rocker **MS4** reduced to the rear (direction **Y-**).

Result:

– The crane drives a reverse curve to the right.

LWE/LTR 1100-009/25105-02-02/en

copyright © Liebherr-Werk Ehingen GmbH 2023

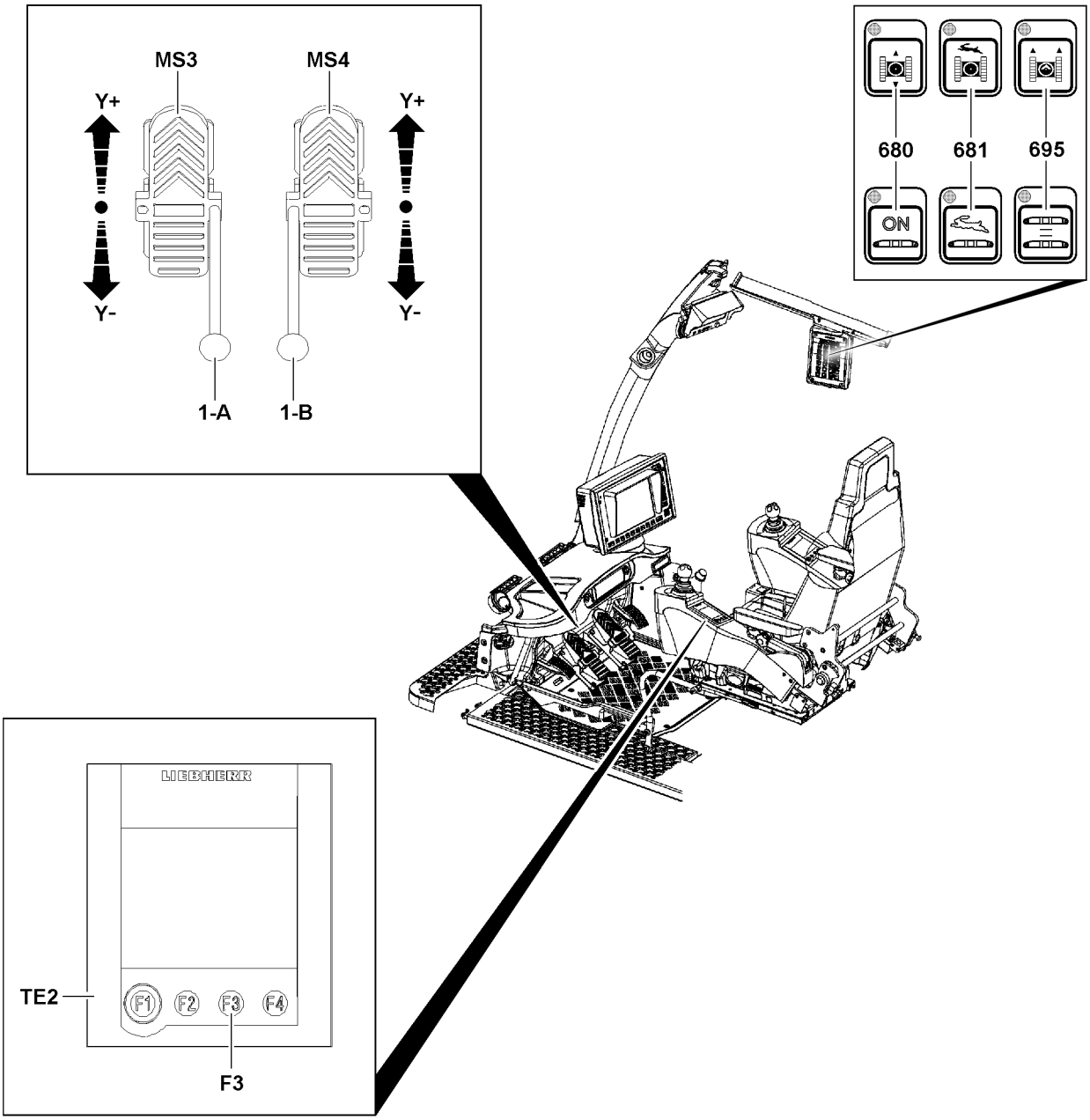

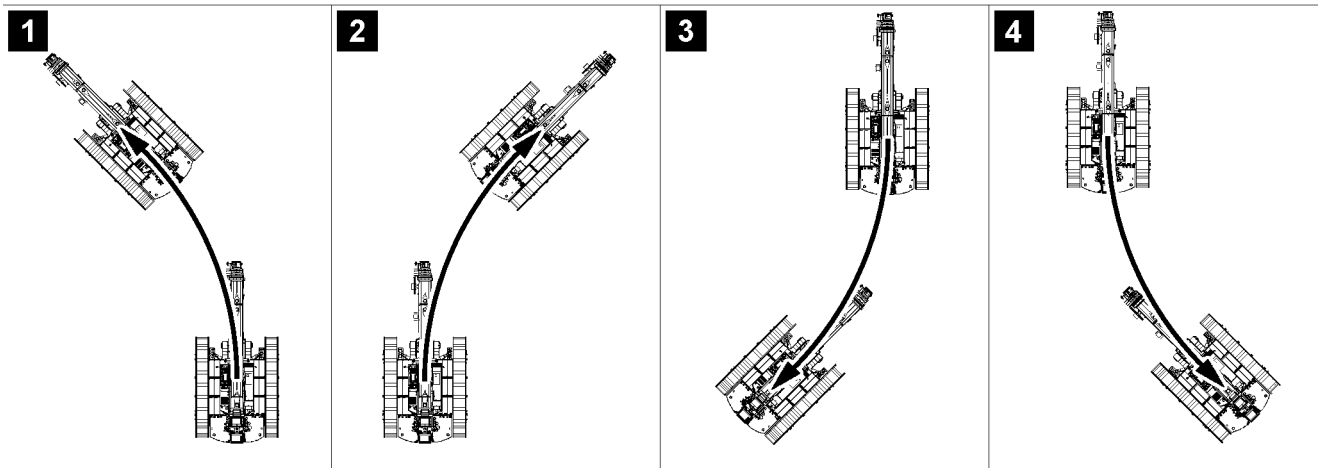

Fig.155683

LWE/LTR 1100-009/25105-02-02/en

copyright © Liebherr-Werk Ehingen GmbH 2023

6.4.7 Turning forward to the left

► Actuate the right foot rocker **MS4** forward (direction **Y+**).

Result:

– The crane is turned forward to the left.

6.4.8 Turning forward to the right

► Actuate the left foot rocker **MS3** forward (direction **Y+**).

Result:

– The crane is turned forward to the right.

6.4.9 Turning backward to the left

► Actuate the right foot rocker **MS4** backward (direction **Y-**).

Result:

– The crane is turned backward to the left.

6.4.10 Turning backward to the right

► Actuate the left foot rocker **MS3** backward (direction **Y-**).

Result:

– The crane is turned backward to the right.

6.4.11 Turning on the spot to the left (counterclockwise direction)

► Actuate the left foot rocker **MS3** to the rear (direction **Y-**) and the right foot rocker **MS4** to the front (direction **Y+**).

Result:

– The crane is turned to the left.

6.4.12 Turning on the spot to the right (clockwise)

► Actuate the left foot rocker **MS3** to the front (direction **Y+**) and the right foot rocker **MS4** to the rear (direction **Y-**).

Result:

– The crane is turned to the right.

LWE/LTR 1100-009/25105-02-02/en

copyright © Liebherr-Werk Ehingen GmbH 2023

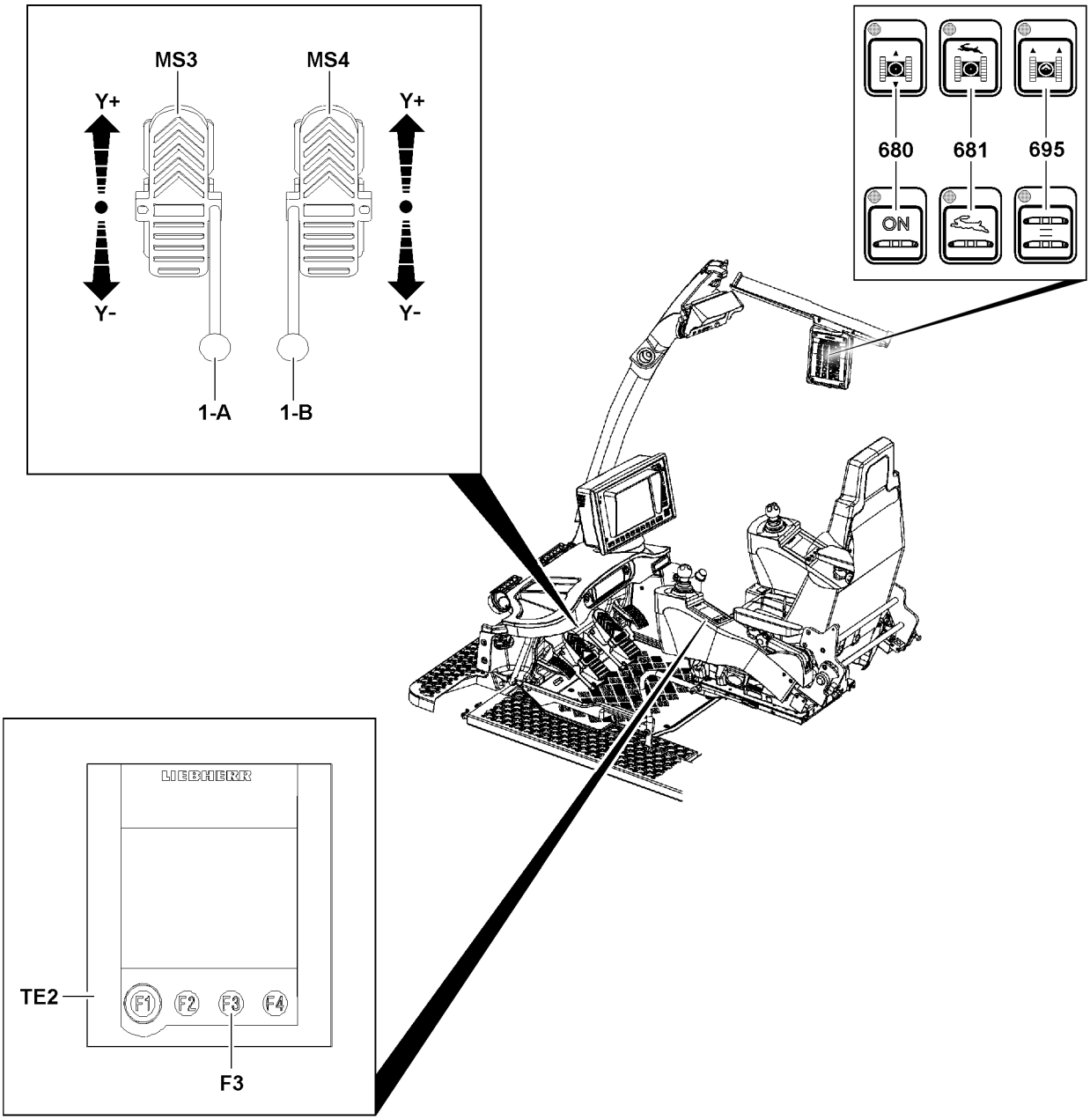

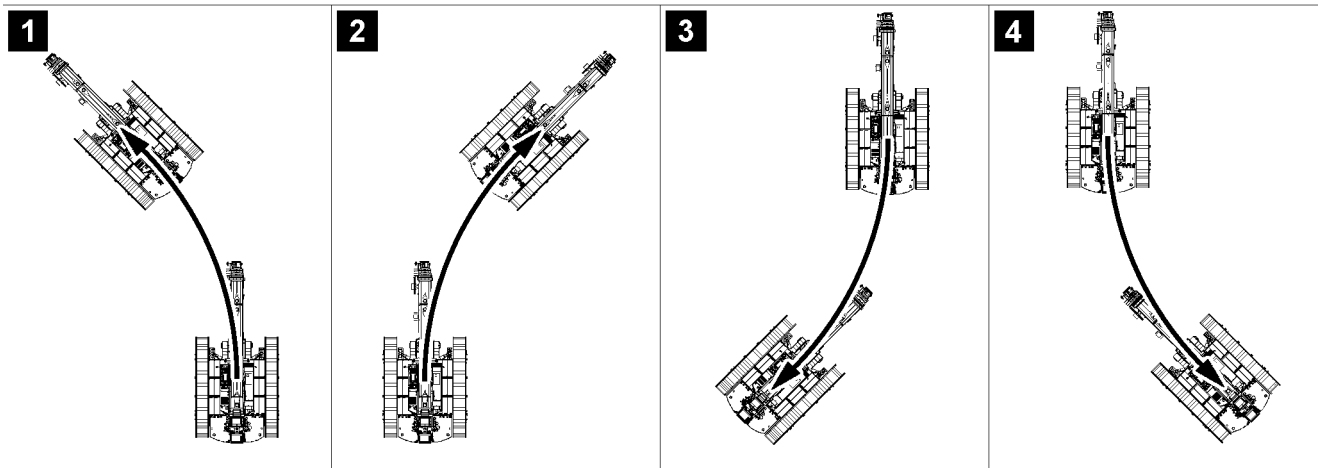

Fig.155683

LWE/LTR 1100-009/25105-02-02/en

copyright © Liebherr-Werk Ehingen GmbH 2023

6.5 Driving the crawler crane in parallel travel

NOTICE
Increased wear on the crawler travel gear!
When steering in small radii, high friction forces are created that lead to increased wear.
► If possible, always drive in curves with large radii.
► Avoid turning over a stationary track, if possible.

Make sure that the following prerequisites are met:
– The desired rpm of the crane engine is set.
– The parallel travel crawler operation is selected.

Note
► The special hand lever **1-A** and hand lever **1-B** can be inserted into the foot rockers. These hand levers **1-A** and hand levers **1-B** are used for delicate driving maneuvers. The operation is identical to that for the foot rockers.
► Hand lever **1-A** and hand lever **1-B** are placed in the transport retainer on the left of the crane operator's seat.
► The technical version of the hand lever **1-A** and the hand lever **1-B** is completely identical. The differentiation of the two hand levers refers only in their assignment to the corresponding foot rockers in the assembled (connected) condition.

Turning the crawler travel gear on the spot is not possible in parallel travel.

6.5.1 Driving forward

► Deflect the right foot rocker **MS4** forward (direction **Y+**).

Result:

– The crane drives forward.

Note
► The further the foot rockers are actuated forward (direction **Y+**) the higher the speed.

6.5.2 Driving in reverse

► Deflect the right foot rocker **MS4** backward (direction **Y-**).

Result:

– The crane drives backward.

Note
► The further the foot rockers are actuated forward (direction **Y+**) the higher the speed.

LWE/LTR 1100-009/25105-02-02/en

copyright © Liebherr-Werk Ehingen GmbH 2023

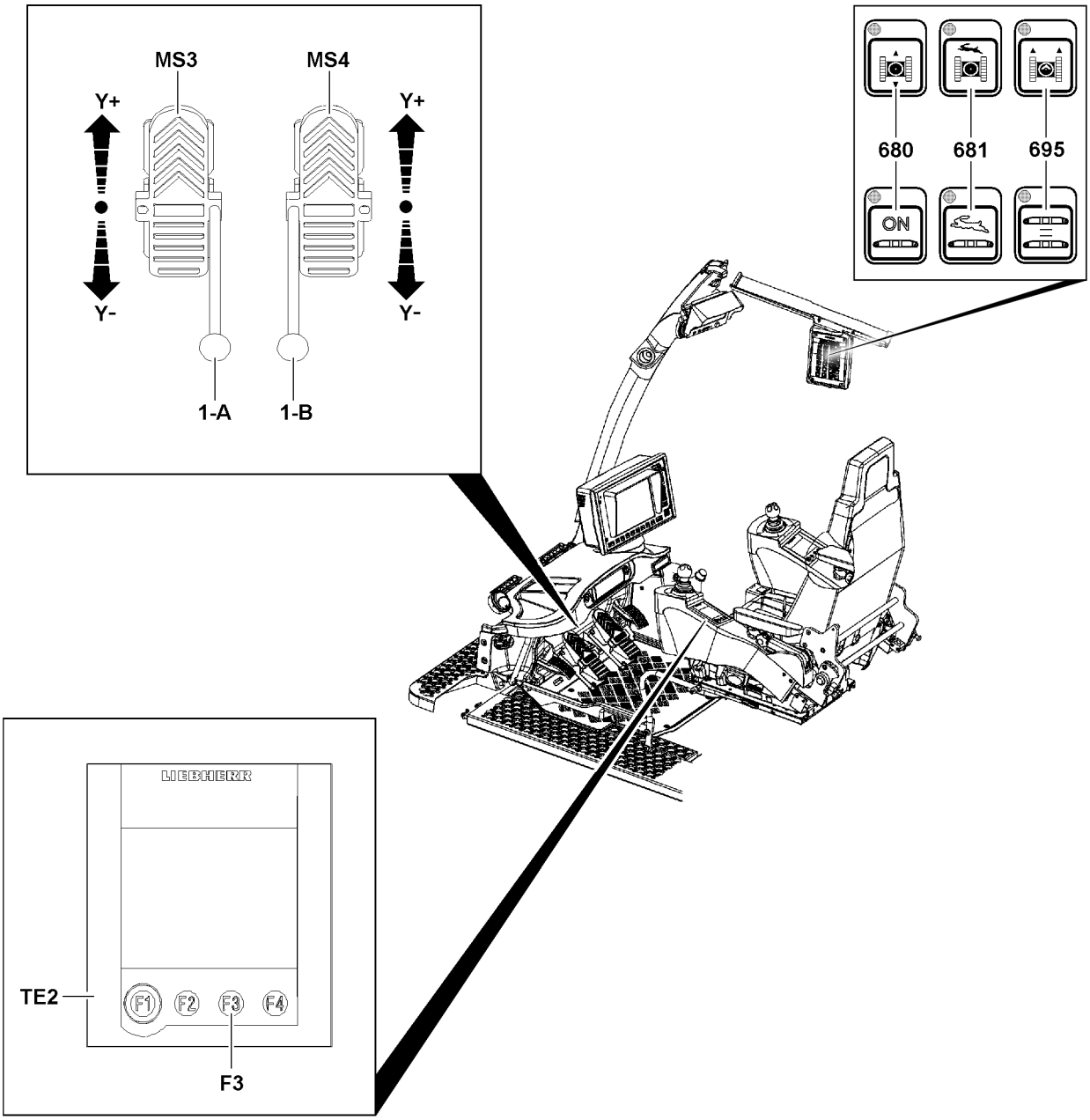

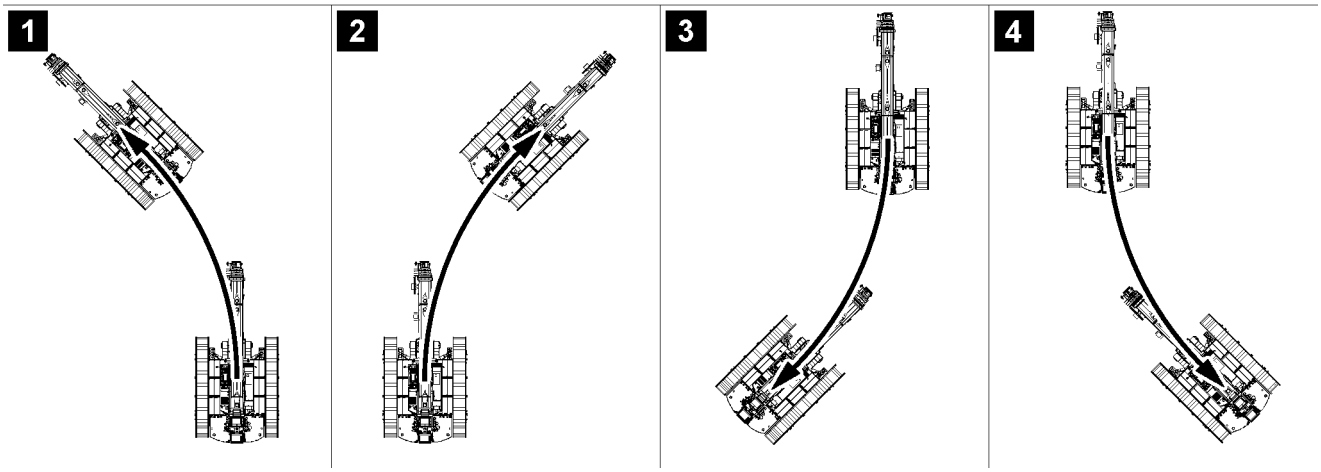

Fig.155683

LWE/LTR 1100-009/25105-02-02/en

copyright © Liebherr-Werk Ehingen GmbH 2023

6.5.3 Driving in curves forward to the left

See illustration **1**.

► Actuate the left foot rocker **MS3** reduced to the rear (direction **Y-**) and the right foot rocker **MS4** to the front (direction **Y+**).

Result:

– The crane drives a forward curve to the left.

Note

► The further the right foot rocker **MS4** is actuated forward (direction **Y+**) the higher the speed of driving a curve.

► If the left foot rocker **MS3** is pushed fully to the rear (direction **Y-**), the left crawler stops.

6.5.4 Driving in curves forward to the right

See illustration **2**.

► Actuate the left foot rocker **MS3** reduced to the front (direction **Y+**) and the right foot rocker **MS4** to the front (direction **Y+**).

Result:

– The crane drives a forward curve to the right.

Note

► The further the right foot rocker **MS4** is actuated forward (direction **Y+**) the higher the speed of driving a curve.

► If the left foot rocker **MS3** is pushed fully to the front (direction **Y+**), the right crawler stops.

6.5.5 Driving in curves in reverse to the left

See illustration **3**.

► Actuate the left foot rocker **MS3** reduced to the rear (direction **Y-**) and the right foot rocker **MS4** to the rear (direction **Y-**).

Result:

– The crane drives a reverse curve to the left.

Note

► The further the right foot rocker **MS4** is actuated backward (direction **Y-**) the higher the speed of driving a curve.

► If the left foot rocker **MS3** is pushed fully to the rear (direction **Y-**), the left crawler stops.

LWE/LTR 1100-009/25105-02-02/en

copyright © Liebherr-Werk Ehingen GmbH 2023

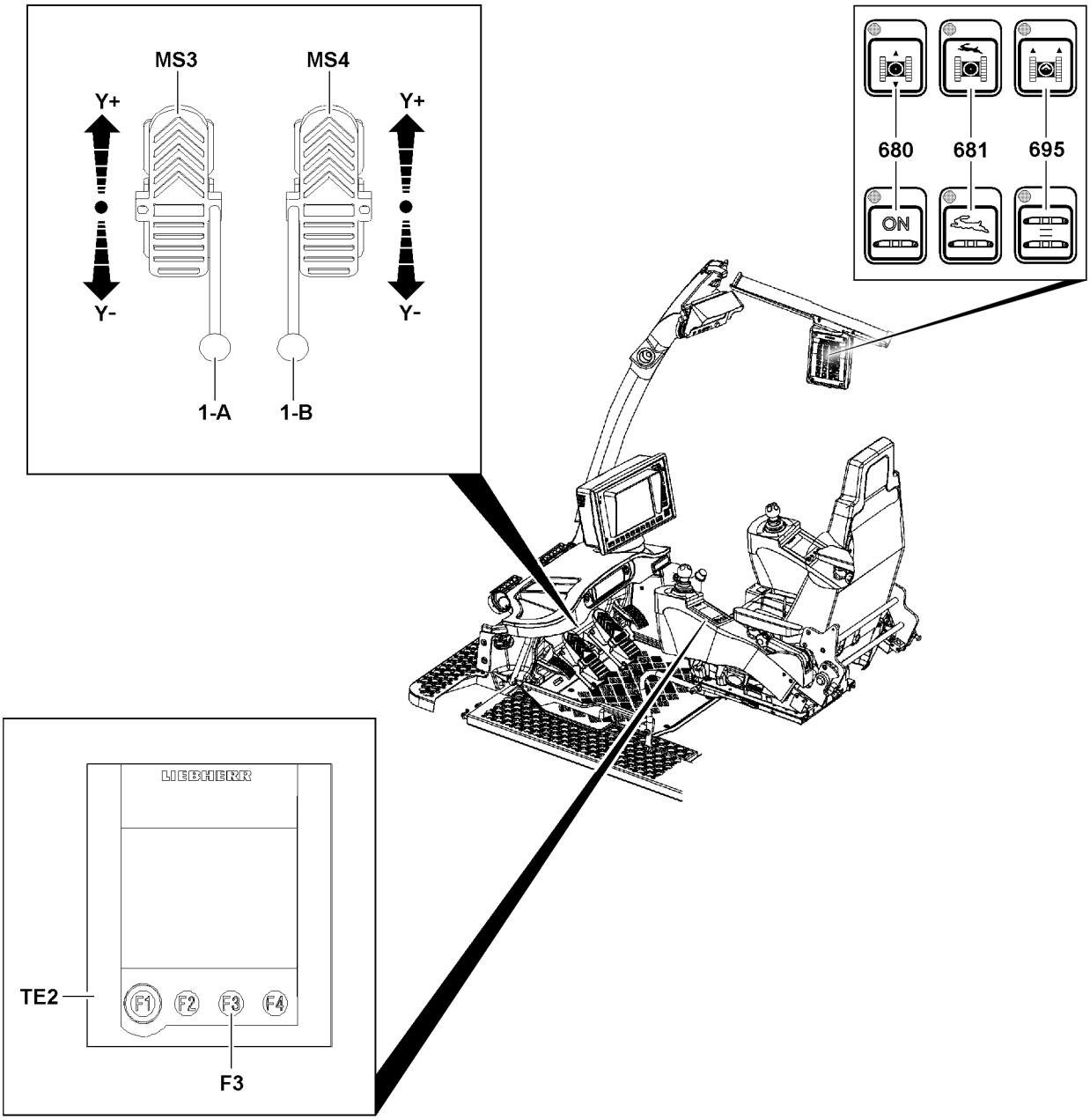

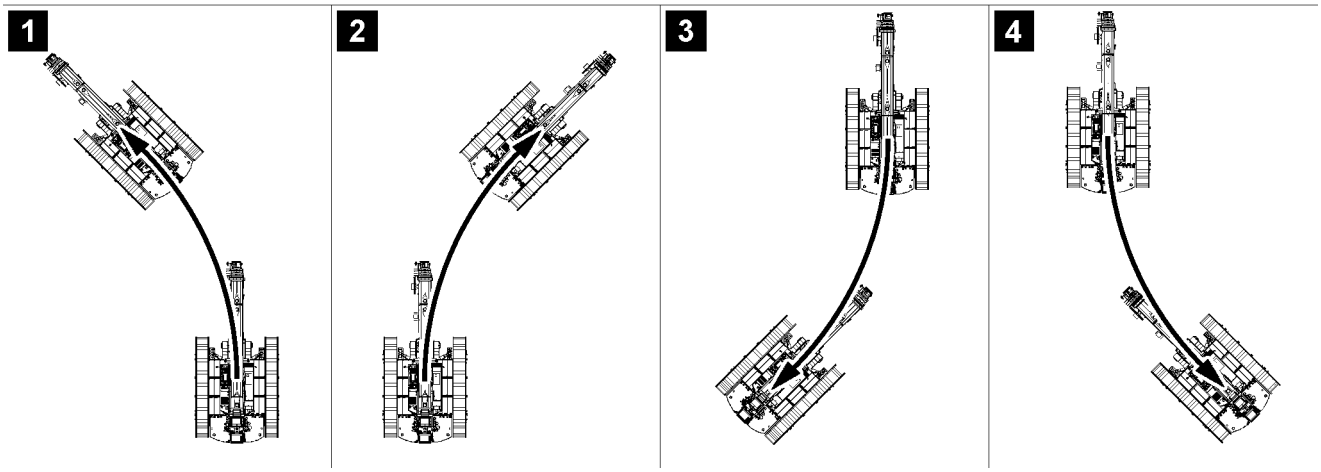

Fig.155683

LWE/LTR 1100-009/25105-02-02/en

copyright © Liebherr-Werk Ehingen GmbH 2023

6.5.6 Driving in curves in reverse to the right

See illustration **4**.

► Actuate the left foot rocker **MS3** reduced to the front (direction **Y+**) and the right foot rocker **MS4** to the rear (direction **Y-**).

Result:

– The crane drives a reverse curve to the right.

Note

► The further the right foot rocker **MS4** is actuated backward (direction **Y-**) the higher the speed of driving a curve.

► If the left foot rocker **MS3** is pushed fully to the front (direction **Y+**), the right crawler stops.

6.5.7 Turning forward to the left

► Push through and hold the left foot rocker **MS3** fully to the rear (direction **Y-**).

► Actuate the right foot rocker **MS4** forward (direction **Y+**).

Result:

– The crane is turned forward to the left.

Note

► The further the right foot rocker **MS4** is actuated forward (direction **Y+**) the higher the speed of the turning movement.

6.5.8 Turning forward to the right

► Push through and hold the left foot rocker **MS3** fully to the front (direction **Y+**).

► Actuate the right foot rocker **MS4** forward (direction **Y+**).

Result:

– The crane is turned forward to the right.

Note

► The further the right foot rocker **MS4** is actuated forward (direction **Y+**) the higher the speed of the turning movement.

LWE/LTR 1100-009/25105-02-02/en

copyright © Liebherr-Werk Ehingen GmbH 2023

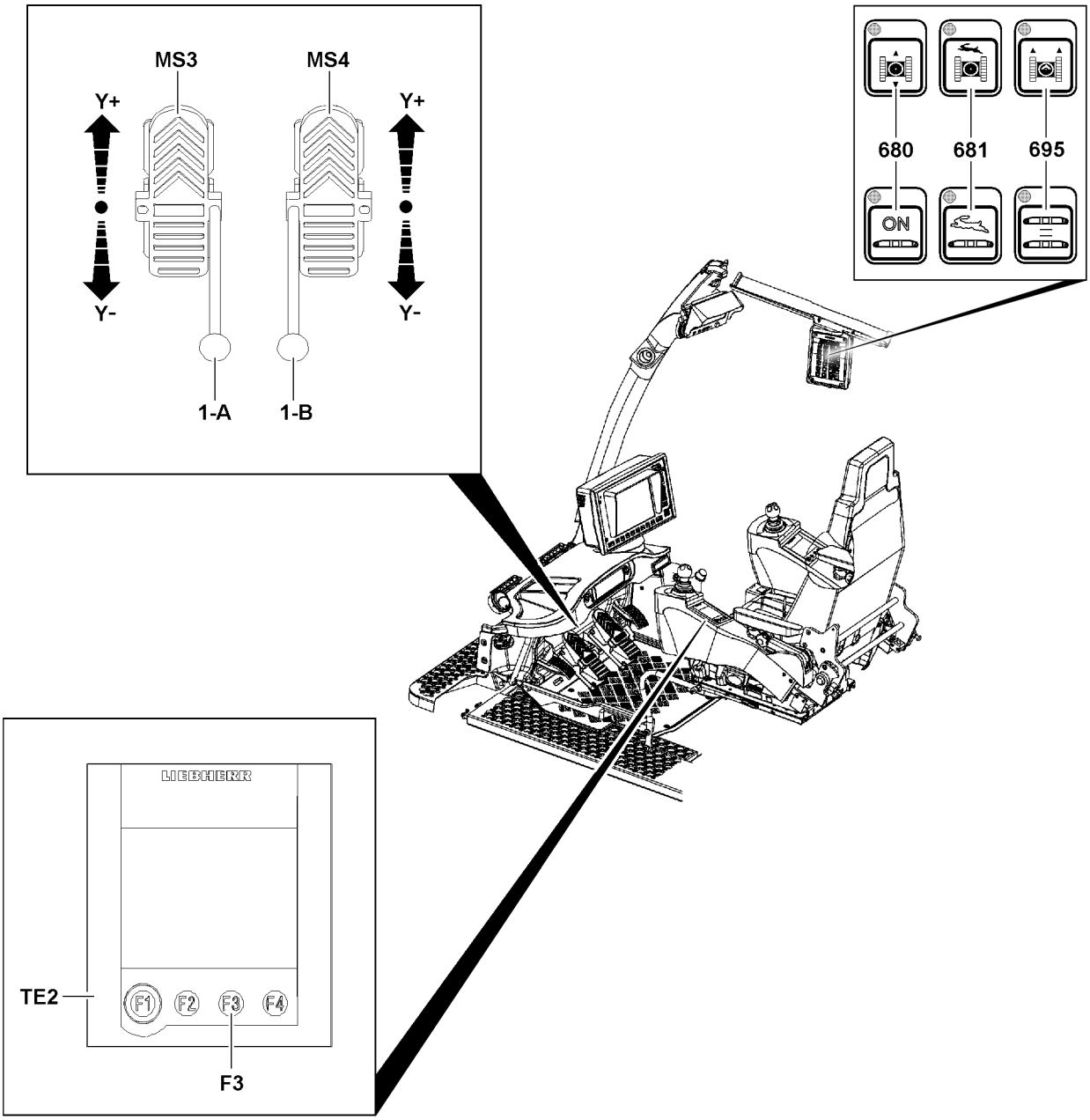

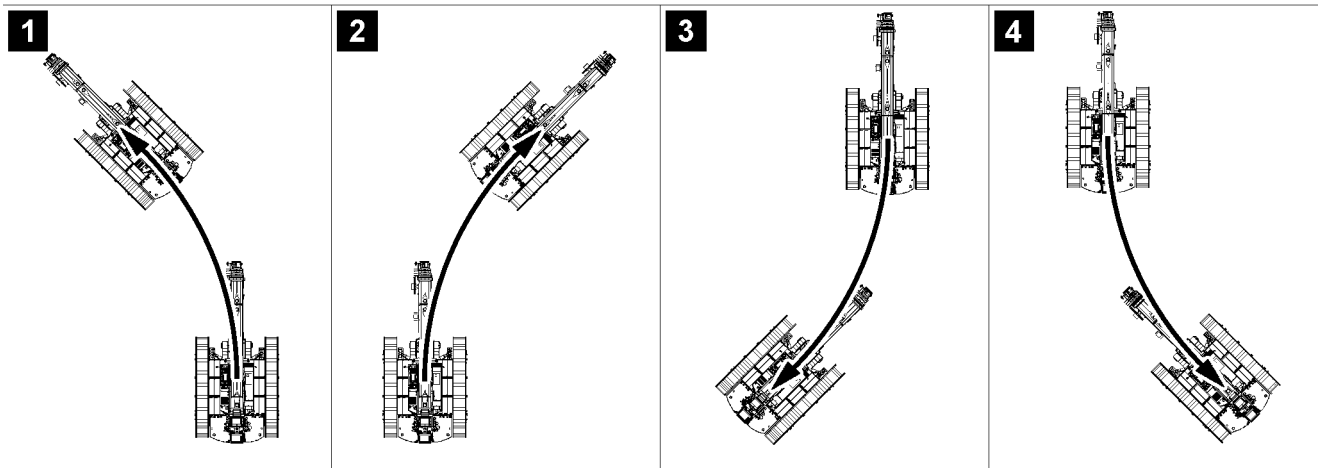

Fig.155683

LWE/LTR 1100-009/25105-02-02/en

copyright © Liebherr-Werk Ehingen GmbH 2023

6.5.9 Turning backward to the left

► Push through and hold the left foot rocker **MS3** fully to the rear (direction **Y-**).
► Actuate the right foot rocker **MS4** backward (direction **Y-**).

Result:

– The crane is turned backward to the left.

Note
► The further the right foot rocker **MS4** is actuated backward (direction **Y-**) the higher the speed of the turning movement.

6.5.10 Turning backward to the right

► Push through and hold the left foot rocker **MS3** fully to the front (direction **Y+**).
► Actuate the right foot rocker **MS4** backward (direction **Y-**).

Result:

– The crane is turned backward to the right.

Note
► The further the right foot rocker **MS4** is actuated backward (direction **Y-**) the higher the speed of the turning movement.

LWE/LTR 1100-009/25105-02-02/en

copyright © Liebherr-Werk Ehingen GmbH 2023

Empty page!

LWE/LTR 1100-009/25105-02-02/en

copyright © Liebherr-Werk Ehingen GmbH 2023

4.12 Two hook operation

1	Auxiliary boom	3
2	Hook operation	7
3	Two hook operation monitored / Two hook operation not monitored	10
4	Safety instructions	11
5	Boom nose on telescopic boom	13
6	Auxiliary jib on the telescopic boom	14
7	Folding jib	15
8	Strong lattice jib	17
9	Fixed lattice jib	18
10	Boom nose on the fixed lattice jib	19
11	Auxiliary jib on the fixed lattice jib	21
12	Luffing lattice jib	22
13	Boom nose on the luffing lattice jib	23
14	Auxiliary jib on the luffing lattice jib	24
15	Lifting a joint load	26

LWE/LTR 1100-009/25105-02-02/en

copyright © Liebherr-Werk Ehingen GmbH 2023

LWE/LTR 1100-009/25105-02-02/en

Fig.195219

copyright © Liebherr-Werk Ehingen GmbH 2023

1 Auxiliary boom

A distinction is made between the following auxiliary booms:
- Boom nose on telescopic boom
- Boom nose on lattice jib
- Auxiliary jib
- Folding jib
- Strong lattice jib
- Fixed lattice jib
- Luffing lattice jib

1.1 Boom nose on telescopic boom

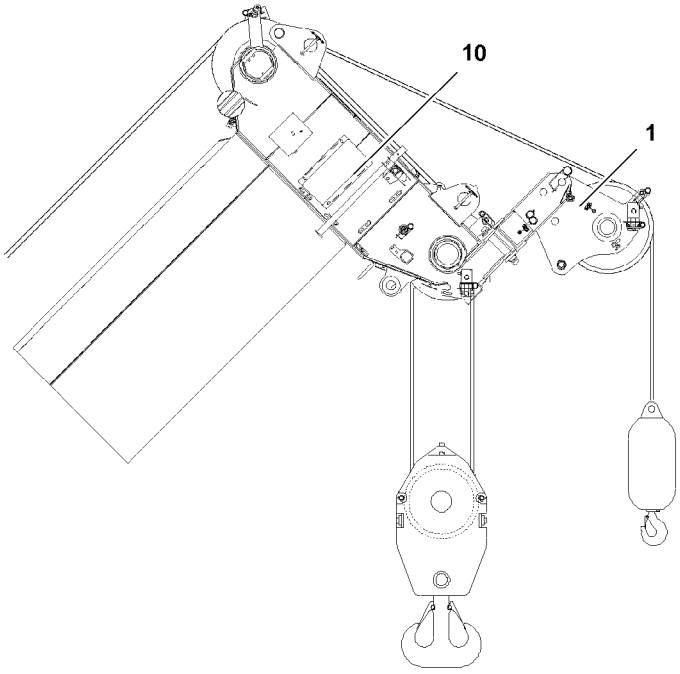

*Fig.120451: Boom nose **1** on telescopic boom*

- Short auxiliary boom as bracket
- Is assembled on the telescopic boom head **10**
- No proprietary load charts available
- Abbreviation: **M**

LWE/LTR 1100-009/25105-02-02/en

copyright © Liebherr-Werk Ehingen GmbH 2023

1.2 Boom nose on lattice jib

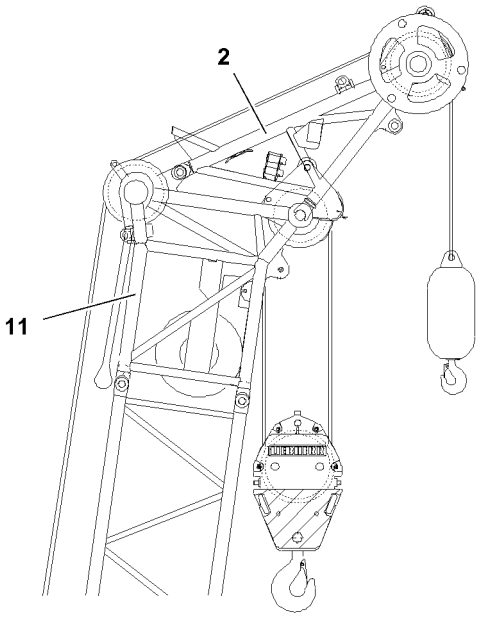

*Fig.120452: Boom nose **2** on lattice jib*

- Auxiliary boom as lattice structure
- Is assembled on the N-head **11**
- No proprietary load charts available
- Abbreviation: **M**

1.3 Auxiliary jib

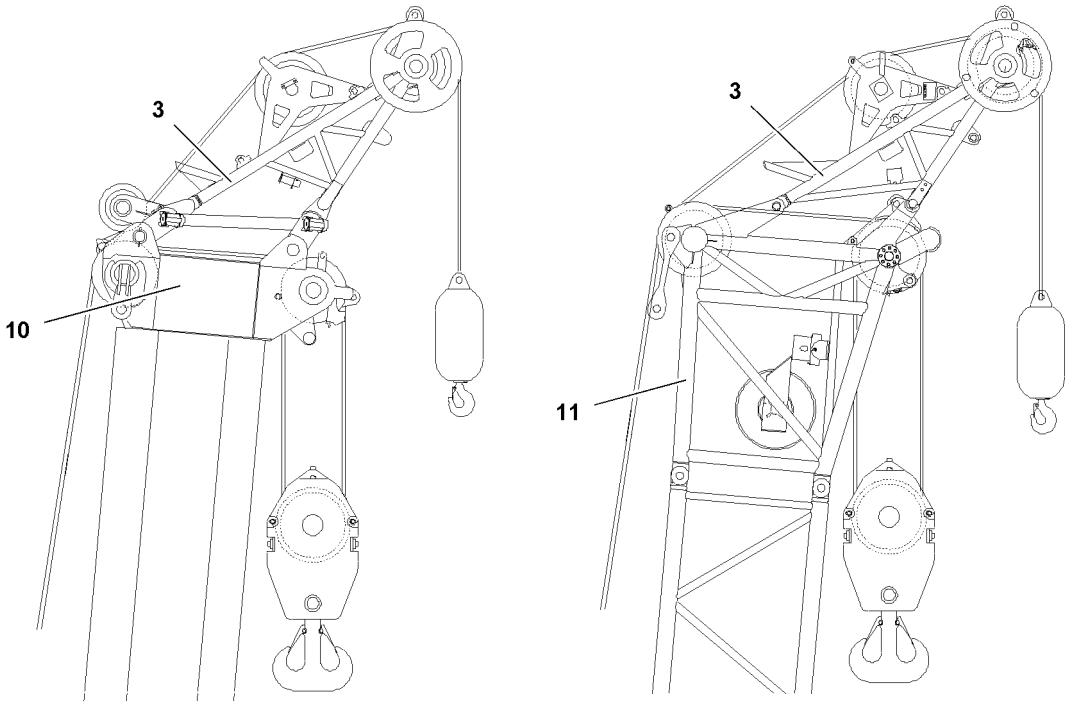

*Fig.120453: Auxiliary jib **3***

- Short auxiliary boom as lattice structure
- Is installed on the telescopic boom head **10** or N-head **11**
- Proprietary load charts available

LWE/LTR 1100-009/25105-02-02/en

copyright © Liebherr-Werk Ehingen GmbH 2023

– Abbreviation: **H**

1.4 Folding jib

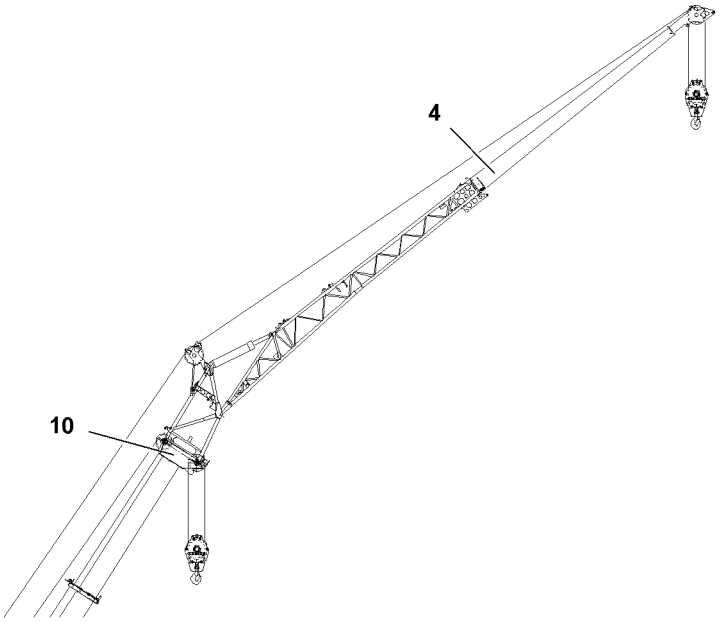

*Fig.120454: Folding jib **4***

– Auxiliary boom as lattice or sheet metal structure
– Is assembled on the telescopic boom head **10**
– Proprietary load charts available
– Abbreviation: **K**

The following folding jib variations are possible:
– Special folding jib
– Single folding jib
– Double folding jib
– 3-part single folding jib
– 3-part double folding jib
– 4-part single folding jib
– 4-part double folding jib

LWE/LTR 1100-009/25105-02-02/en

copyright © Liebherr-Werk Ehingen GmbH 2023

1.5 Strong lattice jib

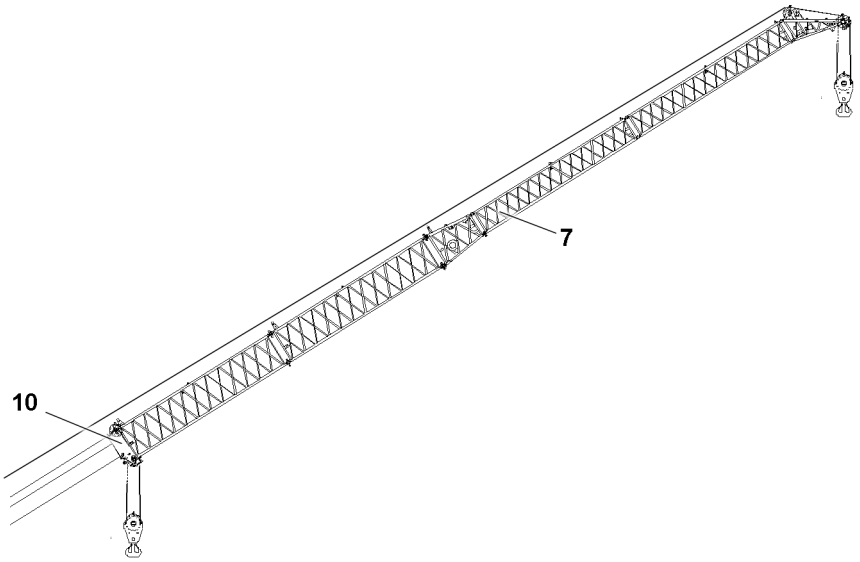

*Fig.126099: Strong lattice jib **7***

- Auxiliary boom in lattice structure
- Is assembled on the telescopic boom head **10**
- Proprietary load charts available
- Abbreviation: **S**

1.6 Fixed lattice jib

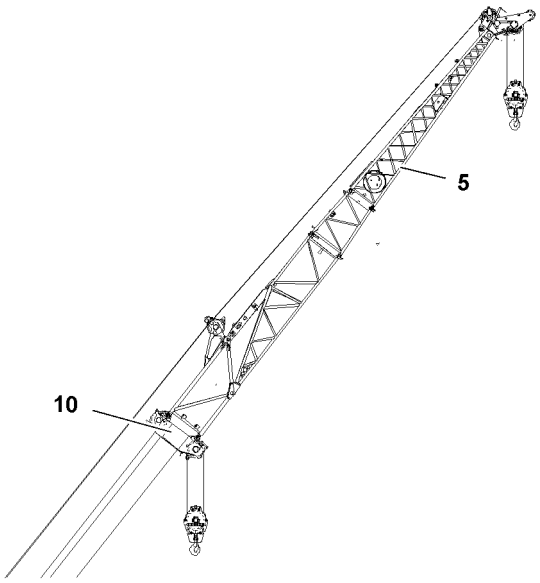

*Fig.120455: Fixed lattice jib **5***

- Auxiliary boom in lattice structure
- Is assembled on the telescopic boom head **10**
- Proprietary load charts available
- Abbreviation: **F**

LWE/LTR 1100-009/25105-02-02/en

copyright © Liebherr-Werk Ehingen GmbH 2023

1.7 Luffing lattice jib

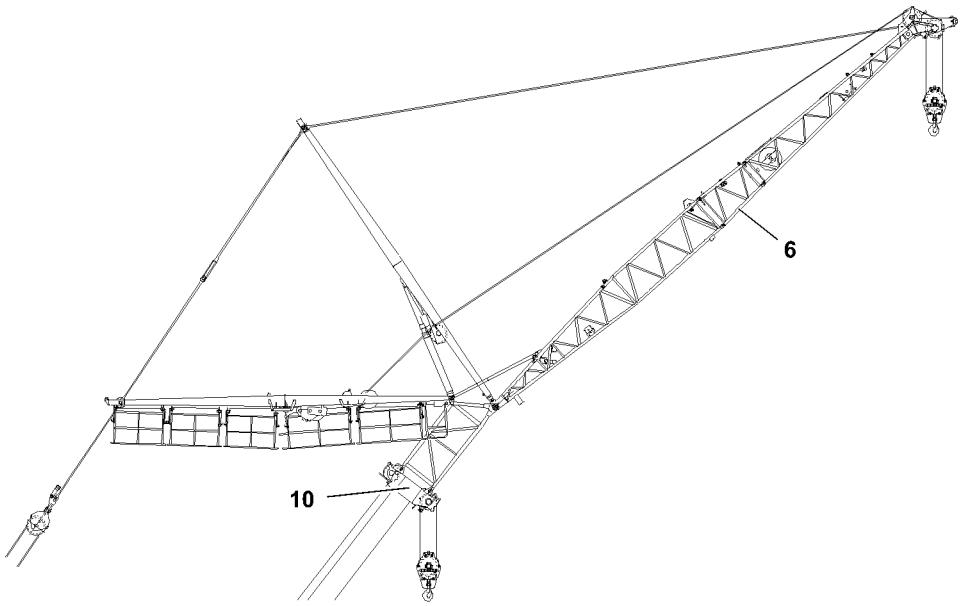

*Fig.120456: Luffing lattice jib **6***

- Auxiliary boom as lattice structure with guying
- Is assembled on the telescopic boom head **10**
- Proprietary load charts available
- Abbreviation: **N**

2 Hook operation

A distinction is made between the following hook operating modes:
- Single hook operation
- Two hook operation
- Three hook operation
- Hook operation depending on the load

LWE/LTR 1100-009/25105-02-02/en

copyright © Liebherr-Werk Ehingen GmbH 2023

2.1 Single hook operation

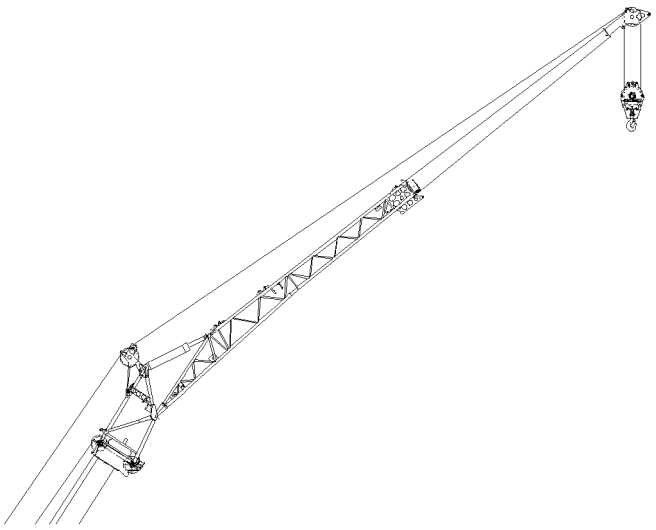

Fig.120458: Single hook operation

One hook is reeved on the boom.

2.2 Two hook operation

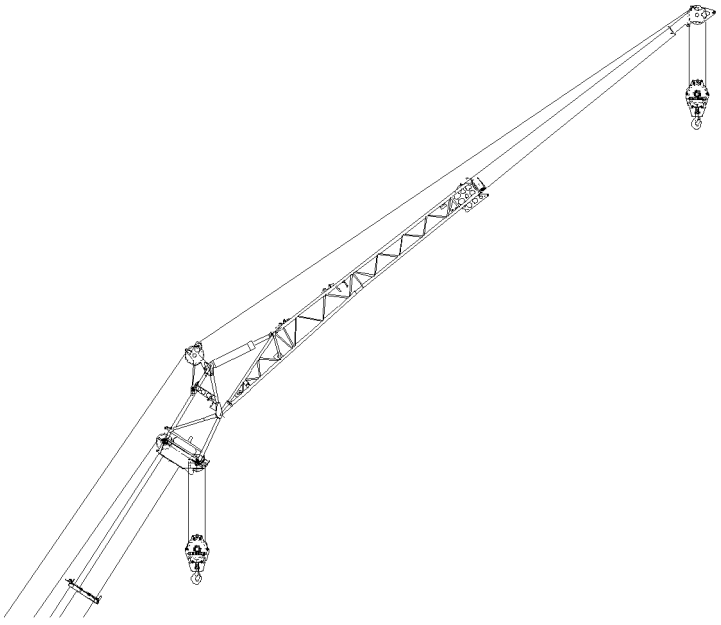

Fig.120459: Two hook operation

Two hooks are reeved on the booms. Number of loads and type of crane operation are not taken into account.

LWE/LTR 1100-009/25105-02-02/en

copyright © Liebherr-Werk Ehingen GmbH 2023

2.3 Three hook operation

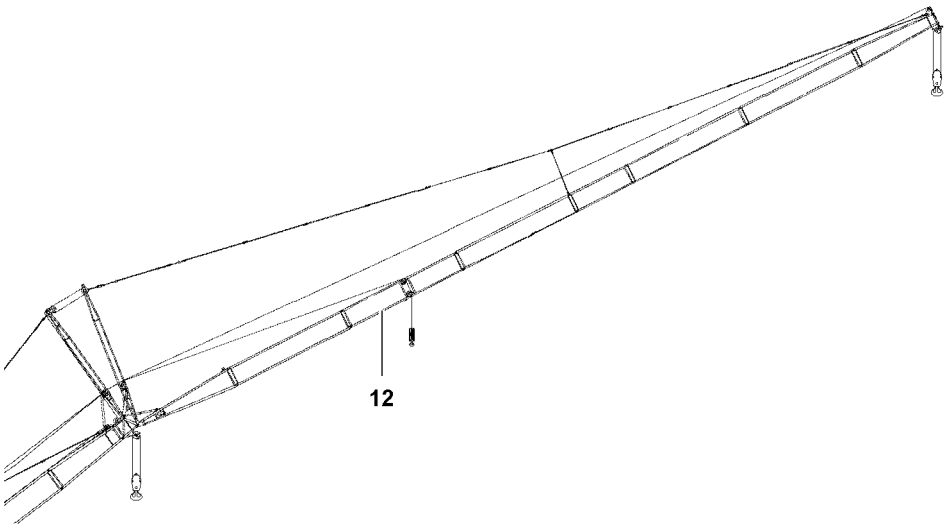

Fig.120457: Three hook operation

Three hooks are reeved on the booms. Number of loads and type of crane operation are not taken into account.

Note
► Three hook operation is **not** possible on telescopic cranes.

2.4 Hook operation depending on the load

The following hook operating modes are differentiated depending on the load:
– Two hook operation on joint load
– Two hook operation on individual loads

2.4.1 Two hook operation on joint load

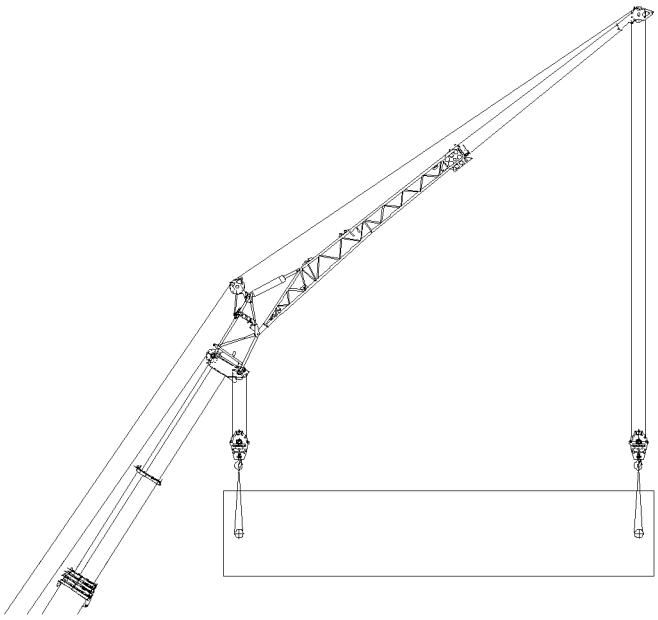

Fig.120460: Two hook operation on joint load

A joint load hangs on two hooks.

LWE/LTR 1100-009/25105-02-02/en

copyright © Liebherr-Werk Ehingen GmbH 2023

2.4.2 Two hook operation on individual loads

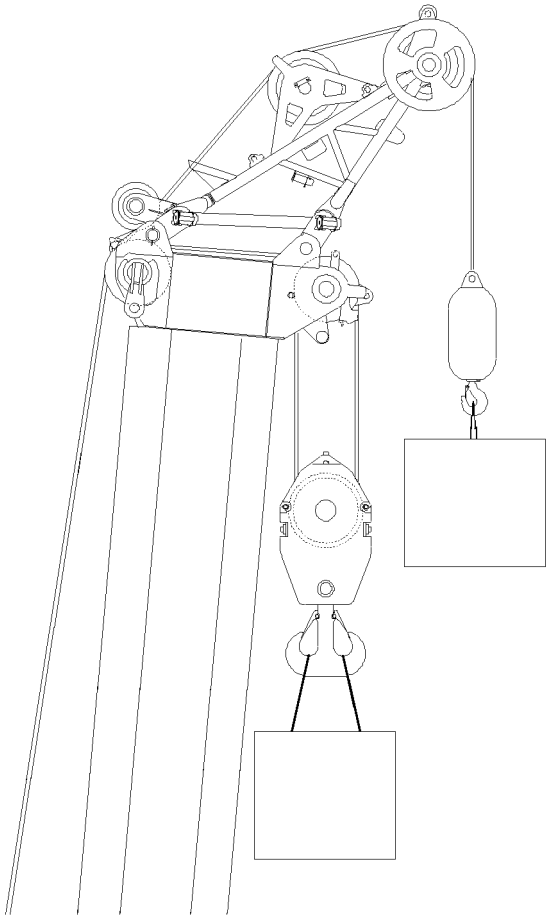

Fig.121508: Two hook operation on individual loads

Individual loads hang on individual hooks.

3 Two hook operation monitored / Two hook operation not monitored

The following is differentiated for two hook operation:

- Two hook operation monitored
  Two hook operation on joint load and on individual loads is monitored by the LICCON overload protection
- Two hook operation **not** monitored
  Two hook operation on joint load and on individual loads is **not** monitored by the LICCON overload protection

LWE/LTR 1100-009/25105-02-02/en

copyright © Liebherr-Werk Ehingen GmbH 2023

3.1 Two hook operation monitored

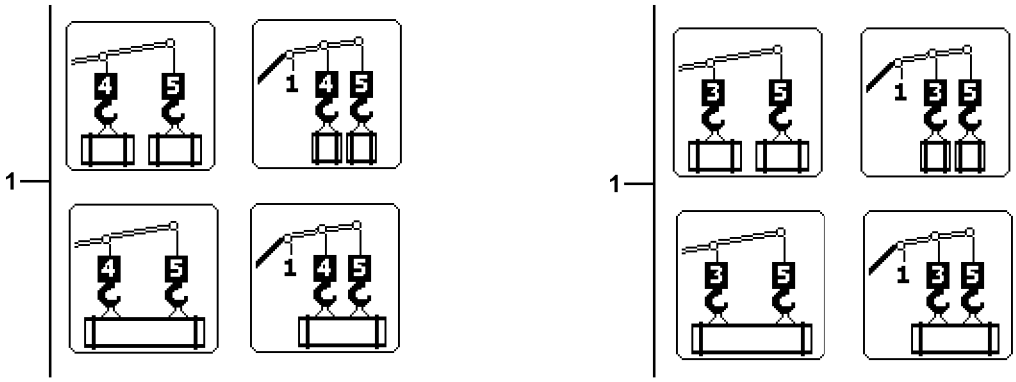

*Fig.121109: Two hook operation monitored icons **1***

For crane types, which are equipped with monitored two hook operation, the two hook operation can be selected in the Set up program. The monitored two hook operation is displayed by the two selectable icons **1**.

3.2 Two hook operation not monitored

If two hook operation can **not** be selected in the Set up program, then two hook operation is **not** monitored.

4 Safety instructions

WARNING
Danger of accident if „two hook operation is **not** monitored“!
If „two hook operation is **not** monitored“ and both hooks are subjected to a load, then the boom can be overloaded when luffing down.

When both hooks are subjected to a load and are **not** monitored:
► Do not luff the boom down.

WARNING
Overload of crane!
Death, severe injuries, property damage.
► Only set up permissible hook operations.
► Lift and lower the load vertically.

When a hook is reeved on the telescopic boom:
► Do **not** carry out two hook operation with TY-guying and an eccentric or spacer.

WARNING
Overload of crane!
Death, severe injuries, property damage.

If no load chart is available:
► **Make sure that the total weight of the load(s) is less than / equal to the maximum permissible load of the auxiliary boom.**
► Two hook operation with load(s) heavier than the maximum permissible load of the auxiliary boom is prohibited.

LWE/LTR 1100-009/25105-02-02/en

copyright © Liebherr-Werk Ehingen GmbH 2023

WARNING
Overload of crane due to imprecise radius and load display!
When no load chart is available, then the radius and load display is not exact.
Toppling crane, death, property damage.
► Move the crane within the permissible utilization range.

WARNING
Incorrect reeving for two hook operation!
Overload of crane, death, property damage.
► Reeve in an auxiliary boom head smaller than / equal to the main boom head.
► Set the LICCON overload protection to reeving on the auxiliary boom head.

WARNING
Incorrect distance of fastening points!
Overload of crane, death, property damage.

For two hook operation on joint load:
► Place the fastening points according to the horizontal distance of both hooks.

WARNING
Danger of collision for two hook operation on joint load!
Falling load, death, property damage.
► Lift the load no higher than to the height of the main boom head.

NOTICE
Hoist rope of incorrect winch is reeved!
The hoist rope can drag and be damaged.
► Reeve in the hoist rope of winch 1 on the main boom head.
► Reeve in the hoist rope of winch 2 on the auxiliary boom head.

Note
Erection and take down charts not observed!
The boom system cannot be erected.

When erection and take-down charts are present:
► Observe and adhere to the Erection and take down charts.
► Only set up permissible operating modes.

Add the following weights to the load:
– Hook block on main boom head
– Hook block (load hook) on auxiliary boom head
– Fastening equipment

LWE/LTR 1100-009/25105-02-02/en

copyright © Liebherr-Werk Ehingen GmbH 2023

5 Boom nose on telescopic boom

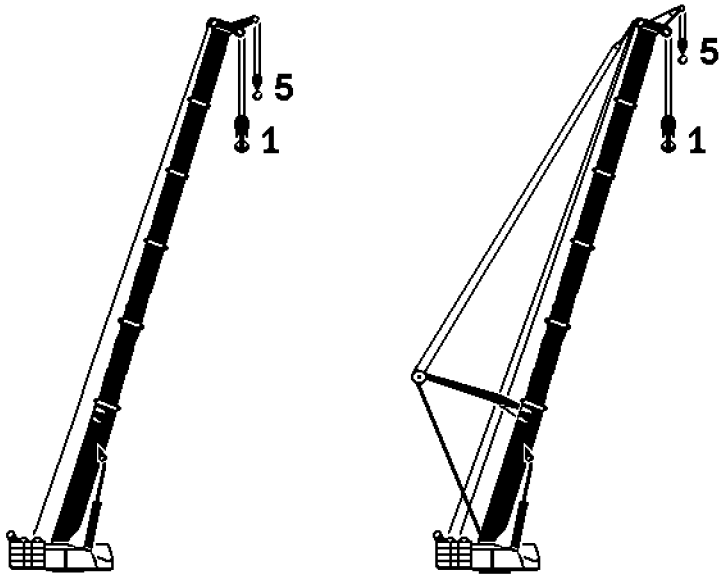

Fig.120462: Boom nose on telescopic boom

WARNING
Impermissible operating conditions!
Overload of crane, death, property damage.
► Only set up permissible hook operations.
► Set up of **non-permissible** hook operations is prohibited.

Hook	Illustration	Permissible hook operations for boom nose on telescopic boom
[5]		**Single hook operation:** Hook 5 is reeved in on the **boom nose**. Load is fastened on hook 5. **WARNING!** Radius and load display is not exact.
[1]		**Single hook operation:** Hook 1 is reeved in on the **telescopic boom**. Load is fastened on hook 1. **WARNING!** Load display is not exact.
1 [5]		**Two hook operation:** Hook 1 is reeved in on the **telescopic boom**. Hook 5 is reeved in on the **boom nose**. Load is fastened on hook 5. **WARNING!** Radius and load display is not exact.
[1] 5		**Two hook operation:** Hook 1 is reeved in on the **telescopic boom**. Hook 5 is reeved in on the **boom nose**. Load is fastened on hook 1. **WARNING!** Load display is not exact.

5.1 Setting up for boom nose on telescopic boom

► Reeve in a boom nose smaller than / equal to the telescopic boom head.

When a load is fastened on hook 5 (boom nose):
► Set the LICCON overload protection to the reeving on the boom nose.

For the two hook operation boom nose on telescopic boom no special load charts are available.

► Set the **telescopic boom** operating mode on the LICCON overload protection.

LWE/LTR 1100-009/25105-02-02/en

copyright © Liebherr-Werk Ehingen GmbH 2023

6 Auxiliary jib on the telescopic boom

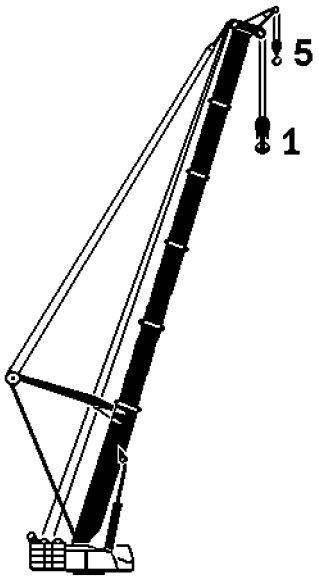

Fig.120467: Auxiliary jib on the telescopic boom

WARNING
Impermissible operating conditions!
Overload of crane, death, property damage.
- ► Only set up permissible hook operations.
- ► Set up of **non-permissible** hook operations is prohibited.

Hook	Illustration	Permissible hook operations for the auxiliary jib on the telescopic boom
[5]		**Single hook operation:** Hook 5 is reeved in on the **auxiliary jib**. Load is fastened on hook 5.
[1]		**Single hook operation:** Hook 1 is reeved in on the **telescopic boom**. Load is fastened on hook 1. **WARNING!** During **non-monitored** two hook operation: Radius and load display is not exact.
1 [5]		**Two hook operation:** Hook 1 is reeved in on the **telescopic boom**. Hook 5 is reeved in on the **auxiliary jib.** Load is fastened on hook 5. **WARNING!** During **non-monitored** two hook operation: Load display is not exact.
[1] 5		**Two hook operation:** Hook 1 is reeved in on the **telescopic boom**. Hook 5 is reeved in on the **auxiliary jib.** Load is fastened on hook 1. **WARNING!** During **non-monitored** two hook operation: Radius and load display is not exact.
[1] [5]		**Two hook operation:** Hook 1 is reeved in on the **telescopic boom**. Hook 5 is reeved in on the **auxiliary jib**. First load is fastened on hook 1. Second load is fastened on hook 5. **WARNING!** Permissible solely for monitored two hook operation.

LWE/LTR 1100-009/25105-02-02/en

copyright © Liebherr-Werk Ehingen GmbH 2023

Hook	Illustration	Permissible hook operations for the auxiliary jib on the telescopic boom
[1 5]		**Two hook operation:** Hook 1 is reeved in on the **telescopic boom**. Hook 5 is reeved in on the **auxiliary jib**. A joint load is fastened on hook 1 and hook 5. **WARNING!** Permissible solely for monitored two hook operation. **WARNING!** Make sure that the weight of the load is smaller than / equal to the maximum permissible load of the auxiliary jib.

6.1 Setting up for the auxiliary jib on the telescopic boom

WARNING
Impermissible operating conditions!
Overload of crane, death, property damage.

Only if the required load chart is available:
► Set up hook operation.

► Reeve in a auxiliary jib smaller than / equal to the telescopic boom head.
► Set the LICCON overload protection to the reeving on the auxiliary jib.
► Set the **auxiliary jib** operating mode on the LICCON overload protection.

7 Folding jib

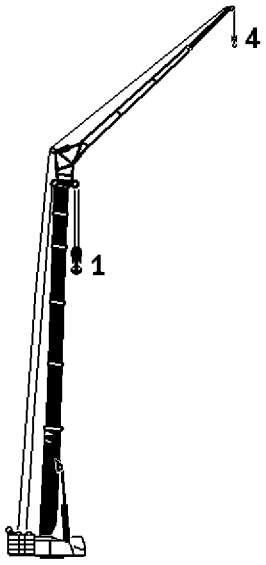

Fig.120468: Folding jib

WARNING
Impermissible operating conditions!
Overload of crane, death, property damage.
► Only set up permissible hook operations.
► Set up of **non-permissible** hook operations is prohibited.

LWE/LTR 1100-009/25105-02-02/en

copyright © Liebherr-Werk Ehingen GmbH 2023

Hook	Illustration	Permissible hook operations for folding jib
[4]		**Single hook operation:** Hook 4 is reeved in on the **folding jib**. Load is fastened on hook 4.
[1] 4		**Two hook operation:** Hook 1 is reeved in on the **telescopic boom**. Hook 4 is reeved in on the **folding jib**. Load is fastened on hook 1. **WARNING!** During **non-monitored** two hook operation: Radius and load display is not exact.
1 [4]		**Two hook operation:** Hook 1 is reeved in on the **telescopic boom**. Hook 4 is reeved in on the **folding jib**. Load is fastened on hook 4. **WARNING!** During **non-monitored** two hook operation: Load display is not exact.
[1] [4]		**Two hook operation:** Hook 1 is reeved in on the **telescopic boom**. Hook 4 is reeved in on the **folding jib**. First load is fastened on hook 1. Second load is fastened on hook 4. **WARNING!** Permissible solely for monitored two hook operation.
[1 4]		**Two hook operation:** Hook 1 is reeved in on the **telescopic boom**. Hook 4 is reeved in on the **folding jib**. A joint load is fastened on hook 1 and hook 4. **WARNING!** During **non-monitored** two hook operation: Radius and load display is not exact. **WARNING!** Make sure that the weight of the load is smaller than / equal to the maximum permissible load of the folding jib.

7.1 Setting up for operation with folding jib

WARNING
Impermissible operating conditions!
Overload of crane, death, property damage.

Only if the required load chart is available:
► Set up hook operation.

► Reeve in a folding jib smaller than / equal to the telescopic boom head.
► Set the LICCON overload protection to the reeving on the folding jib.
► Set **folding jib** operating mode on the LICCON overload protection.

LWE/LTR 1100-009/25105-02-02/en

copyright © Liebherr-Werk Ehingen GmbH 2023

8 Strong lattice jib

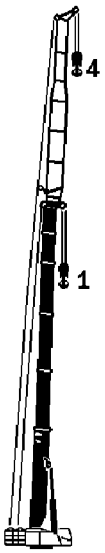

Fig.126100: Strong lattice jib

WARNING
Impermissible operating conditions!
Overload of crane, death, property damage.
- ► Only set up permissible hook operations.
- ► Set up of **non-permissible** hook operations is prohibited.

Hook	Illustration	Permissible hook operations for strong lattice jib
[4]		**Single hook operation:** Hook 4 is reeved on the **strong lattice jib**. Load is fastened on hook 4.
[1] 4		**Two hook operation:** Hook 1 is reeved in on the **telescopic boom**. Hook 4 is reeved on the **strong lattice jib**. Load is fastened on hook 1. **WARNING!** Radius and load display is not exact. **WARNING! Not** permissible for TY-operation.
1 [4]		**Two hook operation:** Hook 1 is reeved in on the **telescopic boom**. Hook 4 is reeved on the **strong lattice jib.** Load is fastened on hook 4. **WARNING!** Load display is not exact. **WARNING! Not** permissible for TY-operation.
[1 4]		**Two hook operation:** Hook 1 is reeved in on the **telescopic boom**. Hook 4 is reeved on the **strong lattice jib.** A joint load is fastened on hook 1 and hook 4. **WARNING!** Radius and load display is not exact. **WARNING!** Make sure that the weight of the load is smaller than / equal to the maximum permissible load of the fixed lattice jib. **WARNING! Not** permissible for TY-operation.

LWE/LTR 1100-009/25105-02-02/en

copyright © Liebherr-Werk Ehingen GmbH 2023

8.1 Setting up for operation with a strong lattice jib

WARNING
Impermissible operating conditions!
Overload of crane, death, property damage.

Only if the required load chart is available:
► Set up hook operation.

► Reeve in a strong lattice jib smaller than / equal to the telescopic boom head.
► Set the LICCON overload protection to the reeving on the strong lattice jib.
► Set the **strong lattice jib** operating mode on the LICCON overload protection.

9 Fixed lattice jib

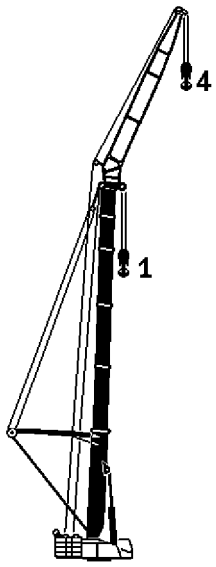

Fig.120473: Fixed lattice jib

WARNING
Impermissible operating conditions!
Overload of crane, death, property damage.
► Only set up permissible hook operations.
► Set up of **non-permissible** hook operations is prohibited.

Hook	Illustration	Permissible hook operations for fixed lattice jib
[4]		**Single hook operation:** Hook 4 is reeved in on the **fixed lattice jib.** Load is fastened on hook 4.
[1] 4	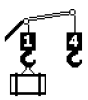	**Two hook operation:** Hook 1 is reeved in on the **telescopic boom**. Hook 4 is reeved in on the **fixed lattice jib**. Load is fastened on hook 1. **WARNING!** Radius and load display is not exact. **WARNING! Not** permissible for TY-operation

LWE/LTR 1100-009/25105-02-02/en

copyright © Liebherr-Werk Ehingen GmbH 2023

Hook	Illustration	Permissible hook operations for fixed lattice jib
1 [4]		**Two hook operation:** Hook 1 is reeved in on the **telescopic boom**. Hook 4 is reeved in on the **fixed lattice jib.** Load is fastened on hook 4. **WARNING!** Load display is not exact. **WARNING! Not** permissible for TY-operation.
[1 4]		**Two hook operation:** Hook 1 is reeved in on the **telescopic boom**. Hook 4 is reeved in on the **fixed lattice jib**. A joint load is fastened on hook 1 and hook 4. **WARNING!** Radius and load display is not exact. **WARNING!** Make sure that the weight of the load is smaller than / equal to the maximum permissible load of the fixed lattice jib. **WARNING! Not** permissible for TY-operation.

9.1 Setting up for operation with a fixed lattice jib

WARNING
Impermissible operating conditions!
Overload of crane, death, property damage.

Only if the required load chart is available:
► Set up hook operation.

► Reeve in a fixed lattice jib smaller than / equal to the telescopic boom head.
► Set the LICCON overload protection to the reeving on the fixed lattice jib.
► Set the **fixed lattice jib** operating mode on the LICCON overload protection.

10 Boom nose on the fixed lattice jib

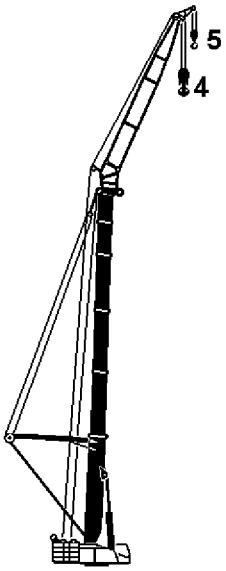

Fig.120474: Boom nose on the fixed lattice jib

LWE/LTR 1100-009/25105-02-02/en

copyright © Liebherr-Werk Ehingen GmbH 2023

WARNING
Impermissible operating conditions!
Overload of crane, death, property damage.
► Only set up permissible hook operations.
► Set up of **non-permissible** hook operations is prohibited.

Hook	Illustration	Permissible hook operations for the boom nose on the fixed lattice jib
[5]		**Single hook operation:** Hook 5 is reeved in on the **boom nose**. Load is fastened on hook 5. **WARNING!** Radius and load display is not exact.
[4]		**Single hook operation:** Hook 4 is reeved in on the **fixed lattice jib.** Load is fastened on hook 4. **WARNING!** Load display is not exact. **WARNING! Not** permissible for LTM 11200-9.1 and LTR 11200 in NZFM operation.
4 [5]		**Two hook operation:** Hook 4 is reeved in on the **fixed lattice jib.** Hook 5 is reeved in on the **boom nose**. Load is fastened on hook 5. **WARNING!** Radius and load display is not exact. **WARNING! Not** permissible for LTM 11200-9.1 and LTR 11200 in NZFM operation.
[4] 5		**Two hook operation:** Hook 4 is reeved in on the **fixed lattice jib**. Hook 5 is reeved in on the **boom nose**. Load is fastened on hook 4. **WARNING!** Load display is not exact. **WARNING! Not** permissible for LTM 11200-9.1 and LTR 11200 in NZFM operation.
[4 5]		**Two hook operation:** Hook 4 is reeved in on the **fixed lattice jib.** Hook 5 is reeved in on the **boom nose**. A joint load is fastened on hook 4 and hook 5. **WARNING!** Radius and load display is not exact. **WARNING!** Make sure that the weight of the load is smaller than / equal to the maximum permissible load bearing capacity of the boom nose. **WARNING! Not** permissible for LTM 11200-9.1 and LTR 11200 in NZFM operation.

10.1 Setting up for operation with a boom nose on the fixed lattice jib

► Reeve in a boom nose smaller than / equal to the N-head.

When a load is fastened on hook 5 (boom nose):
► Set the LICCON overload protection to the reeving on the boom nose.
► Set the **fixed lattice jib** operating mode on the LICCON overload protection.

LWE/LTR 1100-009/25105-02-02/en

copyright © Liebherr-Werk Ehingen GmbH 2023

11 Auxiliary jib on the fixed lattice jib

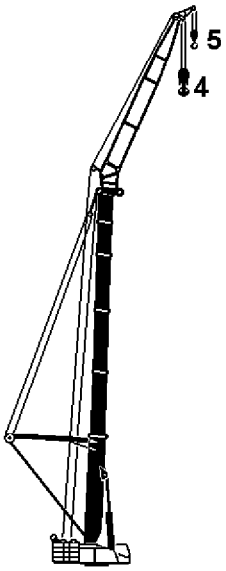

Fig.120474: Auxiliary jib on the fixed lattice jib

WARNING
Impermissible operating conditions!
Overload of crane, death, property damage.
- ► Only set up permissible hook operations.
- ► Set up of **non-permissible** hook operations is prohibited.

Hook	Illustration	Permissible hook operations for the auxiliary jib on the fixed lattice jib
[5]		**Single hook operation:** Hook 5 is reeved in on the **auxiliary jib**. Load is fastened on hook 5.
[4]		**Single hook operation:** Hook 4 is reeved in on the **fixed lattice jib.** Load is fastened on hook 4. **WARNING!** During **non-monitored** two hook operation: Radius and load display is not exact. **WARNING! Not** permissible for LTM 11200-9.1 and LTR 11200 in NZFM operation.
4 [5]		**Two hook operation:** Hook 4 is reeved in on the **fixed lattice jib**. Hook 5 is reeved in on the **auxiliary jib**. Load is fastened on hook 5. **WARNING!** During **non-monitored** two hook operation: Load display is not exact. **WARNING! Not** permissible for LTM 11200-9.1 and LTR 11200 in NZFM operation.
[4] 5		**Two hook operation:** Hook 4 is reeved in on the **fixed lattice jib.** Hook 5 is reeved in on the **auxiliary jib.** Load is fastened on hook 4. **WARNING!** During **non-monitored** two hook operation: Radius and load display is not exact. **WARNING! Not** permissible for LTM 11200-9.1 and LTR 11200 in NZFM operation.

LWE/LTR 1100-009/25105-02-02/en

copyright © Liebherr-Werk Ehingen GmbH 2023

Hook	Illustration	Permissible hook operations for the auxiliary jib on the fixed lattice jib
[4] [5]		**Two hook operation:** Hook 4 is reeved in on the **fixed lattice jib**. Hook 5 is reeved in on the **auxiliary jib**. First load is fastened on hook 4. Second load is fastened on hook 5 **WARNING!** Permissible solely for monitored two hook operation. **WARNING! Not** permissible for LTM 11200-9.1 and LTR 11200 in NZFM operation.
[4 5]		**Two hook operation:** Hook 4 is reeved in on the **fixed lattice jib**. Hook 5 is reeved in on the **auxiliary jib.** A joint load is fastened on hook 4 and hook 5. **WARNING!** During **non-monitored** two hook operation: Radius and load display is not exact. **WARNING!** Make sure that the weight of the load is smaller than / equal to the maximum permissible load of the auxiliary jib. **WARNING! Not** permissible for LTM 11200-9.1 and LTR 11200 in NZFM operation.

11.1 Setting up for operation with an auxiliary jib on the fixed lattice jib

WARNING
Impermissible operating conditions!
Overload of crane, death, property damage.

Only if the required load chart is available:
► Set up hook operation.

► Reeve in an auxiliary jib smaller than / equal to the N-head.
► Set the LICCON overload protection to the reeving on the auxiliary jib.
► Set the **auxiliary jib** operating mode on the LICCON overload protection.

12 Luffing lattice jib

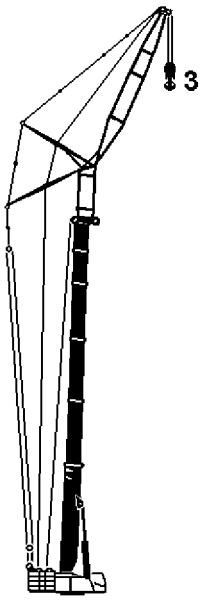

Fig.120700: Luffing lattice jib

LWE/LTR 1100-009/25105-02-02/en

copyright © Liebherr-Werk Ehingen GmbH 2023

WARNING
Impermissible operating conditions!
Overload of crane, death, property damage.
► Only set up permissible hook operations.
► Set up of **non-permissible** hook operations is prohibited.

Hook	Illustration	Permissible hook operations for luffing lattice jib
[3]		**Single hook operation:** Hook 3 is reeved in on the **luffing lattice jib**. Load is fastened on hook 3.

12.1 Setting up for operation with the luffing lattice jib

WARNING
Impermissible operating conditions!
Overload of crane, death, property damage.

Only if the required load chart is available:
► Set up hook operation.

► Set the LICCON overload protection to reeving on the luffing lattice jib.
► Set the **luffing lattice jib** operating mode on the LICCON overload protection.

13 Boom nose on the luffing lattice jib

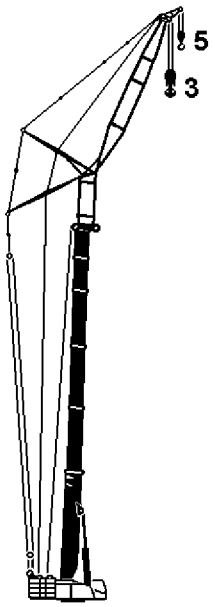

Fig.120702: Boom nose on the luffing lattice jib

WARNING
Impermissible operating conditions!
Overload of crane, death, property damage.
► Only set up permissible hook operations.
► Set up of **non-permissible** hook operations is prohibited.

copyright © Liebherr-Werk Ehingen GmbH 2023

Hook	Illustration	Permissible hook operations for the boom nose on the luffing lattice jib
[5]		**Single hook operation:** Hook 5 is reeved in on the **boom nose**. Load is fastened on hook 5. **WARNING!** Radius and load display is not exact.
[3]		**Single hook operation:** Hook 3 is reeved in on the **luffing lattice jib**. Load is fastened on hook 3. **WARNING!** Load display is not exact.
3 [5]		**Two hook operation:** Hook 3 is reeved in on the **luffing lattice jib**. Hook 5 is reeved in on the **boom nose**. Load is fastened on hook 5. **WARNING!** Radius and load display is not exact.
[3] 5		**Two hook operation:** Hook 3 is reeved in on the **luffing lattice jib**. Hook 5 is reeved in on the **boom nose**. Load is fastened on hook 3. **WARNING!** Load display is not exact.
[3 5]		**Two hook operation:** Hook 3 is reeved in on the **luffing lattice jib**. Hook 5 is reeved in on the **boom nose**. A joint load is fastened on hook 3 and hook 5. **WARNING!** Radius and load display is not exact. **WARNING!** Make sure that the weight of the load is smaller than / equal to the maximum permissible load bearing capacity of the boom nose.

13.1 Setting up for operation with a boom nose on the luffing lattice jib

► Reeve in a boom nose smaller than / equal to the N-head.

When a load is fastened on hook 5 (boom nose):
► Set the LICCON overload protection to the reeving on the boom nose.
► Set the **luffing lattice jib** operating mode on the LICCON overload protection.

14 Auxiliary jib on the luffing lattice jib

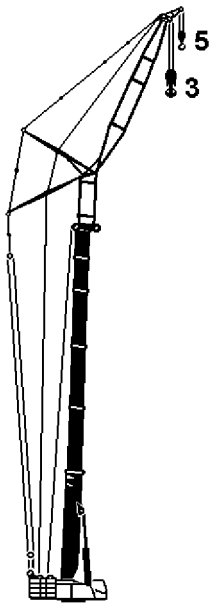

Fig.120702: Auxiliary jib on the luffing lattice jib

LWE/LTR 1100-009/25105-02-02/en

copyright © Liebherr-Werk Ehingen GmbH 2023

WARNING
Impermissible operating conditions!
Overload of crane, death, property damage.
► Only set up permissible hook operations.
► Set up of **non-permissible** hook operations is prohibited.

Hook	Illustration	Permissible hook operations for the auxiliary jib on the luffing lattice jib
[5]		**Single hook operation:** Hook 5 is reeved in on the **auxiliary jib**. Load is fastened on hook 5.
[3]		**Single hook operation:** Hook 3 is reeved in on the **luffing lattice jib**. Load is fastened on hook 3. **WARNING!** During **non-monitored** two hook operation: Radius and load display is not exact. **WARNING! Not** permissible for LTM 1750-9.1 in TYV23EN operation.
3 [5]		**Two hook operation:** Hook 3 is reeved in on the **luffing lattice jib**. Hook 5 is reeved in on the **auxiliary jib**. Load is fastened on hook 5. **WARNING!** During **non-monitored** two hook operation: Load display is not exact. **WARNING! Not** permissible for LTM 1750-9.1 in TYV23EN operation.
[3] 5		**Two hook operation:** Hook 3 is reeved in on the **luffing lattice jib**. Hook 5 is reeved in on the **auxiliary jib**. Load is fastened on hook 3. **WARNING!** During **non-monitored** two hook operation: Radius and load display is not exact. **WARNING! Not** permissible for LTM 1750-9.1 in TYV23EN operation.
[3] [5]		**Two hook operation:** Hook 3 is reeved in on the **luffing lattice jib**. Hook 5 is reeved in on the **auxiliary jib**. First load is fastened on hook 3. Second load is fastened on hook 5. **WARNING!** Permissible solely for monitored two hook operation. **WARNING! Not** permissible for LTM 1750-9.1 in TYV23EN operation.
[3 5]		**Two hook operation:** Hook 3 is reeved in on the **luffing lattice jib**. Hook 5 is reeved in on the **auxiliary jib**. A joint load is fastened on hook 3 and hook 5. **WARNING!** During **non-monitored** two hook operation: Radius and load display is not exact. **WARNING!** Make sure that the weight of the load is smaller than / equal to the maximum permissible load of the auxiliary jib. **WARNING! Not** permissible for LTM 1750-9.1 in TYV23EN operation.

14.1 Setting up for operation with an auxiliary jib on the luffing lattice jib

WARNING
Impermissible operating conditions!
Overload of crane, death, property damage.

Only if the required load chart is available:
► Set up hook operation.

► Reeve in an auxiliary jib smaller than / equal to the N-head.

LWE/LTR 1100-009/25105-02-02/en

copyright © Liebherr-Werk Ehingen GmbH 2023

► Set the LICCON overload protection to the reeving on the auxiliary jib.
► Set the **auxiliary jib** operating mode on the LICCON overload protection.

15 Lifting a joint load

15.1 Lifting a joint load solely with the auxiliary boom

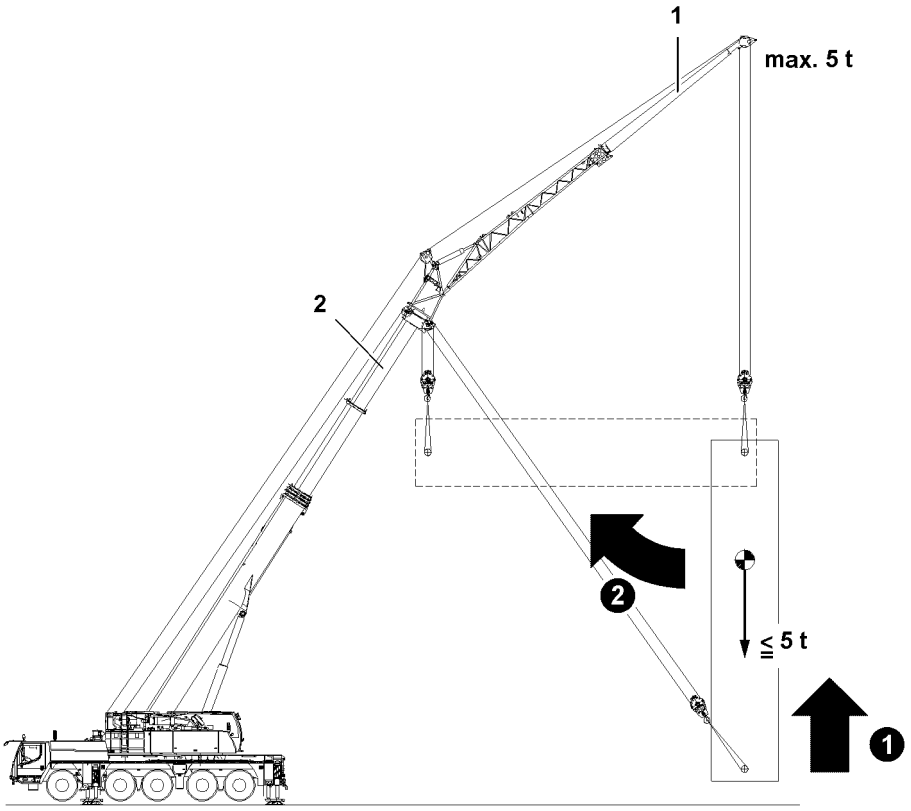

*Fig.120710: Lifting the load with the auxiliary boom **1** to 100 %*

If the weight or the center of gravity of the load is not exactly known, then the load must first be lifted with the auxiliary boom **1** to 100 %.

Make sure that the following prerequisite is met:
– The weight of the load is less than / equal to the maximum permissible load of the auxiliary boom **1**.

WARNING
Incorrect lifting of the load!
Toppling crane, death, property damage.
► Lift the load with the auxiliary boom **1** to 100 %.

LWE/LTR 1100-009/25105-02-02/en

copyright © Liebherr-Werk Ehingen GmbH 2023

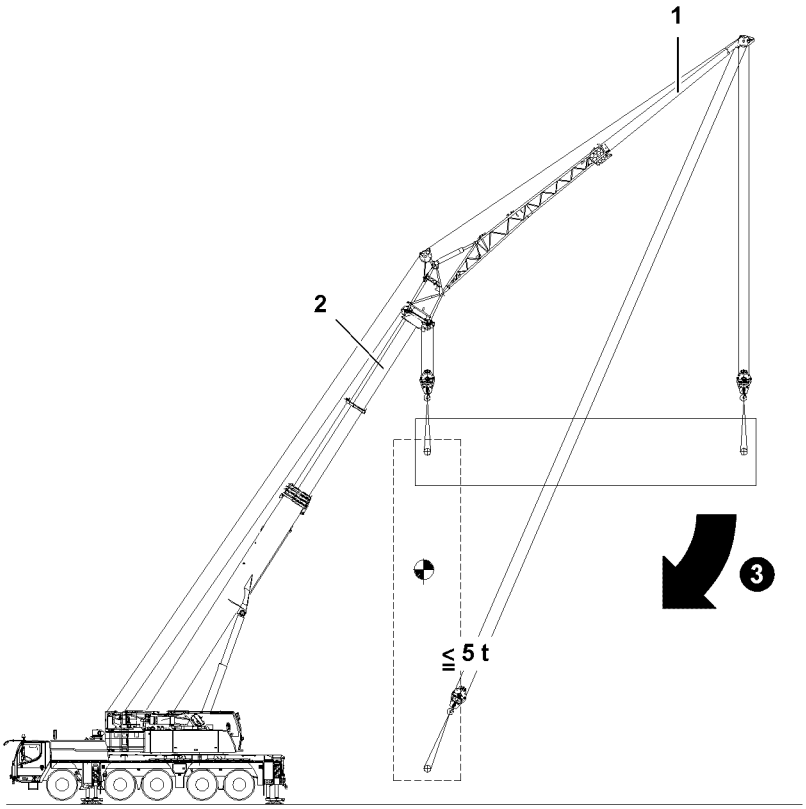

*Fig.120711: Taking on the load with the main boom **2***

In „two hook operation“ angular pull is only permissible in the boom direction with raised load.

NOTICE
Rubbing hoist ropes!
► Make sure that the hoist ropes do not rub on the rope retaining pipes of the rope pulleys during angular pull.

► Take on the load with the main boom **2**.

LWE/LTR 1100-009/25105-02-02/en

copyright © Liebherr-Werk Ehingen GmbH 2023

15.2 Lifting a joint load with two booms

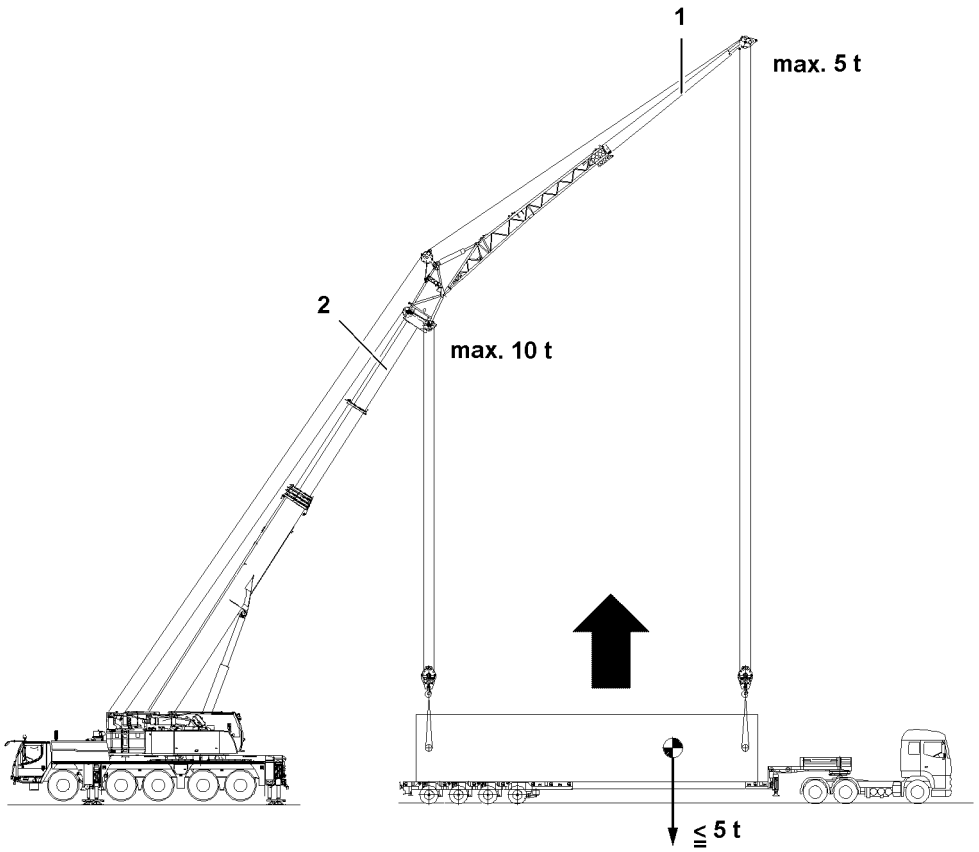

*Fig.120712: Lifting the load with the main boom **2** and auxiliary boom **1***

Make sure that the following prerequisite is met:
– The weight of the load is less than / equal to the maximum permissible load of the auxiliary boom **1**.

WARNING
Overload of crane!
Death, severe injuries, property damage.
► Make sure that the weight and the center of gravity of the load is known exactly.

In „two hook operation“ angular pull is only permissible in the boom direction with raised load.

NOTICE
Rubbing hoist ropes!
► Make sure that the hoist ropes do not rub on the rope retaining pipes of the rope pulleys during angular pull.

► Lift the load with the main boom **2** and auxiliary boom **1**.

LWE/LTR 1100-009/25105-02-02/en

copyright © Liebherr-Werk Ehingen GmbH 2023

4.20 Procedure for shut-off of crane movement

1	General	3
2	Instructions for resuming crane movement	19

LWE/LTR 1100-009/25105-02-02/en

copyright © Liebherr-Werk Ehingen GmbH 2023

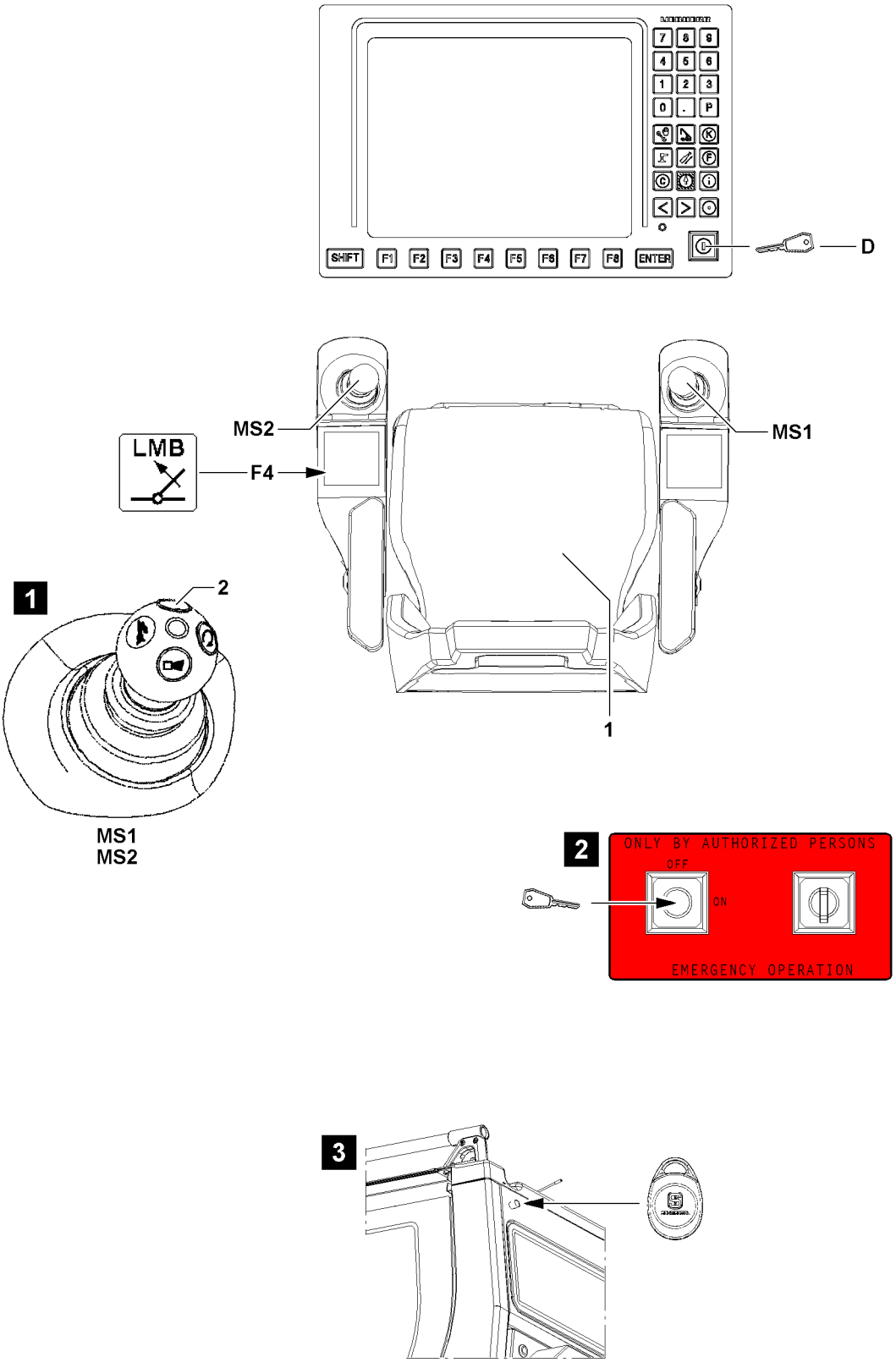

Fig.117245

LWE/LTR 1100-009/25105-02-02/en

copyright © Liebherr-Werk Ehingen GmbH 2023

1 General

WARNING
Limits of LICCON computer system!
The LICCON computer system cannot reduce the danger of accident in case of unsuitable or careless operation nor overcome physical limits.
The LICCON computer system cannot take misjudgments / erroneous operation into account.
- ► Safe crane operation / assembly operation and crane application is the sole responsibility of the crane operator and operating personnel.
- ► Always adapt crane operation / assembly operation and crane application to the operating conditions.

Note
- ► The monitor illustrations in this chapter are only examples.
- ► The numerical values in the individual icons and charts do not have to necessarily match the crane exactly.
- ► Numbers and letters can be replaced by place holders.
- ► The display and assignment of the icons can deviate, depending on the set up configuration, operating status and configuration of the crane.
- ► In addition, many of the illustrations show the maximum configuration of the LICCON monitor with icons.
- ► In crane operation, an identical display will **not** appear on the LICCON monitor.

Note
- ► Load hook and hook block are generally also described as hooks.

1.1 Operating elements for special cases for operation of the LICCON overload protection

Within the crane operator's cab, two buttons are installed as operating elements for „Special cases for operation of the LICCON overload protection“:

– Button **F4** on the left control panel
– The set up key **D** on LICCON monitor 0

Depending on the crane configuration, an additional operating element can be installed outside the crane operator's cab for „Special cases for operation of the LICCON overload protection“:
– LMB-emergency operation key switch in the control cabinet, see illustration **2**.
or
– LMB-emergency operation transponder / sensor on the rear of the crane cab, see illustration **3**

If a crane movement is to be carried out with master switch **MS1** or master switch **MS2**, then at least one of the following buttons must be actuated:
– **1** Seat contact button
  • Is actuated by sitting properly on the seat.
– **2** Button
  • To bypass the seat contact button **1**, to be able to work while standing up, if necessary.

1.2 Special cases for operation of the LICCON overload protection

When special cases for operation of the LICCON overload protection occur, then the functionality of the LICCON overload protection intervenes.

LWE/LTR 1100-009/25105-02-02/en

copyright © Liebherr-Werk Ehingen GmbH 2023

WARNING
Intervention of the functionality of the LICCON overload protection!
If the functionality of the LICCON overload protection intervenes by pressing the button **F4**, set up button **D** or by activation of the LMB-emergency operation, then the LICCON overload protection is entirely deactivated, bypassed or limited.
It is possible to exceed several shut-off limits of the LICCON overload protection simultaneously or one after the other.
It is possible to carry out crane movements that are not monitored by the LICCON overload protection. Without the LICCON overload protection, no additional protection against overload of the crane via the crane control is present.
► When accessing the functionality of the LICCON overload protection, take into account that the LICCON overload protection is deactivated totally or is limited.
► Only access the functionality of the LICCON overload protection according to the specifications in the operating instructions.

Possible limitation in the crane control:
– During certain „Special cases at operation of the LICCON overload protection“, the working speed of the crane is significantly reduced.
– During certain „Special cases at operation of the LICCON overload protection“, the possibility to control the crane is limited in time.
– During certain „Special cases at operation of the LICCON overload protection“, the individual display instruments show no values.

1.2.1 Special operating conditions

If a special operating condition occurs, such as self-blocking of overload protection („Deadlock“), pressing button **F4** or set up key **D** can provide a remedy.

By pressing the key **F4** you can:
– Luff in with suspended load, after the boom radius range of the load chart is left

By pressing the set up key **D**, the function „Exceeding the shut-off limits of the LICCON overload protection“ is activated. This makes it possible:
– To exceed the maximum permissible load moment
– To exceed the maximum value of the F-load display in crane operation.
– To enable individual, limited crane movements after LMB STOP

Note
► Depending on the crane configuration, exceeding the maximum permissible load moment is limited to 110 %.

1.2.2 Assembly / disassembly procedures

By pressing the set up key **D** you can:
– Bypass the LICCON overload protection to carry out erection / take down procedures and assembly procedures.
– Bypass hoist top shut-off (erection / take down procedures and assembly procedures).

Note
► For assembly / disassembly procedures, depending on the circumstances there may not be any display values or they may be significantly reduced.
► The display of the required display values or determination of required values is ensured when proceeding correctly.

LWE/LTR 1100-009/25105-02-02/en

copyright © Liebherr-Werk Ehingen GmbH 2023

1.2.3 Failure of components

WARNING
Erroneous operation of the crane!
If the LICCON overload protection turns the crane movement off due to failure of components, then the exact cause for the shut-off must be determined.
After a failure of components, no normal operating condition can be reached. No normal crane operation is possible.
► Procedure, see separate chapter for Diagnostics and Maintenance.
► Resume normal crane operation only when the cause for the shut-off has been remedied and the crane control is fully functioning.

Depending on the crane configuration, a shut-off due to „failure of components“ can be bypassed by:
– Activating the LMB-emergency operation:
  • LMB-emergency operation key switch in the control cabinet
    or
  • LMB-emergency operation transponder / sensor on the rear of the crane cab

  or
– The set up key **D** on the LICCON monitor

The activated function includes the following:
– Allows crane movements in case of failure of components, for example sensors which are required for monitoring by the LICCON overload protection.

Note
► Installation location of the operating elements, see Chapter 4.01

1.2.4 Emergency situations

WARNING
Overload of crane!
If the LICCON overload protection is bypassed, then the LICCON overload protection is entirely deactivated.
If the LICCON overload protection is bypassed, there is no further protection against crane overload.
There is no longer a load torque limiter.
If the LICCON overload protection is bypassed, the crane can be overloaded readily.
Overloading the crane can lead to accidents.
During accidents, personnel could be killed or seriously injured.
► If the LICCON overload protection is bypassed, take into account that the LICCON overload protection is entirely deactivated.
► If the LICCON overload protection is bypassed, the crane operator assumes the full responsibility for his actions.

Depending on the crane configuration, the LICCON overload protection can be bypassed as follows:
– Activating the LMB-emergency operation:
  • LMB-emergency operation key switch in the control cabinet
    or
  • LMB-emergency operation transponder / sensor on the rear of the crane cab

  or
– The set up key **D** on the LICCON monitor

The activated function includes the following:
– Allowing crane movements in emergency situations without monitoring by the LICCON overload protection

LWE/LTR 1100-009/25105-02-02/en

copyright © Liebherr-Werk Ehingen GmbH 2023

Note
- ► Installation location of the operating elements, see Chapter 4.01
- ► For the procedure, see Crane operating instructions, chapter 4.04.

1.3 Operating condition of crane

A **„normal operating condition“** can only be reached if all of the following statements apply:
- The crane is in a proper condition.
- The crane is set up according to the specifications in the Operating instructions.
- The set up configuration of the crane has been entered correctly in the LICCON computer system.
- The crane is in the range of a valid load chart.
- The crane utilization is in the range of 0 % to 100 %.
- The F-load display is in the permissible range.
- All required displays in the LICCON monitors provide the correct display values.
- All required display instruments are functioning.
- The local conditions meet the specifications for crane application.

The „**operating condition is not normal**“, among others, if one or more of the following statements apply:
- The crane has defects that compromise operational safety.
- The crane is not set up according to the specifications in the operating instructions.
- The set up configuration of the crane deviates from the entries in the LICCON computer system.
- The limit values from the load charts are exceeded.
- The maximum permissible load moment is exceeded.
- The hoist top shut-off is bypassed.
- The limit values from the F-load display are exceeded.
- Required displays in the LICCON monitors provide no correct display values.
- Required display instruments are not functioning.
- The functionality of the LICCON overload protection has intervened by pressing the button **F4**, set up button **D**.
- When LMB emergency operation is activated.
- Crane movements are carried out without a functioning overload protection.
- Crane movements are carried out outside of the load charts.
- A special case at operation of the LICCON overload protection has occurred.

LWE/LTR 1100-009/25105-02-02/en

copyright © Liebherr-Werk Ehingen GmbH 2023

Empty page!

LWE/LTR 1100-009/25105-02-02/en

copyright © Liebherr-Werk Ehingen GmbH 2023

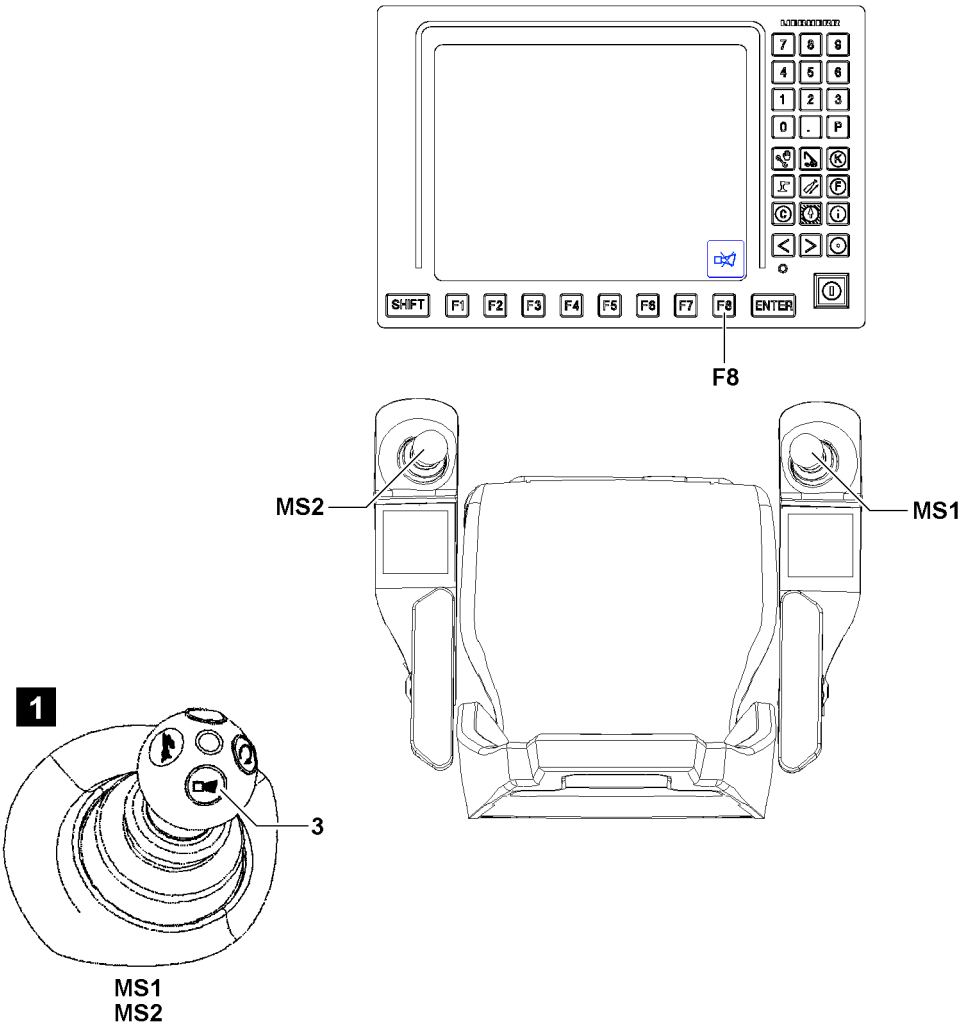

Fig.117246

LWE/LTR 1100-009/25105-02-02/en

copyright © Liebherr-Werk Ehingen GmbH 2023

1.4 Overview of acoustic / optical warnings

- Via the signal sounds of the LICCON monitor, the acoustic warnings are issued to the crane operator.
- The acoustic warnings are issued to the surrounding crane area via a horn on the turntable.
- Via warning icons in display instruments, the optical warnings are issued to the crane operator.
- Via the LMB-warning lights, optical warnings are issued to the area surrounding the crane.
- The acoustic warnings within the crane operator's cab are shut off by pressing the key **F8** on the corresponding LICCON monitor.
- The shut-off of the acoustical warnings outside the crane operator's cab is made by pressing the button **3** (signal horn / horn, illustration **1**) on master switch **MS1** or master switch **MS2**.

1.4.1 General notes regarding the acoustic / optical warnings to the surrounding crane area

WARNING
Disregard of acoustic or optical warnings!
If persons in the crane surrounding area are not informed about the meaning of acoustic / optical warnings of the crane, then there is a danger of accidents.
► Only persons who have been informed about how to proceed correctly according to the acoustic / optical warnings may be in the area surrounding the crane.

In reference to the horn on the turntable, the following applies:
- An intermittent sound is heard: A special case in the operation of the LICCON overload protection has occurred or the overload protection has turned the crane movement off.

In reference to the three color light **9**, (illustration **2**) the following applies:
- The three color light **9** lights up green: The crane is in normal operating condition.
- The three color light **9** lights up yellow: The crane is still in normal operating condition, an advance warning for upcoming shut-off exists.
- The three color light **9** lights up red: The crane movement was turned off by the overload protection.
- The three color light **9** blinks yellow: A special case at operation of the LICCON overload protection has occurred.
- The three color light **9** blinks red: A special case at operation of the LICCON overload protection has occurred.

LWE/LTR 1100-009/25105-02-02/en

copyright © Liebherr-Werk Ehingen GmbH 2023

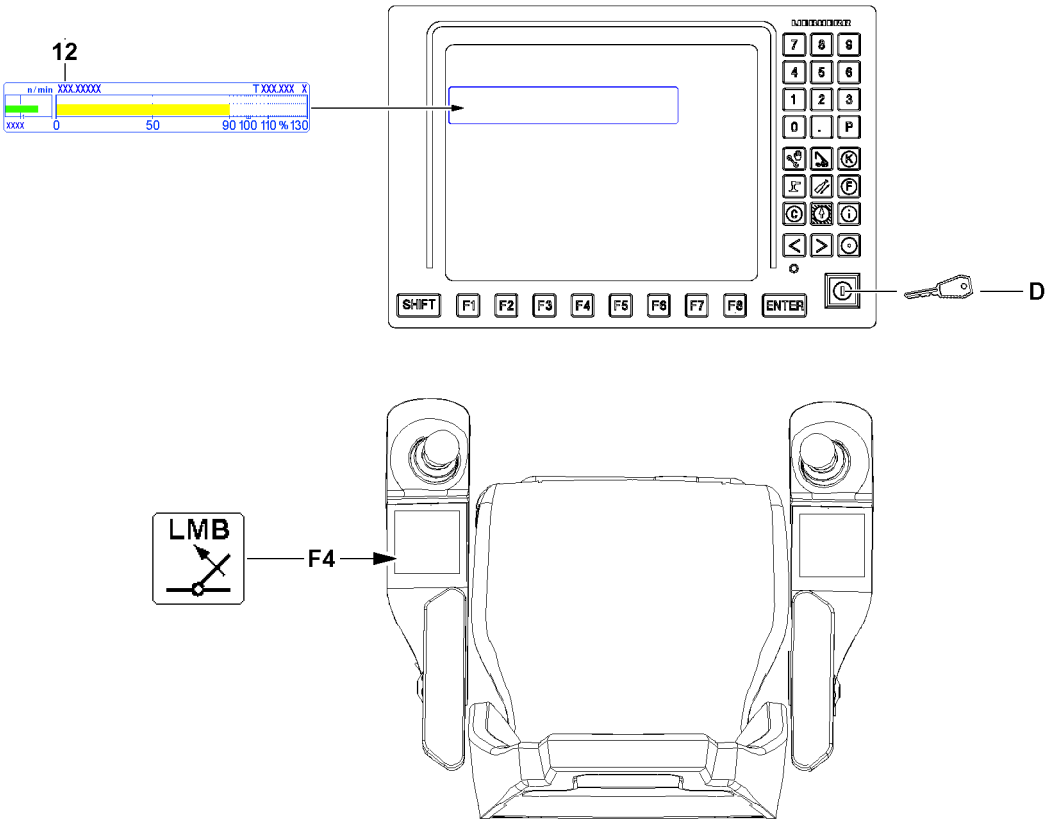

Fig.117247

LWE/LTR 1100-009/25105-02-02/en

copyright © Liebherr-Werk Ehingen GmbH 2023

1.4.2 Description of acoustic / visual warnings

The occurrence of acoustic / optical warnings in crane operation is explained via sample situations. The situation numbers from the chart „Overview of possible situations“ is valid for the following charts in this chapter:

- Acoustic / visual warnings on the LICCON monitor
- LMB warning lights
- Horn on the turntable

Note

► The percentage values in the „Overview of possible situations“ refers to the crane utilization according to the display in the bar diagram for utilization **12**.

Overview of possible situations	
Situation number	**Sample description of the situation**
Situation 001	Normal operating condition with crane utilization of 0 % to 100 %.
Situation 003	The crane movement was turned off due to a crane utilization above 100 % - LMB-STOP was triggered
Situation 004	The crane movement was turned off even though the crane utilization is below 100 % - LMB-STOP was triggered
Situation 005	The crane movement „luffing in with suspended load“ is carried out at a crane utilization above 100 % with the button **F4**
Situation 006	Failure of LICCON overload protection components
Situation 010	The shut off limits of the LICCON overload protection are deactivated / exceeded with the set up key **D**
Situation 011	An actuated hoist limit switch (hoist top shut-off) is bypassed with the set up key **D**
Situation 020	The assembly operation was activated with the set up key **D** to erect / take down the boom system No load chart is available.

LWE/LTR 1100-009/25105-02-02/en

copyright © Liebherr-Werk Ehingen GmbH 2023

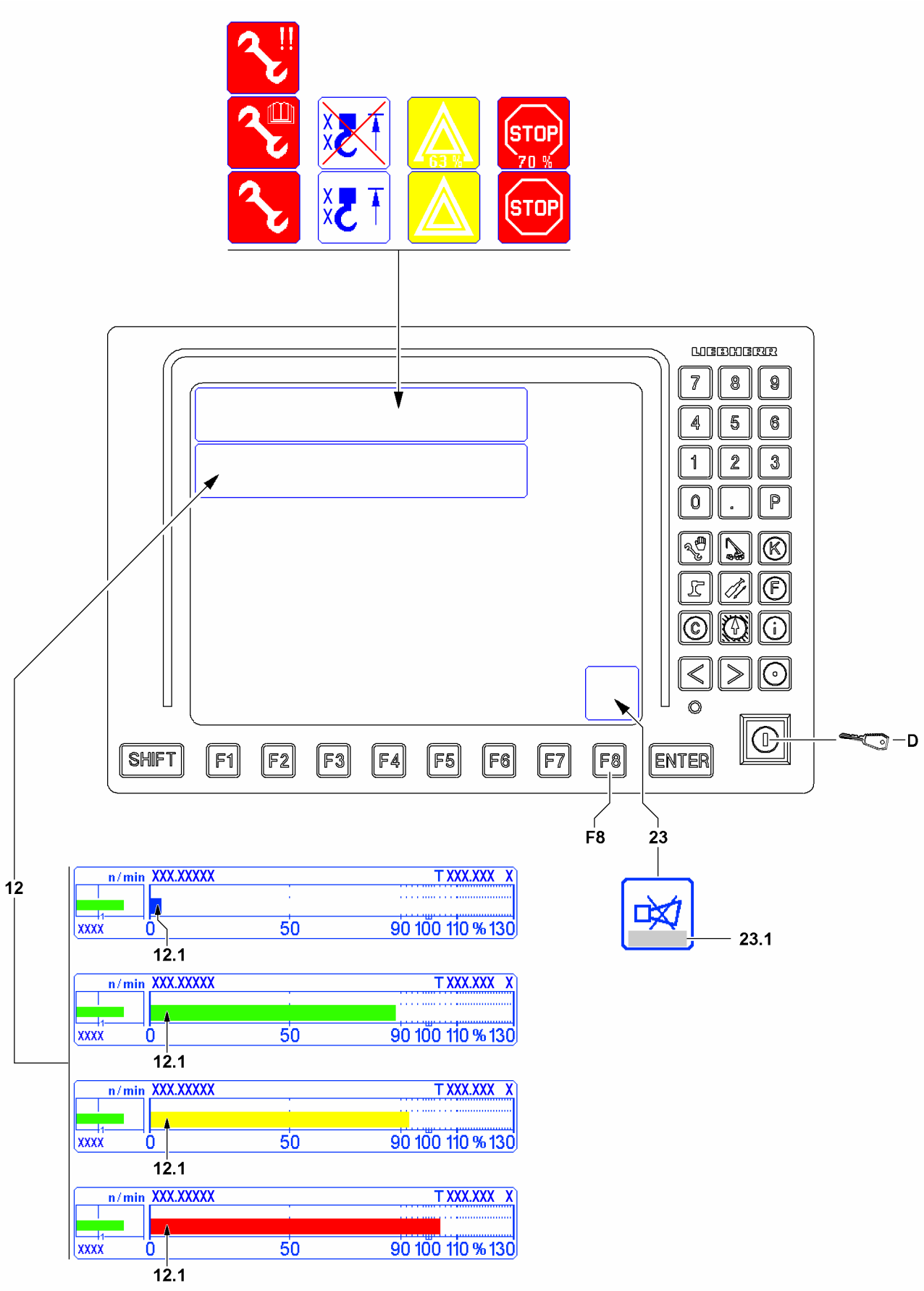

Fig.148653

LWE/LTR 1100-009/25105-02-02/en

copyright © Liebherr-Werk Ehingen GmbH 2023

1.4.3 Acoustic / visual warnings within the crane operator's cab

Note
The percentage values refer to the crane utilization according to the display in the bar diagram for utilization **12**.
If the limit values for the load torque limiter for advance warning and shut-off are set otherwise by the crane driver, the percentage values are correspondingly lower. See the Crane operating instructions, chapter 4.02.

- ► Up to utilization of 20%, the utilization bar **12.1** is blue, when the actual load is simultaneously lower than 0.5 t.
- ► Up to utilization of 90 %, the utilization bar **12.1** is green. In the case of very low utilization, the utilization bar **12.1** is also blue.
- ► Above utilization of 90% to 100 %, the utilization bar **12.1** is yellow.
- ► Above utilization of 100 %, the utilization bar **12.1** is red.

WARNING
Erroneous operation of the crane!

- ► In relation with acoustic / optical warnings in the horn **23** icon, pay attention to the notes regarding error messages **23.1**.

Note

- ► For a more detailed description of the situations according to the situation numbers, see chart „Overview of possible situations“

Acoustic / visual warnings on the LICCON monitor							
Situation[4]	Acoustic warning		Visual warning LICCON monitor				
	Horn short[2]	Horn long[2]	Warning signs		Special signs		
Situation 001	Above 90 %[5]	-	Above 90 %[5]	-	-	-	-
Situation 003	Above 90 %[5]	Above 101 %[5]	Above 90 %[5]	Above 101 %[5]	-	-	-
Situation 004	-	Always	-	Always	-	-	-
Situation 005	-	Above 101 %[5]	Above 101 %[5]	Above 101 %[5]			
Situation 006				Always	Always[3]		
Situation 010	Above 90 %[5]	Above 101 %[5]	Above 90 %[5]	Above 101 %[5]	Always	-	-
Situation 011[1]	-	Always	-	-	-	-	Always
Situation 020	-	Always	-	-	-	Always	-

[1] Is in part superseded by other warnings
[2] Can be turned off immediately on the LICCON monitor with the function key **F8**
[3] Depending on the crane configuration, a variant of this icon appears, see the Crane operating instructions, chapter 4.02
[4] Description of individual situations, see chart „Overview of possible situations“.
[5] If the limit values for the load torque limiter for advance warning and shut-off are set otherwise by the crane driver, this value can be lower. See the Crane operating instructions, chapter 4.02.

LWE/LTR 1100-009/25105-02-02/en

copyright © Liebherr-Werk Ehingen GmbH 2023

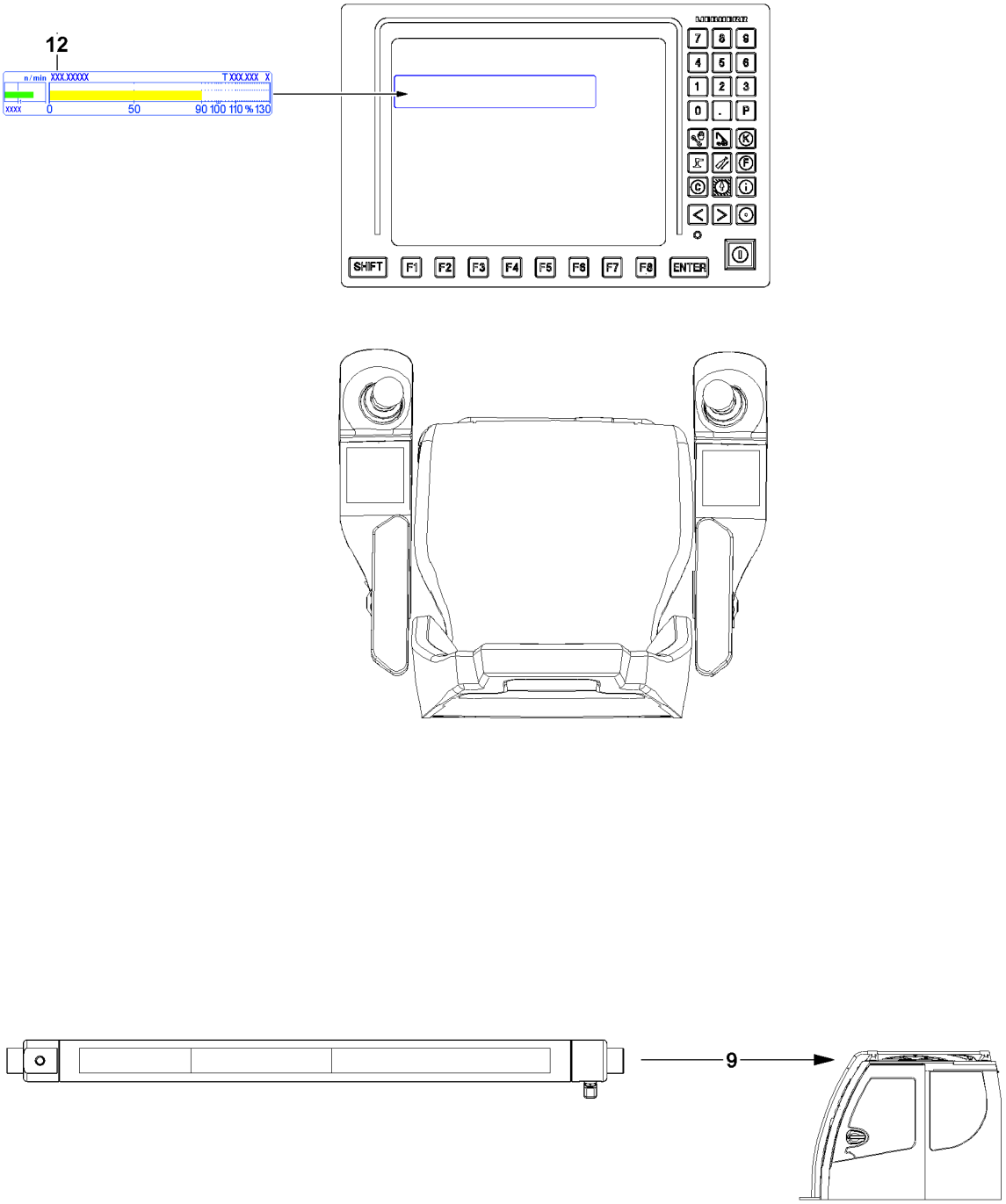

LWE/LTR 1100-009/25105-02-02/en

Fig.117249

copyright © Liebherr-Werk Ehingen GmbH 2023

1.4.4 Acoustic / visual warnings outside the crane operator's cab

Note

- ► For description of the situations assigned to the situation numbers, see chart „Overview of possible situations“
- ► The percentage values refer to the crane utilization according to the display in the bar diagram for utilization **12**.

LMB warning lights				
Situation number	**At utilization of crane**	Three color light **9**		
		Green	**Yellow**	**Red**
Situation 001	0 % to 89 %	Lights up		
	90 % to 100 %		Lights up	
Situation 003	Above 101 %			Lights up
Situation 004	Always			Lights up
Situation 005	Above 101 %			Blinks
Situation 006	Always			Blinks
Situation 010[6)]	0 % to 89 %	Lights up		
	90 % to 100 %		Lights up	
	101 % to 110 %		Blinks	
	Above 111 %			Lights up
Situation 010	0 % to 89 %	Lights up		
	90 % to 100 %		Lights up	
	Above 101 %			Blinks
Situation 011[1)]	Always		Blinks	
Situation 020	No display value		Blinks	

[1)] Is in part superseded by other warnings
[6)] Cranes according to EN13000:2010

LWE/LTR 1100-009/25105-02-02/en

copyright © Liebherr-Werk Ehingen GmbH 2023

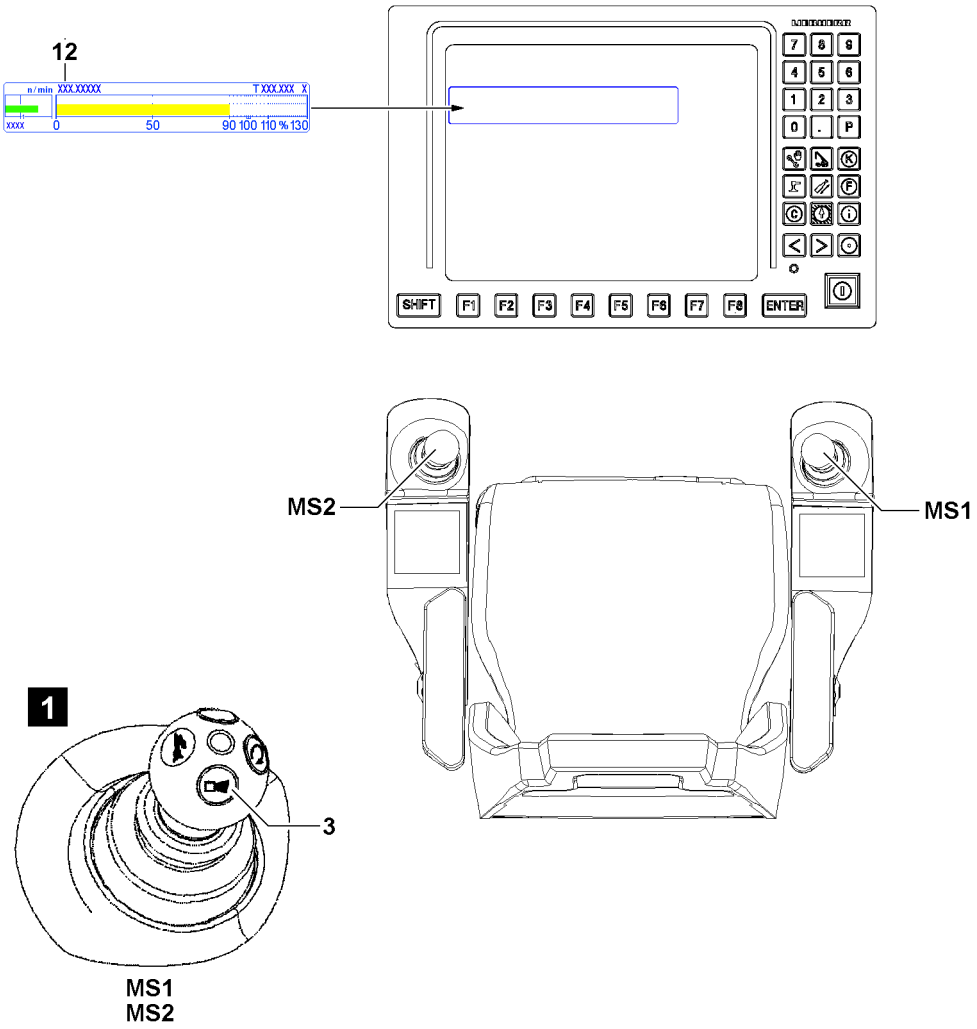

Fig.117250

LWE/LTR 1100-009/25105-02-02/en

copyright © Liebherr-Werk Ehingen GmbH 2023

Note

- ► For description of the situations assigned to the situation numbers, see chart „Overview of possible situations“
- ► The percentage values refer to the crane utilization according to the display in the bar diagram for utilization **12**.

The shut-off of the acoustical warnings outside the crane operator’s cab is made by pressing the button **3** (signal horn / horn, illustration **1**) on master switch **MS1** or master switch **MS2**. The signal shut-off is effective no earlier than after five seconds.

Signal turntable		
Situation number	**At utilization of crane**	**Signal type**
Situation 001	0 % to 89 %	-
Situation 002	90 % to 100 %	-
Situation 003	Above 101 %	Intermittent sound, can be shut off after five seconds
Situation 004	Always	-
Situation 005	Above 101 %	Intermittent sound, can be shut off after five seconds
Situation 006	Always	Intermittent sound
Situation 010	Above 111 %	Intermittent sound, can be shut off after five seconds
Situation 011[1)]	Always	Intermittent sound, can be shut off after five seconds
Situation 020	No display value	-

[1)] Is in part superseded by other warnings

LWE/LTR 1100-009/25105-02-02/en

copyright © Liebherr-Werk Ehingen GmbH 2023

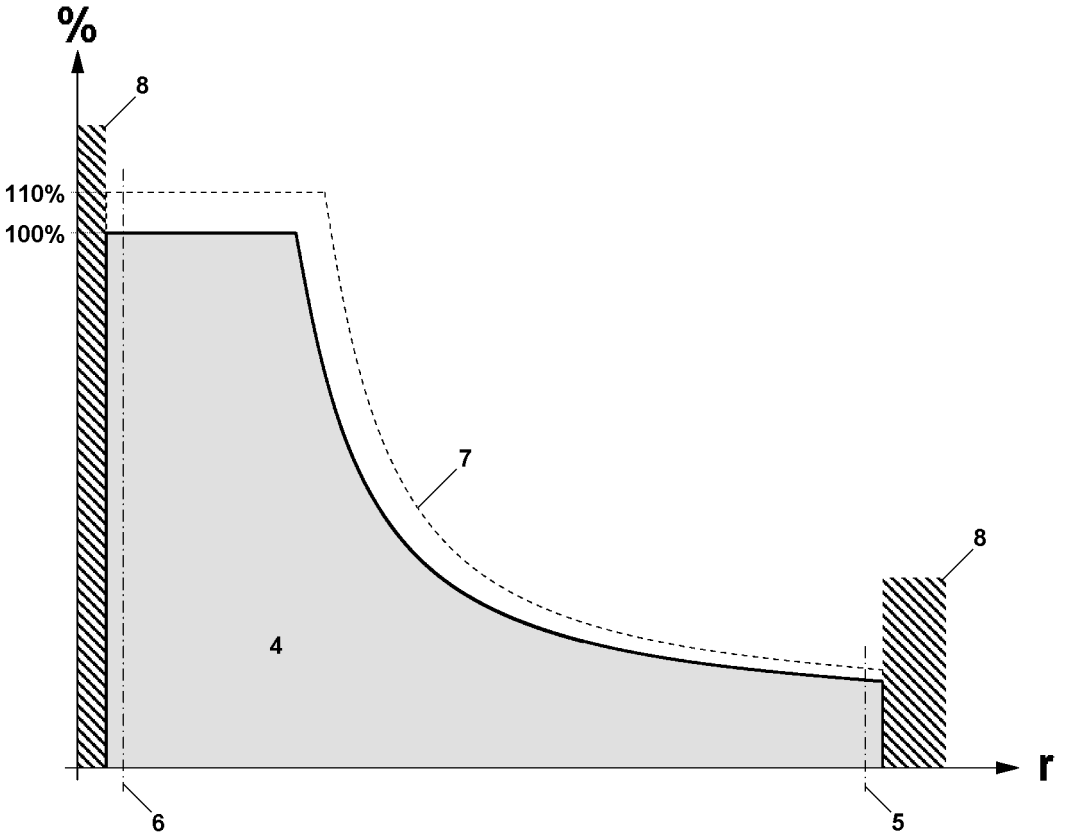

LWE/LTR 1100-009/25105-02-02/en

Fig.115265

copyright © Liebherr-Werk Ehingen GmbH 2023

2 Instructions for resuming crane movement

WARNING
Danger of accident!
If the following points are not observed, personnel can be severely injured or killed.
► The crane operator bears the sole and full responsibility for the adherence to measures to be taken in case of shut-off of crane movement.

2.1 Overview Load chart

Sample overview of a load chart

Axle	Description
r	Boom radius (working radius)
%	Utilization of the crane in percentages

Position	Description
4	Range „Load chart available“
5	Lower limit angle load chart[1)]
6	Upper limit angle load chart[2)]
7	Curve utilization 110 %
8	Range „No load chart available“

[1)] Maximum boom radius of the boom within the load chart reached, the boom is located within the load chart in the flattest position
[2)] Minimum boom radius of the boom within the load chart reached, the boom is located within the load chart in the steepest position

2.2 Shut-off of crane movement

The LICCON overload protection carries out the following shut-offs if a limit value is exceeded during crane operation:
– Shut-off of overload
– Luffing the telescopic boom up / down shut-off
– Luffing the auxiliary boom / accessory up / down shut-off
– Telescoping the telescopic boom out shut-off (limit length)
– Telescoping the telescopic boom in shut-off
– Spooling the winch up / out shut-off
– Hoist top shut-off
– Crane movement with danger of tipping to the rear shut-off
– Maximum value F-load display shut-off
– Telescoping cylinder (pressure too high) shut-off
– Shut-off due to error message

LWE/LTR 1100-009/25105-02-02/en

copyright © Liebherr-Werk Ehingen GmbH 2023

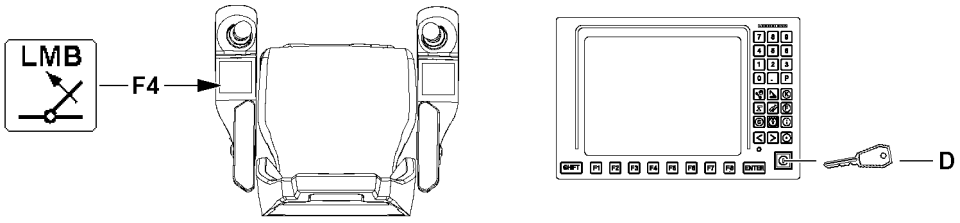

Fig.117251

WARNING
Erroneous operation of the crane!
If the LICCON overload protection turns the crane movement off, then the exact cause for the shut-off must be determined first.
- ► Determine the cause for the shut-off and remedy it if possible without pressing the key **F4** „Luffing in with suspended load“ or the set up key **D**.
- ► If it is not possible to reset the crane movement causing the shut-off, see section „Procedure for special cases at operation of the LICCON overload protection“.

2.2.1 Shut-off of overload

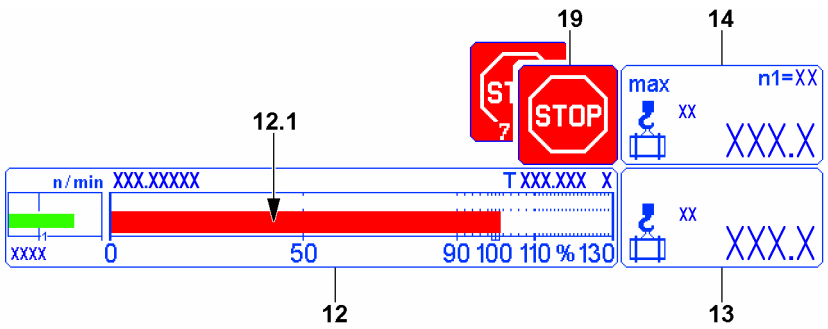

Fig.148656

In the bar diagram utilization **12** the utilization bar **12.1** exceeds the 100 % mark. The LICCON overload protection has turned off the crane movement, the LMB-STOP icon **19** appears. The actual load **13** has exceeded the maximum load **14**.

Note
The crane and load may be swaying.

If possible:
- ► Wait until the crane and load came to a complete standstill.

Note
Limit values for the load torque limiter for advance warning and shut-off reduced
If the limit values for the load torque limiter for advance warning and shut-off are reduced by the crane operator, shut-off takes place earlier according to the set value.
- ► Observe the settings of the limit values for the load torque limiter for advance warning and shut-off, see the crane operating instructions, chapter 4.02.

When the utilization bar diagram **12** levels off at less than or equal to 100 %:
- ► Carry out crane movements in such a way that no repeated shut-off by the LICCON overload protection occurs.

When the utilization bar diagram **12** levels off at more than 100 %:
- ► Check if there are permissible tasks, which positively influence the utilization of the crane.

When necessary and possible:
- ► Set down the load.

LWE/LTR 1100-009/25105-02-02/en

copyright © Liebherr-Werk Ehingen GmbH 2023

Note
It is possible that the following tasks can positively influence the utilization of the crane:
- ► Set down and reduce the load.
- ► Reduce the boom radius.
- ► Set down the load and reconfigure the crane to obtain higher load chart values.
- ► Set down the load and reduce the boom radius by changing over the crane.

► Carry out permissible tasks that reduce the utilization of the crane.

Problem remedy
Crane operation is limited because the maximum load **14** is seemingly too low or reached too soon?
- ► Make sure that the load bearing capacity of the crane is sufficient for the upcoming crane application.
- ► Make sure that a valid set up configuration has been entered in the LICCON computer system.
- ► Make sure that the crane is assembled according to the specifications in the Operating instructions.
- ► Make sure that the actual set up configuration and the entered set up status of the crane match.
- ► Make sure that all attachment parts and guy rods on the boom system, which are not needed, have been removed (weight).
- ► Make sure that the boom system is free of snow and ice (weight).
- ► Make sure that the environmental influences (for example wind influence) onto the crane are not too great.
- ► Contact Liebherr Service.

When the shut-off cannot be remedied despite the observance of all points listed here:
► Change to section „Procedure for special cases at operation of the LICCON overload protection“.

2.2.2 Luffing the telescopic boom up / down shut-off

Note
► The illustration of the icon **15** depends on the set up configuration of the crane.

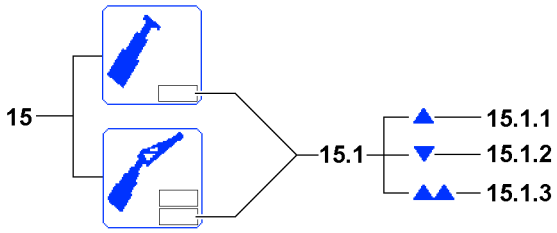

Fig.117253

In the icon **15** the arrow **15.1.1** or arrow **15.1.2** blinks and the LICCON overload protection has shut off the crane movement.

„Luffing the telescopic boom up“ (arrow **15.1.1**) or „Luffing the telescopic boom down“ (arrow **15.1.2**) was shut off because the upper / lower limit angle of the selected load chart was exceeded or fallen below.

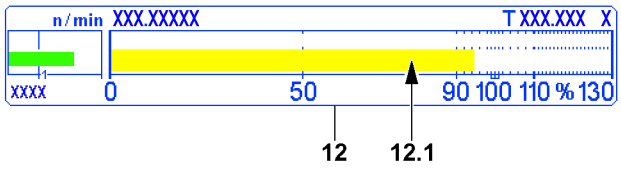

Fig.117254

LWE/LTR 1100-009/25105-02-02/en

copyright © Liebherr-Werk Ehingen GmbH 2023

Note

► If the utilization of the crane approaches 100 % (in the utilization bar diagram **12** the utilization bar **12.1** is just before 100 %) and the maximum load according to the load chart (falling load capacity) drops when continuing to luff up the boom, then the arrow **15.1.1** also appears and the „Luffing the telescopic boom up“ crane movement is turned off.

If the double arrow **15.1.3** appears, then:

– **either** it was luffed up to a limit switch or the limit switch has turned off the „Luffing the telescopic boom up“ crane movement
– **or** there is an error on one of the „Telescopic boom top“ limit switches

The arrow **15.1.1** appears and the „luffing the telescopic boom up“ crane movement is turned off:

► Luff the telescopic boom down.

Result:

– Crane operation is possible again.

The arrow **15.1.2** appears and the „luffing the telescopic boom down“ crane movement is turned off:

► Luff the telescopic boom up.

Result:

– Crane operation is possible again.

The double arrow **15.1.3** appears and the „Luffing the telescopic boom up“ crane movement is turned off:

► Luff the telescopic boom down.

Result:

– Crane operation is possible again.

Problem remedy

The double arrow **15.1.3** appears continuously?
If a double arrow **15.1.3** appears without having luffed the telescopic boom up to a limit switch, then there may be an error in the limit switches / sensors.

► Check if there is an error message from the LICCON computer system, see section „Shut-off due to error message“.
► If yes: Remedy the error immediately.

WARNING

Limited warning functions!
If one of the double version limit switches / sensors is not OK and the crane is continued to be operated, then the warning functions of the LICCON overload protection are limited.

► The crane can only be operated in an emergency after failure of a double limit switch.

► Carry out crane movements in such a way that no repeated shut-off by the LICCON overload protection occurs.

2.2.3 Luffing the auxiliary boom / accessory up / down shut-off

Note

► Only in operating modes with auxiliary boom / accessory
► The illustration of the icon **15** depends on the set up configuration of the crane.
► The designation „auxiliary boom / accessory“ comprises all boom types that are installed luffable / adjustable on the telescopic boom.

LWE/LTR 1100-009/25105-02-02/en

copyright © Liebherr-Werk Ehingen GmbH 2023

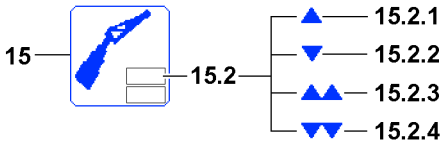

Fig.117255

The arrow **15.2.1** or arrow **15.2.2** blinks in the icon **15** (upper field) and the LICCON overload protection has shut off the crane movement.

„Luffing the auxiliary boom / accessory up“ (arrow **15.2.1**) or „Luffing the auxiliary boom / accessory down“ (arrow **15.2.2**) was shut off because the upper / lower limit angle of the selected load chart was exceeded or fallen below.

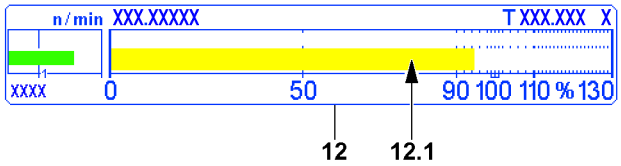

Fig.117254

Note

► If the utilization of the crane approaches 100 % (in the utilization bar diagram **12** the utilization bar **12.1** is just before 100 %) and the maximum load according to the load chart (falling load capacity) drops when continuing to luff up the boom, then the arrow **15.2.1** also appears and the „Luffing the auxiliary boom / accessories up“ crane movement is turned off.

If the double arrow **15.2.3** appears, then:
- **either** it was luffed up to a limit switch or the limit switch has turned off the crane movement „Luffing the auxiliary boom / accessory up“
- **or** the mechanical relapse support has turned off the crane movement „Luffing the auxiliary boom / accessory up“
- **or** there is an error on one of the „Auxiliary boom / accessory top“ limit switches

If the double arrow **15.2.4** appears, then:
- **either** it was luffed down to a limit switch „Auxiliary boom / accessory bottom“ and the limit switch has turned off the crane movement „Luffing the auxiliary boom / accessory up“
- **or** there is an error on one of the „Auxiliary boom / accessory bottom“ limit switches

The arrow **15.2.1** appears and the crane movement „Luffing the auxiliary boom / accessory up“ was turned off:

► Luff the auxiliary boom / accessory down.

Result:

– Crane operation is possible again.

The arrow **15.2.2** appears and the crane movement „Luffing the auxiliary boom / accessory down“ was turned off:

► Luff the auxiliary boom / accessory up.

Result:

– Crane operation is possible again.

The double arrow **15.2.3** appears and the crane movement „Luffing the auxiliary boom / accessory up“ was turned off:

► Luff the auxiliary boom / accessory down.

Result:

– Crane operation is possible again.

copyright © Liebherr-Werk Ehingen GmbH 2023

Problem remedy
The double arrow **15.2.3** appears continuously?
If a double arrow **15.2.3** appears without having luffed up to a limit switch, then there may be an error in the „Auxiliary boom / accessory top“ limit switches.
► Check if there is an error message from the LICCON computer system, see section „Shut-off due to error message“.
► If yes: Remedy the error immediately.

The double arrow **15.2.4** appears and the crane movement „Luffing the auxiliary boom / accessory down“ was turned off:

► Luff the auxiliary boom / accessory up.

Result:

– Crane operation is possible again.

Problem remedy
The double arrow **15.2.4** appears continuously?
If a double arrow **15.2.4** appears without having luffed down to a limit switch, then there may be an error in the limit switches / sensors.
► Check if there is an error message from the LICCON computer system, see the Diagnostics manual.
► If yes: Remedy the error immediately.

WARNING
Limited warning functions!
If one of the double version limit switches / sensors is not OK and the crane is continued to be operated, then the warning functions of the LICCON overload protection are limited.
► The crane can only be operated in an emergency after failure of a double limit switch / sensor.

► Carry out crane movements in such a way that no repeated shut-off by the LICCON overload protection occurs.

2.2.4 Telescoping the telescopic boom out shut-off (limit length)

Fig.117258

An error message appears in the „Horn“ icon, illustration **1**. An acoustical signal sounds, the LICCON overload protection has interrupted the „Telescoping the telescopic boom out“ crane movement. Depending on the crane type, the double arrow in the icon **16** will also blink.

The „Telescoping the telescopic boom out“ crane movement was shut off because the **limit length** of the selected load chart has been exceeded.

► Telescope the telescopic boom in.

Result:

– Crane operation is possible again.

LWE/LTR 1100-009/25105-02-02/en

copyright © Liebherr-Werk Ehingen GmbH 2023

2.2.5 Telescoping the telescopic boom in shut-off

Fig.117258

An error message appears in the „Horn“ icon, illustration **1**. An acoustical signal sounds, the LICCON overload protection has interrupted the „Telescoping the telescopic boom in“ crane movement. Depending on the crane type, the double arrow in the icon **16** will also blink.

The „Telescoping the telescopic boom in“ crane movement was shut off because the **limit length** of the selected load chart has been fallen below.

► Telescope the telescopic boom out.

Result:

– Crane operation is possible again.

2.2.6 Spooling the winch up / out shut-off

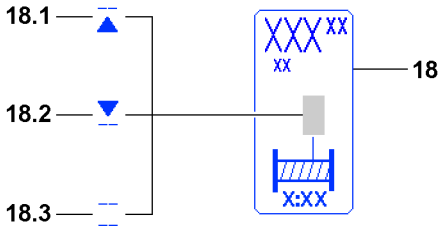

Fig.117256

The line / arrow **18.1**, arrow / line **18.2** or line / line **18.3** appears in the icon **18** and the LICCON overload protection has shut off the crane movement.

„Spooling the winch out“ (line / arrow **18.1**) or „Spooling the winch up“ (arrow / line **18.2**) was shut off because the upper / lower limit value of the rope for the selected winch was exceeded or fallen below.

If the line / line **18.3** appears blinking in the icon **18**, then the concerned winch is deactivated.

The line / arrow **18.1** appears and the „Spooling the winch out“ crane movement turns off:

► Spool the winch up.

Result:

– Crane operation is possible again.

The arrow / line **18.2** appears and the crane movement „Spooling the winch up“ was turned off:

► Spool the winch out.

Result:

– Crane operation is possible again.

The line / line **18.3** appears and the winch is deactivated:

► Activate the winch, see chapter 4.02.

Result:

– Crane operation is possible again.

LWE/LTR 1100-009/25105-02-02/en

copyright © Liebherr-Werk Ehingen GmbH 2023

2.2.7 Hoist top shut-off

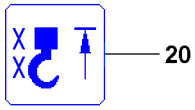

Fig.115281

The „hoist top“ **20** icon appears on the LICCON monitor and the LICCON overload protection has turned off crane movement.

Spooling the hoist winch up was turned off because the hook (hook block / load hook) has touched a hoist limit switch weight during the upward movement and the concerned hoist limit switch was triggered.

WARNING
Property damage / falling load!
► After shut-off spool hoist winch up (hoist top), for every further crane movement, the distance between the hook (hook block / load hook) and the boom head must be checked.

Note
► After a hoist top shut-off occurs, further crane movements, which affect the length of the hoist rope are also shut-off.

► Spool the hoist winch out.

Result:

– Crane operation is possible again.

2.2.8 Crane movement with danger of tipping to the rear shut-off

Note
► Applies only for cranes with support force monitoring*.

WARNING
Danger of tipping backward!
When reaching the programmed minimum / maximum support force limits there is **no** automatic shut-off of crane movements.
Exception: When the two supports with the lowest forces are in the boom direction, then some crane movements which increase the „danger of tipping to the rear“ significantly are turned off.
► If there is a „danger of tipping to the rear“, luff the boom down carefully or telescope out until the support limit forces are again within the minimum / maximum values.

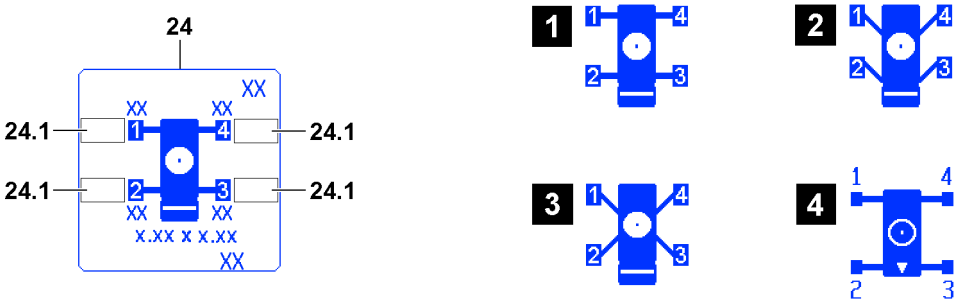

Fig.117257

LWE/LTR 1100-009/25105-02-02/en

copyright © Liebherr-Werk Ehingen GmbH 2023

The icon **24** (depending on the crane similarly to illustration **1** to illustration **4**) is shown on the LICCON monitor with blinking values in the fields **24.1** of the supports with the lowest forces. An acoustical signal sounds and the LICCON overload protection has shut off the crane movement.

Crane movements that increase the „danger of tipping to the rear“ significantly are turned off.

► Luff the boom down carefully until the support limit forces are again within the minimum / maximum values and no value in the fields **24.1** blinks any longer.

Result:

– Crane operation is possible again.

Note
Possibilities to counteract the tipping danger to the rear:
► Luff the boom down.
► Telescope the boom out.
► Reduce the counterweight.

2.2.9 Maximum value F-load display shut-off

Note
► Applies only for certain crane types with respective display on the second LICCON monitor.

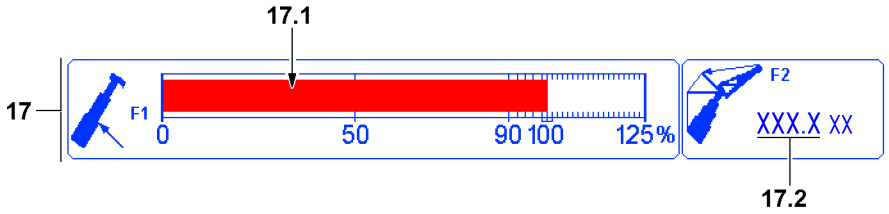

Fig.117259

– F1-utilization bar **17.1** = Test point F1 (luffing cylinder pressure display)
– F2-actual value **17.2** = Test point F2 (force of guying auxiliary boom / accessories)
Note: Appears only for a corresponding boom system

In the F-load display **17** the F1-utilization bar **17.1** exceeds the 100 % mark and the LICCON overload protection has shut off the crane movement. $F1_{actual}$ has exceeded $F1_{max}$.

All subsequent movements, which lead to a deterioration of the force ratios on the test point F1, are shut off.

► Reverse any crane movement that has caused the shut-off.
or
Initiate an alternative crane movement that improves the force ration on test point F1.

Result:

– Crane operation is possible again.

► Carry out crane movements in such a way that no repeated shut-off by the LICCON overload protection occurs.

LWE/LTR 1100-009/25105-02-02/en

copyright © Liebherr-Werk Ehingen GmbH 2023

Problem remedy

The crane operation is limited because the $F1_{max}$ apparently is reached too early?

- ► Make sure that a valid set up configuration has been entered in the LICCON computer system.
- ► Make sure that the crane is assembled according to the specifications in the Operating instructions.
- ► Make sure that the actual set up configuration and the entered set up status of the crane match.
- ► Make sure that all attachment parts and guy rods on the boom system, which are not needed, have been removed (weight).
- ► Make sure that the boom system is free of snow and ice (weight).
- ► Make sure that the wind influence on the crane is not too great.

If no irregularities can be found:

- ► Contact Liebherr Service.

When the shut-off cannot be remedied despite the observance of all points listed here:

- ► Change to section „Procedure for special cases at operation of the LICCON overload protection“.

2.2.10 Telescoping cylinder (pressure too high) shut-off

Note

- ► Applies only for certain crane types with respective display on the second LICCON monitor.

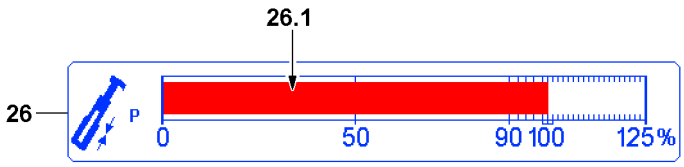

Fig.117260

In the icon **26** (telescoping cylinder pressure) the utilization bar **26.1** reaches the 100 % mark and the LICCON overload protection has shut off the crane movement.

All further movements, which directly lead to an increase of the telescoping cylinder pressure, are shut off.

- ► Lower the telescoping cylinder pressure by lowering the load.
  or
  Initiate an alternative crane movement that lowers the telescoping cylinder pressure.

Result:

– Crane operation is possible again.

During assembly operation:

Make sure that the specifications in the erection / take-down charts are observed.

- ► Check that the specifications are observed.

2.2.11 Shut-off due to error message

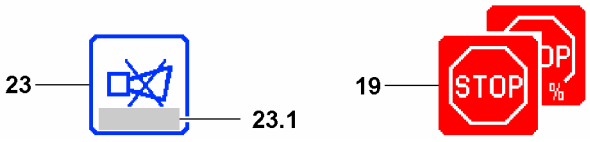

Fig.148297: Shut-off due to error message

In the icon **23** appears an error message, the icon **19** appears in the LICCON monitor and the LICCON overload protection has turned off crane movement.

LWE/LTR 1100-009/25105-02-02/en

copyright © Liebherr-Werk Ehingen GmbH 2023

► Determine the existing error with the help of the error message from the error field **23.1** in icon **23**, see Diagnostics manual.
► Rectify the error.

If the error cannot be remedied:
► Contact Liebherr Service.

Problem remedy
The erection of the crane, for example after assembly at a new job site or with another set up configuration, is not possible due to an error message?
► Evaluate the error message.
► Make sure that all electrical connections are established correctly.
► Check if all sensors are connected properly.
► Check if all end plugs (dust caps with integrated electric) have been connected properly.

Note
If there is a defect in an involved sensor (LMB), then the crane can no longer be operated in normal operating condition.
► Fix / replace the sensor, contact Liebherr Service if necessary.

LWE/LTR 1100-009/25105-02-02/en

copyright © Liebherr-Werk Ehingen GmbH 2023

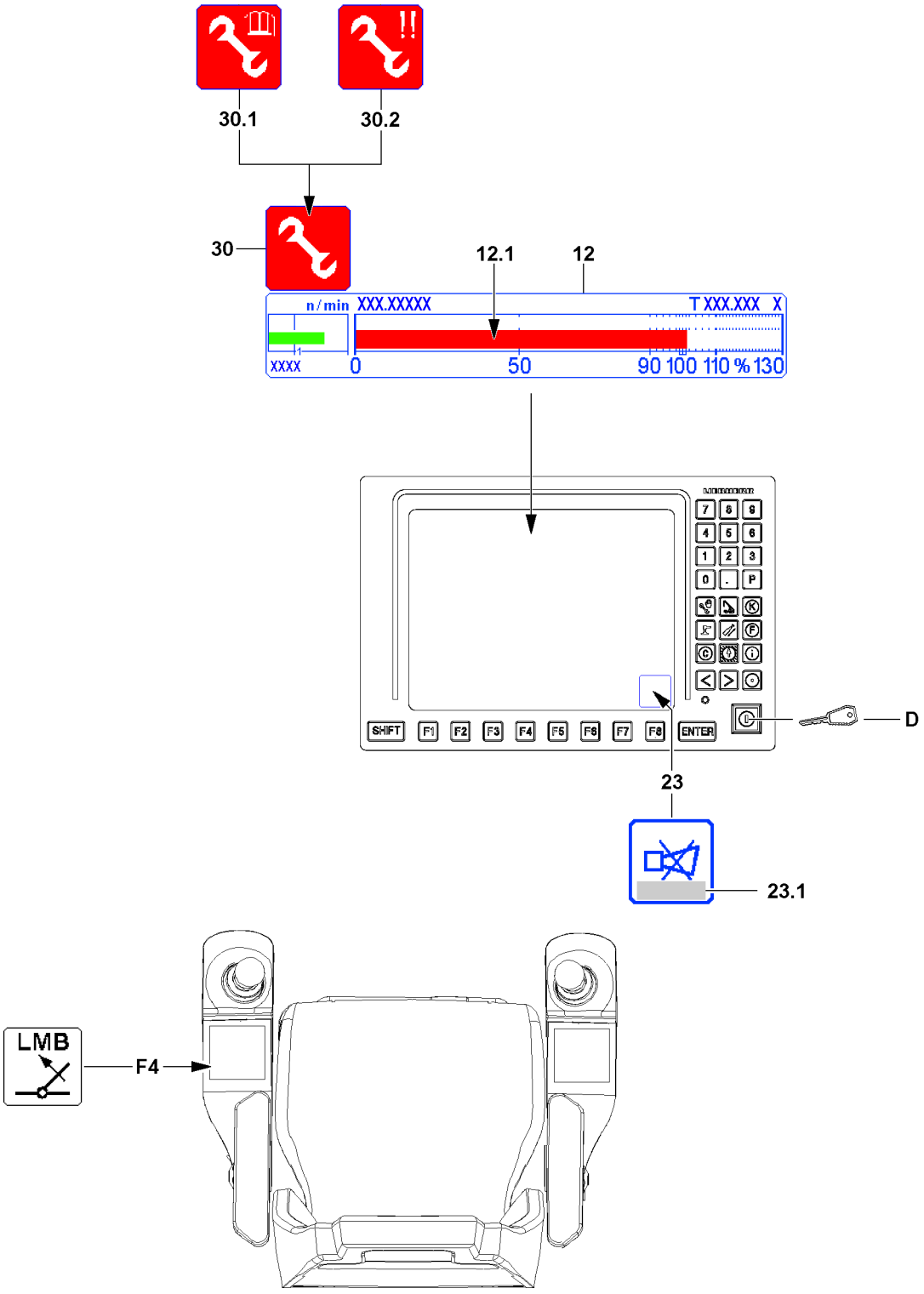

LWE/LTR 1100-009/25105-02-02/en

Fig.117261

copyright © Liebherr-Werk Ehingen GmbH 2023

2.3 Procedure for special cases at operation of the LICCON overload protection

Within the crane operator's cab, the following operating elements available for Special cases at operation of the LICCON overload protection:
- Button **F4** on the left control panel
- Set up key **D** on the right LICCON monitor

By pressing button **F4** and set up key **D** the functionality of the LICCON overload protection is accessed. If the set up key **D** is actuated, the assembly icon **30** appears in the LICCON monitor 0.

The assembly icon **30** appears, depending on the situation, also as:
- Assembly icon **30.1** - no load chart / assembly condition / sensor defect
- Assembly icon **30.2** - emergency operation (also with only one exclamation mark)

Error messages **23.1** also appear in the horn icon **23**:
- Observe and evaluate the error messages **23.1**, see also the Diagnostics manual.

WARNING
Risk of overloading and toppling of the crane!
If the functionality of the LICCON overload protection intervenes without knowing the exact cause for the shut-off, then the crane can be overloaded and topple over.
Personnel can be severely injured or killed.
- ► Before accessing the functionality of the LICCON overload protection, determine the exact cause for the shut-off.
- ► Observe and evaluate the error messages **23.1**.

WARNING
Intervention of the functionality of the LICCON overload protection!
When accessing the functionality of the LICCON overload protection, the LICCON overload protection is deactivated totally or limited.
It is possible to exceed several shut-off limits of the LICCON overload protection simultaneously or one after the other.
It is possible to carry out crane movements that are not monitored by the LICCON overload protection.
Without the LICCON overload protection, no additional protection against overload of the crane via the crane control is present.
- ► When accessing the functionality of the LICCON overload protection, take into account that the LICCON overload protection is deactivated totally or is limited.
- ► Only access the functionality of the LICCON overload protection according to the specifications in the operating instructions.
- ► Outside of the load charts, the data in the erection / take-down charts is binding.

WARNING
Leaving the load chart!
If the set up key **D** is actuated, it is possible that the crane leaves the range of the load charts.
Without a load chart, various display values are no longer displayed on the crane operating screen.
A load on the hook can no longer be monitored by the LICCON overload protection.
Severe accidents due to crane overload can result.
Personnel can be severely injured or killed.
- ► Do not leave the range of the load charts.

LWE/LTR 1100-009/25105-02-02/en

copyright © Liebherr-Werk Ehingen GmbH 2023

WARNING
Danger of accident due to incorrect procedure!
Due to erroneous operation or deliberate misuse, the crane could collapse, the boom can break off or the crane can topple over.
Button **F4** „Luffing in at suspended load“ and set up key **D** may only be actuated when it is ensured that without their actuation no normal operating status (see section „operating status of the crane“) can be reached.

- ► Actuate the set up key **D** only when no normal operating status can be reached with the button **F4** „Luffing in with suspended load“.
- ► The set up key **D** may only be actuated by persons who are aware of the effects of their acts regarding the intervention of the functionality of the LICCON overload protection.
- ► Intervention of the functionality of the LICCON overload protection requires the presence of an authorized person and must be performed with utmost caution.
- ► Accessing the functionality of the LICCON overload protection is prohibited in normal crane operation.

WARNING
Expanded working / danger zone of the crane!
Due to an access the functionality of the LICCON overload protection it is possible that the working / danger zone of the crane is significantly expanded.
If these circumstances are not observed, collisions and accidents can occur.
Personnel can be severely injured or killed.

- ► During a special case at operation of the LICCON overload protection take an expanded working / danger zone of the crane into account and monitor it.

WARNING
Overload of crane!
Luffing in / pulling in of a load standing on the ground is not permissible.
When picking up a load by luffing the boom up, the crane can be overloaded.
This could result in serious accidents.

- ► Taking on load by luffing up the boom is prohibited.
- ► Pick up a load only with the hoist gear.

WARNING
Self-blocking of the overload protection (Deadlock)
After activation of the „exceeding the shut-off limits of the LICCON overload protection“ function, if no crane movements that lead immediately to a normal operating status (see section „operating status of the crane“) are initiated, then the overload protection can be self-blocked (Deadlock).
In the case of a self-blocked overload protection, it is no longer possible to control the crane.

- ► After activation of the function „exceeding the shut-off limits of the LICCON overload protection“ initiate crane movements that lead immediately to a normal operating condition (see section „operating condition of the crane“).

Possible limitation in the crane control during certain „Special cases for operation of the LICCON overload protection“:

- – During certain „Special cases for operation of the LICCON overload protection“ the shut-off limits of the overload protection can be exceeded to maximum 110 % by pressing the set up key **D**
- – During certain „Special cases at operation of the LICCON overload protection“, the working speed of the crane is significantly reduced.
- – During certain „Special cases at operation of the LICCON overload protection“, the possibility to control the crane is limited in time.
- – During certain „Special cases at operation of the LICCON overload protection“, the individual display instruments show no values.

LWE/LTR 1100-009/25105-02-02/en

copyright © Liebherr-Werk Ehingen GmbH 2023

Note
Depending on the number of load positions, the display in the utilization bar diagram **12** changes for certain crane types.
- ► If an additional utilization bar appears next to the utilization bar **12.1**, then the description applies accordingly.
- ► For a detailed description of the utilization bar diagram **12**, see chapter 4.02.

LWE/LTR 1100-009/25105-02-02/en

copyright © Liebherr-Werk Ehingen GmbH 2023

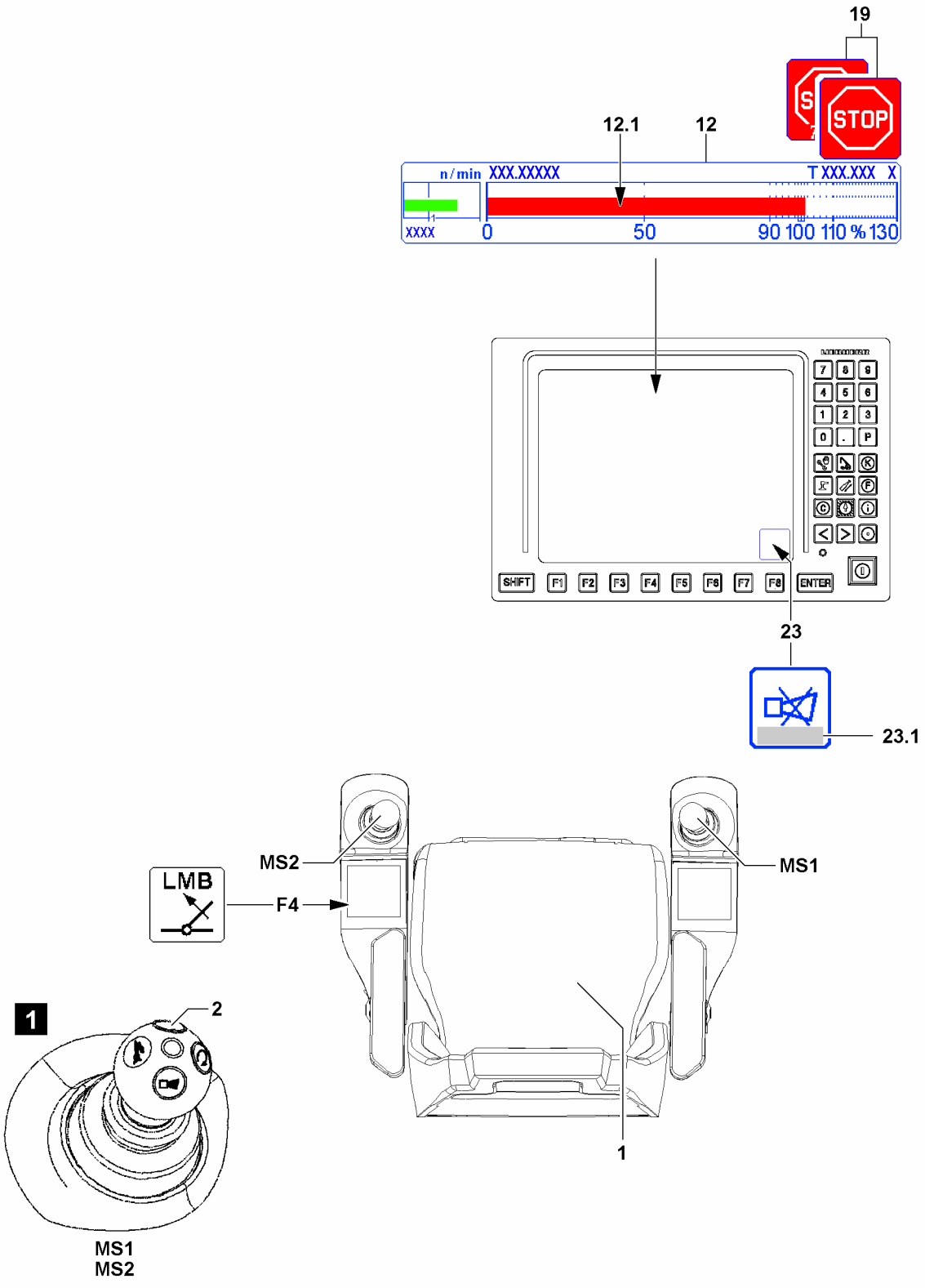

Fig.148660

LWE/LTR 1100-009/25105-02-02/en

copyright © Liebherr-Werk Ehingen GmbH 2023

2.3.1 Luffing in with a suspended load

If the maximum permissible load torque is exceeded, the LICCON overload protection turns off all crane movements that increase the load torque.

In the bar diagram utilization **12** (load moment display) the utilization bar **12.1** is red (shut-off limit value exceeded) and the LICCON monitor displays the icon **19**.

Note
Limit values for the load torque limiter for advance warning and shut-off reduced
If the limit values for the load torque limiter for advance warning and shut-off are reduced by the crane operator, shut-off takes place earlier according to the set value.
► Observe the settings of the limit values for the load torque limiter for advance warning and shut-off, see the crane operating instructions, chapter 4.02.

This shut-off limit can be exceeded by actuating the button **F4** „Luffing in with suspended load“.

Make sure that the following prerequisites are met:
– The load hangs freely.
– The load hook / hook block and boom system have no ground contact.
– Either the seat contact button **1** or one of the buttons **2** (illustration **1**) of the master switches (MS1, MS2) is actuated.

Note
If the load is reduced by luffing up or the values in the utilization bar diagram **12** are exceeded too much, then the „Luffing in with suspended load“ button **F4** is possibly not functioning.
► Pay attention to notes regarding error messages **23.1** occurring in the horn **23** icon.
► For the procedure when the „Luffing in with suspended load“ button **F4** is not functioning, see section „Exceedance of maximum permissible load moment“.

► Press the „luffing in with suspended load“ button **F4** and hold it.

Result:

– The LICCON overload protection is inactive.

► Luff the load in.

The „Luffing in with suspended load“ function is deactivated:
– When the „luffing in with suspended load“ button **F4** is not longer actuated.
– When neither the seat contact button **1** nor one of the buttons **2** of the master switches (MS1, MS2) is actuated.

The „Luffing in with a suspended load“ function is deactivated:
– The LICCON overload protection is active.

► Carry out crane movements in such a way that no repeated shut-off by the LICCON overload protection occurs.

LWE/LTR 1100-009/25105-02-02/en

copyright © Liebherr-Werk Ehingen GmbH 2023

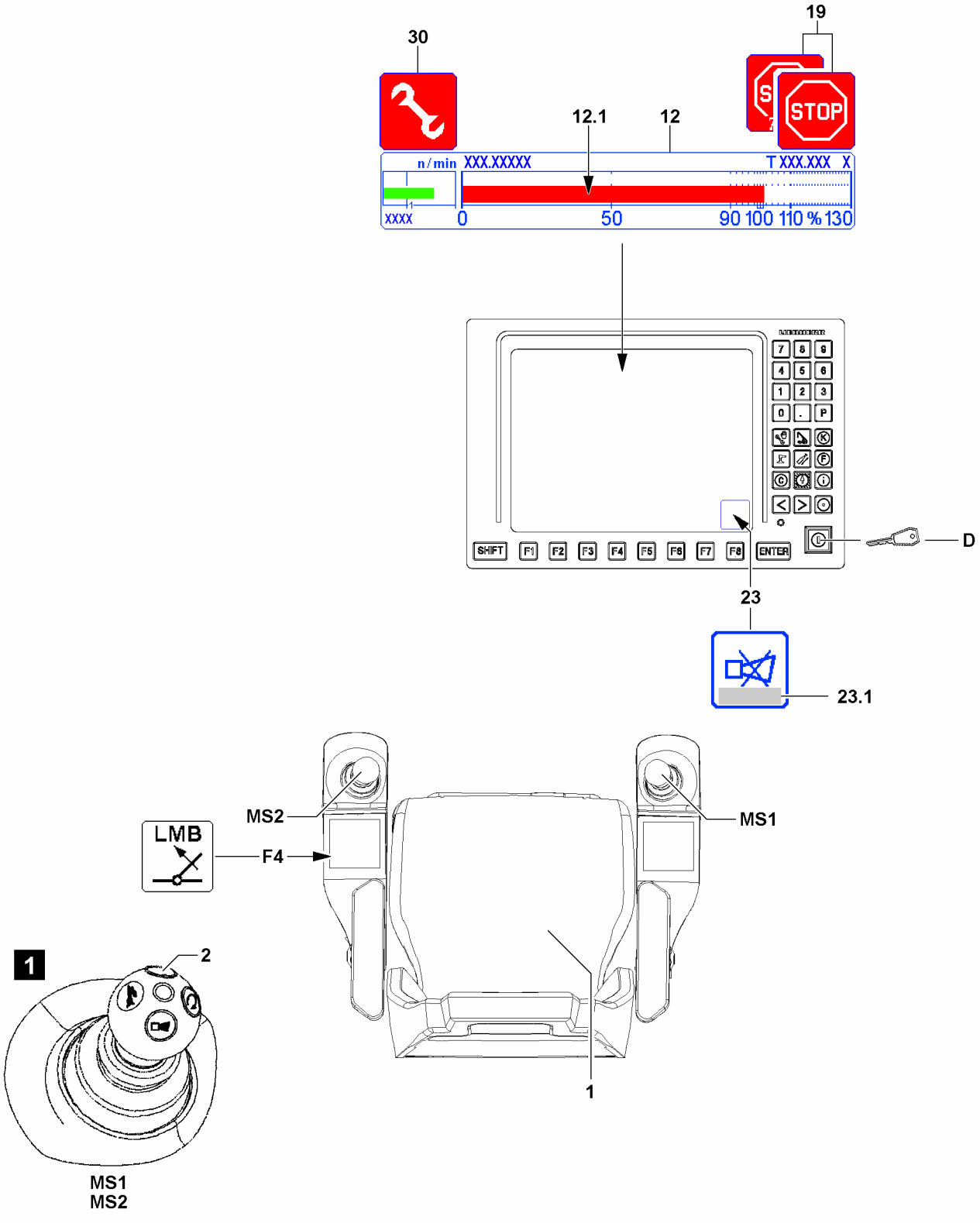

Fig.148661

LWE/LTR 1100-009/25105-02-02/en

copyright © Liebherr-Werk Ehingen GmbH 2023

2.3.2 To exceed the maximum permissible load moment

If the maximum permissible load torque is exceeded, the LICCON overload protection turns off all crane movements that increase the load torque.

In the bar diagram utilization **12** (load moment display) the utilization bar **12.1** is red (shut-off limit value exceeded) and the LICCON monitor displays the icon **19**.

Note
Limit values for the load torque limiter for advance warning and shut-off reduced
If the limit values for the load torque limiter for advance warning and shut-off are reduced by the crane operator, shut-off takes place earlier according to the set value.
► Observe the settings of the limit values for the load torque limiter for advance warning and shut-off, see the crane operating instructions, chapter 4.02.

This limit value can be exceeded via the set up key **D** in the „right touching“ position.

WARNING
Shut off safety device!
If the function „Exceedance of shut-off limits of LICCON overload protection“ is activated by actuating the set up key **D** then it is possible to exceed the maximum permissible load torque.
► All notes regarding the „Special cases at operation of LICCON overload protection“ must be observed.

The set up key **D** on the LICCON monitor has two positions:
– Operating position (not actuated): Crane is in normal operation.
– Position to right (touching): The function „Exceedance of shut-off limits of the LICCON overload protection“ is activated, the assembly icon **30** appears in the LICCON monitor.

Make sure that the following prerequisites are met:
– With the „Luffing in with suspended load“ button **F4**, a normal operating condition (utilization below 100 % and no active shut-off) cannot be reached.
– All master switches are in the zero position (not deflected).
– Either the seat contact button **1** or one of the buttons **2** (illustration **1**) of the master switches (MS1, MS2) is actuated.
– The crane is in the range of a load chart.

Note
If the values in the bar diagram utilization **12** are exceeded too far, then the functionality of the set up key **D** may be disabled.
► Pay attention to notes regarding error messages **23.1** occurring in the horn **23** icon.

► Turn the set up key **D** to the right (touching).

Result:

– The LICCON overload protection is inactive.
– The assembly icon **30** appears on the LICCON monitor.

LWE/LTR 1100-009/25105-02-02/en

copyright © Liebherr-Werk Ehingen GmbH 2023

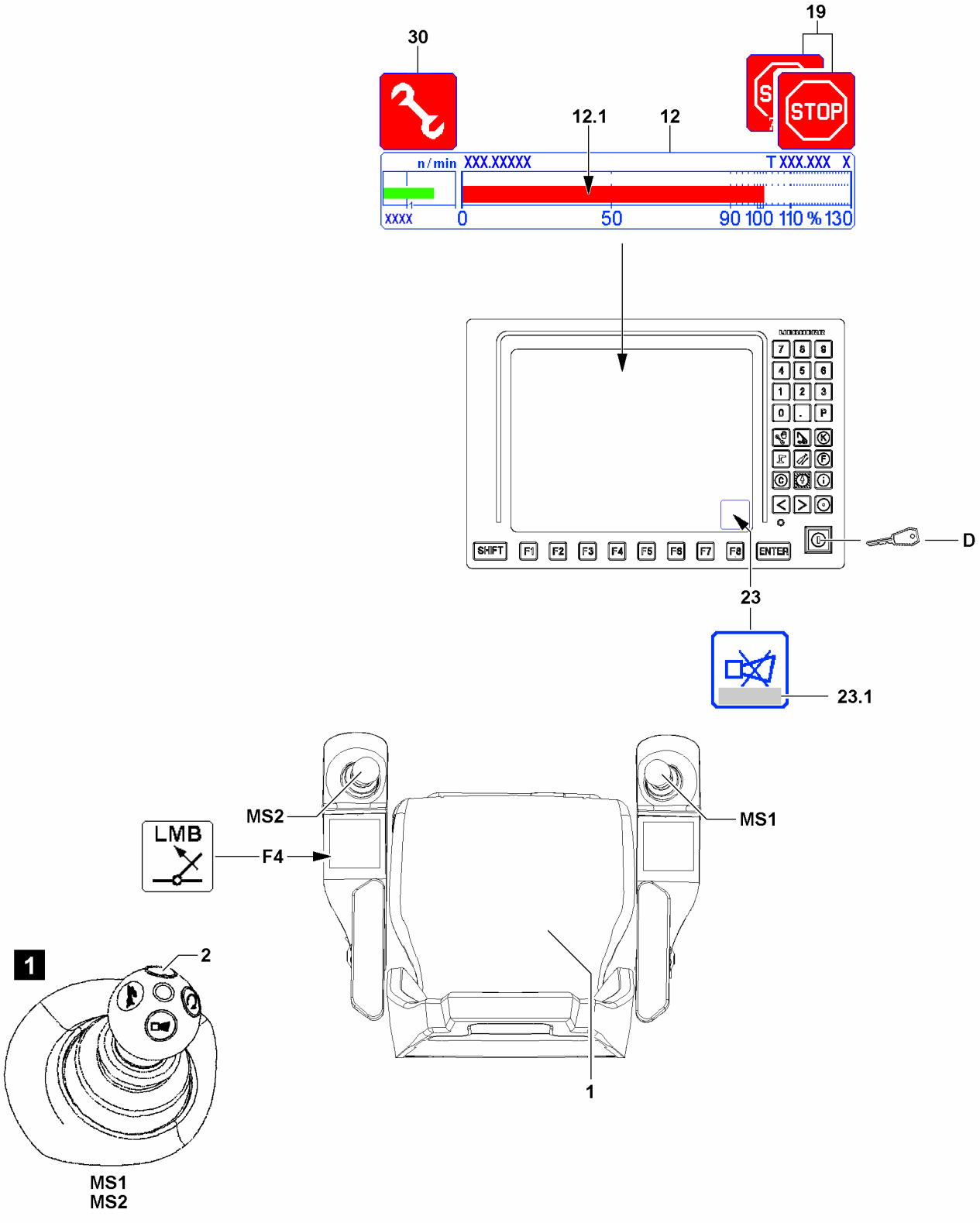

Fig.148661

LWE/LTR 1100-009/25105-02-02/en

copyright © Liebherr-Werk Ehingen GmbH 2023

► Initiate crane movements which lead immediately to a normal operating condition (see section „operating condition of the crane“).

The „Exceedance of shut-off limits of LICCON overload protection“ function turns off immediately also:
– If the set up key **D** is actuated again.
– If all master switches are in neutral position for 10 seconds.
– When neither the seat contact button **1** nor one of the buttons **2** of the master switches (MS1, MS2) is actuated.
– When a hoist top shut-off occurs.

Note
► The function „Exceedance of shut-off limits of the LICCON overload protection“ is only turned off when the assembly icon **30** in the LICCON monitor turns off.
► If the „Exceedance of shut off limits of the LICCON overload protection“ function does not turn off after pressing the set up key **D** once, then press the set up key **D** again until the assembly icon **30** on the LICCON monitor turns off.

The „Exceedance of shut-off limits of the LICCON overload protection“ function has / was shut off:
– The assembly icon **30** in the LICCON monitor turns off.
– The working speed is possibly reduced until all master switches are in the zero position at the same time.

► Make sure that the assembly icon **30** no longer appears on the LICCON monitor.
► Carry out crane movements in such a way that no repeated shut-off by the LICCON overload protection occurs.

LWE/LTR 1100-009/25105-02-02/en

copyright © Liebherr-Werk Ehingen GmbH 2023

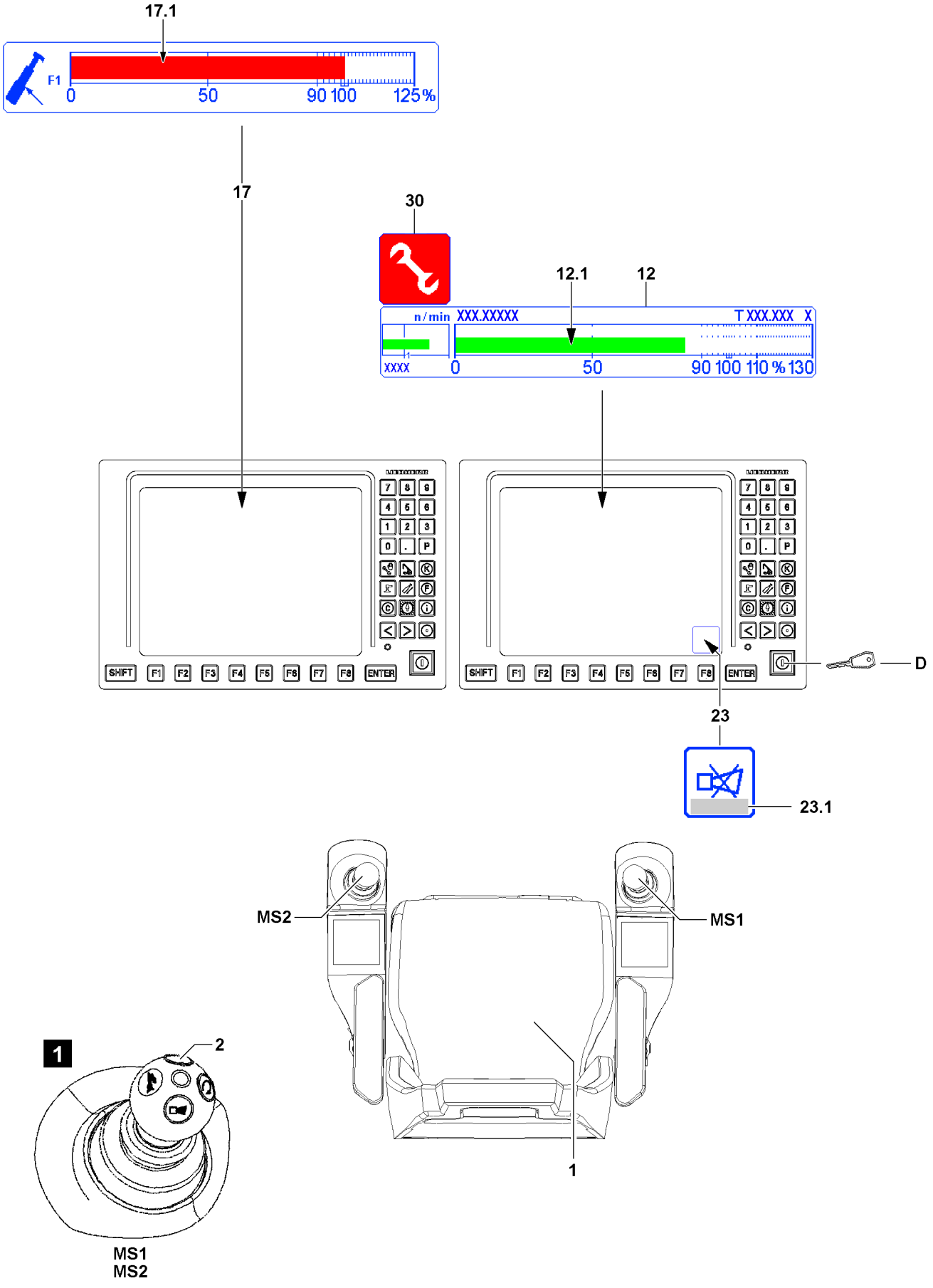

Fig.117264

copyright © Liebherr-Werk Ehingen GmbH 2023

LWE/LTR 1100-009/25105-02-02/en

2.3.3 To exceed the maximum value of the F-load display in crane operation.

Note
► Applies only for certain crane types with respective display on the second LICCON monitor.

WARNING
Shut off safety device!
If the maximum value of the F-load display is exceeded by pressing the set up key **D**, then the function „Exceedance of shut-off limits of the LICCON overload protection“ is automatically activated Thus there is no shut-off if the maximum permissible load moment is exceeded.
► All notes regarding the „Special cases at operation of LICCON overload protection“ must be observed.
► The utilization bar **12.1** of the bar diagram utilization **12** must be observed.
► The F1-utilization bar **17.1** of the F-load display **17** must be observed.

Note
► See also section „Maximum values of F-load display reached“.

On the F1-load display **17**, the utilization bar_{actual} **17.1** exceeds the 100 % mark and the LICCON overload protection has shut off the crane movement. $F1_{actual}$ has exceeded the $F1_{max}$ value.

All other movements that lead to a decline of the force ratio in the F-load display **17** are turned off.

Note
If the values in the F-load display **17** or in the utilization bar diagram **12** are outside the permissible range, then the functionality of the set up key **D** may be disabled.
► Pay attention to notes regarding error messages **23.1** occurring in the horn **23** icon.

LWE/LTR 1100-009/25105-02-02/en

copyright © Liebherr-Werk Ehingen GmbH 2023

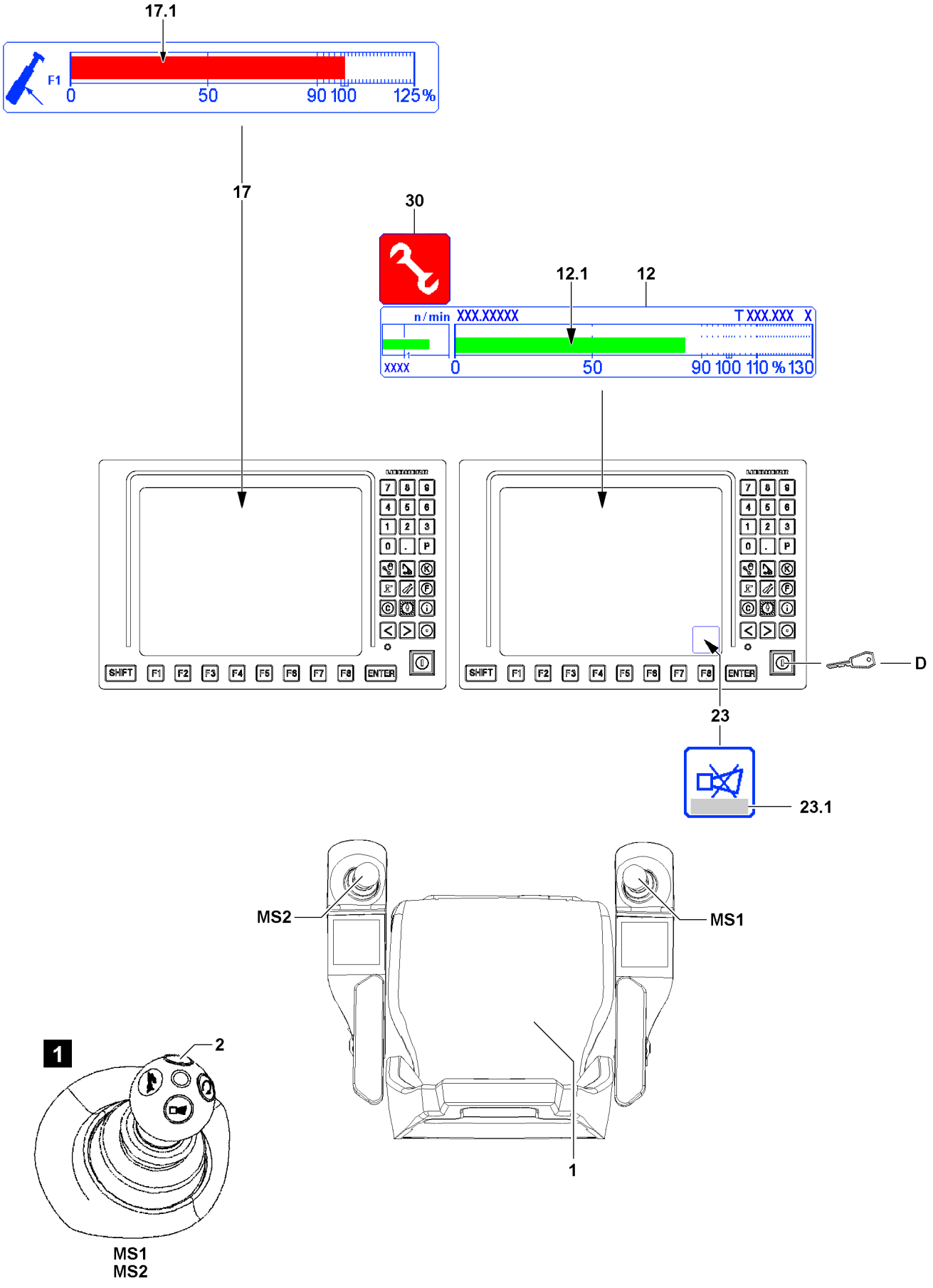

Fig.117264

copyright © Liebherr-Werk Ehingen GmbH 2023

LWE/LTR 1100-009/25105-02-02/en

Make sure that the following prerequisites are met:
- All master switches are in the zero position (not deflected).
- Either the seat contact button **1** or one of the buttons **2** (illustration **1**) of the master switches (MS1, MS2) is actuated.
- The crane is in the range of a load chart.

► Turn the set up key **D** to the right (touching).

Result:

- The function „Exceedance of shut-off limits of the LICCON overload protection“ is activated. As a result the maximum value of the F-load display can be exceeded.
- The assembly icon **30** appears.
- $F1_{max}$ can be exceeded.

► Initiate crane movements which lead immediately to a normal operating condition (see section „operating condition of the crane“).

The „Exceedance of shut-off limits of LICCON overload protection“ function turns off immediately also:
- If the set up key **D** is actuated again.
- If all master switches are in neutral position for 10 seconds (with load chart available).
- When neither the seat contact button **1** nor one of the buttons **2** of the master switches (MS1, MS2) is actuated.
- When a hoist top shut-off occurs.

Note
► The function „Exceedance of shut-off limits of the LICCON overload protection“ is only turned off when the assembly icon **30** in the LICCON monitor turns off.
► If the „Exceedance of shut off limits of the LICCON overload protection“ function does not turn off after pressing the set up key **D** once, then press the set up key **D** again until the assembly icon **30** on the LICCON monitor turns off.

The „Exceedance of shut-off limits of the LICCON overload protection“ function has / was shut off:
- The assembly icon **30** in the LICCON monitor turns off.
- The working speed is possibly reduced until all master switches are in the zero position at the same time.

► Make sure that the assembly icon **30** no longer appears on the LICCON monitor.
► Carry out crane movements in such a way that no repeated shut-off by the LICCON overload protection occurs.

LWE/LTR 1100-009/25105-02-02/en

copyright © Liebherr-Werk Ehingen GmbH 2023

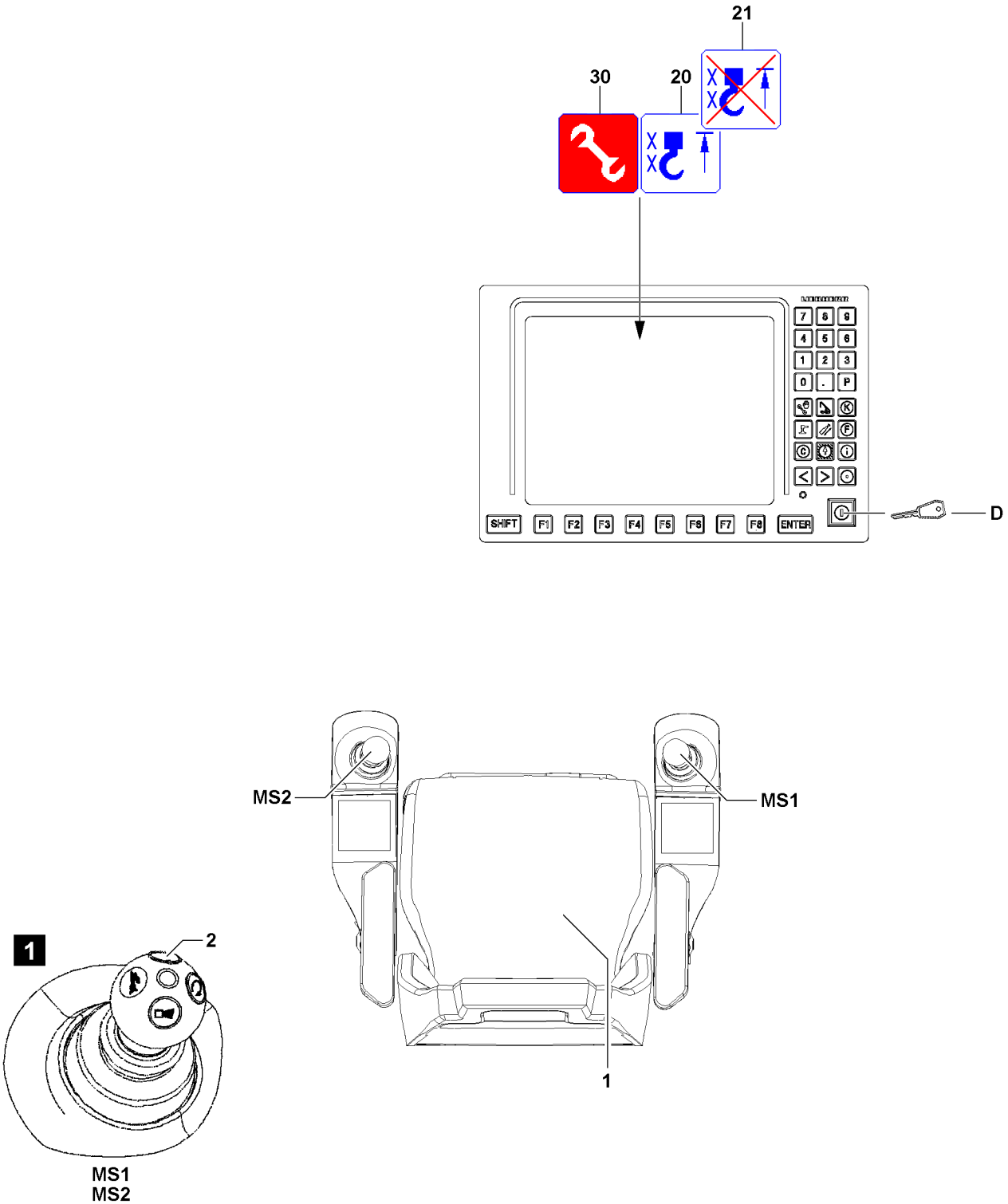

Fig.117265

LWE/LTR 1100-009/25105-02-02/en

copyright © Liebherr-Werk Ehingen GmbH 2023

2.4 Bypassing the hoist top shut-off

WARNING
Improper use of the function „Bypass of hoist top shut-off“!
► The function „Bypass of hoist top shut-off“ may never be used to increase the lifting height during crane operation.

WARNING
Property damage and falling load!
If the function „Bypass of hoist top shut-off“ is activated, there is the danger that the hook (hook block / load hook) is pulled against the pulley head.
This danger exists especially when the hoist winch is continued to be spooled up and for crane movements that have an influence on the hoist rope, for example luffing the telescopic boom or the auxiliary boom / accessory.
Property damage and falling load can result.
Personnel can be severely injured or killed.
► The „Bypass of hoist top shut-off“ function is only possible if the crane operator is able to determine otherwise that there is a sufficient distance between hook block / load hook and boom head.
► Carry out all crane movements with utmost caution.

Note
► A bypass of the hoist top shut off is only possible in some circumstances when the shut-off has already occurred due to a triggered hoist limit switch.
► For assembly purposes or in emergency cases, if the activation of the function „Bypass of hoist top shut-off“ **and** activation of the function „Exceedance of shut-off limits of the LICCON overload protection“ is necessary, then the set up key **D** must be actuated until the icon **21** and assembly icon **30** appear.

Spooling the hoist winch up was turned off because the hook (hook block / load hook) has touched a hoist limit switch weight during the upward movement and the concerned hoist limit switch was triggered.

Make sure that the following prerequisites are met:
– A hoist top shut-off has occurred, the hoist top icon **20** appears on the LICCON monitor.
– Either the seat contact button **1** or one of the buttons **2** (illustration **1**) of the master switches (MS1, MS2) is actuated.
– All master switches are in the zero position (not deflected).

LWE/LTR 1100-009/25105-02-02/en

copyright © Liebherr-Werk Ehingen GmbH 2023

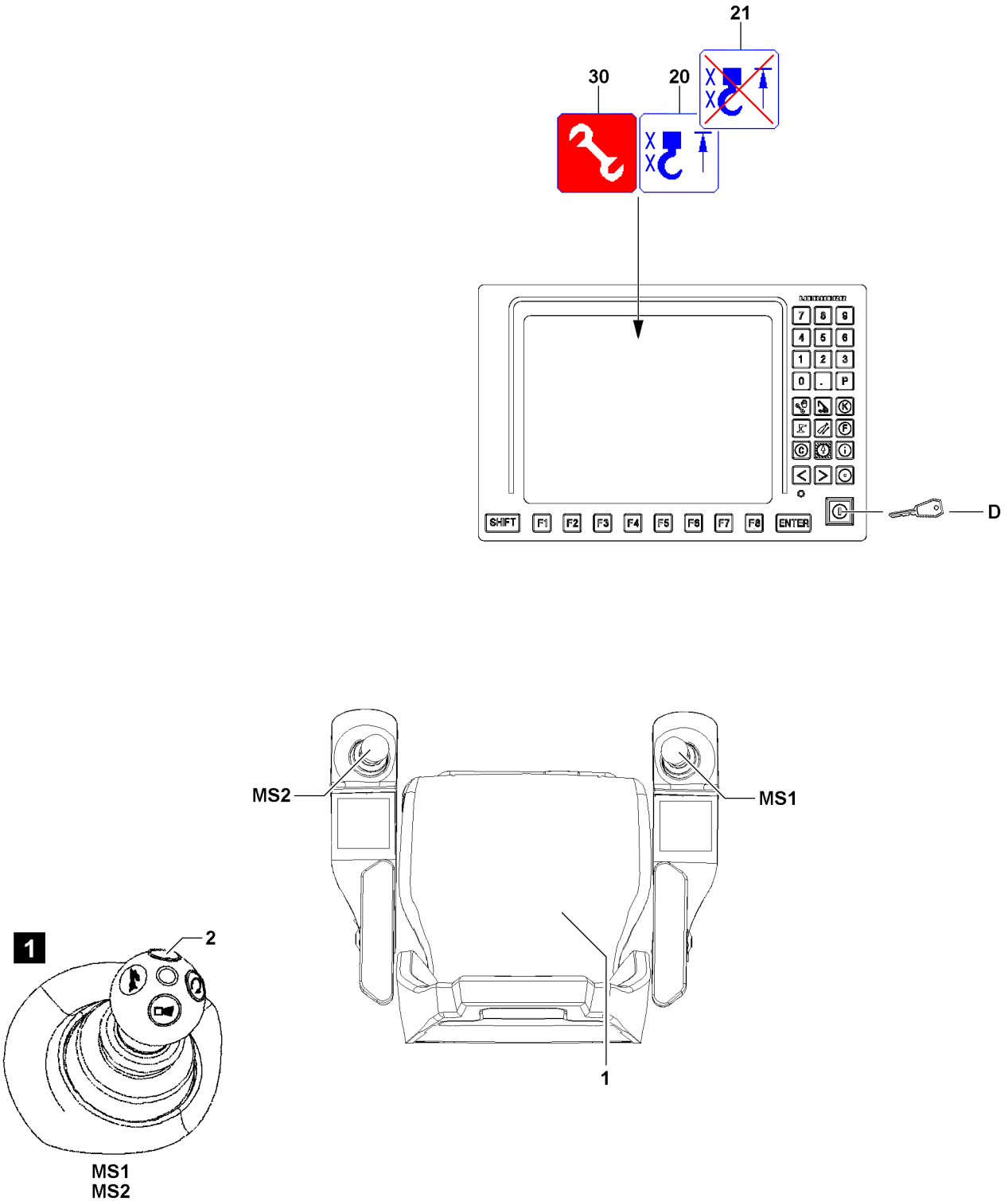

Fig.117265

LWE/LTR 1100-009/25105-02-02/en

copyright © Liebherr-Werk Ehingen GmbH 2023

– To bypass the hoist top shut-off, a combined actuation of the set up key **D** and at least one master switch (MS1, MS2) is required.

► Turn the set up key **D** to the right (touching).

Result:

– The assembly icon **30** (assembly operation) appears on the LICCON monitor.
– The hoist top icon **20** on the LICCON monitor changes to the icon **21**.

Note

► Depending on the situation, it may be possible that the bypass of the hoist top shut-off only remains active as long as the master switch (MS1, MS2) is deflected.

Within 10 seconds, if the master switch (MS1, MS2) to lift the hoist gear is deflected, the hoist limit switches are bypassed.

► Carry out a crane movement with utmost caution and by taking the safety guidelines into account.

The function „Bypass of the hoist top shut-off“ turns off:
– If the set up key **D** is actuated again.
– When no master switch (MS1, MS2) is deflected for 10 seconds.
– When neither the seat contact button **1** nor one of the buttons **2** of the master switches (MS1, MS2) is actuated.
– If there is no longer a shut-off of a hoist limit switch.

The function „Bypass of the hoist top shut-off“ has / was turned off:
– The assembly icon **30** (assembly operation) in the LICCON monitor turns off.
– The icon **21** on the LICCON monitor turns off.

► Make sure that the assembly icon or the assembly icon **30** (assembly operation) as well as the icon **21** no longer appear on the LICCON monitor.
► Carry out the crane movements in such a way that no repeated hoist top shut-off occurs.

LWE/LTR 1100-009/25105-02-02/en

copyright © Liebherr-Werk Ehingen GmbH 2023

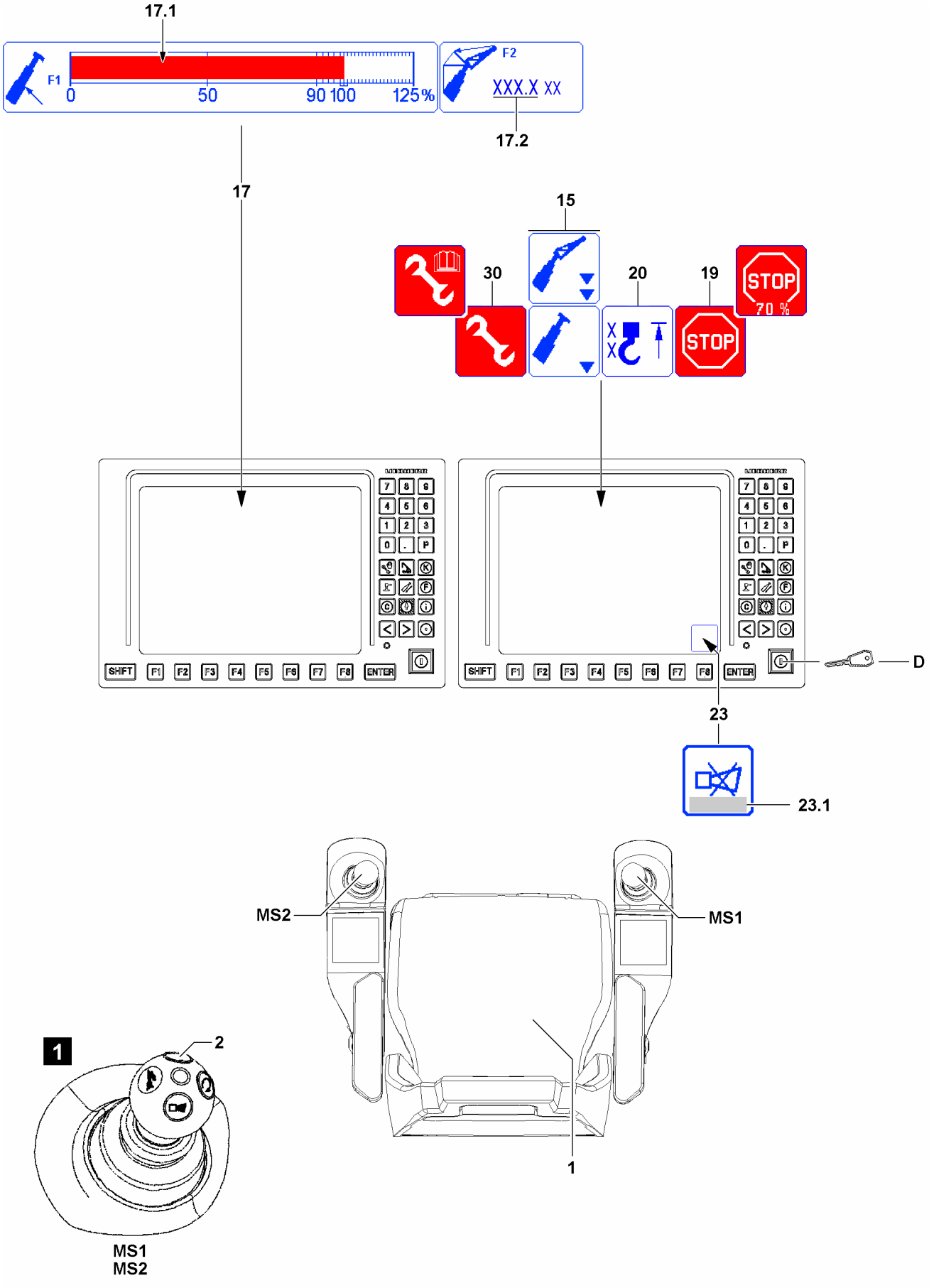

Fig.148662

LWE/LTR 1100-009/25105-02-02/en

copyright © Liebherr-Werk Ehingen GmbH 2023

2.5 Carrying out the erection / take down procedures

To carry out the erection / take down procedures and assembly procedures, the LICCON overload protection can be bypassed with the set up key **D**.

Note

- ► If the crane is in the „No load chart available“ range, then there is a shut-off of the crane control by the LICCON overload protection. The icon **19** appears on the LICCON monitor.
- ► By pressing the set up key **D** all erection / take down procedures and assembly procedures can be carried out according to the specifications in the Operating instructions.

WARNING

Danger of accident during erection / take down procedures!
If the specifications of the Operating instructions are not observed, the crane can collapse, the boom can break off or the crane can topple over.
Personnel can be severely injured or killed.

- ► Make sure to adhere to all specifications in the Operating instructions.
- ► Press the set up key **D** only when the set up configuration has been entered correctly in the LICCON computer system and matches the actual situation.

Additional information for cranes with an F-load display:

- F1-load display
  Luffing cylinder pressure display
- F2-load display
  Force of guying Auxiliary boom / accessory
  Note:
  Appears only for corresponding boom system

Note

The permissible maximum value corresponds to 100 % in the bar display.

- ► The F1-utilization bar **17.1** shows the relationship $F1_{actual}$ to $F1_{max}$.
- ► F2-load display, the F2 $value_{actual}$ **17.2** is only shown. .
- ► When leaving the „load chart available“ range, the display of the assembly icon **30** changes.
- ► Pay attention to error messages **23.1**.

LWE/LTR 1100-009/25105-02-02/en

copyright © Liebherr-Werk Ehingen GmbH 2023

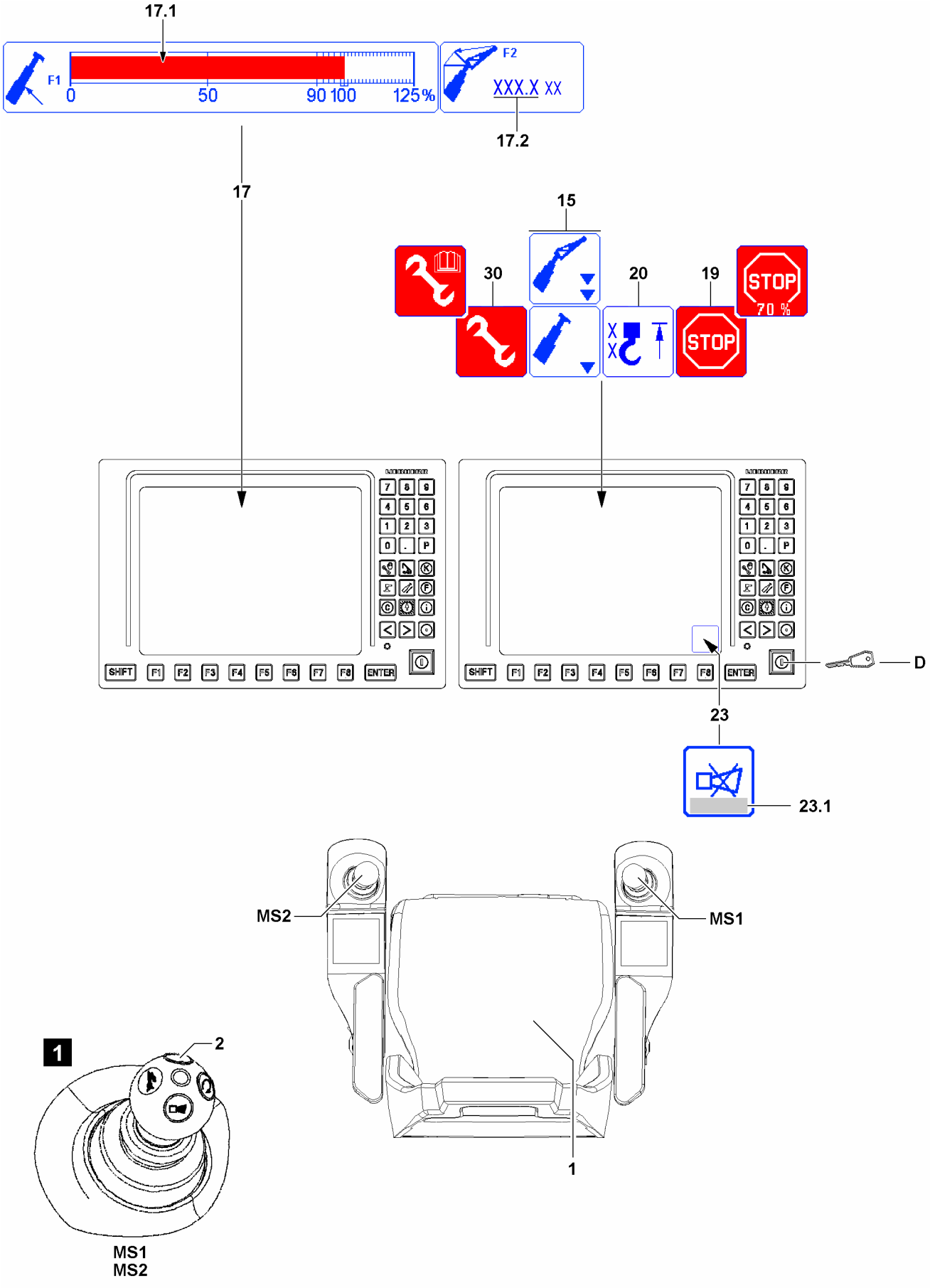

Fig.148662

LWE/LTR 1100-009/25105-02-02/en

copyright © Liebherr-Werk Ehingen GmbH 2023

2.5.1 Carrying out erection procedures

Make sure that the following prerequisites are met:
- The set up configuration corresponds to the specifications in the Operating instructions.
- The set up configuration has been entered correctly in the LICCON computer system.
- All master switches are in the zero position (not deflected).
- Either the seat contact button **1** or one of the buttons **2** (illustration **1**) of the master switches (MS1, MS2) is actuated.

Note
- ► Depending on the situation, the hoist top shut-off (icon **20** appears) must be bypassed at the same time.
- ► Depending on the situation, one of the icons **15** appears, because a limit angle load chart is reached.

► Turn the set up key **D** to the right (touching).

Result:

- The assembly icon **30** appears.
- The erection procedure can be carried out.

Problem remedy
The functionality of the set up key **D** is disabled by the crane control?
- ► Pay attention to notes regarding error messages **23.1** occurring in the horn **23** icon.
- ► Check the electrical connections.
- ► Check if all sensors or dummy plugs with integrated electrics have been connected properly.

- ► Luff the boom system according to the specifications of the Operating instructions.
- ► Observe the F-load display **17**, all values must be within the permissible range.

Problem remedy
The erection / take down procedure cannot be carried out due to exceeding of the maximum values?
- ► See section „Maximum values of F-load display reached“.

The „Bypass of the LICCON overload protection“ via the set up key **D** turns off:
- If the set up key **D** is actuated again.
- When an range with existing load chart is reached (erection procedure).
- If all master switches are in the neutral position for 10 seconds (with „load chart available“).
- When neither the seat contact button **1** nor one of the buttons **2** of the master switches (MS1, MS2) is actuated.

The „Exceedance of shut-off limits of the LICCON overload protection“ function has / was shut off:
- The assembly icon **30** in the LICCON monitor turns off.

- ► After completion of the erection / take down procedures, make sure that the assembly icon **30** no longer appears in the LICCON monitor.

LWE/LTR 1100-009/25105-02-02/en

copyright © Liebherr-Werk Ehingen GmbH 2023

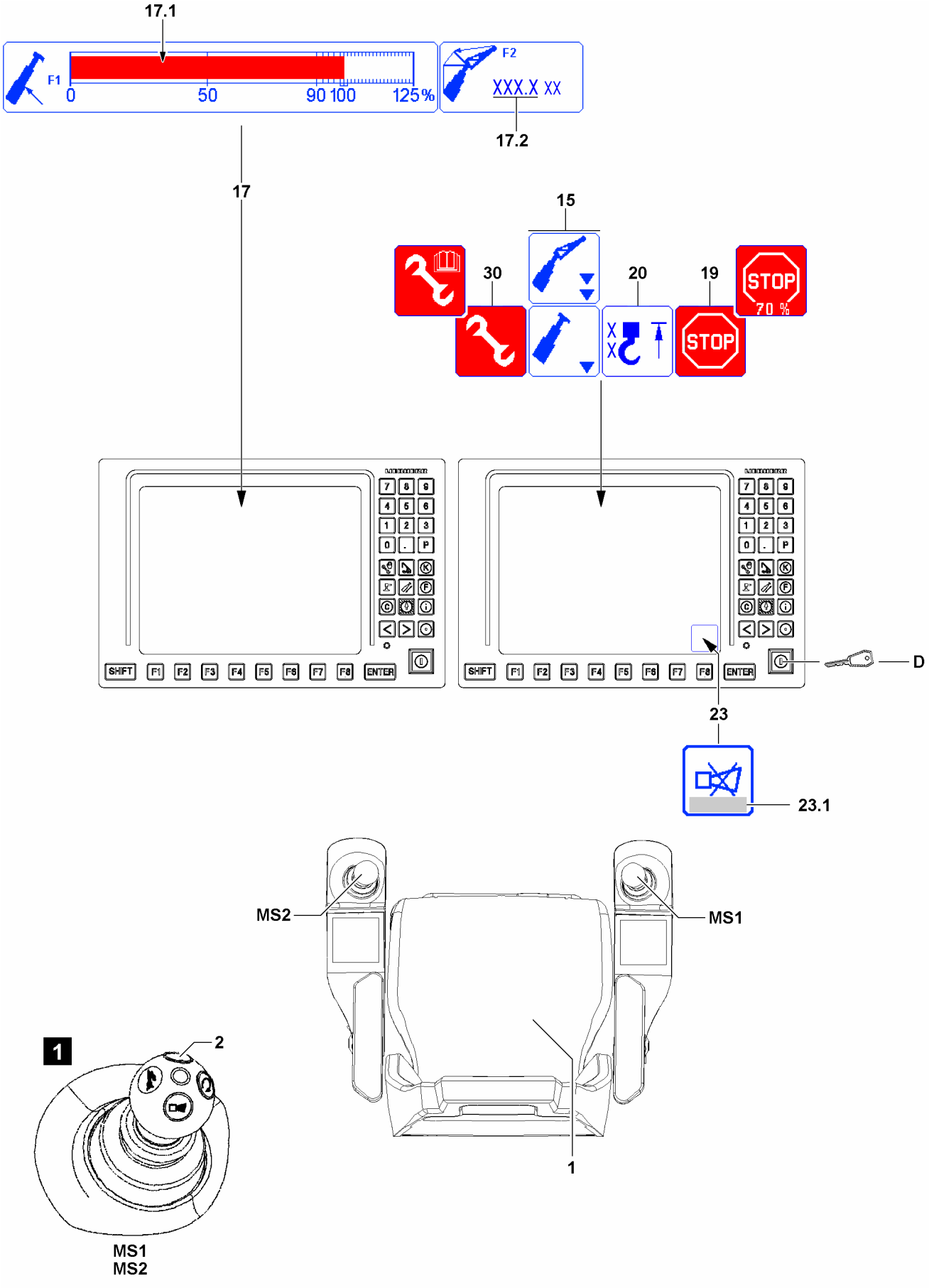

Fig.148662

LWE/LTR 1100-009/25105-02-02/en

copyright © Liebherr-Werk Ehingen GmbH 2023

2.5.2 Carrying out take down procedures

WARNING
Danger of accidents when taking the boom system down!
When the luffing the telescopic boom / auxiliary boom / accessory down shut-off is bypassed, then the LICCON overload protection as a whole is deactivated, bypassed or limited.
The telescopic boom and / or auxiliary boom / accessory can be luffed from the range of the load chart.
In case of deviations from the specifications of the Operating instructions, severe accidents can be the result.
Personnel can be severely injured or killed.
► Always proceed according to the specifications of the Operating instructions.
► Carry out all crane movements with utmost caution.

Make sure that the following prerequisites are met:
– One of the icons **15** appears (limit angle load chart reached) and the LICCON overload protection has shut off the crane movement.
– Either the seat contact button **1** or one of the buttons **2** (illustration **1**) of the master switches are actuated.
– All master switches are in the zero position (not deflected).
– There is no load on the hook (hook block / load hook).
– If necessary, the hook (hook block / load hook) is placed on the ground.
– The set up configuration corresponds to the specifications in the Operating instructions.
– The set up configuration has been entered correctly in the LICCON computer system.

Note
► When leaving the „load chart available“ range, the appearance of the assembly icon **30** changes.

► Turn the set up key **D** to the right (touching).

Result:

– The assembly icon **30** appears on the LICCON monitor.
– The take down procedure can be carried out.

► Take the boom system down according to the specifications of the Operating instructions.
► Observe the F-load display **17**, all values must be within the permissible range.

Problem remedy
The erection / take down procedure cannot be carried out due to exceeding of the maximum values?
► See section „Maximum values of F-load display reached“.

copyright © Liebherr-Werk Ehingen GmbH 2023

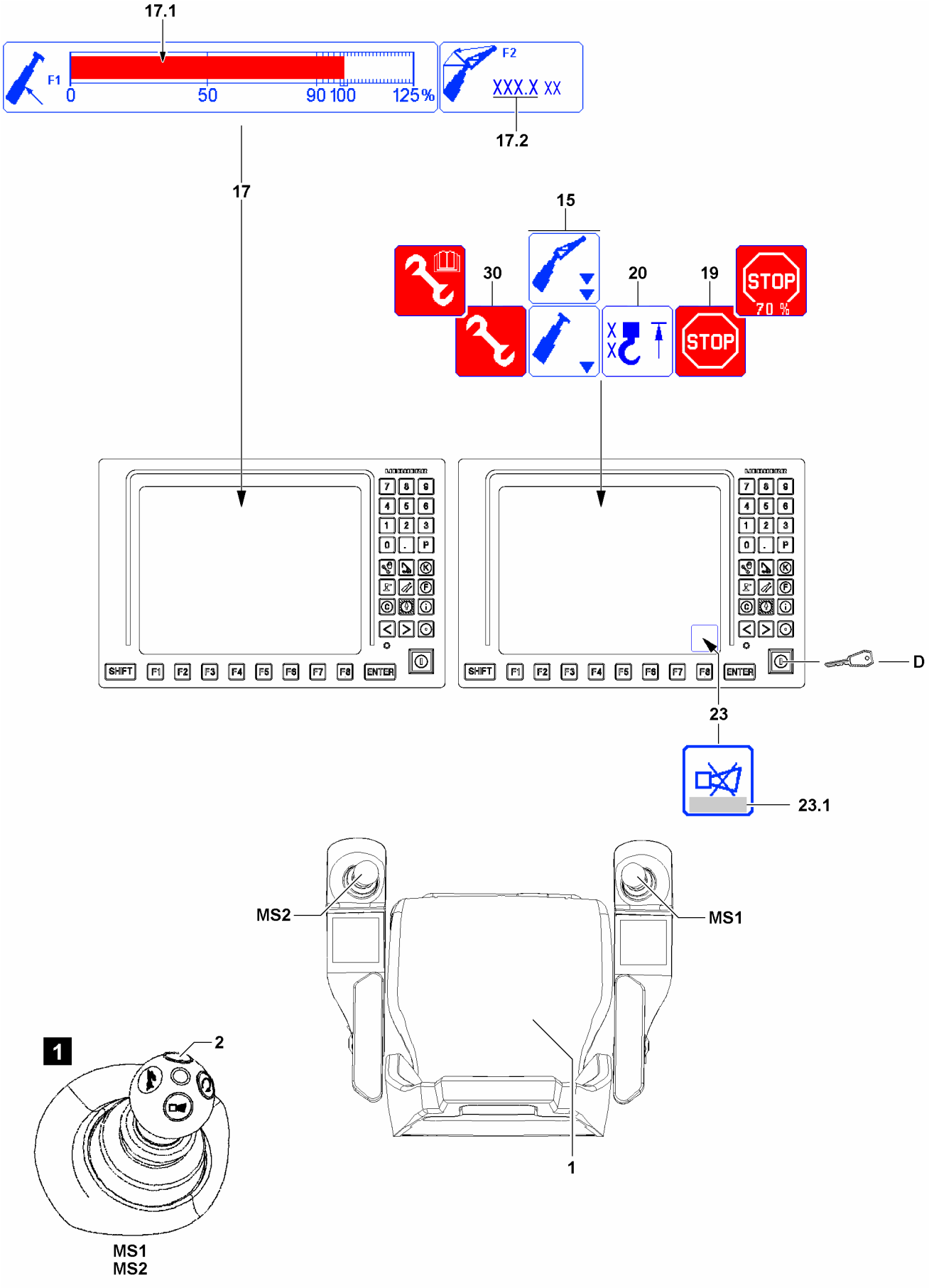

Fig.148662

LWE/LTR 1100-009/25105-02-02/en

copyright © Liebherr-Werk Ehingen GmbH 2023

Note

► Depending on the situation, the hoist top shut-off (icon **20** appears) must be bypassed at the same time.

The „Bypass of the LICCON overload protection“ via the set up key **D** turns off:
– If the set up key **D** is actuated again.
– When neither the seat contact button **1** nor one of the buttons **2** of the master switches (MS1, MS2) is actuated.
– When an area with an existing load chart is reached.

The bypass of the LICCON overload protection is / was turned off:
– The assembly icon **30** in the LICCON monitor turns off.

► Make sure that the assembly icon **30** no longer appears on the LICCON monitor.

2.5.3 Carrying out the assembly procedures

WARNING
Danger of accident during assembly procedures!
In case of deviations from the specifications of the Operating instructions for the assembly procedures, severe accidents can result.
Personnel can be severely injured or killed.
► Always proceed according to the specifications of the Operating instructions.
► **If you cannot proceed according to the Operating instructions, contact Liebherr Service before carrying out any subsequent steps and agree on the procedure.**

Make sure that the following prerequisites are met:
– The set up configuration corresponds to the specifications in the Operating instructions.
– The set up configuration has been entered correctly in the LICCON computer system.

► Actuate the set up key **D** according to the specifications of the Operating instructions.

LWE/LTR 1100-009/25105-02-02/en

copyright © Liebherr-Werk Ehingen GmbH 2023

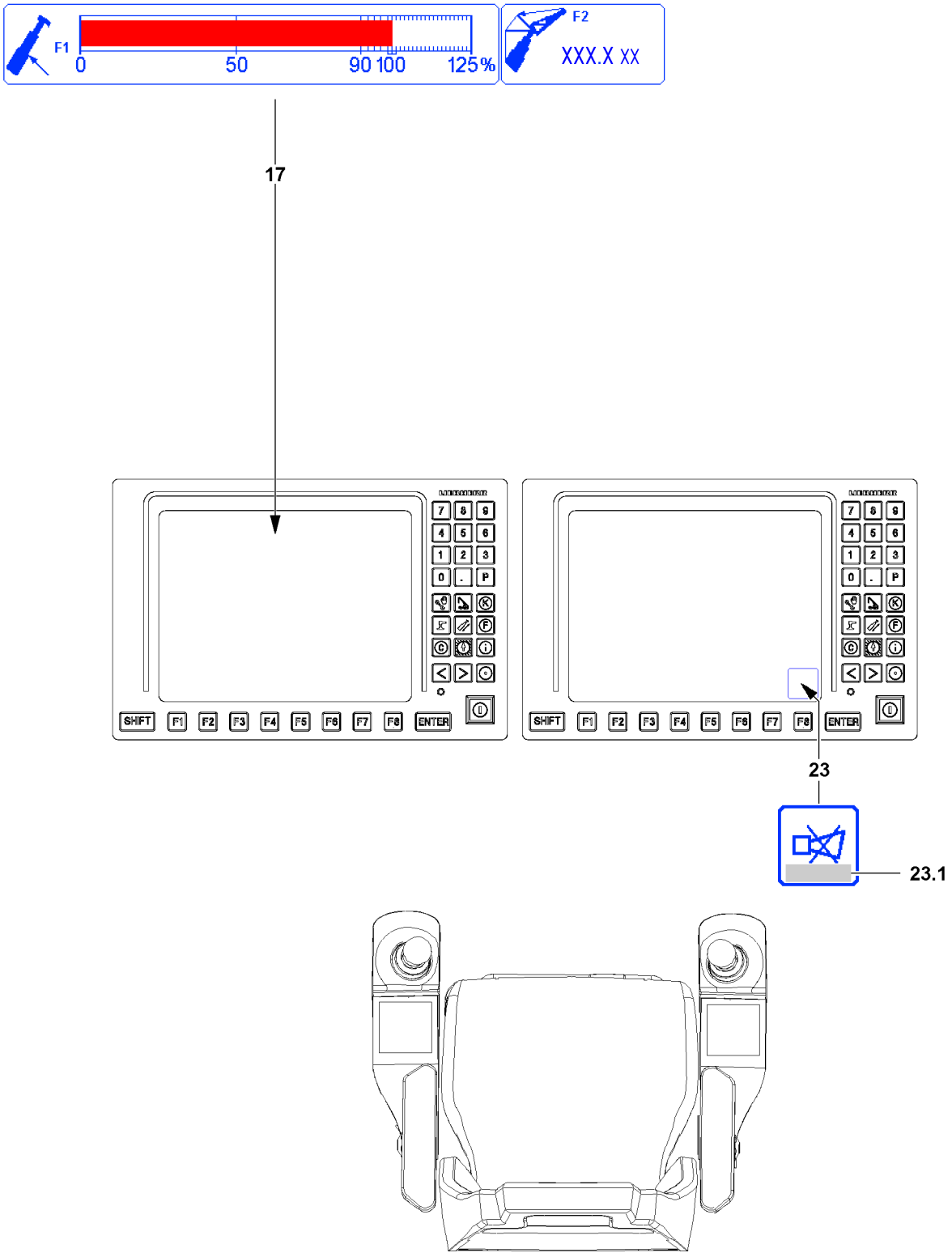

Fig.117267

LWE/LTR 1100-009/25105-02-02/en

copyright © Liebherr-Werk Ehingen GmbH 2023

2.6 Maximum values of F-load display reached

Note

► The display and assignment of the F-load display **17** can deviate depending on the set up configuration, operating status and configuration of the crane, see chapter 4.02.

The maximum values were reached on the F-load display **17**.

Make sure that the following prerequisites are met:
- The crane is assembled according to the specifications in the Operating instructions.
- A valid set up configuration has been entered in the LICCON computer system (Set up program).
- The actual set up configuration has been entered in the LICCON computer system (Set up program).
- The hook block or the load hook is correctly installed and reeved in.
- All attachment parts and guy rods on the boom system, which are not needed, have been removed (weight).
- The boom system is free of snow and ice (weight).
- The wind influence on the crane is not too great.
- The local conditions (terrain incline) are in the permissible range.
- Possible notes regarding error messages **23.1** occurring in the horn **23** icon were observed.

► Check if a crane movement was initiated that leads to an improvement of the force ratio in the F-load display **17**.

Note

In the permissible framework of specifications of the Operating instructions, a positive influence of the force ratio in the F-load display **17** can be reached by:
► Erection of the telescopic boom: Carrying the hook (hook block / load hook) along.
► In difficult local conditions (terrain incline): Support the placed down boom system to obtain more favorable angle conditions.
► In difficult local conditions (terrain incline): Support the placed down boom system to reduce flexation.

LWE/LTR 1100-009/25105-02-02/en

copyright © Liebherr-Werk Ehingen GmbH 2023

Empty page!

LWE/LTR 1100-009/25105-02-02/en

copyright © Liebherr-Werk Ehingen GmbH 2023

5 Equipment

LWE/LTR 1100-009/25105-02-02/en

copyright © Liebherr-Werk Ehingen GmbH 2023

LWE/LTR 1100-009/25105-02-02/en

copyright © Liebherr-Werk Ehingen GmbH 2023

5.01 Technical safety instructions for assembly and disassembly

1	Equipment	2
2	Rope pulleys	2
3	Ropes	2
4	Fiber guy ropes	4
5	Control measures before crane operation	9
6	Relapse cylinders	11
7	Pneumatic springs	11
8	Manual rope winches	12
9	Weights	12
10	Guy rods	13
11	Auxiliary guying	14
12	Bypassing the overload protection	14
13	Bypassing the hoist top shut-off	16
14	Pin connections	17
15	Retaining elements	22
16	Assembling / disassembling	31
17	Erecting / taking-down	93
18	Walking on a boom component	97

LWE/LTR 1100-009/25105-02-02/en

copyright © Liebherr-Werk Ehingen GmbH 2023

1 Equipment

1.1 Checking the steel structures

All components part of the crane's delivery scope must be checked regularly together with the crane.

If equipment or components are assembled that are part of the delivery scope of another crane: Prior to first time use, check load bearing crane structures, especially steel structures, see chapter 8.01.

1.2 Checking the labeling

WARNING
Labeling **not** legible or **not** present!
Components, especially guy rods, can be mixed up.
Death, severe bodily injuries, property damage.
► Do **not** continue to use the components, especially the guy rods.

2 Rope pulleys

WARNING
Danger of accident due to rotating rope pulleys!
Arms and legs can be caught and crushed or severed between the rope pulleys due to rotating rope pulleys.
► It is prohibited to touch the rope pulleys during operation.
► Adhere to the safety distance to the rotating rope pulleys.

3 Ropes

WARNING
Danger of accident due to a running rope!
People can be caught by running rope.
Death, severe bodily injuries, property damage.
► Adhere to the safety distance to the running ropes.
► It is prohibited for anyone to remain in the danger zone.

WARNING
Danger of accident!
► The ropes must be checked by an expert before assembly and checks must be performed at regular intervals in order to detect possible damage or wear and tear at an early stage. See chapter 8.04.

The ropes must be taken down immediately if any of the following damage is detected:
– Breakage of a strand
– Wire breaks
– Broken wire nests
– Reduction in the rope diameter by 10 % or more of the nominal size
– Rope deformations

3.1 Placing the hoist rope or the control rope

In order to guarantee safety and operating characteristics, only original Liebherr spare parts or parts approved by Liebherr may be used.

LWE/LTR 1100-009/25105-02-02/en

copyright © Liebherr-Werk Ehingen GmbH 2023

NOTICE
Damage to the hoist rope or the control rope!
If a hoist rope or control rope is placed with worn rope pulleys, damage can occur.
► Before placing a rope, check the rope pulleys. See chapter 8.01.
► Replace worn or damaged rope pulleys.

3.2 Minimum rope coils

NOTICE
If the following notes are not observed, the cam limit switch / winch speed sensor must be readjusted!
► When the hoist rope is spooled up, the end of the hoist rope must remain in front of the winch and may not be pulled over the winch.
► Never pull the hoist rope end under the winch by spooling the winch up.
► Pull the hoist rope never off from the „stationary“ winch.
► The winch speed sensor must also be readjusted, if it is determined during operation or when changing the hoist rope that the winch does not shut off when the minimum rope coils are reached.

3.2.1 Cranes with cam limit switch

The cam limit switch is adjusted at the factory that it turns off before the minimum rope coils are reached (three hoist rope coils on the winch).

WARNING
Danger of accident due to falling load!
If the following instructions are not observed, the hoist rope end attachment may be torn out, causing the load to topple.
► If a new hoist rope is used, the cam limit switch must be reset.
► The cam limit switch must be adjusted so that it turns off when only 3 hoist rope coils remain on the winch.

3.2.2 Cranes with winch speed sensor

The winch speed sensor is adjusted at the factory that it turns off before the minimum rope coils are reached (four hoist rope coils on the winch). If used properly, the winch turn sensor will not need readjustment.

WARNING
Danger of accident due to falling load!
If the following instructions are not observed, the hoist rope end attachment may be torn out, causing the load to topple.
► If a new hoist rope is placed, the winch speed sensor must be checked.
► The winch speed sensor must be set to turn off when only 4 hoist rope coils remain on the winch.

LWE/LTR 1100-009/25105-02-02/en

copyright © Liebherr-Werk Ehingen GmbH 2023

4 Fiber guy ropes

WARNING
Impermissible assembly of fiber guy ropes!
The fiber guy ropes can rip.
Death, severe bodily injuries, property damage.
- ► Do **not** assemble fiber guy ropes that are rigidly frozen or covered with ice.
- ► Do **not** use buckled, knotted or twisted fiber guy ropes.
- ► Do **not** assemble damaged fiber guy ropes.
- ► Make sure that the identification of the fiber guy rope on the rod plan and the identification on the individual fiber guy ropes are identical. See section „Identifying the fiber guy rope“.
- ► Make sure that the operating temperature of the fiber guy ropes of -40 °C to +60 °C is **not** fallen below or exceeded.
- ► Check the fiber guy ropes for damage prior to assembly, after disassembly and after exceptional events, see chapter 8.16.
- ► Comply with the maintenance intervals, see chapter 7.03.50.
- ► Observe the notes regarding the proper transport and storage of the fiber guy ropes, see chapter 2.04.
- ► Observe the instructions for the fiber guy ropes, see section „Instructions for proper handling“.
- ► Only fasten the fiber guy ropes in the permissible range with belt loops, see section „Fastening the fiber guy ropes“.

WARNING
Temperatures below 0 °C: Fiber guy ropes that are rigidly frozen or covered with ice!
Buckling of the fiber guy ropes. The fiber guy ropes can rip.
Death, severe bodily injuries, property damage.
- ► Before assembling and disassembling the fiber guy ropes, check if the fiber guy ropes are rigidly frozen or covered with ice. See section „Rigidly frozen fiber guy ropes“.
- ► While erecting and taking down the boom system, check if the fiber guy ropes are rigidly frozen or covered with ice. See section „Rigidly frozen fiber guy ropes“.
- ► Do **not** bend, knot or twist rigidly frozen fiber guy ropes.
- ► Do **not** erect or take down boom systems with fiber guy ropes that are rigidly frozen or covered with ice (for example auxiliary guying, guying for the F-jib).
- ► Observe the instructions for the fiber guy ropes, see section „Instructions for proper handling“.
- ► After disassembly: Check the rigidly frozen fiber guy ropes for damage, see chapter 8.16.
- ► Observe the notes regarding the proper transport and storage of the fiber guy ropes, see chapter 2.04.

Comply with the intended use and non-intended use of the fiber guy ropes:
- – Only use fiber guy ropes as guy rope.
- – Do **not** use fiber guy ropes for typical rope tasks, for example for lifting, fastening to hooks, as an auxiliary rope, diverting over rope pulley.

LWE/LTR 1100-009/25105-02-02/en

copyright © Liebherr-Werk Ehingen GmbH 2023

4.1 Identifying the fiber guy rope

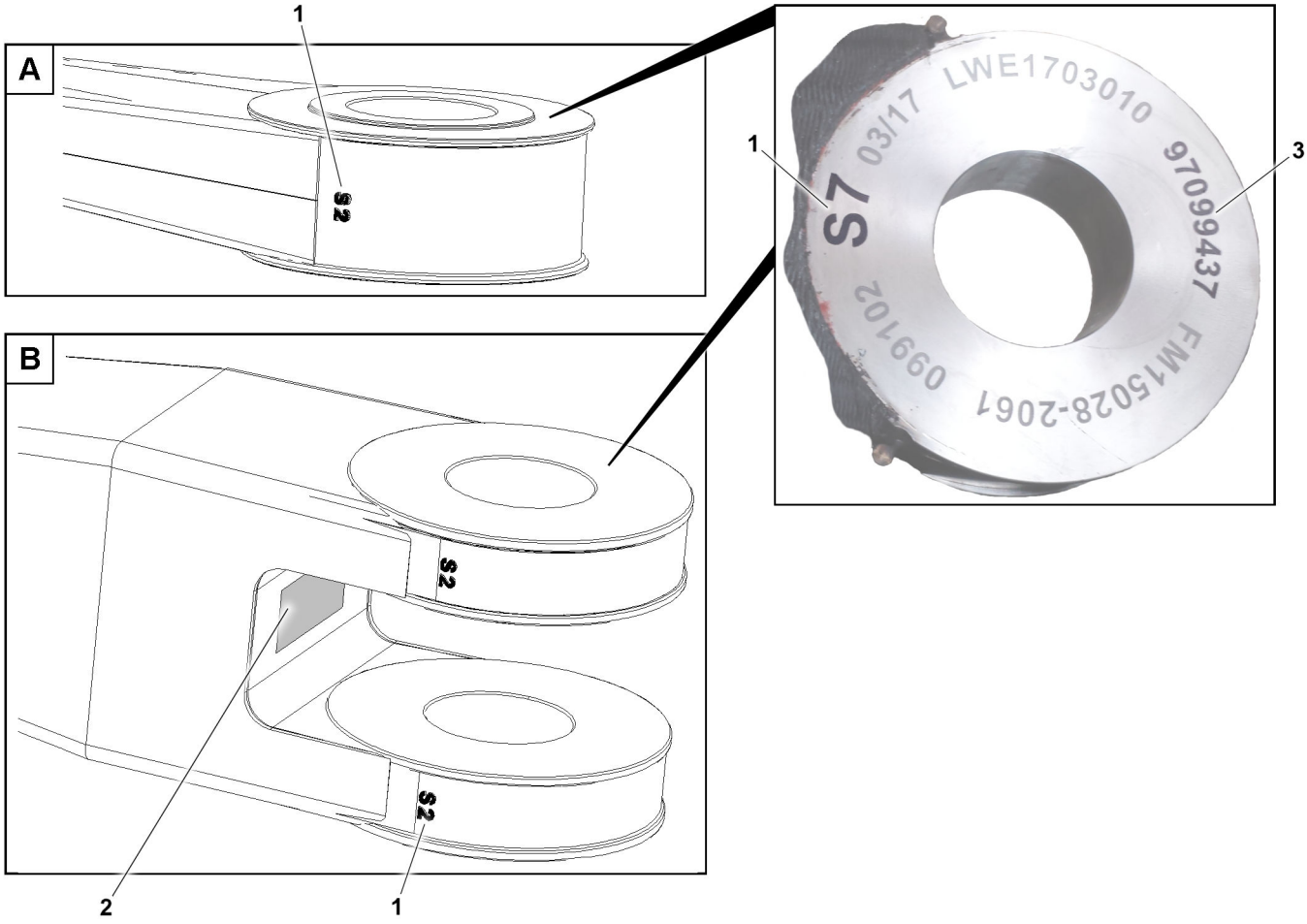

Fig.160911: Fiber guy rope, identification

1 Rope number **2** Component group no. **3** Article number

Follow the instructions below for the correct identification of the fiber guy ropes:
- Make sure that rope number **1** on the rope thimble corresponds to the rope number on the rod plan.
- Make sure that article number **3** on the rope thimble corresponds to the article number on the rod plan.
- If there is an article number **3** and a component group no. **2** on the rope thimble: Make sure that component group no. **2** on the rope thimble corresponds to the component group no. on the rod plan.

4.2 Rigidly frozen fiber guy ropes

Feature of rigidly frozen fiber guy ropes:
- This occurs at temperatures below 0 °C.
- The water contained in the rope is frozen.
- The fiber guy rope can be covered with ice.
- The fiber guy rope can no longer be wound up or spooled out.
- Its bending behavior is considerably limited when erecting and taking down the boom system.

Detect rigidly frozen fiber guy ropes when erecting and taking down the boom system:
- Test period: During the erection or take down of take-down of the boom system, when the fiber guy ropes transition from the tensioned to the relieved condition.
  Or: When the fiber guy ropes transition from the relieved to the tensioned condition.
- Check acoustically (listening) if the noise is generated by cracking or breaking ice.

LWE/LTR 1100-009/25105-02-02/en

copyright © Liebherr-Werk Ehingen GmbH 2023

– Check visually if the fiber guy rope is starting to form a buckle.
– If noise is generated or a buckle is forming: The fiber guy rope is rigidly frozen.

Instructions for the erection and take-down of the boom system when the fiber guy ropes are rigidly frozen or covered with ice:
– End erection or take-down.
– Warm up and dry fiber guy ropes at temperatures below 50 °C. Contact Customer Service at Liebherr-Werk Ehingen GmbH.

4.3 Instructions for proper handling

Fig.160904: Fiber guy rope, twisting marking for permissible alignment of the rope

1 Straight fiber guy rope
2 Twisting marking
3 Fiber guy rope twisted 180°
4 Fiber guy rope twisted 360°

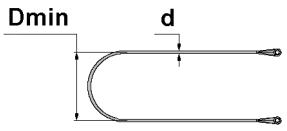

Dmin = 20 x d

Fig.160908: Fiber guy rope: Calculation of minimum permissible bending diameter

Formula element	Meaning
Dmin	Minimum permissible bending diameter
d	Rope diameter

Minimum permissible bending diameter: Definition of the formula elements

Comply with the instructions for the assembly and disassembly of the fiber guy ropes:
– If the fiber guy ropes that are rigidly frozen or covered with ice: Prior to assembly, warm up and dry fiber guy ropes at temperatures below 50 °C.
– Perform a visual inspection: Abrasion, cuts, kinks, knots, deformations, heat damage.
– Perform a visual inspection: Damage to the sheath layers and the rope end connections, gap formation between the rope thimble and the rope sheath.
– Do **not** bend, knot, twist or sever the fiber guy ropes.

LWE/LTR 1100-009/25105-02-02/en

copyright © Liebherr-Werk Ehingen GmbH 2023

- Never fall below the minimum permissible bending diameter **Dmin** of **20** x rope diameter **d**.
- Check the alignment of the rope end connections with respect to each other: Align the twist marking **2** straight along the entire rope length.
- Do **not** drag the fiber guy ropes over the ground, rough surfaces or sharp edges.
- Do **not** let the fiber guy ropes fall down.
- Do **not** crush the fiber guy ropes.
- Do **not** remove the crushed fiber guy ropes out of the clamping point.
- Do **not** pull the fiber guy ropes with force to the pin point.
- Pin the fiber guy ropes only with permissible and lubricated pins.
- Only fasten the fiber guy ropes in the permissible range with belt loops, see section „Fastening the fiber guy ropes“.

Note

Recommendation:

► Liebherr-Werk Ehingen GmbH recommends drying wet fiber guy ropes in the air at approx. 20 °C prior to erection.

4.4 Fastening the fiber guy ropes

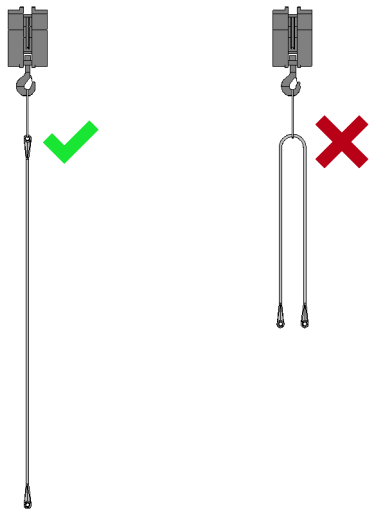

Fig.160907: Fastening the fiber guy ropes

LWE/LTR 1100-009/25105-02-02/en

copyright © Liebherr-Werk Ehingen GmbH 2023

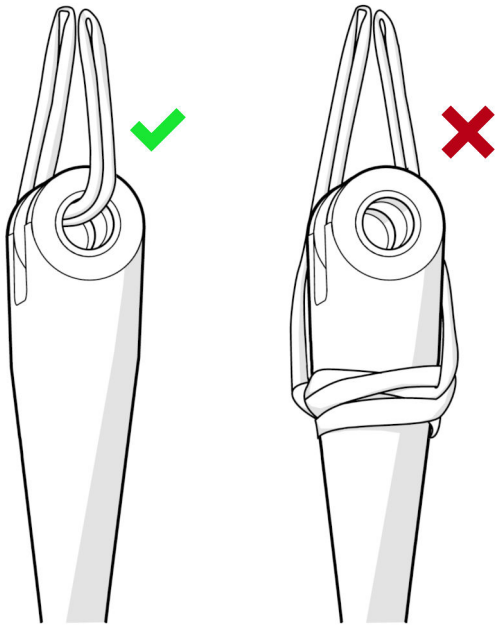

Fig.160905: Fasten the fiber guy rope: Rope end connection without ribs

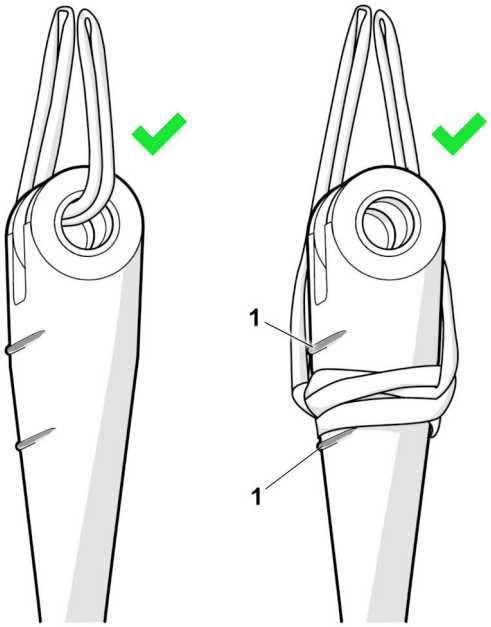

Fig.160906: Fasten the fiber guy rope: Rope end connection with ribs

1 Rib

LWE/LTR 1100-009/25105-02-02/en

copyright © Liebherr-Werk Ehingen GmbH 2023

5 Control measures before crane operation

WARNING
The crane can topple over!
If the following control measures and the crane-specific additional controls are not carried out before crane operation or if they are not carried out sufficiently, then accidents can occur.
The crane can topple over, be overloaded or damaged.
Loose parts, aids or ice can fall down from the boom or the crane superstructure.
Death, severe bodily injuries, property damage.

- ► Crane operation with safety equipment that is **not** functioning correctly is strictly prohibited.
- ► Start crane operation only after all safety equipment have been checked and are functioning correctly.
- ► Start crane operation only if the overload protection has been set according to the data in the load chart.
- ► Start crane operation only if the crane is properly supported and horizontally aligned.
- ► Only start crane operation after making sure that there are not loose parts on the boom, crane superstructure or crane chassis.
- ► Only start crane operation after making sure that there is no snow, frost or ice on the boom.
- ► Only start crane operation after making sure that all specifications, crane conditions and / or properties that are checked and required during the extensive control measures and additional controls have also been completely fulfilled.

WARNING
Interruption of crane operation!
If the following specifications for interruption of crane operation are not observed, accidents can occur.

- ► If the crane operator leaves the crane cab even if for just a short time, the crane must be secured to prevent unauthorized access.
- ► Before starting to work again with the crane, the crane operator is obligated to check the operating mode settings and to reset them, if necessary.

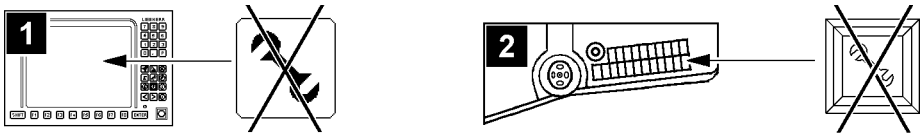

Fig.113437: Monitoring indicators

Make sure that the following prerequisites are met:

- – The overload protection is not bypassed.
- – No assembly operation is activated.

5.1 General controls before crane operation

- – Make sure that no visible damage is present on the crane.
- – Make sure that there are no loose parts on the boom, crane chassis and crane superstructure.
- – Make sure that all hoist and control ropes are free of snow, frost and ice.
- – Make sure that the boom system is free of snow, frost and ice.
- – Make sure that exposed rope pulleys are free of snow, frost and ice.
- – Make sure that the cable / rope drums as well as the limit switches are free of snow and ice.
- – Make sure that the cylinders are free of ice.
- – Make sure that the gear ring of the slewing ring connection is clean and greased.
- – Make sure that the air supply to the oil and water cooler is clear.
- – Make sure that steps, ladders and platforms are in the correct position for crane operation.
- – Make sure that all tool boxes, compartments, coverings, covers and cabinet doors are closed.
- – Make sure that no persons or objects are in the danger zone of the crane.
- – Make sure that the crane is standing on level, load bearing ground.
- – Make sure that the crane is sufficiently supported depending on the load case and the ground conditions.

LWE/LTR 1100-009/25105-02-02/en

copyright © Liebherr-Werk Ehingen GmbH 2023

- Make sure that there is a sufficient safety distance to excavations and slopes.
- Make sure that no obstacles are within the working range of the crane, which obstruct the required crane movements.
- Make sure that the crane has sufficient distance to live power lines.
- Make sure that the LICCON overload protection is set according to the data in the load chart.
- Make sure that the overload protection is set according to the actual set up configuration of the crane.
- Make sure that the electrical connections, the connector plug, the pull relief, the cables and the protective insulation function. Replace missing or defective parts.
- Make sure that the cable routings on the electrical connections are seated tightly. If necessary, tighten loose screw connections.
- Make sure that the existing safety equipment is functioning.
- Make sure that the overload protection is functioning.
- Make sure that the hoist limit switches are functioning.
- Make sure that the limit switch boom „steepest position“ is functioning.
- Make sure that the wind speed sensor moves easily and is functioning.

5.2 Additional controls for cranes with crane support

- Make sure that the folding / sliding beams are secured with pins to prevent them from sliding.
- Make sure that the support plates are secured in the operating position.
- Make sure that the crane is properly supported.
- Make sure that the crane is horizontally aligned.
- Make sure that the axle suspension is blocked (mobile crane).
- Make sure that the tires have no contact to the ground (mobile crane).
- Make sure that the track chains are secured to prevent them from sagging (crawler crane).

5.3 Additional controls for cranes on tires on the front and supported on the rear

- Make sure that the rear folding / sliding beams are secured with pins to prevent them from sliding.
- Make sure that the rear support plates are secured in the operating position.
- Make sure that the crane is properly supported on the rear.
- Make sure that the axle pressure compensation is correctly switched.
- Make sure that the axle suspension is blocked.
- Make sure that the tires of the rear axle group have no contact with the ground.
- Make sure that a sufficient tire pressure is present in the tires.
- Make sure that the ground for the front axle group is sufficiently level and has a sufficient load bearing capacity.

5.4 Additional controls for cranes supported on the front and on tires on the rear

- Make sure that the front folding / sliding beams are secured with pins to prevent them from sliding.
- Make sure that the front support plates are secured in the operating position.
- Make sure that the crane is properly supported on the front.
- Make sure that the axle pressure compensation is correctly switched.
- Make sure that the axle suspension is blocked.
- Make sure that the tires of the front axle group have no contact with the ground.
- Make sure that a sufficient tire pressure is present in the tires.
- Make sure that the ground for the rear axle group is sufficiently level and has a sufficient load bearing capacity.

5.5 Additional controls for freestanding crane operation (on tires)

- Make sure that all prerequisites for freestanding crane operation are met.
- Make sure that sufficient tire pressure is in all tires for crane operation on tires.

LWE/LTR 1100-009/25105-02-02/en

copyright © Liebherr-Werk Ehingen GmbH 2023

– Make sure that the ground is sufficiently level for crane operation on tires and has a sufficient load bearing capacity.

5.6 Additional controls for cranes with a derrick boom

– Make sure that the shut-off via the limit switch - derrick is functioning.
– Make sure that the entire slewing range of the suspended ballast / ballast trailer is free of personnel and obstacles.

5.7 Additional controls for cranes with luffing auxiliary boom / accessories

– Make sure that the shut-off via the luffing auxiliary boom / accessories „steepest position“ limit switch is functioning.
– Make sure that the shut-off via the luffing auxiliary boom / accessories „lowest position“ limit switch is functioning.
– Make sure that the shut-off via the limit switch flap in the „steepest position“ position is functioning.
– Make sure that the pendulum of the mechanical relapse retainer moves easily over the entire slewing range and is functioning.

5.8 Additional controls for certain crawler cranes

For existing crawler assembly key button:
– Make sure that the crawler assembly key button is turned off.

6 Relapse cylinders

6.1 Block position of the relapse cylinders when setting down the load

NOTICE
Damage to the boom or the relapse cylinders!
If the block position of the relapse cylinders is triggered by the boom or the derrick with attached, freely suspended load, then there is a danger of damaging the boom or the relapse cylinders when setting the load on the ground. By setting down the load, the crane is relieved, and this movement causes the boom system to move to the rear.
There is no shut-off of the hoist gear lowering function.
► Actuate the opposite direction of movement which caused the block position and eliminate the block position.

7 Pneumatic springs

Pneumatic springs are installed on various crane components to simplify the assembly of these components.

LWE/LTR 1100-009/25105-02-02/en

copyright © Liebherr-Werk Ehingen GmbH 2023

WARNING
Danger of crushing!
Defective pneumatic springs no longer provide the supporting properties on the movable components.
Components can fall down.
Death, severe bodily injuries, property damage.
- ► Always check pneumatic springs for damage before actuating the corresponding components.
- ► Do not use components with defective pneumatic springs. Replace defective pneumatic springs immediately.
- ► Make sure that no persons or objects are in the movement range of the moving components which is supported by the pneumatic spring.
- ► It is strictly prohibited to remain or place any objects in the movement or other danger zone of the moving crane components which are supported by the pneumatic spring.

8 Manual rope winches

Manual rope winches are installed on various components to simplify the assembly or disassembly of these components.

WARNING
Danger of crushing!
Defective manual rope winches no longer provide the supporting action on the movable components.
Components can fall down.
Death, severe bodily injuries, property damage.
- ► Always check manual rope winches for external and functional damage before actuating the respective components.
- ► Check the rope of the manual rope winch for damage.
- ► At least two rope coils must always remain on the rope drum.
- ► Do not use components with defective manual rope winches. Replace defective manual rope winches.
- ► It is strictly prohibited for personnel or objects to remain within the movement range of the components, which are supported by the manual rope winch.
- ► It is prohibited for personnel or objects to remain within the danger zone of the moving components.

9 Weights

Note
- ► The weight of each component is specified in the chapter 1.03 or the respective chapter in the Crane operating instructions or is stated on the tag attached to the corresponding component.
- ► If components are pushed into one another (for example the boom intermediate sections) or folded together (for example the folding jib), then the total weight is given by the sum of the individual components.

NOTICE
False estimation of weights
- ► Contact Customer Service at **Liebherr-Werk Ehingen GmbH** if the weight of the respective component is not stated on the tag or in the Crane operating instructions.
- ► Use an auxiliary crane with sufficient load carrying capacity including a reasonable reserve.

LWE/LTR 1100-009/25105-02-02/en

copyright © Liebherr-Werk Ehingen GmbH 2023

10 Guy rods

WARNING
The boom can break off!
The arrangement of the guy rods for the boom or boom systems is stipulated in the rod plan. If the arrangement of the guy rods is not observed according to the rod plan, the crane can collapse, the boom can break off or the crane can topple over.
Death, severe bodily injuries, property damage.
- ► Always carry out the arrangement of the guy rods according to the rod plan.
- ► If an auxiliary guying is required for a certain boom length, then it must always be installed according to the rod plan on the position defined in the rod plan.

WARNING
Unutilized guy rods on boom!
If guy rods are on the lattice sections which are not used for operation, then there is a danger of accident.
Unused guy rods can loosen up and fall down.
Death, severe bodily injuries, property damage.
The load chart is invalid.
The load display of the LICCON computer system shows an incorrect value.
The weight of the boom is too heavy for erection.
- ► Disassemble and remove the guy rods that are not needed on the transport retainers before erecting the boom.

Note
- ► Inspection and maintenance of the guy rods, see chapter 8.15.
- ► In reference to the guy rods, observe section „Erection / take-down“.

10.1 Guy rods for telescopic cranes with luffing lattice jib

10.1.1 Long guy rods

This section applies only to cranes with a telescopic boom and luffing lattice jib.

LWE/LTR 1100-009/25105-02-02/en

copyright © Liebherr-Werk Ehingen GmbH 2023

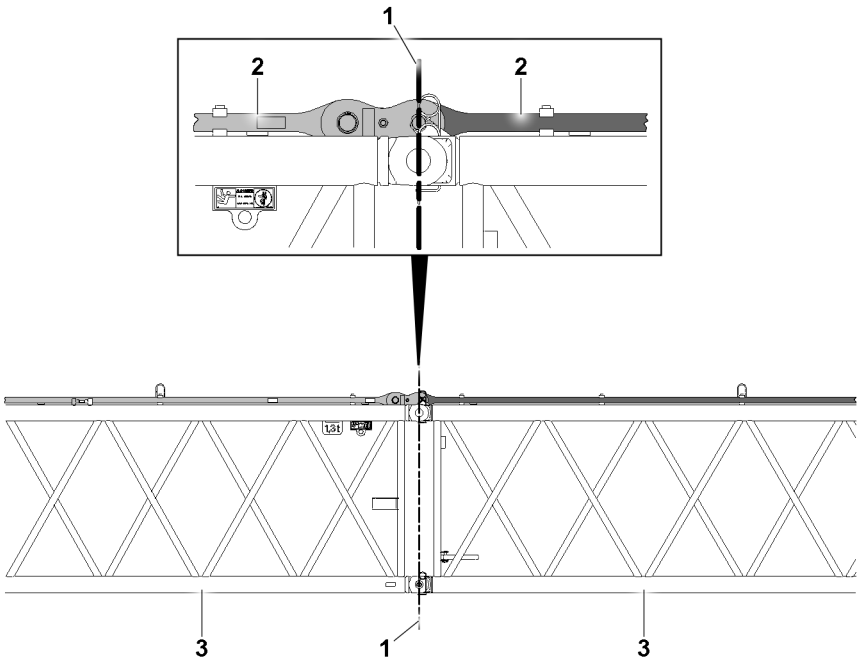

Fig.152299: Lattice section pin level

1 Pin level **2** Guy rods **3** Lattice section

If guy rods **2** are assembled, then close the guy rods **2** on the pin level **1** of the lattice sections **3**. In this way it can be determined if the correct guy rods **2** are assembled.

To completely check the guying, the requirements of the **rod plan**, the **assembly drawings** and the **operating instructions** must be observed.

11 Auxiliary guying

The auxiliary guying is of significant importance for safe crane operation.

The auxiliary guying is a deciding factor in relieving the boom, or the boom system during erection and take-down as well as during crane operation.

WARNING
The crane can topple over!
If the auxiliary guying is not installed or not installed on the position specified in the rod plan, then the crane can collapse, the boom can break off or the crane can topple over.
- ► If an auxiliary guying is specified in the rod plan for the required boom length, then it must be installed on the respective position.
- ► Make sure that the auxiliary guying is always completely installed and that all pins are properly pinned and secured.

12 Bypassing the overload protection

Fig.113438: Bypassing the overload protection

LWE/LTR 1100-009/25105-02-02/en

copyright © Liebherr-Werk Ehingen GmbH 2023

– Illustration **1**: LICCON monitor (only certain crane types)
– Illustration **2**: indicator light „assembly“ on the crane cab instrument panel (only certain crane types)

The overload protection is considered bypassed for:
– All types of assembly operations.
– All types of exceeded shut off limits of the overload protection.
– All types of emergency operation.
– All types of crane operation with deactivated or defective sensors and limit switches.
– All types of deviation from specified set up configuration of the crane.

DANGER
Increased danger of accident due to bypass of the overload protection!
Proper and destined use of the crane is ensured due to the construction of the overload protection system and observance of the information in the Crane operating instructions. All **sensibly foreseeable erroneous operations** of the crane have been taken into consideration.
Impermissible crane operation with bypassed overload protection – with the aim of increasing the maximum load bearing capacity of the crane above the rated value in the load chart or of extending the designated working range of the crane – does not constitute a **reasonably foreseeable erroneous operation**, rather **deliberate improper use with high danger of accident**.
The possible risks and consequences of such improper use are detailed in the Crane operating instructions.
Such deliberate improper use can neither be prevented by means of the structural version nor by means of information in the Crane operating instructions.
► Bypass the overload protection only according to the Crane operating instructions.
► Exceed the shut off limits of the overload protection only according to the Crane operating instructions.
► Any other use of the crane with bypassed overload protection than that described in the Crane operating instructions is prohibited.

If the maximum permissible load moment is exceeded, the overload protection turns all load moment increasing crane movements off.

This shut-off can be bypassed or exceeded various ways, for example:
– Exceeding the shut off limits (utilization more than 100 % or leaving the load chart).
– Activating an assembly operation.
– Activating an emergency operation.

The displays of the LICCON overload protection remain functioning when all associated sensors and limit switches are active and a load chart is available.

WARNING
Increased danger of accident due to bypass of the overload protection!
If the overload protection is bypassed, there is no longer any protection against crane overload.
In the event of improper use, the crane could collapse, the boom can break off or the crane can topple over.
Death, severe bodily injuries, property damage.
This can result in significant property damage.
► It is only permitted to bypass the overload protection for assembly or in emergencies.
► The bypass of the overload protection may only be carried out by persons who are aware of the effects of their acts.
► Bypassing the overload protection requires the presence of a person authorized by the crane operator and must be performed with utmost caution.
► Crane operation is strictly prohibited when the overload protection is bypassed.

12.1 Bypassing the LICCON overload protection

Note
► This applies only for cranes with LICCON overload protection.

LWE/LTR 1100-009/25105-02-02/en

copyright © Liebherr-Werk Ehingen GmbH 2023

Depending on the crane version, one or more operating elements are available to bypass the overload protection:
- Button in the control panel.
- Key button on the LICCON monitor.
- Key button / key switch on the instrument panel.
- Key button / key switch in the control cabinet.
- Sensor for the transponder in the crane cab / control cabinet / engine house.

Note
► For the location and function of the operating elements, see chapter 4.01 and chapter 4.02.

► Actuate the respective operating element.

Result:

- The LICCON overload protection is bypassed / inactive.
- The „Assembly“ icon appears on the LICCON monitor.
- Depending on the circumstances, acoustic and / or optical warning signals (blinkers, flashing beacons, horns and bells) sound.

If the LICCON overload protection is to be reactivated:
► No longer actuate the respective operating element or reset.

Result:

- The LICCON overload protection is active.
- The „Assembly“ icon no longer appears on the LICCON monitor.
- The acoustic and / or optical warning signals which were triggered by the bypass are turned off again.

12.2 Bypassing the PAT overload protection

Note
► Applies only for cranes with PAT overload protection.

► Actuate the bypass key button and turn the PAT overload protection off.

Result:

- The PAT overload protection is bypassed / inactive.

► Actuate the bypass key button and turn the PAT overload protection on.

Result:

- The PAT overload protection is active.

13 Bypassing the hoist top shut-off

Note
► Applies only for cranes with hoist limit switch.

If the hook block touches the hoist limit switch weight during the upward movement, the hoist limit switch reacts. The „Spool up winches“, „Luff boom down“ and „Telescope the telescopic boom out“ crane movements are turned off. The shut-off can be bypassed.

LWE/LTR 1100-009/25105-02-02/en

copyright © Liebherr-Werk Ehingen GmbH 2023

WARNING
Danger of accident due to bypass of hoist top shut-off!
When bypassing the hoist top shut-off, there is a danger that the hook block may be pulled against the pulley head when continuing to lift or luffing down the boom. This may damage the pulleys and cause the loads to fall.
- ► The bypass of the hoist top shut-off in crane operation with a load may only be carried out by a person authorized by the crane operator with the aid of a „Guide“. The guide must be in direct contact with the crane operator and must continually monitor the distance between the hook block and the boom head.
- ► Carry out all crane movements with maximum caution and minimum speed.

14 Pin connections

WARNING
Pin connections **not** lubricated!
If pins or pin connections are not properly greased or lubricated before assembly, then they can corrode.
The pins can be stuck in the pin bores and be damaged.
During the unpinning procedure, the pins can suddenly release.
Death, severe bodily injuries, property damage.
- ► Make sure that all pins, which are not supplied with grease via the central lubrication system are sufficiently greased before assembly.
- ► Make sure that all lube points, which are equipped with a grease fitting, are properly greased at assembly and according to the respective interval specification.
- ► Never insert or unpin pins by force.

WARNING
Pin **not** secured to prevent it from loosening up by itself!
The pin connection could loosen up suddenly.
Death, severe bodily injuries, property damage.
- ► Secure all pins with retaining elements against loosening up by itself.

WARNING
Distorted pin!
Angular pull or excessive or low hoisting force of the auxiliary crane may result in distortion of the pins.
Distorted parts can suddenly fly off when the pins are unpinned.
Death, severe bodily injuries, property damage.
- ► When the pins are unpinned, the lifting force of the auxiliary crane must be adapted to the weight of the components being lifted.
- ► Do **not** unpin difficult to remove pins by force.
- ► Remedy the cause of the tension.

LWE/LTR 1100-009/25105-02-02/en

copyright © Liebherr-Werk Ehingen GmbH 2023

14.1 Inserting and unpinning the collar pins

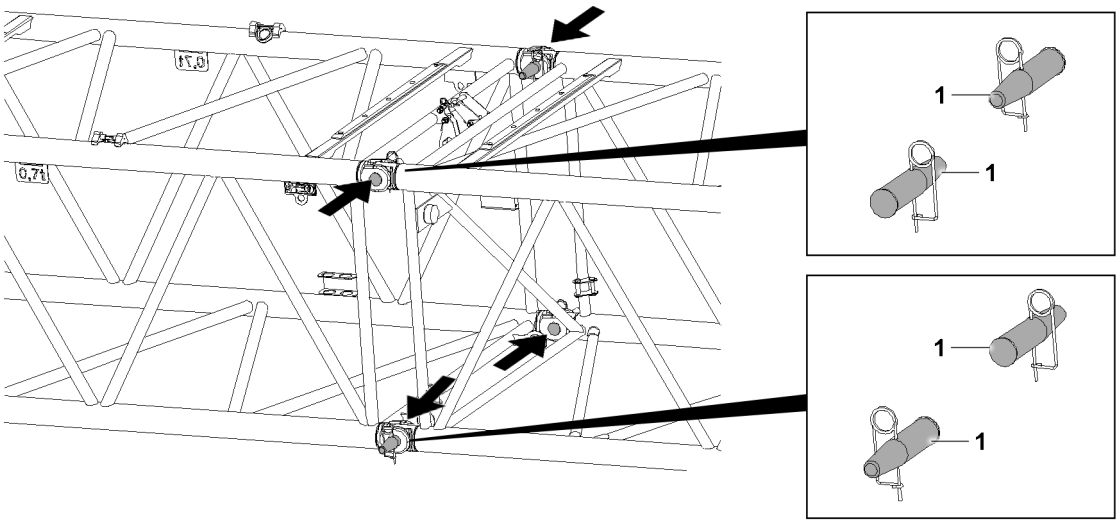

Fig.143114: Inserting the collar pins

WARNING
The collar pin is incorrectly pinned!
Death, severe bodily injuries, property damage.
- ► Insert or unpin both pins on the same horizontal level, i.e. **left and right**.
- ► Pin the upper collar pin **1** from the **outside to the inside** and unpin from the **inside to the outside**.
- ► Insert the lower collar pin **1** from the **inside to the outside** and unpin from the **outside to the inside**.

14.2 Inserting and unpinning the double cone pins horizontally

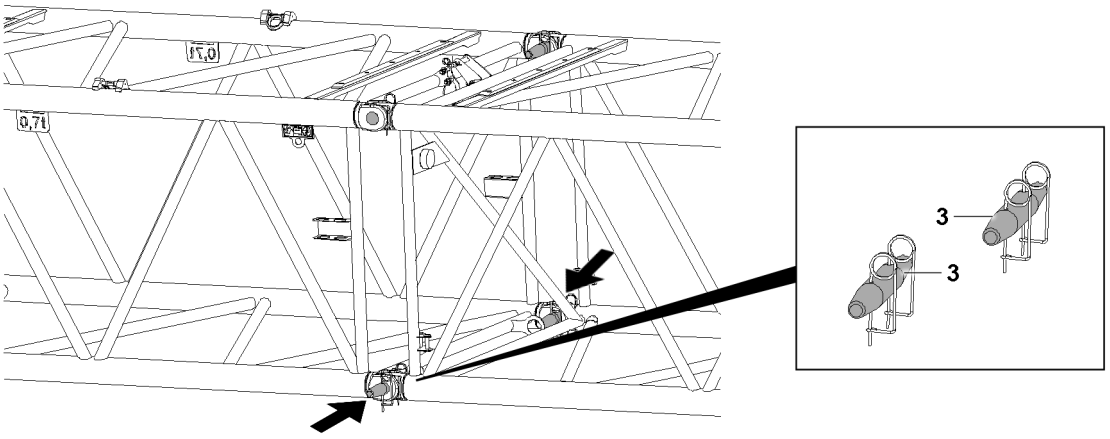

Fig.143115: Inserting the double cone pins horizontally

WARNING
Double cone pins incorrectly pinned!
Death, severe bodily injuries, property damage.
- ► Insert or unpin both pins on the same horizontal level, i.e. **left and right**.
- ► Insert and unpin the horizontally installable double cone pin **3** from the **outside to the inside**.

LWE/LTR 1100-009/25105-02-02/en

copyright © Liebherr-Werk Ehingen GmbH 2023

14.3 Inserting and unpinning the double cone pins vertically

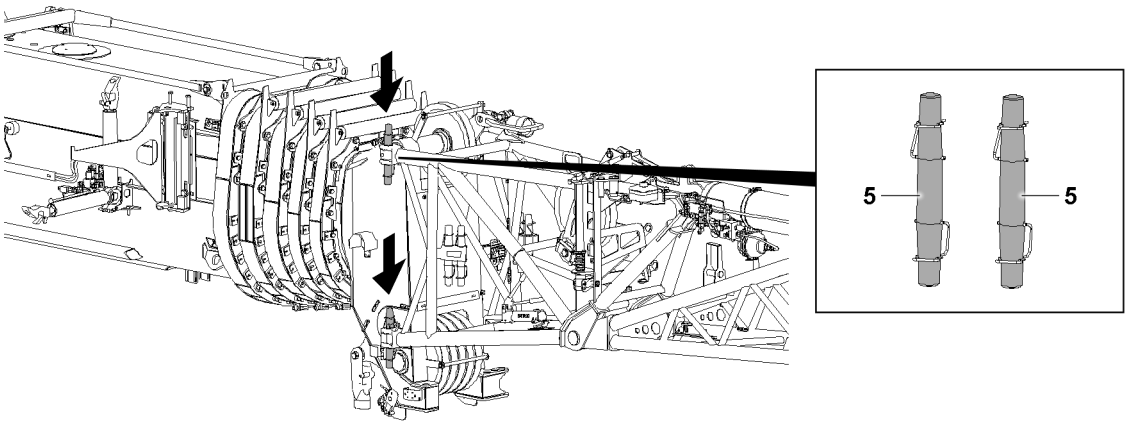

Fig.143116: Assembling the double cone pins vertically

WARNING
Double cone pins incorrectly pinned!
Death, severe bodily injuries, property damage.
► Pin and unpin the vertically installable double cone pins **5** from the **top to the bottom**.

14.4 Impact protection

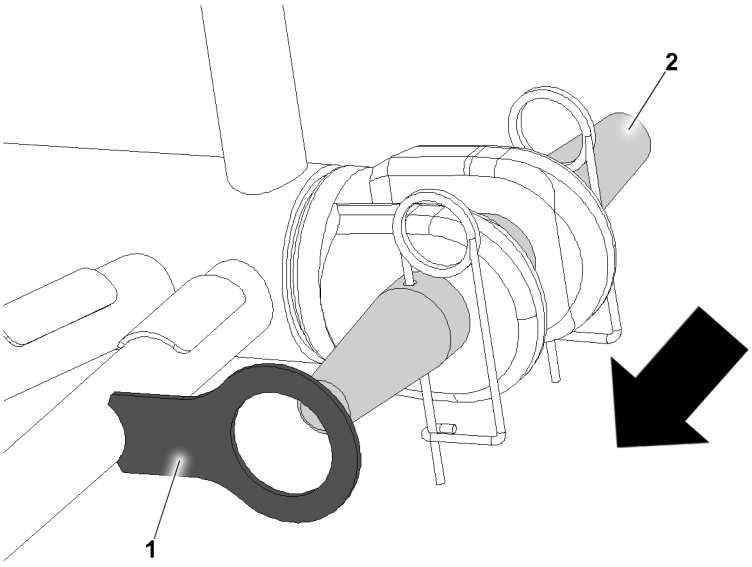

Fig.148194: Lattice section impact protection

Impact protection **1** is installed on certain lattice sections. The impact protection **1** should prevent the pins from being unpinned from the **inside to the outside**.

If impact protection **1** is installed:
► Only use double cone pins **2**.
► Only pin and unpin the double cone pins **2** from the **outside to the inside**.

LWE/LTR 1100-009/25105-02-02/en

copyright © Liebherr-Werk Ehingen GmbH 2023

14.5 Positioning the connecting forks for pinning

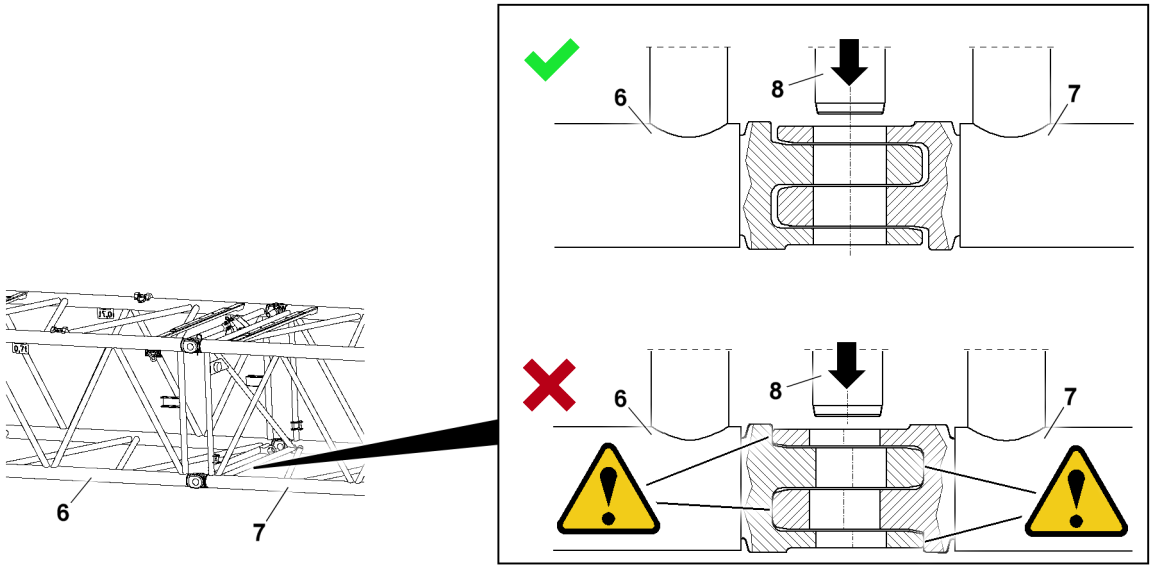

Fig.160395: Positioning the connecting forks for pinning

WARNING
The boom can break off!
If the connecting forks of the lattice section are seriously damaged, they can break under a high load.
The connecting fork, lattice section and boom can break off.
Death, severe bodily injuries, property damage.
► Do not load or push the connecting forks into each other on the block.

Note
In the example, the pins **8** should be inserted from the inside to the outside.
On some lattice sections, they must be inserted from the outside to the inside!
► Observe the correct direction when pinning.

► Bring the lattice section **6** together with the lattice section **7** so that the bores align.

Note
► When the bores align, document the necessary force for disassembly.

► Insert and secure the pin **8** in the right direction.

14.6 Lattice section with walking surfaces and stepping surfaces

This section is valid solely for the telescopic boom cranes.

Certain lattice sections have walking surfaces and stepping surfaces. Observe chapter 2.07 or the respective assembly chapter.

When the lattice sections have walking surfaces and stepping surfaces, the upper pin must be unpinned by assembly personnel on the lattice section. Not by assembly personnel on the ladder.

The procedure is described based on an example. Example of unpinning the N-assembly unit from the telescopic boom extension with eccentric.

Make sure that the following prerequisites are met:
– Person **1** is located on the telescopic boom extension with eccentric.
– Person **2** is located on the ladder.
– The F-assembly unit is unpinned.

LWE/LTR 1100-009/25105-02-02/en

copyright © Liebherr-Werk Ehingen GmbH 2023

Fig.159590: Unpinning the N-assembly unit

► Person **1** unpins the pin and at the same time Person **2** picks up the pin.

14.7 Pin transport position

The illustration in this section is an example. The transport position can be in another position depending on the lattice section.

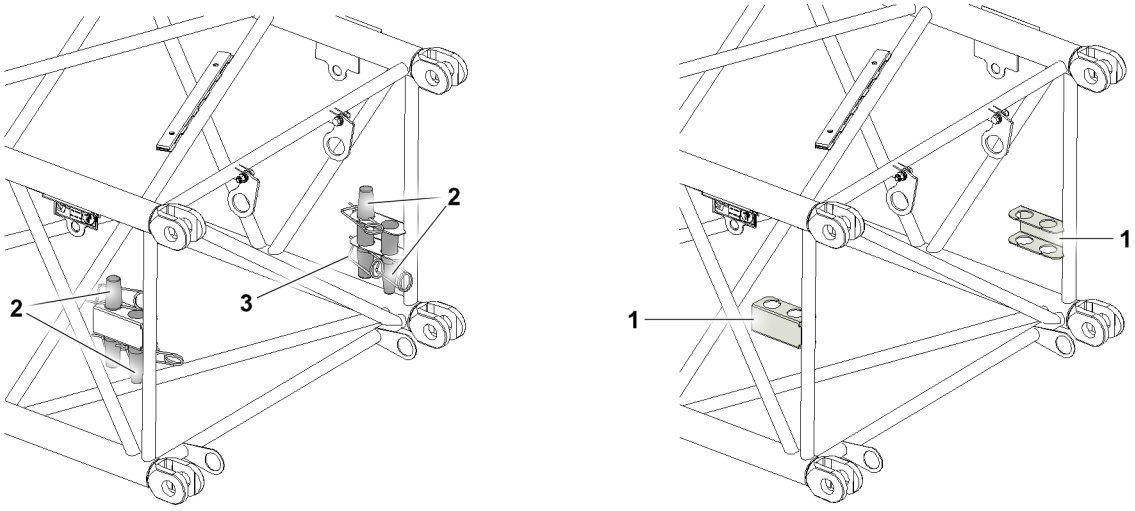

Fig.163330: Pin transport position

The retainer **1** is attached to the lattice sections. The pins **2** are inserted in the retainer **1** in the transport position and secured with retaining elements **3**.

Before the lattice section is assembled:

► Make sure that the pins **2** are inserted in the retainer **1**.

During disassembly of the lattice section:

► After the pin **2** is removed from the lattice section: Insert the pin **2** in the retainer **1**.

LWE/LTR 1100-009/25105-02-02/en

copyright © Liebherr-Werk Ehingen GmbH 2023

15 Retaining elements

15.1 Checking the retaining elements

Retaining elements are used to secure the pins. Due to mechanical damage / distortion, the function of the retaining elements can be compromised. In addition, the spring force of the retaining elements can be reduced significantly. Do **not** re-use retaining elements if there is insufficient spring force. The pin retainer must be secured with a correctly **functioning** retaining element.

WARNING
Mechanical damage or deformation of the retaining elements!
The retaining elements can fail.
The pin can unpin by itself.
Death, severe bodily injury, property damage.
- ► Use exclusively functioning retaining elements in a proper condition.
- ► Replace defective retaining elements.

15.2 Overview of the retaining elements

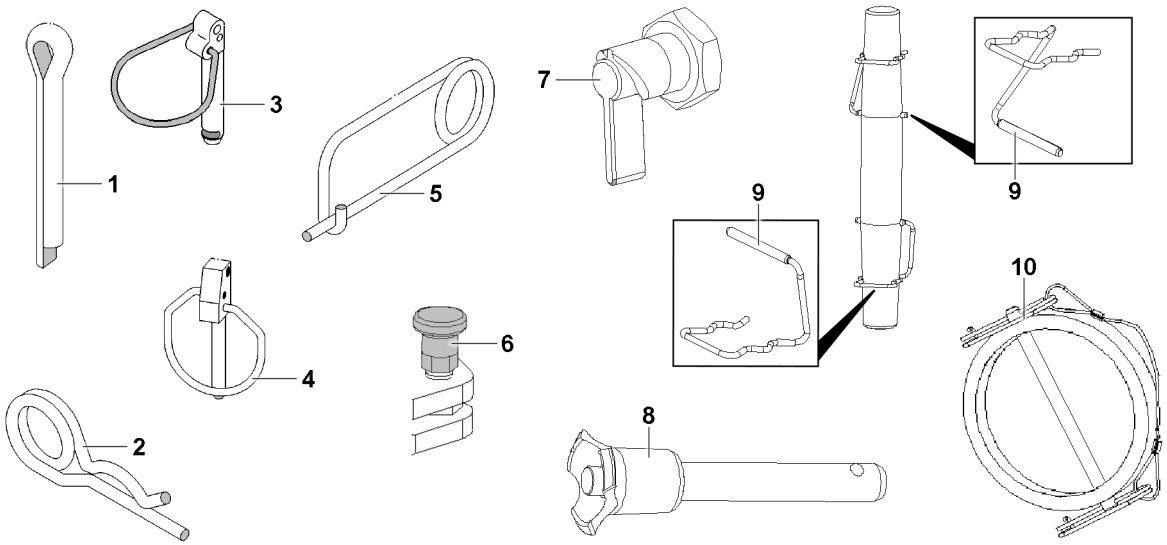

Fig.163492: Retaining elements

1 Split pin
2 Cotter pin
3 Safety locking pin
4 Locking pin
5 Spring retainer
6 Detent pin
7 Latch
8 Ball locking pin
9 Retaining clip
10 Retaining pin with the ring and spring retainer

LWE/LTR 1100-009/25105-02-02/en

copyright © Liebherr-Werk Ehingen GmbH 2023

15.3 Split pin

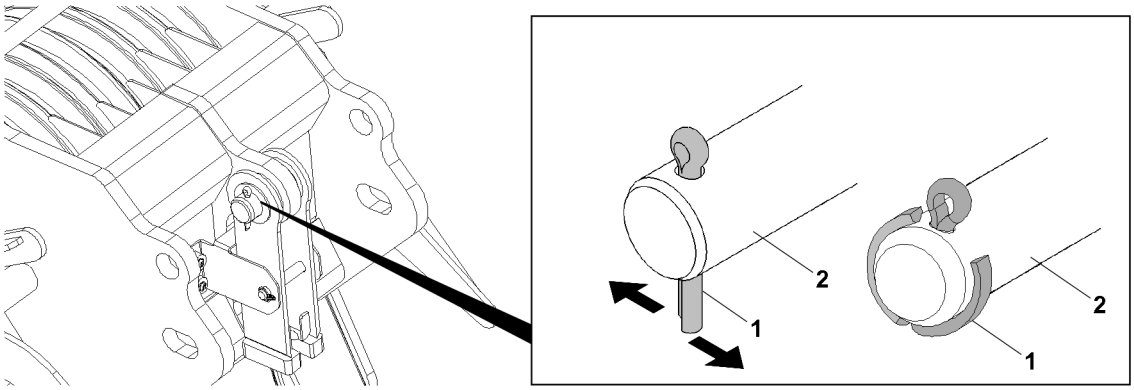

Fig.143105: Split pin

1 Split pin **2** Pin

WARNING
Multiple use of a split pin **1**!
The split pin **1** can break.
- ► Assemble the split pin **1** only once.
- ► Use a correctly sized split pin **1**.

- ► Secure the pin **2**: Insert the split pin **1**.
- ► Bend the end of the split pin **1** toward the outside.

Problem remedy
Is the split pin **1** defective?
- ► Replace the split pin **1**.

15.4 Cotter pin

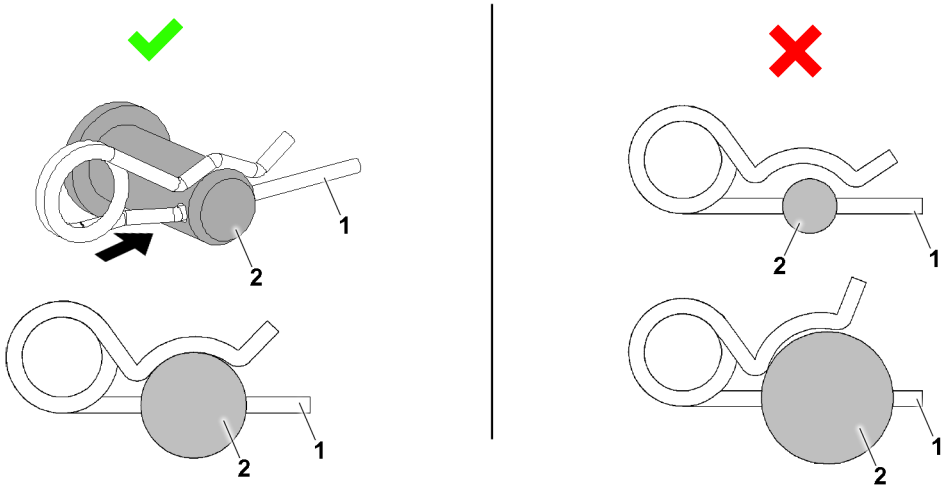

Fig.163494: Cotter pin, correct and incorrect dimensions

1 Cotter pin **2** Pin

LWE/LTR 1100-009/25105-02-02/en

copyright © Liebherr-Werk Ehingen GmbH 2023

WARNING
Improper dimensions of the cotter pin **1**!
The cotter pin **1** can loosen up by itself.
► Use a correctly sized cotter pin **1**.

► Secure the pin **2**:Insert the cotter pin **1**.

Problem remedy
Is the spring tension too low?
The cotter pin **1** is defective.
► Replace the cotter pin **1**.

15.5 Safety locking pin

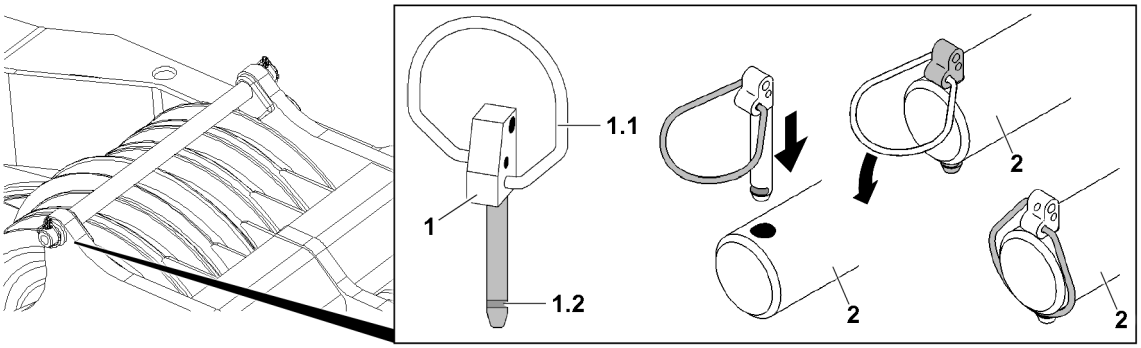

Fig.143103: Safety locking pin

1 Safety locking pin
1.1 Spring clip
1.2 Groove
2 Pin

Increased effort is necessary for opening the safety locking pin **1**.

WARNING
Spring clip **1.1 not** engaged!
The safety locking pin **1** can loosen up by itself.
► Engage the spring clip **1.1** completely in the groove **1.2**.

► Secure the pin **2**: Insert the safety locking pin **1**.
► Close the spring clip **1.1** and engage it completely in the groove **1.2**.

Problem remedy
Does the spring clip **1.1 not** engage completely?
The spring clip **1.1** tension is too low.
► Replace the safety locking pin **1**.

LWE/LTR 1100-009/25105-02-02/en

copyright © Liebherr-Werk Ehingen GmbH 2023

15.6 Locking pin

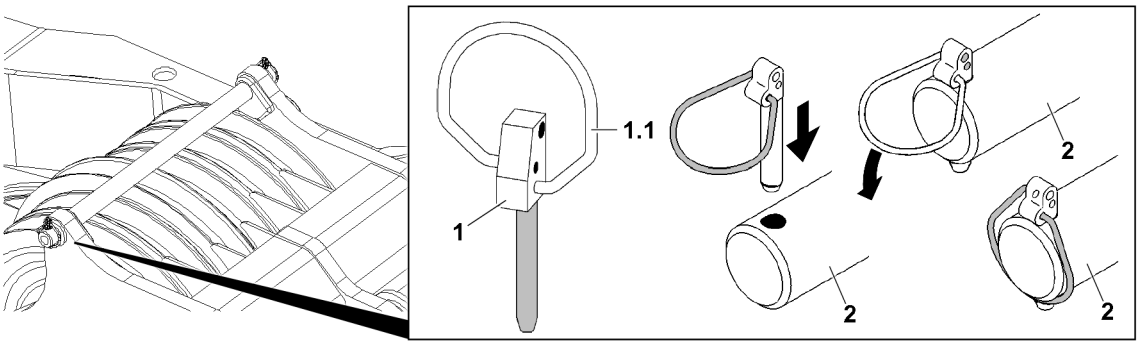

Fig.143104: Locking pin

1 Safety locking pin
1.1 Spring clip
2 Pin

WARNING
The locking pin **1** is **not** completely closed!
The locking pin **1** can loosen up by itself.
► Close the spring clip **1.1** completely.

► Secure the pin **2**: Insert the locking pin **1**.
► Close the spring clip **1.1** completely.

Problem remedy
Does the spring clip **1.1** not close completely?
The spring clip **1.1** tension is too low.
► Replace the locking pin **1**.

15.7 Spring retainer

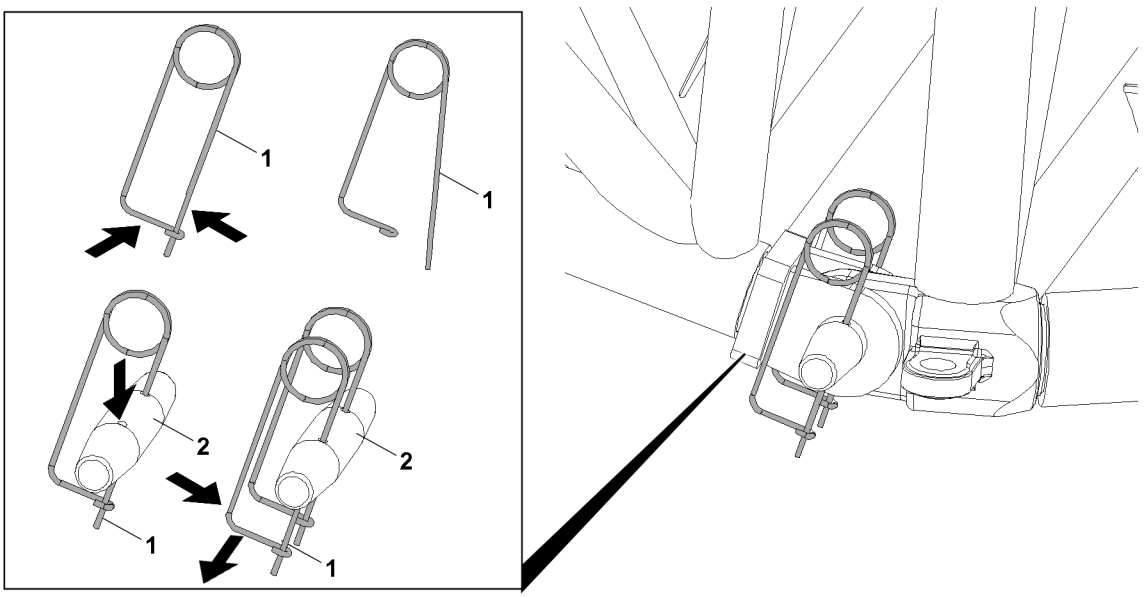

Fig.143108: Spring retainer

1 Spring retainer

LWE/LTR 1100-009/25105-02-02/en

copyright © Liebherr-Werk Ehingen GmbH 2023

WARNING
The spring retainer **1** is **not** closed!
The spring retainer **1** can loosen up by itself.
► Close the spring retainer **1**.

► Secure the pin **2**: Insert the spring retainer **1**.
► Close the spring retainer **1**.

Problem remedy
Is the spring tension too low?
The spring retainer **1** is defective.
► Replace the spring retainer **1**.

15.8 Detent pin

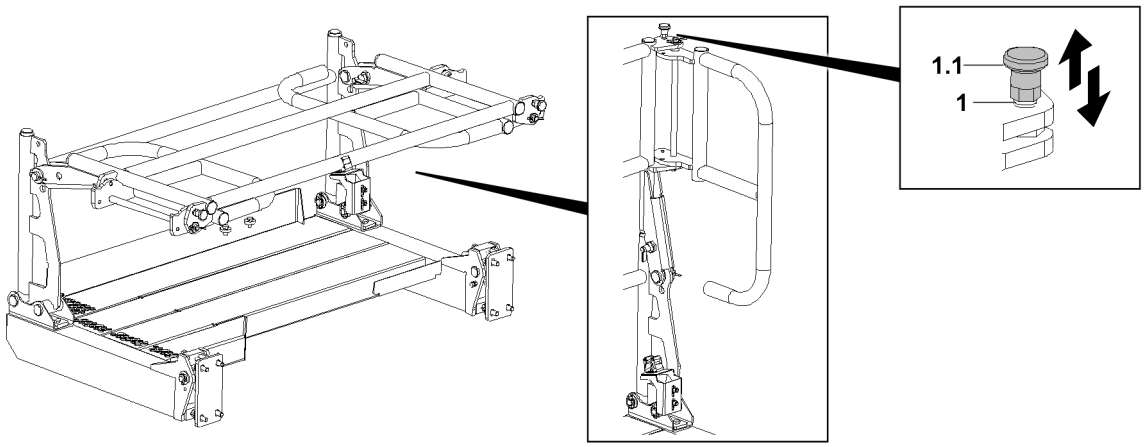

Fig.143110: Detent pin

1 Detent pin **1.1** Handle

WARNING
The handle **1.1** is **not** locked!
The detent pin **1** can loosen up by itself.
► Lock the detent pin **1**.

► Pull the handle **1.1**.

Result:
– The detent pin **1** is unlocked.

► Insert the detent pin **1**: Release the handle **1.1**.

Result:
– The detent pin **1** is pinned.

Problem remedy
Can the handle **1.1** not be pulled?
The detent pin **1** is defective.
► Replace the detent pin **1**.

LWE/LTR 1100-009/25105-02-02/en

copyright © Liebherr-Werk Ehingen GmbH 2023

15.9 Latch

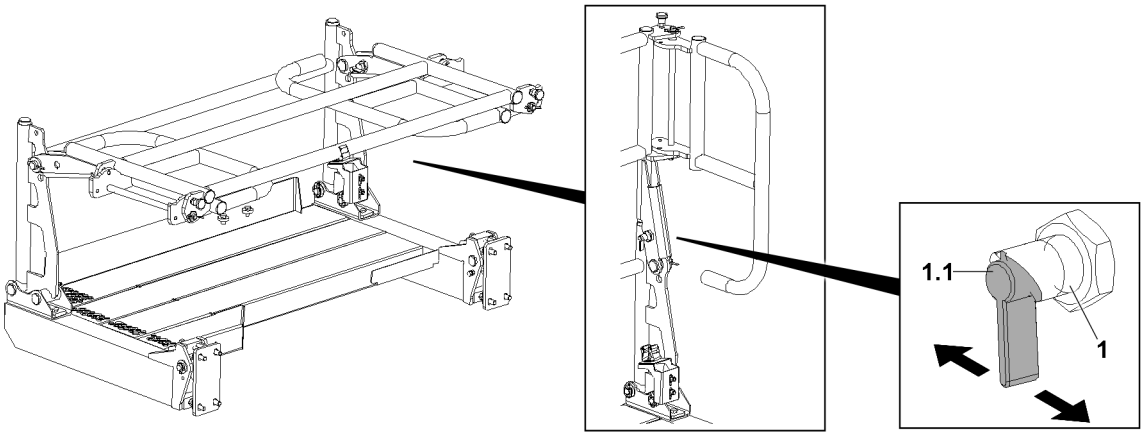

Fig.143111: Latch

1 Latch **1.1** Lever

WARNING
The latch **1** is **not** locked!
The latch **1** can loosen up by itself.
► Lock the latch **1**.

► Operate the lever **1.1**.

Result:
– The latch **1** is unlocked.

► Pin the latch **1**: Release the lever **1.1** and swing the railing until the latch is pinned.

Problem remedy
Can the lever **1.1** not be actuated?
The latch **1** is defective.
► Replace the latch **1**.

LWE/LTR 1100-009/25105-02-02/en

copyright © Liebherr-Werk Ehingen GmbH 2023

15.10 Ball locking pin

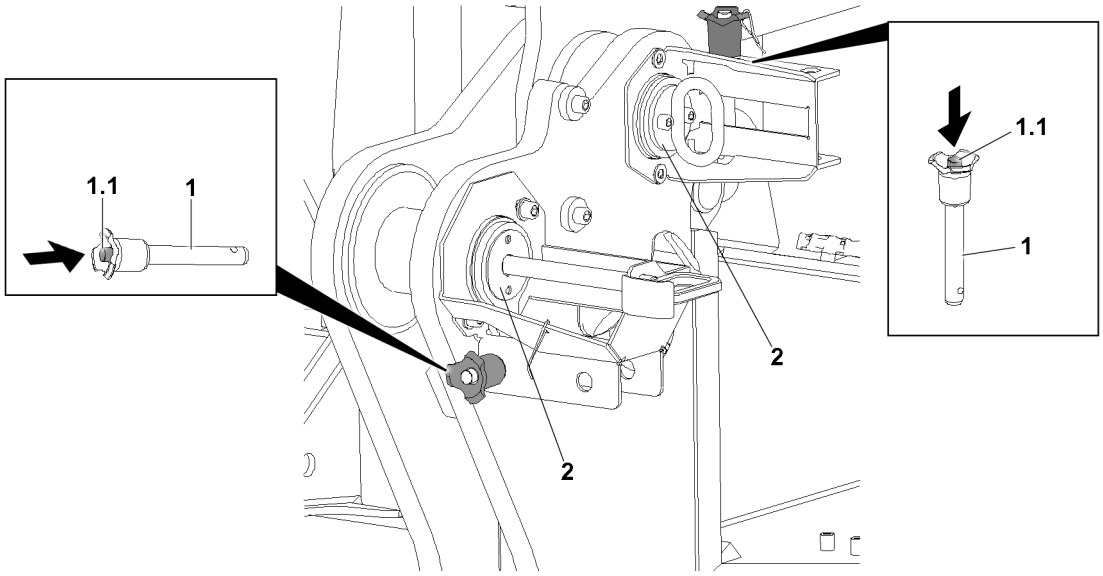

Fig.143109: Ball locking pin

1 Ball locking pin
1.1 Press button
2 Pin

WARNING
The ball locking pin **1** is **not** locked!
The ball locking pin **1** can loosen up by itself.
► Lock the ball locking pin **1**.

► Secure the pin **2**: Actuate the press button **1.1**.

Result:
– The ball locking pin **1** is unlocked.

► Insert the ball locking pin **1** and release the press button **1.1**.

Result:
– The ball locking pin **1** is pinned and secured.

Problem remedy
Can the press button **1.1** not be actuated?
The ball locking pin **1** is defective.
► Replace the ball locking pin **1**.

LWE/LTR 1100-009/25105-02-02/en

copyright © Liebherr-Werk Ehingen GmbH 2023

15.11 Retaining clips

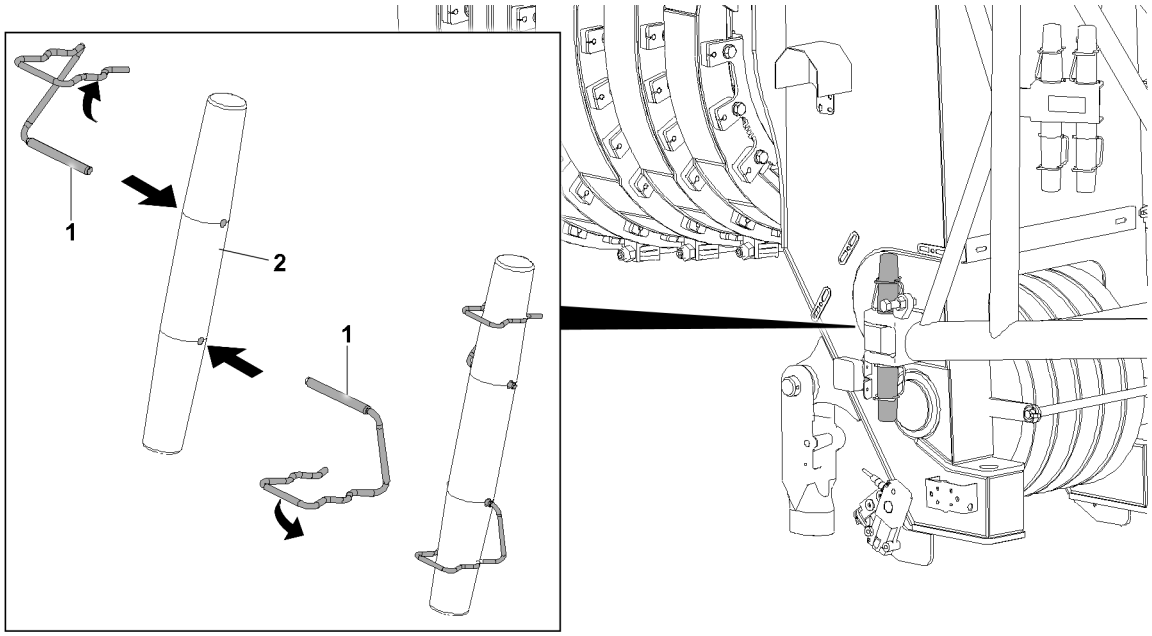

*Fig.143107: Retaining clips **1***

1 Retaining clip **2** Pin

WARNING
Incorrect retaining element!
Shearing off of the retaining elements.
► To secure the folding jib pinning: Use retaining clips **1**.
► The use of other retaining elements is **prohibited**.

WARNING
Retaining clip **not** engaged!
The retaining clip **1** can loosen up by itself.
► Engage the retaining clip **1**.

► Secure the pin **2**: Insert the retaining clip **1**.
► Engage the retaining clip **1**.

Problem remedy
Is the retaining clip **1** defective?
The spring force of the retaining clip **1** is too low.
► Replace the retaining clip **1**.

LWE/LTR 1100-009/25105-02-02/en

copyright © Liebherr-Werk Ehingen GmbH 2023

15.12 Retaining pin with the ring and spring retainer

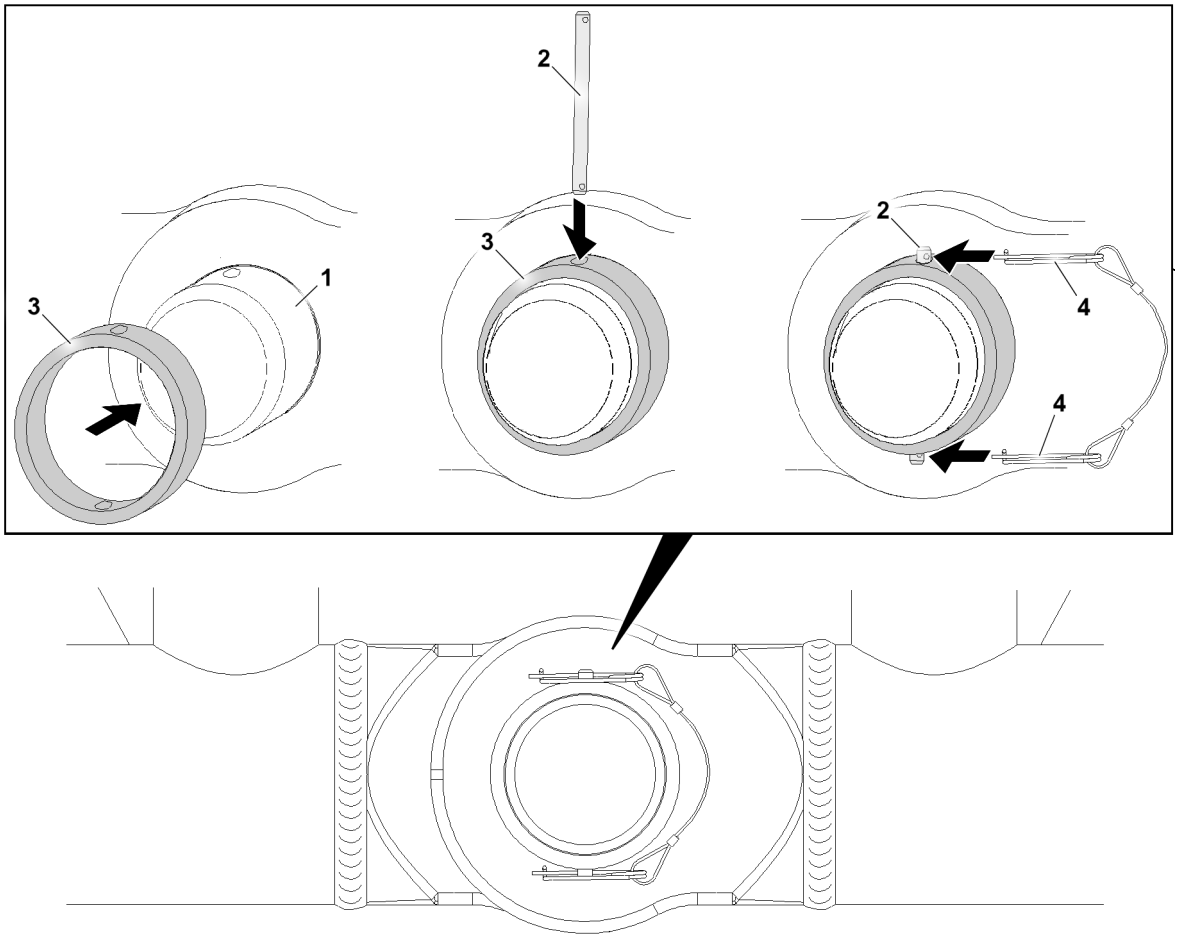

Fig.163493: Using the retaining pin with ring and spring retainer

1	Pin	**3**	Ring
2	Retaining pin	**4**	Spring retainers

WARNING
Incorrect retaining element!
Shearing off of the retaining elements. Failure of the retaining elements.

If specified by the factory for securing the pin **1**:
- ► Use the retaining pin **2** with the corresponding ring **3** and spring retainers **4**.
- ► The use of other retaining elements is **prohibited**.

To sure the pin **1**:
- ► Push the ring **3** over the pin **1**. Pay attention to the alignment of the bores.
- ► Insert the retaining pin **2** through the bores in the ring **3** and pin **1**.
- ► Secure the retaining pin **2** on both sides with spring retainers **4**.

Problem remedy
Is the retaining pin **2** bent / cracked?
The retaining pin **2** is defective.
- ► Replace the retaining pin **2**.

Problem remedy
Is the spring tension too low?
The spring retainer **4** is defective.
- ► Replace the spring retainer **4**.

LWE/LTR 1100-009/25105-02-02/en

copyright © Liebherr-Werk Ehingen GmbH 2023

16 Assembling / disassembling

WARNING
Danger of fatal injury due to incorrect assembly or disassembly!
The assembly / disassembly of lattice sections and / or components may never be performed by untrained personnel.
An erroneous assembly / disassembly of lattice sections and / or components can cause damage on load carrying crane structures.
Crane components can fail due to improper assembly / disassembly.
Death, severe bodily injuries, property damage.

- ► Make sure that the assembly / disassembly of lattice sections and / or components is carried out only by authorized and trained expert personnel.
- ► Make sure that the fastening equipment on lattice sections and / or components is always fastened properly.
- ► Make sure that lattice sections and / or components are always properly pinned and secured at assembly.
- ► For assembly / disassembly of individual components, also observe the chapters relating to those components.
- ► The boom combinations must be assembled according to the separately supplied rod plans.
- ► All components which must be transported separately must be transported with suitable auxiliary cranes and fastening equipment near ground level.

WARNING
Failure of auxiliary winch!

- ► Only use the auxiliary winch (assembly or reeving winch) for assembly and not to lift loads.
- ► Lifting of loads with the auxiliary winch is prohibited.

WARNING
Danger of impact / crushing!
When assembling / disassembling crane components with the auxiliary crane, crane components can start to swing back and forth.
When lifting / lowering and positioning crane components, there is an increased danger of impact / crushing.
Death, severe bodily injuries, property damage.

- ► Make sure that personnel cannot be caught by components.
- ► Make sure that the crane is horizontally aligned.
- ► When working in a danger zone: Use aids to protect limbs.
- ► Guide components with suitable aids to minimize oscillation.
- ► During assembly / disassembly no one may be in the dangerous area around or underneath the suspended components before the load has been secured.

Part of the category „Aids for working at a height“ are, for example:

- – Lifting platforms
- – Scaffolding
- – Auxiliary cranes
- – Ladders

LWE/LTR 1100-009/25105-02-02/en

copyright © Liebherr-Werk Ehingen GmbH 2023

WARNING
Danger of falling!
During assembly / disassembly, inspection and maintenance work, assembly personnel must be secured with appropriate aids to prevent them from falling.
Death, severe bodily injuries, property damage.
- ► All work at a height, when there is a danger of falling, must be carried out with suitable aids.
- ► If aids are not available and work cannot be carried out from the ground, then assembly personnel must secure themselves with the supplied fall arrest system to prevent falling, see chapter 2.04.
- ► If fall protection equipment is available, then it must be used, see chapter 2.06.
- ► When lifting, lowering, swinging crane parts in and out, no persons may remain in the danger zone.
- ► When closing or opening boom systems during boom assembly or boom disassembly, no persons may remain on the boom system or in the danger zone.
- ► If railings are present on the components, then they must be brought into the corresponding position and secured for assembly / disassembly work.
- ► Only step on the aids, ladders and catwalks with clean shoes.
- ► Keep aids, ladders and catwalks free of heavy dirt, snow, frost and ice.
- ► During all assembly and disassembly work, maintenance work and inspections, travel or crane operation is prohibited.
- ► Remaining on a suspended load is prohibited.
- ► Stepping and walking on crane components and lattice sections with an incline of more than 20° is prohibited.
- ► For all assembly work, the crane driver of the main crane must be in voice contact with the crane driver / crane drivers of the auxiliary crane / auxiliary cranes.
- ► For all assembly work, the crane driver of the main crane must be in voice contact with the assembly personnel.
- ► For assembly tasks, the crane driver may only initiate crane movements when the responsible guide has explicitly released the movement.

DANGER
The component can fall down!
If the corresponding component is disengaged from the auxiliary crane before the corresponding component is pinned, then the corresponding component can fall down.
Death, severe bodily injuries, property damage.
- ► Do not detach the auxiliary crane and the fastening equipment until the respective component is pinned and secured.

WARNING
The component can fall down!
If the corresponding component is unpinned without being secured by an auxiliary crane, the corresponding component can fall down.
Death, severe bodily injuries, property damage.
- ► Do not unpin the component until it is secured by an auxiliary crane.

WARNING
Falling components and tools!
Whenever working at a height, for example on the crane or on an aerial platform, components or tools can fall down.
Death, severe bodily injuries, property damage.
- ► Make sure that the danger zone under the work area is blocked off and marked and that no personnel is located within it.

LWE/LTR 1100-009/25105-02-02/en

copyright © Liebherr-Werk Ehingen GmbH 2023

16.1 Assembly drawings

WARNING
Use of assembly drawings!
Due to sole use of assembly drawings, dangerous situations can arise up to toppling of the crane.
Death, severe bodily injuries, property damage.
- ► Assembly drawings should only be considered to be **additional** and **supplementary** information.
- ► The respective chapters in the crane operating instructions are decisive for the assembly and disassembly of crane structures, lattice sections or crane components.
- ► The detailed information and danger notes in the respective chapters must be observed.

16.2 Specifications for the set up configuration for cranes with lattice mast with LICCON overload protection

If exact specifications for the settings of the LICCON overload protection are not available, the following rules apply.

If the crane is erected:
- – The LICCON overload protection must be set in accordance with the future set up configuration of the operational crane.
- – The future set up configuration of the operational crane corresponds to the specifications in the load chart according to which the crane is operated.
- – Take the intermediate operating mode into account. For example, when the SA-operating mode has its own load chart.

If the crane is dismantled:
- – The LICCON overload protection must remain set in accordance with the last set up configuration of the operational crane.
- – The last set up configuration of the operational crane corresponds to the specifications in the load chart according to which the crane is operated.
- – Take the intermediate operating mode into account. For example, when the SA-operating mode has its own load chart.

If the crane is changed to another set up configuration:
- – The LICCON overload protection must remain set in accordance with the last set up configuration of the operational crane until all crane components to be disassembled have been removed. As soon as crane components are installed again, the LICCON overload protection must be set in accordance with the future set up configuration of the operational crane.

Note
- ► The settings for the LICCON overload protection are entered in the Set up program, see chapter 4.02.

16.3 Guiding crane structures, lattice sections or crane components

WARNING
Danger due to oscillating load!
During the assembly of crane structures, lattice sections or crane components with the auxiliary crane, they can start to swing back and forth.
Death, severe bodily injuries, property damage.
- ► To guide and position crane structures, lattice sections or crane components always use a guide rope.
- ► Make sure that there are no persons or obstacles within the danger zone.
- ► Make sure that the guide rope is long enough.

LWE/LTR 1100-009/25105-02-02/en

copyright © Liebherr-Werk Ehingen GmbH 2023

16.4 Fastening the lattice sections

WARNING
Fastening equipment incorrectly attached to the fastening point!
If the fastening equipment incorrectly is attached to the fastening point, the lattice sections can loosen up and fall down.
Death, severe bodily injuries, property damage.
► Correctly attach suitable fastening equipment to the fastening point.

16.4.1 Eyehook fastening point

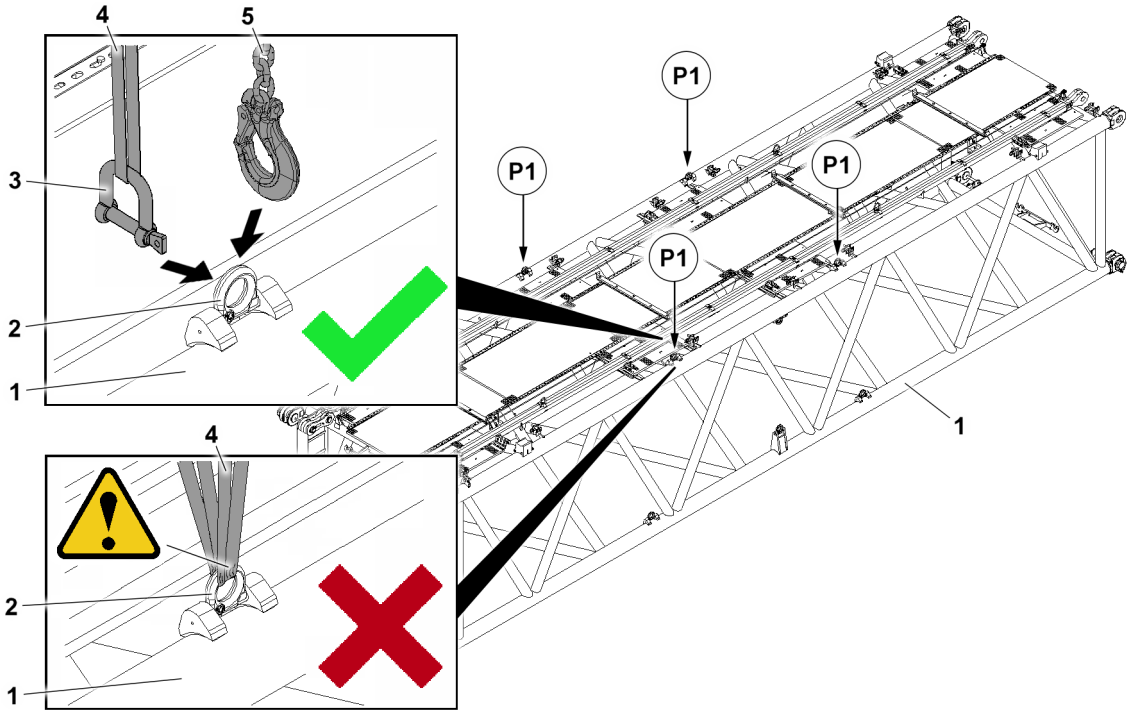

*Fig.159190: Correct and incorrect fastening of an eyehook **2***

P1	Fastening points	**3**	Shackle fastening equipment
1	Lattice section	**4**	Belt loop fastening equipment
2	Eyehook	**5**	Chain hanger fastening equipment

Make sure that the following prerequisites are met:
– The fastening equipment has been selected correctly for the load case.
– The fastening equipment is in a perfect condition.

WARNING
Fastening equipment incorrectly attached to the fastening point!
If the fastening equipment **4** is incorrectly attached to the fastening point, the lattice sections can loosen up and fall down.
The belt loop fastening equipment **4** can be crushed and rip.
Death, severe bodily injuries, property damage.
► Only attach the belt loop fastening equipment **4** with shackle fastening equipment **3** together to the eyehook **2**.

When the fastening points **P1** on the lattice section **1** correspond to the illustrated eyehooks **2**:
► Only fasten the belt loop fastening equipment **4** with shackle fastening equipment **3** to the eyehook **2**.
or
Fasten the chain hanger fastening equipment **5** to the eyehook **2**.

LWE/LTR 1100-009/25105-02-02/en

copyright © Liebherr-Werk Ehingen GmbH 2023

16.4.2 Bitt fastening point

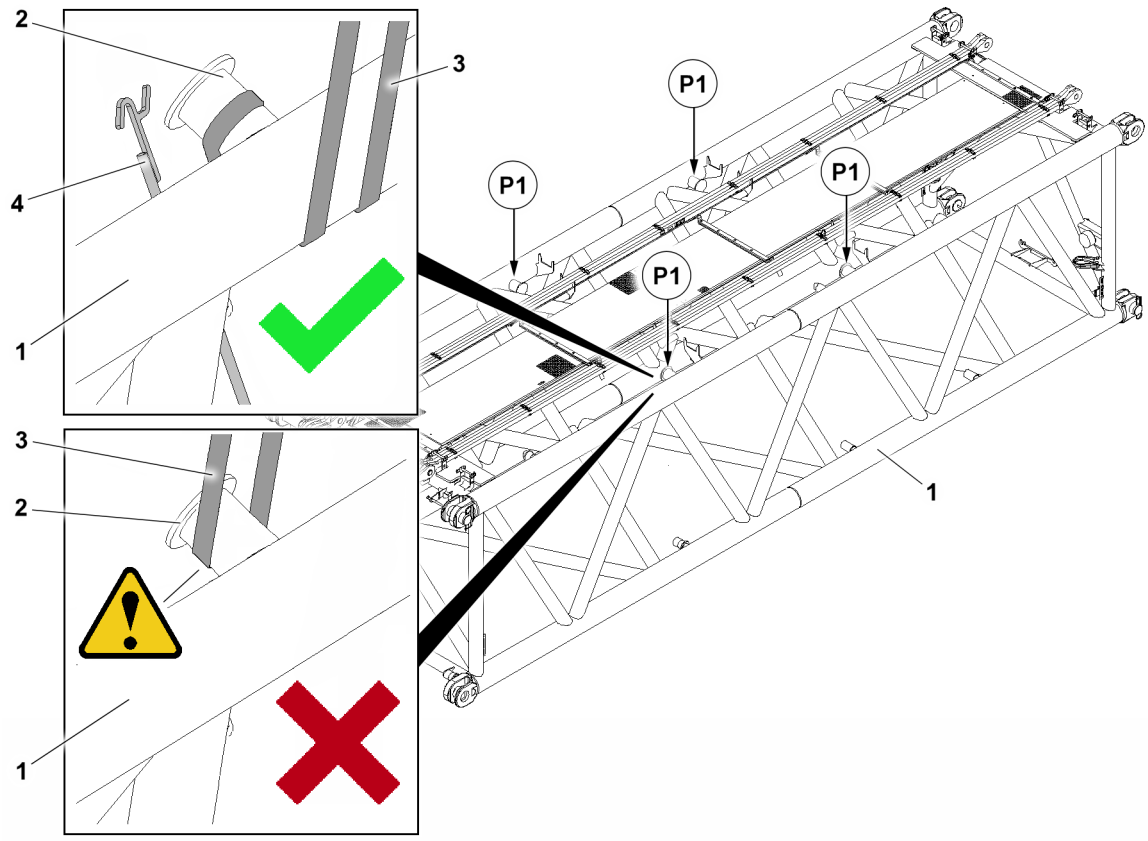

*Fig.159189: Correct and incorrect fastening of a bitt **2***

P1 Fastening points
1 Lattice section
2 Bitt
3 Belt loop fastening equipment
4 Auxiliary rod

Make sure that the following prerequisites are met:
– The fastening equipment has been selected correctly for the load case.
– The fastening equipment is in a perfect condition.

WARNING
Fastening equipment incorrectly attached to the fastening point!
If the belt loop fastening equipment **3** is incorrectly attached to the bitt **2**, the lattice sections can loosen up and fall down.
The belt loop fastening equipment **3** can slide down.
Death, severe bodily injuries, property damage.
► Fasten the belt loop fastening equipment **3** only by wrapping it on the corner pipe of the lattice section **1** on the bitt **2**.

Use an auxiliary rod **4** to attach the belt loop fastening equipment **3** safely from the ground.

When the fastening points **P1** on the lattice section **1** correspond to the illustrated bitts **2**:
► Fasten the belt loop fastening equipment **3** by wrapping it on the corner pipe of the lattice section **1** on the bitt **2**.

LWE/LTR 1100-009/25105-02-02/en

copyright © Liebherr-Werk Ehingen GmbH 2023

16.4.3 Fastening the lattice sections

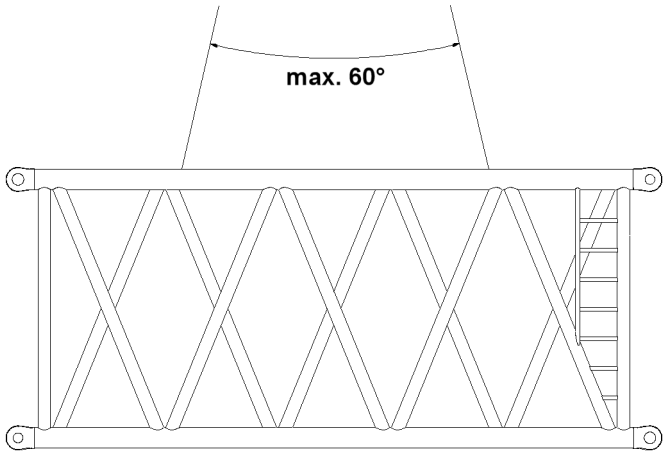

Fig.164543: Fastening equipment, spreading angle maximum 60°

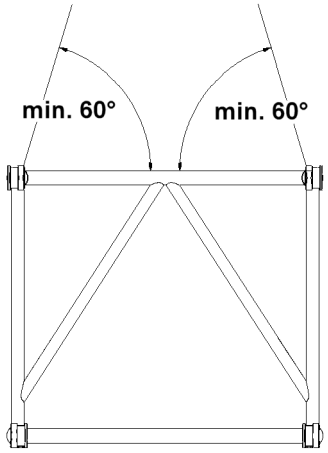

Fig.164544: Fastening equipment, incline angle minimum 60°

Make sure that the following prerequisites are met:
- The fastening equipment has been selected correctly for the load case.
- The fastening equipment is in a perfect condition.

WARNING
Incorrect length of the fastening equipment!
The fastening points can be overloaded. The lattice sections can fall down.
► When fastening, observe a **maximum** spread angle of 60°.
► When fastening, observe a **minimum** incline angle of 60°.

► Select fastening equipment with a suitable length.

LWE/LTR 1100-009/25105-02-02/en

copyright © Liebherr-Werk Ehingen GmbH 2023

16.5 Fastening of guy rods

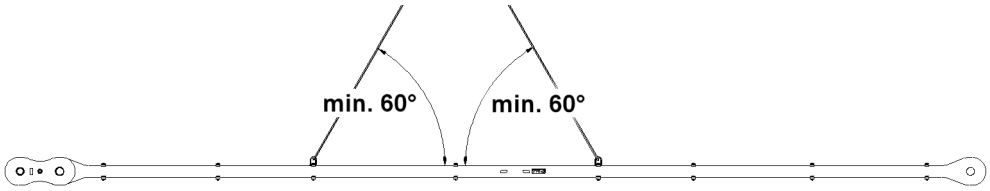

Fig.164542: Fastening equipment, incline angle minimum 60°

Make sure that the following prerequisites are met:
- The fastening equipment has been selected correctly for the load case.
- The fastening equipment is in a perfect condition.

WARNING
Incorrect length of the fastening equipment!
The fastening points can be overloaded. Guy rods can fall down.
► When fastening, observe a **minimum** incline angle of 60°.

► Select fastening equipment with a suitable length.

16.6 Assembling / disassembling the electrical lines

WARNING
The crane can topple over!
If mechanical crane components, which have electrical connections are not immediately electrically connected after assembly then the limit switches and / or electrical sensors are not functioning.
Safety relevant shut offs are not recognized by the LICCON computer system.
Any errors or safety relevant messages which might occur are not shown on the LICCON computer system.
Death, severe bodily injuries, property damage.
► Make sure that the electrical connections are made immediately after installation of the respective crane components on the crane.
► Make sure that the procedure to make the electrical connections to the boom end sections in the respective assembly and set up chapters are observed.

NOTICE
Damage to the electrical connections!
If the following measures are not adhered to, the electrical connections can be damaged.
► Do not plug in the plug connection or unplug them under tension.
► Do not pinch or crush electrical connections.

When pulling the cable out:
► Hold the plug and not the cable. Do not pull on the cable to release the plug connection.
► Relieve the electrical connections in operating condition.
► In case of defective or faulty electrical lines, contact Customer Service at Liebherr-Werk Ehingen GmbH.

WARNING
Malfunction if dummy plugs are not installed!
If the dummy plugs are not fit on the non-required electrical connections, then malfunctions or functional limitations can occur on the crane.
► Make sure that all non-required electrical connections, which have a dummy plug, are closed off with dummy plugs.
► Observe the wiring diagram.

LWE/LTR 1100-009/25105-02-02/en

copyright © Liebherr-Werk Ehingen GmbH 2023

NOTICE
Property damage due to dirt and / or corrosion!
The plug connections are only protected when plugged in. If the plug connections are not plugged in, then the contact surfaces can corrode.
This could result in malfunctions.
- ► Always plug or screw the plug connections together properly.
- ► Keep plug connections clean and dry. Clean contact surfaces provide the best signal transfer.
- ► Close off the plug connections that are not used with dust caps.

- ► Establish the electrical connections to the installed crane components properly.
- ► As a rule, close off on-required electrical connections (for example of accessories which are not installed) with the respective dummy plugs.
- ► Properly close off electrical connections, which have no dummy plugs, with the corresponding protective dust or cover caps.

If a pull relief for the cable drum is present:
- ► Connect the pull relief in the fixed point and relieve the plug connection from the pull strain.

After installing the plug connections:
- ► Check all plug connections for proper connection.

If a plug connection is not properly connected:
- ► Plug or screw the plug connection together properly.

After removing the plug connections:
- ► Protect the electrical connections with protective dust or cover caps or place them in intended storage retainers.
- ► After unplugging the electrical plug connections, install the dummy plugs, see Electrical wiring diagram.

If locking brackets are present:
- ► Close the locking bracket.

16.7 Assembling / disassembling of hydraulic lines

When connecting and releasing hydraulic lines with quick couplings, make sure that the coupling procedure is carried out correctly.

WARNING
Danger of accident due to loss of pressure or leakage!
Incorrectly coupled or self-loosening quick couplings (particularly return lines) can result in serious accidents due to component failure.
Death, severe bodily injuries, property damage.
- ► Check the quick couplings after assembly for correct connection.
- ► Make sure that the sleeve and plug are bolted with the knurled nut after assembly.

WARNING
Pressure in the hydraulic lines!
If the pressure supply is not interrupted before releasing the hydraulic lines, the hydraulic oil can escape with high pressure.
Death, severe bodily injuries, property damage.
- ► Release the pressure in the hydraulic system before releasing. Interrupt the pressure supply and wait a short time.

- ► Release the pressure in the hydraulic system before connecting or disconnecting: Turn the engine off and wait for a short time.
- ► Connect the coupling components (sleeve and connector) and screw them together with the knurled nut.
- ► Tighten the hydraulic coupling by hand. Turn the knurled nut until it reaches a tangible, fixed stop position.

LWE/LTR 1100-009/25105-02-02/en

copyright © Liebherr-Werk Ehingen GmbH 2023

16.8 Bypassing at crawler assembly / disassembly

Note
► Applies only for cranes with crawler assembly key button.

WARNING
High danger of accident in case of actuated crawler assembly key button!
If the crawler assembly key button is actuated, the overload protection is bypassed. No shut-off at overload will occur in assembly operation nor in crane operation.
In the event of misuse, the crane can topple over.
Death, severe bodily injuries, property damage.
► The crawler assembly key button may only be actuated for assembly tasks.
► All other usage of the crawler assembly key button other than as described in the operating instructions is prohibited.
► Crane operation with the crawler assembly key button enabled is strictly prohibited.

16.8.1 Activating the bypass at crawler assembly and crawler disassembly

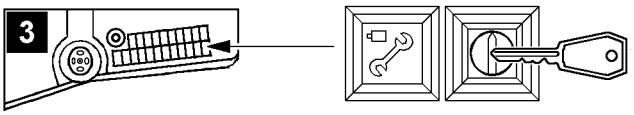

Fig.113441: Activating the bypass

– Illustration **3**: Crawler assembly key button and *Crawler assembly* indicator light with *Crawler assembly off* touch function

► Actuate the crawler assembly key button.

Result:

– The LICCON overload protection is inactive.
– The indicator light *Crawler assembly* lights up.

16.8.2 Deactivating the bypass at crawler assembly and crawler disassembly

Make sure that the following prerequisites are met:
– The LICCON overload protection is bypassed / inactive and the „Bypass at assembly and disassembly“ is activated.
– The *crawler assembly* indicator light illuminates.

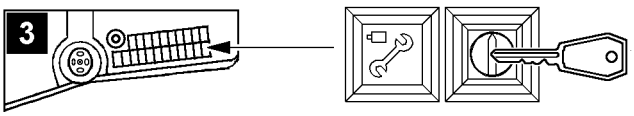

Fig.113441: Deactivating the bypass

If the bypass at crawler assembly is to be turned off:
► Turn the crawler assembly off by pressing the off button *Crawler assembly off*.

Result:

– The indicator light in the button *Crawler assembly* turns off.

16.9 Bypassing at assembly / disassembly

Depending on the crane version, the „Bypass at assembly and disassembly“ is activated by:
– The set up button (key button) on the LICCON monitor.
– The assembly key button in the instrument panel.

LWE/LTR 1100-009/25105-02-02/en

copyright © Liebherr-Werk Ehingen GmbH 2023

Note
- ► This applies only for cranes with LICCON overload protection.
- ► The *Assembly* indicator light is only present on the instrument panel for certain crane types.

WARNING
High danger of accident at crane operation with activated „Bypass at assembly and disassembly“!
With the „Bypass at assembly and disassembly“ activated, the overload protection and, if applicable, also the hoist limit switches are bypassed.
In the event of improper use, the crane could collapse, the boom can break off or the crane can topple over.
Death, severe bodily injuries, property damage.
- ► The activation of the „Bypass at assembly and disassembly“ is only permissible for assembly and disassembly purposes.
- ► All other usage of the „Bypass at assembly and disassembly“ other than as described in the operating instructions is prohibited.
- ► The „Bypass at assembly and disassembly“ may only be activated by persons who are aware of the consequences of a bypass.
- ► Crane operation with activated „Bypass at assembly and disassembly“ is strictly prohibited.
- ► The „Bypass at assembly and disassembly“ must be deactivated immediately after assembly and disassembly work.
- ► The crane operator or a person authorized by him must make sure that no misuse of the bypass device is possible (remove the key and store it safely, if necessary).

16.9.1 Activating the bypass at assembly and disassembly

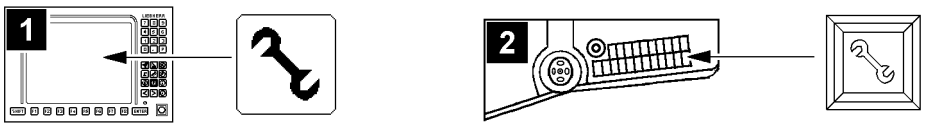

Fig.113438: Activating the bypass at assembly and disassembly

– Illustration **1**: LICCON monitor (only certain crane types)
– Illustration **2**: indicator light „assembly“ on the crane cab instrument panel (only certain crane types)

► Actuate the respective operating element.

Result:

– The LICCON overload protection is bypassed / inactive and the „Bypass at assembly and disassembly“ is activated.
– The „Assembly“ icon appears on the LICCON monitor and / or the „Assembly“ indicator light on the instrument panel lights up.
– Depending on the circumstances, acoustic and / or optical warning signals (blinkers, flashing beacons, horns and bells) sound.

16.9.2 Bypassing at assembly and disassembly

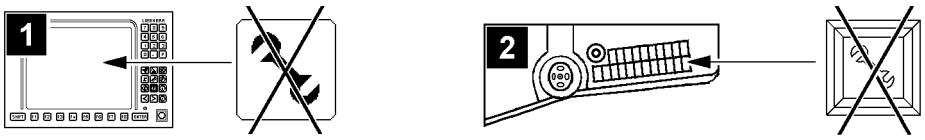

Fig.113437: Bypassing at assembly and disassembly

► No longer actuate the respective operating element or reset.

Result:

– The LICCON overload protection is active and the „Bypass at assembly and disassembly“ is deactivated.

LWE/LTR 1100-009/25105-02-02/en

copyright © Liebherr-Werk Ehingen GmbH 2023

– The „Assembly“ icon turns off on the LICCON monitor and / or the „Assembly“ indicator light on the instrument panel no longer lights up.
– The acoustic and / or optical warning signals which were triggered by the bypass are turned off again.

16.10 Actuation of winches and / or crane movements during assembly / disassembly

Note

► The winches and / or crane movements can be controlled from the crane cab or, depending on the crane set up configuration, with the BTT or the radio remote control*.
► From the crane cab: Observe chapter 4.05.
► With the BTT or the radio remote control* (only properly equipped crane types): Observe chapter 5.31 and chapter 6.08.

WARNING

Uncoordinated procedure for assembly tasks!
Death, severe bodily injuries, property damage.

► Before starting the assembly tasks, define the course of action and agree on all steps with all involved personnel.
► Monitor all steps and continuously check the course of action.
► In the case of unforeseen events, stop the course of action and agree on the new situation with all involved personnel.
► Make sure that winches and / or crane movements are only controlled by people who are aware of the effects on the crane and / or boom system as well as the connected dangers.
► Make sure that no persons, objects or obstacles are in the danger zone of the crane.
► Prewarn persons within the surrounding area of the crane, for example via a horn signal.
► Perform all winch and / or crane movements anticipatorily and at a low speed.

16.11 Assembling / disassembling the counterweight

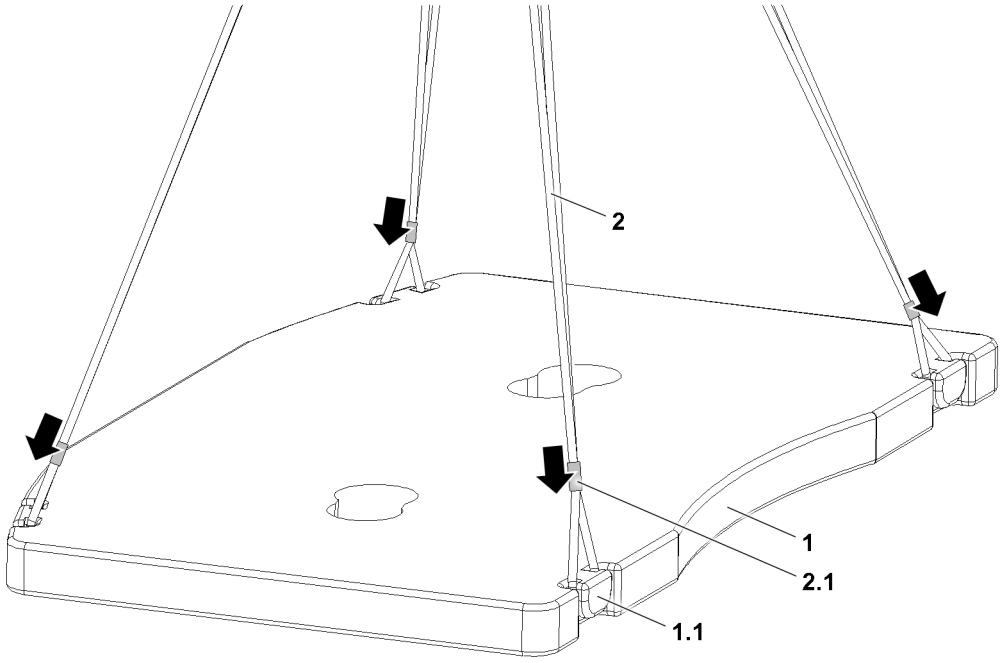

Fig.152587: Grommets and cable laid fastening rope

LWE/LTR 1100-009/25105-02-02/en

copyright © Liebherr-Werk Ehingen GmbH 2023

16.11.1 Grommets and cable laid fastening rope

Use the supplied fastening ropes **2** only for set up work on the crane.

The fastening ropes **2** are marked with the maximum load bearing capacity.

WARNING
Fastening ropes used incorrectly!
The fastening ropes can fail. The load call fall down.
- ► Do **not** exceed the load bearing capacity or the fastening ropes **2** when lifting the counterweight.
- ► **Never** fasten the fastening ropes **2** to the red marked impact points.
- ► **Never** cross or twist the fastening ropes **2**.

Depending on the structural form of the counterweight **1**, use two, three or four fastening ropes **2**.

- ► Lay the fastening rope **2** around the bitts **1.1** of the counterweight **1** to be lifted.
- ► Until the fastening ropes **2** are positioned firmly on the fastening points: Push the mobile ferrules **2.1** in the direction of the fastening point of the counterweight **1**.

16.12 Assembling / disassembling the booms

WARNING
The crane can topple over!
Angular pull can overload the crane.
Overload can cause destruction of the crane or cause it to topple over.
Death, severe bodily injuries, property damage.
- ► The hook block must always be attached (hooked) vertically over the center of gravity of the load to be lifted.
- ► Angular pull is prohibited.

Fig.113444: Danger of accident during assembly / disassembly

LWE/LTR 1100-009/25105-02-02/en

copyright © Liebherr-Werk Ehingen GmbH 2023

WARNING
Danger of accident during assembly / disassembly of booms!
When you disassemble unsecured or unsupported booms, they can fall down.
Death, severe bodily injuries, property damage.
- ► Never unpin the pins under unsecured or unsupported booms.
- ► Never unpin the connector pins on unsecured or unsupported booms.
- ► Do not stand under the booms or within the complete danger zone during the pinning and unpinning procedure of the booms.
- ► Secure the pins in the bearing points and in the receptacles.
- ► The railing must be horizontal during the assembly and disassembly of the booms.
- ► Do not lean the ladder against the component being disassembled.

Make sure that the following prerequisites are met for the closing assembly:
- – If parts of the equipment (for example lattice sections) are not in contact with the ground during assembly / disassembly, then they must be supported with suitable, stable materials.
- – Take down the parts of the equipment with rope pulleys in such a way that the rope pulleys are not damaged.
- – During disassembly make sure that the auxiliary crane can lift the load vertically.
- – Have an auxiliary crane with sufficient load bearing capacity available to be able to hold the load at the corresponding radius.

16.13 Fastening positions for assembly / disassembly of the lattice jib

WARNING
Danger of fatal accidents due falling components!
The maximum permissible tensile load on the fastening eye is engraved on the fastening eye.
The maximum permissible fastening load of the respective components can differ to the maximum permissible tensile load of the fastening eye.
Components can be damaged at overload and fall down during lifting.
- ► Observe the maximum permissible fastening load according to the operating instructions and the tags on the components.
- ► Fasten the lattice jib only according to the following descriptions.
- ► Do not overload the components.

LWE/LTR 1100-009/25105-02-02/en

copyright © Liebherr-Werk Ehingen GmbH 2023

16.13.1 Closing the end section

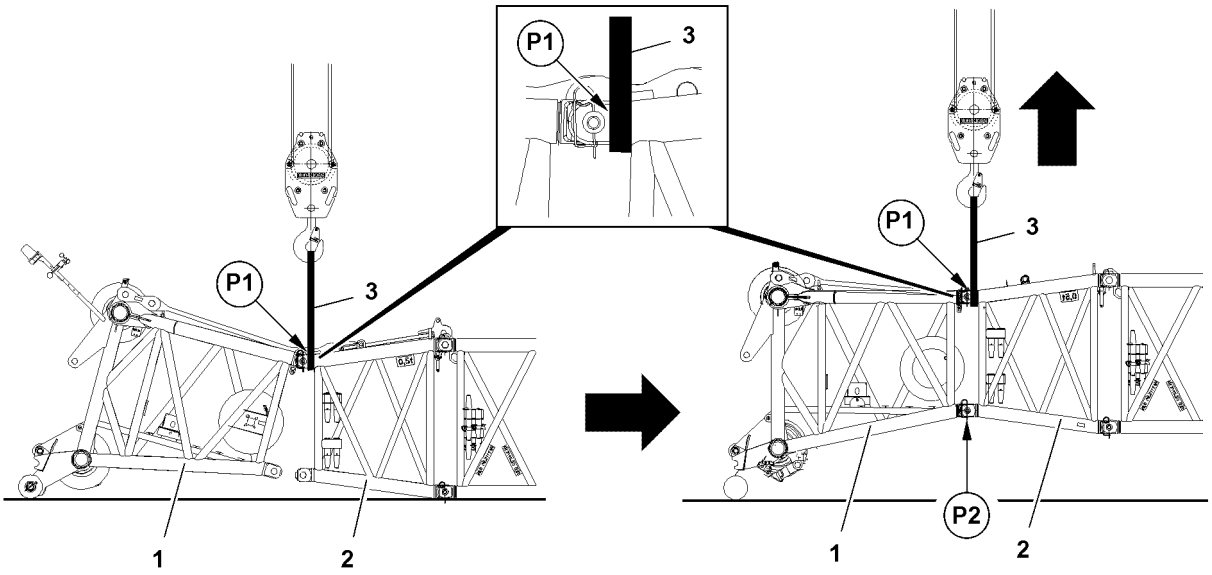

Fig.117840: Closing the end section

Observe the following for closing the end section:
- Use textile type fastening equipment **3**.
- Loop the textile type fastening equipment **3** on the left and right around on the pin points.

Before fastening:
- ► Check the position of the spring retainers and correct, if necessary.
- ► Fasten the textile type fastening equipment **3** on the upper pin points **P1** between the end section **1** and the pinned component **2**.
- ► Lift the lattice jib until the lower pin points **P2** align between the end section **1** and the component **2**.
- ► Pin the end section **1** and component **2** on the lower pin points **P2** on the left and right.

After pinning:
- ► Remove the textile type fastening equipment **3**.

16.13.2 Taking the lattice jib down into the roller cart

Note
- ► The following illustrations are examples and may not match your crane exactly.

LWE/LTR 1100-009/25105-02-02/en

copyright © Liebherr-Werk Ehingen GmbH 2023

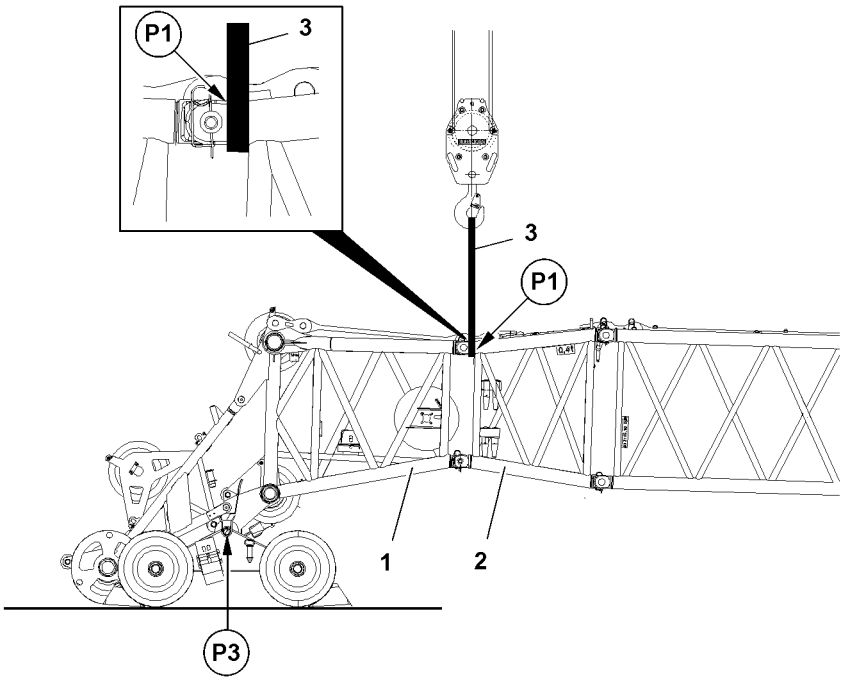

Fig.117842: Taking the lattice jib down into the roller cart (telescopic crane with lattice jib)

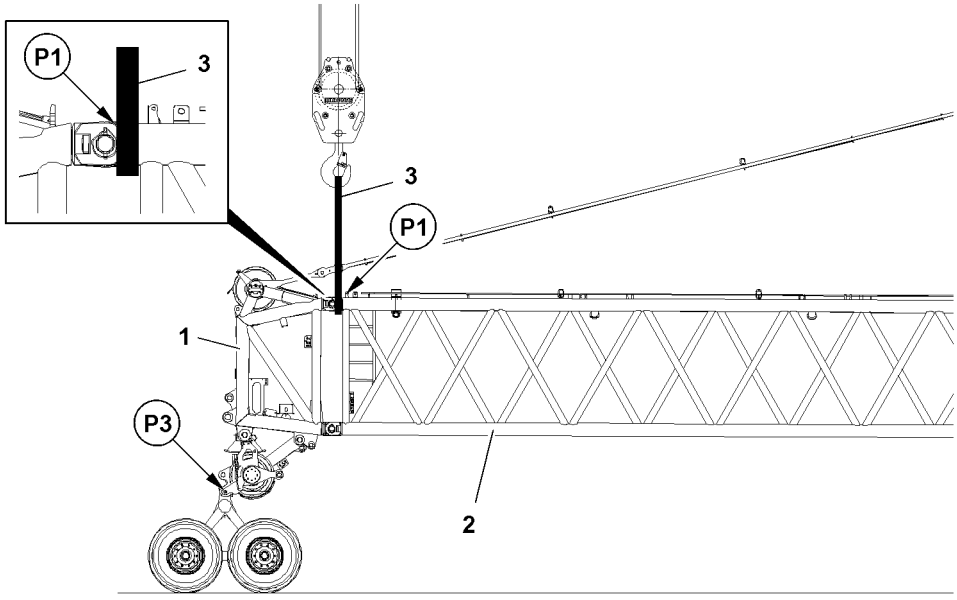

Fig.121550: Taking the lattice jib down into the roller cart (crane with lattice mast)

When taking it down into the roller cart, observe the following:
- The end section **1** is completely assembled.
- Use textile type fastening equipment **3**.
- Loop the textile type fastening equipment **3** on the left and right around on the pin points.

Before fastening:
- ► Check the position of the spring retainers and correct, if necessary.
- ► Fasten the textile type fastening equipment **3** on the upper pin points **P1** between the end section **1** and the pinned component **2**.
- ► Lift the lattice jib and take it down into the roller cart **4**.
- ► Pin the end section **1** with the roller cart **4** on the pin points **P3** on the left and right.
- ► Remove the textile type fastening equipment **3**.

LWE/LTR 1100-009/25105-02-02/en

copyright © Liebherr-Werk Ehingen GmbH 2023

Note
► The disassembly and removal of the roller cart **4** is must be carried out accordingly.

16.13.3 Opening the end section

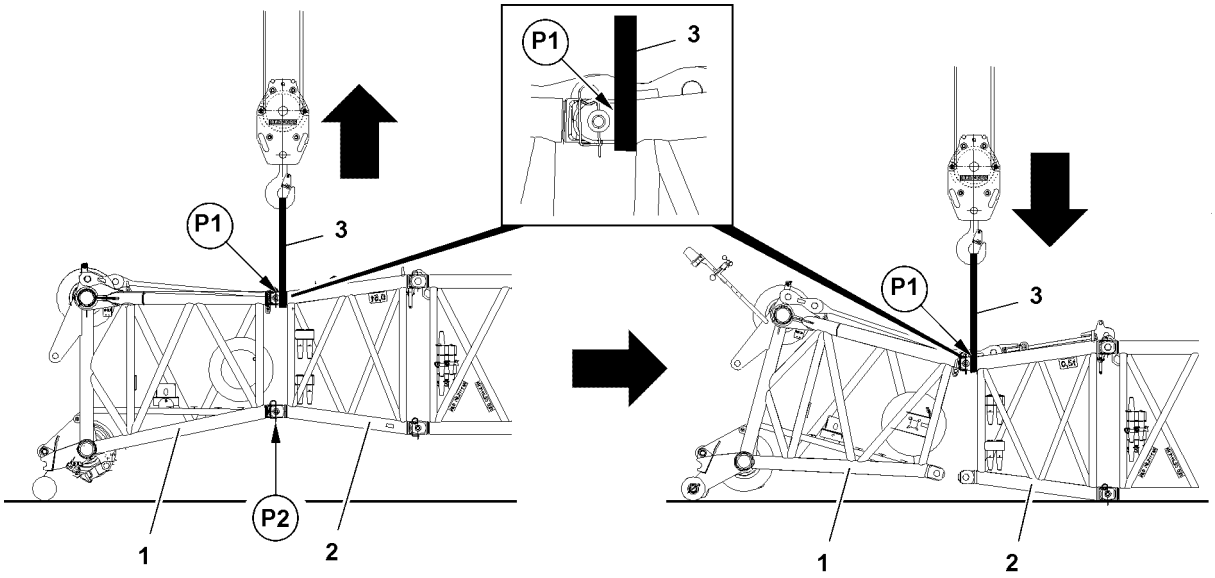

Fig.117841: Opening the end section

For opening the end section, observe the following:
– The roller cart is disassembled and removed.
– Use textile type fastening equipment **3**.
– Loop the textile type fastening equipment **3** on the left and right around on the pin points.

Before fastening:
► Check the position of the spring retainers and correct, if necessary.
► Fasten the textile type fastening equipment **3** on the upper pin points **P1** between the end section **1** and the pinned component **2**.
► Lift the lattice jib and relieve the pins on the lower pin points **P2**.
► Unpin the end section **1** and the component **2** on the lower pin points **P2** on the left and right.
► Take the lattice jib down onto the ground.
► Remove the textile type fastening equipment **3**.

LWE/LTR 1100-009/25105-02-02/en

copyright © Liebherr-Werk Ehingen GmbH 2023

16.13.4 Holding the luffing lattice jib

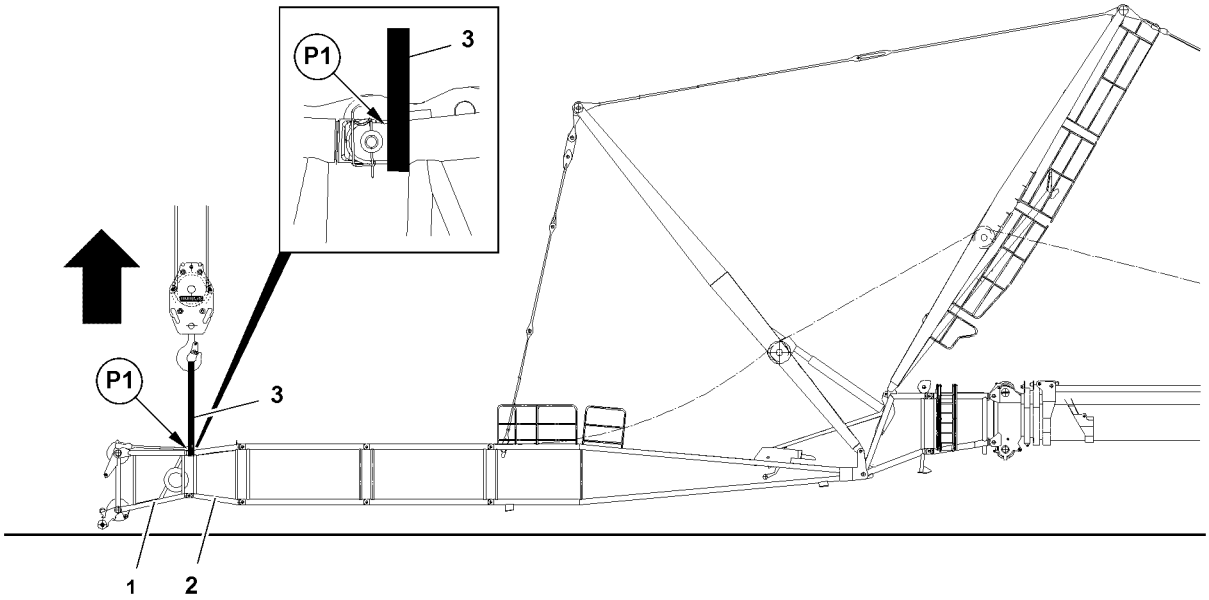

Fig.117843: Holding the luffing lattice jib

To be able to install or remove the guy rods and "flying assembly", the luffing lattice jib must be held on the upper pin points **P1**.

When holding the luffing lattice jib, observe the following:
- The lattice jib has been completely assembled.
- Use textile type fastening equipment **3**.
- Loop the textile type fastening equipment **3** on the left and right around on the pin points.

Before fastening:
- ► Check the position of the spring retainers and correct, if necessary.
- ► Fasten the textile type fastening equipment **3** on the upper pin points **P1** between the end section **1** and the pinned component **2**.
- ► Lift the lattice jib and assemble the guy rods.

When the guy rods are assembled:
- ► Remove the textile type fastening equipment **3**.

Note
- ► The disassembly of the guy rods must be carried out accordingly.

16.13.5 Assembling the fixed lattice jib on the TF-adapter

WARNING
Mortal danger if the lattice jib tilts over!
Due to unfavorable center of gravity, only certain lattice jib lengths can be installed / removed as an assembled lattice jib.
If a lattice jib length cannot be installed / removed as an assembled lattice jib, then they must be installed / removed individually in flying mode.
- ► Check if the respective lattice jib length can be installed / removed as an assembled lattice jib. See charts in chapter 5.01.10.

LWE/LTR 1100-009/25105-02-02/en

copyright © Liebherr-Werk Ehingen GmbH 2023

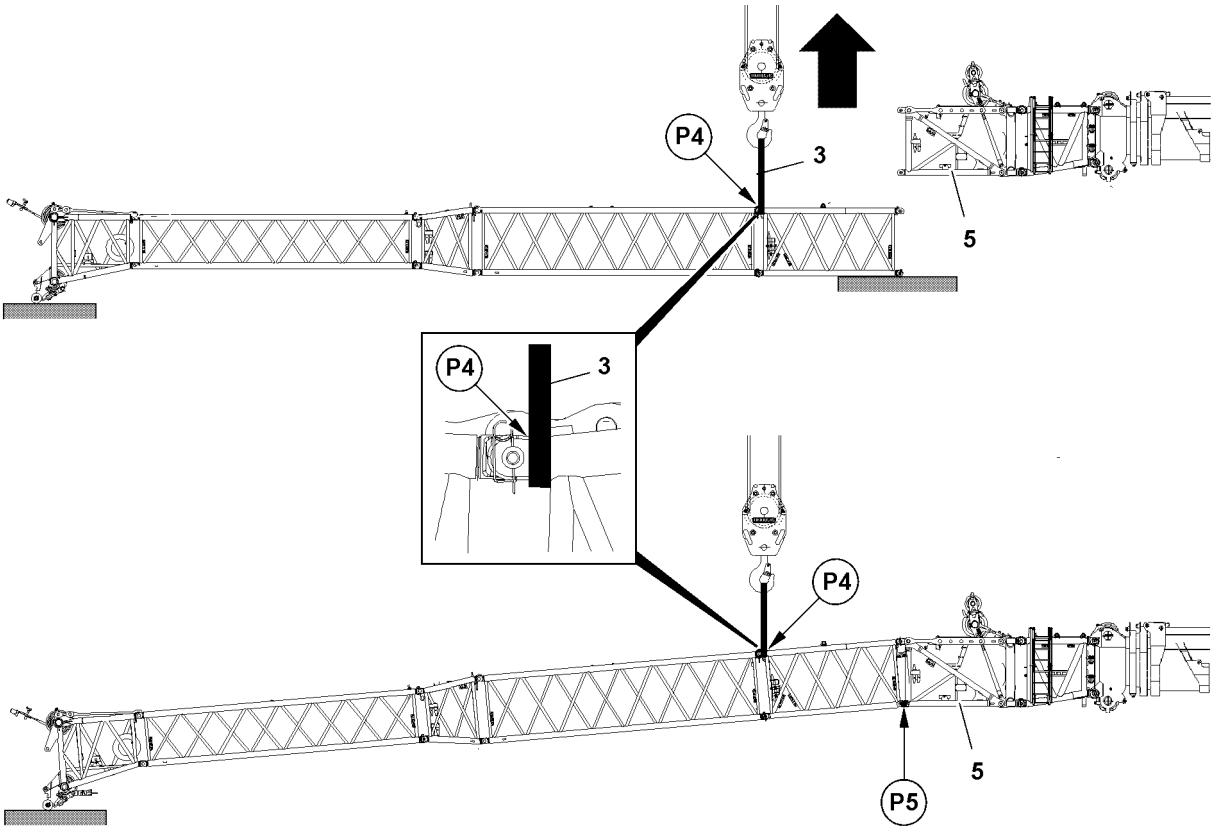

Fig.117844: Assembling the lattice jib on the TF-adapter

Observe the following when assembling the TF-adapter:
- The lattice jib is assembled.
- The TF-adapter **5** is assembled.
- Use textile type fastening equipment **3**.
- Loop the textile type fastening equipment **3** on the left and right around on the pin points.

Before fastening:
► Check the position of the spring retainers and correct, if necessary.

Fasten between the lattice sections, which are installed directly on the TF-adapter.

► Fasten the textile type fastening equipment **3** to the upper pin points **P4**.
► Lift the lattice jib and fit it in the lower pin point **P5** on the TF-adapter **5**.
► Pin the lattice jib in the lower pin point **P5** with the TF-adapter **5**.

After pinning:
► Remove the textile type fastening equipment **3**.

WARNING
Mortal danger if the lattice jib tilts over!
► Make sure to always observe the permissible lattice jib length at disassembly.

► Disassemble accordingly.

LWE/LTR 1100-009/25105-02-02/en

copyright © Liebherr-Werk Ehingen GmbH 2023

16.13.6 Closing the fixed lattice jib

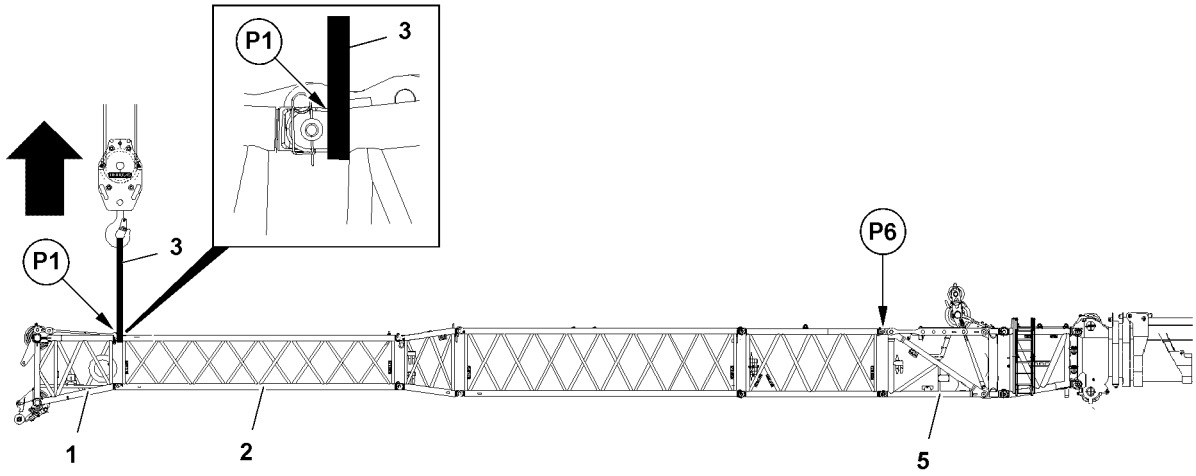

Fig.117850: Closing the lattice jib

Observe the following when assembling the TF-adapter:
- The lattice jib is pinned in the lower pin points of the TF-adapter **5**.
- Use textile type fastening equipment **3**.
- Loop the textile type fastening equipment **3** on the left and right around on the pin points.

Before fastening:
- ► Check the position of the spring retainers and correct, if necessary.
- ► Fasten the textile type fastening equipment **3** on the upper pin points **P1** between the end section **1** and the pinned component **2**.
- ► Lift the lattice jib and fit it in the upper pin point **P6** on the TF-adapter **5**.
- ► Pin the lattice jib in the upper pin point **P6** with the TF-adapter **5**.

After pinning:
- ► Remove the textile type fastening equipment **3**.

Note
- ► Disassemble accordingly.

copyright © Liebherr-Werk Ehingen GmbH 2023

16.13.7 Angle adjustment on the fixed lattice jib with mechanical adjustment

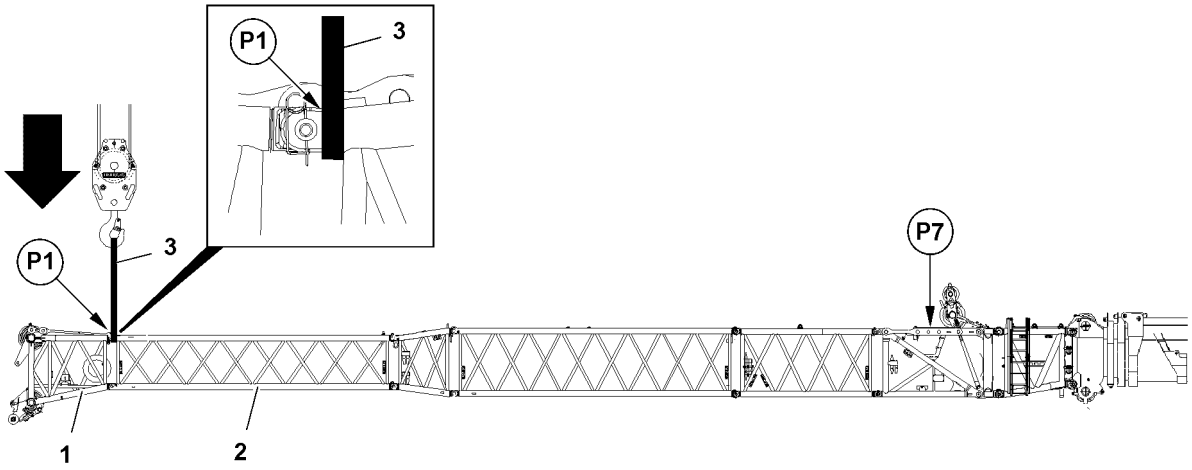

Fig.117851: Angle adjustment on the fixed lattice jib

For the angle adjustment on the fixed lattice jib, observe the following:
- The lattice jib has been completely assembled.
- Use textile type fastening equipment **3**.
- Loop the textile type fastening equipment **3** on the left and right around on the pin points.

Before fastening:
- ► Check the position of the spring retainers and correct, if necessary.
- ► Fasten the textile type fastening equipment **3** on the upper pin points **P1** between the end section **1** and the pinned component **2**.
- ► Lift the lattice jib and relieve the pins on the angle adjustment **P7**.
- ► Unpin the angle adjustment **P7**, see chapter 5.03.
- ► Set and pin a new angle on the angle adjustment **P7**, see chapter 5.03.
- ► Lower the lattice jib.

After lowering:
- ► Remove the textile type fastening equipment **3**.

16.13.8 Loading the preassembled lattice jib

For loading the lattice jib, observe the following:
- The lattice jib has been preassembled.
- Use textile type fastening equipment.
- Loop the textile type fastening equipment on the left and right around on the pin points.

Before fastening:
- ► Check the position of the spring retainers and correct, if necessary.
- ► Fasten the preassembled lattice jib according to the fastening points, chapter 5.03.

16.14 Assembling / disassembling the lattice sections on telescopic cranes with a luffing lattice jib

16.14.1 Guy rod transport retainer during assembly

The illustrations in this section are an example and may not exactly match each lattice section.

A description is provided by means of an example of the moment at which the guy rod transport retainers may be unpinned.

If the sequence is not observed, the guy rods can fall from the lattice sections and kill personnel and cause serious injuries and property damage.

LWE/LTR 1100-009/25105-02-02/en

copyright © Liebherr-Werk Ehingen GmbH 2023

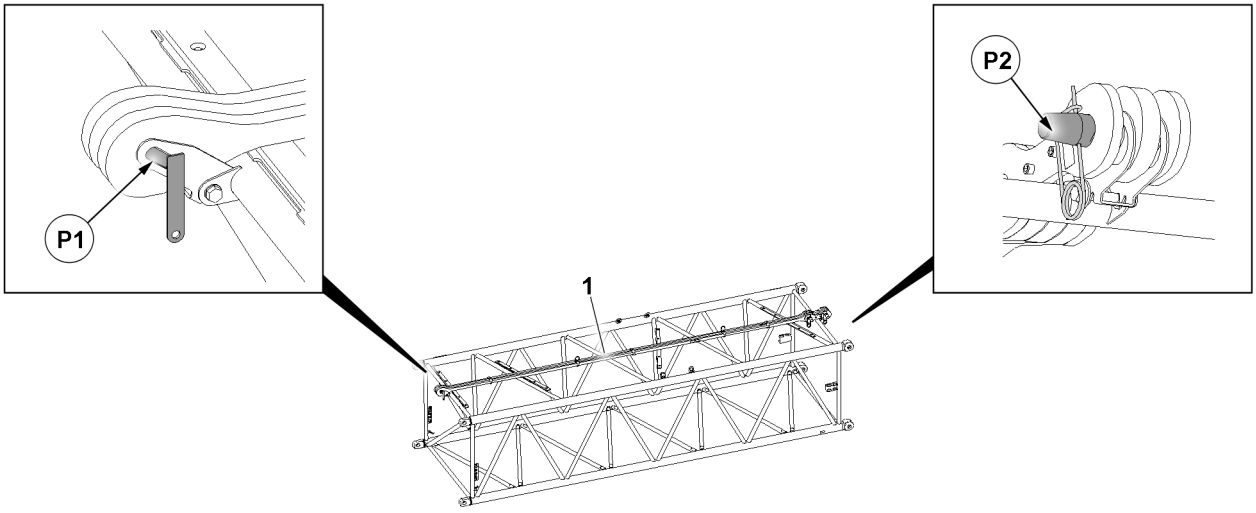

Fig.159460: Guy rod transport retainer

Before a lattice section is fastened:
► Make sure that the guy rod **1** is secured on both sides in position **P1** and position **P2**.

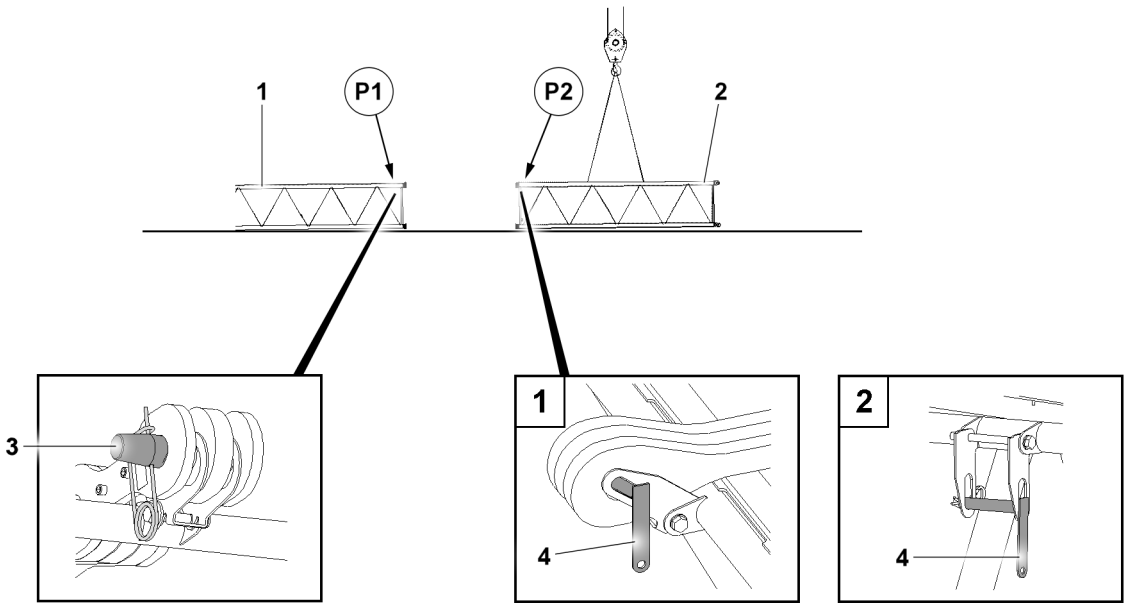

Fig.159592: Disassembling the guy rod transport retainer

Make sure that the following prerequisites are met:
– The lattice section **1** is pinned with the crane.
– The lattice section **2** is taken approx. 2 m from the lattice section **1** onto the ground.

► In position **P1**: Unpin the pin **3**.

When the lattice section **2** is taken approx. 2 m from the lattice section **1** onto the ground:
► In position **P2**: Unpin the pins **4** and insert it into the transport position and secure.

Result:
– The lattice section **1** guy rod transport retainer is unpinned on the side of the lattice section **2**.
– The lattice section **2** guy rod transport retainer is unpinned on the side of the lattice section **1**.

LWE/LTR 1100-009/25105-02-02/en

copyright © Liebherr-Werk Ehingen GmbH 2023

WARNING
Guy rods on the lattice section **not completely** secured against falling down!
Death, severe bodily injuries, property damage.

If the lattice section is moved:
► Carry out the movements slowly and carefully.
► Comply with the safety distance from the lattice section and guy rods.

► Position the lattice section **2** in the pin position.

Further procedure

Pin the lattice sections.

16.14.2 Guy rod transport retainer during disassembly

The illustrations in this section are an example and may not exactly match each lattice section.

A description is provided by means of an example of the moment at which the guy rod transport retainers must be pinned.

If the sequence is not observed, the guy rods can fall from the lattice sections and kill personnel and cause serious injuries and property damage.

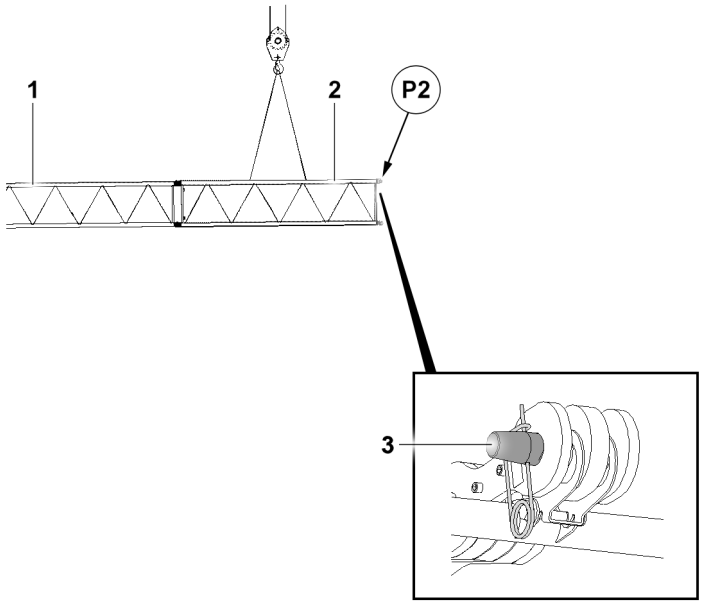

Fig.159591: Assembling the guy rod transport retainer

Make sure that the following prerequisites are met:
– The lattice section **1** is pinned with the crane.
– The lattice section **2** is pinned with the lattice section **1**.

► Secure the guy rod in the transport position in position **P2**: Insert and secure the pin **3**.

Result:
– The lattice section **2** guy rod is secured on one side in the transport position.

LWE/LTR 1100-009/25105-02-02/en

copyright © Liebherr-Werk Ehingen GmbH 2023

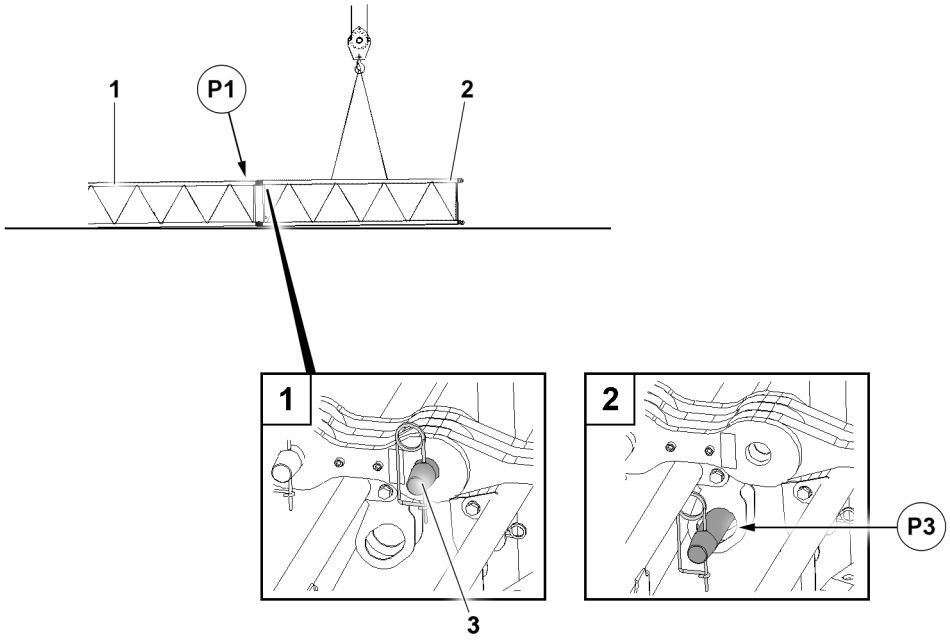

Fig.159587: Disassembling the guy rod transport retainer

- ► Unpin the lattice section **2** guy rod from the lattice section **1** guy rod: Release and unpin the pin **3**.
- ► In position **P3**: Insert and secure the pin **3**.
- ► Unpin the lattice section **2** from the lattice section **1**.

WARNING
Guy rods on the lattice section **not completely** secured against falling down!
Death, severe bodily injuries, property damage.

If the lattice section is moved:
- ► Carry out the movements slowly and carefully.
- ► Comply with the safety distance from the lattice section and guy rods.

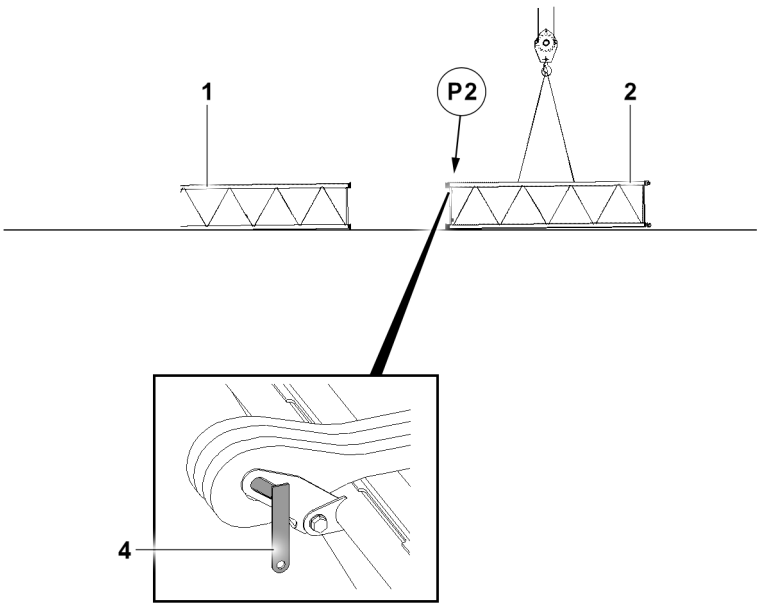

Fig.159588: Assembling the guy rod transport retainer

- ► Move the lattice section **2** approx. 2 m away from the lattice section **1**.
- ► Take the lattice section **2** down onto the ground.

copyright © Liebherr-Werk Ehingen GmbH 2023

► Secure the lattice section **2** guy rod in the transport position in position **P2**: Insert and secure the pin **4**.

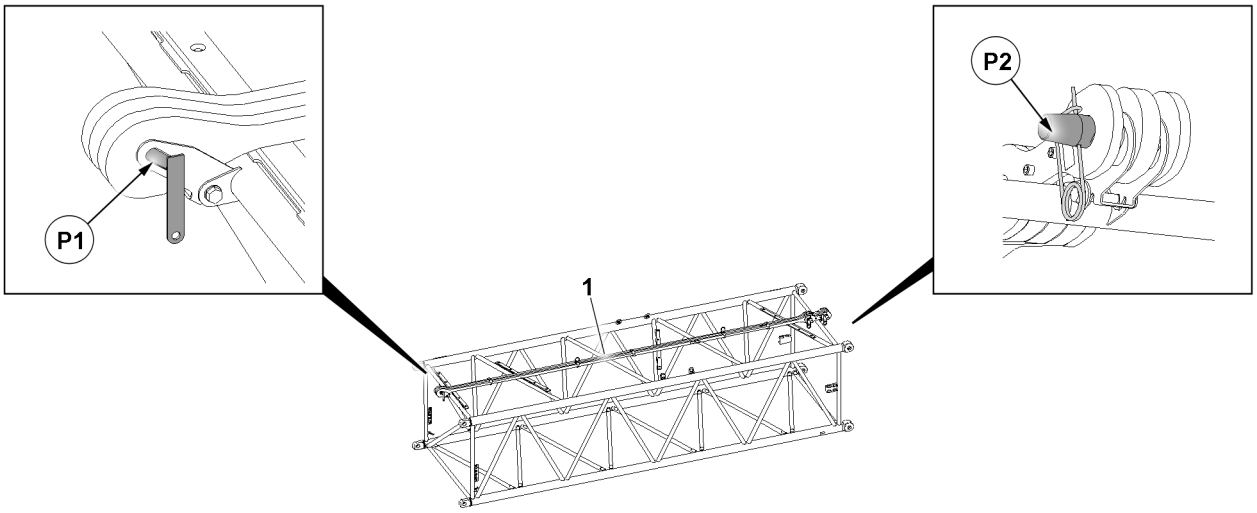

Fig.159460: Guy rod transport retainer

► Make sure that the guy rod **1** is secured on both sides in position **P1** and position **P2**.

Result:

– The lattice section **2** guy rod is secured on both sides in the transport position.

LWE/LTR 1100-009/25105-02-02/en

copyright © Liebherr-Werk Ehingen GmbH 2023

Empty page!

LWE/LTR 1100-009/25105-02-02/en

copyright © Liebherr-Werk Ehingen GmbH 2023

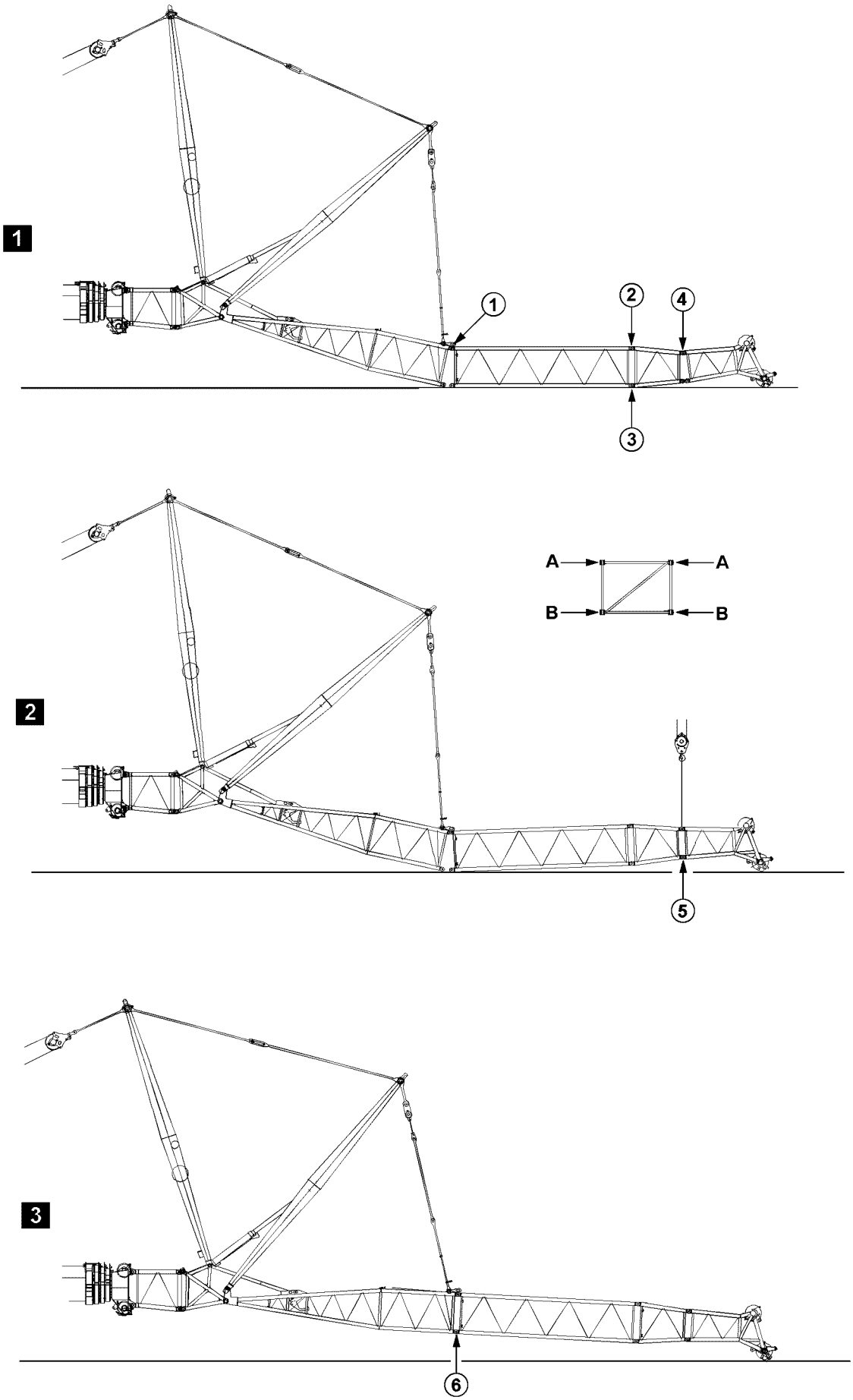

Fig.197718: Example of cranes with a telescopic boom

LWE/LTR 1100-009/25105-02-02/en

copyright © Liebherr-Werk Ehingen GmbH 2023

16.14.3 Assembling the lattice sections on a luffing lattice jib

The illustrations serve as examples. The illustrations may differ depending on the crane.

WARNING
Danger of fatal injury when assembling auxiliary booms!
If the pins are not pinned in the given sequence, then lattice sections may suddenly fold down or fall down.
Death, severe bodily injuries, property damage.
► Pins must be pinned in the order specified.

► Pin and secure pins on both sides (level **A**) in point **1**, illustration **1**.
► Pin and secure pins on both sides (level **A**) in point **2**, illustration **1**.
► Pin and secure pins on both sides (level **B**) in point **3**, illustration **1**.
► Pin and secure pins on both sides (level **A**) in point **4**, illustration **1**.
► Close the end section with the auxiliary crane, illustration **2**.
► Pin and secure pins on both sides (level **B**) in point **5**, illustration **2**.
► Lift the lattice sections, illustration **3**.
► Pin and secure pins on both sides (level **B**) in point **6**, illustration **3**.

LWE/LTR 1100-009/25105-02-02/en

copyright © Liebherr-Werk Ehingen GmbH 2023

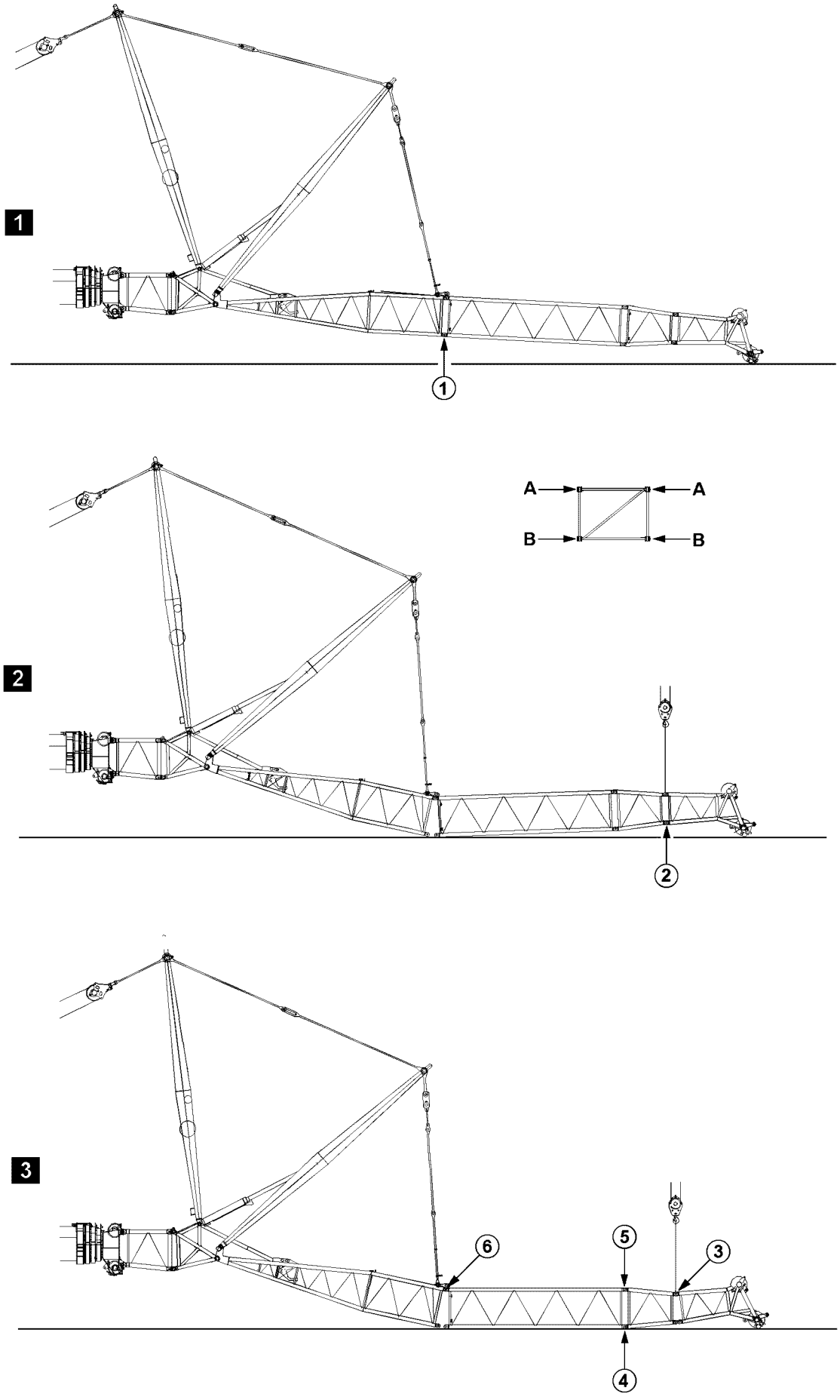

Fig.197719: Example of cranes with a telescopic boom

LWE/LTR 1100-009/25105-02-02/en

copyright © Liebherr-Werk Ehingen GmbH 2023

16.14.4 Disassembling the lattice sections on a luffing lattice jib

The illustrations serve as examples. The illustrations may differ depending on the crane.

WARNING
Danger of fatal injury when disassembling auxiliary booms!
If the pins are not unpinned in the given sequence, then lattice sections may suddenly fold down or fall down.
Death, severe bodily injuries, property damage.
► Pins must be unpinned in the specified order.

► Luff the boom down until the end section touches the ground slightly, illustration **1**.
► Guy the boom with NA-frame I, illustration **1**.
► Release and unpin the pins on both sides (level **B**) in point **1**, illustration **1**.
► Open the boom with the NA-frame I and take the boom down completely, illustration **2**.
► Lift the end section with the auxiliary crane, illustration **2**.
► Release and unpin the pins on both sides (level **B**) in point **2**, illustration **2**.
► Release and unpin the pins on both sides (level **A**) in point **3**, illustration **3**.
► Release and unpin the pins on both sides (level **B**) in point **4**, illustration **3**.
► Release and unpin the pins on both sides (level **A**) in point **5**, illustration **3**.
► Release and unpin the pins on both sides (level **A**) in point **6**, illustration **3**.

LWE/LTR 1100-009/25105-02-02/en

copyright © Liebherr-Werk Ehingen GmbH 2023

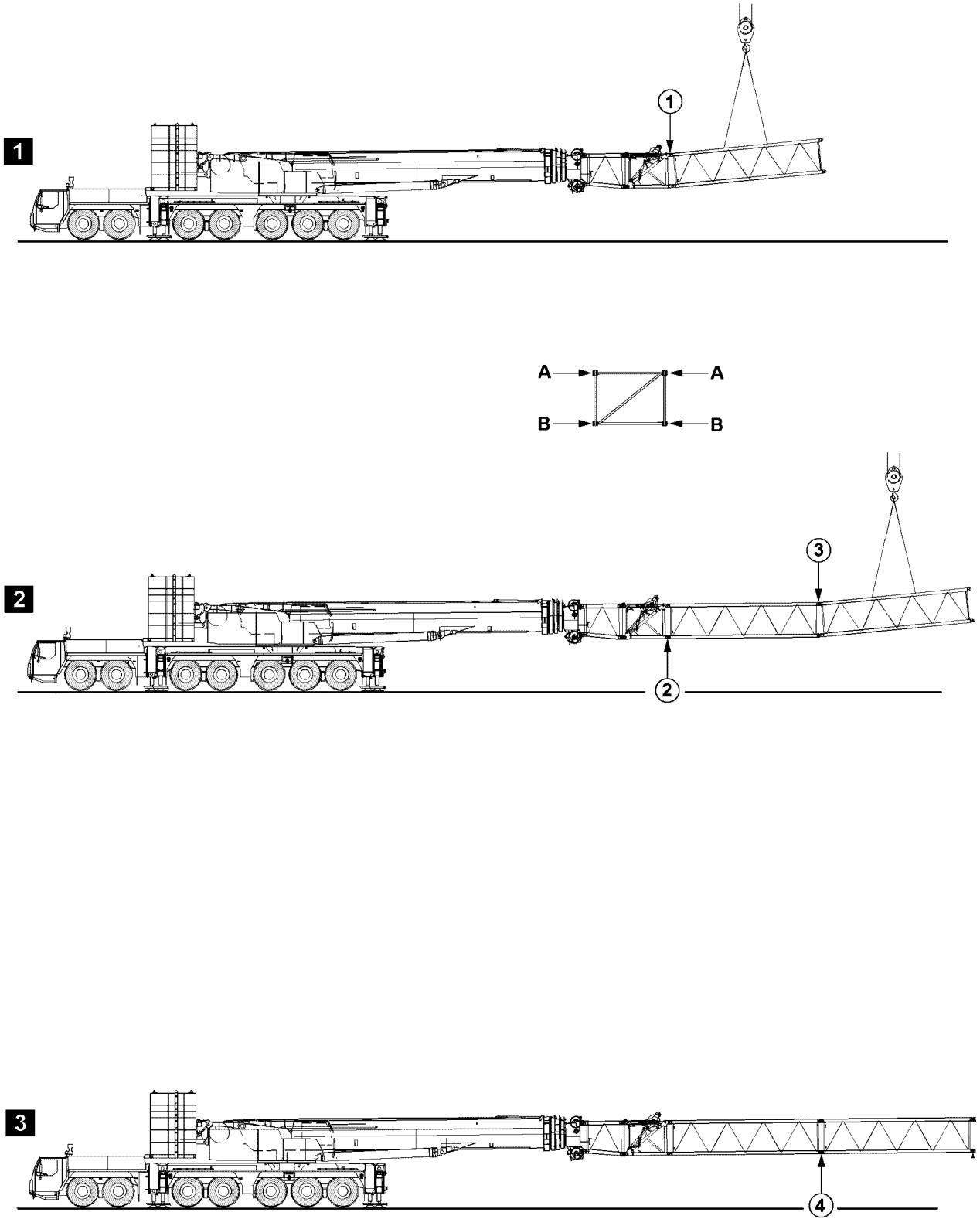

LWE/LTR 1100-009/25105-02-02/en

Fig.197705: Example of cranes with a telescopic boom

copyright © Liebherr-Werk Ehingen GmbH 2023

16.15 Assembling / disassembling the lattice sections on telescopic cranes with an auxiliary boom, with an auxiliary crane

16.15.1 Assembling the lattice sections on an auxiliary boom with an auxiliary crane

The illustrations serve as examples. The illustrations may differ depending on the crane.

WARNING
Danger of fatal injury when assembling auxiliary booms!
If the pins are not pinned in the given sequence, then lattice sections may suddenly fold down or fall down.
Death, severe bodily injuries, property damage.
► Pins must be pinned in the order specified.

► Pin and secure pins on both sides (level **A**) in point **1**, illustration **1**.
► Pin and secure pins on both sides (level **B**) in point **2**, illustration **2**.
► Pin and secure pins on both sides (level **A**) in point **3**, illustration **2**.
► Pin and secure pins on both sides (level **B**) in point **4**, illustration **3**.

LWE/LTR 1100-009/25105-02-02/en

copyright © Liebherr-Werk Ehingen GmbH 2023

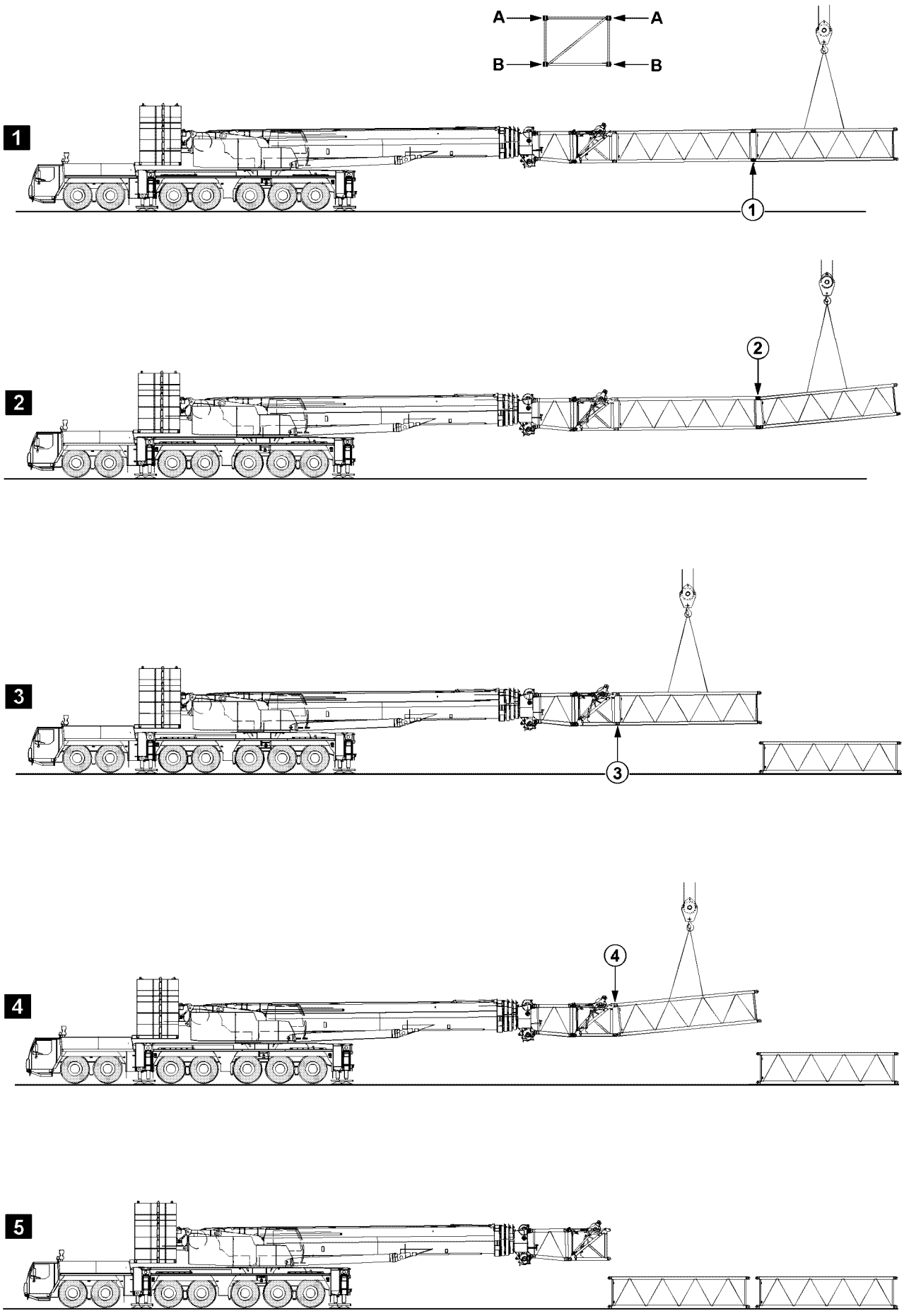

Fig.105510: Example of cranes with a telescopic boom

LWE/LTR 1100-009/25105-02-02/en

copyright © Liebherr-Werk Ehingen GmbH 2023

16.15.2 Disassembling the lattice sections on an auxiliary boom with an auxiliary crane

The illustrations serve as examples. The illustrations may differ depending on the crane.

WARNING
Danger of fatal injury when disassembling auxiliary booms!
If the pins are not unpinned in the given sequence, then lattice sections may suddenly fold down or fall down.
Death, severe bodily injuries, property damage.
► Pins must be unpinned in the specified order.

► Release and unpin the pins on both sides (level **B**) in point **1**, illustration **1**.
► Release and unpin the pins on both sides (level **A**) in point **2**, illustration **2**.
► Release and unpin the pins on both sides (level **B**) in point **3**, illustration **3**.
► Release and unpin the pins on both sides (level **A**) in point **4**, illustration **4**.

LWE/LTR 1100-009/25105-02-02/en

copyright © Liebherr-Werk Ehingen GmbH 2023

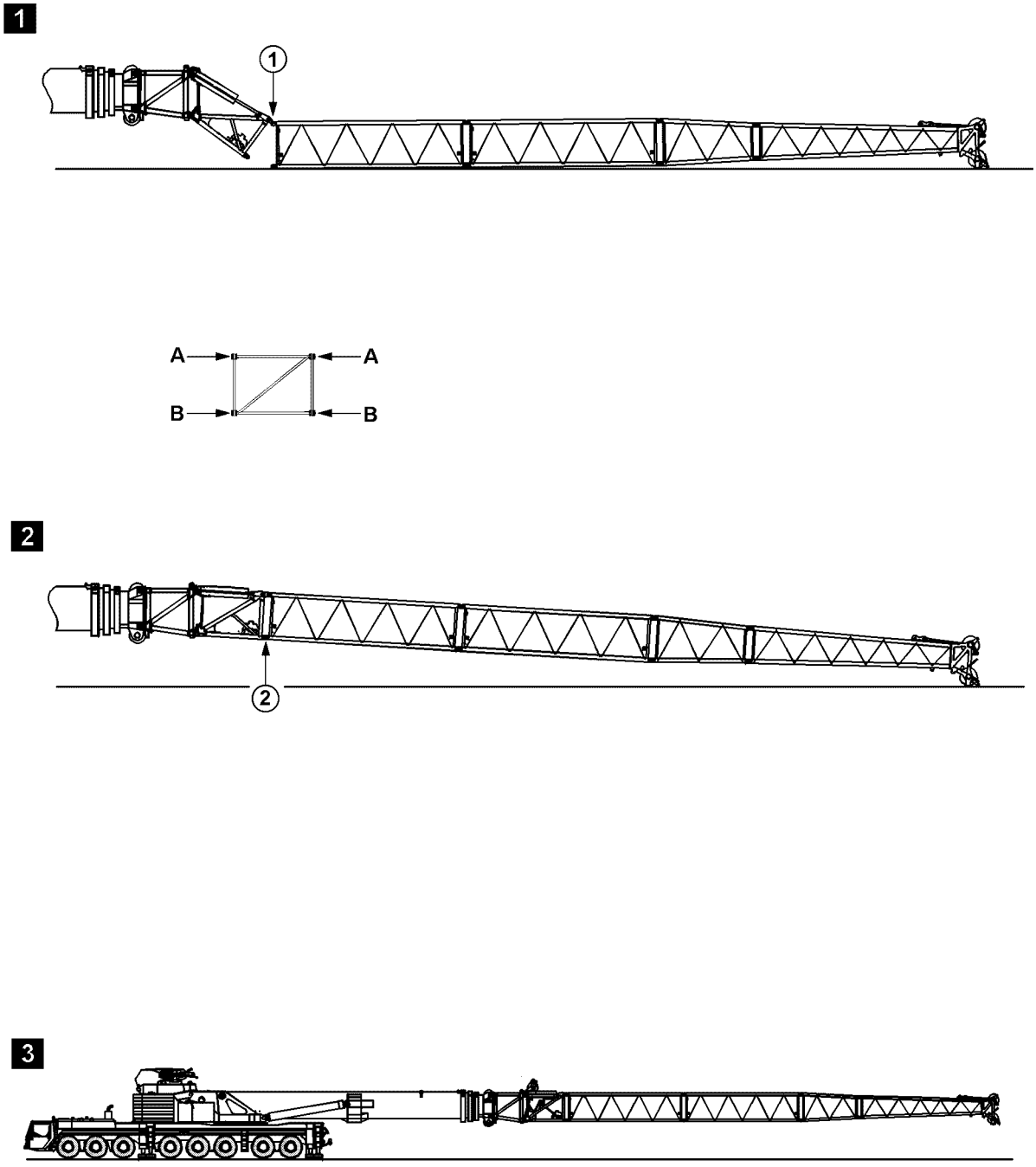

LWE/LTR 1100-009/25105-02-02/en

Fig.197712: Example of cranes with a telescopic boom

copyright © Liebherr-Werk Ehingen GmbH 2023

16.16 Assembling / disassembling the lattice sections on telescopic cranes with an auxiliary boom, without an auxiliary crane

16.16.1 Assembling the lattice sections on an auxiliary boom without an auxiliary crane

The illustrations serve as examples. The illustrations may differ depending on the crane.

WARNING
Danger of fatal injury when assembling auxiliary booms!
If the pins are not pinned in the given sequence, then lattice sections may suddenly fold down or fall down.
Death, severe bodily injuries, property damage.
► Pins must be pinned in the order specified.

For cranes with hydraulic angle adjustment and self-supporting auxiliary boom, the assembly / disassembly of additional lattice sections may be performed using the crane itself.

In order to do so, proceed as follows.

► Assemble the lattice sections to the required length.
► Pin and secure pins on both sides (level **A**) in point **1**, illustration **1**.
► Close the auxiliary boom until the pins can be pinned in point **2**, illustration **2**.
► Pin and secure pins on both sides (level **B**) in point **2**, illustration **2**.

LWE/LTR 1100-009/25105-02-02/en

copyright © Liebherr-Werk Ehingen GmbH 2023

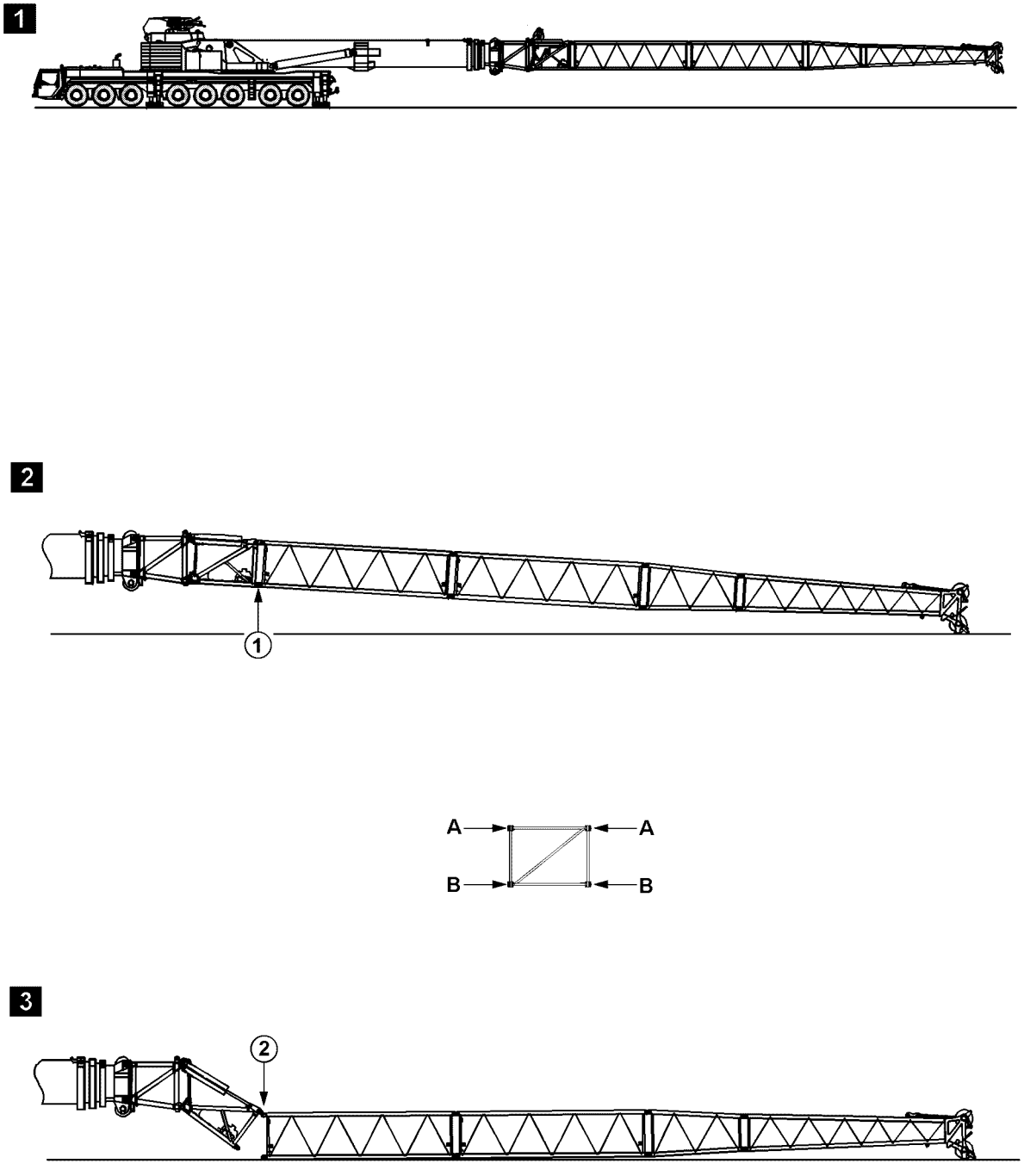

Fig.197713: Example of cranes with a telescopic boom

LWE/LTR 1100-009/25105-02-02/en

copyright © Liebherr-Werk Ehingen GmbH 2023

16.16.2 Disassembling the lattice sections on an auxiliary boom without an auxiliary crane

The illustrations serve as examples. The illustrations may differ depending on the crane.

WARNING
Danger of fatal injury when disassembling auxiliary booms!
If the pins are not unpinned in the given sequence, then lattice sections may suddenly fold down or fall down.
Death, severe bodily injuries, property damage.
► Pins must be unpinned in the specified order.

For cranes with hydraulic angle adjustment and self-supporting auxiliary boom, the assembly / disassembly of additional lattice sections may be performed using the crane itself.

In order to do so, proceed as follows.

NOTICE
Damage to the hydraulic cylinders on the TF-adapter!
► As soon as the lattice jib is placed, stop the luff down movement.
► It is prohibited to set down the fixed lattice jib „roughly“.

► Luff the main boom down until the end section touches the ground slightly, illustration **2**.

If it is not possible to luff down that far:
► Adjust the TF-adapter until the end section touches the ground slightly, illustration **2**.
► Release and unpin the pins on both sides (level **B**) in point **1**, illustration **2**.

NOTICE
Damage to the hydraulic cylinders on the TF-adapter.
► As soon as the lattice jib is placed, stop the opening movement.

► Open the auxiliary boom until the lattice sections to be removed are lying on the ground completely, illustration **3**.
► Release and unpin the pins on both sides (level **A**) in point **2**, illustration **3**.
► Completely remove the auxiliary boom.

LWE/LTR 1100-009/25105-02-02/en

copyright © Liebherr-Werk Ehingen GmbH 2023

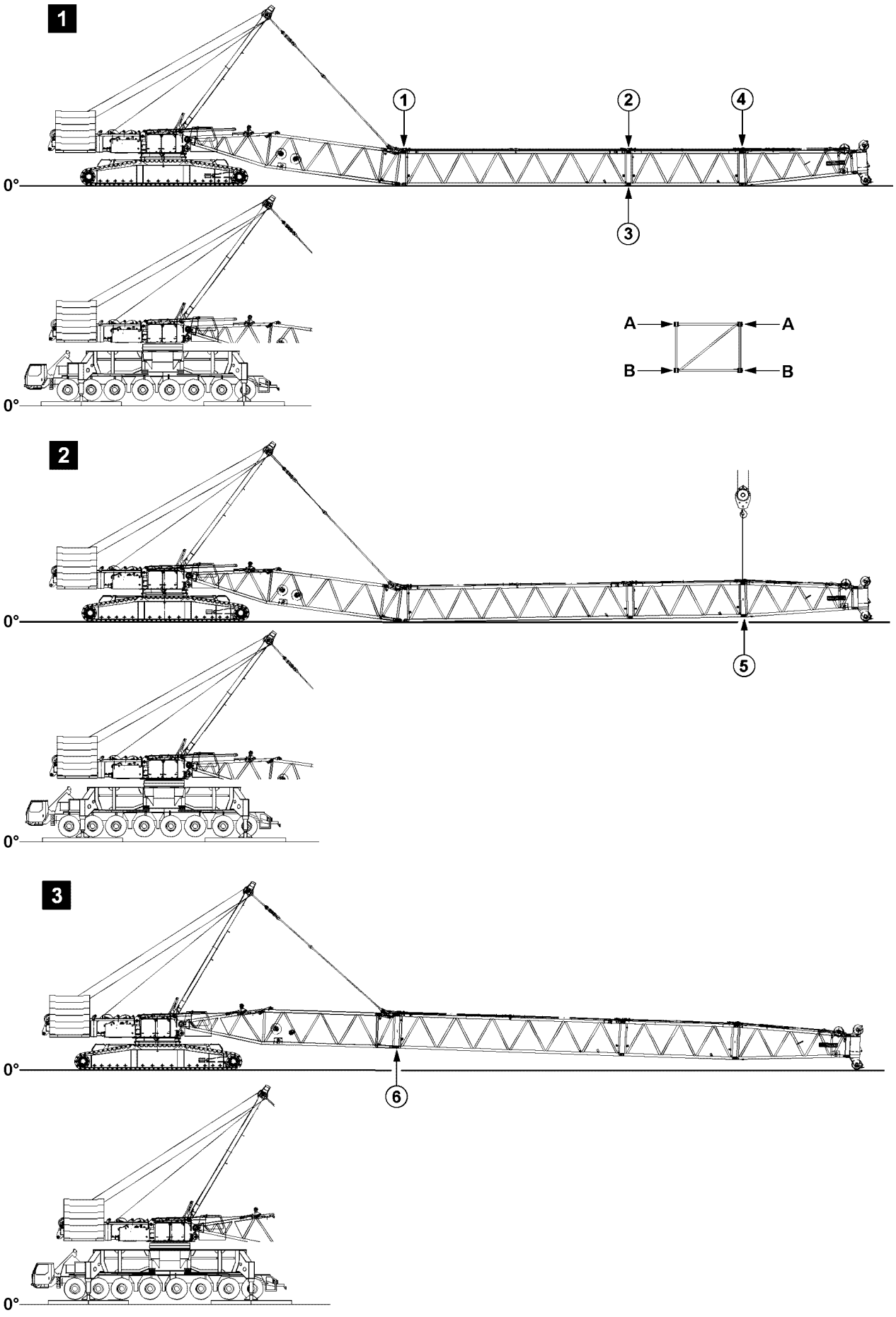

Fig.121633: Example of cranes with a lattice mast boom

LWE/LTR 1100-009/25105-02-02/en

copyright © Liebherr-Werk Ehingen GmbH 2023

16.17 Assembling / disassembling of lattice sections for lattice mast cranes

16.17.1 Assembling lattice sections

The illustrations serve as examples. The illustrations may differ depending on the crane.

WARNING
Danger of fatal injury when assembling booms!
If the pins are not pinned in the given sequence, then lattice sections may suddenly fold down or fall down.
Death, severe bodily injuries, property damage.
► Pins must be pinned in the order specified.

► Pin and secure pins on both sides (level **A**) in point **1**, illustration **1**.
► Pin and secure pins on both sides (level **A**) in point **2**, illustration **1**.
► Pin and secure pins on both sides (level **B**) in point **3**, illustration **1**.
► Pin and secure pins on both sides (level **A**) in point **4**, illustration **1**.
► Lift the end section with the auxiliary crane, illustration **2**.
► Pin and secure pins on both sides (level **B**) in point **5**, illustration **2**.
► Close the boom system with the SA-frame, illustration **3**.
► Pin and secure pins on both sides (level **B**) in point **6**, illustration **3**.

LWE/LTR 1100-009/25105-02-02/en

copyright © Liebherr-Werk Ehingen GmbH 2023

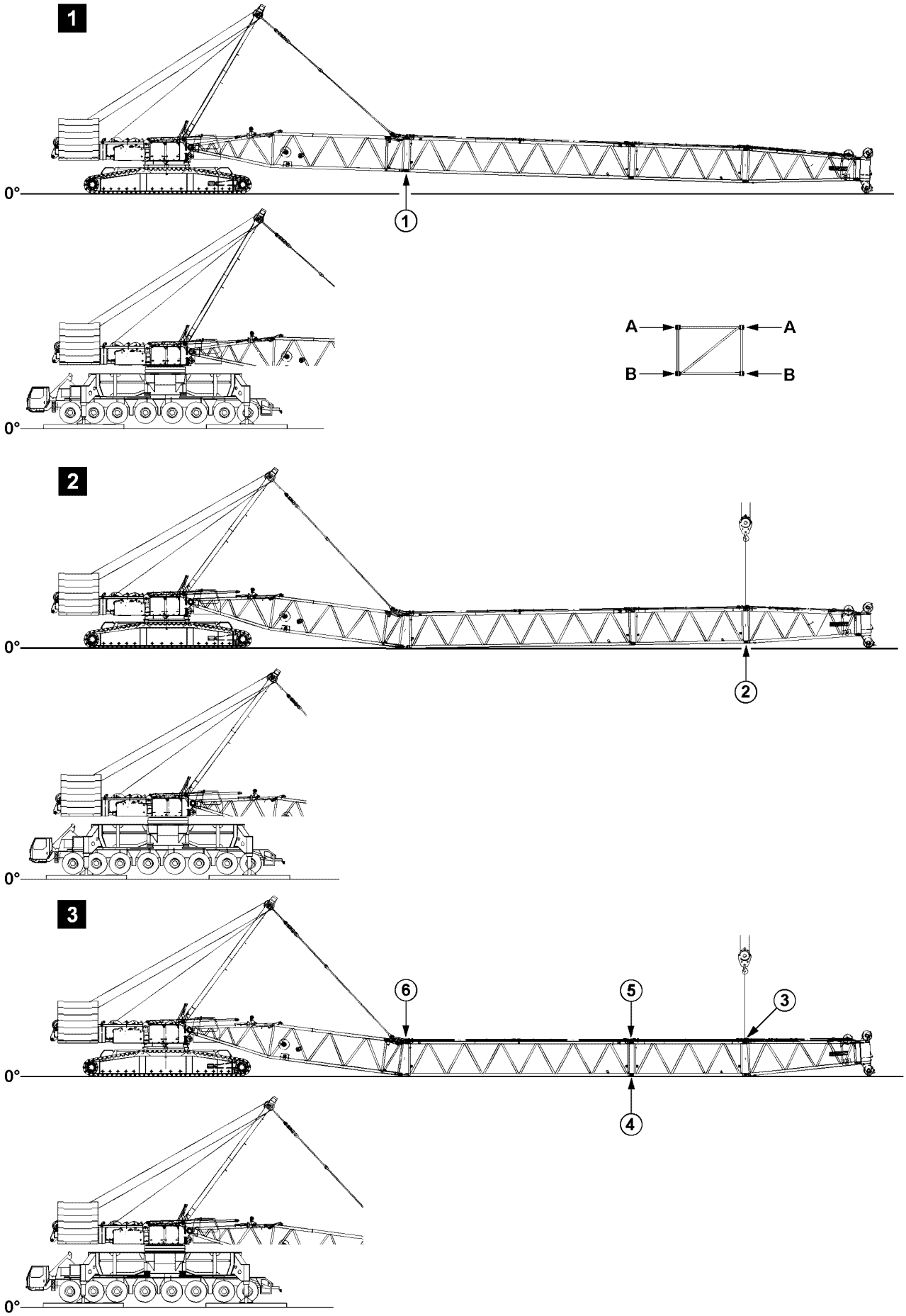

Fig.121634: Example of cranes with a lattice mast boom

LWE/LTR 1100-009/25105-02-02/en

copyright © Liebherr-Werk Ehingen GmbH 2023

16.17.2 Disassembling lattice sections

The illustrations serve as examples. The illustrations may differ depending on the crane.

WARNING
Danger of fatal injury when disassembling booms!
If the pins are not unpinned in the given sequence, then lattice sections may suddenly fold down or fall down.
Death, severe bodily injuries, property damage.
- ► Make sure that the SA-frame guying is tensioned before the pins are unpinned in point **1**, see illustration **1**.
- ► Pins must be unpinned in the specified order.

- ► Luff the boom down until the end section touches the ground slightly, illustration **1**.
- ► Guy the boom with SA-frame, illustration **1**.
- ► Release and unpin the pins on both sides (level **B**) in point **1**, illustration **1**.
- ► Open the boom system with the SA-frame, illustration **2**.
- ► Take the lattice sections down completely, illustration **2**.
- ► Lift the end section with the auxiliary crane, illustration **2**.
- ► Release and unpin the pins on both sides (level **B**) in point **2**, illustration **2**.
- ► Release and unpin the pins on both sides (level **A**) in point **3**, illustration **3**.
- ► Release and unpin the pins on both sides (level **B**) in point **4**, illustration **3**.
- ► Release and unpin the pins on both sides (level **A**) in point **5**, illustration **3**.
- ► Release and unpin the pins on both sides (level **A**) in point **6**, illustration **3**.

LWE/LTR 1100-009/25105-02-02/en

copyright © Liebherr-Werk Ehingen GmbH 2023

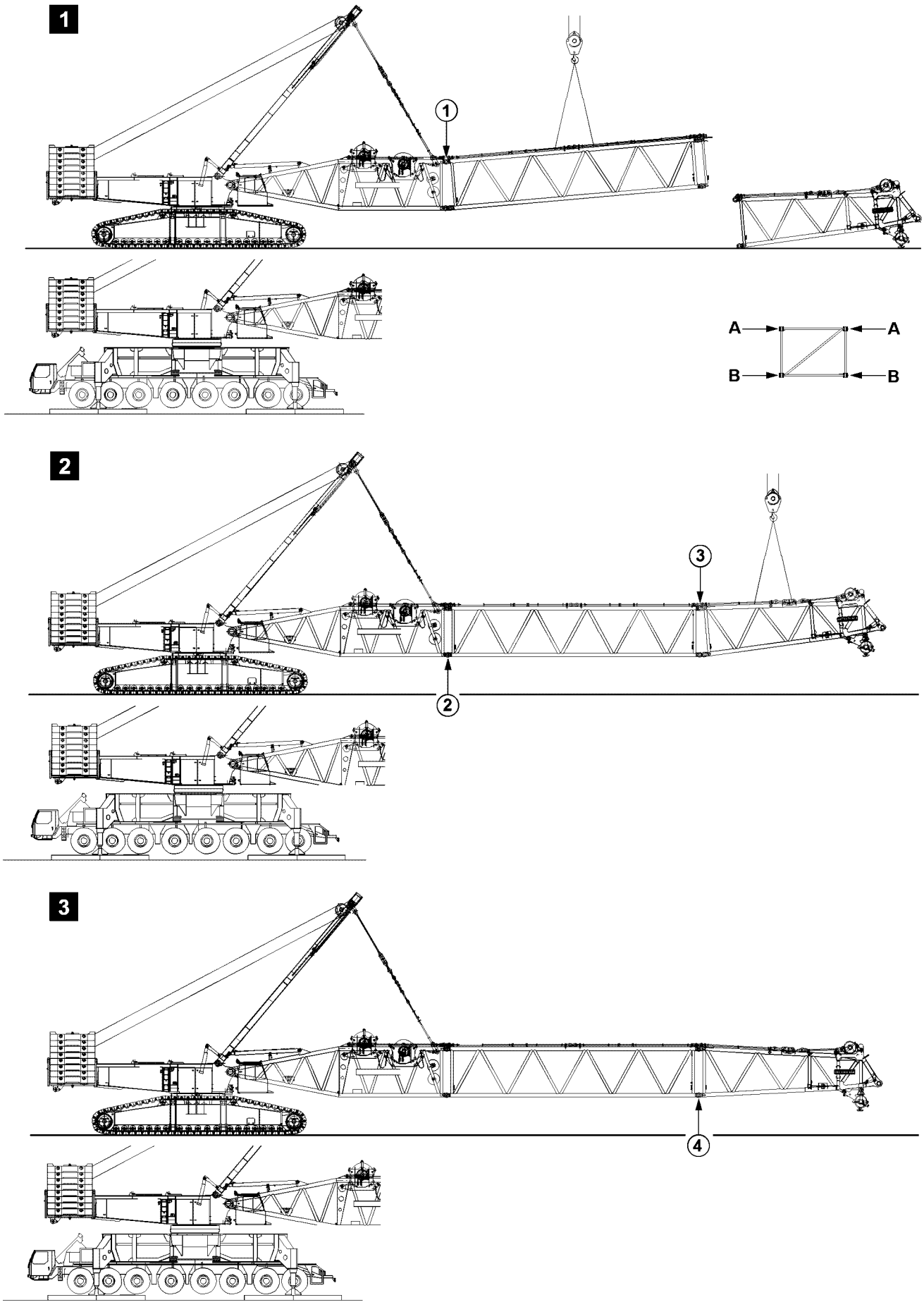

Fig.198182: Example of cranes with a lattice mast boom

LWE/LTR 1100-009/25105-02-02/en

copyright © Liebherr-Werk Ehingen GmbH 2023

16.18 Flying assembly / disassembly of lattice sections

16.18.1 Flying assembly of lattice sections

The illustrations serve as examples. The illustrations may differ depending on the crane.

WARNING
Danger of fatal injury when assembling booms!
If the pins are not pinned in the given sequence, then lattice sections may suddenly fold down or fall down.
Death, severe bodily injuries, property damage.
► Pins must be pinned in the order specified.

► Pin and secure pins on both sides (level **A**) in point **1**, illustration **1**.
► Pin and secure pins on both sides (level **B**) in point **2**, illustration **2**.
► Pin and secure pins on both sides (level **A**) in point **3**, illustration **2**.
► Pin and secure pins on both sides (level **B**) in point **4**, illustration **3**.

LWE/LTR 1100-009/25105-02-02/en

copyright © Liebherr-Werk Ehingen GmbH 2023

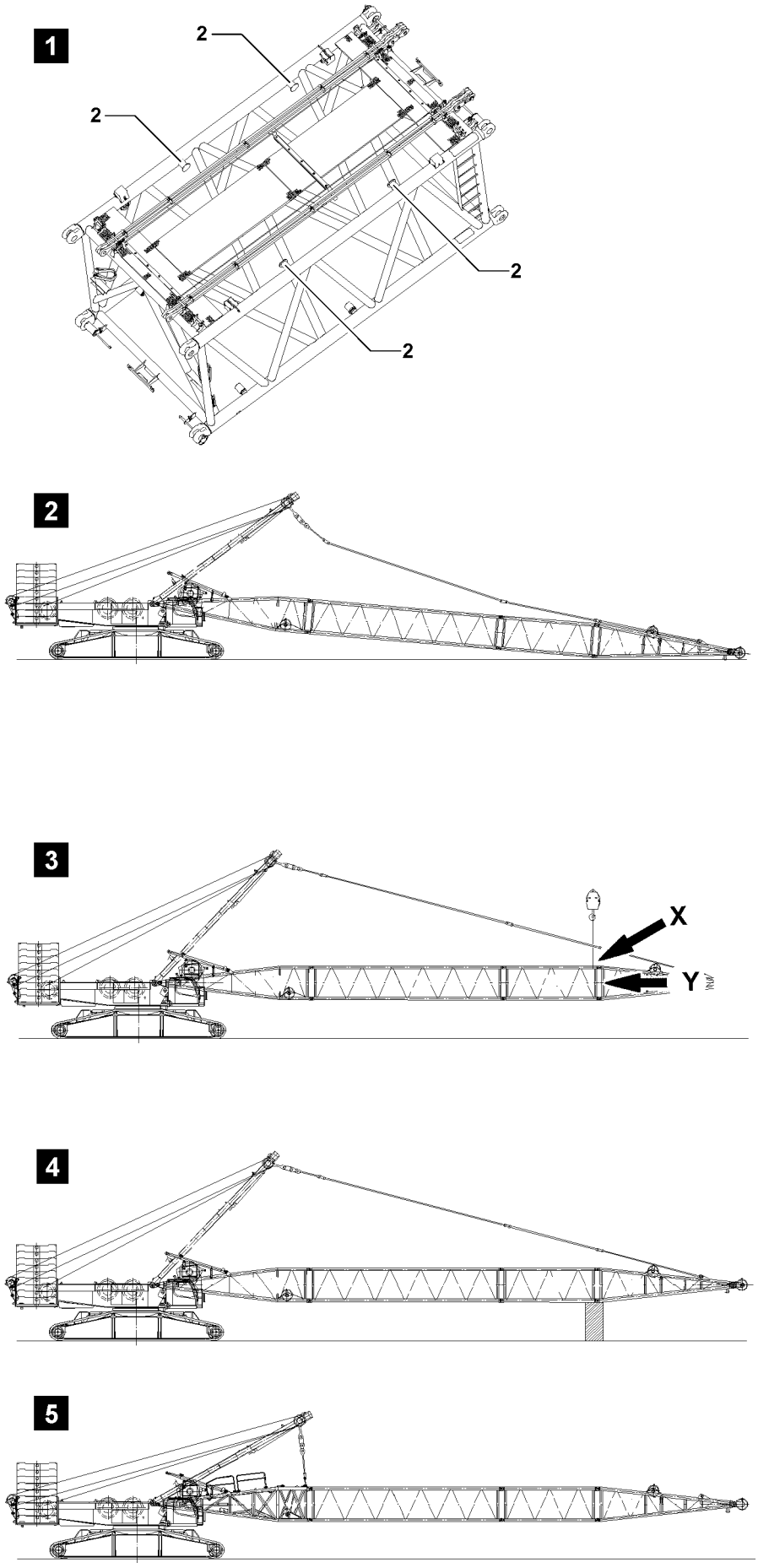

Fig.111448: Guying the pivot section with the SA-frame

LWE/LTR 1100-009/25105-02-02/en

copyright © Liebherr-Werk Ehingen GmbH 2023

16.18.2 Flying disassembly of lattice sections

The illustrations serve as examples. The illustrations may differ depending on the crane.

The flying disassembly of lattice sections can be used on:
– Derrick boom
– Main boom

Make sure that the following prerequisite is met:
– Before guying the pivot section, secure the boom properly to prevent it from falling down.

Guying the pivot section in flying mode with the SA-frame

There are three ways to change the guy point for flying disassembly:
– Take down the boom on the ground.
– Secure the boom with the auxiliary crane.
– Support the boom.

► Take down the boom on the ground, see illustration **2**.
or

WARNING
Lattice section incorrectly attached!
If the fastening equipment is attached on the bitts **2** when securing the boom, then the bitts will be overloaded. The lattice section will be damaged.
The boom can fall down.
Death, severe bodily injuries, property damage.

If an auxiliary crane is used to secure the boom for flying disassembly:
► Do **not** fasten the lattice section to the bitts **2**, see illustration **1**.
► Attach the fastening equipment in the area of point **P1** on both sides on the lattice section, see detail **X**.
► Make sure that the long fastening equipment is used, so that the angle between the cross-section of the lattice section and guyed fastening equipment is at least 60°, see detail **Y**.

Secure the boom with the auxiliary crane, see illustration **3**.
or

WARNING
Falling boom!
If the boom is not properly and securely supported from below, then the boom can fall down.
► Support the boom properly and safely with suitable material.

Support the boom, see illustration **4**.

Result:

– The guy rods can be disassembled.

► Take down, secure and disassemble the guy rods.
► Pin and secure the guy rods SA-frame on the pivot section.
► Tighten the SA-frame guy rods until the boom is in a horizontal position.

Result:

– Pivot section is guyed in flying mode with the SA-frame, see illustration **5**.
– The lattice sections can be disassembled in flying mode.

LWE/LTR 1100-009/25105-02-02/en

copyright © Liebherr-Werk Ehingen GmbH 2023

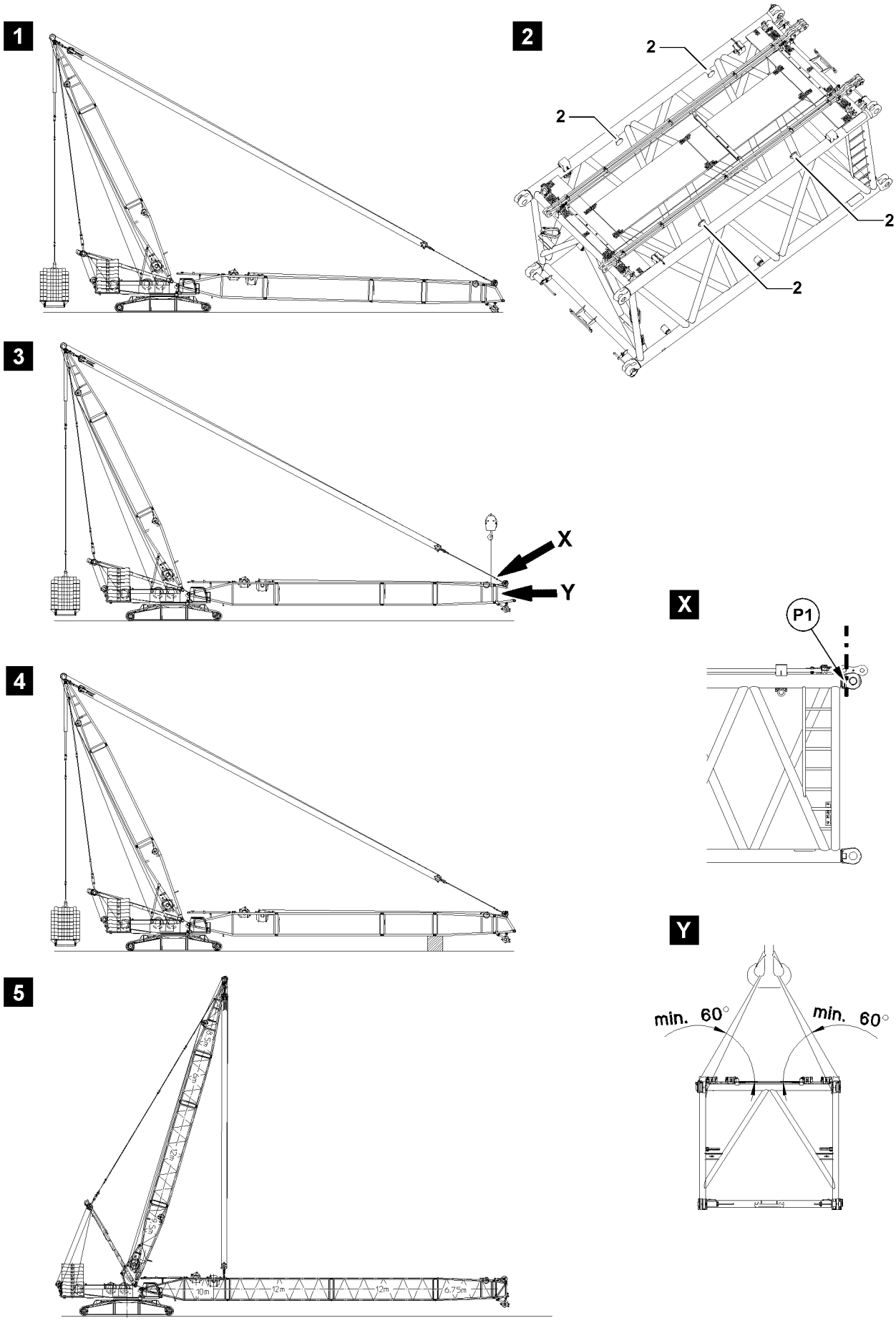

Fig.111449: Guying the pivot section with the derrick boom

LWE/LTR 1100-009/25105-02-02/en

copyright © Liebherr-Werk Ehingen GmbH 2023

Guying the pivot section in flying mode with the derrick boom

There are three ways to change the guy point for flying disassembly:
– Take down the boom on the ground.
– Secure the boom with the auxiliary crane.
– Support the boom.

► Take down the boom on the ground, see illustration **1**.
or

WARNING
Lattice section incorrectly attached!
If the fastening equipment is attached on the bitts **2** when securing the boom, then the bitts will be overloaded. The lattice section will be damaged.
The boom can fall down.
Death, severe bodily injuries, property damage.

If the auxiliary crane is used to secure the boom for flying disassembly:
► Do **not** fasten the lattice section to the bitts **2**, see illustration **2**.
► Attach the fastening equipment in the area of point **P1** on both sides on the lattice section, see detail **X**.
► Make sure that the long fastening equipment is used, so that the angle between the cross-section of the lattice section and guyed fastening equipment is at least 60°, see detail **Y**.

Secure the boom with the auxiliary crane, see illustration **3**.
or

WARNING
Falling boom!
If the boom is not properly supported from below, then the boom can fall down.
► Support the boom properly and safely with suitable material.

Support the boom, see illustration **4**.

Result:

– The guy rods can be disassembled.

► Take down, secure and disassemble the guy rods.
► Pin and secure the luffing pulley block on the pivot section.
► Tighten the control rope until the boom is in a horizontal position.

Result:

– Pivot section is guyed in flying mode with the derrick boom, see illustration **5**.
– The lattice sections can be disassembled in flying mode.

LWE/LTR 1100-009/25105-02-02/en

copyright © Liebherr-Werk Ehingen GmbH 2023

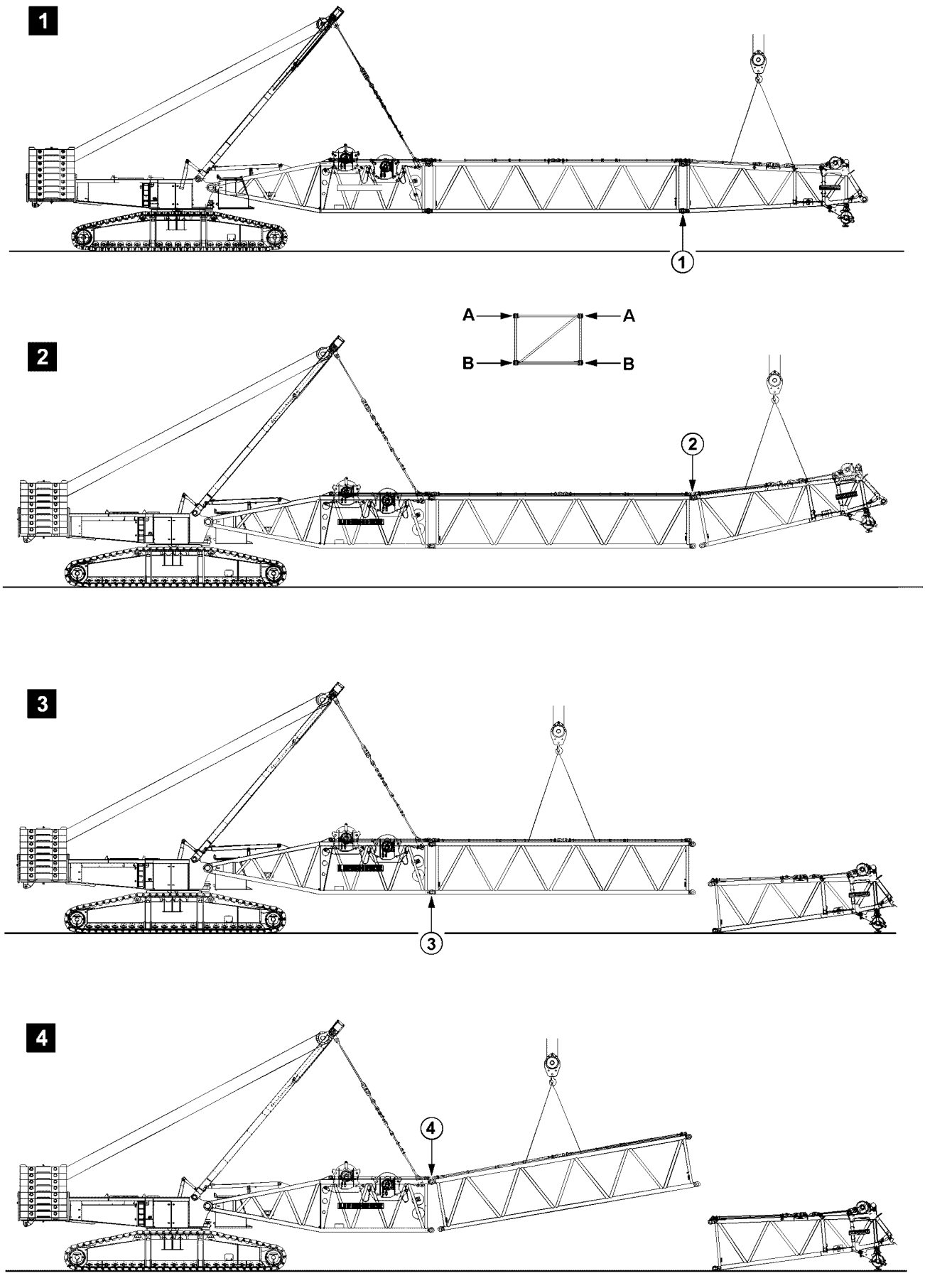

Fig.105511: Example of cranes with a lattice mast boom

LWE/LTR 1100-009/25105-02-02/en

copyright © Liebherr-Werk Ehingen GmbH 2023

Unpinning the lattice components

WARNING
Danger of fatal injury when disassembling booms!
If the pins are not unpinned in the given sequence, then lattice sections may suddenly fold down or fall down.
Death, severe bodily injuries, property damage.
► Pins must be unpinned in the specified order.

► Release and unpin the pins on both sides (level **B**) in point **1**, illustration **1**.
► Release and unpin the pins on both sides (level **A**) in point **2**, illustration **2**.
► Release and unpin the pins on both sides (level **B**) in point **3**, illustration **3**.
► Release and unpin the pins on both sides (level **A**) in point **4**, illustration **4**.

16.19 Supporting long lattice mast booms for erection and take-down

Note
► The illustrations of the crane and lattice mast boom are simplified and are examples and may not match your crane exactly.
► When working on uneven ground, additional or other substructures may be necessary.

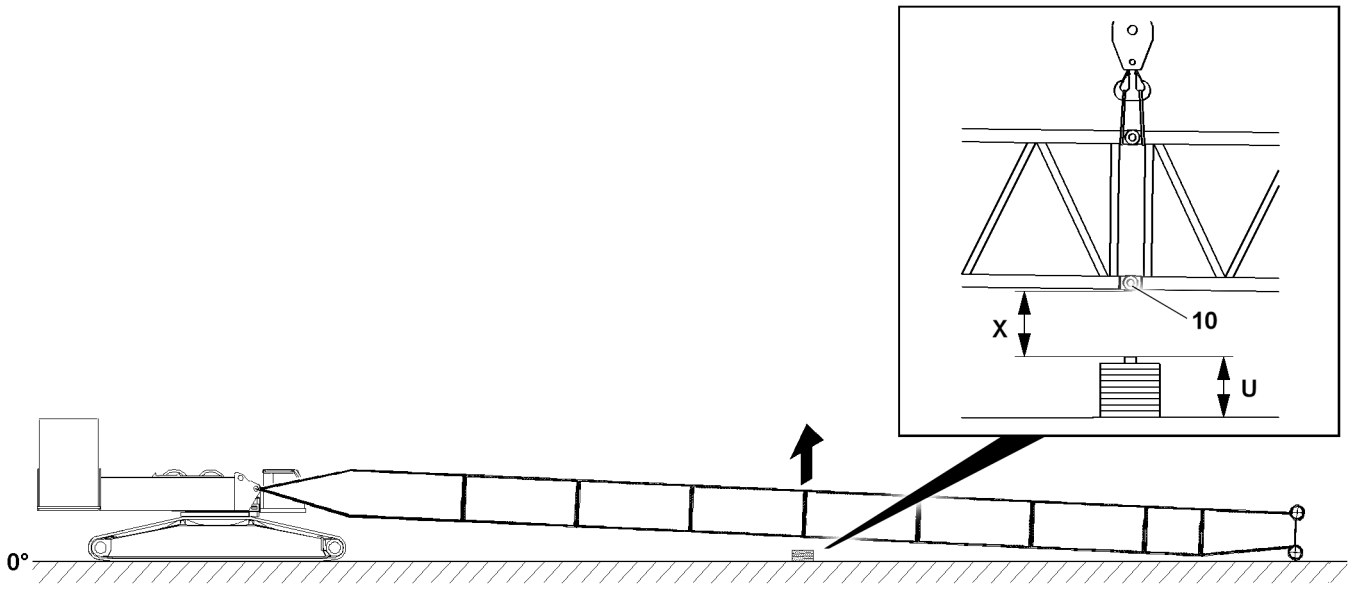

Fig.160362: Example of supporting a long boom system

Note
► The height **U** of the substructure or dimension **X** is noted in the respective boom assembly chapter, see for example, chapter 5.38 or chapter 5.39.
► If the height **U** or dimension **X** is not available in the chapter, see the separately supplied drawing „Support assembly drawing“ or the assembly drawing for the concerned boom system.

16.19.1 Supporting lattice mast booms for erection

Support the boom system properly for the closing procedure.

If the lower pins **10** can be inserted during closing:
► Select the height **U** of the substructure such that the maximum distance according to the dimension **X** is not exceeded.

LWE/LTR 1100-009/25105-02-02/en

copyright © Liebherr-Werk Ehingen GmbH 2023

16.19.2 Supporting lattice mast booms for take-down

For the take-down procedure, the boom system must be supported the same way as for erection.

If the boom system is to be taken down in the same place where it was erected:

► Take the boom system down in the same place with the same substructure.

or

If the boom system is to be taken down in another permissible place:

Establish the same conditions for the substructure according to the dimension **X**.

16.20 Assembling / disassembling boom systems for supporting on ascending terrain (assembly / disassembly diagram)

Note

► The following assembly steps are simplified and are examples and may not match your crane exactly.

WARNING

Danger of fatal injury when assembling / disassembling booms!

If the pins are not pinned / unpinned in the specified sequence, then lattice sections may suddenly fold down or fall down.

Death, severe bodily injuries, property damage.

► Insert / unpin the pins in the specified sequence, see section „Assembly of lattice sections“.

► Observe all safety technical notes in section „Assembly / disassembly“.

► Make sure that there are no persons in the danger zone.

WARNING

Horizontal movement of the boom!

► Make sure that there are no persons in the danger zone.

16.20.1 Assembling the boom systems on ascending terrain

Make sure that the following prerequisites are met:

– An auxiliary crane with sufficient load bearing capacity is available.

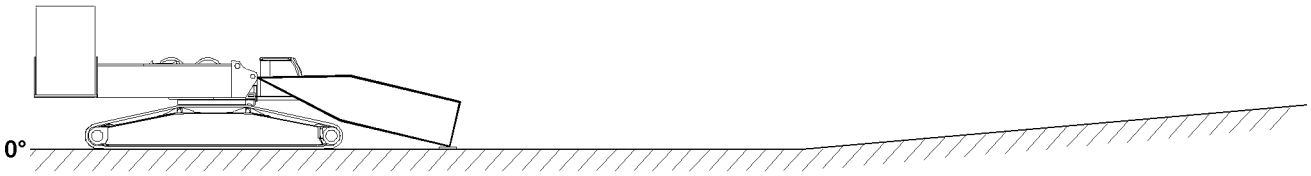

Fig.121635: Boom - pivot section installed on the turntable and taken down on the ground

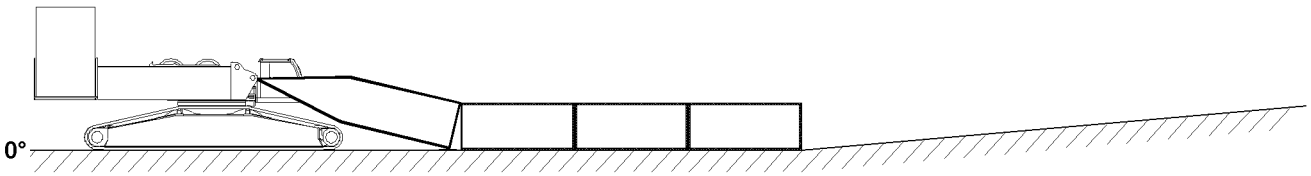

Fig.121636: Boom - intermediate sections installed on the boom - pivot section and taken down on the ground

LWE/LTR 1100-009/25105-02-02/en

copyright © Liebherr-Werk Ehingen GmbH 2023

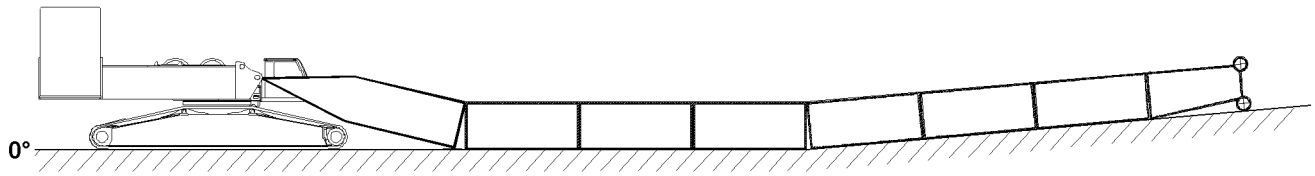

Fig.121637: Boom - intermediate sections installed and taken down on ascending terrain

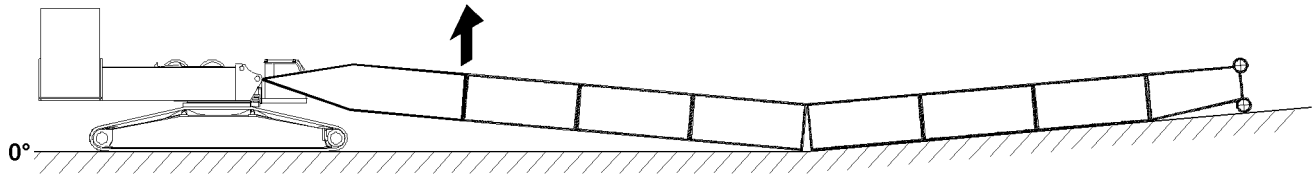

Fig.121638: Lifting and close the boom system in the area of the boom - pivot section

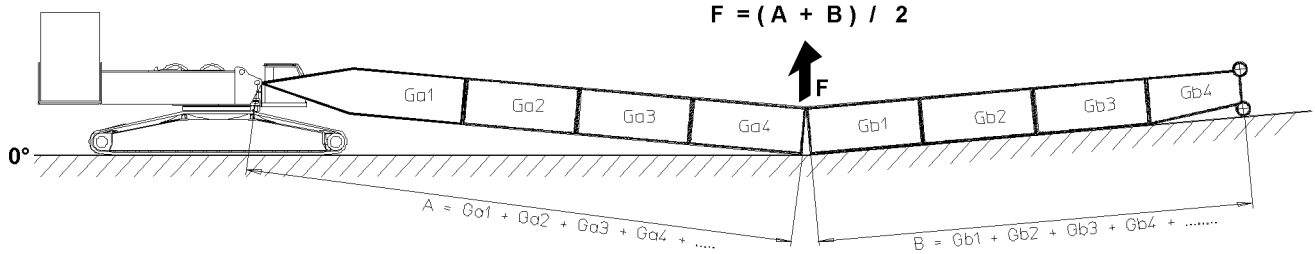

Fig.145512: Calculation of force for the closing procedure of the boom system

Note
- ► The abbreviations Ga1, Ga2, ... and Gb1, Gb2, are for the weights of the individual lattice sections.
- ► The weights of the lattice sections are noted on the welded-on weight tags on the lattice sections.

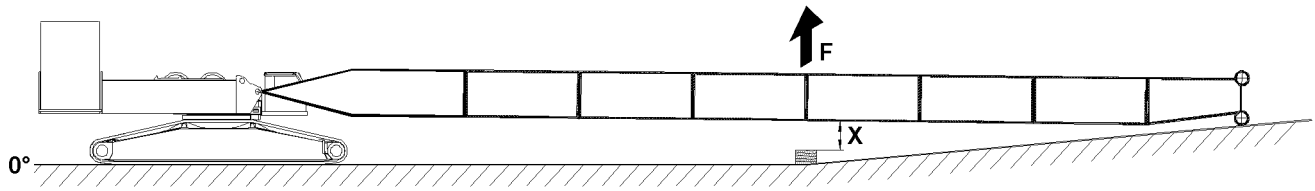

Fig.121639: Lifting and closing the boom system // Supporting the boom system

Note
- ► The height of the substructure or the dimension **X** is noted in the respective boom assembly chapter, see chapter 5.38 or chapter 5.39.
- ► If the dimension **X** is not available in chapter 5.38 or chapter 5.39, see the separately supplied drawing „Support assembly drawing“ or the assembly drawing for the corresponding operating mode.

- ► Support the boom system properly after the closing procedure.

16.20.2 Disassembling boom systems on ascending terrain

Make sure that the following prerequisites are met:
- – An auxiliary crane with sufficient load bearing capacity is available.

LWE/LTR 1100-009/25105-02-02/en

copyright © Liebherr-Werk Ehingen GmbH 2023

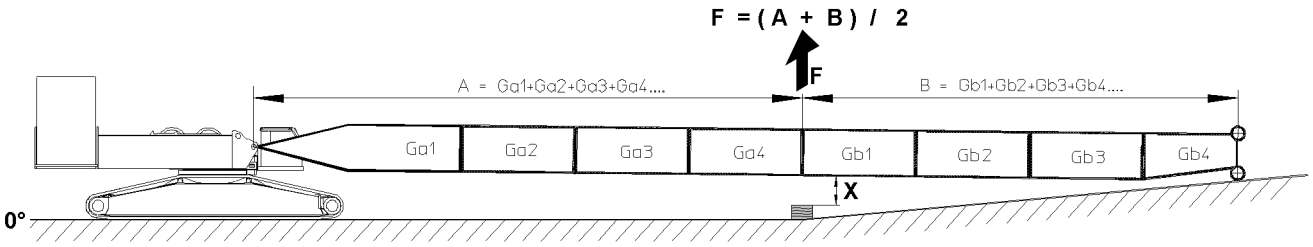

Fig.145513: Calculation of the force for opening the boom system // Lifting the boom system // Removing the substructure // Opening the boom system

Note

- ► The abbreviations Ga1, Ga2, ... and Gb1, Gb2, are for the weights of the individual lattice sections.
- ► The weights of the lattice sections are noted on the welded-on weight tags on the lattice sections.

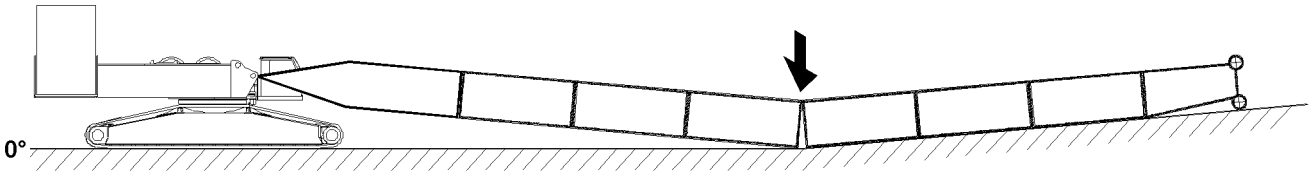

Fig.121657: Taking the boom system down

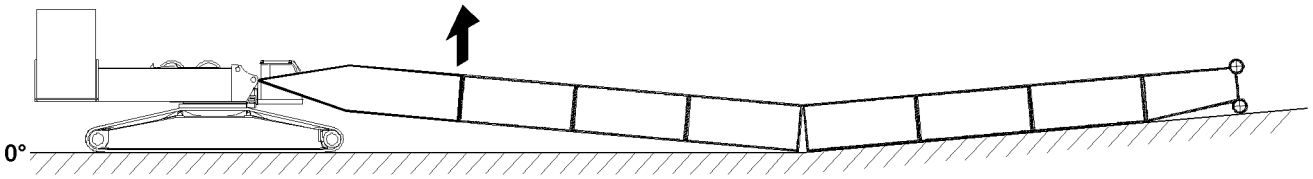

Fig.121652: Lifting and opening the boom system

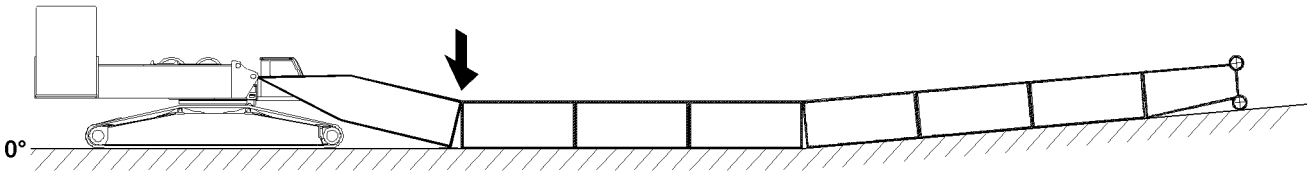

Fig.121653: Taking the boom system down

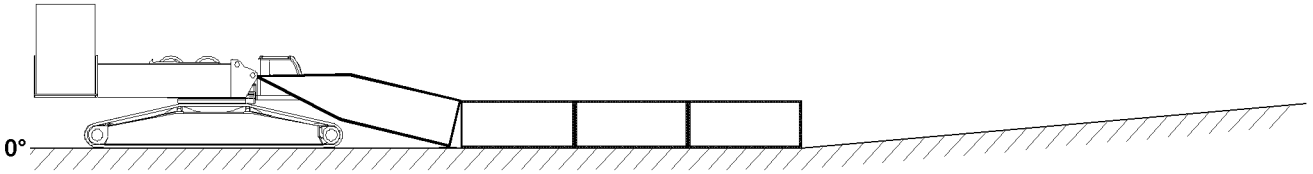

Fig.121636: Disassembling and removing the boom - intermediate sections with the end section

LWE/LTR 1100-009/25105-02-02/en

copyright © Liebherr-Werk Ehingen GmbH 2023

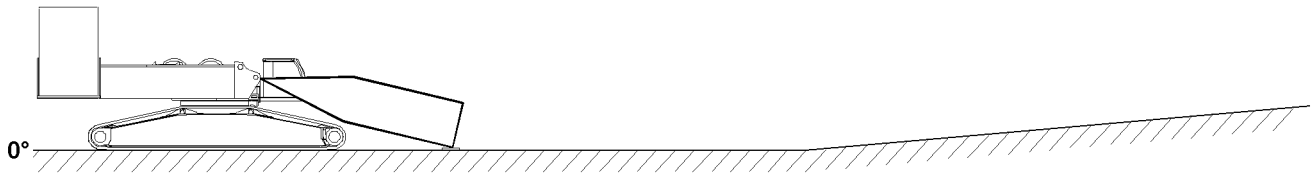

Fig.121635: Disassembling and removing the boom - intermediate sections to the boom - pivot section

► Disassemble and remove the boom - pivot section.

16.21 Assembling / disassembling of boom systems for supporting on descending terrain (assembly / disassembly diagram)

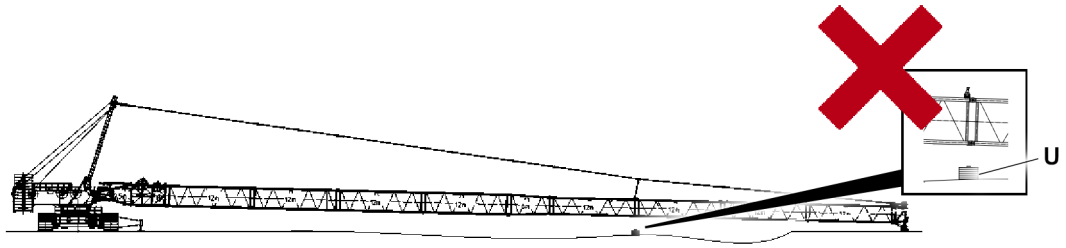

Fig.163434: Example of a boom with a substructure due to the boom length

WARNING
Impermissible boom length!
If boom systems must be supported due to their length, there is the risk of breakage during assembly / disassembly on descending terrain.
► Observe the specifications regarding the substructure **U** in the assembly chapters and assembly drawings.
► Boom lengths, for which a substructure **U** is required must **not** be assembled / disassembled according to the assembly / disassembly diagram in the following sections.

Note
► The following assembly steps are simplified and are examples and may not match your crane exactly.

WARNING
Danger of fatal injury when assembling / disassembling booms!
If the pins are not pinned / unpinned in the specified sequence, then lattice sections may suddenly fold down or fall down.
Death, severe bodily injuries, property damage.
► Insert / unpin the pins in the specified sequence, see section „Assembly of lattice sections“.
► Observe all safety technical notes in section „Assembly / disassembly“.
► Make sure that there are no persons in the danger zone.

16.21.1 Assembling the boom systems on descending terrain

Make sure that the following prerequisites are met:
– The lattice sections are properly assembled.
– An auxiliary crane with sufficient load bearing capacity is available.

LWE/LTR 1100-009/25105-02-02/en

copyright © Liebherr-Werk Ehingen GmbH 2023

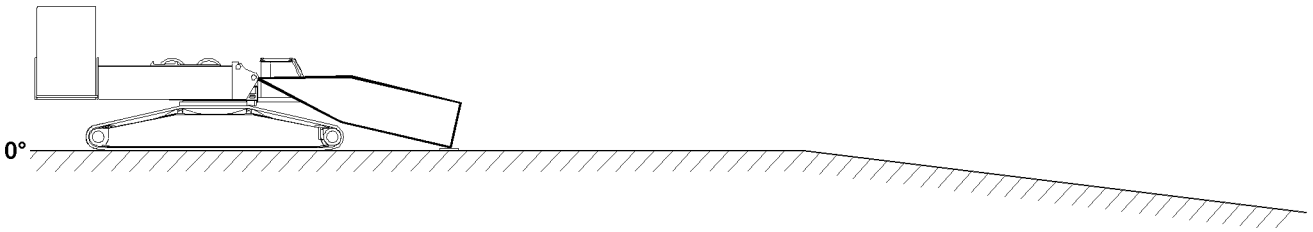

Fig.121640: Boom - pivot section installed on the turntable and taken down on the ground

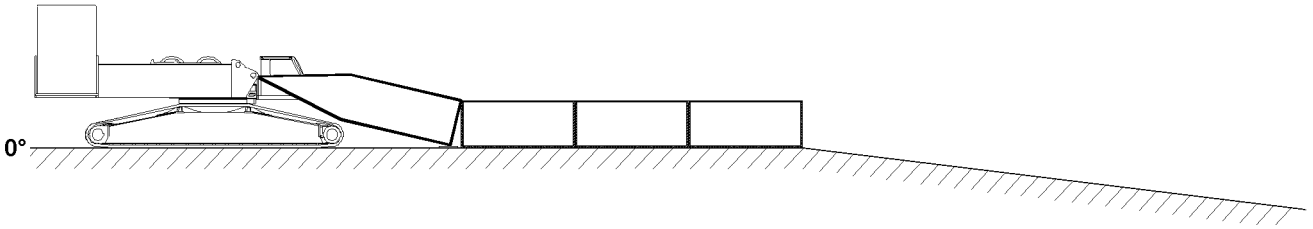

Fig.121641: Boom - intermediate sections installed on the boom - pivot section and taken down on the ground

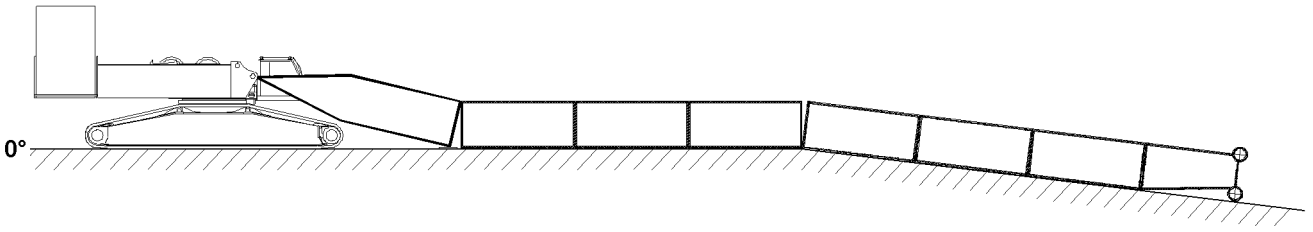

Fig.121642: Boom - intermediate sections installed and taken down on descending terrain

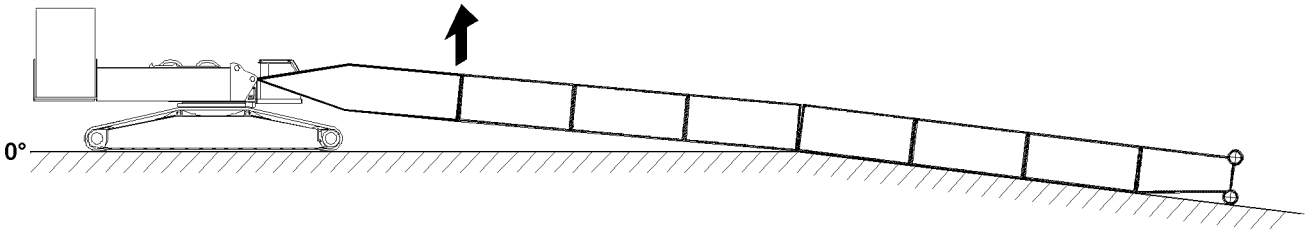

Fig.121643: Lifting and close the boom system in the area of the boom - pivot section

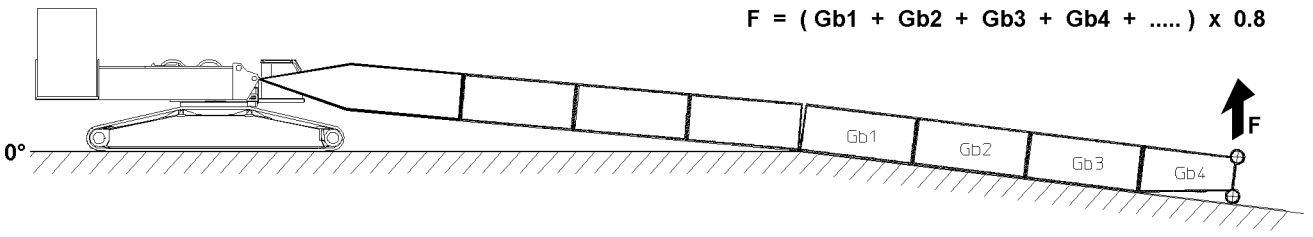

Fig.145514: Calculation of force for the closing procedure of the boom system

Note

- ► The abbreviations Gb1, Gb2, ... are for the weights of the individual lattice sections.
- ► The weights of the lattice sections are noted on the welded-on weight tags on the lattice sections.

LWE/LTR 1100-009/25105-02-02/en

copyright © Liebherr-Werk Ehingen GmbH 2023

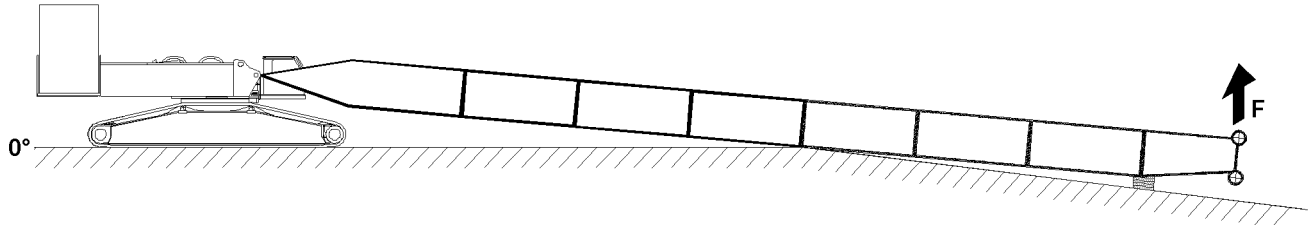

Fig.121644: Lifting and closing the boom system // Supporting the boom system

Note
► The height of the substructure in the area of the boom end section depends on the lay of the terrain and the resulting incline of the boom system.

► Support the boom system properly after the closing procedure.

16.21.2 Disassembling boom systems on descending terrain

Make sure that the following prerequisite is met:
– An auxiliary crane with sufficient load bearing capacity is available.

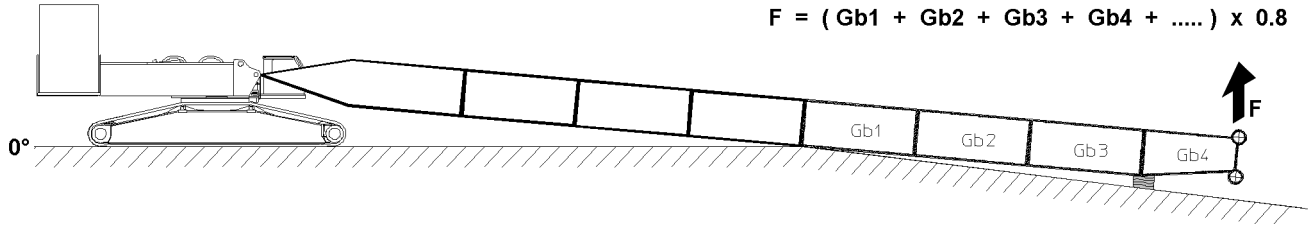

Fig.145515: Calculation of the force for opening the boom system // Lifting the boom system // Removing the substructure // Opening the boom system

Note
► The abbreviations Gb1, Gb2, ... are for the weights of the individual lattice sections.
► The weights of the lattice sections are noted on the welded-on weight tags on the lattice sections.

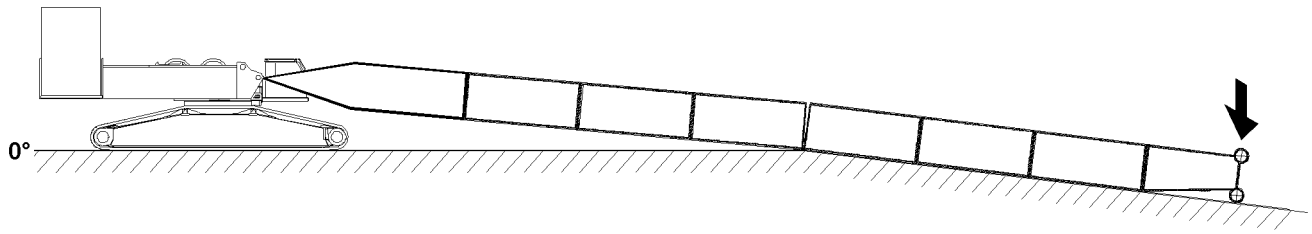

Fig.121658: Taking the boom system down

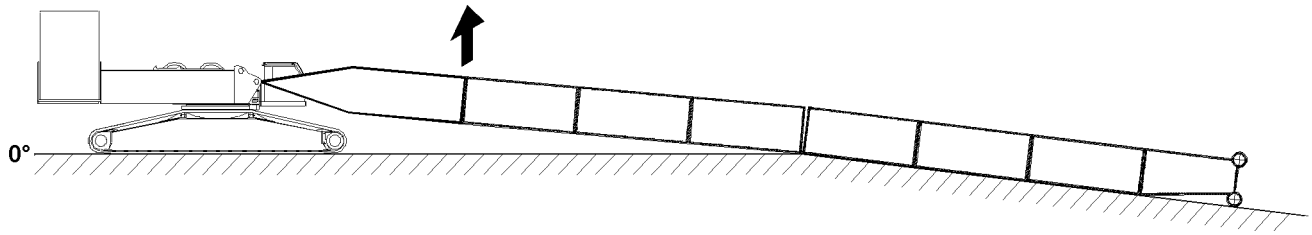

Fig.121655: Lifting and opening the boom system

LWE/LTR 1100-009/25105-02-02/en

copyright © Liebherr-Werk Ehingen GmbH 2023

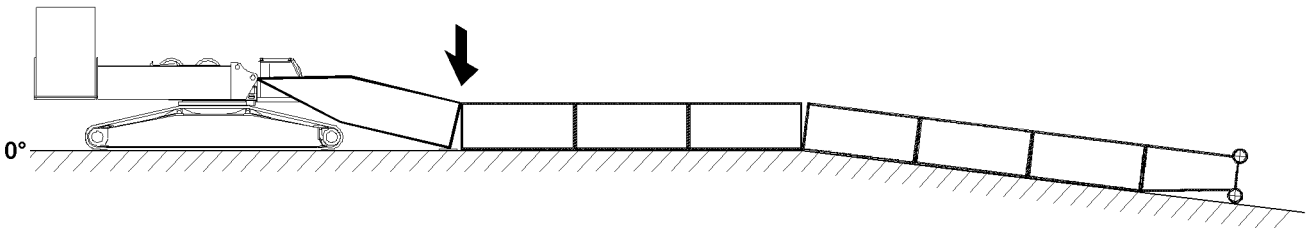

Fig.121656: Taking the boom system down

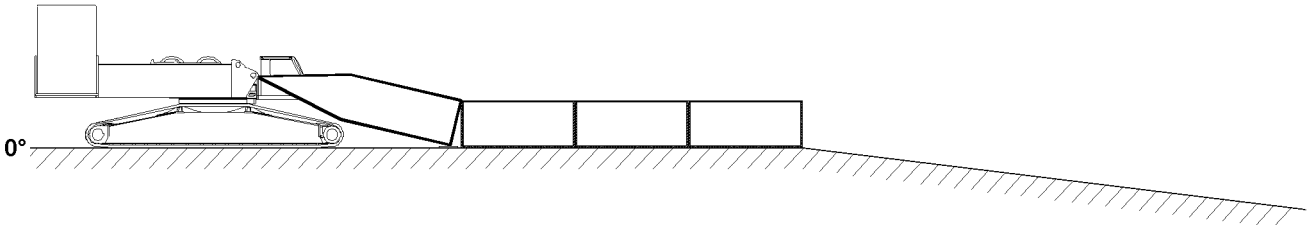

Fig.121641: Disassembling and removing the boom - intermediate sections with the end section

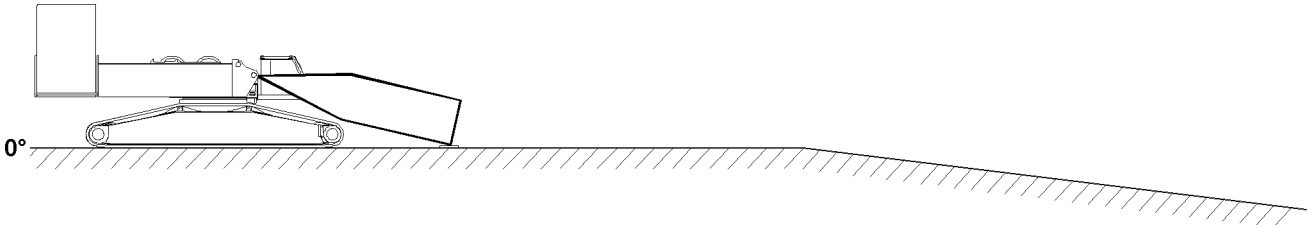

Fig.121640: Disassembling and removing the boom - intermediate sections to the boom - pivot section

► Disassemble and remove the boom - pivot section.

16.22 Closing the boom system - opening the boom system (via the SA-frame)

Note

► This section is described as an example.
► The illustrations in this section are shown as an example.

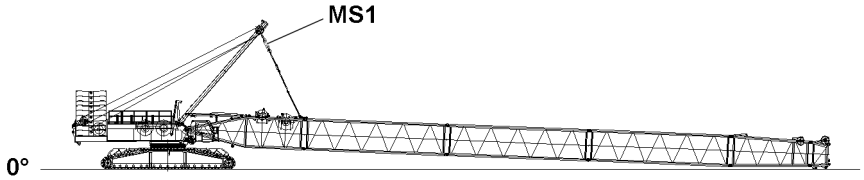

Fig.161332: Test point 1 closing the boom system - opening the boom system

DANGER

Overload of the crane!
Death, severe bodily injuries, property damage.

► The closing and opening of different boom systems with the SA-frame is only permissible up to certain maximum boom lengths.
► Make sure that there are no persons on the boom system as well as in the danger zone during the opening and closing procedure.

LWE/LTR 1100-009/25105-02-02/en

copyright © Liebherr-Werk Ehingen GmbH 2023

Note

The actual forces in test point 1 **MS1** - which are used during the closing and opening procedure of the boom system - are displayed on the LICCON monitor. The force determined in test point 1 is generally designated as $F1^{actual}$.

When specifications are available for the force in test point 1 **MS1** on the assembly drawing:

► Observe the specifications for the force in test point 1 **MS1**.

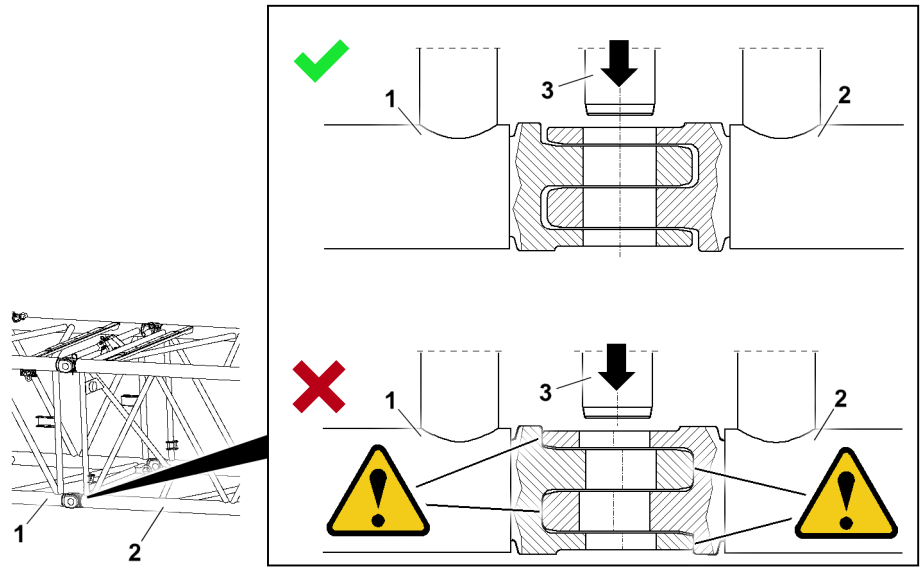

Fig.161335: Alignment of the lattice sections and overloaded pin bores

1 Lattice section 1
2 Lattice section 2
3 Connector pin

DANGER

Overload of the crane!

If when opening and closing too much force is applied in test point 1, the boom system can be overloaded.

Death, severe bodily injuries, property damage.

► Spool winch 4 up to the maximum when closing the boom system such that the pin bores of the lattice sections align. Take note of the force in test point 1. The noted value is decisive for opening.
► Do not load or push the connecting forks into each other on the block.
► When opening, use the noted force from the closing procedure as an orientation.
► The end section may **not** lift off the ground during the boom system closing and opening procedure, it must be lie on the ground.
► The maximum permissible F1-total force ($F1_{max}$) on the LICCON monitor may not be used as a limit value, as it protects another condition (the completely assembled boom).
► A maximum force in test point 1 specified in the assembly drawing cannot always be approached. At times, the closing procedure can be carried out with significantly lower forces, for example with light, short booms.

Note

► Counterweight and central ballast, see the Erection chart depending on the boom length.

LWE/LTR 1100-009/25105-02-02/en

copyright © Liebherr-Werk Ehingen GmbH 2023

16.22.1 Closing the boom system (via the SA-frame)

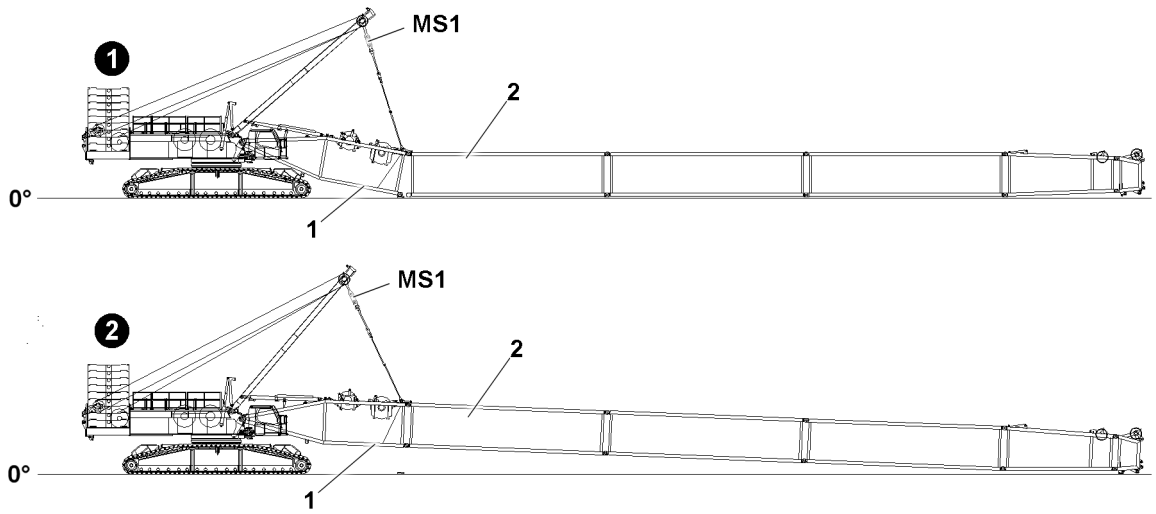

Fig.161384: Example: Boom system with closing

1 Pivot section **2** Intermediate section

Make sure that the following prerequisites are met:
– Counterweight and central ballast positioned according to the assembly drawing.

Note

Noted actual force in test point 1 **MS1** for later disassembly.
► When unpinning in the same location with the same ACTUAL force in test point 1 **MS1**, pull to release the connector pin.

► Spool winch 4 up such that the pin bores of the pivot section **1** and the intermediate section **2** align.

When the pin bores align:
► Take note of the actual force in test point 1 **MS1** displayed on the LICCON monitor.
► Insert the connector pin on both sides and secure.
► Spool winch 4 out such that the boom system is relieved.

Result:
– Boom system closed.

16.22.2 Opening the boom system (without derrick boom)

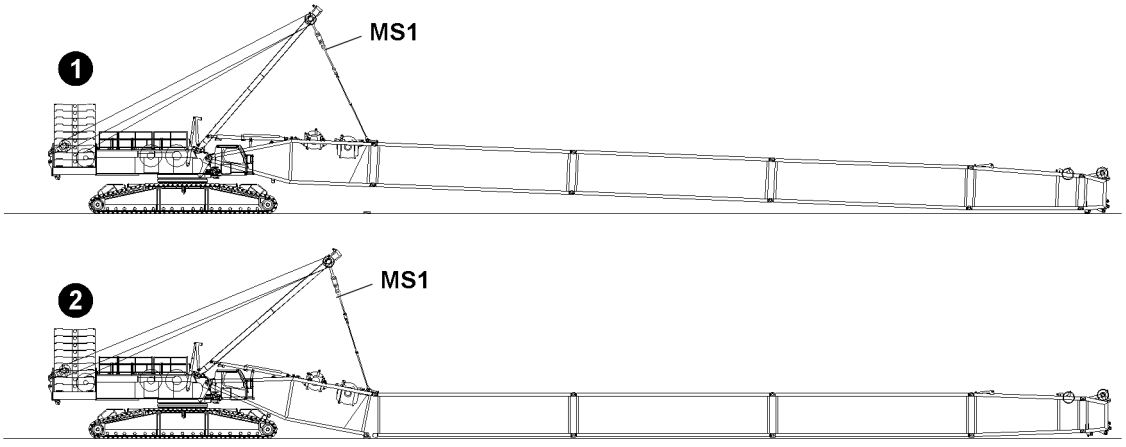

Fig.161385: Example: Opening the boom system

LWE/LTR 1100-009/25105-02-02/en

copyright © Liebherr-Werk Ehingen GmbH 2023

Note
► Use the noted actual force in test point 1 **MS1** to pretension the boom system.

► Spool winch 4 up until the noted actual force is reached in test point 1 **MS1**.
► Release and unpin the connector pins on both sides.

NOTICE
Danger of property damage!
When lowering the opened boom system incorrectly, crane components can be damaged.
► Observe the specifications regarding railings and substructure.

► Spool winch 4 out and lower the boom system properly.

Result:
– Boom system opened and taken down.

16.23 Closing the boom system - opening the boom system (via the derrick boom)

Note
► This section is described as an example.
► The illustrations in this section are shown as an example.

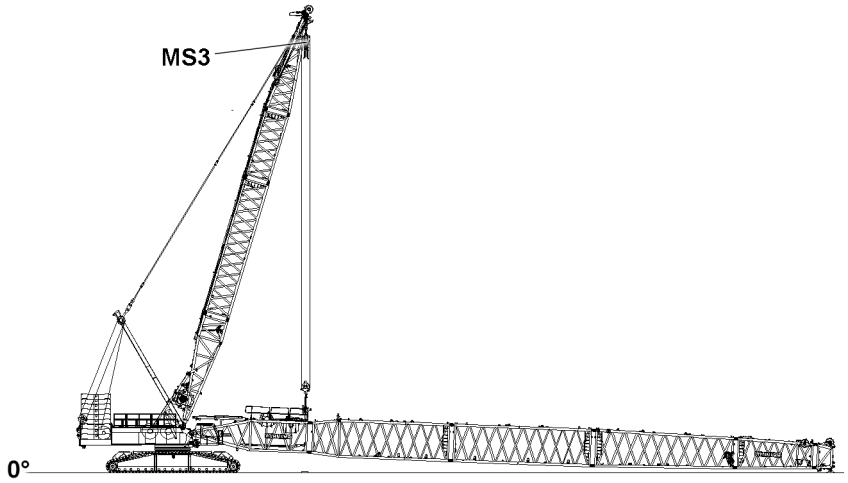

Fig.161378: Test point 3 closing the boom system - opening the boom system

DANGER
Overload of the crane!
Death, severe bodily injuries, property damage.
► The closing and opening of different boom systems with the derrick boom is only permissible up to certain maximum boom lengths.
► Make sure that there are no persons on the boom system as well as in the danger zone during the opening and closing procedure.

Note
The actual forces in test point 3 **MS3** - which are used during the closing and opening procedure of the boom system - are displayed on the LICCON monitor. The force determined in test point 3 is generally designated as $F3^{actual}$.

When specifications are available for the force in test point 3 **MS3** on the assembly drawing:
► Observe the specifications for the force in test point 3 **MS3**.

LWE/LTR 1100-009/25105-02-02/en

copyright © Liebherr-Werk Ehingen GmbH 2023

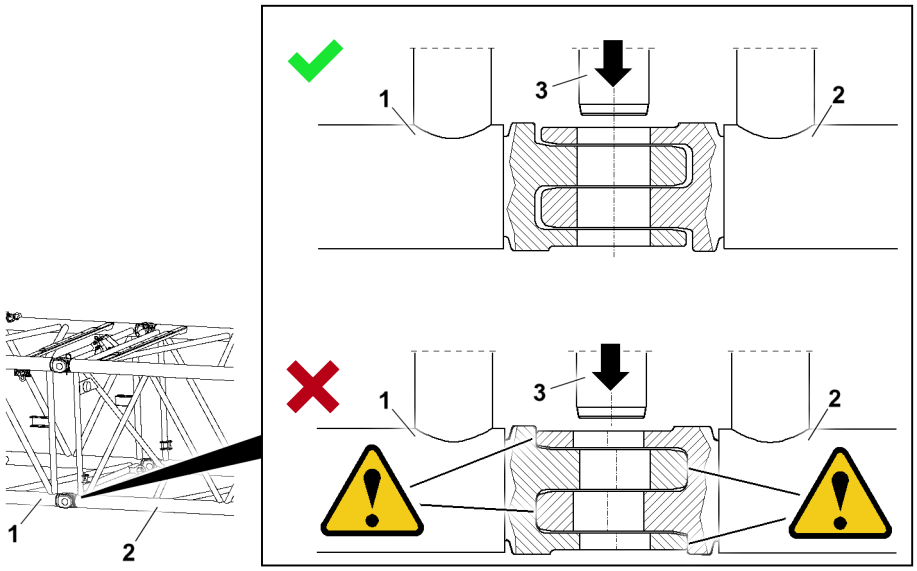

Fig.161335: Alignment of the lattice sections and overloaded pin bores

1 Lattice section 1
2 Lattice section 2
3 Connector pin

DANGER
Overload of the crane!
If when opening and closing too much force is applied in test point 3, the boom system can be overloaded.
Death, severe bodily injuries, property damage.

- ► Spool winch 3 up to the maximum when closing the boom system such that the pin bores of the lattice sections align. Take note of the force in test point 3. The noted value is decisive for opening.
- ► Do not load or push the connecting forks into each other on the block.
- ► When opening, use the noted force from the closing procedure as an orientation.
- ► The end section may **not** lift off the ground during the boom system closing and opening procedure, it must be lie on the ground.
- ► The maximum permissible F3-total force ($F3_{max}$) on the LICCON monitor may not be used as a limit value, as it protects another condition (the completely assembled boom).
- ► The maximum permissible F3-total force ($F3_{max}$) on the LICCON monitor cannot always be approached. At times, the closing procedure can be carried out with significantly lower forces, for example with light, short booms.

LWE/LTR 1100-009/25105-02-02/en

copyright © Liebherr-Werk Ehingen GmbH 2023

16.23.1 Closing the boom system (via the derrick boom)

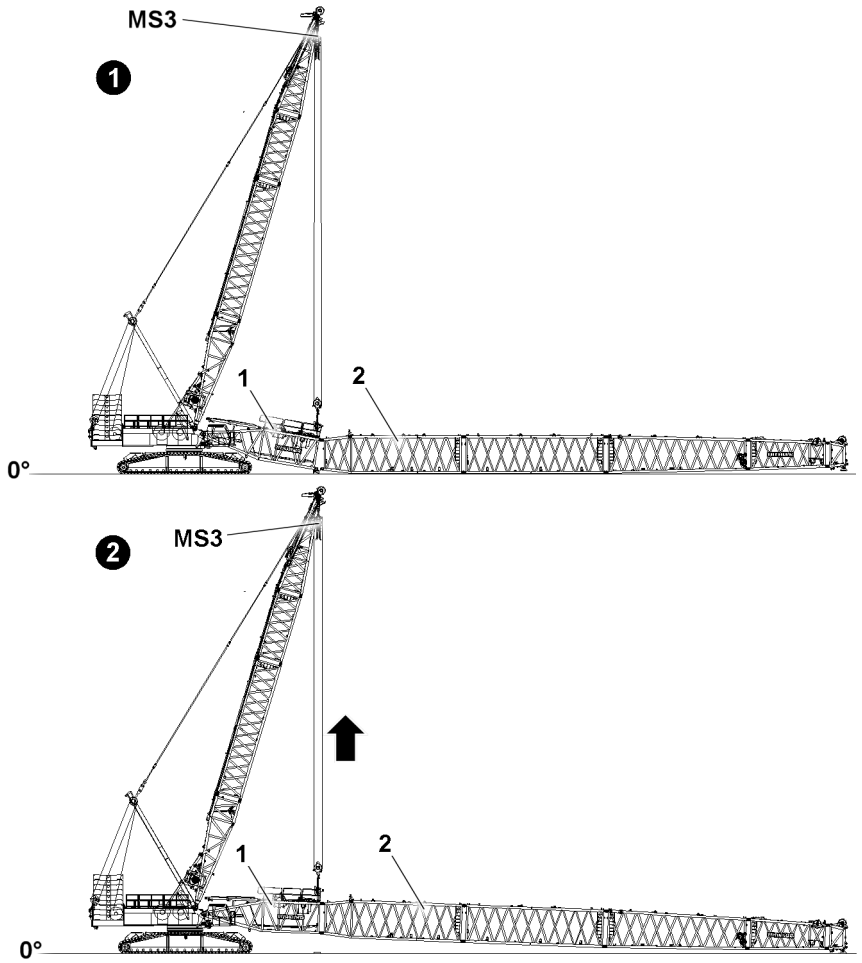

Fig.161383: Example: Closing the boom system

1 Pivot section **2** Intermediate section

Make sure that the following prerequisites are met:
– Counterweight and central ballast positioned according to the assembly drawing.

Note

When the pin bores align:
► When unpinning with the same ACTUAL force in test point 3 **MS3**, pull to release the connector pin.

► Spool winch 3 up to the maximum until the pin bores of the intermediate section **2** and the pivot section **1** align.

When the pin bores align:
► Take note of the actual force in test point 3 **MS3** displayed on the LICCON monitor.
► Insert the connector pin on both sides and secure.
► Spool winch 3 out such until the boom system is relieved.

Result:
– Boom system closed.

LWE/LTR 1100-009/25105-02-02/en

copyright © Liebherr-Werk Ehingen GmbH 2023

16.23.2 Opening the boom system (without derrick boom)

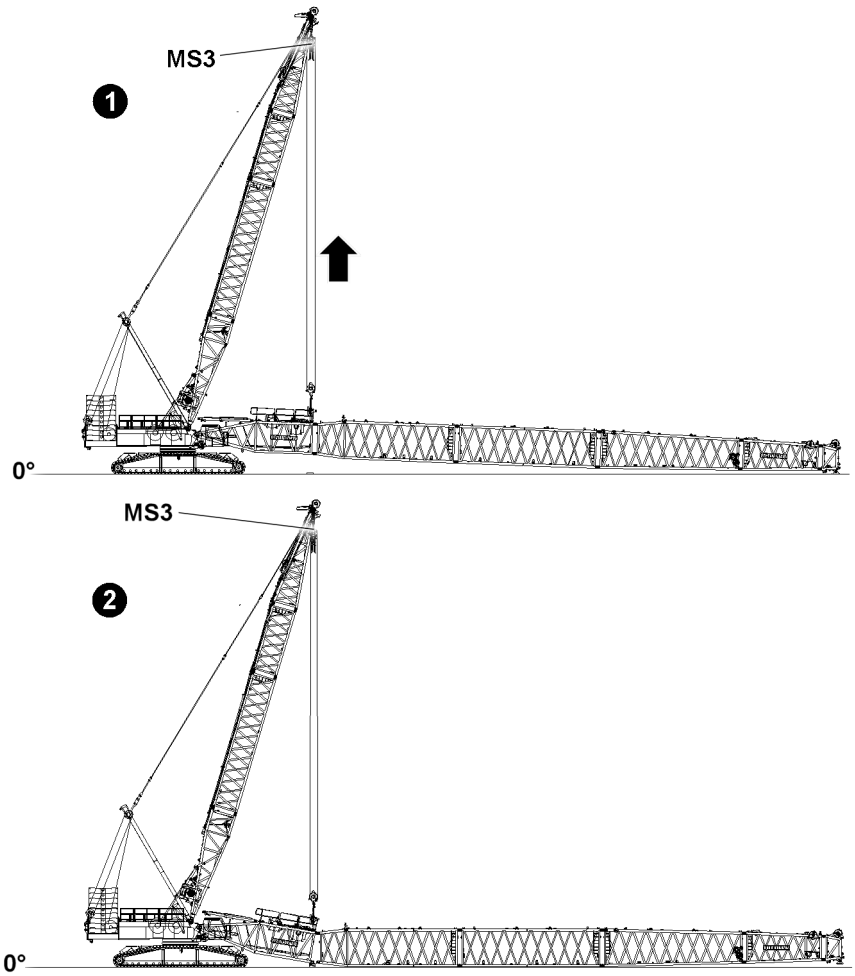

Fig.161382: Example: Opening the boom system

Note
► Use the noted actual force in test point 3 **MS3** to pretension the boom system.

► Spool winch 4 up until the noted actual force is reached in test point 3 **MS3**.
► Release and unpin the connector pins on both sides.

NOTICE
Danger of property damage!
When lowering the opened boom system incorrectly, crane components can be damaged.
► Observe the specifications regarding railings and substructure.

► Spool winch 3 out and lower the boom system properly.

Result:
– Boom system opened.

LWE/LTR 1100-009/25105-02-02/en

copyright © Liebherr-Werk Ehingen GmbH 2023

17 Erecting / taking-down

WARNING
The crane can topple over!
Due to an unforeseen occurrence, for example: Sudden strong wind or storm can lead to dangerous operating situations, up to toppling the crane.
Death, severe bodily injuries, property damage.
- ► The boom must be able to be taken down at any time with its current equipment, observe the erection and take-down charts. Observe the job planner.
- ► The counterweights and / or ballasts required for this must always be in direct vicinity of the crane.
- ► The crane operator must ensure that the required counterweight and / or the required ballast is carried along when driving the crane with the equipment in place and that the boom can be placed down at any time.

WARNING
Danger of fatal injury!
- ► Incorrectly installed or non-functioning limit switches as well as falling parts (pins, cotter pins, ice etc.) can cause accidents.

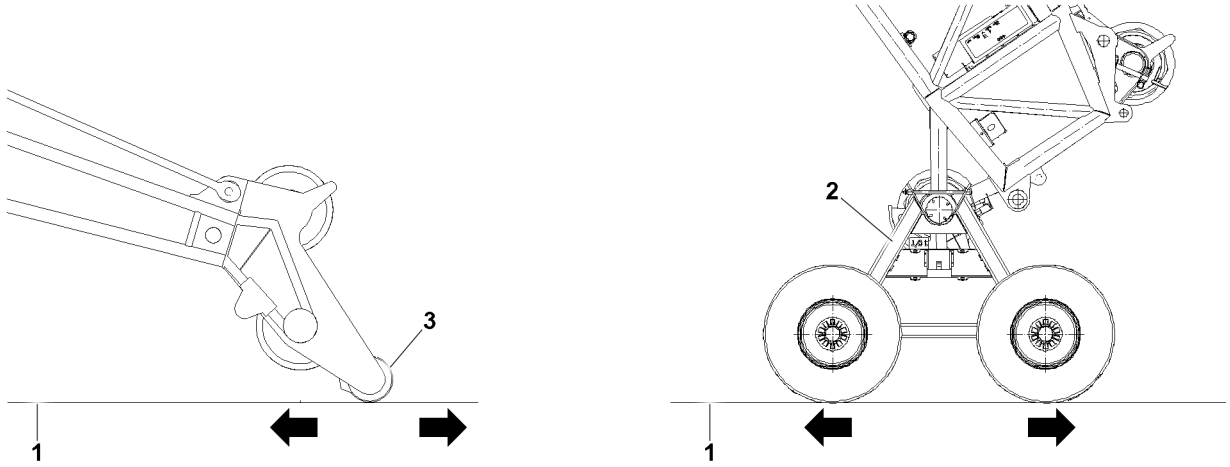

Fig.152357: Roller cart road or lattice head track roller

1 Road **2** Roller cart **3** Lattice head track roller

When erecting or taking down with the aid of a roller cart **2** or a lattice head track roller **3**, make sure that the following prerequisites are met:
- – The road **1** is level.
- – The road **1** has a sufficient load bearing capacity.
- – The road **1** is free of obstacles.
- – The road **1** is free of persons.

LWE/LTR 1100-009/25105-02-02/en

copyright © Liebherr-Werk Ehingen GmbH 2023

17.1 Erecting / taking down with mobile cranes

Make sure that the following prerequisites are met:
- The crane is properly supported.
- The crane is horizontally aligned.
- The counterweight has been installed on the turntable according to the load chart or the erection / take down charts.
- In the case of cranes with derrick ballast: The derrick ballast (suspended ballast or ballast trailer ballast) is installed according to the load chart or the erection / take down charts.
- For cranes with a telescopic boom: The telescopic boom is telescoped in all the way.
- The boom has been installed according to the load chart and the Crane operating instructions.
- The hoist rope has been correctly placed in the rope pulleys and prevented from jumping out with the rope retaining pins.
- All limit switches have been correctly assembled and are fully operational.
- All pin connections are secured.
- No persons in the danger zone.
- No loose parts on the boom or the auxiliary boom.
- The exposed rope pulleys are free of snow and ice.
- The boom and its components (limit switches, cable drums, airplane warning light, wind speed sensor etc.) must be kept free of ice and snow.

► Check if all prerequisites have been met.

The roller cart may not be lifted off the ground.

Before the N-head lifts up:
► Unpin the roller cart on the N-head.

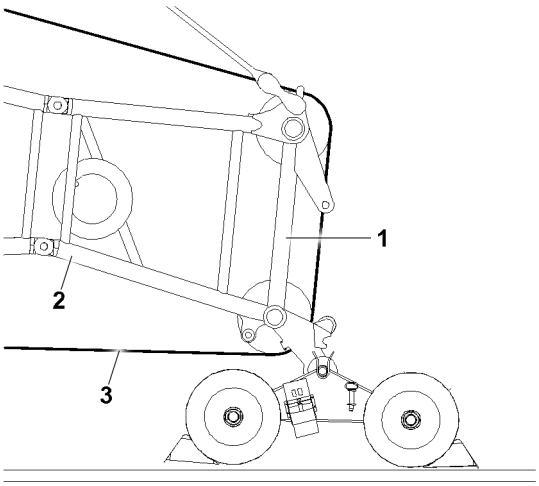

Fig.152358: Securing the hoist rope to the head of the lattice jib

When the luffing lattice jib is erected or taken down **angled**, then the hoist rope must be secured **prior to reeving in** or **after reeving out** the hook block.

Before the hook block is reeved in or after the hook block is reeved out, it is possible that the hoist rope is pulled out of the head of the lattice jib. Therefore the hoist rope must be secured by a hemp rope.

WARNING
Hoist rope not secured!
The hoist rope can run back in the direction of the hoist winch after reeving out or reeving in the hook block.
► Secure the hoist rope with the hemp rope.

► Fasten the hemp rope with Prusik knots to the hoist rope **3**.

LWE/LTR 1100-009/25105-02-02/en

copyright © Liebherr-Werk Ehingen GmbH 2023

► Fasten both ends of the hemp rope on the corner bar pipe **2** of the head **1** of the lattice jib with tie knots.

17.2 Erecting / taking down with crawler cranes

Make sure that the following prerequisites are met:
- Comply with the maximum permissible incline of the crane specified in the load chart manual.
- For cranes with a support: The crane is properly supported.
- For cranes with a support: The crane is horizontally aligned.
- The counterweight is installed on the turntable according to the load chart.
- The central ballast is installed according to the load chart.
- The counterweight is installed according to the load chart or the erection / take down charts.
- In the case of cranes with derrick ballast: The derrick ballast (suspended ballast or ballast trailer ballast) is installed according to the load chart or the erection / take down charts.
- For cranes with a telescopic boom: The telescopic boom is telescoped in all the way.
- The boom has been installed according to the load chart and the Crane operating instructions.
- The hoist rope has been correctly placed in the rope pulleys and prevented from jumping out with the rope retaining pins.
- All limit switches have been correctly assembled and are fully operational.
- All pin connections are secured.
- No persons in the danger zone.
- No loose parts on the boom or the auxiliary boom.
- The exposed rope pulleys are free of snow and ice.
- The boom and its components (limit switches, cable drums, airplane warning light, wind speed sensor etc.) must be kept free of ice and snow.

► Check if all prerequisites have been met.

17.3 Rigging the guy rods on lattice booms on placed down boom system

WARNING
Danger of fatal injury due to damaged guy rods!
If the boom system is placed on the ground or a load bearing substructure in strong wind or longer downtime, the guy rods can be damaged due to wind influence on the boom guying. This wind influenced oscillations can lead to fatigue on the guy rods.
As a result, the guy rods could break or rip off under load - for example when erecting the boom system or in crane operation. The boom system can therefore fall uncontrolled forward onto the ground.
Death, severe bodily injuries, property damage.
- ► Make sure that the guy rods are taken down completely on the lattice sections and relieved when the boom systems are taken down on the ground.
- ► Make sure that freely suspended guy rods are rigged on the lattice boom.
- ► Make sure that the upper pulley block is rigged on the lattice boom in Derrick operating modes.
- ► Make sure, that the guying on the luffing lattice jib is removed on lattice mast cranes.
- ► Make sure that the guy rods are inspected before resuming crane operation and that no damage or cracks are present.
- ► Make sure that the maintenance intervals of the guy rods are adhered to.

Note
- ► In case of strong wind or longer downtimes of the crane, the boom system must be placed on the ground or on a load bearing substructure.
- ► The guying must be relieved and the guy rods must be placed on the transport receptacles.
- ► The following illustrations are examples and may not match your crane exactly.

LWE/LTR 1100-009/25105-02-02/en

copyright © Liebherr-Werk Ehingen GmbH 2023

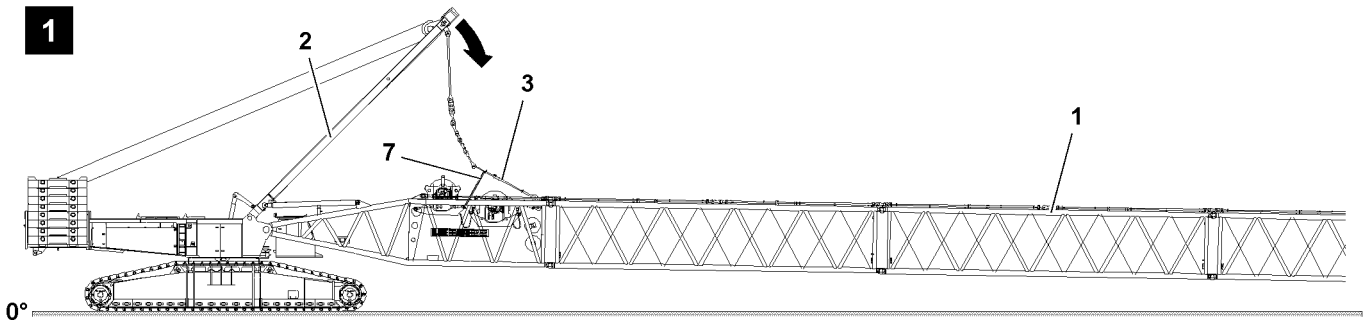

Fig.120722: Guying taken down in transport receptacle and SA-frame guying relieved

- ► Take the guy rods down on the lattice sections **1**: Luff the SA-frame **2** down to the front until the guying is taken down completely in the transport receptacles on the lattice sections and the SA-frame guying **3** is relieved, see illustration **1**.
- ► To minimize side oscillation of the SA-frame guying **3** due to wind influence: Rig the SA-frame guying **3** with suitable rigging straps / ropes **7** against the boom, see illustration **1**.

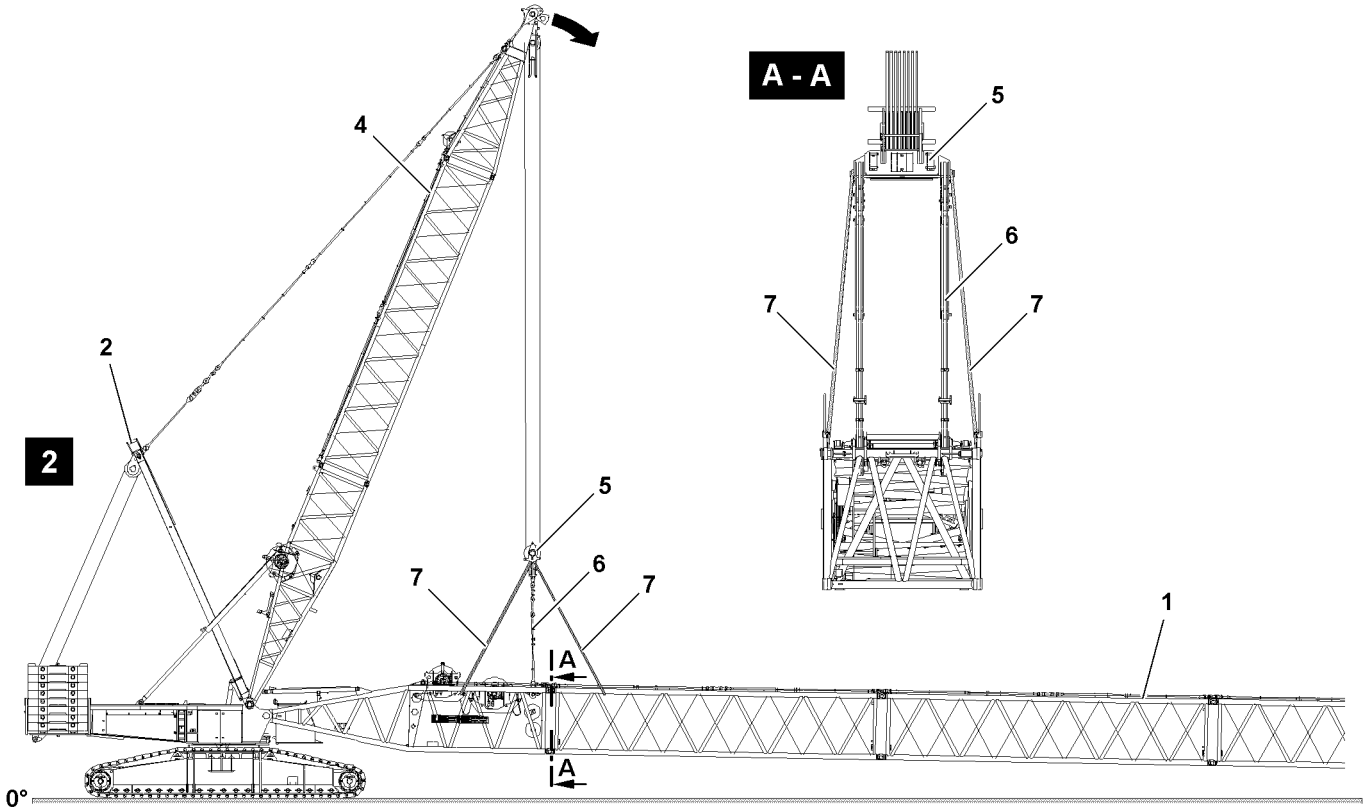

Fig.120771: Guying taken down in the transport receptacle and upper pulley block rigged against the boom

- ► Take the boom system down and - if present - release the derrick guying to the derrick ballast.
- ► Take the guy rods down on the lattice sections **1**: Luff the D-boom **4** down to the front until the main boom guying is taken down completely in the transport receptacles on the lattice sections and the upper pulley block **5** is positioned over the S-pivot section, see illustration **2**.
- ► To minimize side oscillation of the upper pulley block **5** due to wind influence: Rig the upper pulley block **5** with suitable rigging straps / ropes **7** against the boom, see illustration **2**.

For cranes with lattice mast and with luffing lattice jib the following applies:

LWE/LTR 1100-009/25105-02-02/en

copyright © Liebherr-Werk Ehingen GmbH 2023

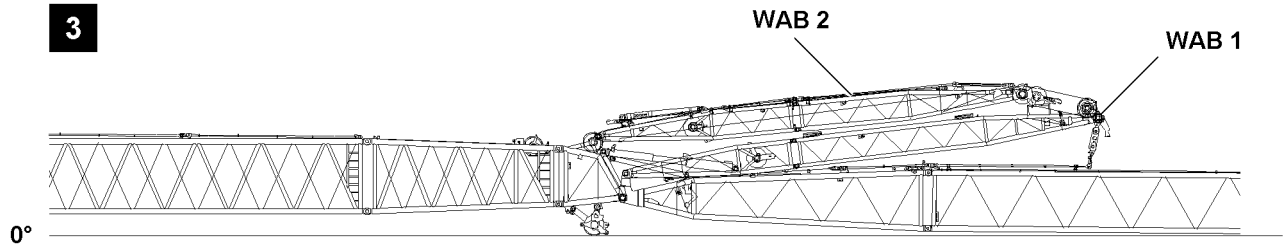

Fig.120821: Guying in the transport receptacle(s) and WA-frames taken down to the front (example crane with lattice mast)

WARNING
Danger of accident when removing the W-guying!
When taking down and removing the guying dangerous situations can arise.
► Make sure that the danger notes in the respective chapter of the Crane operating instructions are observed.

► Disassemble the guy rods on the luffing lattice jib and take them down into the transport receptacles.
► Take the WA-frames (WA-frame 1 **WAB 1** and WA-frame 2 **WAB 2**) down to the front.

For telescopic cranes with luffing lattice jib the following applies:

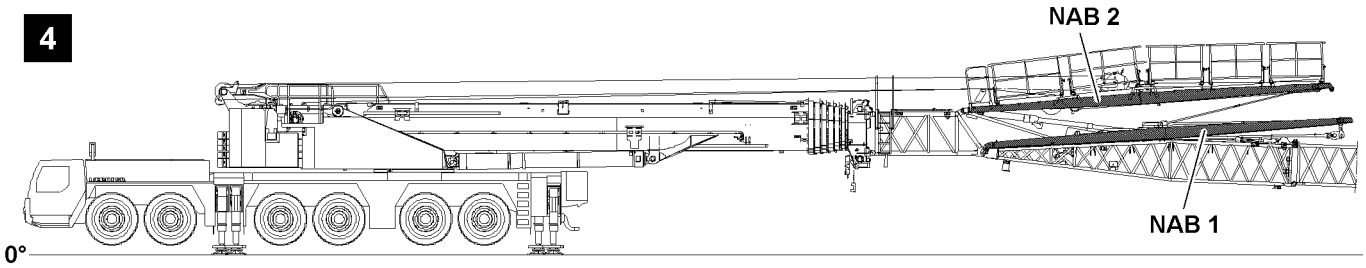

Fig.121261: Guying in the transport receptacle(s) and NA-frames taken down to the front (example telescopic crane)

WARNING
Danger of accident when taking the NA-frames down!
When taking the guy rods as well as the NA-frames down dangerous situations can arise.
► Make sure that the danger notes in the respective chapter of the Crane operating instructions are observed.

► Spool the jib control winch out and take the NA-frames down to the front so that the guy rods are relieved.

18 Walking on a boom component

WARNING
Falling from the boom component!
Death, severe bodily injuries.
► Before working on a boom component, personnel must wear an approved fall arrest system and protective equipment.

LWE/LTR 1100-009/25105-02-02/en

copyright © Liebherr-Werk Ehingen GmbH 2023

WARNING
Falling from the boom component!
Operating personnel falling from a boom component due to tripping on objects.
Death, severe bodily injuries.
► Make sure that there are no objects on the boom component when walking on it.

WARNING
Overload of the grating!
Operating personnel falling from the boom component grating if the grating is overloaded due to an impermissible number of personnel.
The grating for the boom components is permitted for the weight of only two people.
Death, severe bodily injuries.
► Make sure that only the permissible number of personnel can walk on the grating at the same time.

WARNING
Impermissible work position for the hydraulic aggregate!
If a hydraulic aggregate is placed on boom components or crane components for assembly purposes, this can cause accident situations.
Operating personnel can fall down from the grating of the boom component if the grating is overloaded by the hydraulic aggregate positioned on it.
The grating for the boom components is permitted for the weight of only two people.
Death, severe bodily injuries, property damage.
► Make sure that a hydraulic aggregate is never placed on boom components or crane components.
► The hydraulic aggregate may only be operated on the ground.

LWE/LTR 1100-009/25105-02-02/en

copyright © Liebherr-Werk Ehingen GmbH 2023

5.02 Folding jib - TK

1	Safety	2
2	Folding jibs from other crane types	4
3	Description	7
4	Assembling the folding jib	13
5	Reeving the hoist rope in	35
6	Changing over the mechanical folding jib from 0° to 20° or 40°	37
7	Hydraulic connections	51
8	Electrical connections	57
9	Erecting	63
10	Adjusting the folding jib angle hydraulically*	65
11	Changing over the mechanical folding jib from 20° or 40° to 0°	67
12	Reeving the hoist rope out	79
13	Disassembling the folding jib	81

LWE/LTR 1100-009/25105-02-02/en

copyright © Liebherr-Werk Ehingen GmbH 2023

1 Safety

Before assembly and disassembly observe the safety instructions:
- General safety instructions: See chapter 2.04.
- Information regarding personal protective equipment: See chapter 2.04.
- Information regarding the use of ladders: See chapter 2.04.10.
- Information regarding fall protection equipment: See chapter 2.06.
- Information regarding accessible surfaces: See chapter 2.07.
- Information regarding two hook operation: See chapter 4.12.
- Technical safety instructions for assembly and disassembly: See chapter 5.01.

WARNING
Personnel in the danger zone!
Death, severe bodily injuries, crushing, property damage.
Personnel can be hit by falling loads or falling components.
Personnel can be caught by moving crane components or moving components during lifting, lowering and positioning.
► Make sure that there are **no** persons within the danger zone or that can be caught by components during the assembly / disassembly procedure.
► Do **not** step into the danger zone.

To protect limbs:
► Guide the components with suitable aids.

WARNING
Oscillating load!
Danger of impact and crushing.
► To guide and position crane structures, always use a guide rope.
► Make sure that there are no persons or obstacles within the danger zone.
► Make sure that the guide rope is long enough.

WARNING
Crane movements carried out without approval of the guide!
Personnel can be severely injured or killed.
► For all work, observe the instructions of the guide.

If necessary:
► Use a walkie-talkie.
► The crane operator and guide must monitor the danger zone.

WARNING
Persons not secured!
Personnel can fall down.
Death, severe bodily injuries.
► Correctly attach the supplied fall arrest system (safety harness and height safety equipment).
► Secure personnel with the fall arrest system to the hook points, safety ropes and fastening points to prevent them from falling. See chapter 2.06.

LWE/LTR 1100-009/25105-02-02/en

copyright © Liebherr-Werk Ehingen GmbH 2023

1.1 Catch bar-plus system

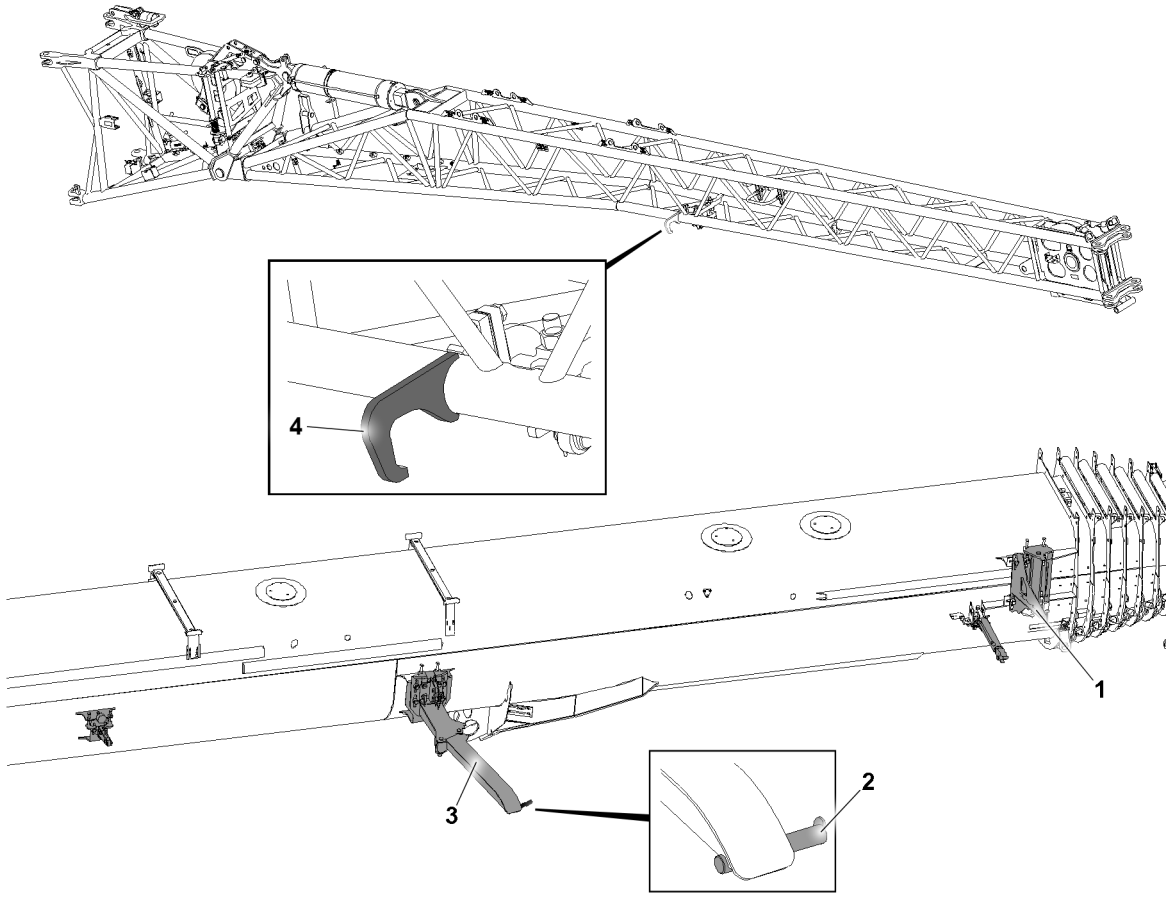

Fig.163344: Catch bar-plus system

The catch bar plus system consists of:
- **1** Catch bar
- **2** Rod
- **3** Folding jib support
- **4** Hook

The catch bar plus system prevents the folding jib from falling down in case of an assembly error or a disassembly error.

The folding jib may only transported on the crane with the integrated catch bar plus system.

Without the catch bar plus system, the folding jib must be transported with a separate transport vehicle.

Without the catch bar plus system, the folding jib can only be assembled and disassembled in flying mode.

1.2 Ladder

When working on a ladder, people can fall down.

If a ladder must be used for assembly work or disassembly work, a second person must be present to hand the tool to the person on the ladder.

1.3 Double cone pin

When pinning and unpinning, people can be injured by moving components.

LWE/LTR 1100-009/25105-02-02/en

copyright © Liebherr-Werk Ehingen GmbH 2023

The vertically installable double cone pins must be inserted from the **top to the bottom**.

The vertically installable double cone pins must be unpinned from the **top to the bottom**.

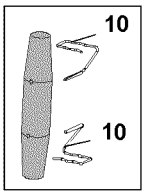

*Fig.120105: Double cone pin with retaining clip **10***

WARNING
Double cone pin not secured!
The folding jib can fall down
► Secure the vertically assembled double cone pins only with retaining clips **10**.

1.4 End section folding jib

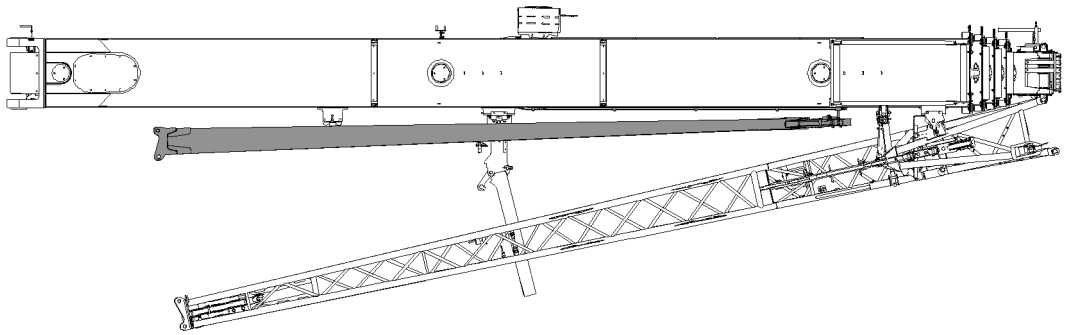

Fig.145814: End section folding jib

When the end section folding jib is assembled on the telescopic boom in the transport position, then the fastening and disassembling of the end section folding jib is impermissible.

Fasten the end section folding jib only as described in section „Fastening points“.

2 Folding jibs from other crane types

With this crane type, only folding jibs with the following designations according to the overview may be assembled and carried along.

Folding jib designation	Assembly possible	Carrying along possible	Required conversion kit
3A–1	X	—	—
3A–2	X	—	—
3A–7	X	—	9A–4 + 9A–5
3A–8	X	—	9A–4 + 9A–5
3A–26	X	—	—

LWE/LTR 1100-009/25105-02-02/en

copyright © Liebherr-Werk Ehingen GmbH 2023

Folding jib designation	Assembly possible	Carrying along possible	Required conversion kit
3A–27	X	—	—
3A–34	X	X	—
3A–35	X	X	—

Folding jibs that can be carried along according to the overview may be carried along, assembled and disassembled on the crane.

Folding jibs that may not be carried along according to the overview may be assembled and disassembled on the crane only in flying mode.

Folding jibs that require a conversion set according to the overview must be converted with the corresponding conversion set prior to use. To do so, contact customer service at Work Heinen GmbH.

Folding jibs without the indicated designations can be assembled under certain circumstances with this crane type, or retrofitted with a conversion kit. In order to determine if a folding jib can be retrofitted with a conversion kit, contact customer service at Liebherr-Werk Ehingen GmbH.

If several folding jibs are carried along on the crane, the transport retainers may have to be adjusted to the respective folding jib.

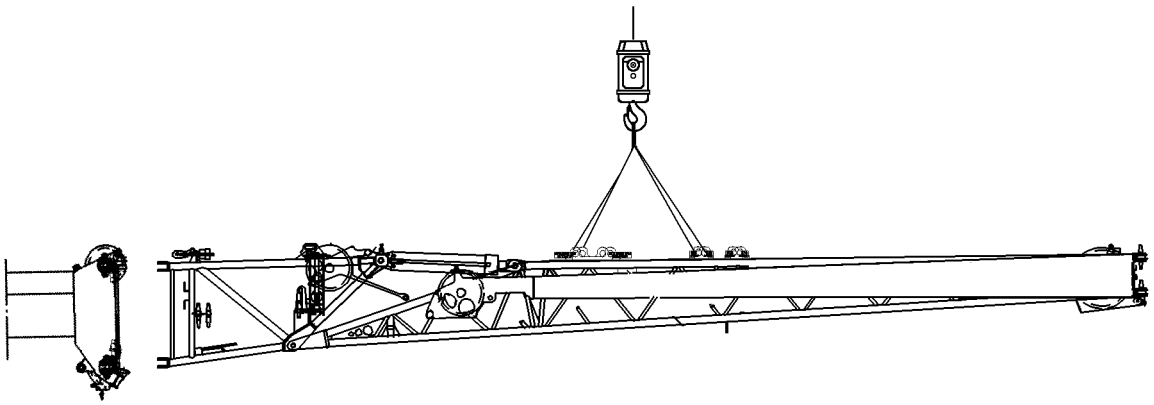

Fig.124342: Flying folding jib assembly

WARNING
Falling folding jib!
Death, severe bodily injuries, property damage.

Assembly of folding jibs of different crane types:
► Assemble the folding jib only in flying mode with an auxiliary crane.

Before fastening the double folding jib:
► Fold the end section in, lock and secure.
► Fasten the folding jib only on the fastening points.
► It is prohibited for personnel to remain under or on the folding jib as well as in the entire danger zone.

LWE/LTR 1100-009/25105-02-02/en

copyright © Liebherr-Werk Ehingen GmbH 2023

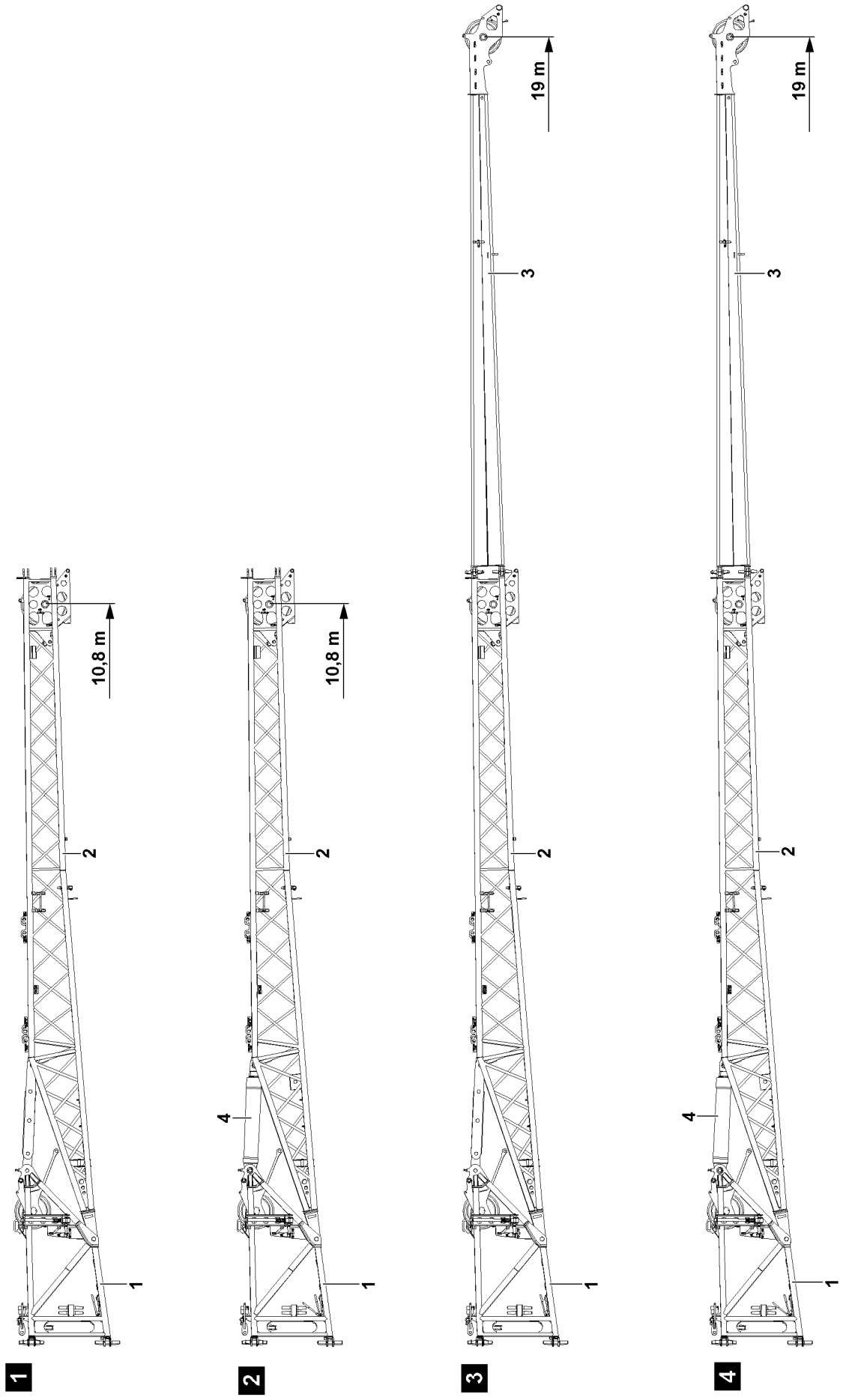

Fig.108689

LWE/LTR 1100-009/25105-02-02/en

copyright © Liebherr-Werk Ehingen GmbH 2023

3 Description

The folding jib versions for TK operation (mechanical angle adjustment) and TNZK operation (hydraulic angle adjustment) can be self-assembled on the telescopic boom.

The folding jib can be operated as a single folding jib with 10.8 m or as a double folding jib with 19 m.

A folding jib with „mechanical angle adjustment“ can be assembled on the telescopic boom from 0° to 20° and maximum 40°.

A folding jib with „hydraulic angle adjustment“ can be luffed under load from 0° to 40°.

DANGER
Danger of accident when driving with the folding jib!
- ► Before on-road driving, the folding jib must always be brought into the transport position and mechanically secured.
- ► Make sure that the folding jib is properly secured before moving the crane on public roads.

3.1 Folding jib variations

The following folding jib variations are possible:
- – Single folding jib with „mechanical angle adjustment“
- – Double folding jib with „mechanical angle adjustment“
- – Single folding jib with „hydraulic angle adjustment“
- – Double folding jib with „hydraulic angle adjustment“

3.1.1 Single folding jib, see illustration 1 and 2

Position	Designation	Length
1	Adapter	
2	Pivot section	
4	Control cylinder	
Length of the single folding jib		10.8 m

3.1.2 Double folding jib, see illustration 3 and 4

Position	Designation	Length
1	Adapter	
2	Pivot section	
3	End section	
4	Control cylinder	
Length of the double folding jib		19.0 m

LWE/LTR 1100-009/25105-02-02/en

copyright © Liebherr-Werk Ehingen GmbH 2023

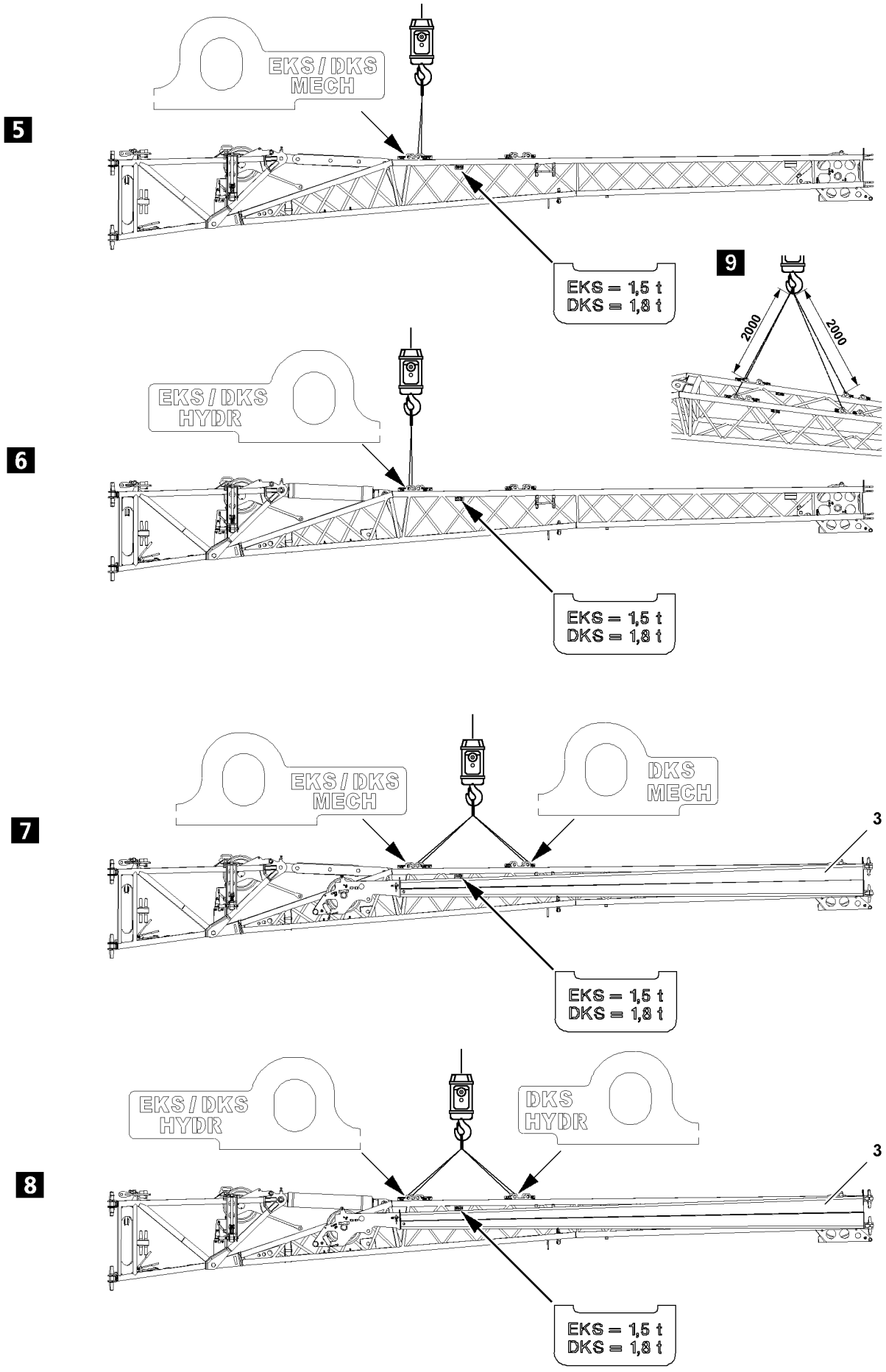

Fig.118301

LWE/LTR 1100-009/25105-02-02/en

copyright © Liebherr-Werk Ehingen GmbH 2023

3.2 Fastening points

The end section, if also carried along, must be folded in and locked on the fastening points.

Various fastening eyes are installed on the folding jib for the different transport variations. The transport variations are differentiated in single or double folding jib or „mechanical angle adjustment“ or „hydraulic angle adjustment“.

The appropriate fastening eyes / fastening points are marked with tags.

DANGER
Danger of accident due to incorrect fastening!
Life-threatening situations can arise if the folding jib is improperly or incorrectly fastened!
- ► Fasten the folding jib according to the fastening points shown on the signs!
- ► When fastening the double folding jib, the end section **3** must be folded in, locked and secured, see illustration **7** and illustration **8**!

WARNING
Assembled attachment parts!
Center of gravity changed, the folding jib can tip over.
Death, severe bodily injuries, property damage.
- ► Remove all installation parts before fastening the folding jib.

Attachment parts are for example:
- – Camera
- – Airplane warning light
- – Wind speed sensor

CAUTION
Damage to the fastening points!
If the fastening equipment is too short, then the fastening points on the folding jibs can be damaged!
- ► To fasten the folding jib, fastening equipment with a strand length of at least 2000 mm each must be used, see illustration **9**!

Name	Abbreviation
Single folding jib	**EKS**
Double folding jib	**DKS**
Hydraulically luffable	**HYDR**
Mechanically luffable	**MECH**

LWE/LTR 1100-009/25105-02-02/en

copyright © Liebherr-Werk Ehingen GmbH 2023

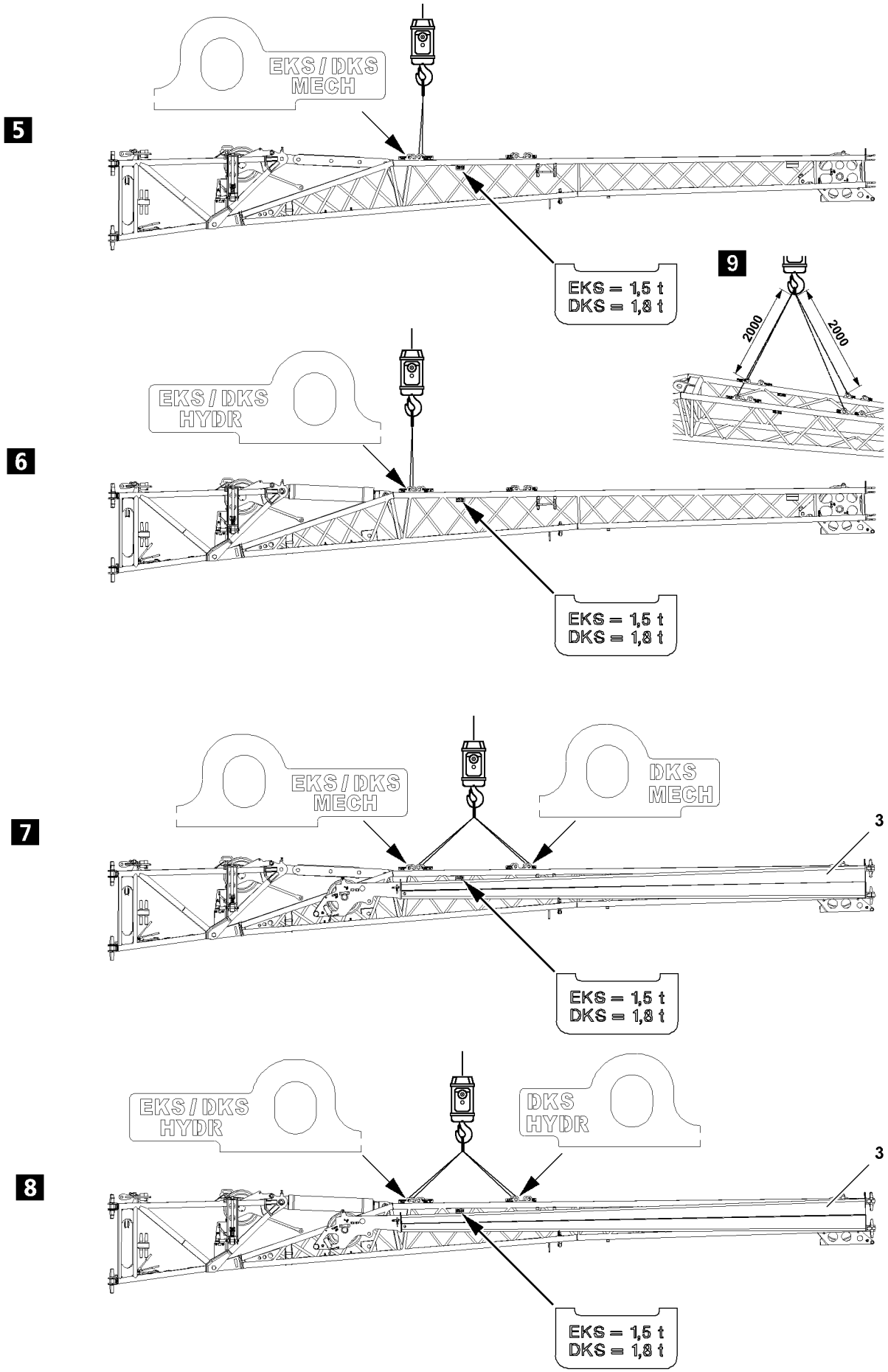

Fig.118301

LWE/LTR 1100-009/25105-02-02/en

copyright © Liebherr-Werk Ehingen GmbH 2023

3.2.1 Single folding jib, see illustration 5

Single folding jib with „mechanical angle adjustment“.

Name	Abbreviation	Weight
Single folding jib	EKS MECH	1.5 t

3.2.2 Single folding jib, see illustration 6

Single folding jib with „hydraulic angle adjustment“.

Name	Abbreviation	Weight
Single folding jib	EKS HYDR	1.5 t

3.2.3 Double folding jib, see illustration 7

Double folding jib with „mechanical angle adjustment“.

Name	Abbreviation	Weight
Double folding jib	DKS MECH	1.8 t

3.2.4 Double folding jib, see illustration 8

Double folding jib with „hydraulic angle adjustment“.

Name	Abbreviation	Weight
Double folding jib	DKS HYDR	1.8 t

LWE/LTR 1100-009/25105-02-02/en

copyright © Liebherr-Werk Ehingen GmbH 2023

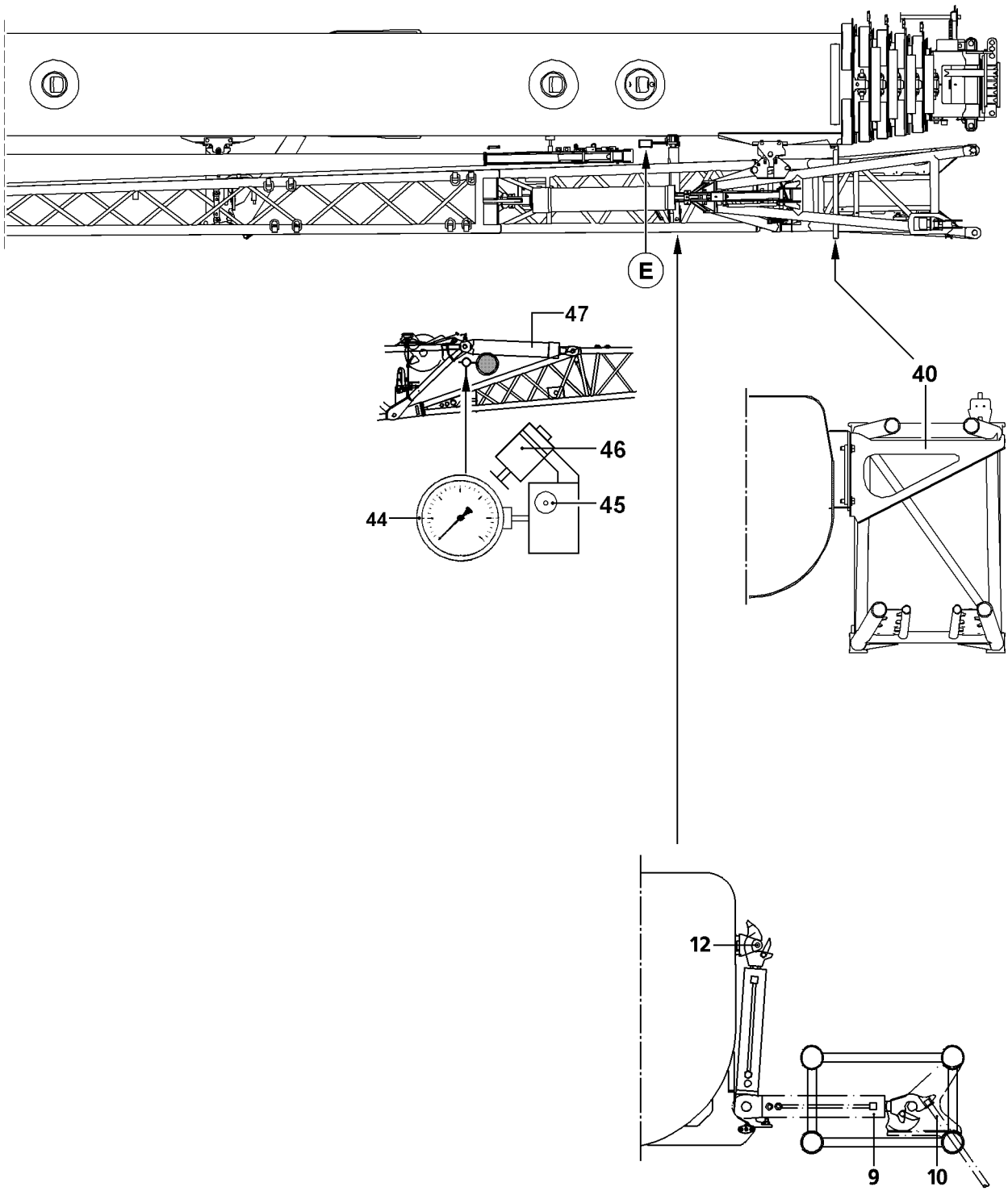

LWE/LTR 1100-009/25105-02-02/en

Fig.103057

copyright © Liebherr-Werk Ehingen GmbH 2023

4 Assembling the folding jib

In tele operation, the swing cylinder **9** can be folded up, if necessary, and pinned with a pin **12**.

4.1 General

DANGER
Danger of fatal injury due to falling folding jib!
As a result of an improperly mounted, damaged or non-existent catch bar **40** on the telescopic boom pivot section, the folding jib – due to an assembly error – can fall down and cause fatal injuries.
- ► Prior to folding jib assembly, make sure that the catch bar **40** is properly mounted on the telescopic boom pivot section and that it is not damaged.
- ► The catch bar **40** is mechanical safety equipment. For that reason, it is prohibited to make any changes to the catch bar **40**.
- ► Standing under the folding jib during the swing procedure is prohibited!
- ► Is it prohibited to stand in the slewing range or in the folding area of the folding jib!
- ► The folding jib must be secured by an auxiliary rope during the swinging process!

WARNING
Danger of falling!
During assembly and disassembly, assembly personnel must be secured with appropriate aids to prevent them from falling! If this is not observed, assembly personnel could fall and suffer fatal injuries!
- ► All work at a height, when there is a danger of falling, must be carried out with suitable aids!
- ► If fall protection equipment is available, then it must be used, see chapter 2.06!
- ► If aids are not available and work cannot be carried out from the ground, then the assembly personnel must secure themselves with the supplied fall arrest system to prevent falling, see chapter 2.04!
- ► The supplied fall arrest system must be fastened in the fastening and hook points as well as to the safety ropes. For safety points, see chapter 2.06!
- ► When lifting, lowering, swinging crane parts in and out, no persons may remain in the danger zone!
- ► Only step on the aids, ladders and catwalks with clean shoes!
- ► Keep aids, ladders and catwalks free of heavy dirt, snow and ice!

Make sure that the following prerequisites are met:
- – The crane is properly supported and horizontally aligned.
- – The counterweight has been installed on the turntable according to the load chart.
- – The central ballast is installed on the crane chassis according to the load chart.
- – The telescopic boom is fully telescoped in.
- – The folding jib has been attached for transport on the telescopic boom pivot section.
- – The telescopic boom has been luffed down to the rear or to the side in the 0° position.

DANGER
Danger of accident if the folding jib swings out by itself when it is unpinned!
If the telescopic boom is not in the 0° position, there is a danger of accidents if the folding jib swings out by itself when it is unpinned.
- ► Move the telescopic boom to the 0° position.

LWE/LTR 1100-009/25105-02-02/en

copyright © Liebherr-Werk Ehingen GmbH 2023

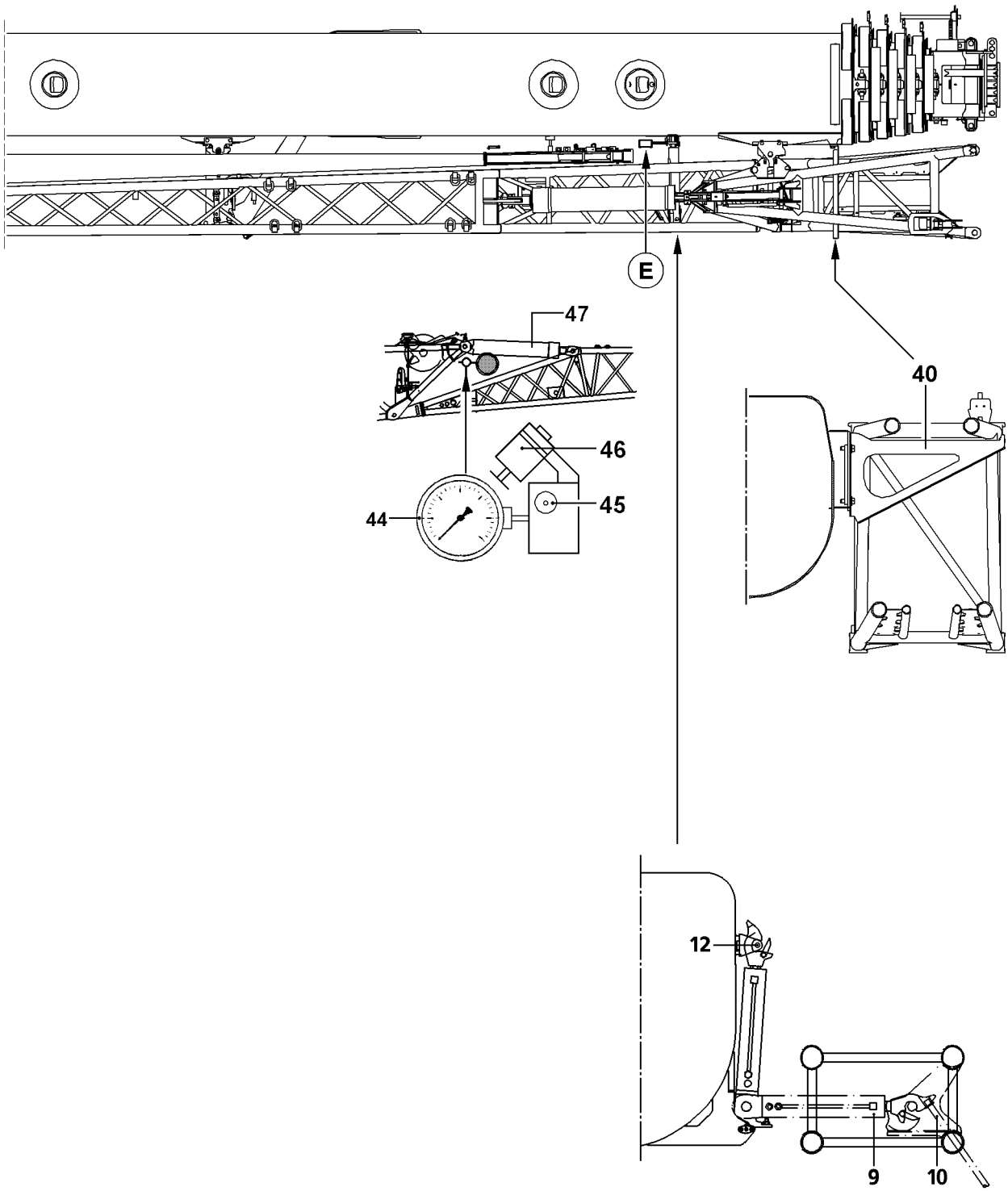

LWE/LTR 1100-009/25105-02-02/en

Fig.103057

copyright © Liebherr-Werk Ehingen GmbH 2023

4.2 Reeving out the hoist rope on the telescopic boom head

In order to speed up subsequent reeving in of the hoist rope after assembling the folding jib, the hook block can be taken down at a distance from the crane approximating to the subsequent distance of the telescoped in telescopic boom **with** assembled folding jib.

- ► Telescope the telescopic boom out to the respective length.
- ► Place the hook block on the ground.
- ► Disconnect the hoist rope in the rope fixed point.
- ► For safety reasons, remove the hoist limit switch weight and the chain.

Note

- ► The hoist limit switch must be pulled mechanically and the operating rope must be attached to the telescopic boom head with the snap hook when operating the folding jib.
- ► The telescopic boom can remain reeved in, if the hoist rope of winch 2 is used for the folding jib operation.

- ► Remove the rope retaining pipes on the pulley head and on the back pulley.
- ► Telescope the telescopic boom in all the way again.

4.3 Important check before swinging out the hydraulic folding jibs (TNZK operation)

DANGER

Danger of fatal injury if the folding jib inadvertently folds down!
When using hydraulic folding jibs (TNZK operation), before swinging the folding jib out, check if a pressure of 60 bar is shown on the pressure gauge **44**. If the pressure on the pressure gauge **44** is too low, fatal accidents can occur if the folding jib folds down by itself!

- ► It is **expressly prohibited** to swing out the folding jib with less than 60 bar on the pressure gauge **44**.

The restrictor **45** may only be operated during maintenance operations.

If the pressure gauge **44** shows pressure that is too low:

- ► Connect the hydraulic lines.
- ► Luff the folding jib up until a pressure of at least 60 bar is shown on the pressure gauge **44**.

LWE/LTR 1100-009/25105-02-02/en

copyright © Liebherr-Werk Ehingen GmbH 2023

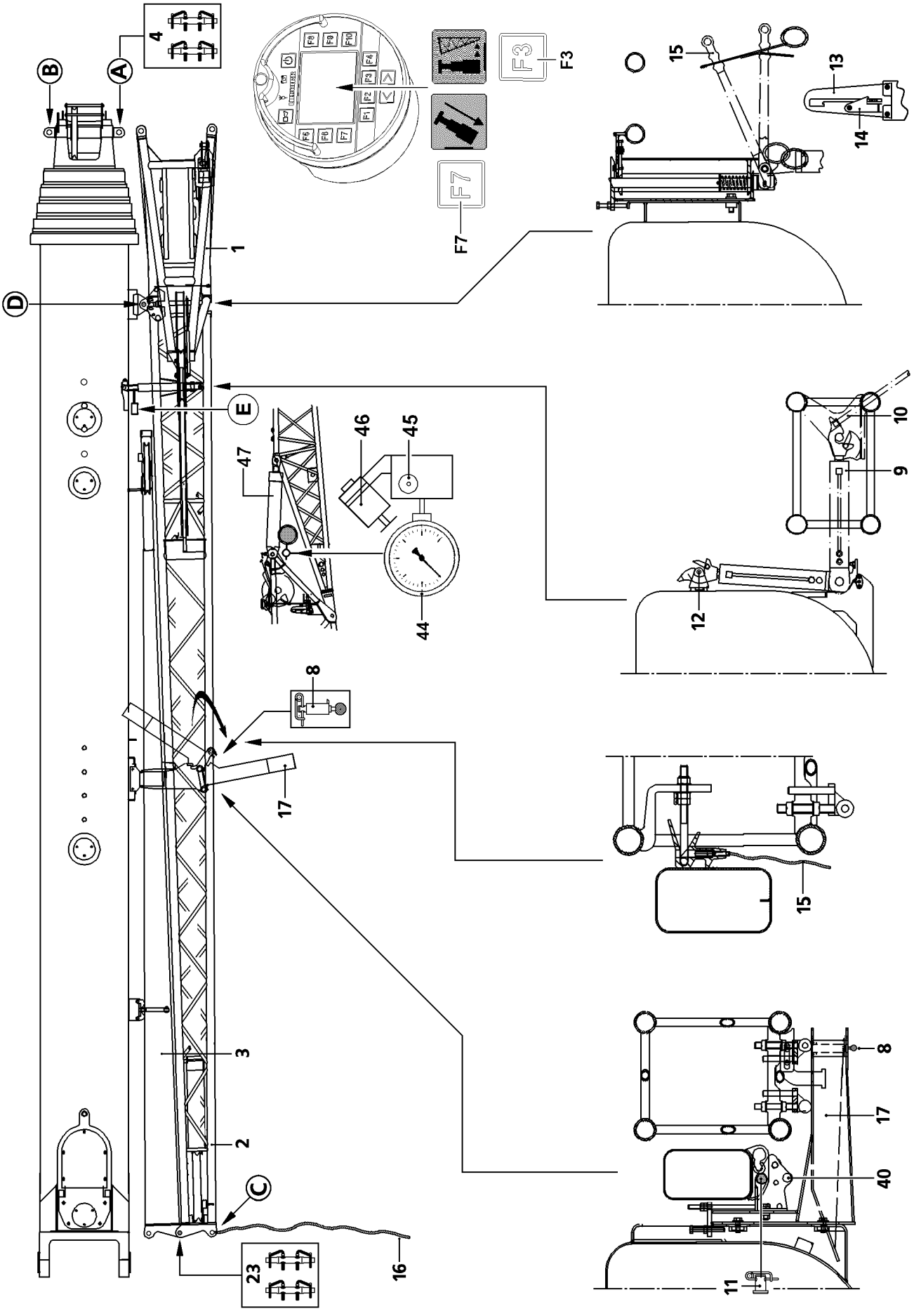

Fig.108691

LWE/LTR 1100-009/25105-02-02/en

copyright © Liebherr-Werk Ehingen GmbH 2023

4.4 Assembling the single folding jib carried along on the crane

The end section **3** that is not required remains pinned to the telescopic boom during single folding jib operation.

DANGER
Danger of fatal injury due to falling end section!
During operation with the single folding jib, the end section **3** may not be unpinned from the telescopic boom. Otherwise there is a danger of accident due to falling end section **3**.
► Do not unpin the end section on the telescopic boom!

When swinging the folding jib support **17** in and out, ensure that the spring pin **8** is unlocked with one hand and that the folding jib support **17** is moved overhead with the other hand.

► Release and unpin the spring pin **8**.
► Swing the folding jib support **17** out until the spring pin **8** locks again.

With „hydraulic folding jibs“ (TNZK operation), the hydraulic line must be disconnected before swinging the folding jib out.

If a hydraulic folding jib is carried along:
► Disconnect the hydraulic line to the hydraulic cylinder **47** in point **E**.
► Attach the auxiliary rope **16** in point **C**.

If a double folding jib is carried along:
► Release and unpin the pin **23**.

If a double folding jib is carried along:
► Pull the nylon rope **15** and loosen the lock between the end section **3** and the pivot section **2**.
► Start the crane engine.
► Press the function key **F3** on the BTT and swing out the folding jib with the swing cylinder until it can be pinned in point **A**.

Problem remedy
If the pin bores in point **A** do not align, the telescopic boom can be tensioned with the function key **F7**:
► Take the telescopic boom down and telescope all telescopes in all the way.
► Pin telescope 4.

WARNING
Danger of severe crushing!
For the „Tension the telescopic boom“ function, all telescopic sections are pulled together, which can lead to severe finger crushing injuries.
► As long as the „Tension telescopic boom“ function is carried out, it is prohibited for any personnel to remain in the push out range of the telescopic sections!

► Press the function key **F7** on the BTT.

Result:

– All telescopic sections are pulled together.

Note
► BTT, see chapter 5.31.

LWE/LTR 1100-009/25105-02-02/en

copyright © Liebherr-Werk Ehingen GmbH 2023

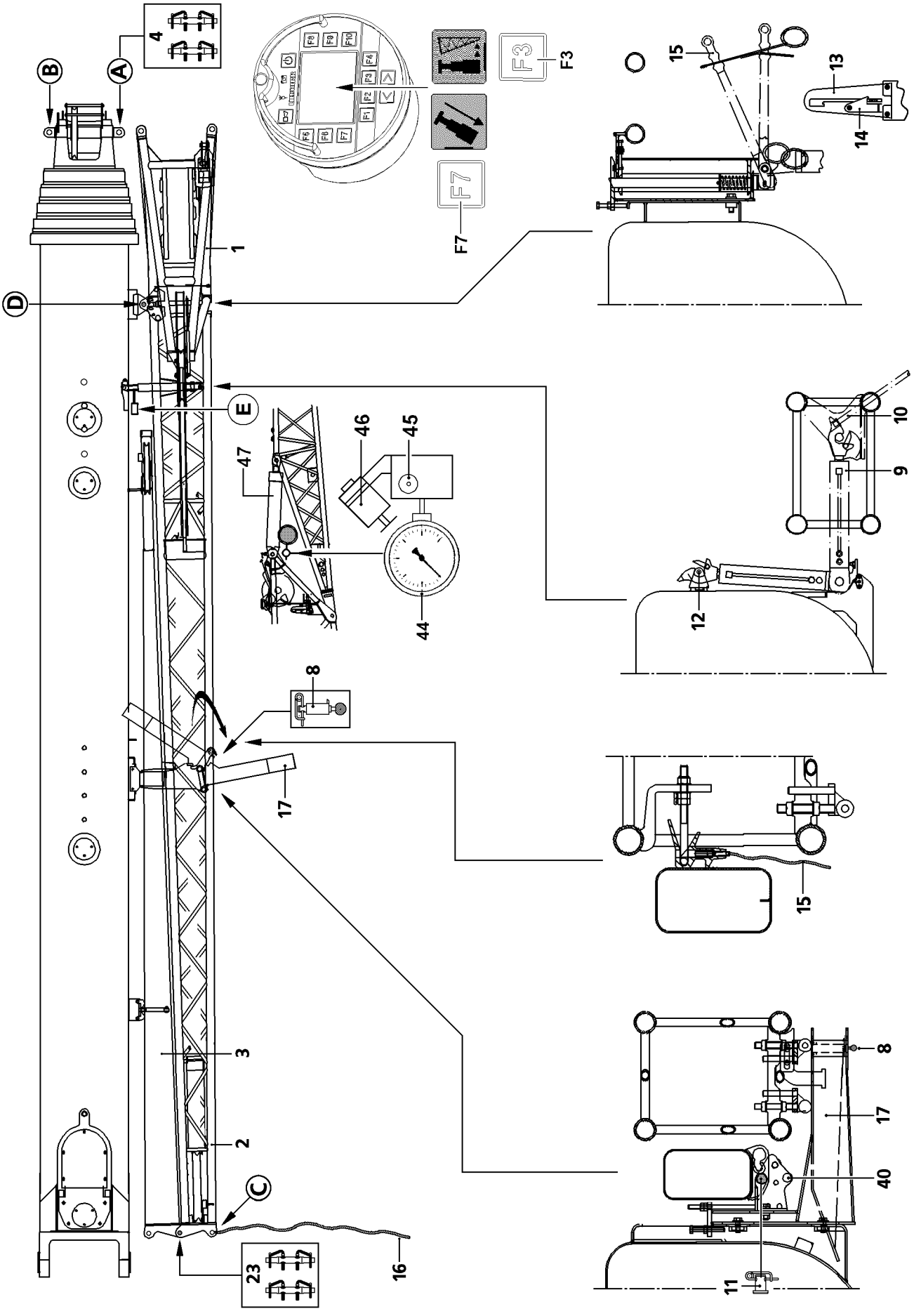

Fig.108691

LWE/LTR 1100-009/25105-02-02/en

copyright © Liebherr-Werk Ehingen GmbH 2023

► Insert the pins **4** at the top and bottom in point **A** and secure.

DANGER
Danger of fatal injury due to falling folding jib!
The special retaining clips must be used to secure the pins **4**. The use of cotter pins or spring retainers on the pins **4** is not permitted. The folding jib may only be unlocked in point **D**, when the pins **4** are pinned and secured at the top and bottom in point **A**.
► Pin and secure the pin **4** in point **A** at the top and bottom.

► Swing the retaining bracket **14** with the assembly rod **10** to the side.
► Push the lever **15** with the assembly rod **10** upward and latch it into the link.
► Press the button **451** and swing the folding jib all the way out with the swing cylinder.
► Unlock the swing cylinder **9** with the assembly rod **10**.

LWE/LTR 1100-009/25105-02-02/en

copyright © Liebherr-Werk Ehingen GmbH 2023

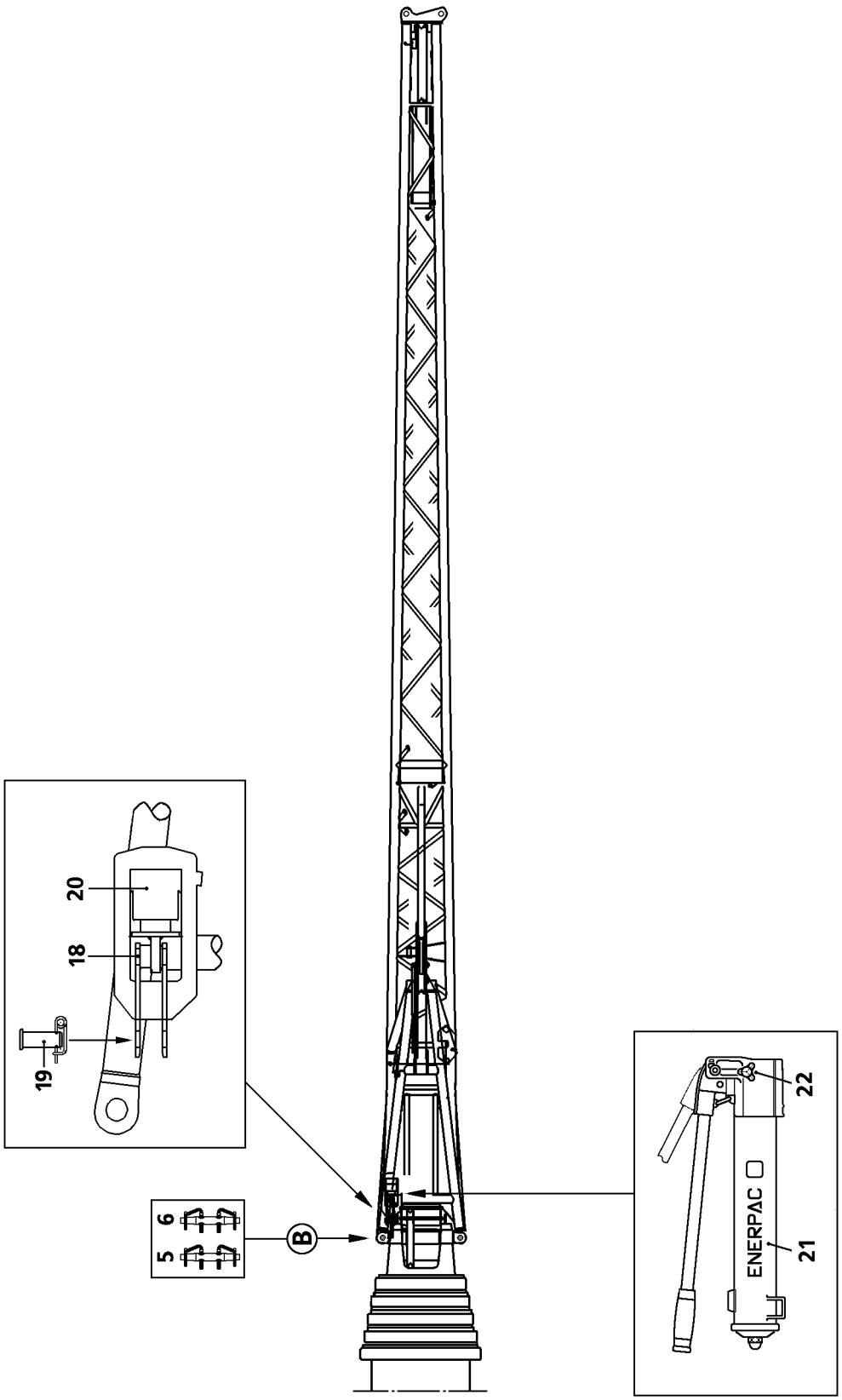

LWE/LTR 1100-009/25105-02-02/en

Fig.190754

copyright © Liebherr-Werk Ehingen GmbH 2023

DANGER
Danger of fatal injury due to falling folding jib!
The folding jib could fall down due to an assembly error.
► Standing under the folding jib during the swing procedure is prohibited!
► Is it prohibited to stand in the slewing range or in the folding area of the folding jib!

► Swing the pivot section **2** with the auxiliary rope **16** 180° until it can be pinned at the top and bottom at point **B**.

DANGER
Danger of accident!
► The use of cotter pins or spring retainers is prohibited on pins **5** and pins **6**!
► To secure the pin **5** and the pin **6**, use the special retaining clips.

► Insert and secure the pin **5** at the bottom in point **B**.

In order to pin on top in point **B**, the hydraulic / mechanical assembly aid **20** must be used.

► Release the pin **19** and unpin from the bore **18**.
► Pin and secure the assembly aid **20** to the towing bracket with the pin **19**.
► Close the knob **22** on the hand pump **21**.
► Extend the hydraulic cylinder of the assembly aid **20** by operating the hand pump **21** until the bore is aligned at the opening of the folding jib with the bore on the telescopic boom.
► Pin and secure the pin **6** at the top in point **B**.
► Open the knob **22**.

Result:

– The hydraulic cylinder of the assembly aid **20** returns to the starting position and the pin **19** is released.

LWE/LTR 1100-009/25105-02-02/en

copyright © Liebherr-Werk Ehingen GmbH 2023

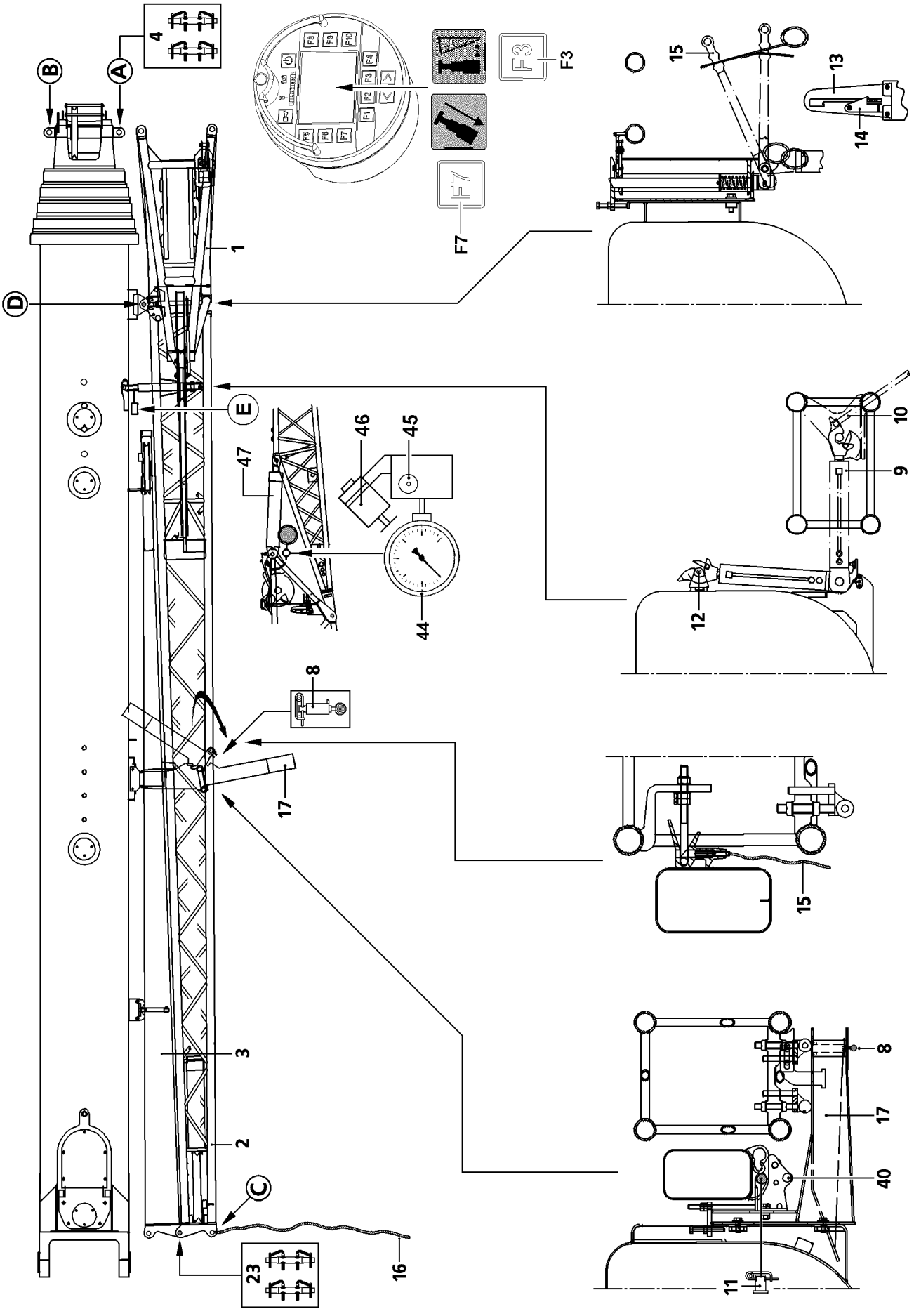

Fig.108691

LWE/LTR 1100-009/25105-02-02/en

copyright © Liebherr-Werk Ehingen GmbH 2023

4.5 Assembling the double folding jib carried along on the crane

4.5.1 Assembling the pivot section

When swinging the folding jib support **17** in and out, ensure that the spring pin **8** is unlocked with one hand and that the folding jib support **17** is moved overhead with the other hand.

- ► Release and unpin the spring pin **8**.
- ► Swing the folding jib support **17** out until the spring pin **8** locks again.

With „hydraulic folding jibs“ (TNZK operation), the hydraulic line must be disconnected before swinging the folding jib out.

If a hydraulic folding jib is carried along:

- ► Disconnect the hydraulic line to the hydraulic cylinder **47** in point **E**.
- ► Attach the auxiliary rope **16** in point **C**.
- ► Release and unpin the pin **11** and insert it into the bore **40**.
- ► Start the crane engine.
- ► Press the function key **F3** on the BTT and swing out the folding jib with the swing cylinder until it can be pinned in point **A**.

Problem remedy

If the pin bores in point **A** do not align, the telescopic boom can be tensioned with the function key **F7**:

- ► Take the telescopic boom down and telescope all telescopes in all the way.
- ► Pin telescope 4.

WARNING

Danger of severe crushing!

For the „Tension the telescopic boom“ function, all telescopic sections are pulled together, which can lead to severe finger crushing injuries.

- ► As long as the „Tension telescopic boom“ function is carried out, it is prohibited for any personnel to remain in the push out range of the telescopic sections!

- ► Press the function key **F7** on the BTT.

Result:

– All telescopic sections are pulled together.

Note

- ► BTT, see chapter 5.31.

LWE/LTR 1100-009/25105-02-02/en

copyright © Liebherr-Werk Ehingen GmbH 2023

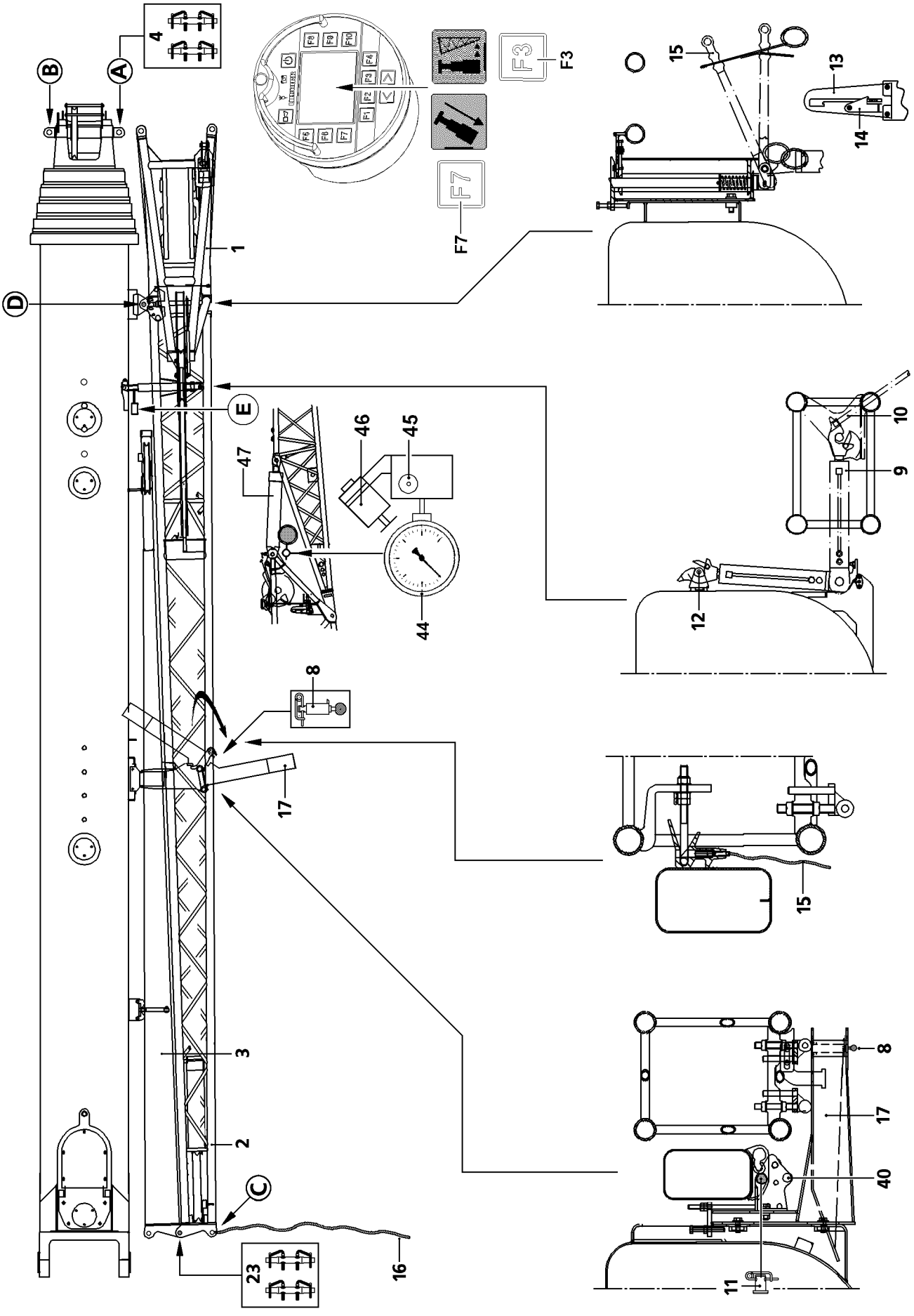

Fig.108691

LWE/LTR 1100-009/25105-02-02/en

copyright © Liebherr-Werk Ehingen GmbH 2023

► Pin the upper and lower pins **4** in point **A** and secure.

DANGER
Danger of fatal injury due to falling folding jib!
The special retaining clips must be used to secure the pins **4**. The use of cotter pins or spring retainers on the pins **4** is not permitted. The folding jib may only be unlocked in point **D**, when the pins **4** are pinned and secured at the top and bottom in point **A**.
► Pin and secure the pin **4** in point **A** at the top and bottom.

► Swing the retaining bracket **14** with the assembly rod **10** to the side.
► Push the lever **15** with the assembly rod **10** upward and latch it into the link.
► Press the function key **F3** on the BTT and swing the folding jib out all the way with the swing cylinder.
► Unlock the swing cylinder **9** with the assembly rod **10**.

DANGER
Danger of fatal injury due to falling folding jib!
It is prohibited to stand under the folding jib during the swing operation, since the folding jib could topple if it was incorrectly installed.
► No persons or objects may be present in the slewing or folding range of the telescopic boom or folding jib.

► Swing the folding jib with the auxiliary rope **16** 180° until it can be pinned at the top and bottom at point **B**.

LWE/LTR 1100-009/25105-02-02/en

copyright © Liebherr-Werk Ehingen GmbH 2023

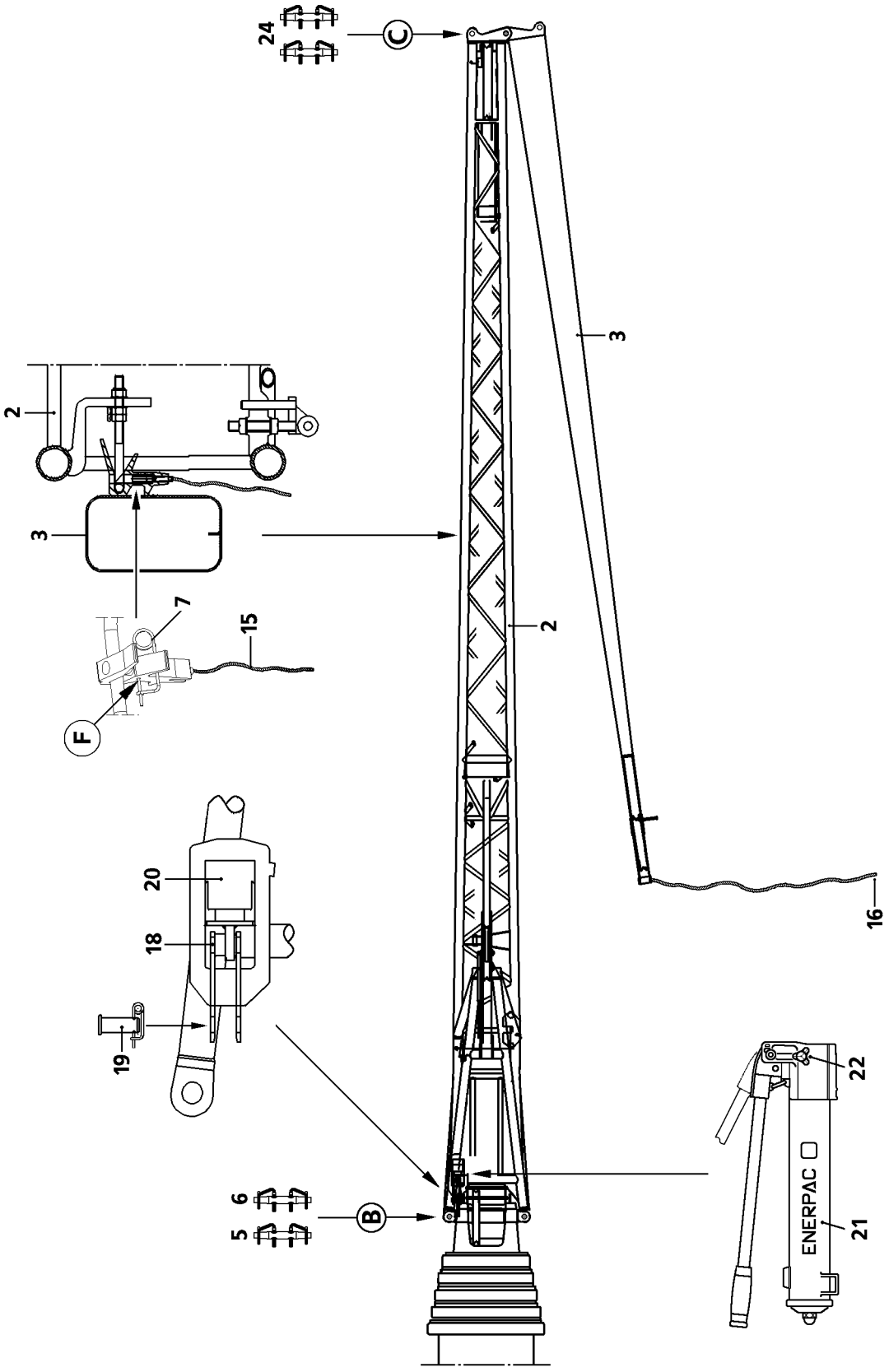

LWE/LTR 1100-009/25105-02-02/en

Fig.103414

copyright © Liebherr-Werk Ehingen GmbH 2023

DANGER
Danger of accident!
► The use of cotter pins or spring retainers is prohibited on pins **5** and pins **6**!
► To secure the pin **5** and the pin **6**, use the special retaining clips.

► Insert and secure the pin **5** at the bottom in point **B**.

In order to pin on top in point **B**, the hydraulic / mechanical assembly aid **20** must be used.

► Release the pin **19** and unpin from the bore **18**.
► Pin and secure the assembly aid **20** to the towing bracket with the pin **19**.
► Close the knob **22** on the hand pump **21**.
► Extend the hydraulic cylinder of the assembly aid **20** by operating the hand pump **21** until the bore is aligned at the opening of the folding jib with the bore on the telescopic boom.
► Pin and secure the pin **6** at the top in point **B**.
► Open the knob **22**.

Result:

– The hydraulic cylinder of the assembly aid **20** returns to the starting position and the pin **19** is released.

LWE/LTR 1100-009/25105-02-02/en

copyright © Liebherr-Werk Ehingen GmbH 2023

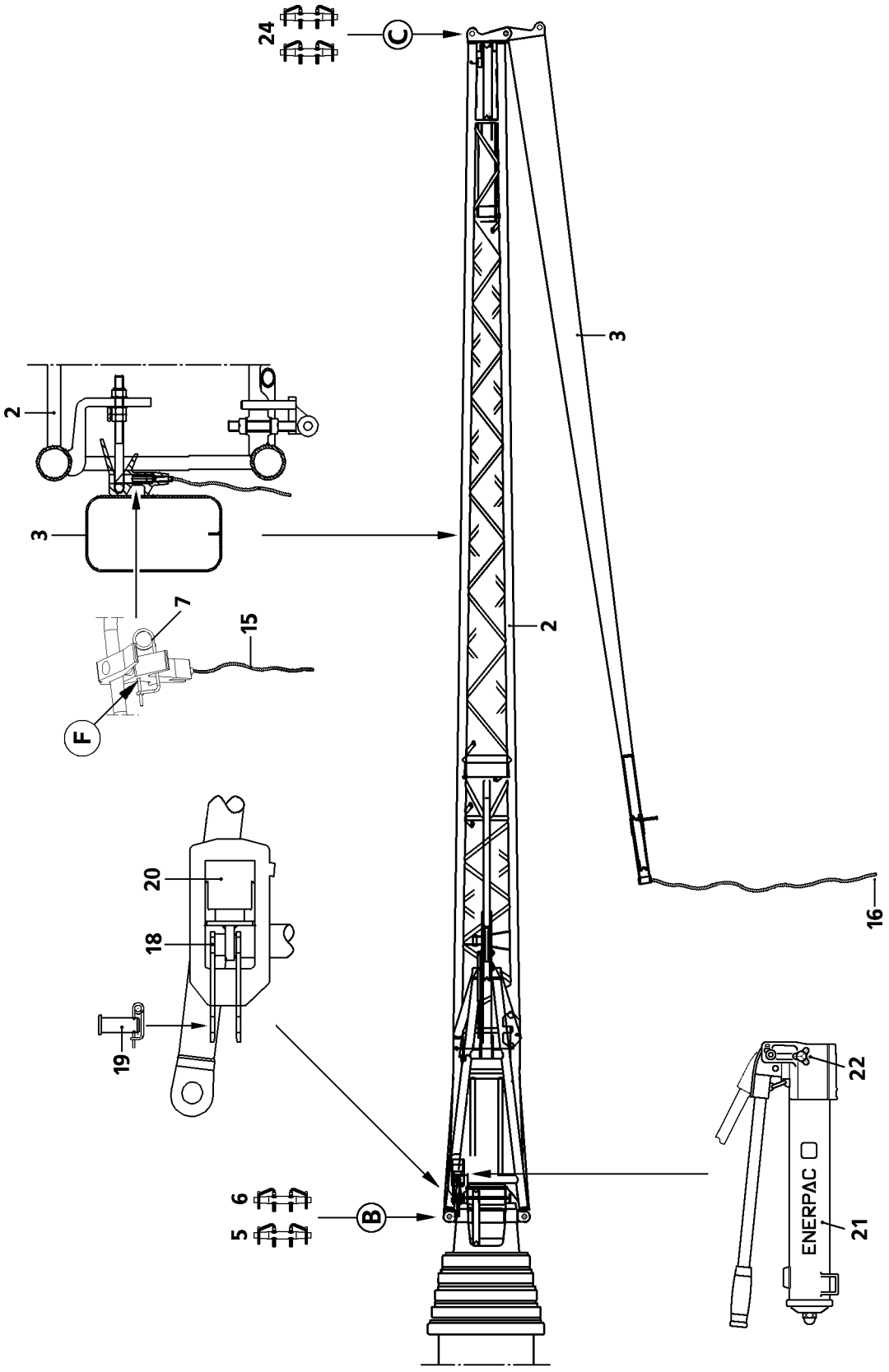

LWE/LTR 1100-009/25105-02-02/en

Fig.103414

copyright © Liebherr-Werk Ehingen GmbH 2023

4.5.2 Assembling the end section

- ► Remove the auxiliary rope **16** in point **C** and attach it to the end section **3**.
- ► Remove the spring retainer **7** in point **F**.

CAUTION
The end section **3** can swing out inadvertently!
When the lock is being released, the end section **3** can swing out inadvertently.

In order to prevent the end section **3** from swinging out by itself:
- ► Hold the end section **3** with the auxiliary rope **17**!

- ► Pull the nylon rope **15** and loosen the lock between the end section **3** and the pivot section **2**.
- ► Swing the end section **3** forward 180° until it can be pinned in point **C**.

DANGER
Danger of fatal injury due to falling folding jib!
It is prohibited to stand under the folding jib during the swing operation, since the folding jib could topple if it was incorrectly installed.
- ► No persons or objects may be present in the slewing or folding range of the telescopic boom or folding jib.

- ► Insert the pin **24** at the top and bottom and secure with retaining clips.
- ► Remove the auxiliary rope **16**.

LWE/LTR 1100-009/25105-02-02/en

copyright © Liebherr-Werk Ehingen GmbH 2023

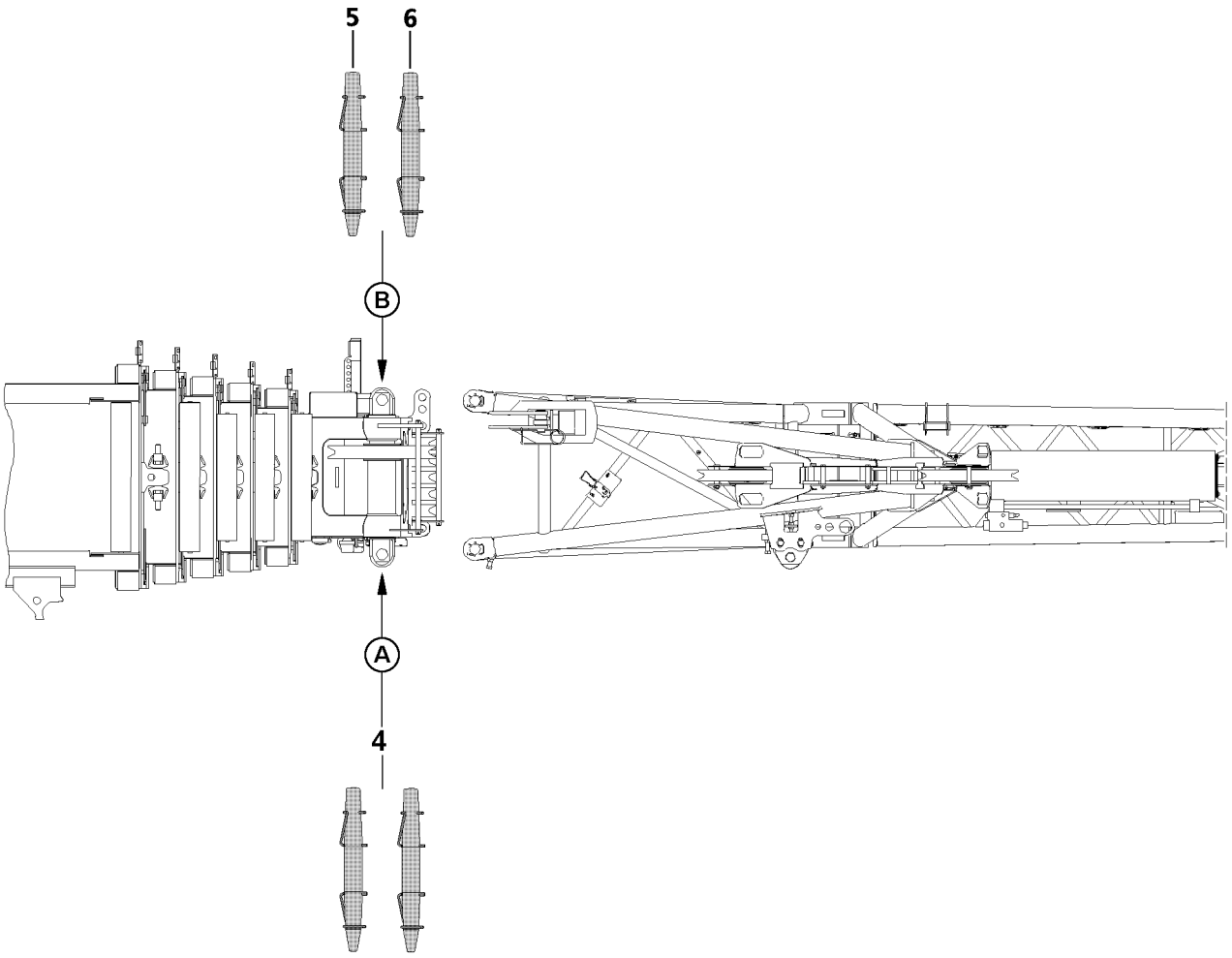

LWE/LTR 1100-009/25105-02-02/en

Fig.103435

copyright © Liebherr-Werk Ehingen GmbH 2023

4.6 Assembling the separately transported folding jib on the crane

4.6.1 Assembling the separately transported folding jib in the crane operating position

For a description of the fastening points, see the section „Fastening points“.

- ► Fasten the auxiliary crane to the respective fastening points of the folding jib.
- ► Lift the folding jib with the auxiliary crane and insert it into the pin points on the telescopic boom.

DANGER
Danger of accident!
- ► The use of cotter pins or spring retainers is prohibited on pins **4**, **5** and **6**!
- ► Use the special retaining clips to secure pins **4**, **5** and **6**.

- ► Pin the folding jib with the telescopic boom:
- ► Insert and secure the pin **4** at the top in point **A**.
- ► Insert and secure the pin **5** at the top in point **B**.
- ► Insert and secure the pin **4** at the bottom in point **A**.
- ► Insert and secure the pin **6** at the bottom in point **B**.
- ► For further assembly of the double folding jib, see section „Assembling the end section“.

LWE/LTR 1100-009/25105-02-02/en

copyright © Liebherr-Werk Ehingen GmbH 2023

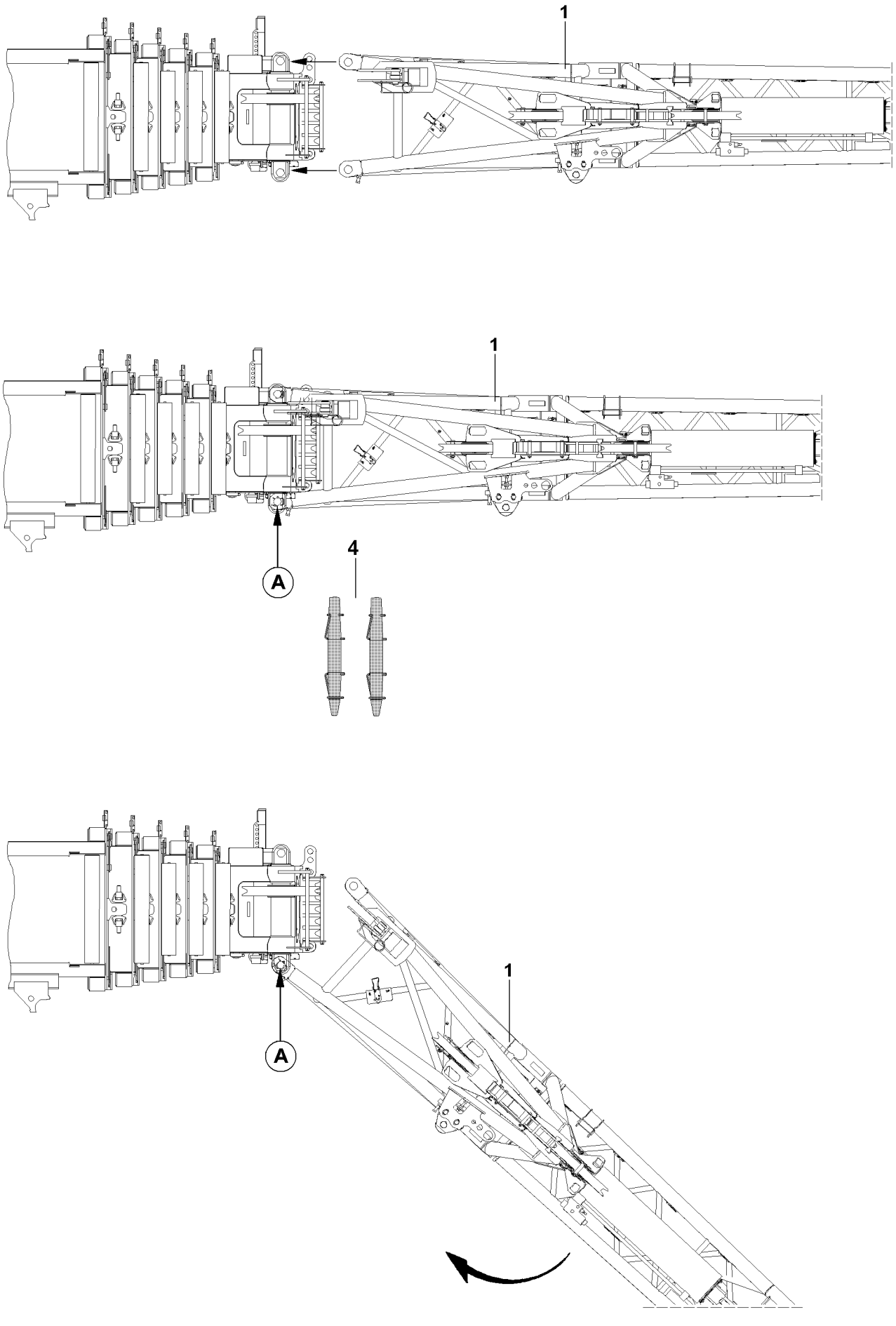

Fig.103436

LWE/LTR 1100-009/25105-02-02/en

copyright © Liebherr-Werk Ehingen GmbH 2023

4.6.2 Assembling the separately transported folding jib in the transport position

An auxiliary crane must be available for the assembly of the separate folding jib **1**.

Make sure that the following prerequisites are met:
- The crane is properly supported and horizontally aligned.
- The telescopic boom is telescoped in all the way.
- The telescopic boom is in travel direction in 0° position.

DANGER
Danger of accident from involuntary swinging out of the folding jib when removing the fastening equipment!
If the telescopic boom is not in 0° position, a danger of accident exists due to involuntary swinging out of the folding jib when the fastening equipment is removed.
► Move the telescopic boom to the 0° position.

► Attach the auxiliary crane to corresponding fastening points on folding jib, see section „Fastening points“.

CAUTION
Danger of property damage!
If the following notes are not observed, the folding jib can move uncontrolled and as a result, damage can occur in the area of the telescopic boom and the driver's cab.
► Carry out auxiliary crane movements only with utmost caution and the least possible acceleration.
► The folding jib must be secured with an auxiliary rope during the assembly procedure!

► Lift the folding jib with the auxiliary crane and guide it into pin points on the telescopic boom head.

DANGER
Danger of accident!
► The use of cotter pins or spring retainers is prohibited on the pins **4**!
► Use the special retaining clips to secure the pins **4**.

► Pin the folding jib with the telescopic boom:
► Pin and secure the pins **4** on top and on the bottom at point **A**.

DANGER
Danger of fatal injury due to falling folding jib!
Due to an improperly pinned folding jib on the telescopic boom, life threatening or even fatal injuries can occur.
► Before removing the auxiliary crane, make sure that the folding jib is pinned and secured in point **A** on the top and bottom.

► Remove the auxiliary crane.

Note
► For further procedure to fold the folding jib onto the telescopic boom or in transport position, refer to section „Disassembling the folding jib“.

LWE/LTR 1100-009/25105-02-02/en

copyright © Liebherr-Werk Ehingen GmbH 2023

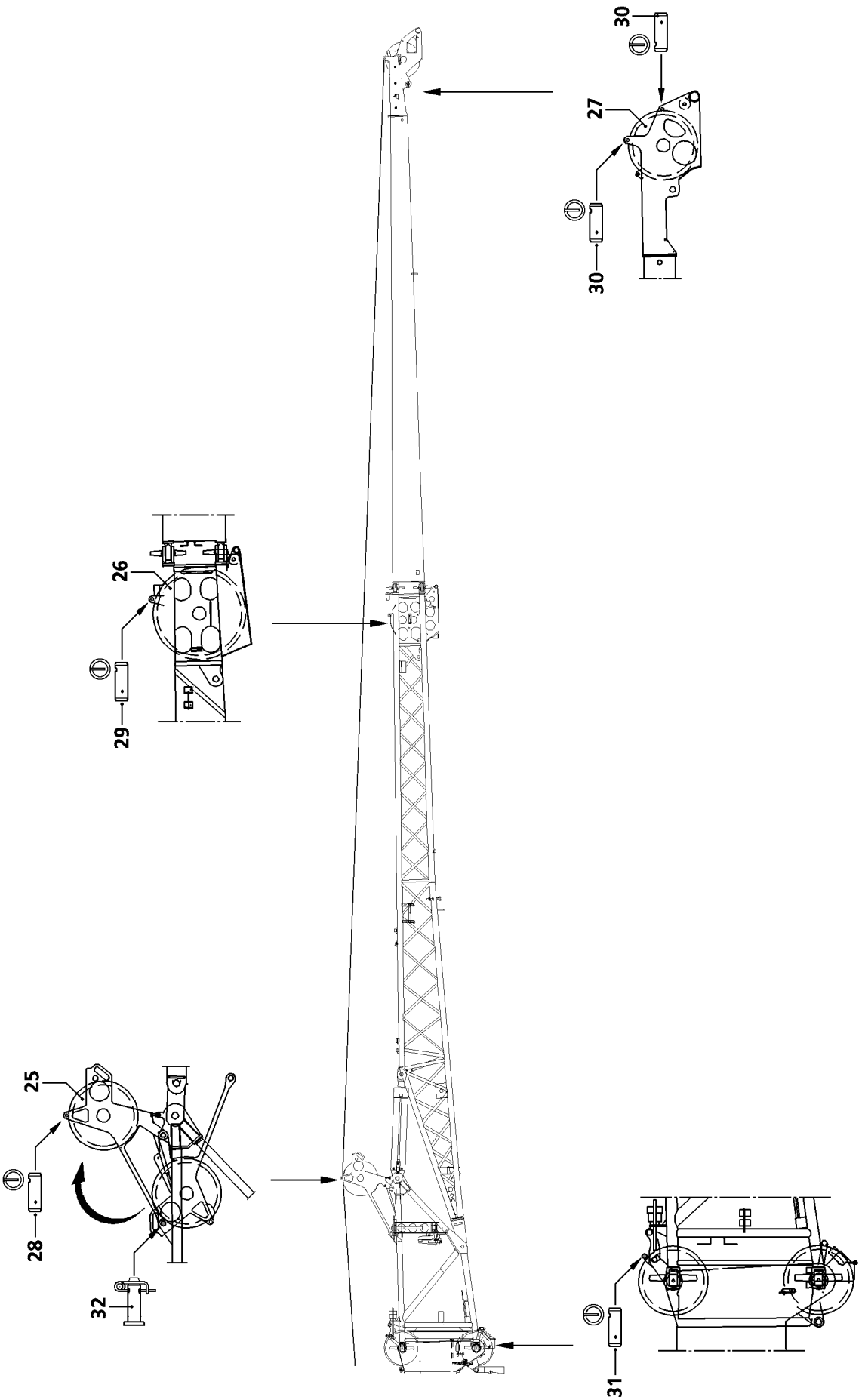

Fig.103278

LWE/LTR 1100-009/25105-02-02/en

copyright © Liebherr-Werk Ehingen GmbH 2023

5 Reeving the hoist rope in

DANGER
Danger of falling due to slipping!
When walking on the folding jib, for example to reeve the hoist rope in or out, there is a risk of slipping and falling from the folding jib.
► Do not step on the folding jib!

5.1 Swinging the rope guide pulley into the operating position

► Release and unpin the pin **32**.
► Swing the rope guide pulley **25** into the operating position.
► Pin the rope guide pulley **25** in the operating position: Insert and secure the pin **32**.

5.2 Reeving the hoist rope in

NOTICE
Folding jib with the rope guide pulley without counter pulley!
If the hoist rope is reeved via hoist gear 2 during operation with a single or double folding jib in the 0° position, then the hoist rope can lift off from the rope guide pulley **25** and scrape on the rope retaining pins.
The hoist rope can be damaged!
► Reeving in the hoist rope via hoist gear 2 during operation with the single or double folding jib in the 0° position is prohibited.
► During operation with the single or double folding jib in the 0° position, reeve the hoist rope in only via hoist gear 1.

► Release and unpin the rope retaining pin **28** and rope retaining pin **29**.

For operation with a double folding jib:
► Release and unpin the rope retaining pins **30**.
► Place the hoist rope over the rope guide pulley **25** and over the end pulley **26** at 10.8 m or over the end pulley **27** at 19 m.
► Insert the rope retaining pin again and secure with locking pins.

CAUTION
Damage to the hoist rope!
If the rope retaining pin **29** is inserted during operation with the double folding jib, the slack hoist rope can scrape against the rope retaining pin **29** and be damaged.
► Do **not** insert the rope retaining pin **29** during double folding jib operation!

► Attach the load hook on the hoist rope, or reeve the hoist rope in to the hook block, in the fixed point and secure.
► Attach the hoist limit switch weight.

Note
► In folding jib operation with the hook block reeved in on the telescopic boom, the weight of the reeved in hook block on the telescopic boom must be deducted from the load.

LWE/LTR 1100-009/25105-02-02/en

copyright © Liebherr-Werk Ehingen GmbH 2023

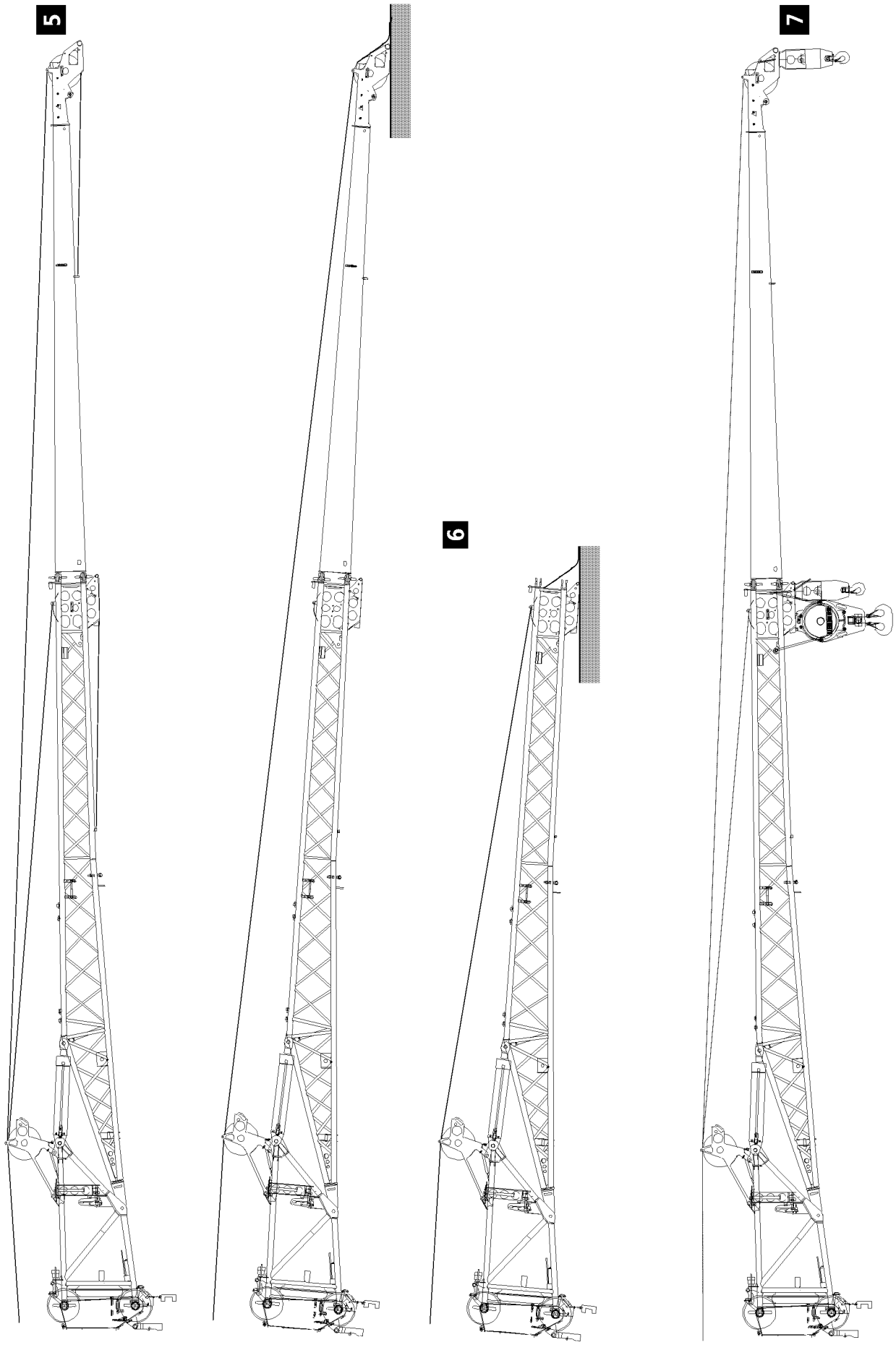

Fig.103279

LWE/LTR 1100-009/25105-02-02/en

copyright © Liebherr-Werk Ehingen GmbH 2023

6 Changing over the mechanical folding jib from 0° to 20° or 40°

DANGER
Danger of fatal injury!
If the following danger notes are not observed, fatal injuries can occur during assembly and change over work on the folding jib.
► No persons may remain within the danger zone of the crane.

There are 3 ways for changing the mechanical folding jib to 20° or 40°:
1. Changing the folding jib with the hoist rope, see illustration **5**.
   Only permitted for operation with the single folding jib and double folding jib.
2. Changing the folding jib by supporting it, see illustration **6**.
3. Changing the folding jib with the hook block or load hook, illustration **7**.

Note
► The angle assembly with load hook is only possible with a rope lock „without a swivel“.
► With a rope lock „with swivel“, angle assembly with the load hook is not possible.

Make sure that the following prerequisites are met:
– The crane is properly supported and horizontally aligned.
– The telescopic boom is telescoped in all the way.
– The folding jib is attached as a straight extension in the 0° position.
– The telescopic boom has been luffed to the rear or the side.

LWE/LTR 1100-009/25105-02-02/en

copyright © Liebherr-Werk Ehingen GmbH 2023

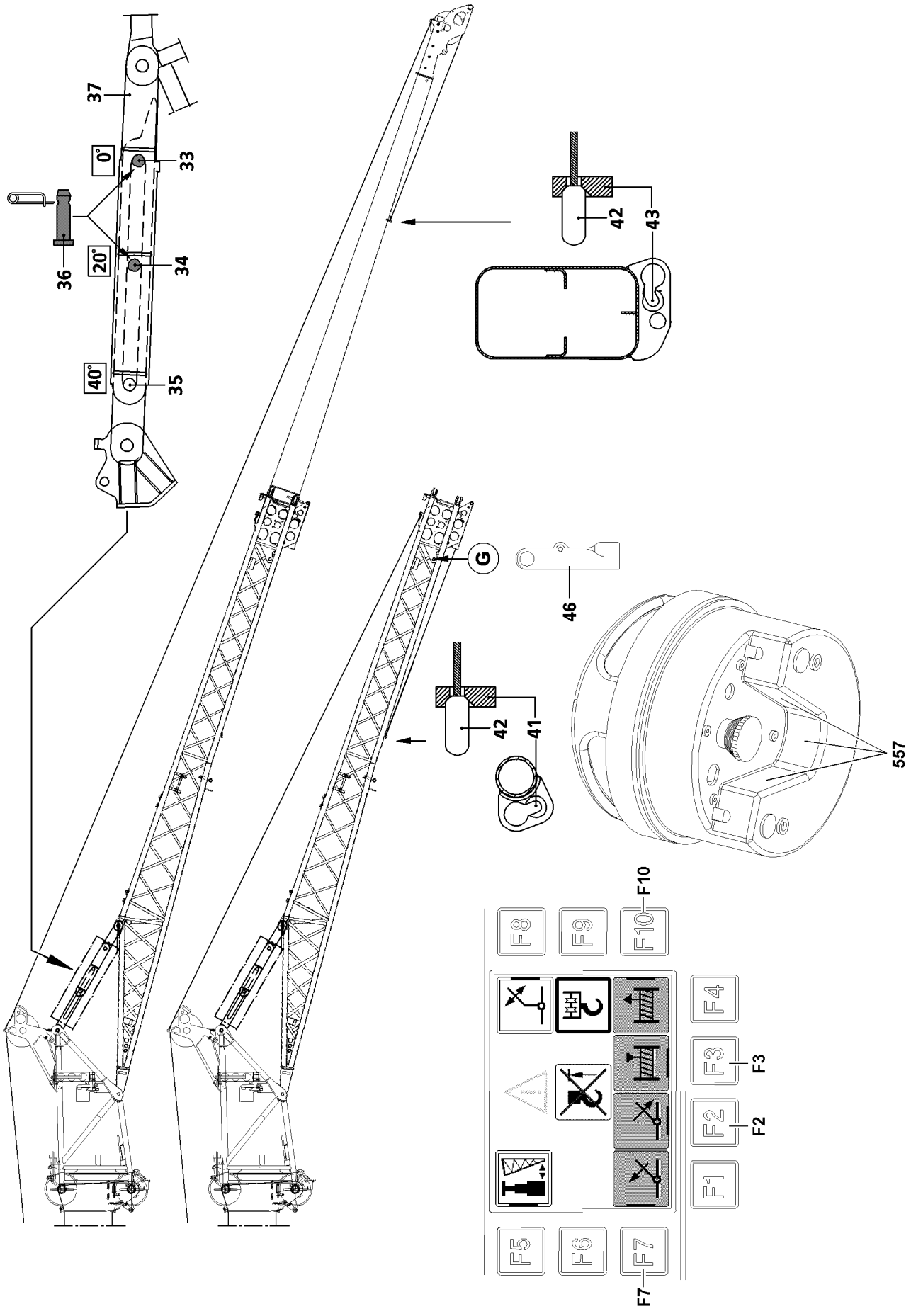

Fig.118539

LWE/LTR 1100-009/25105-02-02/en

copyright © Liebherr-Werk Ehingen GmbH 2023

6.1 Changing the folding jib with the hoist rope

CAUTION
Damage to the folding jib and the hoist rope!
If the telescopic boom is telescoped out or luffed down as long as the hoist rope is tightened on the assembly fixed point, the hoist rope can rip and the folding jib can be damaged.
► Do not telescope out or luff down the telescopic boom with the hoist rope attached in the assembly fixed point!

WARNING
Danger of fatal injury during angle assembly via the BTT!
Due to jerky movements at angle installation of the folding jib with the hoist rope, the boom can swing up together with the folding jib. This can cause the folding jib to fold down uncontrolled!
Personnel can be severely injured or killed!
► All movements must be actuated with extreme sensitivity using the BTT!
► Make sure that there are no persons within the danger zone of the folding jib!

Note
► When changing the folding jib with the hook block or load hook via the BTT, the hoist limit switch is bypassed.

6.1.1 Preparatory work

► Reeve out the hoist rope on the lock.
► Disassemble the hoist limit switch weight.

CAUTION
Damage to the hoist rope!
The hoist rope can be damaged by the lock **46**.
► Remove the lock **46** in point **G**!

For operation with a double folding jib:
► Guide the locking clamp **42** into the assembly fixed point **43**.
or

For operation with a single folding jib:
Guide the locking clamp **42** into the assembly fixed point **41**.
► Tighten the hoist rope by **carefully moving** the corresponding master switch.
or
Tighten the hoist rope by actuating the 2-hand keypad **557** and the function key **F3**.

Note
► BTT, see chapter 5.31.

LWE/LTR 1100-009/25105-02-02/en

copyright © Liebherr-Werk Ehingen GmbH 2023

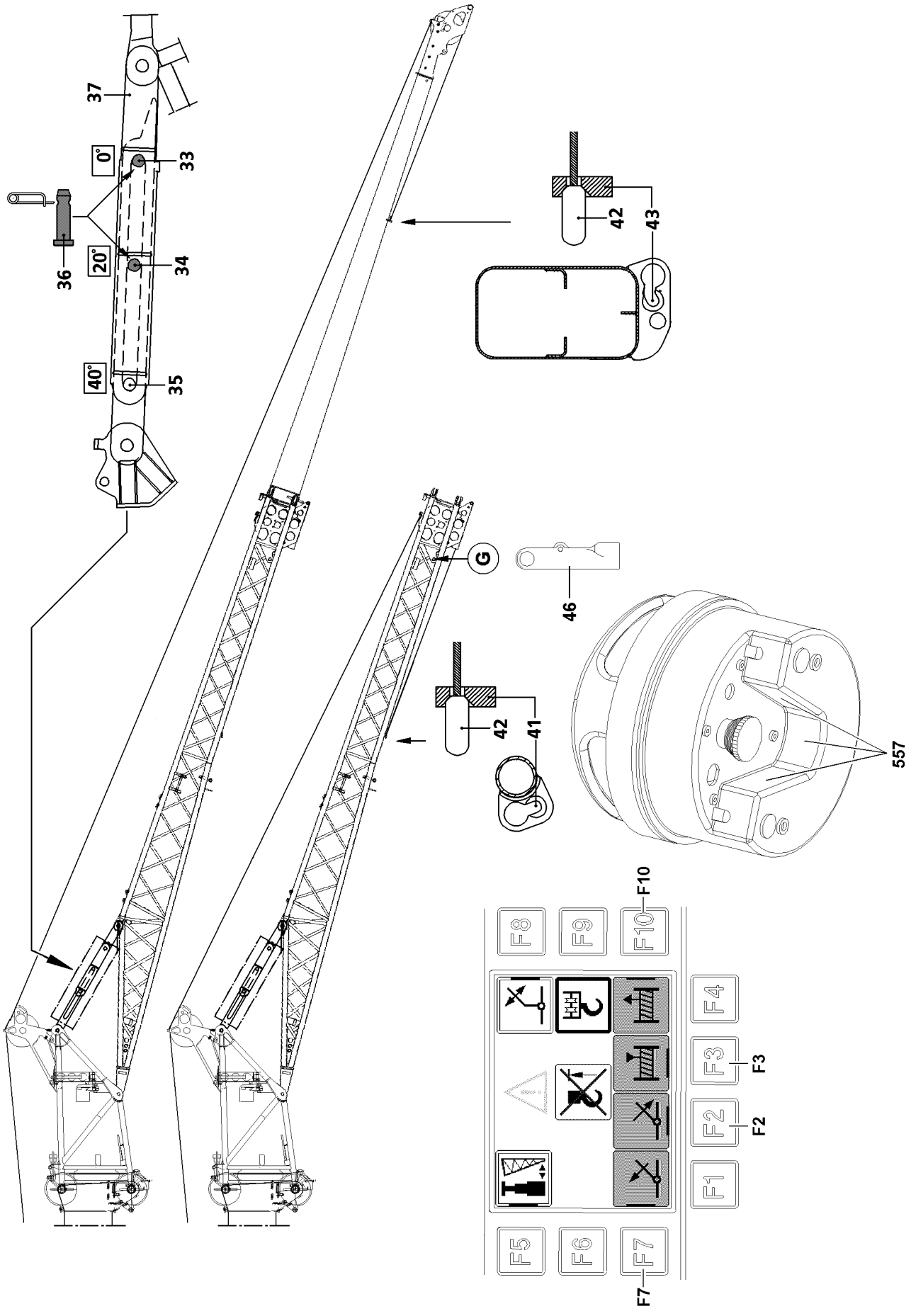

Fig.118539

LWE/LTR 1100-009/25105-02-02/en

copyright © Liebherr-Werk Ehingen GmbH 2023

6.1.2 Changing the angle with the hoist rope

The folding jib can be operated in three different angles. The required angle is set with the pin **36**. In the „initial position“, immediately after assembling the folding jib, the folding jib is in the 0° position.

DANGER
Danger of fatal injury!
Danger of fatal injury if the folding jib suddenly „folds downward“!
- ► Make sure that there are no persons in the danger zone of the folding jib.
- ► Make sure **before unpinning** the pin **36** that the hoist rope is tensioned and the folding jib is actually held by the hoist rope.
- ► Unpinning the retaining pin **35** in the 40° pin bores is **prohibited**.

Angle setting 20°

- ► Release the pin **36** and unpin from the 0° bore **33**.
- ► Insert the pin **36** into the 20° bore **34** and secure.

Angle setting 40°

- ► Release the pin **36** and unpin from the 0° bore **33**.
- ► Insert the pin **36** into the pin receptacle and secure.

Positioning the folding jib

Make sure that the pin **36** is properly inserted and secured for the required angle setting.

- ► Spool the hoist rope out by carefully moving the corresponding master switch and simultaneously luffing the telescopic boom up.
  or
  Spool the hoist rope out by actuating the 2-hand keypad **557** and the function key **F10** on the BTT. At the same time, luff the telescopic boom up slowly and carefully by pressing the function key **F7**.

Result:

- – The pull bracket **37** places itself against the respective pin in the selected angle setting.
- – The folding jib is held by the respective pin.

Note
- ► BTT, see chapter 5.31.

- ► Release the locking clamp from the assembly fixed point.
- ► Install the rope lock **46** on point **G**.

copyright © Liebherr-Werk Ehingen GmbH 2023

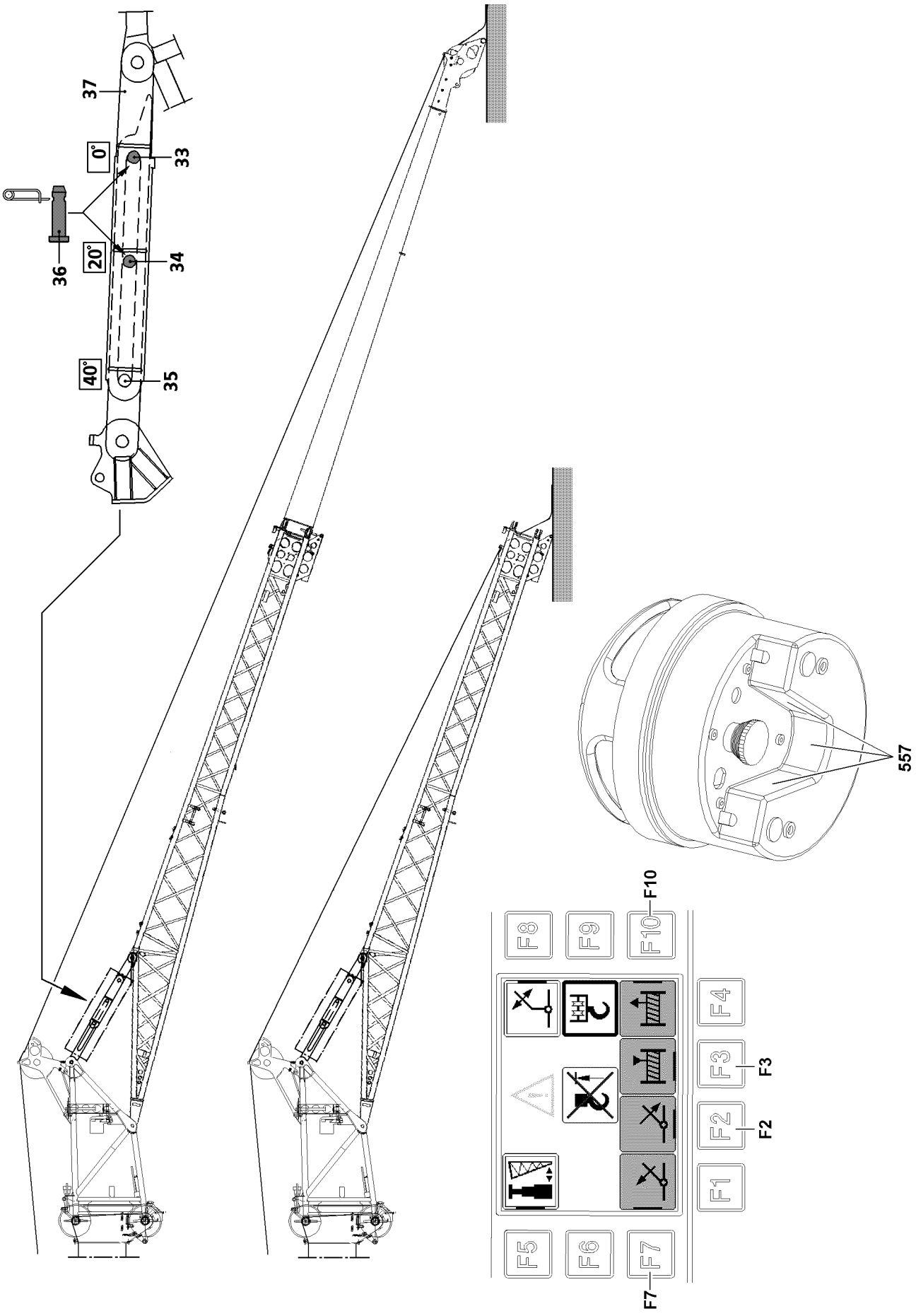

Fig.118540

LWE/LTR 1100-009/25105-02-02/en

copyright © Liebherr-Werk Ehingen GmbH 2023

6.2 Changing the folding jib by supporting it.

WARNING
Danger of fatal injury during angle assembly via the BTT!
- ► All movements must be actuated with extreme sensitivity using the BTT!
- ► Make sure that there are no persons within the danger zone of the folding jib!

Note
- ► When changing the folding jib with the hook block or load hook via the BTT, the hoist limit switch is bypassed.

6.2.1 Preparatory work

Note
- ► The folding jib can lie on the ground or must be properly supported, if necessary.

CAUTION
Danger of property damage!
- ► When taking down the folding jib, make sure that the folding jib is **not** placed on the rope pulley. Otherwise it will be damaged. Also make sure that the hoist rope is **not** damaged.

- ► Completely luff down the telescopic boom until the folding jib lies on the ground.

LWE/LTR 1100-009/25105-02-02/en

copyright © Liebherr-Werk Ehingen GmbH 2023

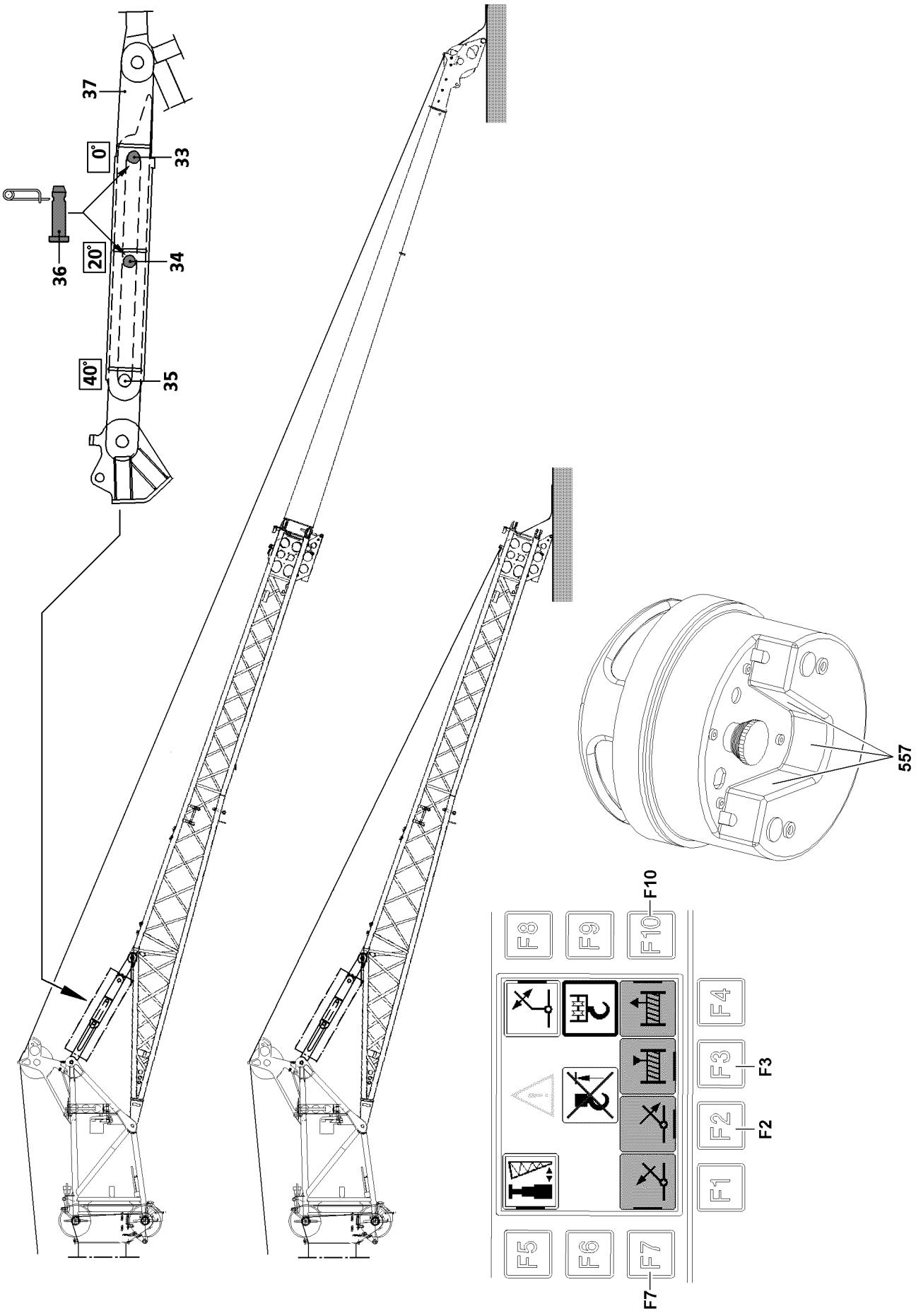

Fig.118540

LWE/LTR 1100-009/25105-02-02/en

copyright © Liebherr-Werk Ehingen GmbH 2023

6.2.2 Changing the angle with the folding jib supported

The folding jib can be operated in three different angles. The required angle is set with the pin **36**. In the „initial position“ - immediately after assembling the folding jib - the folding jib is in the 0° position.

DANGER
Danger of fatal injury!
Danger of fatal injury if the folding jib suddenly „folds downward“!
- ► Make sure that there are no persons in the danger zone of the folding jib.
- ► Make sure, **before unpinning** the pin **36**, that the folding jib is lying on the ground or on a proper and secure substructure.
- ► Unpinning the retaining pin **35** in the 40° pin bores is **prohibited**.

Angle setting 20°

- ► Release the pin **36** and unpin from the 0° bore **33**.
- ► Insert the pin **36** into the 20° bore **34** and secure.

Angle setting 40°

- ► Release the pin **36** and unpin from the 0° bore **33**.
- ► Insert the pin **36** into the pin receptacle and secure.

Positioning the folding jib

Make sure that the pin **36** is properly inserted and secured for the required angle setting.

- ► Spool the hoist rope out by deflecting the corresponding manual control lever and at the same time luff the telescopic boom up slowly and carefully.
  or
  Luff the telescopic boom up slowly and carefully by actuating the 2-hand keypad **557** and the function key **F7** on the BTT.

Result:

- – The pull bracket **37** places itself against the respective pin in the selected angle setting.
- – The folding jib is held by the respective pin.

Note
- ► BTT, see chapter 5.31.

- ► Assemble the hoist limit switch weight and chain.
- ► Attach the hoist limit switch weight on the hoist rope.

LWE/LTR 1100-009/25105-02-02/en

copyright © Liebherr-Werk Ehingen GmbH 2023

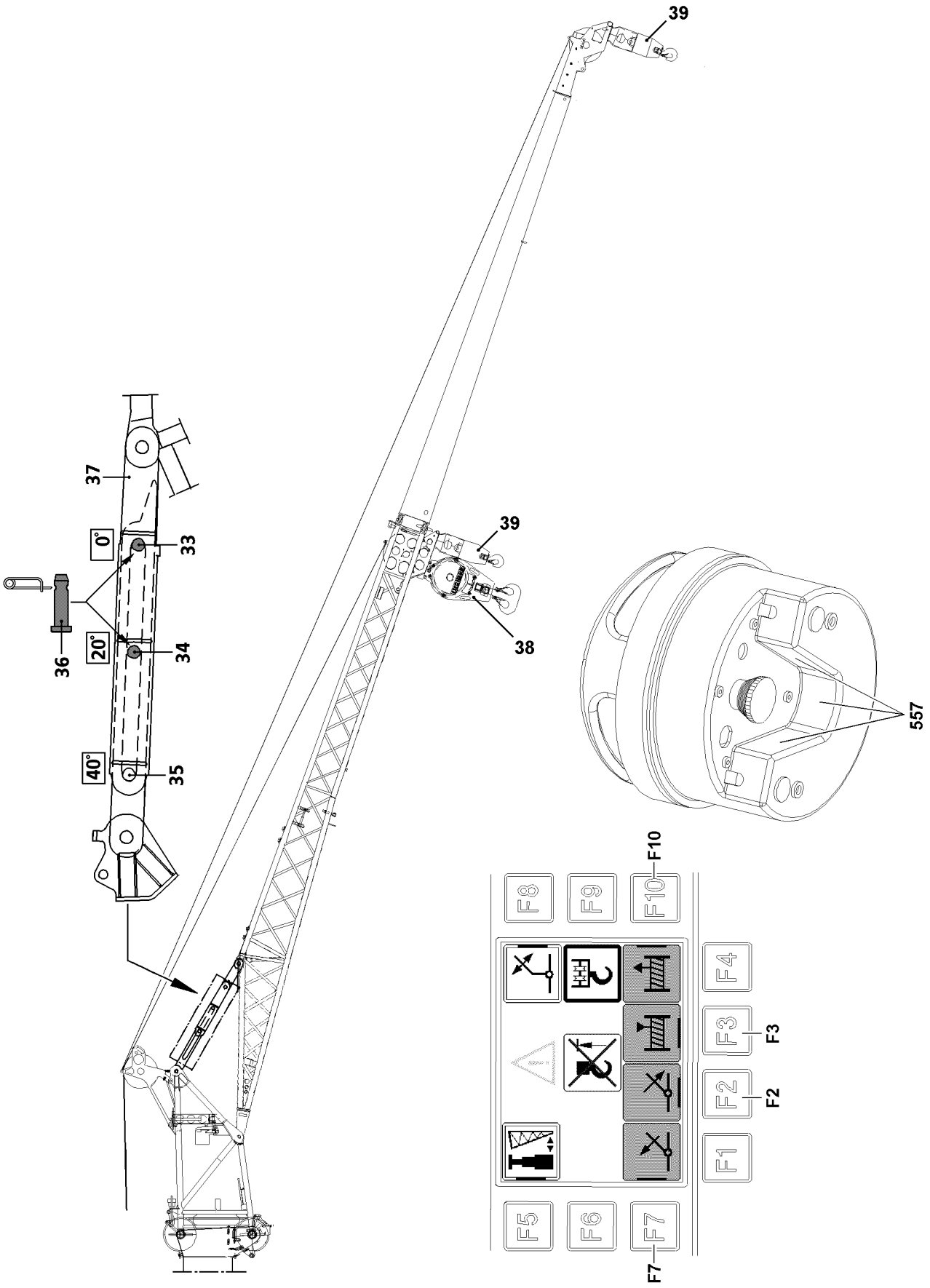

Fig.118541

LWE/LTR 1100-009/25105-02-02/en

copyright © Liebherr-Werk Ehingen GmbH 2023

6.3 Changing the folding jib with the hook block or load hook

Note
- ► The angle assembly with load hook is only possible with a rope lock „without a swivel“.
- ► With a rope lock „with swivel“, angle assembly with the load hook is not possible.
- ► When changing the folding jib with the hook block or load hook via the BTT, the hoist limit switch is bypassed.

On a single folding jib, the angle assembly can be carried out with 1–roller (G = 460 kg) or 3–roller hook block **38** (G = 500 kg) or with load hook **39** (G = 250 kg).

On a double folding jib, the angle assembly may only be carried out with load hook **39** (W = 250 kg).

WARNING
Danger of fatal injury during angle assembly via the BTT!
Due to jerky movements during the angle assembly of the folding jib with the hook block or the load hook, the boom can swing up together with the folding jib. This can cause the folding jib to fold down uncontrolled!
Personnel can be severely injured or killed!
- ► All movements must be actuated with extreme sensitivity using the BTT!
- ► Make sure that there are no persons within the danger zone of the folding jib!

6.3.1 Preparatory work

WARNING
Damage to the folding jib and the hoist rope!
- ► Do not telescope the telescopic boom out or luff it down as long as the hook block / load hook touches the stop on the folding jib.

- ► Remove the hoist limit switch weight with chain.
- ► Bypass the „hoist top shut-off“ on the LICCON computer system.
- ► Carefully deflect the corresponding master switch and run the hook block or load hook carefully to the stop of the folding jib and tension via the hoist gear.
  or
  By actuating the 2-hand keypad **557** and the function key **F3** on the BTT, move the hook block or the load hook carefully to the stop of the folding jib and tension it via the hoist gear.

Note
- ► BTT, see chapter 5.31.

LWE/LTR 1100-009/25105-02-02/en

copyright © Liebherr-Werk Ehingen GmbH 2023

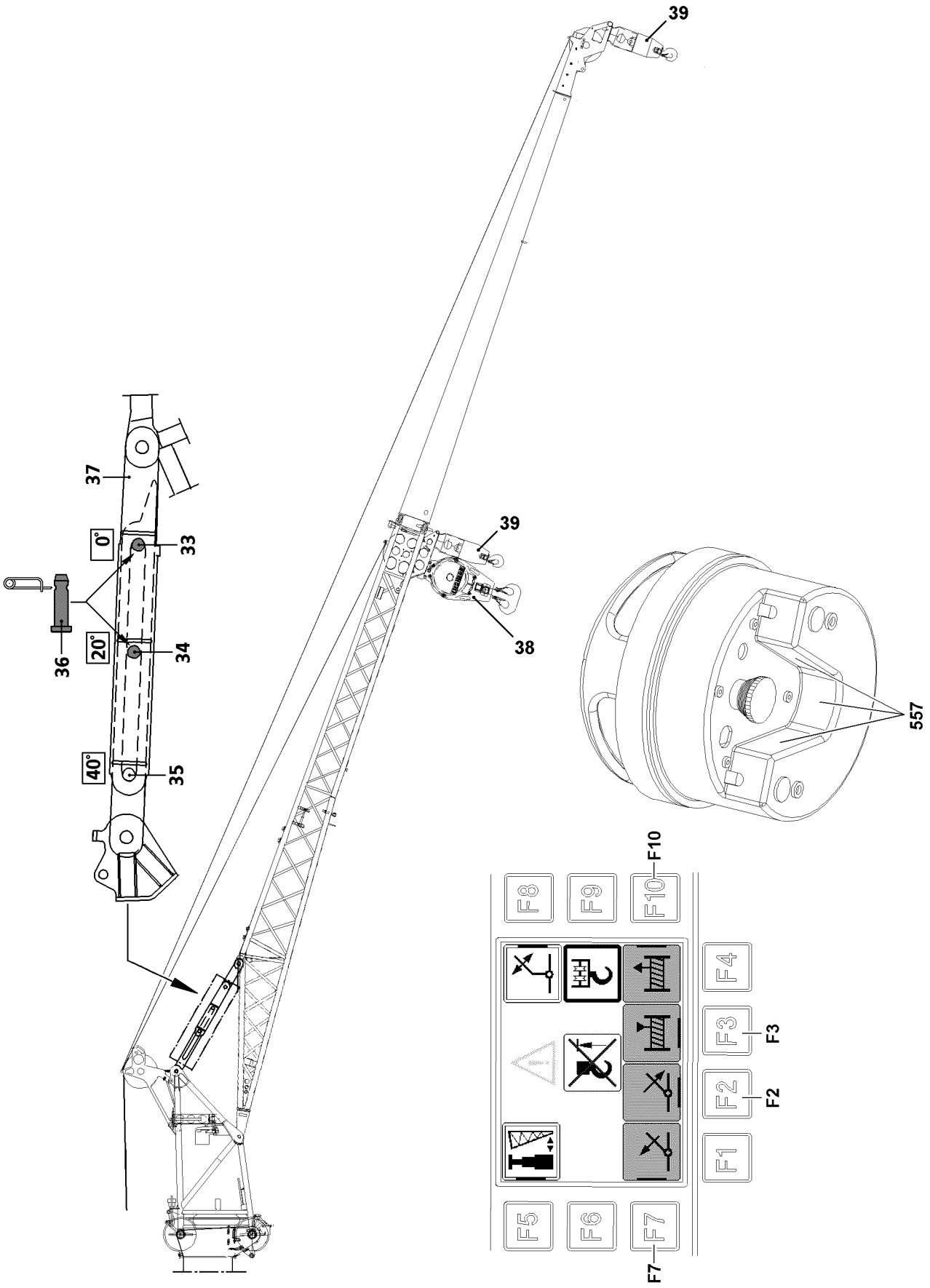

Fig.118541

LWE/LTR 1100-009/25105-02-02/en

copyright © Liebherr-Werk Ehingen GmbH 2023

6.3.2 Changing the angle with the hook block or load hook

The folding jib can be operated in three different angles. The required angle is set with the pin **36**. In the „initial position“ - immediately after assembling the folding jib - the folding jib is in the 0° position.

DANGER
Danger of fatal injury!
Danger of fatal injury if the folding jib suddenly „folds downward“!
- ► Make sure that there are no persons in the danger zone of the folding jib.
- ► Make sure that the folding jib is held by the hook block / load hook via the hoist rope **before unpinning** the pin **36**.
- ► Unpinning the retaining pin **35** in the 40° pin bores is **prohibited**.

Angle setting 20°

- ► Release the pin **36** and unpin from the 0° bore **33**.
- ► Insert the pin **36** into the 20° bore **34** and secure.

Angle setting 40°

- ► Release the pin **36** and unpin from the 0° bore **33**.
- ► Insert the pin **36** into the pin receptacle and secure.

Positioning the folding jib

Make sure that the pin **36** is properly pinned and secured in the required angle position or that it is inserted into the transport retainer.

- ► Spool the hoist rope out by deflecting the corresponding manual control lever and at the same time luff the telescopic boom up slowly and carefully.
  or
  Spool the hoist rope out by actuating the 2-hand keypad **557** and the function key **F10** on the BTT. At the same time, luff the telescopic boom up slowly and carefully by pressing the function key **F7**.

Result:

- – The pull bracket **37** places itself against the respective pin in the selected angle setting.
- – The folding jib is held by the respective pin.

Note
- ► BTT, see chapter 5.31.

- ► Assemble the hoist limit switch weight and chain.
- ► Attach the hoist limit switch weight on the hoist rope.

copyright © Liebherr-Werk Ehingen GmbH 2023

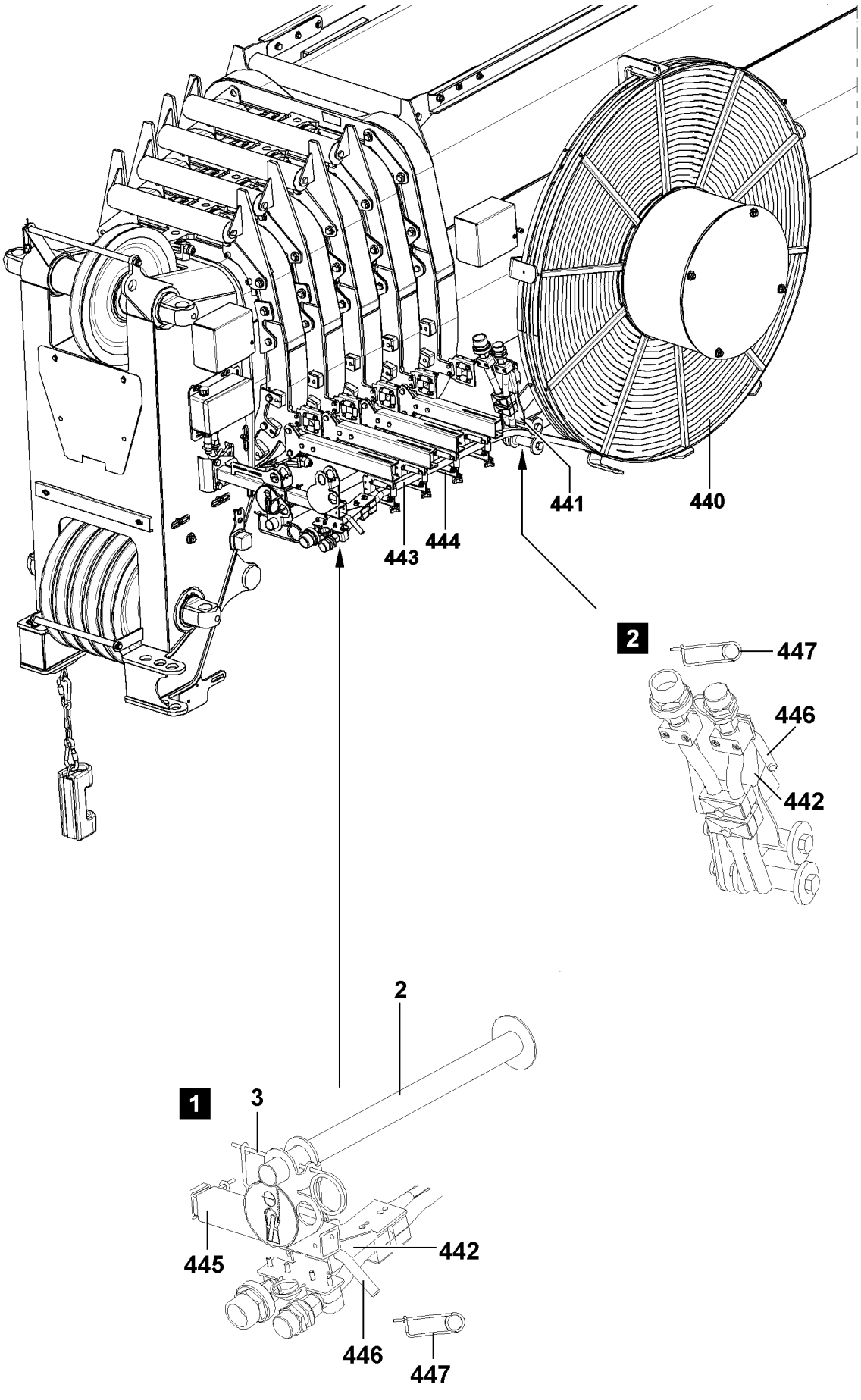

Fig.110283

LWE/LTR 1100-009/25105-02-02/en

copyright © Liebherr-Werk Ehingen GmbH 2023

7 Hydraulic connections

7.1 Establishing the hydraulic connections

A hydraulic connection to the folding jib only has to be established for hydraulic angle adjustment (TNZK operation). Hydraulic lines cannot be incorrectly connected due to the different diameters of the hydraulic connections.

For operation with a hydraulic folding jib:
► Establish the hydraulic connections.

After operation with a hydraulic folding jib:
► Protect the connections from contamination.

7.2 Assembling the hose couplings in the operating or neutral position

The hydraulic supply to the folding jib is made via the hydraulic hose drum **440** on the telescopic boom. For extended telescopic boom operation, the bracket **442** should be installed in the retainer **441** in the „neutral position“.

This avoids having to spool the hydraulic hoses up and out unnecessarily.

CAUTION
Danger of accident due to rebounding hydraulic hoses!
The hydraulic hoses are under spring tension. If the removed bracket **442** is released, it snaps back against the hydraulic hose drum **440** due to the spring force. This can cause injury to assembly personnel or damage the hydraulic hose drum **440**.
► Do not allow the removed bracket **442** to snap back!
► Hold the disassembled bracket **442** and then reinstall it!

7.2.1 Assembling the hose couplings in the operating position (illustration 1)

► Change the pipe **2** and secure with a spring retainer **3**, see illustration **1**.
► Unpin the bracket **442** with the hydraulic couplings from the retainer **441**.
► Place the two-fold hydraulic hose **443** in the guides **444**.
► Insert and secure the bracket **442** in the retainer **445**, see illustration **1**.
► Insert the pin **446** and secure with the spring retainer **447**, see illustration **1**.
► Secure the hydraulic hose **443** in the guides **444**.

7.2.2 Assembling the hose couplings in the neutral position (illustration 2)

► Release the hydraulic hose **443** in the guides **444**.
► Remove the bracket **442** with the hydraulic couplings from the retainer **445** on the boom head, to do so, release and unpin the pin **446**, see illustration **1**.
► Remove the two-fold hydraulic hose **443** from the guides **444**.
► Insert and secure the bracket **442** with the hydraulic couplings in the retainer **441**, see illustration **2**.
► Insert the pin **446** and secure with the spring retainer **447**, see illustration **2**.

LWE/LTR 1100-009/25105-02-02/en

copyright © Liebherr-Werk Ehingen GmbH 2023

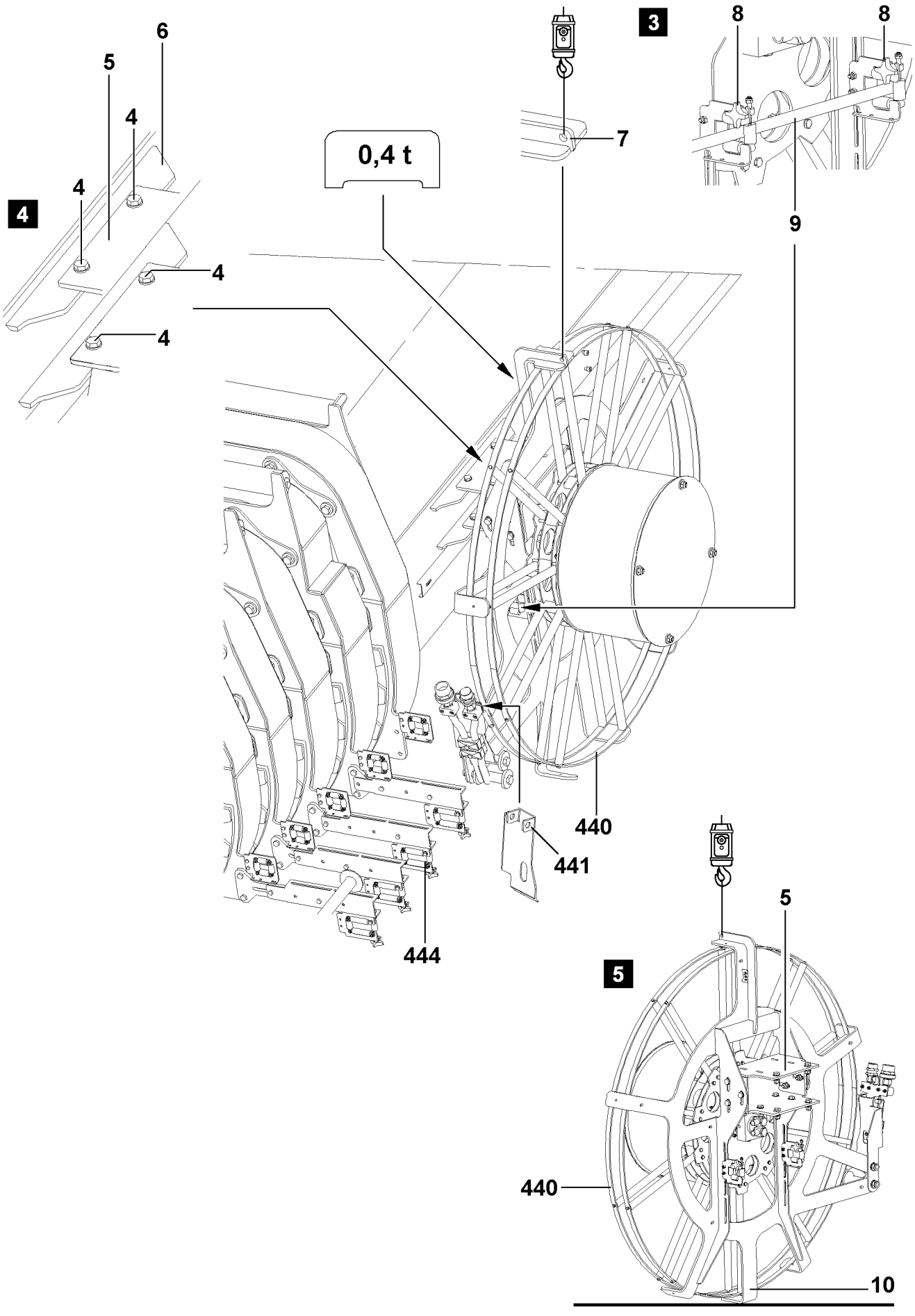

Fig.107186

LWE/LTR 1100-009/25105-02-02/en

copyright © Liebherr-Werk Ehingen GmbH 2023

7.3 Removing the hydraulic hose drum

WARNING
Danger of falling!
During assembly and disassembly of the hydraulic hose drum **440**, personnel must be secured with appropriate fall arrest aids to prevent them from falling. If this is not observed, assembly personnel could fall and be killed or seriously injured!
- ► All work, where there is a danger of falling, must be carried out with suitable aids (for example: lifting platform, scaffolding, ladders, auxiliary crane)!
- ► If the work cannot be carried out with such aids or from the ground, then assembly personnel must secure themselves with approved fall arrest systems to avoid falling, see „chapter 2.04“!
- ► Only step on the aids with clean shoes!
- ► Keep aids clean and free of snow and ice!
- ► It is prohibited to walk on the telescopic boom!

WARNING
Danger of fatal injury due to falling hose drum!
- ► The hydraulic hose drum **440** can fall down due to an assembly error / disassembly error!
- ► It is prohibited for anyone to remain under the hydraulic hose drum **440** during assembly or disassembly!

Make sure that the following prerequisites are met:
- – The telescopic boom is luffed down, telescoped in and swung 90° to the side **or** to the rear.
- – The hydraulic connections of the hose couplings to the folding jib are released and the hose couplings are installed in the neutral position, see section „Assembling the hose couplings in the neutral position“.
- – An auxiliary crane with suitable fastening equipment is available for disassembling the hydraulic hose drum **440**.

- ► Attach the auxiliary crane to the lashing lug **7** of the hydraulic hose drum **440** with suitable fastening equipment and secure, see illustration **3**.
- ► Unscrew the cross handles **8** from the pulley sections and remove the cable **9** from the pulley sections, see illustration **3**.

WARNING
Danger of burning due to hot oil!
When releasing hydraulic connections, hot oil can emerge!
- ► When releasing hydraulic connections, it is imperative to use suitable work gloves!

- ► Release all hydraulic connections from the telescopic boom to the hydraulic hose drum **440**.
- ► Remove all **four** hex head screws **4** from the retainer **5** and bracket **6**, see illustration **4**.
- ► Lift the hydraulic hose drum **440** with the auxiliary crane and remove.

WARNING
Danger of crushed limbs!
When taking the hydraulic hose drum **440** down, limbs can be crushed!
- ► Take the hydraulic hose drum **440** down with particular caution!

- ► Place the hydraulic hose drum **440** on the center spoke **10** on level ground, see illustration **5**.
- ► Take the hydraulic hose drum **440** down slowly on the retainer **5**, see illustration **5**.

LWE/LTR 1100-009/25105-02-02/en

copyright © Liebherr-Werk Ehingen GmbH 2023

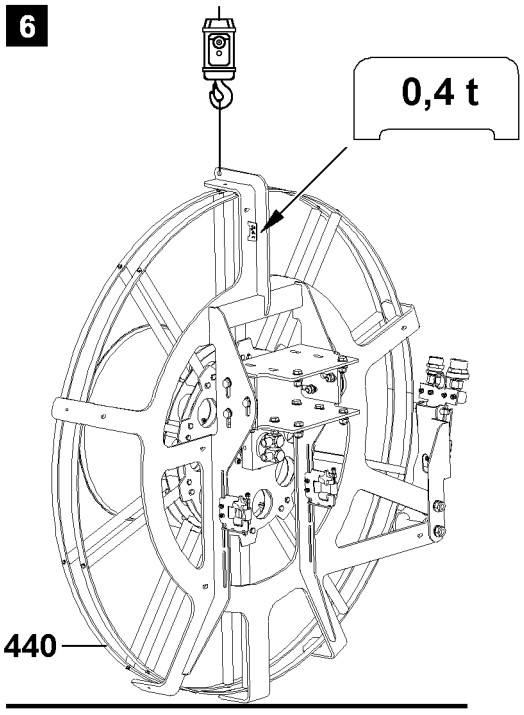

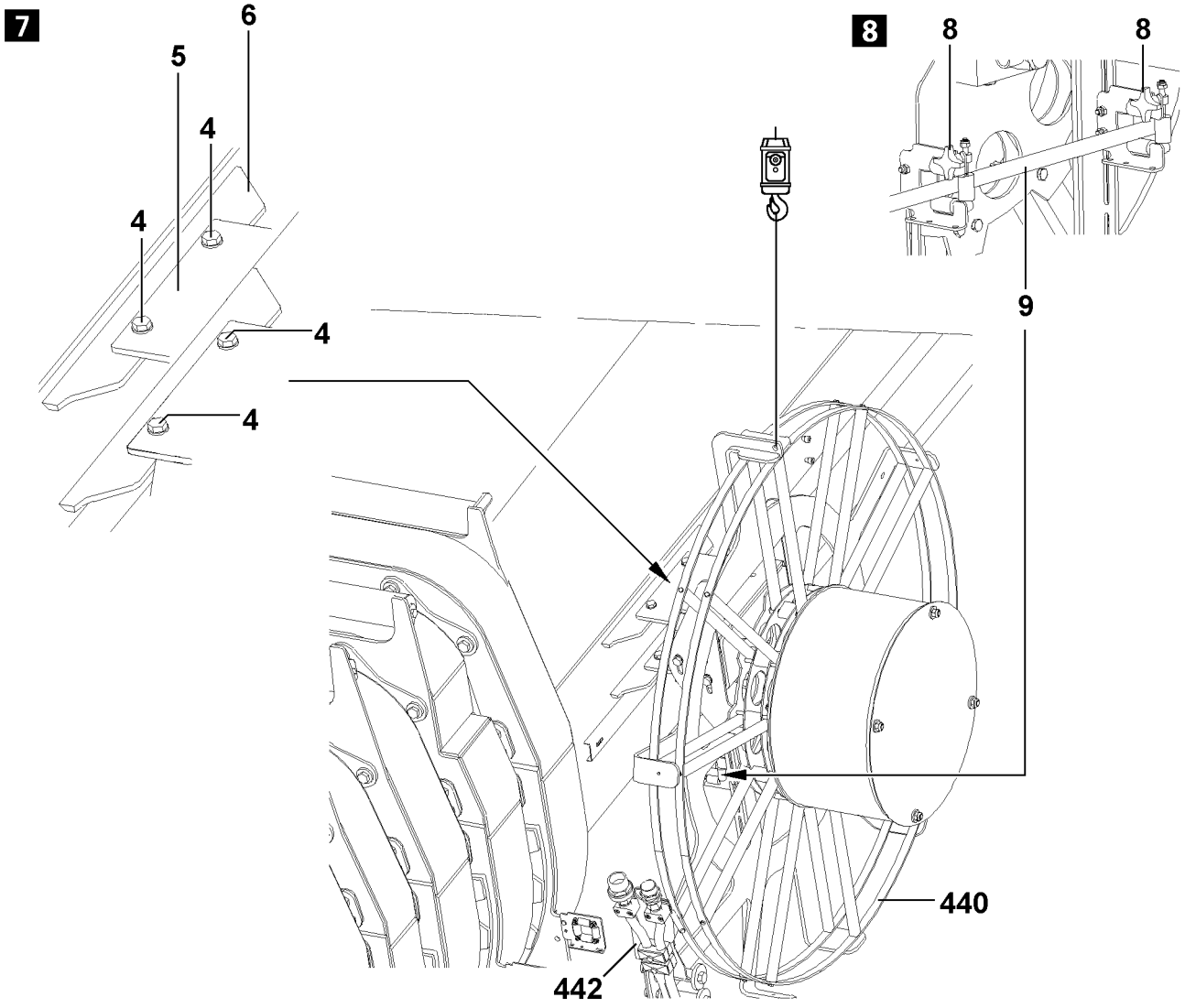

Fig.107270

LWE/LTR 1100-009/25105-02-02/en

copyright © Liebherr-Werk Ehingen GmbH 2023

7.4 Assembling the hydraulic hose drum

WARNING
Danger of falling!
During assembly and disassembly of the hydraulic hose drum **440**, personnel must be secured with appropriate fall arrest aids to prevent them from falling. If this is not observed, assembly personnel could fall and be killed or seriously injured!
- ► All work, where there is a danger of falling, must be carried out with suitable aids (for example: lifting platform, scaffolding, ladders, auxiliary crane)!
- ► If the work cannot be carried out with such aids or from the ground, then assembly personnel must secure themselves with approved fall arrest systems to avoid falling, see „chapter 2.04“!
- ► Only step on the aids with clean shoes!
- ► Keep aids clean and free of snow and ice!
- ► It is prohibited to walk on the telescopic boom!

WARNING
Danger of fatal injury due to falling hose drum!
- ► The hydraulic hose drum **440** can fall down due to an assembly error / disassembly error!
- ► It is prohibited for anyone to remain under the hydraulic hose drum **440** during assembly or disassembly!

Make sure that the following prerequisites are met:
- – The telescopic boom is luffed down, telescoped in and swung 90° to the side **or** to the rear.
- – An auxiliary crane with suitable fastening equipment is available for disassembling the hydraulic hose drum **440**.

- ► Attach the auxiliary crane to the lashing lug **7** of the hydraulic hose drum **440** with suitable fastening equipment and secure, see illustration **6**.
- ► Lift the hydraulic hose drum **440** with the auxiliary crane and fix it to the telescopic boom.

WARNING
Danger of crushed limbs!
When installing the hydraulic hose drum **440** on the telescopic boom, limbs can be crushed!
- ► Be especially careful when assembling the hydraulic hose drum **440**!

- ► Screw the retainer **5** on the bracket **6** with all **four** hex head screws **4** and **new self-locking nuts**, see illustration **7**.
- ► Guide the cable **9** into the pulley sections and attach the cross handles **8** tightly, see illustration **8**.
- ► Establish all hydraulic connections from the telescopic boom to the hydraulic hose drum **440**.
- ► Remove the auxiliary crane.
- ► Install the bracket **442** with hose couplings in operating position, if needed, see section „Installing the hose couplings in operating position“.

LWE/LTR 1100-009/25105-02-02/en

copyright © Liebherr-Werk Ehingen GmbH 2023

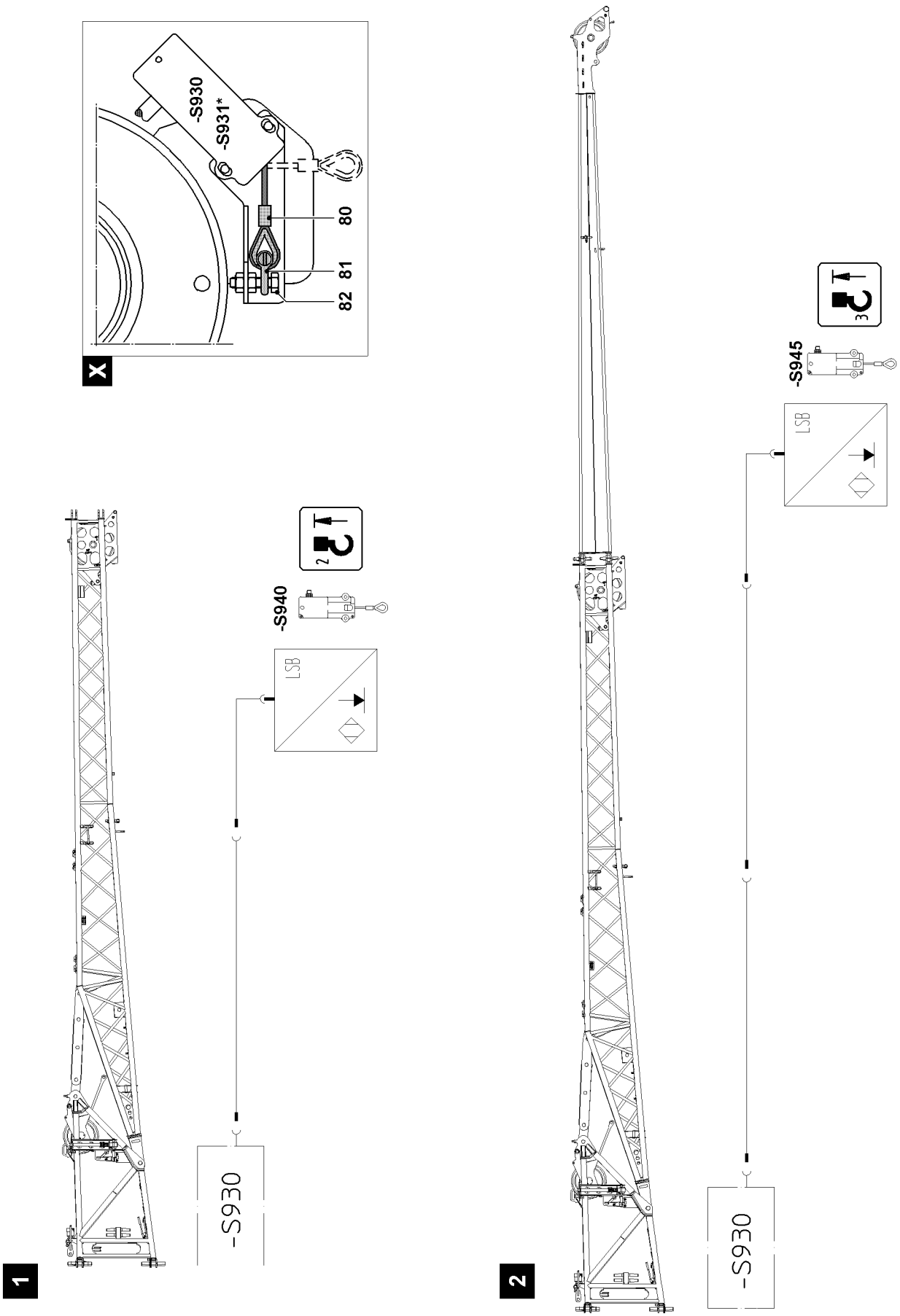

Fig.118299

LWE/LTR 1100-009/25105-02-02/en

copyright © Liebherr-Werk Ehingen GmbH 2023

8 Electrical connections

Note
- ► For further information about the electrical connections, see the wiring diagram.
- ► After the folding jib operation, protect the electrical connections from contamination with caps.

8.1 Mechanically actuating the hoist limit switch, illustration X

If you are working in „Single hook operation“ with the installed folding jib, the hoist limit switch **-S930** and hoist limit switch***** **-S931** which is not required must be actuated manually.

- ► Disassemble the hoist limit switch weight and chain.
- ► Pull the hoist limit switch rope **80** and attach to the fixed point **82** with the shackle **81**.

8.2 Establishing the electrical connections on the single folding jib

Note
- ► In single hook operation, only the hoist limit switch **-S940** on the single folding jib is active. The hoist limit switch **-S930** and the hoist limit switch***** **-S931** must be mechanically actuated, see illustration **X**.
- ► In two hook operation, the hoist limit switch **-S940** on the single folding jib and the hoist limit switch **-S930** on the telescopic boom are active. The hoist limit switch***** **-S931** must be mechanically actuated, see illustration **X**.
- ► Designation of the electrical connections, see the wiring diagram.

- ► Establish the electrical connections.
- ► Make sure that all electrical connections on the boom are established.

8.3 Establishing the electrical connections to the wind speed sensor and airplane warning light

- ► Establish the electrical connections to the wind speed sensor***** and airplane warning light*****, see the wiring diagram.

LWE/LTR 1100-009/25105-02-02/en

copyright © Liebherr-Werk Ehingen GmbH 2023

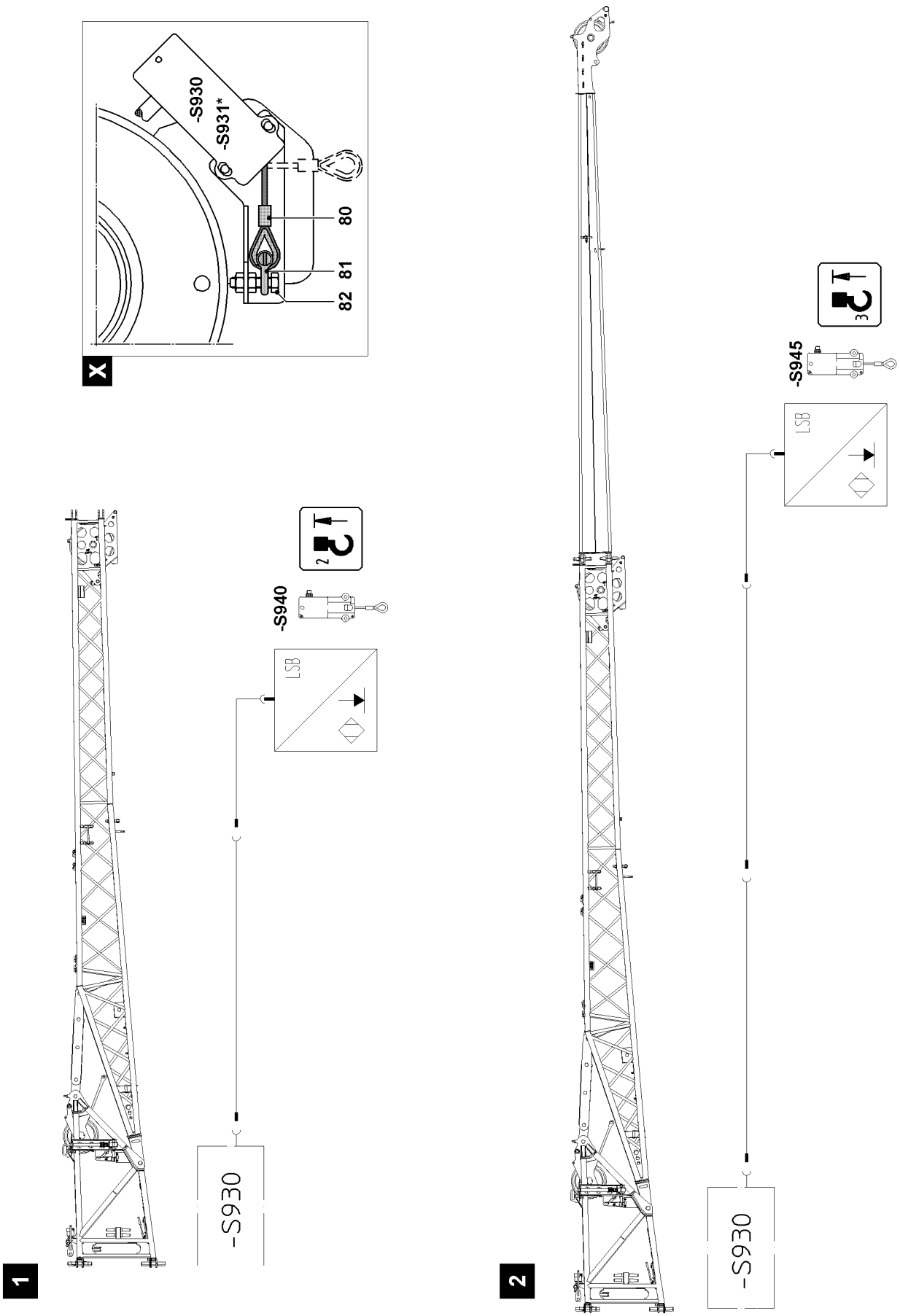

Fig.118299

LWE/LTR 1100-009/25105-02-02/en

copyright © Liebherr-Werk Ehingen GmbH 2023

8.4 Establishing the electrical connections on the double folding jib

Note

- ► In single hook operation, only the hoist limit switch **-S945** on the double folding jib is active. The hoist limit switch **-S940** on the single folding jib must be unplugged. The hoist limit switch **-S930** and the hoist limit switch***** **-S931** must be mechanically actuated, see illustration **X**.
- ► In two hook operation, the hoist limit switch **-S945** on the double folding jib and the hoist limit switch **-S930** on the telescopic boom are active. The hoist limit switch **-S940** must be unplugged and the hoist limit switch***** **-S931** must be mechanically actuated, see illustration **X**.
- ► Designation of the electrical connections, see the wiring diagram.

- ► Establish the electrical connections.
- ► Make sure that all electrical connections on the boom are established.

8.5 Establishing the electrical connections to the wind speed sensor and airplane warning light

- ► Establish the electrical connections to the wind speed sensor***** and airplane warning light*****, see the wiring diagram.

8.6 Checking the electrical connections

Make sure that the following prerequisites are met:
- – All electrical connections have been established.
- – The LICCON computer system is running.
- – The appropriate operating mode is set.

WARNING
Defective monitoring devices!
Death, toppling crane, property damage

In case of defective monitoring devices:
- ► Do not carry out any crane operation.

8.6.1 Wind speed sensor*

- ► Manually actuate the wind speed sensor.

Result:

- – The „Wind speed“ icon element appears on the monitor.

8.6.2 Airplane warning light*

- ► Turn the airplane warning light on.
- ► Perform a visual inspection.

8.6.3 Hoist limit switch

The hoist limit switch **-S930** and hoist limit switch***** **-S931** are located on the telescopic boom head.

The hoist limit switch **-S930** and hoist limit switch***** **-S931** must always be connected to the LICCON system bus.

- ► Actuate the hoist limit switches manually.

Result:

- – The Hoist top icon element appears on the monitor.
- – The winch turns off.

LWE/LTR 1100-009/25105-02-02/en

copyright © Liebherr-Werk Ehingen GmbH 2023

8.6.4 Angle sensor*

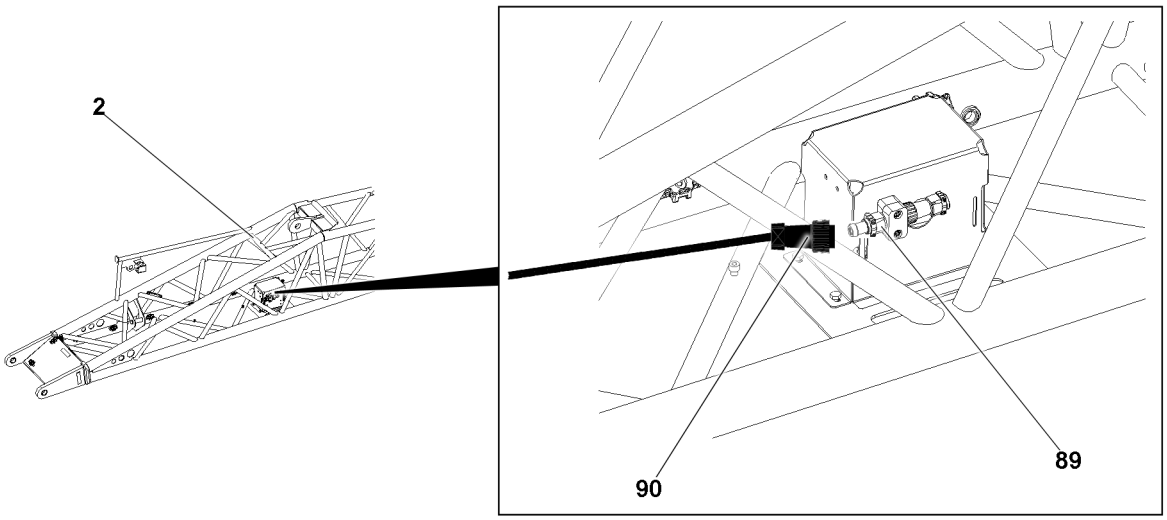

*Fig.153602: Folding jib with angle sensor**

Depending on the version, an angle sensor **89** is attached to the folding jib **2**.

Make sure that the following prerequisites are met:
- All electrical connections have been established.
- The LICCON computer system is running.
- If an angle sensor **89** is installed on the folding jib **2**: The cable plug **90** is inserted in the angle sensor **89**.

Folding jib with angle sensor

Observe the display on the LICCON monitor.

Problem remedy
Is the error message displayed on the LICCON monitor?
The angle sensor **89** is not detected by the crane.
► Unplug the cable plug **90** from the angle sensor **89**.

Folding jib without angle sensor

Observe the display on the LICCON monitor.

Problem remedy
Is the error message displayed on the LICCON monitor?
The angle sensor **89** is required by the crane.
► Contact Liebherr Customer Service and have the angle sensor **89** installed.

LWE/LTR 1100-009/25105-02-02/en

copyright © Liebherr-Werk Ehingen GmbH 2023

Empty page!

LWE/LTR 1100-009/25105-02-02/en

copyright © Liebherr-Werk Ehingen GmbH 2023

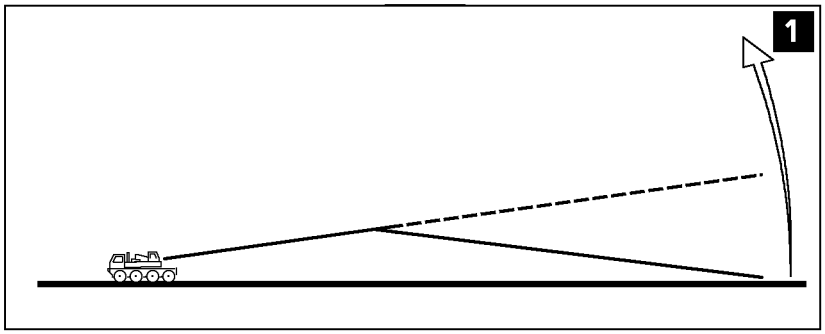

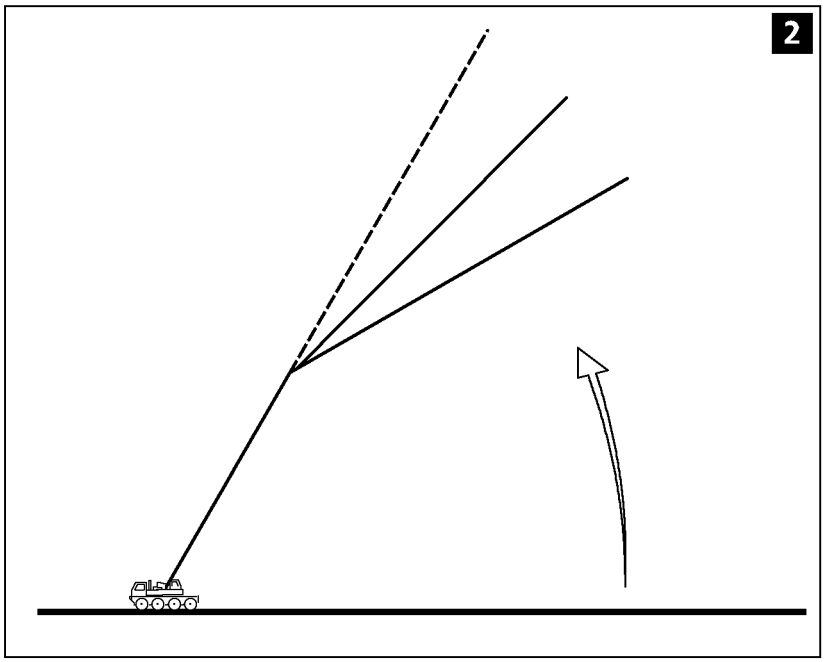

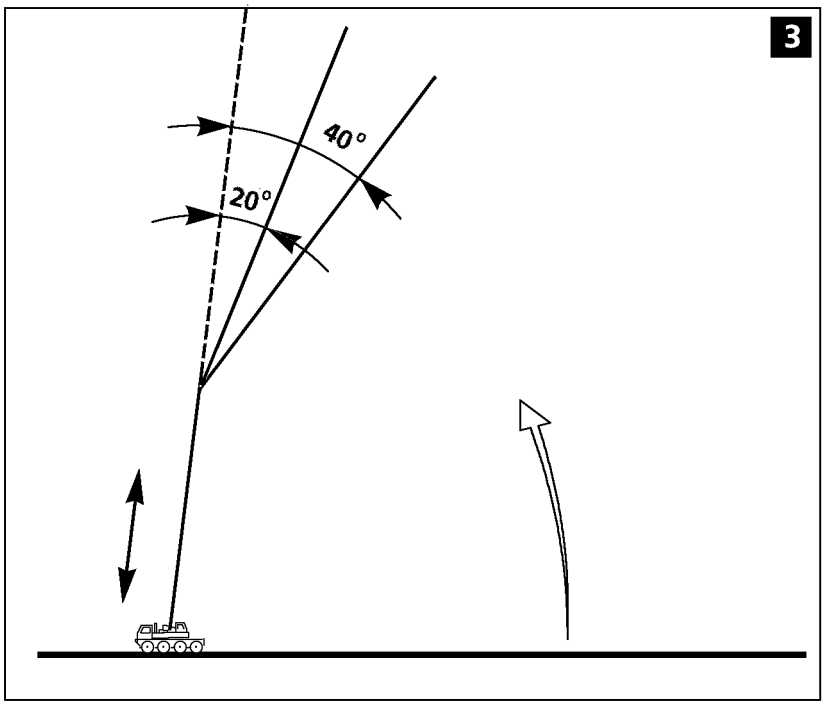

LWE/LTR 1100-009/25105-02-02/en

Fig.185908

copyright © Liebherr-Werk Ehingen GmbH 2023

9 Erecting

9.1 Preparatory work

Make sure that the following prerequisites are met:
- The crane is properly supported and horizontally aligned.
- The counterweight has been installed on the turntable according to the load chart.
- The central ballast is installed on the crane chassis according to the load chart.
- The telescopic boom is fully telescoped in.
- The folding jib has been assembled according to the load chart and the operating instructions.
- All limit switches have been correctly assembled and are fully operational.
- All pin connections are secured.
- The hoist rope has been correctly placed in the rope pulleys and is secured with rope retaining pins to prevent it from jumping out.
- There are no foreign objects on the telescopic boom and the folding jib.
- The telescopic boom, the folding jib and its components (e.g.: limit switches, airplane warning light, wind speed sensor) must be free of snow and ice in the winter.

DANGER
Danger of accident!
Incorrectly assembled or non-functioning limit switches as well as falling parts (pins, cotter pins, ice etc.) can cause accidents!
► Assemble all limit switches, pins and cotter pins properly.

► Check if all prerequisites have been met.

9.2 Erection procedure

DANGER
Danger of fatal injury!
The boom radii specified in the load chart may not be exceeded or fallen below, even if there is no load on the hook! If this regulation is not observed, the crane can topple over.
► Compare and check the settings on the LICCON computer system with the actual set up configuration!

For adjustment of the LICCON overload protection, see chapter 4.02.

► Set and confirm the LICCON overload protection according to the required set up configuration.
► Luff the telescopic boom up with the folding jib attached until the LICCON signals the release.
► Telescope the telescopic boom out to the values specified in the load chart.

LWE/LTR 1100-009/25105-02-02/en

copyright © Liebherr-Werk Ehingen GmbH 2023

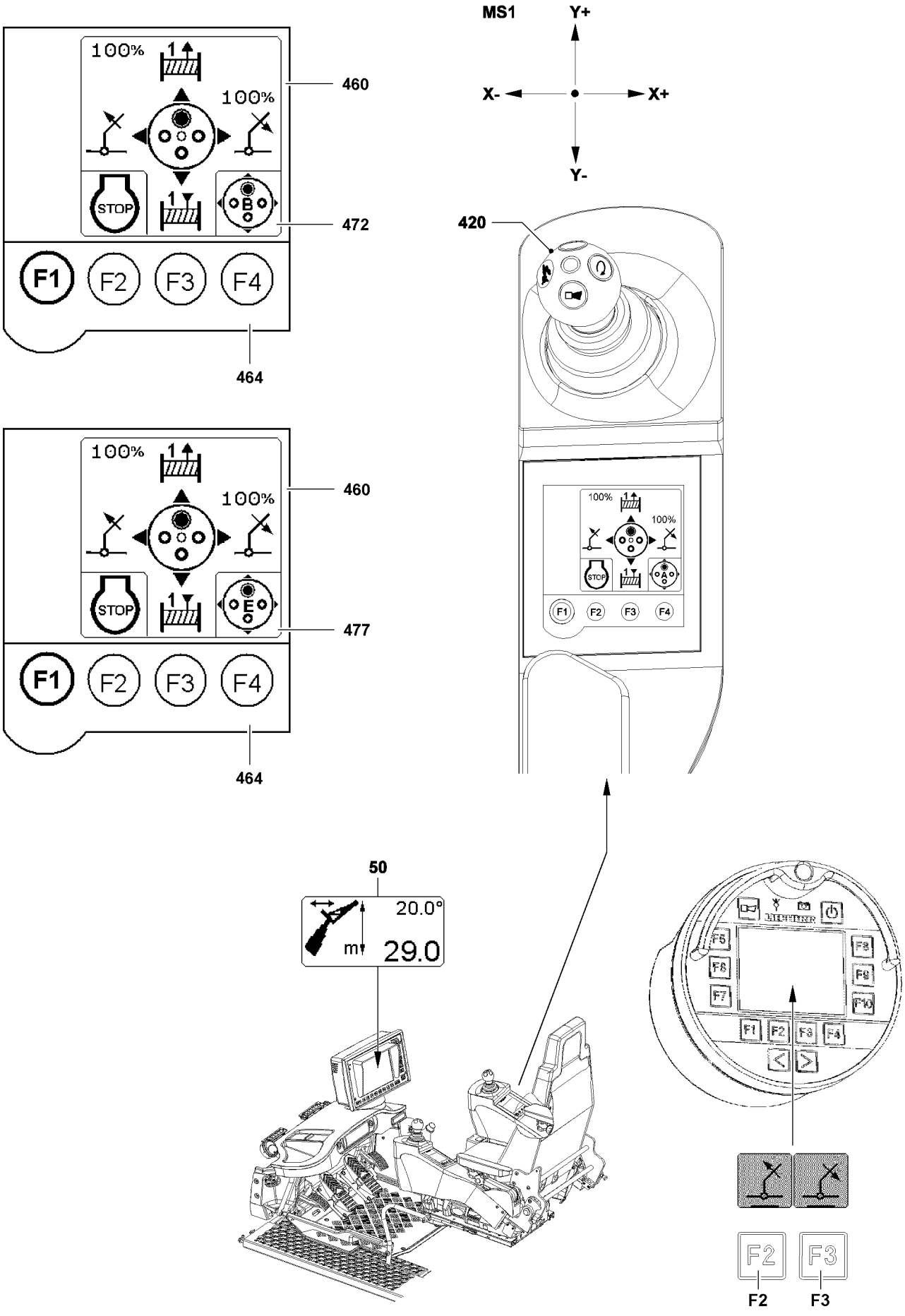

Fig.118300

LWE/LTR 1100-009/25105-02-02/en

copyright © Liebherr-Werk Ehingen GmbH 2023

10 Adjusting the folding jib angle hydraulically*

10.1 Folding jib with hydraulic* angle adjustment

The adjustment range of the folding jib lies between 0° and 40° to the telescopic boom. It is possible to luff the hydraulically adjustable folding jib under load.

DANGER
Danger of accident due to toppling crane!
The crane may topple if the maximum load is exceeded.
- ► The specifications in the load charts must be adhered to!
- ► The load charts for the hydraulically adjustable folding jib are only valid for angles of 0°, 20° and 40°!
- ► For the adjustment angles between the nominal angles of 0°, 20° and 40°, the maximum load will be determined by the LICCON computer system shown on the LICCON monitor.

Make sure that the following prerequisites are met:
- – All hydraulic connections have been made.
- – All electrical connections have been made.
- – The crane engine is running.
- – The operating mode **TNZK** has been set and confirmed on the LICCON computer system.

10.1.1 Angle indicator for the folding jib

The folding jib angle **50** is shown on the LICCON monitor as the relative angle between the telescopic boom pulley head and the folding jib.

10.1.2 Luffing with „hydraulic angle adjustment“

Make sure that the following prerequisites are met:
- – The right touch display **460** appears on the „Travel operation + Master switch configuration“ menu.
- – The master switch assignment „B“ **472** is active (for devices with one winch).
- – The master switch assignment „E“ **477** is active (for devices with two winches).

The folding jib angle adjustment can be made with a load.

If the folding jib is to be luffed down:
- ► Deflect the master switch **420** to the right in direction X+.

Result:

- – The hydraulic folding jib is luffed down.

If the folding jib is to be luffed up:
- ► Deflect the master switch **420** to the left in direction X-.

Result:

- – The hydraulic folding jib is luffed up.

Note
- ► Alternatively, hydraulic angle adjustment is possible with the BTT.
- ► The hydraulic folding jib can be luffed up with the function key **F2** or luffed down with the function key **F3**, see chapter 5.31, section „The assembly function on the BTT menu“.

LWE/LTR 1100-009/25105-02-02/en

copyright © Liebherr-Werk Ehingen GmbH 2023

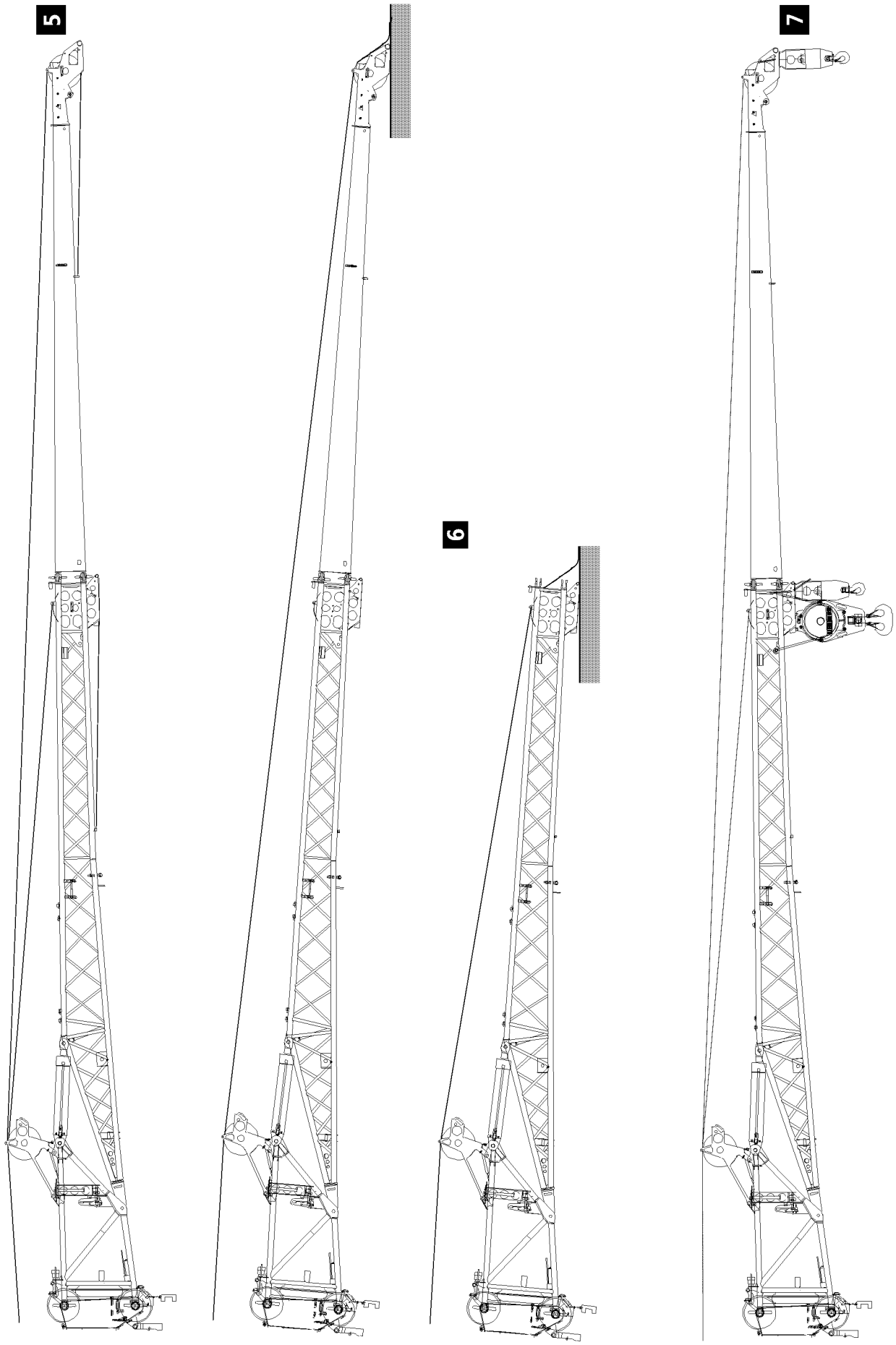

Fig.103279

LWE/LTR 1100-009/25105-02-02/en

copyright © Liebherr-Werk Ehingen GmbH 2023

11 Changing over the mechanical folding jib from 20° or 40° to 0°

DANGER
Danger of fatal injury!
If the following danger notes are not observed, fatal injuries can occur during assembly and change over work on the folding jib.
► No persons may remain within the danger zone of the crane.

There are 3 ways of changing the mechanical folding jib to 0°:
1. Changing the folding jib with the hoist rope, see illustration **5**.
   Only permitted for operation with the single folding jib and double folding jib.
2. Changing the folding jib by supporting it, see illustration **6**.
3. Changing the folding jib with the hook block or load hook, illustration **7**.

Note
► Changing with the load hook is only possible with a rope lock „without swivel“.
► With a rope lock „with swivel“, changing with load hook is not possible.

Make sure that the following prerequisites are met:
– The crane is properly supported and horizontally aligned.
– The telescopic boom is telescoped in all the way.
– The counterweight has been installed on the turntable according to the load chart.
– The central ballast is installed on the crane chassis according to the load chart.
– The folding jib is installed at an angle of 20° or 40°.
– The telescopic boom has been luffed to the rear or the side.

LWE/LTR 1100-009/25105-02-02/en

copyright © Liebherr-Werk Ehingen GmbH 2023

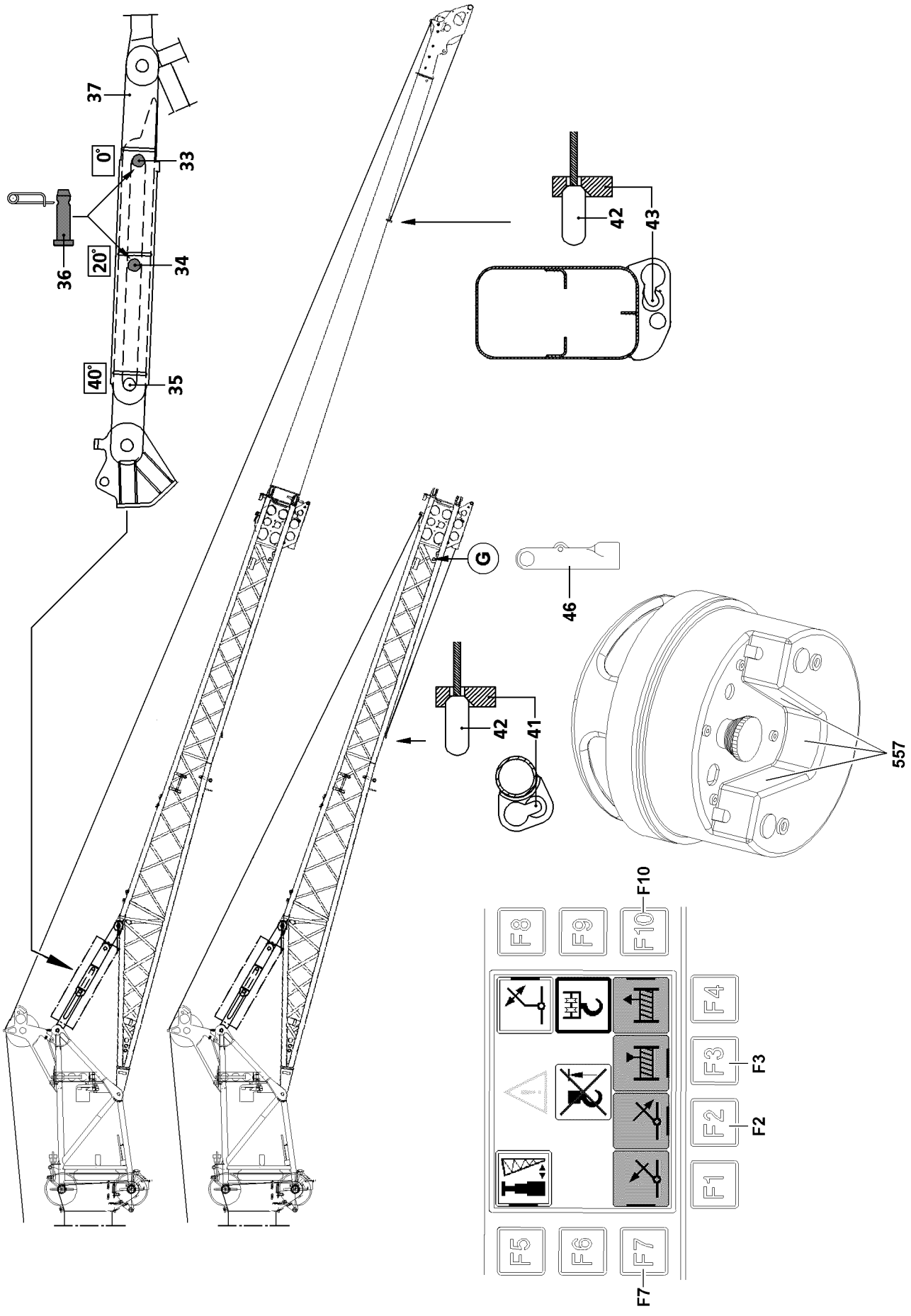

Fig.118539

LWE/LTR 1100-009/25105-02-02/en

copyright © Liebherr-Werk Ehingen GmbH 2023

11.1 Changing the folding jib with the hoist rope

WARNING
Danger of fatal injury during angle assembly via the BTT!
Due to jerky movements at angle installation of the folding jib with the hoist rope, the boom along with the folding jib can swing up. This can cause the folding jib to fold down uncontrolled!
Personnel can be severely injured or killed!
- ► All movements must be actuated with extreme sensitivity using the BTT!
- ► Make sure that there are no persons within the danger zone of the folding jib!

Note
- ► When changing the folding jib with the hook block or load hook via the BTT, the hoist limit switch is bypassed.

11.1.1 Preparatory work

- ► Luff the telescopic boom down until the hook block can be reeved out on the end section of the folding jib.
- ► Reeve out the hoist rope on the hook block.
- ► Disassemble the hoist limit switch weight.

CAUTION
Damage to the folding jib and the hoist rope!
If the telescopic boom is telescoped out or luffed down as long as the hoist rope is tightened on the assembly fixed point, the hoist rope can rip and the folding jib can be damaged.
- ► Do not telescope out or luff down the telescopic boom with the hoist rope attached in the assembly fixed point!

For operation with a double folding jib:
- ► Guide the locking clamp **42** into the assembly fixed point **43**.

or

For operation with a single folding jib:
Guide the locking clamp **42** into the assembly fixed point **41**.
- ► Tighten the hoist rope by **carefully moving** the corresponding manual control lever.

or

Tighten the hoist rope by actuating the 2-hand keypad **557** and the function key **F3**.

Note
- ► BTT, see chapter 5.31.

LWE/LTR 1100-009/25105-02-02/en

copyright © Liebherr-Werk Ehingen GmbH 2023

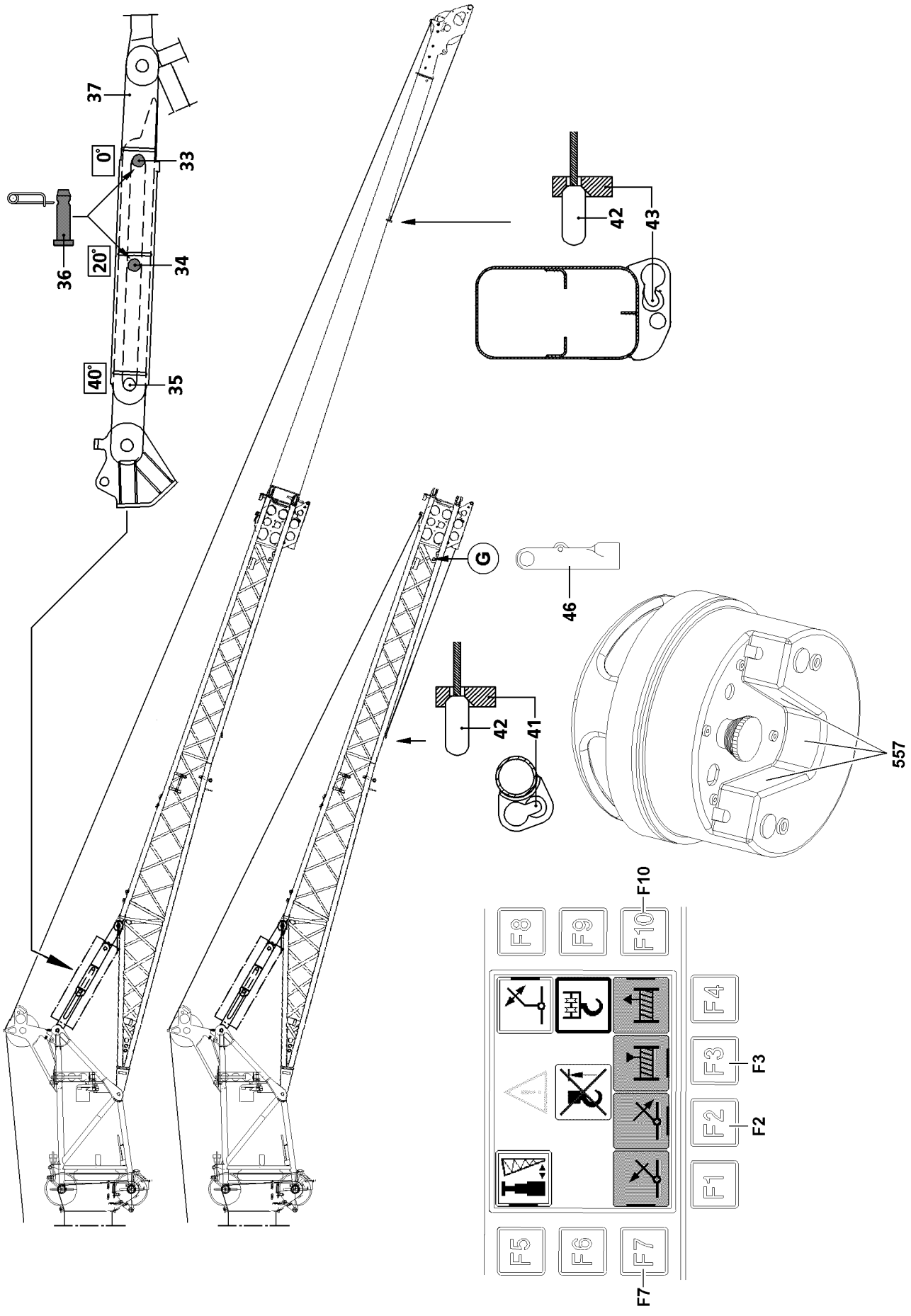

Fig.118539

LWE/LTR 1100-009/25105-02-02/en

copyright © Liebherr-Werk Ehingen GmbH 2023

11.1.2 Changing the angle with the hoist rope

CAUTION
Danger of damage to the folding jib and the hoist rope!
► As soon as the folding jib has reached the 0° position (stop at pull bracket), stop the „Lifting“ and „Luffing“ movement immediately.

► Luff the telescopic boom down and at the same time, spool the hoist rope up so that the pivot section of the folding jib is always held at the same height, approx. 1.0 m - 1.5 m above the ground, until the 0° position (stop on pull bracket) is reached.
or
Luff the telescopic boom down using the BTT by actuating the 2-hand keypad **557** and the function key **F2**. Spool up the hoist rope simultaneously with the function key **F3** so that the pivot section of the folding jib is always held at the same height, approx. 1.0 m to 1.5 m above the ground until the 0 ° „Stop on pull bracket“ position is reached.

Note
► BTT, see chapter 5.31.

DANGER
Danger of fatal injury!
Danger of fatal injury if the folding jib suddenly „folds downward“!
► Make sure that there are no persons in the danger zone of the folding jib.
► Make sure **before unpinning** the pin **36** that the hoist rope is tensioned and the folding jib is actually held by the hoist rope.
► Unpinning the retaining pin **35** in the 40° pin bores is **prohibited**.

► Release the pin **36** and unpin from the 20° bore **34 or** from the transport retainer.
► Insert the pin **36** into the 0° bore **33** and secure.
► Disconnect the hoist rope in the assembly fixed point.
► Install the rope lock **46** on point **G**.

LWE/LTR 1100-009/25105-02-02/en

copyright © Liebherr-Werk Ehingen GmbH 2023

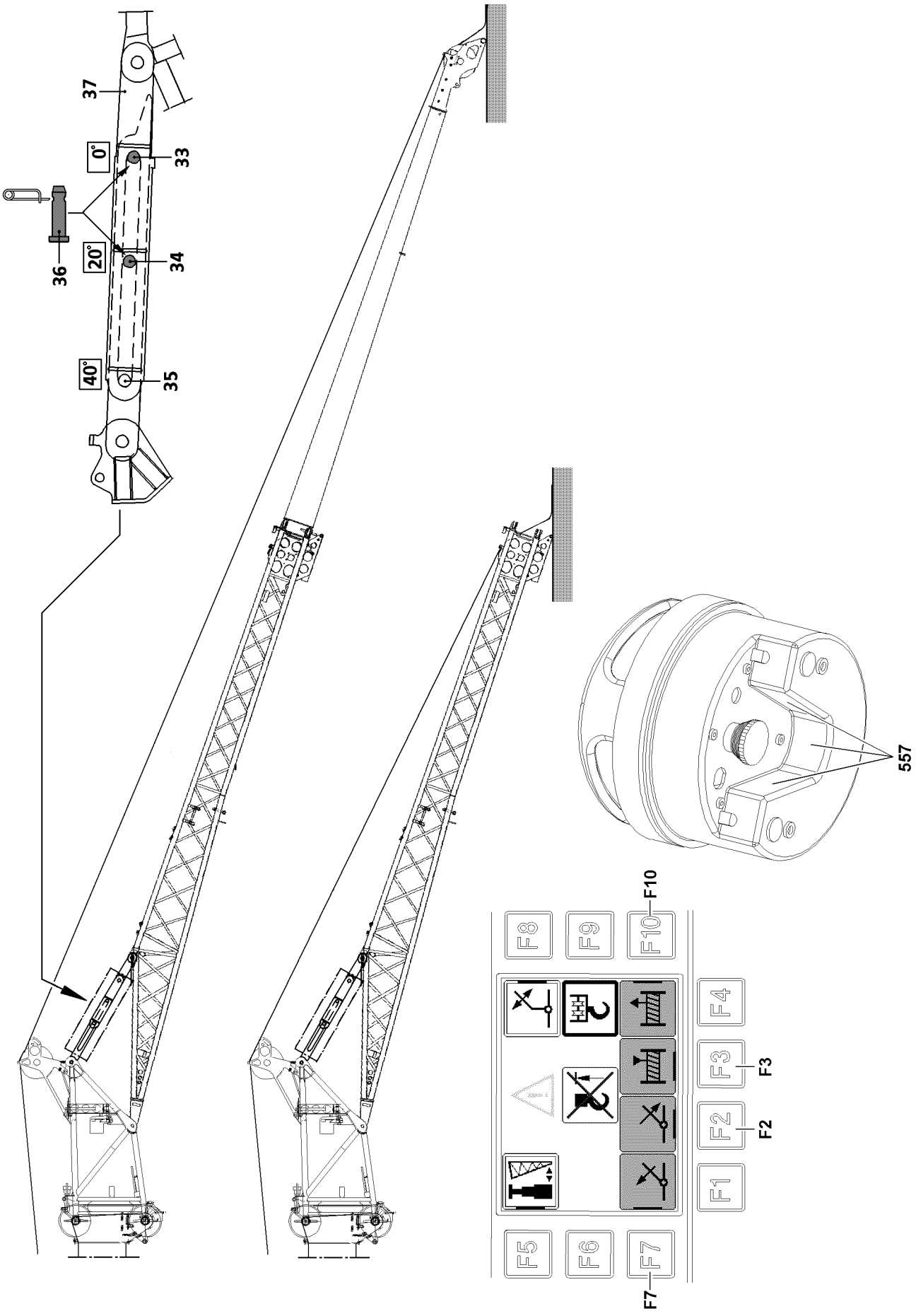

Fig.118540

LWE/LTR 1100-009/25105-02-02/en

copyright © Liebherr-Werk Ehingen GmbH 2023

11.2 Changing the folding jib by supporting it.

WARNING
Danger of fatal injury during angle assembly via the BTT!
- ► All movements must be actuated with extreme sensitivity using the BTT!
- ► Make sure that there are no persons within the danger zone of the folding jib!

Note
- ► When changing the folding jib with the hook block or load hook via the BTT, the hoist limit switch is bypassed.

- ► Luff the telescopic boom down via the master switch until the hook block can be reeved out.
- ► Remove the lock and the hoist limit switch weight.

CAUTION
Danger of property damage!
- ► When taking down the folding jib, make sure that the folding jib is **not** placed on the rope pulley. Otherwise it will be damaged. Also make sure that the hoist rope is **not** damaged.
- ► Make sure that the ground is firm and even, so that the folding jib does not sink into the ground when it is luffed down.

- ► Luff the telescopic boom down completely until the folding jib lies on the ground.
  or
  Luff the telescopic boom down completely by actuating the 2-hand keypad **557** and the function key **F2** on the BTT until the folding jib is lying on the ground.

Note
- ► BTT, see chapter 5.31.

- ► Continue to luff down the telescopic boom carefully until the 0° position (stop at pull bracket) is reached.

DANGER
Danger of fatal injury!
Danger of fatal injury if the folding jib suddenly „folds downward“!
- ► No persons may remain within the danger zone of the crane.
- ► Make sure, **before unpinning** the pin **36**, that the folding jib is lying on the ground or on a proper and secure substructure.
- ► Unpinning the retaining pin **35** in the 40° pin bores is **prohibited**.

- ► Release the pin **36** and unpin from the 20° bore **34 or** from the transport retainer.
- ► Insert the pin **36** into the 0° bore **33** and secure.

LWE/LTR 1100-009/25105-02-02/en

copyright © Liebherr-Werk Ehingen GmbH 2023

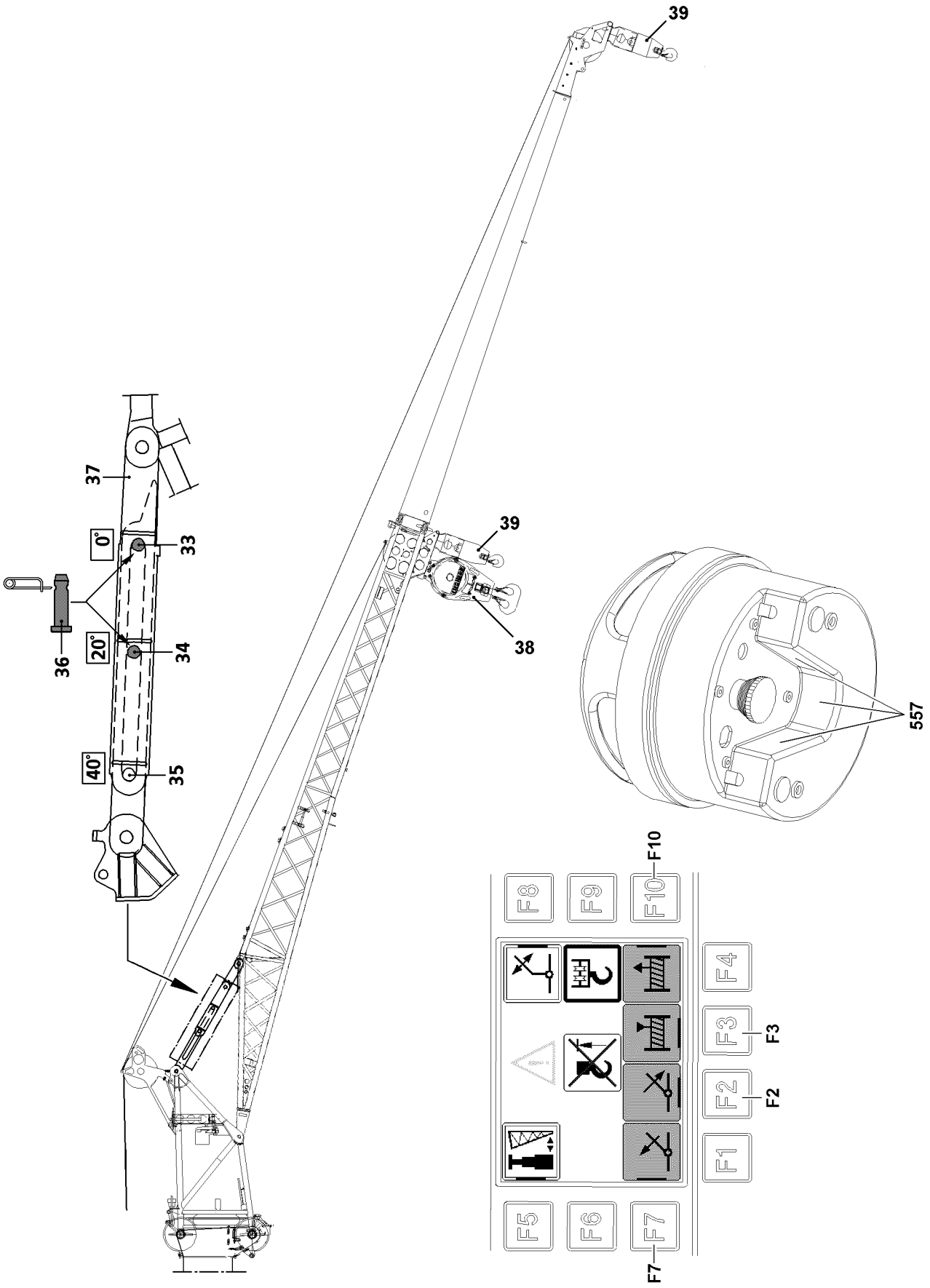

Fig.118541

LWE/LTR 1100-009/25105-02-02/en

copyright © Liebherr-Werk Ehingen GmbH 2023

11.3 Changing the folding jib with the hook block or load hook

Note

- ► The angle assembly with load hook is only possible with a rope lock „without a swivel“.
- ► With a rope lock „with swivel“, angle assembly with the load hook is not possible.

On a single folding jib, the angle assembly can be carried out with 1–roller (G = 460 kg) or 3–roller hook block **38** (G = 500 kg) or with load hook **39** (G = 250 kg).

On a double folding jib, the angle assembly may only be carried out with load hook **39** (W = 250 kg).

WARNING

Danger of fatal injury during angle assembly via the BTT!
Due to jerky movements during the angle assembly of the folding jib with the hook block or the load hook, the boom can swing up together with the folding jib. This can cause the folding jib to fold down uncontrolled!
Personnel can be severely injured or killed!

- ► All movements must be actuated with extreme sensitivity using the BTT!
- ► Make sure that there are no persons within the danger zone of the folding jib!

LWE/LTR 1100-009/25105-02-02/en

copyright © Liebherr-Werk Ehingen GmbH 2023

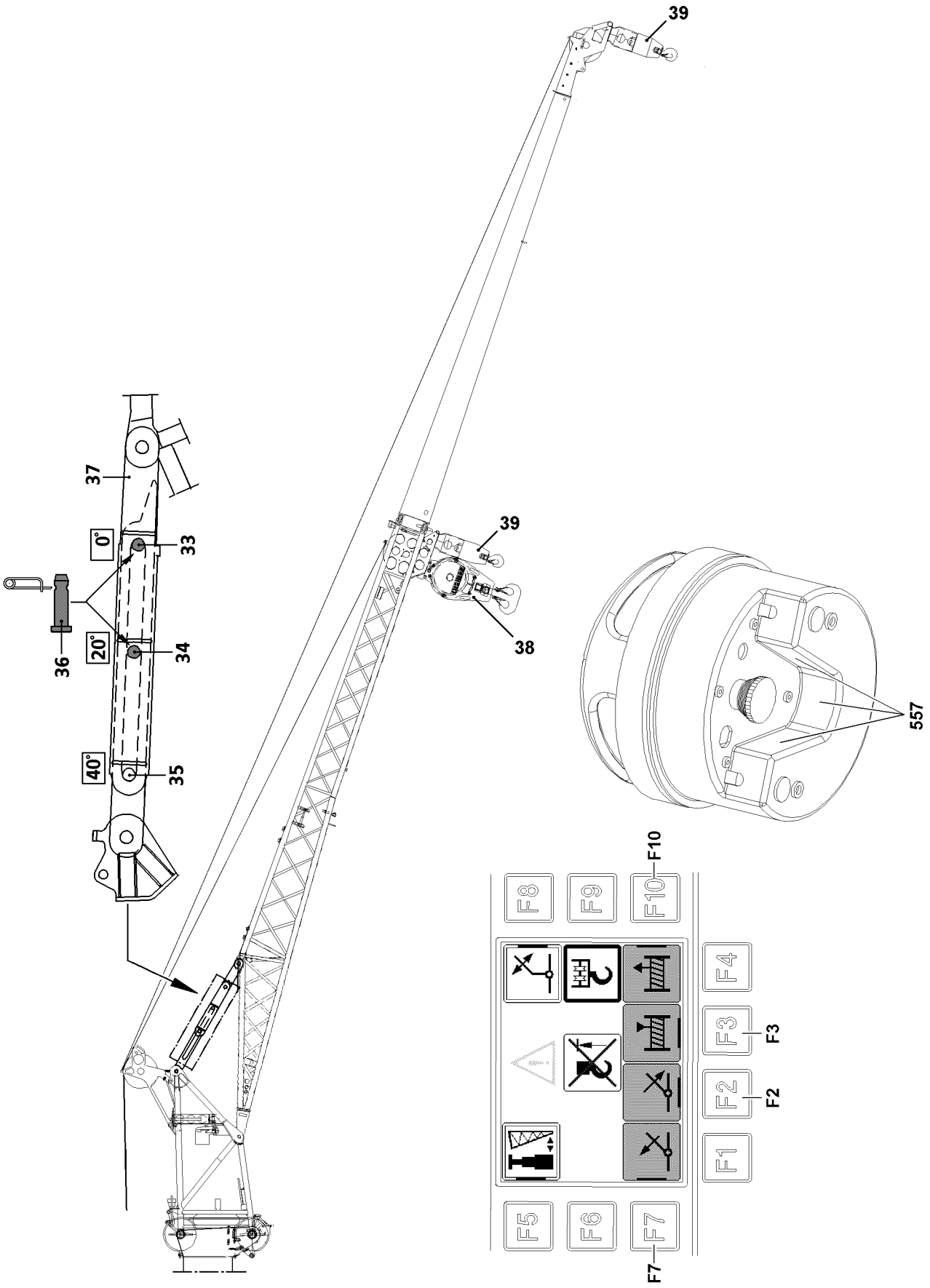

Fig.118541

LWE/LTR 1100-009/25105-02-02/en

copyright © Liebherr-Werk Ehingen GmbH 2023

11.3.1 Preparatory work

WARNING
Damage to the folding jib and the hoist rope!
► Do not telescope the telescopic boom out or luff it down as long as the hook block / load hook touches the stop on the folding jib.

► Remove the hoist limit switch weight with chain.
► Turn the bypass key button **D** on the LICCON monitor to the right and release it.

Result:

– The „hoist top shut-off“ is bypassed.

► Carefully deflect the corresponding master switch and run the hook block or load hook carefully to the stop of the folding jib and tension via the hoist gear.
or
By actuating the 2-hand keypad **557** and the function key **F3** on the BTT, move the hook block or the load hook carefully to the stop of the folding jib and tension it via the hoist gear.

WARNING
Danger of damage!
► As soon as the folding jib has reached the 0 ° stop, the „Lifting“ and „Luffing“ movement must be stopped immediately.

► Luff the telescopic boom down and at the same time, spool the hoist rope up so that the pivot section of the folding jib is always held at the same height, approx. 1.0 m to 1.5 m above the ground, until the 0 ° „stop on the pull bracket“ position is reached.
or
Luff the telescopic boom down using the BTT by actuating the 2-hand keypad **557** and the function key **F2**. Spool up the hoist rope simultaneously by pressing the function key **F3** so that the pivot section of the folding jib is always held at the same height, approx. 1.0 m to 1.5 m above the ground until the 0 ° „Stop on pull bracket“ position is reached.

Note
► BTT, see chapter 5.31.

11.3.2 Positioning the folding jib

► Release the pin **36** and unpin from the bore **34** or remove from the pin receptacle.
► Insert the pin **36** into the bore **33** and secure.
► Assemble the hoist limit switch weight and chain.
► Attach the hoist limit switch weight on the hoist rope.

LWE/LTR 1100-009/25105-02-02/en

copyright © Liebherr-Werk Ehingen GmbH 2023

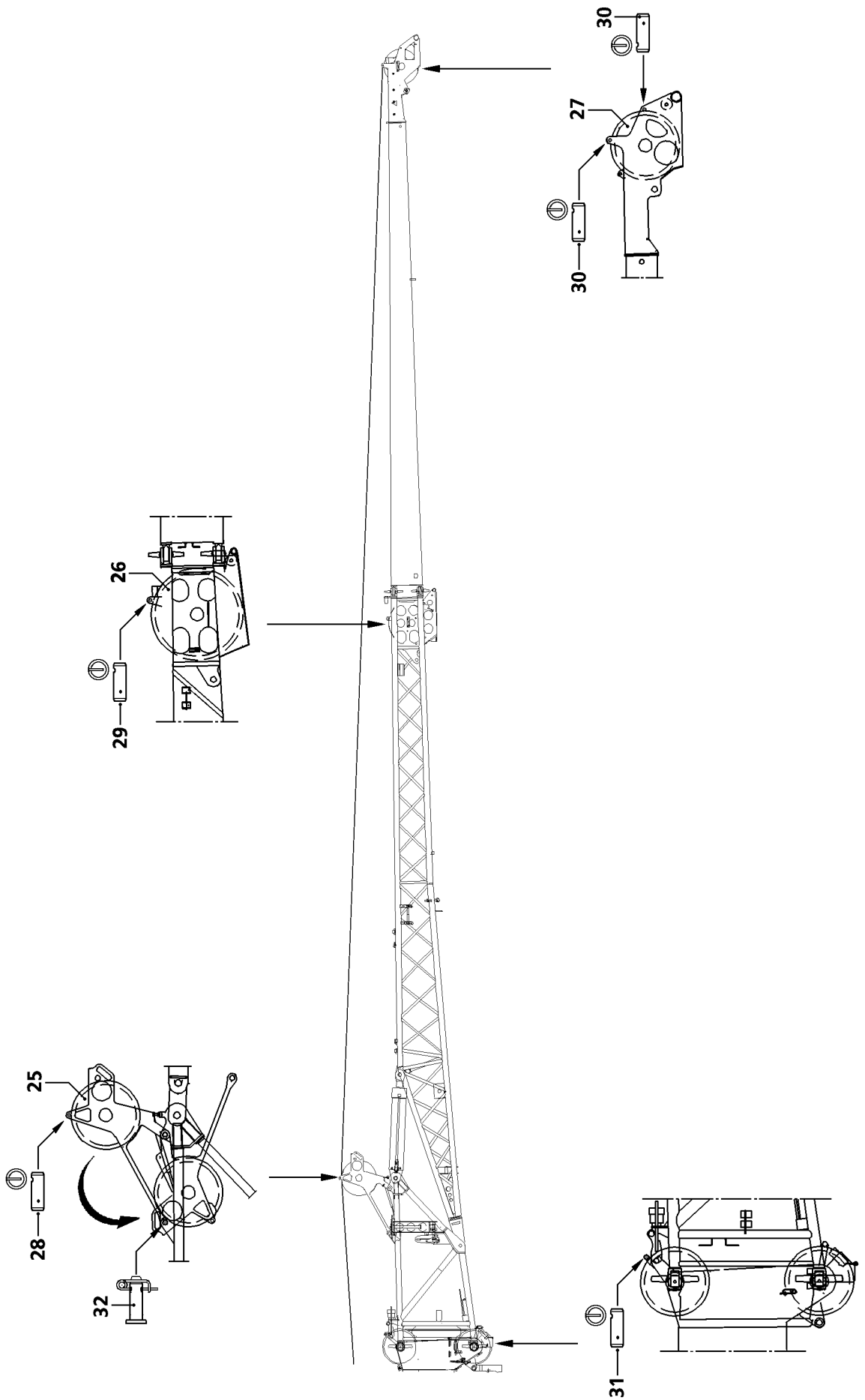

Fig.103283

LWE/LTR 1100-009/25105-02-02/en

copyright © Liebherr-Werk Ehingen GmbH 2023

12 Reeving the hoist rope out

DANGER
Danger of falling due to slipping!
When walking on the folding jib, for example to reeve the hoist rope in or out, there is a risk of slipping and falling from the folding jib.
► Do not step on the folding jib!

Make sure that the following prerequisites are met:

– The telescopic boom is telescoped in.
– The hook block / load hook has been placed on the ground.
– The hoist rope is detached from the rope fixed point.
– The hoist limit switch weight and the chain have been removed.

12.1 Unpinning / pinning the rope retaining pin

► Release and unpin the rope retaining pin **28** and rope retaining pin **29**.

For operation with a double folding jib:
► Release and unpin the rope retaining pin **30**.
► Spool the hoist rope up.
► Reinsert the rope retaining pin **28**, rope retaining pin **29** and rope retaining pin **30** and secure with locking pins.

12.2 Swinging the rope guide pulley into the transport position

► Release and unpin the pin **32**.
► Swing the rope guide pulley **25** into the transport position.
► Pin and secure the rope guide pulley **25** with the pin **32** and secure.

LWE/LTR 1100-009/25105-02-02/en

copyright © Liebherr-Werk Ehingen GmbH 2023

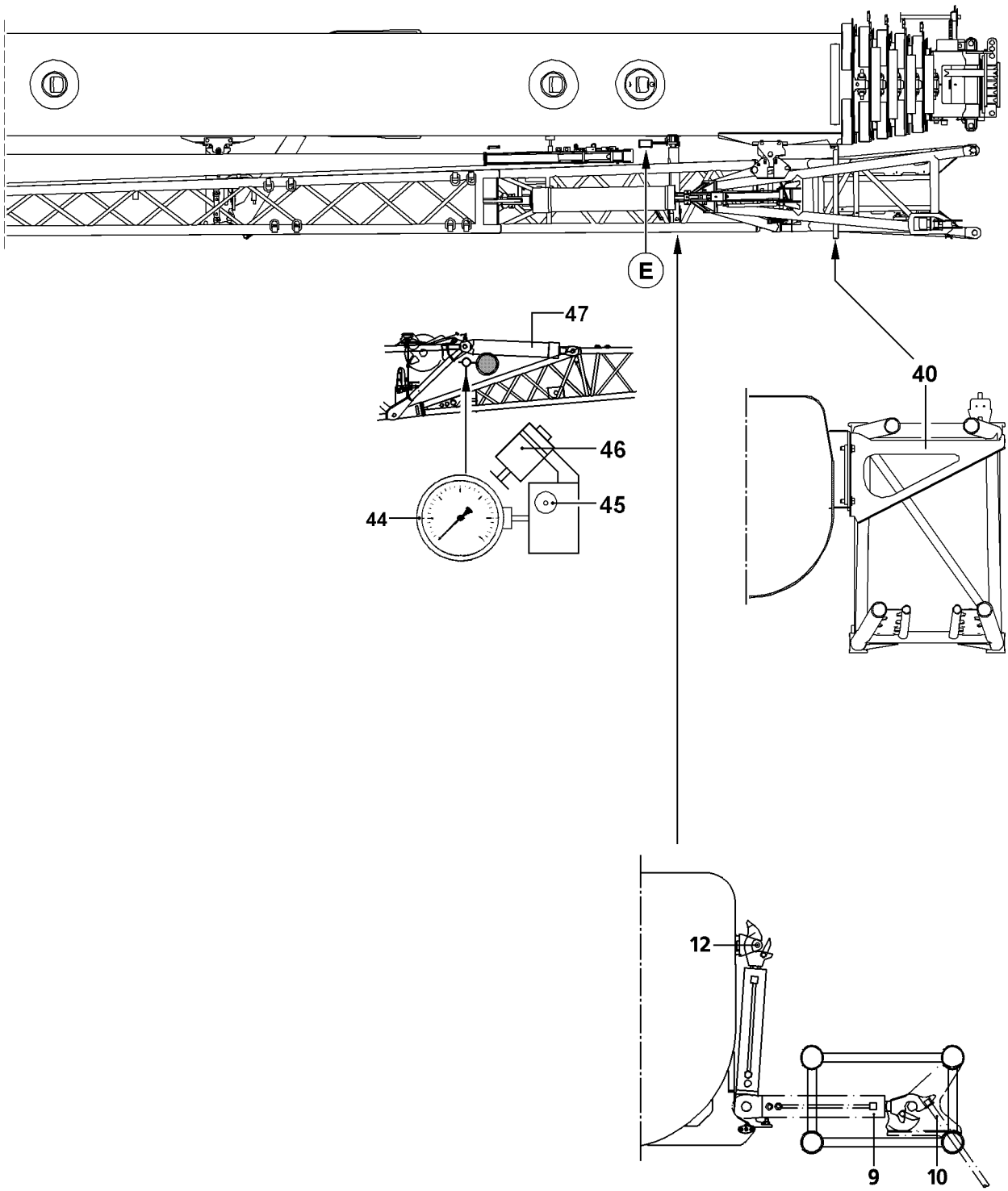

LWE/LTR 1100-009/25105-02-02/en

Fig.103057

copyright © Liebherr-Werk Ehingen GmbH 2023

13 Disassembling the folding jib

13.1 General

DANGER
Danger of fatal injury due to falling folding jib!
The folding jib could fall down due to a disassembly error.
► Standing under the folding jib during the swing procedure is prohibited!
► Is it prohibited to stand in the slewing range or in the folding area of the folding jib!
► The folding jib must be secured with an auxiliary rope during the swing procedure!

WARNING
Danger of falling!
During assembly and disassembly, assembly personnel must be secured with appropriate aids to prevent them from falling! If this is not observed, assembly personnel could fall and suffer fatal injuries!
► All work at a height, when there is a danger of falling, must be carried out with suitable aids!
► If fall protection equipment is available, then it must be used, see chapter 2.06!
► If aids are not available and work cannot be carried out from the ground, then the assembly personnel must secure themselves with the supplied fall arrest system to prevent falling, see chapter 2.04!
► The supplied fall arrest system must be fastened in the fastening and hook points as well as to the safety ropes. For safety points, see chapter 2.06!
► When lifting, lowering, swinging crane parts in and out, no persons may remain in the danger zone!
► Only step on the aids, ladders and catwalks with clean shoes!
► Keep aids, ladders and catwalks free of heavy dirt, snow and ice!

Make sure that the following prerequisites are met:
– The crane is properly supported and horizontally aligned.
– The counterweight has been installed on the turntable according to the load chart.
– The central ballast is installed on the crane chassis according to the load chart.
– The telescopic boom is fully telescoped in.
– The folding jib is in the 0° position.
– The electrical / hydraulic connections on the folding jib have been released.
– The rope guide pulley has been folded from the operating position into the transport position.
– The telescopic boom has been luffed down to the rear or to the side in the 0° position.

DANGER
Danger of accident if the folding jib swings out by itself when it is unpinned!
The telescopic boom must be in 0° position, otherwise there is a danger of accident if the folding jib swings out by itself when it is unpinned.
► Move the telescopic boom to the 0° position.

LWE/LTR 1100-009/25105-02-02/en

copyright © Liebherr-Werk Ehingen GmbH 2023

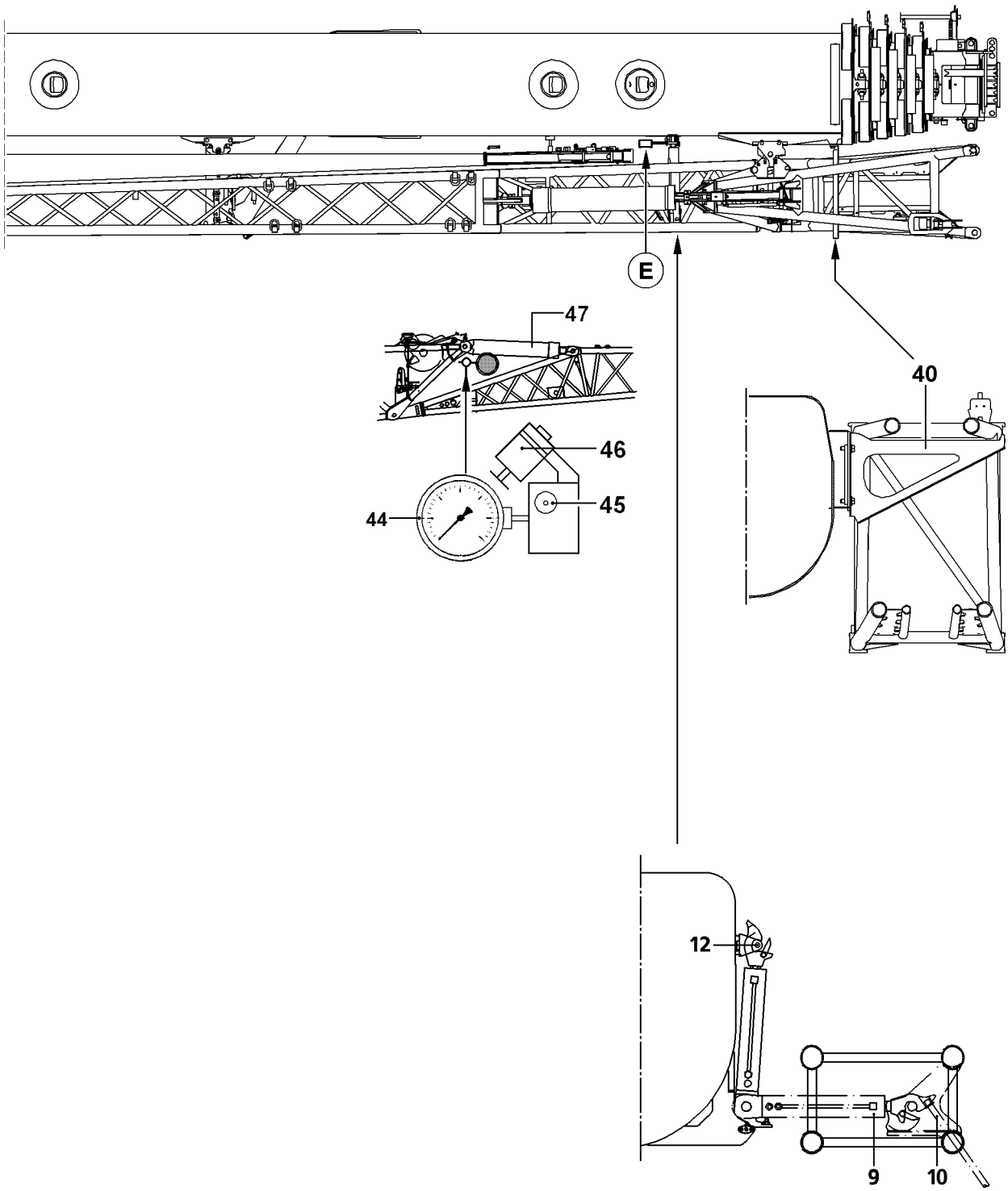

LWE/LTR 1100-009/25105-02-02/en

Fig.103057

copyright © Liebherr-Werk Ehingen GmbH 2023

13.2 Preparatory work before swinging in hydraulic folding jibs

Prior to swinging in the hydraulic folding jib*, the folding jib must be completely luffed up and held on block for approximately 15 seconds. This causes the hydraulic reservoir to fill.

For operation with a hydraulic folding jib:

► Luff the folding jib up and drive to the block.

Result:

– The pressure gauge **44** then must show 200 to 250 bar.

LWE/LTR 1100-009/25105-02-02/en

copyright © Liebherr-Werk Ehingen GmbH 2023

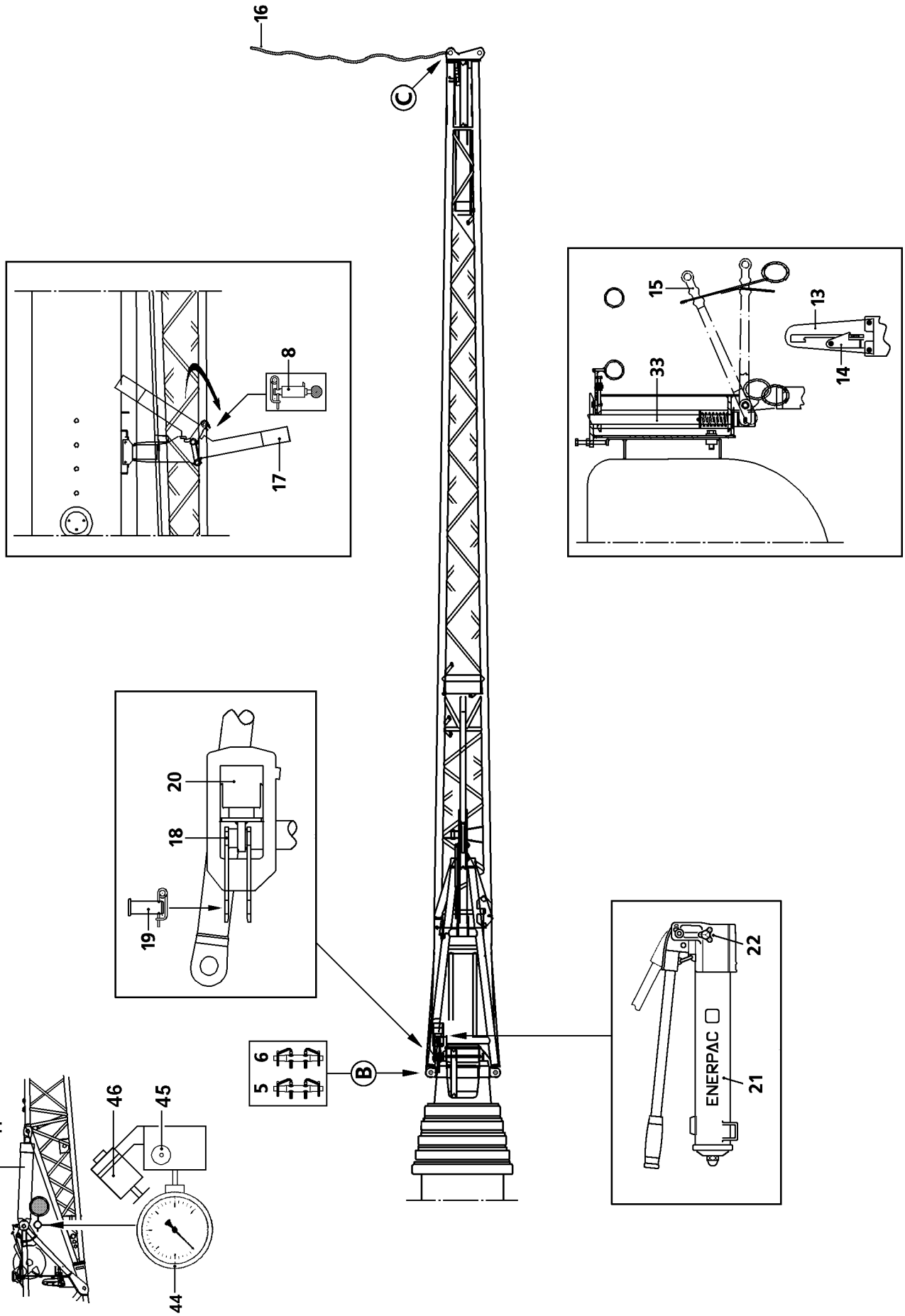

Fig.199427

LWE/LTR 1100-009/25105-02-02/en

copyright © Liebherr-Werk Ehingen GmbH 2023

13.3 Disassembling the single folding jib carried along on the crane

- ► Disengage the lever **15** with the assembly rod from the link **13** and pull it down.
- ► Attach the auxiliary rope **16** in point **C**.

When swinging the folding jib support **17** in and out, ensure that the spring pin **8** is unlocked with one hand and that the folding jib support **17** is moved overhead with the other hand.

- ► Release and unpin the spring pin **8**.
- ► Swing the folding jib support **17** out until the spring pin **8** engages again.

In order to unpin on top in point **B**, the hydraulic / mechanical assembly aid **20** must be used.

- ► Close the knob **22** on the hand pump **21**.
- ► Extend the hydraulic cylinder of the assembly aid **20** by operating the hand pump **21** until the pin **6** can be unpinned.
- ► Release and unpin the pin **6** at the top.
- ► Open the knob **22** on the hand pump **21**.

Result:

– The hydraulic cylinder of the assembly aid **20** returns to the starting position.

- ► Unpin the pin **19** and insert it into the bore **18** and secure.

DANGER
The folding jib can swing out inadvertently!
When removing the pin **5**, the folding jib can swing out inadvertently.

In order to prevent the folding jib from swinging out by itself:
- ► Hold the folding jib with the auxiliary rope!
- ► Do not lean the ladder against the folding jib!

- ► Release the pin **5** on the bottom and unpin.

LWE/LTR 1100-009/25105-02-02/en

copyright © Liebherr-Werk Ehingen GmbH 2023

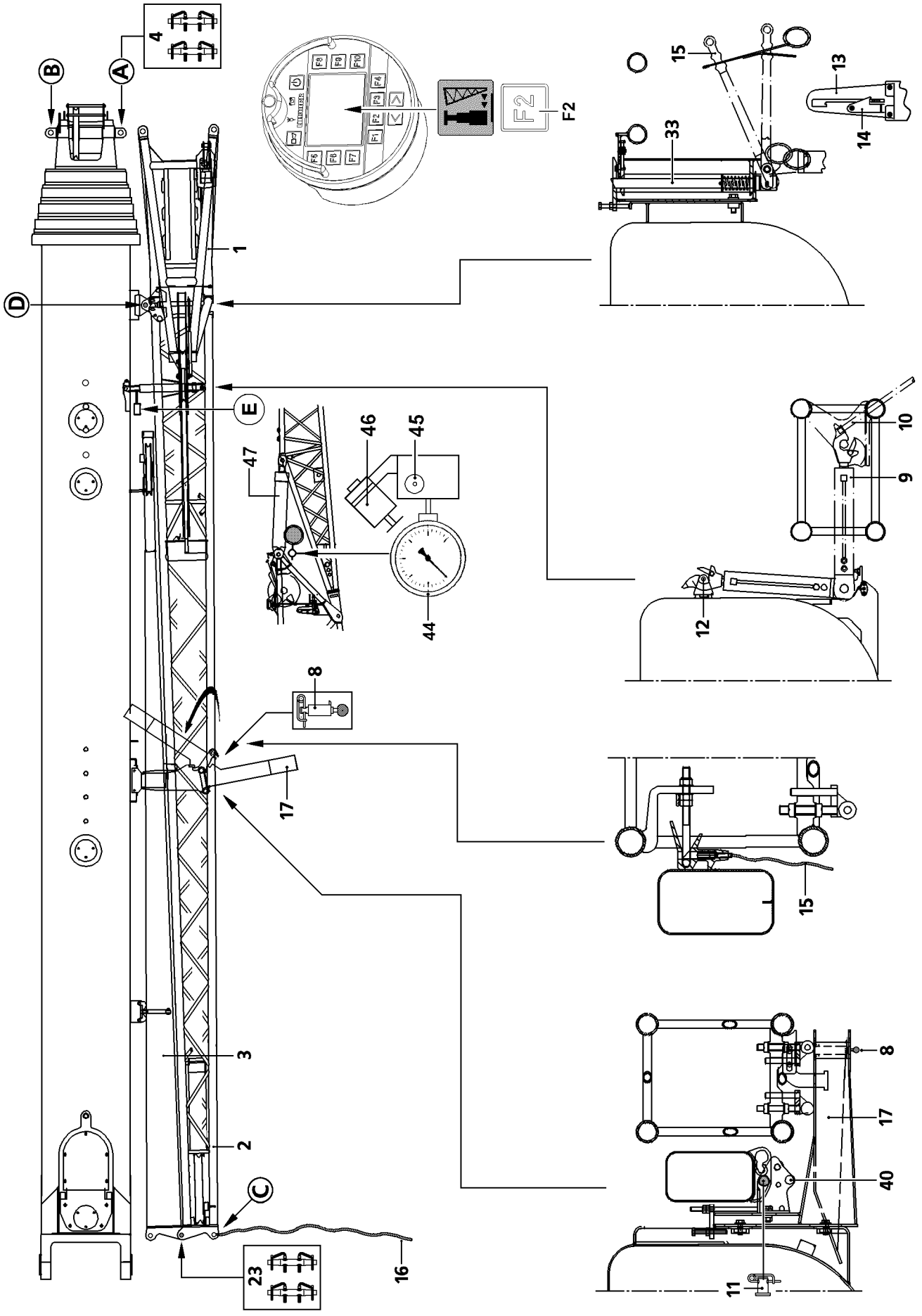

Fig.108695

LWE/LTR 1100-009/25105-02-02/en

copyright © Liebherr-Werk Ehingen GmbH 2023

DANGER
Danger of fatal injury due to falling folding jib!
The folding jib could fall down due to a disassembly error.
► Standing under the folding jib during the swing procedure is prohibited!
► Is it prohibited to stand in the slewing range or in the folding area of the folding jib!

► Swing the folding jib back until the swing cylinder **9** is locked with the folding jib.
► Start the crane engine.
► Press the function key **F2** on the BTT and swing the folding jib in with the swing cylinder until the lock **33** engages audibly.
► Check if the lock **33** is engaged properly.

DANGER
Danger of fatal injury when unpinning the pins **4**!
If the pins **4** are unpinned before the lock **33** has engaged, then the folding jib will fall down and could cause fatal injury to assembly personnel.
► The pins **4** may not be unpinned until the lock **33** has engaged and the hand lever **16** has been secured with the retaining bracket **15**.

► Secure the hand lever **15** with the retaining bracket **14**.
► Release the pin **4** in point **A**, unpin and insert it into the transport retainer.
► Press the function key **F2** on the BTT and swing the folding jib in all the way with the swing cylinder.

Result:

– When carrying the double folding jib along, the pivot section **2** is locked with the end section **3**.

If a double folding jib is carried along:
► Insert and secure the pin **23**.

When swinging the folding jib support **17** in and out, ensure that the spring pin **8** is unlocked with one hand and that the folding jib support **17** is moved overhead with the other hand.

► Unpin the spring pin **8** and swing in the folding jib support **17** until the spring pin **8** engages.
► Secure the spring pin **8**.

If a hydraulic folding jib is carried along:
► Connect the hydraulic line to the hydraulic cylinder **47** in point **E**.
► Remove the auxiliary rope **16**.

In the case of hydraulic folding jibs, an overflow tank is installed on the hydraulic cylinder. The overflow tank must be emptied when it is full. Even if the folding jib is not transported on the crane.

For operation with a hydraulic folding jib:
► Empty the overflow tank on the hydraulic cylinder.

LWE/LTR 1100-009/25105-02-02/en

copyright © Liebherr-Werk Ehingen GmbH 2023

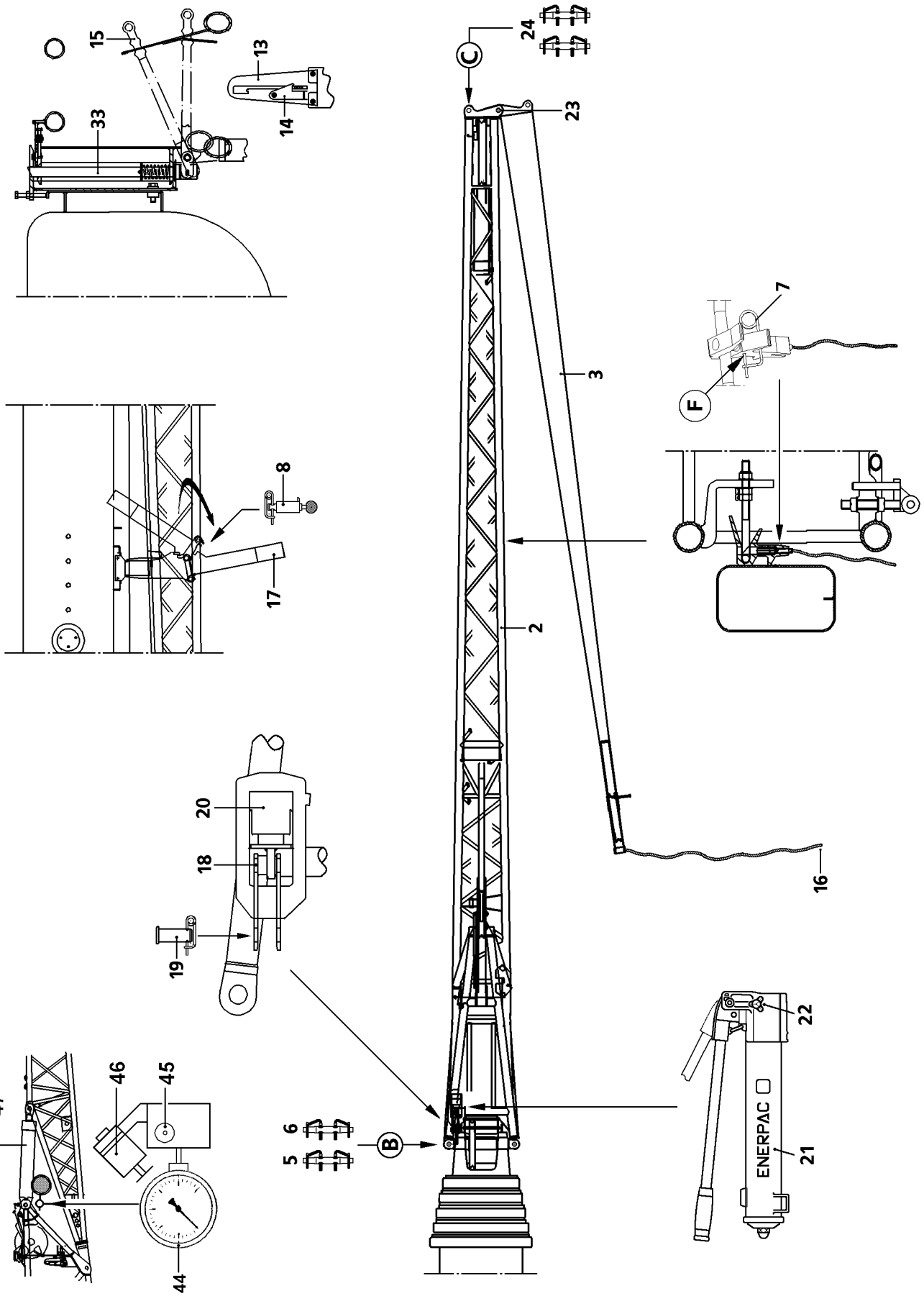

Fig.103415

LWE/LTR 1100-009/25105-02-02/en

copyright © Liebherr-Werk Ehingen GmbH 2023

13.4 Disassembling the double folding jib carried on the crane

13.4.1 Disassembling the end section

► Attach the auxiliary rope **16** to the end section.

DANGER
The folding jib can swing out inadvertently!
When removing the pins **24**, the folding jib may swing out inadvertently.

In order to prevent the folding jib from swinging out by itself:
► Hold the folding jib with the auxiliary rope!
► Do not lean the ladder against the end section **3**!

► Release and unpin the pin **24**.

DANGER
Danger of fatal injury due to falling folding jib!
The folding jib could fall down due to a disassembly error.
► Standing under the folding jib during the swing procedure is prohibited!
► Is it prohibited to stand in the slewing range or in the folding area of the folding jib!
► The pins **23** must remain pinned.

► Swing the end section **3** in until the end section **3** is locked with the pivot section **2**.

DANGER
The end section can swing out inadvertently!
To prevent the lock between the end section **3** and the pivot section **2** from opening inadvertently, the spring retainer **7** must also be inserted in point **F**.
► Insert the spring retainer **7** in point **F**.

► Check if the end section **3** and the pivot section **2** are properly locked.
► Remove the auxiliary rope **16** from the end section **3** and attach it in point **C**.
► Disengage the lever **15** with the assembly rod from the link **13** and pull it down.

When swinging the folding jib support **17** in and out, ensure that the spring pin **8** is unlocked with one hand and that the folding jib support **17** is moved overhead with the other hand.

► Release and unpin the spring pin **8**.
► Swing the folding jib support **17** out until the spring pin **8** engages again.

LWE/LTR 1100-009/25105-02-02/en

copyright © Liebherr-Werk Ehingen GmbH 2023

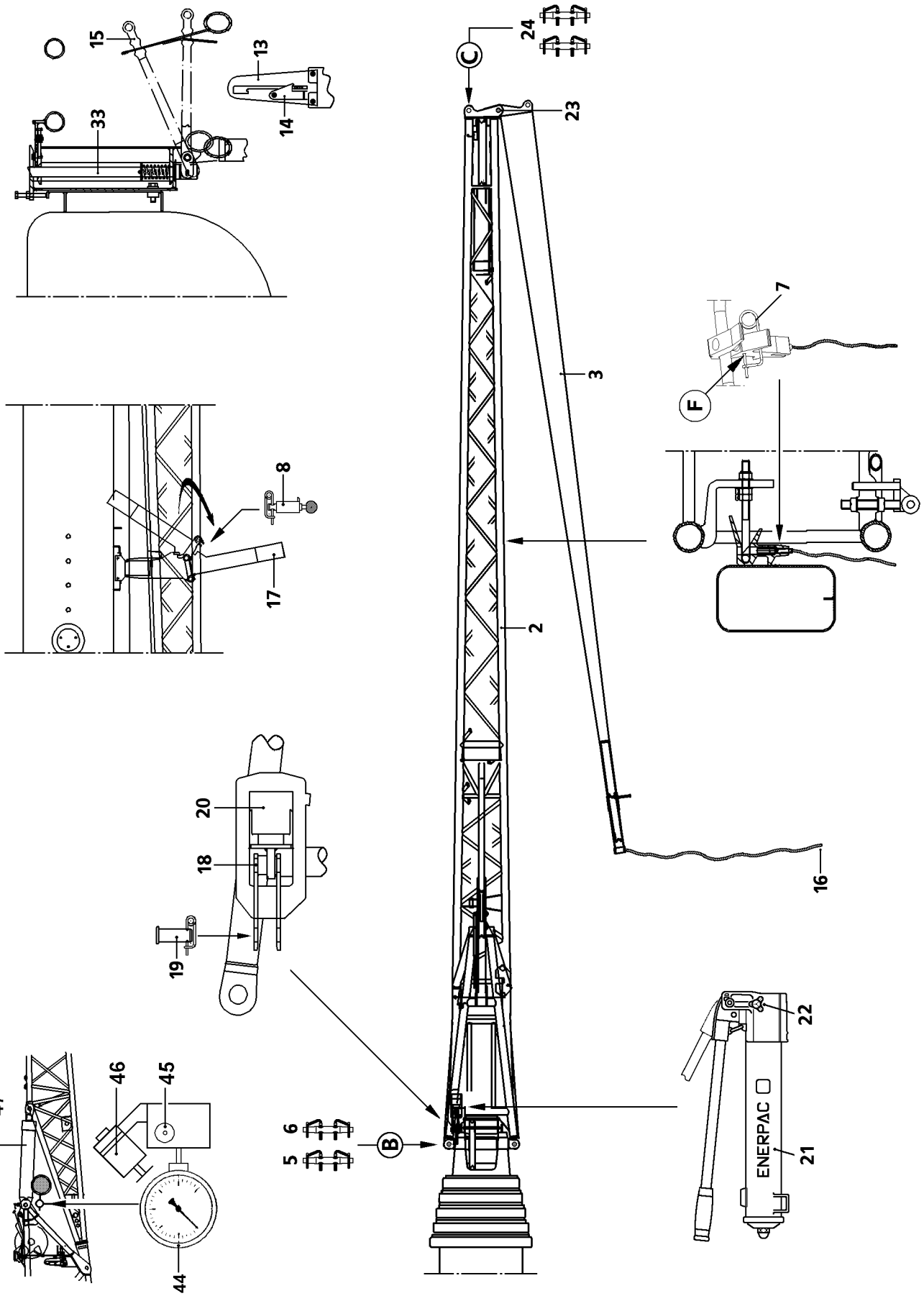

Fig.103415

LWE/LTR 1100-009/25105-02-02/en

copyright © Liebherr-Werk Ehingen GmbH 2023

13.4.2 Disassembling the pivot section

In order to unpin on top in point **B**, the hydraulic / mechanical assembly aid **20** must be used.

- ► Close the knob **22** on the hand pump **21**.
- ► Extend the hydraulic cylinder of the assembly aid **20** by operating the hand pump **21** until the pin **6** can be unpinned.
- ► Release and unpin the pin **6** at the top.
- ► Open the knob **22** on the hand pump **21**.

Result:

– The hydraulic cylinder of the assembly aid **20** returns to the starting position.

► Unpin the pin **19** and insert it into the bore **18** and secure.

DANGER
The folding jib can swing out inadvertently!
When removing the pin **5**, the folding jib can swing out inadvertently.

In order to prevent the folding jib from swinging out by itself:
- ► Hold the folding jib with the auxiliary rope!
- ► Do not lean the ladder against the folding jib!

► Release the pin **5** on the bottom and unpin.

LWE/LTR 1100-009/25105-02-02/en

copyright © Liebherr-Werk Ehingen GmbH 2023

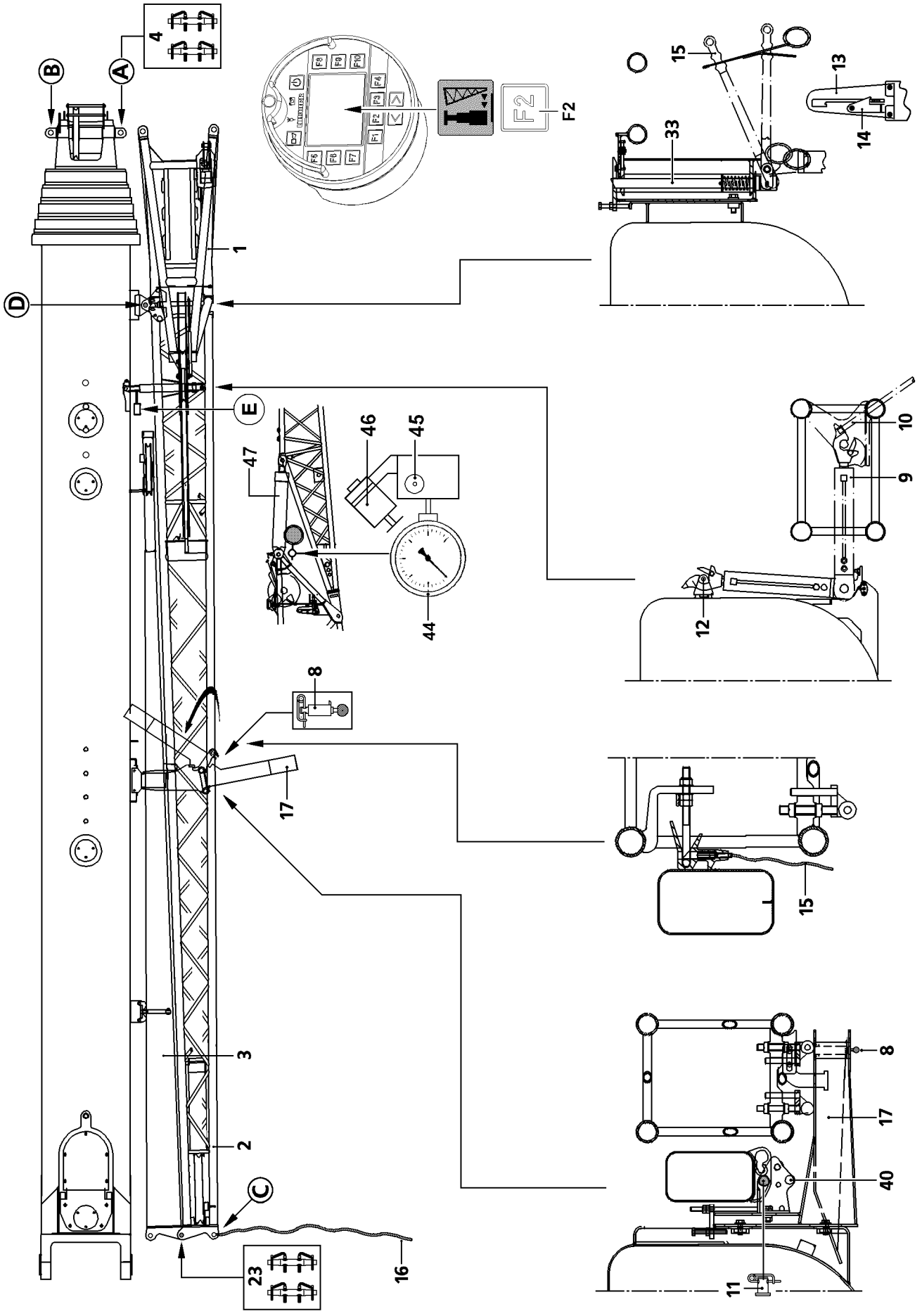

Fig.108695

LWE/LTR 1100-009/25105-02-02/en

copyright © Liebherr-Werk Ehingen GmbH 2023

DANGER
Danger of fatal injury due to falling folding jib!
The folding jib could fall down due to a disassembly error.
► Standing under the folding jib during the swing procedure is prohibited!
► Is it prohibited to stand in the slewing range or in the folding area of the folding jib!

► Swing the folding jib back until the swing cylinder **9** is locked with the folding jib.
► Start the crane engine.
► Press the function key **F2** on the BTT and swing the folding jib in with the swing cylinder until the lock **33** engages audibly.
► Check if the lock **33** is engaged properly.

DANGER
Danger of fatal injury when unpinning the pins **4**!
If the pins **4** are unpinned before the lock **33** has engaged, then the folding jib will fall down and could cause fatal injury to assembly personnel.
► The pins **4** may not be unpinned until the lock **33** has engaged and the hand lever **16** has been secured with the retaining bracket **15**.

► Secure the hand lever **15** with the retaining bracket **14**.
► Release the pin **4** in point **A**, unpin and insert it into the transport retainer.
► Press the function key **F2** on the BTT and swing the folding jib in all the way with the swing cylinder.
► Unpin the pin **11** from the bore **40**, pin the folding jib with the pin **11** and secure.

When swinging the folding jib support **17** in and out, ensure that the spring pin **8** is unlocked with one hand and that the folding jib support **17** is moved overhead with the other hand.

► Unpin the spring pin **8** and swing in the folding jib support **17** until the spring pin **8** engages.
► Secure the spring pin **8**.

If a hydraulic folding jib is carried along:
► Connect the hydraulic line to the hydraulic cylinder **47** in point **E**.
► Remove the auxiliary rope **16**.

In the case of hydraulic folding jibs, an overflow tank is installed on the hydraulic cylinder. The overflow tank must be emptied when it is full. Even if the folding jib is not transported on the crane.

For operation with a hydraulic folding jib:
► Empty the overflow tank on the hydraulic cylinder.

LWE/LTR 1100-009/25105-02-02/en

copyright © Liebherr-Werk Ehingen GmbH 2023

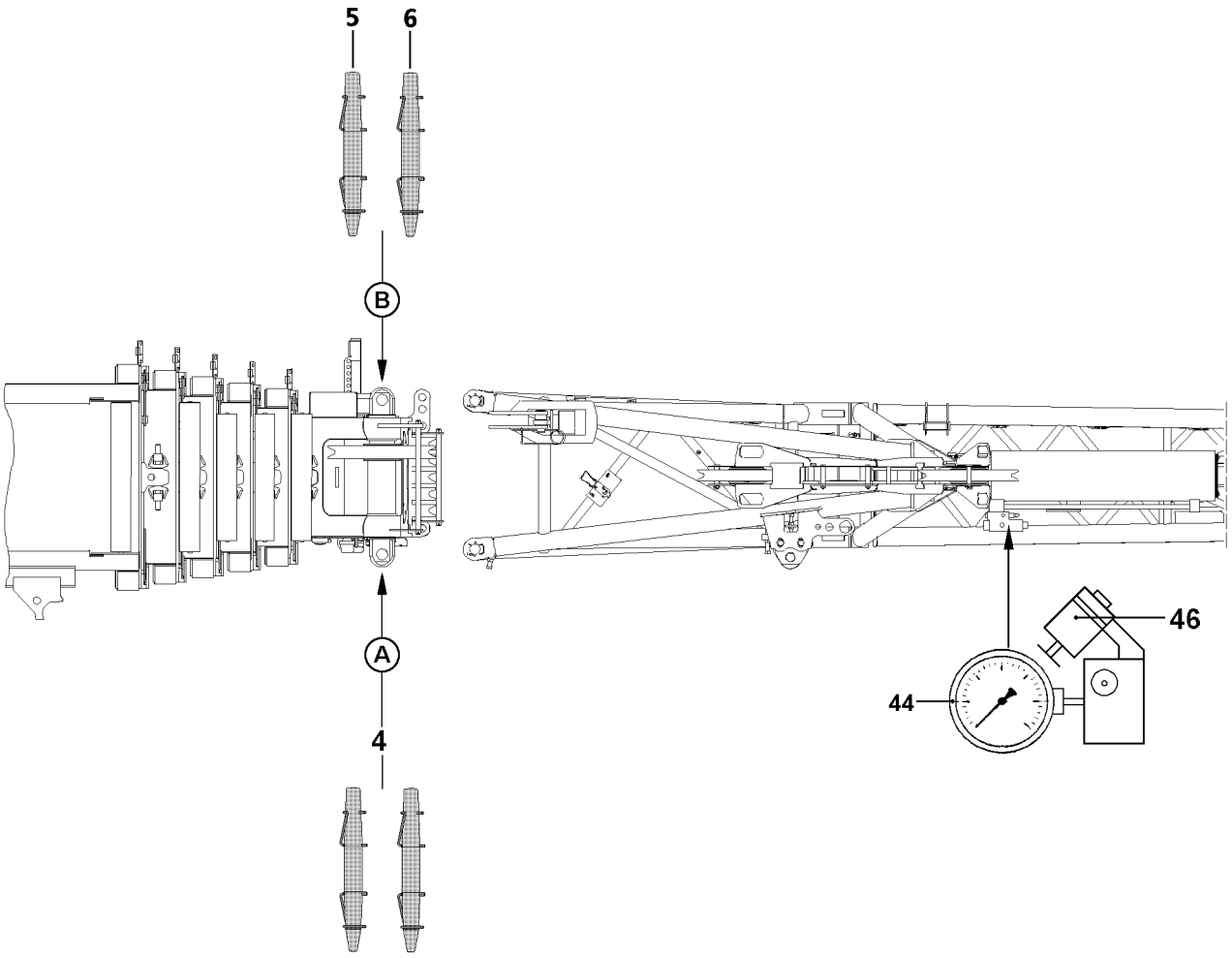

LWE/LTR 1100-009/25105-02-02/en

Fig.103467

copyright © Liebherr-Werk Ehingen GmbH 2023

13.5 Disassembling the separately transported folding jib

Make sure that the following prerequisite is met:
– The end section is locked with the pivot section.
See section „Disassembling the end section“.

DANGER
Danger of accident due to incorrect fastening!
Life-threatening situations can arise if the folding jib is improperly or incorrectly fastened!
► Fasten the folding jib according to the fastening points shown on the signs!
► The folding jib may **not** be fastened to the auxiliary crane in the folded out position!
► Do **not** attach the pivot section and the end section separately and also **not** together!

For a description of the fastening points, see the section „Fastening points“.

► Fasten the auxiliary crane to the respective fastening points of the folding jib.

DANGER
Danger of accident when disassembling the folding jib!
If the following conditions are not met, then assembly personnel can be fatally injured during disassembly.
► When knocking out the pins, no one may remain under the folding jib!
► Fasten the auxiliary crane so that angular pull does not occur!
► Only lift a weight with the auxiliary crane that corresponds to the weight of the folding jib that is being removed!
► The folding jib can suddenly release due to tension!
► Do not remove folding jib until it has been secured with the auxiliary crane to prevent it from falling!
► Do not lean the ladder against the folding jib!

► Tighten the fastening ropes until the folding jib is secured to prevent it from falling.
► Unpin the folding jib from the telescopic boom:
► Release and unpin the pin **4** at the top in point **A**.
► Release and unpin the pin **5** at the top in point **B**.
► Release and unpin the pin **4** at the bottom in point **A**.
► Release and unpin the pin **6** at the bottom in point **B**.
► Take the folding jib down onto the transport vehicle.

In the case of hydraulic folding jibs, an overflow tank **46** is installed on the hydraulic cylinder. The overflow tank **46** must be emptied when it is full. Even if the folding jib is not transported on the crane.

For operation with a hydraulic folding jib:
► Empty the overflow tank **46** on the hydraulic cylinder.

LWE/LTR 1100-009/25105-02-02/en

copyright © Liebherr-Werk Ehingen GmbH 2023

Empty page!

LWE/LTR 1100-009/25105-02-02/en

copyright © Liebherr-Werk Ehingen GmbH 2023

5.09 Hoist gear 2

1	Safety	2
2	Component description	5
3	Assembling	7
4	Disassembling	9

LWE/LTR 1100-009/25105-02-02/en

copyright © Liebherr-Werk Ehingen GmbH 2023

1 Safety

Observe the safety instructions prior to assembly / disassembly.

- General safety information: See chapter 2.04.
- Information regarding personal protective equipment: See chapter 2.04.
- Information regarding the use of ladders: See chapter 2.04.10.
- Information regarding fall protection equipment: See chapter 2.06.
- Information regarding accesses to the crane: See chapter 2.07.
- Information for assembly and disassembly: See chapter 5.01.

WARNING
Assembly personnel **not** secured with suitable aids to prevent them from falling!
Assembly personnel can fall, death, severe bodily injuries.
► Cary out all overhead work, where there is a danger of falling with suitable aids.

When fall protection equipment is available:
► Use the fall protection equipment.

When there are railings on the crane components:
► Move the railings to the assembly / disassembly position and secure.

If aids are **not** available and work **cannot** be carried out on the ground:
► Secure assembly personnel with the supplied fall arrest system to prevent falling.
► Fasten the supplied fall arrest system to the fastening and hook points as well as to the safety ropes.
► Only step on the aids, ladders and catwalks with clean shoes.
► Keep aids, ladders and catwalks free of heavy dirt, snow, frost and ice.

WARNING
Oscillating load!
Danger of impact and crushing.
Death, severe bodily injuries, property damage.

When taking down / lifting winch 2:
► Do **not** put limbs in the danger zone.
► Do **not** remain in the danger zone.

WARNING
Moving components!
Death, crushing by components.
► Make sure that personnel cannot be caught by components.

To protect limbs:
► Guide the components with suitable aids.

WARNING
Winch 2* can fall down!
Death, severe bodily injuries, property damage.
► Do **not** stand below winch 2*.

LWE/LTR 1100-009/25105-02-02/en

copyright © Liebherr-Werk Ehingen GmbH 2023

Empty page!

LWE/LTR 1100-009/25105-02-02/en

copyright © Liebherr-Werk Ehingen GmbH 2023

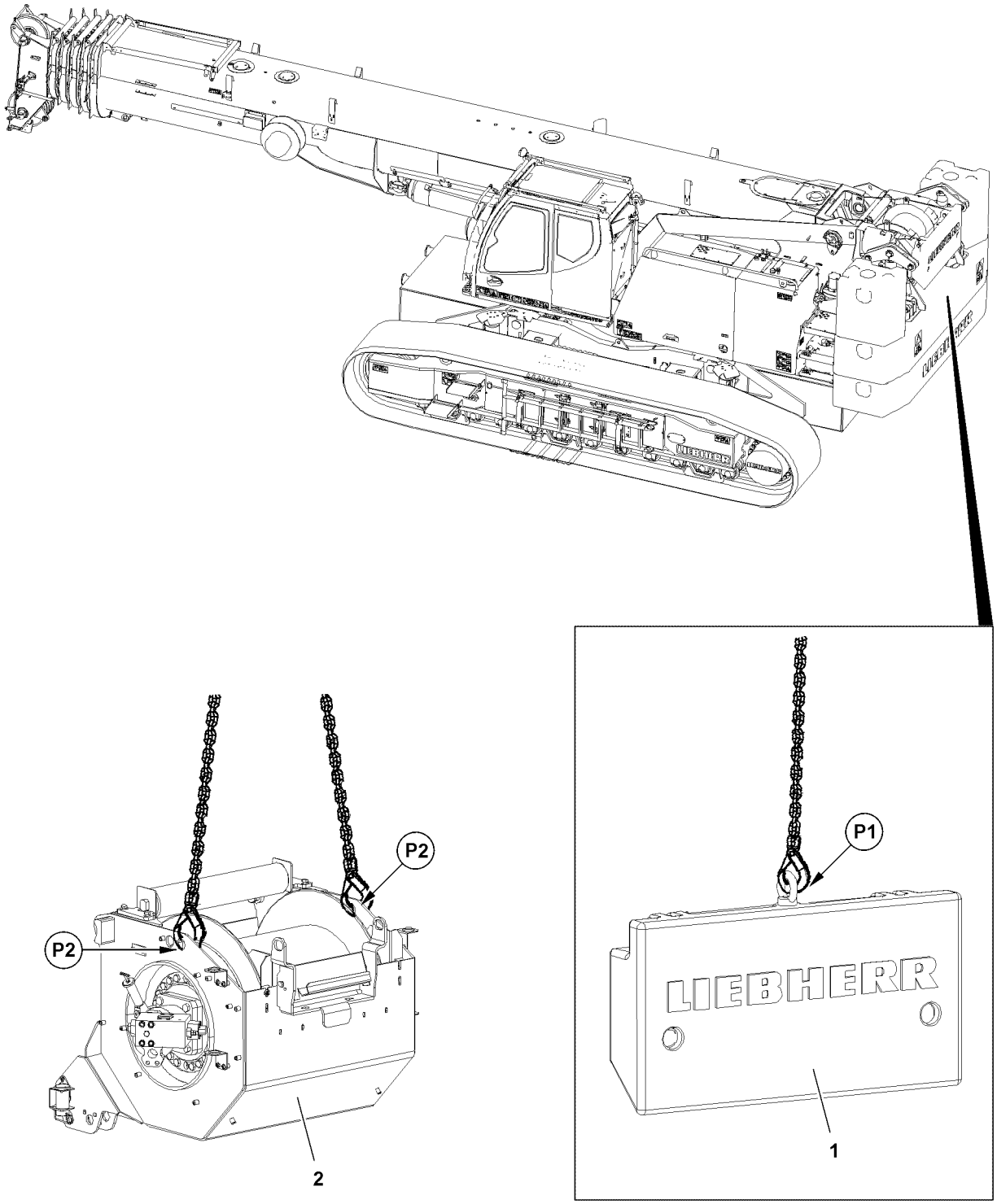

LWE/LTR 1100-009/25105-02-02/en

Fig.118505

copyright © Liebherr-Werk Ehingen GmbH 2023

2 Component description

Winch 2***** can be attached to this crane for folding jib operation with the telescopic boom reeved in or for two hook operation.

2.1 Winch 2* designation

With this crane, only a winch 2***** with designation 4B-23 can be assembled and operated on the crane.

Winches without the designation 4B-23 can be retrofitted under certain circumstances with a conversion kit. In order to determine if a winch can be retrofitted or in order to receive the corresponding retrofitting kit, contact customer service at Liebherr-Werk Ehingen GmbH.

2.2 Weight

Designation	Weight
Winch 2 without wire rope	0.8 t
Winch 2 with wire rope	1.3 t

2.3 Replacement ballast fastening point

For the assembly / disassembly of replacement ballast an eyehook **P1** is installed.

2.4 Winch 2* fastening point

For the assembly / disassembly of winch 2***** eyehooks **P2** are installed.

LWE/LTR 1100-009/25105-02-02/en

copyright © Liebherr-Werk Ehingen GmbH 2023

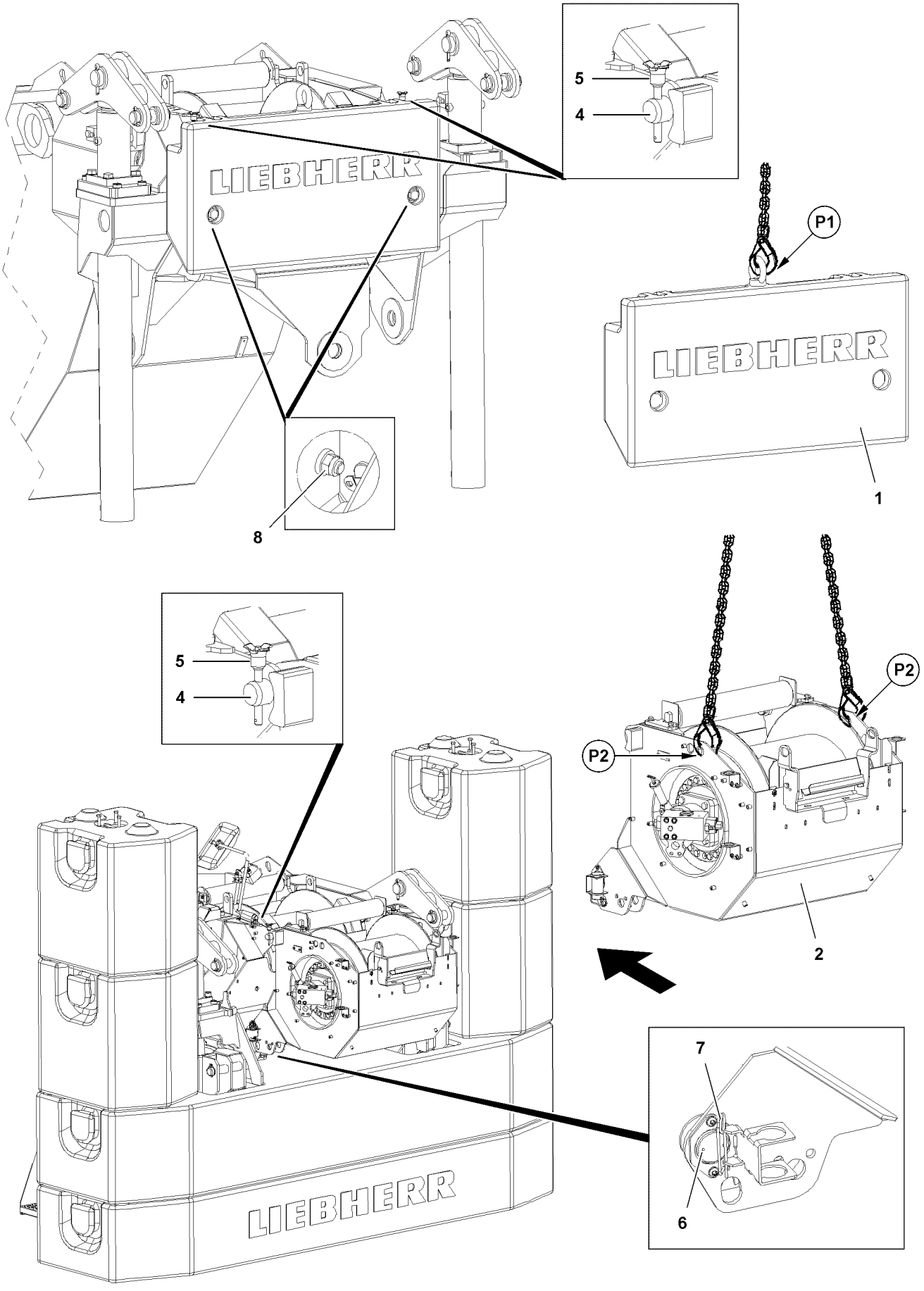

Fig.118488

LWE/LTR 1100-009/25105-02-02/en

copyright © Liebherr-Werk Ehingen GmbH 2023

3 Assembling

Make sure that the following prerequisites are met:
- The crane is pinned in the 0° or 180° position.
- An auxiliary crane is available.

3.1 Disassembling the replacement ballast

WARNING
Danger of accident due to missing counterweight!
► If the replacement ballast **1** is removed: Assemble winch 2 **WII**.

DANGER
Danger of accidents due to falling replacement ballast!
► Do not unpin the pin **4** until winch 2 **WII** has been secured with the auxiliary crane.

► Fasten the replacement ballast **1** with fastening equipment to the eyehook **P1**.
► Tension the fastening equipment carefully.
► Release and remove the screws **8** on both sides.
► Remove the ball locking pin **5** on both sides on the pins **4**.
► Unpin the pin **4** on both sides.
► Take the replacement ballast **1** down.

3.2 Assembling winch 2*

► Fasten winch 2 **WII** with fastening equipment to the eyehooks **P1** on both sides.
► Bring winch 2 **WII** to the assembly position with the auxiliary crane until the pin bores of winch 2 **WII** align with the pin bores on the turntable.
► Insert the pin **4** on both sides.
► Secure the pin **4** with the ball locking pin **5** on both sides.
► Insert the pin **6** on both sides from the outside to the inside.
► Secure the pin **6** on both sides with the spring retainer **7**.

DANGER
Danger of accident due to falling winch 2!
► Do not remove the fastening equipment until winch 2 **WII** has been properly assembled and secured.

► Detach winch 2 **WII** from the auxiliary crane.

3.3 Connecting the supply lines

► Establish the electrical connection for winch 2.
► Establish the supply line for the central lubrication system.

The engine must be turned off before connecting and disconnecting the hydraulic lines.

The different diameters of the hydraulic lines prevent incorrect coupling.

► Establish the hydraulic connection for winch 2.

Note
► If winch 2 is assembled, the master switch assignment must be switched from a „one-winch system“ to a „two-winch system“, see the Crane operating instructions, chapter 4.01.

LWE/LTR 1100-009/25105-02-02/en

copyright © Liebherr-Werk Ehingen GmbH 2023

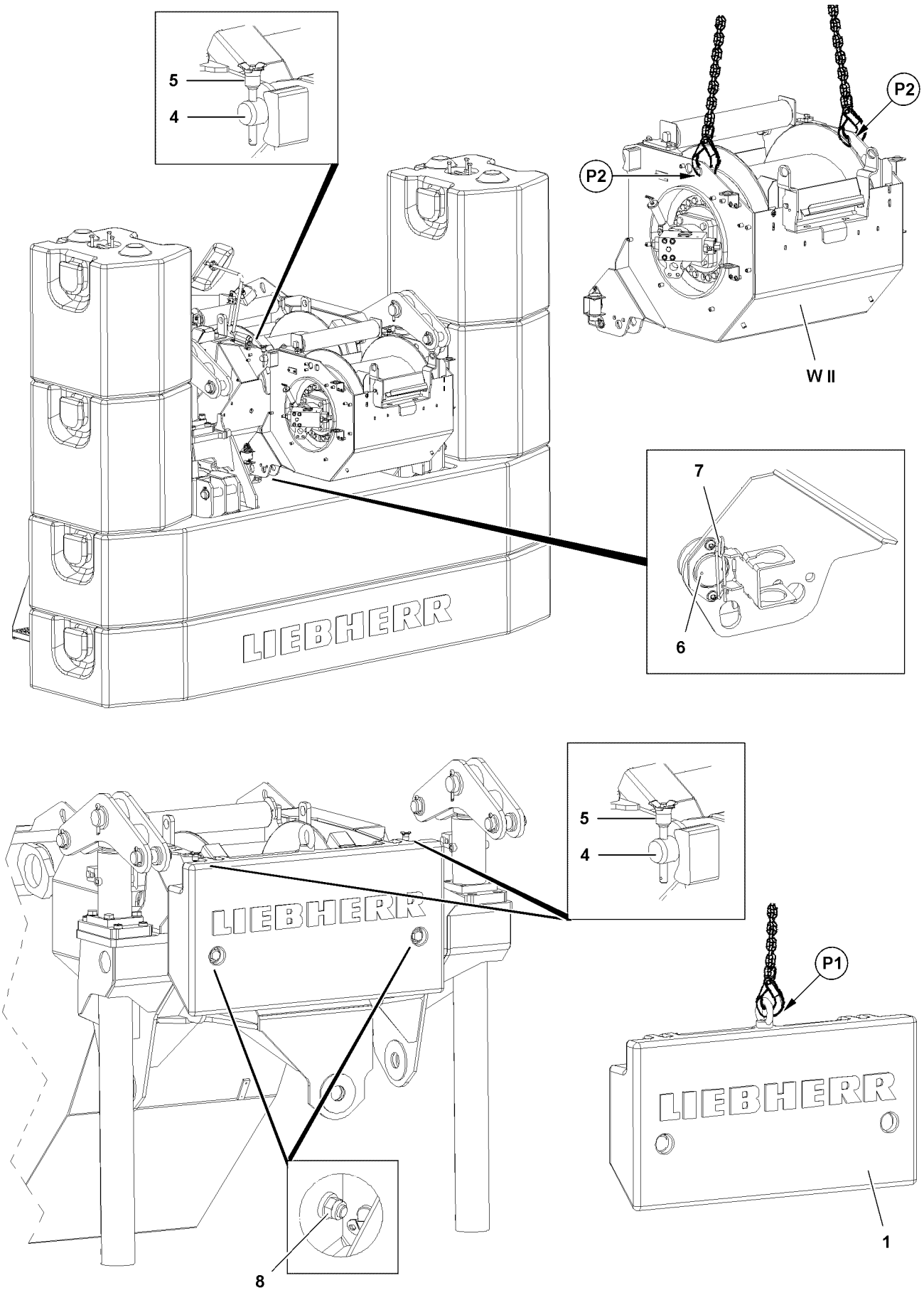

Fig.118489

LWE/LTR 1100-009/25105-02-02/en

copyright © Liebherr-Werk Ehingen GmbH 2023

4 Disassembling

Make sure that the following prerequisites are met:
- The crane is pinned in the 0° or 180° position.
- An auxiliary crane is available.

4.1 Releasing the supply lines

- ► Spool up the hoist rope of winch 2 **WII**.
- ► Secure the hoist rope.
- ► Block winch 2 **WII** on the left touch display by pressing the function key **F2**, see the Crane operating instructions, chapter 4.01.

The engine must be turned off before connecting and disconnecting the hydraulic lines.

- ► Release the hydraulic connection for winch 2.
- ► Release the electrical connection for winch 2.
- ► Release the supply line for the central lubrication system.
- ► Secure the supply lines in the transport retainers.

4.2 Disassembling winch 2*

WARNING
Danger of accident due to missing counterweight!
- ► If winch 2 **WII** is disassembled: Assemble the replacement ballast **1**.

- ► Fasten the auxiliary crane to the eyehooks **P2** of winch 2 **WII** on both sides.
- ► Slightly tension the hoist rope of the auxiliary crane.
- ► Remove the spring retainer **7** on the pin **6** on both sides.
- ► Unpin the pin **6** on both sides.

DANGER
Danger of accident due to falling winch 2!
- ► Do not unpin the pin **4** until winch 2 **WII** has been secured with the auxiliary crane.

- ► Release and unpin the pin **4** on both sides.
- ► Take winch 2 **WII** down on the transport vehicle.

Note
- ► If winch 2 **WII** has been disassembled, the master switch assignment must be switched from a „two-winch system“ to a „one-winch system“, see the Crane operating instructions, chapter 4.01.

4.3 Assembling the replacement ballast

- ► Fasten the replacement ballast **1** with fastening equipment to the eyehook **P1**.

DANGER
Danger of accident due to falling winch 2!
- ► Do not remove the fastening equipment until winch 2 **WII** has been properly pinned and secured!

- ► Bring the replacement ballast **1** to the assembly position with the auxiliary crane until the pin bores of replacement ballast **1** align with the pin bores on the turntable.
- ► Insert the pin **4** on both sides.
- ► Secure the pin **4** with the ball locking pin **5** on both sides.
- ► Tighten the screws **8** with a tightening torque of 730 Nm.

LWE/LTR 1100-009/25105-02-02/en

copyright © Liebherr-Werk Ehingen GmbH 2023

Empty page!

LWE/LTR 1100-009/25105-02-02/en

copyright © Liebherr-Werk Ehingen GmbH 2023

5.10 Boom nose - telescopic boom

1	General	3
2	Assembly	5
3	Disassembly	11

LWE/LTR 1100-009/25105-02-02/en

copyright © Liebherr-Werk Ehingen GmbH 2023

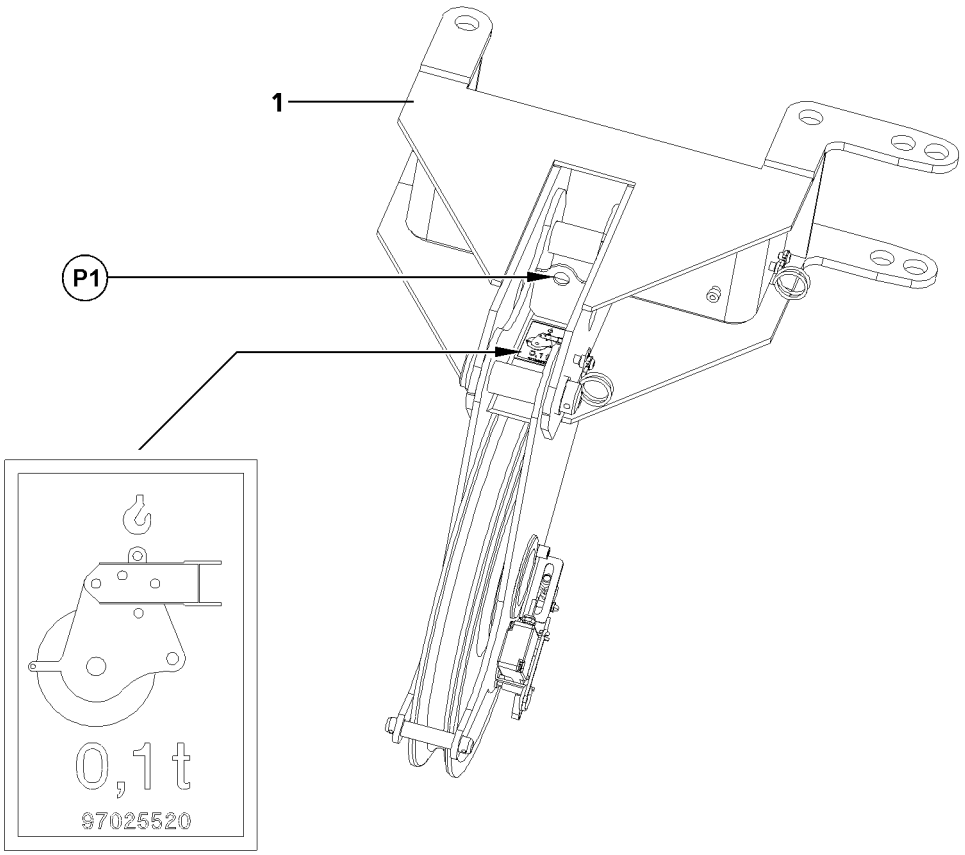

LWE/LTR 1100-009/25105-02-02/en

Fig.114083

copyright © Liebherr-Werk Ehingen GmbH 2023

1 General

Operation with the boom nose **1** is set up for rapid lifting via theboom nose **1**, whereby the hook block can remain reeved on the telescopic boom.

Position	Description	Weight
1	Boom nose	0.1 t

Note
Load charts
► No special load charts are available for operation with boom nose **1**. The boom nose **1** is generally run in the telescopic boom operating mode. However, the load is reduced by the weight of the boom nose **1** and the lifting and fastening equipment that is used.

1.1 Fastening point

A fastening point **P1** is installed on the boom nose **1**.

The fastening point **P1** is marked with a tag.

WARNING
Danger of accident!
Life-threatening situations can arise if the boom nose **1** is improperly or incorrectly attached!
► At assembly / disassembly, fasten the boom nose **1** properly on the fastening point **P1**!

LWE/LTR 1100-009/25105-02-02/en

copyright © Liebherr-Werk Ehingen GmbH 2023

1

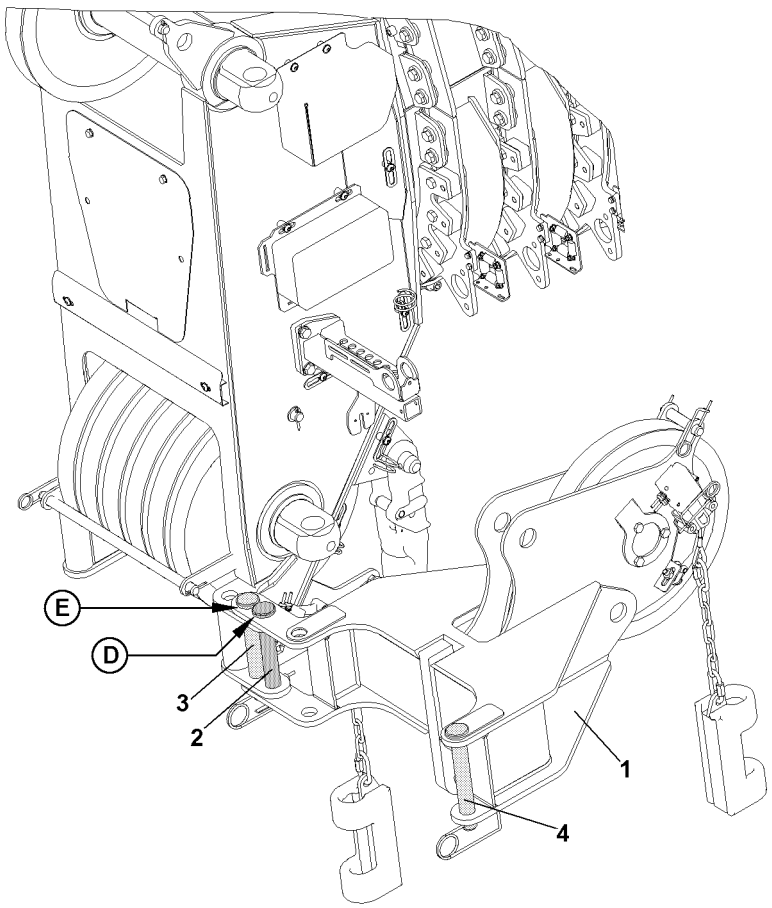

2

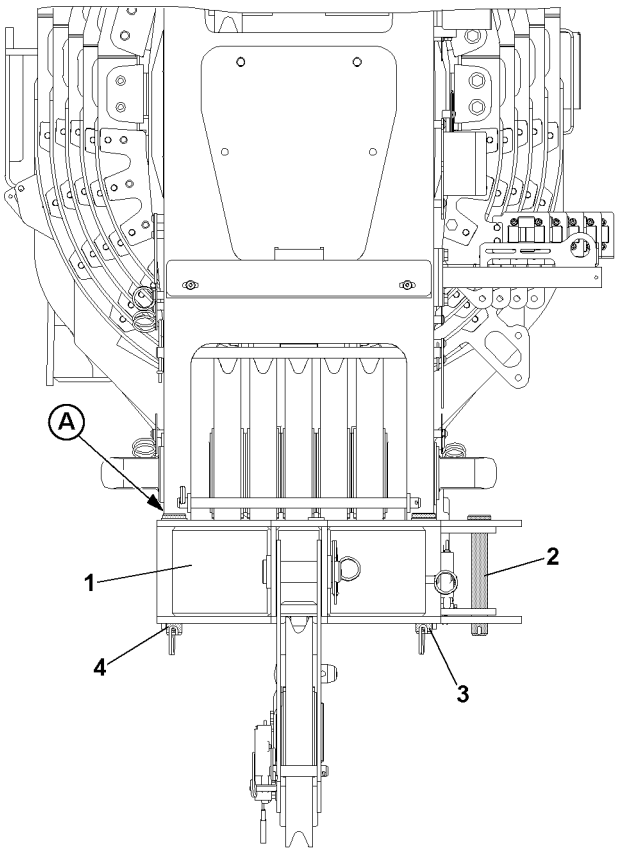

Fig.114084

LWE/LTR 1100-009/25105-02-02/en

copyright © Liebherr-Werk Ehingen GmbH 2023

2 Assembly

2.1 Installing the boom nose on the telescopic boom, illustration 1

WARNING
Danger of crushing!
During assembly, hands can be crushed due to swing movements of the boom nose **1**!
► Make sure that the boom nose **1** is not swinging back and forth during installation!

► Attach the boom nose **1** on the auxiliary crane, see section „Fastening point“.

DANGER
The boom nose can fall down!
If the boom nose **1** is unhooked from the auxiliary crane before the boom nose **1** is pinned, then the boom nose **1** can fall down and kill or severely injure personnel!
► Do not detach the auxiliary crane until the boom nose **1** is properly installed and secured!

► Install the boom nose **1** on the telescopic boom: Pin the swing pin **2** on point **D** and secure with spring retainer.
► Insert the pin **3** on point **E** and secure with spring retainer.
► Detach the auxiliary crane.

2.2 Swinging the boom nose into operating position, illustrations 1 and 2

DANGER
Risk of accident due to falling of the boom nose!
If the swing pin **2** is unpinned theboom nose **1** will fall down.
► Never unpin the swing pin **2**!

► Release the pin **3** and the pin **4** and unpin.

CAUTION
Danger of crushing fingers!
Fingers could be crushed between the telescopic boom and the boom nose **1** when the boom nose **1** is swivelled.
► Do not put fingers between the boom nose **1** and the telescopic boom!

► Swing the boom nose **1** by 180° until the pin **4** can be pinned on point **A**.
► Insert and secure pin **3**.
► Insert and secure pin **4**.

LWE/LTR 1100-009/25105-02-02/en

copyright © Liebherr-Werk Ehingen GmbH 2023

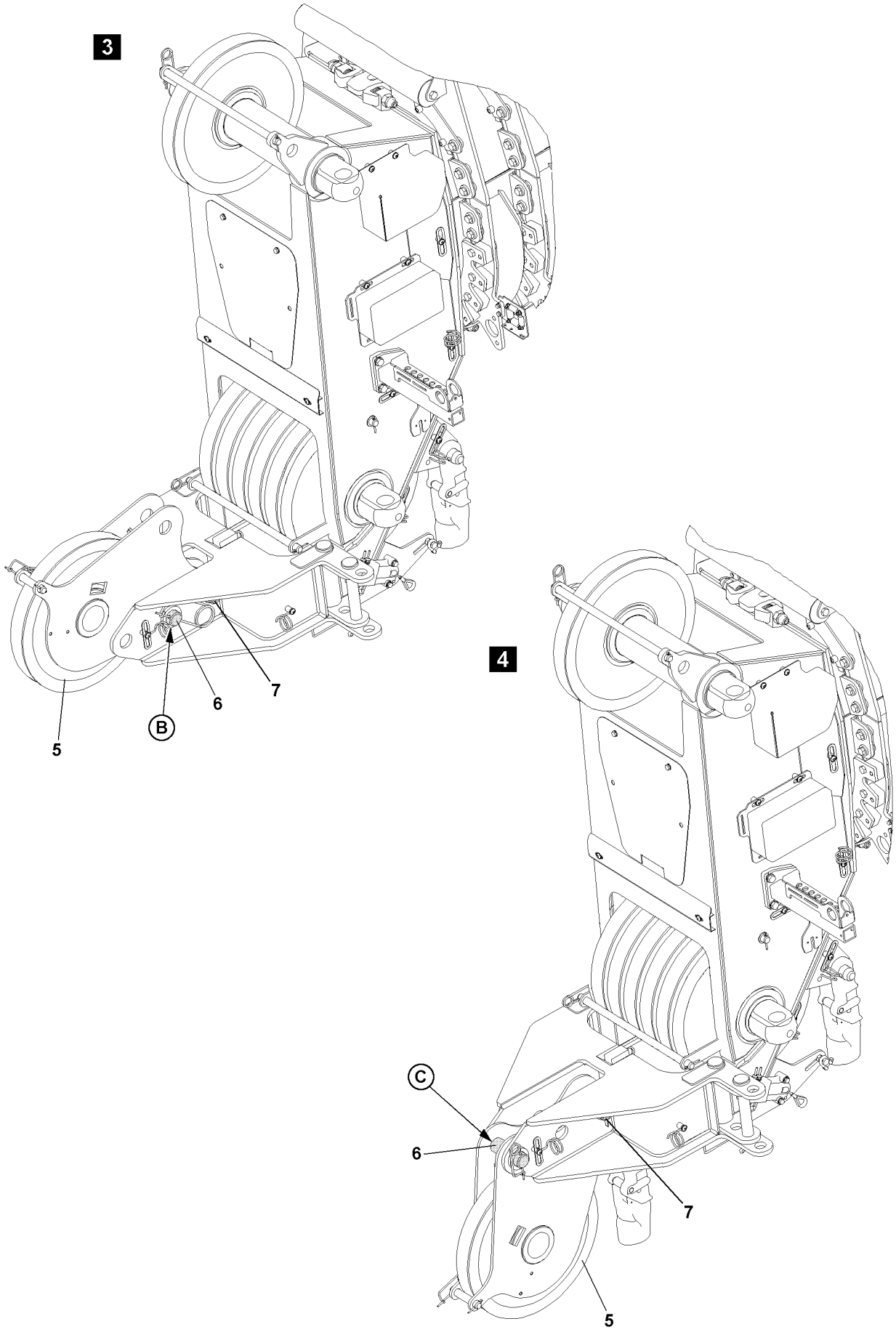

LWE/LTR 1100-009/25105-02-02/en

Fig.197011

copyright © Liebherr-Werk Ehingen GmbH 2023

2.3 Folding the rope pulley into operating position, illustrations 3 and 4

DANGER
Danger of accident due to falling rope pulley!
If the swing pin **7** is unpinned, the rope pulley **5** will fall down.
► Never unpin the swing pin **7**!

► Release the pin **6** on point **B** and unpin.

CAUTION
Danger of crushing fingers!
Fingers can be crushed when the rope pulley **5** is moved.
► Do not crush your fingers when the rope pulley **5** folds down!

► Fold the rope pulley **5** down until it can be pinned at point **C**.
► Pin and secure the pin **6**.

LWE/LTR 1100-009/25105-02-02/en

copyright © Liebherr-Werk Ehingen GmbH 2023

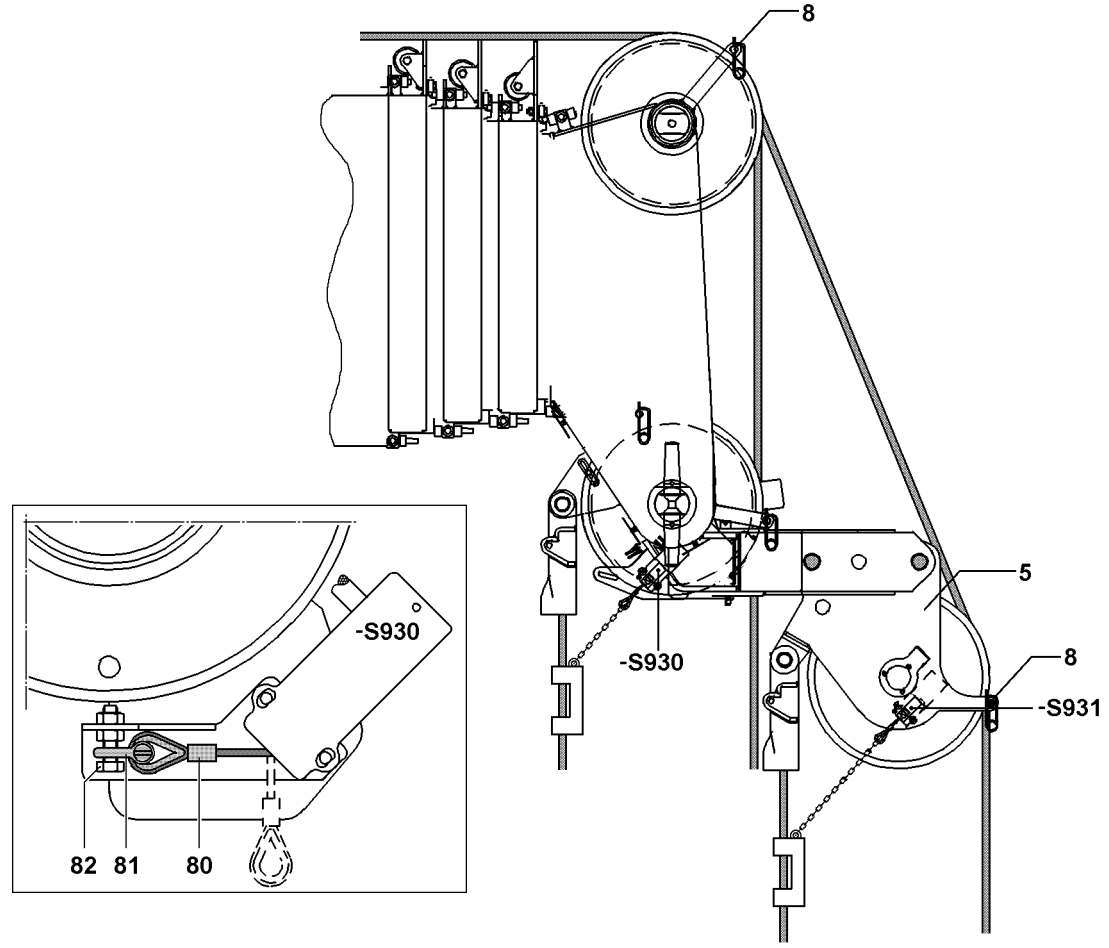

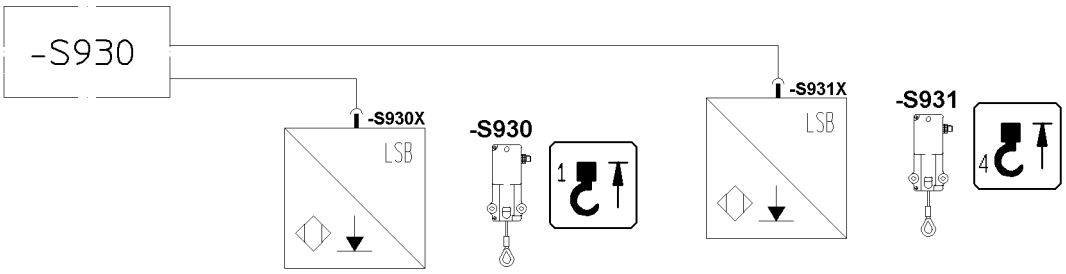

LWE/LTR 1100-009/25105-02-02/en

Fig.118303

copyright © Liebherr-Werk Ehingen GmbH 2023

2.4 Reeving in the hoist rope

Can be reeved in a maximum of 2 times at the boom nose.

- ► Release and unpin the rope retaining pipes **8**.
- ► Place the hoist rope over the end pulley on the telescopic boom and over the rope pulley **5**.
- ► Pin the rope retaining pipes **8** and secure.
- ► Reeve in the load hook or hook block.
- ► Attach the hoist limit switch weight.

2.5 Hoist limit switch

The hoist limit switch **-S930**, the airplane warning light***** and the wind sensor***** remain attached on the telescopic boom head.

If the hoist limit switch **-S931** is attached to the telescopic boom:

- ► Remove the hoist limit switch **-S931** from the telescopic boom and assemble to the boom nose.

2.6 Single hook operation

If you are working in „single hook mode“, the hoist limit switch **-S930** that is not required must be operated manually.

- ► Remove the hoist limit switch weight and chain.
- ► Pull the hoist limit switch rope **80**, hang in on the fixed point **81** and secure with locking pin **82**.

Result:

– The hoist limit switch **-S930** is operated manually.

2.7 Operation with two hooks

In two hook operation, the hoist limit switch **-S930** on the telescopic boom and the hoist limit switch **-S931** on the boom nose are active.

2.8 Function check

The function check **must** be performed by the operator before lifting a load.

The following checks must be performed.

- ► Check that the hoist limit switch, wind sensor***** and airplane warning light***** connections are properly connected.
- ► Check wind sensor***** operation on LICCON monitor.
- ► Check the function of the airplane warning light*****.

Check hoist limit switches for easy movement. The following steps are required to perform these checks.

- ► Actuate the hoist limit switch manually.
- ► Check that „Hoist top“ icon is displayed on LICCON monitor for main boom or boom nose.
- ► Check that the hoist winch turns off.

LWE/LTR 1100-009/25105-02-02/en

copyright © Liebherr-Werk Ehingen GmbH 2023

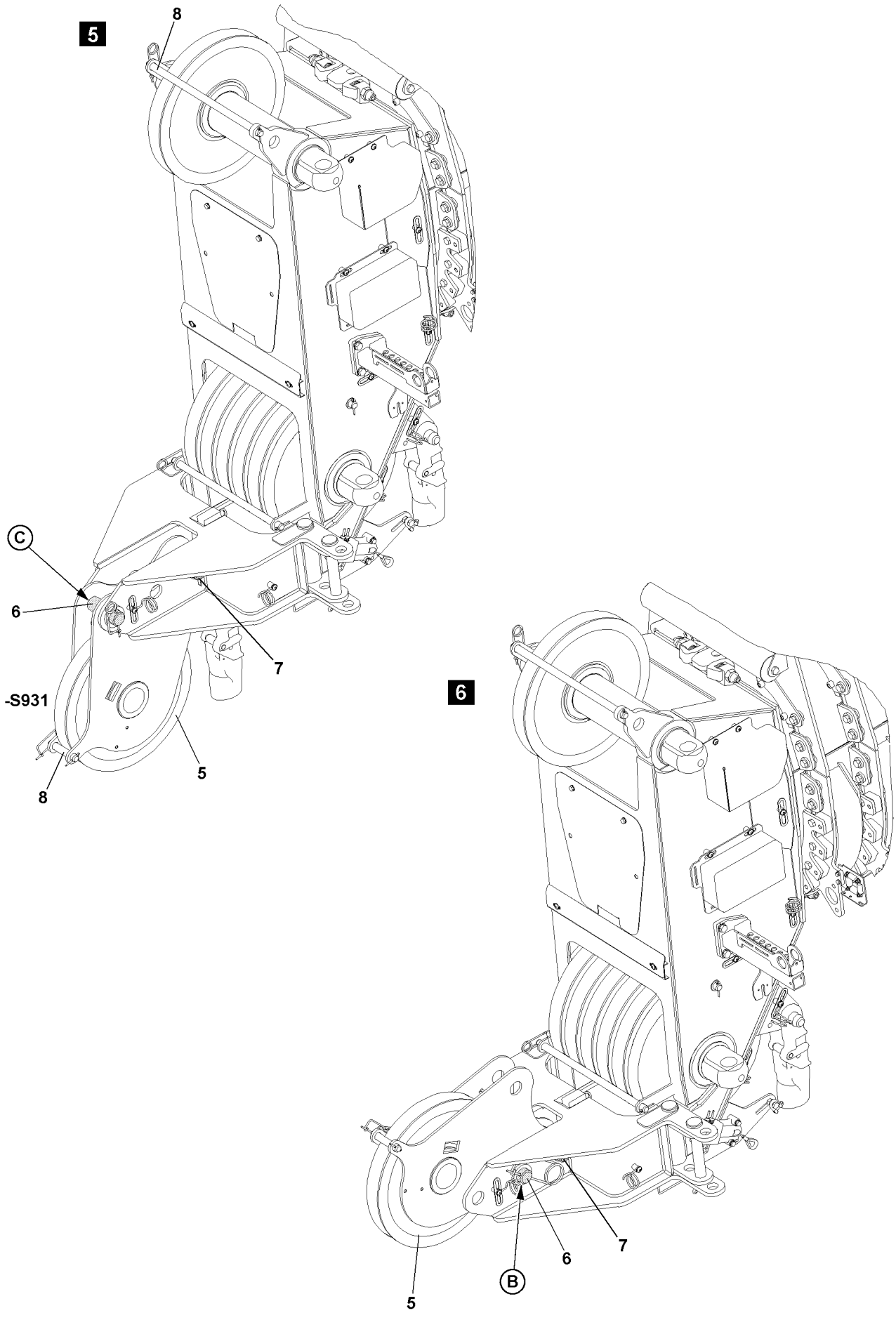

Fig.197012

LWE/LTR 1100-009/25105-02-02/en

copyright © Liebherr-Werk Ehingen GmbH 2023

3 Disassembly

3.1 Folding the rope pulley to transport position, illustrations 5 and 6

- ► Remove the hoist limit switch weight.
- ► Reeve out load hook/hook block to boom nose.
- ► Release and unpin the rope retaining pipes **8**.

Do not pull hoist rope beneath the winch when reeling in.

- ► Spool the hoist rope up.

Note

- ► During operation **without** the boom nose, you must use the hoist limit switch **-S931** as an additional hoist limit switch for the telescopic boom **or** mechanically pull the hoist limit switch **-S931** and attach it to the rope fixed position with a shackle.

DANGER

Danger of accident due to falling rope pulley!
If the swing pin **7** is unpinned, the rope pulley **5** will fall down.

- ► Never unpin the swing pin **7**!

- ► Release the pin **6** on point **C** and unpin.

CAUTION

Danger of crushing fingers!
Fingers can be crushed when the boom nose is folded.

- ► Do not crush your fingers when the rope pulley **5** folds up!

- ► Move the rope pulley **5** up until it can be pinned at the point **B**.
- ► Insert and secure pin **6**.

LWE/LTR 1100-009/25105-02-02/en

copyright © Liebherr-Werk Ehingen GmbH 2023

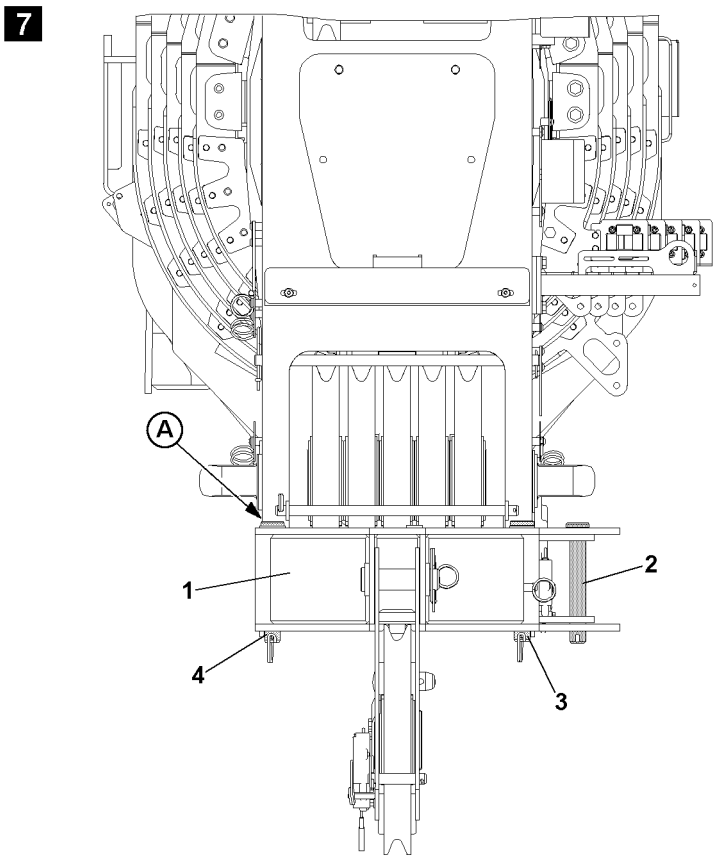

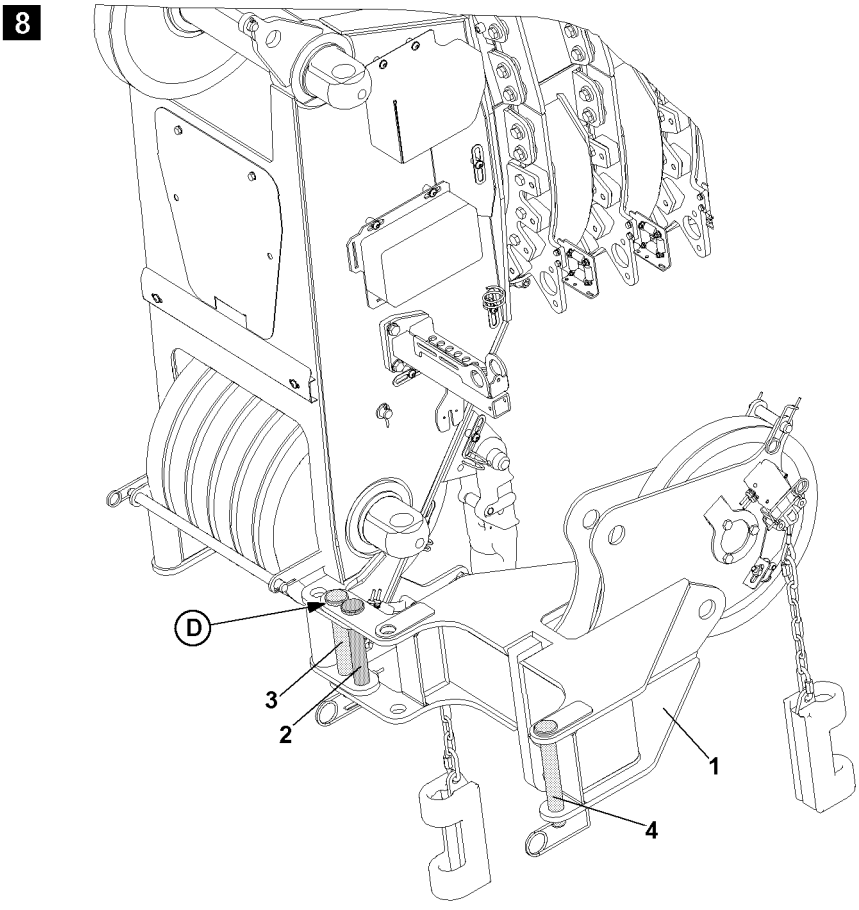

Fig.197013

LWE/LTR 1100-009/25105-02-02/en

copyright © Liebherr-Werk Ehingen GmbH 2023

3.2 Swinging the boom nose into transport position, illustrations 7 and 8

DANGER
Risk of accident due to falling of the boom nose!
If the swing pin **2** is unpinned, the boom nose will fall down.
► Never unpin the swing pin **2**!

► Release the pin **3** and the pin **4** and unpin.

CAUTION
Danger of crushing fingers!
Fingers could be crushed between the telescopic boom and the boom nose when the boom nose is swivelled.
► Do not put fingers between the boom nose and the telescopic boom!

► Swing the boom nose **1** by 180° until the pin **3** can be pinned on point **D**.
► Insert and secure pin **3**.
► Pin the pin **4** on the boom nose and secure.

3.3 Removing the boom nose from the telescopic boom

DANGER
Risk of accident due to falling of the boom nose!
If the swing pin **2** is unpinned before the boom nose **1** is secured with the auxiliary crane, then the boom nose **1** can fall down and kill or severely injure personnel!
► Unpin the swing pin **2** only when the boom nose **1** is secured with the auxiliary crane!

► Attach the boom nose **1** on the auxiliary crane, see section „Fastening point“.

WARNING
Danger of crushing!
During disassembly, hands can be crushed due to swing movements of the boom nose **1**!
► Make sure that the boom nose **1** is not swinging back and forth during removal!

Remove the boom nose **1**:

► Release the swing pin **2** and the pin **3** and unpin.
► Use the auxiliary crane to place the boom nose **1** onto the transport vehicle.
► Detach the auxiliary crane.

LWE/LTR 1100-009/25105-02-02/en

copyright © Liebherr-Werk Ehingen GmbH 2023

Empty page!

LWE/LTR 1100-009/25105-02-02/en

copyright © Liebherr-Werk Ehingen GmbH 2023

5.12 Special folding jib

1	Safety	2
2	Special folding jib	5
3	Assembling the special folding jib	7
4	Electrical connections on the special folding jib	23
5	Erecting	27
6	Disassembling the special folding jib	29

LWE/LTR 1100-009/25105-02-02/en

copyright © Liebherr-Werk Ehingen GmbH 2023

1 Safety

Before assembly and disassembly observe the safety instructions:
- General safety instructions: See chapter 2.04.
- Information regarding personal protective equipment: See chapter 2.04.
- Information regarding fall protection equipment: See chapter 2.06.
- Information regarding accessible surfaces: See chapter 2.07.
- Information regarding two hook operation: See chapter 4.12.
- Technical safety instructions for assembly and disassembly: See chapter 5.01.

Note
Load reduction!

When a hook block is reeved in on the telescopic boom:
► The loads for the special folding jib are reduced by the weight of the hook block reeved in on the telescopic boom.

WARNING
Personnel in the danger zone!
Death, severe bodily injuries, property damage.
► Do **not** step into the danger zone.

WARNING
Crane movements carried out without approval of the guide!
Personnel can be severely injured or killed.
► For all work, observe the instructions of the guide.

If necessary:
► Use a walkie-talkie.
► The crane operator and guide must monitor the danger zone.

WARNING
Moving components during lifting, lowering and positioning!
Death, crushing by components!
► Make sure that personnel cannot be caught by components.

To protect limbs:
► Guide the components with suitable aids.

WARNING
Oscillating load!
Danger of impact and crushing.
► To guide and position crane structures, always use a guide rope.
► Make sure that the guide rope is long enough.

1.1 Ladder

When working on a ladder, people can fall down.

If a ladder must be used for assembly work or disassembly work, a second person must be present to hand the tool to the person on the ladder.

1.2 Double cone pin

When pinning and unpinning, people can be injured by moving components.

The vertically installable double cone pins must be inserted from the **top to the bottom**.

LWE/LTR 1100-009/25105-02-02/en

copyright © Liebherr-Werk Ehingen GmbH 2023

The vertically installable double cone pins must be unpinned from the **top to the bottom**.

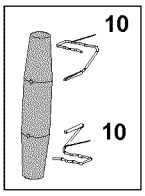

*Fig.120105: Double cone pin with retaining clip **10***

WARNING
Double cone pin not secured!
The special folding jib can fall down
► Secure the vertically assembled double cone pins only with retaining clips **10**.

1.3 Crane operation

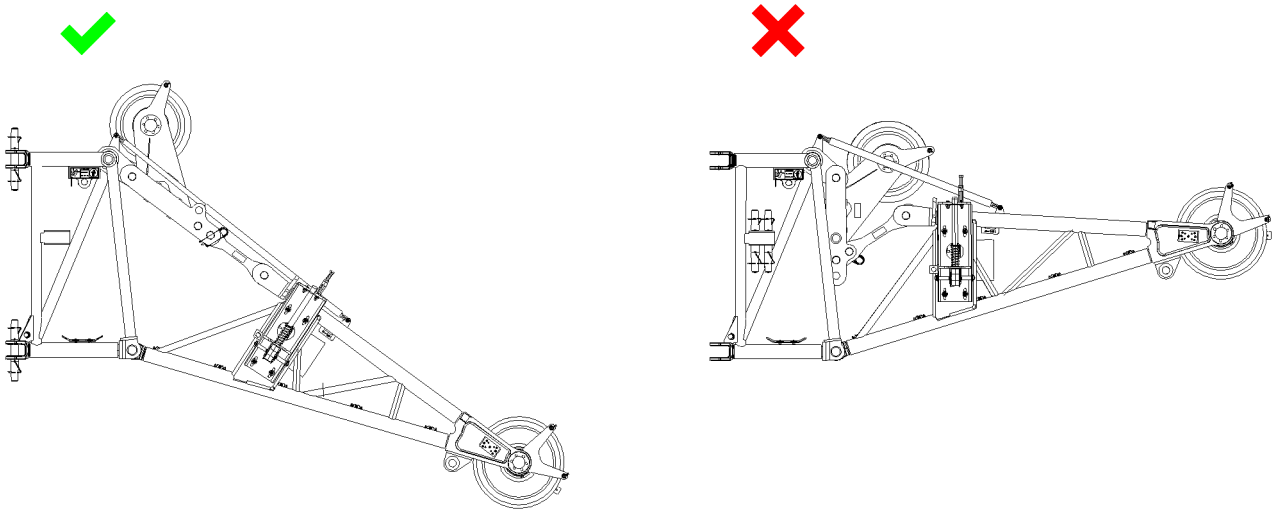

Fig.157645: Special folding jib operating position

If the special folding jib is not in the operating position, then the end section of the folding jib can fold down and fatally or seriously injure personnel.

Crane operation is only permissible when the special folding jib is assembled in the operating position.

copyright © Liebherr-Werk Ehingen GmbH 2023

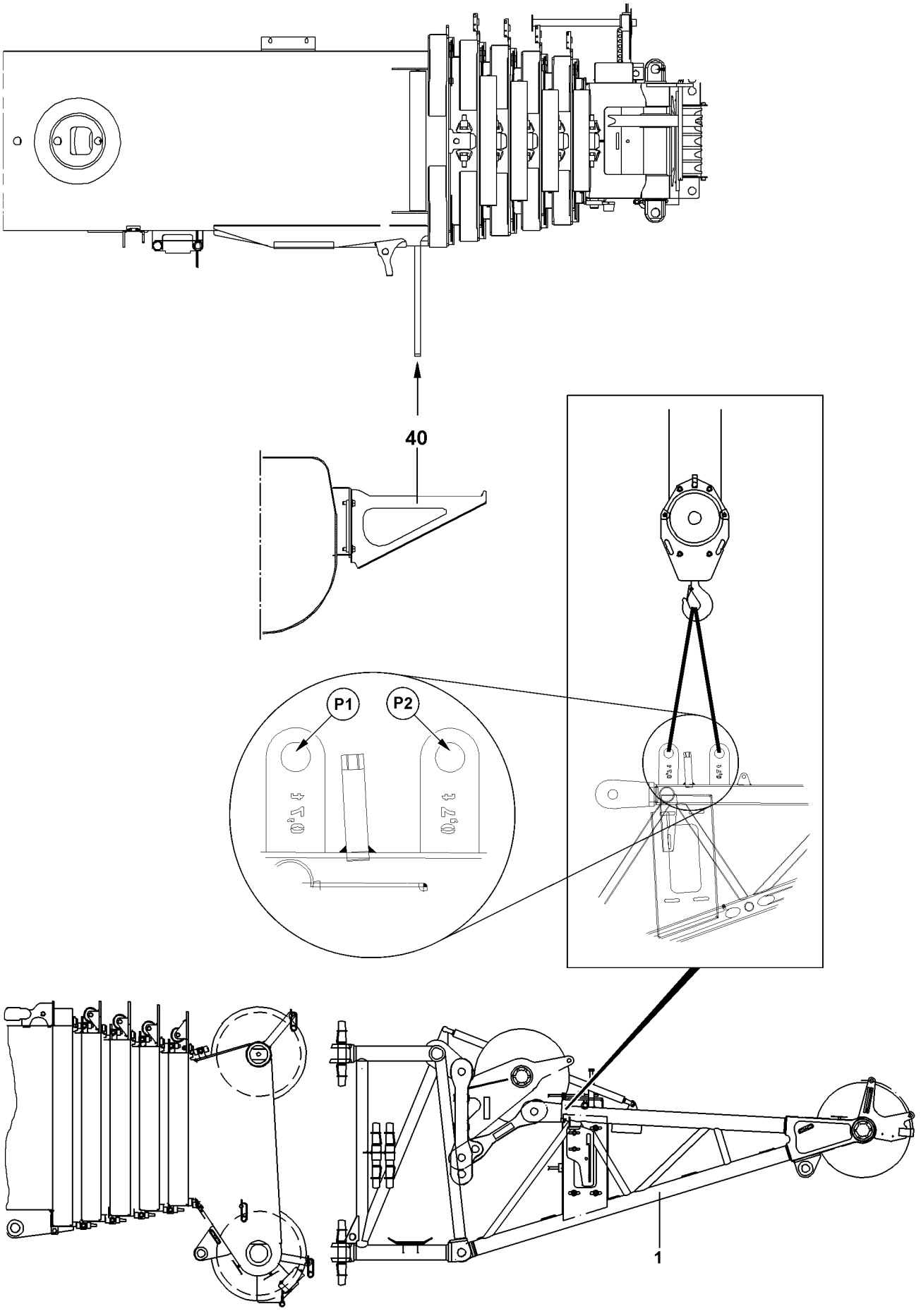

Fig.118544

LWE/LTR 1100-009/25105-02-02/en

copyright © Liebherr-Werk Ehingen GmbH 2023

2 Special folding jib

2.1 Special folding jibs from other crane types

With this crane type, only special folding jibs with the following designations according to the overview may be assembled and carried along.

Special folding jib designation	Assembly possible	Carrying along possible	Required conversion kit
3A–24	X	X	—
3A–40	X	—	—

Special folding jibs that can be carried along according to the overview may be carried along, assembled and disassembled on the crane.

Special folding jibs that may not be carried along according to the overview may be assembled and disassembled on the crane only in flying mode.

Special folding jibs that require a conversion set according to the overview must be converted with the corresponding conversion set prior to use. To do so, contact customer service at Work Heinen GmbH.

Special folding jibs without the indicated designations can be assembled under certain circumstances with this crane type, or retrofitted with a conversion kit. In order to determine if a special folding jib can be retrofitted with a conversion kit, contact customer service at Work Heinen GmbH.

If several special folding jibs are carried along on the crane, the transport retainers may have to be adjusted to the respective special folding jib.

2.2 Component overview

The special folding jib can be self-assembled on the telescopic boom.

Position	Designation	Length	Weight
1	Special folding jib	2.9 m	0.7 t

2.3 Fastening points

See illustration

WARNING
Assembled attachment parts!
Center of gravity changed, the special folding jib can tip over.
Death, severe bodily injuries, property damage.
► Remove all installation parts before fastening the special folding jib.

Attachment parts are for example:
– Camera
– Airplane warning light
– Wind speed sensor

Component	Fastening point
Special folding jib	P1 and P2 (in pairs)

LWE/LTR 1100-009/25105-02-02/en

copyright © Liebherr-Werk Ehingen GmbH 2023

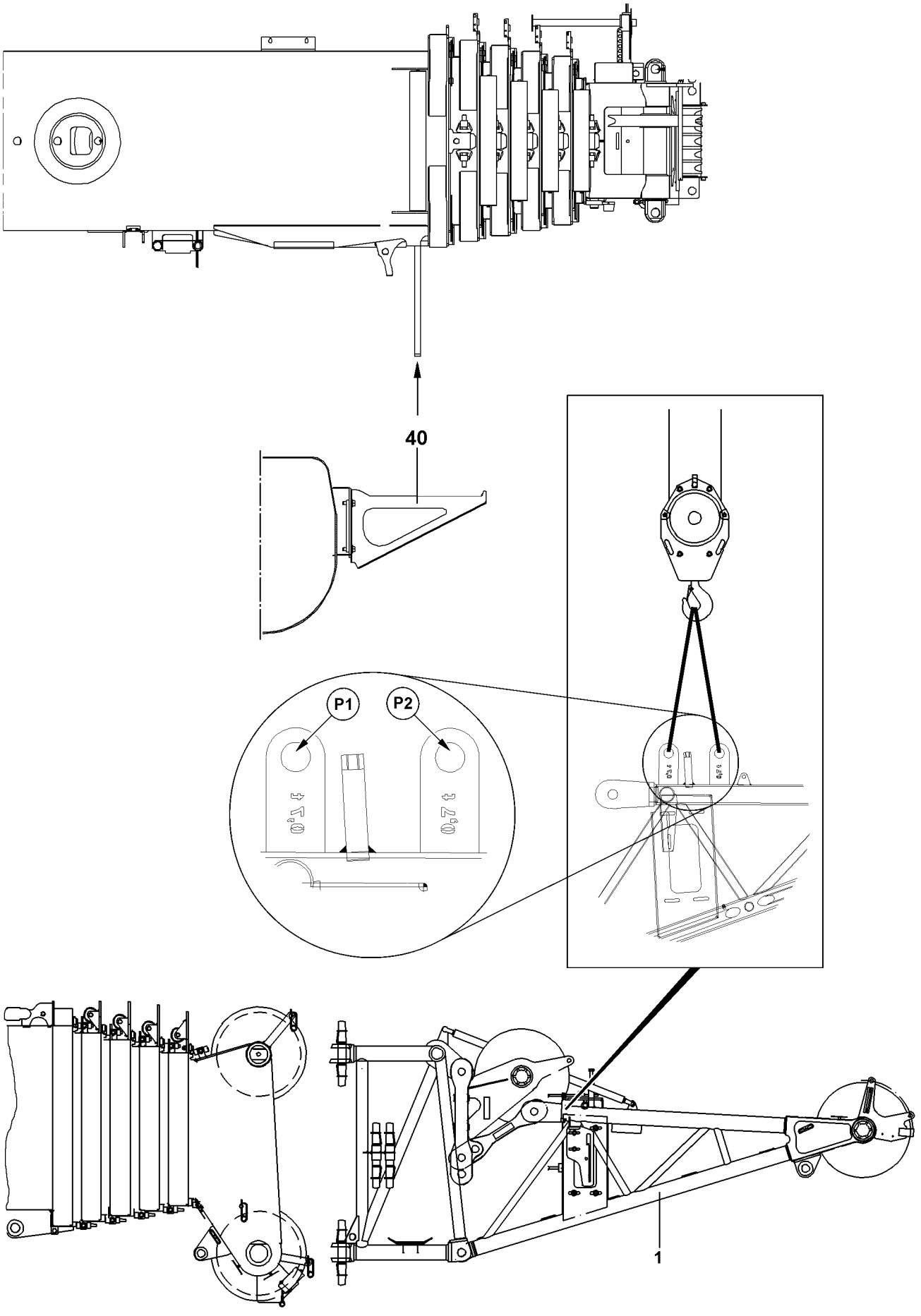

Fig.118544

LWE/LTR 1100-009/25105-02-02/en

copyright © Liebherr-Werk Ehingen GmbH 2023

3 Assembling the special folding jib

WARNING
Danger of falling!
During assembly and disassembly, assembly personnel must be secured with appropriate aids to prevent them from falling. If this is not observed, assembly personnel could fall and suffer fatal injuries.
- ► All work at a height, when there is a danger of falling, must be carried out with suitable aids.
- ► If fall protection equipment is available, then it must be used, see chapter 2.06.
- ► If aids are not available and work cannot be carried out from the ground, then the assembly personnel must secure themselves with the supplied fall arrest system to prevent falling, see chapter 2.04.
- ► The supplied fall arrest system must be fastened in the fastening and hook points as well as to the safety ropes. For safety points, see chapter 2.06.
- ► When lifting, lowering, swinging crane parts in and out, no persons may remain in the danger zone!
- ► Only step on the aids, ladders and catwalks with clean shoes.
- ► Keep aids, ladders and catwalks free of heavy dirt, snow and ice.

WARNING
Danger of accident when driving with the special folding jib!
- ► Before on-road driving, the special folding jib must always be brought into the transport position and mechanically secured.
- ► Make sure that the special folding jib is properly secured before moving the crane on public roads.

WARNING
Danger of fatal injury due to falling special folding jib!
Due to an assembly error, the special folding jib can fall down and cause fatal injuries.
- ► Standing under the special folding jib during the swinging procedure is prohibited.
- ► It is prohibited to stand in the slewing range or in the folding area of the special folding jib!
- ► The special folding jib must be secured by an auxiliary rope during the swinging procedure.

WARNING
Danger of accident if the special folding jib swings out by itself when it is unpinned!
If the telescopic boom is not in the 0° position, there is a danger of accident if the special folding jib swings out by itself when it is unpinned.
- ► Move the telescopic boom to the 0° position.
- ► Make sure that the boom is **not** luffed during assembly.

Make sure that the following prerequisites are met:
- – The crane is properly supported and horizontally aligned.
- – The counterweight has been installed on the turntable according to the load chart.
- – The central ballast has been installed on the turntable according to the load chart.
- – The telescopic boom has been luffed to the rear or the side.
- – The telescopic boom is fully telescoped in.
- – The special folding jib has been attached for transport to the telescopic boom pivot section.
- – The telescopic boom has been luffed down to the rear or to the side in the 0° position.

LWE/LTR 1100-009/25105-02-02/en

copyright © Liebherr-Werk Ehingen GmbH 2023

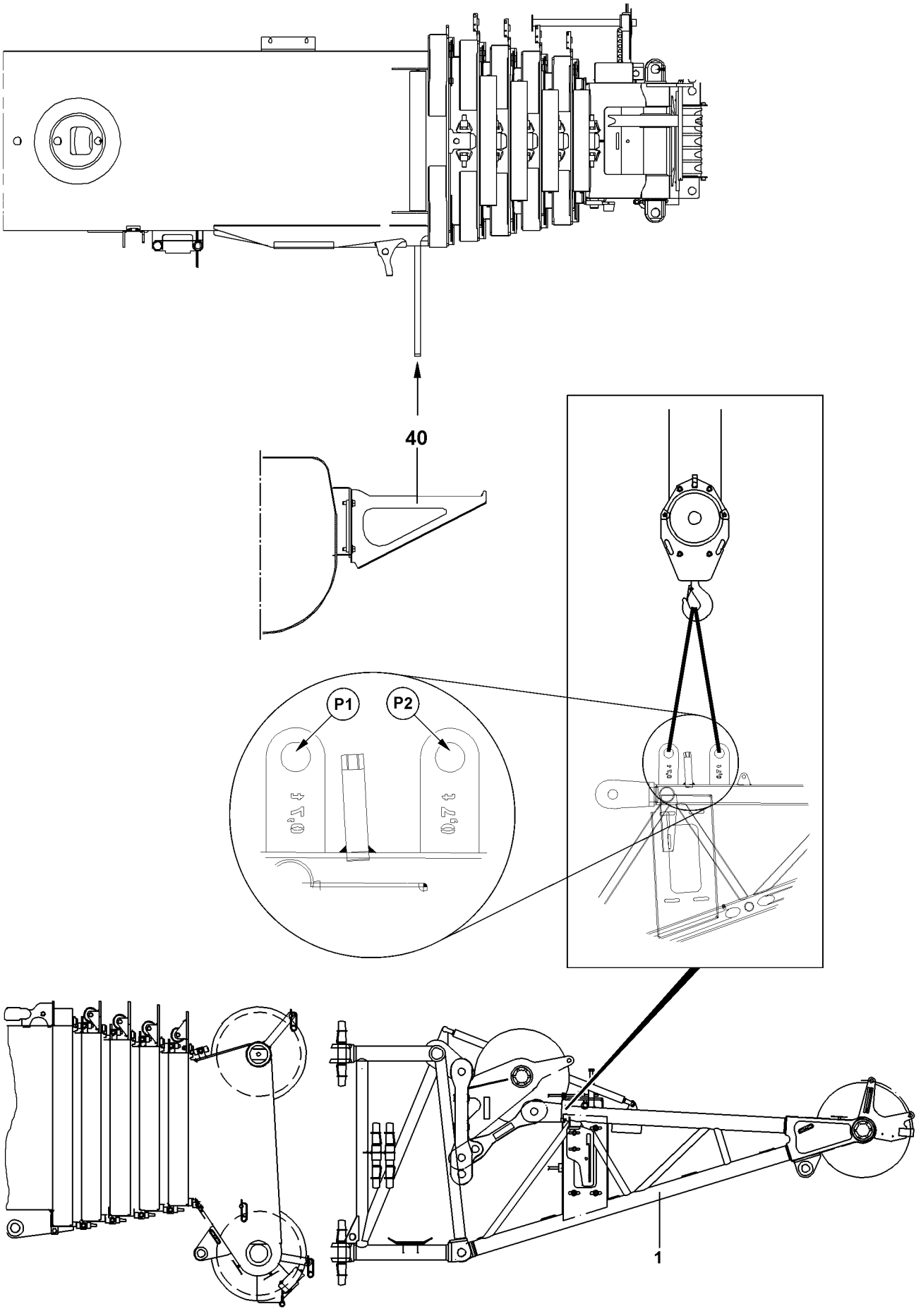

Fig.118544

LWE/LTR 1100-009/25105-02-02/en

copyright © Liebherr-Werk Ehingen GmbH 2023

3.1 Disassembling the catch bar on the telescopic boom pivot section

WARNING
Danger of fatal injury due to falling special folding jib!
Due to a damaged or non-existent catch bar **40** on the telescopic boom pivot section, the folding jib can fall down and cause fatal injuries.
- ► Make sure that the catch bar **40** is property installed again and not damaged „before assembling the single or the double folding jib“, see also, chapter 5.02.
- ► After the special folding jib is disassembled from the telescopic boom, the catch bar **40** must be reassembled properly.

CAUTION
The special folding jib can collide with the catch bar **40** for the single / double folding jib!
- ► Disassemble the catch bar **40** before installing the special folding jib.

► Disassemble the catch bar **40** properly on the telescopic boom pivot section.

LWE/LTR 1100-009/25105-02-02/en

copyright © Liebherr-Werk Ehingen GmbH 2023

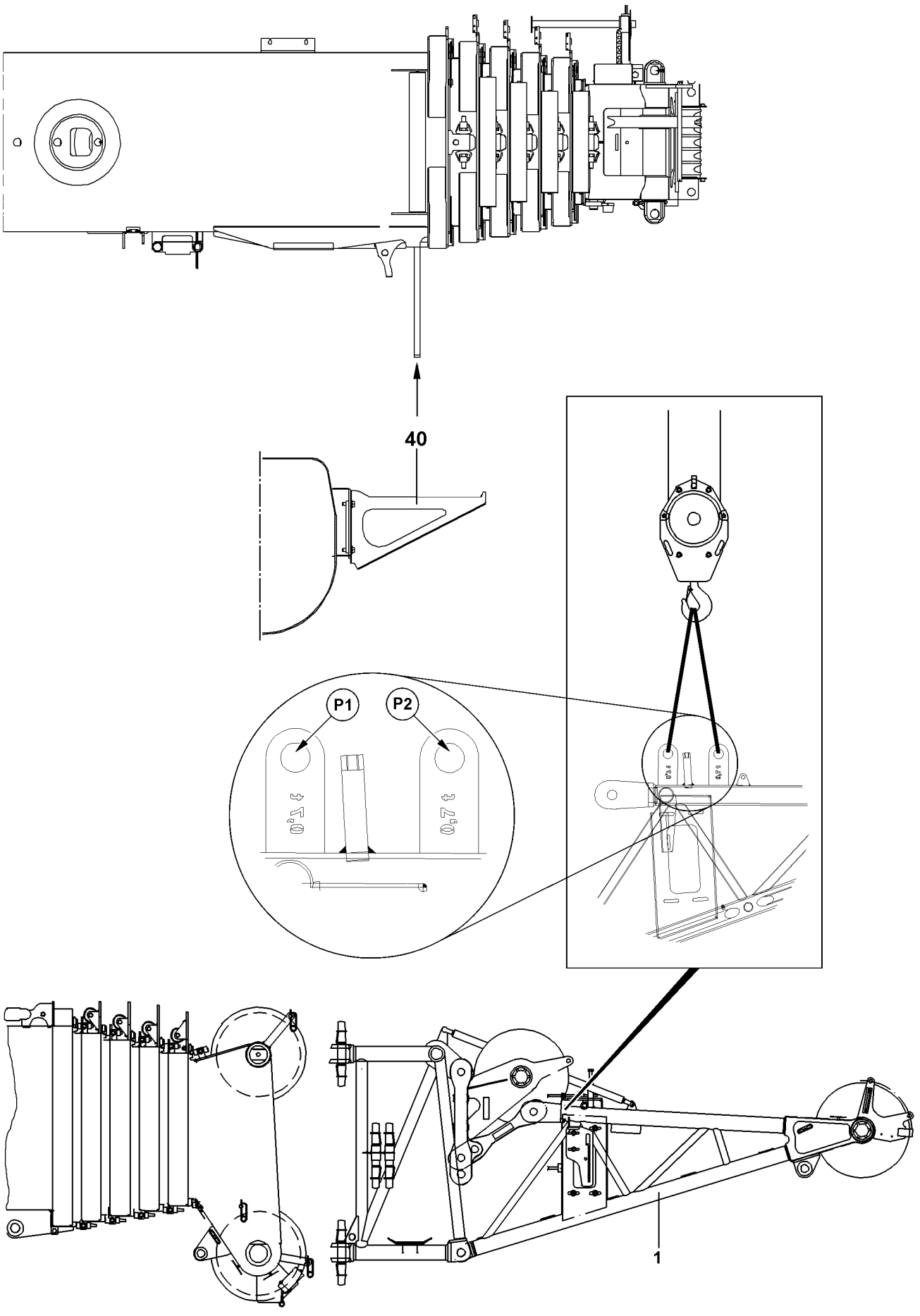

Fig.118544

LWE/LTR 1100-009/25105-02-02/en

copyright © Liebherr-Werk Ehingen GmbH 2023

3.2 Reeving out the hoist rope on the telescopic boom head

Note

► The telescopic boom can remain reeved in if the hoist rope of winch 2 is used for special folding jib operation.

► Telescope the telescopic boom out to approx. 3 m.

WARNING

Danger of accident due to uneven ground or when the load bearing capacity of the ground is not adequate!

► Make sure that the hook block is placed on even and load bearing ground.
► Secure the hook block to prevent it from tipping over.

► Place the hook block on the ground.
► For safety reasons, remove the hoist limit switch weight and the chain.
► Disconnect the hoist rope in the rope fixed point.
► Reeve the hook block out.
► Remove the rope retaining pipes on the pulley head and on the back pulley.
► Disassemble the wind speed sensor* and airplane warning light*.
► Assemble and secure the rope retaining pipes on the pulley head and on the back pulley.
► Telescope the telescopic boom in all the way.

LWE/LTR 1100-009/25105-02-02/en

copyright © Liebherr-Werk Ehingen GmbH 2023

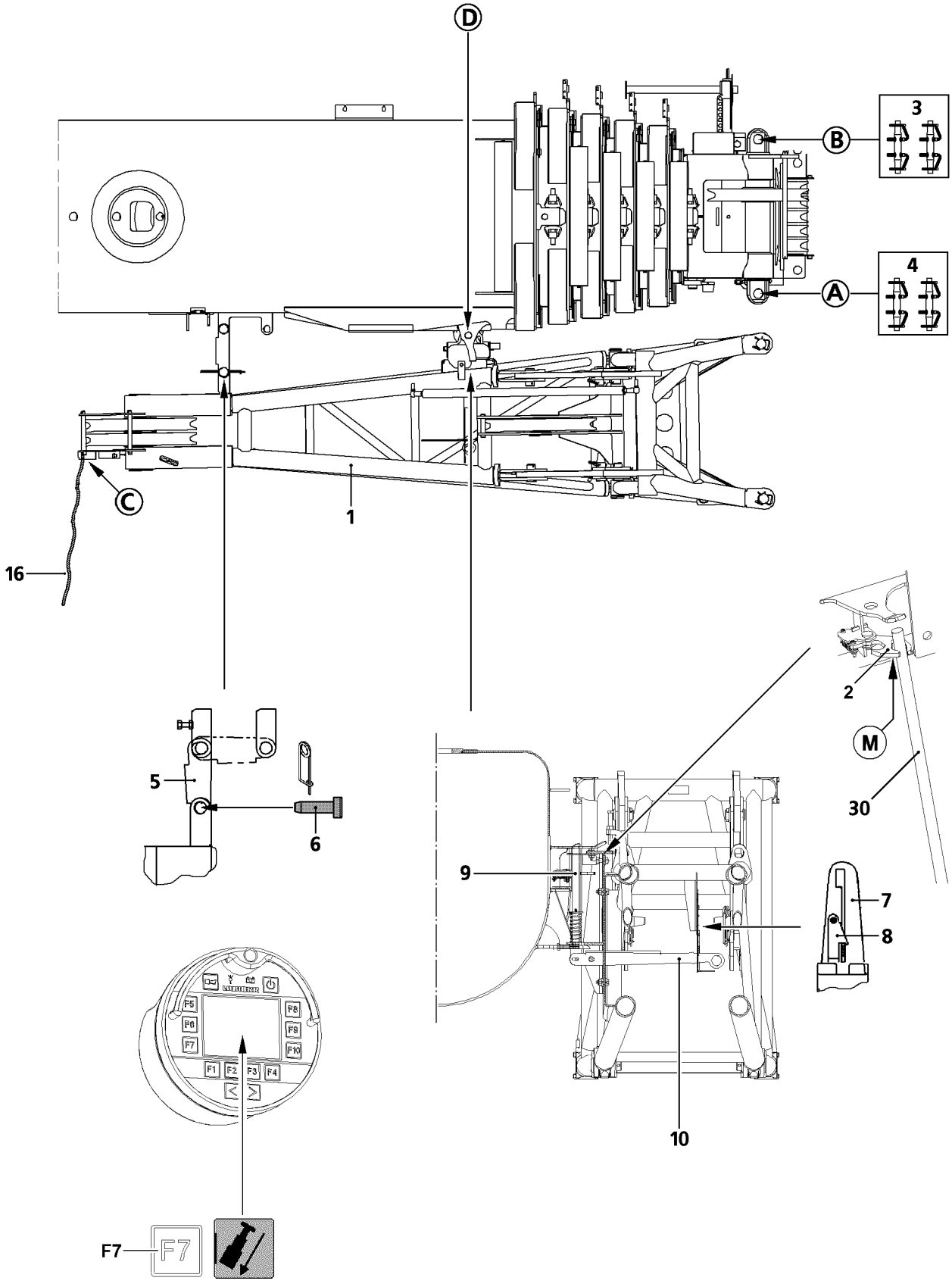

LWE/LTR 1100-009/25105-02-02/en

Fig.108696

copyright © Liebherr-Werk Ehingen GmbH 2023

3.3 Swinging the special folding jib into the operating position

Make sure that the following prerequisite is met:
– The ladders set on the special folding jib are removed.

► Attach the auxiliary rope **16** in point **C**.
► Release and unpin the pin **6**.

WARNING
Danger of accident due to assembly error on the special folding jib!
► Make sure that the pin **9** is properly locked in the pivot point.
► Make sure that the lever **10** is secured with the retaining bracket **8**.

► Swing the special folding jib **1** out until it can be pinned in point **A**.

Problem remedy
If the pin bores in point **A** do not align, the telescopic boom can be tensioned with the function key **F7** on the BTT in the „Assembly functions on the BTT“ menu:
► Start the crane engine.
► Take the telescopic boom down and telescope all telescopes in all the way.
► Pin telescope 5.

Note
► BTT, see chapter 5.31.

WARNING
Danger of severe crushing!
For the „Tension the telescopic boom“ function, all telescopic sections are pulled together. This can result in severe crushing of fingers.
► As long as the „Tension telescopic boom“ function is carried out, it is prohibited for any personnel to remain in the push out range of the telescopic sections.

► Press the function key **F7** on the BTT.

Result:

– All telescopic sections are pulled together.

► Insert the pin **4** at the top and bottom in point **A** and secure.

WARNING
Danger of fatal injury due to falling special folding jib!
The special retaining clips must be used to secure the pins **4**. The use of cotter pins or spring retainers on the pins **4** is not permitted. The special folding jib may only be unlocked in point **D**, when the pins **4** are pinned and secured at the top and bottom in point **A**.
► Pin and secure the pin **4** in point **A** at the top and bottom.

► Swing the retaining bracket **8** with the assembly rod to the side.
► Push the lever **10** with the assembly rod upward and latch it into the link **7**.

Note
► Open the catch claw **2** with the special assembly rod **30** from the ground.

► Guide the assembly rod **30** from below in point **M** and leverage the catch claw **2** on the side in direction of the boom head.

Result:

– The catch claw **2** opens and the special folding jib **1** is leveraged from the bracket of the transport retainer.

► Swing the special folding jib **1** out from the catch claw **2**.

LWE/LTR 1100-009/25105-02-02/en

copyright © Liebherr-Werk Ehingen GmbH 2023

► Swing the special folding jib **1** with the auxiliary rope **16** 180 ° until it can be pinned in point **B** at the top and bottom.

WARNING
Danger of accident due to impermissible retaining elements!
► The use of cotter pins or spring retainers is prohibited on the pins **3**.
► Use the special retaining clips to secure the pins **3**.

► Insert the pin **3** at the top and bottom in point **B** and secure.
► Remove the auxiliary rope **16**.

LWE/LTR 1100-009/25105-02-02/en

copyright © Liebherr-Werk Ehingen GmbH 2023

Empty page!

LWE/LTR 1100-009/25105-02-02/en

copyright © Liebherr-Werk Ehingen GmbH 2023

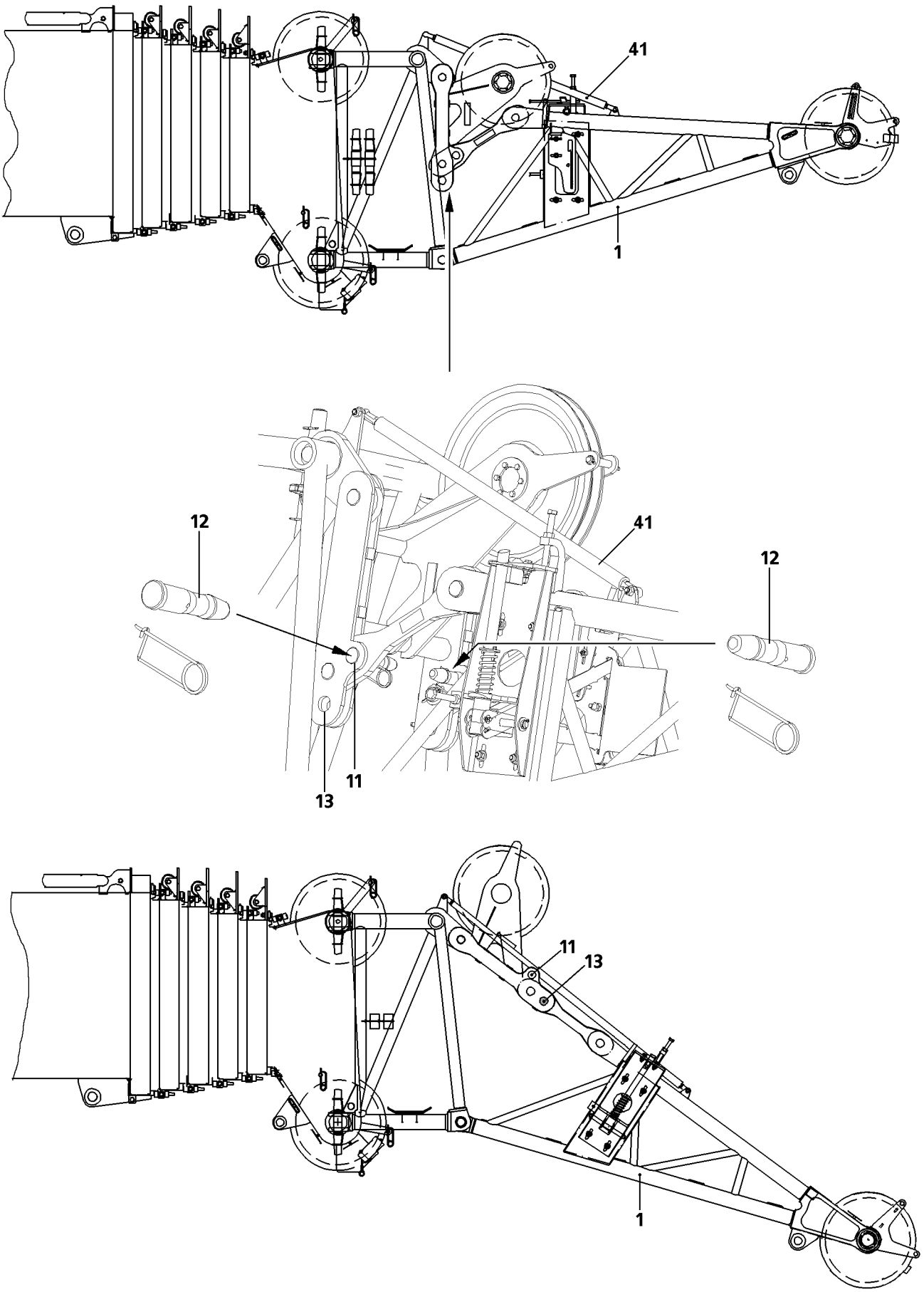

Fig.104953

LWE/LTR 1100-009/25105-02-02/en

copyright © Liebherr-Werk Ehingen GmbH 2023

3.4 Folding the special folding jib into the operating position

Note
- ► The pins **12** are easy to remove when the pneumatic spring **41** is working correctly.
- ► Defective pneumatic springs **41** no longer provide the supporting properties on the movable components on the special folding jib **1**.

DANGER
Danger of fatal injury in case of a defective pneumatic spring!
If the pneumatic spring **41** is defective, the special folding jib **1** can fall down and fatally or seriously injure personnel.
There is an increased danger of accident.
- ► Before unpinning the pin **12** and before actuation, check the pneumatic spring **41** for external damage.
- ► Do not use a special folding jib **1** with a defective pneumatic spring **41**. Replace a defective pneumatic spring **41**.
- ► If the pneumatic spring **41** is defective, support the special folding jib **1** or connect and secure it to the auxiliary crane.
- ► It is strictly prohibited for personnel or objects to remain in the movement range of the special folding jib **1**.
- ► It is prohibited for personnel or objects to remain in the danger zone of the moving components.

WARNING
Danger of fatal injury due to falling special folding jib!
Before unpinning the pin **12** it must be ensured that no persons or objects are in the danger zone, particularly below the special folding jib.
- ► Do not unpin the pin **12** until all persons and objects have been removed from the danger zone.

- ► Unpin the pin **12** on both sides from the bores **11**.
- ► Fold the special folding jib **1** down until the bores **13** align.

Note
- ► The folding procedure is simplified if a hook block is reeved in.
- ► The rope retaining pins must be unpinned before the folding procedure, see section „Reeving the hoist rope“.
- ► Lift the hook block to the point where the bores align.

- ► Insert the pin **12** on both sides in the bores **13** from the „outside to the inside“ and secure with spring retainers.

Before starting operation with the special folding jib **1**, the special folding jib **1** must be folded down and pinned.

- ► Check if the special folding jib **1** has been pinned according to the operating instructions.

LWE/LTR 1100-009/25105-02-02/en

copyright © Liebherr-Werk Ehingen GmbH 2023

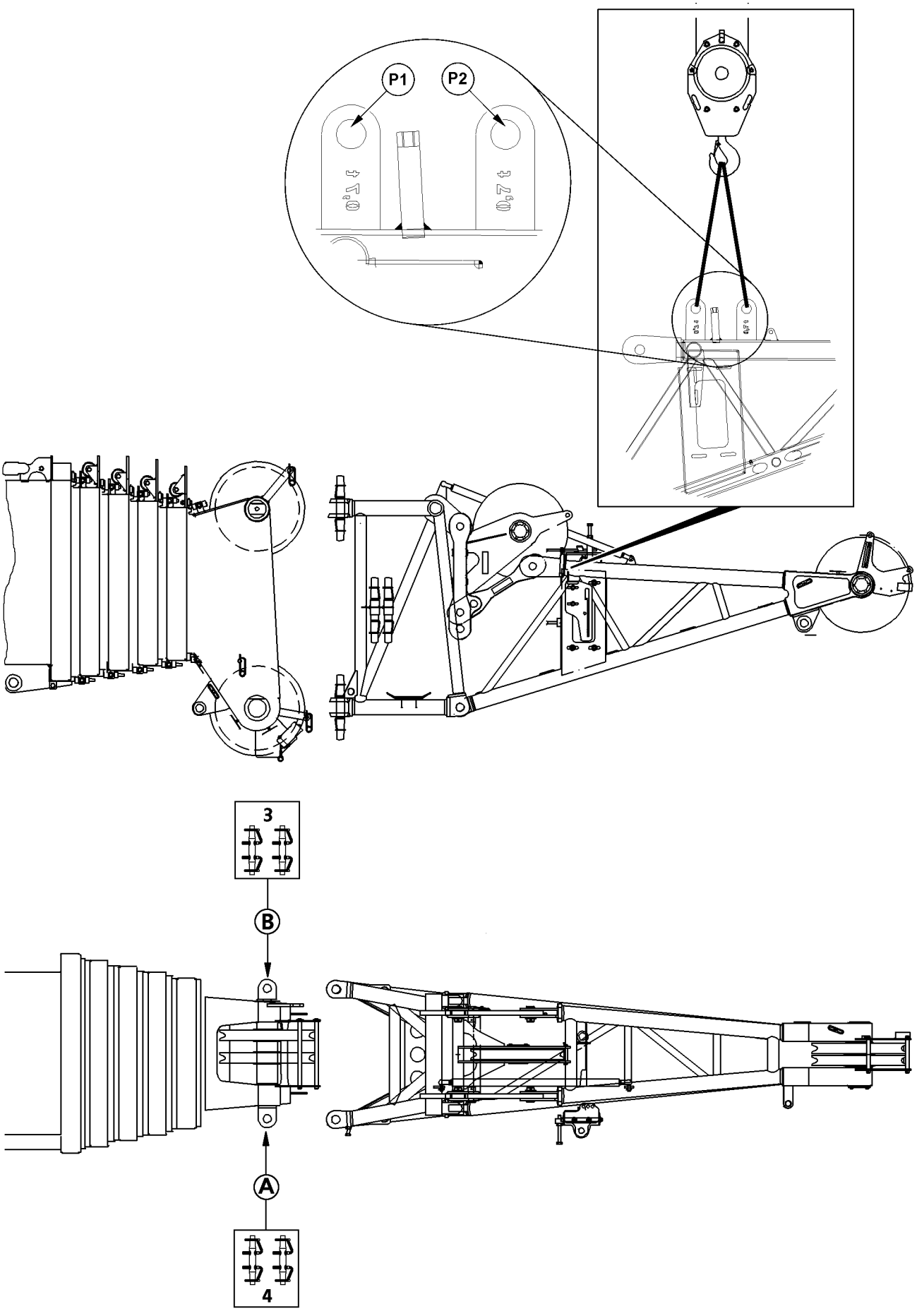

Fig.118545

LWE/LTR 1100-009/25105-02-02/en

copyright © Liebherr-Werk Ehingen GmbH 2023

3.5 Assembling the separately transported special folding jib

- ► Connect the special folding jib to the auxiliary crane, points **P1** and points **P2**.
- ► Guide the special folding jib into the fork heads on the telescopic boom.

WARNING
Danger of accident due to impermissible retaining elements!
- ► The use of cotter pins or spring retainers is prohibited on the pins **3** and pins **4**!
- ► To secure the pin **3** and the pin **4**, use the special retaining clips.

- ► Pin the special folding jib with the telescopic boom:
- ► Insert and secure the pin **4** at the top in point **A**.
- ► Insert and secure the pin **3** at the top in point **B**.
- ► Insert and secure the pin **4** at the bottom in point **A**.
- ► Insert and secure the pin **3** at the bottom in point **B**.
- ► For further assembly, see section „Folding the special folding jib into the operating position“.

LWE/LTR 1100-009/25105-02-02/en

copyright © Liebherr-Werk Ehingen GmbH 2023

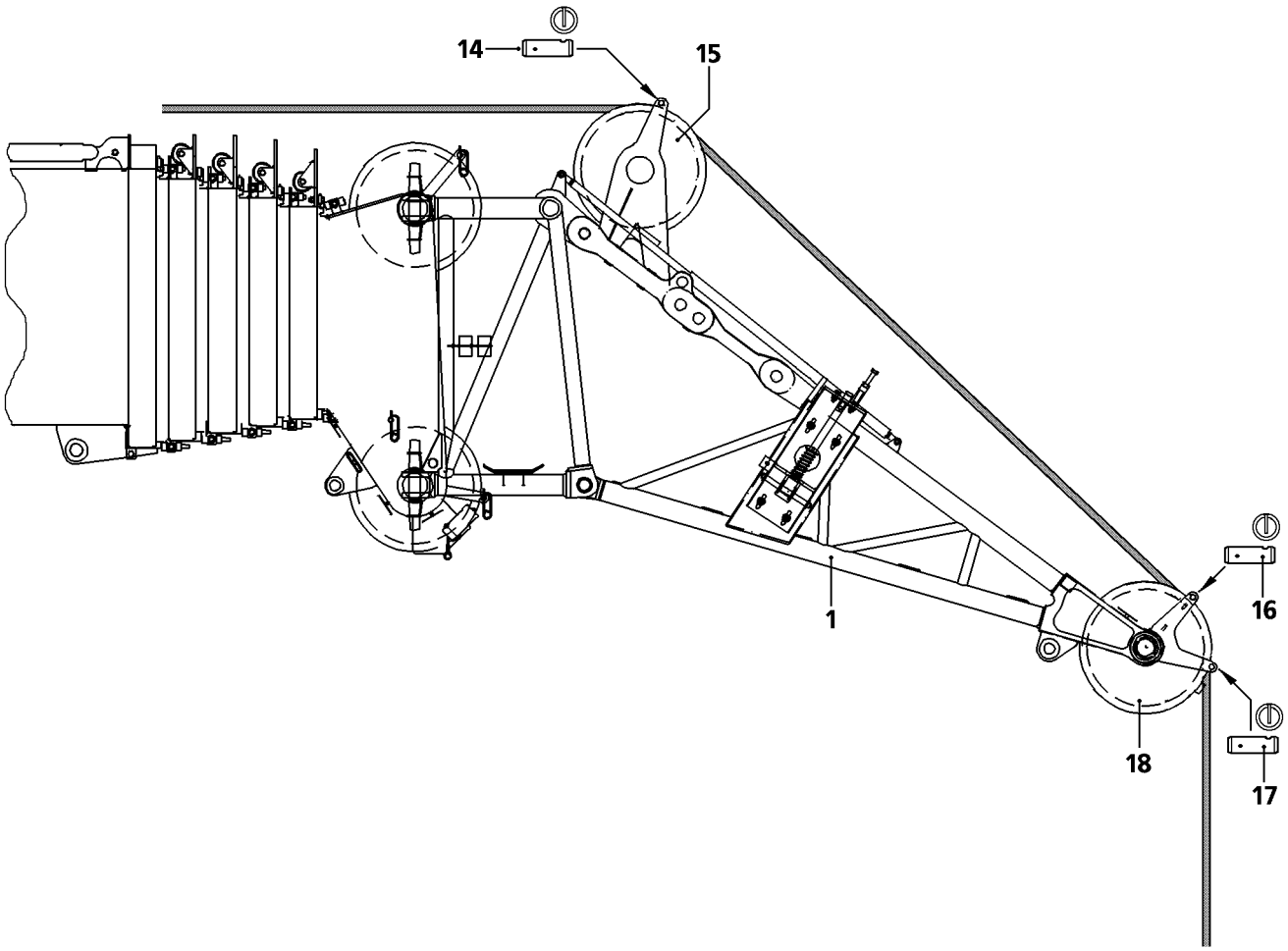

LWE/LTR 1100-009/25105-02-02/en

Fig.192470

copyright © Liebherr-Werk Ehingen GmbH 2023

3.6 Reeving the hoist rope in

DANGER
Danger of the special folding jib falling!
When stepping on the special folding jib, to reeve the hoist rope in or out, for example, there is a danger of slipping and falling from the special folding jib.
► It is prohibited to step on the special folding jib.

- ► Release and unpin the rope retaining pin **14**, rope retaining pin **16** and rope retaining pin **17**.
- ► Place the hoist rope over the rope guide pulley **15** and over the end pulley **18**.
- ► Reeve the hoist rope in.
- ► Insert the rope retaining pin again and secure with locking pins.
- ► Attach the hoist limit switch weight.
- ► Assemble the wind speed sensor* and airplane warning light*.

Note
► For special folding jib operation with the hook block reeved in on the telescopic boom, the weight of the hook block reeved in on the telescopic boom must be deducted from the load.

LWE/LTR 1100-009/25105-02-02/en

copyright © Liebherr-Werk Ehingen GmbH 2023

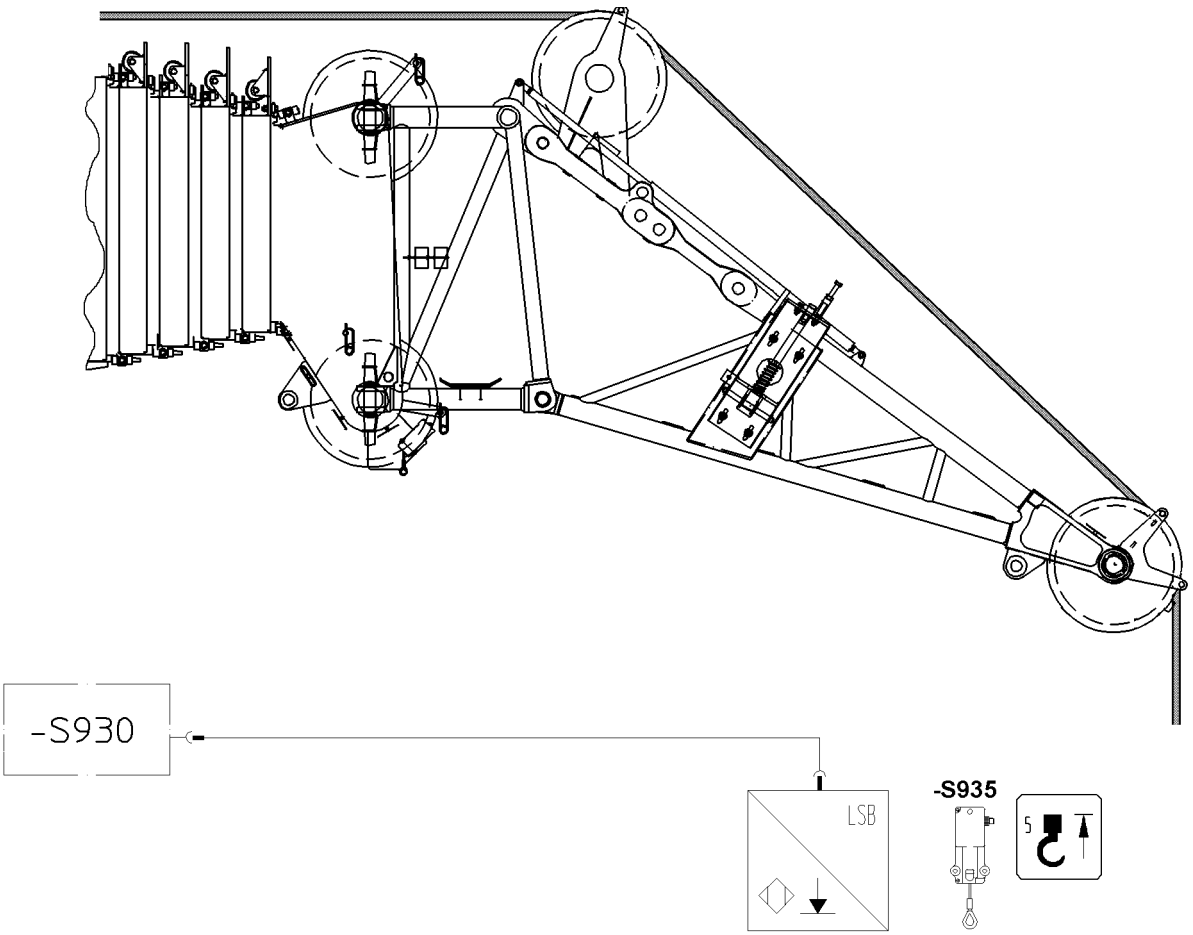

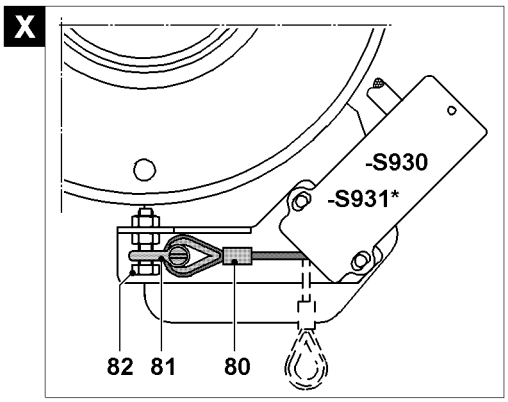

LWE/LTR 1100-009/25105-02-02/en

Fig.118543

copyright © Liebherr-Werk Ehingen GmbH 2023

4 Electrical connections on the special folding jib

Note
► For further information about the electrical connections, see the wiring diagram.

4.1 Mechanically actuating the hoist limit switch, illustration X

If working in „single hook operation“ with the installed special folding jib, the unrequired hoist limit switch **-S930** and hoist limit switch* **-S931** must be actuated manually.

► Disassemble the hoist limit switch weight and chain.
► Pull the hoist limit switch rope **80** and attach to the fixed point **82** with the shackle **81**.

4.2 Establishing the electrical connections on the special folding jib

Note
► In single hook operation, only the hoist limit switch **-S935** on the special folding jib is active. The hoist limit switch **-S930** and the hoist limit switch* **-S931** must be mechanically actuated, see illustration **X**.
► In two hook operation, the hoist limit switch **-S935** on the Special folding jib and the hoist limit switch **-S930** on the telescopic boom are active. The hoist limit switch* **-S931** must be actuated mechanically, see illustration **X**.

► Establish the electrical connections.
► Make sure that all electrical connections on the boom are established.

4.3 Checking the electrical connections

Make sure that the following prerequisites are met:
– All electrical connections have been established.
– The LICCON computer system is running.
– The appropriate operating mode is set.

WARNING
Defective monitoring devices!
Death, toppling crane, property damage

In case of defective monitoring devices:
► Do not carry out any crane operation.

4.3.1 Wind speed sensor*

► Manually actuate the wind speed sensor.

Result:

– The „Wind speed“ icon element appears on the monitor.

4.3.2 Airplane warning light*

► Turn the airplane warning light on.
► Perform a visual inspection.

4.3.3 Hoist limit switch

The hoist limit switch **-S930** and hoist limit switch* **-S931** are located on the telescopic boom head.

The hoist limit switch **-S930** and hoist limit switch* **-S931** must always be connected to the LICCON system bus.

LWE/LTR 1100-009/25105-02-02/en

copyright © Liebherr-Werk Ehingen GmbH 2023

► Actuate the hoist limit switches manually.

Result:

– The Hoist top icon element appears on the monitor.
– The winch turns off.

LWE/LTR 1100-009/25105-02-02/en

copyright © Liebherr-Werk Ehingen GmbH 2023

Empty page!

LWE/LTR 1100-009/25105-02-02/en

copyright © Liebherr-Werk Ehingen GmbH 2023

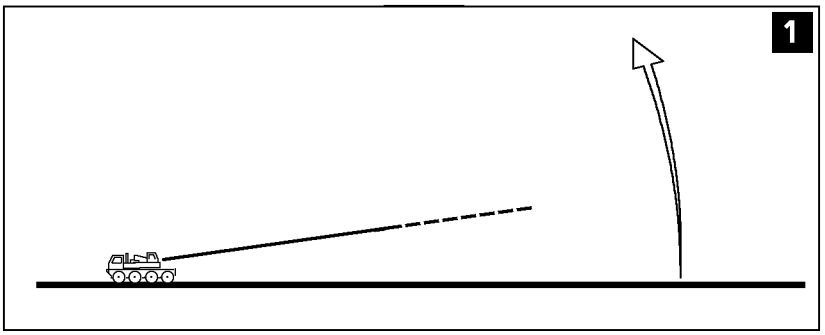

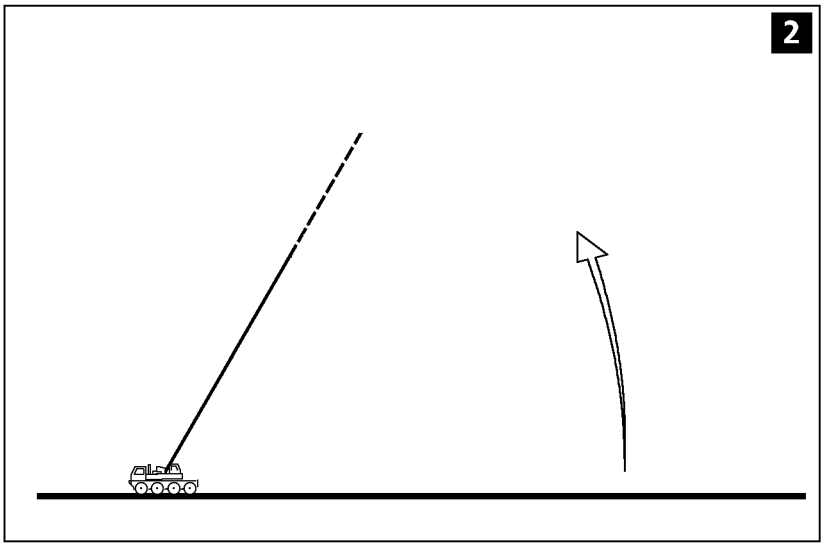

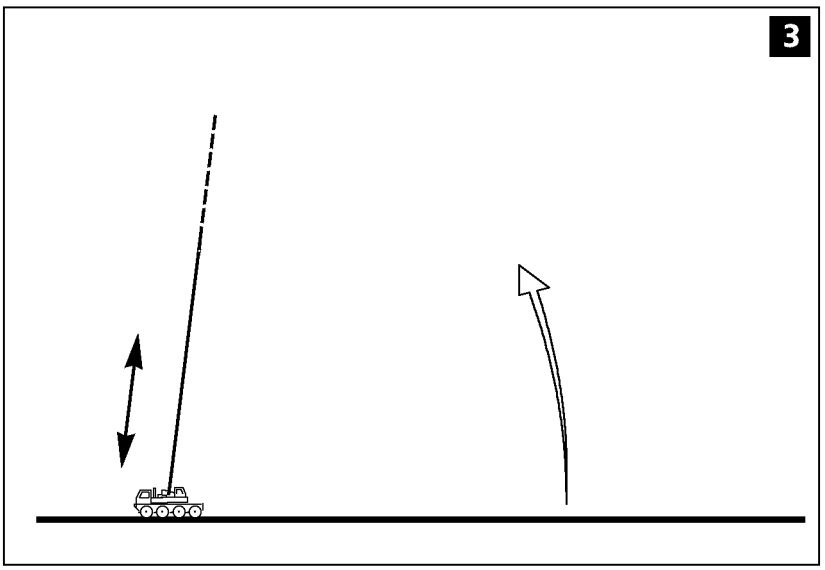

Fig.192389

LWE/LTR 1100-009/25105-02-02/en

copyright © Liebherr-Werk Ehingen GmbH 2023

5 Erecting

5.1 Preparatory work

Make sure that the following prerequisites are met:
- The crane is properly supported and horizontally aligned.
- The counterweight has been installed on the turntable according to the load chart.
- The telescopic boom is fully telescoped in.
- The special folding jib has been assembled according to the load chart and the Operating instructions.
- All limit switches have been correctly assembled and are fully operational.
- All pin connections are secured.
- The hoist rope has been correctly placed in the rope pulleys and is secured with rope retaining pins to prevent it from jumping out.
- There are no foreign objects on the telescopic boom and the special folding jib.
- The telescopic boom, the special folding jib and its components (e.g.: limit switches, airplane warning light, wind speed sensor) must be free of snow and ice in the winter.

DANGER
Danger of accident!
Incorrectly installed or non-functioning limit switches as well as falling parts (pins, cotter pins, ice etc.) can cause accidents.
► Assemble all limit switches, pins and cotter pins properly.

► Check if all prerequisites have been met.

5.2 Erection procedure

DANGER
Danger of accident due to toppling of the crane!
The boom radii specified in the load chart may not be exceeded or fallen below, even if there is no load on the hook. If this regulation is not observed, the crane can topple over.
► Compare and check the settings on the LICCON computer system with the actual set up configuration.

For adjustment of the LICCON overload protection, see chapter 4.02.

► Set and confirm the LICCON overload protection according to the required set up configuration.
► Luff the telescopic boom up with the special folding jib attached until the LICCON signals the release.
► Telescope the telescopic boom out to the values specified in the load chart.

LWE/LTR 1100-009/25105-02-02/en

copyright © Liebherr-Werk Ehingen GmbH 2023

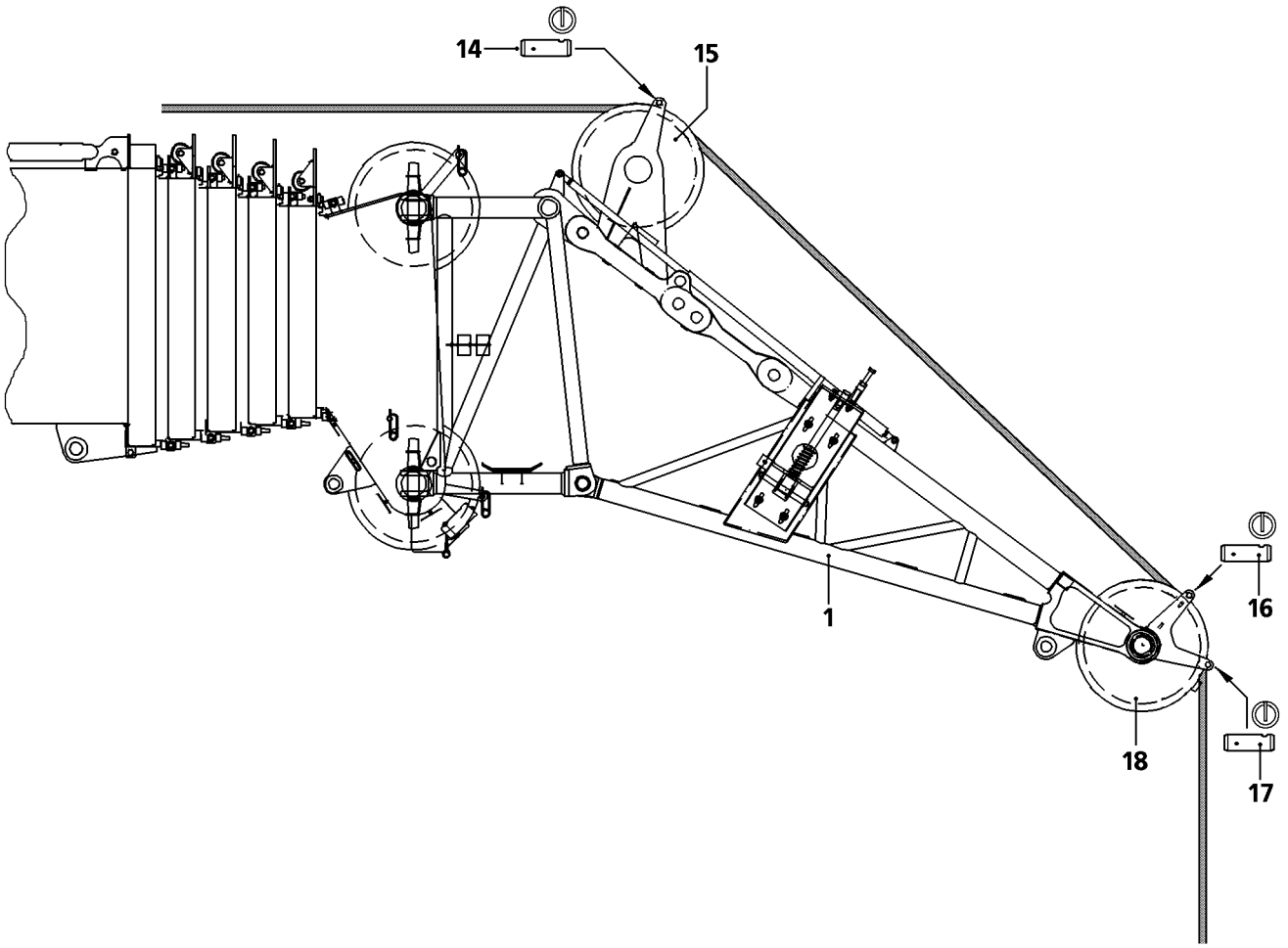

LWE/LTR 1100-009/25105-02-02/en

Fig.192470

copyright © Liebherr-Werk Ehingen GmbH 2023

6 Disassembling the special folding jib

WARNING
Danger of falling!
During assembly and disassembly, assembly personnel must be secured with appropriate aids to prevent them from falling. If this is not observed, assembly personnel could fall and suffer fatal injuries.
- ► All work at a height, when there is a danger of falling, must be carried out with suitable aids.
- ► If fall protection equipment is available, then it must be used, see chapter 2.06.
- ► If aids are not available and work cannot be carried out from the ground, then the assembly personnel must secure themselves with the supplied fall arrest system to prevent falling, see chapter 2.04.
- ► The supplied fall arrest system must be fastened in the fastening and hook points as well as to the safety ropes. For safety points, see chapter 2.06.
- ► When lifting, lowering, swinging crane parts in and out, no persons may remain in the danger zone.
- ► Only step on the aids, ladders and catwalks with clean shoes.
- ► Keep aids, ladders and catwalks free of heavy dirt, snow and ice.

WARNING
Danger of accident when driving with the special folding jib!
- ► Before on-road driving, the special folding jib must always be brought into the transport position and mechanically secured.
- ► Make sure that the special folding jib is properly secured before moving the crane on public roads.

WARNING
Danger of fatal injury due to falling special folding jib!
Due to an assembly error, the special folding jib can fall down and cause fatal injuries.
- ► Standing under the special folding jib during the swinging procedure is prohibited.
- ► It is prohibited to stand in the slewing range or in the folding area of the special folding jib!
- ► The special folding jib must be secured by an auxiliary rope during the swinging procedure.

WARNING
Danger of fatal injury due to falling special folding jib!
The special folding jib could fall down due to a disassembly error.
- ► Standing under the special folding jib during the swinging procedure is prohibited.
- ► It is prohibited to stand in the slewing range or in the folding area of the special folding jib!
- ► The special folding jib must be secured by an auxiliary rope during the swinging procedure!

WARNING
Danger of accident if the special folding jib swings out by itself when it is unpinned!
If the telescopic boom is not in the 0° position, there is a danger of accident if the special folding jib swings out by itself when it is unpinned.
- ► Move the telescopic boom to the 0° position.
- ► Make sure that the boom is **not** luffed during assembly.

Make sure that the following prerequisites are met:
- – The crane is properly supported and horizontally aligned.
- – The counterweight has been installed on the turntable according to the load chart.
- – The central ballast has been installed on the turntable according to the load chart.
- – The telescopic boom has been luffed to the rear or the side.
- – The telescopic boom is telescoped in all the way.
- – The telescopic boom has been luffed down to the rear or to the side in the 0° position.

LWE/LTR 1100-009/25105-02-02/en

copyright © Liebherr-Werk Ehingen GmbH 2023

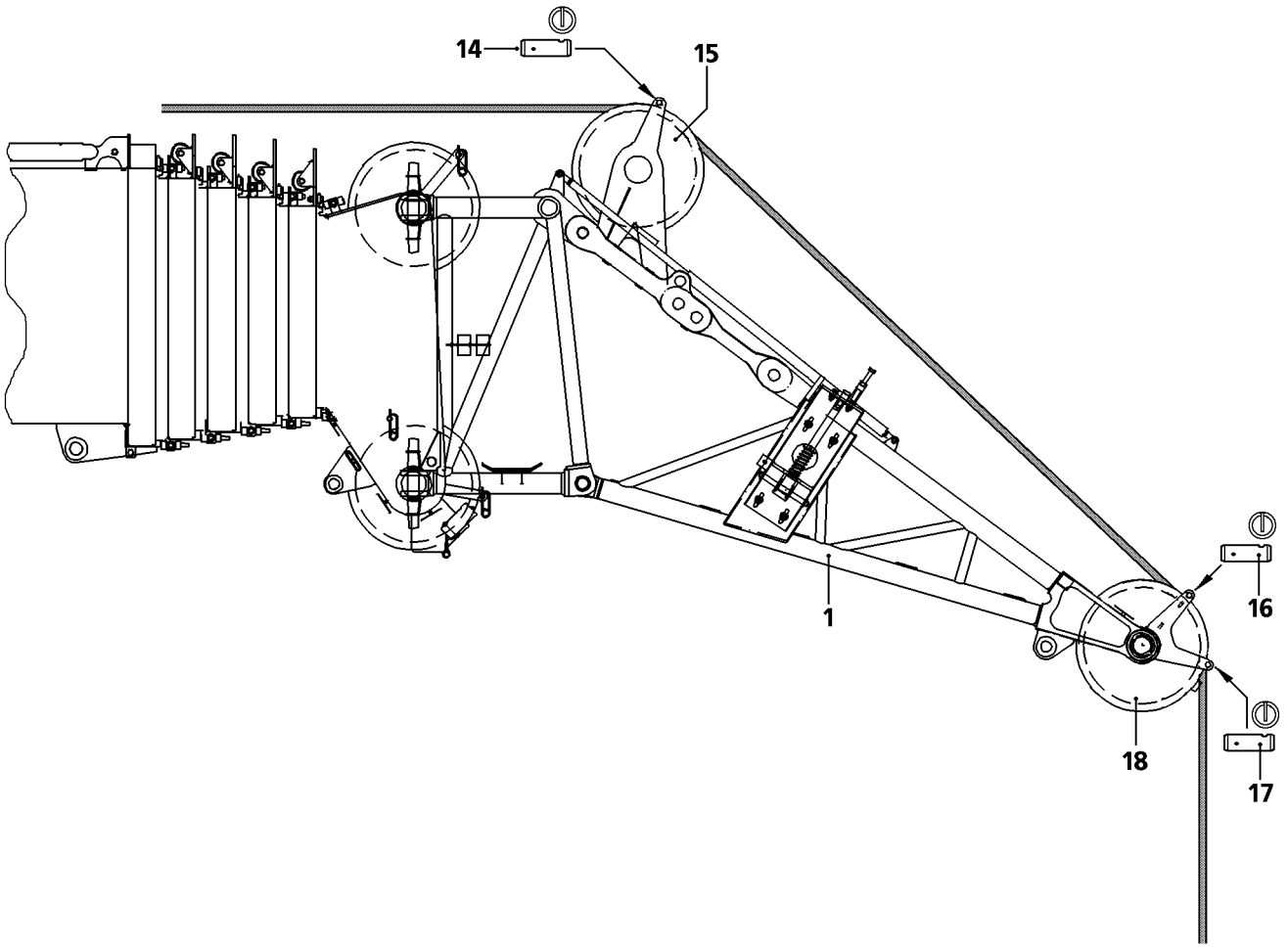

LWE/LTR 1100-009/25105-02-02/en

Fig.192470

copyright © Liebherr-Werk Ehingen GmbH 2023

6.1 Reeving the hoist rope out

DANGER
Danger of the special folding jib falling!
When stepping on the special folding jib, to reeve the hoist rope in or out, for example, there is a danger of slipping and falling from the special folding jib.
► It is prohibited to step on the special folding jib.

WARNING
Danger of accident due to uneven ground or when the load bearing capacity of the ground is not adequate!
► Make sure that the hook block is placed on even and load bearing ground.
► Secure the hook block to prevent it from tipping over.

► Place the hook block on the ground.
► For safety reasons, remove the hoist limit switch weight and the chain.
► Disassemble the wind speed sensor* and airplane warning light*.
► Release and unpin the rope retaining pin **14**, rope retaining pin **16** and rope retaining pin **17**.
► Disconnect the hoist rope in the rope fixed point.
► Reeve the hook block out.
► Lift the hoist rope from the rope guide pulley and end pulley and take it down on the ground.
► Spool the hoist rope up.
► Reinsert the rope retaining pin **14**, rope retaining pin **16** and rope retaining pin **17** and secure with locking pins.

LWE/LTR 1100-009/25105-02-02/en

copyright © Liebherr-Werk Ehingen GmbH 2023

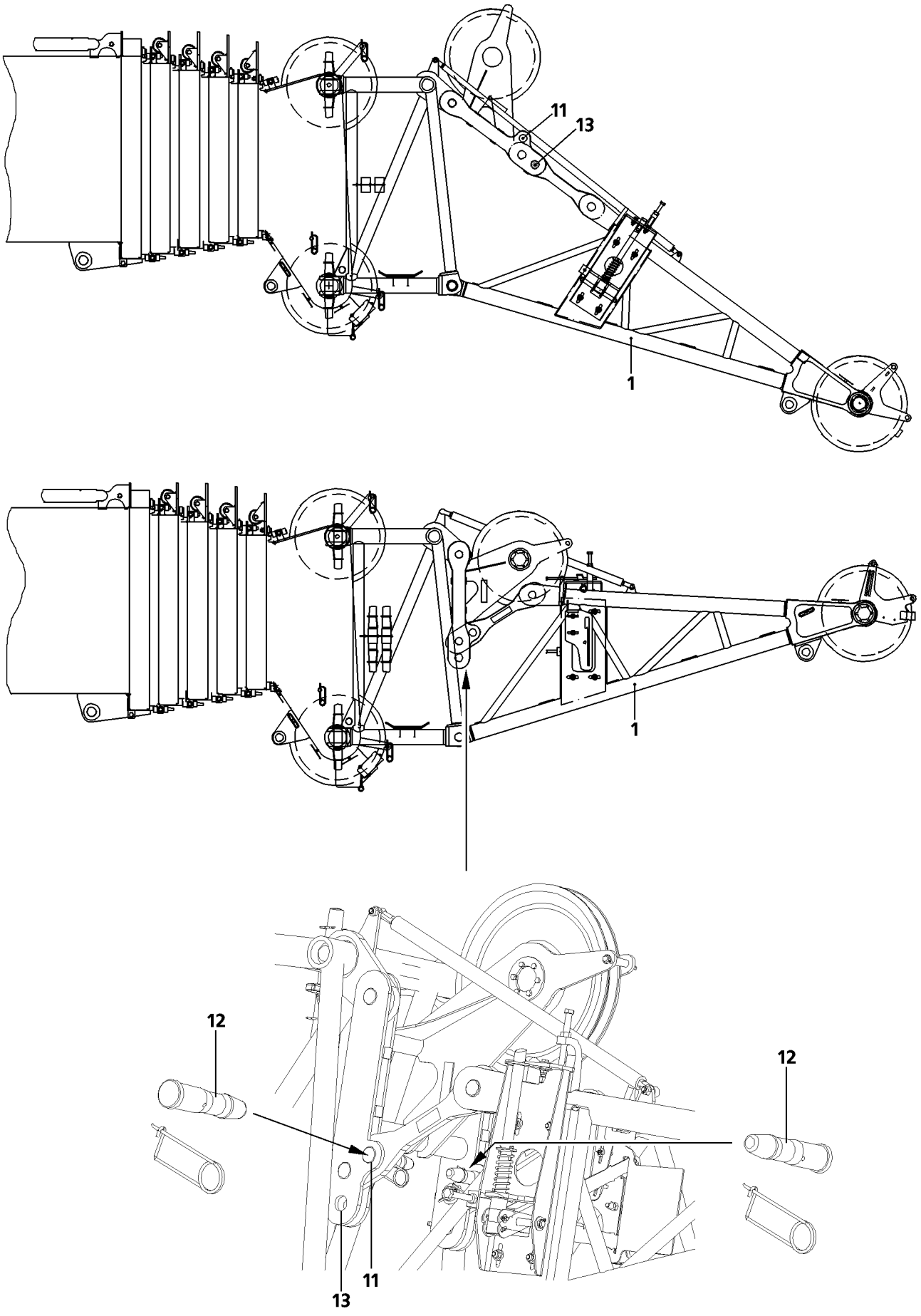

Fig.104954

LWE/LTR 1100-009/25105-02-02/en

copyright © Liebherr-Werk Ehingen GmbH 2023

6.2 Folding the special folding jib into the transport position

WARNING
Danger of accident!
Before the special folding jib **1** may be swung into the transport position, the special folding jib **1** must be folded up into the transport position and pinned.
Before unpinning the pin **12** it must be ensured that no persons or objects are in the danger zone, particularly below the special folding jib.
- ► Do not unpin the pin **12** until all persons and objects have been removed from the danger zone.
- ► Insert the pin **12** from the „outside to the inside“.

WARNING
Danger of fatal injury in case of a defective pneumatic spring!
- ► Before unpinning the pin **12** and before actuation, check the pneumatic spring **41** for external damage.
- ► Do not use a special folding jib with a defective **pneumatic spring**.

If the pneumatic spring **41** does not fold up by itself after unpinning it from the pin **12**:
- ► Replace a defective pneumatic spring **41**.

Note
- ► The special folding jib **12** can be folded up easily if the pneumatic spring **41** is functioning.
- ► Defective pneumatic springs **41** no longer provide the supporting properties on the movable components on the special folding jib **1**.

- ► Release the pin **12** on both sides and unpin from the bores **13**.
- ► Fold the special folding jib **1** up into the transport position until the bores **11** align.
- ► Insert the pin **12** on both sides in the bores **11** from the „outside to the inside“ and secure with spring retainers.

6.3 Disconnecting the electrical connections

- ► Disconnect all electrical connections on the special folding jib

LWE/LTR 1100-009/25105-02-02/en

copyright © Liebherr-Werk Ehingen GmbH 2023

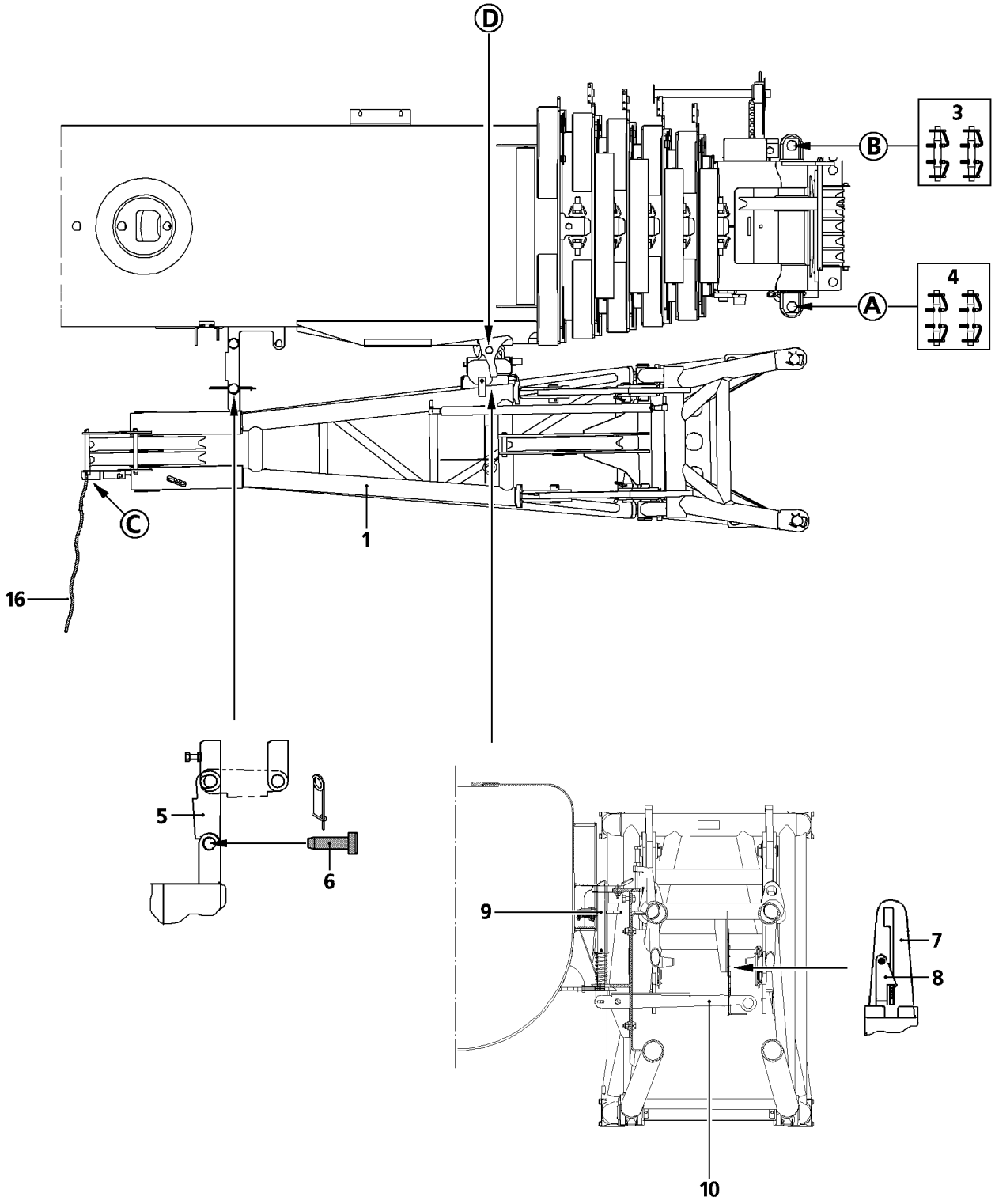

LWE/LTR 1100-009/25105-02-02/en

Fig.107278

copyright © Liebherr-Werk Ehingen GmbH 2023

6.4 Swinging the special folding jib into the transport position

► Attach the auxiliary rope **16** in point **C**.

WARNING
Danger of accident due to the special folding jib swinging out by itself!
When unpinning the pin **3**, the special folding jib can swing out inadvertently.

In order to prevent the special folding jib from swinging out by itself:
► Hold the special folding jib using the auxiliary rope **16**.
► Do not lean the ladder against the special folding jib!

► Release and unpin the pin **3** on the top and bottom in point **B**.
► Insert the pin **3** in the receptacle and secure.
► Disengage the lever **10** with the assembly rod from the link **7** and pull downward.
► Swing the special folding jib **1** in with the auxiliary rope **16** until the lock **9** engages audibly in point **D**.
► Check visually to ensure that the retaining bracket **8** remains open.
► Secure the lever **10**: Swing the retaining bracket **8** downward.

DANGER
Danger of accident due to falling special folding jib!
If the pins **4** are unpinned before the lock **9** is engaged and secured with the retaining bracket **8**, the special folding jib will fall down!
► Unpin the pin **4** in point **A** only when the lock **9** is engaged and secured with the retaining bracket **8**.

► Release and unpin the pin **4** on the top and bottom in point **A**.
► Insert the pin **4** in the receptacle and secure.
► Swing the special folding jib **1** in until the pin **6** can be pinned.
► Pin the special folding jib **1** with the telescopic boom: Insert and secure the pin **6**.
► Remove the auxiliary rope **16**.

LWE/LTR 1100-009/25105-02-02/en

copyright © Liebherr-Werk Ehingen GmbH 2023

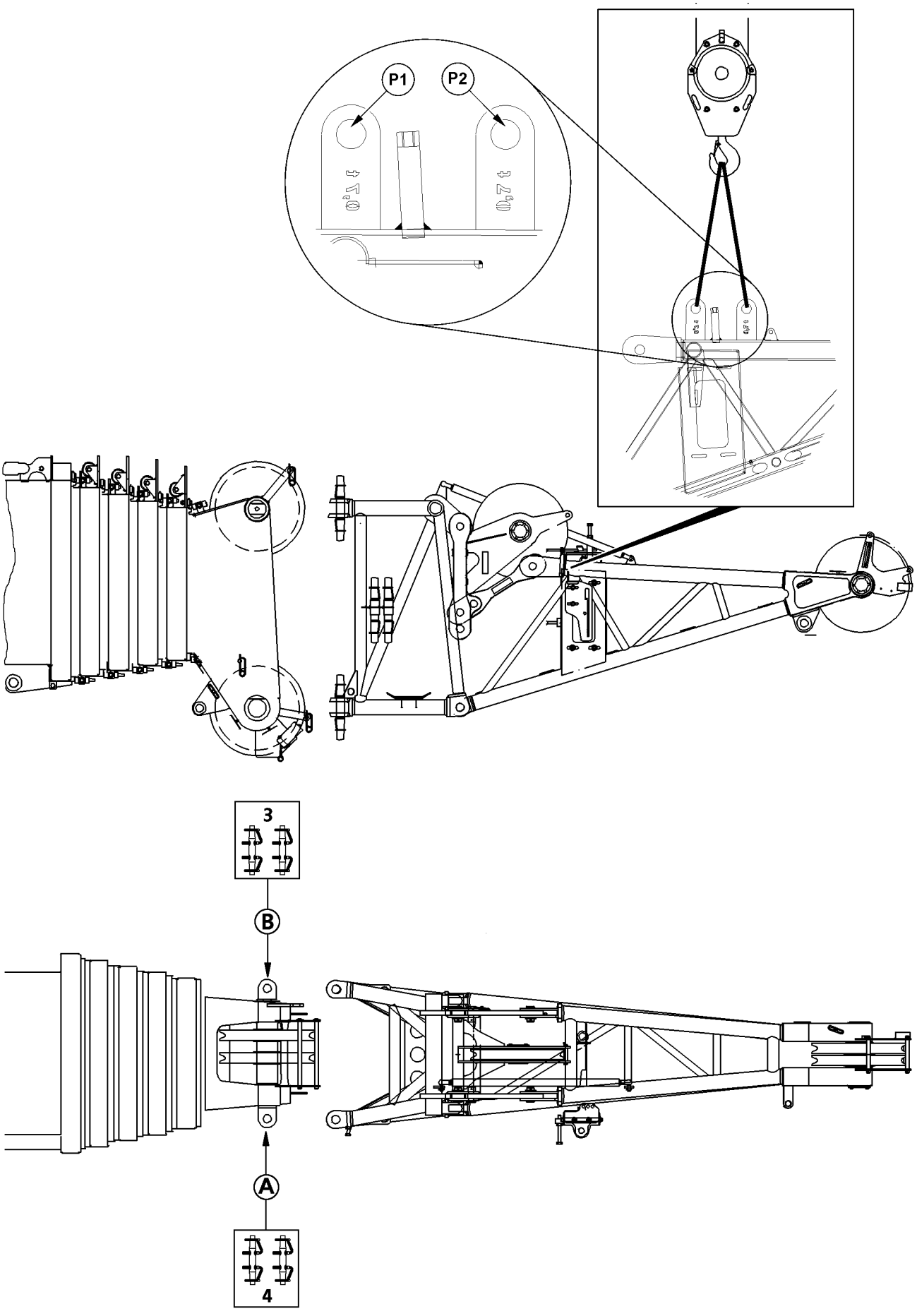

Fig.118545

LWE/LTR 1100-009/25105-02-02/en

copyright © Liebherr-Werk Ehingen GmbH 2023

6.5 Disassembling the separately transported special folding jib

Make sure that the following prerequisite is met:
– The special folding jib is folded into the operating position.

► Fasten the auxiliary crane in point **P1** and point **P2** of the jib boom.

WARNING
Danger of accident during disassembly of the special folding jib!
If the following conditions are not met, then assembly personnel can be fatally injured during disassembly.
► When knocking out the pins, no one may remain under the special folding jib.
► Fasten the auxiliary crane so that no angular pull occurs.
► Match the „hoisting power“ of the auxiliary crane to the „weight“ of the special folding jib.
► The special folding jib can suddenly release due to tension!
► Do not disassemble the special folding jib until it has been secured with the auxiliary crane to prevent it from falling.
► Do not lean the ladder against the special folding jib!

► Tighten the fastening ropes until the special folding jib is secured to prevent it from falling.
► Unpin the special folding jib on the telescopic boom:
► Release the pin **4** at the top in point **A** and unpin.
► Release the pin **3** at the top in point **B** and unpin.
► Release and unpin the pin **4** at the bottom in point **A**.
► Release and unpin the pin **3** at the bottom in point **B**.
► Take the special folding jib down on the transport vehicle.

LWE/LTR 1100-009/25105-02-02/en

copyright © Liebherr-Werk Ehingen GmbH 2023

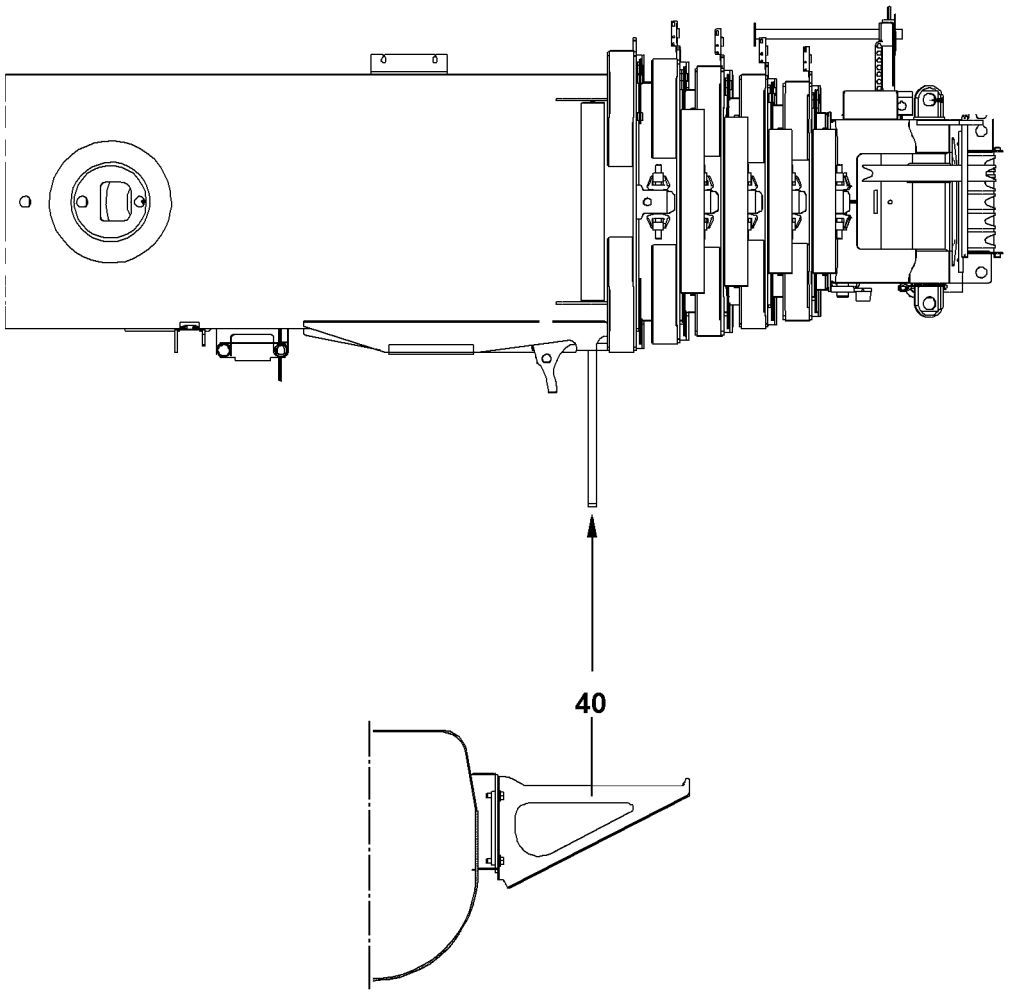

LWE/LTR 1100-009/25105-02-02/en

Fig.103264

copyright © Liebherr-Werk Ehingen GmbH 2023

6.6 Assembling the catch bar on the telescopic boom pivot section

WARNING
Danger of fatal injury due to falling folding jib!
Due to a damaged or non-existent catch bar **40** on the telescopic boom pivot section, the folding jib can fall down and cause fatal injuries.

- ► Make sure that the catch bar **40** is property installed again and not damaged „before assembling the single or the double folding jib“, see also, chapter 5.02.
- ► After the special folding jib is disassembled from the telescopic boom, the catch bar **40** must be reassembled properly.

► Assemble the catch bar **40** properly on the telescopic boom pivot section.

LWE/LTR 1100-009/25105-02-02/en

copyright © Liebherr-Werk Ehingen GmbH 2023

Empty page!

LWE/LTR 1100-009/25105-02-02/en

copyright © Liebherr-Werk Ehingen GmbH 2023

5.19 Hook blocks

1	Safety	2
2	Hook block / load hook fastening points	3
3	Rope guard	4
4	Transporting the hook block / load hook	5
5	Divisible hook block*	6
6	Overview of the fastening systems	10
7	Fastening system 1	11
8	Fastening system 2	14
9	Fastening system 3	17
10	Slack rope formation	23

LWE/LTR 1100-009/25105-02-02/en

copyright © Liebherr-Werk Ehingen GmbH 2023

1 Safety

Before using the hook block, observe the safety guidelines.

- General safety information: See chapter 2.04.
- Information regarding the labeling of the load carriers: See chapter 2.05.10.
- Information regarding rope reeving: See chapter 4.06.
- Reeving plans

Differently sized hook blocks can be used for various load cases.

The load hooks and hook blocks approved for this crane type are listed in the load chart.

The hook blocks shown in this chapter are examples only and can deviate from the existing hook block.

WARNING
Improper assembly!
Death, severe bodily injuries, property damage.
► Observe and adhere to the data in the erection and take-down charts.
► Observe and adhere to the data in the load charts.
► Assemble the hook block according to instruction.
► Observe and adhere to the minimum required hook block weight.

The maximum permissible own weight (WT max.) is engraved on ballastable hook blocks.

WARNING
Maximum permissible own weight of the hook block exceeded.
Failure of the hook block and the auxiliary weight mount.
Permissible ground pressure exceeded.
► Do **not** exceed the maximum permissible own weight (WT max.) of the hook block.

WARNING
Hook block weight is too low!
Slack rope formation, spooling problems on the winches.
Death, severe bodily injuries, property damage.
► Avoid slack rope formation.
► Calculate the minimum required hook block weight before lifting the load.
► Select the weight of the hook block depending on the calculation.

When the hook block weight is too low:
► Select a heavier hook block or increase the hook block weight with auxiliary weights or modification kits.

LWE/LTR 1100-009/25105-02-02/en

copyright © Liebherr-Werk Ehingen GmbH 2023

2 Hook block / load hook fastening points

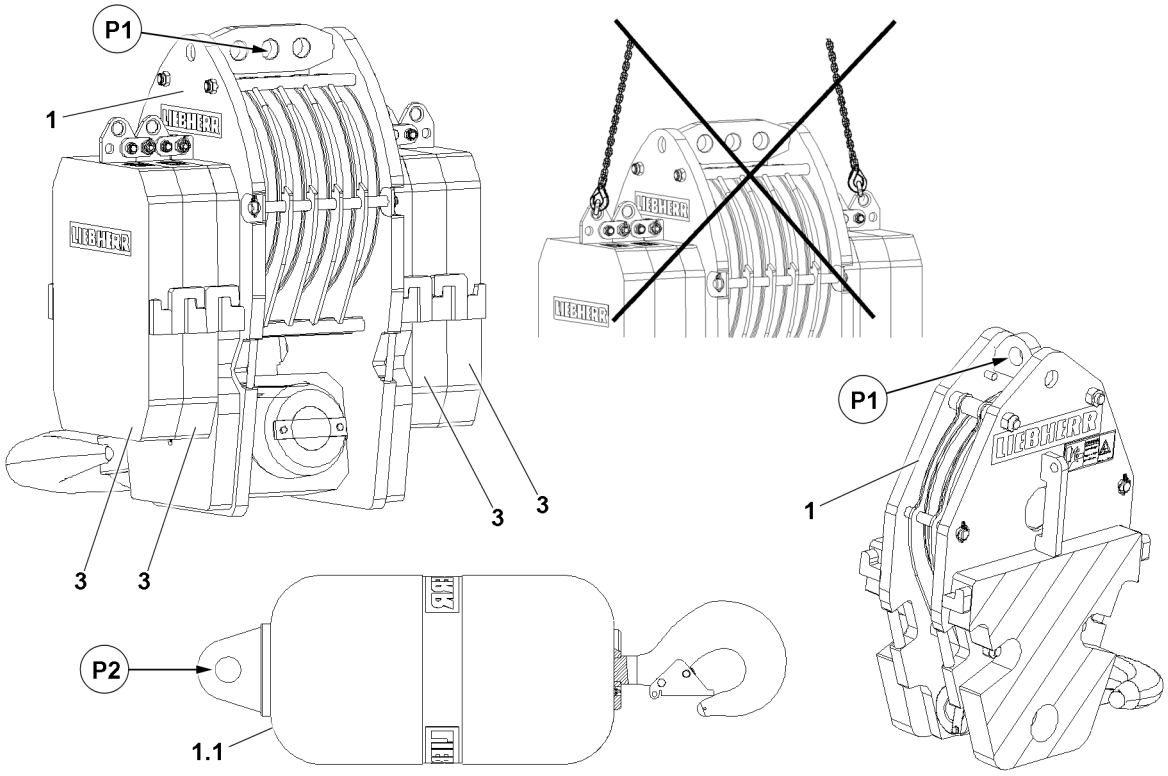

Fig.152229: Hook block / load hook fastening points

If necessary: Use a suitable shackle.

WARNING
Hook block incorrectly fastened!
Failure of the fastening points, the hook block **1** falls down.
Death, severe bodily injuries.
- ► Fasten the hook block **1** exclusively in the center in the fastening point **P1**.
- ► Do **not** fasten the hook block **1** to the auxiliary weights **3**.
- ► Fasten the load hook **1.1** in the fastening point **P2**.

LWE/LTR 1100-009/25105-02-02/en

copyright © Liebherr-Werk Ehingen GmbH 2023

3 Rope guard

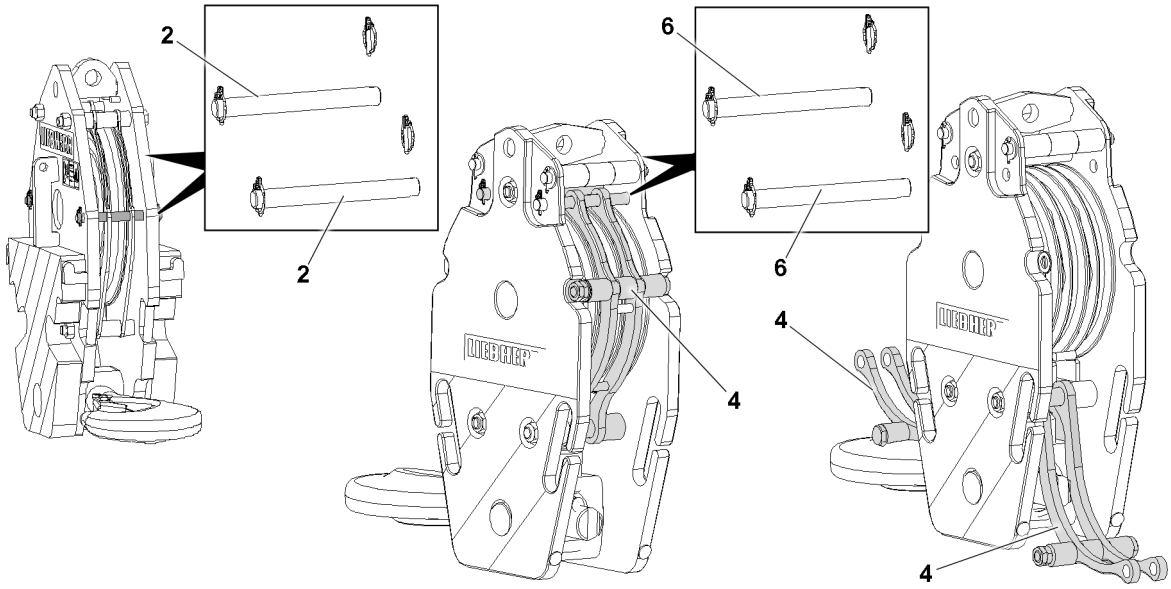

Fig.152230: Rope guard system for hook blocks

Rope guard systems are used to protect hands and secure the hoist rope.

A distinction is made between the following rope guard systems:
- Rope guard with rope guard pin
- Folding rope guard

The folding rope guard is only available as an option for certain crane types.

3.1 Rope guard pin

Before assembly of the hoist rope, all rope guard pins **2** must be disassembled.

► Release and unpin all rope guard pins **2**.
► Reeve the hoist rope in.
► Insert and secure all rope guard pins **2**.

3.2 Folding rope guard

Before assembly of the hoist rope, the folding rope guard **4** must be folded down.

WARNING
Folding rope guard **4** not secured!
Hands can be crushed.
► Before unpinning, secure the rope guard **4**. Then fold it down.

► Release and unpin the pin **6**.
► Fold the rope guard **4** down completely.
► Reeve the hoist rope in.
► Fold the rope guard **4** up.
► Insert and secure the pin **6**.

LWE/LTR 1100-009/25105-02-02/en

copyright © Liebherr-Werk Ehingen GmbH 2023

4 Transporting the hook block / load hook

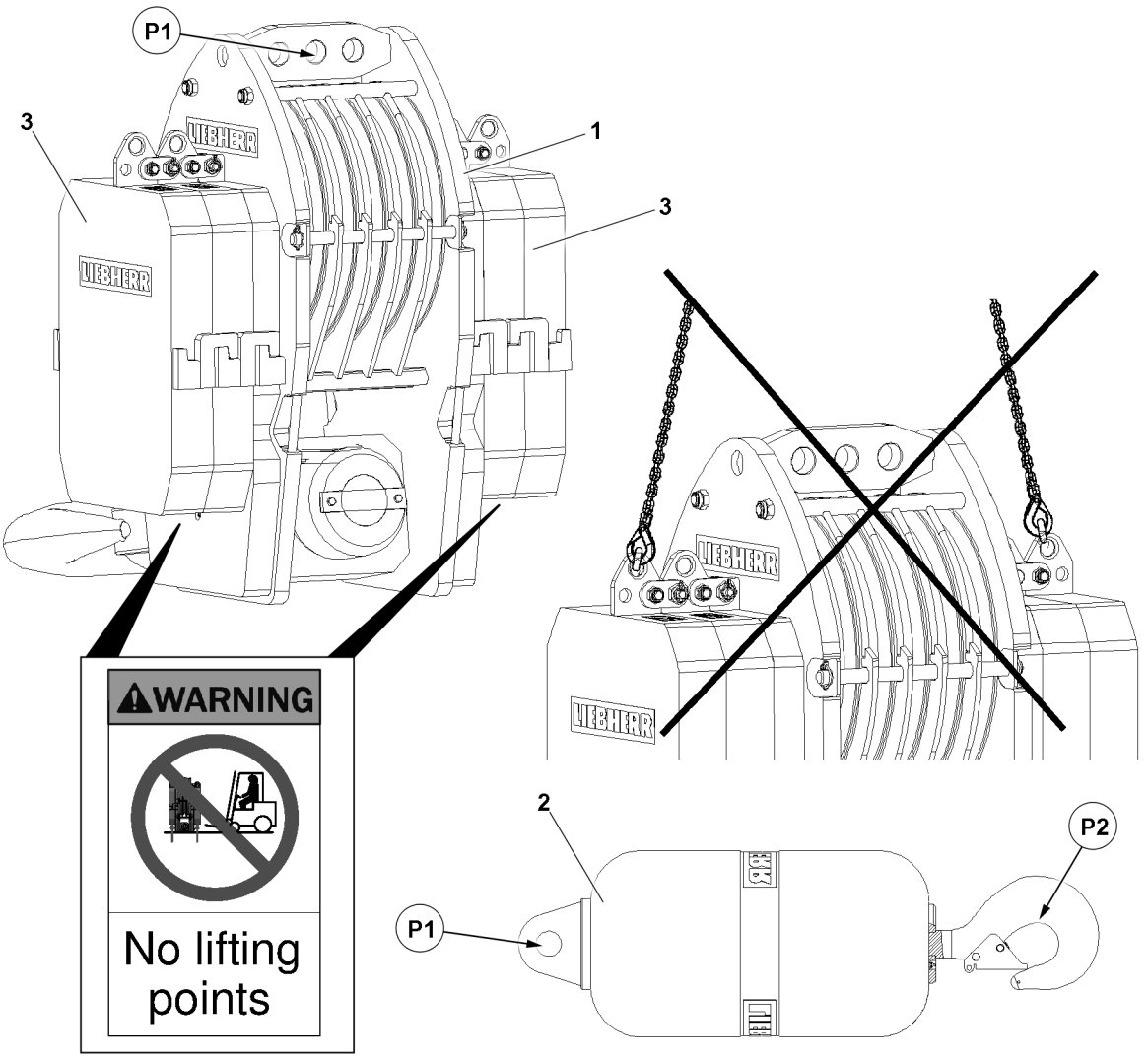

Fig.152232: Transporting the hook block / load hook

4.1 Transporting with the crane

WARNING
Hook block incorrectly fastened!
The fastening point can fail and the hook block **1** can fall down.
Personnel can be killed or seriously injured.
- ► Fasten the hook block **1** exclusively in the center in the fastening point **P1**.
- ► Do **not** fasten the hook block **1** to the auxiliary weights.

- ► If necessary: Use a suitable shackle.
- ► Fasten the load hook **2** in the fastening point **P1** or to the hook **P2**.

4.2 Transporting with a forklift truck

If necessary: Use a suitable shackle.

LWE/LTR 1100-009/25105-02-02/en

copyright © Liebherr-Werk Ehingen GmbH 2023

WARNING
Lifting the hook block on the additional weights with the forklift truck!
Failure of the additional weights, the hook block **1** falls down.
Death, severe bodily injuries.
► Take the hook block **1** down for transport on a load-bearing pallet.
► Do **not** lift the hook block **1** with a forklift truck on the auxiliary weights.

► Transport the hook block **1** with an EU-pallet.

5 Divisible hook block*

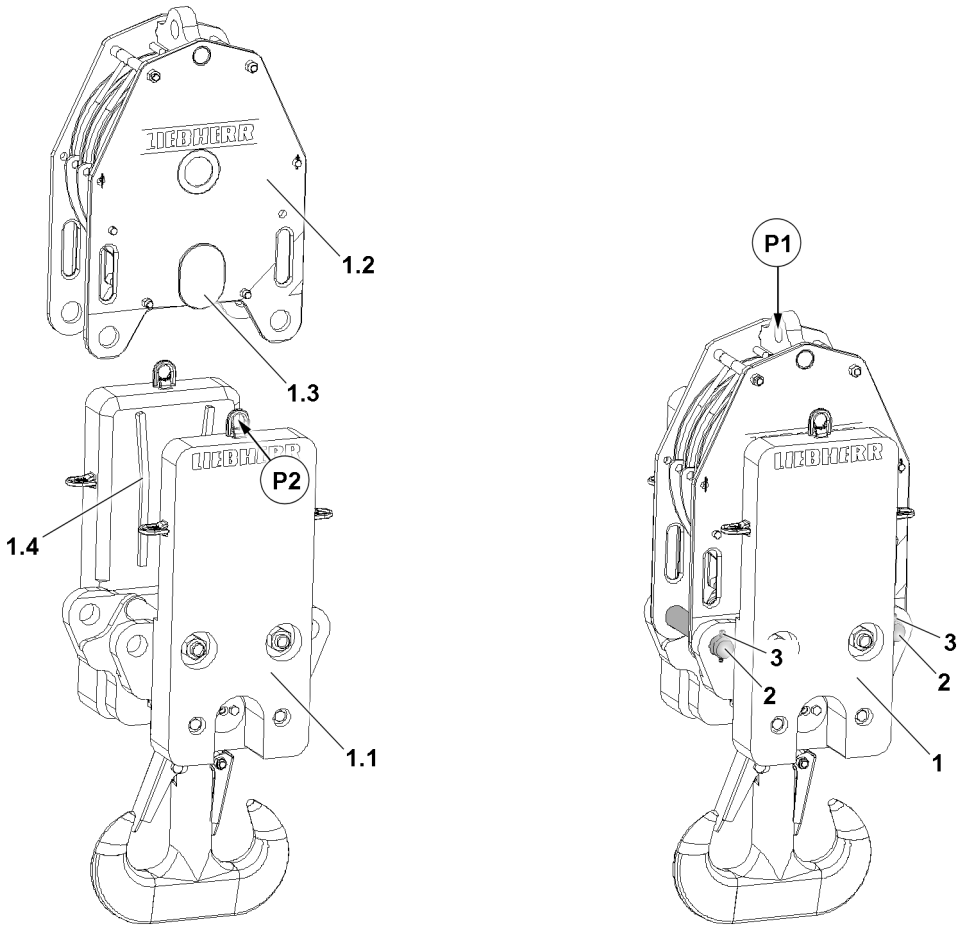

Fig.127724: Divisible hook block

The divisible hook block is only available on certain crane types.

The divisible hook block **1** is meant to be transported separated when driving the mobile crane for weight reasons.

The divisible hook block **1** consists of two parts:
– The upper part (roller set **1.2**)
– The lower part (load hook **1.1**)

Fasten the complete hook block **1** in the fastening point **P1** or in both fastening points **P2**.

Fasten the load hook **1.1** in both fastening points **P2**.

LWE/LTR 1100-009/25105-02-02/en

copyright © Liebherr-Werk Ehingen GmbH 2023

5.1 Installing the divisible hook block

WARNING
The load hook is **not** secured to prevent it from falling over!
The load hook **1.1** can topple over. Personnel can be severely injured.
► Secure the load hook **1.1** to prevent it from toppling over.

Make sure that the following prerequisites are met:
– The hook block **1** is removed in two parts (load hook **1.1** and roller set **1.2**).
– The load hook **1.1** is secured to prevent it from falling over!

► Position the roller set **1.2** over the load hook **1.1**.

On the roller set **1.2**, centering plates **1.3** are installed on both sides. On the load hook **1.1**, centering guides **1.4** are installed on both sides. When lowering the roller set **1.2** in the load hook **1.1**, make sure that the centering plates **1.3** slide in the centering guides **1.4**.

► Lower the roller set **1.2** in the load hook **1.1**.
► Pin the roller set **1.2** with the load hook **1.1**: Insert the pins **2** on the left and right.
► Secure the pins **2** on the left and right with locking pins **3**.

5.2 Removing the divisible hook block

WARNING
The load hook is **not** secured to prevent it from falling over!
The load hook **1.1** topples over after removal.
Personnel can be severely injured.
► Secure the load hook **1.1** before disassembly against toppling over.

Make sure that the following prerequisites are met:
– The hook block **1** (load hook **1.1** and roller set **1.2**) is installed.
– The load hook **1.1** is secured on the transport vehicle to prevent it from falling over.

► Release the pins **2** on the left and right and unpin.

WARNING
Oscillating roller set!
Danger of impact and crushing.
► Lift the roller set **1.2** up vertically out of the load hook **1.1**.

► Secure the load hook **1.1** as described below on the transport vehicle.

LWE/LTR 1100-009/25105-02-02/en

copyright © Liebherr-Werk Ehingen GmbH 2023

5.3 Securing the load hook on the transport vehicle

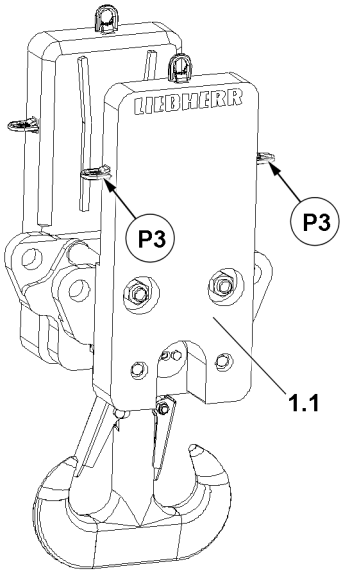

Fig.127725: Securing the load hook on the transport vehicle

► Secure the load hook **1.1** on the rigging points **P3** on the transport vehicle.

5.4 Securing the roller set on the crane

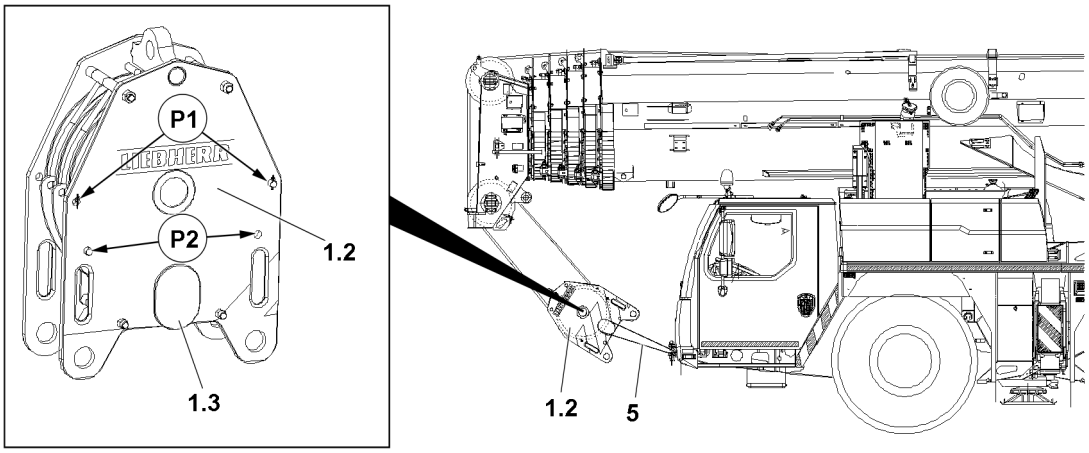

Fig.154999: Securing the roller set on the crane

The detaching and attaching of the roller set **1.2** is described in the Crane operating instructions, chapter 4.03.

Make sure that the following prerequisites are met:
- The roller set **1.2** is removed from the hook block.
- The roller set **1.2** has been reeved a maximum of four times.
- The rope guard pin is inserted in the operating position in position **P1**.
- The rope guard pin is inserted in the transport position in position **P2**.

► Position the roller set **1.2** in front of the maneuvering coupling.

Note
► Check the supplied round sling **5** prior to use.
► Replace the round sling **5** if defective.

LWE/LTR 1100-009/25105-02-02/en

copyright © Liebherr-Werk Ehingen GmbH 2023

► Place the supplied round sling **5** around the left and right centering plate **1.3**.
► Secure the supplied round sling **5** on the maneuvering coupling and secure the roller set **1.2**.

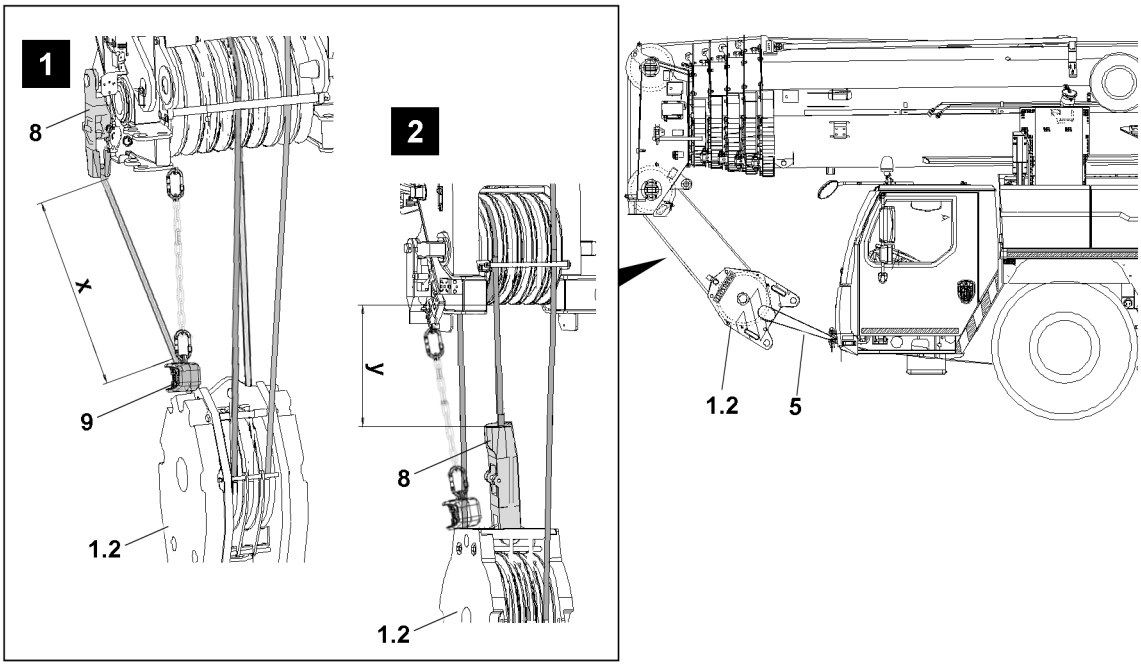

Fig.152965: Roller set distance

NOTICE
The hoist rope is tensioned too much.
The supplied round sling **5** can be damaged.
► Lightly tighten the hoist rope.

WARNING
Distance x or distance y **not** observed according to the chart!
The roller set **1.2** can touch the ground or limit the field of vision of the crane driver.
► Distance x or distance y observed according to the chart.

Crane type	Roller set **1.2** reeving	Illustration	Distance **x**	Distance **y**
LTM 1400-7.1 LTM 1450-8.1	4x	1	400 mm to 500 mm	—
LTM 1400-7.1 LTM 1450-8.1	3x	2	—	100 mm

The roller set **1.2** has been reeved four times:
► Observe the distance **x** from the rope lock **8** to the hoist limit switch weight **9**, see chart.

The roller set **1.2** has been reeved three times:
► Observe distance **y** from the rope lock **8** to the telescopic boom, see chart.

Note
► For crane types for which a distance value **x** or distance value **y** has not been specified, it must be observed that the roller set **1.2** does not touch the ground or limit the field of vision of the crane driver.

LWE/LTR 1100-009/25105-02-02/en

copyright © Liebherr-Werk Ehingen GmbH 2023

WARNING
The hook block is located within the field of vision of the crane driver!
The mobile crane may not drive.
► Make sure that the mobile crane is brought to the respective permissible condition as prescribed by the traffic regulations before driving on public roads, paths and squares.

► Drive the crane.

6 Overview of the fastening systems

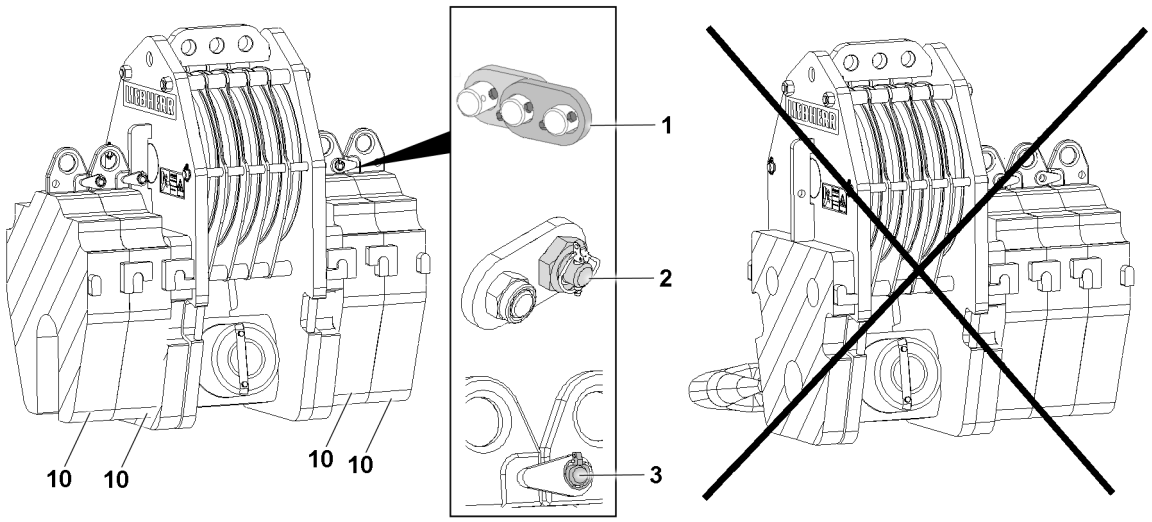

Fig.152234: Hook block

If a high hook block weight is required, auxiliary weights **10** must be installed. Observe the specifications in the load charts and the erection and take-down charts.

A distinction is made between the following fastening systems:
– Fastening system 1
– Fastening system 2
– Fastening system 3

Note
► The own weight is marked on the side on the respective auxiliary weight **10**.

WARNING
Asymmetric assembly or disassembly of the auxiliary weight **10**!
The hook block can topple over.
Death, severe bodily injuries, property damage.
► Only assemble and disassemble the auxiliary weights **10 individually** and alternatively on the hook block.
► The asymmetrical assembly and disassembly of the auxiliary weights **10** is prohibited.
► The operation of the hook block with asymmetrically installed weights is **prohibited**.

LWE/LTR 1100-009/25105-02-02/en

copyright © Liebherr-Werk Ehingen GmbH 2023

7 Fastening system 1

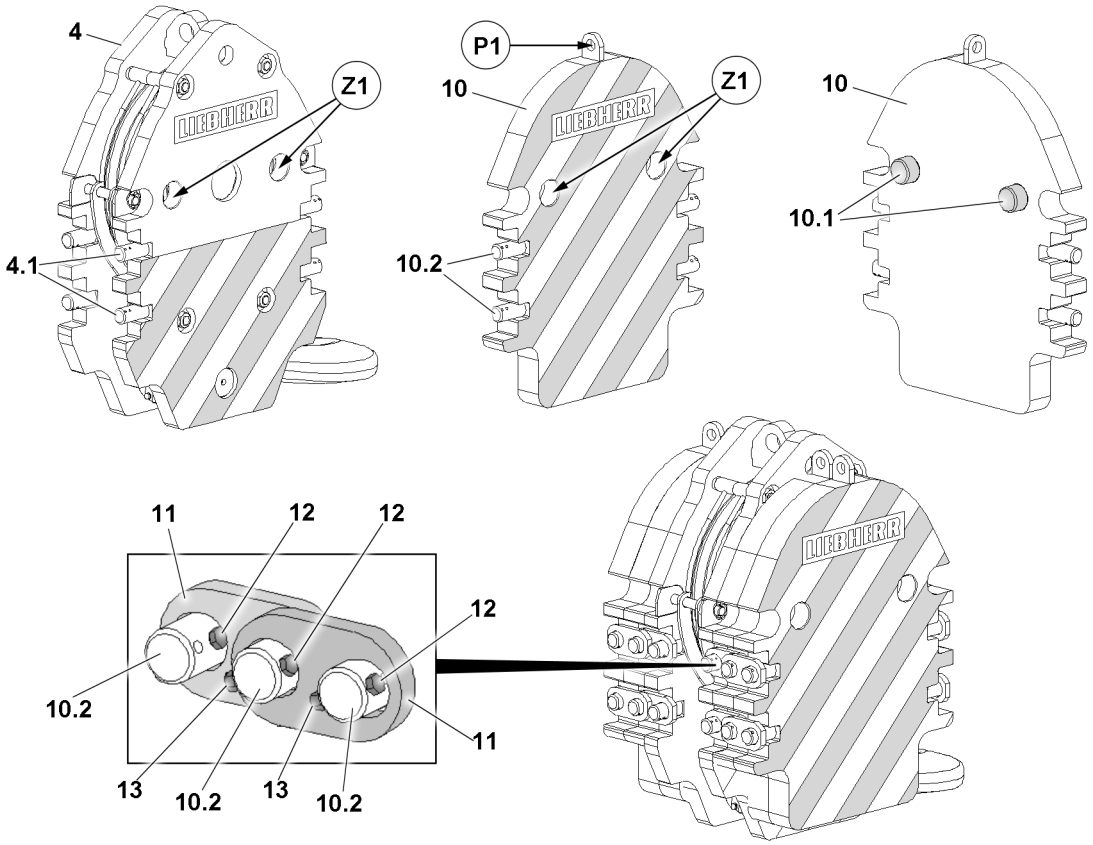

Fig.152235: Hook block

7.1 Assembling the auxiliary weights

Make sure that the following prerequisites are met:
- The ground is of sufficient load bearing capacity.
- The ground is level and horizontal.
- The hook block is placed on the ground.

WARNING
Asymmetric assembly of the auxiliary weights **10**!
The hook block can topple over.
Death, severe bodily injuries.
- ► Install auxiliary weights **10** only **individually** and alternately on the hook block.
- ► Asymmetrical assembly of auxiliary weights **10** is prohibited.
- ► The operation of the hook block with asymmetrically installed weights is **prohibited**.

WARNING
Personnel in the danger zone!
Death, severe bodily injuries, property damage.
- ► Do not remain under suspended loads or in the danger zone.
- ► Do not reach between the hook block and auxiliary weight.

LWE/LTR 1100-009/25105-02-02/en

copyright © Liebherr-Werk Ehingen GmbH 2023

WARNING
Incorrect assembly of the auxiliary weights!
Personnel can be severely injured or killed!
- ► Assemble and secure the auxiliary weights according to the operating instructions.
- ► Do not operate the crane if the auxiliary weights are **not** secured.

When the auxiliary weight **10** is pinned and secured with all mounting brackets **11**:
- ► Remove the auxiliary crane.

- ► Fasten the auxiliary weight **10** in the fastening point **P1**.
- ► Align the auxiliary weight **10** with the hook block **4**.
- ► Retract the centering pin **10.1** of the auxiliary weight into the centering bores **Z1** on the hook block **4**.

WARNING
Unsecured auxiliary weight is disassembled!
The auxiliary weight can fall down and injure personnel.
- ► Never remove all mounting brackets **11** of an unsecured auxiliary weight simultaneously.
- ► Always install or remove the mounting brackets **11** alternately.

- ► Install the mounting brackets **11** on both sides and connect the hook block with the auxiliary weight **10**.
- ► Secure the mounting brackets **11** on both sides with screws **12** and lock nuts **13**.

When the respective auxiliary weight is properly assembled and secured:
- ► Remove the auxiliary crane.
- ► Install additional auxiliary weights as described above.

7.2 Preparing the hook block for crane operation

Note
- ► To reeve in the hook block, observe chapter 4.06 and the reeving plans.
- ► Observe the permissible hook block weights in the erection and take-down charts.

- ► Reeve in the hoist rope according to chapter 4.06 and the reeving plans.

LWE/LTR 1100-009/25105-02-02/en

copyright © Liebherr-Werk Ehingen GmbH 2023

7.3 Preparing the hook block for disassembly

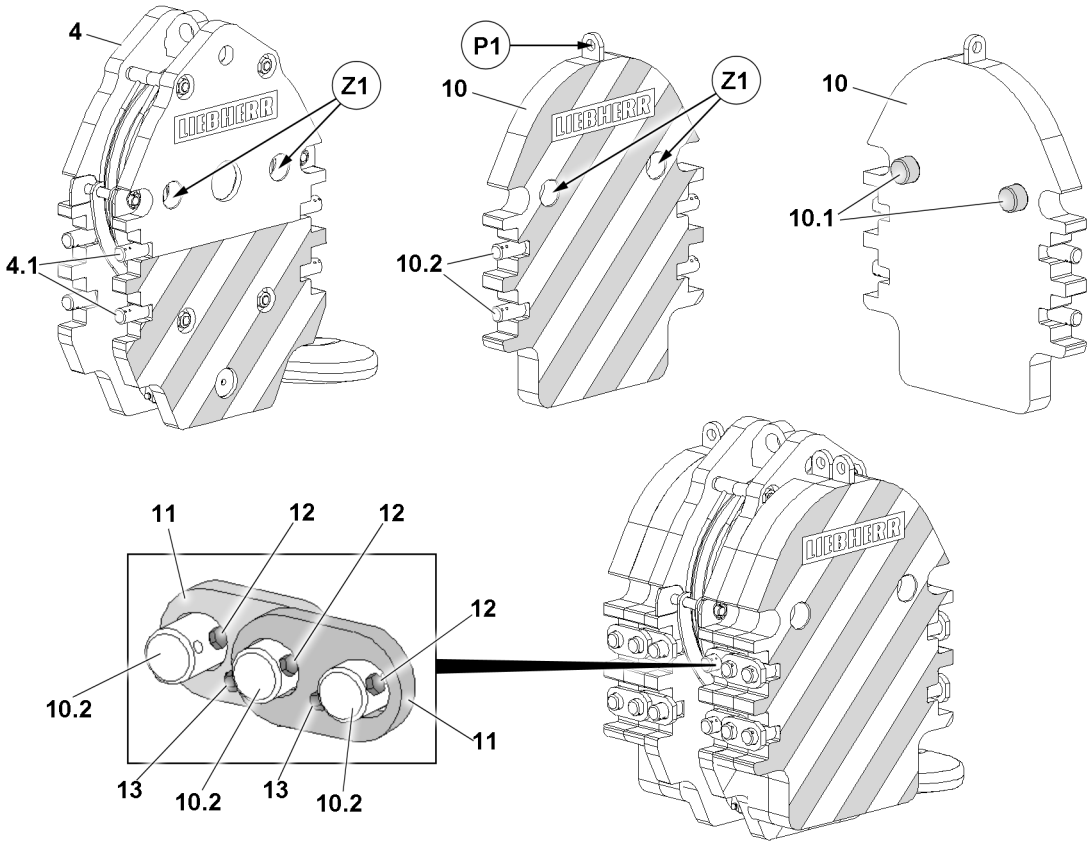

Fig.152235: Hook block

Note
- ► To reeve out the hook block, observe chapter 4.06 and the reeving plans.
- ► Observe the permissible hook block weights in the erection and take-down charts.

Make sure that the following prerequisites are met:
- – The ground is of sufficient load bearing capacity.
- – The ground is level and horizontal.
- – The hook block is placed on the ground.

When the hook block is placed on the ground
- ► Reeve the hoist rope out.

7.4 Disassembling the auxiliary weights

WARNING
Asymmetric disassembly of the auxiliary weights!
The hook block can topple over.
Death, severe bodily injuries.
- ► Disassemble auxiliary weights only **individually** and alternately on the hook block.
- ► Asymmetrical disassembly of the auxiliary weights is prohibited.

WARNING
Personnel in the danger zone!
Personnel can be severely injured or killed!
- ► Do not remain under suspended loads or in the danger zone.
- ► Angular pull is prohibited.

LWE/LTR 1100-009/25105-02-02/en

copyright © Liebherr-Werk Ehingen GmbH 2023

► Secure the auxiliary weight **10**: Fasten the auxiliary crane in the fastening point **P1**.
► Tension the fastening equipment with caution.

WARNING
Unsecured auxiliary weight is disassembled!
Death, severe bodily injuries.
► Never remove all mounting brackets **11** of an unsecured auxiliary weight simultaneously.
► Always install or remove the mounting brackets **11** alternately.
► Upon disassembly, only release the outermost auxiliary weight.

When the fastening equipment is tensioned on the auxiliary weight:
► Release the screw connection on the mounting brackets **11** of the outermost auxiliary weight **10** and remove the screws **12**.
► Remove the mounting brackets **11**.

If additional mounting brackets **11** must be removed to release the outermost auxiliary weight:
► Reinstall the mounting brackets **11** of the remaining auxiliary weights again immediately.
► Lift the auxiliary weight with the auxiliary crane from the hook block.
► Take the auxiliary weight down.
► Disassemble the additional auxiliary weights as described above.

8 Fastening system 2

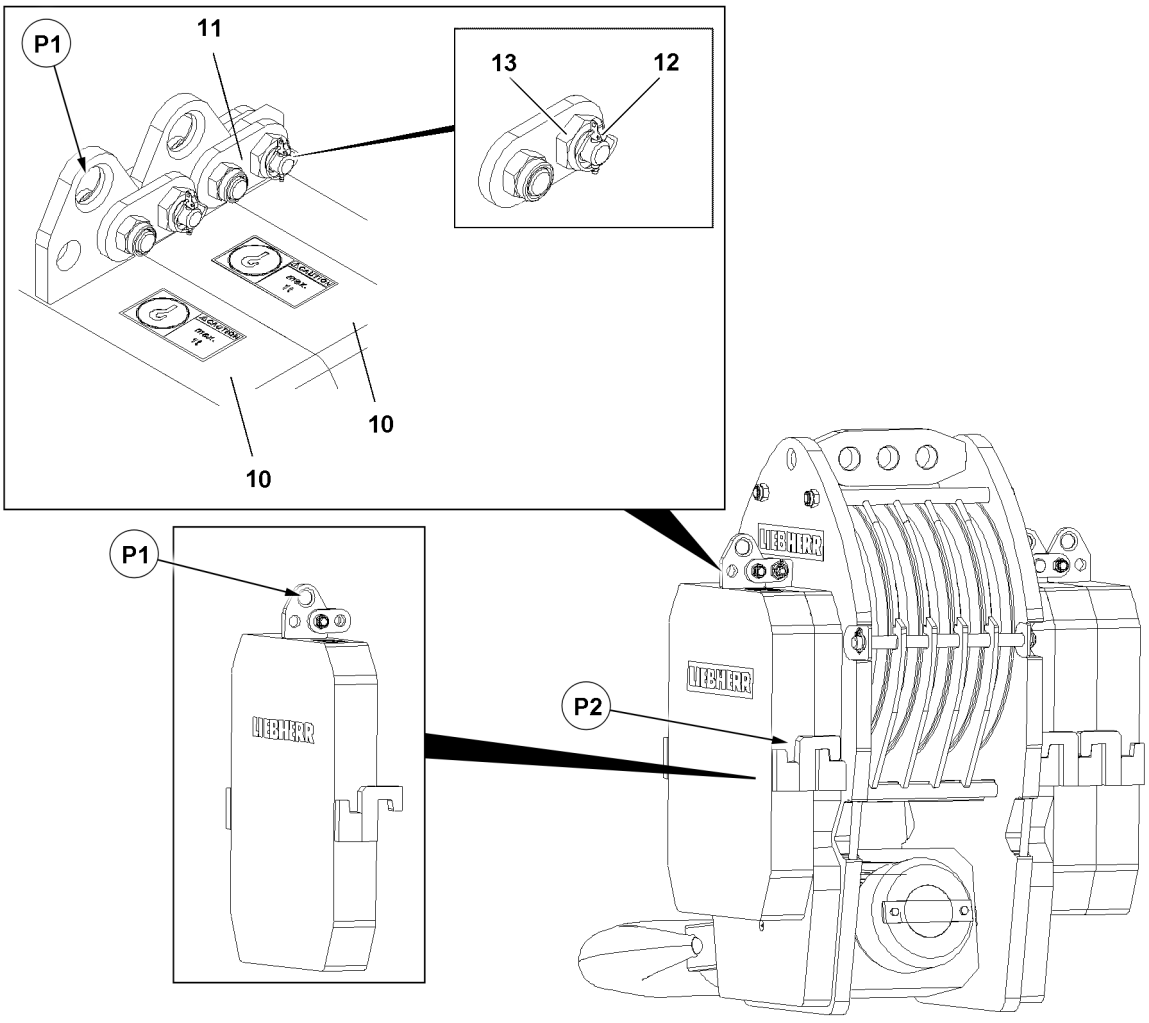

LWE/LTR 1100-009/25105-02-02/en

Fig.152231

copyright © Liebherr-Werk Ehingen GmbH 2023

8.1 Assembling the auxiliary weights

Make sure that the following prerequisites are met:
- The ground is of sufficient load bearing capacity.
- The ground is level and horizontal.
- The hook block is placed on the ground.

WARNING
Asymmetric assembly of the auxiliary weights **10**!
The hook block can topple over.
Death, severe bodily injuries.
► Install auxiliary weights **10** only **individually** and alternately on the hook block.
► Asymmetrical assembly of auxiliary weights **10** is prohibited.
► The operation of the hook block with asymmetrically installed weights is **prohibited**.

WARNING
Personnel in the danger zone!
Death, severe bodily injuries, property damage.
► Do not remain under suspended loads or in the danger zone.
► Do not reach between the hook block and auxiliary weight.

WARNING
Incorrect assembly of the auxiliary weights!
Death, severe bodily injuries.
► Assemble and secure the auxiliary weights according to the operating instructions.
► Do not operate the crane if the auxiliary weights are **not** secured.

When the auxiliary weight **10** is properly pinned and secured:
► Remove the auxiliary crane.

► Fasten the auxiliary weight **10** in the fastening point **P1**.
► Attach the auxiliary weight **10** to the hook block in position **P2**.

WARNING
Auxiliary weight not secured!
Death, severe bodily injuries.
► Bolt and secure the mounting brackets **11** with screws **12** and nuts **13**.

► Bolt and secure the mounting brackets **11** on both sides with screws **12** and nuts **13**.

When the respective auxiliary weight is properly assembled and secured:
► Remove the auxiliary crane.
► Install additional auxiliary weights as described above.

8.2 Preparing the hook block for crane operation

Note
► To reeve in the hook block, observe chapter 4.06 and the reeving plans.
► Observe the permissible hook block weights in the erection and take-down charts.

► Reeve in the hoist rope according to chapter 4.06 and the reeving plans.

LWE/LTR 1100-009/25105-02-02/en

copyright © Liebherr-Werk Ehingen GmbH 2023

8.3 Preparing the hook block for disassembly

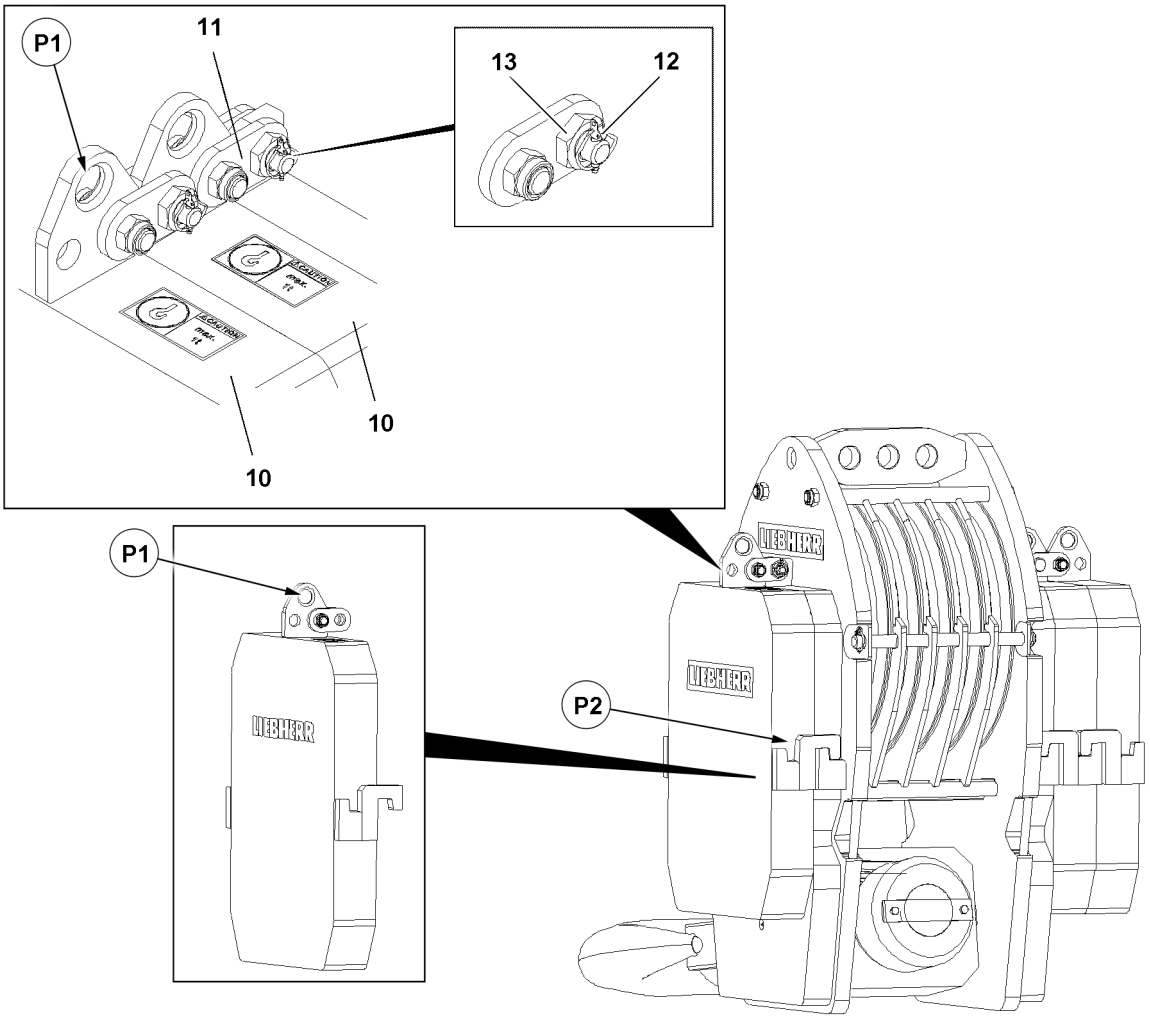

Fig.152231: Hook block

Note
- ► To reeve out the hook block, observe chapter 4.06 and the reeving plans.
- ► Observe the permissible hook block weights in the erection and take-down charts.

Make sure that the following prerequisites are met:
- – The ground is of sufficient load bearing capacity.
- – The ground is level and horizontal.
- – The hook block is placed on the ground.

When the hook block is placed on the ground
- ► Reeve the hoist rope out.

8.4 Disassembling the auxiliary weights

WARNING
Asymmetric disassembly of the auxiliary weights!
The hook block can topple over.
Death, severe bodily injuries.
- ► Disassemble auxiliary weights only **individually** and alternately on the hook block.
- ► Asymmetrical disassembly of the auxiliary weights is prohibited.

LWE/LTR 1100-009/25105-02-02/en

copyright © Liebherr-Werk Ehingen GmbH 2023

WARNING
Personnel in the danger zone!
Death, severe bodily injuries.
► Do not remain under suspended loads or in the danger zone.
► Angular pull is prohibited.

► Secure the auxiliary weight **10**: Fasten the auxiliary crane in the fastening point **P1**.
► Tension the fastening equipment with caution.

WARNING
Disassemble the unsecured auxiliary weight!
Death, severe bodily injuries.
► Never remove all screws **12** of the auxiliary weight simultaneously.
► Upon disassembly, only release the outermost auxiliary weight.

When the fastening equipment is tensioned on the auxiliary weight:
► Release the screw connection on the mounting brackets **11** of the outermost auxiliary weight **10** and remove the screws **12**.
► Lift the auxiliary weight with the auxiliary crane from the hook block.
► Take the auxiliary weight down.
► Disassemble the additional auxiliary weights as described above.

9 Fastening system 3

The guide on the auxiliary weight quick-change system is present has the following variations:
– Quick-change system for the auxiliary weight with guide variation **A**
– Quick-change system for the auxiliary weight with guide variation **B**

LWE/LTR 1100-009/25105-02-02/en

copyright © Liebherr-Werk Ehingen GmbH 2023

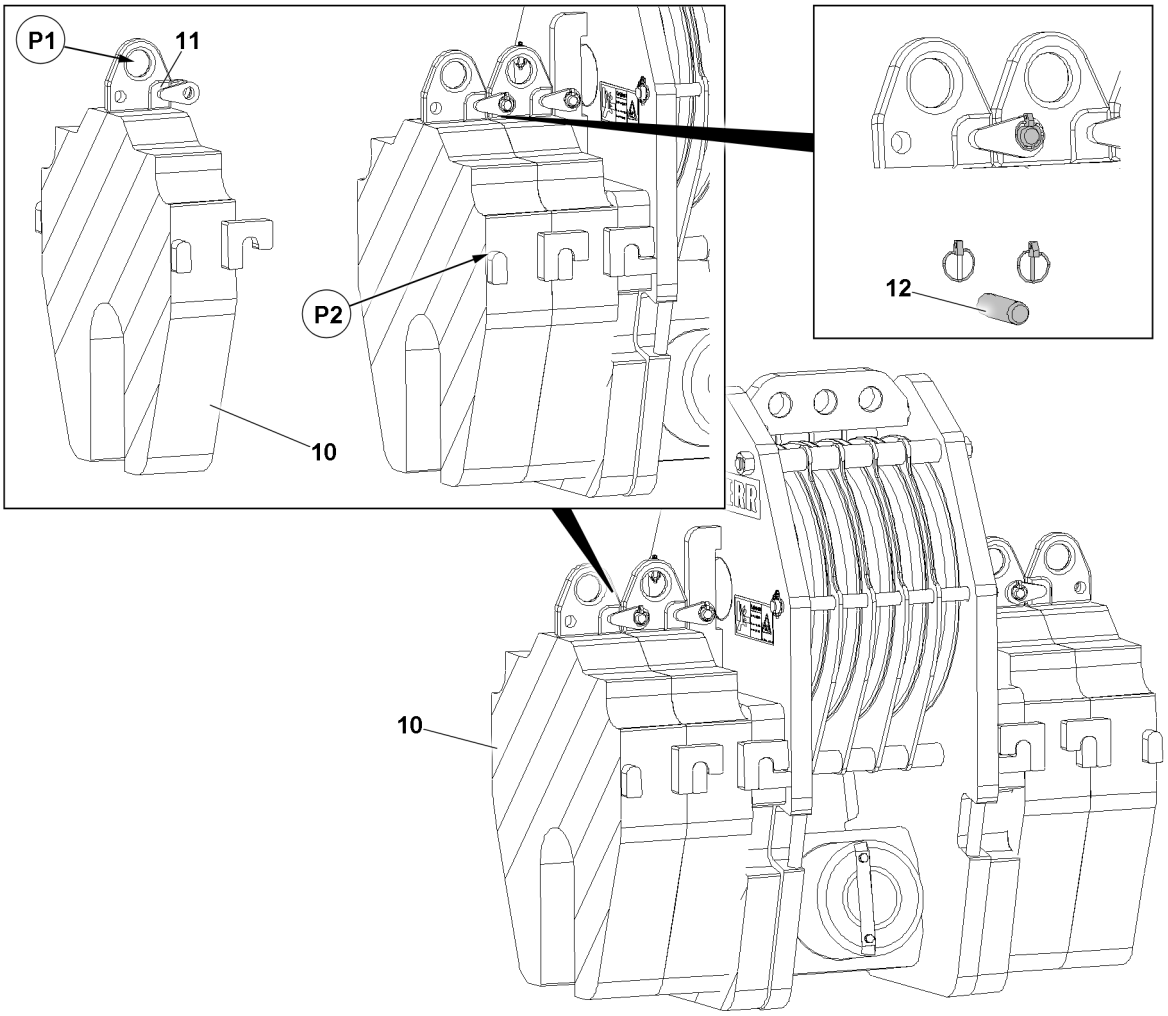

*Fig.152233: Quick-change system for the auxiliary weight (with guide variation **A**)*

copyright © Liebherr-Werk Ehingen GmbH 2023

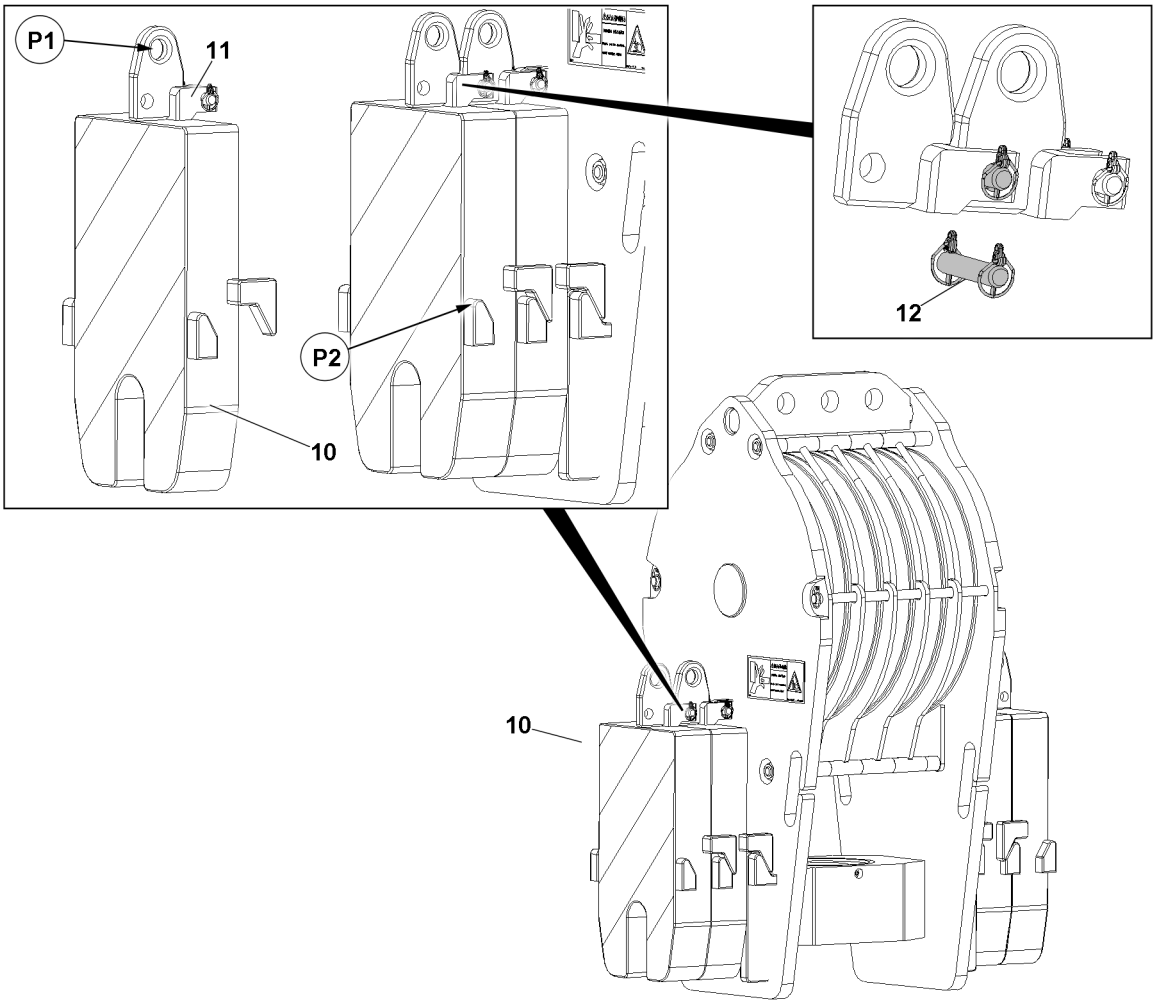

*Fig.154963: Quick-change system for the auxiliary weight (with guide variation **B**)*

9.1 Assembling the auxiliary weights

Make sure that the following prerequisites are met:
- The ground is of sufficient load bearing capacity.
- The ground is level and horizontal.
- The hook block is placed on the ground.

WARNING
Asymmetric assembly of the auxiliary weights **10**!
The hook block can topple over.
Death, severe bodily injuries.
- ► Install auxiliary weights **10** only **individually** and alternately on the hook block.
- ► Asymmetrical assembly of auxiliary weights **10** is prohibited.
- ► The operation of the hook block with asymmetrically installed weights is **prohibited**.

WARNING
Personnel in the danger zone!
Death, severe bodily injuries, property damage.
- ► Do not remain under suspended loads or in the danger zone.
- ► Do not reach between the hook block and auxiliary weight.

LWE/LTR 1100-009/25105-02-02/en

copyright © Liebherr-Werk Ehingen GmbH 2023

WARNING
Incorrect assembly of the auxiliary weights!
Death, severe bodily injuries.
► Assemble and secure the auxiliary weights according to the operating instructions.
► Do not operate the crane if the auxiliary weights are **not** secured.

When the auxiliary weight **10** is properly pinned and secured:
► Remove the auxiliary crane.

► Fasten the auxiliary weight **10** in the fastening point **P1**.
► Attach the auxiliary weight **10** to the hook block in position **P2**.

WARNING
Auxiliary weight not pinned!
Death, severe bodily injuries.
► Pin the mounting brackets **11** on both sides with pins **12** and secure.

When the respective auxiliary weight is properly assembled and secured:
► Remove the auxiliary crane.
► Install additional auxiliary weights as described above.

9.2 Preparing the hook block for crane operation

Note
► To reeve in the hook block, observe chapter 4.06 and the reeving plans.
► Observe the permissible hook block weights in the erection and take-down charts.

► Reeve in the hoist rope according to chapter 4.06 and the reeving plans.

LWE/LTR 1100-009/25105-02-02/en

copyright © Liebherr-Werk Ehingen GmbH 2023

9.3 Preparing the hook block for disassembly

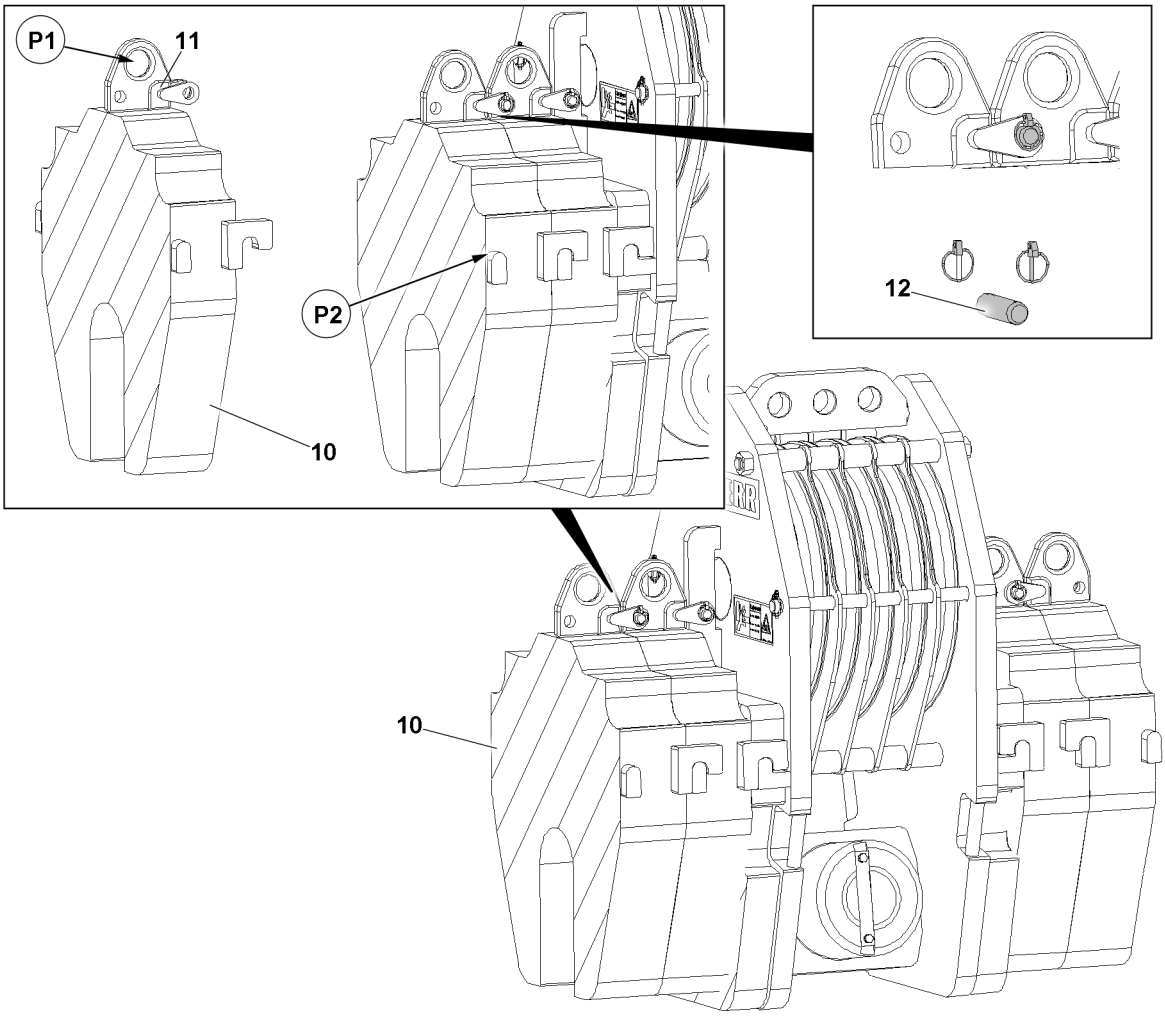

*Fig.152233: Quick-change system for the auxiliary weight (with guide variation **A**)*

LWE/LTR 1100-009/25105-02-02/en

copyright © Liebherr-Werk Ehingen GmbH 2023

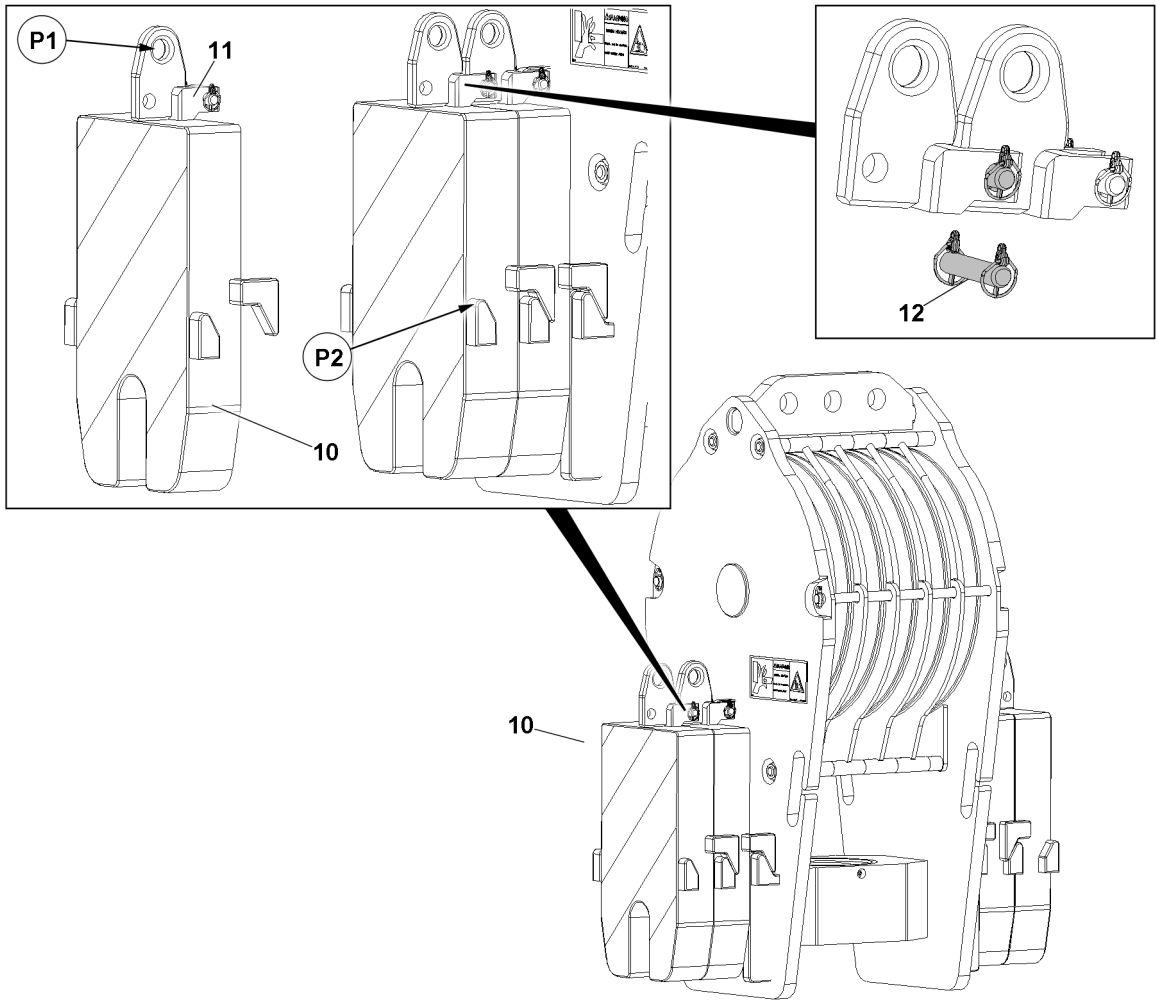

*Fig.154963: Quick-change system for the auxiliary weight (with guide variation **B**)*

Note
- ► To reeve out the hook block, observe chapter 4.06 and the reeving plans.
- ► Observe the permissible hook block weights in the erection and take-down charts.

Make sure that the following prerequisites are met:
- – The ground is of sufficient load bearing capacity.
- – The ground is level and horizontal.
- – The hook block is placed on the ground.

When the hook block is placed on the ground
- ► Reeve the hoist rope out.

9.4 Disassembling the auxiliary weights

WARNING
Asymmetric disassembly of the auxiliary weights!
The hook block can topple over.
Death, severe bodily injuries.
- ► Disassemble auxiliary weights only **individually** and alternately on the hook block.
- ► Asymmetrical disassembly of the auxiliary weights is prohibited.

LWE/LTR 1100-009/25105-02-02/en

copyright © Liebherr-Werk Ehingen GmbH 2023

WARNING
Personnel in the danger zone!
Death, severe bodily injuries.
► Do not remain under suspended loads or in the danger zone.
► Angular pull is prohibited.

► Secure the auxiliary weight **10**: Fasten the auxiliary crane in the fastening point **P1**.
► Tension the fastening equipment with caution.

WARNING
Disassemble the unsecured auxiliary weight!
Death, severe bodily injuries.
► Never remove all pins **12** of the auxiliary weight simultaneously.
► Upon disassembly, only release the outermost auxiliary weight.

When the fastening equipment is tensioned on the auxiliary weight:
► Release the pin connection on the mounting brackets **11** of the outermost auxiliary weight **10** and remove the pin **12**.
► Lift the auxiliary weight with the auxiliary crane from the hook block.
► Take the auxiliary weight down.
► Disassemble the additional auxiliary weights as described above.

10 Slack rope formation

If the hook block can no longer be lowered due to slack rope formation, then the following steps must be carried out.

10.1 Spooling up loose hoist rope

► Spool up loose hoist rope between the boom head and the wind carefully onto the winch.

Note
► A slight rope slack must remain between the boom head and the winch!

10.2 Luffing the boom down

When luffing the boom down, the hoist rope length can shorten and the hook block can collide with the boom head.

NOTICE
Hoist rope too short!
Danger of collision.
► Do not pull the hook block against the boom head.

► Luff the boom down carefully.

Result:

– The hoist rope between the boom head and the winch is tensioned.

10.3 Lowering the hook block

► Lower the hook block carefully with the winch.

LWE/LTR 1100-009/25105-02-02/en

copyright © Liebherr-Werk Ehingen GmbH 2023

Empty page!

LWE/LTR 1100-009/25105-02-02/en

copyright © Liebherr-Werk Ehingen GmbH 2023

5.25 Telescopic boom extension

1	Component description	2
2	Telescopic boom extension fastening points	2
3	Assembling	3
4	Disassembling	5

LWE/LTR 1100-009/25105-02-02/en

copyright © Liebherr-Werk Ehingen GmbH 2023

1 Component description

The lifting height can be increased by installing a telescopic boom extension.

Designations	Length	Weight
Telescopic boom extension	7 m	0.7 t

1.1 Telescopic boom extension designation

With this crane type, only telescopic boom extensions with the following designations may be assembled and operated on the telescopic boom for the respective operation.

Telescopic boom extension designation	For operation with a mechanical folding jib	For operation with a hydraulic folding jib
3A–13	X	—
3A–14	X	X

Telescopic boom extensions with the designation 3A-15 und 3A-16 can be converted with a conversion kit to telescopic boom extensions with the designation 3A-13 and 3A-14. Contact customer service at Work Heinen GmbH.

Telescopic boom extensions without the indicated designations can be assembled under certain circumstances with this crane type, or retrofitted with a conversion kit. In order to determine if a telescopic boom extension can be retrofitted with a conversion kit, contact customer service at Work Heinen GmbH.

2 Telescopic boom extension fastening points

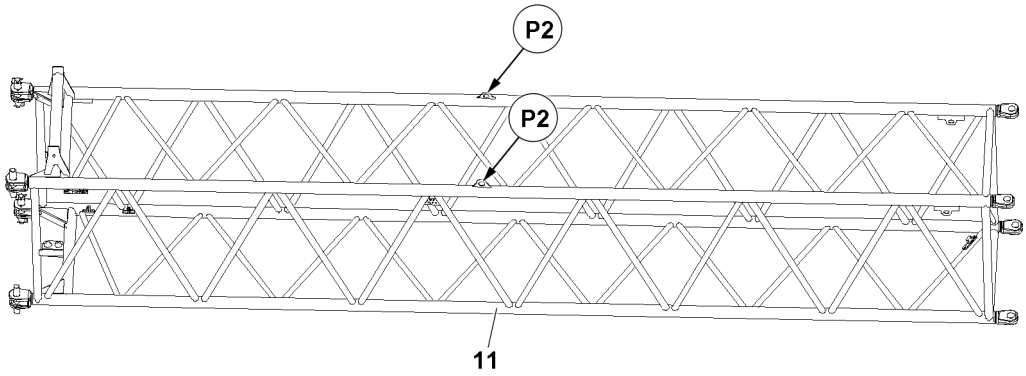

Fig.127351: Telescopic boom extension

Fasten the telescopic boom extension **11** in all fastening points **P2**.

LWE/LTR 1100-009/25105-02-02/en

copyright © Liebherr-Werk Ehingen GmbH 2023

3 Assembling

WARNING
Assembly personnel **not** secured with suitable aids to prevent them from falling!
Assembly personnel can fall, death, severe bodily injuries.
► Cary out all overhead work, where there is a danger of falling with suitable aids.

When fall protection equipment is available:
► Use the fall protection equipment.

When there are railings on the crane components:
► Move the railings to the assembly / disassembly position and secure.

If aids are **not** available and work **cannot** be carried out on the ground:
► Secure assembly personnel with the supplied fall arrest system to prevent falling.
► Attach the supplied fall arrest system on the fastening and hook points as well as on the safety ropes.
► Only step on the aids, ladders and catwalks with clean shoes.
► Keep aids, ladders and catwalks free of heavy dirt, snow, frost and ice.

WARNING
Telescopic boom extension **not** correctly pinned and secured!
The telescopic boom extension can fall down, death, severe injuries.
► Make sure that no personnel is in the danger zone when pinning and unpinning the boom below or on the lattice sections.
► Pin or unpin both pins on the same vertical level, i.e. **above and below**.
► Pin and unpin double cone pins from **top to bottom**.
► Secure all pins.

WARNING
Oscillating load!
Danger of impact and crushing.
► To guide and position crane structures, always use a guide rope.
► Make sure that there are no persons or obstacles within the danger zone.
► Make sure that the guide rope is long enough.

WARNING
Auxiliary crane uncoupled before pinning!
The crane components can fall down, death, severe injuries.
► Pin and secure the crane components. Then detach the auxiliary crane.

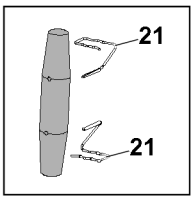

*Fig.127357: Double cone pin with locking pins **21***

Note
► Secure vertically assembled double cone pins only with locking pins **21**.

LWE/LTR 1100-009/25105-02-02/en

copyright © Liebherr-Werk Ehingen GmbH 2023

Make sure that the following prerequisites are met:
- The crane is supported and horizontally aligned.
- The counterweight has been installed on the turntable according to the load chart.
- The telescopic boom is telescoped in all the way.
- The telescopic boom is luffed down to the 0° position.
- The LICCON overload protection has been set according to the set up configuration.
- An auxiliary crane is available.

3.1 Assembling the telescopic boom extension

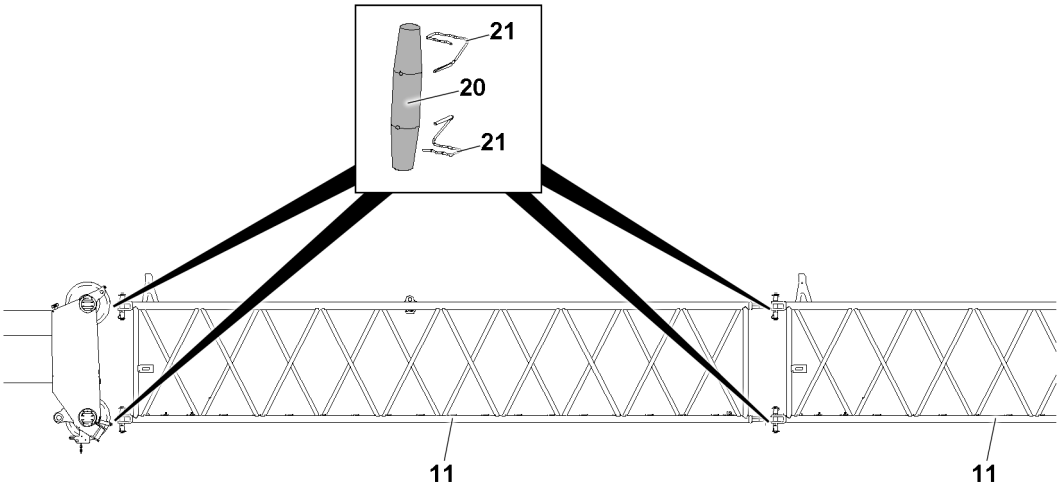

Fig.127710: Assembling the telescopic boom extension

- ► Fasten the auxiliary crane to the telescopic boom extension **11**.
- ► Until the bores for the double cone pins **20** align: Fasten the telescopic boom extension **11** to the telescopic boom head.
- ► Pin the telescopic boom extension **11** on top with the telescopic boom head: Insert the double cone pins **20** on the left and right and secure with the locking pins **21**.
- ► Pin the telescopic boom extension **11** on the bottom with the telescopic boom head: Insert the double cone pins **20** on the left and right and secure with the locking pins **21**.
- ► Detach the auxiliary crane.

A hydraulic connection must be established only for folding jib operation with hydraulic angle adjustment. Hydraulic lines cannot be incorrectly connected due to the different diameters of the hydraulic couplings.

When the folding jib operation is equipped with hydraulic angle adjustment:
- ► Establish the hydraulic connection for the telescopic boom extension **11**.
- ► Establish the electrical connection for the telescopic boom extension **11**.
- ► Assemble an additional telescopic boom extension **11** or folding jib accordingly.
- ► Set the LICCON overload protection according to the set up configuration.

LWE/LTR 1100-009/25105-02-02/en

copyright © Liebherr-Werk Ehingen GmbH 2023

4 Disassembling

WARNING
Assembly personnel **not** secured with suitable aids to prevent them from falling!
Assembly personnel can fall, death, severe bodily injuries.
► Cary out all overhead work, where there is a danger of falling with suitable aids.

When fall protection equipment is available:
► Use the fall protection equipment.

When there are railings on the crane components:
► Move the railings to the assembly / disassembly position and secure.

If aids are **not** available and work **cannot** be carried out on the ground:
► Secure assembly personnel with the supplied fall arrest system to prevent falling.
► Attach the supplied fall arrest system on the fastening and hook points as well as on the safety ropes.
► Only step on the aids, ladders and catwalks with clean shoes.
► Keep aids, ladders and catwalks free of heavy dirt, snow, frost and ice.

WARNING
Telescopic boom extension not secured with the auxiliary crane when unpinning!
The telescopic boom extension can fall down, death, severe injuries.
► First secure the telescopic boom extension with the auxiliary crane. Then unpin the telescopic boom extension.
► Make sure that no personnel is in the danger zone when pinning and unpinning the boom below or on the lattice sections.
► Pin or unpin both pins on the same vertical level, i.e. **above and below**.
► Pin and unpin the vertically installable double cone pins from the **top to the bottom**.
► Secure all pins.

WARNING
Oscillating load!
Danger of impact and crushing.
► To guide and position crane structures, always use a guide rope.
► Make sure that there are no persons or obstacles within the danger zone.
► Make sure that the guide rope is long enough.

Make sure that the following prerequisites are met:
– The crane is supported and horizontally aligned.
– The counterweight has been installed on the turntable according to the load chart.
– The telescopic boom is telescoped in all the way.
– The telescopic boom is luffed down to the 0° position.
– The folding jib is disassembled.
– The LICCON overload protection has been set according to the set up configuration.

LWE/LTR 1100-009/25105-02-02/en

copyright © Liebherr-Werk Ehingen GmbH 2023

4.1 Disassembling the telescopic boom extension

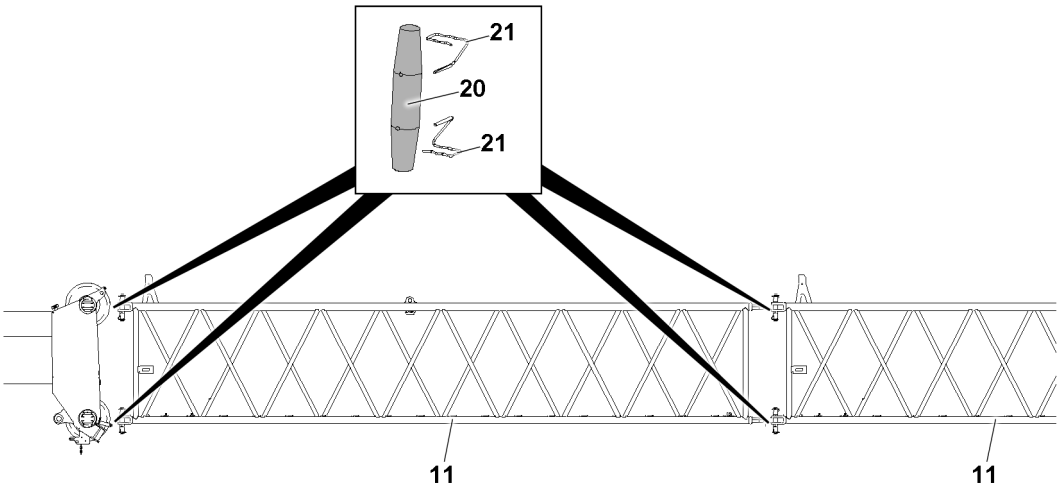

Fig.127710: Disassembling the telescopic boom extension

When the folding jib operation was equipped with hydraulic angle adjustment:

- ► Release the hydraulic connection for the telescopic boom extension **11**.
- ► Release the electrical connection for the telescopic boom extension **11**.
- ► Fasten the auxiliary crane to the telescopic boom extension **11** and tighten the fastening equipment slightly.
- ► Unpin the telescopic boom extension **11** on the telescopic boom head on the bottom: Release the double cone pin **20** on the left and right and unpin.
- ► Unpin the telescopic boom extension **11** on the telescopic boom head on the top: Release the double cone pin **20** on the left and right and unpin.
- ► Take the telescopic boom extension **11** down.
- ► Set the LICCON overload protection according to the set up configuration.

LWE/LTR 1100-009/25105-02-02/en

copyright © Liebherr-Werk Ehingen GmbH 2023

5.31 BTT - Operating element

1	Display / operating element BTT	3
2	Start menu of the BTT	12
3	Settings and status displays on the BTT	17
4	Aligning the BTT with the crane	19
5	Crawler travel gear menu	21
6	Engine operation menu	27
7	Support menu	37
8	*Ballasting* menu	45
9	Assembly functions menu	51
10	Menu Test system	65
11	BTT operation	67
12	Measures in case of problems	69

LWE/LTR 1100-009/25105-02-02/en

copyright © Liebherr-Werk Ehingen GmbH 2023

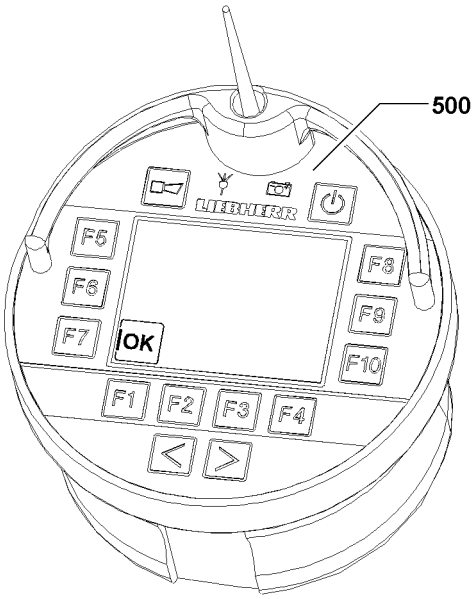

Fig.114221

LWE/LTR 1100-009/25105-02-02/en

copyright © Liebherr-Werk Ehingen GmbH 2023

1 Display / operating element BTT

Note
► One of the described BTTs is used depending on the delivery condition of the crane.

Note
► The Bluetooth Terminal is referred to as BTT in the description.
► The Bluetooth Basis is referred to as BTB in the description.

The BTT is a combined display / operating element for the crane. Selected crane movements can be carried out. The data exchange is made via the BTB on the crane. The data exchange can also be made wireless as well as via a connector cable.

The BTT is operated using function keys F1 - F10 and two changeover buttons

Note
► The illustrations or icons on the screen display of the BTT are only examples.
► They may differ from the crane!

Via the BTT **500** you can call up various menus. Various crane functions can be selected or preselected, turned on or off, or directly activated in these menus.

The operation of the BTT **500** via the function keys and changeover buttons:

Function keys
- The function of the function keys is menu dependent. For an exact description, see the respective menu section.

Changeover buttons
- The function of the changeover buttons is menu dependent. For an exact description, see the respective menu section.

NOTICE
Destruction of the BTT!
► Under no circumstances clean the BTT **500** with a jet of water or a steam cleaner.

LWE/LTR 1100-009/25105-02-02/en

copyright © Liebherr-Werk Ehingen GmbH 2023

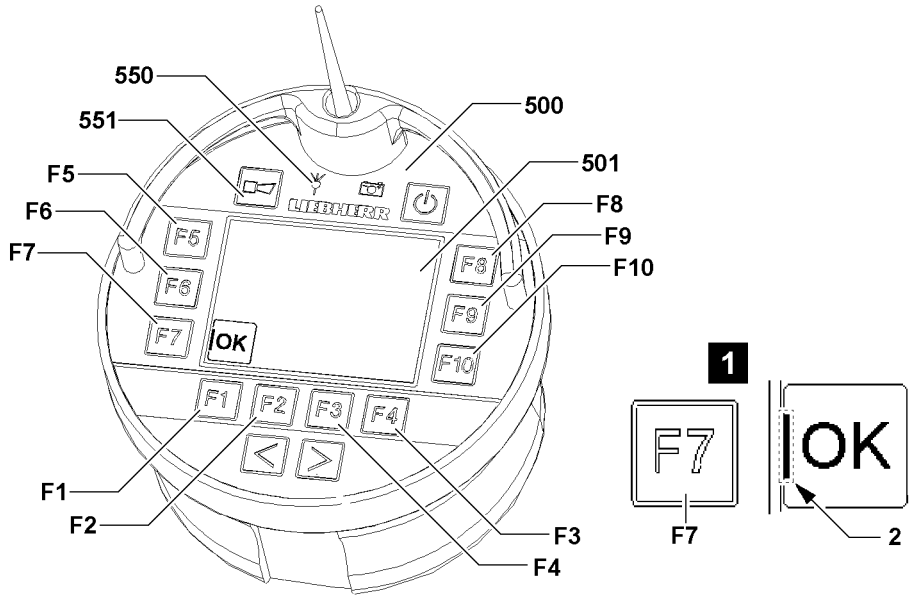

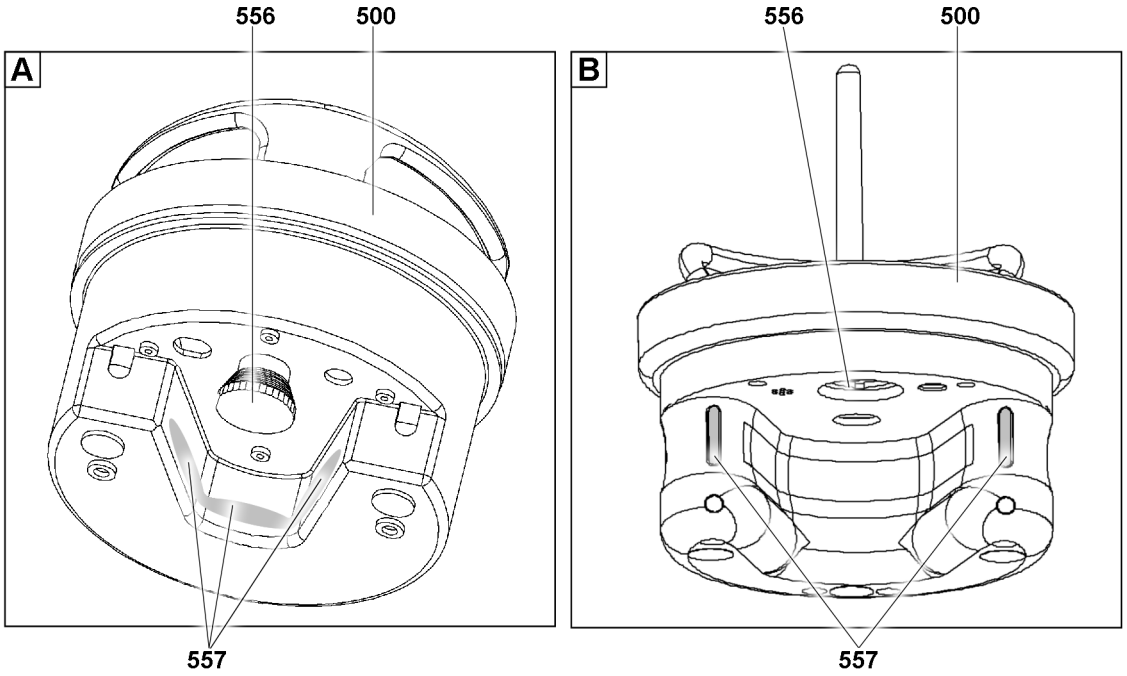

Fig.146318

A 2-hand keypad: On the inner surface

B 2-hand keypad: Button on the front side of the curvature

LWE/LTR 1100-009/25105-02-02/en

copyright © Liebherr-Werk Ehingen GmbH 2023

1.1 Important information about the BTT

The following important information must be observed for operation with the BTT **500**:

- The machine number on the data tag of the crane cab must match the machine number on the BTT display **501**.
- It can only be turned on when the EMERGENCY STOP switch **556** on the rear of the BTT is **not** actuated.
- The rechargeable battery of the BTT is only charged if the EMERGENCY STOP switch **556** on the rear of the BTT is **not** actuated when plugging it into the charging module.
- When a function is selected via a function key, the corresponding icon is surrounded with a black border. In some case, additional icons are shown on the display.
- The operation of the BTT must be made with two hands for safety reasons, see section „Release of button block on the BTT“.
- During crane operation via the BTT **500**, the complete crane must be in the field of visibility of the operator.
- Before any movement, which is controlled via the BTT **500**, the horn **551** must be actuated.
- As soon as the reception of the radio signal deteriorates, the indicator light **550** lights up orange.
- The reach of the radio signal can fluctuate due to local conditions.
- If the radio contact between the BTT **500** and the BTB is interrupted or the EMERGENCY STOP switch **556** on the rear of the BTT **500** is actuated, the crane movement stops.
- Keep the BTT **500** and the charging module clean.
- Protect the BTT **500** from direct sun exposure.
- Protect the BTT **500** from dirt and moisture.

Note

Function keys **F1** to **F10**

► Icons are assigned to the individual function keys. A small bar **2** marks the assigned button, see illustration **1**: Example for function key **F7**.

1.2 Releasing the button block on the BTT

To prevent inadvertent crane operation, movements to be carried out on the BTT are secured by a button block. The 2-Hand keypad **557** can be activated by finger touch. The button block is removed.

After selecting a function, the actual movement (operation) is only released after activation of the 2-hand keypad **557**. Released icons are highlighted with the color **purple**.

If the icon is released and the respective function key is pressed, the movement is carried out.

Note

► The actuation of the 2-hand keypad **557** is stored for 30 seconds. If no movement is actuated within these 30 s or if the 2-hand keypad **557** is actuated again, then the button block is activated and a signal tone sounds.

LWE/LTR 1100-009/25105-02-02/en

copyright © Liebherr-Werk Ehingen GmbH 2023

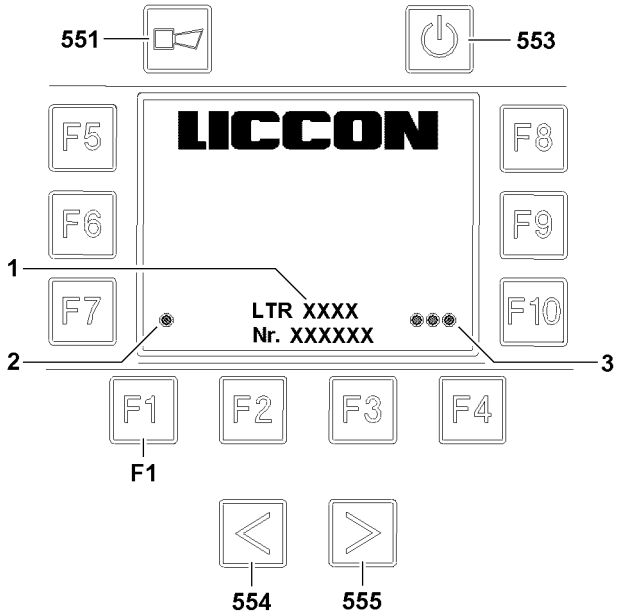

Fig.114223

LWE/LTR 1100-009/25105-02-02/en

copyright © Liebherr-Werk Ehingen GmbH 2023

1.3 Connecting the BTB and the BTT

Note

► If crane type and crane number **2** do not match, a connection between BTB and BTT is not possible.

To be able to control the crane via the BTT a connection to the BTB must be established.

The connection is based on a pairing process and code comparison.

1.3.1 Pairing process

If the BTT is plugged into the charging module when the ignition is turned on, then a pairing process is carried out automatically with the BTB.

Carry out the pairing process by hand:

To do so, the turned on BTT must be plugged into the charging module. Various connecting parameters are compared and checked for a match via an infrared interface.

When the pairing process is completed successfully, the indicator light **1** lights up green.

Note

► If the pairing process does not run successfully, contact your **Liebherr customer service center** or **Liebherr-Werk Ehingen**!

1.3.2 Code calibration

If the BTT is plugged into the charging module when the ignition is turned on, then the code calibration is made automatically.

Perform code calibration by hand:

One after the other, press the button **554**, then the button **555** and then the function key **F1**.

When the code calibration is completed successfully, all indicator lights **3** light up green.

LWE/LTR 1100-009/25105-02-02/en

copyright © Liebherr-Werk Ehingen GmbH 2023

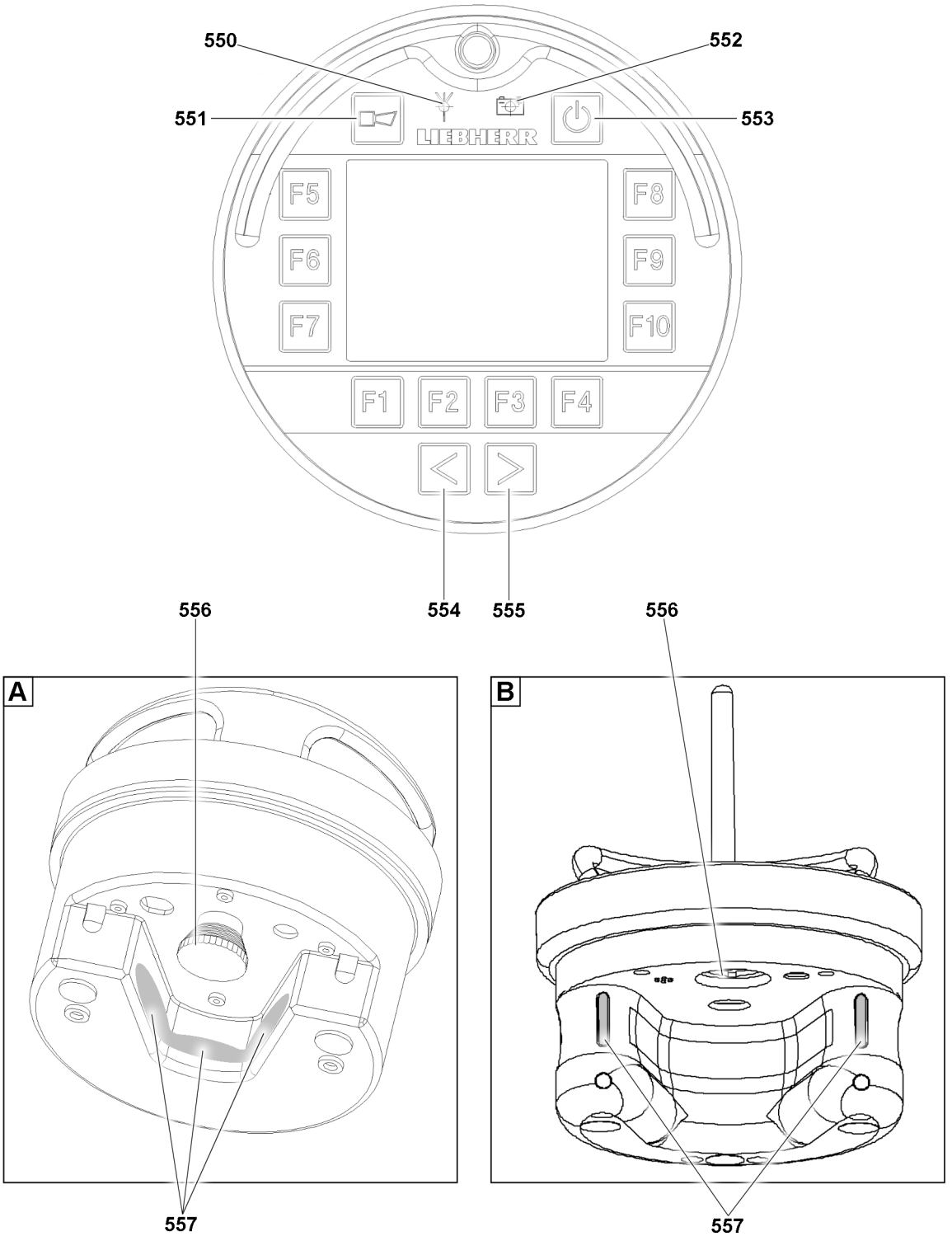

Fig.146316

A 2-hand keypad: On the inner surface

B 2-hand keypad: Button on the front side of the curvature

LWE/LTR 1100-009/25105-02-02/en

copyright © Liebherr-Werk Ehingen GmbH 2023

1.4 General information regarding the BTT

550 Indicator light

Transmission signal for BTT:
- Green: Transmission signal ok
- Yellow: Transmission signal about to be lost
- Red: Transmission signal not available

551 Button
- Operate the crane's acoustic signal (horn)

552 Indicator light

Charge condition of the rechargeable battery on the BTT:
- Green: Rechargeable battery fully charged
- Yellow: Rechargeable battery almost discharged
- Red: Rechargeable battery discharged

Note

► To recharge the rechargeable battery, the BTT **500** must be plugged into the charging cradle.

553 Button
- ON / OFF button: Turn the BTT on / off
- ON / OFF button: End stand-by of the BTT

554 Button
- Changeover button (menu dependent)

555 Button
- Changeover button (menu dependent)

556 EMERGENCY STOP switch
- **Note:**
  The EMERGENCY STOP switch **556** is on the underside of the BTT.

557 2-hand keypad
- **Note:**
  The 2-hand keypad **557** must be actuated in order to be able to actuate a movement with the BTT.

LWE/LTR 1100-009/25105-02-02/en

copyright © Liebherr-Werk Ehingen GmbH 2023

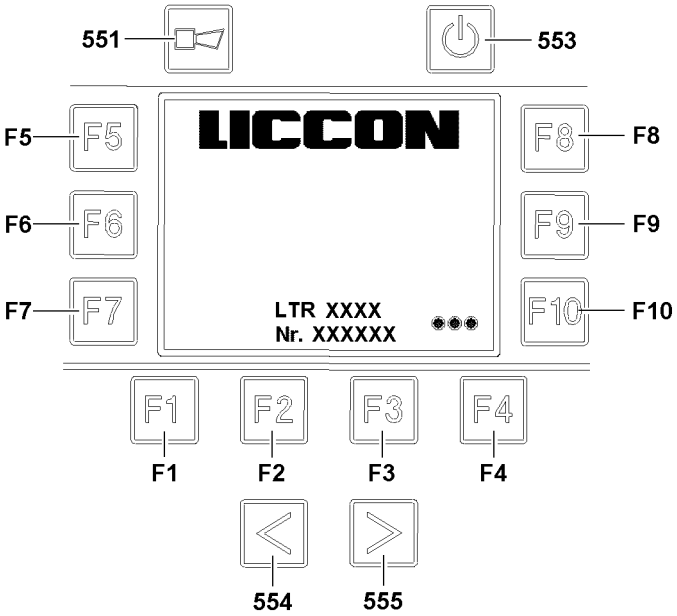

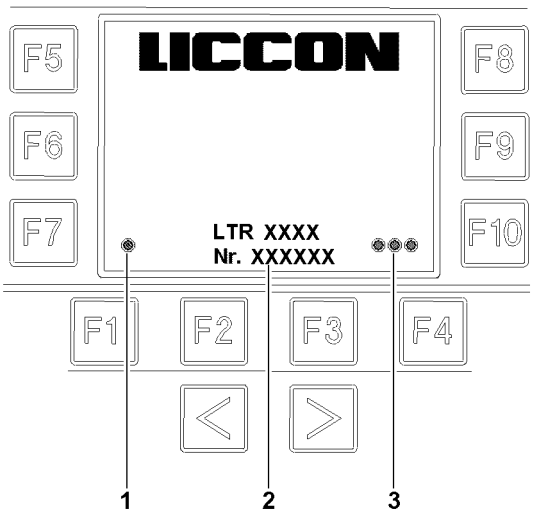

LWE/LTR 1100-009/25105-02-02/en

Fig.110317

copyright © Liebherr-Werk Ehingen GmbH 2023

1.5 Start screen BTT

1.5.1 Icon explanation Start screen BTT

1 Indicator light

Status display Connection between BTT and receiver (BTB)
- Yellow / red: not connected
- Yellow: Transmission signal being build up or severed
- Green / magenta: Connection prepared
- Green: Connection established
- Red: No connection between BTT and BTB
  Note:
  If necessary, the pairing process must be repeated, see section „Connecting the BTB and BTT“

2 Crane type and crane number

3 Indicator lights

Status display Code entry:
- Green: Code entry OK
- Red: No code entered, code entry incorrect

F1- F10 Function key
- **Note**:
  Once the code has been successfully entered, press any function key **F1-F10** to switch back to the selection overview.

LWE/LTR 1100-009/25105-02-02/en

copyright © Liebherr-Werk Ehingen GmbH 2023

2 Start menu of the BTT

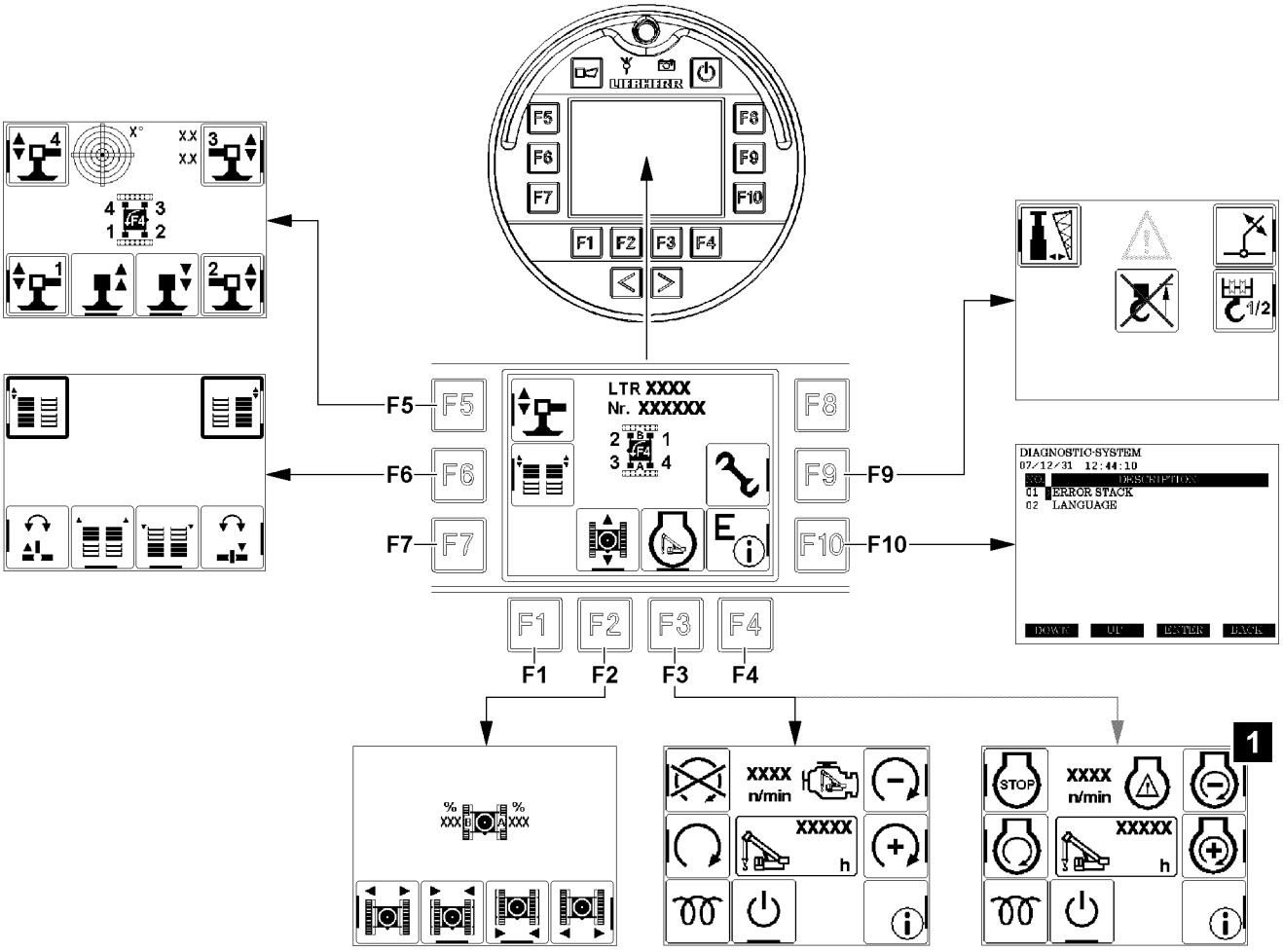

Fig.152694

F2		Crawler travel gear menu
>>	**F1**	-back to the start menu-
>>	**F2**	Retract the crawler carrier: actuate the rear cylinder
>>	**F3**	Retract the crawler carrier: actuate the front cylinder
>>	**F7**	Extend the crawler carrier: actuate the rear cylinder
>>	**F10**	Extend the crawler carrier: actuate the front cylinder

F3		Engine operation menu [1)]
>>	**F1**	-back to the start menu-
>>	**F2**	Turn the crane superstructure ignition on / off [2)]
>>	**F5**	Turn the engine off
>>	**F6**	Turn the engine on

LWE/LTR 1100-009/25105-02-02/en

copyright © Liebherr-Werk Ehingen GmbH 2023

F3		Engine operation menu [1]
>>	**F8**	Decrease engine rpm
>>	**F9**	Increase the engine rpm
>>	**F10**	Call up the test system

1) Illustration of individual icons can vary, depending on the crane programming, see example illustration **1**.
2) Function only available for certain crane types.

F4	Turn off the disengageable acoustic warning signal
	Note: After an error message of the LICCON computer system the BTT issues an *acoustic warning signal*. Depending on the error message (for example operating error or system error), the warning signal can be turned off directly via the **F4** function key or it remains and additional steps are required.

F5		Support menu [2]
>>	**F1**	-back to the start menu-
>>	**F2**	Retract selected support(s)
>>	**F3**	Extend selected support(s)
>>	**F5**	Select / deselect the support for a given crane position
>>	**F6**	Selection / deselection of the automatic support [2]
>>	**F7**	Select / deselect the support for a given crane position
>>	**F8**	Select / deselect the support for a given crane position
>>	**F10**	Select / deselect the support for a given crane position

2) Function only available for certain crane types.

F6		Ballasting menu
>>	**F1**	-back to the start menu-
>>	**F2**	Lift the counterweight: Extend the ballast cylinder
>>	**F3**	Lower the counterweight: Retract the ballast cylinder
>>	**F5**	Select / deselect the left ballast cylinder
>>	**F6**	Select ballast weighing for performance
>>	**F7**	Unpin the turntable lock
>>	**F8**	Select / deselect the right ballast cylinder
>>	**F10**	Pin the turntable lock

2) Function only available for certain crane types.

LWE/LTR 1100-009/25105-02-02/en

copyright © Liebherr-Werk Ehingen GmbH 2023

F9		Crane superstructure assembly functions menu
>>	**F1**	-back to the start menu-
>>	**F5**	Selection / deselection of assembling the hydraulic folding jib* [2)]
>>	**F8**	Selection / deselection of lifting / lowering the hydraulic folding jib* [2)]
>>	**F9**	Selection / deselection of fastening the hook block
	>>	**554** Control floodlight menu [2)]

2) Function only available for certain crane types.

LWE/LTR 1100-009/25105-02-02/en

copyright © Liebherr-Werk Ehingen GmbH 2023

Empty page!

LWE/LTR 1100-009/25105-02-02/en

copyright © Liebherr-Werk Ehingen GmbH 2023

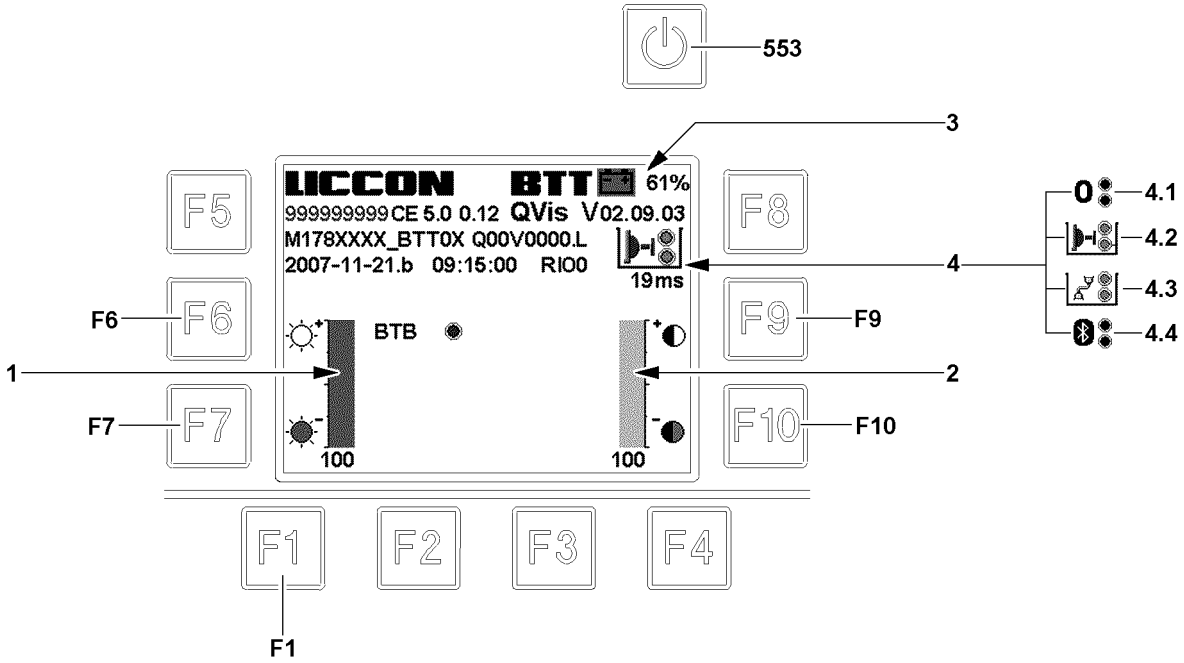

Fig.117976

LWE/LTR 1100-009/25105-02-02/en

copyright © Liebherr-Werk Ehingen GmbH 2023

3 Settings and status displays on the BTT

Settings can be made and status displays can be read on the BTT system screen.

3.1 Calling up / closing the system screen

Make sure that the following prerequisite is met:
– The start menu is displayed.

► Select the system screen: Press the button **553** momentarily until the system screen appears (max. 1 second).

Note
► When the button **553** is pressed too long, the BTT turns off.

► To switch back to the start menu: Press the function key **F1**.

3.2 Adjusting the brightness of the BTT display

The current setting stage for brightness can be read on the bar diagram **1**.

► BTT display brighter: Press the function key **F6**.
► BTT display darker: Press the function key **F7**.

3.3 Setting the contrast on the BTT display

Note
► Only available for certain crane types.

The current setting stage for the contrast can be read on the bar diagram **2**.

► BTT display more contrast: Press the function key **F9**.
► BTT display less contrast: Press the function key **F10**.

3.4 Determining the exact charge condition of the rechargeable battery

The exact charge condition of the rechargeable battery can be read on the charge condition display **3**.

► Read the charge condition, if necessary recharge the BTT by inserting it in the charging bay.

3.5 Checking the connection type

The connection type can be read on the connection type display **4**.

► Read the connection type.

Result:

– **4.1** No connection
– Infrared **4.2** (only in the charging bay)
– **4.3** Cable
– **4.4** Bluetooth

LWE/LTR 1100-009/25105-02-02/en

copyright © Liebherr-Werk Ehingen GmbH 2023

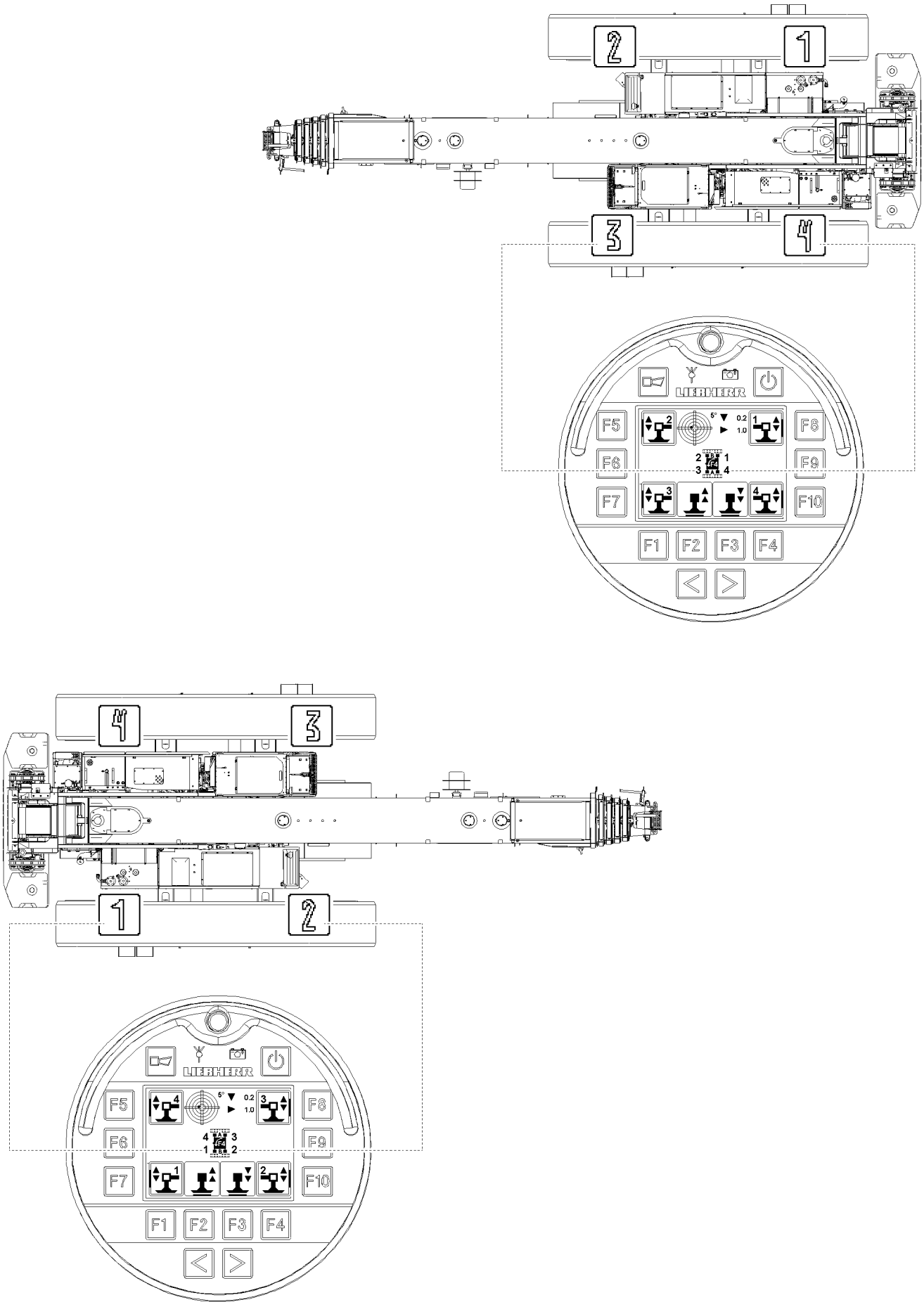

Fig.118341

LWE/LTR 1100-009/25105-02-02/en

copyright © Liebherr-Werk Ehingen GmbH 2023

4 Aligning the BTT with the crane

If „F4“ and two rotation arrows appear within the crane icon on the BTT display, then the location of the operator with the BTT must be aligned with the crane.

– The determining factor for the alignment of the BTT is the crane chassis.
– A selection can be made between two alignments:
  • Illustration **1**:
    • Operator is standing to the side of support 3 and support 4 (crawler carrier A).
    • In the crane icon on the BTT display, the supports with number 3 and number 4 are at the bottom.
  • Illustration **2**:
    • Operator is standing to the side of support 1 and support 2 (crawler carrier B).
    • In the crane icon on the BTT display, the supports with number 1 and number 2 are at the bottom.

WARNING
Danger of accident if the operator is incorrectly aligned with the crane!
If the operator is not correctly aligned with the crane, then the working range / danger zone cannot be viewed completely.
Personnel can be severely injured or killed!
► The crane icon on the BTT display and the actual alignment of the operator with the crane must match!

F4 Function key
  • When „F4“ and two rotation arrows appear in the crane icon:
    Press the function key **F4** to turn the crane icon in 180° increments.

LWE/LTR 1100-009/25105-02-02/en

copyright © Liebherr-Werk Ehingen GmbH 2023

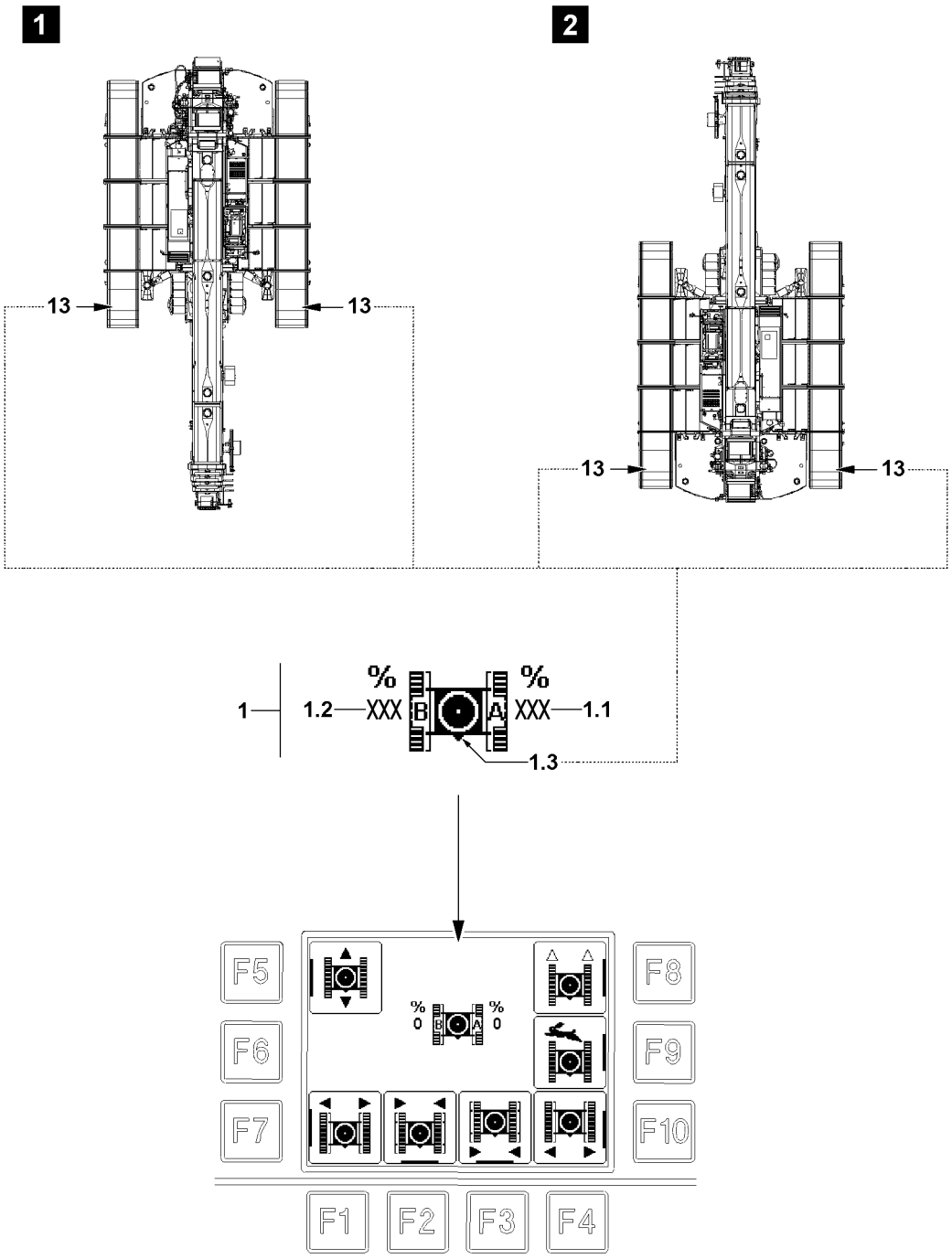

LWE/LTR 1100-009/25105-02-02/en

Fig.118328

copyright © Liebherr-Werk Ehingen GmbH 2023

5 Crawler travel gear menu

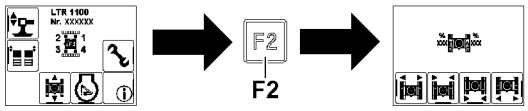

Fig.118373

Note
Change from the start menu to the crawler travel gear menu:
► Press the function key **F2**.

Functions in the „Crawler travel gear“ menu:
– Extending / retracting the crawler carrier

In the crawler travel gear menu, the display of the crane icon **1** cannot be adjusted:
– The marker „front side of crawler travel gear“ **1.3** shows the position in the display of the front side of the crawler travel gear.
– The position of the crane superstructure is not relevant in the crawler travel gear menu, see example of illustration **1** and illustration **2**.
– The front and rear on the crawler travel gear can be determined by the chain tension devices **13** (chain tension side):
  • The chain tension devices **13** are always on the front of the crawler travel gear.
  • The chain tension devices **13** are on the side of support 2 and support 3 (for crane types with support).

5.1 Icon explanation in the crawler travel gear menu

1 Track width display
  • The crawler carriers are marked with letters.
  • The extension conditions of the cross carriers are given in percentages.

1.1 Crawler carrier A
  • Extension condition of crawler carrier A in percent (%)
    0 % = Crawler carrier A is completely retracted
    to
    100 % = Crawler carrier A is completely extended

1.2 Crawler carrier B
  • Extension condition of crawler carrier B in percent (%)
    0 % = Crawler carrier B is completely retracted
    to
    100 % = Crawler carrier B is completely extended

1.3 Front on the travel gear
  • Shows where the front side of the crawler travel gear is in the icon.

LWE/LTR 1100-009/25105-02-02/en

copyright © Liebherr-Werk Ehingen GmbH 2023

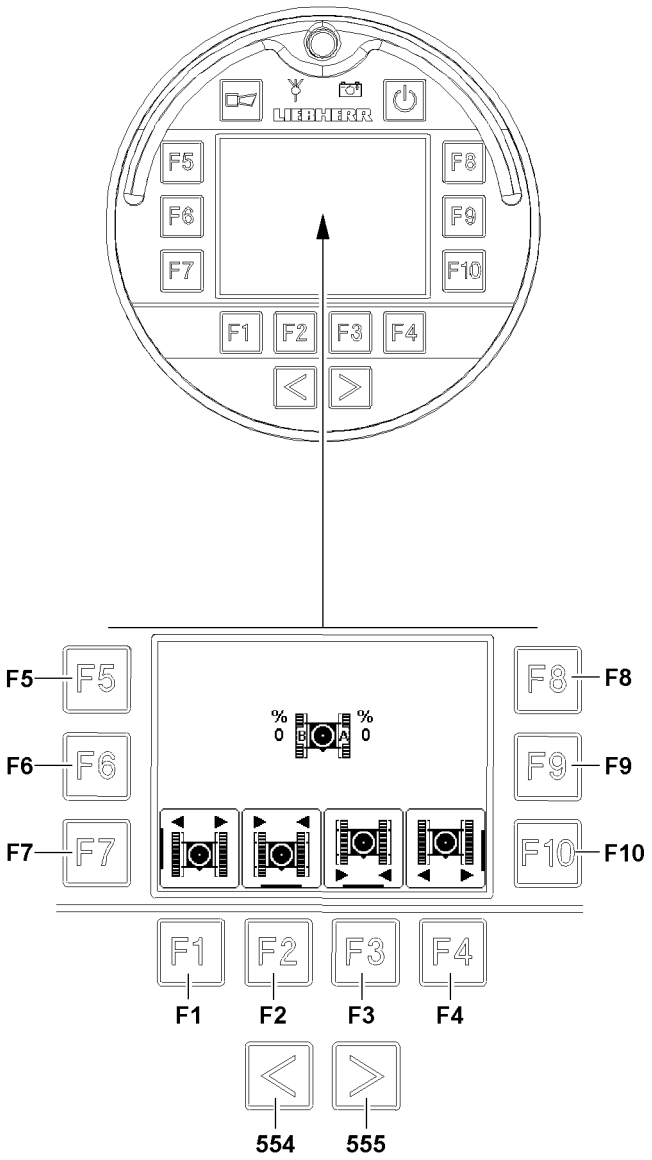

LWE/LTR 1100-009/25105-02-02/en

Fig.118374

copyright © Liebherr-Werk Ehingen GmbH 2023

5.2 Function keys in the crawler travel gear menu

554 Key
- Switch to the engine operation menu

555 Key
- Call up the BTT operating screen

F1 Function key
- Return to the start menu

F2 Function key
- Retract the crawler carrier: actuate the rear cylinder

F3 Function key
- Retract the crawler carrier: actuate the front cylinder

F4 Function key
- -No function-

F5 Function key
- -No function-

F6 Function key
- -No function-

F7 Function key
- Extend the crawler carrier: actuate the rear cylinder

F8 Function key
- -No function-

F9 Function key
- -No function-

F10 Function key
- Extend the crawler carrier: actuate the front cylinder

LWE/LTR 1100-009/25105-02-02/en

copyright © Liebherr-Werk Ehingen GmbH 2023

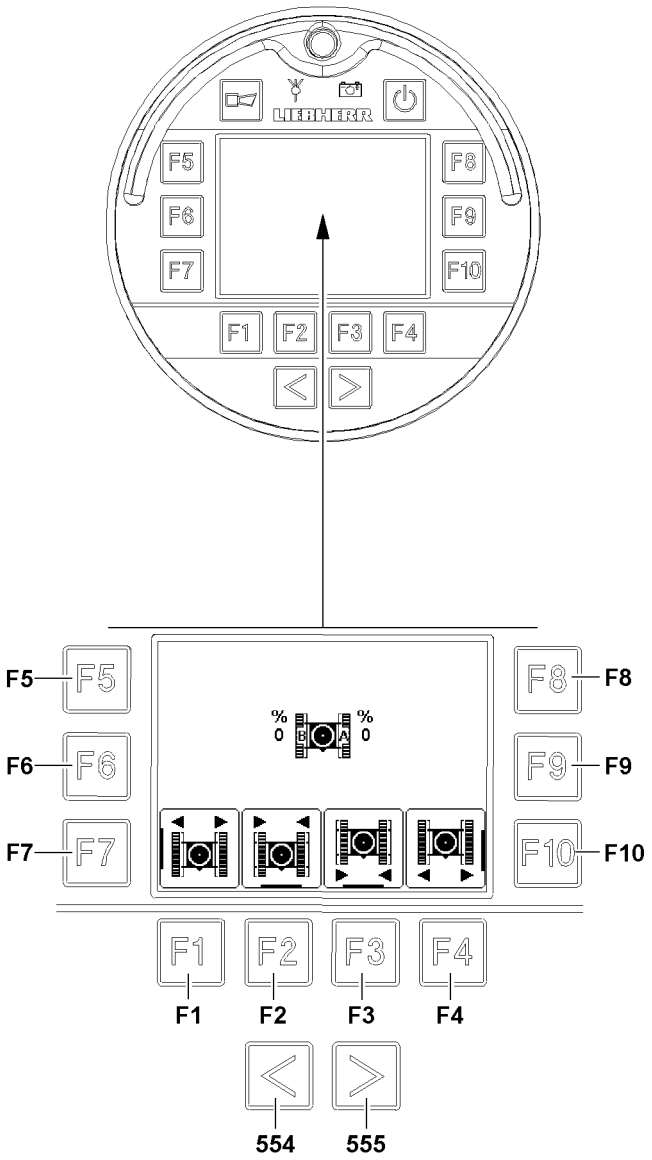

LWE/LTR 1100-009/25105-02-02/en

Fig.118374

copyright © Liebherr-Werk Ehingen GmbH 2023

5.3 Extending / retracting the crawler carrier

To be able to extend / retract the crawler carriers, the cross carriers must be unpinned.

NOTICE
Property damage!
If the crawler carriers are pushed out further than the outer pin points (100 %) then the crawler travel gear can be damaged.
► Push the crawler carriers out only to the point where they can be pinned on the outer pin points (100 %).
► Pay attention to the marks for the track width on the crawler carriers.
► Unpin the crawler carriers individually and push out to the desired position: First crawler carrier A, then crawler carrier B.

– **Control release:**
  • The control release is provided by touching the 2-hand keyboard on the rear of the BTT, see section „Releasing the button block on the BTT“
  • After the control release is provided, the icons over the function key **F2** / function key **F3** / function key **F7** and function key **F10** are highlighted in purple.

Note
► To control the crawler carriers, a control release must be issued: The corresponding icons must be highlighted in purple.

– **Retract the crawler carrier:**
  Prerequisite: The cross carriers are unpinned.
  • Press the function key **F2** and the function key **F3** at the same time.

Note
Twisted cross beams
When the crawler carrier is not retracted / extended evenly, then the cross beams can twist and block.
► Press the function key **F2** and function key **F7** or function key **F3** and function key **F10** alternately until the crawler carrier can be retracted / extended again.

– **Extend the crawler carrier:**
  Prerequisite: Unpin the crawler carriers individually and push out to the desired position: First crawler carrier A, then crawler carrier B.
  • Press the function key **F7** and the function key **F10** at the same time.

LWE/LTR 1100-009/25105-02-02/en

copyright © Liebherr-Werk Ehingen GmbH 2023

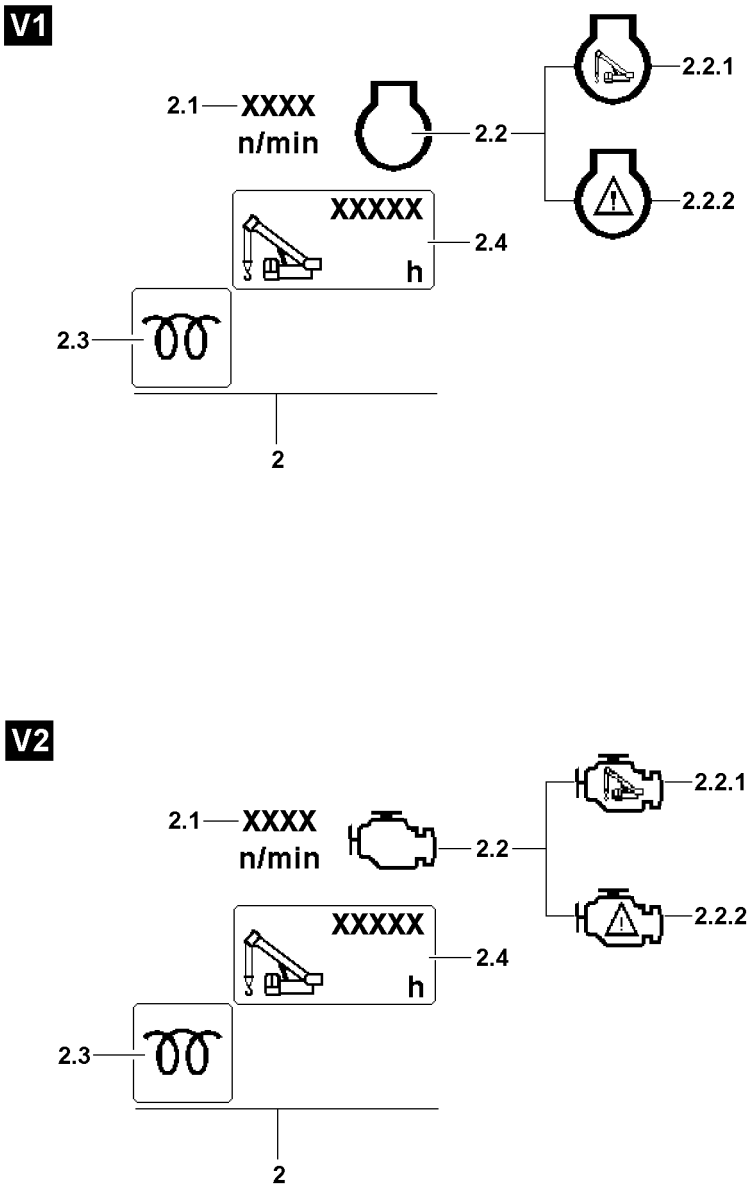

Fig.122498

LWE/LTR 1100-009/25105-02-02/en

copyright © Liebherr-Werk Ehingen GmbH 2023

6 Engine operation menu

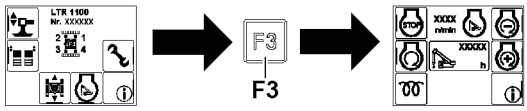

Fig.118375

Note
Change from the start menu to the engine operation menu:
► Press the function key **F3**.

Note
The depiction of the Engine operation icons **2** depends on the crane programming.
► Either the variation **V1** or variation **V2** icons appear.

6.1 Icon explanation in engine operation menu

2 Engine operation icons

2.1 Engine rpm
- Actual engine rpm

2.2 Engine monitoring
- If icon **2.2.1** appears, then there is no engine warning present.
- If warning icon **2.2.2** appears, then an engine warning is present.
- **NOTICE:**
  Call up engine monitoring functions and evaluate.

2.3 Monitoring indicator
- The monitoring indicator lights up green: The crane superstructure engine is ready to start
- The monitoring indicator lights up yellow: Crane superstructure engine preheating is active
- The monitoring indicator lights up red: The crane superstructure engine is not ready to start

2.4 Operating hour meter
- Operating hours of crane engine

LWE/LTR 1100-009/25105-02-02/en

copyright © Liebherr-Werk Ehingen GmbH 2023

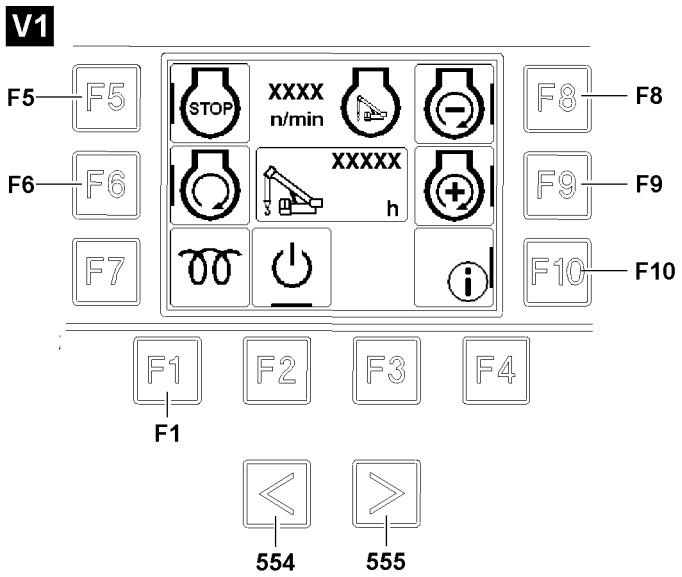

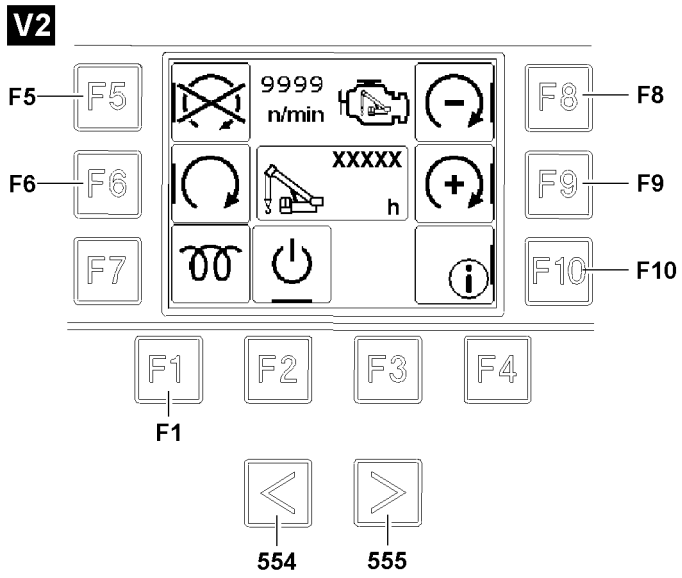

LWE/LTR 1100-009/25105-02-02/en

Fig.122499

copyright © Liebherr-Werk Ehingen GmbH 2023

6.2 The function keys

Note
The depiction of the Engine operation icons depends on the crane programming.
► Either the variation **V1** or variation **V2** icons appear.

554 Button
- Call up engine monitoring functions

555 Button
- Call up engine monitoring functions

F1 Function key
- Back to the start menu

F2 Function key
- Turn the crane chassis ignition on / off
- **Note**: Appears only for certain crane types

F5 Function key
- Press momentarily (less than 0.5 seconds): Reset settings in the engine operation menu
- Press long: Turn the engine off
- **Note**: The control release must have been made by touching the 2-Hand keypad in the rear of the BTT, see section „Release of button block on BTT“

F6 Function key
- Turn the engine on

F8 Function key
- Decrease engine rpm
- **Note**: The control release must have been made by touching the 2-Hand keypad in the rear of the BTT, see section „Release of button block on BTT“

F9 Function key
- Increase the engine rpm
- **Note**: The control release must have been made by touching the 2-Hand keypad in the rear of the BTT, see section „Release of button block on BTT“

F10 Function key
- Change to test system

LWE/LTR 1100-009/25105-02-02/en

copyright © Liebherr-Werk Ehingen GmbH 2023

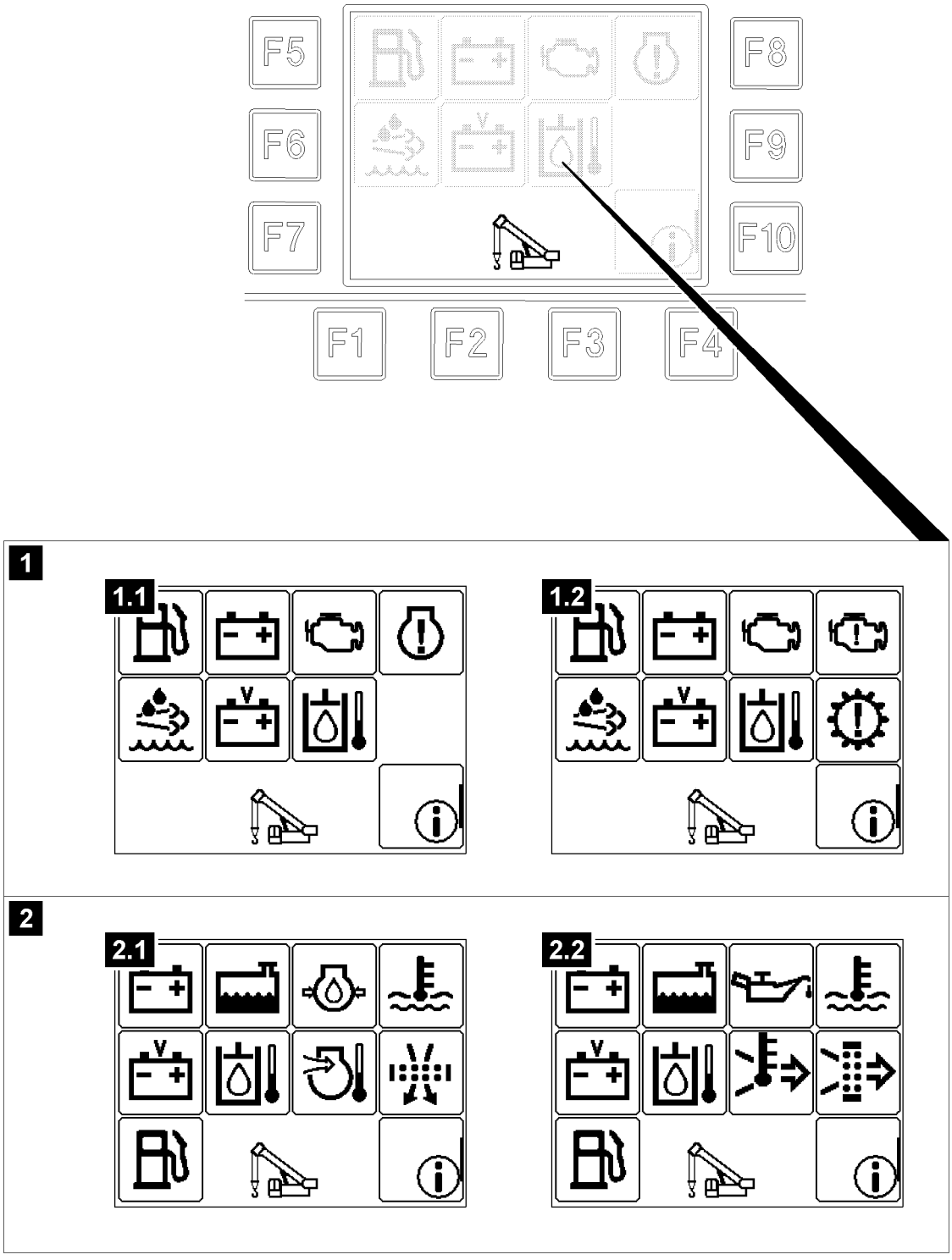

LWE/LTR 1100-009/25105-02-02/en

Fig.152695

copyright © Liebherr-Werk Ehingen GmbH 2023

6.3 Engine monitoring functions

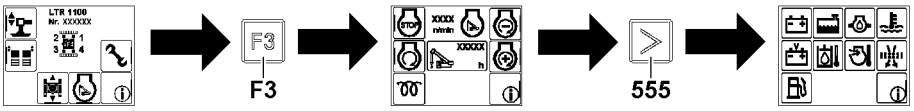

Fig.118376

Note
Change from the start menu to the engine monitoring functions:
- ► Press the function key **F3**.
- ► Press the function key **555**.

Note
- ► Engines **with SCR system** for exhaust aftertreatment - Display in BTT display, see illustrations **1**. Depending on the crane programming, either the illustration **1.1** or illustration **1.2** icon appears.
- ► Engines **without SCR system** - Display on the BTT display, see illustrations **2**. Depending on the crane programming, either the illustration **2.1** or illustration **2.2** icon appears.
- ► If a function is highlighted **green**, this function is operating correctly.
- ► If a function is highlighted **red** or **orange**, then there is a problem with this function.

NOTICE
Property damage!
Significant property damage can result if a problem is not immediately rectified!
- ► Remedy the problem immediately!

Note
The scope of the monitoring functions depends on the crane type and crane configuration.
The depiction of the icon depends on the crane programming. If two icons are depicted for one function, then only one of the two appears.
- ► Not all crane types have all listed monitoring functions.

	Fuel reserve
Green:	Fuel reserve sufficient
Yellow:	Fuel reserve is short
Red:	Fuel reserve low / depleted / system error **NOTICE!** Add fuel immediately / Immediately bring the crane to a standstill, turn the crane engine off and remedy the problem. Pay attention to the error message.

	Coolant temperature
Green:	Coolant temperature OK
Red:	Coolant temperature too high / system error **NOTICE!** Immediately bring the crane to a standstill, turn the engine off and remedy the problem. Pay attention to the error message.

copyright © Liebherr-Werk Ehingen GmbH 2023

/	**Engine oil pressure**
Green:	Engine oil pressure OK (engine on)
Red:	Engine oil pressure too low (engine on) / system error **NOTICE!** Immediately bring the crane to a standstill, turn the engine off and remedy the problem. Pay attention to the error message.

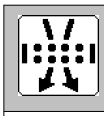 /	**Engine air filter**
Green:	Air intake opening / air filter OK (engine on)
Yellow / red	Air intake opening / air filter dirty (engine on) / system error **NOTICE!** Immediately bring the crane to a standstill, turn the engine off and remedy the problem. Pay attention to the error message.

	Charge control display (alternator)
Green:	Charge control OK (engine on)
Red:	Charge control has a problem (engine on) / system error **NOTICE!**: Immediately bring the crane to a standstill, turn the engine off and remedy the problem. Pay attention to the error message.

	Urea tank / exhaust aftertreatment [1)]
Green:	Urea reserve sufficient
Yellow:	The urea reserve is low or erroneous function of exhaust aftertreatment[2)] **Advance warning!** Add urea or remedy the erroneous function of the exhaust aftertreatment. Pay attention to the error message.
Red:	Urea level too low / depleted or erroneous function of exhaust aftertreatment system [2)] / system error **NOTICE!** Add urea or remedy the erroneous function of the exhaust aftertreatment / immediately bring the crane to a standstill, turn the engine off and remedy the problem. Pay attention to the error message.

1) Applies only for engines with the SCR system.
2) Under some circumstances a power reduction or start block of the engine is triggered. The type and scope of a power reduction or start block of the engine depends on the respectively valid national / regional regulations and the vehicle configuration.

LWE/LTR 1100-009/25105-02-02/en

copyright © Liebherr-Werk Ehingen GmbH 2023

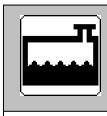	**Coolant level**
Green:	Coolant level OK
Red:	Coolant level too low / system error **NOTICE!**: Immediately bring the crane to a standstill, turn the engine off and remedy the problem. Pay attention to the error message.

/	**Charge air temperature**
Green:	Charge air temperature OK
Red:	Charge air temperature too high / system error **NOTICE!**: Immediately bring the crane to a standstill, turn the engine off and remedy the problem. Pay attention to the error message.

	Hydraulic oil temperature
Green:	Hydraulic oil temperature OK
Red:	Hydraulic oil temperature too high / system error **NOTICE!**: Immediately bring the crane to a standstill, turn the engine off and remedy the problem. Pay attention to the error message.

	Hydraulic oil
Green:	Leak oil filter OK (engine on) and hydraulic oil temperature OK
Red:	Air filter dirty (engine on) and / or hydraulic oil temperature too high / system error **NOTICE!**: Immediately bring the crane to a standstill, turn the engine off and remedy the problem. Pay attention to the error message.

	Battery voltage
Green:	Battery voltage OK
Red:	On-board power supply over / undervoltage / system error **NOTICE!**: Immediately bring the crane to a standstill, turn the engine off and remedy the problem. Pay attention to the error message.

LWE/LTR 1100-009/25105-02-02/en

copyright © Liebherr-Werk Ehingen GmbH 2023

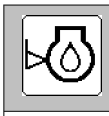 /	**Engine oil level** [3]
Green:	Engine oil level OK
Blue	The engine oil level can not be checked here on the display, call up the individual indicator light.
Red:	Engine oil level not OK / System error **NOTICE!**: Immediately bring the crane to a standstill, turn the engine off and remedy the problem. Call up individual indicator lights and adjust the engine oil according to the display - pay attention to error message.

3) Only for certain crane types.

	Hydraulic oil level [3]
Green:	Hydraulic oil level OK
Red:	Hydraulic oil level too low / error / system error **NOTICE!**: Immediately bring the crane to a standstill, turn the engine off and remedy the problem. Pay attention to the error message.

3) Only for certain crane types.

	Exhaust aftertreatment [1]
Green:	Exhaust aftertreatment OK
Yellow / red:	Urea level too low / depleted or erroneous function of exhaust aftertreatment system [2] / system error **NOTICE!** Add urea or remedy the erroneous function of the exhaust aftertreatment. Under some circumstances a power reduction or start block of the engine [2] is triggered, pay attention to the error message.

1) Applies only for engines with the SCR system.
2) Under some circumstances a power reduction or start block of the engine is triggered. The type and scope of a power reduction or start block of the engine depends on the respectively valid national / regional regulations and the vehicle configuration.

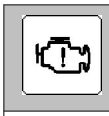	**Collective warning**
Green:	No warning messages present
Generally at yellow or red:	A warning is present / system error **NOTICE!** Determine the cause with the error message or on the LICCON monitor and observe the following description.
Yellow:	Air intake opening / Air filter dirty (engine on) / system error **NOTICE!** Immediately bring the crane to a standstill, turn the engine off and remedy the problem. Pay attention to the error message.
Red:	Engine oil pressure too low (engine on) / system error **NOTICE!** Immediately bring the crane to a standstill, turn the engine off and remedy the problem. Pay attention to the error message!

LWE/LTR 1100-009/25105-02-02/en

copyright © Liebherr-Werk Ehingen GmbH 2023

	Collective warning
Red:	Engine oil level too low or too high **NOTICE!** Call up the display for the engine oil level on the LICCON monitor and match the engine oil level according to the display. See the Crane operating instructions, chapter 4.02. Pay attention to the error message!
Red:	Coolant level too low / system error **NOTICE!** Immediately bring the crane to a standstill, turn the engine off and remedy the problem. Pay attention to the error message!
Red:	Coolant temperature too high / system error **NOTICE!** Immediately bring the crane to a standstill, turn the engine off and remedy the problem. Pay attention to the error message.
Red:	Charge air temperature too high / system error **NOTICE!** Immediately bring the crane to a standstill, turn the engine off and remedy the problem. Pay attention to the error message.

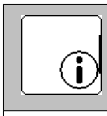	**Information field**
B / E:	If a *B (operating error)* or *E (system error)* appears in the information field, then at least one error message is present. Call up and evaluate the error message by pressing function key F10 on the BTT, see also Diagnostics Manual.

Note
Triggers power reduction or start block of the engine
If the urea level is too low or if there is a malfunction in the exhaust aftertreatment, then a power reduction or starting block of the engine can be triggered.
The crane operation and travel operation can be limited or disabled.
- ► Replenish the Urea level in time.
- ► Remedy the faulty function of the exhaust aftertreatment immediately.
- ► Observe any valid national / regional regulations and the vehicle configuration.

LWE/LTR 1100-009/25105-02-02/en

copyright © Liebherr-Werk Ehingen GmbH 2023

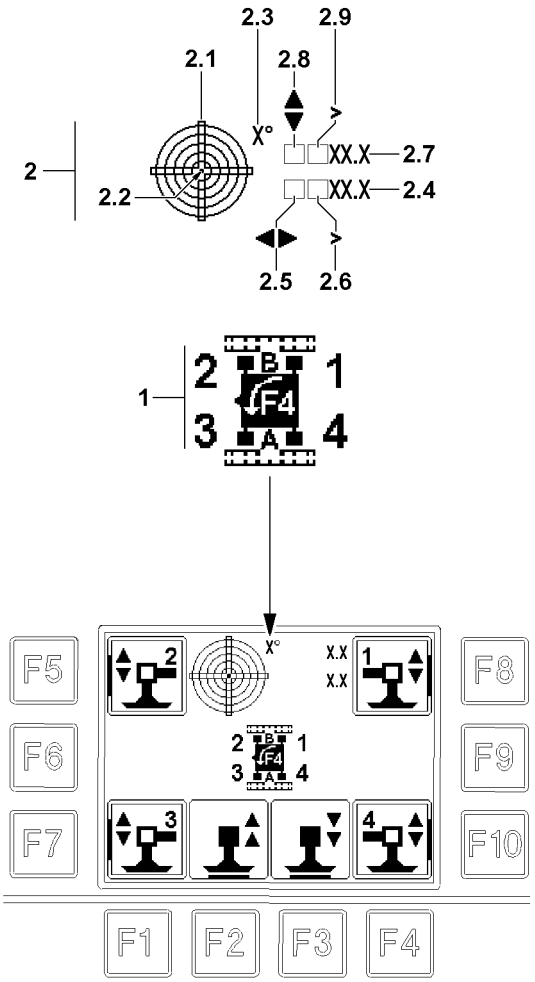

Fig.118377

LWE/LTR 1100-009/25105-02-02/en

copyright © Liebherr-Werk Ehingen GmbH 2023

7 Support menu

Note
► The support menu is available only for crane types with support*.

WARNING
Danger of accident if the operator is incorrectly aligned with the crane!
If the operator is not correctly aligned with the crane, then the working range / danger zone cannot be viewed completely.
Personnel can be severely injured or killed!
► The crane icon on the BTT display must correspond with the actual position of the operator with respect to the crane, see section „Aligning the BTT with the crane“!

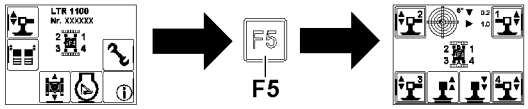

Fig.118378

Note
Change from the start menu to the support menu:
► Press the function key **F5**.

copyright © Liebherr-Werk Ehingen GmbH 2023

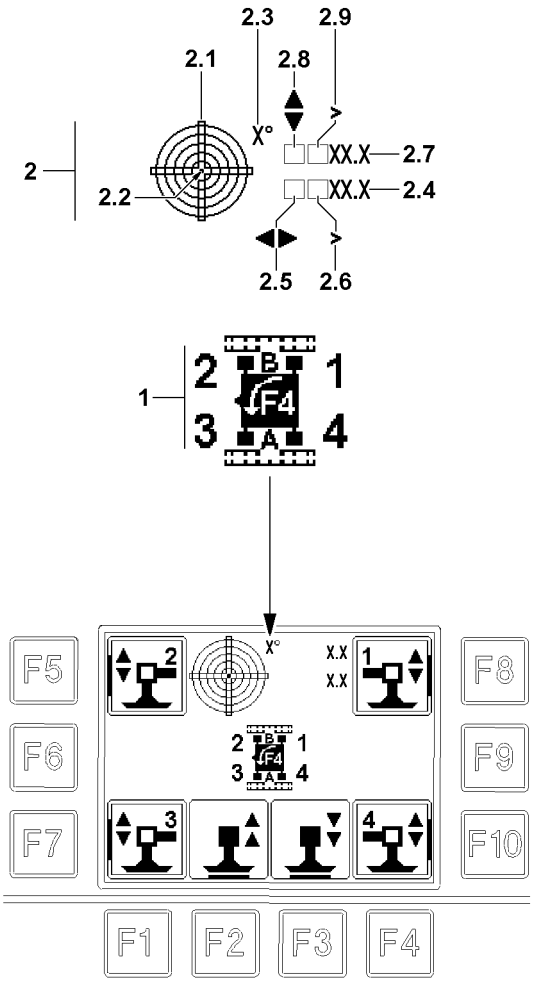

Fig.118377

LWE/LTR 1100-009/25105-02-02/en

copyright © Liebherr-Werk Ehingen GmbH 2023

7.1 Icon explanation in support menu

1 Crane icon
- On the crane icon:
  - The crawler carriers are displayed with their identification letter.
  - The support cylinders are displayed with numbers.

WARNING
The crane can topple over!
The „larger than symbol“ shows that the crane is inclined further than can be shown!
The exact incline can then not be read!
► Do not exceed the permissible incline of the crane!

2 „Incline“ icon
- Display of the incline of the crane to the horizontal in longitudinal and lateral direction. The display is graphic as well as numeric.
- The direction data refer to the orientation of the displayed crane icon

2.1 Graphic display
- The graphic display has the form of a sight gauge. In it is a moving dot **2.2**, which represents the air bubble

2.2 Point
- The center of the dot **2.2** shows the incline value.

2.3 Display resolution
- This value describes the resolution of the graphic view. The resolution is matched automatically to the inclination.

2.4 Longitudinal direction
- Incline of crane in the longitudinal direction in [°].

2.5 Direction arrow
- The direction arrow shows the direction of the incline

2.6 Display range exceeded
- If the „larger than icon“ appears, then the display range is exceeded
- **Note:**
  The crane is inclined further than can be shown!

2.7 Lateral direction
- Incline of crane in lateral direction in [°]

2.8 Direction arrow
- The direction arrow shows the direction of the incline

2.9 Display range exceeded
- If the „larger than icon“ appears, then the display range is exceeded
- **Note:**
  The crane is inclined further than can be shown!

LWE/LTR 1100-009/25105-02-02/en

copyright © Liebherr-Werk Ehingen GmbH 2023

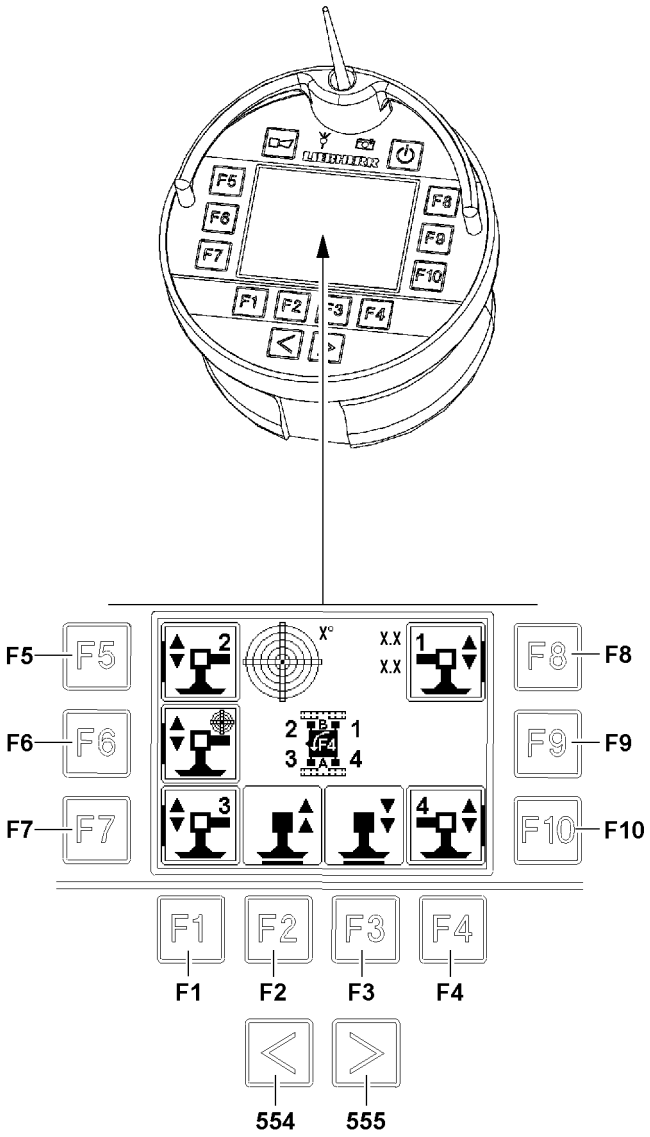

Fig.117973

LWE/LTR 1100-009/25105-02-02/en

copyright © Liebherr-Werk Ehingen GmbH 2023

7.2 Function keys in the support menu

554 Key
- Switch to the engine operation menu

555 Key
- Switch to the engine operation menu

F1 Function key
- Return to the start menu

F2 Function key
- Retract the selected support cylinder
- **Note**: The control release must have been made by touching the 2-Hand keypad in the rear of the BTT, see section „Release of button block on BTT“

F3 Function key
- Extend the selected support cylinder
- **Note**: The control release must have been made by touching the 2-Hand keypad in the rear of the BTT, see section „Release of button block on BTT“

F4 Function key
- Turn the crane icon in 180° increments

F5 Function key
- Select / deselect the support cylinders according to the crane position

F6 Function key
- Select / deselect automatic support*****
- **Note**: The function support automatic***** is only available on certain crane types.

F7 Function key
- Select / deselect the support cylinders according to the crane position

F8 Function key
- Select / deselect the support cylinders according to the crane position

F9 Function key
- -No function-

F10 Function key
- Select / deselect the support cylinders according to the crane position

LWE/LTR 1100-009/25105-02-02/en

copyright © Liebherr-Werk Ehingen GmbH 2023

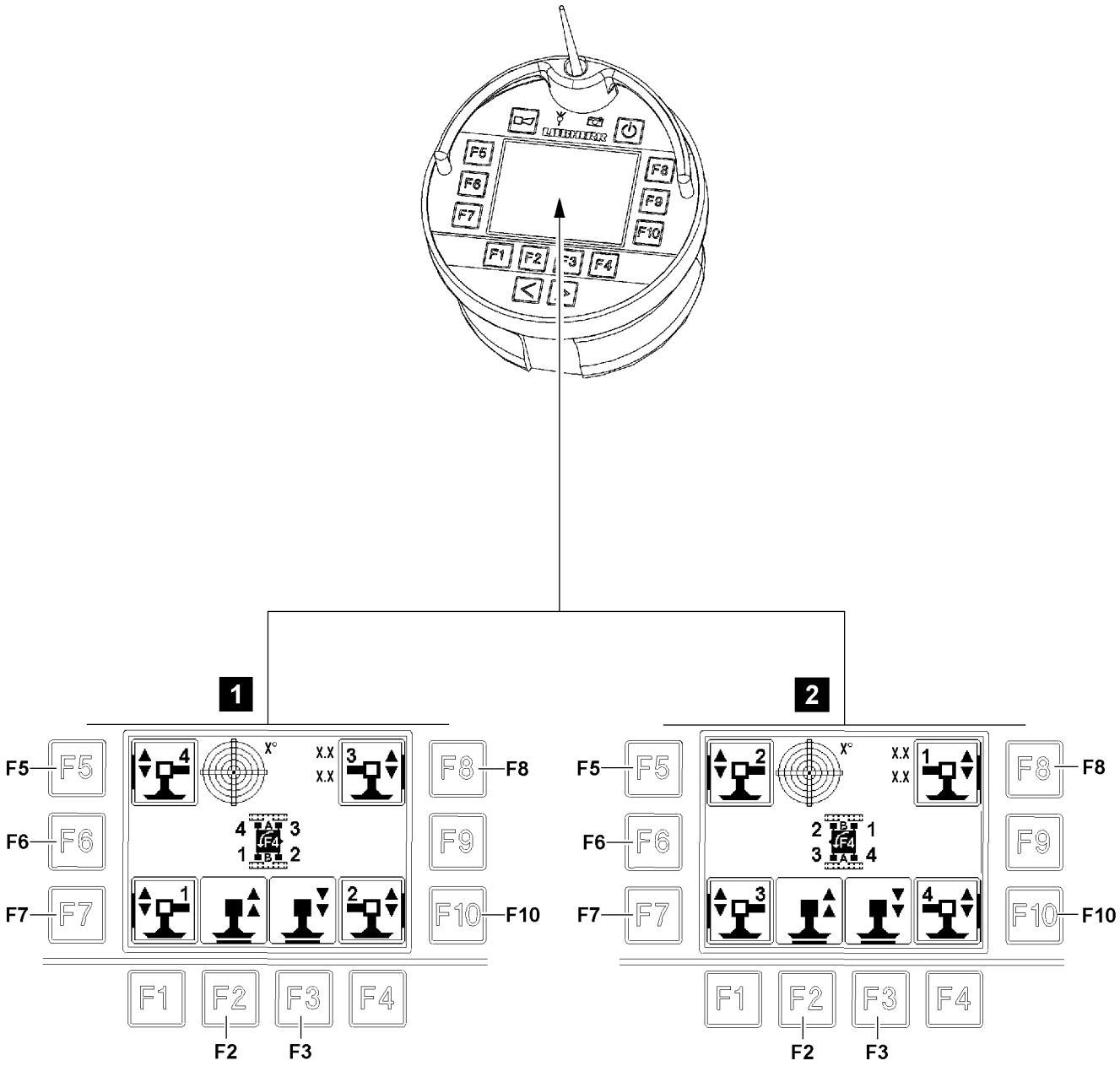

LWE/LTR 1100-009/25105-02-02/en

Fig.118380

copyright © Liebherr-Werk Ehingen GmbH 2023

7.3 Manual support

The supports can be selected and controlled individually or in groups. When a support cylinder is directly selected, then the automatic support selection is cancelled.

Make sure that the following prerequisite is met:
– The orientation of the operator to the crane has been set correctly, see section „Aligning the BTT with the crane“.

Selection / deselection of the support cylinder:
– Illustration **1**: The operator is standing to the side of crawler carrier B:
  • Actuate the function key **F5** for support cylinder 4.
  • Actuate the function key **F7** for support cylinder 1.
  • Actuate the function key **F8** for support cylinder 3.
  • Actuate the function key **F10** for support cylinder 2.
    • **Result**: Selected support cylinders are bordered in bold. Additional support cylinders can be selected / deselected as desired.

– Illustration **2**: Operator is standing to the side of crawler carrier A:
  • Actuate the function key **F5** for support cylinder 2.
  • Actuate the function key **F7** for support cylinder 3.
  • Actuate the function key **F8** for support cylinder 1.
  • Actuate the function key **F10** for support cylinder 4.
    • **Result**: Selected support cylinders are bordered in bold. Additional support cylinders can be selected / deselected as desired.

– **Control release:**
  • The control release is provided by touching the 2-hand keyboard on the rear of the BTT, see section „Releasing the button block on the BTT“
  • After the control release is provided, the icons over the function key **F2** / function key **F3** are highlighted in purple.

Note
► To control the support cylinders, a control release must be issued: The corresponding icons must be highlighted in purple.

– **Retract the support cylinders:**
  • Press the function key **F2**.

– **Extend the support cylinders:**
  • Press the function key **F3**.

LWE/LTR 1100-009/25105-02-02/en

copyright © Liebherr-Werk Ehingen GmbH 2023

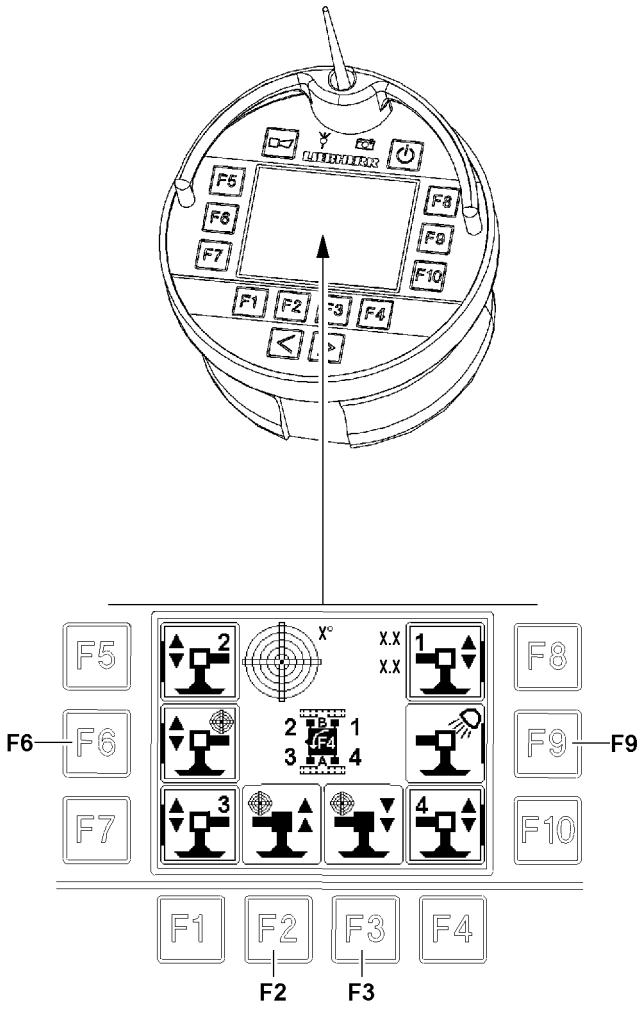

Fig.118947

LWE/LTR 1100-009/25105-02-02/en

copyright © Liebherr-Werk Ehingen GmbH 2023

7.4 Automatic support*

Note
► The function support automatic* is only available on certain crane types.

The automatic support function automatically levels the crane during the support procedure.

At selection of the automatic support, an existing individual selection of the support cylinders will be deleted.

Make sure that the following prerequisite is met:
– The orientation of the operator to the crane has been set correctly, see section „Aligning the radio remote control with the crane“.

– **Automatic support selection:**
  • Press the function key **F6**.
    • **Result**: When the automatic support is selected, the icon is surrounded with a bold border. When subsequently individual support cylinders are selected / deselected, the automatic support is deselected.

– **Control release:**
  • The control release is provided by touching the 2-hand keyboard on the rear of the BTT, see section „Releasing the button block on the BTT“
  • After the control release is provided, the icons over the function key **F2** / function key **F3** are highlighted in purple.

Note
► To control the support cylinders, a control release must be issued: The corresponding icons must be highlighted in purple.

– **Levelling the crane by retracting the support cylinder:**
  • Press the function key **F2**.
– **Levelling the crane by extending the support cylinders:**
  • Press the function key **F3**.

8 *Ballasting* menu

The *ballasting* menu contains:
– Turntable lock
– Performing ballasting
– Performing ballast weighing
  Note: Only for crane types with ballast monitoring

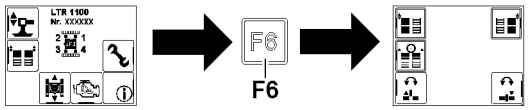

Fig.158251: Switching from the start menu to the Ballasting menu

LWE/LTR 1100-009/25105-02-02/en

copyright © Liebherr-Werk Ehingen GmbH 2023

8.1 Icons in the *Ballasting* menu

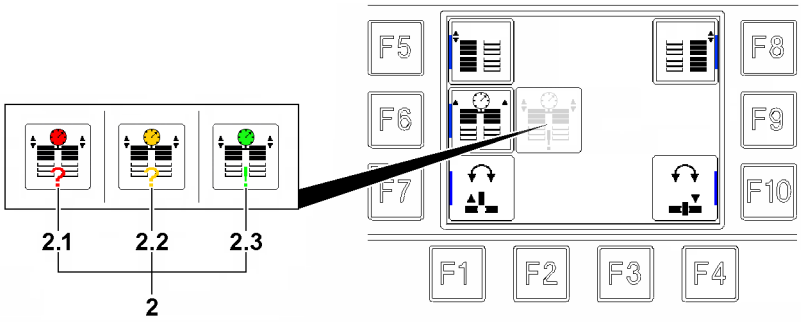

Fig.158252: Icons in the Ballasting menu

2 Ballast weighing
Note: Only for crane types with ballast monitoring
- The icon changes depending on the progress
- Icon *red* **2.1**: Ballast weighing must be performed
- Icon *yellow* **2.2**: Ballast weighing is being performed
- Icon *green* **2.3**: Ballast weighing successfully performed

8.2 *Ballasting* menu function keys

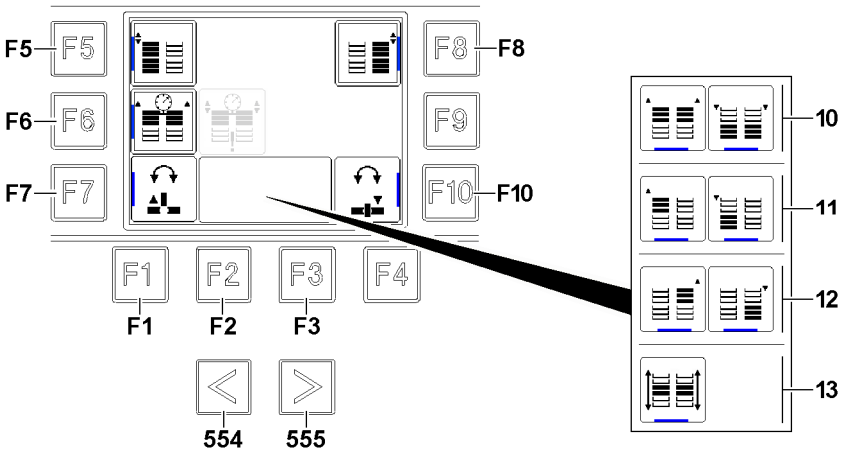

Fig.158253: Ballasting menu function keys

554 Change over key
- Switch to the previous menu

555 Change over key
- Switch to the next menu

F1 Function key
- Back to the start menu

F2 Function key
- after the corresponding selection: Extend the ballast cylinder (lift the counterweight)
  - The operating icons **10** appear: extend both ballast cylinders
  - The operating icons **11** appear: extend the left ballast cylinder
  - The operating icons **12** appear: extend the right ballast cylinder

  or
- The operating icon **13** appears: Perform ballast weighing
  Note: Only for crane types with ballast monitoring

LWE/LTR 1100-009/25105-02-02/en

copyright © Liebherr-Werk Ehingen GmbH 2023

F3 Function key
- after the corresponding selection: Retract the ballast cylinder (lower the counterweight)
  - The operating icons **10** appear: retract both ballast cylinders
  - The operating icons **11** appear: retract the left ballast cylinder
  - The operating icons **12** appear: retract the right ballast cylinder

F5 Function key
- Select or deselect the left ballast cylinder

F6 Function key
- Select ballast weighing for performance
  Note: Only for crane types with ballast monitoring

F7 Function key
- Unpin the turntable lock

F8 Function key
- Select or deselect the right ballast cylinder

F10 Function key
- Pin the turntable lock

8.3 Turntable lock

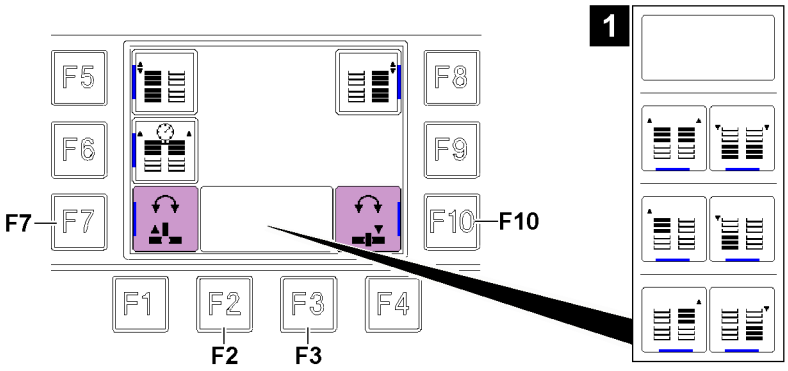

Fig.158254: Turntable lock function

Make sure that the following prerequisites are met:
– The crane superstructure must be in a position in which it can be pinned (pin bore present)
– The crane superstructure must be in a position in which the turntable lock does not twist

– **Control release:**
  - The control release is provided by touching the 2-hand keyboard in the rear of the BTT, see section „Releasing the button block on the BTT“.
  - After completed control release, the icons next to the function key **F7** and function key **F10** are highlighted in purple.
    Note: For the control of the turntable lock, the icons over function key **F2** and function key **F3** (illustration **1**) are not relevant.

Note
► To control the functions, a control release must be issued: The corresponding icons must be highlighted in purple.

– **Unpin the turntable lock:**
  - Press the function key **F7**.

– **Pin the turntable lock:**
  - Press the function key **F10**.

copyright © Liebherr-Werk Ehingen GmbH 2023

8.4 Performing ballasting

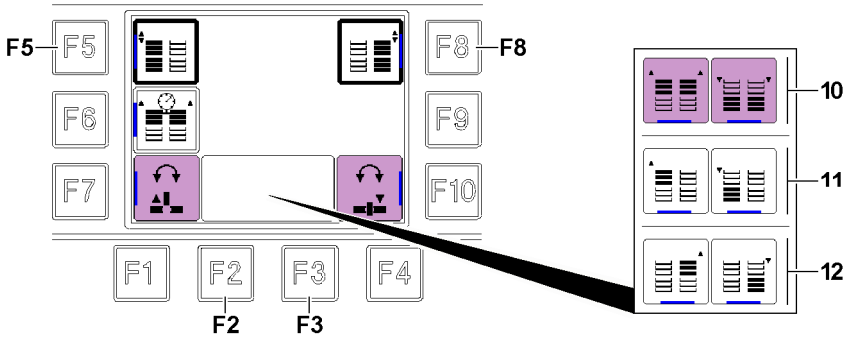

Fig.158255: Ballasting function

The ballast cylinders can be controlled in parallel or individually. The control of the individual ballast cylinders is required to equalize an incline position or to position the ballast cylinders at assembly.

– **Selection / deselection of the left ballast cylinder**
  • Press the function key **F5** and select the left ballast cylinder.
    • **Result**: The icon is bordered in bold.
      The icons **11** above the function key **F2** and function key **F3** appear.
  • **Note**: Pressing the function key **F5** again deselects the left ballast cylinder.

– **Selection / deselection of the right ballast cylinder**
  • Press the function key **F8** and select the right ballast cylinder.
    • **Result**: The icon is bordered in bold.
      The icons **12** above the function key **F2** and function key **F3** appear.
  • **Note**: Pressing the function key **F8** again deselects the right ballast cylinder.

– **Selection / deselection of both ballast cylinders**
  • Press the function key **F5** and the function key **F8** and select both ballast cylinders.
    • **Result**: The icons are bordered in bold.
      The icons **10** above the function key **F2** and function key **F3** appear.
  • **Note**: By pressing the function key **F5** and function key **F8** again, the ballast cylinders are deselected again.

– **Control release:**
  • The control release is provided by touching the 2-hand keyboard in the rear of the BTT, see section „Releasing the button block on the BTT“.
  • After the control release is provided, the icons over the function key **F2** / function key **F3** are highlighted in purple.

Note

► To control the functions, a control release must be issued: The corresponding icons must be highlighted in purple.

– **Lift the counterweight / extend the ballast cylinders:**
  • Press the function key **F2**.

– **Lower the counterweight / retract the ballast cylinders:**
  • Press the function key **F3**.

LWE/LTR 1100-009/25105-02-02/en

copyright © Liebherr-Werk Ehingen GmbH 2023

8.5 Performing ballast weighing

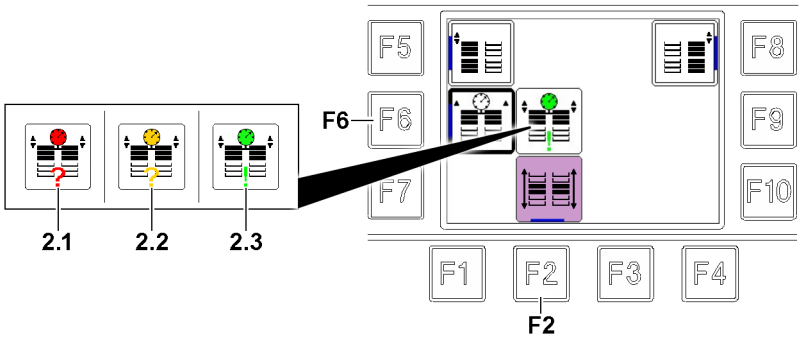

Fig.158256: Ballast weighing function

Note
► Only for crane types with ballast monitoring.

Make sure that the following prerequisites are met:
– The counterweight is at the top.
– The retaining pin is not inserted.

– **Selection / deselection of ballast weighing**
  • Press the function key **F6** and select ballast weighing.
    • **Result**: The icon is bordered in bold.
      The *red* icon **2.1** appears.
      The icon over the function key **F2** appears.
  • **Note**: Pressing the function key **F6** again deselects ballast weighing again.

– **Control release:**
  • The control release is provided by touching the 2-hand keyboard in the rear of the BTT, see section „Releasing the button block on the BTT“.
  • After the control release is provided, the icon over the function key **F2** is highlighted in purple.

Note
► To control the functions, a control release must be issued: The corresponding icons must be highlighted in purple.

– **Perform ballast weighing:**
  • Press and hold the function key **F2**.
    • **Result**: For the duration of ballast weighing, the *yellow* icon **2.2** appears
    • As soon as the *green* icon **2.3** appears, ballast weighing is successfully completed and the function key **F2** no longer needs to be pressed.

Note
► If the counterweight is changed, the counterweight settings in the set up program must be updated and the ballast must be weighed again.

LWE/LTR 1100-009/25105-02-02/en

copyright © Liebherr-Werk Ehingen GmbH 2023

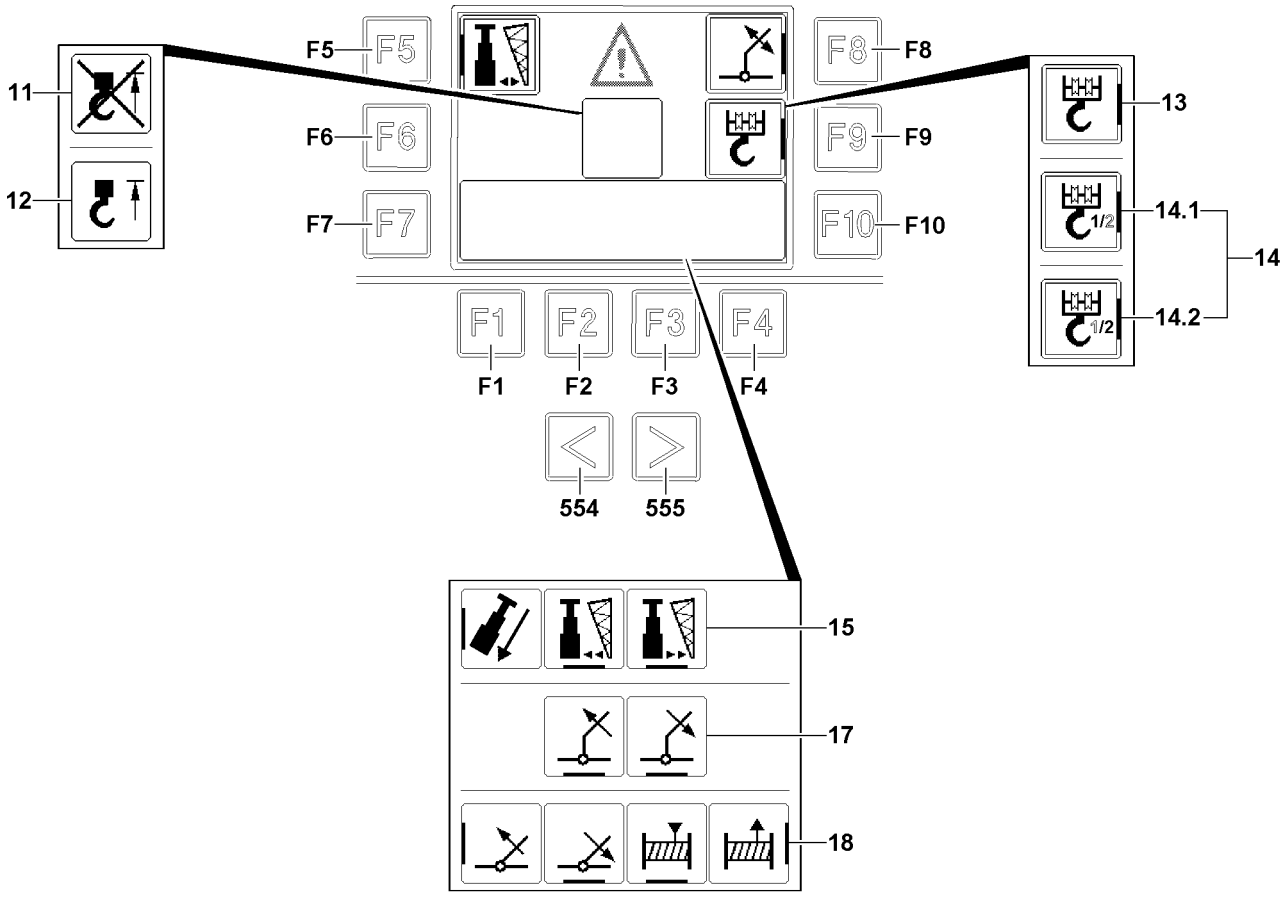

LWE/LTR 1100-009/25105-02-02/en

Fig.118343

copyright © Liebherr-Werk Ehingen GmbH 2023

9 Assembly functions menu

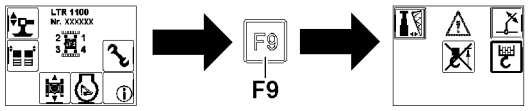

Fig.118383

Note
Change from the start menu to the assembly function menu:
► Press the function key **F9**.

Note
► The function key **F5** and the function key **F9** in the assembly functions menu remain active only as long as the telescopic boom is telescoped in all the way.

9.1 Icon explanation in assembly function menu

11 Hoist top bypassed
- Appears when the hoist top limit switch is automatically bypassed by the control.

12 Hoist top triggered
- Appears when the hoist top limit switch is triggered.

13 Single hoist gear
- Icon appears when only one hoist winch is activated.

14 Two hoist gears
- Icon appears if two hoist winches are activated
- The icon **14.1** appears: Hoist gear 1 selected
- The icon **14.2** appears: Hoist gear 2***** selected

LWE/LTR 1100-009/25105-02-02/en

copyright © Liebherr-Werk Ehingen GmbH 2023

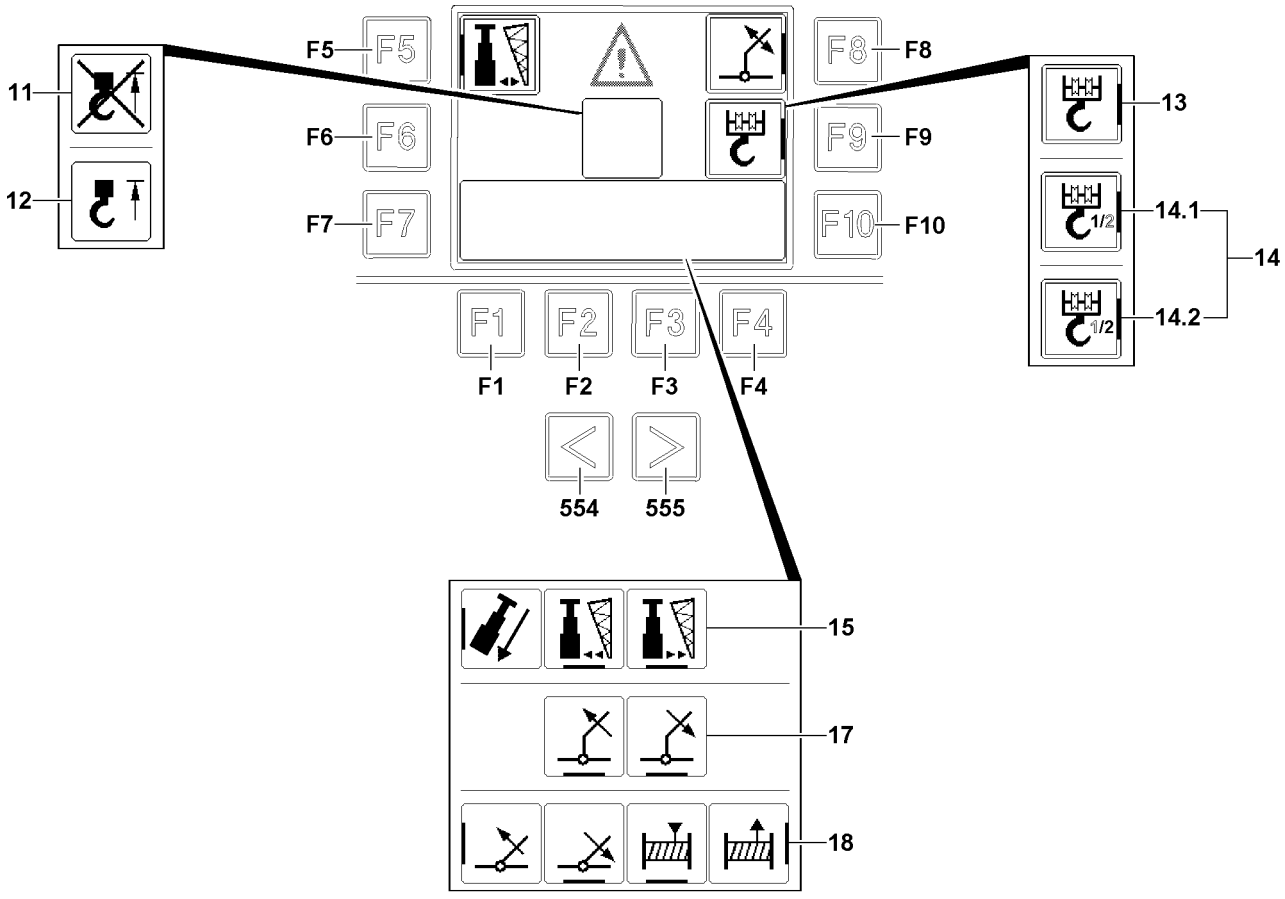

LWE/LTR 1100-009/25105-02-02/en

Fig.118343

copyright © Liebherr-Werk Ehingen GmbH 2023

9.2 Function keys in assembly functions menu

554 Key
- Call up engine operation

555 Key
- Call up engine operation

F1 Function key
- Back to the start menu

F2 Function key
- Function depending on the selection made

F3 Function key
- Function depending on the selection made

F4 Function key
- -No function-

F5 Function key
- Selection / deselection of assembling the hydraulic folding jib*****
- After selection, the operating icons **15** appear additionally
- Function is only active when the telescopic boom is telescoped in all the way.

F6 Function key
- -No function-

F7 Function key
- Function depending on the selection made

F8 Function key
- Selection / deselection of lifting / lowering the hydraulic folding jib*****
- After selection, the operating icons **17** appear additionally

F9 Function key
- Selection / deselection of fastening the hook block
- After selection, the operating icons **18** appear additionally
- Function is only active when the telescopic boom is telescoped in all the way.

F10 Function key
- Function depending on the selection made

LWE/LTR 1100-009/25105-02-02/en

copyright © Liebherr-Werk Ehingen GmbH 2023

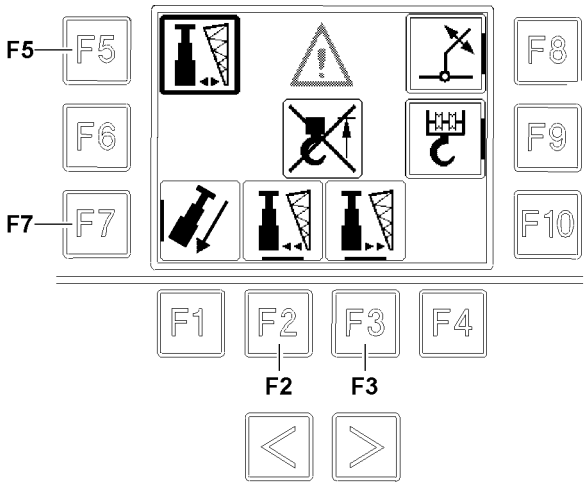

Fig.118346

LWE/LTR 1100-009/25105-02-02/en

copyright © Liebherr-Werk Ehingen GmbH 2023

9.3 Assembling the hydraulic folding jib*

In order to be able to assemble the hydraulic folding jib* on the boom head, it must be swung out over a cylinder.

To be able to pin the hydraulic folding jib* on the boom head, it can be possible that the pin bores do not align. The telescopic boom must then be tensioned, in doing so the telescopic sections are pulled together.

Make sure that the following prerequisites are met:
– The telescopic boom is telescoped in all the way.
– The boom angle is less than 5°.

WARNING
Danger of crushing!
For the Tension the telescopic boom function, all telescopic sections are pulled together. Limbs or other body parts can be caught and crushed.
► As long as the function „tension the telescopic boom“ is carried out, keep sufficient distance to the push area of the telescopic sections!

– **Selection / deselection of assembling the hydraulic folding jib*:**
  • Press the function key **F5**.
    • **Result**: When the selection has been made, the border on the icon on the right of function key **F5** is bold. The icons over the function key **F2** / function key **F3** and next to the function key **F7** appear.
– **Control release:**
  • The control release is provided by touching the 2-hand keyboard on the rear of the BTT, see section „Releasing the button block on the BTT“
  • After the control release is provided, the icons over the function key **F2** / function key **F3** and next to the function key **F7** are highlighted in purple.

Note
► To control the functions, a control release must be issued: The corresponding icons must be highlighted in purple.

– **Swing the hydraulic folding jib* out:**
  • Press the function key **F3**.
– **Swing the hydraulic folding jib* in:**
  • Press the function key **F2**.
– **Tension the telescopic boom:**
  • Press the function key **F7**.

Note
► To be able to tension the telescopic boom completely, the telescoping cylinder must be pinned with the innermost telescope, see Crane operating instructions, chapter 4.05.

LWE/LTR 1100-009/25105-02-02/en

copyright © Liebherr-Werk Ehingen GmbH 2023

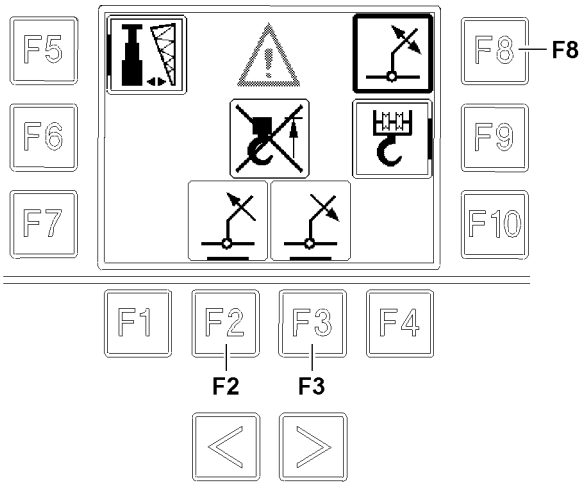

Fig.118347

LWE/LTR 1100-009/25105-02-02/en

copyright © Liebherr-Werk Ehingen GmbH 2023

9.4 Lifting / lowering the hydraulic folding jib*

The hydraulic folding jib* can be lifted / lowered for assembly, see the Crane operating instructions, chapter 5.02.

– **Selection / deselection of lifting / lowering the hydraulic folding jib*:**
  • Press the function key **F8**.
    • **Result**: When the selection has been made, the border on the icon on the left of function key **F8** is in bold. The icons above the function key **F2** / function key **F3** appear.

– **Control release:**
  • The control release is provided by touching the 2-hand keyboard on the rear of the BTT, see section „Releasing the button block on the BTT“
  • After the control release is provided, the icons over the function key **F2** / function key **F3** are highlighted in purple.

Note

► To control the functions, a control release must be issued: The corresponding icons must be highlighted in purple.

– **Lift the hydraulic folding jib*:**
  • Press the function key **F2**.

– **Lower the hydraulic folding jib*:**
  • Press the function key **F3**.

LWE/LTR 1100-009/25105-02-02/en

copyright © Liebherr-Werk Ehingen GmbH 2023

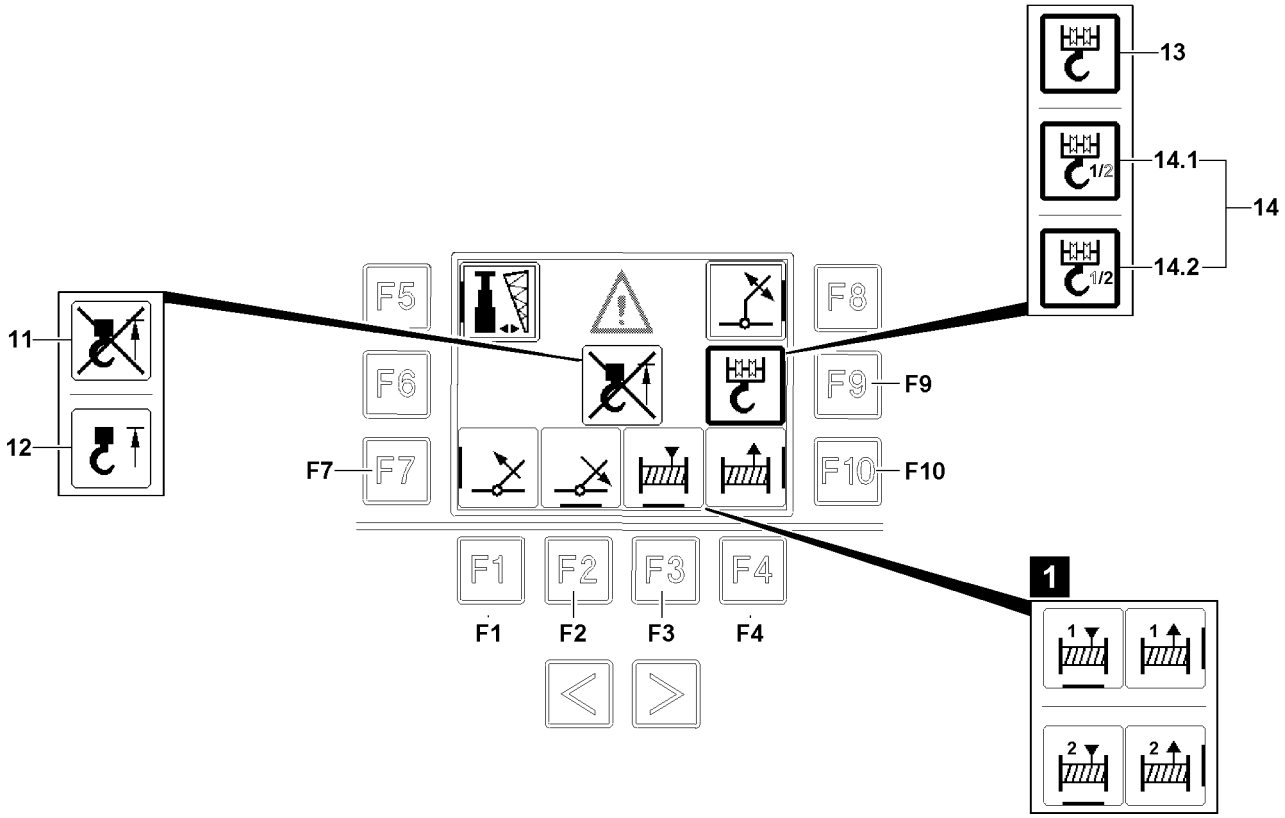

LWE/LTR 1100-009/25105-02-02/en

Fig.118348

copyright © Liebherr-Werk Ehingen GmbH 2023

9.5 Fastening the hook block

NOTICE
Incorrect hoist winch selected!
If the incorrect hoist winch is selected, the crane can be damaged.
► When two hoist winches are active, select the correct hoist winch for the hook block.

9.5.1 Selecting the hoist winch

When the hoist winches **14** icon appears, a hoist winch must be selected first. The selection is only possible using the operating elements in the crane operator's cab! To do so, the winch that should not be driven must be blocked.

– The hoist winch **14.1** icon is displayed: Hoist winch 1 (winch 1) is active.
– The hoist winch **14.2** icon is displayed: Hoist winch 2 (winch 2) is active.

Make sure that the following prerequisite is met:
– The hoist winches **14** icon appears in the BTT display.

– **Selection of the hoist winch:**
  • Release the respective winch, see Crane operating instructions, chapter 4.05.
    • **Result:** The number for the active hoist winch is displayed in bold.
      In the icons for the control appears the number of the active hoist winch, see illustration **1**.

LWE/LTR 1100-009/25105-02-02/en

copyright © Liebherr-Werk Ehingen GmbH 2023

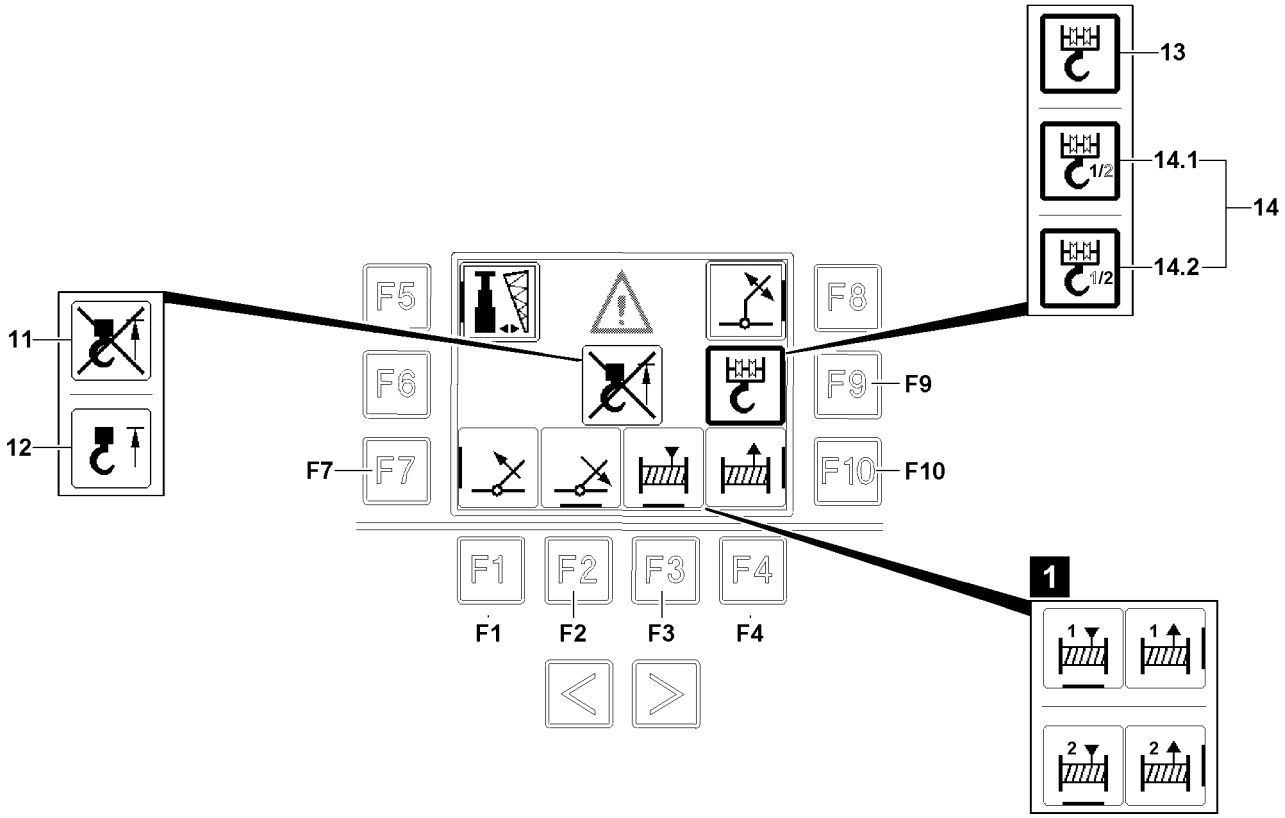

LWE/LTR 1100-009/25105-02-02/en

Fig.118348

copyright © Liebherr-Werk Ehingen GmbH 2023

9.5.2 Detaching / attaching the hook block on the fastening point

Detaching / attaching the hook block on the fastening point is described in chapter 4.03.

– **11** Hoist top limit switch bypassed
Is displayed when the hoist top limit switch is automatically bypassed by the control.
– **12** Hoist top limit switch triggered
Is displayed when the hoist top limit switch is triggered, crane movements are limited.

– **Hoist winch / hook block selection:**
  • Press the function key **F9**.
    • **Result**: When the selection has been made, the border on the icon on the left of function key **F9** is in bold. The icons over the function key **F2** / function key **F3** and next to the function key **F7** / function key **F10** appear.

– **Control release:**
  • The control release is provided by touching the 2-hand keyboard on the rear of the BTT, see section „Releasing the button block on the BTT“
  • After the control release is provided, the icons over the function key **F2** / function key **F3** and next to function key **F7** / function key **F10** are highlighted in purple.

Note
► To control the functions, a control release must be issued: The corresponding icons must be highlighted in purple.

Note
► The function key **F2**, function key **F3**, function key **F7** and function key **F10** have 2 speed stages. For example, if the function key **F10** is actuated lightly, the hoist rope is spooled out slowly. If the function key **F10** is actuated harder, the hoist rope is spooled out quickly.

Spool the hoist winch up:
– Press the function key **F3**.

Spool the hoist winch out:
– Press the function key **F10**.

Luff the telescopic boom down:
– Press the function key **F2**.

Luff the telescopic boom up:
– Press the function key **F7**.

9.6 Control Floodlight* menu

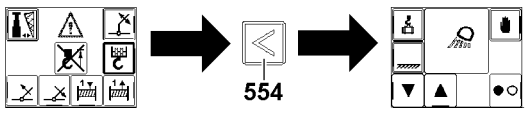

Fig.121447: Changing from fastening the hook block function to the Floodlight control menu*

The *fasten the hook block* function can be used to call up the floodlight* control menu.

LWE/LTR 1100-009/25105-02-02/en

copyright © Liebherr-Werk Ehingen GmbH 2023

9.6.1 Control floodlight* menu icon explanation

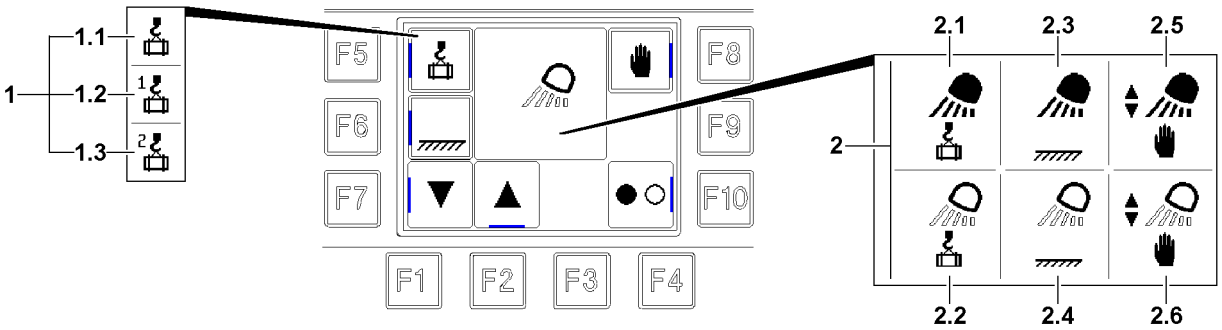

Fig.121448: Control floodlight menu icon explanation*

– **1** Load following icon
  - **1.1** Load following Hoist gear
  - **1.2** Load following is set in case of two active hoist gears on hoist gear 1
    Note: Only present for certain crane types.
  - **1.3** Load following is set in case of two active hoist gears on hoist gear 2
    Note: Only present for certain crane types.

– **2** Floodlight icon
  - **2.1** Working floodlight turned on and set to load following
  - **2.2** Working floodlight turned off and set to load following
  - **2.3** Working floodlight turned on and set to illuminate work area
  - **2.4** Working floodlight turned off and set to illuminate work area
  - **2.5** Working floodlight turned on and set to manual control
  - **2.6** Working floodlight turned off and set to manual control

9.6.2 Function keys Menu Control Floodlight*

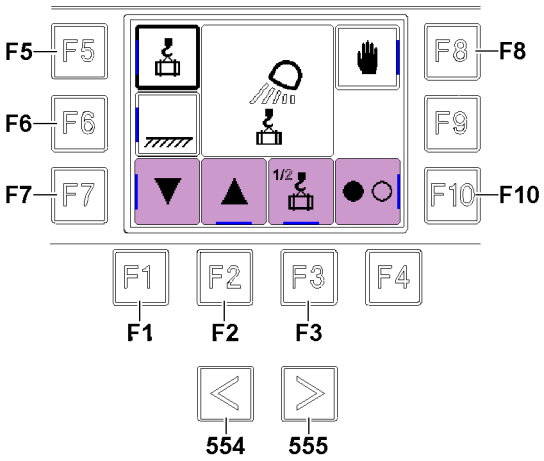

Fig.121449: Floodlight menu function keys*

554 Key
- Call up engine operation

555 Key
- back to function *Fasten the hook block*

F1 Function key
- Back to the *Mobile operating element* menu overview

F2 Function key
- Swing working floodlight up manually

F3 Function key
- Load following with the two active hoist gears: switch between the hoist gears
  Note: Only present for certain crane types.

LWE/LTR 1100-009/25105-02-02/en

copyright © Liebherr-Werk Ehingen GmbH 2023

F5 Function key
- Automatic floodlight control operation: Select load following

F6 Function key
- Automatic floodlight control operation: Select illuminate work area

F7 Function key
- Swing working floodlight down manually

F8 Function key
- Select working floodlight manual control operation

F10 Function key
- Turn the floodlight on / off

9.6.3 Control floodlight*

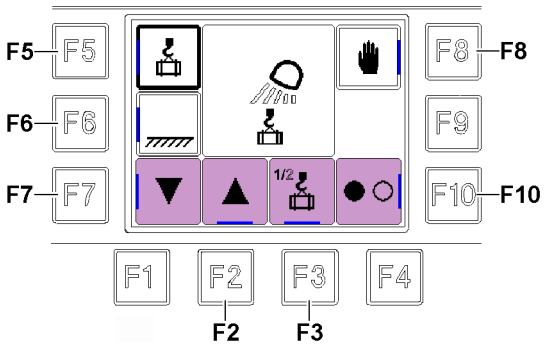

*Fig.121446: Function Control Working floodlight**

– **Turn the floodlight on / off:**
  - Press the function key **F10**.
    - **Result**: The working floodlight is turned on / off.

– **Automatic floodlight control operation: Select load following:**
  - Press the function key **F5**.
    - **Result**: The working floodlight is automatically controlled according to the movement of the load.
    - Readjust upward by pressing the function key **F2**.
    - Readjust downward by pressing the function key **F7**.

– **Automatic floodlight control operation: Select illuminate work area:**
  - Press the function key **F6**.
    - **Result**: The working floodlight is automatically controlled according to the location of the work area.
    - Readjust forward by pressing the function key **F2**.
    - Readjust backward by pressing the function key **F7**.

– **Manual floodlight control operation:**
  - Swing the floodlight up / forward: Press the function key **F2**.
    - **Result**: The working floodlight is controlled according to the actuation of the key.
  - Swing the floodlight down / backward: Press the function key **F7**.
    - **Result**: The working floodlight is controlled according to the actuation of the key.

LWE/LTR 1100-009/25105-02-02/en

copyright © Liebherr-Werk Ehingen GmbH 2023

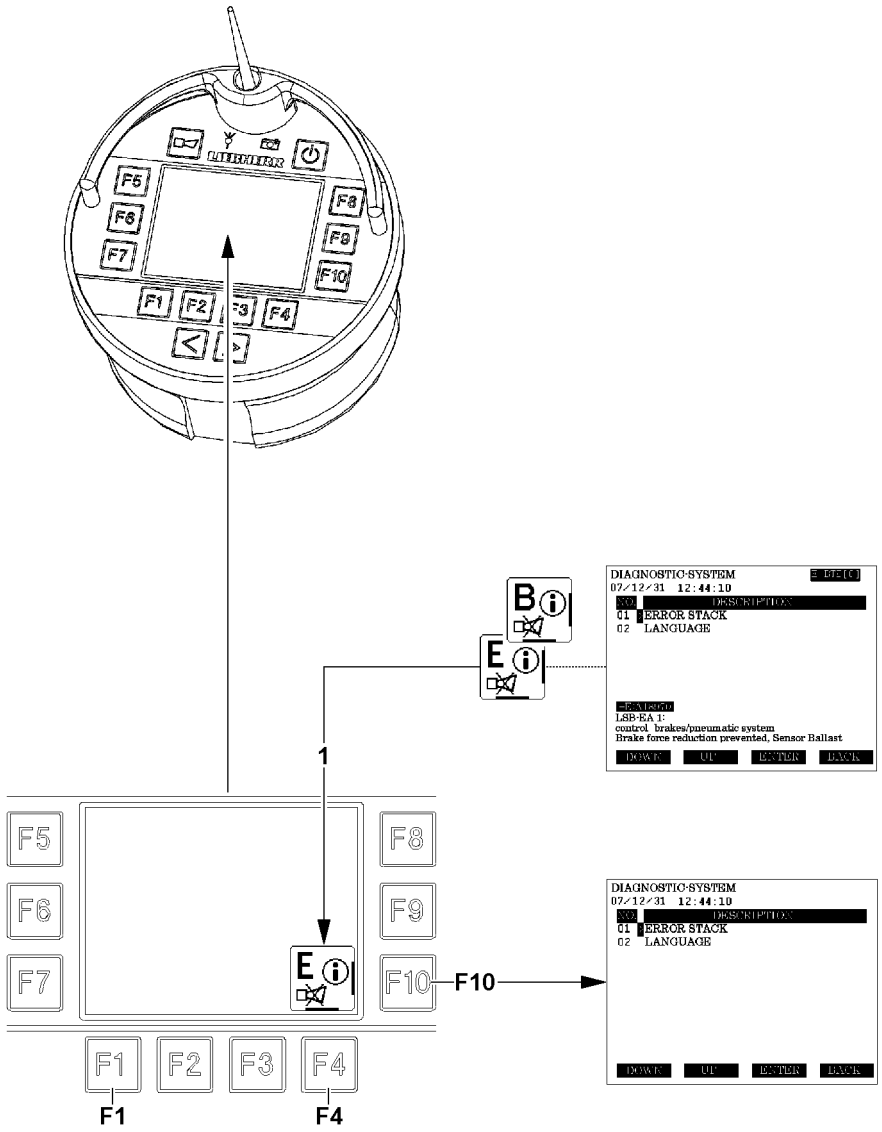

Fig.117975

LWE/LTR 1100-009/25105-02-02/en

copyright © Liebherr-Werk Ehingen GmbH 2023

10 Menu Test system

If an error message is issued for the LICCON control:
– a „B“ or „E“ is shown in the information field **1**, see illustration
– An acoustic warning signal is issued on the BTT

10.1 Function keys in the „Test system“ menu

F1 Function key
- Return to selection overview

F4 Function key
- When a note for an error message appears and a horn is shown in the information field **1**:
  Press 1x: acoustic warning signal of the BTT, which can be shut off, is shut off in the case of operating / system errors.
  Press 2x: Call up the test system

F10 Function key
- Call up the test system

10.2 Operating the test system

– **Turn the acoustic warning signal off:**
  - Press the function key **F4**.
    - **Result**: Acoustic warning signal of the BTT, which can be shut off in case of operating / system errors is shut off.

– **Call up the test system:**
  - Press the function key **F4** again.
    or
  - Press the function key **F10**.
    - **Result**: Start page of test system is called up.

– **Close the test system:**
  - Press the function key **F1**.

Note
► For a detailed description of the test system, see the Diagnostics Manual.

LWE/LTR 1100-009/25105-02-02/en

copyright © Liebherr-Werk Ehingen GmbH 2023

1

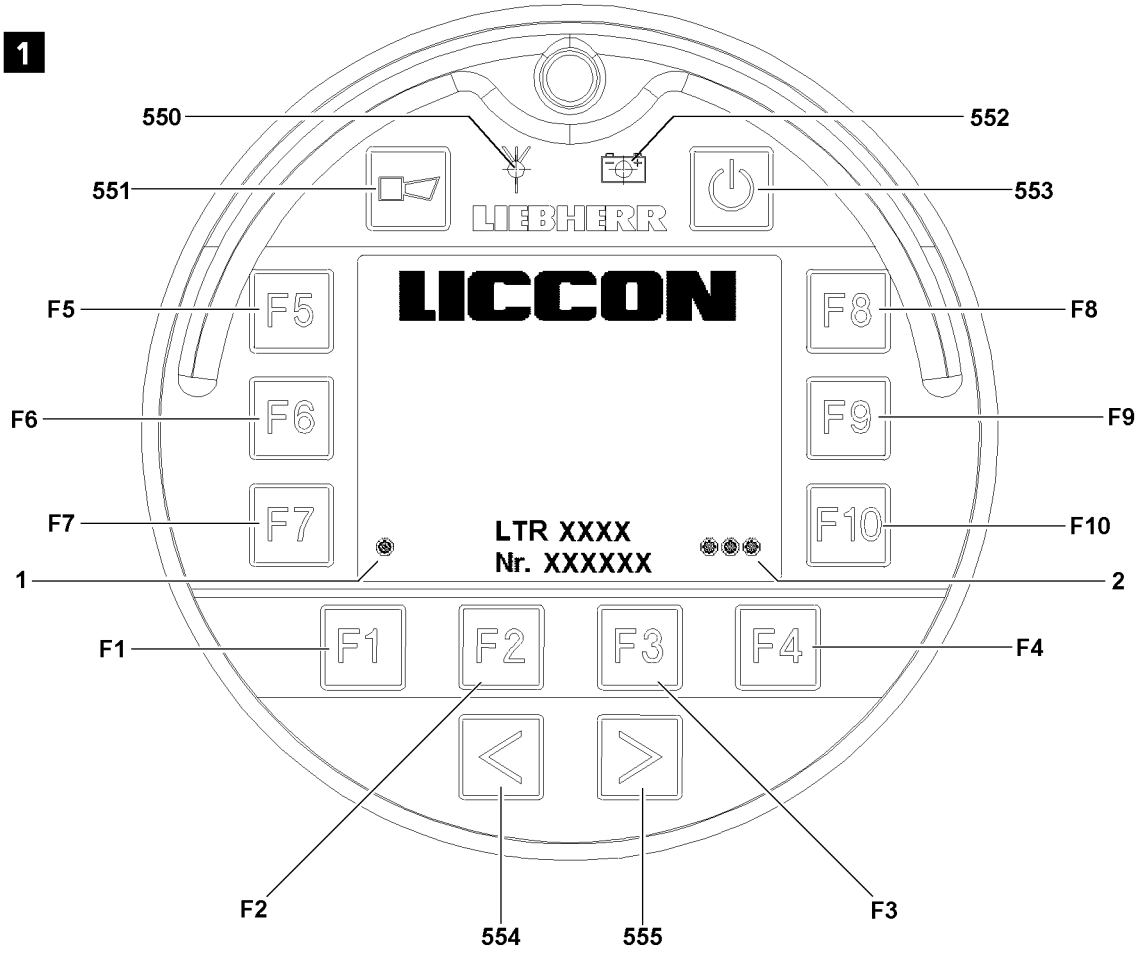

2

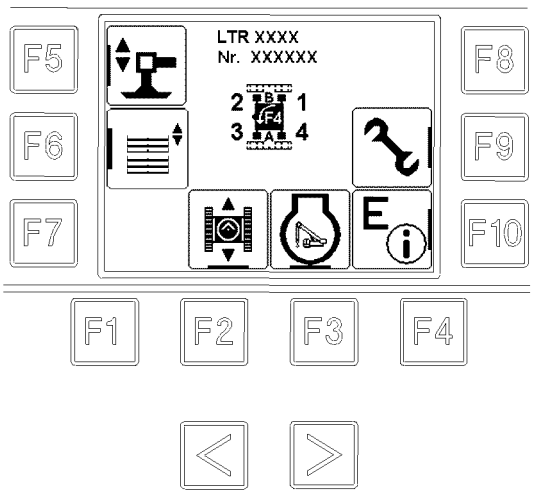

Fig.118381

LWE/LTR 1100-009/25105-02-02/en

copyright © Liebherr-Werk Ehingen GmbH 2023

11 BTT operation

There are two ways to turn the BTT:
- Turning the BTT on using the ignition switch
- Turning the BTT on using the ON / OFF button

11.1 Turning the BTT on using the ignition switch

Make sure that the following prerequisite is met:
- The BTT is in the charging cradle.

► Turn the ignition for the crane engine on: Actuate the ignition switch, see Crane operating instructions, chapter 4.01.

Result:

- The BTT turns itself on.
- After completion of the starting procedure, the indicator light **550** and indicator light **552** light up green, see illustration **1**.
- The starting screen is shown before the display for „Menu overview“ changes, see illustration **2**.

11.2 Turning the BTT on using the ON / OFF button

Make sure that the following prerequisite is met:
- The BTT is pulled off the charging cradle

► Turn the ignition for the crane engine on: Actuate the ignition switch, see Crane operating instructions, chapter 4.01.
► Turn the BTT on: Press the button **553** (ON / OFF button).

Result:

- The BTT turns itself on.
- The indicator light **550** and indicator light **552** light up in orange.
- The start screen is displayed, see illustration **1**.

► Enter the code: Press button **554**, then button **555** and then function key **F1**.

Result:

- The indicator light **550** and indicator light **552** light up in green.
- The indicator light **1** and indicator light **2** turn on green.
- The connection between the BTT and the receiver is established.

► Press any function key.

Result:

- The BTT displays the „Menu overview“, see illustration **2**.

► Select the menu with the appropriate function key, see the relevant technical chapter.

LWE/LTR 1100-009/25105-02-02/en

copyright © Liebherr-Werk Ehingen GmbH 2023

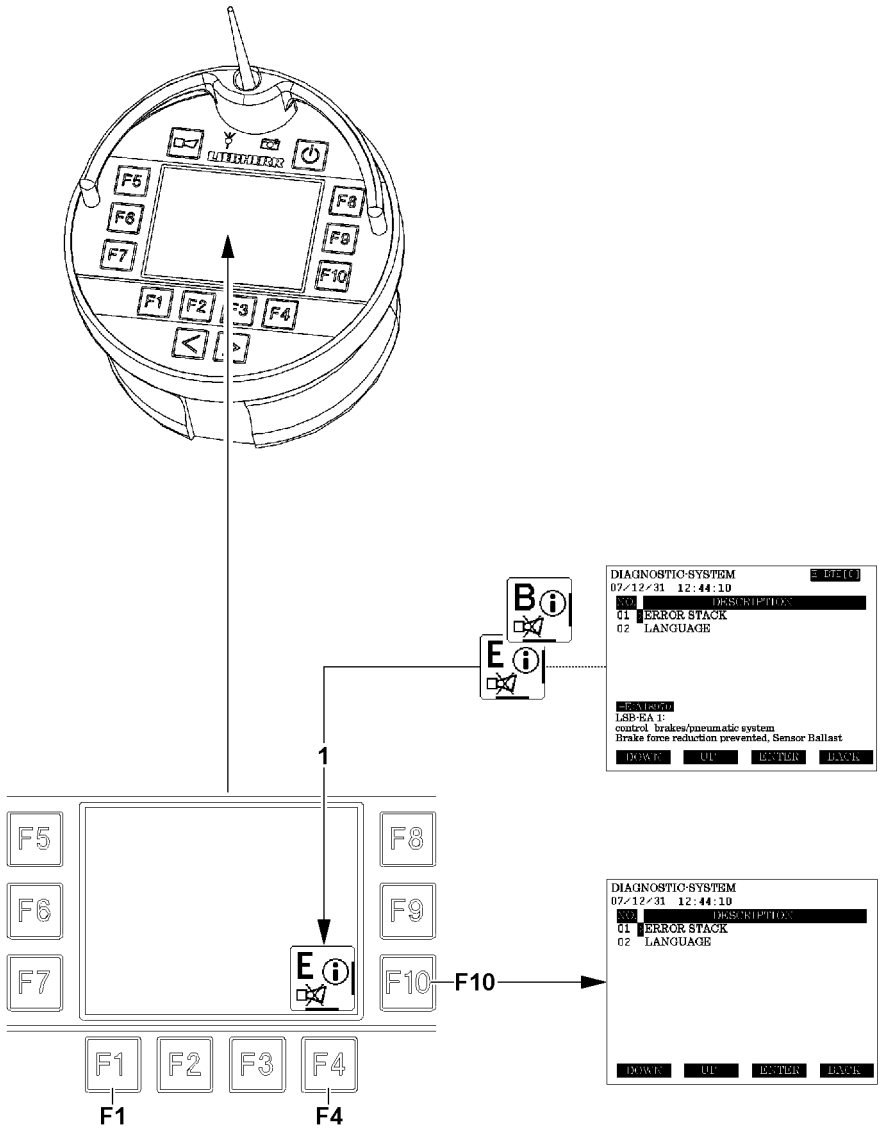

Fig.117975

LWE/LTR 1100-009/25105-02-02/en

copyright © Liebherr-Werk Ehingen GmbH 2023

12 Measures in case of problems

12.1 Did an error message appear?

If an event occurs that leads to the display of an error message, a „B“ or „E“ is shown in the icon **1**, see illustration.

WARNING
Danger of accident!
If the displayed errors in the icon **1** are ignored, there is a danger of accident!
► Take the crane out of operation and remedy the cause of the error!
► Do not put the crane back into operation before the cause of the error has been remedied!

► Press the function key **F4**.

Result:

– Acoustic warning signal of the BTT, which can be shut off in case of operating / system errors is shut off.

► Press the function key **F10**.

Result:

– The „Test system“ program (error determination screen) is called up.

Note
► To be able to find the cause of the problem, the error or errors must be read on the error determination screen / error stack of the BTT **500**, see the Diagnostics manual.

Close the „Test system“ program (error determination screen):

► Press the function key **F1**.

Result:

– The „Test system“ program (error determination screen) is closed.

LWE/LTR 1100-009/25105-02-02/en

copyright © Liebherr-Werk Ehingen GmbH 2023

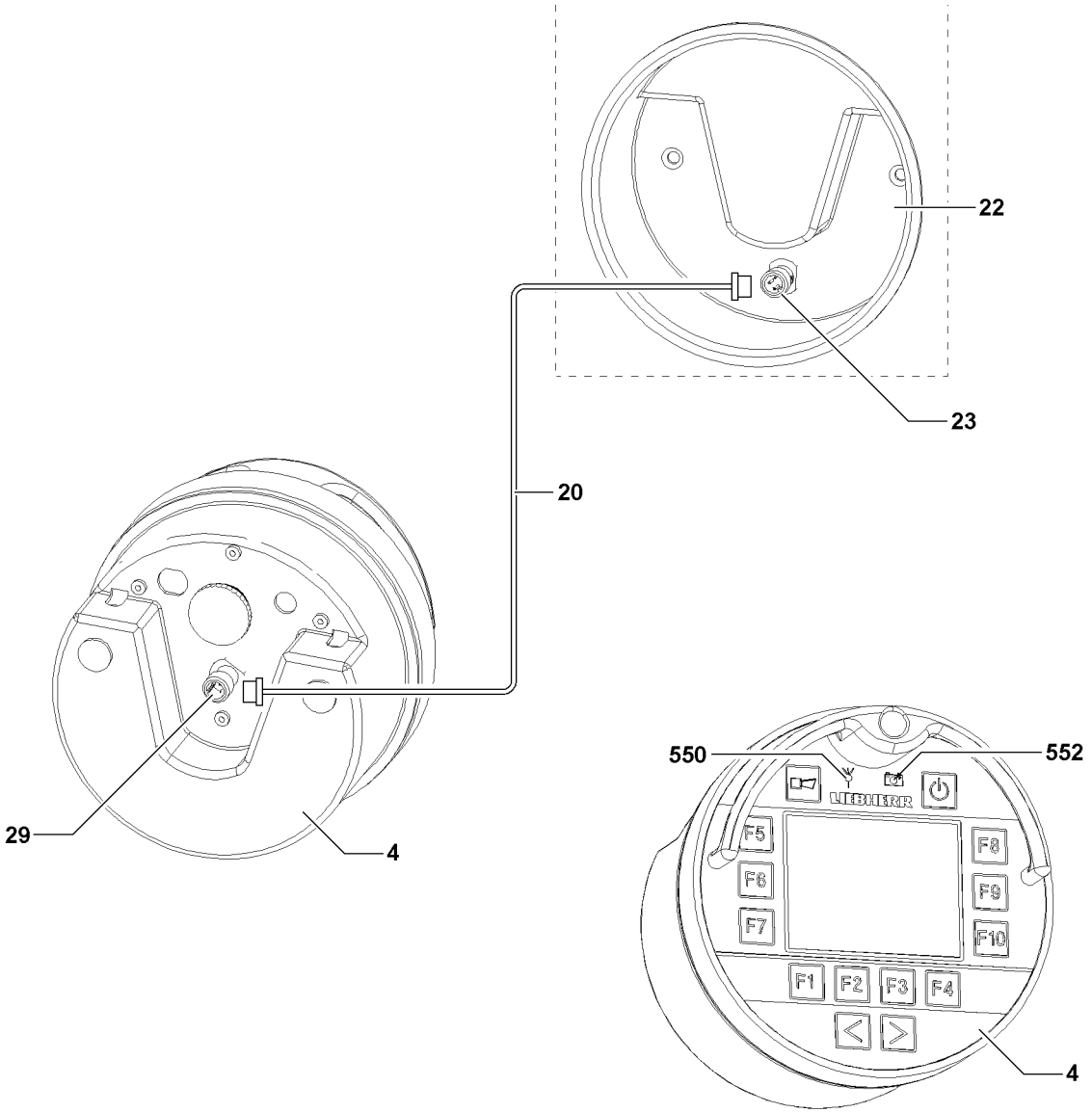

Fig.112952

12.2 Do the displays remain dark?

Note

► The charge condition indicator light **552** shows the charge condition.
► Indicator light Transmission signal **550** shows the quality of the radio contact connection.

When the indicator light charge condition **552** does not light up or lights up red:
► Plug the BTT **4** into the charging module **22**.

When the LED **552** does not light up even though the BTT **4** is in the charging module **22** or the BTT **4** can not be turned on:
► Contact Liebherr Service to determine the cause of the problem and further procedure.

12.3 Is the radio connection faulty?

If the radio contact connection to the BTT **4** is faulty or interrupted (Indicator light Transmission signal **550** lights up red), then it can be bypassed with line **20**.

LWE/LTR 1100-009/25105-02-02/en

copyright © Liebherr-Werk Ehingen GmbH 2023

The radio connection to the BTT **4** can become faulty or interrupted through the following occurrences:
- By interference signals from a nearby radio tower.
- The radio module on the BTT **4** or on the BTB is defective.
- The rechargeable battery in the BTT **4** is discharged.
- Due to bad selection of the placement location by the operator.

12.3.1 Bypassing the radio connection

Make sure that the following prerequisites are met:
- The line **20** to bypass the radio communication has been removed from the control cabinet of the crane cab.
- The BTT **4** has been removed from the charging module **22** and is turned on.
- The caps on the plug connection **23** and the plug connection **29** have been removed.

► Screw the line **20** on the charging module **22** onto the plug connection **23**.
► Screw the line **20** on the BTT **4** onto the plug connection **29**.

Result:

– The radio communication is bypassed.

Note
If the BTT **4** does not turn on, even though the line **20** is connected with the charging module **22**, then the rechargeable battery may be defective!
► Contact Liebherr Service to determine the cause of the problem and further procedure.

LWE/LTR 1100-009/25105-02-02/en

copyright © Liebherr-Werk Ehingen GmbH 2023

Empty page!

LWE/LTR 1100-009/25105-02-02/en

copyright © Liebherr-Werk Ehingen GmbH 2023

5.70 Camera

1	Safety instructions	2
2	Bringing the camera to assembly height	2
3	Bringing the cable drum to the assembly height	3
4	Assembling the camera on the telescopic boom	3
5	Assembling the cable drum on the telescopic boom	5
6	Assembling the cable drum on the auxiliary boom	6
7	Assembling the cable drum on the fixed jib	6
8	Assembling the cable drum on the luffing lattice jib	6
9	Assembling the camera on the auxiliary boom	6
10	Assembling the camera on the fixed jib	10
11	Assembling the camera on the luffing lattice jib	14
12	Establishing the electrical connections	18
13	Checking the electrical connections	29
14	Disconnecting the electrical connections	30
15	Disassembling the camera	30
16	Disassembling the cable drum	31
17	Transporting the camera	32
18	Folding the camera on the winch	32

LWE/LTR 1100-009/25105-02-02/en

copyright © Liebherr-Werk Ehingen GmbH 2023

1 Safety instructions

WARNING
Boom / equipment fastened with attachment parts!
The boom / equipment can tip over.
Death, severe bodily injuries, property damage.
► Before the boom / equipment is fastened: Make sure that all attachment parts have been removed.

NOTICE
Boom / equipment is installed / removed with attachment parts!
The attachment parts can be damaged.
► **After** the hook block or the load hook is installed: Install the attachment parts.
► **Before** the hook block or the load hook is removed: Remove the attachment parts.

WARNING
Attachment parts in the field of vision of the crane driver!
Death, severe bodily injury, property damage.
► Before the crane is driven: Make sure that all attachment parts have been removed or are in the park position.

Attachment parts are for example:
– Camera
– Cable drum
– Flashing beacon
– Wind speed sensor
– Hoist limit switch weight with chain

WARNING
Assembly personnel **not** secured with suitable aids to prevent them from falling!
Assembly personnel can fall, death, severe bodily injuries.
► Cary out all overhead work, where there is a danger of falling with suitable aids.

When fall protection equipment is available:
► Use the fall protection equipment.

When there are railings on the crane components:
► Move the railings to the assembly / disassembly position and secure.

If aids are **not** available and work **cannot** be carried out on the ground:
► Secure assembly personnel with the supplied fall arrest system to prevent falling.
► Attach the supplied fall arrest system on the fastening and hook points as well as on the safety ropes.
► Only step on the aids, ladders and catwalks with clean shoes.
► Keep aids, ladders and catwalks free of heavy dirt, snow, frost and ice.

The illustrations in this chapter are an example. The installation of the camera is described as an example. The attached retainers are located at times in other positions than as shown.

Carry out the assembly of the camera depending on the crane structure.

2 Bringing the camera to assembly height

If a second person is not present during assembly and a ladder is used, then the camera must be brought to the assembly height as described:

► Fasten the auxiliary rope to the camera.
► Climb onto the ladder and at the same time carry along the auxiliary rope relieved.
► Until the camera is at the assembly height: Pull the auxiliary rope up.

LWE/LTR 1100-009/25105-02-02/en

copyright © Liebherr-Werk Ehingen GmbH 2023

3 Bringing the cable drum to the assembly height

If a second person is not present during assembly and a ladder is used, then the cable drum must be brought to the assembly height as described:

- ► Fasten the auxiliary rope to the cable drum.
- ► Climb onto the ladder and at the same time carry along the auxiliary rope relieved.
- ► Until the cable drum is at the assembly height: Pull the auxiliary rope up.

4 Assembling the camera on the telescopic boom

Make sure that the following prerequisites are met:
- The telescopic boom is luffed down to the 0° position.
- The telescopic boom is telescoped in all the way.

If possible, to reduce the working height:
- ► Luff the telescopic boom down all the way.

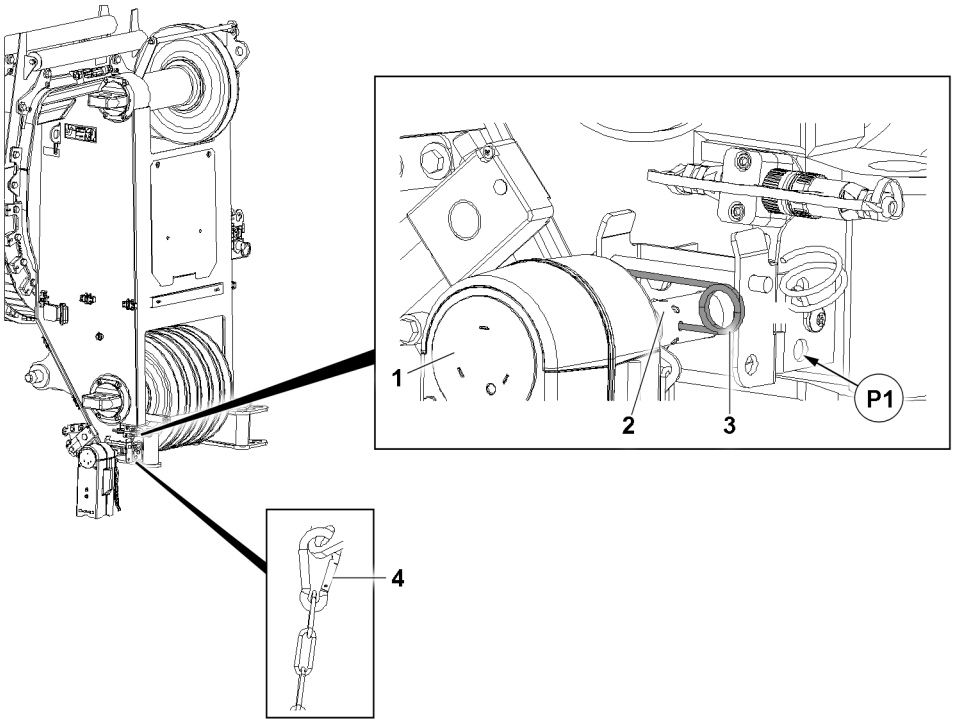

Fig.128377: Camera installed on the telescopic boom

- ► Insert the camera **1** in the retainer **2**.
- ► Secure the camera **1**: Install the retainer **3**.
- ► Attach the camera retaining chain **4** in position **P1**.

LWE/LTR 1100-009/25105-02-02/en

copyright © Liebherr-Werk Ehingen GmbH 2023

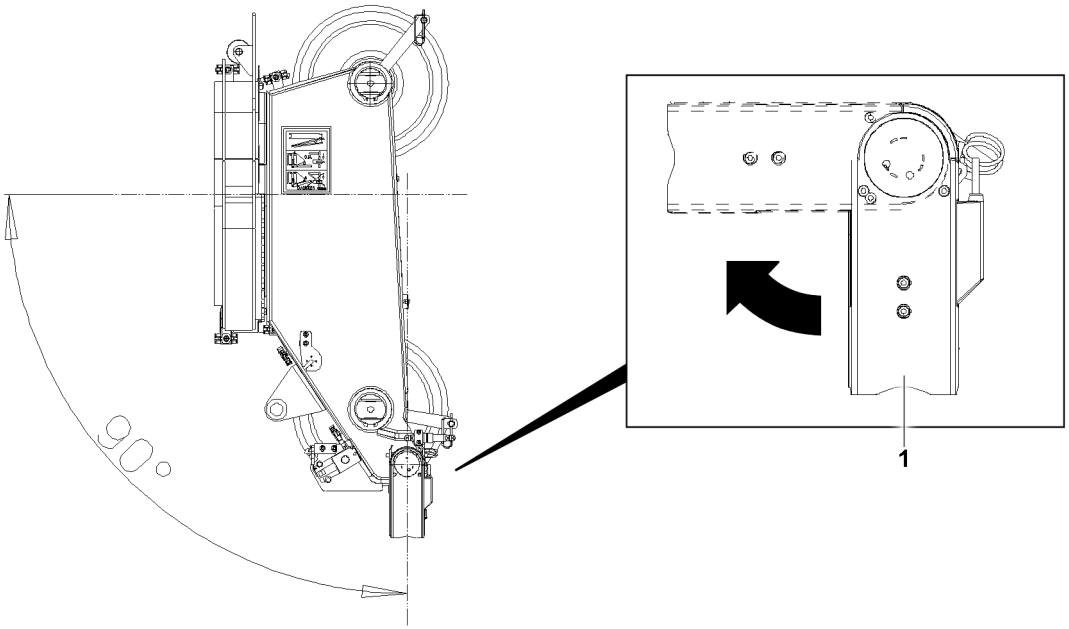

Fig.128406: Telescopic boom camera slewing range

The camera changes its angle automatically so that it is aligned vertically, gravity related. The swing angle is limited by design.

To ensure that the camera can align with the hook depending on the boom position, a certain swing angle must be possible.

► Make sure that the camera **1** has a swing angle of **90°** with respect to the vertical position to the boom.

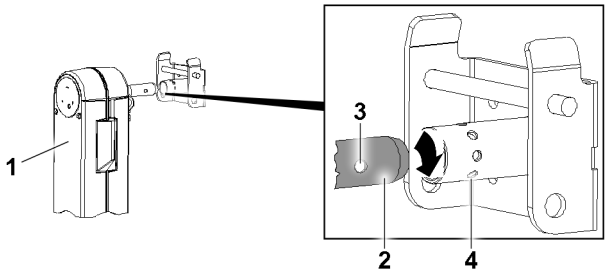

Fig.128404: Assemble the camera turned.

If the **90°** swing angle is not reached:
► Disassemble the camera **1**.
► Until the bore **3** and bore **4** are concentrically aligned: Turn the pin **2** in direction of the arrow.

Result:
– The bore **3** and bore **4** are concentrically aligned.

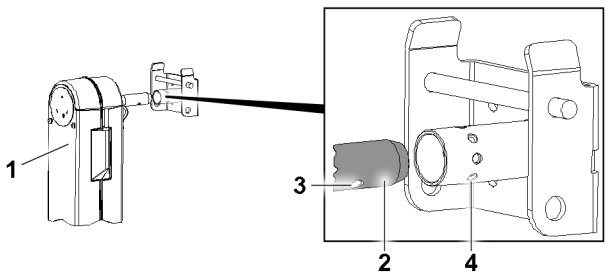

Fig.128399: The bores are concentric.

LWE/LTR 1100-009/25105-02-02/en

copyright © Liebherr-Werk Ehingen GmbH 2023

► Install the camera **1** as described in this section.
► Make sure that the camera **1** has a swing angle of **90°** with respect to the vertical position to the boom.

5 Assembling the cable drum on the telescopic boom

When all of the following requirements are fulfilled, the cable drum must be installed on the telescopic boom:
– The camera is installed on the auxiliary boom.

Make sure that the following prerequisite is met:
– The telescopic boom is telescoped in all the way.

If possible, to reduce the working height:
► Luff the telescopic boom down all the way.

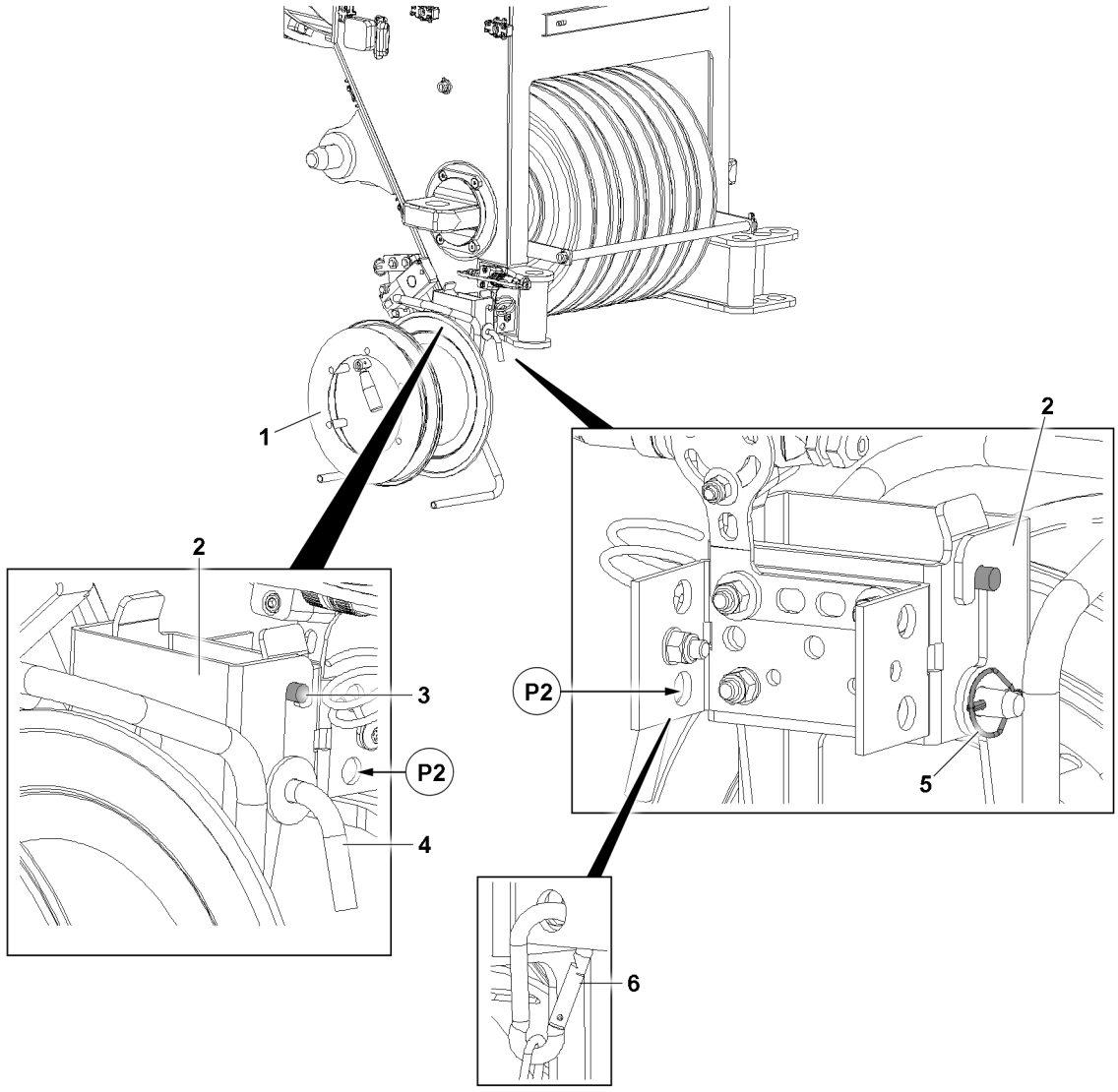

Fig.128379: Cable drum on the telescopic boom

► Attach the cable drum **1** with the retainer **2** on the pin **3**.
► Secure the cable drum **1**: Insert the pin **4**.
► Secure the pin **4**:Install the retainer **5**.
► Attach the retaining chain **6** of the cable drum **1** in position **P2**.

LWE/LTR 1100-009/25105-02-02/en

copyright © Liebherr-Werk Ehingen GmbH 2023

6 Assembling the cable drum on the auxiliary boom

When all of the following requirements are fulfilled, the cable drum must be assembled on the auxiliary boom:
- The camera is installed on the auxiliary boom.
- The fixed routed cable for the camera is installed in the luffing range of the auxiliary boom.

Make sure that the following prerequisite is met:
- The telescopic boom is telescoped in all the way.

If possible, to reduce the working height:
► Luff the auxiliary boom down as far as possible.

The cable drum is installed on the auxiliary boom using the same procedure used to install it on the telescopic boom.

► Install the cable drum. See section „Assembling the cable drum on the telescopic boom“.

7 Assembling the cable drum on the fixed jib

When all of the following requirements are fulfilled, the cable drum must be assembled on the auxiliary boom:
- The camera is installed on the auxiliary boom.
- The fixed routed cable for the camera is installed in the luffing range of the auxiliary boom.

Make sure that the following prerequisite is met:
- The telescopic boom is telescoped in all the way.

If possible, to reduce the working height:
► Luff the auxiliary boom down as far as possible.

The cable drum is installed on the auxiliary boom using the same procedure used to install it on the telescopic boom.

► Install the cable drum. See section „Assembling the cable drum on the telescopic boom“.

8 Assembling the cable drum on the luffing lattice jib

When all of the following requirements are fulfilled, the cable drum must be assembled on the auxiliary boom:
- The camera is installed on the auxiliary boom.
- The fixed routed cable for the camera is installed in the luffing range of the auxiliary boom.

Make sure that the following prerequisite is met:
- In the case of assembly by closing the lattice jib: The N-pivot section and N-head are still open on the ground.
- For flying assembly: The telescopic boom is in the 0° position.
- The telescopic boom is telescoped in all the way.

The cable drum is installed on the auxiliary boom using the same procedure used to install it on the telescopic boom.

► Install the cable drum. See section „Assembling the cable drum on the telescopic boom“.

9 Assembling the camera on the auxiliary boom

Depending on the available equipment, the camera can be installed in different positions.

LWE/LTR 1100-009/25105-02-02/en

copyright © Liebherr-Werk Ehingen GmbH 2023

Possible positions on the auxiliary boom are shown below as an example.

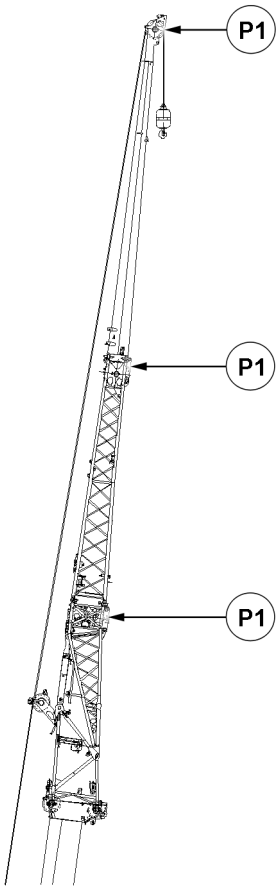

Fig.159546: Camera installation positions

1 Illustration: folding jib **P1** Camera installation position

Make sure that the following prerequisites are met:
- The telescopic boom is luffed down to the 0° position **or** if possible, the telescopic boom is luffed down completely.
- Luff the auxiliary boom down as far as possible.
- The telescopic boom is telescoped in all the way.

LWE/LTR 1100-009/25105-02-02/en

copyright © Liebherr-Werk Ehingen GmbH 2023

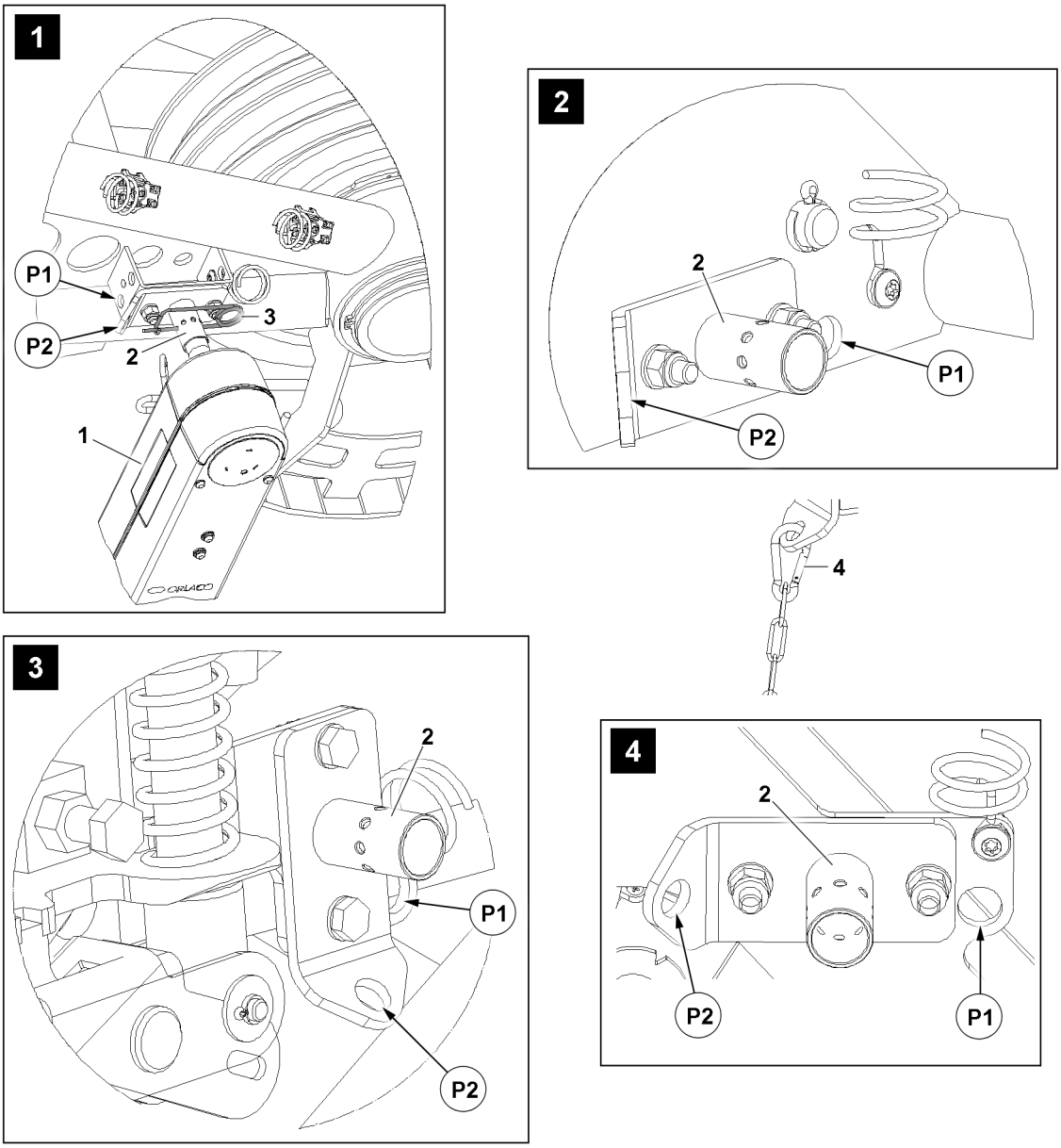

Fig.128375: Retainer variations

Illustration **1** to illustration **4** show different variants of the retainer **2**. The procedure for installing the camera **1** is the same for all variants.

- ► Insert the camera **1** in the retainer **2**.
- ► Secure the camera **1**: Install the retainer **3**.
- ► Attach the camera retaining chain **4** in position **P1**.

The longer cable of the cable drum must be secured by the pull relief installed on the cable.

- ► Fit the pull relief cable in position **P2**.

LWE/LTR 1100-009/25105-02-02/en

copyright © Liebherr-Werk Ehingen GmbH 2023

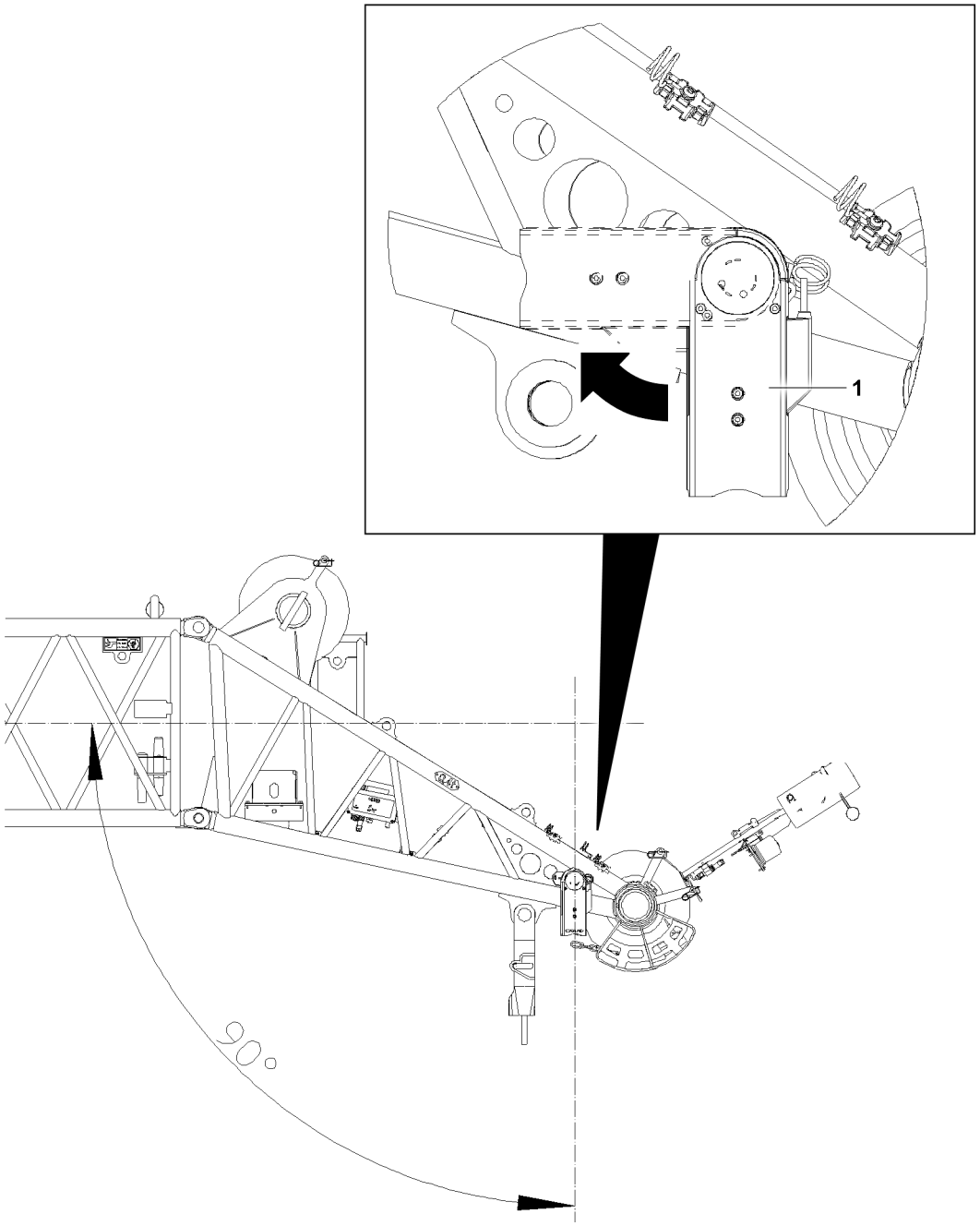

Fig.128376: Auxiliary boom camera slewing range

The camera changes its angle automatically so that it is aligned vertically, gravity related. The swing angle is limited by design.

To ensure that the camera can align with the hook depending on the boom position, a certain swing angle must be possible.

► Make sure that the camera **1** has a swing angle of **90°** with respect to the vertical position to the boom.

LWE/LTR 1100-009/25105-02-02/en

copyright © Liebherr-Werk Ehingen GmbH 2023

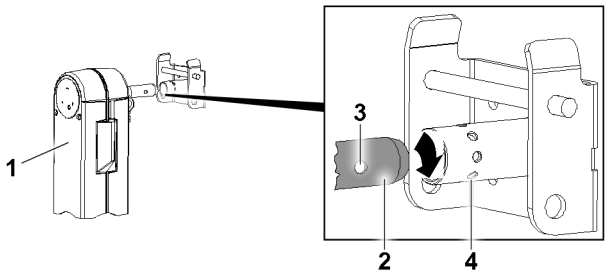

Fig.128404: Assemble the camera turned.

If the **90°** swing angle is not reached:
► Disassemble the camera **1**.
► Until the bore **3** and bore **4** are concentrically aligned: Turn the pin **2** in direction of the arrow.

Result:
– The bore **3** and bore **4** are concentrically aligned.

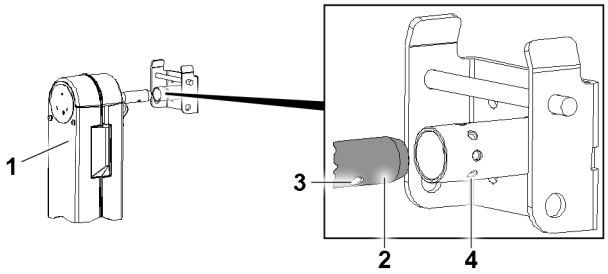

Fig.128399: The bores are concentric.

► Install the camera **1** as described in this section.
► Make sure that the camera **1** has a swing angle of **90°** with respect to the vertical position to the boom.

10 Assembling the camera on the fixed jib

Depending on the available equipment, the camera can be installed in different positions.

A possible position on the fixed jib is shown below as an example.

LWE/LTR 1100-009/25105-02-02/en

copyright © Liebherr-Werk Ehingen GmbH 2023

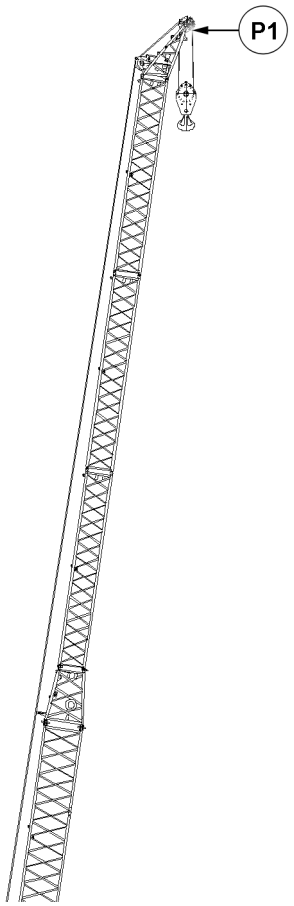

Fig.159544: Camera installation positions

P1 Camera installation position

Make sure that the following prerequisites are met:
- The telescopic boom is luffed down to the 0° position **or** if possible, the telescopic boom is luffed down completely.
- Luff the auxiliary boom down as far as possible.
- The cable drum(s) for the camera is / are assembled.
- The electrical connections are established to the camera position.
- The head of the fixed jib is **no** longer in the roller cart.
- The telescopic boom is telescoped in all the way.

LWE/LTR 1100-009/25105-02-02/en

copyright © Liebherr-Werk Ehingen GmbH 2023

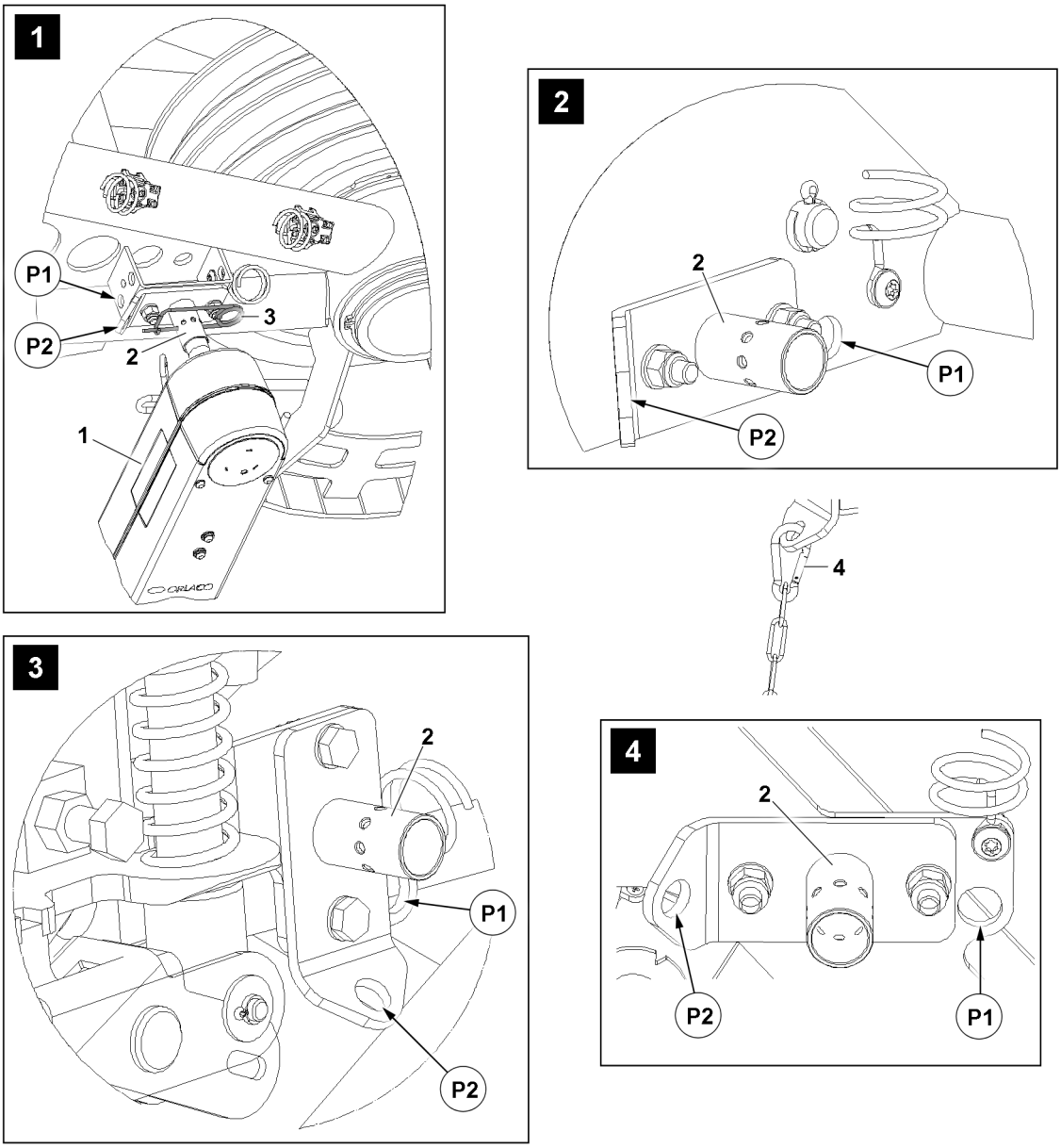

Fig.128375: Retainer variations

Illustration **1** to illustration **4** show different variants of the retainer **2**. The procedure for installing the camera **1** is the same for all variants.

- ► Insert the camera **1** in the retainer **2**.
- ► Secure the camera **1**: Install the retainer **3**.
- ► Attach the camera retaining chain **4** in position **P1**.

The longer cable of the cable drum must be secured by the pull relief installed on the cable.

- ► Fit the pull relief cable in position **P2**.

LWE/LTR 1100-009/25105-02-02/en

copyright © Liebherr-Werk Ehingen GmbH 2023

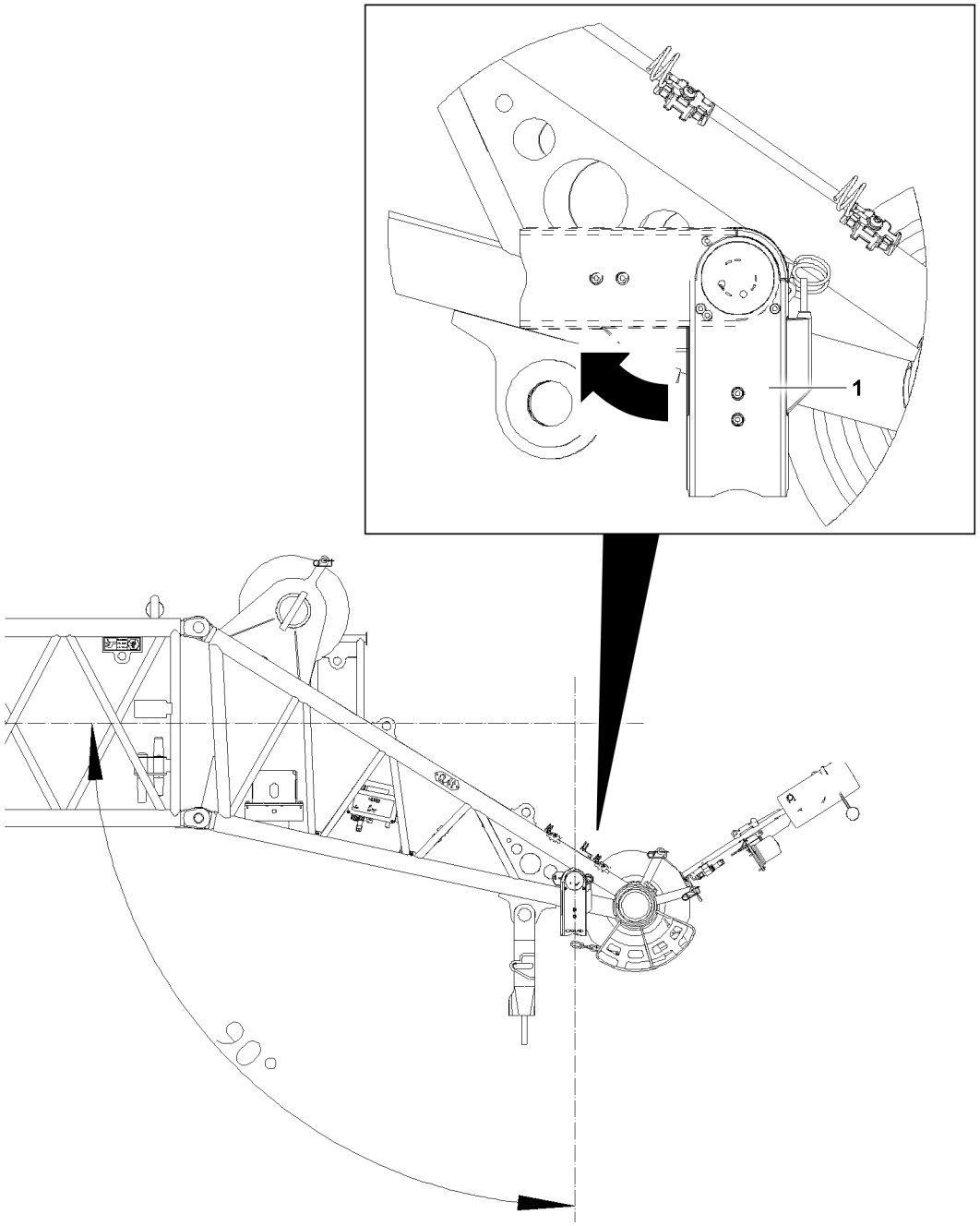

Fig.128376: Auxiliary boom camera slewing range

The camera changes its angle automatically so that it is aligned vertically, gravity related. The swing angle is limited by design.

To ensure that the camera can align with the hook depending on the boom position, a certain swing angle must be possible.

► Make sure that the camera **1** has a swing angle of **90°** with respect to the vertical position to the boom.

LWE/LTR 1100-009/25105-02-02/en

copyright © Liebherr-Werk Ehingen GmbH 2023

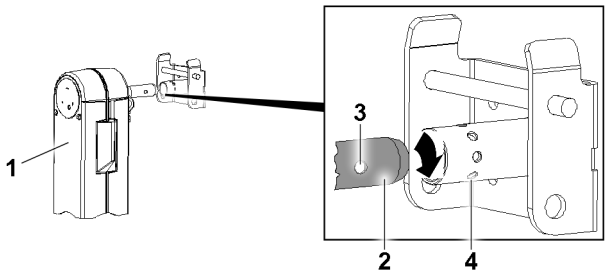

Fig.128404: Assemble the camera turned.

If the **90°** swing angle is not reached:
► Disassemble the camera **1**.
► Until the bore **3** and bore **4** are concentrically aligned: Turn the pin **2** in direction of the arrow.

Result:
– The bore **3** and bore **4** are concentrically aligned.

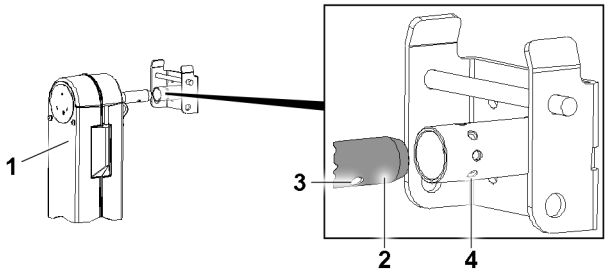

Fig.128399: The bores are concentric.

► Install the camera **1** as described in this section.
► Make sure that the camera **1** has a swing angle of **90°** with respect to the vertical position to the boom.

11 Assembling the camera on the luffing lattice jib

Depending on the available equipment, the camera can be installed in different positions.

A possible position on the luffing lattice jib is shown below as an example.

LWE/LTR 1100-009/25105-02-02/en

copyright © Liebherr-Werk Ehingen GmbH 2023

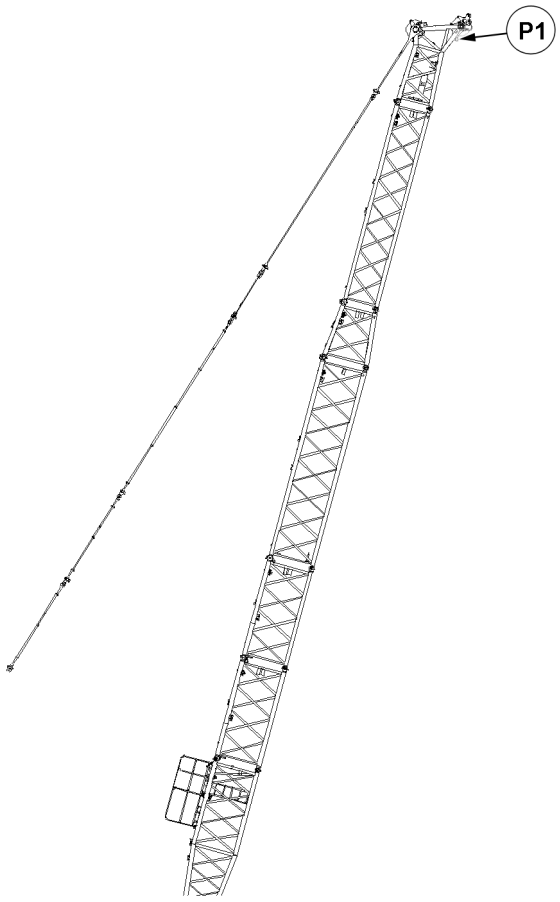

Fig.159545: Camera installation positions

P1 Camera installation position

Make sure that the following prerequisites are met:
- The telescopic boom is luffed down to the 0° position.
- The cable drum(s) is / are assembled.
- The electrical connections are established to the camera position.
- The luffing lattice jib is in the same position in which the hook block was reeved in. See chapter 5.04.

LWE/LTR 1100-009/25105-02-02/en

copyright © Liebherr-Werk Ehingen GmbH 2023

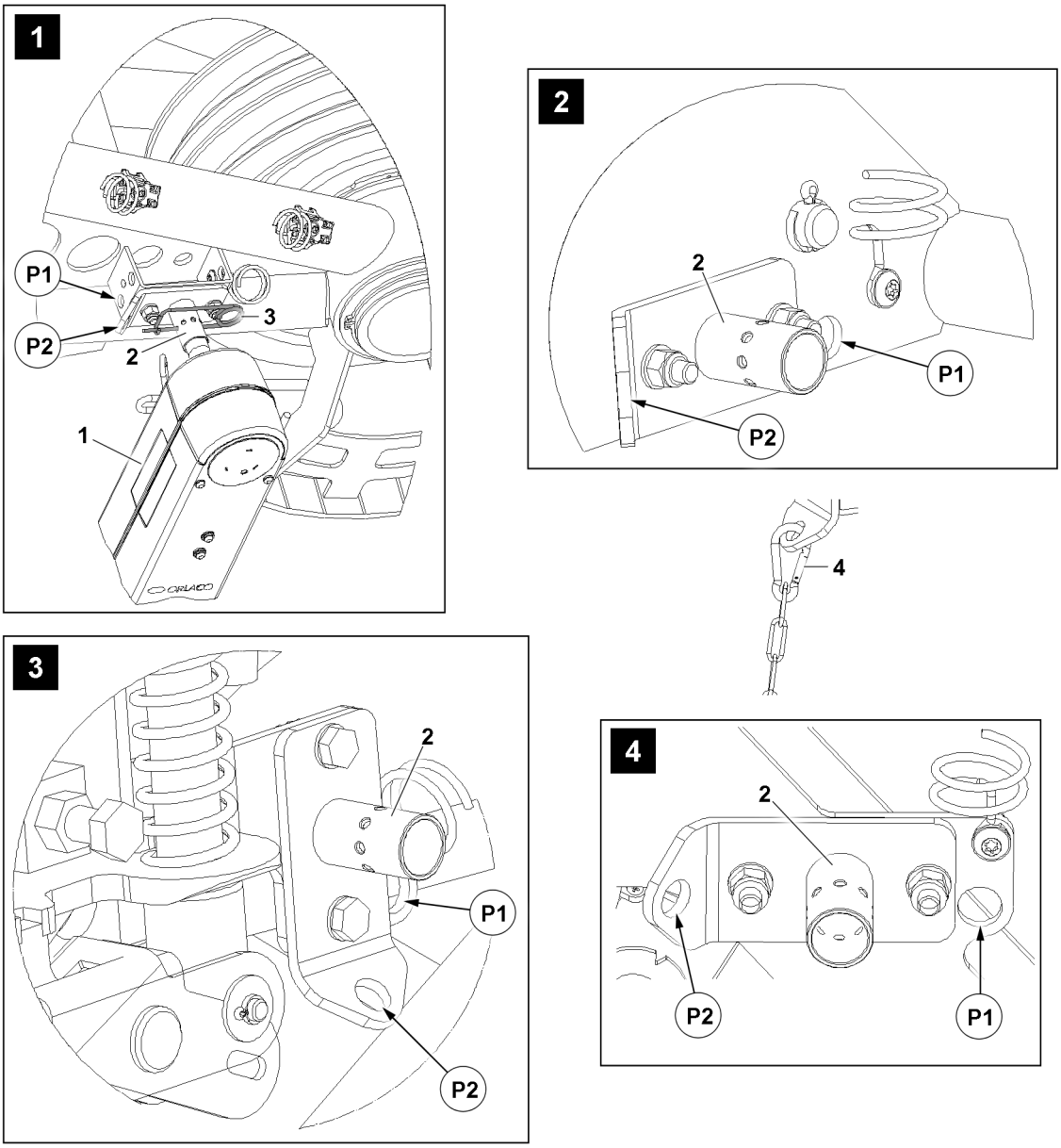

Fig.128375: Retainer variations

Illustration **1** to illustration **4** show different variants of the retainer **2**. The procedure for installing the camera **1** is the same for all variants.

- ► Insert the camera **1** in the retainer **2**.
- ► Secure the camera **1**: Install the retainer **3**.
- ► Attach the camera retaining chain **4** in position **P1**.

The longer cable of the cable drum must be secured by the pull relief installed on the cable.

- ► Fit the pull relief cable in position **P2**.

LWE/LTR 1100-009/25105-02-02/en

copyright © Liebherr-Werk Ehingen GmbH 2023

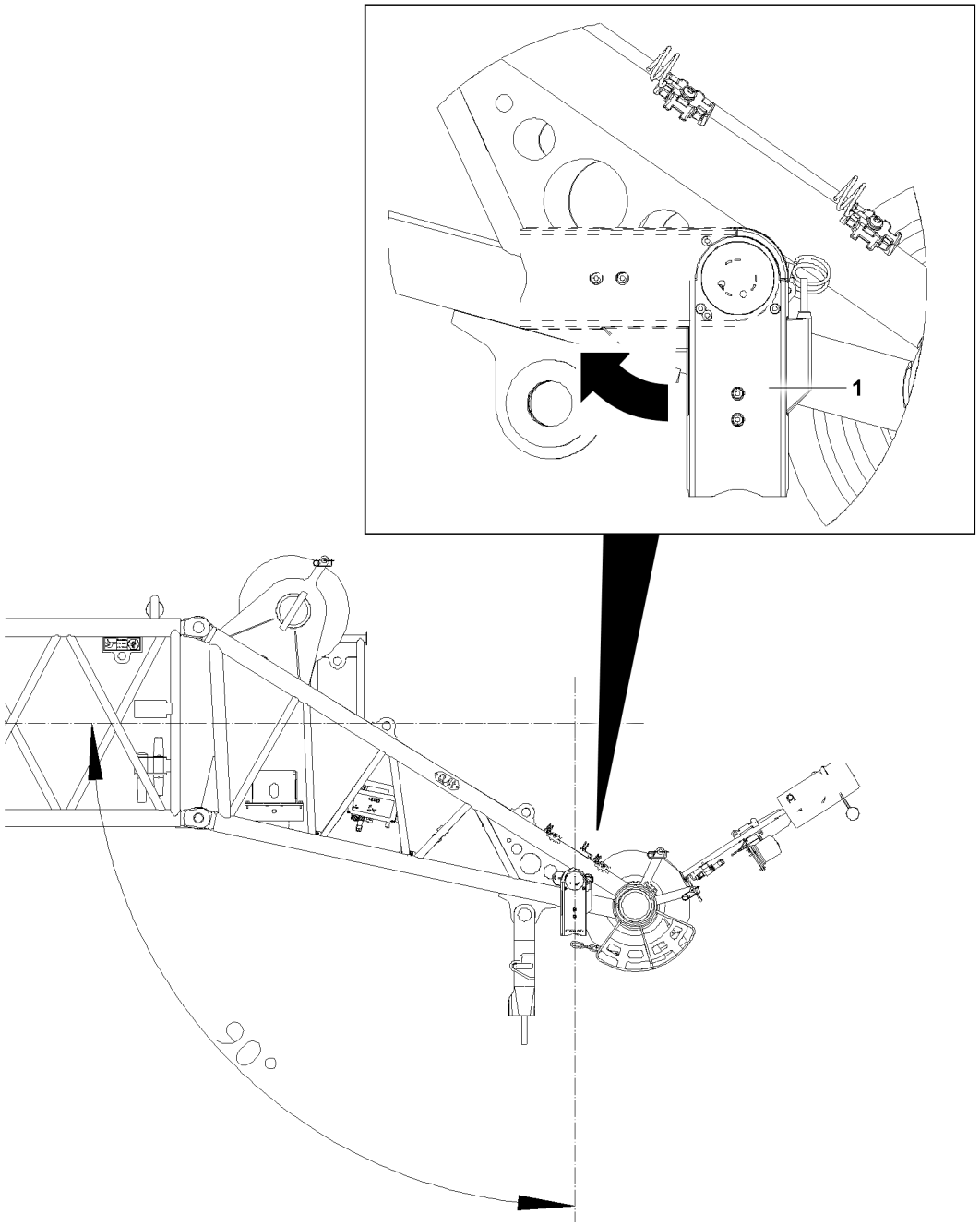

Fig.128376: Auxiliary boom camera slewing range

The camera changes its angle automatically so that it is aligned vertically, gravity related. The swing angle is limited by design.

To ensure that the camera can align with the hook depending on the boom position, a certain swing angle must be possible.

► Make sure that the camera **1** has a swing angle of **90°** with respect to the vertical position to the boom.

LWE/LTR 1100-009/25105-02-02/en

copyright © Liebherr-Werk Ehingen GmbH 2023

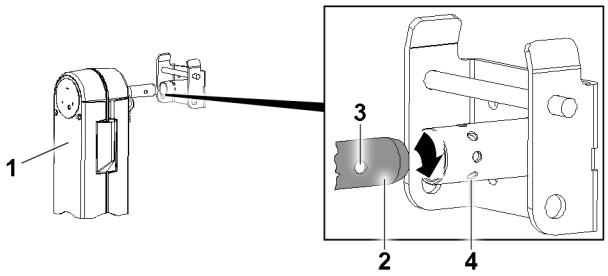

Fig.128404: Assemble the camera turned.

If the **90°** swing angle is not reached:
► Disassemble the camera **1**.
► Until the bore **3** and bore **4** are concentrically aligned: Turn the pin **2** in direction of the arrow.

Result:
– The bore **3** and bore **4** are concentrically aligned.

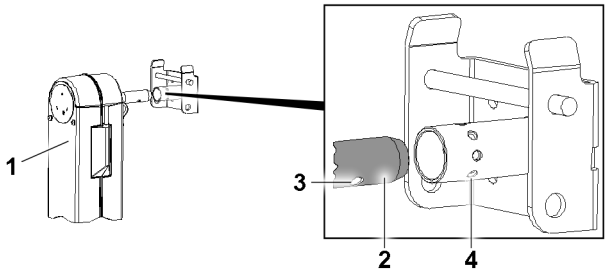

Fig.128399: The bores are concentric.

► Install the camera **1** as described in this section.
► Make sure that the camera **1** has a swing angle of **90°** with respect to the vertical position to the boom.

12 Establishing the electrical connections

The electrical connections are established differently depending on the equipment.

There are the following variants:
– Camera on the telescopic boom
– Camera on the auxiliary boom - one cable drum
– Camera on the auxiliary boom - two cable drums

12.1 Camera on the telescopic boom

Note
► This section is only relevant if the camera is assembled on the telescopic boom.

Make sure that the following prerequisites are met:
– The camera is assembled on the telescopic boom.

LWE/LTR 1100-009/25105-02-02/en

copyright © Liebherr-Werk Ehingen GmbH 2023

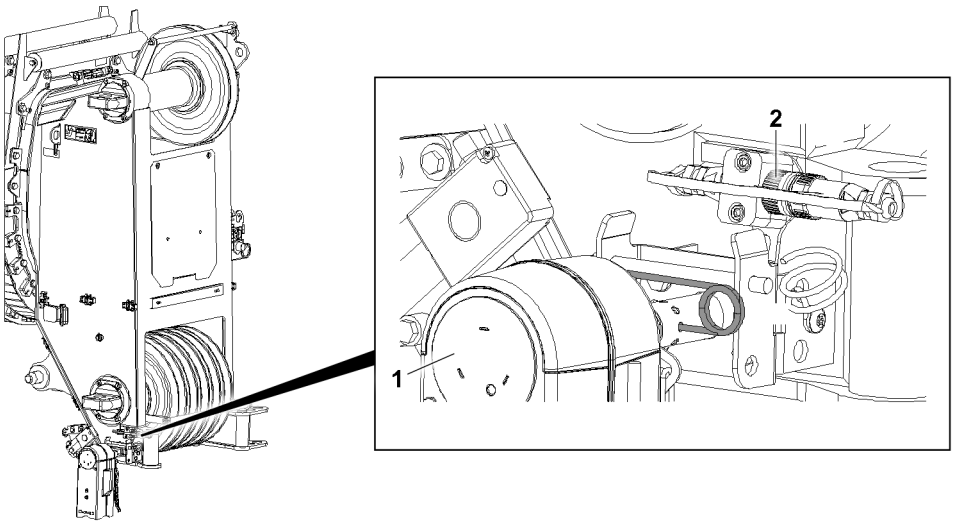

Fig.128383: Establishing the electrical connection on the telescopic boom

- ► Insert the cable from the camera **1** in the socket **2**.
- ► Make sure that the socket **2** is connected with the transmitter to the telescopic boom head.

12.2 Camera on the auxiliary boom - one cable drum

Note

- ► This section is only relevant if the camera is installed on the auxiliary boom **and one** cable drum is used.

Make sure that the following prerequisites are met:

- – The camera is installed on the auxiliary boom.
- – The cable drum is assembled on the telescopic boom.

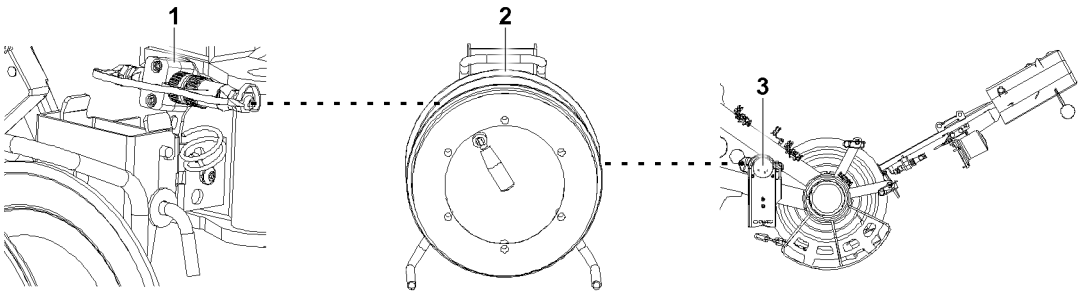

Fig.128380: Establishing the electrical connection to the camera on the auxiliary boom

- ► Connect the longer cable from the cable drum **2** with the camera **3** to the auxiliary boom.
- ► Insert the shorter cable from the cable drum **2** in the socket **1** on the telescopic boom.
- ► Make sure that the socket **1** is connected with the transmitter to the telescopic boom head.

12.3 Camera on the auxiliary boom - two cable drums

Note

- ► This section is only relevant if the camera is installed on the auxiliary boom **and two** cable drums are used.

LWE/LTR 1100-009/25105-02-02/en

copyright © Liebherr-Werk Ehingen GmbH 2023

Make sure that the following prerequisites are met:
- The camera is installed on the auxiliary boom.
- The cable drum is assembled on the telescopic boom.
- The cable drum is installed on the auxiliary boom head.

The establishment of the electrical connection is explained below using an example of a configuration with a TF adapter. All equipment with fixed routed cable is connected using the same procedure.

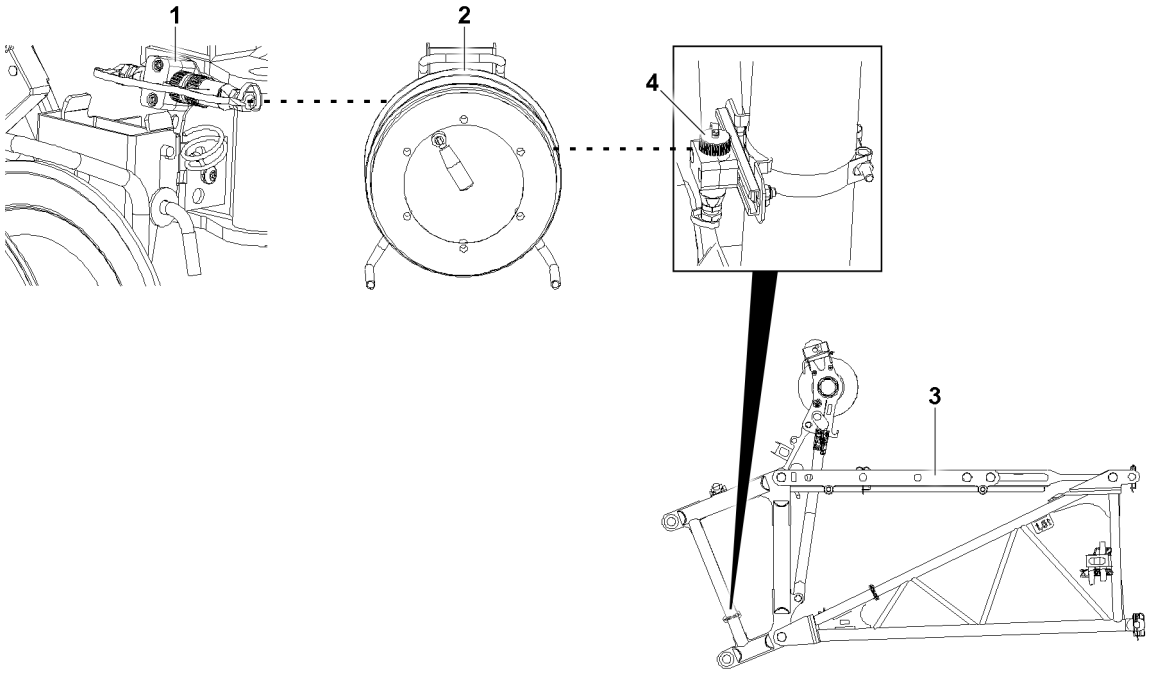

Fig.128400: Establishing the electrical connection, with two cable drums, to the camera on the auxiliary boom

► Connect the longer cable from the cable drum **2** with the socket **4** to the TF adapter **3**.
► Insert the shorter cable from the cable drum **2** in the socket **1** on the telescopic boom.
► Make sure that the socket **1** is connected with the transmitter to the telescopic boom head.

LWE/LTR 1100-009/25105-02-02/en

copyright © Liebherr-Werk Ehingen GmbH 2023

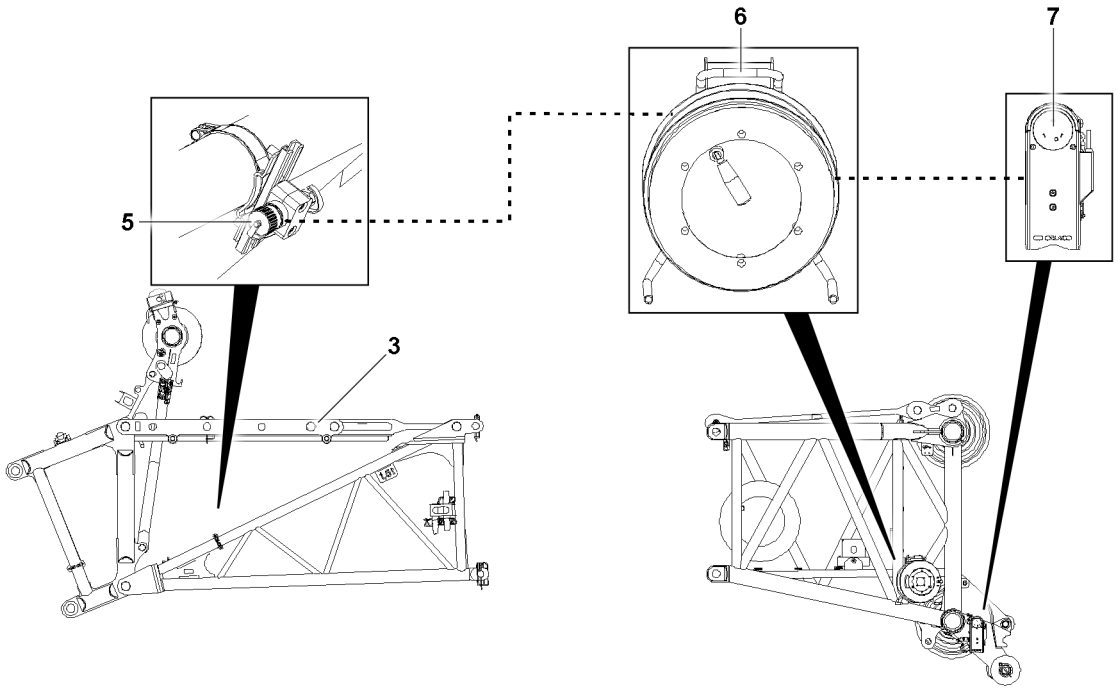

Fig.128401: Establishing the electrical connection, with two cable drums, to the camera on the auxiliary boom

- ► Connect the longer cable from the cable drum **6** with the socket **5** to the TF adapter **3**.
- ► Connect the shorter cable from the cable drum **6** with the camera **7** to the boom head.

12.4 Auxiliary boom luffing range

The boom angle changes depending on crane operation. This also changes the required cable length.

NOTICE
Cable length too short!
The cable tears, property damage.
- ► Make sure that enough cable length is available for the luffing movement of the boom.

copyright © Liebherr-Werk Ehingen GmbH 2023

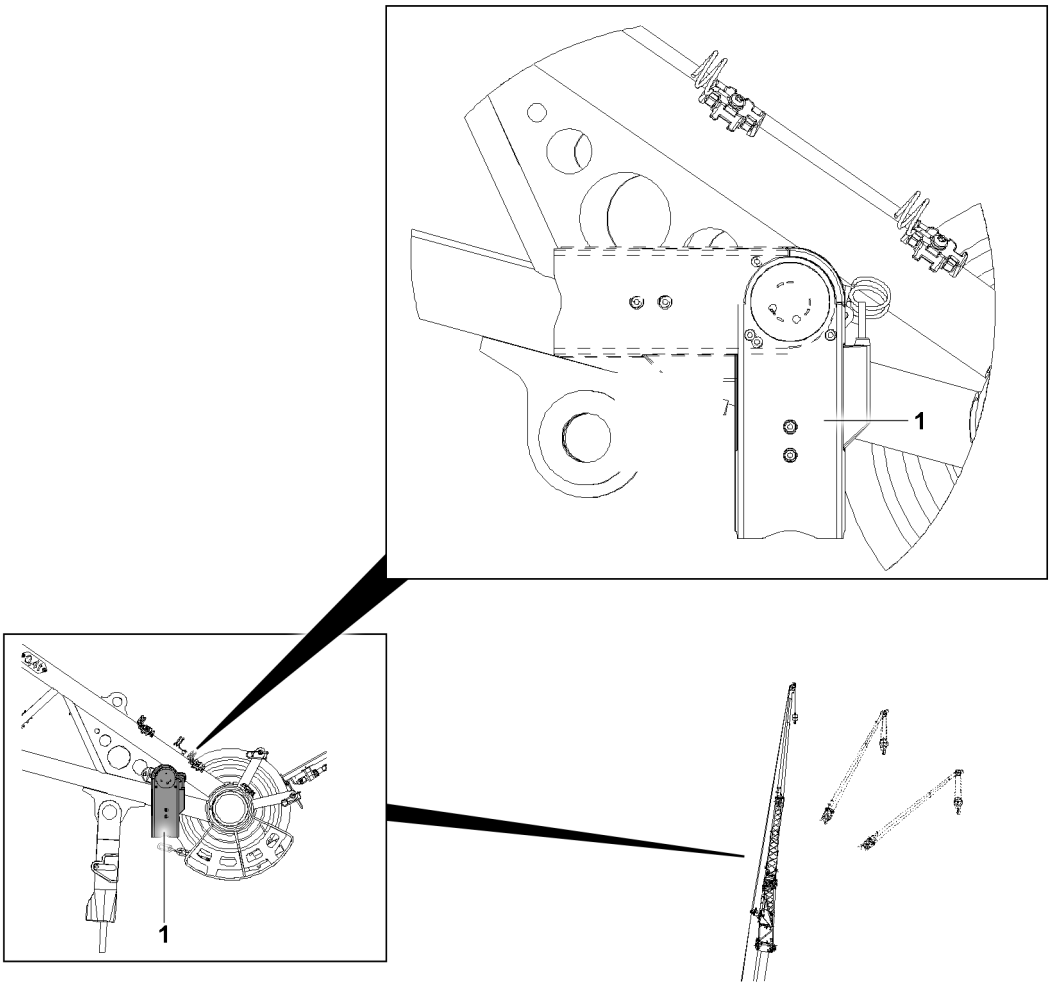

Fig.128402: Boom luffing range and camera slewing range

When the boom angle is changed, also the position of the camera **1** changes. Therefore, there must be enough cable length available for the swinging movement of the camera **1**.

► Make sure that enough cable length is available for the swinging movement of the camera **1**.

12.5 Securing the cable

NOTICE
Cable in the luffing range of the auxiliary boom!
The cable tears, property damage.
► Make sure that the cable for the camera and cable drum is not in the luffing range of the auxiliary boom.

NOTICE
Cable in the working range of other components!
The cable tears, property damage.
► Make sure that the cable for the camera and cable drum is not in the working range of other components.

Other components are, for example:
– Hoist rope
– Rope pulleys

LWE/LTR 1100-009/25105-02-02/en

copyright © Liebherr-Werk Ehingen GmbH 2023

12.5.1 Cable drum

► Feed the longer cable through the struts on the auxiliary boom.

The longer cable of the cable drum must be secured by the pull relief installed on the cable.

If the longer cable is connected with the camera:
► Install the pull relief cable on the attached retainer.
or

If the longer cable is connected with the fixed routed cable on the auxiliary boom:
Secure the pull relief cable on the grating.

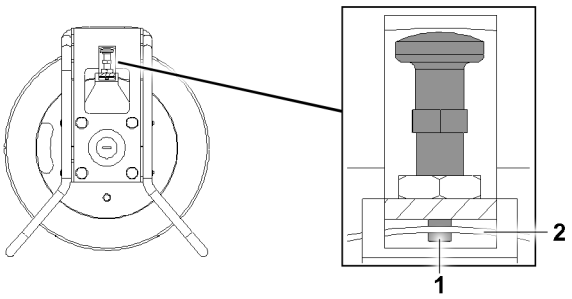

Fig.128381: Locking the cable drum

To ensure that the cable drum **2** does not rotate inadvertently, the cable drum **2** must be locked.

► Insert the pin **1**.

Result:
– The longer cable is secured.

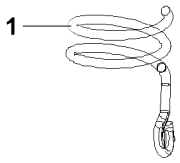

Fig.128403: Cable retainer

► Attach the shorter cable to the cable retainer **1**.

12.5.2 Camera

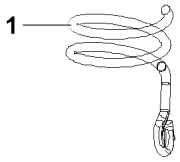

Fig.128403: Cable retainer

► Attach the cable in the cable retainer **1**.

LWE/LTR 1100-009/25105-02-02/en

copyright © Liebherr-Werk Ehingen GmbH 2023

12.6 Radio connection

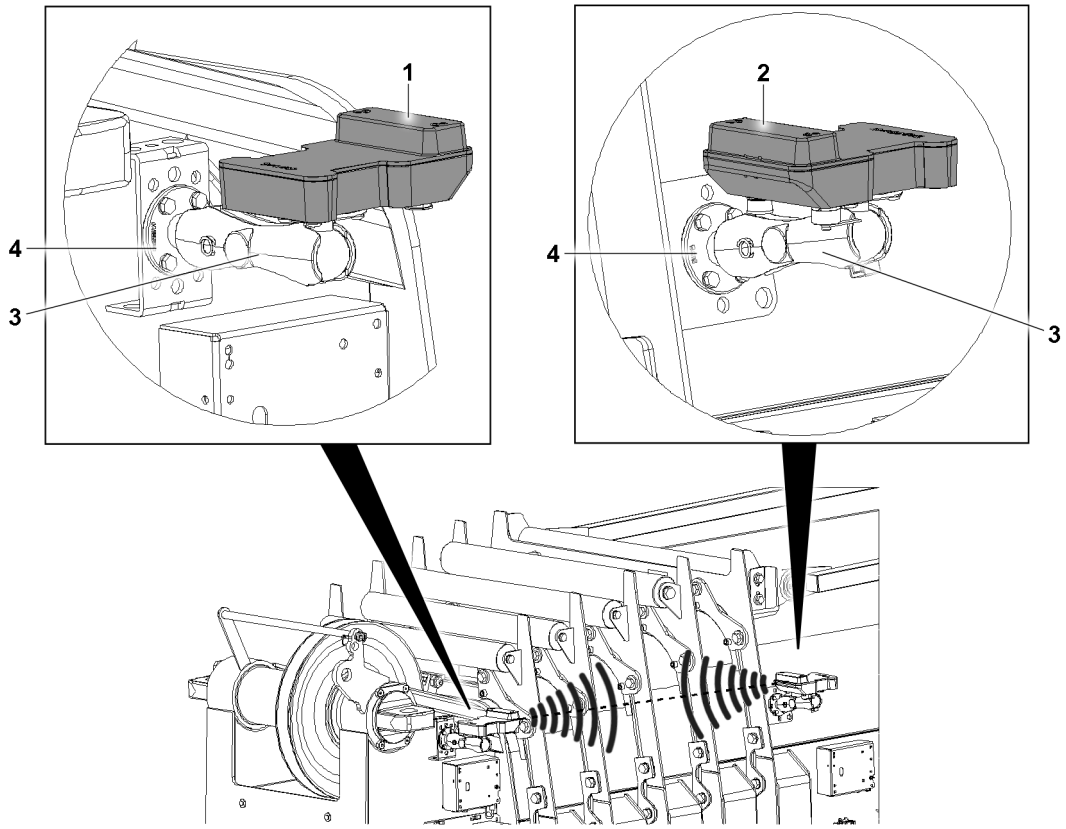

Fig.128423: Radio connection on the telescopic boom

1 Transmitter
2 Receiver
3 Retainer
4 Base plate

When the camera is used, a radio connection must be established between the transmitter **1** and the receiver **2**.

Note
► The range of the radio signal can fluctuate due to local conditions.

12.6.1 Extension

With certain crane types, the transmitter and receiver must be extended. Additional components are necessary for this.

LWE/LTR 1100-009/25105-02-02/en

copyright © Liebherr-Werk Ehingen GmbH 2023

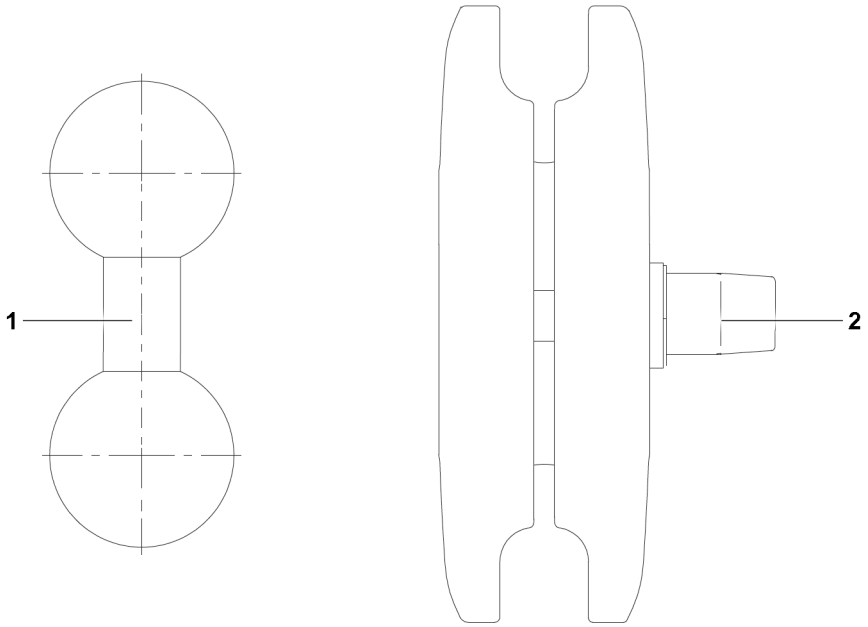

Fig.128477: Extension

1 Double ball joint **2** Retainer

The following chart contains the following information:
- Which types of cranes require an extension.
- The number of components that are required.

Crane type	Transmitter		Receiver	
	Double ball joint	Retainer	Double ball joint	Retainer
LTC 1050-3.1	1	1	0	0
LTF 1060-4.1	1	1	0	0
LTM 1030-2.1	1	1	0	0
LTM 1040-2.1	1	1	0	0
LTM 1050-3.1	1	1	0	0
LTM 1055-3.2	1	1	1	1
LTM 1060-3.1	1	1	0	0
LTM 1070-4.2	1	1	1	1
LTM 1090-4.1	1	1	1	1
LTM 1095-5.1	1	1	1	1
LTM 1100-4.2	1	1	1	1
LTM 1100-5.2	1	1	1	1
LTM 1130-5.1	1	1	1	1
LTM 1250-5.1	1	1	1	1
LTM 1300-6.2	1	1	1	1
LTM 1750-9.1	1	1	1	1
LTR 1100	1	1	1	1

Transmitter / receiver extensions

LWE/LTR 1100-009/25105-02-02/en

copyright © Liebherr-Werk Ehingen GmbH 2023

12.6.2 Alpha - α angle

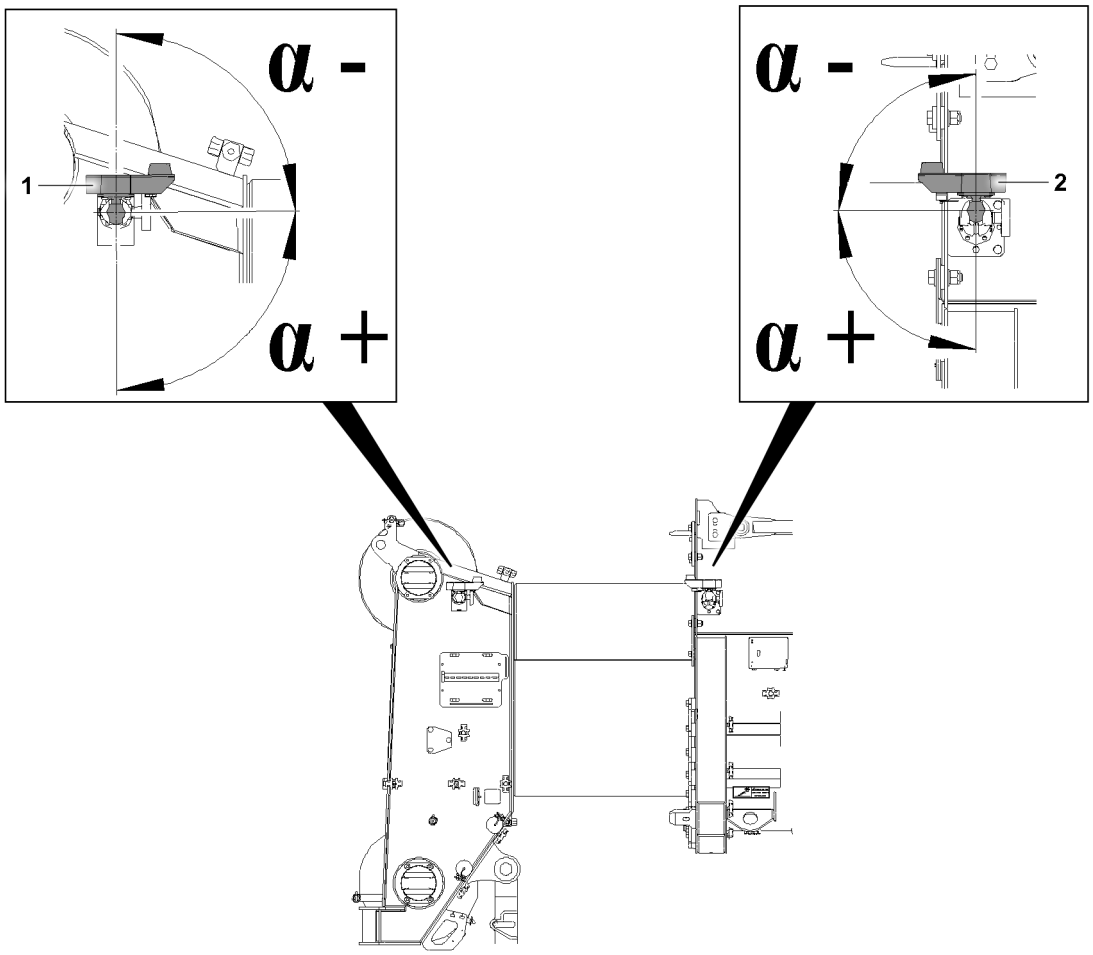

Fig.128420: Alpha α angle

1 Transmitter

2 Receiver

LWE/LTR 1100-009/25105-02-02/en

copyright © Liebherr-Werk Ehingen GmbH 2023

12.6.3 Beta - β angle

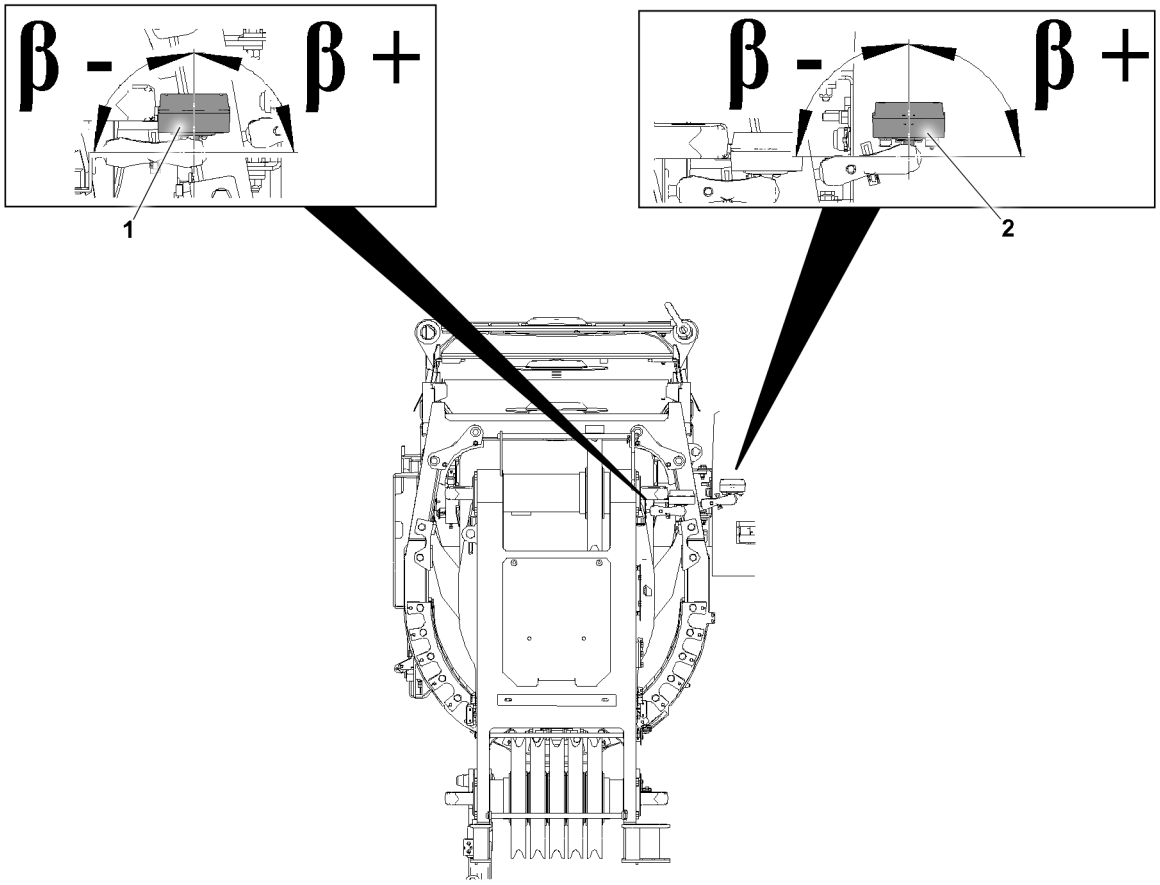

Fig.128421: Beta β angle

1 Transmitter **2** Receiver

LWE/LTR 1100-009/25105-02-02/en

copyright © Liebherr-Werk Ehingen GmbH 2023

12.6.4 Gamma - γ angle

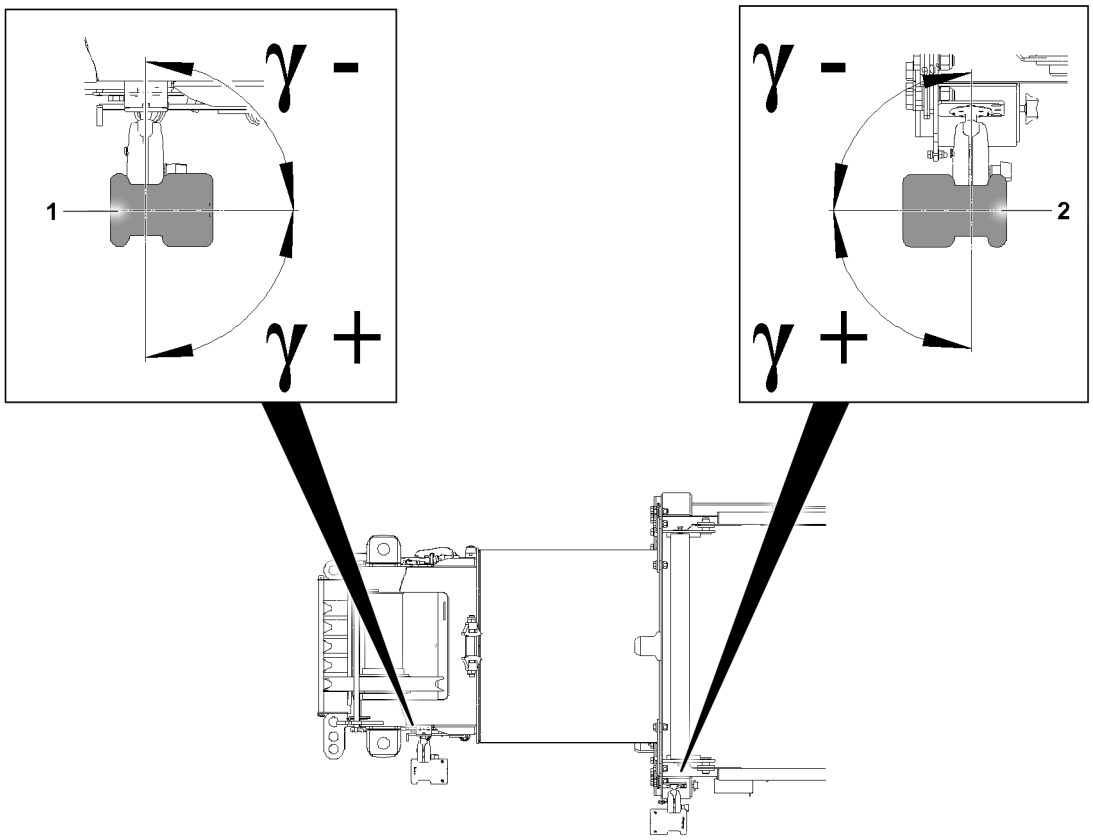

Fig.128422: Gamma γ angle

1 Transmitter **2** Receiver

12.6.5 Angle guide values

The rough angle values for the transmitter **1** and receiver **2** are provided below.

Crane type	Transmitter			Receiver		
	Alpha α	Beta β	Gamma γ	Alpha α	Beta β	Gamma γ
LTC 1050-3.1	+5°	0°	0°	+10°	0°	0°
LTF 1060-4.1	+5°	0°	0°	0°	0°	0°
LTM 1030-2.1	0°	+90°	0°	0°	+90°	0°
LTM 1040-2.1	+5°	0°	0°	0°	0°	0°
LTM 1050-3.1	+5°	0°	0°	0°	0°	0°
LTM 1055-3.2	+10°	0°	+5°	+5°	0°	+5°
LTM 1060-3.1	+15°	0°	+5°	+5°	0°	+5°
LTM 1070-4.2	-10°	0°	+5°	+10°	0°	+5°
LTM 1090-4.1	+5°	0°	0°	+5°	0°	0°
LTM 1095-5.1	+5°	0°	0°	+5°	0°	0°
LTM 1100-4.2	+5°	0°	+5°	+5°	0°	+5°
LTM 1100-5.2	0°	0°	0°	0°	0°	0°

LWE/LTR 1100-009/25105-02-02/en

copyright © Liebherr-Werk Ehingen GmbH 2023

Crane type	Transmitter			Receiver		
	Alpha α	Beta β	Gamma γ	Alpha α	Beta β	Gamma γ
LTM 1130-5.1	+0°	+90°	0°	+5°	+90°	0°
LTM 1250-5.1	0°	+45°	0°	0°	+45°	0°
LTM 1300-6.2	0°	+45°	+5°	0°	+45°	+5°
LTM 1750-9.1	0°	+45°	0°	0°	+45°	0°
LTR 1100	0°	0°	0°	0°	0°	0°

Transmitter / receiver angle guide values

- ► Align the transmitter retainer vertically with the base plate.
- ► Align the receiver retainer vertically with the base plate.

or

NOTICE
Receiver in the slewing range of the front window!
The front window and receiver will be damaged.
- ► Make sure that the receiver is not located in the slewing range of the front window.

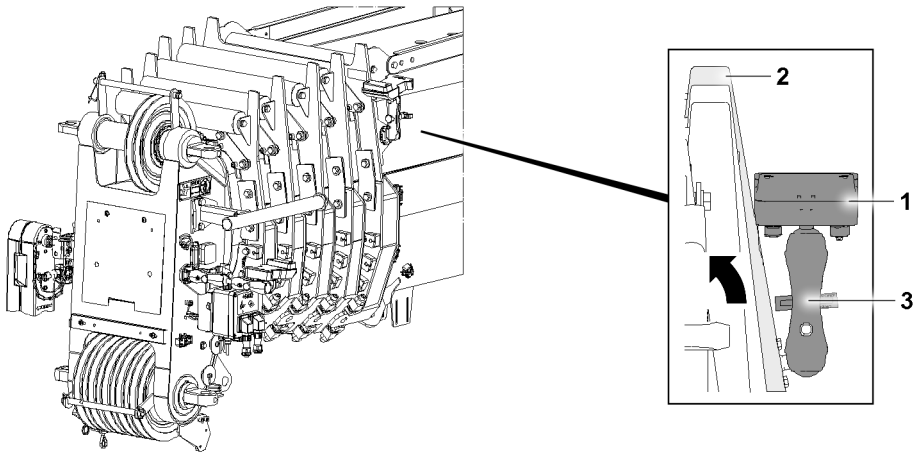

Fig.145617: LTC 1050-3.1

For LTC 1050-3.1:
Until the receiver **1** is lying on the pivot section **2** collar: Align the retainer **3**.

The Beta β angle must be set as the first angle. If the Beta β angle is not set as the first angle, the guide values are no longer correct.

- ► Set the Beta β angle.
- ► Set the Alpha α angle.
- ► Set the Gamma γ angle.
- ► Align the transmitter **1** and the receiver **2** so a radio connection is established.

13 Checking the electrical connections

- ► Make sure that the camera image is displayed on the monitor.

LWE/LTR 1100-009/25105-02-02/en

copyright © Liebherr-Werk Ehingen GmbH 2023

14 Disconnecting the electrical connections

When the electrical connections are separated, protective caps must be installed to protect the electrical connections from damage.

When a protective cap is available:
► Assemble the protective cap.

15 Disassembling the camera

The disassembly of the camera is described as an example.

Make sure that the following prerequisites are met:
– When the camera is assembled on the telescopic boom:
  • The telescopic boom is luffed down as far as possible. At least in the 0° position.
  • The telescopic boom is telescoped in all the way.
– When the camera is assembled on the auxiliary boom:
  • The telescopic boom is luffed down as far as possible. At least in the 0° position.
  • Luff the auxiliary boom down as far as possible. At least in the 0° position.
  • The telescopic boom is telescoped in all the way.
– When the camera is assembled on the luffing lattice jib:
  • The luffing lattice jib is in the same position in which the hook block was reeved out. See chapter 5.04.

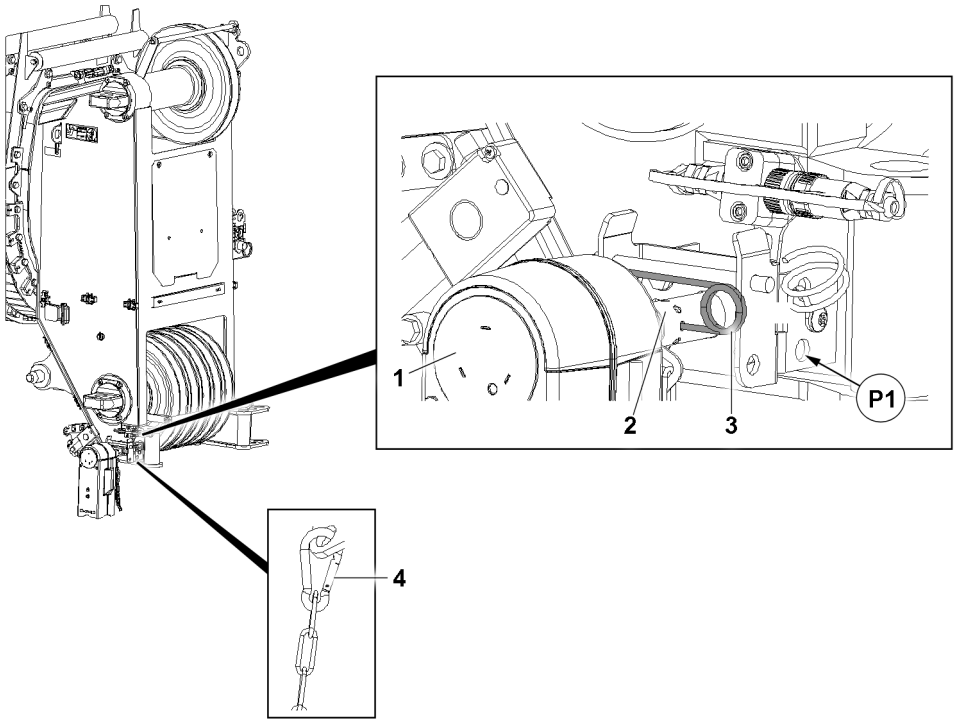

Fig.128377: Camera installed on the telescopic boom

► Disconnect the electrical connections to the camera.

When assembly personnel is alone on the ladder:
► Fasten the auxiliary rope to the camera.
► Detach the safety chain **4** for the camera in position **P1**.
► Release the camera **1**: Disassemble the retainer **3**.
► Pull the camera **1** out from the retainer **2**.
► Lower the camera **1** to the ground using the auxiliary rope.

LWE/LTR 1100-009/25105-02-02/en

copyright © Liebherr-Werk Ehingen GmbH 2023

16 Disassembling the cable drum

Make sure that the following prerequisites are met:
- The telescopic boom is completely disassembled.
- When the cable drum is assembled on the telescopic boom:
  - The telescopic boom is luffed down as far as possible. At least in the 0° position.
- When the cable drum is assembled on the auxiliary boom:
  - The telescopic boom is luffed down as far as possible. At least in the 0° position.
  - Luff the auxiliary boom down as far as possible. At least in the 0° position.
- When the cable drum is assembled on the luffing lattice jib and disassembly by opening the lattice jib on the ground:
  - The N-pivot section is unpinned from the first lattice section and is lying on the ground.
  - The N-head is unpinned from the first lattice section and is lying in the roller cart or on the ground.
- When the cable drum is assembled on the luffing lattice jib and flying disassembly of the lattice jib:
  - The telescopic boom is in the 0° position.

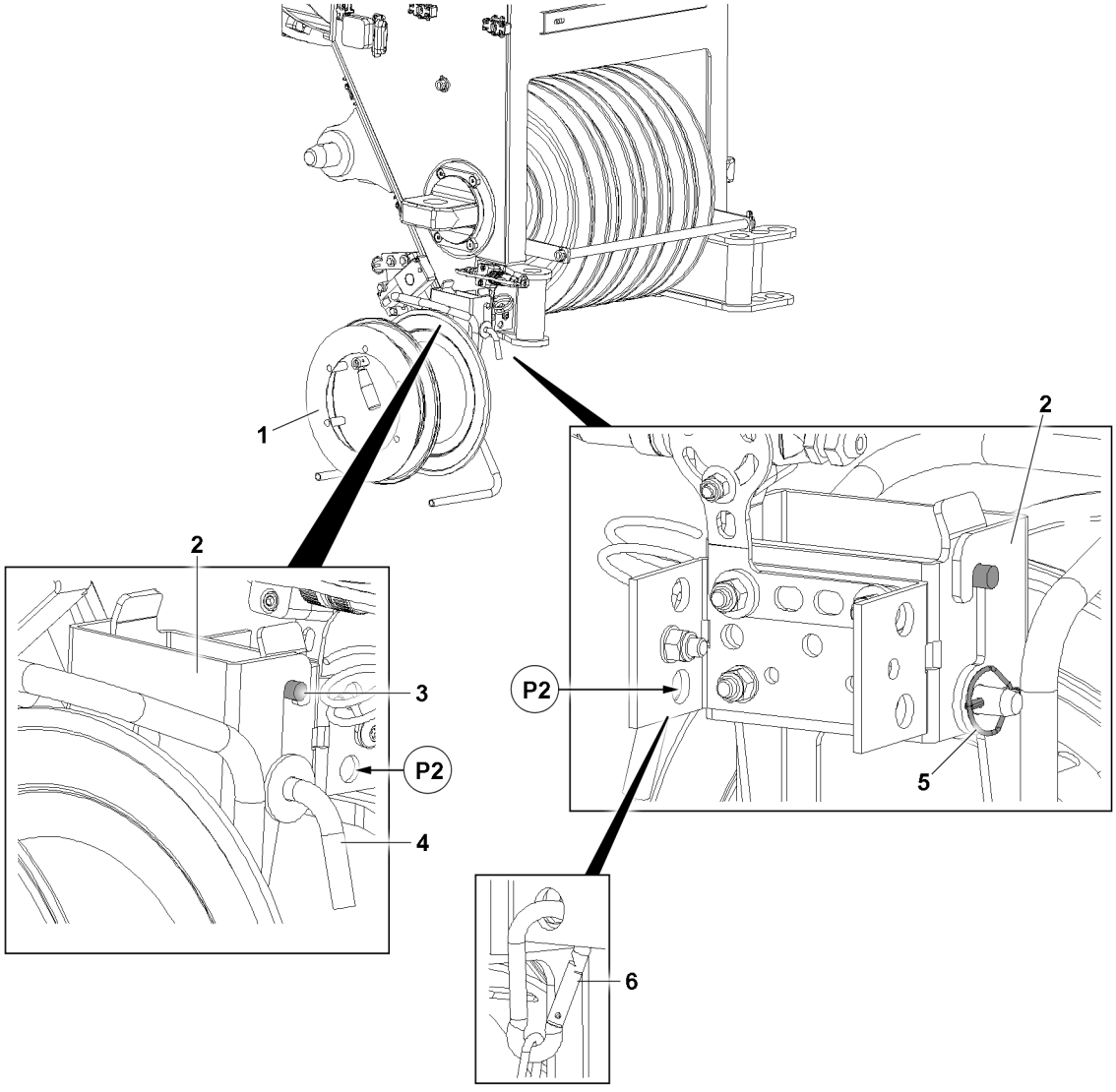

Fig.128379: Cable drum on the telescopic boom

► Disconnect the electrical connection for the cable drum.

When assembly personnel is alone on the ladder:
► Fasten the auxiliary rope to the cable drum.

LWE/LTR 1100-009/25105-02-02/en

copyright © Liebherr-Werk Ehingen GmbH 2023

- ► Detach the retaining chain **6** of the cable drum **1** in position **P2**.
- ► Release the pin **4**: Disassemble the retainer **5**.
- ► Release the cable drum **1**: Unpin the pin **4**.
- ► Detach the cable drum **1** from the pin **3**.
- ► Lower the cable drum **1** to the ground using the auxiliary rope.

17 Transporting the camera

To prevent the camera from being damaged, the camera must be protected by the supplied case.

- ► Disconnect the electrical connections to the camera.
- ► Disassembling the camera.
- ► Store the camera in the supplied case and transport it.

18 Folding the camera on the winch

The camera is only installed on certain crane types.

The camera is used to monitor the hoist rope and must be folded into the operating position.

18.1 Folding the camera into the operating position

Fold the camera into the operating position prior to crane operation.

LWE/LTR 1100-009/25105-02-02/en

copyright © Liebherr-Werk Ehingen GmbH 2023

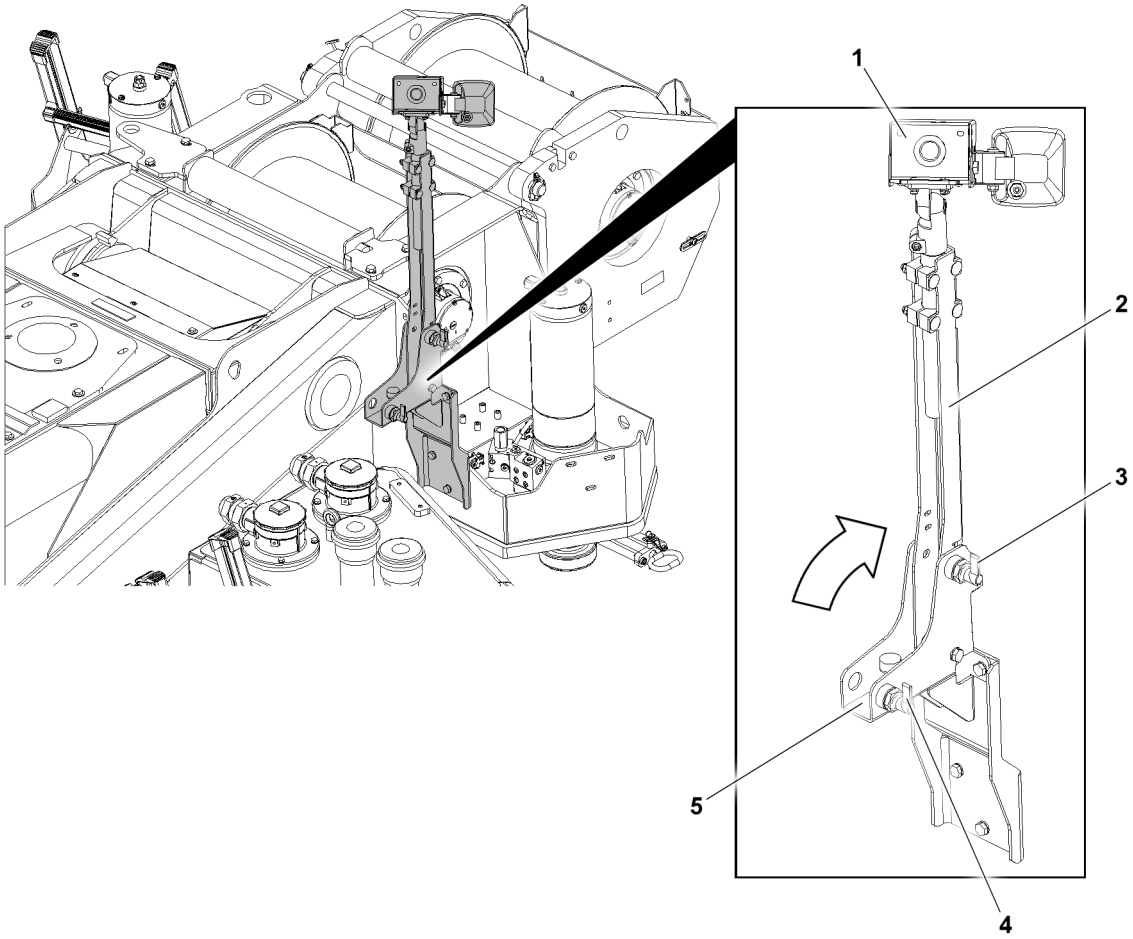

Fig.166116: Camera in the operating position

1 Camera
2 Swing arm
3 Latch
4 Latch
5 Retainer

► Release the swing arm **2** with the latch **4**.
► Fold the swing arm **2** up and secure with the latch **3**.

Result:
– The camera **1** is in the operating position.

18.2 Folding the camera into the transport position

Before on-road driving, fold the camera into the transport position.

LWE/LTR 1100-009/25105-02-02/en

copyright © Liebherr-Werk Ehingen GmbH 2023

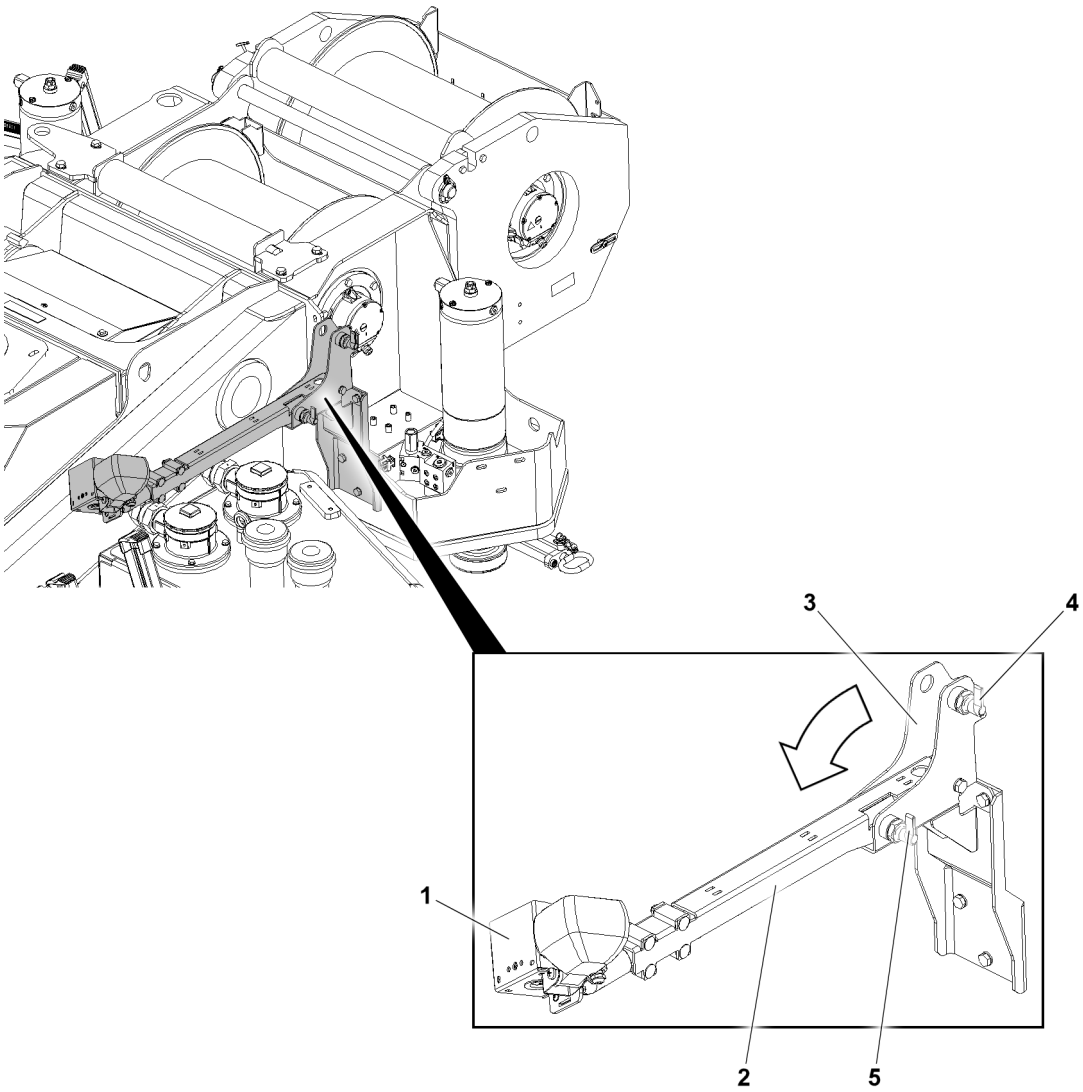

Fig.166117: Camera in the transport position

1 Camera
2 Swing arm
3 Retainer
4 Latch
5 Latch

CAUTION
Moving parts!
Fingers and hands can be crushed.
► Do **not** reach into the retainer **3** or the hinge area.

► Hold the swing arm **2** with one hand and release the latch **4**.
► Fold the swing arm **2** down and secure with the latch **5**.

Result:
– The camera **1** is in the transport position.

LWE/LTR 1100-009/25105-02-02/en

copyright © Liebherr-Werk Ehingen GmbH 2023

5.75 Wind speed sensor / airplane warning light

1	Safety	2
2	Description	2
3	Disassembling the wind speed sensor in the transport position	3
4	Assembling the wind speed sensor for crane operation	3
5	Electrical connection	10
6	Disassembling the wind speed sensor	10
7	Assembling the wind speed sensor in the transport position	12
8	Transporting the wind speed sensor	13

LWE/LTR 1100-009/25105-02-02/en

copyright © Liebherr-Werk Ehingen GmbH 2023

1 Safety

Observe the safety instructions prior to assembly / disassembly:
- General safety information: See chapter 2.04.
- Information regarding personal protective equipment: See chapter 2.04.
- Information regarding the use of ladders: See chapter 2.04.

WARNING
Attachment parts in the field of vision of the crane driver!
Death, severe bodily injury, property damage.

Before the crane is driven:
► Make sure that all attachment parts have been disassembled or are in the transport position.

NOTICE
The boom and the auxiliary boom are assembled or disassembled with the attachment parts!
The attachment parts can be damaged.
► **After** the hook block or the load hook is installed: Install the attachment parts.
► **Before** the hook block or the load hook is removed: Remove the attachment parts.

Attachment parts are for example:
- Camera
- Airplane warning light
- Wind speed sensor
- Wind speed sensor with integrated airplane warning light
- Hoist limit switch weight with chain

The illustrations in this chapter are an example. The installation of the wind speed sensor is described as an example. The attached retainers are located at times in other positions than as shown.

The assembly of the wind speed sensor is carried out depending on the crane structure.

2 Description

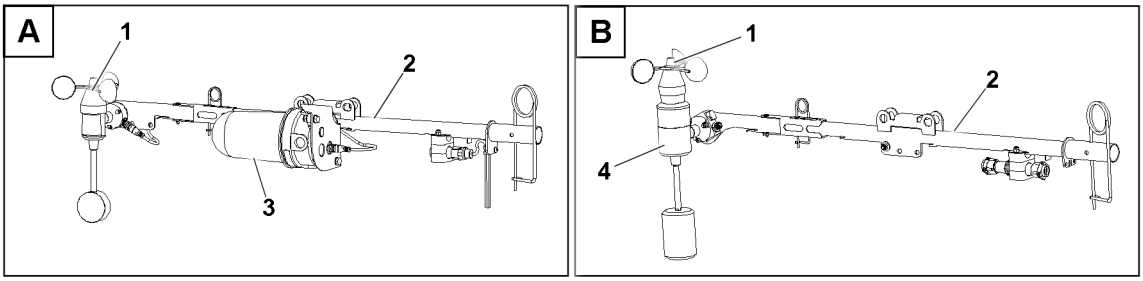

*Fig.159822: Exemplary illustration of the wind speed sensor with separate or integrated airplane warning light**

1 Wind speed sensor
2 Retainer
3 Separate airplane warning light*
4 Integrated airplane warning light*

The assembly and disassembly of the wind speed sensor, the airplane warning light* or the wind speed sensor* with integrated airplane warning light are identical and are explained based on the wind speed sensor.

During transport and when driving on public roads, the wind speed sensor is assembled on a retainer in the transport position.

During crane operation, the wind speed sensor is assembled in the highest point of the boom.

LWE/LTR 1100-009/25105-02-02/en

copyright © Liebherr-Werk Ehingen GmbH 2023

The wind speed sensor assembled on the boom measures the wind speed at the boom jib. The current wind speed is shown on the LICCON monitor in the crane cab.

3 Disassembling the wind speed sensor in the transport position

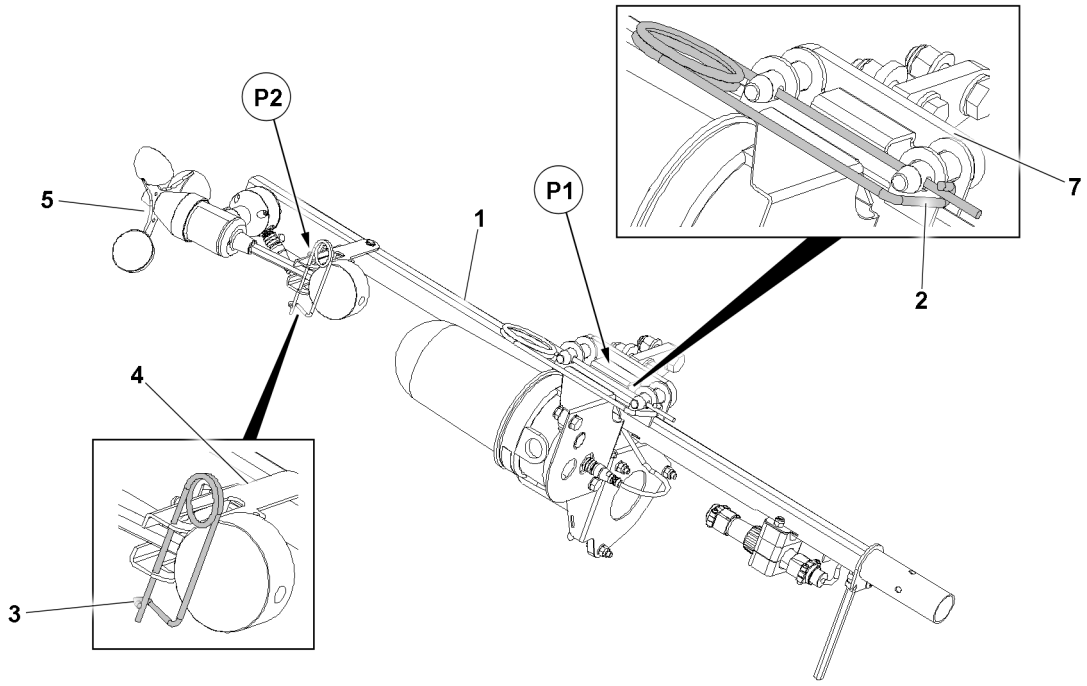

Fig.149020: Wind speed sensor in the transport position

Make sure that the following prerequisites are met:
– The telescopic boom is luffed down to the 0° position.

► Remove the protective cover and store it for later use.
► Remove the retaining element **2** in position **P1** from the retainer **7** on the telescopic boom.
► Carefully remove the retainer **1** with attachment parts.
► Store the retaining element **2** safely for assembly on the telescopic boom head or auxiliary boom.

4 Assembling the wind speed sensor for crane operation

Depending on the available equipment, the wind speed sensor can be assembled in different positions.

Possible positions on the telescopic boom and the auxiliary boom are shown below as an example.

LWE/LTR 1100-009/25105-02-02/en

copyright © Liebherr-Werk Ehingen GmbH 2023

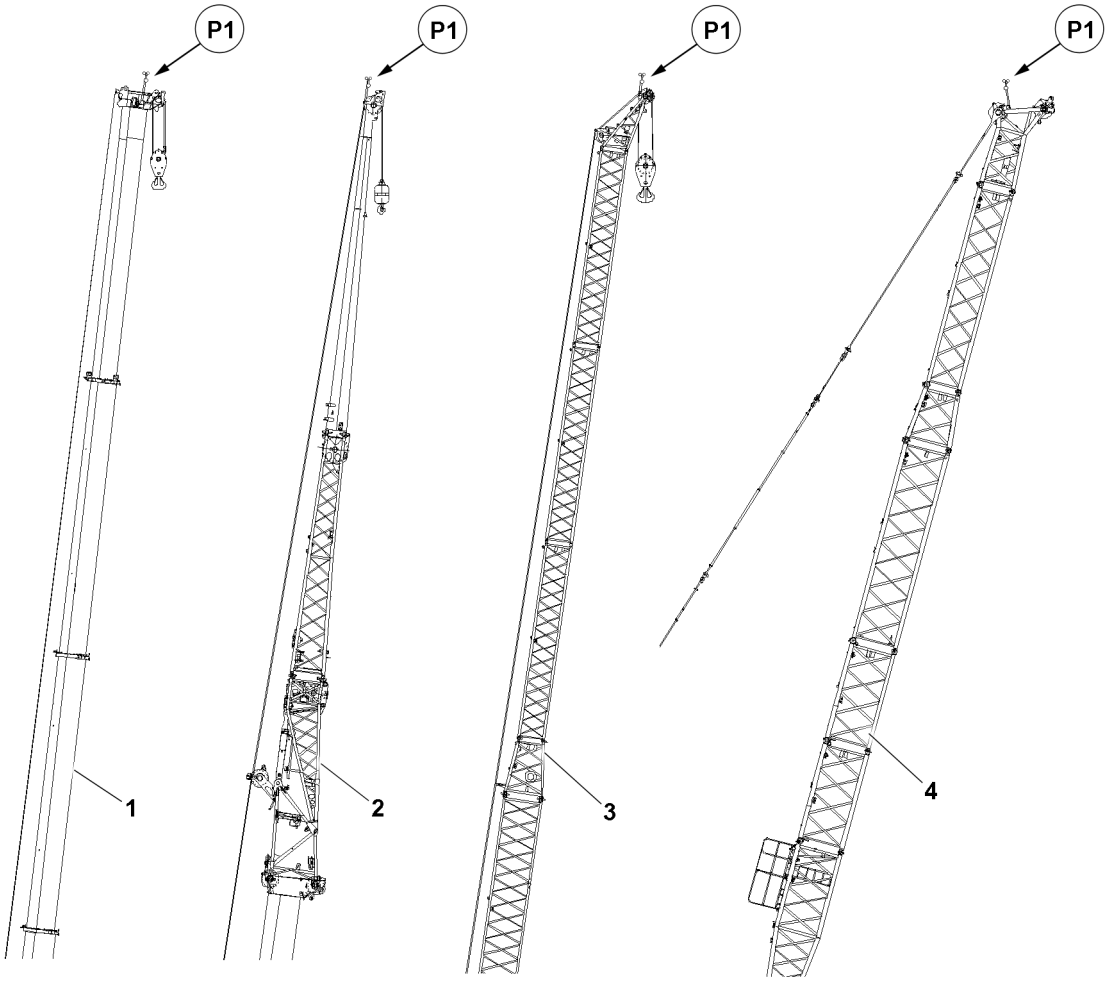

Fig.149022: Possible assembly positions

1 Telescopic boom
2 Folding jib
3 Fixed lattice jib or sharp lattice jib
4 Luffing lattice jib
P1 Wind speed sensor position

LWE/LTR 1100-009/25105-02-02/en

copyright © Liebherr-Werk Ehingen GmbH 2023

4.1 Assembly position

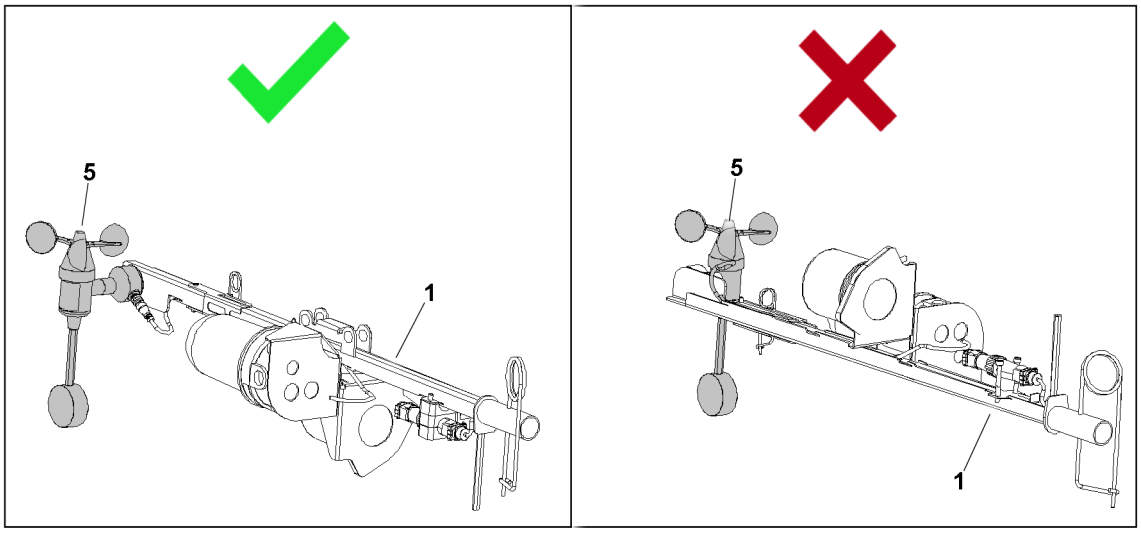

Fig.149030: Assembly position of the wind speed sensor

WARNING
Wind speed sensor incorrectly assembled!
The wind speed will not be correctly recorded. Incorrect values are transmitted.
Failure of equipment. Death, severe bodily injuries, property damage.
► Assemble the wind speed sensor correctly.

► Assemble the retainer **1** such that the wind speed sensor **5** is on the left hand side of the retainer **1**.

LWE/LTR 1100-009/25105-02-02/en

copyright © Liebherr-Werk Ehingen GmbH 2023

4.2 Assembly on the telescopic boom

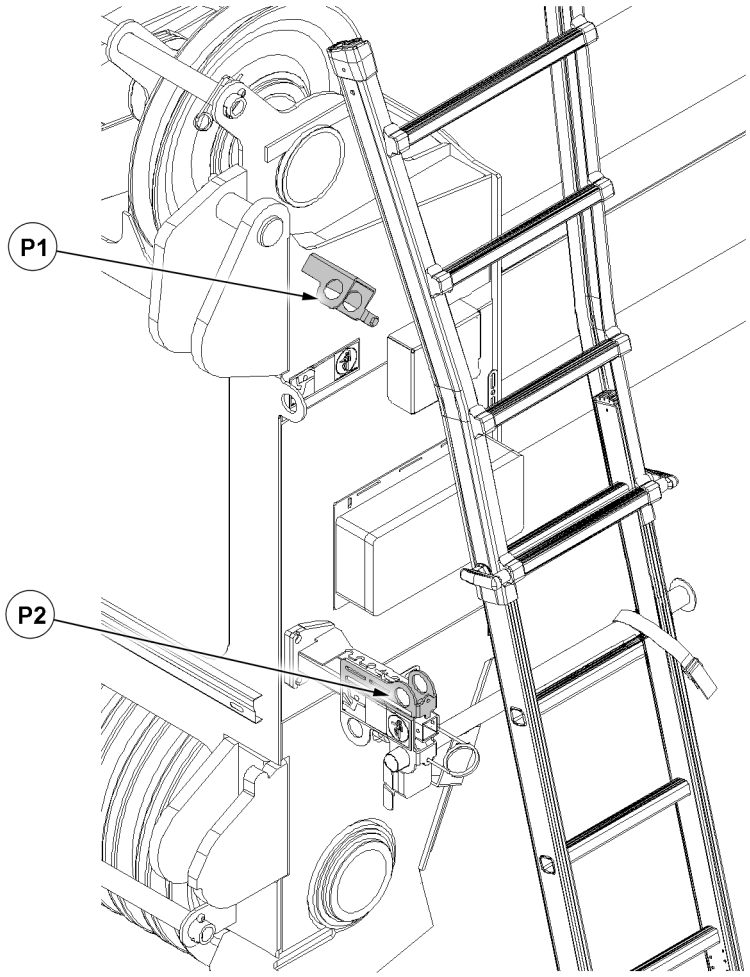

Fig.149023: Assembling the wind speed sensor on the telescopic boom

The retainer **P1** is only present on certain crane types!

For cranes with two retainers on the telescopic boom:
– Assemble the wind speed sensor on the retainer **P1**.

For cranes with one retainer on the telescopic boom:
– Assemble the wind speed sensor on the retainer **P2**.

Make sure that the following prerequisites are met:
– The telescopic boom is luffed down to the 0° position.

LWE/LTR 1100-009/25105-02-02/en

copyright © Liebherr-Werk Ehingen GmbH 2023

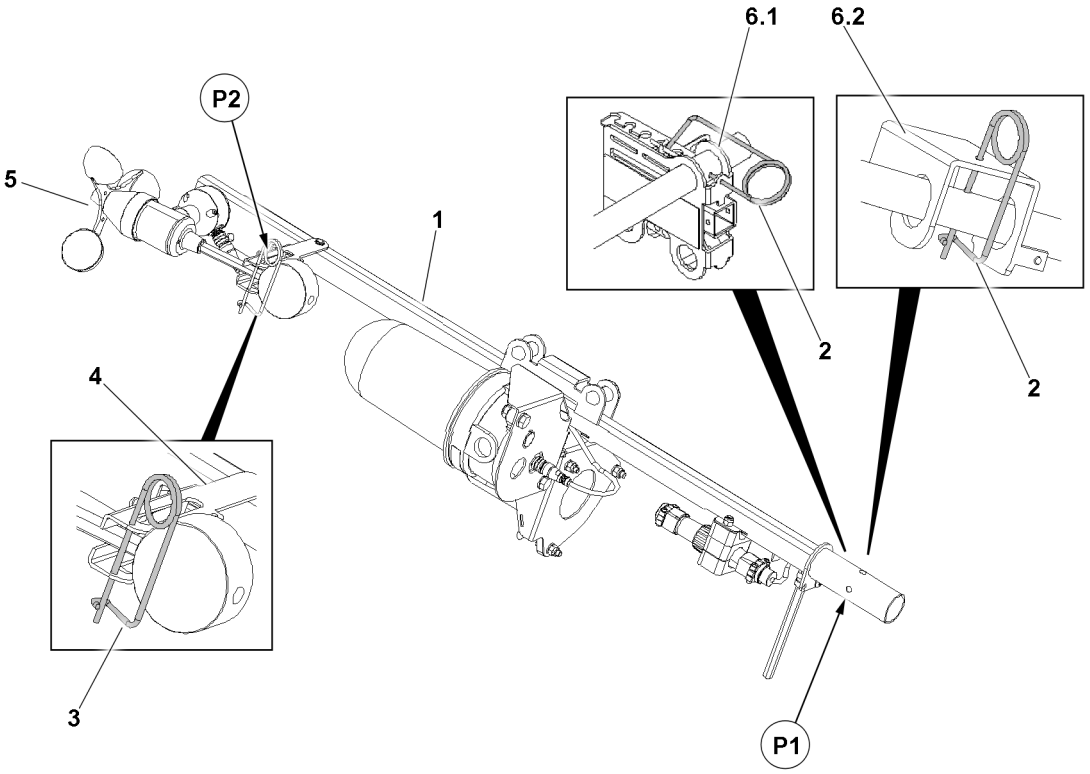

Fig.149024: Assembling the wind speed sensor on the telescopic boom

- ► Insert the retainer **1** of the wind speed sensor in the retainer **6.1** or retainer **6.2** on the telescopic boom.
- ► Secure the retainer **1** with the retaining element **2** in position **P1**. Pay attention to the correct assembly position: See section „Assembly position“.
- ► Remove the retaining element **3** from the transport position in position **P2**.

Result:

– The wind speed sensor **5** swings back and forth until the weight is located vertically below it.

LWE/LTR 1100-009/25105-02-02/en

copyright © Liebherr-Werk Ehingen GmbH 2023

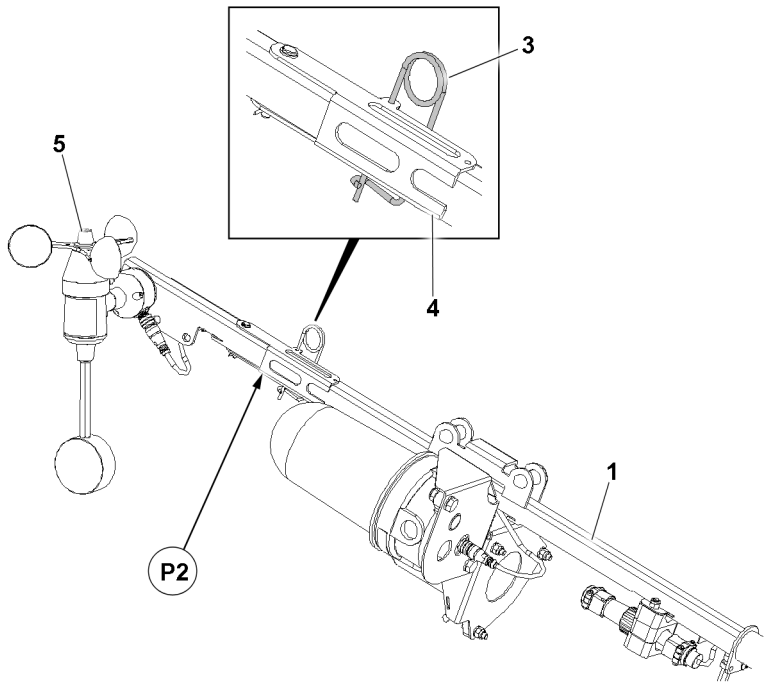

Fig.149025: Locking the transport retainer

- ► Fold the transport retainer **4** back to the retainer **1**.
- ► Secure the transport retainer **4** with the retaining element **3** in position **P2**.
- ► Establish the electrical connections: See the section „Establishing the electrical connections“.

4.3 Assembly on the auxiliary boom

Always assemble the wind speed sensor in the highest point of the auxiliary boom.

Make sure that the following prerequisites are met:
- The telescopic boom is luffed down to the 0° position.
- The auxiliary boom is in the 0° position.

LWE/LTR 1100-009/25105-02-02/en

copyright © Liebherr-Werk Ehingen GmbH 2023

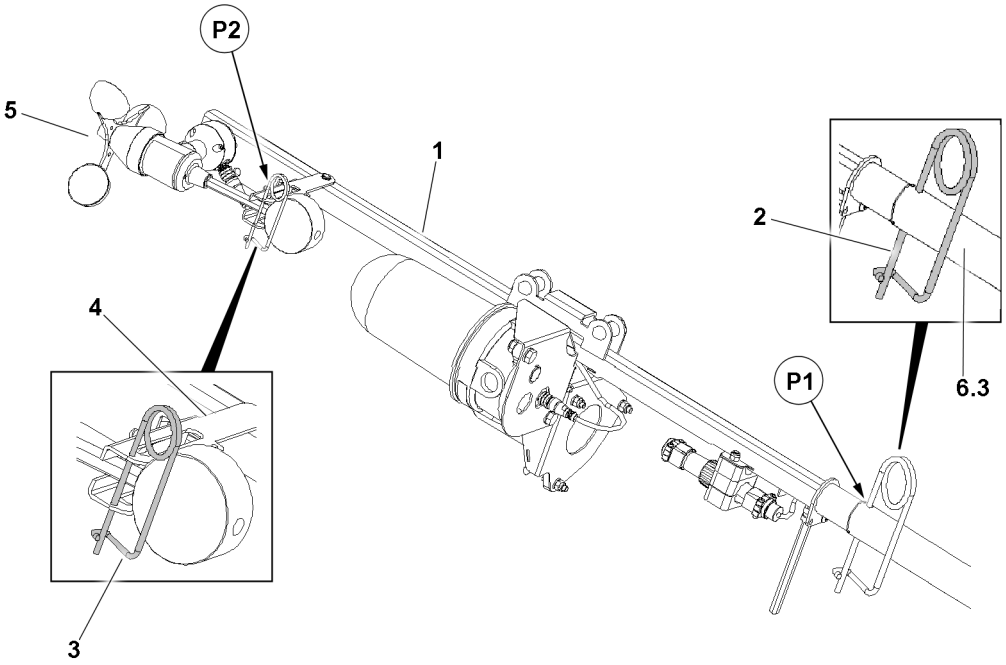

Fig.149026: Assembling the wind speed sensor on the auxiliary boom

- ► Insert the retainer **1** of the wind speed sensor in the retainer **6.3** on the auxiliary boom.
- ► Secure the retainer **1** with the retaining element **2** in position **P1**. Pay attention to the correct assembly position: See section „Assembly position“.
- ► Remove the retaining element **3** out of position **P2**.

Result:

– The wind speed sensor **5** swings back and forth until the weight is located vertically below it.

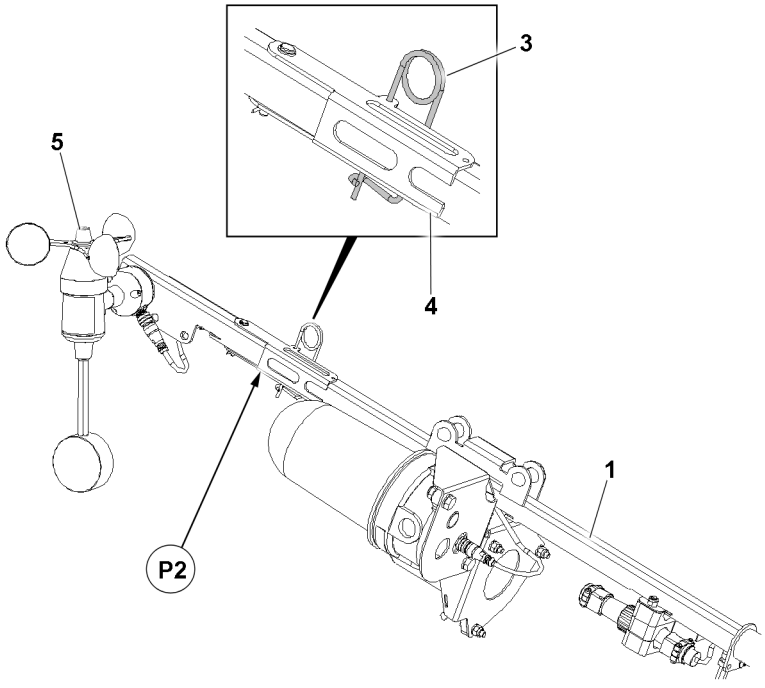

Fig.149025: Securing the transport retainer

- ► Fold the transport retainer **4** back to the retainer **1**.
- ► Secure the transport retainer **4** with the retaining element **3** in position **P2**.
- ► Establish the electrical connections: See the section „Establishing the electrical connections“.

LWE/LTR 1100-009/25105-02-02/en

copyright © Liebherr-Werk Ehingen GmbH 2023

4.4 Checking the wind speed sensor

The function of the wind speed sensor must be checked each time before erecting the boom.

Check the wind speed sensor for easy movement and proper function:

- ► Manually operate the cup anemometer of the wind speed sensor.
- ► Replace a defective wind speed sensor immediately.

5 Electrical connection

5.1 Establishing the electrical connection

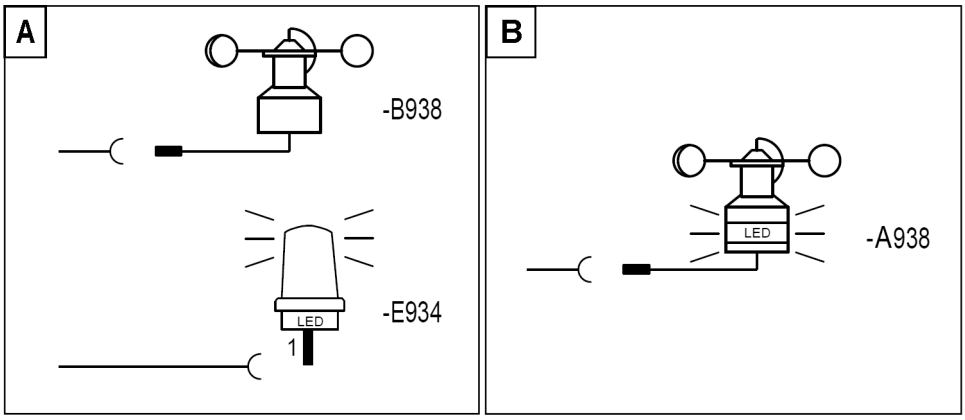

Fig.159821: Electrical connection

The establishment of the electrical connections is described based on an example.

The specifications in the supplied electric wiring diagram are applicable for the connection.

- ► Plug the wind speed sensor **-B938** into the socket.
- ► Plug the airplane warning light***** **-E934** into the socket.
  or
  Plug the wind speed sensor with integrated airplane warning light***** **-A938** into the socket.

5.2 Checking the electrical connections

The integrated airplane warning light***** has two internal electronic circuits with corresponding LEDs.

In case of an electronic circuit error, the corresponding LEDs turn off automatically and the other halves of the LEDs light up brighter. In this condition, the airplane warning light still fulfills are legal requirements. To be able to detect the error, the LEDs are turned off briefly every 10 seconds.

- ► Check that the plug connections of the wind speed sensor and the airplane warning light***** have been connected correctly.
- ► Check the function of the wind speed sensor on the LICCON monitor.
- ► In case of a permanent error of the wind speed sensor: Replace the wind speed sensor.
- ► Check the function of the airplane warning light*****.
- ► In case of a permanent airplane warning light***** error: Replace the airplane warning light*****.

6 Disassembling the wind speed sensor

Make sure that the following prerequisites are met:
- – The telescopic boom is luffed down to the 0° position.
- – The auxiliary boom is in the 0° position.

LWE/LTR 1100-009/25105-02-02/en

copyright © Liebherr-Werk Ehingen GmbH 2023

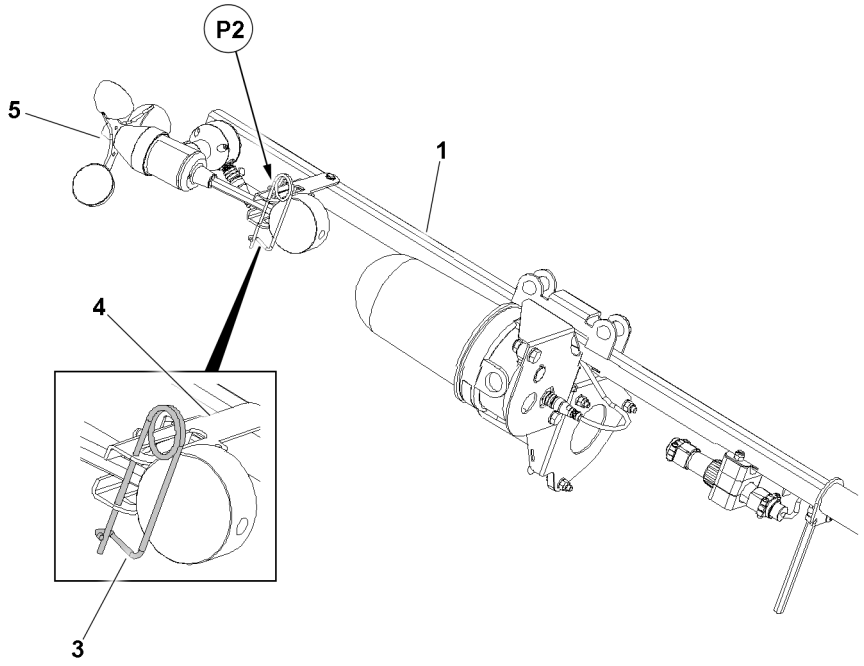

Fig.149028: Securing the wind speed sensor in the transport position

- ► Disconnect the electrical connection.
- ► Release the transport retainer **4** and fold it out.
- ► Swing the wind speed sensor **5** upward and lock the weight in position **P2** in the transport retainer **4**.
- ► Secure the wind speed sensor **5** with the retaining element **3**.

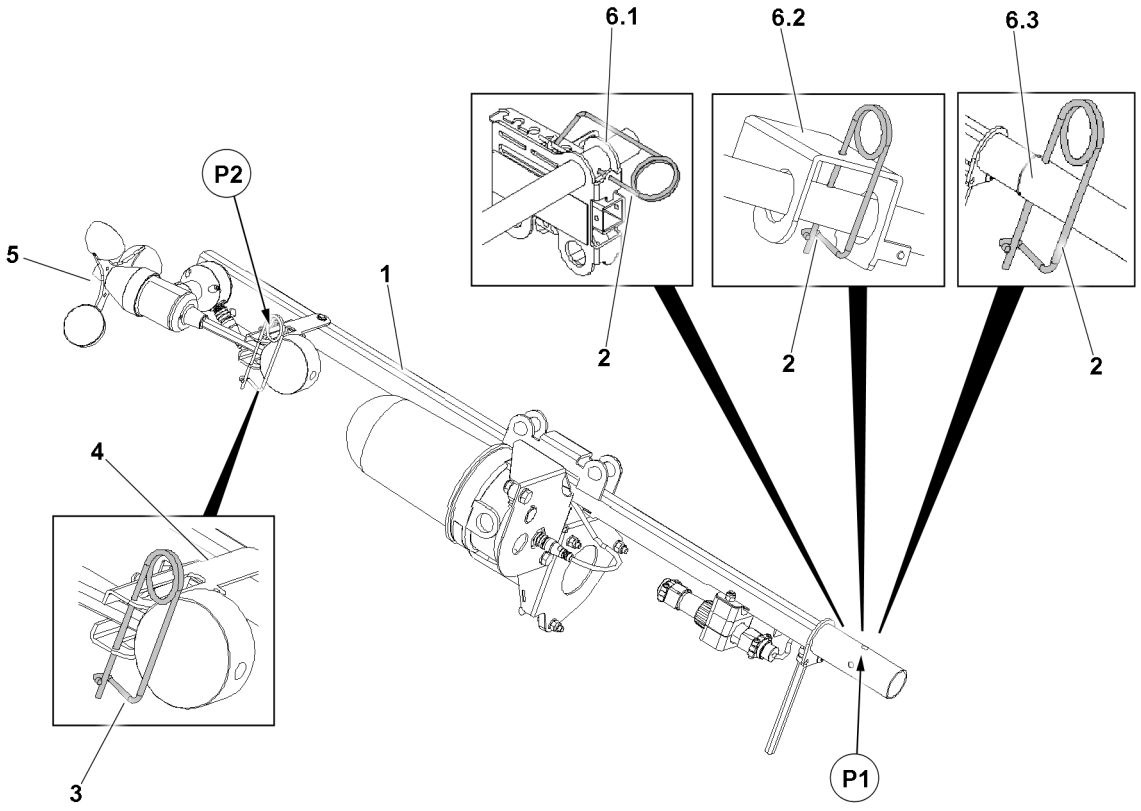

Fig.149027: Disassembling the retainer

LWE/LTR 1100-009/25105-02-02/en

copyright © Liebherr-Werk Ehingen GmbH 2023

► Remove the retaining element **2** from the retainer **6.1**, retainer **6.2** or retainer **6.3** and store it.
► Carefully remove the retainer **1** with attachment parts.

7 Assembling the wind speed sensor in the transport position

Before the crane may be driven or transported on public roads, the wind speed sensor **5** and the retainer **1** must be assembled in transport position.

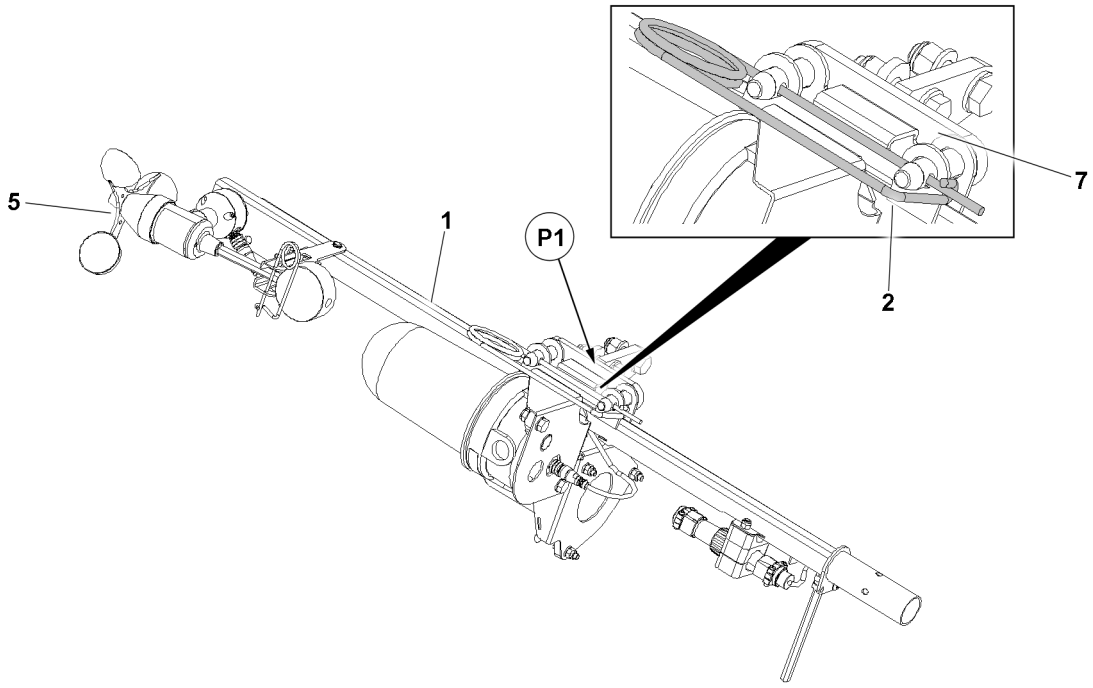

Fig.149029: Assembling the wind speed sensor in the transport position

► Assemble the retainer **1** with the wind speed sensor **5** in position **P1**.
► Secure the retainer **1** with the retaining element **2** on the retainer **7**.

Result:

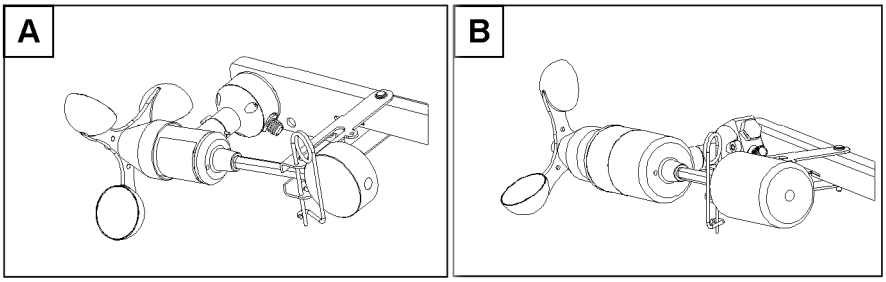

Fig.159823: Exemplary illustration des wind speed sensors in the transport position

– The wind speed sensor is in the transport position.

LWE/LTR 1100-009/25105-02-02/en

copyright © Liebherr-Werk Ehingen GmbH 2023

8 Transporting the wind speed sensor

To prevent the wind speed sensor from being damaged, the wind speed sensor must be protected when driving and during transport.

► Fasten the supplied protective cover on the wind speed sensor.

LWE/LTR 1100-009/25105-02-02/en

copyright © Liebherr-Werk Ehingen GmbH 2023

Empty page!

LWE/LTR 1100-009/25105-02-02/en

copyright © Liebherr-Werk Ehingen GmbH 2023

5.80 Floodlight

1	Safety	2
2	Assembling the floodlight	2
3	Electrical connection	3
4	Disassembling the floodlight	4

LWE/LTR 1100-009/25105-02-02/en

copyright © Liebherr-Werk Ehingen GmbH 2023

1 Safety

Observe the safety instructions prior to assembly / disassembly of the floodlight.
- General safety information: See chapter 2.04.
- Information regarding personal protective equipment: See chapter 2.04.
- Information regarding the use of ladders: See chapter 2.04.

NOTICE
Excessive width with installed floodlight!
Impermissible vehicle condition.

If the mobile crane exceeds the permissible vehicle width with the floodlight assembled:
► Disassemble the floodlight before starting to travel.

The illustrations in this chapter are an example. The installation of the floodlight is explained based on the example of a telescopic boom head. The attached retainers are located at times in other positions than as shown.

The assembly of the floodlight is carried out depending on the crane structure.

2 Assembling the floodlight

Depending on the available equipment, the floodlight can be assembled directly on the boom head or the pull relief for the hose drum.

2.1 Assembling the floodlight without pull relief

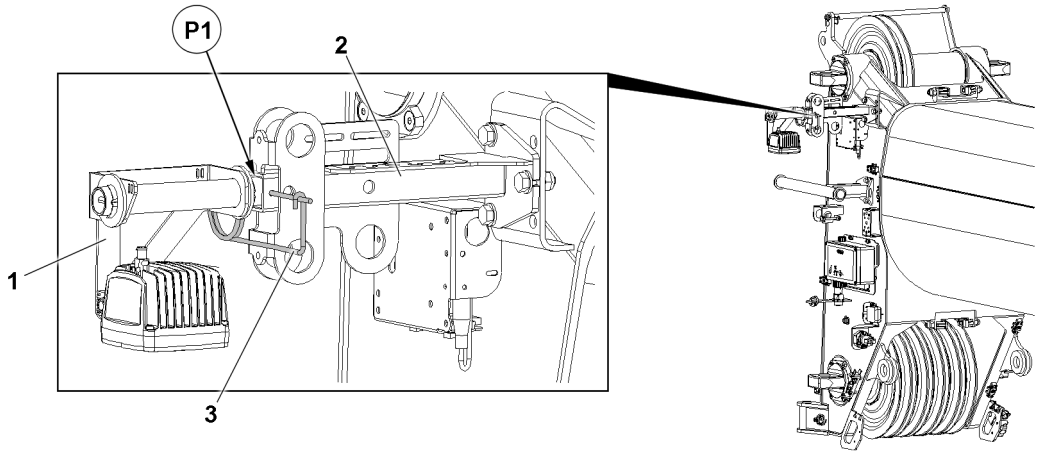

Fig.152468: Floodlight assembly

Make sure that the following prerequisites are met:
- The telescopic boom is luffed down to the 0° position.
- The pull relief for the hose drum is disassembled.

► Insert the floodlight **1** in position **P1** in the retainer **2** on the telescopic boom.
► Secure the floodlight **1** with the retaining element **3**.

Result:
- The floodlight **1** is assembled.

LWE/LTR 1100-009/25105-02-02/en

copyright © Liebherr-Werk Ehingen GmbH 2023

2.2 Assembling the floodlight with pull relief

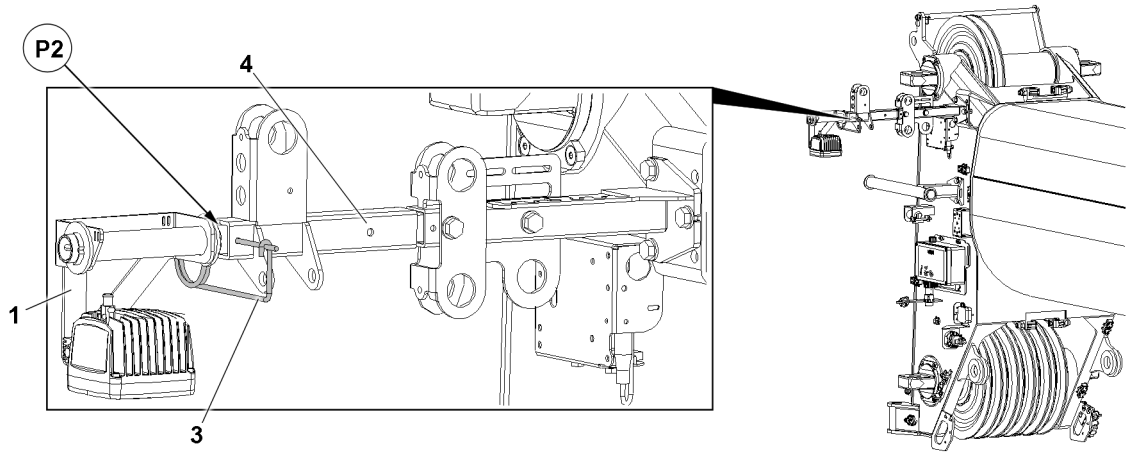

Fig.152469: Floodlight assembly on the pull relief

Make sure that the following prerequisites are met:
- The telescopic boom is luffed down to the 0° position.
- The pull relief **4** for the hose drum is assembled.

► Insert the floodlight **1** in position **P2** in the pull relief **4** for the hose drum.
► Secure the floodlight **1** with the retaining element **3**.

Result:
– The floodlight **1** is assembled.

3 Electrical connection

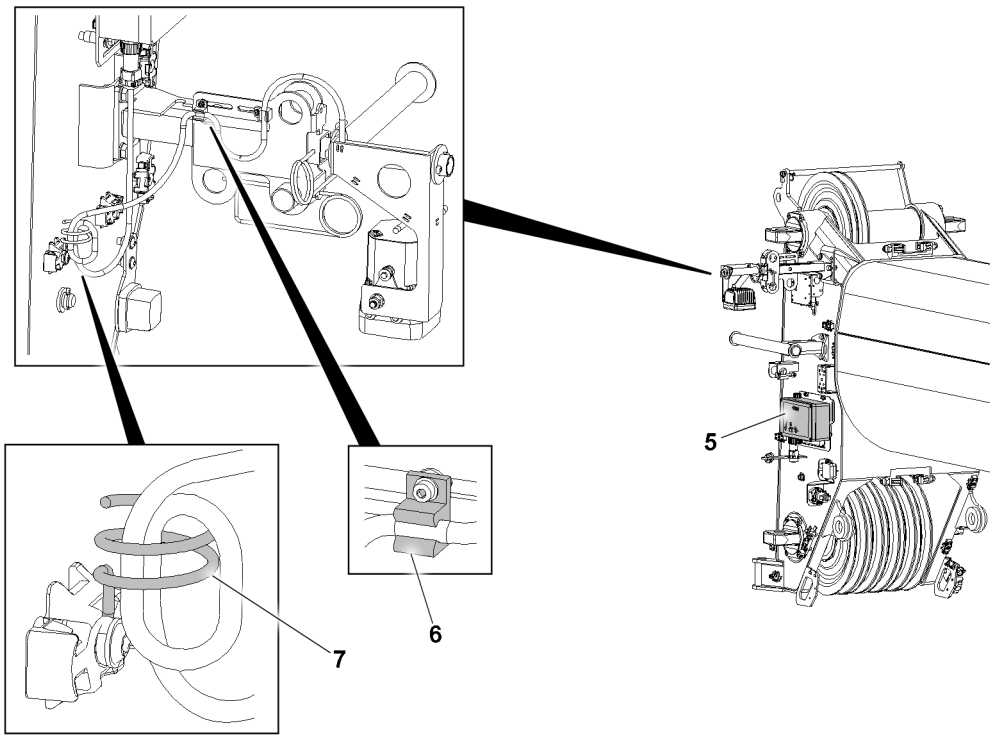

Fig.152471: Establishing the electrical connection

LWE/LTR 1100-009/25105-02-02/en

copyright © Liebherr-Werk Ehingen GmbH 2023

3.1 Establishing the electrical connection

The establishment of the electrical connection is described based on an example.

The specifications in the supplied Electric wiring diagram are applicable for the connection.

Make sure that the following prerequisites are met:
- The electrical connection has been carefully and clearly established.
- Secure the electrical connection with cable clips **6** and, if necessary, using a cable retainer **7**.

► Establish the electrical connection from the floodlight to the terminal box **5**.

3.2 Checking the electrical connections

► Check the function of the floodlight.

4 Disassembling the floodlight

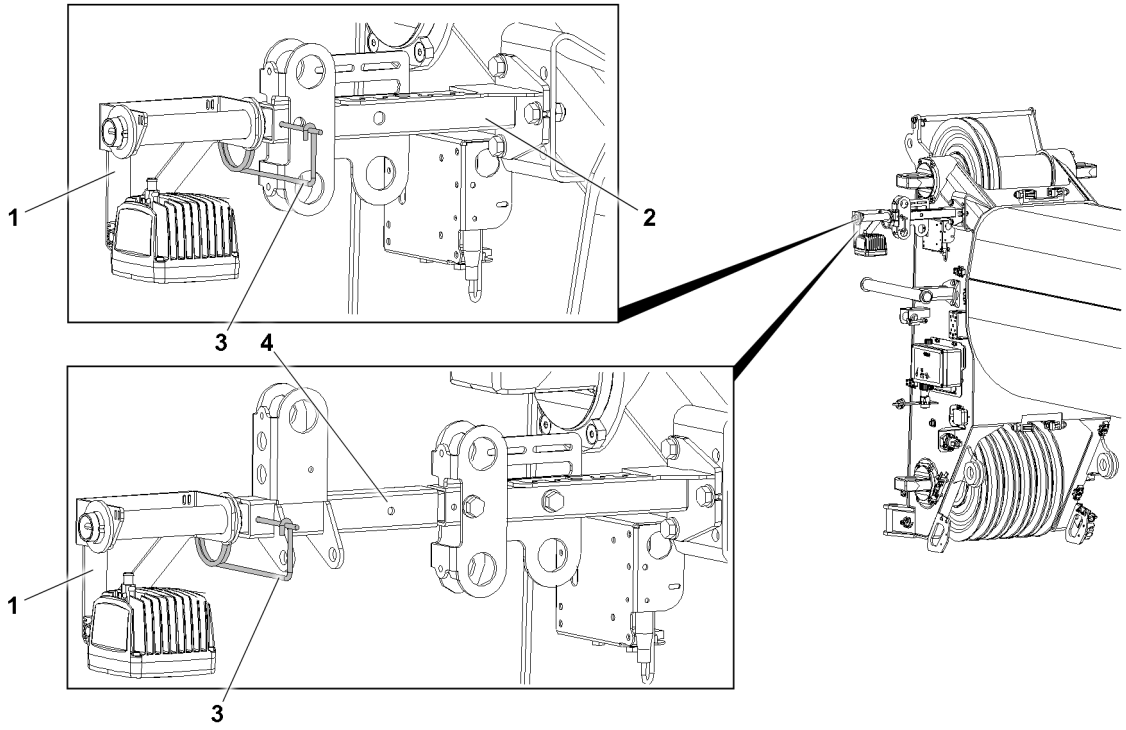

Fig.152470: Floodlight disassembly

Make sure that the following prerequisites are met:
- The telescopic boom is luffed down to the 0° position.
- The floodlight is assembled.

► Disconnect the electrical connection.
► Release the floodlight **1**: Remove the retaining element **3** and set it aside.
► Remove the floodlight **1** from the retainer **2** or the pull relief **4**.

LWE/LTR 1100-009/25105-02-02/en

copyright © Liebherr-Werk Ehingen GmbH 2023

6 Auxiliary equipment

LWE/LTR 1100-009/25105-02-02/en

copyright © Liebherr-Werk Ehingen GmbH 2023

LWE/LTR 1100-009/25105-02-02/en

copyright © Liebherr-Werk Ehingen GmbH 2023

6.02 Crane operator's cab heater / engine preheating / air conditioning system

1	Climate control systems	3
2	Safety instructions	3
3	Climate control	4
4	Air distribution	12
5	Defrosting the window	13
6	Air supply	14
7	Operating the timer	14
8	Air heater*	16
9	Checking the fill level of the fuel container*	17

LWE/LTR 1100-009/25105-02-02/en

copyright © Liebherr-Werk Ehingen GmbH 2023

LWE/LTR 1100-009/25105-02-02/en

Fig.195219

copyright © Liebherr-Werk Ehingen GmbH 2023

1 Climate control systems

The climate control system consists of multiple components:
- Crane superstructure auxiliary heater for the climate control of the crane cab
- Crane superstructure climate control system* for the climate control of the crane cab

Note
- ► The coolant circuit of the crane engine does not have any influence on crane cab heating.
- ► Engine preheating* is controlled via the climate control system of the driver's cab, see the Crane operating instructions, chapter 6.01.

1.1 Operating instructions

The climate control system is only operational when the crane engine is running.

The auxiliary heater is operational independently of the crane engine.

It is not possible to heat the crane cab without switching on the auxiliary heater.

Cooling of the crane cab is possible in a limited manner only without the climate control system switched on.

Keep the air intake and the air filter of the climate control system free of:
- Ice
- Snow
- Contaminants
- Objects

For efficient climate control, close the windows and door of the crane cab.

2 Safety instructions

Observe the country specific regulations for the operation of climate control systems.

WARNING
Danger of accident due to bad visibility!
A window that is fogged up, icy or dirty impedes the view of the crane operator.
- ► Only drive / operate the crane with good visibility through the windows.

WARNING
Danger of poisoning and suffocation in enclosed areas!
- ► Do **not** operate the auxiliary heater in closed rooms.

WARNING
Danger of poisoning and suffocation!
After turning the auxiliary heater off, there is an after-run phase.
During the after-run phase, exhaust gases are still emitted.
- ► Ensure sufficient ventilation.

For example, there is a danger of explosion and fires in the following locations:
- Gas stations and refueling facilities.
- Locations where vapors, gases or dust can form.
- Locations with easily flammable materials or fluids.

WARNING
Danger of explosion and fires!
- ► Do **not** operate the auxiliary heater if there is a danger of explosion or fires.

LWE/LTR 1100-009/25105-02-02/en

copyright © Liebherr-Werk Ehingen GmbH 2023

Signs of a defective auxiliary heater:
- Significant smoke development
- Unusual combustion noise
- Fuel odor

NOTICE
Auxiliary heater defective!
- ► Turn the auxiliary heater off.
- ► Take the auxiliary heater out of operation: Shut off the power supply to the auxiliary heater.
- ► Before turning it on again: Have the auxiliary heater checked by authorized and trained service personnel.

NOTICE
Damage to the climate control systems!
- ► Adjust the operating fluids in time to the ambient temperatures.
- ► Comply with the maintenance intervals, see chapter 7.02.

Repair work on the climate control systems:
- ► Contact Customer Service at Liebherr-Werk Ehingen and coordinate the procedure.

NOTICE
Deep discharge of the battery!
When the crane engine is turned off, operating the auxiliary heater can discharge the batteries.
A long-term programmed turn on time for the auxiliary heater can discharge the batteries.
- ► Make sure that the battery charge is sufficient.

3 Climate control

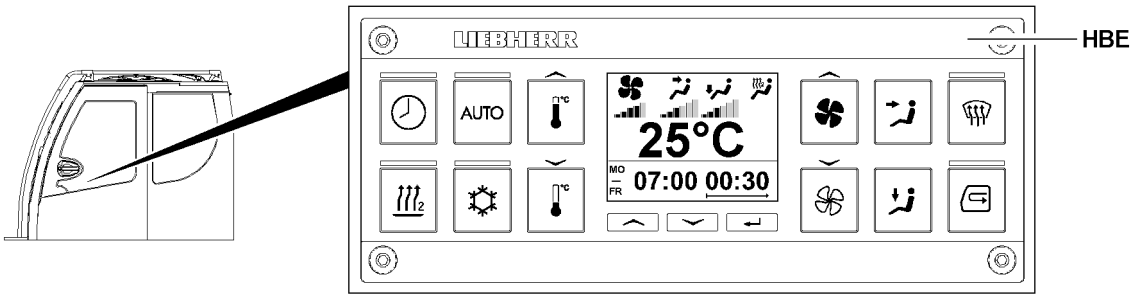

Fig.145971: Heater control unit

The climate control of the crane cab is controlled using the heater control unit **HBE**.

The climate control in the crane cab can:
- Be automatically regulated in automatic operation.
- Be manually regulated in manual operation.

LWE/LTR 1100-009/25105-02-02/en

copyright © Liebherr-Werk Ehingen GmbH 2023

3.1 Heater control unit operating elements

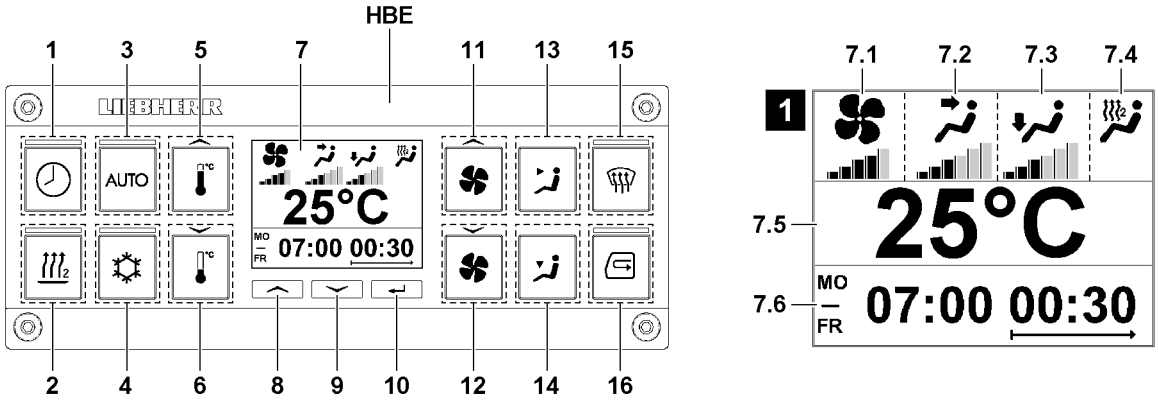

Fig.145959: Heater control unit operating elements

1 *Timer* key
- Setting the timer for auxiliary heater and turning it on / off
- The LED lights up: The timer for the auxiliary heater is turned on

2 *Auxiliary heater* key
- Control the auxiliary heater:
  - Turn the auxiliary heater on
  - Turn the auxiliary heater off
- The LED lights up: The auxiliary heater is turned on

3 *Automatic operation* key
- Switching between automatic operation and manual operation
- The LED lights up: Automatic operation is turned on, automatic control of heater settings
- LED off: Manual operation is turned on, manual adjustment of the heater settings

4 *Climate control system* key
- Control the climate control system:
  - Turn the climate control system on
  - Turn the climate control system off
- The LED lights up: The auxiliary heater is turned on / ready to operate
  Note: In automatic operation, the luminous LED signals that the climate control system is ready for operation and can be switched on / off as required using the control.

5 *Increase temperature* key

6 *Decrease temperature* key

7 Display

Display of the current settings, see illustration **1**:
- **7.1** Fan stage
- **7.2** Head area air distribution
- **7.3** Foot area air distribution
- **7.4** Heat distribution
- **7.5** Temperature
- **7.6** Setting the time

8 *Up selection* key

9 *Down selection* key

10 *Confirm entry* key

11 *Increase fan stage* key

12 *Decrease fan stage* key

13 *Head area air distribution* key
- Increase air distribution in the head area
- Note: Each key press decreases at the same time the air distribution to the foot area

LWE/LTR 1100-009/25105-02-02/en

copyright © Liebherr-Werk Ehingen GmbH 2023

14 *Foot area air distribution* key
- Increase air distribution in the foot area
- Note: Each key press decreases at the same time the air distribution to the head area

15 *Defrost window* key
- *Defrost window* function on / off
- The LED lights up: The *defrost window* function is turned on

16 *Recirculating air* key
- Recirculating air on / off
- The LED lights up: Recirculating air is turned on

3.2 Turning the heater control unit on and off

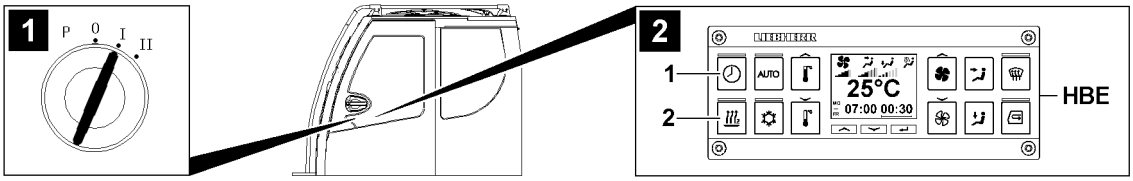

Fig.145978: Turning the heater control unit on and off

The heater control unit is turned on and ready to operate:
– With ignition turned on
– After being turned on manually with the ignition turned off

Note
At very low temperatures, the display of the heater control unit **HBE** may not display anything initially.
► When turning on the heater control unit **HBE**, wait until the display can be read.

3.2.1 Turning the heater control unit on and off via the ignition

► Turn the heater control unit on: Turn on the ignition with the ignition switch, see illustration **1**.

Result:

– The heater control unit turns on.

► Turn the heater control unit off: Turning the ignition off with the ignition switch.

Result:

– The heater control unit turns off after a short time.

3.2.2 Turning the heater control unit on and off manually

See illustration **2**:

Make sure that the following prerequisites are met:
– The ignition is off.

Turning the heater control unit on

► Press the *timer* button **1** until the heater control unit turns on.
or
Press the *auxiliary heater* button **2** until the heater control unit turns on.

Turning the heater control unit off

The heater control unit cannot be turned off directly. To increase operating safety, there are partially automated processes for turning off the heater control unit.

LWE/LTR 1100-009/25105-02-02/en

copyright © Liebherr-Werk Ehingen GmbH 2023

Note
► As long as the auxiliary heater is operating, the heater control unit will not turn off.
► When the auxiliary heater is turned off, the heater control unit turns off automatically after a short period of time.

When the auxiliary heater is turned off:
► Do not press any button on the heater control unit for at least ten seconds.

Result:

– The heater control unit turns off after a short time.

When the auxiliary heater is still operating:
► The separate turning off of the heater control unit is not necessary and also not possible.

Result:

– As soon as the auxiliary heater is turned off by the automatic control, also the heater control unit turns off automatically after a short period of time.

When the auxiliary heater is still operating, but should be turned off:
► See section „Turning the auxiliary heater on and off“.

Result:

– As soon as the auxiliary heater is turned off, the heater control unit turns off automatically after a short period of time.

3.3 Switching between automatic operation and manual operation

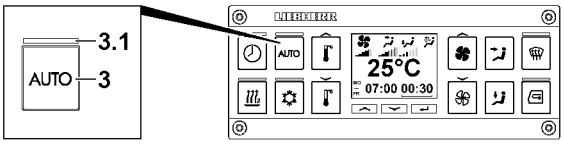

Fig.145964: Switching between automatic operation and manual operation

3.3.1 Turning on automatic operation

Make sure that the following prerequisites are met:
– The LED **3.1** is off.

► Press the *automatic operation* key **3**.

Result:

– The LED **3.1** lights up: The automatic operation is turned on.
– The heater settings are automatically adjusted.

Note
In automatic operation:
► If the heater settings are changed extensively by hand, the climate control switches to manual operation.

3.3.2 Turning manual operation on

Make sure that the following prerequisites are met:
– The LED **3.1** lights up.

► Press the *automatic operation* key **3**.

Result:

– The LED **3.1** turns off: Manual operation is turned on.
– The heater settings must be adjusted manually.

copyright © Liebherr-Werk Ehingen GmbH 2023

3.4 Automatic operation

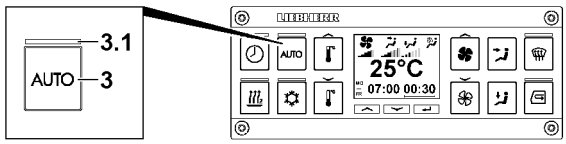

*Fig.145964: Automatic operation - the LED **3.1** is on*

Automatic operation is only turned on when the LED **3.1** over the *automatic operation* key **3** lights up

Automatic operation automatically regulates the climate control to reach the set temperature and keep it constant.

The following settings are automatically adjusted:
- Warm air supply
- Fan stage
- Air supply
- Auxiliary heater
- Climate control system
  Note: The crane engine must be running to operate the climate control system.

3.4.1 Adjusting the temperature

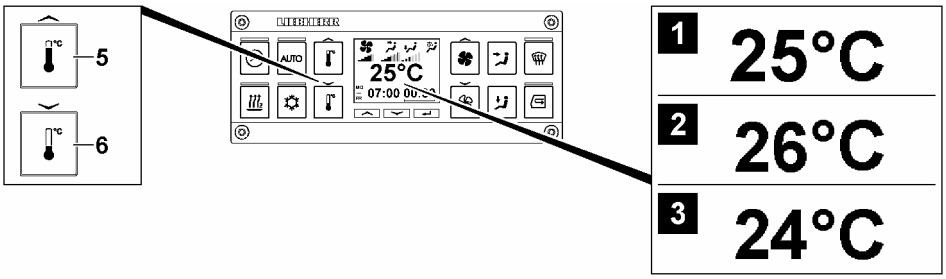

Fig.145967: Adjusting the temperature

The target temperature of *25°C* is used as the initial setting, see illustration **1**.

To increase the temperature:
► Press the *increase temperature* key **5**.

Result:

– The set value increases, see illustration **2**.

To decrease the temperature setting:
► Press the *decrease temperature* key **6**.

Result:

– The set value decreases, see illustration **3**.

Problem remedy
Is the cooling capacity of the climate control system insufficient?
The recirculated air filter, fresh air filter or condenser could be dirty.
► Check the filter for impurities. If necessary, clean or replace.
► Check the condenser for impurities and clean, if necessary.

When all these measures do not help:
► Contact the Service Dept. at Liebherr-Werk Ehingen.

LWE/LTR 1100-009/25105-02-02/en

copyright © Liebherr-Werk Ehingen GmbH 2023

3.5 Manual operation

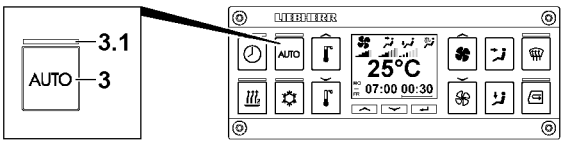

*Fig.145964: Manual operation - the LED **3.1** is off*

Manual operation is only turned on when the LED **3.1** over the *automatic operation* key **3** does not light up.

In manual operation all settings must be carried out manually.

3.5.1 Turning the auxiliary heater on and off

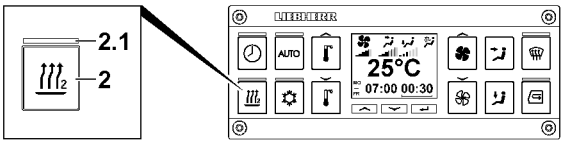

Fig.145963: Turning the auxiliary heater on and off

Note
Protection against auxiliary heater overheating
► If the temperature of the heat carrier is too high, the auxiliary heater turns off automatically.

Turning the auxiliary heater on

Note
► If the ignition is turned off while the auxiliary heater is turned on, the auxiliary heater continues to run with an automatic shut off delay for up to 30 minutes.
► If the ignition is turned on while the auxiliary heater is turned off, the auxiliary heater runs for 30 minutes.
► If the auxiliary heater must be turned on at a certain time when the ignition is turned off, the timer must be programmed, see section „Operating the timer“.

Make sure that the following prerequisites are met:
– The LED **2.1** is off.
– Sufficient fuel for the auxiliary heater has been added.
– With the auxiliary heater turned on, sufficient ventilation is ensured.
– With the auxiliary heater turned on, the crane is located in an area where operation of the auxiliary heater is permitted.

► Press the *auxiliary heater* key **2**.

Result:

– The LED **2.1** lights up: The auxiliary heater is turned on.

Turning the auxiliary heater off

Make sure that the following prerequisites are met:
– The LED **2.1** lights up.

► Press the *auxiliary heater* key **2**.

Result:

– The LED **2.1** turns off: The auxiliary heater is turned off.

LWE/LTR 1100-009/25105-02-02/en

copyright © Liebherr-Werk Ehingen GmbH 2023

3.5.2 Turning the climate control system on and off

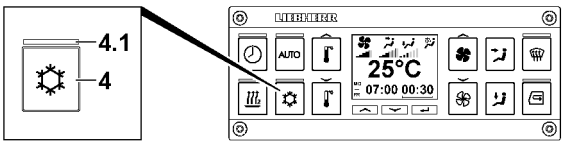

Fig.145965: Turning the climate control system on and off

The climate control system functions only when the crane engine is running.

The climate control system is responsible for cooling and the dehumidification of the air in the crane cab.

The humidity is reduced considerably when the climate control system is switched on. This counteracts the fogging up of the windows.

The maximum cooling output is reached when:
- The air supply is switched to recirculating air.
- The fan stage is set to maximum output.
- The temperature stage is set to the lowest value.
- All outlet nozzles in the crane cab are open.
- The door and windows of the crane cab are closed.

Note
Protection against condenser freezing
► If the outside temperature is too low, the climate control system turns off automatically.

Turning the climate control system on

Make sure that the following prerequisites are met:
- The crane engine is running.
- The LED **4.1** is off.

► Press the *climate control system* key **4**.

Result:

– The LED **4.1** lights up: The climate control system is turned on.

Problem remedy
Is the cooling capacity of the climate control system insufficient?
The recirculated air filter, fresh air filter or condenser could be dirty.
► Check the filter for impurities. If necessary, clean or replace.
► Check the condenser for impurities and clean, if necessary.

When all these measures do not help:
► Contact the Service Dept. at Liebherr-Werk Ehingen.

Turning the climate control system off

Make sure that the following prerequisites are met:
- The LED **4.1** lights up.

► Press the *climate control system* key **4**.

Result:

– The LED **4.1** turns off: The climate control system is turned off.

LWE/LTR 1100-009/25105-02-02/en

copyright © Liebherr-Werk Ehingen GmbH 2023

3.5.3 Adjusting the temperature

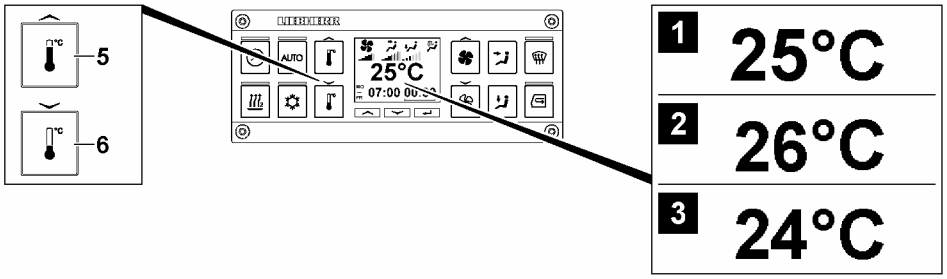

Fig.145967: Adjusting the temperature

Make sure that the following prerequisites are met:
- Turn the auxiliary heater on to heat the crane cab.
- Turn the climate control system on to cool the crane cab.

The target temperature of *25°C* is used as the initial setting, see illustration **1**.

To increase the temperature:
► Press the *increase temperature* key **5**.

Result:

– The set value increases, see illustration **2**.

To decrease the temperature setting:
► Press the *decrease temperature* key **6**.

Result:

– The set value decreases, see illustration **3**.

3.5.4 Adjusting the fan stage

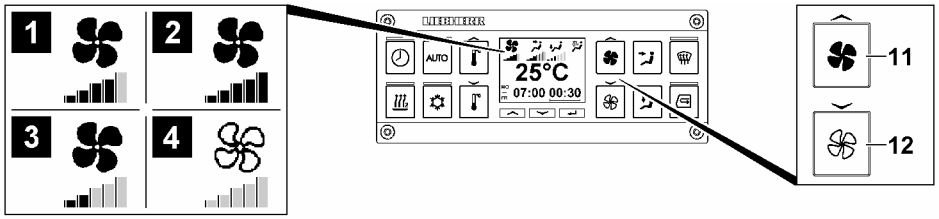

Fig.145969: Adjusting the fan stage in manual operation

Fan stage *four* is used as the initial setting, see illustration **1**.

To increase the fan stage:
► Press the *increase fan stage* key **11**.

Result:

– Fan stage *five* is displayed, see illustration **2**.

To decrease the fan stage:
► Press the *decrease fan stage* key **12**.

Result:

– Fan stage *three* is displayed, see illustration **3**.

Note
► When the fan is switched off, the fan icon is displayed not filled out, see illustration **4**.

copyright © Liebherr-Werk Ehingen GmbH 2023

4 Air distribution

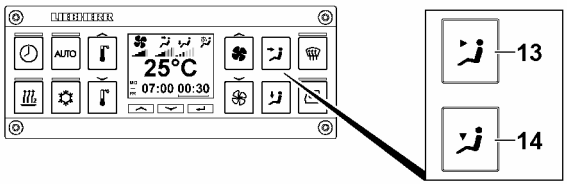

Fig.145974: Air distribution

– **13** *Head area air distribution* key
  - Increase air distribution in the head area
  - Note: Each key press decreases at the same time the air distribution to the foot area
– **14** *Foot area air distribution* key
  - Increase air distribution in the foot area
  - Note: Each key press decreases at the same time the air distribution to the head area

4.1 Increasing air distribution in the head area

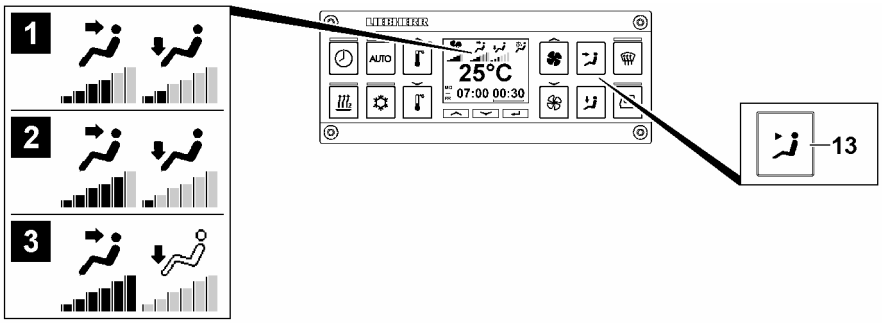

Fig.145968: Increasing air distribution in the head area

Level *four* in the head area is used as the initial setting, see illustration **1**.

To increase the level in the head area:
► Press the *Head area air distribution* key **13**.

Result:

– Level *five* is displayed in the head area, see illustration **2**.
– The level in the foot area is decreased accordingly.

Note
At the highest level in the head area, the air distribution to the foot area is turned off.
► When the air distribution to the foot area is turned off, the icon is displayed not filled out, see illustration **3**.

LWE/LTR 1100-009/25105-02-02/en

copyright © Liebherr-Werk Ehingen GmbH 2023

4.2 Increasing air distribution in the foot area

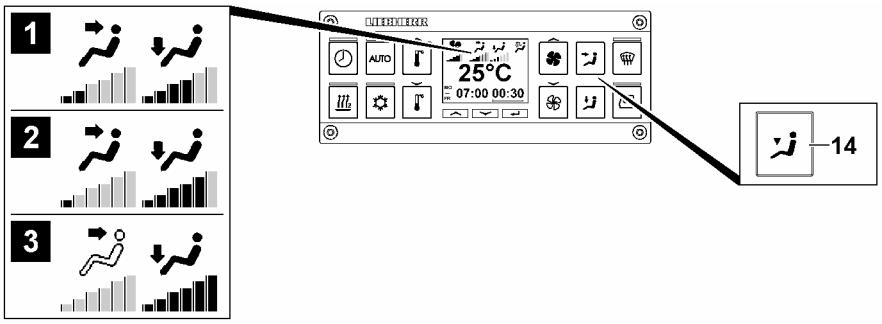

Fig.145972: Increasing air distribution in the foot area

Level *four* in the foot area is used as the initial setting, see illustration **1**.

To increase the level in the foot area:

► Press the *Foot area air distribution* key **14**.

Result:

– Level *five* is displayed in the foot area, see illustration **2**.
– The level in the head area is decreased accordingly.

Note

At the highest level in the foot area, the air distribution to the head area is turned off.

► When the air distribution to the head area is turned off, the icon is displayed not filled out, see illustration **3**.

5 Defrosting the window

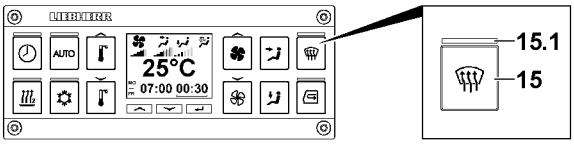

Fig.145973: Turning the defrost window function on / off

5.1 Turning the *defrost window* function on

Make sure that the following prerequisites are met:

– The outlet nozzles in the A-pillars and instrument panel are open and directed evenly towards the front window.
– The LED **15.1** is off.

► Press the *defrost window* key **15**.

Result:

– The LED **15.1** lights up: The *defrost window* function is turned on.

5.2 Turning the *defrost window* function off

Make sure that the following prerequisites are met:

– The LED **15.1** lights up.

► Press the *defrost window* key **15**.

copyright © Liebherr-Werk Ehingen GmbH 2023

Result:

– The LED **15.1** turns off: The *defrost window* function is turned off.

6 Air supply

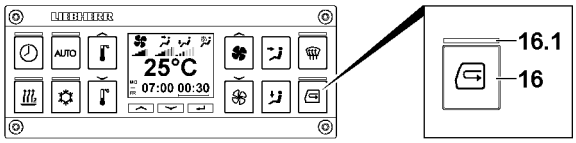

Fig.145970: Air supply

When recirculating air is turned on, the air is circulated in the crane cab.

When recirculating air is turned off, fresh air is introduced from the outside.

6.1 Turning recirculating air on

Make sure that the following prerequisites are met:
– The LED **16.1** is off.

► Press the *recirculating air* key **16**.

Result:

– The LED **16.1** lights up: Recirculating air is turned on.

6.2 Turning recirculating air off

Make sure that the following prerequisites are met:
– The LED **16.1** lights up.

► Press the *recirculating air* key **16**.

Result:

– The LED **16.1** turns off: Recirculating air is turned off.

7 Operating the timer

The auxiliary heater can be turned on at any time using the timer.

WARNING
Danger of suffocation and explosion!

Only when the auxiliary heater is turned on if sufficient ventilation is ensured and no danger of explosion exists:
► Activate the timer.

Note
► Pay attention to a sufficient fuel reserve for the auxiliary heater. See the section „Checking the fill level of the fuel container“.
► Add fuel, see chapter 7.05.

7.1 Programming the timer

The following applies when the timer for the auxiliary heater turns on:
– The fan stage is generally set to 30 %.

LWE/LTR 1100-009/25105-02-02/en

copyright © Liebherr-Werk Ehingen GmbH 2023

– The previously set air supply and air distribution is taken over.
– Operation of the auxiliary heater ends after the set time. Automatic start does not take place after another 7 days.

Make sure that the following prerequisites are met:
– At the programmed start time for the timer, the ignition is turned off.
– Sufficient fuel for the auxiliary heater has been added.
– With the auxiliary heater turned on, sufficient ventilation is ensured.
– With the auxiliary heater turned on, the crane is located in an area where operation of the auxiliary heater is permitted.

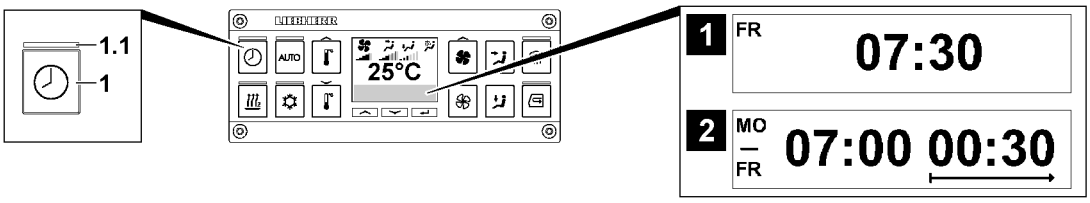

Fig.145976: Timer turned on / off

– When the timer is turned off, the system time appears on the display, see illustration **1**.
  The system time includes the day of the week and time.
  The system time is the determining factor for the timer.
– When the timer is turned on, the *start time and running time* appears on the display, see illustration **2**
  The start time includes the day of the week / day of the week and time.

If the LED **1.1** does not light up:
► Press the *timer* key **1**.

Result:

– The LED **1.1** lights up: The timer is turned on.
– The *start time and running time* display appears, see illustration **2**.

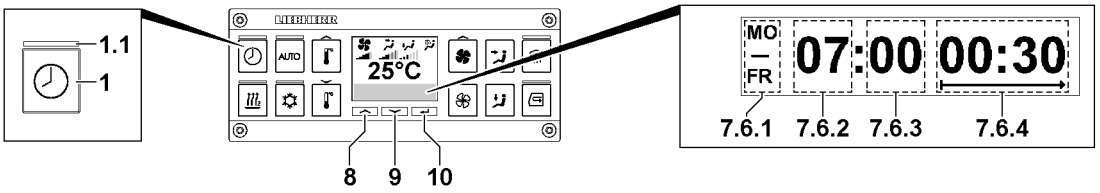

Fig.145977: Programming the timer

If the LED **1.1** lights up:
► Press the *timer* key **1** for approx. three seconds.

Result:

– The turn on day **7.6.1** blinks.

The following can be set as the turn on day **7.6.1**:
– Single day of the week
– Daily from Monday to Friday
– Daily from Monday to Sunday

When the turn on day **7.6.1** blinks:
► Set the turn on day **7.6.1**: Press the *up selection* key **8** or the *down selection* key **9**. If the key is pressed longer, it is increased / decreased automatically.
► Accept the turn on day **7.6.1**: Press the *confirm entry* key **10**.

Result:

– The turn on day **7.6.1** is set.
– The turn on time*hour* **7.6.2** blinks.

LWE/LTR 1100-009/25105-02-02/en

copyright © Liebherr-Werk Ehingen GmbH 2023

When the turn on time *hour* **7.6.2** blinks:
► Set the turn on time *hour* **7.6.2**: Press the *up selection* key **8** or the *down selection* key **9**. If the key is pressed longer, it is increased / decreased automatically.
► Accept the turn on time*hour* **7.6.2**: Press the *confirm entry* key **10**.

Result:

– The turn on time *hour* **7.6.2** is set.
– The turn on time*minute* **7.6.3** blinks.

When the turn on time *minute* **7.6.3** blinks:
► Set the turn on time *minute* **7.6.3**: Press the *up selection* key **8** or the *down selection* key **9**. If the key is pressed longer, it is increased / decreased automatically.
► Accept the turn on time*minute* **7.6.3**: Press the *confirm entry* key **10**.

Result:

– The turn on time *minute* **7.6.3** is set.
– The turn on duration **7.6.4** blinks.

When the turn on duration **7.6.4** blinks:
► Set the turn on duration **7.6.4**: Press the *up selection* key **8** or the *down selection* key **9**. If the key is pressed longer, it is increased / decreased automatically.
► Accept the turn on duration **7.6.4**: Press the *confirm entry* key **10**.

Result:

– The turn on duration **7.6.4** is set.

Ending timer programming:
► Press the *confirm entry* key **10**

Note
► In the case of cranes with engine preheating, the heat distribution must then be checked / set, see section „Setting the auxiliary heater heat distribution“.
► After programming the timer, the set heat distribution will be displayed briefly.
► When the ignition is turned off and the auxiliary heater is not activated, the heat distribution is displayed permanently.

8 Air heater*

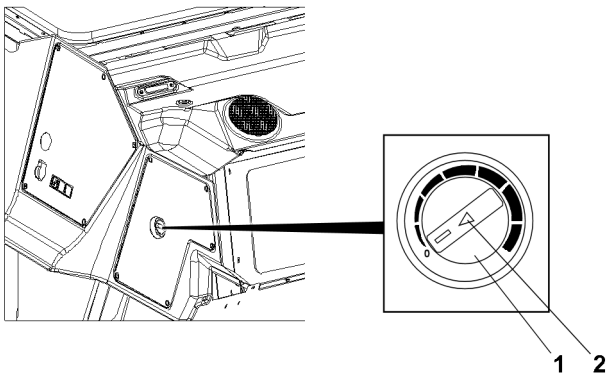

*Fig.152187: Air heater**

8.1 Turning the air heater* on

For description of the air heater*, see the documentation from the manufacturer.

LWE/LTR 1100-009/25105-02-02/en

copyright © Liebherr-Werk Ehingen GmbH 2023

► Turn the rotary switch **1** to the desired temperature.

Result:

– The LED **2** lights up: The *heating* function is turned on.

8.2 Turning the air heater* off

► Set the rotary switch **1** to „0“.

Result:

– The LED **2** turns off: The *heating* function is turned off.

9 Checking the fill level of the fuel container*

The position and refueling of the fuel tank is described in the maintenance guidelines.

► Make sure that before operating the auxiliary heater enough fuel is available.

If fuel must be added:

► Only use permissible fuel.

LWE/LTR 1100-009/25105-02-02/en

copyright © Liebherr-Werk Ehingen GmbH 2023

Empty page!

LWE/LTR 1100-009/25105-02-02/en

copyright © Liebherr-Werk Ehingen GmbH 2023

6.25 Emergency control

1	Crane control emergency control	2
2	Preparing for emergency control	7
3	Controlling crane movements via master switches: Preselecting the crane movements for the master switch	13
4	Carrying out the crane movement	21
5	Ending emergency control	35

LWE/LTR 1100-009/25105-02-02/en

copyright © Liebherr-Werk Ehingen GmbH 2023

1 Crane control emergency control

WARNING
Intended use of the crane!
- ► The intended use of the crane is **lifting loads**.
- ► **Lifting personnel** is **not** considered to be intended use of the crane.
- ► The **national laws, regulations and standards** for **lifting personnel** must be adhered to.

To bring persons in the personnel lifting device into a safe position in case the crane hydraulics, the crane electrics or the crane engine on the crane fails, a device for the emergency control of the crane is installed on the crane superstructure.

WARNING
The crane can topple over during emergency control!
All movements that change the center of gravity (luffing / turning / telescoping / ballast adjustment) can cause the crane to topple over, also without a load, in or against the working direction.
- ► Determine the safe movement area using the LICCON job planner.

or:
- ► Move the crane to a safe working area: Determine the load charts according the least extended sliding beam.
- ► The emergency control and especially luffing down the boom may only be carried out according to the specifications in the load charts or the erection / take-down charts.

or:
- ► Contact Liebherr Customer Service.
- ► Increased danger on the variable support, as in this case a working range cannot be determined using the LICCON job planner.

WARNING
Increased danger of accident during emergency control of the crane!
In the case of emergency control, the crane movements are no longer monitored by the LICCON overload protection.
- ► Observe all notes and danger notes.
- ► The emergency control may only be carried out by trained persons.
- ► The operator must find a position in advance that he can approach safely during the emergency control, in order to set down the people in the personnel lifting device.
- ► A shut-off by the LICCON overload protection may not be circumvented with an emergency control.
- ► If normal „crane operation“ is possible, then the emergency control may not be activated.
- ► Only one crane movement after the other may be carried out.
- ► All crane movements must be carried out with extreme caution and slowly.

WARNING
Sequence of crane movements!
The „lift / lower the hook“ crane movement is preferential to all other crane movements when carrying out the emergency control.
- ► Carry out other crane movements only when the persons in the personnel lifting device can **not** be brought to safety directly using the crane movement „lift / lower the hook“ crane movement.

Note
Identification of emergency control plug connections
- ► Plug connections, which must be established for the emergency control, always have a „white“ on „white“ housing color.

LWE/LTR 1100-009/25105-02-02/en

copyright © Liebherr-Werk Ehingen GmbH 2023

Empty page!

LWE/LTR 1100-009/25105-02-02/en

copyright © Liebherr-Werk Ehingen GmbH 2023

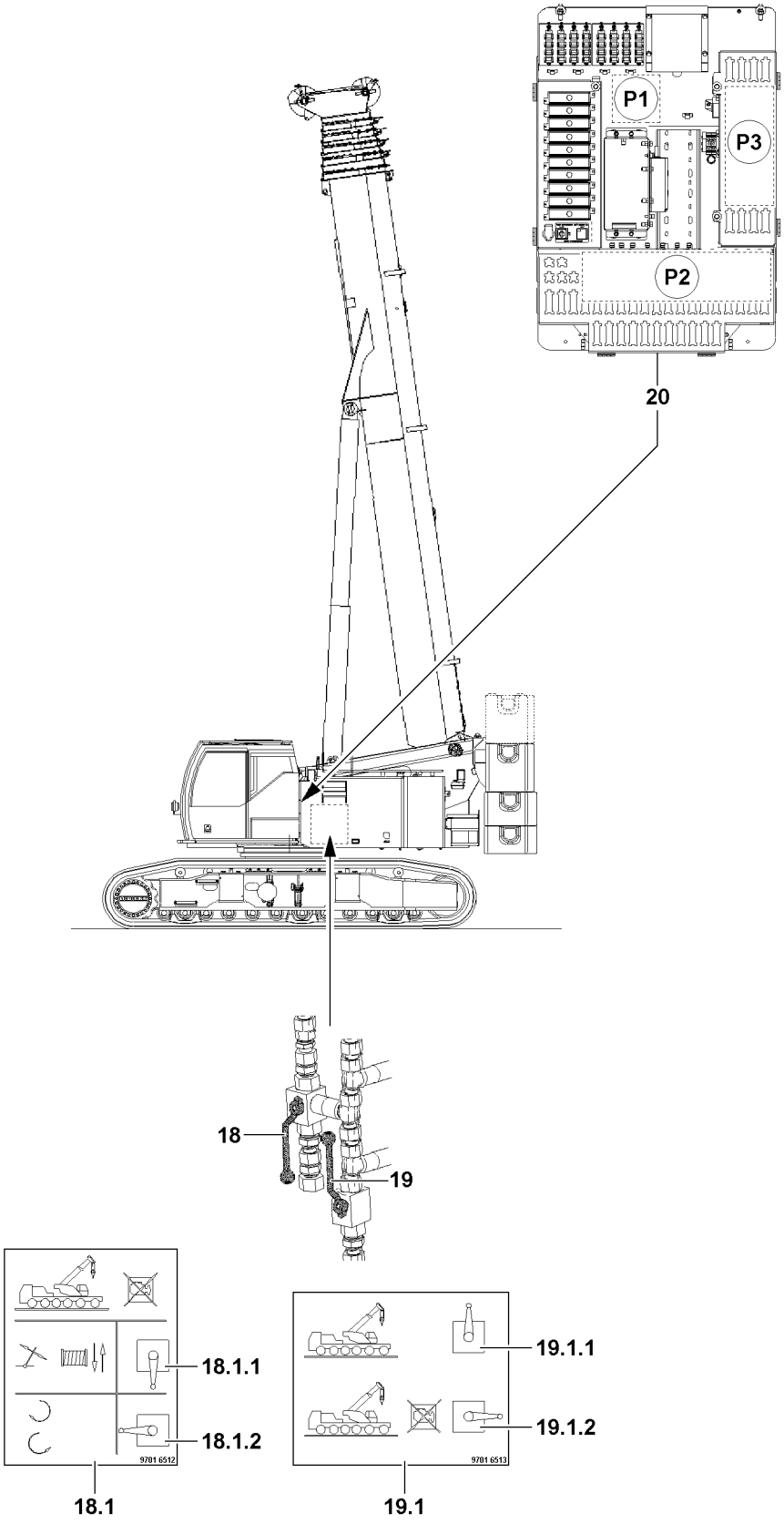

LWE/LTR 1100-009/25105-02-02/en

Fig.119856

copyright © Liebherr-Werk Ehingen GmbH 2023

1.1 Illustrations

Note

► The illustrations of the crane model in this chapter are examples and generally valid. The operation and location of the elements for emergency control are accordingly.

1.2 Overview of the emergency control plug connections

Note

► The control cabinet **20** contains the plug connections **P1** in position, position **P2** and position **P3**.

Plug connections in position **P1**

Plug connection -X487
- Plug -X487.B: black
- Plug location -X487: white

Plug connections in position **P2**

Plug connection -X467
- Plug-X467.B: white
- Plug location -X467: black

Plug connection -XNOT1
- Plug location -XNOT1: white

Plug connection -XNOT2
- Plug -XNOT2.B: black
- Plug location -XNOT2: white

Plug connection -XNOT4
- Plug -XNOT4.B: black
- Plug location -XNOT4: white

Plug connection -XNOT6
- Plug -XNOT6.B: black
- Plug location -XNOT6: white

Plug connections in position **P3**

Plug connection -X412
- Plug-X412.B: white
- Plug location -X412: black

Plug connection -X416
- Plug-X416.B: white
- Plug location -X416: black

1.3 Overview of the emergency control ball valves

18 Ball valve
- Change over emergency control movement
- **18.1** Sign
  “Down” position **18.1.1**: HOIST WINCH / LUFFING
  “To the side” position **18.1.2**: SLEWING GEAR

19 Ball valve
- Switch the hydraulic over
- **19.1** Sign
  “Up” position **19.1.1**: NORMAL OPERATION
  “To the side” position **19.1.2**: EMERGENCY CONTROL

LWE/LTR 1100-009/25105-02-02/en

copyright © Liebherr-Werk Ehingen GmbH 2023

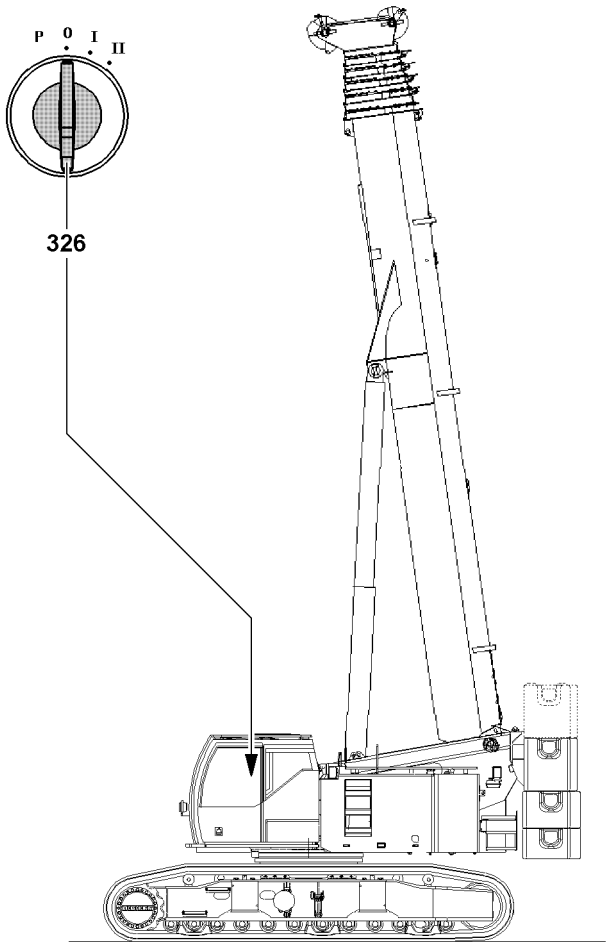

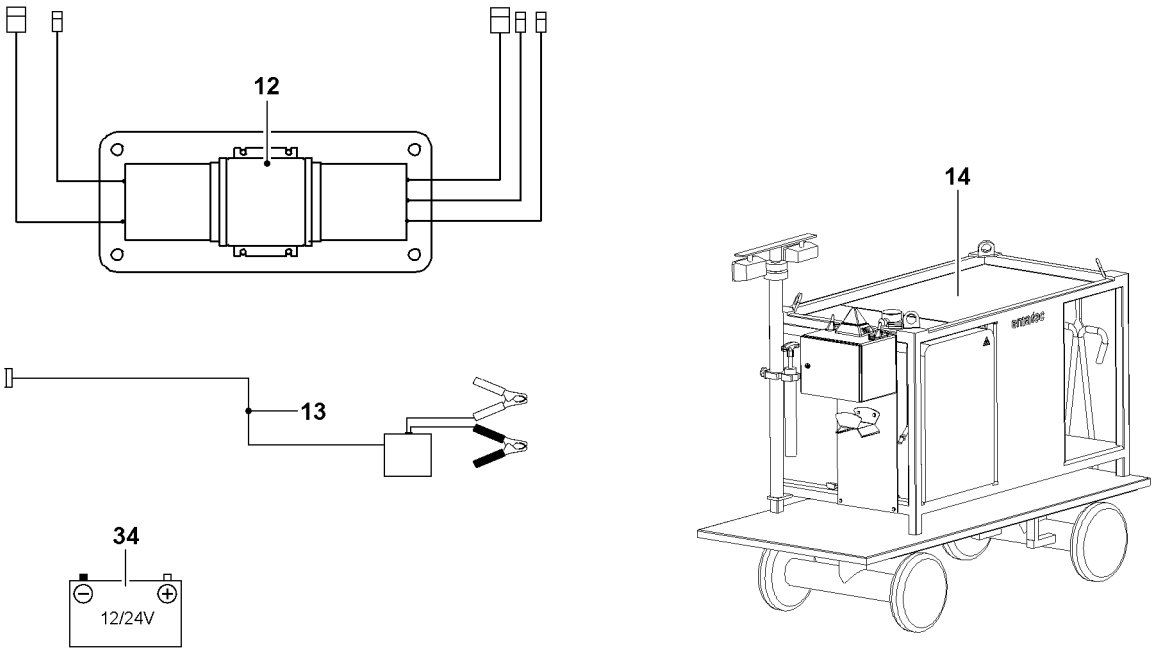

Fig.152532

LWE/LTR 1100-009/25105-02-02/en

copyright © Liebherr-Werk Ehingen GmbH 2023

2 Preparing for emergency control

Make sure that the following prerequisites are met:
- The crane function is no longer possible.
- The ignition switch **326** is in position 0.
- The hydraulic transformer **12** is available.
- The supply cable **13** is available.
- The hydraulic aggregate **14** is available.
- An external electrical supply source **34** (12V/24V - for example through a truck) is available.

WARNING
Danger of falling!
When working on the crane, operating personnel must be secured with appropriate aids to prevent them from falling.
If this is not observed, operating personnel could fall and suffer life-threatening or fatal injuries.
- ► The operating personnel must move on the crane always cautiously and anticipatory.
- ► All work at a height, when there is a danger of falling, must be carried out with suitable aids.
- ► If fall protection equipment is available, then it must be used.
- ► If aids are not available and work cannot be carried out from the ground, then assembly personnel must secure themselves with an approved fall arrest system to prevent falling.

WARNING
Insufficient hydraulic supply!
- ► Hydraulic aggregate **14** and hydraulic transformer **12** must be approved by Liebherr-Werk Ehingen for the emergency control.

NOTICE
Damage to components!
If covers are removed or control cabinets are opened, moisture and foreign particles can enter and damage components.
- ► If covers are removed or control cabinets are opened, the components must be protected from infiltration of moisture and foreign particles.

LWE/LTR 1100-009/25105-02-02/en

copyright © Liebherr-Werk Ehingen GmbH 2023

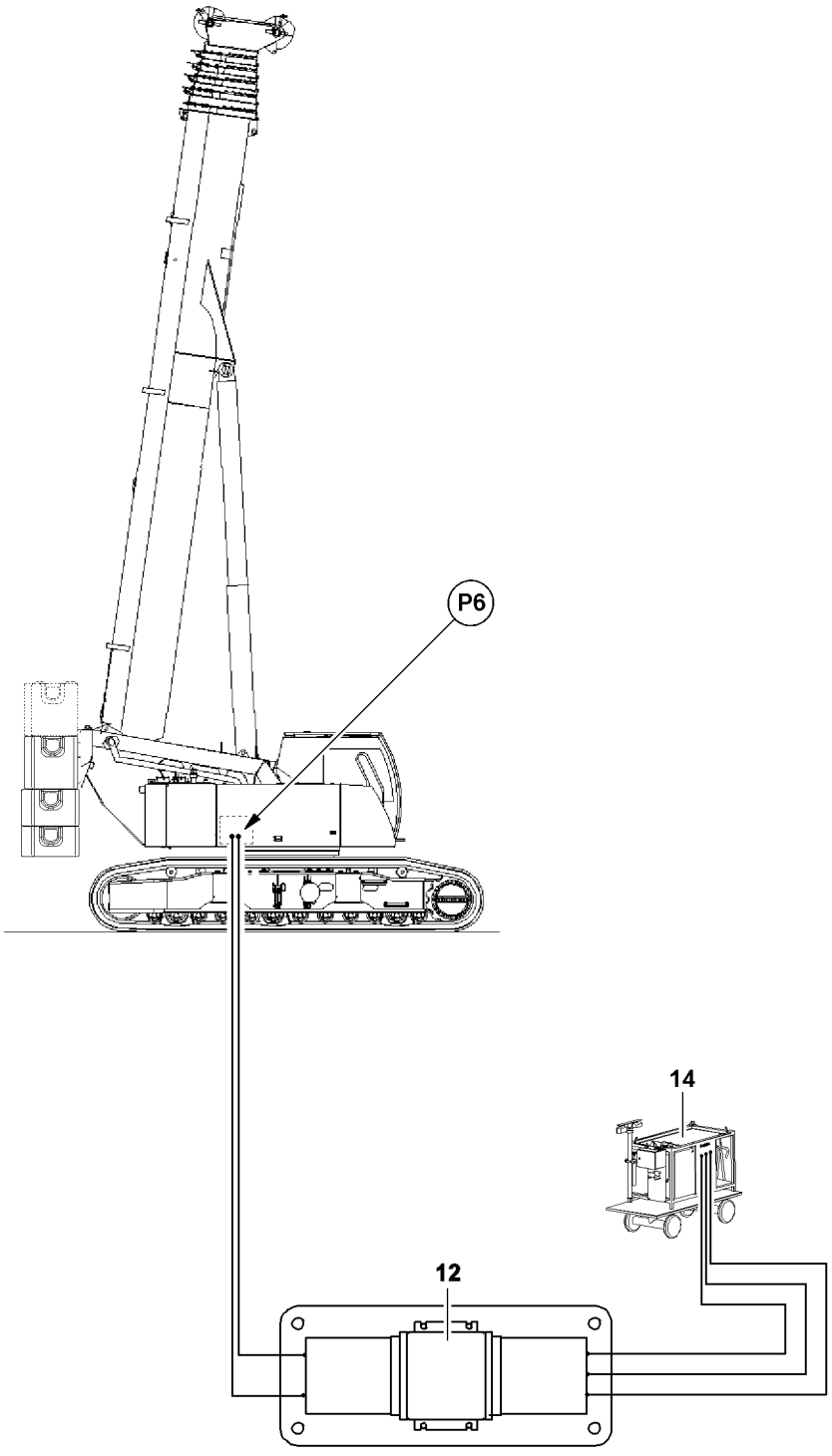

LWE/LTR 1100-009/25105-02-02/en

Fig.119858

copyright © Liebherr-Werk Ehingen GmbH 2023

2.1 Preparing the external hydraulic supply (auxiliary aggregate)

To be able to establish the hydraulic supply with the external auxiliary aggregate **14**, the respective hydraulic connections must be established.

WARNING
Pressure in the hydraulic lines!
If the pressure in the hydraulic system is not released before connecting / releasing the hydraulic lines, hydraulic oil can escape with high pressure.
Personnel can be severely injured or killed.
► Release the pressure in the hydraulic system before connecting / disconnecting. Interrupt the hydraulic pressure supply and wait for a short time.
► The auxiliary aggregate **14** and crane engine must be turned off.

WARNING
Loss of pressure or leakage!
Any quick couplings which are not connected completely (especially return lines) can release by themselves.
Dirt on the sealing surfaces causes loss of pressure or leakage.
Severe accidents due to faulty functions can result.
Personnel can be severely injured or killed.
► Check that the quick couplings have been properly connected before using the emergency control.
► Always keep the sealing surfaces clean.

NOTICE
Incorrect operation of the auxiliary aggregate!
► Observe the separate operating instructions for the auxiliary aggregate **14**.

Note
► The different diameters of the hydraulic lines prevent incorrect connection.

Make sure that the following prerequisites are met:
– The auxiliary aggregate **14** is turned off.
– The crane engine is turned off.

► Remove the caps from the hydraulic connections.
► Establish the hydraulic connections from the hydraulic transformer **12** to the auxiliary aggregate **14**.
► Point **P6**: Establish the hydraulic connections from the auxiliary transformer **12** to the crane superstructure.

Result:

– The hydraulic connections have been established.

LWE/LTR 1100-009/25105-02-02/en

copyright © Liebherr-Werk Ehingen GmbH 2023

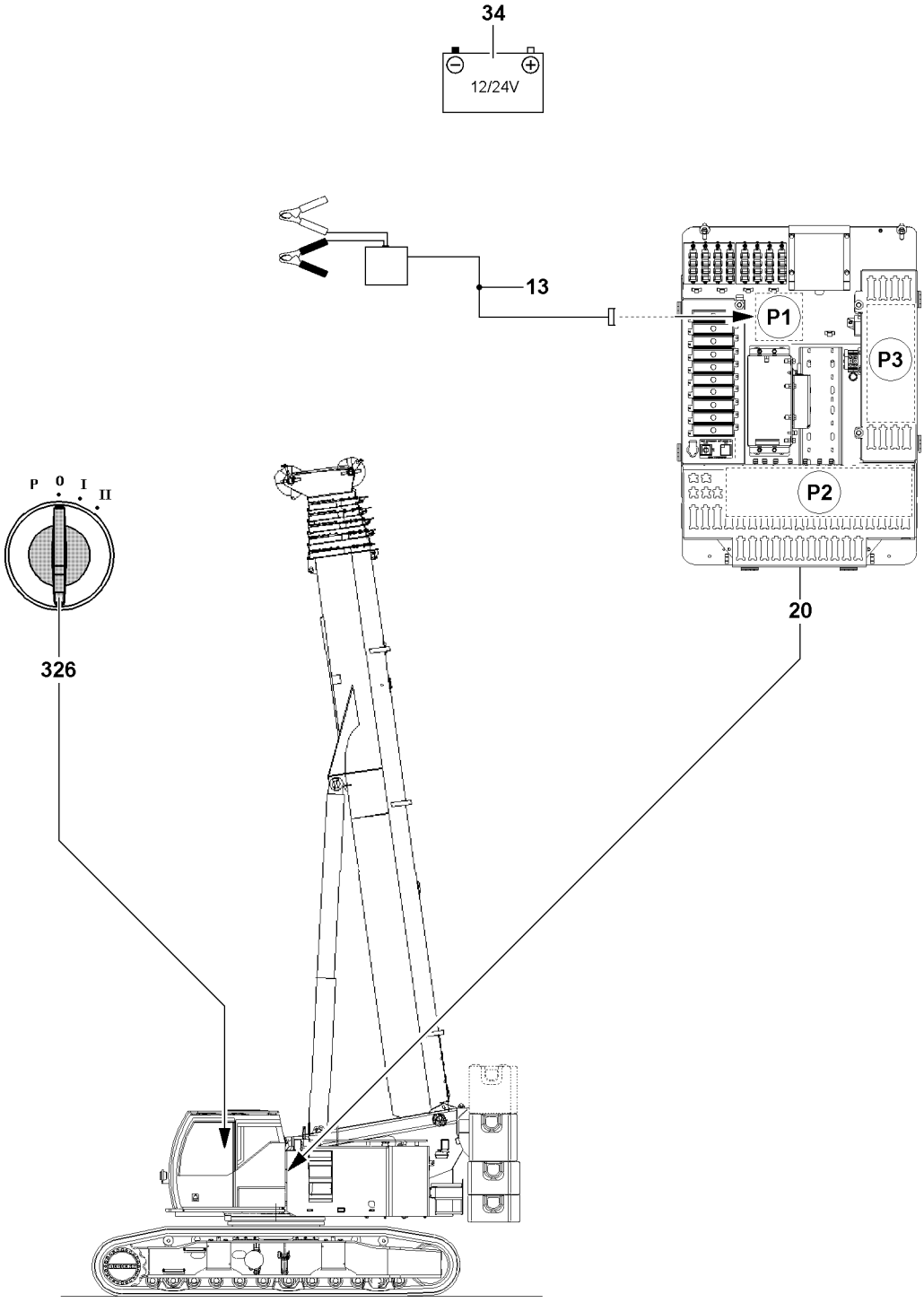

LWE/LTR 1100-009/25105-02-02/en

Fig.152533

copyright © Liebherr-Werk Ehingen GmbH 2023

2.2 Preparing the electrical supply

Note
- ► This section is only relevant if the emergency control is to be made via the master switches.
- ► For control of crane movements through manually actuated valves: Switch to section „Carrying out the crane movement“.

NOTICE
Damage to the electrical components!
If current carrying electrical connections are disconnected / connected, then there is the danger that electrical components can be damaged.
- ► De-energize the electrical connections before disconnection / connection.
- ► Set all crane ignition switches to position **0**.

Make sure that the following prerequisites are met:
- – The ignition switch **326** is in position **0**.

NOTICE
Insufficient electrical supply!
If the electrical supply is insufficient, the emergency control cannot be controlled via the master switches.
- ► An electrical power supply source **34** of 12V/24V must be continuously available.

Control cabinet **20**:

- ► Position **P1**: Unplug the plug -X487.B from plug location -X487.
- ► The power supply cable **13** may not be plugged in at this point to the external electrical power supply source **34**.
- ► Position **P1**: Insert plug -X487.NOT (supply cable **13**) in plug location -X487.
- ► Position **P2**: Unplug the plug -X467.B from plug location -X467.
- ► Position **P2**: Insert plug -X467.B in plug location -XNOT1.

LWE/LTR 1100-009/25105-02-02/en

copyright © Liebherr-Werk Ehingen GmbH 2023

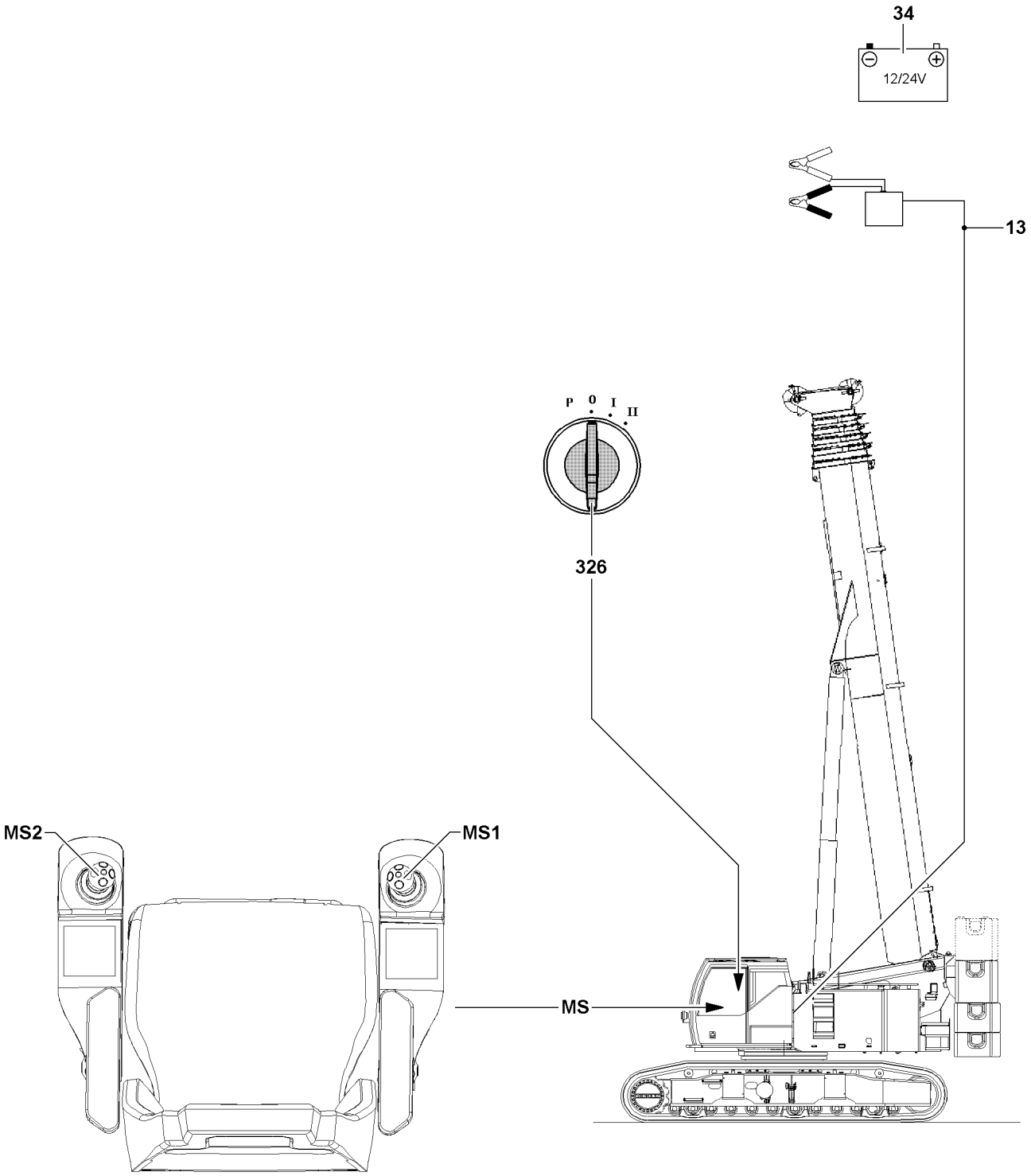

LWE/LTR 1100-009/25105-02-02/en

Fig.152534

copyright © Liebherr-Werk Ehingen GmbH 2023

3 Controlling crane movements via master switches: Preselecting the crane movements for the master switch

Note
- ► This section is only relevant if the control of the crane movements is to be made via a master switch **MS**.
- ► For crane movement through manually actuated valves: Switch to section „Carrying out the crane movement“.

Since only one crane movement after the other can be carried out during emergency control, only one of the master switches **MS** can be selected for the control of the crane movements.

Every crane movement in emergency control can be carried out via master switch **MS1** or master switch **MS2**.

Possible crane movements:
- – Lifting / lowering the hook (HOIST WINCH)
- – Luffing the boom (LUFFING)
- – Turning the crane superstructure (SLEWING GEAR)

NOTICE
Damage to the electrical components!
If current carrying electrical connections are disconnected / connected, then there is the danger that electrical components can be damaged.
- ► De-energize the electrical connections before disconnection / connection.
- ► Set all crane ignition switches to position **0**.
- ► The power supply cable **13** may not be plugged in yet to the external electrical power supply source **34**.

Before disconnecting / connecting electrical connections, make sure that the following prerequisites are met:
- – The ignition switch **326** is in position **0**.
- – The supply cable **13** is not yet plugged into to the external electrical power supply source **34**.

LWE/LTR 1100-009/25105-02-02/en

copyright © Liebherr-Werk Ehingen GmbH 2023

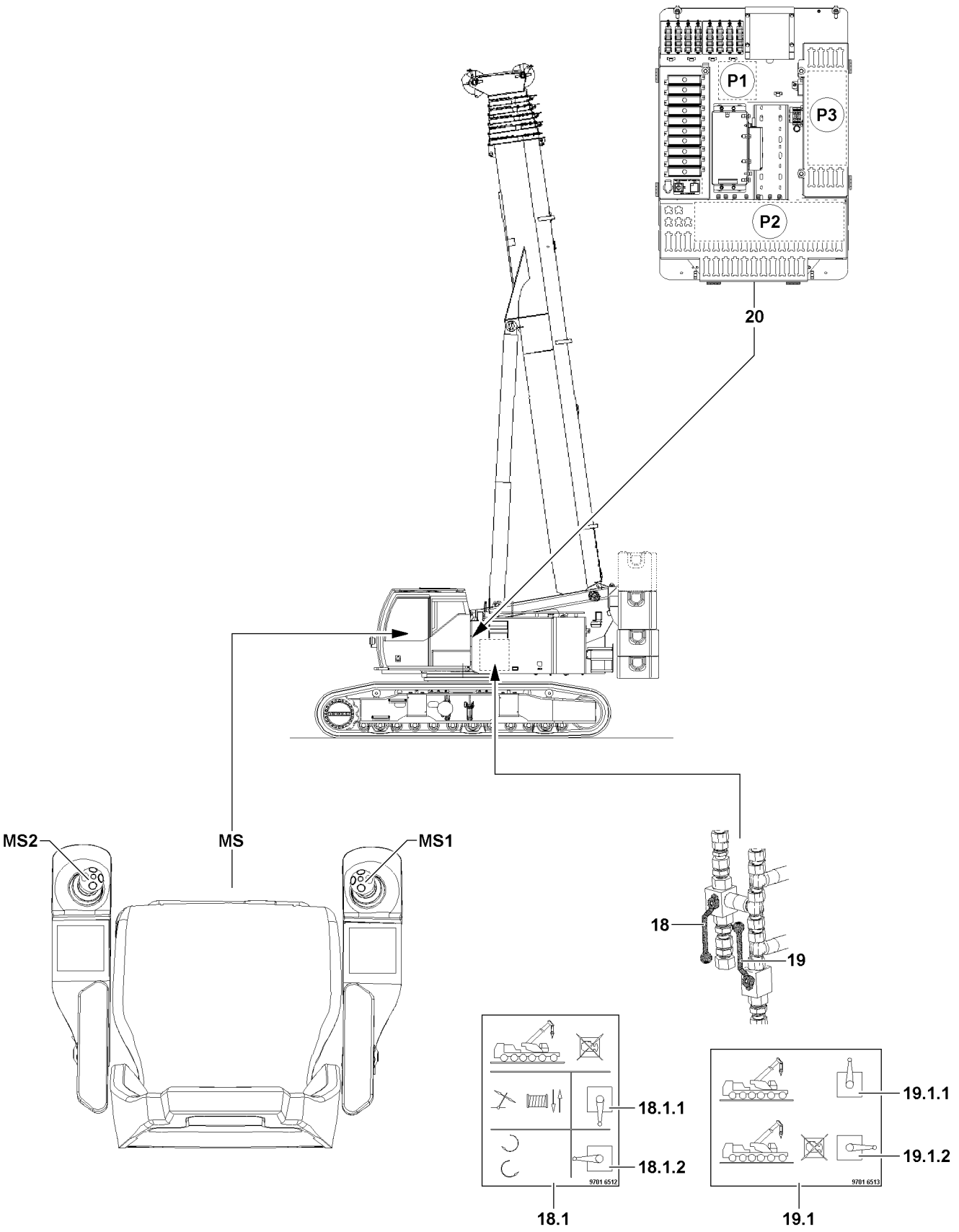

Fig.119861

LWE/LTR 1100-009/25105-02-02/en

copyright © Liebherr-Werk Ehingen GmbH 2023

3.1 Preselecting lifting / lowering the hook

Make sure that the following prerequisite is met:
– The ball valve **19** is set to the „up“ position: Position **19.1.1** (NORMAL OPERATION).

Note
► Only one master switch is required for emergency control: Select **either** master switch **MS1 or** master switch **MS2**.

3.1.1 Selecting master switch MS1 for the crane movement

Control cabinet **20**:

► Position **P2**: Unplug the plug -XNOT4.B from plug location -XNOT4.
► Position **P3**: Unplug the plug -X412.B from plug location -X412.
► Position **P2**: Insert plug -X412.B in plug location -XNOT4.
► Set the ball valve **18** „down“: Position **18.1.1** (HOIST WINCH / LUFFING).

Result:

– Crane movement „lifting / lowering the hook“ is preselected.

3.1.2 Selecting master switch MS2 for the crane movement

Select master switch **MS2** only when master switch **MS1** cannot / should not be used!

Control cabinet **20**:

► Position **P2**: Unplug the plug -XNOT4.B from plug location -XNOT4.
► Position **P3**: Unplug the plug -X416.B from plug location -X416.
► Position **P2**: Insert plug -X416.B in plug location -XNOT4.
► Set the ball valve **18** „down“: Position **18.1.1** (HOIST WINCH / LUFFING).

Result:

– Crane movement „lifting / lowering the hook“ is preselected.

LWE/LTR 1100-009/25105-02-02/en

copyright © Liebherr-Werk Ehingen GmbH 2023

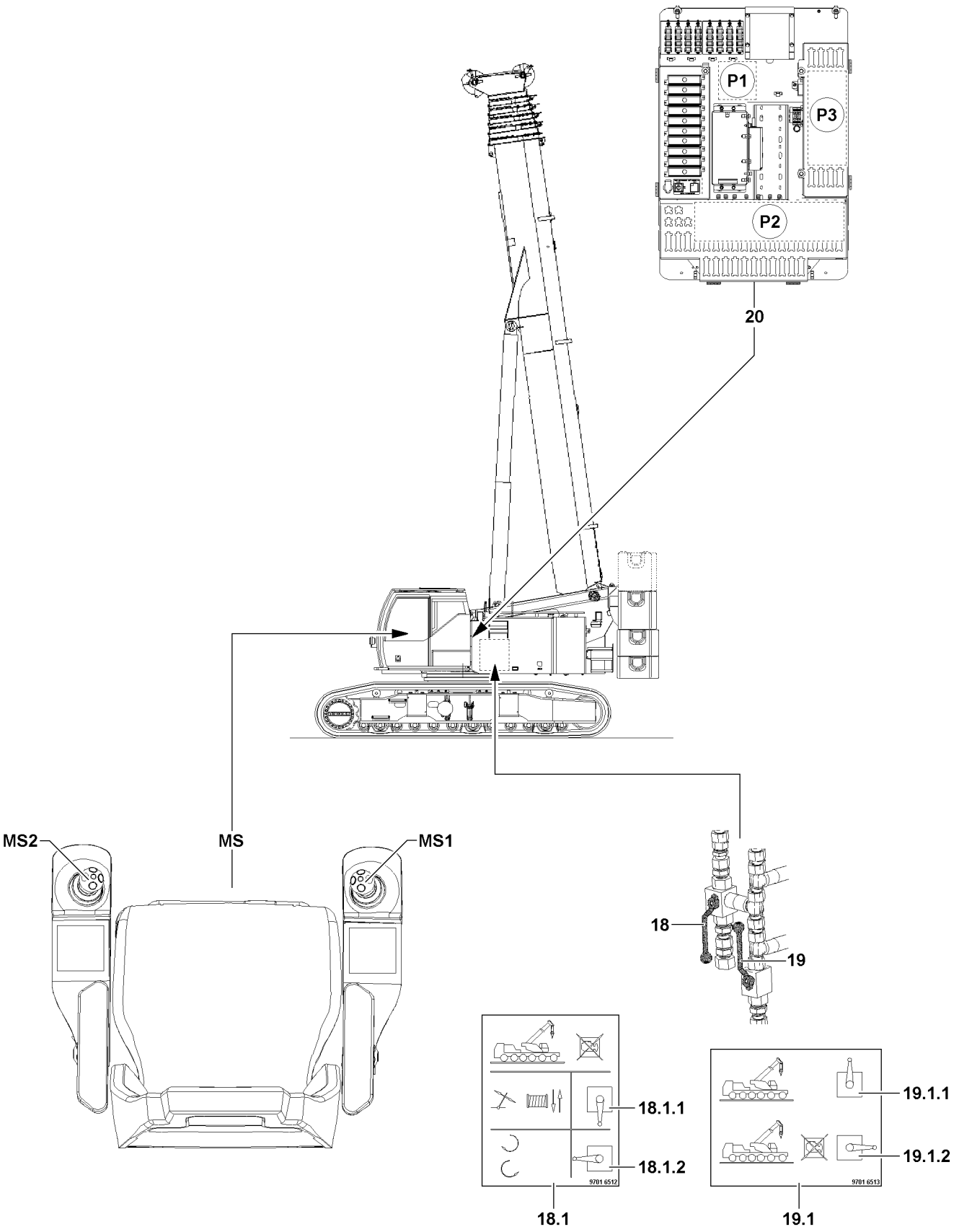

Fig.119861

LWE/LTR 1100-009/25105-02-02/en

copyright © Liebherr-Werk Ehingen GmbH 2023

3.2 Preselecting luffing the boom

Make sure that the following prerequisite is met:
– The ball valve **19** is set to the „up“ position: Position **19.1.1** (NORMAL OPERATION).

Note
► Only one master switch is required for emergency control: Select **either** master switch **MS1 or** master switch **MS2**.

3.2.1 Selecting master switch MS1 for the crane movement

Control cabinet **20**:

► Position **P2**: Unplug the plug -XNOT6.B from plug location -XNOT6.
► Position **P3**: Unplug the plug -X412.B from plug location -X412.
► Position **P2**: Insert plug -X412.B in plug location -XNOT6.
► Set the ball valve **18** „down“: Position **18.1.1** (HOIST WINCH / LUFFING).

Result:

– The „luffing the boom“ crane movement is preselected.

3.2.2 Selecting master switch MS2 for the crane movement

Select master switch **MS2** only when master switch **MS1** cannot / should not be used!

Control cabinet **20**:

► Position **P2**: Unplug the plug -XNOT6.B from plug location -XNOT6.
► Position **P3**: Unplug the plug -X416.B from plug location -X416.
► Position **P2**: Insert plug -X416.B in plug location -XNOT6.
► Set the ball valve **18** „down“: Position **18.1.1** (HOIST WINCH / LUFFING).

Result:

– The „luffing the boom“ crane movement is preselected.

LWE/LTR 1100-009/25105-02-02/en

copyright © Liebherr-Werk Ehingen GmbH 2023

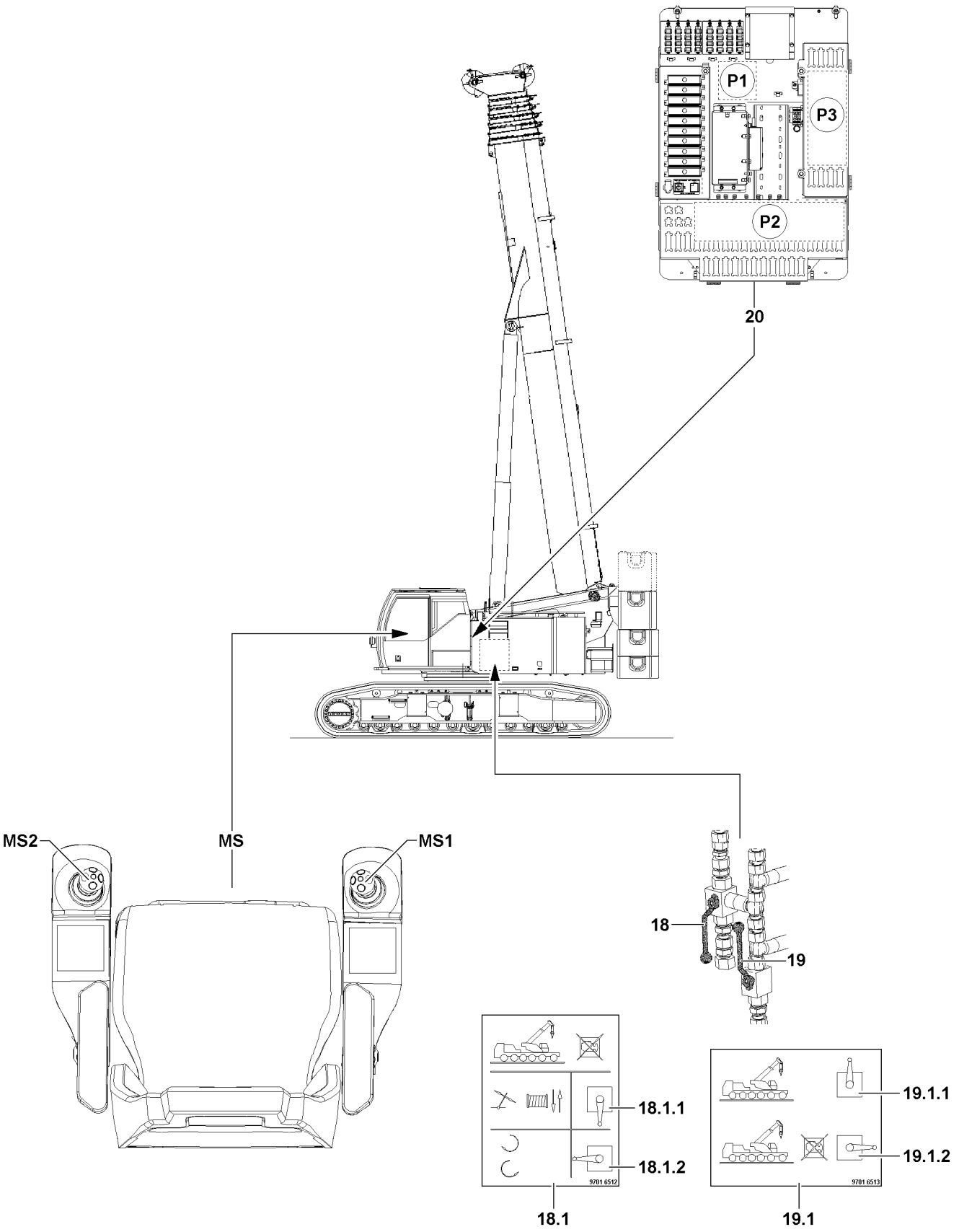

Fig.119861

LWE/LTR 1100-009/25105-02-02/en

copyright © Liebherr-Werk Ehingen GmbH 2023

3.3 Preselecting turning the crane superstructure

Make sure that the following prerequisite is met:
– The ball valve **19** is set to the „up“ position: Position **19.1.1** (NORMAL OPERATION).

Note
► Only one master switch is required for emergency control: Select **either** master switch **MS1 or** master switch **MS2**.

3.3.1 Selecting master switch MS1 for the crane movement

Control cabinet **20**:

► Position **P2**: Unplug the plug -XNOT2.B from plug location -XNOT2.
► Position **P3**: Unplug the plug -X412.B from plug location -X412.
► Position **P2**: Insert plug -X412.B in plug location -XNOT2.
► Move the ball valve **18** „to the side“: Position **18.1.2** (SLEWING GEAR).

Result:

– The „turn the crane superstructure“ crane movement is preselected.

3.3.2 Selecting master switch MS2 for the crane movement

Select master switch **MS2** only when master switch **MS1** cannot / should not be used!

Control cabinet **20**:

► Position **P2**: Unplug the plug -XNOT2.B from plug location -XNOT2.
► Position **P3**: Unplug the plug -X416.B from plug location -X416.
► Position **P2**: Insert plug -X416.B in plug location -XNOT2.
► Move the ball valve **18** „to the side“: Position **18.1.2** (SLEWING GEAR).

Result:

– The „turn the crane superstructure“ crane movement is preselected.

LWE/LTR 1100-009/25105-02-02/en

copyright © Liebherr-Werk Ehingen GmbH 2023

LWE/LTR 1100-009/25105-02-02/en

Fig.195219

copyright © Liebherr-Werk Ehingen GmbH 2023

4 Carrying out the crane movement

WARNING
Danger of tipping!
In the case of emergency control, the crane movements are no longer monitored by the LICCON overload protection.
- ► Crane movements, especially **luffing down the boom** may only be carried out according to the specifications in the load charts or the erection / take down charts.
- ► All crane movements must be carried out individually and with extreme caution.

WARNING
Sequence of crane movements!
The „lift / lower the hook“ crane movement is preferential to all other crane movements when carrying out the emergency control.
- ► Carry out other crane movements only when the persons in the personnel lifting device can **not** be brought to safety directly using the crane movement „lift / lower the hook“ crane movement.

WARNING
Danger of burns due to hot crane components!
Crane components can heat up and cause burns if skin is unprotected.
- ► Wear suitable protective clothing.
- ► Keep sufficient distance to hot crane components.

NOTICE
Displays on the LICCON monitor!
During the emergency control, the displays in the LICCON monitor are not monitored and can be erroneous.
The display may change into stand-by operation without prior notice.
- ► During emergency control, do not rely on the displays in the LICCON monitor.

Make sure that the following prerequisite is met:
- – The emergency control is prepared, see section „Preparing emergency control“.

When the control of the crane movements is to be made via the master switch:
- – The crane movements to be actuated are preselected, see section „Control of crane movements via master switches: Preselecting the crane movements for the master switch“

LWE/LTR 1100-009/25105-02-02/en

copyright © Liebherr-Werk Ehingen GmbH 2023

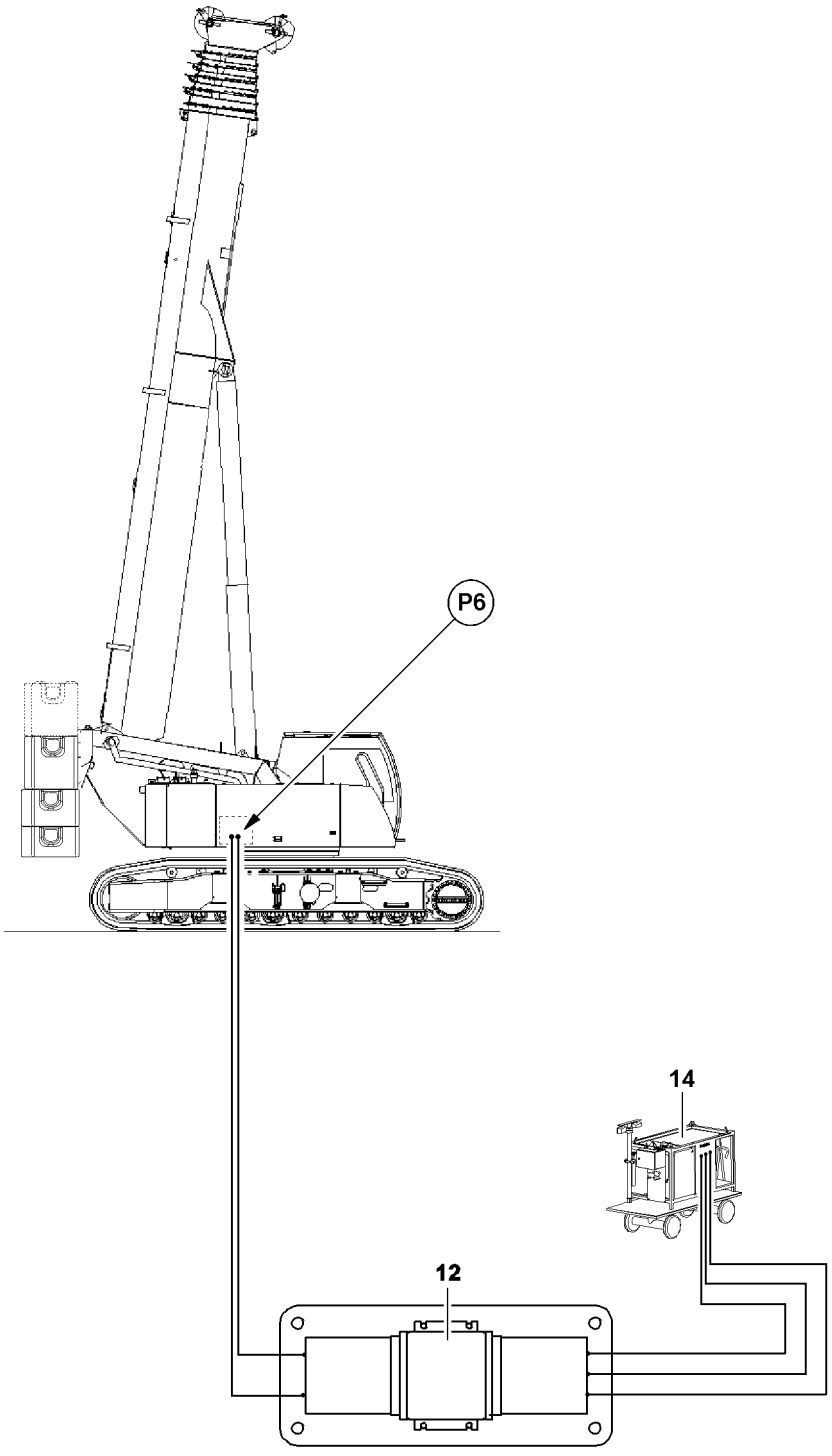

LWE/LTR 1100-009/25105-02-02/en

Fig.119858

copyright © Liebherr-Werk Ehingen GmbH 2023

4.1 Connecting / disconnecting the supply

4.1.1 Connecting the hydraulic supply with an external auxiliary aggregate

NOTICE
Incorrect operation of the auxiliary aggregate!
► Observe the separate operating instructions for the auxiliary aggregate **14**.

Make sure that the following prerequisite is met:
– The external hydraulic supply is prepared.

► Start the auxiliary aggregate **14**.
► Open the hydraulic supply line on the auxiliary aggregate **14**.

Result:

– The supply with an external auxiliary aggregate **14** is activated.

► Check all coupling locations in point **P6**, on the hydraulic transformer **12** and on the auxiliary aggregate **14** for emerging hydraulic oil.

When hydraulic oil emerges:
► Turn the auxiliary aggregate **14** off and connect the concerned coupling location properly.
► Start the auxiliary aggregate **14** again.

4.1.2 Turning off the hydraulic supply with an external auxiliary aggregate

NOTICE
Incorrect operation of the auxiliary aggregate!
► Observe the separate operating instructions for the auxiliary aggregate **14**.

► Connect the hydraulic supply line to the auxiliary aggregate **14**.
► Turn the auxiliary aggregate **14** off.

Result:

– The supply with an external auxiliary aggregate **14** is turned off.

LWE/LTR 1100-009/25105-02-02/en

copyright © Liebherr-Werk Ehingen GmbH 2023

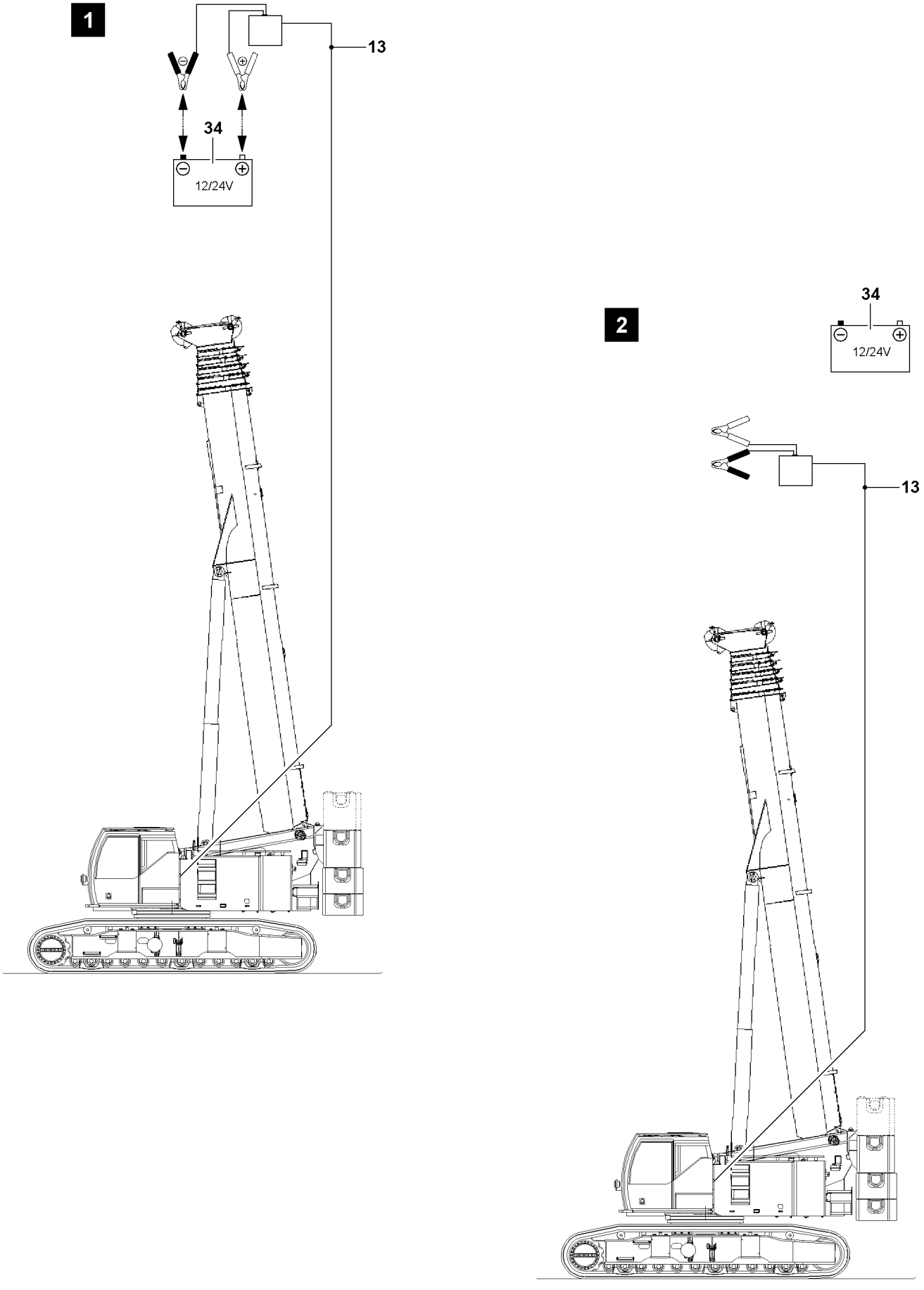

Fig.152535

LWE/LTR 1100-009/25105-02-02/en

copyright © Liebherr-Werk Ehingen GmbH 2023

4.1.3 Connecting the electrical supply

Note
- ► This section is only relevant if the emergency control is to be made via master switches.
- ► For control of crane movements through manually actuated valves: Switch to section „Crane movement through manually actuated valves“.

NOTICE
Insufficient electrical supply!
If the electrical supply is insufficient, the emergency control cannot be controlled via the master switches.
- ► 12V/24V must be continuously available on the external electrical power supply source **34**.

Make sure that the following prerequisite is met:
- – The electrical supply is prepared.

► Connect the supply cable **13** with the external electrical power supply source **34**, see illustration **1**.

Result:

– The electrical power supply is connected.

4.1.4 Turning the electrical supply off

► Disconnect the supply cable **13** from the external electrical power supply source **34**, see illustration **2**.

Result:

– The electrical supply is turned off.

LWE/LTR 1100-009/25105-02-02/en

copyright © Liebherr-Werk Ehingen GmbH 2023

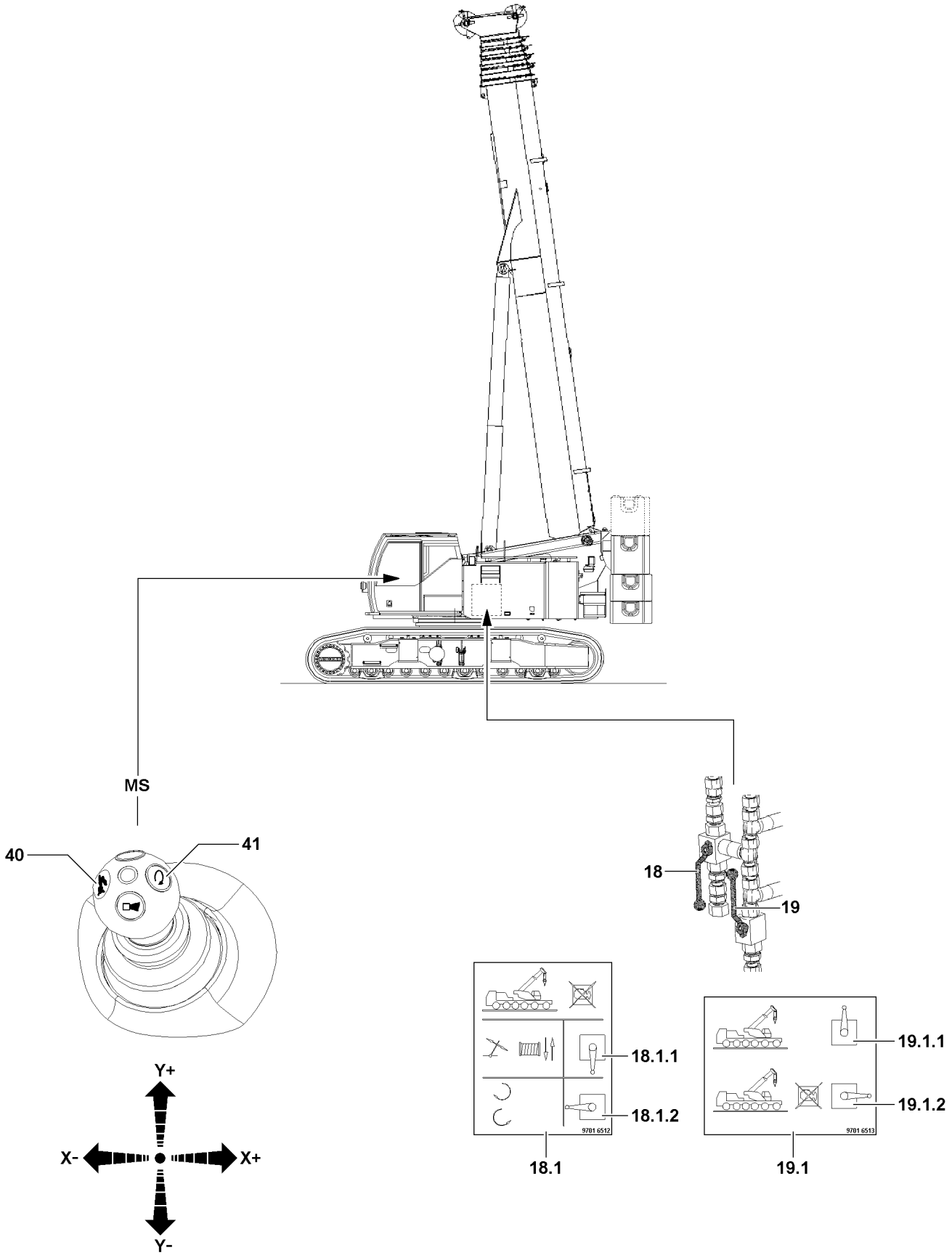

LWE/LTR 1100-009/25105-02-02/en

Fig.119864

copyright © Liebherr-Werk Ehingen GmbH 2023

4.2 Carrying out crane movement via master switches

WARNING
Deviating assignment of master switches!
During emergency control the assignment of the master switches changes.
Erroneous operation of the crane can be the result.
► Note: During emergency control, only one crane movement is possible for every master switch.
► Note: The direction of the deflection for the crane movement is preset and cannot be changed.

Make sure that the following prerequisites are met:
– The desired crane movement is preselected, see section „Control of crane movements via master switches: Preselecting the crane movements for the master switch“
– The hydraulic and electrical supply is activated, see section „Connecting / disconnecting the supply“

To avoid unintended crane movements by deflecting a master switch **MS**, in addition to the deflection movement at least one of the following buttons on the respective master switch must be pressed:
– **40** Button
– **41** Button

Note
Rhythmic vibration of the selected master switch
Depending on the selected crane movement, the selected master switch vibrates rhythmically:
► If the crane movement „lift / lower the hook“ is selected, then there is a rhythmic double vibration.
► If the crane movement „luff the boom“ is selected, then there is a rhythmic triple vibration.
► If the crane movement „turn crane superstructure“ is selected, then there is a rhythmic quadruple vibration.

LWE/LTR 1100-009/25105-02-02/en

copyright © Liebherr-Werk Ehingen GmbH 2023

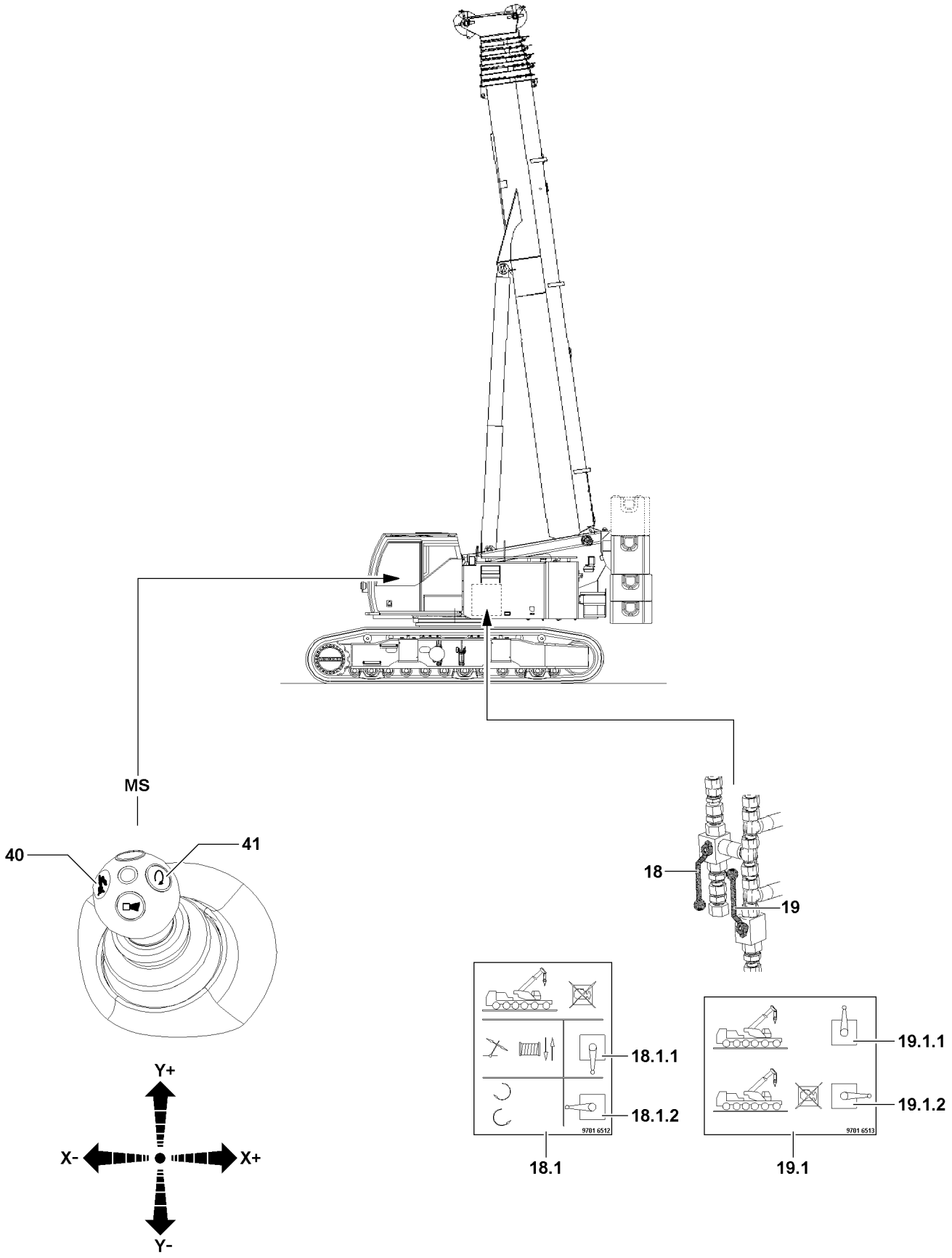

LWE/LTR 1100-009/25105-02-02/en

Fig.119864

copyright © Liebherr-Werk Ehingen GmbH 2023

4.2.1 Lifting / lowering the hook (HOIST WINCH) crane movement

Icon	MS - deflection direction	Crane movement	Position of ball valves	
			18	19
		Lower the hook (spool hoist winch out)	**18.1.1**	**19.1.2**
		Lift the hook (spool hoist winch up)	**18.1.1**	**19.1.2**

Make sure that the following prerequisite is met:
– A sufficient distance between hook and boom head is monitored to avoid a collision.

► Set the ball valve **18** „down“: Position **18.1.1** (HOIST WINCH / LUFFING).
► Move the ball valve **19** „to the side“: Position **19.1.2** (EMERGENCY CONTROL).
► Press the button **40** or button **41** on the selected master switch **MS** and hold.
► Carefully deflect the master switch **MS** in the respective deflection direction.

Result:

– The crane movement is carried out.

Problem remedy
Is the crane movement not carried out?
The selected master switch **MS** is not functioning.
► Move the ball valve **19** „up“: Position **19.1.1** (NORMAL OPERATION).
► Turn the hydraulic and electrical supply off, see section „Connecting / disconnecting the supply“.
► Connect another master switch **MS**, see section „Control of crane movements via master switches: Preselecting the crane movements for the master switch“.

Problem remedy
Is the crane movement is not carried out even with the other master switch **MS**?
The valve(s) are without a control signal.
► Actuate the valves, see section „Crane movement via manually actuated valves“.
or
► Actuate the individual valves manually, see section „Control via master switches in connection with manual valve actuation“.

LWE/LTR 1100-009/25105-02-02/en

copyright © Liebherr-Werk Ehingen GmbH 2023

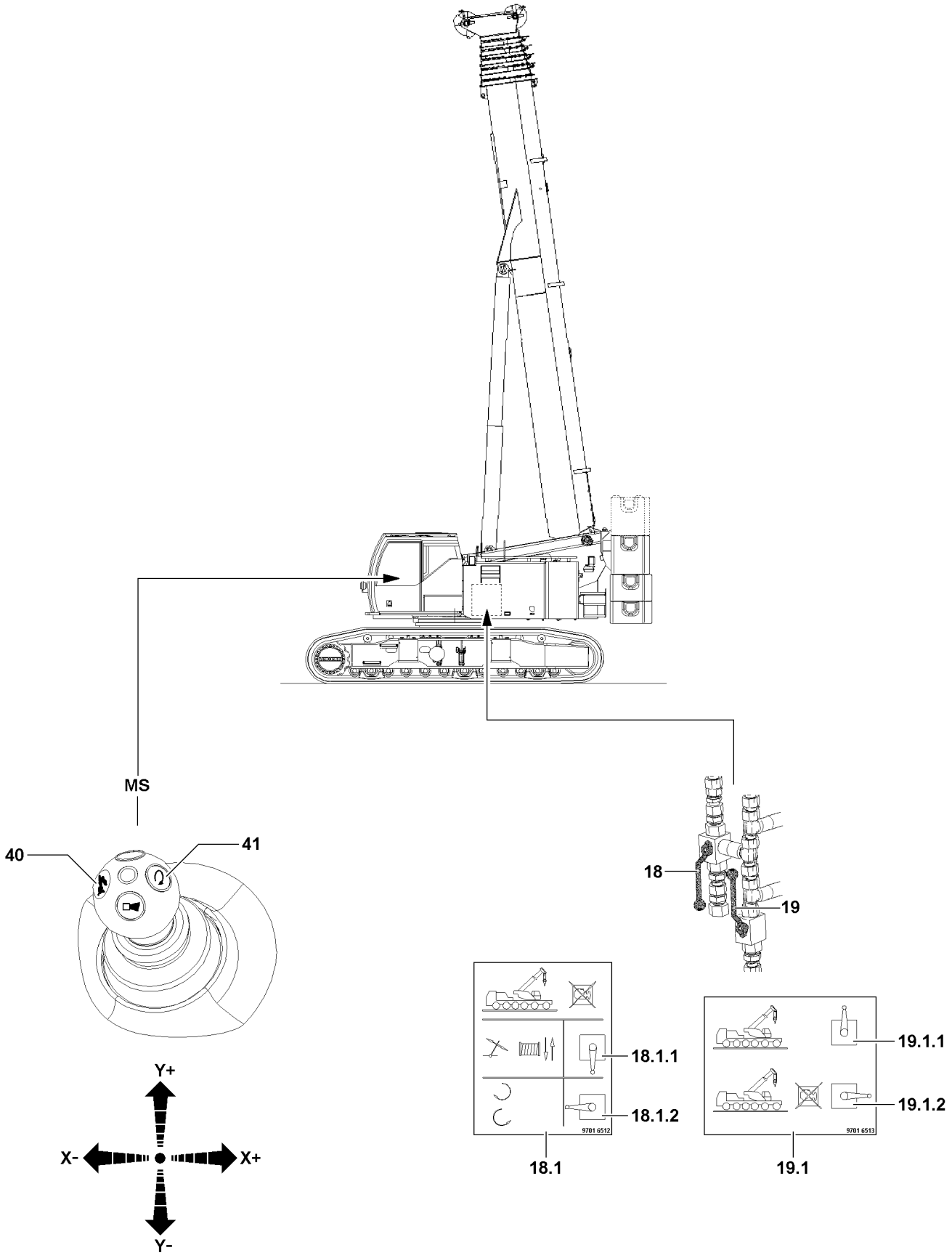

LWE/LTR 1100-009/25105-02-02/en

Fig.119864

copyright © Liebherr-Werk Ehingen GmbH 2023

4.2.2 Turning the crane superstructure (SLEWING GEAR) crane movement

Icon	MS - deflection direction	Crane movement	Position of ball valves	
			18	19
	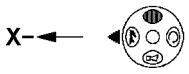	Turn the crane superstructure to the left (counterclockwise direction)	**18.1.2**	**19.1.2**
	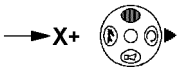	Turn crane superstructure to the right (clockwise direction)	**18.1.2**	**19.1.2**

Make sure that the following prerequisite is met:
– The slewing range of the crane is free of personnel and obstacles.

► Move the ball valve **18** „to the side“: Position **18.1.2** (SLEWING GEAR).
► Move the ball valve **19** „to the side“: Position **19.1.2** (EMERGENCY CONTROL).
► Press the button **40** or button **41** on the selected master switch **MS** and hold.
► Carefully deflect the master switch **MS** in the respective deflection direction.

Result:

– The crane movement is carried out.

Problem remedy
Is the crane movement not carried out?
The selected master switch **MS** is not functioning.
► Move the ball valve **19** „up“: Position **19.1.1** (NORMAL OPERATION).
► Turn the hydraulic and electrical supply off, see section „Connecting / disconnecting the supply“.
► Connect another master switch **MS**, see section „Control of crane movements via master switches: Preselecting the crane movements for the master switch“.

Problem remedy
Is the crane movement is not carried out even with the other master switch **MS**?
The valve(s) are without a control signal.
► Actuate the valves, see section „Crane movement via manually actuated valves“.
or
► Actuate the individual valves manually, see section „Control via master switches in connection with manual valve actuation“.

LWE/LTR 1100-009/25105-02-02/en

copyright © Liebherr-Werk Ehingen GmbH 2023

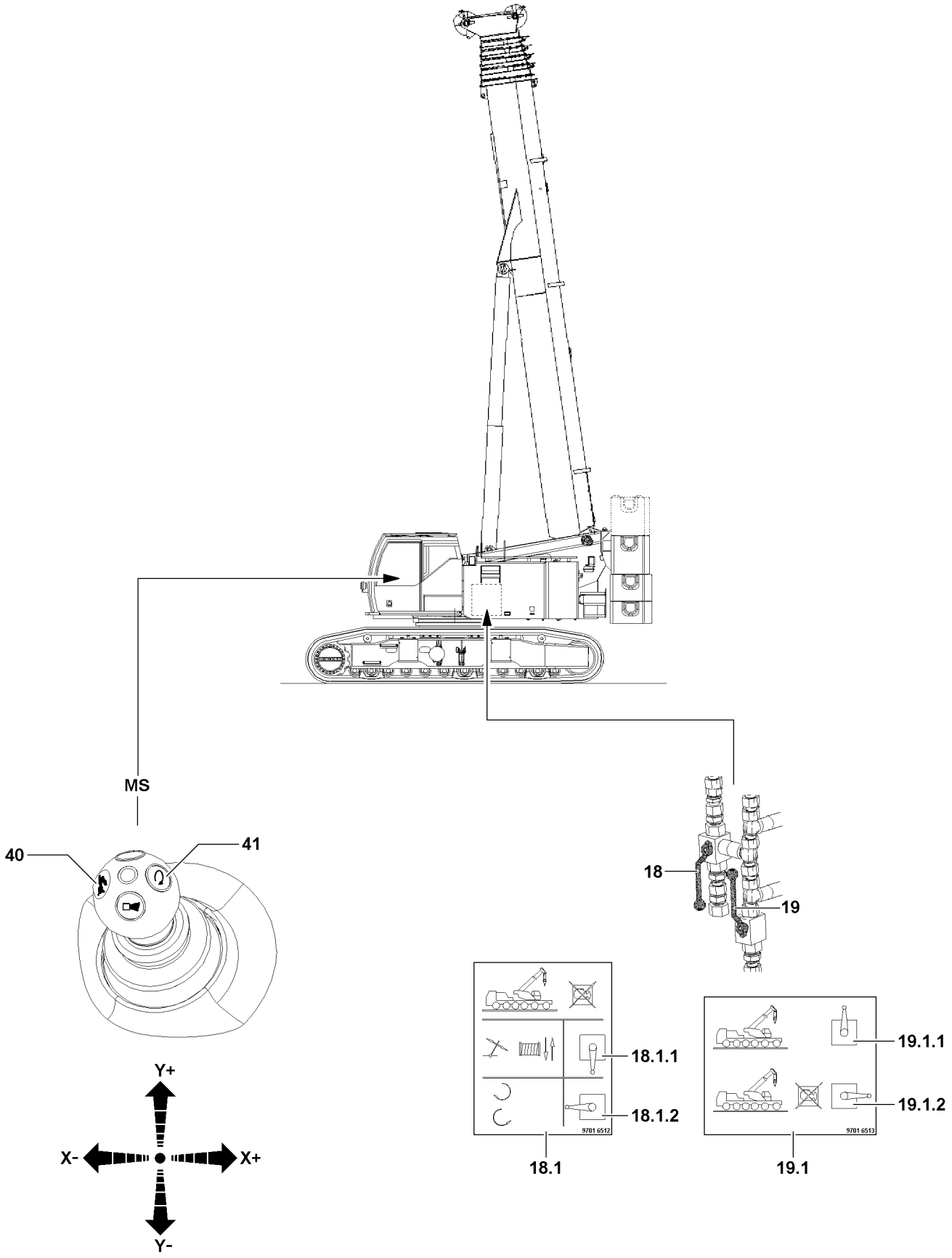

LWE/LTR 1100-009/25105-02-02/en

Fig.119864

copyright © Liebherr-Werk Ehingen GmbH 2023

4.2.3 Luffing the boom crane movement (LUFFING)

Icon	MS - deflection direction	Crane movement	Position of ball valves	
			18	19
	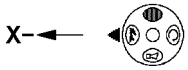	Luff the boom up	**18.1.1**	**19.1.2**
	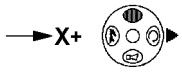	Luff the boom down	**18.1.1**	**19.1.2**

► Set the ball valve **18** „down“: Position **18.1.1** (HOIST WINCH / LUFFING).
► Move the ball valve **19** „to the side“: Position **19.1.2** (EMERGENCY CONTROL).
► Press the button **40** or button **41** on the selected master switch **MS** and hold.
► Carefully deflect the master switch **MS** in the respective deflection direction.

Result:

– The crane movement is carried out.

Problem remedy
Is the crane movement not carried out?
The selected master switch **MS** is not functioning.
► Move the ball valve **19** „up“: Position **19.1.1** (NORMAL OPERATION).
► Turn the hydraulic and electrical supply off, see section „Connecting / disconnecting the supply“.
► Connect another master switch **MS**, see section „Control of crane movements via master switches: Preselecting the crane movements for the master switch“.

Problem remedy
Is the crane movement is not carried out even with the other master switch **MS**?
The valve(s) are without a control signal.
► Actuate the valves, see section „Crane movement via manually actuated valves“.
or
► Actuate the individual valves manually, see section „Control via master switches in connection with manual valve actuation“.

LWE/LTR 1100-009/25105-02-02/en

copyright © Liebherr-Werk Ehingen GmbH 2023

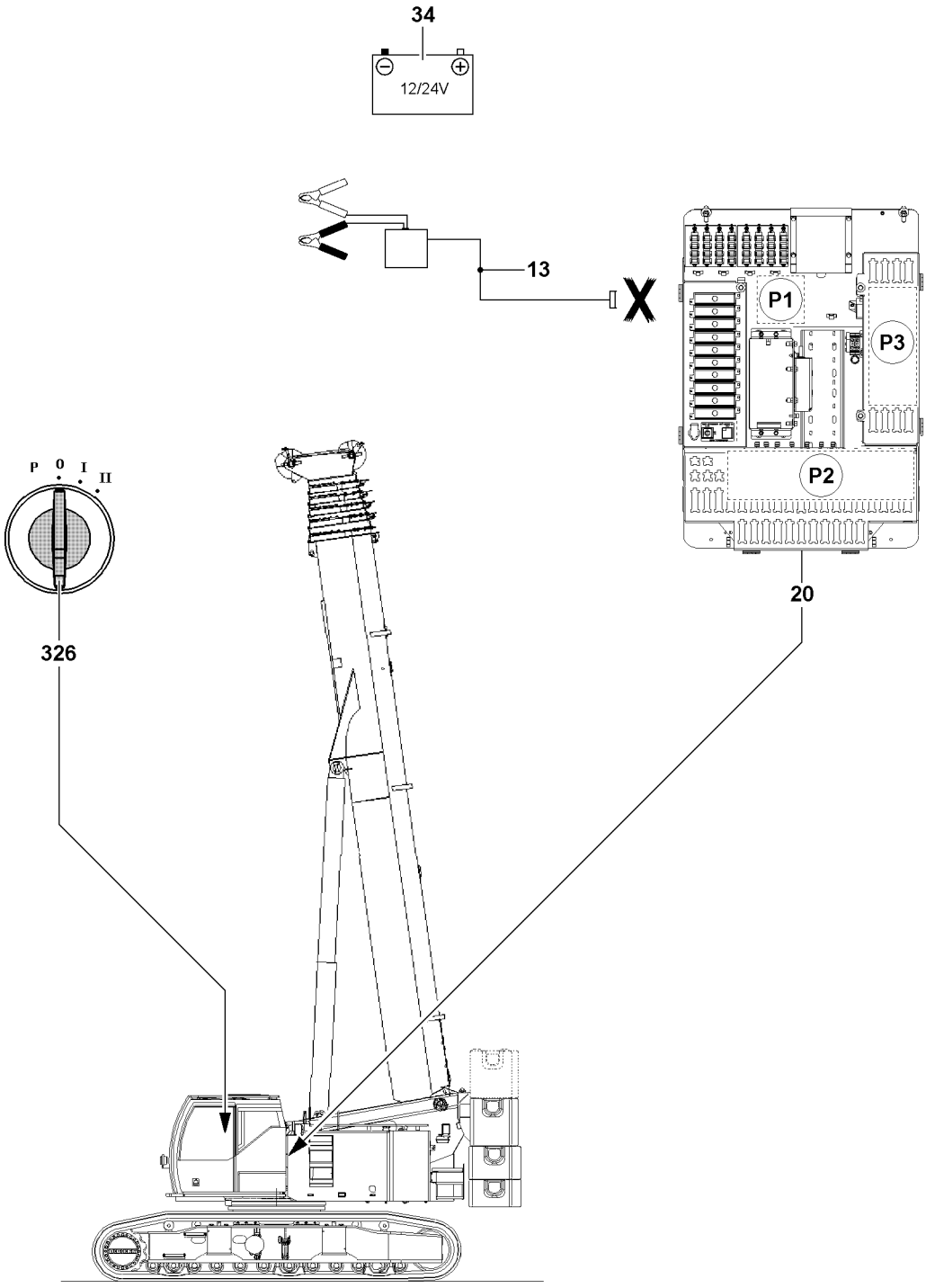

LWE/LTR 1100-009/25105-02-02/en

Fig.152536

copyright © Liebherr-Werk Ehingen GmbH 2023

5 Ending emergency control

When the emergency control is completed and the triggering cause has been remedied, the crane must be reset to normal operation.

DANGER
Erroneous crane control function!
- ► Make sure to reset all electrical connections to normal operation after completed emergency control.
- ► Make sure to reset all ball valves to normal operation after completed emergency control.

5.1 Resetting the electrical connections to normal operation

NOTICE
Damage to the electrical components!
If current carrying electrical connections are disconnected / connected, then there is the danger that electrical components can be damaged.
- ► De-energize the electrical connections before disconnection / connection.
- ► Set all crane ignition switches to position 0.

Note
- ► The control cabinet **20** contains the plug connections **P1** in position, position **P2** and position **P3**.

Before disconnecting / connecting electrical connections, make sure that:
- – The ignition switch **326** is in position 0.
- – The supply cable **13** is removed.

Plug connections in position **P1**:
- – Plug -X487.B is inserted in plug location -X487

Plug connections in position **P2**:
- – Plug -X467.B is inserted in plug location -X467
- – Plug -XNOT2.B is inserted in plug location -XNOT2
- – Plug -XNOT4.B is inserted in plug location -XNOT4
- – Plug -XNOT6.B is inserted in plug location -XNOT6

Plug connections in position **P3**:
- – Plug -X412.B is inserted in plug location -X412
- – Plug -X416.B is inserted in plug location -X416

LWE/LTR 1100-009/25105-02-02/en

copyright © Liebherr-Werk Ehingen GmbH 2023

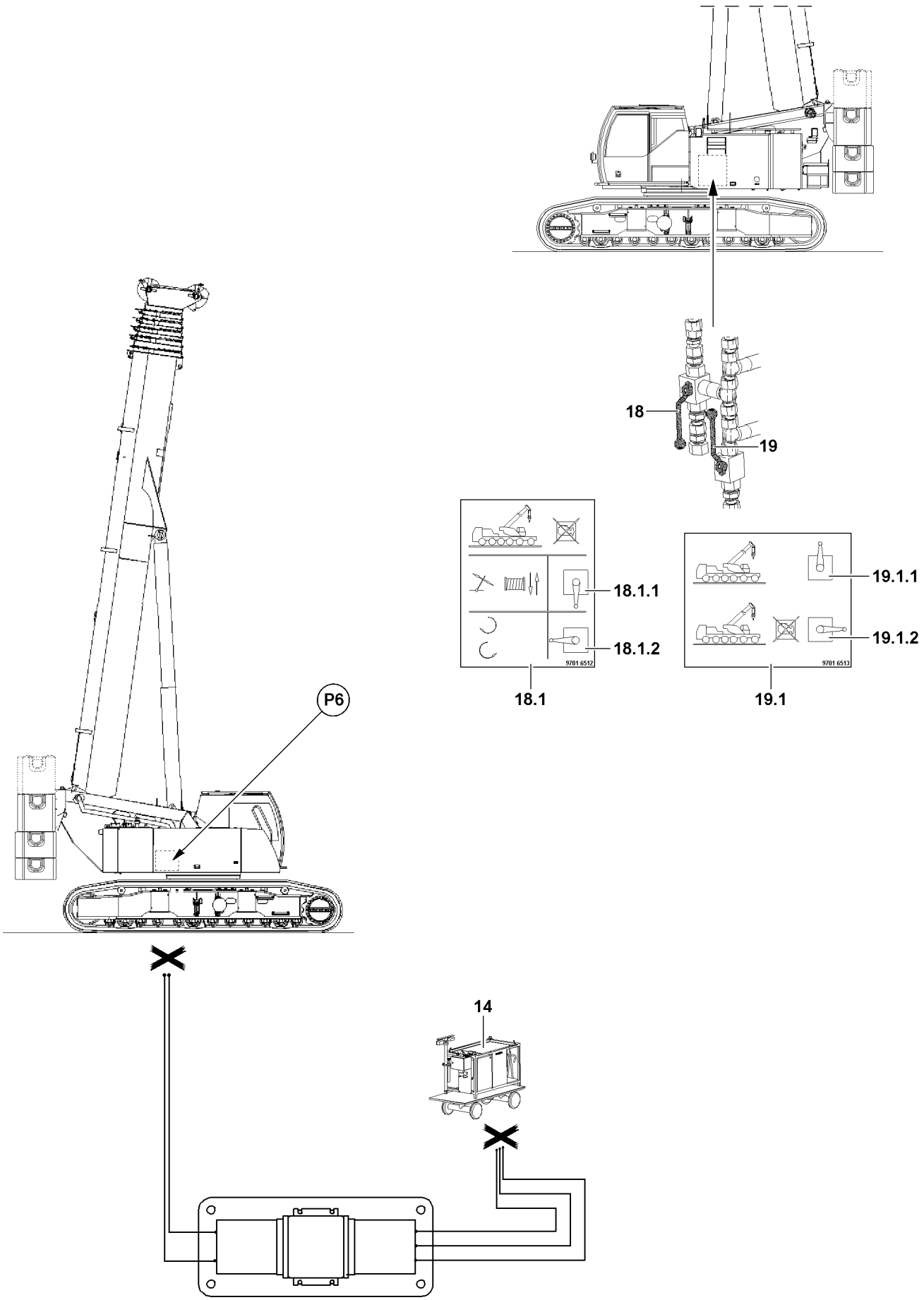

Fig.119867

LWE/LTR 1100-009/25105-02-02/en

copyright © Liebherr-Werk Ehingen GmbH 2023

5.2 Resetting the hydraulic connections to normal operation

When releasing hydraulic lines with quick couplings, make sure that the coupling procedure is carried out correctly.

WARNING
Pressure in the hydraulic lines!
If the pressure in the hydraulic system is not released before connecting / releasing the hydraulic lines, hydraulic oil can escape with high pressure.
Personnel can be severely injured or killed.
- ► Release the pressure in the hydraulic system before connecting / disconnecting. Interrupt the hydraulic pressure supply and wait for a short time.
- ► The auxiliary aggregate **14** and crane engine must be turned off.

Make sure that the following prerequisites are met:
- – The ball valve **19** is set to the „up“ position: Position **19.1.1** (NORMAL OPERATION).
- – The auxiliary aggregate **14** is turned off.
- – The crane engine is turned off.

Note
- ► The ball valve **18** may be positioned in any position (position is not relevant in normal operation)

Disconnect all hydraulic connections from the emergency control:

- ► Install the coupling components (sleeve and connector) with the knurled nut.
- ► Disconnect the hydraulic connections.
- ► Install dust caps on the quick couplings.

Make sure that:
- – All hydraulic connections between the crane superstructure (point **P6**) and hydraulic transformer **12**, as well as hydraulic transformer **12** and auxiliary aggregate **14** are separated.
- – All valves are not actuated.

LWE/LTR 1100-009/25105-02-02/en

copyright © Liebherr-Werk Ehingen GmbH 2023

Empty page!

LWE/LTR 1100-009/25105-02-02/en

copyright © Liebherr-Werk Ehingen GmbH 2023

7 Maintenance and service

LWE/LTR 1100-009/25105-02-02/en

copyright © Liebherr-Werk Ehingen GmbH 2023

LWE/LTR 1100-009/25105-02-02/en

copyright © Liebherr-Werk Ehingen GmbH 2023

7.01 Maintenance and service - General

1	Safety	2
2	Warranty and coverage	7
3	Liebherr Customer Service	7
4	Taking an oil sample	8
5	Taking care of the crane	8
6	Storage	14
7	Recommendation for safe disposal	15

LWE/LTR 1100-009/25105-02-02/en

copyright © Liebherr-Werk Ehingen GmbH 2023

1 Safety

WARNING
Maintenance instructions **not** adhered to!
Death, severe injury, increased wear and failure of components.
- ► Observe the following listed safety instructions and the generally applicable safety rules.
- ► Adhere to the maintenance intervals.
- ► Carry out only applicable maintenance tasks.
- ► Repair and maintenance tasks are to be carried out carefully.
- ► For aggregates and components: Follow the operating instructions of the manufacturer.

1.1 Personnel

WARNING
Personnel requirements **not** adhered to!
Improper maintenance. Death, severe bodily injuries, property damage.
- ► Adhere to the areas of responsibility and personnel requirements.
- ► Comply with the personnel requirements within the scope of the respective maintenance tasks.
- ► Have the repair tasks performed exclusively by authorized and trained service personnel.
- ► Make sure that only authorized persons are in the danger zone.

The operator commissions maintenance personnel and authorized and trained service personnel according to the maintenance and inspection schedule.

1.1.1 Maintenance technician

The maintenance technician has the following responsibilities:
- – The maintenance technician is responsible for the crane maintenance assigned to him according to the maintenance and inspection schedule and to guarantee safe and satisfactory operation. Maintenance personnel carries out all required maintenance work in compliance with the manufacturer's maintenance and inspection schedule and within the framework of a systematic procedure for creating a safe working environment.
- – The maintenance technician shall have read and understood the operating instructions and the maintenance instructions.
- – The maintenance technician wears the personal protective equipment necessary for the respective work procedure in accordance with the operating instructions and national regulations.
- – The maintenance technician shall not make any alterations or repairs to the crane that exceed his technical knowledge (welding, for example) without consulting with the manufacturer and receiving written approval.
- – The maintenance technician uses only original spare parts from Liebherr-Werk Ehingen GmbH.
- – The maintenance technician contacts his supervisors when the information in the operating instructions or maintenance instructions is not sufficient.

1.1.2 Authorized and trained service technician

The service technician has the following responsibilities:
- – He is responsible for carrying out the assigned crane maintenance and repairs to guarantee safe and satisfactory operation. The technician carries out all required maintenance work in compliance with the manufacturer's maintenance and inspection schedule and within the framework of a systematic procedure for creating a safe working environment.
- – The technician wears the personal protective equipment necessary for the respective work procedure in accordance with the operating instructions and national regulations.
- – The technician only carries out work for which he was authorized and trained to carry out by Liebherr-Werk Ehingen GmbH or a Liebherr service point.

LWE/LTR 1100-009/25105-02-02/en

copyright © Liebherr-Werk Ehingen GmbH 2023

1.2 Description of intervals and tasks

Note
► Fill quantities and designations of service fluids and lubricants are specified in the Service fill.

The maintenance intervals and scope of maintenance are described in several chapters.

For crane maintenance, observe the following chapters:
– Crane operating instructions, chapter 7.02: Maintenance intervals - Crane chassis [1)]
– Crane operating instructions, chapter 7.02.50: Maintenance intervals Ballast trailer* [1)]
– Crane operating instructions, chapter 7.03: Maintenance intervals - Crane superstructure [1)]
– Crane operating instructions, chapter 7.03.50: Maintenance intervals - Crane boom [1)]
– Crane operating instructions, chapter 7.04: Maintenance instructions - Crane chassis [2)]
– Crane operating instructions, chapter 7.04.50: Ballast trailer maintenance instructions [2)]
– Crane operating instructions, chapter 7.05: Maintenance instructions - Crane superstructure [2)]
– Crane operating instructions, chapter 7.05.50: Crane boom maintenance instructions [2)]
– Crane operating instructions, chapter 7.06: Fill quantities, lubrication plan
– Crane operating instructions, chapter 7.07: Service fluids and lubricants

[1)] These chapters contain a list of maintenance intervals for all maintenance tasks.
[2)] For aggregates, observe and adhere additionally to the instructions of the manufacturer.

1.3 Maintenance intervals

Use the following rules for interval determination:
– Carry out maintenance and inspection tasks on the crane chassis after reaching the specified driven mileage, operating hours or calendar intervals. The interval that occurs first is the deciding factor.
– Carry out maintenance and inspection tasks on the crane superstructure after reaching the specified operating hours or calendar intervals. The interval that occurs first is the deciding factor.
– The maintenance intervals complement each other. If a higher interval is coming up, then carry out the tasks according to the lower interval also.

1.4 Securing against start up

WARNING
Impermissible travel or crane operation during maintenance or repair tasks!
Death, severe injury, severe property damage.
► Make sure that travel and crane operation is not possible during maintenance and repair tasks.
► Show clearly with signs that maintenance or repair tasks are being carried out on the mobile crane.
► Use signs which show without a doubt that it travel operation and crane operation are prohibited.
► Adhere to the national regulations regarding tagging on mobile crane and signs.
► Turn the engine on the crane superstructure and the crane chassis off.
► Apply the „parking brake crane chassis“.

If possible:
► Lock the driver's cab and the crane cab.
► Hand the ignition key from the crane superstructure and the crane chassis to an authorized person.

LWE/LTR 1100-009/25105-02-02/en

copyright © Liebherr-Werk Ehingen GmbH 2023

1.5 Securing against falls

WARNING
Personnel is **not** secured against falls!
During maintenance tasks on the crane superstructure or boom, personnel must be secured with appropriate safety measures to prevent them from falling. If this is **not** observed, working personnel can fall and be killed or severely injured.
- ► For all tasks on the crane where there is a danger of falling, take suitable safety measures.
- ► The crane superstructure or the boom may **not** be accessed without suitable aids.
- ► Suitable aids are, for example: Lifting platforms, scaffoldings, ladders, assembly platforms, auxiliary crane.
- ► If railings are present on the crane superstructure, then they must be swung into operating position and secured for all tasks. See the Crane operating instructions, chapter 2.06.
- ► Only step on such aids with clean shoes.
- ► Keep aids clean, free of snow and ice.
- ► If tasks cannot be carried out using these aids or from the ground, then the maintenance personnel must be protected from falling using approved fall arrest systems. See the Crane operating instructions, chapter 2.04.
- ► It is prohibited to step on the driver's cab or cab roof and specially marked surfaces. See the Crane operating instructions, chapter 2.05

WARNING
Dirty slip-resistant mats!
Fall
- ► Keep slip-resistant mats clean and free of snow and ice!
- ► Only step on slip-resistant mats with clean shoes!
- ► Replace or renew missing or damaged slip-resistant mats!

1.6 Preventing fires

WARNING
Excess fuel, excess oil in engine compartment during operation!
Death, severe injury, fire damage.
- ► Check the diesel engine after repairs and Service tasks but also in regular intervals for leaking oil and fuel.
- ► Fix the leaks. Replace damaged components.
- ► Do **not** spill service fluids.

WARNING
Disregard of general safety regulations during tasks on the fuel system or on the electrical system!
Severe burns, fire damage.
- ► Disconnect the battery from the power supply.
- ► Do **not** smoke.
- ► Do **not** work near open flames.
- ► Keep a functioning fire extinguisher ready.

LWE/LTR 1100-009/25105-02-02/en

copyright © Liebherr-Werk Ehingen GmbH 2023

WARNING
Sound insulation mats are contaminated with fuel, engine oil, gear oil, hydraulic oil or solvents!
The sound insulation mats can ignite. Severe burns, fire damage.
► Remove any polluted sound insulation mats **immediately** and **replace immediately** with **Original Liebherr spare parts**.

If there are sound insulation mats in the chassis near the starter:
► **Immediately remove** any sound insulation mats located in an area of 0.5 m around the starter and **do not replace them**

If there are sound insulation mats in the superstructure in the engine compartment flap:
► **Immediately remove** the sound insulation mats and **do not replace them**.
► Also observe and adhere to the section „Sound insulation mats“.

1.7 Protecting against burns

WARNING
Hot surfaces!
Severe burns.
► Let any components to be maintained or inspected cool off.
► Let hot components cool off.
► Avoid contact with hands and skin.
► Wear personal protective equipment and suitable protective gloves.

WARNING
Hot service fluids!
Severe burns.
► Let hot service fluids cool off.
► Avoid contact with hands, skin and eyes.
► Wear safety goggles.
► Wear personal protective equipment and suitable protective gloves.

WARNING
Electric short circuit!
Severe burns.
► Prevent short circuits in the electrical system, especially on the battery.
► Replace or change missing or defective protective insulation.

1.8 Protecting from scalding

WARNING
The cooling system is pressurized!
When the coolant reservoir is opened, hot coolant can escape explosively.
Severe scalding.

When the engine is warm:
► Do **not** open the cover of the coolant reservoir.
► To protect face, hands and arms from hot steam of hot coolant, cover the cap with a large rag when opening.

LWE/LTR 1100-009/25105-02-02/en

copyright © Liebherr-Werk Ehingen GmbH 2023

1.9 Rotating parts

WARNING
Rotating parts, ignition system on running engine!
The cooler fan can turn on suddenly.
Death, severe injury.
- ► Proceed especially careful.
- ► Do **not** reach into rotating parts.
- ► Never reach into the cooler fan when the engine is hot.

1.10 Using permissible service fluids

NOTICE
Impermissible service fluid added!
Destruction of components. Failure of the crane.
- ► Only add the service fluid that is specified on the sign on the respective service fluid container.
- ► Keep the service fluid absolutely pure.

1.11 Protecting against the hazards of service fluids

WARNING
Contact with service fluids!
Health risk.
- ► Make sure that personnel are aware of first aid measures.
- ► Use personal protective equipment depending on the service fluid.
- ► Observe and adhere to the safety data sheets of the service fluid manufacturer.

WARNING
Impermissible handling of service fluids!
Environmental risk.
- ► Make sure that the service fluids are **not** released in the environment.
- ► Immediately collect spilled service fluids using suitable material.
- ► Observe and adhere to the safety data sheets of the service fluid manufacturer.

1.12 Replacing damaged crane components

WARNING
Damaged crane components **not** replaced!
Death, severe injury, failure of components.
- ► Service the crane components according to the data in the maintenance intervals, the maintenance guidelines and the chart for service fluids and lubricants.
- ► Replace damaged crane components immediately.

1.13 After replacement of components

Type of oil, see data tag and supplied „Service fill“.

The following instructions must be observed when replacing components such as the engine, transmission or axle:

LWE/LTR 1100-009/25105-02-02/en

copyright © Liebherr-Werk Ehingen GmbH 2023

WARNING
Maintenance of a replaced component **not** carried out!
- ► Before start up, be sure to refill with the correct type of oil to the center of the minimum / maximum mark.
- ► Carry out first maintenance. See chapter „Maintenance intervals“.
- ► Adhere to regular maintenance intervals.
- ► Follow the break-in instructions. See the Crane operating instructions, chapter 2.02.

1.14 Tire size

When changing certain tire sizes, the mobile crane must be modified.

Contact Liebherr customer service to change the following tire sizes:
- From 385/95 R 25 to 445/95 R 25
- From 385/95 R 25 to 525/80 R 25
- From 445/95 R 25 to 385/95 R 25
- From 525/80 R 25 to 385/95 R 25

2 Warranty and coverage

NOTICE
Maintenance intervals and maintenance guidelines **not** adhered to, impermissible lubricants used!
Damage, failure of crane components.
The warranty for the respective crane component is voided.
- ► Service the crane components according to the data in the maintenance intervals, the maintenance guidelines and the chart for service fluids and lubricants.

NOTICE
Use of **non**-original Liebherr spare parts and **non**-original Liebherr service fluids!
In the event that replacement parts are used that are **not** original Liebherr replacement parts and **not** original Liebherr service fluids and lubricants, Liebherr-Werk Ehingen GmbH excludes all liability for system functionality as well as for the parts.
- ► Use only original Liebherr spare parts.

Note
- ► Original Liebherr replacement parts have been tested for crane operation and may be used without risking safety.

The buyer is entitled to warranty or coverage only:
- When only original Liebherr spare parts are used.
- When Liebherr service fluids and Liebherr lubricants are used for the Liebherr crane.

3 Liebherr Customer Service

Liebherr mobile cranes, whether truck-mounted, mobile or crawler cranes - are technically advanced products, which prove their worth daily even under tough conditions.

The high technical standards of these cranes provide functional security, resistance to failure and ease of maintenance.

Liebherr is continuously developing the drive and control components. The combination of well proven units and modern manufacturing methods produces cranes that are safe to operate and easy to maintain.

LWE/LTR 1100-009/25105-02-02/en

copyright © Liebherr-Werk Ehingen GmbH 2023

Several hundred cranes are built every year for the international market, supported by international service.

Liebherr's „After Sales Service“ plays an important role at Liebherr in ensuring operational readiness and high crane availability.

With Liebherr, Service begins when the crane is handed over. Your crane operators will be professionally trained in line with their level of knowledge and we devote much time to this.

We also train your workshop staff in all crane-specific matters, because we know that they can deal with more than just minor repairs themselves. Often there are specialists who can quickly and reliably carry out crane repairs.

We have special service advisers available who will solve any problems you may have. This phone contact saves time and money. You should take advantage of it as soon as possible.

Our service technicians are specialists with years of experience, who can be deployed from local support points. Naturally these experts have specialized knowledge and special tools.

But before you call these specialists, it is worth making use of the facilities for getting advice mentioned above.

4 Taking an oil sample

Note

- ► Liebherr recommends taking oil samples for the gears, engines and hydraulic system in regular intervals.
- ► Based on the trend analysis of the oil analysis results, changes can be determined in the lubricity of the oil and increased component wear.

WARNING

Tasks on components and operating fluids at operating temperature!
Burns.

- ► Carry out all tasks with utmost caution.
- ► Wear protective clothing.

Make sure that the following prerequisites are met:

– Oil has a normal operating temperature.

- ► Always take oil in the same location.
- ► Take oil always according to the same method.
- ► Do **not** take oil right after an oil change.
- ► Do **not** take oil immediately after larger amounts of oil have been added.

Note

Recommendation:

- ► Fill oil into original laboratory sample containers.

- ► Fill oil exclusively in a clean and dry sample container.

5 Taking care of the crane

5.1 Washing the crane

In order to ensure a consistent surface quality, the crane must be washed regularly. See the maintenance intervals, chapter 7.02, chapter 7.03, chapter 7.03.50. Clean the crane in particular after contact with highly corrosive materials or highly adherent contaminants.

LWE/LTR 1100-009/25105-02-02/en

copyright © Liebherr-Werk Ehingen GmbH 2023

Highly adherent contaminants are:
– Residual road salt
– Oils, grease and fuel
– Insect remains
– Rust film
– Tar splashes, concrete splatter

Check the crane for corrosion and paint damage. See the maintenance intervals, chapter 7.02, chapter 7.03chapter 7.03.50. If detected, have corrosion and paint damage removed by authorized and trained service personnel.

NOTICE
Impermissible cleaning agent!
Damage to the surface.
► Do not use aggressive cleaning agents.
► Do not use scouring cleaning agents.
► Do not use a phosphate based cleaner.
► Do not solvents or cleaning agents that contain solvents.
► Only use cleaning agents with a pH value that is less than / equal to 12.
► Make sure that the cleaning agent and water ratio of 3% is not exceeded.
► Rinse with clear water (not salt water).

Make sure that the following prerequisites are met:
– The crane is switched off and secured against unauthorized start up.
– The crane has cooled down.
– The battery master switch is turned off.

5.1.1 High pressure cleaner

The water jet of a circular jet nozzle can cause damage to the tires or parts of the travel gear that cannot be seen exteriorly.

NOTICE
High pressure cleaner with circular jet nozzle used!
Damaged components could fail unexpectedly.
► Do not use a high pressure cleaner with a circular jet nozzle.
► Replace damaged components.

CAUTION
Hot steam and water pressure!
Burns.
► Wear personal protective equipment.

Do **not** expose the following components to a water jet:
– Inside of the driver's cab and cab
– Electric motor
– Electrical plug connections, line drums and power distributor
– Control units
– Transmitter
– Relay circuit boards and fuse circuit boards
– Hydraulic block
– Intake manifolds for combustion air
– Seals
– Bellows
– Gear shafts
– Retracted sliding beams
– Sealing lips on slewing ring connections
– Radial shaft sealing rings on winches
– Slewing gears

LWE/LTR 1100-009/25105-02-02/en

copyright © Liebherr-Werk Ehingen GmbH 2023

- Hoist rope, control rope, assembly rope
- Piston rods
- Slip-resistant mats
- Signs
- Overflow container on the equipment
- Generator
- Lighting
- Wind speed sensor / airplane warning light
- Bearing on the rope pulleys
- Carrier rollers
- Swivel joints
- Pin points
- Head camera inclusive of the transmitter and receiver unit
- Hand pump on the folding jib

The crane can be cleaned with the high pressure cleaner. The water pressure, minimum distance and water temperature are specified in the following chart:

Washing painted surfaces		
Water pressure	**Minimum distance**	**Water temperature**
maximum 150 bar	30 cm to 40 cm	60 °C

Adjusting the high pressure cleaner

Washing surfaces covered with film		
Water pressure	**Minimum distance**	**Water temperature**
maximum 150 bar	80 cm	60 °C

Adjusting the high pressure cleaner

Washing surfaces protected against corrosion with Carlofon 81		
Water pressure	**Minimum distance**	**Water temperature**
maximum 30 bar	30 cm to 40 cm	40 °C

Adjusting the high pressure cleaner

Clean electrical systems, cables, cable harnesses and sound insulation mats with low pressure.

► Before cleaning, cover all openings.
► Wash the crane and equipment with a high pressure cleaner.
► Lubricate the crane and equipment.

Note
Environmental pollution!
► Dispose of auxiliary and cleaning materials contaminated with oil according to national and international regulations and directives.
► Only direct cleaning water through the oil separator of the drainage system.

LWE/LTR 1100-009/25105-02-02/en

copyright © Liebherr-Werk Ehingen GmbH 2023

5.1.2 Exhaust system

NOTICE
Ingress of water, steam or cleaning substances into the AGN-module!
Sensors and electrics for the exhaust aftertreatment can be destroyed, the coating of the catalytic converter can be washed off.
- ► Before cleaning, let the AGN system cool down (surface temperature 50 °C).
- ► Before cleaning, cover all openings.
- ► Make sure that **no** fluids and **no** dirt gets into the tailpipe opening of the AGN module.
- ► During cleaning, maintain a sufficient distance from the tailpipe opening.

5.1.3 Sound insulation mats

NOTICE
Improper cleaning (tools or cleaning methods)!
Sound insulation mats can be destroyed or damaged.
- ► Remove severe contamination with suitable tools, for example with soft plastic scrapers.
- ► Do **not** use tools with sharp edges.
- ► Use high pressure cleaners **exclusively** with extreme caution and with a sufficient distance to the sound insulation mats and with low water pressure.
- ► Do **not** use solvents for cleaning.

If sound insulation mats are contaminated with fuel, engine oil, gear oil, hydraulic oil or solvents:
- ► Observe and adhere to the section „Preventing fires“.

5.1.4 Slip-resistant mats

WARNING
Heavily worn slip-resistant mats!
People can slip and fall down from the crane.
- ► Replace heavily worn slip-resistant mats.
- ► Do **not** wax slip-resistant mats.

- ► Before every access: Check the slip-resistant mats for slip resistance and cleanliness.
- ► If dirty: Clean the slip-resistant mats with a brush with hard plastic bristles.
- ► For cleaning the surfaces, use commercially available cleaners.
- ► Flush with water.

5.1.5 Driver's cab and crane cab

Note
- ► The steering wheel, center console, instrument panel cover, floor covering and dirty upholstery in the driver's cab and the crane cab should only be cleaned with warm water mixed with dishwashing detergent.
- ► Keep the driver's cab and crane cab free from trash.

5.1.6 Ladders

- ► Remove any dirt on the ladders.
- ► Make sure that the grooves on the rungs are free of dirt.

LWE/LTR 1100-009/25105-02-02/en

copyright © Liebherr-Werk Ehingen GmbH 2023

5.2 Protecting the crane against corrosion

NOTICE
Aggressive environmental conditions!
Crane components can corrode and be damaged.
► Protecting the crane against corrosion

The corrosion protection agent **Carlofon 81** must be reapplied regularly according to wear. See the maintenance intervals, chapter 7.02, chapter 7.03 chapter 7.03.50.

The corrosion protection agent **Metacorin 822** must be reapplied regularly according to wear on the mechanically machined, blank surfaces. See the maintenance intervals, chapter 7.02, chapter 7.03 chapter 7.03.50.

The corrosion protection agent **Liebherr Cylinder Protect** must be reapplied regularly on the chrome-plated piston rods. See the maintenance intervals, chapter 7.02, chapter 7.03 chapter 7.03.50.

WARNING
Improper corrosion protection!
Injury to the respiratory system, suffocation.
► Wear a respirator mask.

NOTICE
Improper corrosion protection!
Damage to the crane.
► Make sure that crane corrosion protection is carried out only by authorized and trained service personnel.
► Make sure that the inspection and reconditioning intervals are not exceeded.

Make sure that the following prerequisites are met:
– A sufficient quantity of corrosion protection agent is available.
– Appropriate tools and aids are available.
– The crane is switched off and secured against unauthorized start up.
– The crane has cooled down.
– The battery master switch is turned off.
– Protective equipment is worn.

5.2.1 Crane

► Wash the crane thoroughly with a high pressure cleaner.
► Let the crane dry.

If corrosion or paint damage is found:
► Remove the corrosion and paint damage.

The following surfaces must be masked prior to corrosion protection:
– Walking surfaces and stepping surfaces
– Vents on brake valves and control valves
– Vents and drains on electrical equipment
– Mechanically machined, blank surfaces
– Piston rods

WARNING
Walking surfaces and stepping surfaces **not** masked!
Personnel can slip and fall down.
► Mask walking surfaces and stepping surfaces prior to corrosion protection.

► All surfaces that should **not** be corrosion protected should be masked.
► Protect the crane against corrosion with **Carlofon 81**.
► Remove the masking.

LWE/LTR 1100-009/25105-02-02/en

copyright © Liebherr-Werk Ehingen GmbH 2023

► Protect mechanically machined, blank surfaces against corrosion with **Metacorin 822**.
► Lubricate the crane.

5.2.2 Cylinders

If the chrome-plated piston rods are not retracted for a longer period of time, the chrome-plated piston rods must be protected against corrosion by applying **Liebherr Cylinder Protect**.

Application temperatures of **Liebherr Cylinder Protect**:
– Possible application temperatures: Between -20 °C and +45 °C.
– Optimal application temperatures: Between -10 °C and +30 °C.

Liebherr-Werk Ehingen GmbH recommends the first-time application of anti-corrosion agent, in the case of:
– Aggressive influences such as a high salt content in the ambient air:
  • After 24 hours without cylinder movement.
– Normal environmental conditions:
  • At least after 1 week without cylinder movement.

Note
► Only use **Liebherr Cylinder Protect** as corrosion protection for cylinders with chrome-plated piston rods.
► Do **not** apply corrosion protection to piston rods with NIL35 coating.

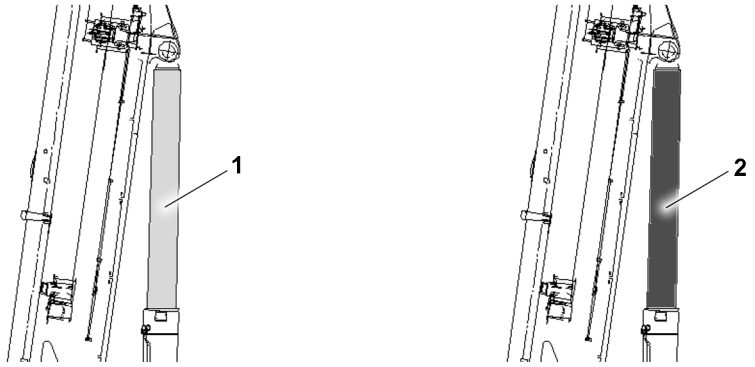

Fig.156557: Piston rods

1 Chrome-plated piston rod **2** Piston rod with NiL35 coating

Piston rods with a NiL35 coating appear darker than chrome-plated piston rods and can therefore be optically differentiated.

Before applying the anti-corrosion agent, the surface of the piston rod must be carefully wiped off with a clean cloth. The surface must be free of visible dirt. The use of an additional cleaner is not required.

► Clean the surface of the piston rod.
► Shake the spray can well before use. Apply the anti-corrosion agent evenly on the piston rod.
► Until a sufficient protective film has formed on the piston rod: Wait approx. 30 to 60 minutes.

When the **Liebherr Cylinder Protect** must be reapplied:
► Clean the surface of the piston rod again.

The piston rod must **not** be cleaned again when putting the hydraulic cylinder back into service.

When the hydraulic cylinder is put back into operation:
► Remove the anti-corrosion agent from the scraper.

5.3 Protecting the crane against corrosion for storage

Note
► When storing the crane, contact the Service department at Liebherr-Werk Ehingen GmbH.

LWE/LTR 1100-009/25105-02-02/en

copyright © Liebherr-Werk Ehingen GmbH 2023

5.4 Protecting the crane against corrosion for shutdown

Note
► Before shutting down the crane, contact the Service department at Liebherr-Werk Ehingen GmbH.

6 Storage

If the conditions in this section are observed, the crane can be stored as long as necessary.

6.1 Storage conditions

► Store the crane in a dry hall.

6.2 Decommissioning

Make sure that the following prerequisites are met:
– The crane is carefully washed.
– Corrosion and paint damage on the crane have been removed.
– Worn or damaged components have been replaced.

In the case of cranes with the battery master switch in the chassis and superstructure, both battery master switches must be turned off.

► Turn the battery master switch off.

In the case of cranes with a superstructure engine and a chassis engine, the batteries in the chassis and superstructure must be removed.

► Remove the batteries properly.

6.3 Maintenance

In the case of cranes with a fuel tank in the chassis and superstructure, both fuel tanks must be filled.

► Fill up the fuel tank completely.
► Apply approved lubricants in all lube points.
► Replace all operating fluids.
► Check the crane for leaking fluids.

If fluids are leaking from the crane:
► fix the leak.

In the case of cranes with a superstructure engine and a chassis engine, both engines must be started once a month.

► Start the engine once a month.

The specified maintenance interval must be observed even if the crane is in storage.

► Service the crane according to the maintenance interval.

6.4 Returning to service

NOTICE
Impermissible start up!
Damage to the crane.
► Make sure that the crane is supplied with approved lubricants.
► Make sure that the oil levels are correct.
► Only operate the crane in a perfect condition.

LWE/LTR 1100-009/25105-02-02/en

copyright © Liebherr-Werk Ehingen GmbH 2023

In the case of cranes with a superstructure engine and a chassis engine, the batteries must be installed in the chassis and superstructure.

- ► Install the batteries properly.
- ► Turn on the battery master switch.
- ► Put the crane in operation.

7 Recommendation for safe disposal

7.1 Service fluids and lubricants

WARNING
Service fluids and lubricants are dangerous waste products!
- ► Dispose of service fluids and lubricants separately.
- ► Service fluids and lubricants may **not** be disposed of in the ground, bodies of waters, wastewater systems, sewers or in the groundwater.
- ► Dispose of service fluids and lubricants in an environmentally safe manner.
- ► When disposing of service fluids and lubricants, observe and follow the applicable regulations of the responsible authorities.
- ► Observe and adhere to the safety data sheets of the service fluid manufacturer and the lubricant manufacturer.

Service fluids and lubricants are:
- – Fuels
- – Coolant
- – Urea
- – Engine oils, gear oils
- – Hydraulic fluids
- – Brake fluids
- – Window washer concentrate
- – Greases

7.2 Batteries

WARNING
Batteries contain harmful substances!
- ► Do **not** dispose of batteries in regular household trash.
- ► Collect batteries separately and send them for environmentally safe disposal.
- ► Leave batteries at a qualified workshop or at a licensed collection points for used batteries.

7.3 Prevention of improper machine use

After the end of its service life, the crane must be made unusable by cutting the load bearing crane structures, and in particular the steel structures. This can be done by means of flame cutting.

After the machine's service life has ended:
- ► Make the machine unusable.

7.4 Disposing of the machine

The crane owner is responsible for disposal.

- ► Separate the metals.

If the counterweights are made of concrete:
- ► Brake the steel parts out of the counterweight. Dispose of the concrete or recycle it.

Rope pulleys and bearing shoes in the boom are made out of PA6.

LWE/LTR 1100-009/25105-02-02/en

copyright © Liebherr-Werk Ehingen GmbH 2023

Due to the markings on the plastic parts, it is possible to dispose of them properly.

- ► Separate the plastic parts.
- ► Separate the remaining parts (for example, rubber, glass).
- ► Sort all parts.
- ► Take all parts to a licensed collection point for reusable materials and send them for recycling.

LWE/LTR 1100-009/25105-02-02/en

copyright © Liebherr-Werk Ehingen GmbH 2023

7.01.10 Service system

1	Description	2
2	Safety instructions	2
3	Calling up the service system	2
4	*Service system* operating interface	3
5	*Service system* function key line	5
6	Maintenance is due	5
7	Selecting the maintenance status	6
8	Resetting the maintenance status	7

LWE/LTR 1100-009/25105-02-02/en

copyright © Liebherr-Werk Ehingen GmbH 2023

1 Description

The service system is only available when a diesel particle filter is installed.

The service system is a function of the BSE test system.

For further functions of the BSE test system, see the Diagnostics manual.

2 Safety instructions

Observe and comply with chapter 2.04, chapter 2.06, chapter 2.07.

Observe and comply with chapter 7.01.

NOTICE
Maintenance interval exceeded!
The crane functions can fail. Death, severe bodily injuries.
Components can be damaged. Property damage.

When the error message in the LICCON computer system displays that maintenance is due:
► Make sure that the defined maintenance activities are carried out, see chapter 7.02, section „maintenance personnel“.

When maintenance activities have been carried out completely:
► Reset the respective maintenance status in the service system.

3 Calling up the service system

Make sure that the following prerequisite is met:
– The *Crane operation* program is visible on the LICCON monitor.

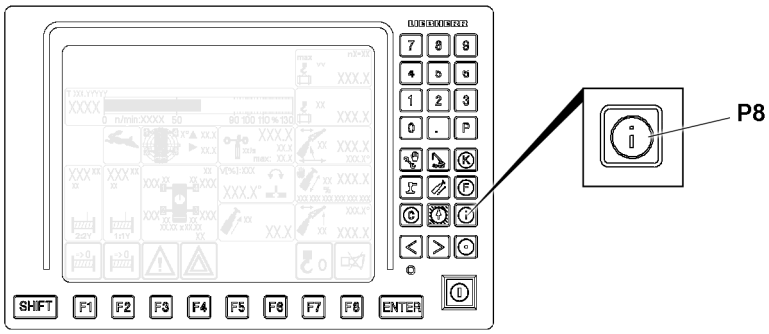

Fig.152484: Crane operation program

► Press the program key **P8**.

LWE/LTR 1100-009/25105-02-02/en

copyright © Liebherr-Werk Ehingen GmbH 2023

Result:

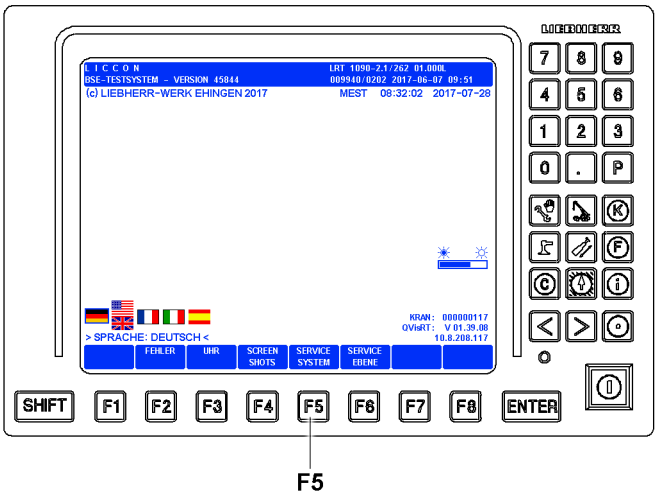

Fig.147628: BSE test system, start screen

– The *BSE test system* start screen is visible on the LICCON monitor.

► Press the function key **F5**.

Result:

– The *service system* operating interface is visible on the LICCON monitor.

4 *Service system* operating interface

4.1 Operating hour meter

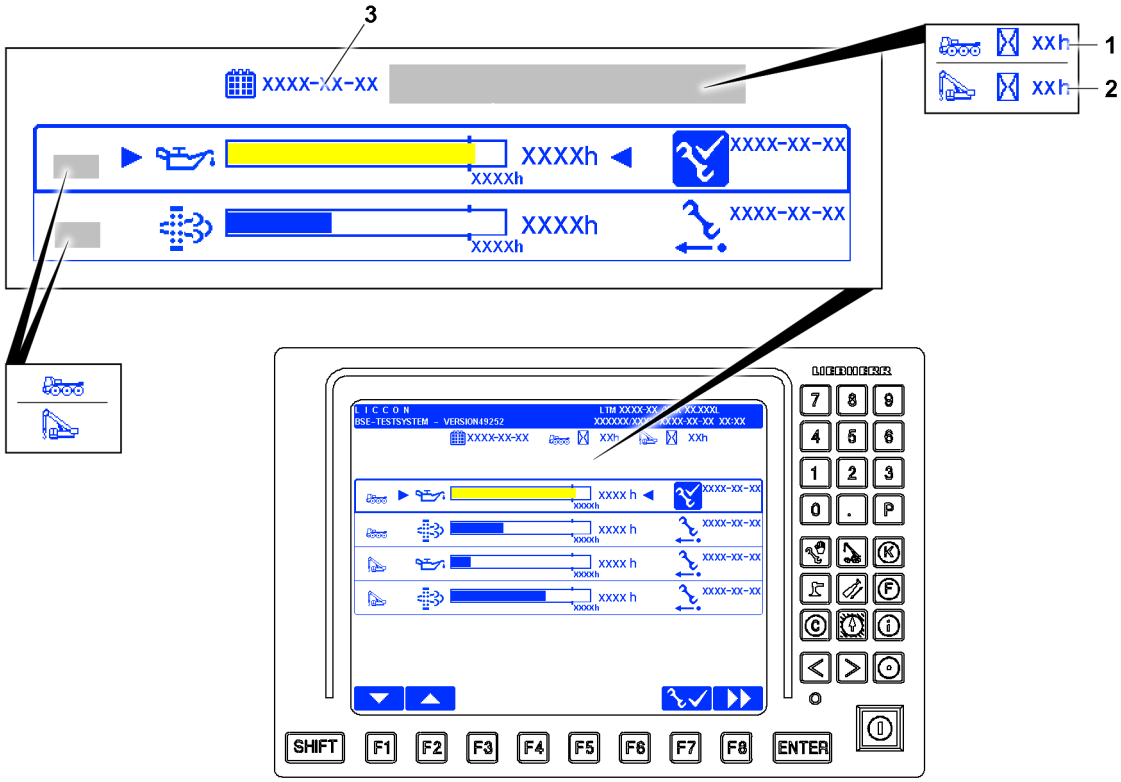

Fig.159214: Service system (example) operating interface

copyright © Liebherr-Werk Ehingen GmbH 2023

Depending on the crane type, there are different displays for the operating hours:

1 Crane chassis diesel engine operating hours
- The display is visible only for certain crane types.

2 Crane superstructure diesel engine operating hours
- The display is visible only for certain crane types.

3 Current date (year-month-day)

4.2 Maintenance status overview

For each diesel engine, the following maintenance statuses are displayed in pairs on the service system operating interface:
- *Engine oil* maintenance status
- *Diesel particle filter (DPF)* maintenance status

4.2.1 Crane chassis diesel engine

Note
► The display is only visible if there is a diesel engine in the crane chassis.

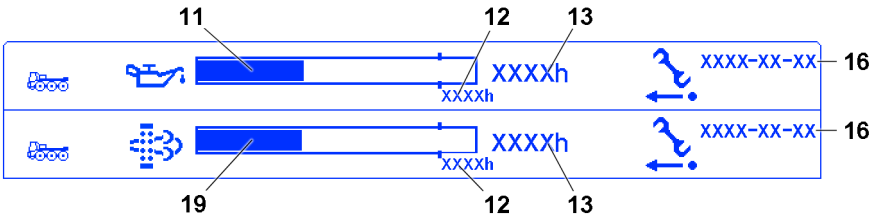

Fig.164823: Crane chassis diesel engine maintenance status

11 Bar diagram: Graphic display of the engine oil maintenance status
12 Maintenance interval in hours
13 Elapsed interval hours since the last maintenance
16 Date of last maintenance (year-month-day)
19 Bar diagram: Graphic display of the diesel particle filter maintenance status

4.2.2 Crane superstructure diesel engine

Note
► The display is only visible if there is a diesel engine in the crane superstructure.

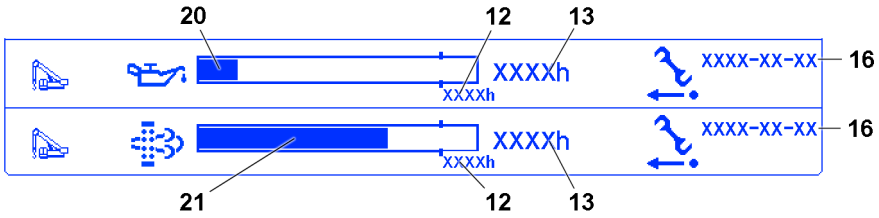

Fig.164822: Crane superstructure diesel engine maintenance status

12 Maintenance interval in hours
13 Elapsed interval hours since the last maintenance
16 Date of last maintenance (year-month-day)
20 Bar diagram: Graphic display of the engine oil maintenance status
21 Bar diagram: Graphic display of the diesel particle filter maintenance status

LWE/LTR 1100-009/25105-02-02/en

copyright © Liebherr-Werk Ehingen GmbH 2023

5 *Service system* function key line

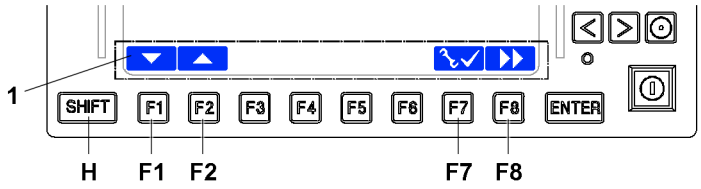

Fig.154729: Service system function key line

The function key line consists of function keys **F1** to **F8** and the function key icon line **1** above it.

F1 Function key
- Navigation in the *service system* operating interface, downward: Change maintenance status

F2 Function key
- Navigation in the *service system* operating interface, upward: Change maintenance status

F7 Function key
- If pressed together with the *SHIFT* **H** key: Reset the maintenance status

F8 Function key
- Call up the *BSEtest system* start screen

6 Maintenance is due

Error messages on the BTT or on the LICCON monitor draw attention to pending maintenance:
– When a maintenance interval has almost been reached, an error message is displayed.
– The maintenance that is due is indicated in an error text or can be read on the displays in the service system.
– When a maintenance interval has been reached 100 % or was exceeded, the bar diagram is displayed in „yellow“.

6.1 Engine oil change interval

The maintenance interval for the engine oil is a dynamically calculated interval that depends on the operating conditions of the crane.

NOTICE
According to the error message the engine oil was **not** changed!
The DPF can not be regenerated any more. Reduction of engine output.
► Pay attention to the error message: Change the engine oil immediately.

Error no.	Error text	Assignment
8CD69C	Engine oil change interval almost reached - observe the influence on DPF regeneration!	Chassis
8CD69D	Engine oil change interval reached - attention DPF regeneration not possible!	Chassis
8DD69C	Engine oil change interval almost reached - observe the influence on DPF regeneration!	Superstructure
8DD69D	Engine oil change interval reached - attention DPF regeneration not possible!	Superstructure

BSEtest system error messages: Engine oil

LWE/LTR 1100-009/25105-02-02/en

copyright © Liebherr-Werk Ehingen GmbH 2023

The engine oil change is a maintenance activity that is assigned the *engine oil* maintenance status.

► Carry out all defined maintenance activities, see chapter 7.02, section „engine oil maintenance status“.

When maintenance activities have been carried out completely:
► Call up the service system.
► Reset the *engine oil* maintenance status.

6.2 DPF filter element change interval

The maintenance interval for the diesel particle filter (DPF) is a dynamically calculated interval that depends on the operating conditions of the crane.

NOTICE
According to the error message the DPF filter element was **not** changed!
Reduction of engine output.
► Pay attention to the error message: Replace the DPF filter element immediately.

Error no.	Error text	Assignment
8CD079	Particle filter DPF cleaning interval reached, replace the DPF filter element	Chassis
8CD07A	Particle filter DPF cleaning interval reached, replace the DPF filter element - reduction!	Chassis
8DD079	Particle filter DPF cleaning interval reached, replace the DPF filter element	Superstructure
8DD07A	Particle filter DPF cleaning interval reached, replace the DPF filter element - reduction!	Superstructure

BSEtest system error messages: Diesel particle filter (DPF)

The DPF filter element change is a maintenance activity that is assigned the *diesel particle filter (DPF)* maintenance status.

► Carry out all defined maintenance activities, see chapter 7.02, section „diesel particle filter (DPF) maintenance status“.

When maintenance activities have been carried out completely:
► Call up the service system.
► Reset the *diesel particle filter (DPF)* maintenance status.

7 Selecting the maintenance status

Display elements differentiate the condition for the maintenance status:
– Selected maintenance status
– Unselected maintenance status

LWE/LTR 1100-009/25105-02-02/en

copyright © Liebherr-Werk Ehingen GmbH 2023

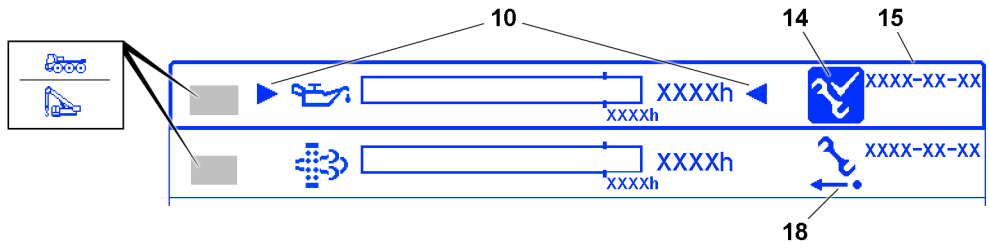

Fig.164844: Maintenance status, display elements, service system

10 Arrow
14 *Selected maintenance status* icon
15 Frame for selected maintenance status
18 *Maintenance status not selected* icon

Definition of the function keys, see section „service system function key line“.

► Until the selected maintenance status is selected: Press the function keys.

8 Resetting the maintenance status

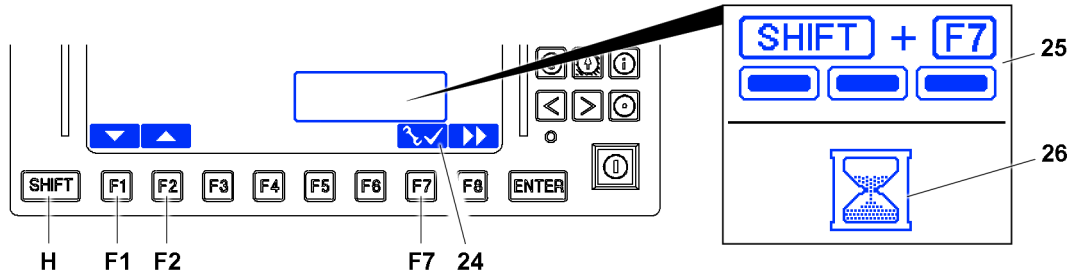

Fig.164829: Resetting the maintenance status

8.1 Resetting the *engine oil* maintenance status

Make sure that the following prerequisite is met:
– The diesel engine is turned off.
– The icon **24** is visible.

► Use the function key **F1** and function key **F2** to select the maintenance status that must be reset.

Result:
– The selected maintenance status is marked visually, see section „Select maintenance status“.

► Press the SHIFT key **H** and function key **F7** at the same time and hold them.

Result:
– The display **25** is visible.

► Hold the SHIFT key **H** and the function key **F7** until the display **25** is hidden.

When the display **26** is shown:
► Wait until the display **26** is hidden.

Result:
– The selected maintenance status is reset to **0 hours**.
– The date is updated.

8.2 Resetting the *diesel particle filter (DPF)* maintenance status

Make sure that the following prerequisite is met:
– The diesel engine is turned off.
– The icon **24** is visible.

The maintenance interval for the diesel particle filter (DPF) can only be reset with a daily code.

LWE/LTR 1100-009/25105-02-02/en

copyright © Liebherr-Werk Ehingen GmbH 2023

The icon over the function key **F7** for resetting the maintenance interval for the diesel particle filter (DPF) appears only when entering the daily code.

► For registered customers: Call up the daily code at www.myliebherr.com.
or
Request the daily code from the Service Dept. at Liebherr-Werk Ehingen GmbH.
► Enter the daily code on the service level in the *BSE test system*, see the Diagnostics manual.
► Use the function key **F1** and function key **F2** to select the maintenance status that must be reset.

Result:
– The maintenance status is marked visually, see section „Select maintenance status“.

► Press the SHIFT key **H** and function key **F7** at the same time and hold them.

Result:
– The display **25** is visible.

► Hold the SHIFT key **H** and the function key **F7** until the display **25** is hidden.

When the display **26** is shown:
► Wait until the display **26** is hidden.

Result:
– The selected maintenance status is reset to **0 hours**.
– The date is updated.

LWE/LTR 1100-009/25105-02-02/en

copyright © Liebherr-Werk Ehingen GmbH 2023

7.02 Maintenance and inspection schedule

1	Crane operator	3
2	Maintenance personnel	11

LWE/LTR 1100-009/25105-02-02/en

copyright © Liebherr-Werk Ehingen GmbH 2023

LWE/LTR 1100-009/25105-02-02/en

Fig.195219

copyright © Liebherr-Werk Ehingen GmbH 2023

1 Crane operator

Daily	Before start up and before assembly	Weekly	Crane operator Activities to be performed ● Repeat interval	Chapter	Confirmation
			Crane base		
●			Check for leaks.		
			Accessible surfaces (crawler travel gear)		
●			Check the accessible surfaces for cleanliness.		
●			Check accessible surfaces for completeness and slip resistance.		
			Diesel engine		
●			Check the oil level on the LICCON monitor.	7.04	
			Cooling system		
●			Check the fill level in the coolant tank.	7.04	
			SCR exhaust system*		
●			Visual inspection: Check the fastening, lines and electronic plug.		
			Hydraulic hose lines		
●			Check for damage and leaks.	7.04	
			Travel gear		
●			Visual inspection: Check for leaks.	7.04	
			Crawler carrier		
●			Check that the carrier rollers, track rollers and idlers are tight. If a component is leaky, have the component replaced by maintenance personnel.		
			Crawler chain		
●			Check the chain tension. If necessary, have the chain tightened by maintenance personnel.	7.04	
			Slewing gear		
●			Check the slewing gear for leaks.		
●			Check the slewing gear brake for leaks.		
			Winches		
●			Check the winches for leaks.		
			Rope pulleys		
●			Remove snow and ice.		

LWE/LTR 1100-009/25105-02-02/en

copyright © Liebherr-Werk Ehingen GmbH 2023

Daily	Before start up and before assembly	Weekly	Crane operator Activities to be performed ● Repeat interval	Chapter	Confirmation
			Overload protection		
●			Check the function: Perform a overload protection quick test.	4.04	
			Electrical system		
●			Check the function of the vehicle lighting.		
			Engine preheating engine-independent heater*		
●			Check the fill level of the fuel container.	7.04	
			Crane cab engine-independent heater*		
●			Check the fill level in the expansion tank.	7.04	
			Crane cab: Operating and control instruments		
●			Check the function of the fittings.		
●			Check the function of the indicator lights.		
			Crane ropes		
●			Visual inspection: Check the crane ropes for damage and distortion.		
			Personal protective equipment		
	●		Check the personal protective equipment. Observe the manufacturer documentation.		
			Fall protection equipment		
	●		Check the ladders and ladder positioning points.	8.17	
	●		Check railings, steps and pedestals for damage and safe function.		
	●		Check the catwalks and grating for safe function.		
			Accessible surfaces		
	●		Check accessible surfaces for completeness and slip resistance.		
			Load handling equipment and assembly aids		
	●		Visual inspection: Check for cracks, damage, wear and distortion.		
			Fastening equipment and load securing devices		
	●		Visual inspection: Observe and adhere to the manufacturer's documentation.		
			Rigging points and fastening points		
	●		Visual inspection: Check the condition and mounting.	8.01	
			Winches		
	●		At assembly: Check the oil level.	7.04	

LWE/LTR 1100-009/25105-02-02/en

copyright © Liebherr-Werk Ehingen GmbH 2023

Daily	Before start up and before assembly	Weekly	Crane operator Activities to be performed ● Repeat interval	Chapter	Confirmation
			Track adjustment		
	●		Clean and grease visible gliding surfaces.		
	●		Check the hydraulic cylinder for tightness and tight seating.		
			Assembly support		
	●		Check the hydraulic cylinder for tightness and tight seating.		
			Pneumatic springs		
	●		Check for function and damage (turntable cover, for example).		
			Folding jib		
	●		Check the function of the swing cylinder (on the pivot section of the telescopic boom).		
	●		Check the function of the hydraulic assembly aid (on the adapter).		
			Carrier rollers		
	●		Perform a visual inspection.	8.01	
	●		Check the depth of the lead-in tracks.	8.01	
	●		Function test: Check the bearing for easy movement.	8.01	
			Hydraulic cylinder (boom)		
	●		Check the hydraulic cylinder for leaks.		
	●		Lubricate the bearing. See the Service fill.		
			Pin connections (boom)		
	●		Lubricate the pin connections.		
			Pin connections		
	●	Every 8 weeks (also if used for a long period of time).	Check the retainer of the pin connections.		
	●	Every 8 weeks (also if used for a long period of time).	Visual inspection: Check the pins and / or connector elements for damage.		
	●	Every 8 weeks (also if used for a long period of time).	Visual inspection: Check the retaining elements for damage.		
			Slewing ring connection		
	●	Every 3 months if the crane is not moved	Lubricate the slewing ring connection.	7.04	

LWE/LTR 1100-009/25105-02-02/en

copyright © Liebherr-Werk Ehingen GmbH 2023

Daily	Before start up and before assembly	Weekly	Crane operator Activities to be performed ● Repeat interval	Chapter	Confirmation
			Lattice sections		
	●	●	Grease the lube points of lattice sections.		
			Rope pulleys		
	●	●	Check the groove base for cleanliness.		
			Hook block		
	●	●	Lubricate the pressure bearings on the grease fitting. See the Service fill.		
	●	●	Grease the hinge joint of the points of lattice sections. If grease fittings are available: See the Service fill. If grease fittings are not available: Use multifunctional spray.		
	●	●	Check if the anti-rotation device of the hook nut is tightened.		
	●	●	Check the retaining elements: Anti-rotation device of the hook nut, hook guard.		
			Accessible surfaces		
		●	Check the accessible surfaces for cleanliness.		
		●	Check accessible surfaces for completeness and slip resistance.		
			Central lubrication system		
		●	Check the fill level in the grease container, add grease if necessary. See the Service fill	7.04	
		Every 3 months if the crane is not moved	Activate intermediate lubrication.	7.04	
		Every 6 months	Activate intermediate lubrication.	7.04	
			Travel gear		
		Every 4 weeks	Check the oil level.	7.04	
		Every 4 weeks	Check the gear and hydraulic connections for leaks.		
			Crawler carrier		
		Every 4 weeks	Check the sprocket, idler and idler guide for wear. Have it replaced by maintenance personnel when necessary.	7.04	
		Every 4 weeks	Check the track rollers, carrier rollers, slide plates and guide blocks for wear. Have it replaced by maintenance personnel when necessary.	7.04	
		Every 4 weeks	Check the tightness of the mounting screws.		

LWE/LTR 1100-009/25105-02-02/en

copyright © Liebherr-Werk Ehingen GmbH 2023

Daily	Before start up and before assembly	Weekly	Crane operator Activities to be performed ● Repeat interval	Chapter	Confirmation
			Crawler chain		
		Every 4 weeks	Check the crawler chain for damage.		
		Every 4 weeks	Check the contact surfaces, gliding surfaces of the chain links, chain pitch, chain bushing and outrigger pads for wear.	7.04	
		Every 4 weeks	Visual inspection: Check that the screws in the outrigger pads are firmly tightened. Retighten if necessary, until the specified torque is reached.	7.05	
			Assembly support		
		Every 4 weeks	Grease the bearing points of the support beams.		
			Diesel engine		
		●	Visual inspection: Check for leaks, impurities and damage.		
			Cooling system		
		●	Visual inspection: Check the cooling system for leaks.		
			Fuel system		
		●	Check the fuel system for leaks.		
		●	Check the fuel preliminary filter, drain water if necessary.	7.04	
			Compressed air system		
		●	Check the compressed air system for leaks (listen).		
		●	Drain water from the compressed air tank.	7.04	
			Air filter system		
		●	Clean the dust discharge valve.		
			Hydraulic system		
		●	Check the hydraulic system for leaks		
		●	Check the oil level in hydraulic tank.	7.04	
		●	Check the fouling indicator on the return filter.	7.04	
		●	Check the fouling indicator on the pressure filter.	7.04	
			Slewing gear		
		●	Slewing gear: Check the oil level on the oil tank.	7.04	
		●	Overflow container: Dispose of the gear oil.	7.04	
			Slewing ring connection		
		Every 8 weeks and as necessary.	Lubricate the gear ring and the slewing gear pinion. See the Service fill.	7.04	

LWE/LTR 1100-009/25105-02-02/en

copyright © Liebherr-Werk Ehingen GmbH 2023

Daily	Before start up and before assembly	Weekly	Crane operator Activities to be performed ● Repeat interval	Chapter	Confirmation
			Pin connections (turntable)		
		Every 8 weeks	Check the retainer of the pin connections.		
		Every 8 weeks	Visual inspection: Check the pins and / or connector elements for damage.		
		Every 8 weeks	Visual inspection: Check the retaining elements.		
			Crane cab heating-air conditioner device		
		Every 4 weeks	Operate the climate control system for 15 min and check the function.	6.02	
			Engine preheating engine-independent heater*		
		● Outside of the heating period	Operate and check the function for 15 min with the engine cold and the heater at the highest temperature level.	7.04	
			Crane cab engine-independent heater*		
		●	Check the fuel tank for leaks.		
		● During the heating period	Operate and burn-off the burner for 15 min with the engine cold and the highest fan stage.	7.04	
		Every 4 weeks outside of the heating period	Operate and check the function for 15 min with the engine cold and the highest fan stage.	7.04	
			Crane cab		
		Every 8 weeks	Check the function of the sliding devices: Extend the step		
		Every 8 weeks	Check the function of the inclination devices: Incline the crane cab fully to the rear and fully to the front.		
		Every 8 weeks	Lubricate the bearings of the sliding devices and inclination devices.		
			Window washing system		
		●	Check the fill level of the cleaning fluid. When necessary, add cleaning fluid.	7.04	
			Telematik telescopic boom system		
		●	Check the lubrication condition of the inner and outer gliding surfaces of the telescopic boom bearing, lubricate if necessary.	7.04	

LWE/LTR 1100-009/25105-02-02/en

copyright © Liebherr-Werk Ehingen GmbH 2023

Daily	Before start up and before assembly	Weekly	Crane operator Activities to be performed ● Repeat interval	Chapter	Confirmation
			Crane		
		● Each time after the crane is used if possible.	Wash the crane.	7.01	
		Every 6 months if possible each time after the crane is used.	Check the crane for corrosion and paint damage.	7.01	

* Optional

LWE/LTR 1100-009/25105-02-02/en

copyright © Liebherr-Werk Ehingen GmbH 2023

LWE/LTR 1100-009/25105-02-02/en

Fig.195219

copyright © Liebherr-Werk Ehingen GmbH 2023

2 Maintenance personnel

2.1 *Engine oil* maintenance status

The *engine oil* maintenance status is displayed in the service system. For the service system, see chapter 7.01.10.

Crawler travel gear operating hour meter, see chapter 4.01.

Crane type:	Subsidiary:
Crane number:	Maintenance personnel
Current date (year-month-day): _ _ _ _ - _ _ - _ _	Last name, first name:
Date of last maintenance (year-month-day) _ _ _ _ - _ _ - _ _	Date:
Elapsed interval hours since last maintenance _ _ _ _ _ _ h	Signature:
Operating hours display Diesel engine operating hours: _ _ _ _ _ _ h Crawler travel gear operating hours: _ _ _ _ _ _ h	Next maintenance with operating hours Diesel engine operating hours: _ _ _ _ _ _ h Crawler travel gear operating hours: _ _ _ _ _ _ h
Maintenance status, elapsed hours Engine oil hours: _ _ _ _ _ _ h Diesel particle filter (DPF)*: _ _ _ _ _ _ h	Next maintenance in 1 year (year-month-day): _ _ _ _ - _ _ - _ _

When all maintenance activities and maintenance intervals are completed, the maintenance status must be reset in the service system.

	Maintenance personnel		
Every 1000 h	**Activities to be performed** ● **Repeat interval** ■ **First maintenance**	**Chapter**	**Confirmation**
	Diesel engine		
● 1) 2) 3)	Change the engine oil and replace the oil filter. See the Service fill.	7.01.10, 7.05	
	Replace the oil separator filter insert.	7.05	
	Service system		
●	Reset the *engine oil* maintenance status.	7.01.10	

* Optional

1) The interval and be reduced depending on the individual load duty cycle, see the error message chapter 7.01.10.

2) The interval is reduced in the case of alternative oil specifications, see the see separate engine manufacturer's operating instructions.

3) The interval depends on the sulfur content in the permissible fuel for the respective emissions level, see the see separate engine manufacturer's operating instructions.

LWE/LTR 1100-009/25105-02-02/en

copyright © Liebherr-Werk Ehingen GmbH 2023

LWE/LTR 1100-009/25105-02-02/en

Fig.195219

copyright © Liebherr-Werk Ehingen GmbH 2023

2.2 *Diesel particle filter (DPF)** maintenance status

The *Diesel particle filter (DPF)* maintenance status is displayed in the service system. For the service system, see chapter 7.01.10.

Crawler travel gear operating hour meter, see chapter 4.01.

Crane type:	Subsidiary:
Crane number:	Maintenance personnel
Current date (year-month-day): _ _ _ _ - _ _ - _ _	Last name, first name:
Date of last maintenance (year-month-day) _ _ _ _ - _ _ - _ _	Date:
Elapsed interval hours since last maintenance _ _ _ _ _ _ h	Signature:
Operating hours display Diesel engine operating hours: _ _ _ _ _ _ h Crawler travel gear operating hours: _ _ _ _ _ _ h	Next maintenance with operating hours Diesel engine operating hours: _ _ _ _ _ _ h Crawler travel gear operating hours: _ _ _ _ _ _ h
Maintenance status, elapsed hours Engine oil hours: _ _ _ _ _ _ h Diesel particle filter (DPF)*: _ _ _ _ _ _ h	Next maintenance in 1 year (year-month-day): _ _ _ _ - _ _ - _ _

When all maintenance activities and maintenance intervals are completed, the maintenance status must be reset in the service system.

	Maintenance personnel		
Every 5000 h	**Activities to be performed** ● **Repeat interval** ■ **First maintenance**	**Chapter**	**Confirmation**
	SCR exhaust system*		
● See the service system display	Replace the diesel particle filter.	7.05	
●	Urea tank: Replacing the filter strainer in the tank fitting.	7.05	
	Service system		
●	Reset the *diesel particle filter (DPF)* maintenance status.	7.01.10	

* Optional

LWE/LTR 1100-009/25105-02-02/en

copyright © Liebherr-Werk Ehingen GmbH 2023

LWE/LTR 1100-009/25105-02-02/en

Fig.195219

copyright © Liebherr-Werk Ehingen GmbH 2023

2.3 *Total (diesel engine)* maintenance status

The *Diesel particle filter (DPF)* maintenance status is displayed in the service system. For the service system, see chapter 7.01.10.

Crawler travel gear operating hour meter, see chapter 4.01.

Crane type:	Subsidiary:
Crane number:	Maintenance personnel
Current date (year-month-day): _ _ _ _ - _ _ - _ _	Last name, first name:
Date of last maintenance (year-month-day) _ _ _ _ - _ _ - _ _	Date:
Elapsed interval hours since last maintenance _ _ _ _ _ _ h	Signature:
Operating hours display Diesel engine operating hours: _ _ _ _ _ _ h Crawler travel gear operating hours: _ _ _ _ _ _ h	Next maintenance with operating hours Diesel engine operating hours: _ _ _ _ _ _ h Crawler travel gear operating hours: _ _ _ _ _ _ h
Maintenance status, elapsed hours Engine oil hours: _ _ _ _ _ _ h Diesel particle filter (DPF)*: _ _ _ _ _ _ h	Next maintenance in 1 year (year-month-day): _ _ _ _ - _ _ - _ _

	Maintenance personnel		
Every 1000 h	**Activities to be performed** ● **Repeat interval** ■ **First maintenance**	**Chapter**	**Confirmation**
	Diesel engine		
●	Check the condition, fastening and tightness of the intake and exhaust system.		
●	Check the ribbed V-belt.		
●	Check the condition of the belt drive, replace if required.	7.05	
Every 5000 h	Replace the belt drive.	7.05	
●	Check the engine mount and diesel engine brackets for tight seating.		
●	Check the valve clearance.	7.05	
●	Check the engine control unit mount, sensors, actuators, cable holders and plugs for damage.		
Every 10000 h	Check the heat flange.	7.05	
Every 10000 h	Replace the heat flange.	7.05	

LWE/LTR 1100-009/25105-02-02/en

copyright © Liebherr-Werk Ehingen GmbH 2023

	Maintenance personnel		
Every 1000 h	**Activities to be performed** **● Repeat interval** **■ First maintenance**	**Chapter**	**Confirmation**
	Fuel system		
●	Drain the sediment in the fuel tank.	7.05	
●	Service the fuel preliminary filter.	7.05	
●	Replace the fuel fine filter.	7.05	
●	Fuel tank: Check the condition and fastening of the system.		
	Transmission		
●	Check the oil level.	7.04	
	Service system		
●	Reset the *total (diesel engine)* maintenance status.	7.01.10	

* Optional

LWE/LTR 1100-009/25105-02-02/en

copyright © Liebherr-Werk Ehingen GmbH 2023

Empty page!

LWE/LTR 1100-009/25105-02-02/en

copyright © Liebherr-Werk Ehingen GmbH 2023

LWE/LTR 1100-009/25105-02-02/en

Fig.195219

copyright © Liebherr-Werk Ehingen GmbH 2023

2.4 *Crawler travel gear hours* and *crawler travel gear days* maintenance status.

The *Diesel particle filter (DPF)* maintenance status is displayed in the service system. For the service system, see chapter 7.01.10.

Crawler travel gear operating hour meter, see chapter 4.01.

Crane type: Travel gear	Subsidiary:
Crane number:	Maintenance personnel
Current date (year-month-day): _ _ _ _ - _ _ - _ _	Last name, first name:
Date of last maintenance (year-month-day) _ _ _ _ - _ _ - _ _	Date:
Elapsed interval hours since last maintenance: _ _ _ _ _ _ h	Signature:
Operating hours display Diesel engine operating hours: _ _ _ _ _ _ h Crawler travel gear operating hours: _ _ _ _ _ _ h	Next maintenance with operating hours Diesel engine operating hours: _ _ _ _ _ _ h Crawler travel gear operating hours: _ _ _ _ _ _ h
Maintenance status, elapsed hours Engine oil hours: _ _ _ _ _ _ h Diesel particle filter (DPF)*: _ _ _ _ _ _ h	Next maintenance in 1 year (year-month-day): _ _ _ _ - _ _ - _ _

Crawler travel gear operating hours			Maintenance personnel Activities to be performed ● Repeat interval ■ First maintenance	Chapter	Confirmation
100 h	Every 1000 h	Annually			
			Travel gear		
■			Change the gear oil. See the service fill.	7.05	
			Crawler carrier		
■			Check the tightness of the mounting screws.		
			Travel gear		
	Every 4000 h	Every 4 years	Change the gear oil. See the service fill.	7.05	
	●	●	Check the gear oil (oil analysis).	7.01	
	●	●	Check the tightness of the mounting screws.		
			Accessible surfaces		
		●	Check accessible surfaces for completeness and slip resistance.		
			Signs		
		●	Check signs for completeness and legibility.		

LWE/LTR 1100-009/25105-02-02/en

copyright © Liebherr-Werk Ehingen GmbH 2023

Crawler travel gear operating hours			Maintenance personnel Activities to be performed ● Repeat interval ■ First maintenance	Chapter	Confirmation
100 h	Every 1000 h	Annually			
			Crawler carrier		
		●	Have the spring and tension system checked by an authorized and trained service technician.		
		●	Check the tightness of the mounting screws.		
		●	Clean and grease the gliding surfaces of the guide rails on the sliding component.		
			Crawler chain		
		●	Retighten the screws on the outrigger pads until the specified torque is reached.	7.05	
			Emergency control		
		●	Have the function of the emergency control checked by authorized and trained service personnel. Comply with national regulations.		
			Electrical system		
		●	Check the bulbs and fuses.	7.05	
		●	Check the lines.	7.05	
		●	Check the cable connections.		
		●	Visual inspection: Check the plug connections and screw connections for damage and tight seating.		
			Crane, protected against corrosion		
		Every 6 months	Check the corrosion protection for wear, and if necessary reapply protection.	7.01	
		Every 2 months	Check the corrosion protection on mechanically machined, blank surfaces for wear and reapply the corrosion protection if necessary.	7.01	
		Every 3 months	Check the corrosion protection on the chrome-plated piston rods for wear, and if necessary reapply the corrosion protection.	7.01	

* Optional

LWE/LTR 1100-009/25105-02-02/en

copyright © Liebherr-Werk Ehingen GmbH 2023

Empty page!

LWE/LTR 1100-009/25105-02-02/en

copyright © Liebherr-Werk Ehingen GmbH 2023

LWE/LTR 1100-009/25105-02-02/en

Fig.195219

copyright © Liebherr-Werk Ehingen GmbH 2023

2.5 *Crane superstructure hours* and *crane superstructure days* maintenance status

The crane superstructure operating hours are not displayed in the Service System or on the BTT.

The crane superstructure operating hours (without crawler travel gear) must be calculated.

Deduct the crawler travel gear operating hours from the total operating hours (diesel engine).

The *Diesel particle filter (DPF)* maintenance status is displayed in the service system. For the service system, see chapter 7.01.10.

Crawler travel gear operating hour meter, see chapter 4.01.

Crane type:	Subsidiary:
Crane number:	Maintenance personnel
Current date (year-month-day): _ _ _ _ - _ _ - _ _	Last name, first name:
Date of last maintenance (year-month-day) _ _ _ _ - _ _ - _ _	Date:
Elapsed interval hours since last maintenance: _ _ _ _ _ _ h	Signature:
Operating hours display Diesel engine operating hours: _ _ _ _ _ _ h Crawler travel gear operating hours: _ _ _ _ _ _ h Crane superstructure operating hours (Diesel engine operating hours – crawler travel gear operating hours): _ _ _ _ _ _ h	Next maintenance in 1 year (year-month-day): _ _ _ _ - _ _ - _ _ Next maintenance with operating hours Crane superstructure operating hours (Diesel engine operating hours – crawler travel gear operating hours): _ _ _ _ _ _ h

Crane superstructure operating hours			Maintenance personnel		
			Activities to be performed ● Repeat interval ■ First maintenance	Chapter	Confirmation
100 h	Every 1000 h	Annually			
			Crane superstructure hydraulic system		
■			Replace the pressure filter element.	7.05	
■			Hydro reservoir: Have the pretension pressure (nitrogen) checked by an authorized and trained service technician.	7.05	
			Slewing gear		
■			Slewing gear: Check the tightness of the mounting screws.	8.01	
■			Slewing gear: Change the gear oil. See the Service fill.	7.05	
			Turntable lock		
■			Lubricate the pins: With a grease gun on the grease fitting.		

LWE/LTR 1100-009/25105-02-02/en

copyright © Liebherr-Werk Ehingen GmbH 2023

Crane superstructure operating hours			Maintenance personnel Activities to be performed ● Repeat interval ■ First maintenance	Chapter	Confirmation
100 h	Every 1000 h	Annually			
			Winch		
■			Winch gear: Change the gear oil. See the Service fill.	7.05	
			Slewing ring connection		
500 h			Check the tightness of the mounting screws.	8.01	
			Supports, hydraulic		
	● And as necessary		Grease the sliding beams. See the Service fill.		
			Winches and slewing gear		
	●		Check the gear oil (oil analysis).	7.01	
			Central lubrication system		
	●		Check the function.	7.05	
			Crane superstructure hydraulic system		
	●		Check the hydraulic oil: Take an oil sample and have it checked by oil supplier (required degree of purity: 20/18/15).	7.01	
	● And if the maintenance indicator activates.		Replace the pressure filter element.	7.05	
			Rope pulleys		
	●		Check the rope pulleys for damage and cracks.	7.05	
	●	●	Check the groove diameter.	8.01	
	●	●	Check the bearing for easy movement.	7.05	
	●	●	If the rope diameter is at least 25 mm: Lubricate the bearing.	7.05	
			Crane cab engine-independent heater*		
	Every 3000 h	●	Have the burner of the heater replaced by an authorized and trained service technician.		
			Slewing gear		
	●	●	Check the tightness of the mounting screws.	8.01	
	Every 4000 h	Every 4 years	Slewing gear: Change the gear oil. See the Service fill.	7.05	
	●	●	Check the function of the slewing gear brake.		
			Slewing ring connection		
	●	●	Check the tightness of the mounting screws.	8.01	

LWE/LTR 1100-009/25105-02-02/en

copyright © Liebherr-Werk Ehingen GmbH 2023

Crane superstructure operating hours			Maintenance personnel		
100 h	Every 1000 h	Annually	Activities to be performed ● Repeat interval ■ First maintenance	Chapter	Confirmation
			Turntable lock		
	●	●	Lubricate the pins: With a grease gun on the grease fitting.		
	●	●	Check the function of the turntable lock.		
			Winches		
	Every 4000 h	Every 4 years	Winch gear: Change the gear oil. See the Service fill.	7.05	
	●	●	Check the tightness of the mounting screws.	8.01	
	●	●	Check the winch brake for leaks.	7.05	
	●	●	Check the winch brake oil level.	7.05	
			Telematik telescopic boom system		
	●	●	Check the elements of the locking system.	8.01	
	●	●	Check that the screws in the adjustment plates are firmly tightened.	8.01	
	●	●	Lubricate the locking pin. See the Service fill.	7.05	
	●	●	Check that the gliding surfaces are not damaged.		
	●	●	Lubricate the outer and inner gliding surfaces of the telescopic boom bearing. See the Service fill.	7.05	
	●	●	Grease the guide rails on the telescoping cylinder. See the Service fill.		
			Pneumatic springs		
	●	●	Check for function and damage. (For example, turntable cover, rope pulley on the folding jib for assembly support)		
			Carrier rollers		
	●	●	Perform a visual inspection.	8.01	
	●	●	Check the depth of the lead-in tracks.	8.01	
	●	●	Function test: Check the bearing for easy movement.	8.01	
	●	●	Check the tightness of the mounting screws.	8.01	
			Crane ropes		
	●	●	Check and lubricate the crane ropes.	7.05	
	●	●	Checking the multi layer spooling for distortions.	7.05	

LWE/LTR 1100-009/25105-02-02/en

copyright © Liebherr-Werk Ehingen GmbH 2023

Crane superstructure operating hours			Maintenance personnel		
			Activities to be performed ● Repeat interval	Chapter	Confirmation
100 h	Every 1000 h	Annually	■ First maintenance		
			Crane cab		
	●	●	Check the function of the sliding device: Extend the step.		
	●	●	Check the function of the inclination device: Incline the crane cab fully to the rear and fully to the front.		
	●	●	Lubricate the bearings of the sliding devices and inclination devices.		
			Service system		
	●		Reset the *crane superstructure hours* maintenance status.	7.01.10	
			Accessible surfaces		
		●	Check accessible surfaces for completeness and slip resistance.		
			Cooling system		
		●	Coolant: Check the concentration of the antifreeze.	7.05	
		At least every 4 years	If Liebherr Antifreeze OS is used: Change the coolant.	7.05	
			Air filter system		
		● And in the case of an error message.	Replace the air filter main element.	7.05	
		●	Replace the air filter safety element.	7.05	
			Compressed air system		
		●	Check the shut-off pressure.		
		●	Replace air dryer granular cartridges.		
			Crane operator tasks		
		●	Perform all crane operator maintenance tasks, see section "Crane operator".	7.02	
			Signs		
		●	Check signs for completeness and legibility.		
			Screw connection (not glued)		
		●	Visual inspection: Check the screwed components for tight seating.		
			Hydraulic cylinder (boom)		
		●	Check the hydraulic cylinder for leaks.		
		●	Lubricate the bearing. See the Service fill.		

LWE/LTR 1100-009/25105-02-02/en

copyright © Liebherr-Werk Ehingen GmbH 2023

Crane superstructure operating hours			Maintenance personnel		
100 h	Every 1000 h	Annually	Activities to be performed ● Repeat interval ■ First maintenance	Chapter	Confirmation
			Slewing ring connection		
		Every 3 months if the crane is not moved	Lubricate the slewing ring connection.	7.05	
		●	Lubricate the slewing ring connection.	7.05	
		●	Check the tilt play. Carrying out lowering.	8.01	
		●	Check the gearing for wear.		
		Every 6 months	Check the seals for damage.		
			Guy rods		
		●	Check the retaining elements.		
			Folding jib		
		●	Check the function of the swing cylinder (on the pivot section of the telescopic boom).		
		●	Check the function of the hydraulic assembly aid (on the adapter).		
			Rope pulleys		
		●	Check the groove base for cleanliness.		
			Hose drum		
		●	Visual inspection: Check the hoses and screw connections for damage, leaks and function.		
		●	Visual inspection: Check the suspension and pinning for damage.		
			Hook block		
		●	Lubricate the pressure bearings. See the service fill.		
		●	Lubricate the radial bushing. See the service fill.		
		●	Grease the hinge joint of the points of lattice sections. If grease fittings are available: See the Service fill. If grease fittings are not available: Use multi-functional spray		
		●	Check the retaining elements (anti-rotation device of the hook nut, hook guard).	8.05	
			Pin connections		
		●	Check the retainer of the pin connections.		
		●	Visual inspection: Check the pins and / or connector elements for damage.		
		●	Lubricate the pin connection.		
			Bearings (turntable)		
		●	Check the retaining elements.		

LWE/LTR 1100-009/25105-02-02/en

copyright © Liebherr-Werk Ehingen GmbH 2023

Crane superstructure operating hours			Maintenance personnel		
			Activities to be performed	**Chapter**	**Confirmation**
			● **Repeat interval**		
100 h	**Every 1000 h**	**Annually**	■ **First maintenance**		
			Emergency control		
		●	Have the function of the emergency control checked by authorized and trained service personnel. Comply with national regulations.		
			Remote diagnostics device		
		●	Check the contract period of the SIM card.		
			Electrical system		
		●	Check the lights and fuses.	7.05	
		●	Check the lines.	7.05	
		●	Check the cable connections.		
		●	Visual inspection: Check the plug connections and screw connections for damage and tight seating.		
		●	Replace the interior compartment filter of the switch cabinet ventilation.	7.05	
			Crane cab heating-air conditioner device		
		●	Replace the filter insert.	7.05	
			Crane cab engine-independent heater*		
		● Before and / or after every heating period.	Have the water heater checked by an authorized and trained service technician.	7.05	
		● Before and / or after every heating period.	Have the air heater checked by an authorized and trained service technician.	7.05	
		Every 2 years	Have the fluid in the heating system replaced by authorized and trained service personnel.		
		Every 10 years	Have the air heater heat exchanger replaced by an authorized and trained service technician.		
			Crane, protected against corrosion		
		Every 6 months	Check the corrosion protection for wear, and if necessary reapply protection.	7.01	
		Every 2 months	Check the corrosion protection on mechanically machined, blank surfaces for wear and reapply the corrosion protection if necessary.	7.01	
		Every 3 months	Check the corrosion protection on the chrome-plated piston rods for wear, and if necessary reapply the corrosion protection.	7.01	
			Service system		
		●	Reset the *crane superstructure days* maintenance status.	7.01.10	

* Optional

LWE/LTR 1100-009/25105-02-02/en

copyright © Liebherr-Werk Ehingen GmbH 2023

7.04 Crane operator maintenance tasks

1	Safety	2
2	Diesel engine	2
3	Cooling system	3
4	Air filter system	5
5	Fuel system	6
6	Urea system*	9
7	Exhaust system*	11
8	Compressed air system	12
9	Hydraulic system	12
10	Hydraulic hose lines	18
11	Central lubrication system	19
12	Travel gear	27
13	Crawler chain	29
14	Slewing ring connection	34
15	Slewing gear	36
16	Telescopic boom	37
17	Winch	38
18	Engine preheating auxiliary heater*	40
19	Crane cab auxiliary heater*	43
20	Crane cab window washing system	45

LWE/LTR 1100-009/25105-02-02/en

copyright © Liebherr-Werk Ehingen GmbH 2023

1 Safety

Before performing maintenance activities, observe the safety notes:
- General safety information: See chapter 2.04.
- Information regarding personal protective equipment: See chapter 2.04.
- Information regarding ladders: See chapter 2.04.10.
- Information regarding fall protection equipment on the crane: See chapter 2.06.
- Information regarding accesses to the crane: See chapter 2.07.
- Information regarding maintenance and service: See chapter 7.01.

2 Diesel engine

WARNING
Hot components, hot operating materials!
Severe burns, scalding.
- ► Let components cool off to below 50 °C.
- ► Avoid contact with hands, skin and eyes.
- ► Wear safety goggles.
- ► Wear heat-resistant protective equipment: Protective gloves and work attire.

2.1 Checking the oil level on the LICCON monitor

Make sure that the following prerequisites are met:
- The crane is in a horizontal position.
- The diesel engine has been turned off for at least 30 min.
- The ignition is turned on.

NOTICE
Impermissible engine oil level!
Engine damage
- ► Remedy the problem. Pay attention to the error message.
- ► Establish a permissible oil level.

The engine oil level is monitored by the LICCON computer system.

Call up the monitoring functions and *engine oil level* individual control display, see chapter 4.02.

Engine oil level conditions, see following chart.

LWE/LTR 1100-009/25105-02-02/en

copyright © Liebherr-Werk Ehingen GmbH 2023

Condition	Filling level		Meaning
1	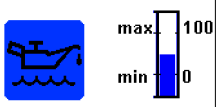	Between min and max	The oil level is OK.
2	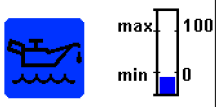	Lower than the min	The oil level is too low.
3	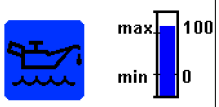	Higher than the max	The oil level is overfilled.
4	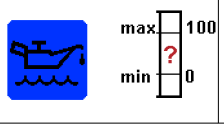	The question mark is visible	Measurement is not possible. Establish the prerequisites for testing.

Engine oil fill level conditions

The oil level display must be between 0 and 100.

► Check the oil level, add engine oil if necessary. Check the oil level with the dipstick, see section 7.15.

Problem remedy
Is the oil level higher than the max?
► Find the cause and remedy it.

If the cause cannot be remedied:
► Contact Customer Service at Liebherr-Werk Ehingen GmbH.

Problem remedy
Is there excessive oil consumption or loss of oil?
► Find the cause and remedy it.

If the cause cannot be remedied:
► Contact Customer Service at Liebherr-Werk Ehingen GmbH.

3 Cooling system

NOTICE
Impermissible coolant!
Engine damage
► Do **not** mix different coolants.
► Do **not** thin Liebherr-Fertig-Mix (Liebherr Ready Made Mix).

When adding coolant:
► Use exclusively the same coolant with the same color.

LWE/LTR 1100-009/25105-02-02/en

copyright © Liebherr-Werk Ehingen GmbH 2023

3.1 Checking the coolant level

Make sure that the following prerequisites are met:
- The mobile crane is horizontal.
- The telescopic boom is luffed up.
- The diesel engine is turned off.
- The diesel engine, cooling system and exhaust system have cooled off for at least 30 min.
- The ignition key is pulled out.
- The battery master switch is turned off.

The coolant level is monitored by the LICCON computer system.

Call up the monitoring functions and *coolant level* individual control display, see chapter 4.02.

Condition	Icon	Icon color	Meaning
1		Green	The coolant level is OK.
2		Red	The coolant level is low.

Coolant level conditions

► Check the coolant level on the LICCON monitor.

WARNING
Hot pressurized coolant!
Severe scalding, severe burns
► Only open the coolant expansion tank when the coolant has cooled off.
► Wait until the coolant has cooled off.
► Wear personal protective equipment.

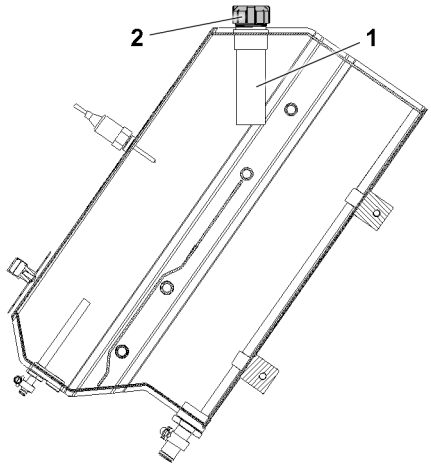

Fig.154112: Coolant expansion tank

1 Riser tube **2** Cover

► Wait until the coolant has cooled off.
► Release excess pressure: Turn the cover **2** on the filler neck of the coolant expansion tank to the first notch.
► Screw off the cover **2**.

The coolant must be filled up to the lower edge of the riser tube **1** in the filler neck.

Add coolant only through the filler neck of the coolant expansion tank.

► Check the coolant level.

LWE/LTR 1100-009/25105-02-02/en

copyright © Liebherr-Werk Ehingen GmbH 2023

► Add coolant only through the filler neck.

WARNING
Spilled coolant!
Danger of slipping.
► Danger of slipping, pay attention.
► Use personal protective equipment depending on the operating materials.
► Immediately collect spilled coolant using suitable material. See the safety data sheet from the manufacturer of the operating fluid.

When the coolant level is too low:
► Add coolant up to the lower edge of the riser tube **1**.
► Screw the cover **2** onto the coolant expansion tank and close firmly.

4 Air filter system

4.1 Cleaning the dust discharge valve

NOTICE
The dust discharge valve is missing!
The service life of the air filter can be reduced.
► Operate the diesel engine only with the dust discharge valve.

Make sure that the following prerequisites are met:
– The crane is in a horizontal position.
– The diesel engine is turned off. The ignition is off.
– The battery master switch is turned off.

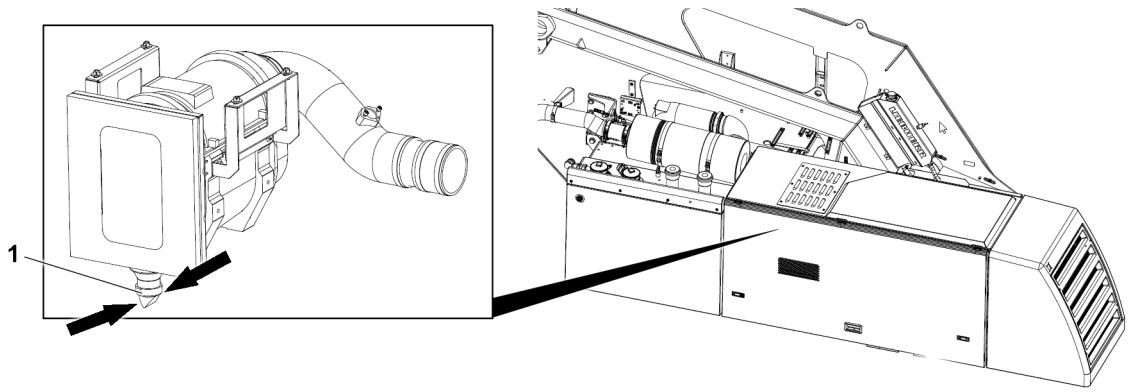

Fig.154098: Air filter

► Continue to compress the dust discharge valve **1** until the dust discharge valve **1** opens.

Result:

– Dust and deposits release from the dust discharge valve **1**.

Problem remedy
Dust and deposits do **not** release from the dust discharge valve **1**!
► Disassemble the dust discharge valve **1**: Remove the hose clamp. Turn the dust discharge valve **1** and pull it out from below from the outlet pipe.

When the dust discharge valve **1** is disassembled:
► Clean the dust discharge valve **1** manually.

LWE/LTR 1100-009/25105-02-02/en

copyright © Liebherr-Werk Ehingen GmbH 2023

5 Fuel system

5.1 Safety

WARNING
Impermissible conditions for the fuel!
Danger of fire. Death, severe bodily injuries, property damage.
► Turn the heating systems off, for example the auxiliary heater or the flame start system.

When working on the fuel system or adding fuel:
► Exclude heat, sparks, flames and sources of ignition.

WARNING
Spilled fuel!
Danger of slipping
► Danger of slipping, pay attention.
► Use personal protective equipment depending on the operating materials.
► Immediately collect spilled fuel using suitable material. See the safety data sheet from the manufacturer of the operating fluid.

5.2 Adding diesel fuel

Make sure that the following prerequisites are met:
– The diesel engine is turned off.
– The ignition key is pulled out.
– The battery master switch is turned off.
– The heating systems are turned off, for example the auxiliary heater, flame start system.

NOTICE
Impermissible fuel!
Severe damage to the engine and fuel system.
► Make sure that the minimum requirement for fuel is fulfilled, see the separate operating instructions of the engine manufacturer.
► Do **not** mix fuels.

NOTICE
Dirt in the fuel system!
Damage to components. Increased wear and shorter service life of the components.
► Make sure that no dirt gets inside the fuel system.

WARNING
Tripping, falling from the working height!
► Ensure a 3-point support.
► Use personal protective equipment to prevent falling.

WARNING
Climb on the ladder with the fuel nozzle!
Danger of falling. Death, severe bodily injuries.
► Secure the fuel nozzle **11** to prevent it from falling.
► Place both hands on the ladder to climb up.

When maintenance personnel can **not** reach the filler neck from the ground:
– Use the supplied ladder as a stepladder.

LWE/LTR 1100-009/25105-02-02/en

copyright © Liebherr-Werk Ehingen GmbH 2023

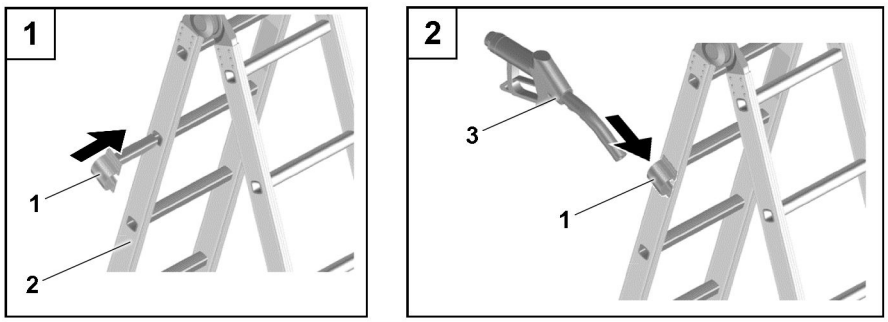

Fig.152445: Ladder with fuel nozzle holder

- ► Place the ladder **2** as a stepladder next to the mobile crane.
- ► Insert the fuel nozzle holder **1** to the stop in the ladder rung.

WARNING
Fuel nozzle **not** inserted deep enough!
Danger of fire: Escaping fuel, falling of the fuel nozzle.
- ► Insert the fuel nozzle as deep as possible into the fuel nozzle holder and the filler neck.

- ► Insert the fuel nozzle **3** as deep as possible into the fuel nozzle holder **1** and secure it from falling down.

Access to the fuel container: Access and climb up onto the crane superstructure, see chapter 2.07.

- ► Follow the notes and instructions, see chapter 2.04.10 and chapter 2.06.

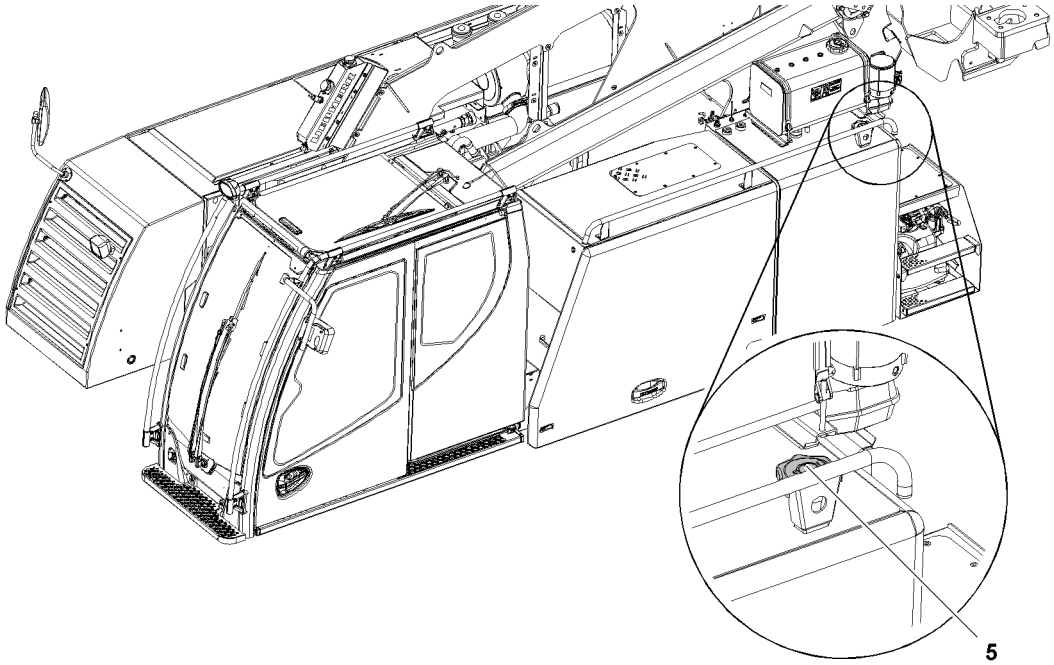

Fig.154114: Fuel tank

- ► Remove the cover **5**.
- ► Use the fuel nozzle such that **no** fuel can escape.
- ► Insert the fuel nozzle as deep as possible into the filler neck.
- ► Until the fuel nozzle turns off: Add fuel.

When the refueling procedure is complete:
- ► Remove the fuel nozzle from the filler neck and secure it from falling down.

LWE/LTR 1100-009/25105-02-02/en

copyright © Liebherr-Werk Ehingen GmbH 2023

WARNING
Fuel tank **not** tightly closed!
Escaping fuel.
► Make sure that the fuel tank is tightly closed.

► Tighten the cover **5** completely.

Problem remedy
Was **impermissible** fuel added?
► Do **not** turn the ignition on.
► Have the fuel tank and fuel lines completely drained by authorized and trained expert personnel.

5.3 Checking the fuel preliminary filter

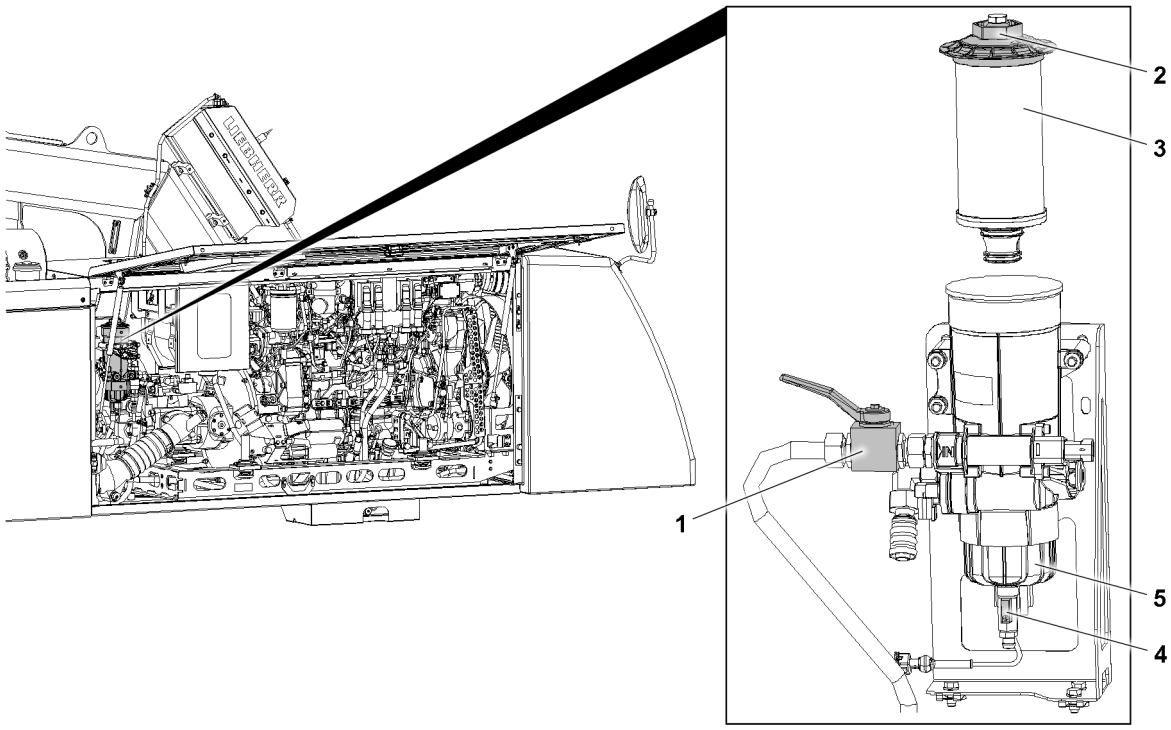

Fig.153573: Fuel preliminary filter

1 Cover
2 Fuel preliminary filter
3 Ball valve
4 Drain valve
5 Water manifold

The fuel preliminary filter must be drained in the following situations:
– An error message is displayed.
– The diesel-water mixture is visible in the water manifold **5**.

When the prerequisites for draining the fuel preliminary filter are met:
► Follow the instructions in the section „Draining the fuel preliminary filter“.

5.4 Draining the fuel preliminary filter

Make sure that the following prerequisites are met:
– The diesel engine is turned off.
– The ignition key is pulled out.
– The battery master switch is turned off.
– A container for the fuel-water mixture with sufficient capacity is available.
– A container with sufficient capacity has been positioned below the water manifold **5**.

LWE/LTR 1100-009/25105-02-02/en

copyright © Liebherr-Werk Ehingen GmbH 2023

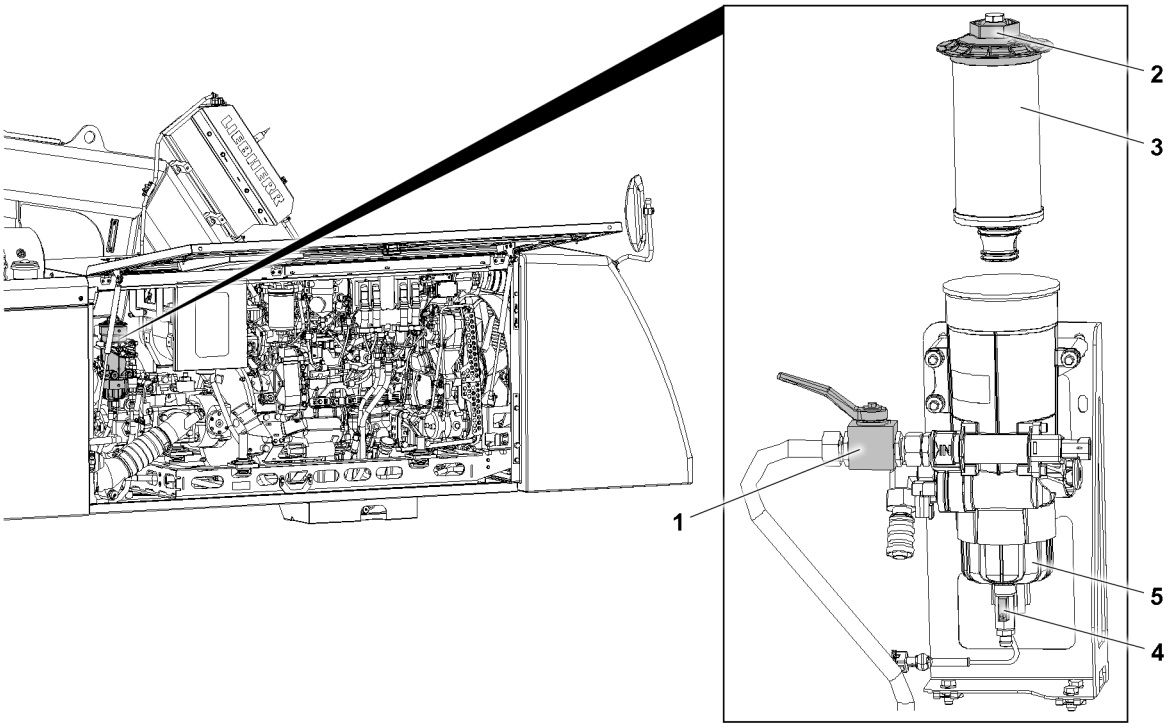

Fig.153573: Fuel preliminary filter

3 Ball valve
4 Drain valve
5 Water manifold

Note
Recommendation!
► Before draining the fuel preliminary filter, place cleaning rags below it.

► Collect the fuel-water mixture: Position a container below the drain valve **4**.
► When the fuel-water mixture is completely drained: Open the drain valve **4**.
► Close the drain valve **4**.
► Remove the container and dispose of the fuel-water mixture.
► Turn on the battery master switch.
► Turn the ignition on and wait 1 minute.
► Start the diesel engine.

Problem remedy
Does starting the diesel engine remain unsuccessful after approx. 20 seconds?
► Turn the ignition off.
► Wait for 1 minute.
► Turn the ignition on and wait 1 minute.
► Start the diesel engine.

6 Urea system*

Note
► Applies exclusively if the diesel engine is equipped with an exhaust aftertreatment system SCR.

LWE/LTR 1100-009/25105-02-02/en

copyright © Liebherr-Werk Ehingen GmbH 2023

6.1 Safety

WARNING
Ammonia vapors!
If the cover of the urea tank is opened at high temperatures, ammonia vapors can emerge. Irritation of eyes and mucous membranes.
- ► Keep the urea tank closed at high temperatures.
- ► Do **not** breathe in ammonia vapors.

WARNING
Spilled urea solution!

Danger of slipping.
- ► Danger of slipping, pay attention.
- ► Use personal protective equipment depending on the operating materials.
- ► Immediately collect spilled urea solution using suitable material. See the safety data sheet from the manufacturer of the operating fluid.

WARNING
Spilled urea solution!
Affected surfaces can corrode.
Environmental risk.
- ► Rinse the affected surfaces immediately with lots of water.
- ► Do **not** overfill the container.
- ► Refuel using a fuel nozzle.

6.2 Adding urea solution

NOTICE
Admixing of special additives and diluting the urea solution!
The legally required emissions standards are not observed.
Destruction of the exhaust aftertreatment system.
- ► Do **not** mix or dilute the urea solution with special additives.
- ► Make sure that **no** dirt gets into the inside of the urea tank.
- ► Only fill permissible operating materials in the urea tank.

Make sure that the following prerequisites are met:
- – The diesel engine is turned off.
- – The ignition key is pulled out.
- – The battery master switch is turned off.
- – The heating systems are turned off, for example the auxiliary heater, flame start system.

Climb up onto the crane chassis, see chapter 2.06.

LWE/LTR 1100-009/25105-02-02/en

copyright © Liebherr-Werk Ehingen GmbH 2023

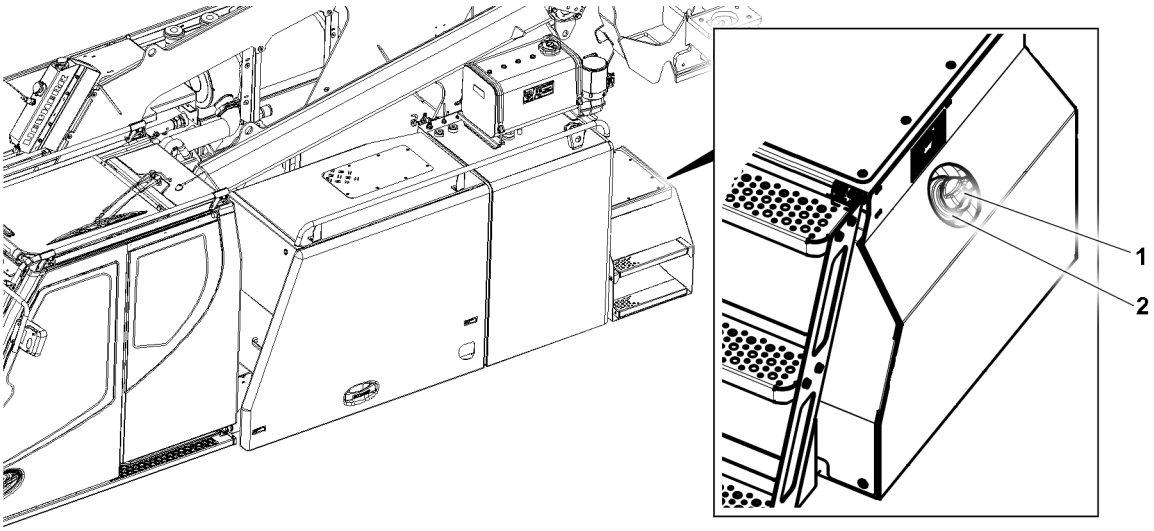

Fig.124877: Urea container, filler neck

1 Cover **2** Filler neck

- ► Remove the cover **1**.
- ► Use the fuel nozzle such that **no** urea solution can escape.
- ► Insert the fuel nozzle as deep as possible into the filler neck.

WARNING
Urea tank overfilled!
Urea solution expands at temperature fluctuations: Crack formation in the urea tank.
Emerging urea solution.
- ► Do **not** overfill the urea tank.

- ► Until the fuel nozzle turns off: Refill urea.

When the refueling procedure is complete:
- ► Remove the fuel nozzle from the filler neck and secure it from falling down.

WARNING
Urea tank **not** tightly closed!
Danger of fire: Escaping urea.
- ► Make sure that the urea tank is tightly closed.

- ► Tighten the cover **1** completely.

7 Exhaust system*

7.1 Checking the exhaust system for leaks and damage

- ► Check the exhaust gas aftertreatment component group for tightness and damage, see the separate operating instructions from the engine manufacturer.

LWE/LTR 1100-009/25105-02-02/en

copyright © Liebherr-Werk Ehingen GmbH 2023

8 Compressed air system

8.1 Draining water from the compressed air tank

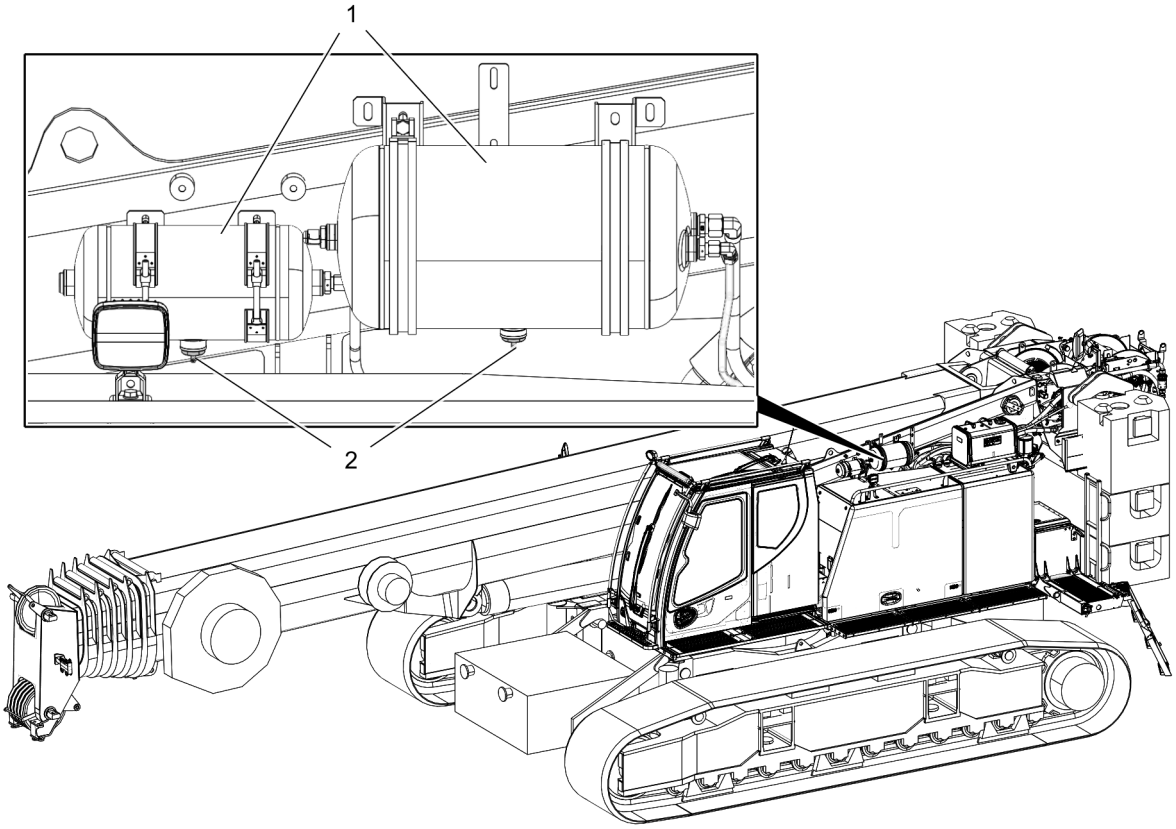

Fig.166277: Compressed air tank

► On every compressed air tank **1**: Press the valve pin **2** and drain the water.

9 Hydraulic system

9.1 Adding hydraulic oil

WARNING
Impermissible conditions for the hydraulic oil!
Danger of fire. Death, severe bodily injuries, property damage.
► Turn the heating systems off, for example the auxiliary heater or the flame start system.

When hydraulic oil is added:
► Exclude heat, sparks, flames and sources of ignition.
► Avoid high temperatures and direct sunlight.

WARNING
Spilled hydraulic oil!
Danger of slipping
► Danger of slipping, pay attention.
► Use personal protective equipment depending on the operating materials.
► Immediately collect spilled hydraulic oil using suitable material. See the safety data sheet from the manufacturer of the operating fluid.

LWE/LTR 1100-009/25105-02-02/en

copyright © Liebherr-Werk Ehingen GmbH 2023

Make sure that the following prerequisites are met:
- The crane is horizontally aligned.
- The diesel engine is turned off.
- The ignition key is pulled out.
- The battery master switch is turned off.
- The heating systems are turned off, for example the auxiliary heater, flame start system.
- The required quantity of hydraulic oil is available, see the service fill.

NOTICE
Impermissible hydraulic oil!
Severe damage to the hydraulic system.
► Make sure that the requirements for the hydraulic oil are fulfilled, see the service fill.
► Do **not** mix hydraulic oils.

NOTICE
Dirt in the hydraulic system!
Damage to components. Increased wear and shorter service life of the components.
► Maintain extreme cleanliness during all work.
► Make sure that dirt does not get inside the hydraulic system.

WARNING
Tripping, falling from the working height!
► Ensure a 3-point support.
► Use personal protective equipment to prevent falling.

WARNING
Climb on the ladder with the fuel nozzle!
Danger of falling. Death, severe bodily injuries.
► Secure the fuel nozzle to prevent it from falling.
► Place both hands on the ladder to climb up.

Access to the fuel container: Access and climb up onto the crane superstructure, see chapter 2.07.

► Follow the notes and instructions, see chapter 2.04.10 and chapter 2.06.

LWE/LTR 1100-009/25105-02-02/en

copyright © Liebherr-Werk Ehingen GmbH 2023

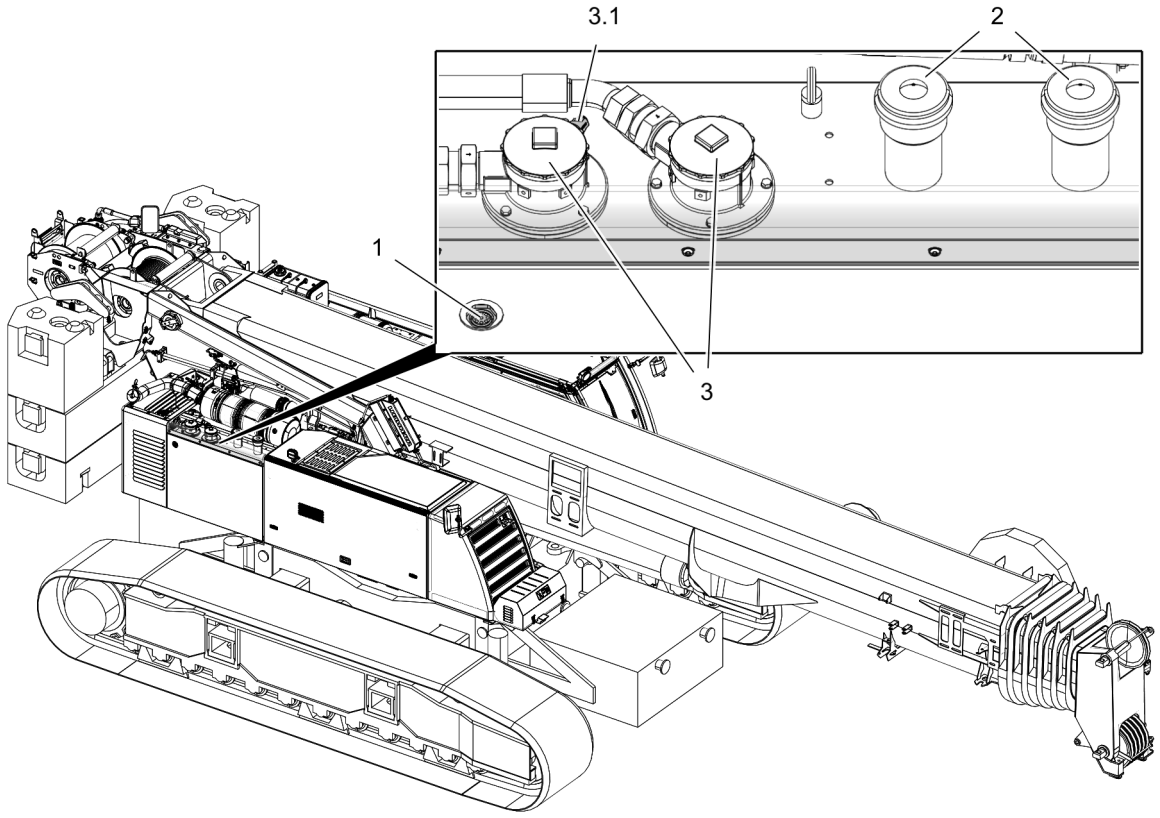

Fig.166278: Hydraulic oil tank, hydraulic oil filter

1 Sight gauge
2 Cover (vent filter)
3 Cover (return filter)
3.1 Fouling indicator (return filter)

► Remove the cover **2**.
► Use the fuel nozzle such that **no** hydraulic oil is spilled.
► Insert the fuel nozzle as deep as possible into the filler port.

The oil level must be in the center of the sight gauge **1**.

► Add fuel while checking the oil level on the sight gauge **1** of the hydraulic tank.
► Until the required oil level is reached: Add hydraulic oil.

When the refueling procedure is complete:
► Remove the fuel nozzle and secure it from falling down.

WARNING
Hydraulic oil tank **not** tightly closed!
Danger of fire: Escaping hydraulic oil.
Environmental risk
► Make sure that the hydraulic oil tank is tightly closed.

► Tighten the cover **2** completely.

Problem remedy
Was impermissible hydraulic oil added?
► Do **not** turn the ignition on.
► Have the hydraulic tank and hydraulic lines completely drained by authorized and trained service personnel.

LWE/LTR 1100-009/25105-02-02/en

copyright © Liebherr-Werk Ehingen GmbH 2023

9.2 Checking the oil level in the hydraulic tank

WARNING
Considerable hydraulic oil loss!
Uncontrolled load movements. Death, severe bodily injury.
► In the case of considerable hydraulic oil loss, contact Customer Service at Liebherr-Werk Ehingen GmbH.

WARNING
Impermissible hydraulic oil level!
Malfunctioning of crane movements.
► Remedy the problem and observe the error message.
► Establish a permissible oil level.

Make sure that the following prerequisites are met:
– The crane is horizontally aligned.
– All hydraulic cylinders are fully retracted.

► Make sure that the hydraulic oil reaches a temperature of 20 °C.

When the hydraulic temperature is lower than 20 °C:
► Warm up the hydraulic oil.
or

When the auxiliary equipment is available for ambient temperatures of less than -20 °C:
Warm up the hydraulic oil, see chapter 4.03.

When the hydraulic temperature is higher than 20 °C:
► Let the hydraulic oil cool off.

Access to the fuel container: Access and climb up onto the crane superstructure, see chapter 2.07.

► Follow the notes and instructions, see chapter 2.04.10 and chapter 2.06.

LWE/LTR 1100-009/25105-02-02/en

copyright © Liebherr-Werk Ehingen GmbH 2023

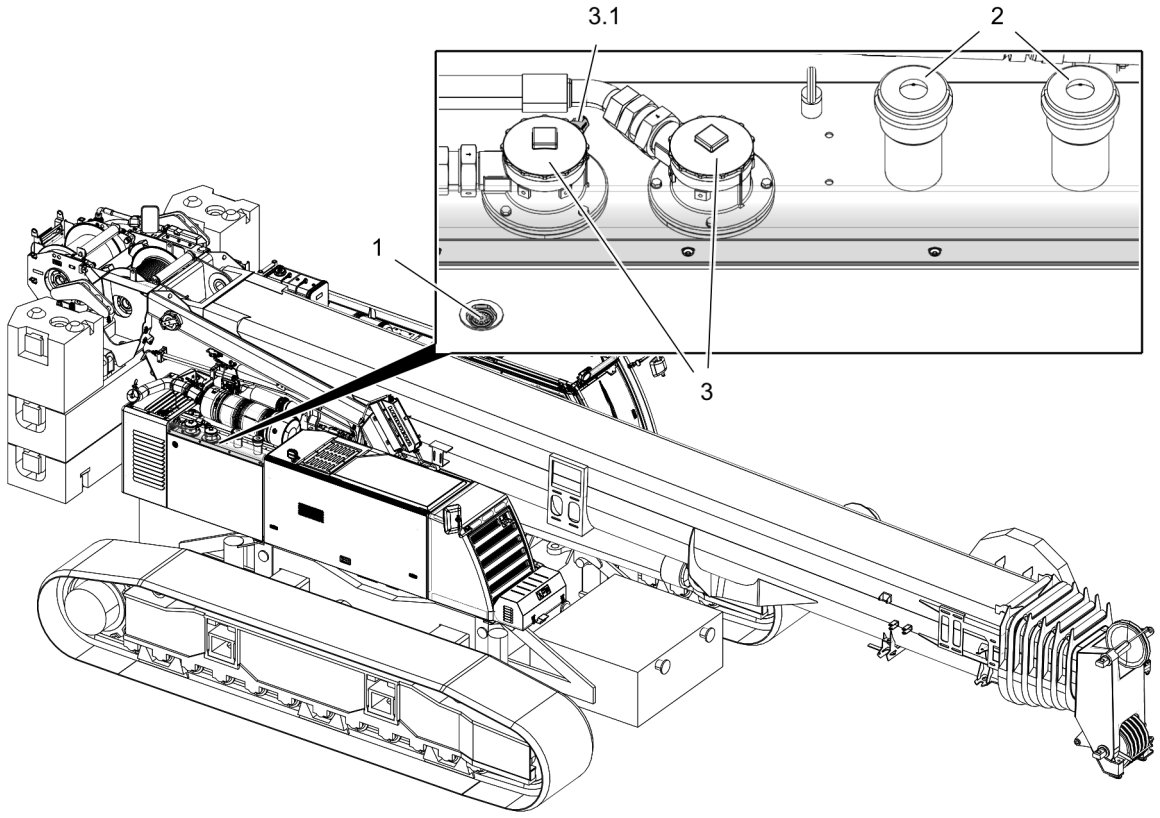

Fig.166278: Hydraulic tank, sight gauge

1 Sight gauge
2 Cover (vent filter)
3 Cover (return filter)
3.1 Fouling indicator (return filter)

The oil level must be visible in the center of the sight gauge **1**.

► Check the oil level on the sight gauge **1** of the hydraulic tank.

If no hydraulic oil is visible in the sight gauge **1**:

► Add the hydraulic oil through a fine-mesh strainer until the oil level is visible in the center of the sight gauge **1**, see section „Adding hydraulic oil“.

Problem remedy
Is the hydraulic oil level too low?
Hydraulic oil loss.
► Find the cause of the problem and remedy it.
► Establish a permissible hydraulic oil level, see section „Adding hydraulic oil“.

If the cause cannot be remedied or if there is again excessive loss of oil:
► Contact Customer Service at Liebherr-Werk Ehingen GmbH.

LWE/LTR 1100-009/25105-02-02/en

copyright © Liebherr-Werk Ehingen GmbH 2023

9.3 Checking the fouling indicator on the return filter

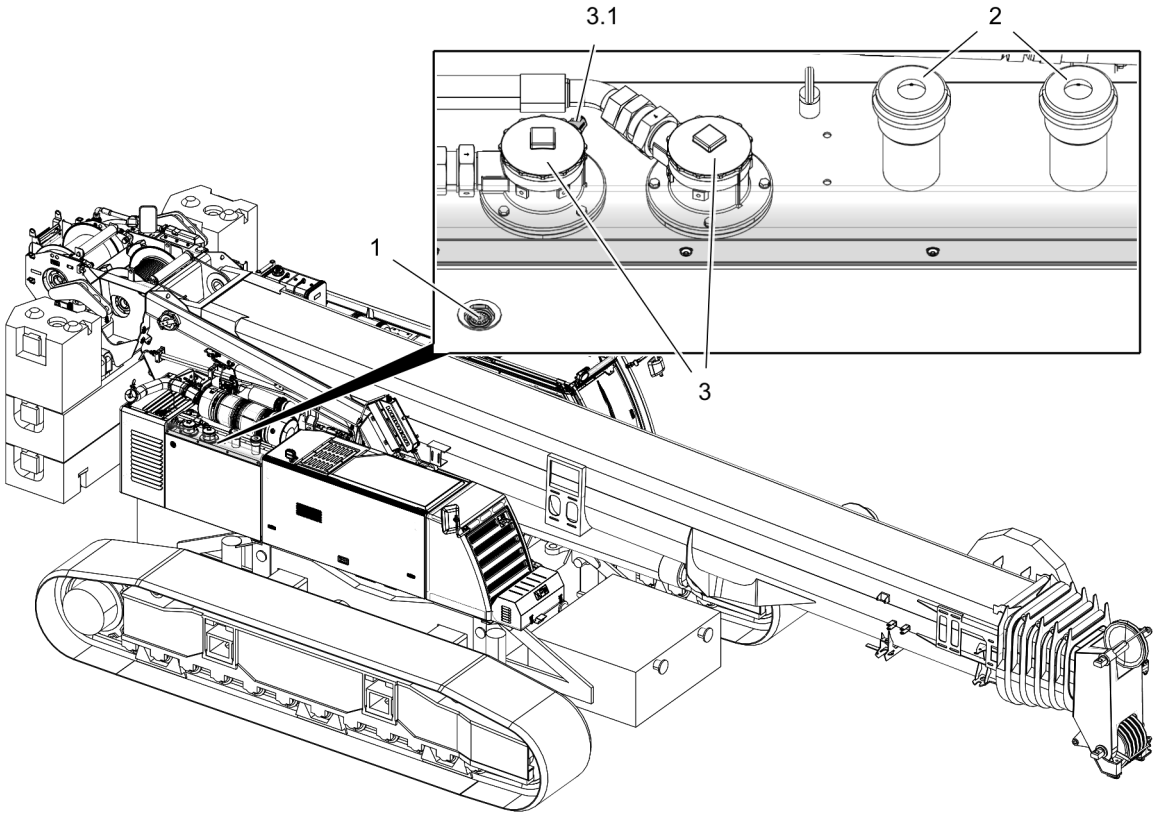

Fig.166278: Return filter, fouling indicator

1 Sight gauge
2 Cover (vent filter)
3 Cover (return filter)
3.1 Fouling indicator (return filter)

The filter elements must be replaced in the following situations:
– The maintenance interval is due.
– The red bar display of the fouling indicator **3.1** is visible when the hydraulic oil is at the operating temperature.

► Check the fouling indicator **3.1** on every return filter.
► Have the return filter replaced by maintenance personnel, see chapter 7.05.

LWE/LTR 1100-009/25105-02-02/en

copyright © Liebherr-Werk Ehingen GmbH 2023

9.4 Checking the fouling indicator on the pressure filter

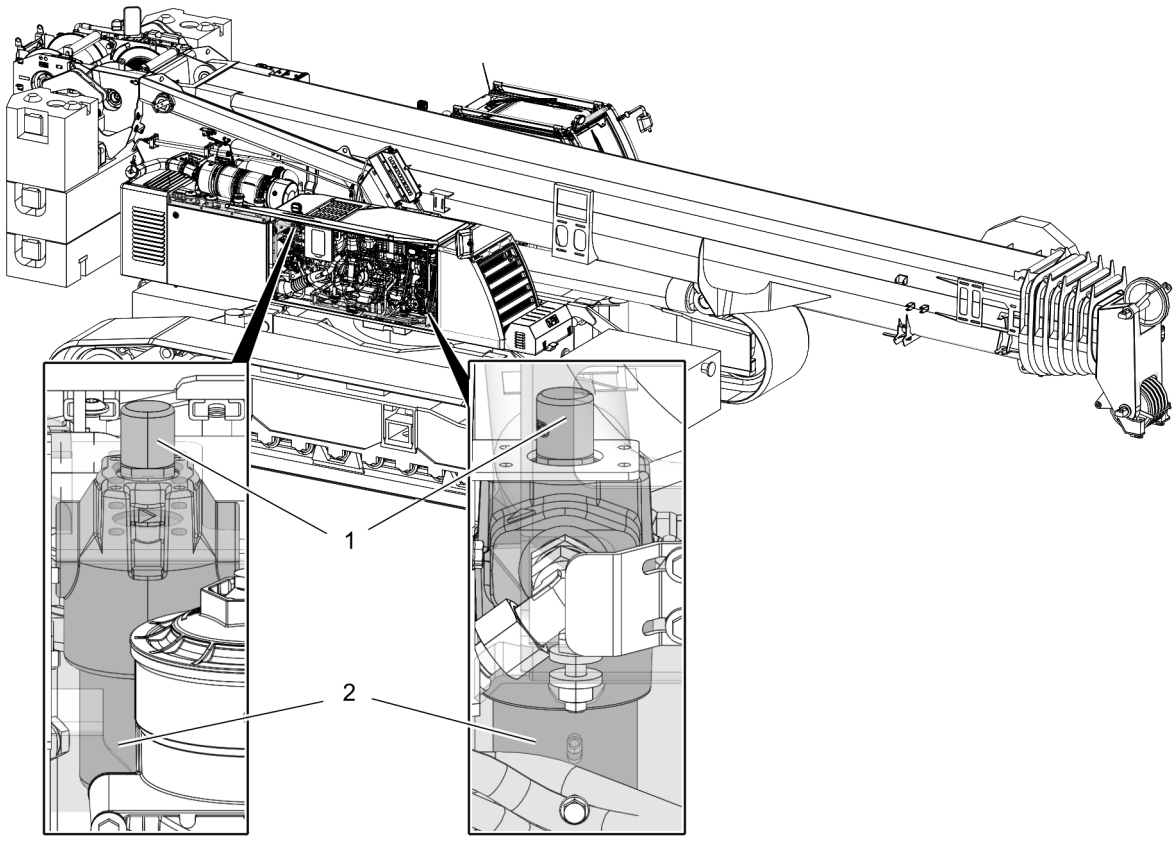

Fig.166279: Fouling indicator on the pressure filter

1 Fouling indicator **2** Pressure filter

The filter elements must be replaced in the following situations:
– The maintenance interval is due.
– The red bar display of the fouling indicator **1** is visible when the hydraulic oil is at the operating temperature.

► Check the fouling indicator **3.1** on every pressure filter.
► Have the pressure filter element replaced by maintenance personnel, see chapter 7.05.

10 Hydraulic hose lines

WARNING
Damaged and leaky hydraulic hose lines!
Fire. Accident. Death, severe injury, property damage.

If leaky areas are found during the visual inspection:
► Have these leaky areas inspected immediately by authorized and trained expert personnel and remedied.

If damage is found during the visual inspection:
► Have the hydraulic hose lines checked by an **expert person for hydraulic hose lines**.

Note
► For the annual inspection of the hydraulic hose lines and for the definition of an **expert person for hydraulic hose lines**, see chapter 8.06.

Hydraulic hose lines must be inspected **once a year** by an **expert person for hydraulic hose lines**.

LWE/LTR 1100-009/25105-02-02/en

copyright © Liebherr-Werk Ehingen GmbH 2023

The system must be visually inspected **before starting to work**.

10.1 Checking the hydraulic hose lines for damage

The hydraulic hose lines must be checked by an **expert person for hydraulic hose lines** when one of the following defects is found:
– Damage on the outer surface, such as chafe marks, cuts and cracks.
– Brittleness due to aging of outer layer (cracks).
– Distortion, such as splitting of hose layers, bubbles, crushed areas, kinks, twists.
– Damage or distortion of hose fixtures or hose fitting (seal is endangered).

► Check the hydraulic hose lines for damage.

If one of the listed defects is found:
► Have the hydraulic hose lines checked by an **expert person for hydraulic hose lines**.
► Document conspicuous findings, decisions and replacements comprehensibly, see chapter 8.06.

10.2 Checking the hydraulic hose lines for leaks

► Check the crane for leaked hydraulic oil.
► Check the ground under the crane for leaks.

When the hydraulic system leaks:
► Have these leaky areas inspected by authorized and trained expert personnel and remedied.

If one of the listed defects is found:
► Have the hydraulic hose lines checked by an **expert person for hydraulic hose lines**.
or
Contact Customer Service at Liebherr-Werk Ehingen GmbH.
► Document conspicuous findings, decisions and replacements comprehensibly, see chapter 8.06.

11 Central lubrication system

11.1 Safety

WARNING
Problems in the central lubrication system!
Failure of lubrication. Corrosion. Limitation of crane function.
Personal injury, property damage, environmental risk
► Remedy the problem with the central lubrication system immediately.

NOTICE
Dirt in the lubrication system!
Damage to central lubrication system. Failure of lubrication.
► Maintain extreme cleanliness during all work.
► Make sure that **no** dirt gets inside the lubrication system.

NOTICE
Crane is **not** being moved for longer than three months!
Insufficient lubrication. Property damage.
► Check the function of the central lubrication system.
► Carry out intermediate lubrication until lubricant emerges on all lube points.
► Repeat the respective crane movement several times.
► Carry out intermediate lubrications again.

LWE/LTR 1100-009/25105-02-02/en

copyright © Liebherr-Werk Ehingen GmbH 2023

11.2 Superstructure

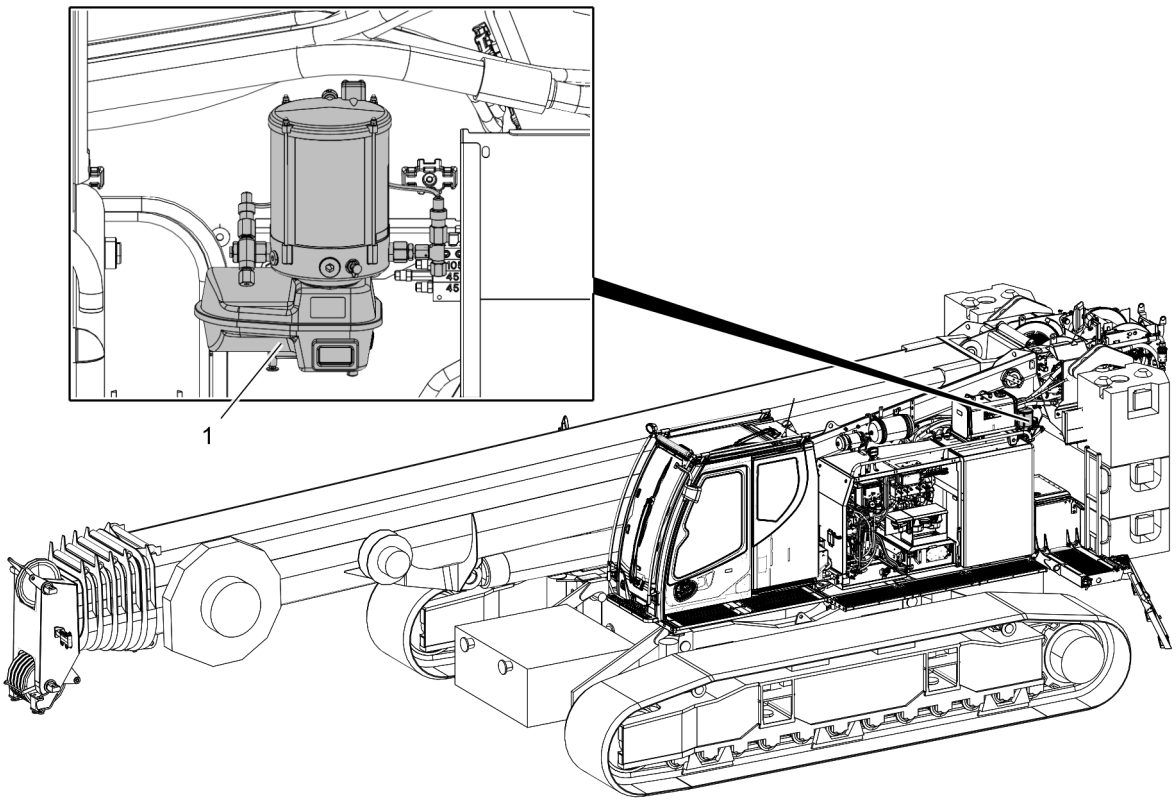

Fig.166288: Position of the central lubrication system on the turntable

1 Central lubrication system

The lube points in the bearings of the following components are supplied with lubricant:
- Boom
- Luffing cylinder
- Slewing ring
- Winch 1
- Winch 2

11.3 Display in the crane cab

Note
- ► Problems with the central lubrication system are displayed on the operating and control unit (BKE) in the crane operator's cab.
- ► Crane operator's cab indicator lights, see chapter 4.01.
- ► Problems with the central lubrication system, see section „Diagnostics and troubleshooting“.

LWE/LTR 1100-009/25105-02-02/en

copyright © Liebherr-Werk Ehingen GmbH 2023

11.4 Operating the central lubrication system

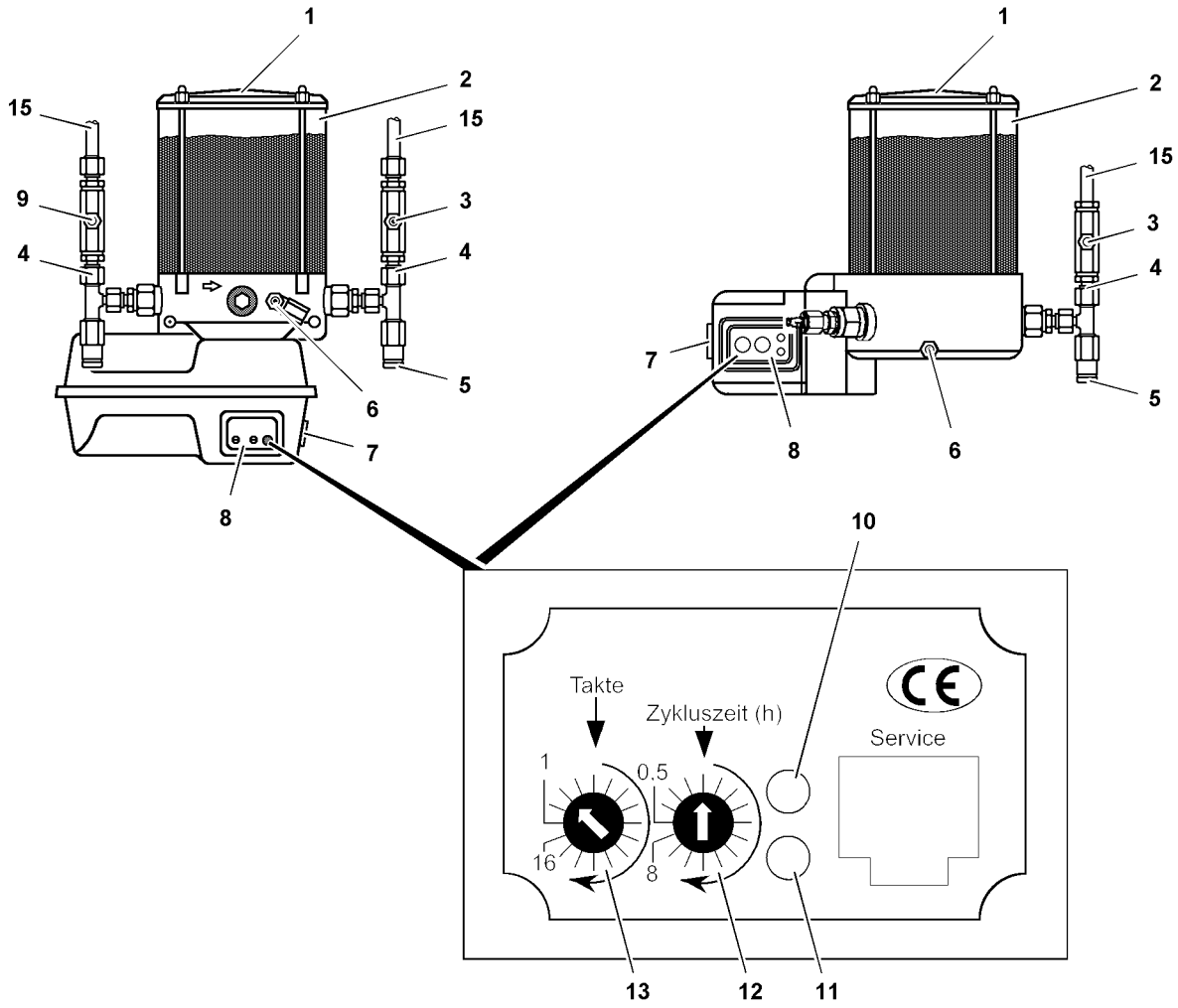

Fig.144842: Variations and elements of the central lubrication system

11.4.1 Display elements on the control element

Note

- ► In the crane operator's cab, operating conditions and problems of the central lubrication system are shown on the indicator light **3**.
- ► Problems, see section „Diagnostics“.
- ► Crane operator's cab indicator lights, see chapter 4.01.

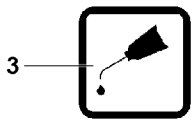

Fig.146332

LWE/LTR 1100-009/25105-02-02/en

copyright © Liebherr-Werk Ehingen GmbH 2023

LED red 11	LED green 10	Operating condition
Lights up for 1.5 seconds	Lights up for 1.5 seconds	Operational readiness after ignition on
Off	Lights up	Lubrication is active (during lube cycles)

*Status of LEDs on control element **8***

11.4.2 Lubrication cycle

Note
The lubrication time and the cycle time are set in the factory!
► Do **not** change the settings.

Cycle time: Time from start of one lubrication to the start of another lubrication.

The cycle time is set with the latched switch **12**.

Lube cycles: Number of strokes, during which lubricant is supplied by the pump cylinder.

The number of lube pulses for a lubrication cycle is set with the latched switch **13**.

11.4.3 Checking the function

Make sure that the following prerequisite is met:
– The ignition is turned on.

Note
► Problems with the central lubrication system, see section „Diagnostics and troubleshooting“.

When lubricant emerges on all lube points, then the central lubrication system functions error-free.

► Check the function: Trigger several lube pulses.
► Carry out intermediate lubrication until lubricant emerges on all lube points.

11.4.4 Activating intermediate lubrication

Manual intermediate lubrication is carried out, for example:
– If the crane has not been moved for longer than three months.
– After washing the crane.

Note
► When a lube pulse is triggered, the pump starts the lubrication cycle again. The lubrication cycle is reset.

Several lube pulses may be required until lubricant emerges in all lube points.

► On the central lubrication system: Press the button **7**.

LWE/LTR 1100-009/25105-02-02/en

copyright © Liebherr-Werk Ehingen GmbH 2023

11.5 Servicing the central lubrication system

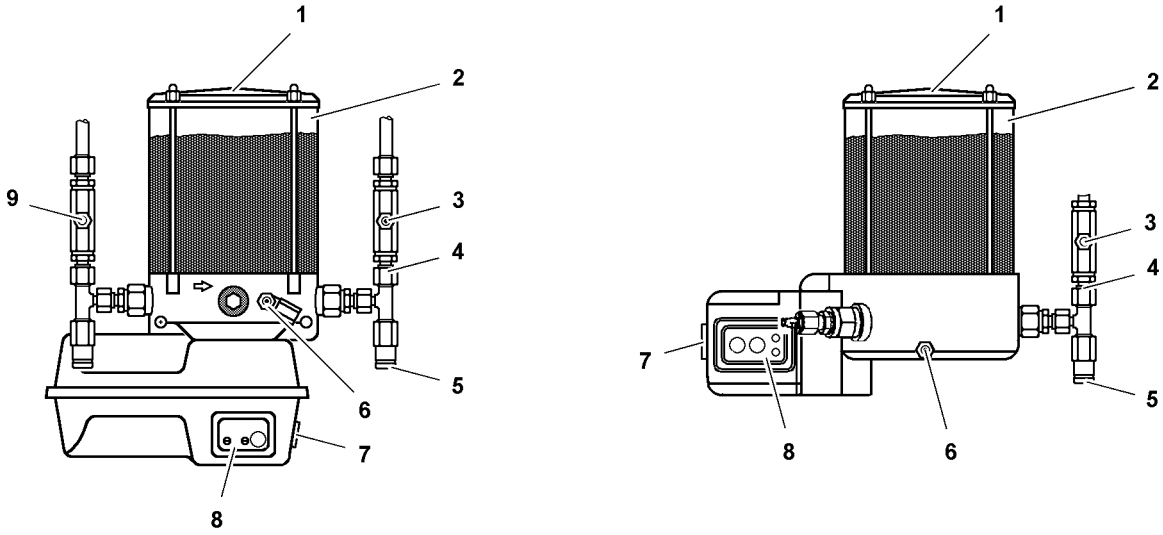

Fig.144843: Types of central lubrication systems with integrated control unit

1	Grease container cover	**4**	Pump outlet	**7**	Intermediate greasing button
2	Grease container	**5**	Pressure relief valve	**8**	Control element
3	Lubrication line grease fitting	**6**	Grease container grease fitting	**9**	Lubrication line grease fitting

Make sure that the following prerequisites are met:
- The diesel engine is turned off.
- The ignition key is pulled out.

11.5.1 Check the fill level in the grease container

The grease container must be filled when the lubricant level has dropped below 1/4 of the container content.

► Check the fill level and fill the grease container if necessary.

11.5.2 Replacing the lubricant

Make sure that the following prerequisites are met:
- The required quantity of lubricant is available, see the service fill.

NOTICE
No lubricant!
Dry run of components. Property damage
► Make sure that the grease container **2** is filled.
► Make sure that all grease fittings are free of contamination.

When the lubricant container is completely empty:
► Bleed, see section „Bleeding the central lubrication system“.
► Fill the lubricant container **2** with a lubricant pump on the grease fitting **6**.

11.5.3 Bleeding the central lubrication system

NOTICE
Insufficient lubrication!
Air in the lubricant pump, lube points running dry.
► Bleed the central lubrication system carefully.

LWE/LTR 1100-009/25105-02-02/en

copyright © Liebherr-Werk Ehingen GmbH 2023

When the lubricant container **2** is completely empty, the central lubrication system must be bled.

Note
► Carry out the bleeding procedure individually for each main line **5**.

► Fill the lubricant container **2** with a lubricant pump via the grease fitting **6**.
► Fill the main lines **5** with an external lubrication pump via the grease fittings **3** until lubricant free of air bubbles emerges in all lube points.
► Unscrew the main line **5** on the pump outlet **4**.
► Trigger intermediate lubrication until there are no more air bubbles in the emerging lubricant at the pump outlet **4**.
► Connect the main line **5**.
► Trigger intermediate lubrication until lubricant emerges in all lube points.

11.5.4 Repair: Filling the lubrication lines

NOTICE
No lubrication!
Dry run of components. Property damage
► After every repair on greased components, fill the lubrication lines with grease.
► Make sure that all grease fittings are free of contamination.

► Fill lube lines with a grease pump on the grease fitting **3** (and grease fitting **9**).
or
Carry out intermediate lubrication until lubricant emerges in all lube points.
► Check repaired lubrication lines for function and leaks.

LWE/LTR 1100-009/25105-02-02/en

copyright © Liebherr-Werk Ehingen GmbH 2023

11.6 Diagnostics and troubleshooting

11.6.1 Problem signals on control element

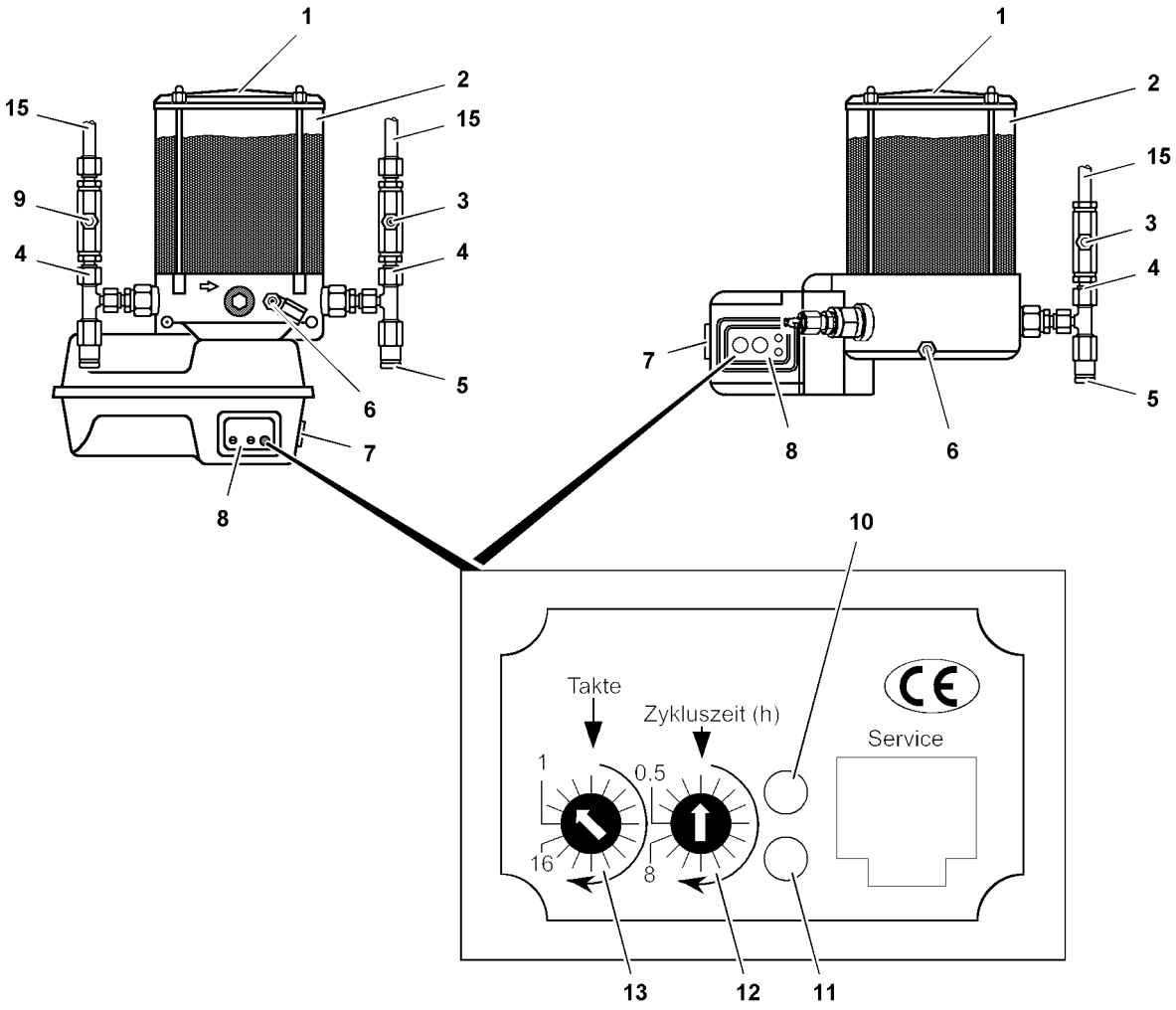

Fig.144842: Elements in the central lubrication system

Note

- ► In the crane operator's cab, operating conditions and problems of the central lubrication system are shown on the indicator light **3**.
- ► Crane operator's cab indicator lights, see chapter 4.01.

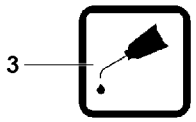

Fig.146332

LWE/LTR 1100-009/25105-02-02/en

copyright © Liebherr-Werk Ehingen GmbH 2023

Status LEDs		Cause	Remedy
LED red 10	**LED green 11**		
Blinks once in two seconds	Blinks once in two seconds	Cycle error	Fix the system; contact Customer Service at Liebherr-Werk Ehingen GmbH.
Blinks once a second	Off	CPU error, memory error	Fix the system; contact Customer Service at Liebherr-Werk Ehingen GmbH.
Lights up	Off	Lubricant level too low (depending on system type)	Fill the lubricant container.

*Diagnostics for problem signals on control element **8***

11.6.2 Problems on central lubrication system

Lubrication system status	Cause	Remedy
The lubrication pump does not work.	Electrical line interrupted, lubrication pump defective	Fix the system **or** contact Customer Service at Liebherr-Werk Ehingen GmbH.
The lubrication pump works but lubricant is not supplied.	Air cushion in delivery piston, minimum fill level fallen below, lubrication pump element defective	Bleed the central lubrication system, fill the lubricant container, fix the system **or** contact Customer Service at Liebherr-Werk Ehingen GmbH.
No lubricant emerges in all lube points	The lubrication pump is defective, the system is blocked or the lubricant container is empty.	See „The lubrication pump does not work“ **or** „Lubricant emerges on the pressure relief valve **5**“.
No lubricant emerges in several lube points or in one lube point	Supply lines to auxiliary distributor broken or leaky, associated lubrication line broken or leaky, screw connections leak	Tighten the screw connections, fix the system **or** contact Customer Service at Liebherr-Werk Ehingen GmbH.
Lubrication pump speed reduced	High system pressure, low ambient temperature	Check system / bearing points, if no damage can be found: Carry out one or two intermediate lubrications.
Lubricant emerges via pressure relief valve **5**	System pressure too high, distributor blocked, system blocked, defective valve spring on pressure relief valve	Check the system, fix the system **or** contact Customer Service at Liebherr-Werk Ehingen GmbH.

Problems and diagnostics on the central lubrication system

11.6.3 Resetting a problem

► Press the button **7**.

Result:

– Problem signal on control element turns off.

When a problem signal occurs again:
► Contact Customer Service at Liebherr-Werk Ehingen GmbH.

LWE/LTR 1100-009/25105-02-02/en

copyright © Liebherr-Werk Ehingen GmbH 2023

12 Travel gear

12.1 Checking for leaks

NOTICE
Leaky transmission!
Transmission damage.
► Check the travel gear for leaks according to the maintenance schedule.

► Visual inspection: Check the travel gear for leaks.

When the travel gear leaks:
► Have the travel gear sealed by authorized and trained service personnel.

12.2 Checking the gear oil level

WARNING
Spilled gear oil!
Danger of slipping.
► Danger of slipping, pay attention.
► Use personal protective equipment depending on the operating materials.
► Immediately collect spilled gear oil using suitable material. See the safety data sheet from the manufacturer of the operating fluid.

NOTICE
Dirt inside the transmission!
Transmission damage. Increased wear and shorter service life of the components.
► Maintain extreme cleanliness during all work.
► Make sure that **no** dirt gets inside the transmission.

NOTICE
Insufficient oil!
Transmission damage.
► Check the oil level according to the maintenance schedule and add gear oil if necessary.

Make sure that the following prerequisites are met:
– The crane is horizontally aligned.
– The diesel engine is turned off.
– The ignition key is pulled out.
– The battery master switch is turned off.
– The travel gear has been stopped for at least two minutes: The gear oil has drained back completely.

LWE/LTR 1100-009/25105-02-02/en

copyright © Liebherr-Werk Ehingen GmbH 2023

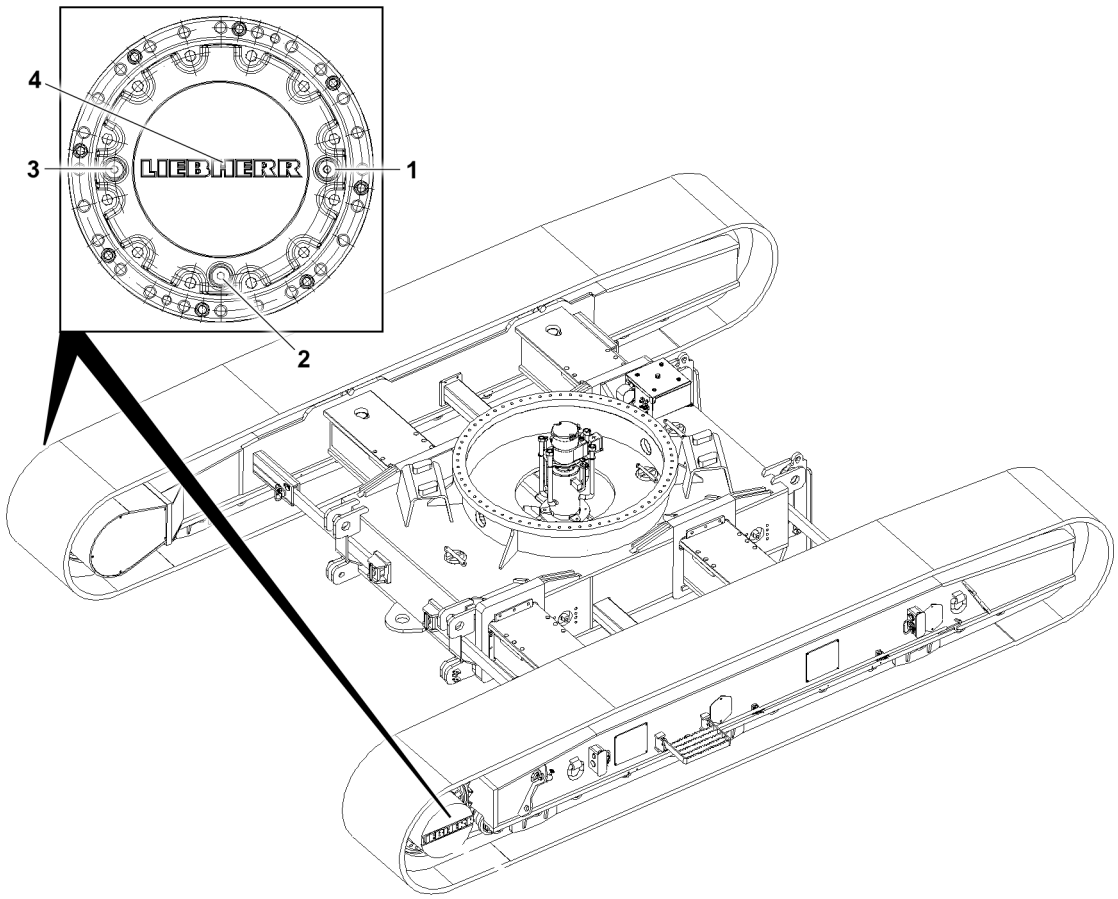

Fig.164814: Travel gear, maintenance ports

1 Control plug, inspection port
2 Drain plug
3 Control plug, inspection port

WARNING
Hot components, hot operating materials!
Severe burns, scalding.
- ► Let components cool off to below 50 °C.
- ► Avoid contact with hands, skin and eyes.
- ► Wear safety goggles.
- ► Wear heat-resistant protective equipment: Protective gloves and work attire.

There are **no** separate filler ports on the travel gear. Fill the gear oil in the inspection port **1**.

► Unscrew the control plug **1** or control plug **3**.

The oil level must be at the lower edge of the inspection port **1**.

- ► Perform a visual inspection.
- ► Screw in the control plug **1** with a new seal and tighten.

Problem remedy
When opening the control plug **1**, does oil emerge?
Depending on the position of the gears in the travel gear, the oil level can be higher than the inspection port **1**.
► Add the same amount of gear oil that emerged.

LWE/LTR 1100-009/25105-02-02/en

copyright © Liebherr-Werk Ehingen GmbH 2023

Problem remedy
Is the oil level is **not** at the lower edge of the inspection port **1**?
► Unscrew the second control plug **1**.
► Add gear oil in one inspection port **1** until gear oil starts to overflow in the second inspection port **1**.
► Screw in the control plugs **1** with a new seal and tighten.

Problem remedy
Is there excessive oil consumption or loss of oil?
► Find the cause and remedy it.

If the cause cannot be remedied:
► Contact Customer Service at Liebherr-Werk Ehingen GmbH.

13 Crawler chain

13.1 Checking the chain tension

The following prerequisites must be met to check the chain tension:
– The crane is horizontally aligned.
– The diesel engine is turned off.
– The ignition key is pulled out.
– The battery master switch is turned off.
– A level rod is available.

WARNING
Crawler chain too loose!
The crawler chain can slip out of the guide from the pulleys, drive wheel and idler.
Increased wear!
► Have the crawler chain tightened immediately by maintenance personnel.

WARNING
Too tightly tensioned crawler chain!
Increased fuel consumption!
Increased wear!
► Have the crawler chain relieved immediately by maintenance personnel.

The chain tension is checked by measuring the sag between the level rod and the crawler chain.

With a length of 1 m to 1.5 m , there must be a sag of 2 cm to 2.5 cm.

When the free length is shorter or larger: Reduce or increase the distance linearly.

The level rod must be placed on at least 4 chain links.

LWE/LTR 1100-009/25105-02-02/en

copyright © Liebherr-Werk Ehingen GmbH 2023

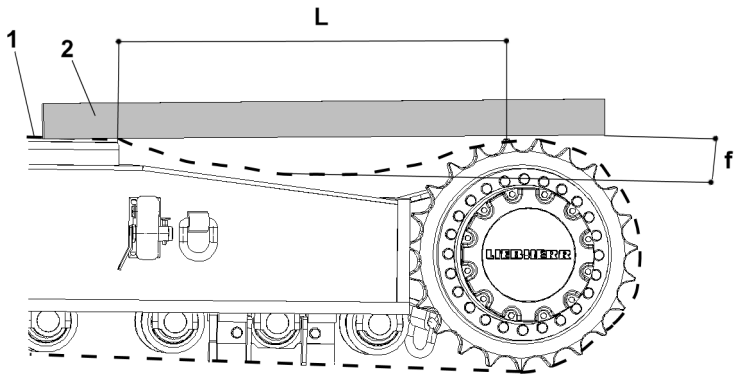

Fig.162773: Checking the chain tension on the top

1	Crawler chain	**f**	Sag
2	Level rod	**L**	Measuring length

► Place the level rod **2** on the crawler chain **1**.
► Measure the maximum sag **f** between the level rod **2** and the crawler chain **1**.

Problem remedy
Is the sag **f** between the level rod **2** and the crawler chain **1** too large?
► Have the crawler chain **1** tightened by maintenance personnel.

Problem remedy
Is the sag **f** between the level rod **2** and the crawler chain **1** too small?
► Have the crawler chain **1** relieved by maintenance personnel.

13.2 Checking for wear

WARNING
Exceeding of wear limits on the chain link, chain bushing, outrigger pad, outrigger pad screws, idler or track roller!
The crawler chain can be ripped off. The crane can topple over.
Death, severe bodily injury, property damage.
► Visually check the wear parts on a random basis. Always check the first and the last track roller on the crawler carrier.

When a wear limit on a component is reached:
► Replace the component or have it reworked by authorized and trained service personnel.

NOTICE
Significant height differences between the individual outrigger pads!

Increased wear on the outrigger pads and track rollers.
► Replace a defective outrigger pad with an outrigger pad which shows a similar degree of wear.

NOTICE
Components **not** replaced after reaching the wear limits!
Damage to the crawler travel gear.
► Any components which have reached the wear limit must be replaced with new components.

LWE/LTR 1100-009/25105-02-02/en

copyright © Liebherr-Werk Ehingen GmbH 2023

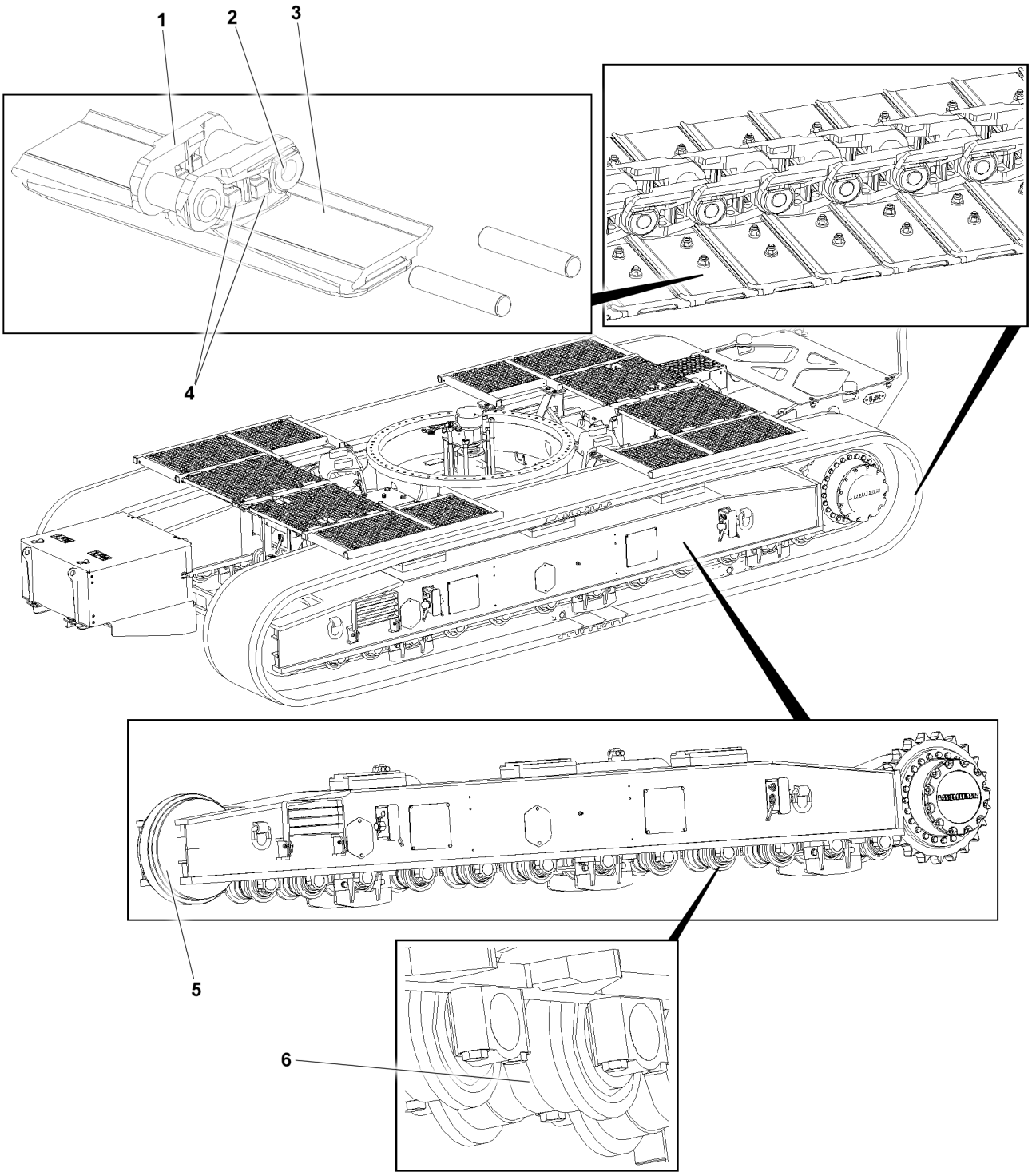

Fig.162775: Crawler carrier, wear parts

1	Chain link	**3**	Outrigger pad	**5**	Idler
2	Chain bushing	**4**	Outrigger pad screws	**6**	Track roller

LWE/LTR 1100-009/25105-02-02/en

copyright © Liebherr-Werk Ehingen GmbH 2023

13.2.1 Chain link

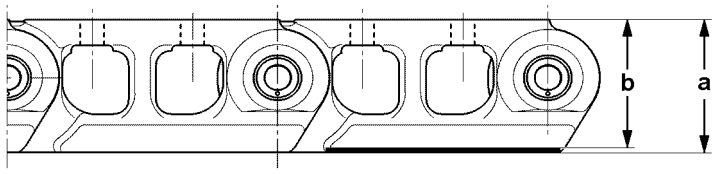

Fig.111492

Component	Dimensions	
	New	Wear limit
	a	b
Chain link	117.5 mm	108.5 mm

13.2.2 Chain length (4 links), chain pitch

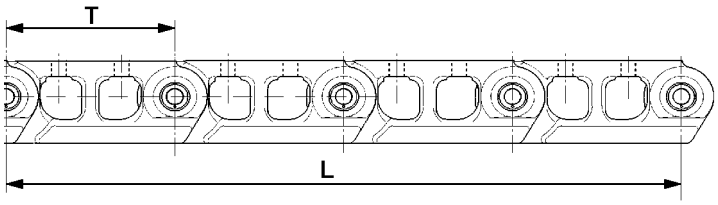

Fig.111493

Component	Dimensions	
	New	Wear limit
Chain length **L**	811.2 mm	832.0 mm
Chain pitch **T**	202.8 mm	

13.2.3 Chain bushing

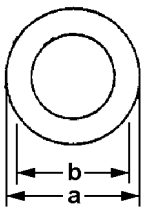

Fig.198808

Component	Dimensions	
	New	Wear limit
	a	b
Chain bushing	Diameter 66.5 mm	Diameter 61.7 mm

LWE/LTR 1100-009/25105-02-02/en

copyright © Liebherr-Werk Ehingen GmbH 2023

13.2.4 Outrigger pad

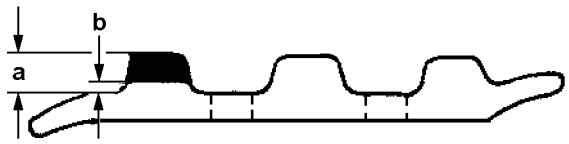

Fig.198809

Component	Dimensions	
	New	Wear limit
	a	b
Outrigger pad	26.5 mm	10 mm

13.2.5 Idler

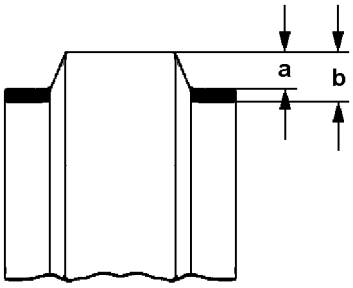

Fig.198812

Component	Dimensions	
	New	Wear limit
	a	b
Idler	26 mm	37 mm

13.2.6 Track roller

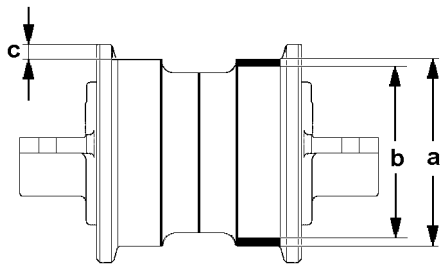

Fig.111491

LWE/LTR 1100-009/25105-02-02/en

copyright © Liebherr-Werk Ehingen GmbH 2023

Component	Dimensions	
	New	Wear limit
Track roller	a = Diameter 172 mm	b = Diameter 157 mm
Distance **c** „Collar running surface“	c= 18.5 mm	c = 26 mm

14 Slewing ring connection

14.1 Lubricating the gear ring and the slewing gear pinion

WARNING
Impermissible set up configuration when turning the crane superstructure!
The crane can topple over. Death, severe bodily injuries, property damage.
► Enter and activate the load chart for the *360° turning* crane operation in the LICCON overload protection.
► Set up the crane according to the set up configuration for the *360° turning* load chart.

WARNING
Turning crane superstructure!
Pulling in and crushing of body parts. Death, severe bodily injuries.
► Work only when the crane superstructure is at a standstill.
► Protect fingers from being pulled in. Keep a distance.

Make sure that the following prerequisites are met:
– The crane is supported and horizontally aligned.
– The load chart for crane operation *Turning 360°* is entered in the LICCON overload protection and active.
– The crane is equipped according to the set up configuration for a *360° turning* load chart.
– The diesel engine is turned off.
– The ignition key is pulled out.

LWE/LTR 1100-009/25105-02-02/en

copyright © Liebherr-Werk Ehingen GmbH 2023

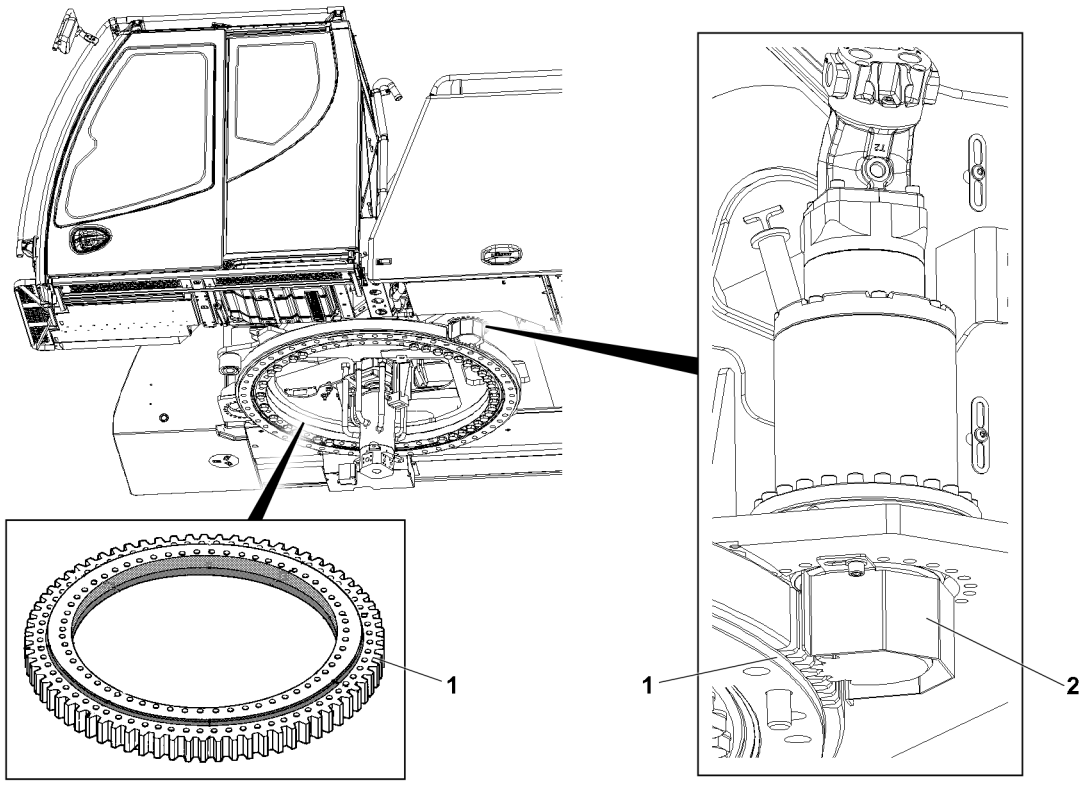

Fig.124878: Slewing ring connection

1 Gear ring **2** Slewing gear pinion

Before and after extended breaks in operation, grease the gear ring **1** and the slewing gear pinion **2** to ensure the best possible protection against corrosion.

► Grease the gear ring **1** and the slewing gear pinion **2** externally.

14.2 Lubricating the slewing ring connection

WARNING
Impermissible set up configuration when turning the crane superstructure!
The crane can topple over. Death, severe bodily injuries, property damage.
► Enter and activate the load chart for the *360° turning* crane operation in the LICCON overload protection.
► Set up the crane according to the set up configuration for the *360° turning* load chart.

WARNING
Personnel in the slewing range!
Crushing danger, death, severe bodily injuries.
► Monitor the slewing range.
► Make sure that there are **no** persons within the slewing range.
► Before initiating the turning movement, give a warning signal (horn).

WARNING
Obstacle in the slewing range!
Danger of collision, property damage
► Make sure that there is **no** obstacle within the slewing range of the crane and the crane components.

copyright © Liebherr-Werk Ehingen GmbH 2023

Make sure that the following prerequisites are met:
- The load chart for crane operation *Turning 360°* is entered in the LICCON overload protection and active.
- The crane is equipped according to the set up configuration for a *360° turning* load chart.
- The diesel engine is turned on.

► Manually trigger intermediate lubrication on the central lubrication system.
or
Lubricate with the external lubrication pump.
► Turn the crane superstructure slowly.
► Carry out lubrication until lubricant emerges on the sealing lips.
► Stop the slewing movement of the crane superstructure.

15 Slewing gear

15.1 Safety

WARNING
Impermissible conditions for the gear oil!
Danger of fire. Death, severe bodily injuries, property damage.
► Turn the heating systems off, for example the auxiliary heater or the flame start system.

When the gear oil is filled:
► Exclude heat, sparks, flames and sources of ignition.
► Avoid high temperatures and direct sunlight.

WARNING
Hot components, hot operating materials!
Severe burns, scalding
► Let components cool off to below 50 °C.
► Avoid contact with hands, skin and eyes.
► Wear safety goggles.
► Wear heat-resistant protective equipment: Protective gloves and work attire.

WARNING
Spilled gear oil!
Danger of slipping
► Danger of slipping, pay attention.
► Use personal protective equipment depending on the operating materials.
► Immediately collect spilled gear oil using suitable material. See the safety data sheet from the manufacturer of the operating fluid.

WARNING
Significant oil loss!
Uncontrolled load movements
Death, severe bodily injury, transmission damage
► Contact Customer Service at Liebherr-Werk Ehingen GmbH.

NOTICE
Insufficient oil!
Transmission damage
► Check the oil level and add gear oil if necessary.

LWE/LTR 1100-009/25105-02-02/en

copyright © Liebherr-Werk Ehingen GmbH 2023

NOTICE
Dirt inside the transmission!
Transmission damage. Increased wear and shorter service life of the components.
► Maintain extreme cleanliness during all work.
► Make sure that **no** dirt gets inside the transmission.

15.2 Slewing gear: Checking the oil level with the dipstick

Make sure that the following prerequisites are met:
– The crane is horizontally aligned.
– The diesel engine is turned off.
– The ignition key is pulled out.
– The battery master switch is turned off.
– The slewing gear has been stationary for at least 2 min.
– The transmission has warmed up.

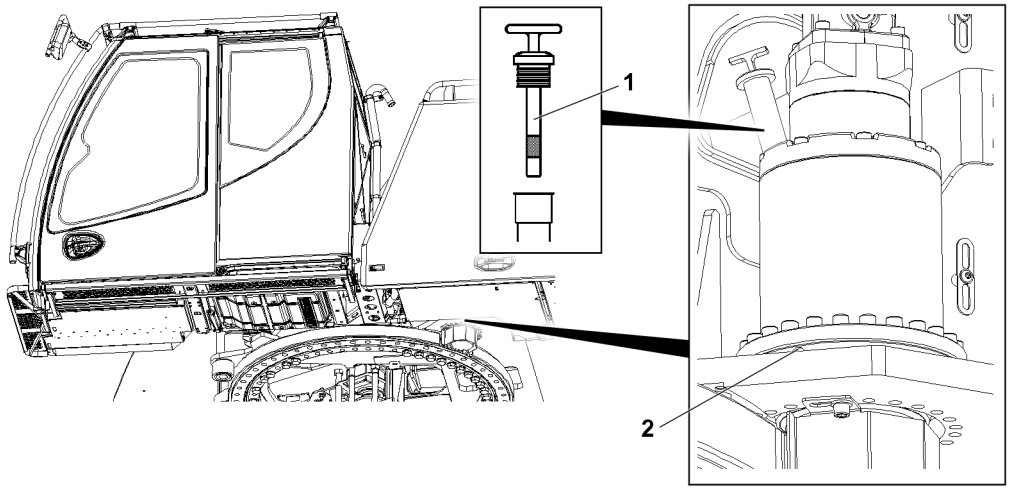

Fig.124879: Slewing gear

► Pull out the dipstick **1** and wipe it off.
► Insert the dipstick **1** and pull it out.

The oil level must be visible between the minimum and maximum marks on the dipstick **1**.

► Check the oil level.
► Insert the dipstick **1**.

Problem remedy
Is there excessive oil consumption or loss of oil?
► Find the cause and remedy it.

If the cause cannot be remedied:
► Contact Liebherr Customer Service.

16 Telescopic boom

16.1 Inner and outer gliding surfaces: Checking the lubrication condition

Note
► The folding jib may remain on the side on the telescopic boom in the transport retainer.

LWE/LTR 1100-009/25105-02-02/en

copyright © Liebherr-Werk Ehingen GmbH 2023

Make sure that the following prerequisites are met:
– The hook block is reeved out (reeving n=1).
– The auxiliary boom / accessory is disassembled.
– There is a permissible set up configuration for telescoping.
– The LICCON overload protection has been set according to the set up configuration.
– The *Telescoping* program is selected on the LICCON computer system, see chapter 4.05.

The following symptoms indicate an insufficient lubrication condition
– Sudden movement when telescoping.

► Telescope the telescopic boom.

When the telescopes retract or extend suddenly:
► Lubricate the inner and outer gliding surfaces of the telescopic boom bearing, see chapter 7.05.

17 Winch

Winch I is the main hoist gear.

Winch II* is optional.

17.1 Safety

WARNING
Impermissible conditions for the gear oil!
Danger of fire. Death, severe bodily injuries, property damage.
► Turn the heating systems off, for example the auxiliary heater or the flame start system.

When the gear oil is filled:
► Exclude heat, sparks, flames and sources of ignition.
► Avoid high temperatures and direct sunlight.

WARNING
Hot components, hot operating materials!
Severe burns, scalding
► Let components cool off to below 50 °C.
► Avoid contact with hands, skin and eyes.
► Wear safety goggles.
► Wear heat-resistant protective equipment: Protective gloves and work attire.

WARNING
Spilled gear oil!
Danger of slipping
► Danger of slipping, pay attention.
► Use personal protective equipment depending on the operating materials.
► Immediately collect spilled gear oil using suitable material. See the safety data sheet from the manufacturer of the operating fluid.

WARNING
Significant oil loss!
Uncontrolled load movements
Death, severe bodily injury, transmission damage.
► Contact Customer Service at Liebherr-Werk Ehingen GmbH.

LWE/LTR 1100-009/25105-02-02/en

copyright © Liebherr-Werk Ehingen GmbH 2023

NOTICE
Insufficient oil!
Transmission damage
► Check the oil level and add gear oil if necessary.

NOTICE
Dirt inside the transmission!
Transmission damage. Increased wear and shorter service life of the components.
► Maintain extreme cleanliness during all work.
► Make sure that **no** dirt gets inside the transmission.

17.2 Winch gear

17.2.1 Checking the oil level with the dipstick

Make sure that the following prerequisites are met:
– Winch 1 is assembled. Optionally, winch 2 is assembled.
– Or: The winches are disassembled and horizontally aligned.
– The crane is horizontally aligned.
– The diesel engine is turned off.
– The ignition key is pulled out.
– The battery master switch is turned off.
– The winch has been stationary for at least 2 min.
– The transmission has warmed up.

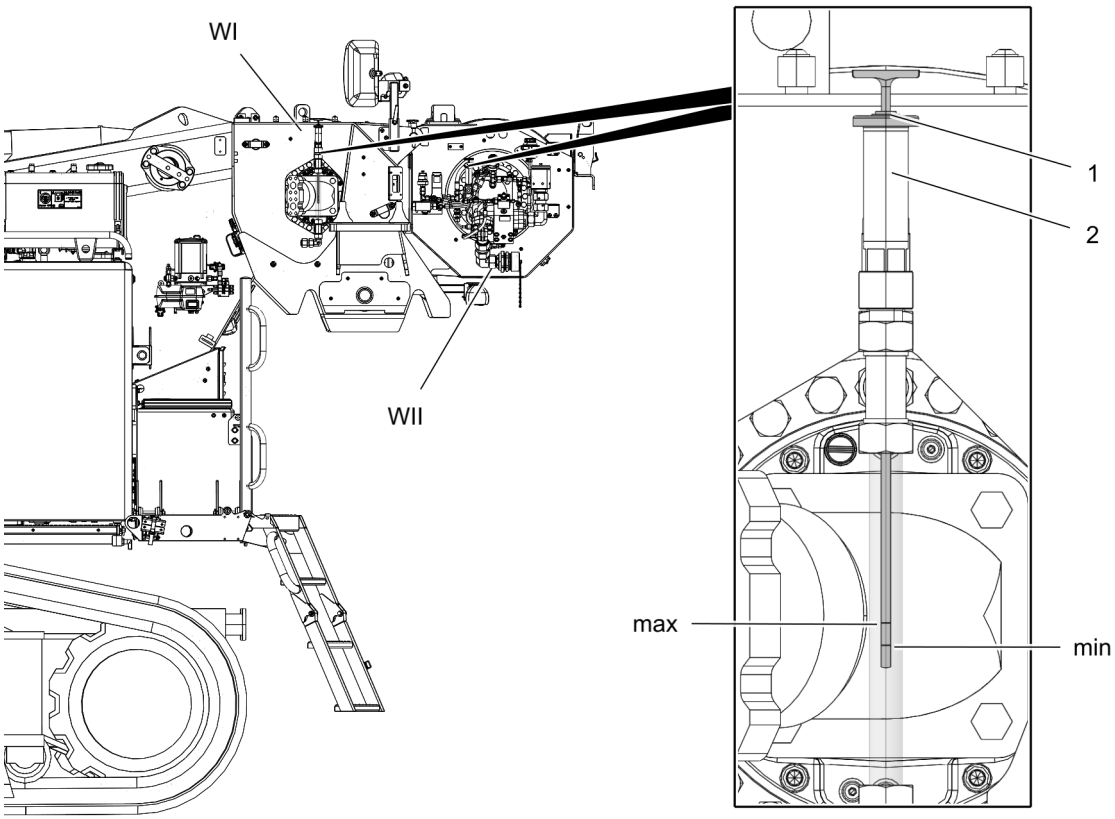

Fig.166280: Winch gear

1 Dipstick
2 Filler port
WI Winch 1
WII Winch 2

► Unscrew, remove and wipe off the dipstick **1**.
► Insert the dipstick **1** and pull it out.

copyright © Liebherr-Werk Ehingen GmbH 2023

The oil level must be visible between the minimum and maximum marks on the dipstick **1**.

► Check the oil level.

When the oil level has dropped below the minimum mark:
► Fill gear oil in the filler port **2** until the oil level is visible between both marks on the dipstick.
► Insert and tighten the dipstick **1**.

Problem remedy
Is there excessive oil consumption or loss of oil?
► Find the cause and remedy it.

If the cause cannot be remedied:
► Contact Customer Service at Liebherr-Werk Ehingen GmbH.

17.3 Overflow container

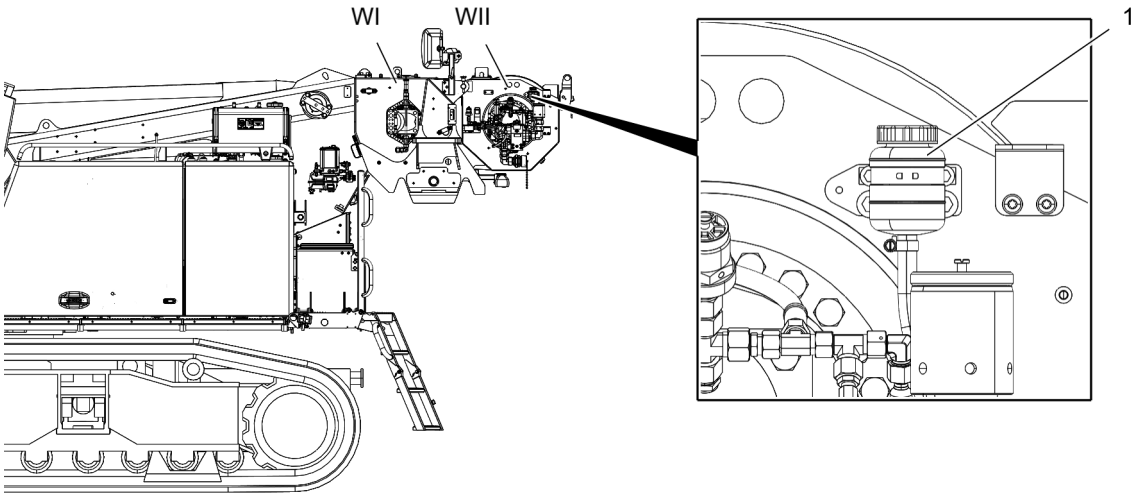

Fig.166281: Overflow container

1 Overflow container
WI Winch 1
WII Winch 2

17.3.1 Disposing of the gear oil

When hydraulic oil is found in the overflow container **1**:
► Dispose of the hydraulic oil properly.

18 Engine preheating auxiliary heater*

The fuel container for the auxiliary heater is optional and is only required for operation with heating systems, for example an auxiliary heater, flame start system.

LWE/LTR 1100-009/25105-02-02/en

copyright © Liebherr-Werk Ehingen GmbH 2023

18.1 Checking the fill level of the fuel container

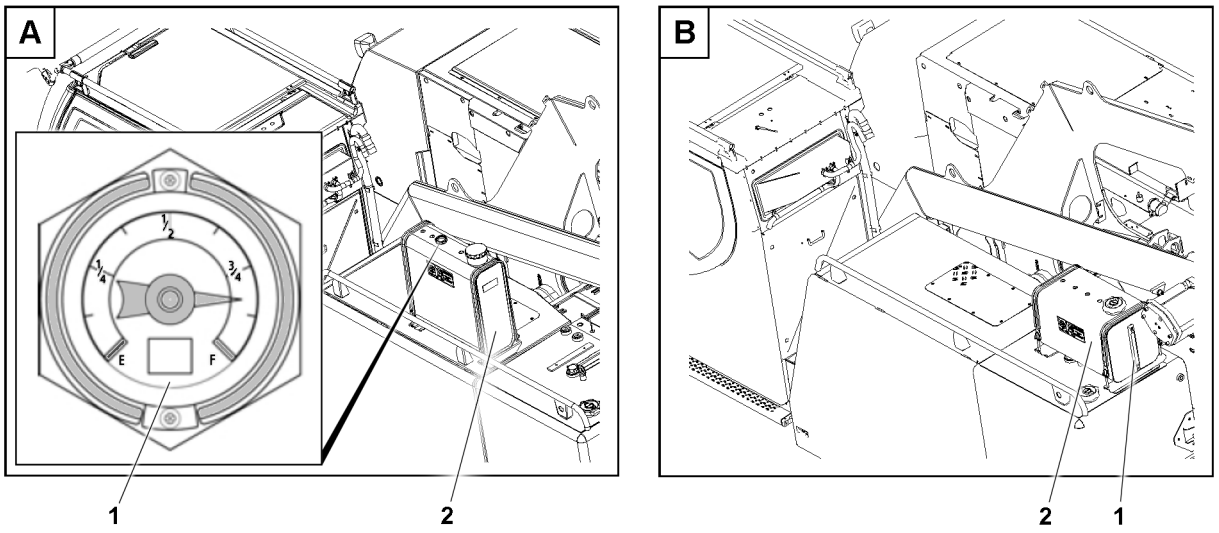

Fig.152431: Checking the fuel reserve

A Variation **B** Variation

Variation A: The fill level of the fuel container **2** is displayed by a level indicator **1**:
- Green mark: The fuel container is full.
- Red mark: The fuel container is empty.

Variation B: The fill level of the fuel container is displayed through a sight gauge **1**. When the crane is horizontal, the filling height in the sight gauge corresponds to the filling height in the fuel container.

Make sure that the following prerequisites are met:
- The crane is in a horizontal position.

► Variation A: Check the fill level on the level indicator **1**.
or
Variation B: Check the filling height on the sight gauge **1**.
► Add fuel in time before the fuel container is empty.
► Add fuel, see section „Adding fuel“.

18.2 Adding fuel

When the fuel is depleted:
- Under some circumstances, the fuel line must be bled.
- Contact Customer Service at Liebherr-Werk Ehingen and coordinate the procedure.

WARNING
Danger of fire!
Fuel is easily flammable and can cause fatal accidents in case of fire or open flames.
High property damage.
► Before the refueling procedure, turn the heating systems off, for example the heater, flame start system.
► When adding fuel, preclude fire, open light and smoking.

DANGER
Danger of fires due to spilled fuel!
► Keep the heating area free of fuel.
► Absorb fuel with rags.
► Dry up spilled fuel.

LWE/LTR 1100-009/25105-02-02/en

copyright © Liebherr-Werk Ehingen GmbH 2023

WARNING
Poisoning due to fuel!
Fuel is poisonous and hazardous to health.
► Do **not** allow fuel to come into contact with skin, eyes or clothing.
► Do **not** breathe in fuel vapors.
► Keep children away from fuel.

First aid measures after contact with fuel:
– If fuel was swallowed: Contact a physician immediately.
– In case of eye contact, flush out the eyes immediately and consult a physician if necessary.
– Clean affected skin areas with fresh water.

NOTICE
Impermissible fuel!
The auxiliary heater can be severely damaged.
► Only add permissible fuel, see the manufacturer's instructions.
► Select the fuel in relation to the weather and temperature conditions.

Make sure that the following prerequisites are met:
– The crane is in a horizontal position.
– The heater is turned off.
– The engine and the ignition are turned off.
– All railings and steps are swung into the assembly position, see chapter 2.06.

Access and climb up on the mobile crane, see chapter 2.07.

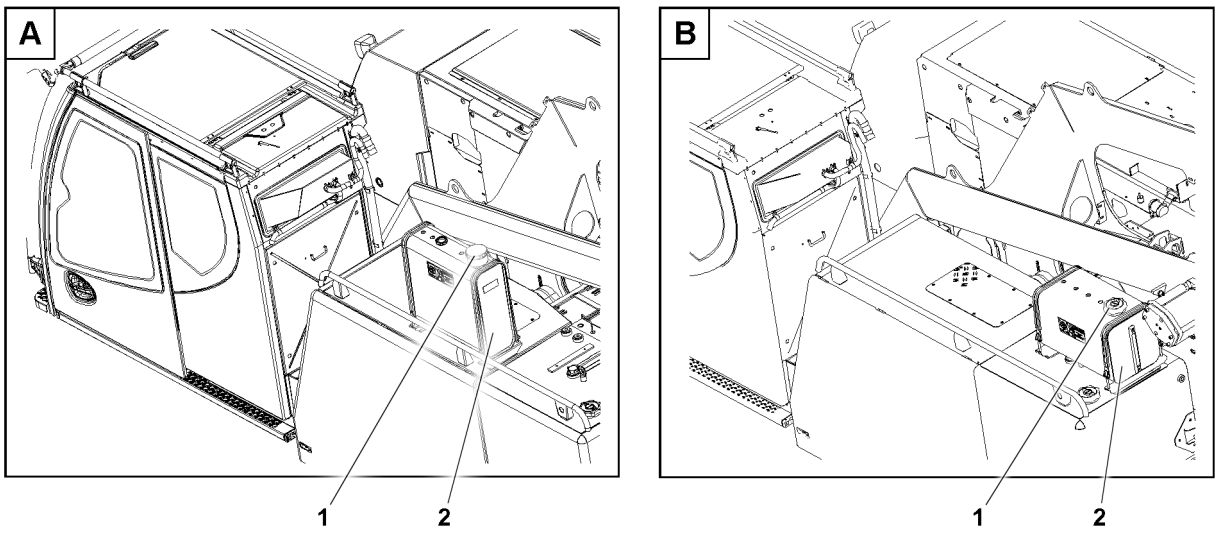

Fig.152430: Fuel container, auxiliary heater

A Variation **B** Variation

► Open the fuel container **2**: Screw off the cover **1**.
► Insert the fuel nozzle into the filler neck.
► Fill the fuel container **2** only to the point where the fuel nozzle shuts off: Add fuel.

After the refueling procedure:
► Take the fuel nozzle out of the filler neck.
► Close the fuel tank **2** with the cover **1**.

Problem remedy
Was **impermissible** fuel added?
► Do **not** turn the ignition on.
► Have the fuel container and fuel lines completely drained by authorized and trained service personnel.

LWE/LTR 1100-009/25105-02-02/en

copyright © Liebherr-Werk Ehingen GmbH 2023

18.3 Bleeding the fuel line

If the fuel ran out, then the fuel line may have to be bled.

Note
► Contact Customer Service at Liebherr-Werk Ehingen.

18.4 Checking the function

Make sure that the following prerequisites are met:
– The air filters are not blocked.
– Combustion air infiltration and exhaust emission of the heater are free of foreign particles.
– If present: The pollen filter / dust filter of the heater are not blocked.
– The heating circuit is bled.
– The fuel line is bled.
– The heating circuit is cold.
– The LICCON computer system error memory does not contain any error messages regarding the auxiliary heater.
– The crane engine is turned off.

► Turn on the auxiliary heater and run it for at least 15 min.

Wait a few minutes:
► Check the heat effect on the air vents of the vehicle.

18.5 Burning-off the burner

To prevent soot deposits in the burner of the auxiliary heater, free-burn the burner according to the maintenance interval. Burning off is used for the self-cleaning of the auxiliary heater burner.

Make sure that the following prerequisites are met:
– All outlet nozzles in the crane cab are open.
– The crane cab door is open.
– The interior temperature is set to the highest level.
– The fan stage is set to the highest level.
– The air supply is set to fresh air.
– The heater is in manual operation.

► Operate the auxiliary heater at full load for at least 15 min.

19 Crane cab auxiliary heater*

19.1 Checking the fill level in the expansion tank

NOTICE
Impermissible coolant!
Property damage.
► Do **not** mix different coolants.
► Do **not** thin Liebherr-Fertig-Mix (Liebherr Ready Made Mix).

When adding coolant:
► Use only the identical coolant with the same color.

Different coolants are differentiated by different colors.

Coolants contain corrosion inhibitor - antifreeze fluid.

LWE/LTR 1100-009/25105-02-02/en

copyright © Liebherr-Werk Ehingen GmbH 2023

Make sure that the following prerequisites are met:
- The crane is in a horizontal position.
- The cab is in a horizontal position.
- The auxiliary heater is turned off.
- The diesel engine is turned off.
- The ignition key is pulled out.
- The diesel engine, cooling system and exhaust system have cooled off for at least 30 min.

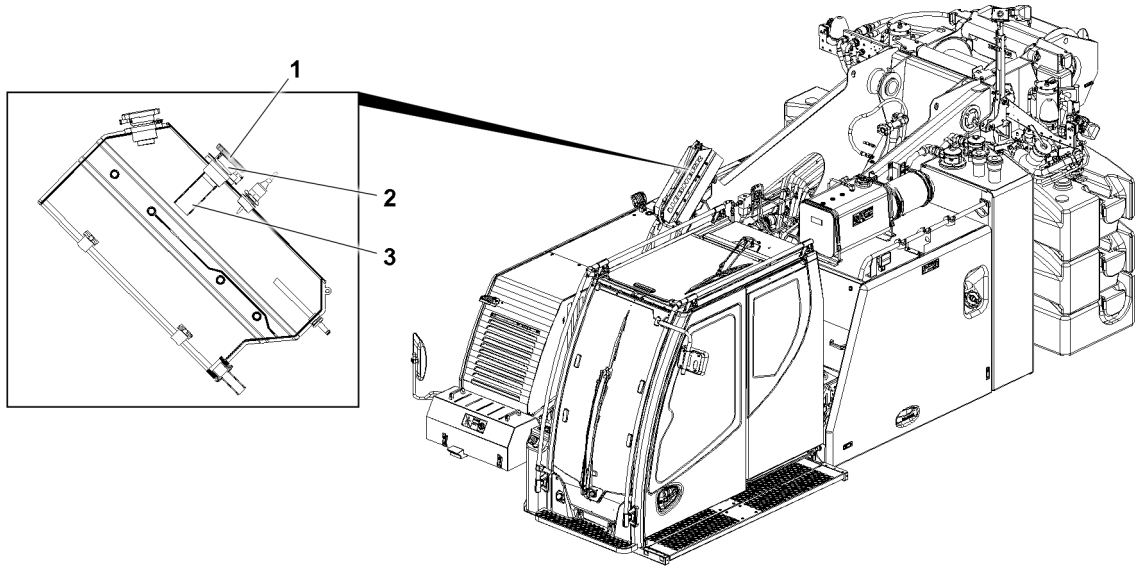

Fig.152568: Expansion tank, auxiliary heater

1 Cover
2 Filler neck
3 Riser tube

WARNING
Hot pressurized coolant!
Severe scalding, severe burns
► Only open the coolant expansion tank when the coolant has cooled off.
► Wait until the coolant has cooled off.
► Wear personal protective equipment.

► Wait until the coolant has cooled off.
► Release excess pressure: Turn the cover **1** on the filler neck on the expansion tank **2** to the first notch.
► Remove the cover **1**.

The coolant must be filled up to the lower edge of the riser tube in the filler neck.

► Check the coolant level.
► Add coolant only through the filler neck.

When the coolant level is too low:
► Add coolant up to the lower edge of the riser tube **3**.

WARNING
Spilled coolant!
Danger of slipping.
► Danger of slipping, pay attention.
► Use personal protective equipment depending on the operating materials.
► Immediately collect spilled coolant using suitable material. See the safety data sheet from the manufacturer of the operating fluid.

LWE/LTR 1100-009/25105-02-02/en

copyright © Liebherr-Werk Ehingen GmbH 2023

When the coolant level is too low:
► Add coolant up to the lower edge of the riser tube.
► Firmly close the expansion tank with the cover **1**.

19.2 Checking the function

Operate the auxiliary heater at least once a month for 15 minutes.

Make sure that the following prerequisites are met:
– The air filters are not blocked.
– Combustion air infiltration and exhaust emission of the heater are free of foreign particles.
– If present: The pollen filter / dust filter of the heater are not blocked.
– The heating circuit is bled.
– The fuel line is bled.
– The heating circuit is cold.
– The LICCON computer system error memory does not contain any error messages regarding the auxiliary heater*.
– The diesel engine is turned off.

► Turn on the auxiliary heater to the highest fan stage and run it for at least 15 min.

Wait a few minutes:
► Check the heat effect on the air vents of the crane cab.

19.3 Burning-off the burner

To prevent soot deposits in the burner of the auxiliary heater, free-burn the burner according to the maintenance interval. Burning off is used for the self-cleaning of the auxiliary heater burner.

Make sure that the following prerequisites are met:
– All outlet nozzles in the crane cab are open.
– The crane cab door is open.
– The interior temperature is set to the highest level.
– The fan stage is set to the highest level.
– The air supply is set to fresh air.
– The heater is in manual operation.

► Turn on the auxiliary heater to the highest fan stage and run it for at least 15 min.

20 Crane cab window washing system

20.1 Checking the fill level of the cleaning fluid

The cleaning fluid must be replaced before the cold season.

Make sure that the following prerequisites are met:
– All catwalks and railings are assembled in the operating position.
– Cleaning fluid for refilling is available.

LWE/LTR 1100-009/25105-02-02/en

copyright © Liebherr-Werk Ehingen GmbH 2023

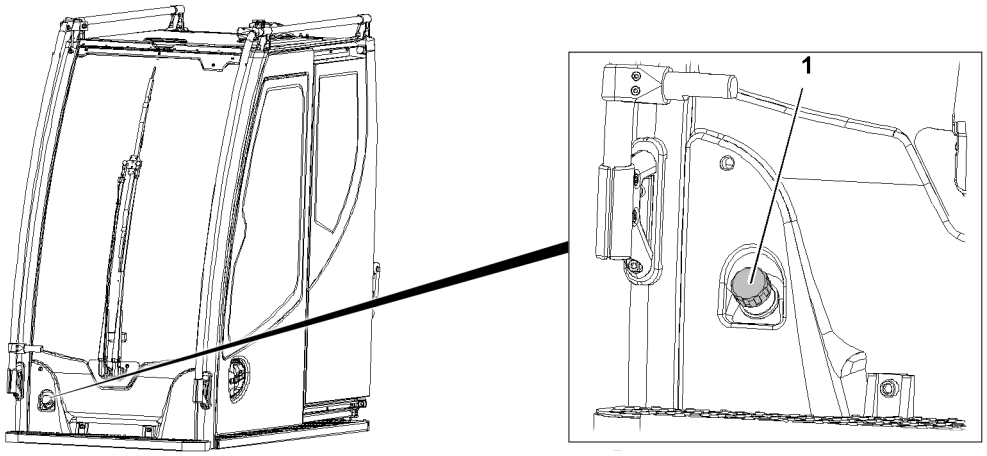

Fig.125276: Window washing system container

► Climb onto the crane: Use the stairs, platform, catwalk and ladder.

If operation during the cold season is planned:
► Replace the cleaning fluid, see chapter 7.05.
► Open the container: Screw off the cover **1**.
► Check the fill level of the cleaning fluid.

When the fill level is low:
► Add cleaning fluid.
► Close the container with cover **1**.

LWE/LTR 1100-009/25105-02-02/en

copyright © Liebherr-Werk Ehingen GmbH 2023

7.05 Maintenance personnel maintenance activities

1	Safety	2
2	Fall protection equipment	2
3	Diesel engine	3
4	Cooling system	6
5	Fuel system	13
6	Urea system*	20
7	Exhaust system*	23
8	Air filter system	26
9	Compressed air system*	28
10	Hydraulic system	29
11	Hydraulic hose lines	36
12	Central lubrication system	37
13	Travel gear	45
14	Crawler chain	47
15	Slewing ring connection	51
16	Slewing gear	52
17	Winch	53
18	Telescopic boom	61
19	Rope pulleys	68
20	Crane ropes	69
21	Crane cab heating-air conditioner device	82
22	Crane cab auxiliary heater*	86
23	Engine preheating auxiliary heater*	87
24	Electrical system	88

LWE/LTR 1100-009/25105-02-02/en

copyright © Liebherr-Werk Ehingen GmbH 2023

1 Safety

Before performing maintenance activities, observe the safety notes:
- General safety information: See chapter 2.04.
- Information regarding personal protective equipment: See chapter 2.04.
- Information regarding ladders: See chapter 2.04.10.
- Information regarding accesses to the crane: See chapter 2.06.
- Information regarding fall protection equipment on the crane: See chapter 2.07.
- Information regarding maintenance and service: See chapter 7.01.

2 Fall protection equipment

2.1 Lubricating the ladders

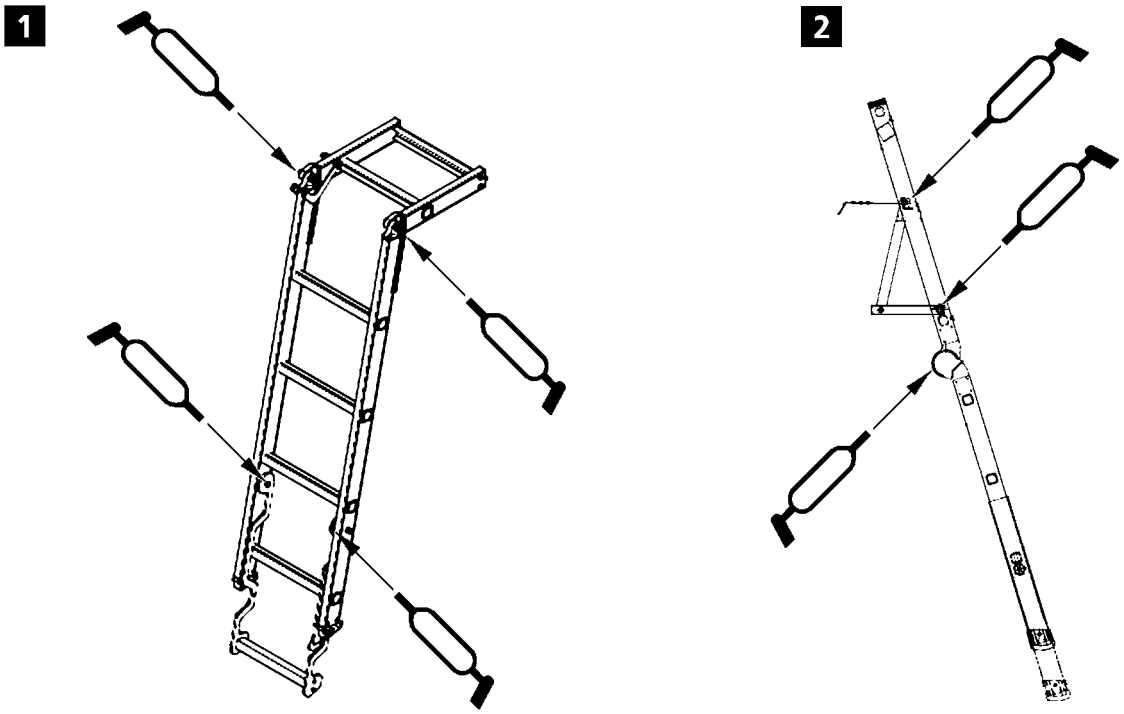

Fig.109766

WARNING
The following safety instructions were **not** observed!
Danger of falling. Death, severe bodily injuries, property damage.
- ► Observe and adhere to the assembly and safety instructions for ladders.
- ► Observe and adhere to the safety signs on the ladders.
- ► Install and secure the ladders properly.
- ► Do **not** use damaged ladders and replace them immediately.
- ► Have ladders repaired exclusively at authorized expert repair shops.

Make sure that the following prerequisites are met:
- The diesel engine is turned off.
- The ignition key is pulled out.
- The battery master switch is turned off.
- A grease gun is available.

LWE/LTR 1100-009/25105-02-02/en

copyright © Liebherr-Werk Ehingen GmbH 2023

► Grease joints and pivot points on the ladders and check them for easy movement, see illustration **1** and illustration **2**.

When damage is present:
► Have ladders repaired by authorized and trained service personnel.

3 Diesel engine

WARNING
Hot components, hot operating materials!
Severe burns, scalding.
► Let components cool off to below 50 °C.
► Avoid contact with hands, skin and eyes.
► Wear safety goggles.
► Wear heat-resistant protective equipment: Protective gloves and work attire.

3.1 Checking the oil level with the dipstick

NOTICE
Impermissible engine oil level!
Engine damage.
► Remedy the problem and observe the error message.
► Establish a permissible oil level.

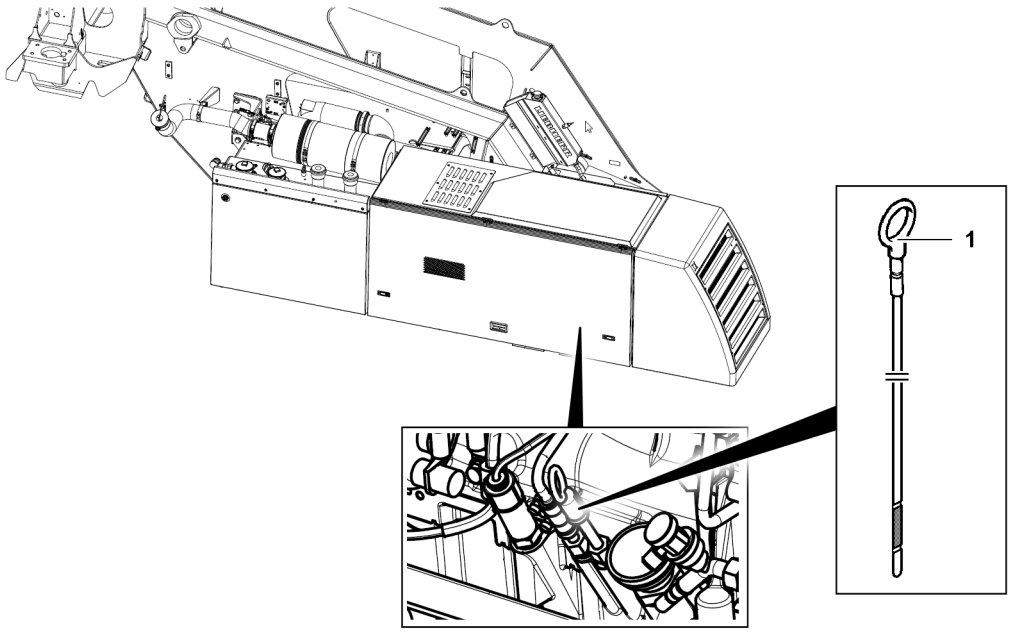

Fig.124870: Opening the engine flap

Make sure that the following prerequisites are met:
– The crane is horizontally aligned.
– The diesel engine is turned off.
– The ignition key is pulled out.
– The battery master switch is turned off.
– The engine flap is open.
– The diesel engine has been turned off for at least 30 min.
– The crane superstructure is aligned parallel to the crawler travel gear.

LWE/LTR 1100-009/25105-02-02/en

copyright © Liebherr-Werk Ehingen GmbH 2023

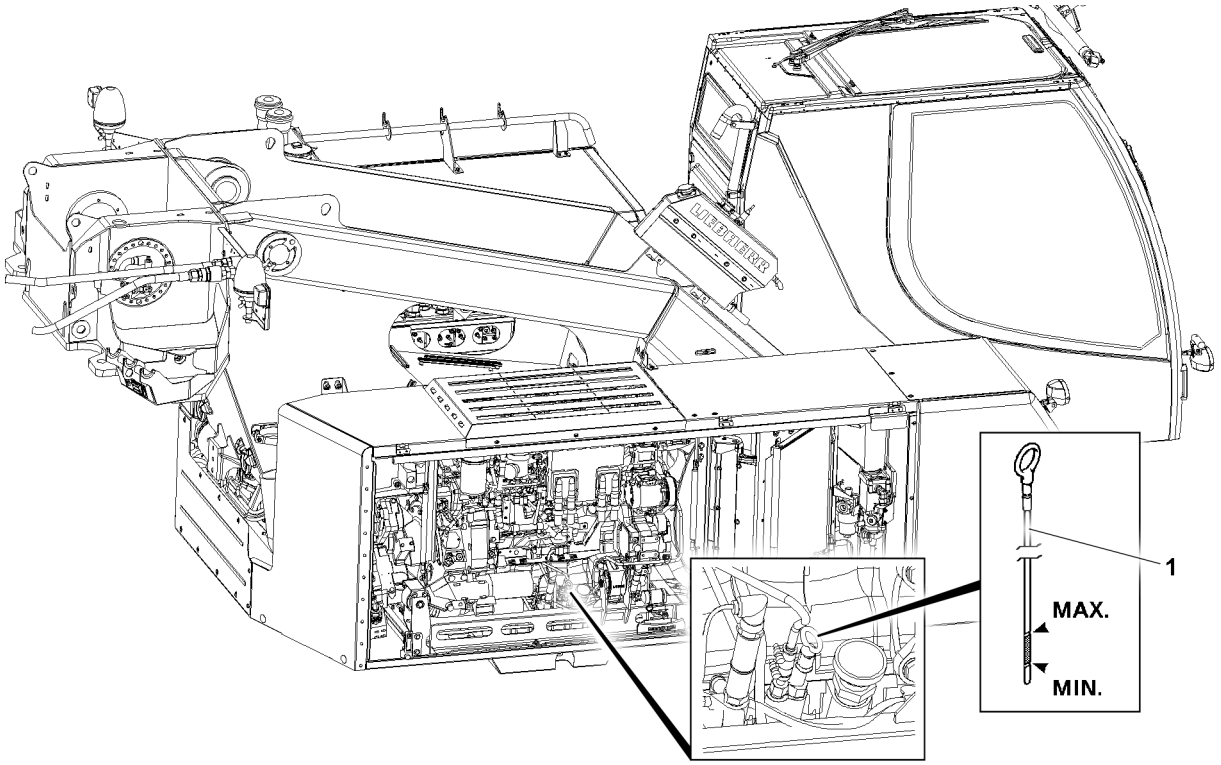

Fig.154723: Engine dipstick

► Climbing up and down the crawler carrier, observe the notes and instructions in chapter 2.07.
► Pull out the dipstick **1** and wipe it off.
► Insert the dipstick **1** and pull it out.

The engine oil must be visible between both marks on the dipstick **1**.

► Check the oil level.

Oil filler port, see section „Changing the engine oil and replacing the oil filter“.

When the oil level has dropped below the minimum mark:
► Add engine oil until the oil level is visible between both marks on the dipstick **1**.
► Insert the dipstick **1**.

Problem remedy
Is the oil level above the maximum mark?
► Find the cause and remedy it.

If the cause cannot be remedied:
► Contact Customer Service at Liebherr-Werk Ehingen GmbH.

Problem remedy
Is there excessive oil consumption or loss of oil?
► Find the cause and remedy it.

If the cause cannot be remedied:
► Contact Customer Service at Liebherr-Werk Ehingen GmbH.

3.2 Checking the condition of the belt drive

Make sure that the following prerequisites are met:
– The diesel engine is turned off.
– The ignition key is pulled out.
– The diesel engine, cooling system and exhaust system have cooled off for at least 30 min.
– The battery master switch is turned off.
– The engine flap is open.

LWE/LTR 1100-009/25105-02-02/en

copyright © Liebherr-Werk Ehingen GmbH 2023

► Check the belt drive, see the separate operating instructions from the engine manufacturer.

3.3 Replacing the belt drive

Make sure that the following prerequisites are met:
– The prerequisites for maintenance are established, see section “Establishing the prerequisites for maintenance”.
– The diesel engine is turned off.
– The ignition key is pulled out.
– The diesel engine, cooling system and exhaust system have cooled off for at least 30 min.
– The battery master switch is turned off.
– A new ribbed V-belt is available.

► Replace the belt drive, see the separate operating instructions from the engine manufacturer.

3.4 Checking the heat flange

Make sure that the following prerequisites are met:
– The diesel engine is turned off.
– The ignition key is pulled out.
– The diesel engine, cooling system and exhaust system have cooled off for at least 30 min.
– The battery master switch is turned off.
– The engine flap is open.

► Check the heat flange, see the separate operating instructions from the engine manufacturer.

3.5 Replacing the heat flange

Make sure that the following prerequisites are met:
– The diesel engine is turned off.
– The ignition key is pulled out.
– The diesel engine, cooling system and exhaust system have cooled off for at least 30 min.
– The battery master switch is turned off.
– The engine flap is open.

► Replace the heat flange, see the separate operating instructions from the engine manufacturer.

3.6 Changing the engine oil and replacing the oil filter

WARNING
Impermissible conditions for the engine oil!
Danger of fire. Death, severe bodily injuries, property damage.
► Turn the heating systems off, for example the auxiliary heater or the flame start system.

When engine oil is filled:
► Exclude heat, sparks, flames and sources of ignition.
► Avoid high temperatures and direct sunlight.

Make sure that the following prerequisites are met:
– The crane is horizontally aligned.
– The diesel engine is turned off.
– The ignition key is pulled out.
– The battery master switch is turned off.
– The engine flap is open.
– The diesel engine has warmed up.
– A drain hose for draining the engine oil is available, see the on-board tools.
– A container with sufficient capacity for the engine oil is available.
– The required quantity of engine oil is available.
– A new oil filter is available.

LWE/LTR 1100-009/25105-02-02/en

copyright © Liebherr-Werk Ehingen GmbH 2023

WARNING
Spilled engine oil!
Danger of slipping
► Danger of slipping, pay attention.
► Use personal protective equipment depending on the operating materials.
► Immediately collect spilled engine oil using suitable material. See the safety data sheet from the manufacturer of the operating fluid.

► Change the engine oil, see the separate operating instructions from the engine manufacturer.
► Replace the oil filter, see the separate operating instructions from the engine manufacturer.

3.7 Replacing the oil separator filter insert

Make sure that the following prerequisites are met:
– The crane is horizontally aligned.
– The diesel engine is turned off.
– The ignition key is pulled out.
– The battery master switch is turned off.
– The engine flap is open.
– The diesel engine has warmed up.
– A new oil separator filter insert is available.

► Replace the oil separator filter insert, see the separate operating instructions from the engine manufacturer.

3.8 Checking the valve clearance

Make sure that the following prerequisites are met:
– The crane is horizontally aligned.
– The diesel engine is turned off.
– The ignition key is pulled out.
– The battery master switch is turned off.
– The engine flap is open.
– The diesel engine has warmed up.

► Check and set the valve clearance, see the separate operating instructions from the engine manufacturer.

4 Cooling system

NOTICE
Impermissible coolant!
Property damage.
► Do **not** mix different coolants.
► Do **not** thin Liebherr-Fertig-Mix (Liebherr Ready Made Mix).

When adding coolant:
► Use exclusively the same coolant with the same color.

4.1 Checking the coolant level

Make sure that the following prerequisites are met:
– The crane is horizontally aligned.
– The diesel engine is turned off.
– The ignition key is pulled out.
– The battery master switch is turned off.
– The diesel engine, cooling system and exhaust system have cooled off for at least 30 min.

LWE/LTR 1100-009/25105-02-02/en

copyright © Liebherr-Werk Ehingen GmbH 2023

The coolant level is monitored by the LICCON computer system.

Call up the monitoring functions and coolant level individual control display, see chapter 4.02.

Condition	Icon	Icon color	Meaning
1		Green	The coolant level is OK.
2		Red	The coolant level is low.

Coolant level conditions

► Check the coolant level on the LICCON monitor.

WARNING
Hot pressurized coolant!
Severe scalding, severe burns
► Only open the coolant expansion tank when the coolant has cooled off.
► Wait until the coolant has cooled off.
► Wear personal protective equipment.

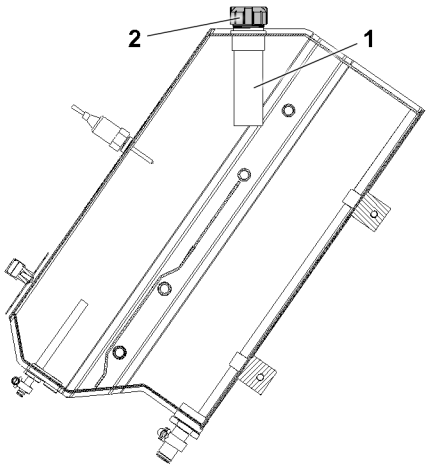

Fig.154112: Coolant expansion tank

1 Coolant expansion tank **2** Cover

► Wait until the coolant has cooled off.
► Release excess pressure: Turn the cover **2** on the filler neck of the coolant expansion tank **1** to the first notch.
► Screw off the cover **2**.

The coolant must be filled up to the lower edge of the riser tube in the filler neck.

► Check the coolant level.
► Add coolant only through the filler neck.

When the coolant level is too low:
► Add coolant up to the lower edge of the riser tube.

LWE/LTR 1100-009/25105-02-02/en

copyright © Liebherr-Werk Ehingen GmbH 2023

WARNING
Spilled coolant!
Danger of slipping.
- ► Danger of slipping, pay attention.
- ► Use personal protective equipment depending on the operating materials.
- ► Immediately collect spilled coolant using suitable material. See the safety data sheet from the manufacturer of the operating fluid.

When the coolant level is too low:
- ► Add coolant up to the lower edge of the riser tube.
- ► Screw the cover **2** onto the coolant expansion tank **1** and close firmly.

4.2 Check the concentration of the antifreeze in the coolant

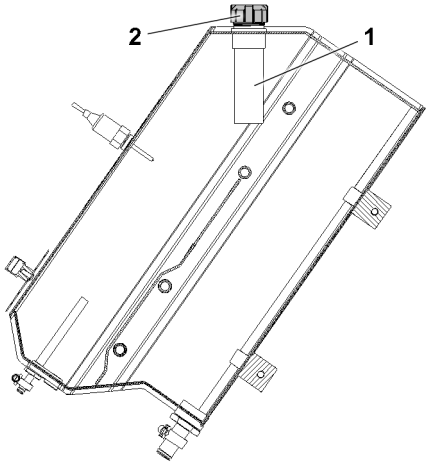

Fig.154112: Coolant expansion tank

1 Coolant expansion tank **2** Cover

Make sure that the following prerequisites are met:
- – The crane is horizontally aligned.
- – The diesel engine is turned off.
- – The ignition key is pulled out.
- – The battery master switch is turned off.
- – The diesel engine, cooling system and exhaust system have cooled off for at least 30 min.

WARNING
Hot pressurized coolant!
Severe scalding, severe burns
- ► Only open the coolant expansion tank when the coolant has cooled off.
- ► Wait until the coolant has cooled off.
- ► Wear personal protective equipment.

- ► Wait until the coolant has cooled off.
- ► Release excess pressure: Turn the cover **2** on the filler neck of the coolant expansion tank **1** to the first notch.
- ► Remove the cover **2**.
- ► Remove the coolant sample.

The concentration of the antifreeze must be between 50 % and 60 %.

- ► Check the concentration of the antifreeze.

If the concentration of the antifreeze is impermissible:
- ► Correct the concentration of the antifreeze, see the separate operating instructions from the engine manufacturer.

LWE/LTR 1100-009/25105-02-02/en

copyright © Liebherr-Werk Ehingen GmbH 2023

If the coolant must be drained:
► Drain the coolant, see section „Changing the coolant“.

4.3 Changing the coolant

Note

When the coolant is changed:
► Empty the cooling system completely and flush it.

WARNING
Spilled coolant!
Danger of slipping
► Danger of slipping, pay attention.
► Use personal protective equipment depending on the operating materials.
► Immediately collect spilled coolant using suitable material. See the safety data sheet from the manufacturer of the operating fluid.

Make sure that the following prerequisites are met:
– The crane is horizontally aligned.
– The diesel engine is turned off.
– The ignition key is pulled out.
– The battery master switch is turned off.
– The diesel engine, cooling system and exhaust system have cooled off for at least 30 min.
– The engine flap is open.
– A suitably sized container for the used coolant is available.
– A drain hose for draining the coolant is available, see the on-board tools.
– The required quantity of coolant is available, see the service fill.

4.3.1 Draining the coolant

WARNING
Hot pressurized coolant!
Severe scalding, severe burns
► Only open the coolant expansion tank when the coolant has cooled off.
► Wait until the coolant has cooled off.
► Wear personal protective equipment.

LWE/LTR 1100-009/25105-02-02/en

copyright © Liebherr-Werk Ehingen GmbH 2023

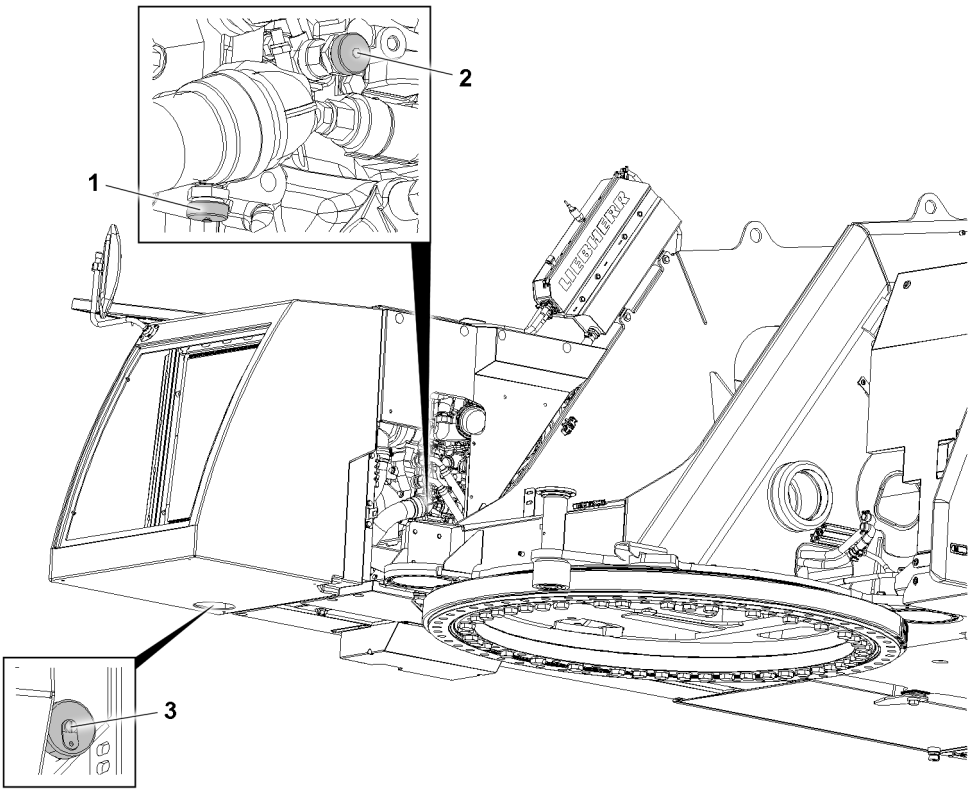

Fig.154113: Coolant draining positions

1 Drain valve
2 Drain valve
3 Drain valve

► Remove the cover from the filler neck on the coolant expansion tank, see section „Checking the coolant level“.
► Unscrew the protective cover from the drain valve **3**.
► Collect the coolant: Position a container under the drain valve **3**.

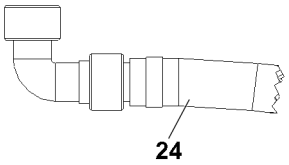

Fig.153600

► Connect the drain hose **24** to the drain valve **3** and drain the coolant fully.
► Remove the drain hose **24**.
► Screw the protective cap onto the drain valve **3**.
► Unscrew the protective caps from the drain valve **1** and drain valve **2**.
► Collect the coolant: Position a container under the drain valve **2**.
► Connect the drain hose **24** to the drain valve **2** and drain the coolant fully.
► Remove the drain hose **24**.
► Screw the protective cap onto the drain valve **2**.
► Collect the coolant: Position a container under the drain valve **1**.
► Connect the drain hose **24** to the drain valve **1** and drain the coolant fully.
► Remove the drain hose **24**.
► Screw the protective cap onto the drain valve **1**.

LWE/LTR 1100-009/25105-02-02/en

copyright © Liebherr-Werk Ehingen GmbH 2023

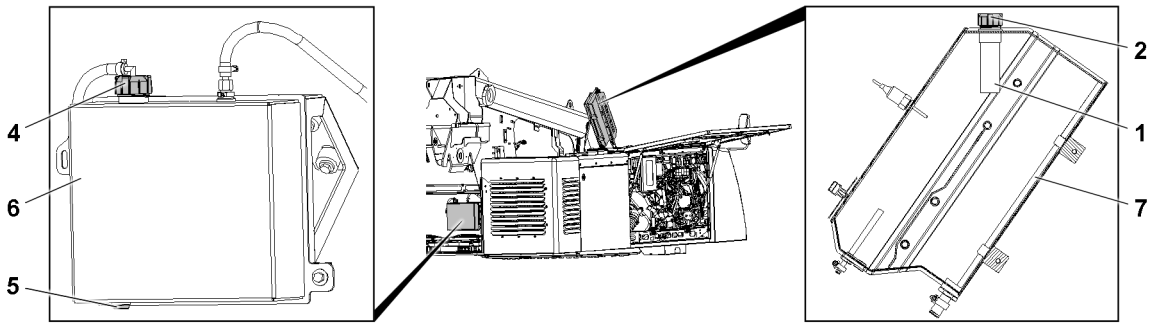

Fig.155740: Draining the coolant

1	Riser tube	**5**	Drain plug
2	Coolant expansion tank cover	**6**	Auxiliary coolant tank
4	Auxiliary coolant tank cover	**7**	Coolant expansion tank

► Open the cap **4** on the auxiliary coolant tank **6**.
► Collect the coolant: Position a container under the drain plug **5**.
► Unscrew the drain plug **5**.

When the coolant has been fully drained from the auxiliary coolant tank **6**:
► Clean the drain plug **5** and the sealing surface.
► Screw in the drain plug **5** with a new seal and tighten.

After draining the coolant: Fill up the coolant.

4.3.2 Filling up the coolant

NOTICE
Impermissible coolant!
Property damage
► Do **not** mix different coolants.
► Do **not** thin Liebherr-Fertig-Mix (Liebherr Ready Made Mix).

When adding coolant:
► Use exclusively the same coolant with the same color.

Different coolants are differentiated by different colors.

Coolants contain antifreeze fluid.

LWE/LTR 1100-009/25105-02-02/en

copyright © Liebherr-Werk Ehingen GmbH 2023

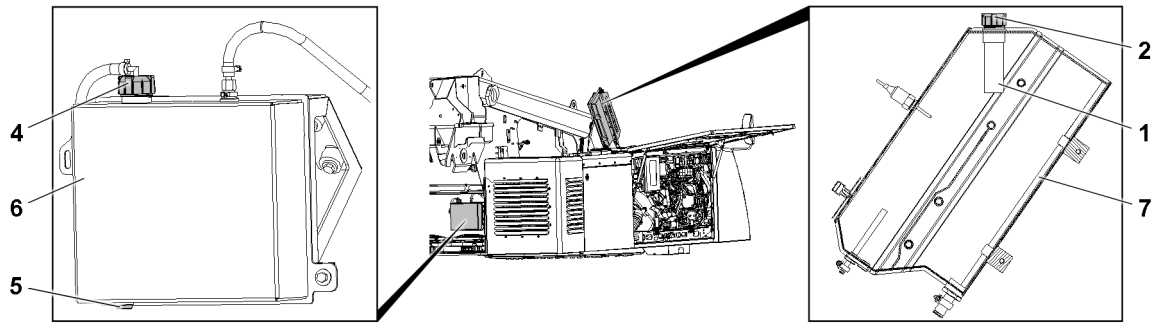

Fig.155740: Filling up the coolant

1 Riser tube
2 Coolant expansion tank cover
4 Auxiliary coolant tank cover
5 Drain plug
6 Auxiliary coolant tank
7 Coolant expansion tank

Make sure that the following prerequisites are met:
– The crane is horizontally aligned.
– The diesel engine is turned off.
– The ignition key is pulled out.
– The battery master switch is turned off.
– The cover **2** is removed from the filler neck on the coolant expansion tank.
– The coolant is fully drained.
– Protective caps are screwed onto the drain valves.
– Permissible coolant is available, see the service fill.
– The required quantity of coolant is available.

► Add coolant up to the lower edge of the riser tube **1**.
► Position the cover **2** and close the coolant expansion tank **7**.
► Fill the auxiliary coolant tank **6** with 3 l of coolant.

The diesel engine and auxiliary heater create a connected coolant circuit. When draining the diesel engine coolant, the coolant for the auxiliary heater is also drained. When refilling the system, the coolant circuit must be bled completely.

► Start the diesel engine.
► Set the heater to „hot“.

Result:

– The diesel engine is bled.

► Until no more air bubbles are visible: Observe the coolant in the coolant expansion tank **7**.
► Set the heater to „cold“.

Result:

– The auxiliary heater is bled.

► Until no more air bubbles are visible: Observe the coolant in the coolant expansion tank **7**.

LWE/LTR 1100-009/25105-02-02/en

copyright © Liebherr-Werk Ehingen GmbH 2023

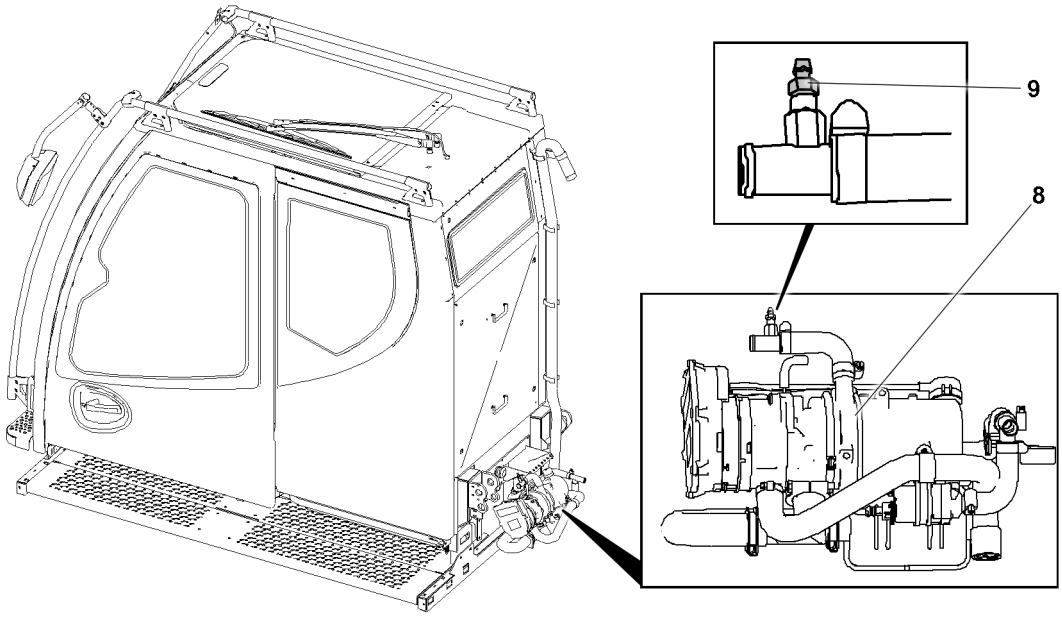

Fig.162754: Water heater, crane cab

9 Breather valve **8** Water heater

To ensure that it can be fully bled, the coolant circuit on the water heater **2** must be opened.

► Open the breather valve **1** and keep it open until coolant escapes.

Result:

– The coolant circuit is bled.

► Screw the cover **2** onto the coolant expansion tank **7** and close firmly.
► Start the diesel engine and let it warm up until the coolant temperature reaches at least 80 °C.
► Turn off the diesel engine and let it cool off.
► Check the coolant level, see section „Checking the coolant level“.

5 Fuel system

5.1 Safety

WARNING
Impermissible condition for the fuel!
Fire hazard, death, severe bodily injury, property damage.
► Turn the heating system off, for example the auxiliary heater or the flame start system.

When working on the fuel system or adding fuel:
► Exclude heat, sparks, flames and sources of ignition.

WARNING
Spilled fuel!
Danger of slipping
► Danger of slipping, pay attention.
► Use personal protective equipment depending on the operating materials.
► Immediately collect spilled fuel using suitable material. See the safety data sheet from the manufacturer of the operating fluid.

LWE/LTR 1100-009/25105-02-02/en

copyright © Liebherr-Werk Ehingen GmbH 2023

5.2 Adding diesel fuel

Make sure that the following prerequisites are met:
- The diesel engine is turned off.
- The ignition key is pulled out.
- The battery master switch is turned off.
- The heating systems are turned off, for example the auxiliary heater, flame start system.

NOTICE
Impermissible fuel!
Severe damage to the engine and fuel system.
► Make sure that the minimum requirement for fuel is fulfilled, see the separate operating instructions of the engine manufacturer.
► Do **not** mix fuels.

NOTICE
Dirt in the fuel system!
Damage to components. Increased wear and shorter service life of the components.
► Make sure that no dirt gets inside the fuel system.

WARNING
Tripping, falling from the working height!
► Ensure a 3-point support.
► Use personal protective equipment to prevent falling.

WARNING
Climb on the ladder with the fuel nozzle!
Danger of falling. Death, severe bodily injuries.
► Secure the fuel nozzle **11** to prevent it from falling.
► Place both hands on the ladder to climb up.

When maintenance personnel can **not** reach the filler neck from the ground:
- Use the supplied ladder as a stepladder.

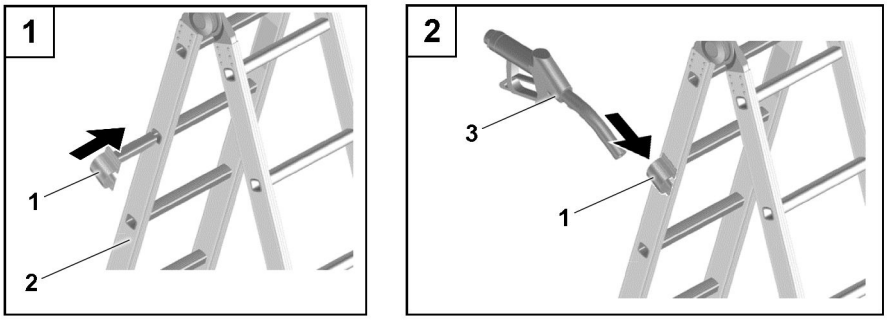

Fig.152445: Ladder with fuel nozzle holder

► Place the ladder **2** as a stepladder next to the mobile crane.
► Insert the fuel nozzle holder **1** to the stop in the ladder rung.

WARNING
Fuel nozzle **not** inserted deep enough!
Danger of fire: Escaping fuel, falling of the fuel nozzle.
► Insert the fuel nozzle as deep as possible into the fuel nozzle holder and the filler neck.

► Insert the fuel nozzle **3** as deep as possible into the fuel nozzle holder **1** and secure it from falling down.

LWE/LTR 1100-009/25105-02-02/en

copyright © Liebherr-Werk Ehingen GmbH 2023

Access to the fuel container: Access and climb up onto the crane superstructure, see chapter 2.07.

► Follow the notes and instructions, see chapter 2.04.10 and chapter 2.06.

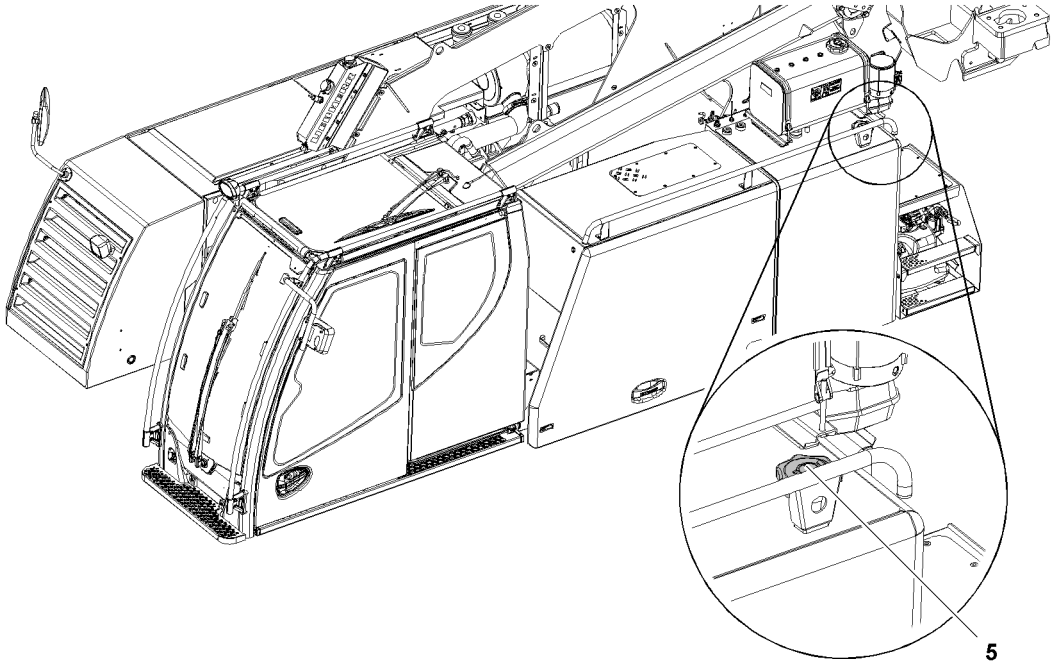

Fig.154114: Fuel tank

5 Cover

► Remove the cover **5**.
► Use the fuel nozzle such that **no** fuel can escape.
► Insert the fuel nozzle as deep as possible into the filler neck.
► Until the fuel nozzle turns off: Add fuel.

When the refueling procedure is complete:
► Remove the fuel nozzle from the filler neck and secure it from falling down.

WARNING
Fuel tank **not** tightly closed!
Escaping fuel.
► Make sure that the fuel tank is tightly closed.

► Tighten the cover **5** completely.

Problem remedy
Was **impermissible** fuel added?
► Do **not** turn the ignition on.
► Have the fuel tank and fuel lines completely drained by authorized and trained expert personnel.

5.3 Servicing the fuel preliminary filter

Maintenance of the fuel preliminary filter consists of the following tasks:
– Take the fuel system out of service.
– Replace the filter insert.
– Clean the water manifold.
– Put the fuel system in operation.

LWE/LTR 1100-009/25105-02-02/en

copyright © Liebherr-Werk Ehingen GmbH 2023

5.3.1 Taking the fuel system out of service

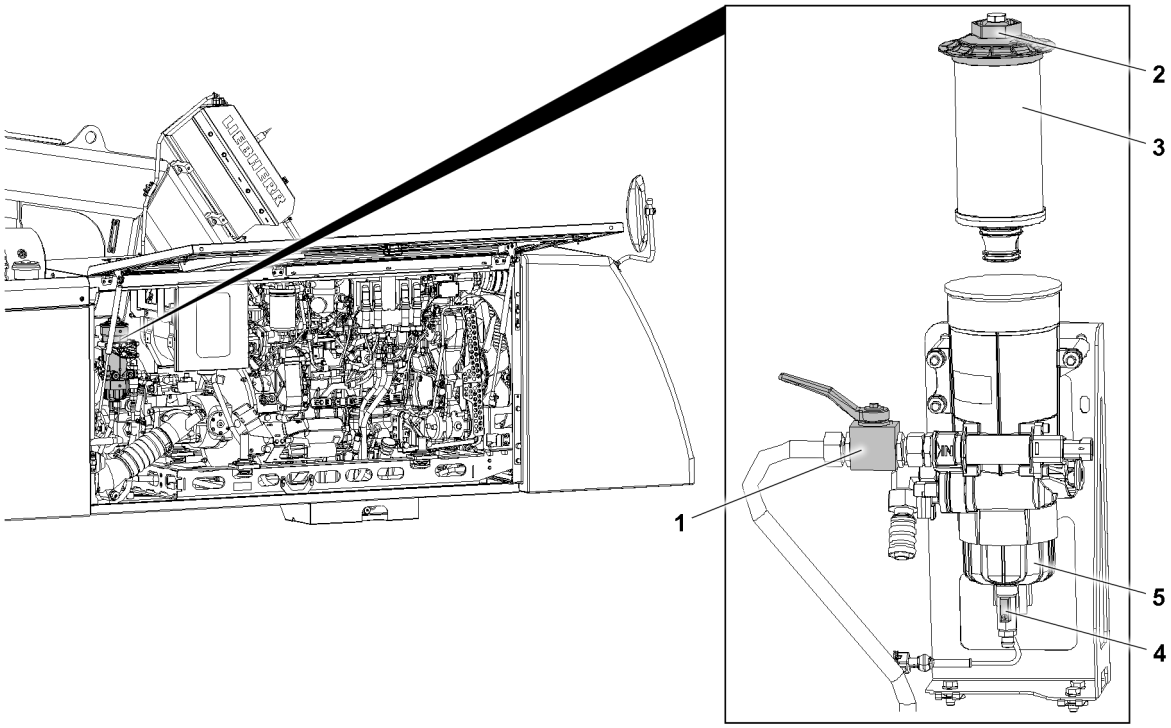

Fig.153573: Fuel preliminary filter

1 Ball valve
2 Cover
2 Preliminary filter insert
4 Drain valve
5 Water manifold

Make sure that the following prerequisites are met:
- The mobile crane is horizontally aligned.
- The diesel engine is turned off.
- The ignition key is pulled out.
- The battery master switch is turned off.
- The diesel engine and fuel system have cooled off for at least 30 min.
- A container for diesel fuel with sufficient capacity is available.
- A new preliminary filter insert **2** is available.
- A new seal for the water manifold **5** is available.

Note
► Prior to maintenance of the fuel preliminary filter, Liebherr-Werk Ehingen recommends placing cleaning rags underneath it.

► Close the ball valve **1**.

LWE/LTR 1100-009/25105-02-02/en

copyright © Liebherr-Werk Ehingen GmbH 2023

5.3.2 Replacing the filter insert

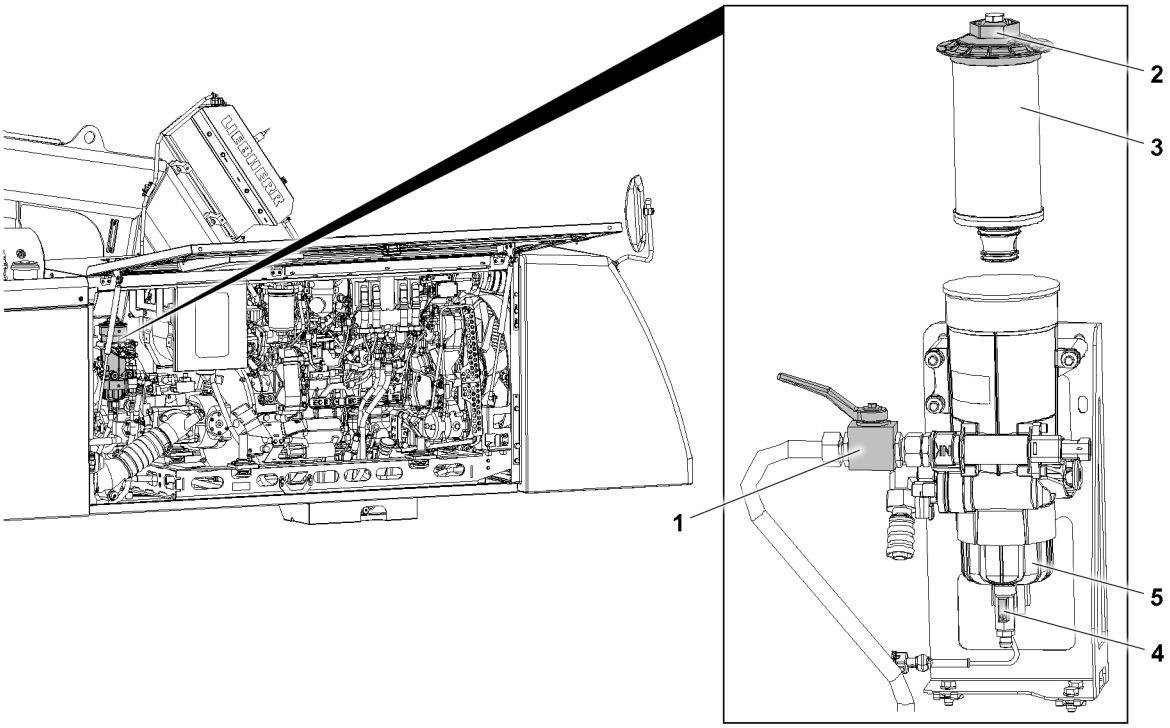

Fig.153573: Fuel preliminary filter

1 Ball valve
2 Cover
3 Preliminary filter insert
4 Drain valve
5 Water manifold

The preliminary filter insert **3** must be replaced in the following situations:
– According to the maintenance intervals.
– **Or** when an error message is displayed on the LICCON monitor.

Make sure that the following prerequisites are met:
– The fuel system is out of operation.
– The ball valve **1** is closed.

NOTICE
Dirt!
Destruction of the Common Rail System.
► Make sure that **no** dirt gets inside the preliminary filter insert **3**.
► Do **not** release or open the fuel lines and injection lines.
► Do **not** reuse a used preliminary filter insert.

► Collect the fuel: Position a container under the fuel preliminary filter.
► Screw off the cover **2**.
► Remove the cover **2** with the preliminary filter insert **3**.
► Remove the preliminary filter insert **3** from the cover **2**.
► Place the new preliminary filter insert **3** on the cover **2**.

A new seal ring is provided with the replacement filter insert.

► Replace the seal ring on the cover **2**.
► Wet the seal ring with fuel.
► Assemble the cover **2** with the preliminary filter insert **3** properly and tighten with a tightening torque of 40 Nm.

LWE/LTR 1100-009/25105-02-02/en

copyright © Liebherr-Werk Ehingen GmbH 2023

Problem remedy
Does the fuel preliminary filter insert need to be replaced regularly at short intervals?
Dirt entered the fuel tank during refueling.
► Drain the sediments, see section „Draining the sediments out of the fuel tank“.

5.3.3 Cleaning the water manifold

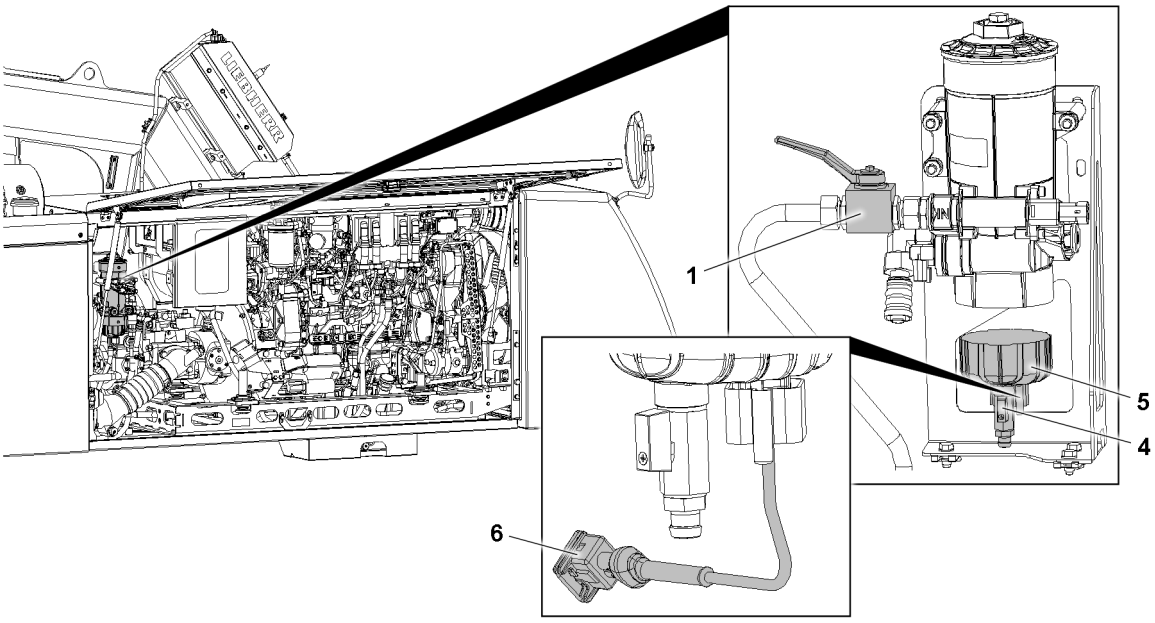

Fig.153574: Fuel preliminary filter

1	Ball valve	**5**	Water manifold
4	Drain valve	**6**	Plug connection

Make sure that the following prerequisites are met:
– The fuel system is out of operation.
– The ball valve **3** is closed.
– A container with sufficient capacity has been positioned below the water manifold **5**.

NOTICE
Dirt!
Destruction of the Common Rail System
► Make sure that **no** dirt gets inside the filter insert.
► Do **not** release or open the fuel lines and injection lines.
► Do **not** reuse a used filter insert.

► Drain the diesel fuel: Open the drain valve **4** until the diesel fuel has drained fully.
► Release the plug connection **6** of the water lever sensor.
► Screw off the water manifold **5**.
► Clean the water manifold **5**.
► Assemble a new seal on the water manifold **5** and wet it with diesel.
► Tighten the water manifold **5** with maximum tightening torque of 5 Nm.
► Close the drain valve **4**.
► Remove the container and dispose of the fuel.

5.3.4 Putting the fuel system in operation

Make sure that the following prerequisites are met:
– The fuel preliminary filter insert is replaced.
– The water manifold is clean.
– The drain valve is closed.

LWE/LTR 1100-009/25105-02-02/en

copyright © Liebherr-Werk Ehingen GmbH 2023

► Open the ball valve **1**.

The fuel system is automatically bled when the ignition is turned on.

► Turn the ignition on and wait 1 minute.
► Start the diesel engine.

Problem remedy
Does the starting procedure remain unsuccessful after approx. 20 seconds?
► Turn the ignition off.
► Wait for 1 minute.
► Turn the ignition on and wait 1 minute.
► Start the diesel engine.

5.4 Replacing the fuel fine filter

Make sure that the following prerequisites are met:
– The diesel engine is turned off.
– The ignition key is pulled out.
– The battery master switch is turned off.
– A new fuel fine filter is available.

The fuel system is automatically bled when the ignition is turned on.

WARNING
Hot components, hot operating materials!
Severe burns, scalding
► Let components cool off to below 50 °C.
► Avoid contact with hands, skin and eyes.
► Wear safety goggles.
► Wear heat-resistant protective equipment: Protective gloves and work attire.

► Change the fuel fine filter, see the separate engine manufacturer's operating instructions.
► Turn on the battery master switch.

When the fuel fine filter has been replaced:
► Turn the ignition on and wait 1 minute.
► Start the diesel engine.

Problem remedy
Does the starting procedure remain unsuccessful after approx. 20 seconds?
► Turn the ignition off.
► Wait for 1 minute.
► Turn the ignition on and wait 1 minute.
► Start the diesel engine.

5.5 Draining the sediment in the fuel tank

Make sure that the following prerequisites are met:
– The crane is horizontally aligned.
– The diesel engine is turned off.
– The ignition key is pulled out.
– The battery master switch is turned off.
– The diesel engine has cooled off for at least 30 min.
– A container for the fuel with sufficient collection capacity is available.

LWE/LTR 1100-009/25105-02-02/en

copyright © Liebherr-Werk Ehingen GmbH 2023

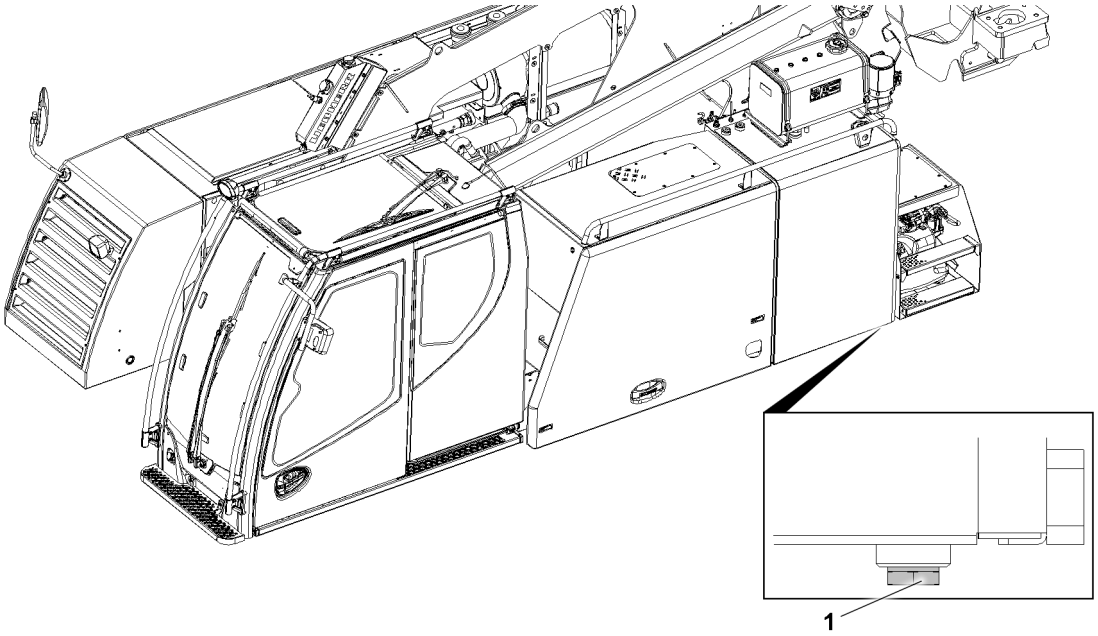

Fig.154115: Fuel tank, drain plug

The drain plug **1** has a cross hole. Fine sediments are flushed out through the cross hole.

- ► Collect the diesel fuel: Position a container under the drain plug **1**.
- ► Unscrew the drain plug **1** until diesel fuel exits.
- ► Drain the sediment.
- ► Screw in the drain plug **1** and tighten.

Problem remedy
Does the fuel preliminary filter insert still need to be replaced at short intervals?
Coarse sediment is present in the fuel tank.
- ► The fuel tank must be cleaned: Contact Customer Service at Liebherr-Werk Ehingen.

6 Urea system*

Note
- ► Applies only if an engine with a SCR exhaust aftertreatment system is installed.

6.1 Safety

WARNING
Ammonia vapors!
If the cover of the urea tank is opened at high temperatures, ammonia vapors can emerge. Irritation of eyes and mucous membranes.
- ► Keep the urea tank closed at high temperatures.
- ► Do **not** breathe in ammonia vapors.

LWE/LTR 1100-009/25105-02-02/en

copyright © Liebherr-Werk Ehingen GmbH 2023

WARNING
Spilled urea solution!

Danger of slipping.
- ► Danger of slipping, pay attention.
- ► Use personal protective equipment depending on the operating materials.
- ► Immediately collect spilled urea solution using suitable material. See the safety data sheet from the manufacturer of the operating fluid.

WARNING
Spilled urea solution!
Affected surfaces can corrode.
Environmental risk.
- ► Rinse the affected surfaces immediately with lots of water.
- ► Do **not** overfill the container.
- ► Refuel using a fuel nozzle.

6.2 Adding urea solution

NOTICE
Admixing of special additives and diluting the urea solution!
The legally required emissions standards are not observed.
Destruction of the exhaust aftertreatment system.
- ► Do **not** mix or dilute the urea solution with special additives.
- ► Make sure that **no** dirt gets into the inside of the urea tank.
- ► Only fill permissible operating materials in the urea tank.

Make sure that the following prerequisites are met:
- – The diesel engine is turned off.
- – The ignition key is pulled out.
- – The battery master switch is turned off.
- – The heating systems are turned off, for example the auxiliary heater, flame start system.

Climb up onto the crane chassis, see chapter 2.06.

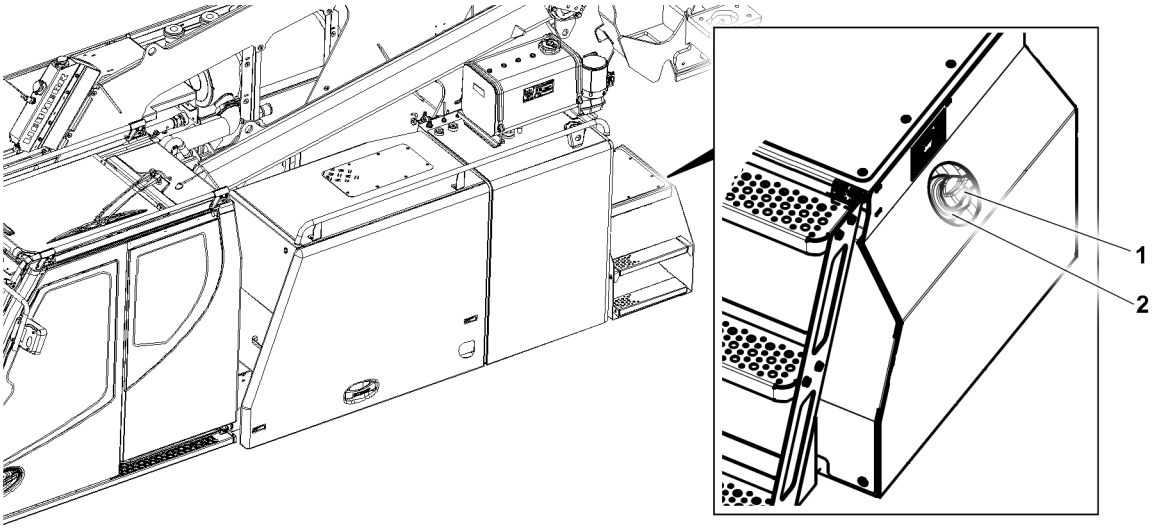

Fig.124877: Urea container, filler neck

1 Cover **2** Filler neck

- ► Remove the cover **1**.
- ► Use the fuel nozzle such that **no** urea solution can escape.

copyright © Liebherr-Werk Ehingen GmbH 2023

► Insert the fuel nozzle as deep as possible into the filler neck.

WARNING
Urea tank overfilled!
Urea solution expands at temperature fluctuations: Crack formation in the urea tank.
Emerging urea solution.
► Do **not** overfill the urea tank.

► Until the fuel nozzle turns off: Refill urea.

When the refueling procedure is complete:
► Remove the fuel nozzle from the filler neck and secure it from falling down.

WARNING
Urea tank **not** tightly closed!
Danger of fire: Escaping urea.
► Make sure that the urea tank is tightly closed.

► Tighten the cover **1** completely.

6.3 Urea tank: Replacing the filter strainer in the tank fitting

NOTICE
Dirt in the urea tank!
Destruction of urea system.
► Make sure that **no** dirt gets into the inside of the urea tank.

If the filter strainer is dirty or damaged, the filter strainer must be cleaned or replaced.

Make sure that the following prerequisites are met:
– The crane is horizontally aligned.
– The diesel engine is turned off.
– The ignition key is pulled out.
– The battery master switch is turned off.
– The heating systems are turned off, for example the auxiliary heater, flame start system.
– A new filter strainer is available.

6.3.1 Filter strainer Variation 1

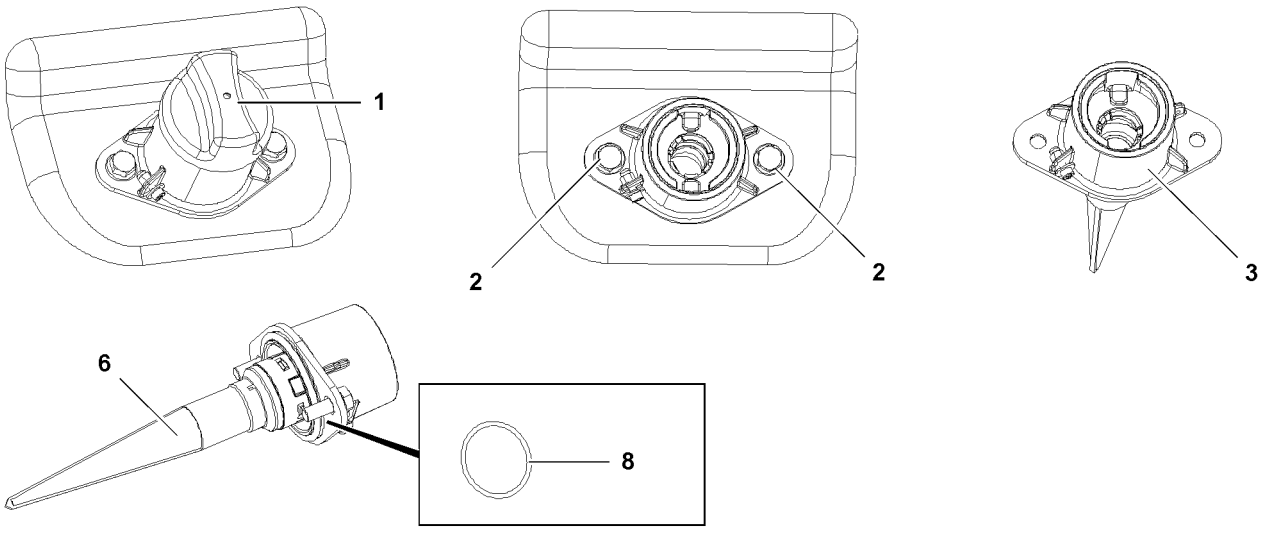

Fig.124111: Urea tank filter strainer

► Make sure that the variation of the tank fitting **3** corresponds to the illustration.

LWE/LTR 1100-009/25105-02-02/en

copyright © Liebherr-Werk Ehingen GmbH 2023

► Remove the cover **1** of the urea tank.
► Unscrew the screws **2** and remove the tank fitting **3**.
► Clean the filter strainer **6** with water.

When the filter strainer **6** is damaged:
► Replace the filter strainer **6**.
► Check the seal **8** for damage.

When the seal **8** is damaged:
► Replace the seal **8**.
► Install the tank fitting **3** with the seal **8** and spacer properly.

NOTICE
Tightening torque too high!
Destruction of urea tank.
► Tighten the screws **2** with a maximum tightening torque of 8 Nm.

► Properly screw in and tighten the screws **2**.
► Close the urea tank with the cover **1**.

6.3.2 Filter strainer Variation 2

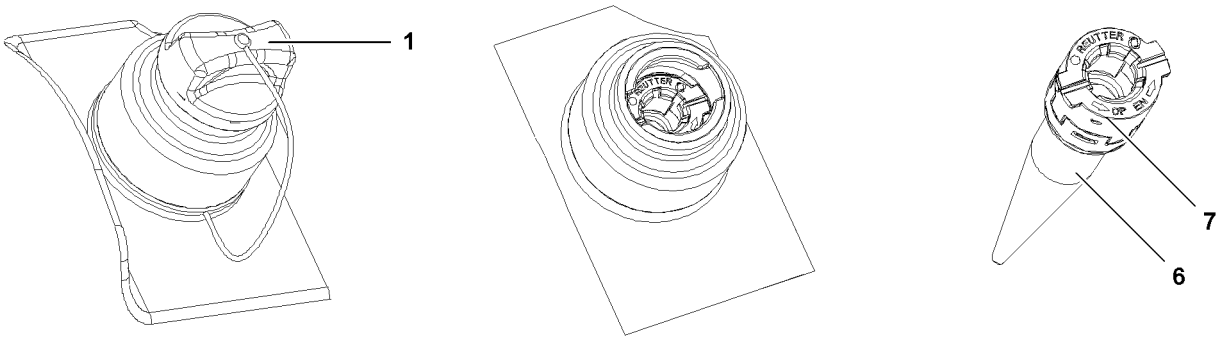

Fig.124112: Urea tank filter strainer

► Make sure that the version of the filter unit **7** corresponds to the illustration.
► Remove the cover **1** of the urea tank.
► Remove the filter unit **7**.
► Clean the filter strainer **6** with water.

When the filter strainer **6** is damaged:
► Replace the filter strainer **6**.
► Close the urea tank with the cover **1**.

7 Exhaust system*

The equipment with the diesel particle filter depends on the emissions level of the diesel engine.

LWE/LTR 1100-009/25105-02-02/en

copyright © Liebherr-Werk Ehingen GmbH 2023

WARNING
Hot components!
Severe burns possible.
- ► Before parts that could be hot can be touched: Let the exhaust system cool off to below 50 °C.
- ► Wear heat-resistant protective equipment: Protective gloves and work attire.

7.1 Checking the exhaust system for leaks and damage

► Check the exhaust gas aftertreatment component group for tightness and damage, see the separate operating instructions from the engine manufacturer.

7.2 Checking the profile clamps

► Check the profile clamps, see the separate operating instructions from the engine manufacturer.

7.3 Replace the diesel particle filter*

7.3.1 Ordering the filter module

Make sure that the following prerequisite is met:
– The diesel particle filter must be replaced.

The filter modules will be replaced (AT). Prior to removal and installation, an AT filter module must be ordered.

Registered customers can order the AT filter module at www.myliebherr.com.

► Order the AT filter module, see the separate operating instructions from the engine manufacturer.

7.3.2 Removing the filter module

Make sure that the following prerequisites are met:
– The diesel engine is turned off.
– The ignition key is pulled out.
– The battery master switch is turned off.
– The diesel engine, cooling system and exhaust system have cooled off for at least 30 minutes.
– A new AT filter module is available.

LWE/LTR 1100-009/25105-02-02/en

copyright © Liebherr-Werk Ehingen GmbH 2023

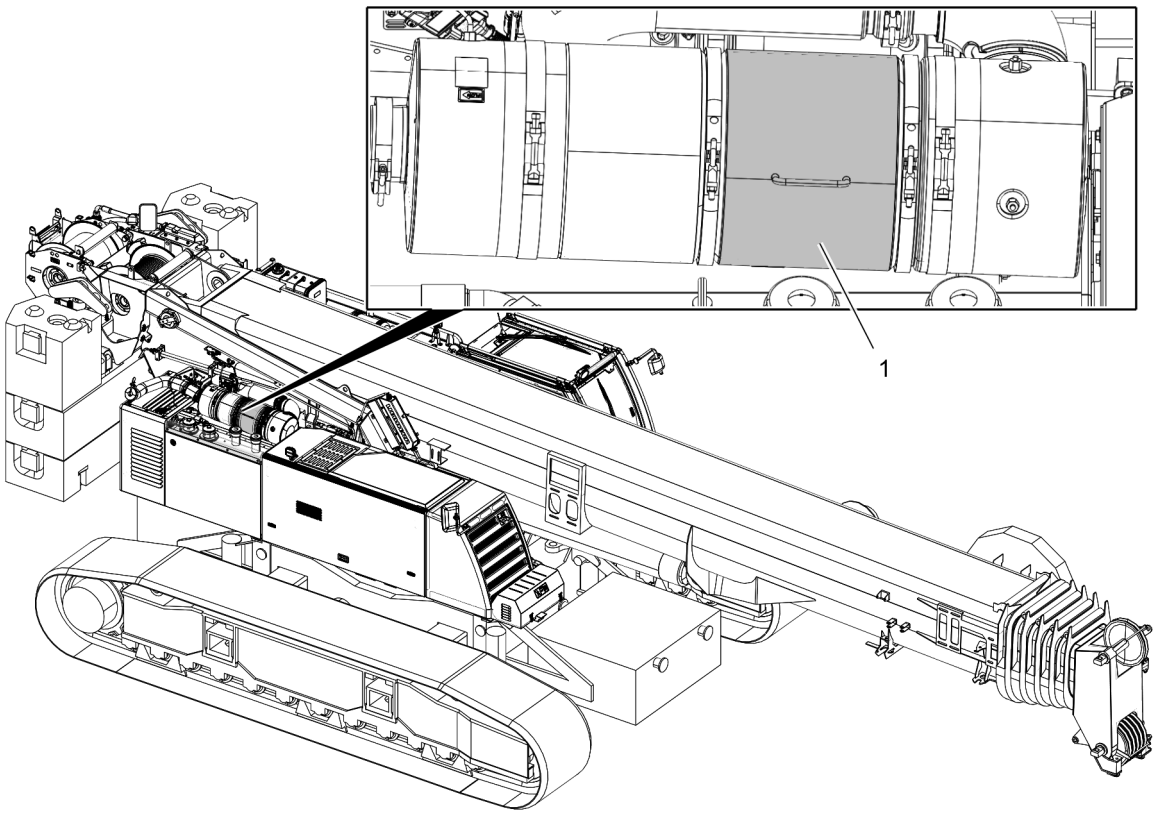

Fig.166282: Diesel particle filter

1 Diesel particle filter

Climb up onto the crane chassis, see chapter 2.06.

► Remove the filter module from the diesel particle filter **1**, see the separate operating instructions from the engine manufacturer.

7.3.3 Packing the filter module for transport

Make sure that the following prerequisites are met:
- The dirty filter module has been removed.
- The dirty filter module is **not** damaged.

► Pack the filter module for transport, see the separate operating instructions from the engine manufacturer.
► Send the filter module to an authorized Liebherr service location for cleaning.

7.3.4 Installing the AT filter module

Make sure that the following prerequisites are met:
- The diesel engine is turned off.
- The ignition key is pulled out.
- The battery master switch is turned off.
- The diesel engine, cooling system and exhaust system have cooled off for at least 30 min.
- The dirty filter module has been removed.
- An AT filter module is available.

LWE/LTR 1100-009/25105-02-02/en

copyright © Liebherr-Werk Ehingen GmbH 2023

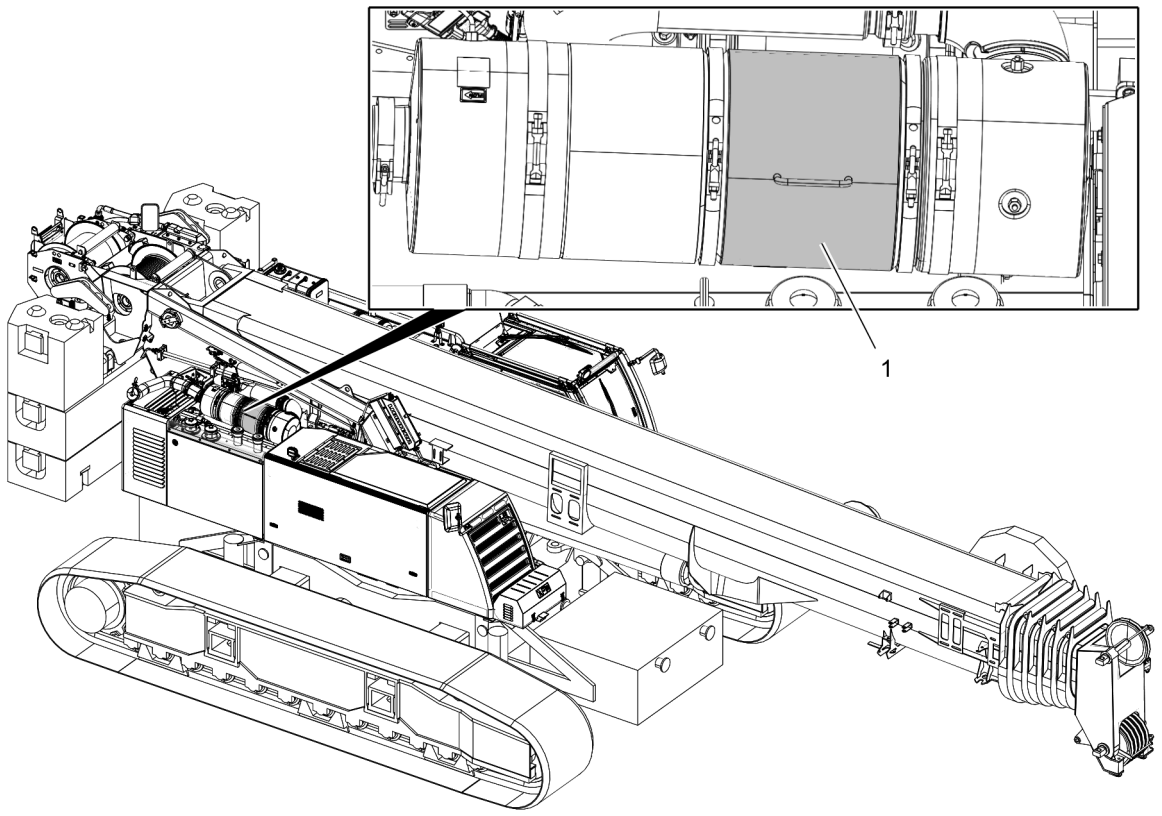

Fig.166282: Diesel particle filter

1 Diesel particle filter

Climb up onto the crane chassis, see chapter 2.06.

► Install the HP filter module for the diesel particle filter **1**, see the separate operating instructions from the engine manufacturer.

7.3.5 Resetting the maintenance interval for the diesel particle filter

Make sure that the following prerequisite is met:
– The AT filter module is installed.

► Turn on the battery master switch.
► Turn the ignition on.
► Reset the maintenance interval for the diesel particle filter, see chapter 7.01.10.

8 Air filter system

8.1 Replacing the air filter

Make sure that the following prerequisites are met:
– The diesel engine is turned off.
– The ignition key is pulled out.
– The battery master switch is turned off.
– A new air filter is available.
– The engine flap is open.

The air filter and the air duct are monitored by the LICCON computer system.

Call up the monitoring functions and *air filter* individual control display, see chapter 4.02.

LWE/LTR 1100-009/25105-02-02/en

copyright © Liebherr-Werk Ehingen GmbH 2023

Condition	Icon	Icon color	Meaning
1		Green	The air filter system is OK.
2		Yellow	The air filter is dirty or the air supply is blocked.

Air filter conditions

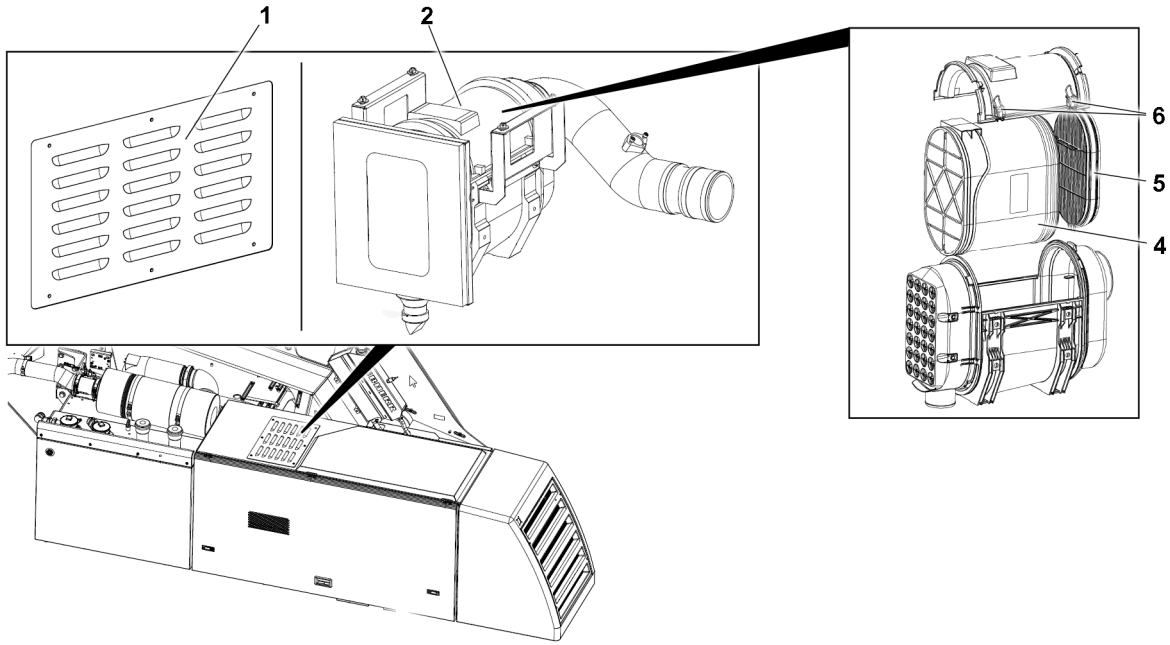

Fig.154099: Air filter elements

1 Safety panel
2 Cover
4 Dry air filter main element
5 Dry air filter safety element
6 Locks

When the *air filter* icon **3** is yellow:
- ► Remove the safety panel **1**.
- ► Open the locks **6** and remove the cover **2**.
- ► Remove the dry air filter main element **4**.

When both filter elements are replaced:
- ► Replace the dry air filter safety element **5**.
- ► Replace the dry air filter main element **4**.
- ► Position the cover **2** and close the locks **6**.

LWE/LTR 1100-009/25105-02-02/en

copyright © Liebherr-Werk Ehingen GmbH 2023

9 Compressed air system*

9.1 Replacing the granular cartridge of the air dryer

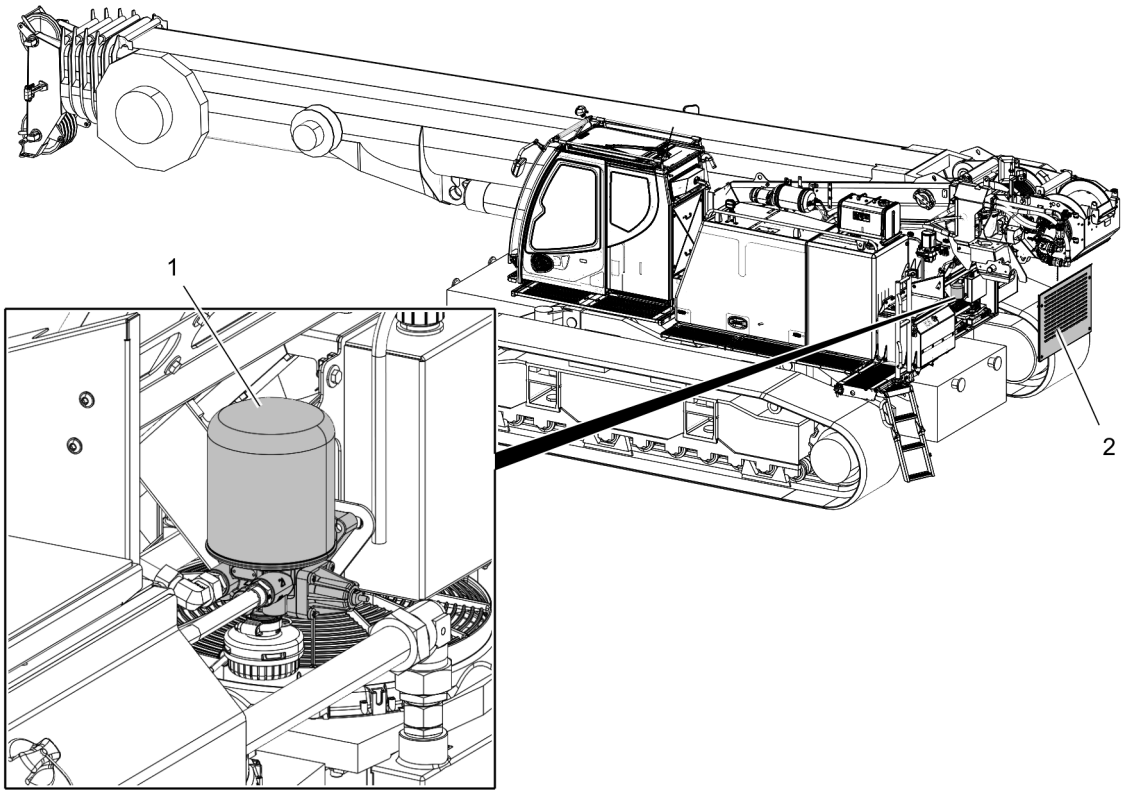

Fig.166283

NOTICE
Maintenance interval exceeded!
The drying and filtering power of the granular cartridge is reduced. Condensation and dirt in the compressed air system. Erroneous function of compressed air system and exhaust aftertreatment.
► Replace the granular cartridge **1** according to the intervals.

The granular cartridge **1** of the air dryer is under spring tension.

WARNING
Uncontrolled release of the granular cartridge!
Severe injury, property damage.
► Replace the granular cartridge carefully and professionally.

► Replace the granular cartridge according to the intervals.

LWE/LTR 1100-009/25105-02-02/en

copyright © Liebherr-Werk Ehingen GmbH 2023

10 Hydraulic system

10.1 Adding hydraulic oil

WARNING
Impermissible conditions for the hydraulic oil!
Danger of fire. Death, severe bodily injuries, property damage.
► Turn the heating systems off, for example the auxiliary heater or the flame start system.

When hydraulic oil is added:
► Exclude heat, sparks, flames and sources of ignition.
► Avoid high temperatures and direct sunlight.

WARNING
Spilled hydraulic oil!
Danger of slipping
► Danger of slipping, pay attention.
► Use personal protective equipment depending on the operating materials.
► Immediately collect spilled hydraulic oil using suitable material. See the safety data sheet from the manufacturer of the operating fluid.

Make sure that the following prerequisites are met:
– The crane is horizontally aligned.
– The diesel engine is turned off.
– The ignition key is pulled out.
– The battery master switch is turned off.
– The heating systems are turned off, for example the auxiliary heater, flame start system.
– The required quantity of hydraulic oil is available, see the service fill.

NOTICE
Impermissible hydraulic oil!
Severe damage to the hydraulic system.
► Make sure that the requirements for the hydraulic oil are fulfilled, see the service fill.
► Do **not** mix hydraulic oils.

NOTICE
Dirt in the hydraulic system!
Damage to components. Increased wear and shorter service life of the components.
► Maintain extreme cleanliness during all work.
► Make sure that dirt does not get inside the hydraulic system.

WARNING
Tripping, falling from the working height!
► Ensure a 3-point support.
► Use personal protective equipment to prevent falling.

WARNING
Climb on the ladder with the fuel nozzle!
Danger of falling. Death, severe bodily injuries.
► Secure the fuel nozzle to prevent it from falling.
► Place both hands on the ladder to climb up.

Access to the fuel container: Access and climb up onto the crane superstructure, see chapter 2.07.

► Follow the notes and instructions, see chapter 2.04.10 and chapter 2.06.

LWE/LTR 1100-009/25105-02-02/en

copyright © Liebherr-Werk Ehingen GmbH 2023

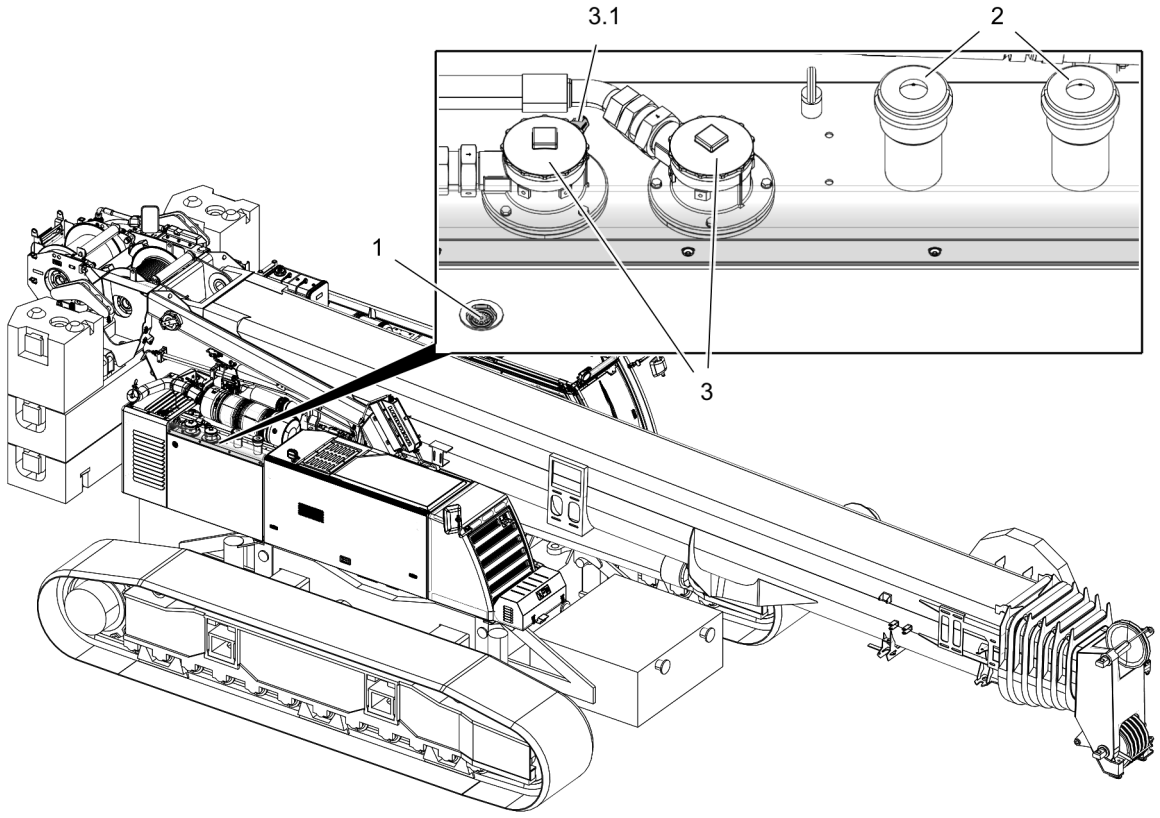

Fig.166278: Hydraulic oil tank, hydraulic oil filter

1 Sight gauge
2 Cover (vent filter)
3 Cover (return filter)
3.1 Fouling indicator (return filter)

► Remove the cover **2**.
► Use the fuel nozzle such that **no** hydraulic oil is spilled.
► Insert the fuel nozzle as deep as possible into the filler port.

The oil level must be in the center of the sight gauge **1**.

► Add fuel while checking the oil level on the sight gauge **1** of the hydraulic tank.
► Until the required oil level is reached: Add hydraulic oil.

When the refueling procedure is complete:
► Remove the fuel nozzle and secure it from falling down.

WARNING
Hydraulic oil tank **not** tightly closed!
Danger of fire: Escaping hydraulic oil.
Environmental risk
► Make sure that the hydraulic oil tank is tightly closed.

► Tighten the cover **2** completely.

Problem remedy
Was impermissible hydraulic oil added?
► Do **not** turn the ignition on.
► Have the hydraulic tank and hydraulic lines completely drained by authorized and trained service personnel.

LWE/LTR 1100-009/25105-02-02/en

copyright © Liebherr-Werk Ehingen GmbH 2023

10.2 Checking the oil level on the LICCON monitor

WARNING
Considerable hydraulic oil loss!

Uncontrolled load movements. Death, severe bodily injury.
► In the case of considerable hydraulic oil loss, contact Customer Service at Liebherr-Werk Ehingen

WARNING
Impermissible hydraulic oil level!
Malfunctioning of crane movements.
► Remedy the problem and observe the error message.
► Establish a permissible oil level.

Make sure that the following prerequisites are met:
– The crane is horizontally aligned.
– The diesel engine is turned off.
– The ignition is turned on.
– All hydraulic cylinders are fully retracted.

► Make sure that the hydraulic oil reaches a temperature of 20 °C.

When the hydraulic temperature is lower than 20 °C:
► Warm up the hydraulic oil.
or

When the auxiliary equipment is available for ambient temperatures of less than -20 °C:
Warm up the hydraulic oil, see chapter 4.03.

When the hydraulic temperature is higher than 20 °C:
► Let the hydraulic oil cool off.

The hydraulic oil level is monitored by the LICCON computer system.

Call up the monitoring functions and the *hydraulic oil level* individual control display, see chapter 4.02.

Hydraulic oil level display, see the following chart.

Condition	Filling level	Icon color	Meaning
1	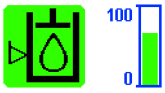	Green	The oil level is OK.
2		Yellow	The oil level is too low.
3	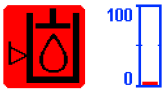	Red	The oil level is too low.
4	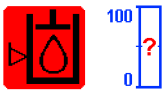	Red	System error.

Hydraulic oil level conditions

► Check the hydraulic oil level.

LWE/LTR 1100-009/25105-02-02/en

copyright © Liebherr-Werk Ehingen GmbH 2023

Problem remedy
Is the hydraulic oil level too low?
Hydraulic oil loss.
► Find the cause of the problem and remedy it.
► Establish a permissible hydraulic oil level, see section „Adding hydraulic oil“.

If the cause cannot be remedied or if there is again excessive loss of oil:
► Contact Customer Service at Liebherr-Werk Ehingen GmbH.

Problem remedy
Is a system error displayed?
Unknown problem.
► Find the cause of the problem and remedy it.

If the cause cannot be remedied:
► Contact Customer Service at Liebherr-Werk Ehingen GmbH.

10.3 Checking the breather / vent filter

Make sure that the following prerequisites are met:
– The crane is horizontally aligned.
– The diesel engine is turned off.
– The ignition key is pulled out.
– The battery master switch is turned off.
– New breather / vent filters are available.

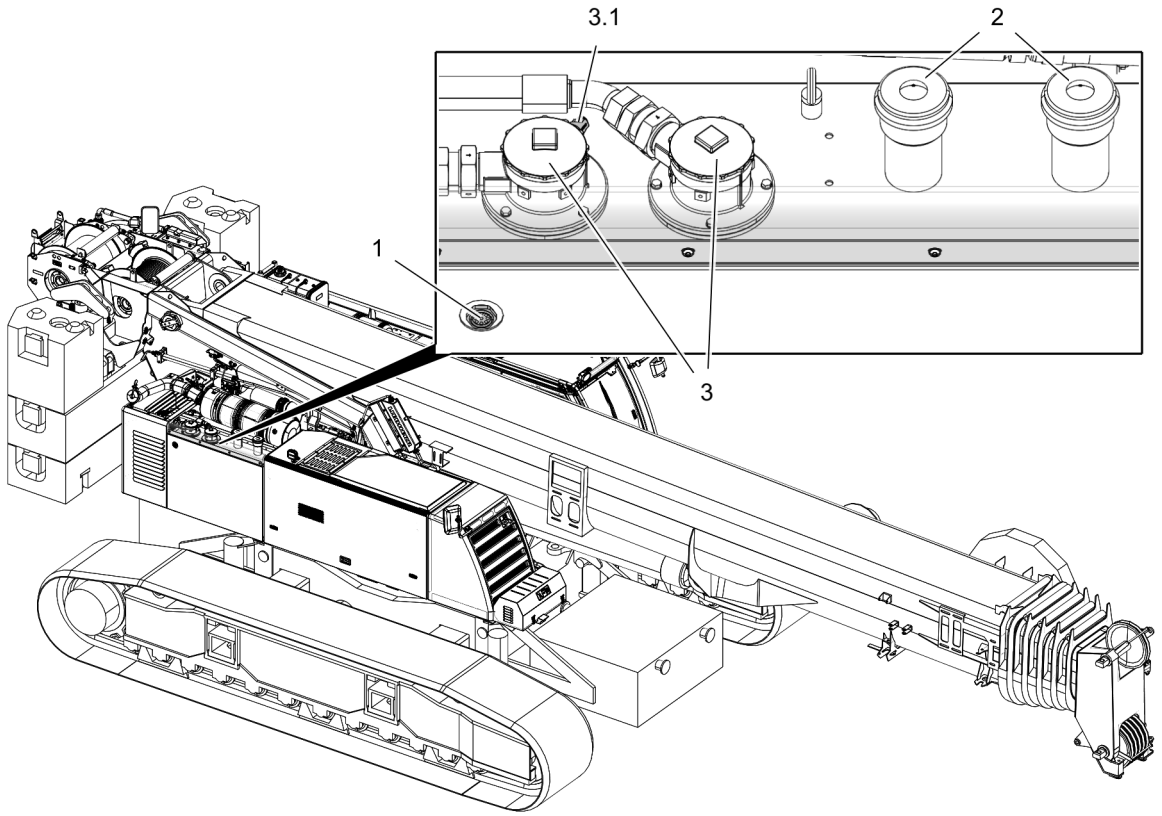

Fig.166278: Hydraulic oil tank, hydraulic oil filter

1 Sight gauge
2 Cover (vent filter)
3 Cover (return filter)
3.1 Fouling indicator (return filter)

LWE/LTR 1100-009/25105-02-02/en

copyright © Liebherr-Werk Ehingen GmbH 2023

WARNING
Tripping, falling from the working height!
► Ensure a 3-point support.
► Use personal protective equipment to prevent falling.

Access to the fuel container: Access and climb up onto the crane superstructure, see chapter 2.07.

► Follow the notes and instructions, see chapter 2.04.10 and chapter 2.06.
► Screw off the cover **2** from the breather / vent filter.
► Check the vent filter for impurities (visual inspection).

When the vent filter is very dirty:
► Replace the vent filter.
► Position the cover **2** and tighten.
► Start the diesel engine.
► Slowly run through all crane movements.

Result:

– The hydraulic system is bled.

► Check the breather / vent filter for leaks.
► Check the oil level and add hydraulic oil if necessary.

10.4 Replacing the return filter

The return filter inserts must be replaced in the following situations:
– If the red bar is visible when the hydraulic oil is at the operating temperature:
– When maintenance is due.

Make sure that the following prerequisites are met:
– The crane is horizontally aligned.
– The diesel engine is turned off.
– The ignition key is pulled out.
– The battery master switch is turned off.
– New return filter inserts are available.

LWE/LTR 1100-009/25105-02-02/en

copyright © Liebherr-Werk Ehingen GmbH 2023

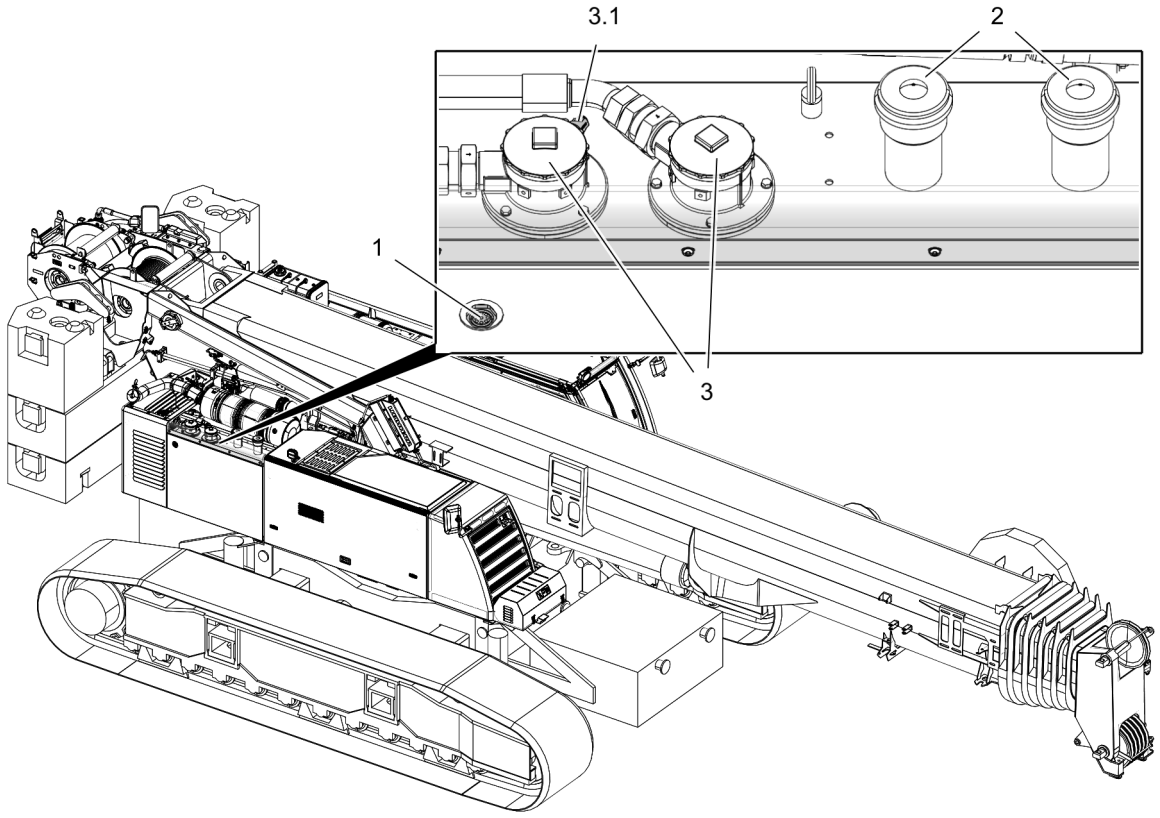

Fig.166278: Hydraulic oil tank, hydraulic oil filter

1 Sight gauge
2 Cover (vent filter)
3 Cover (return filter)
3.1 Fouling indicator (return filter)

WARNING
Tripping, falling from the working height!
► Ensure a 3-point support.
► Use personal protective equipment to prevent falling.

Access to the fuel container: Access and climb up onto the crane superstructure, see chapter 2.07.

► Follow the notes and instructions, see chapter 2.04.10 and chapter 2.06.
► Screw off the cover **3** from the return filter.
► Unscrew the filter inserts.
► Rinse out the filter housings.
► Clean the sealing surfaces on the cover and filter housings.
► Insert new filter units.
► On the covers: Oil the seal rings.
► Position both covers **3** and tighten.
► Start the diesel engine.
► Slowly run through all crane movements.

Result:

– The hydraulic system is bled.

► Check the return filter for leaks.
► Check the oil level and add hydraulic oil if necessary.

LWE/LTR 1100-009/25105-02-02/en

copyright © Liebherr-Werk Ehingen GmbH 2023

10.5 Replacing the pressure filter element

The pressure filter elements must be replaced in the following situations:
- When the red bar display of the fouling indicator is visible when the hydraulic oil is at operating temperature.
- When maintenance is due.

Make sure that the following prerequisites are met:
- The crane is horizontally aligned.
- The diesel engine is turned off.
- The ignition key is pulled out.
- The battery master switch is turned off.
- New pressure filter elements are available.
- A container for the oil with sufficient collection capacity is available.

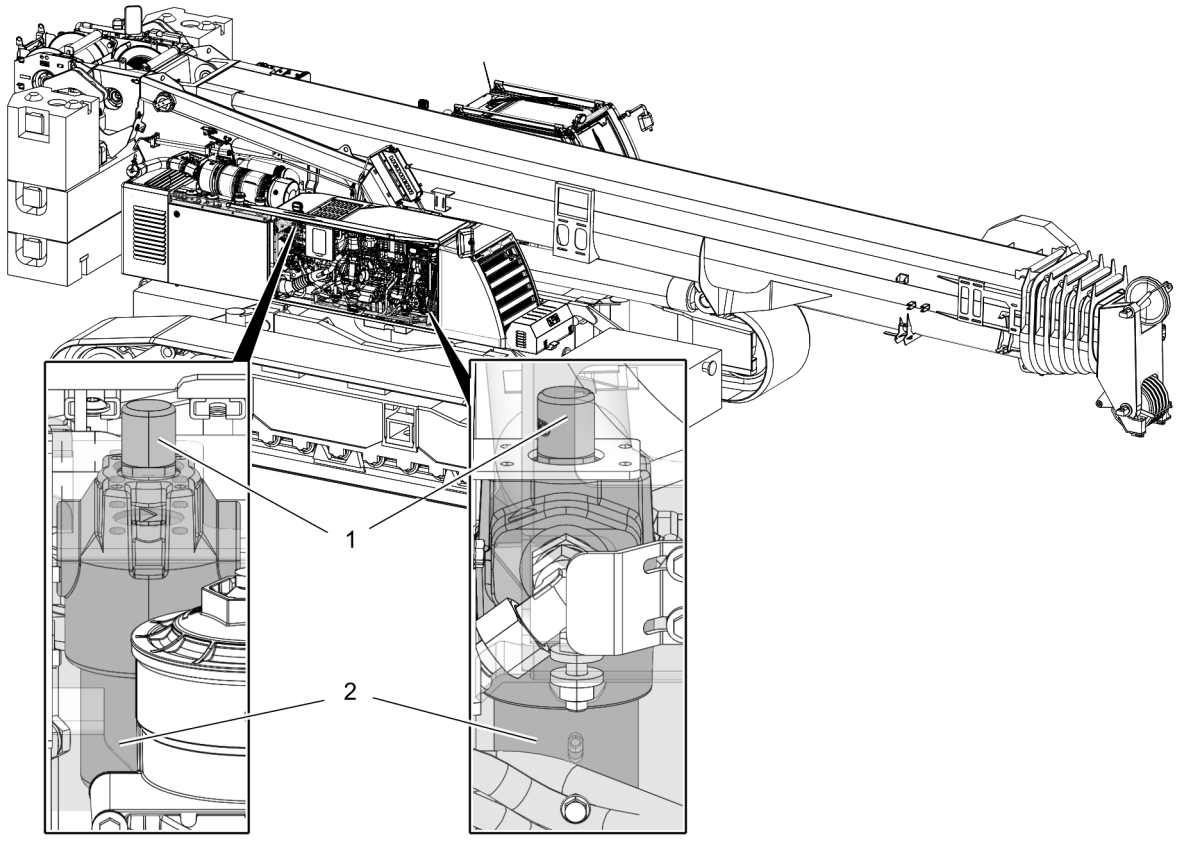

Fig.166279: Replacing the pressure filter element

1 Fouling indicator **2** Pressure filter

WARNING
Hot components!
Severe burns possible.
- ► Before parts that could be hot can be touched: Let components cool off to below 50 °C.
- ► Wear heat-resistant protective equipment: Protective gloves and work attire.

Climb up onto the crane chassis, see chapter 2.06.

- ► Catch the hydraulic oil: Position a container below the pressure filter elements.
- ► Release the pressure filter element **2**.
- ► Remove and dispose of the pressure filter element **2**.
- ► Clean the sealing surface on the filter bracket.
- ► Oil the seal ring on the new pressure filter element **2**.
- ► Screw on the new pressure filter element **2** and tighten.
- ► Start the diesel engine.

LWE/LTR 1100-009/25105-02-02/en

copyright © Liebherr-Werk Ehingen GmbH 2023

► Slowly run through all crane movements.

Result:

– The hydraulic system is bled.

► Check the filter element for leaks.
► Check the oil level and add hydraulic oil if necessary.

10.6 Checking the pretension pressure of the hydro reservoir

Various hydro reservoirs are installed in the hydraulic system.

The pretension pressures are specified in the hydraulic circuit diagram as well as on the individual hydro reservoirs.

The pretension pressure must be measured separately in each hydro reservoir.

Significantly fluctuating ambient temperatures occur:
– After transfer to countries with extremely warm or cold temperatures.
– In case of significant temperature differences between summer and winter.

NOTICE
Changes of pressures in diaphragm reservoirs due to significantly fluctuating ambient temperatures!
Damage to the hydraulic system.
► Check the gas accumulator pressures and correct if necessary.

Make sure that the following prerequisites are met:
– The crane is horizontally aligned.
– The diesel engine is turned off: The hydro reservoir is relieved on the fluid side.
– The ignition key is pulled out.
– The battery master switch is turned off.
– Authorized and trained service personnel checks the pretension pressure of the hydro reservoir.

DANGER
Exceedance of the maximum permissible operating pressure!
Danger of explosion. Death, severe bodily injuries, property damage.
► Make sure that the pressure in the nitrogen cylinder is below the maximum permissible operating pressure of the reservoir or the pressure gauge.

When the pressure in the nitrogen cylinder is less than the maximum permissible operating pressure of the accumulator and the pressure gauge:
► Switch the pressure reducing device between the bottle and the filling device.
► Do not fill the hydro reservoir with air or oxygen under **any** circumstances.
► Adhere to the national regulations regarding the inspection of pressurized containers.

► Check the pretension pressure with a testing and filling device and correct, if necessary.

11 Hydraulic hose lines

WARNING
Damaged and leaky hydraulic hose lines!
Fire. Accident. Death, severe bodily injuries, property damage.

If leaky areas are found during the visual inspection:
► Have these leaky areas inspected immediately by authorized and trained service personnel and remedied.

If damage is found during the visual inspection:
► Have the hydraulic hose lines checked by an **expert person for hydraulic hose lines**.

LWE/LTR 1100-009/25105-02-02/en

copyright © Liebherr-Werk Ehingen GmbH 2023

Note
► For the annual inspection of the hydraulic hose lines and for the definition of an **expert person for hydraulic hose lines**, see chapter 8.06.

Hydraulic hose lines must be inspected **once a year** by an **expert person for hydraulic hose lines**.

The system must be visually inspected **before starting to work**.

11.1 Checking the hydraulic hose lines for damage

The hydraulic hose lines must be checked by an **expert person for hydraulic hose lines** when one of the following defects is found:
– Damage on the outer surface, such as chafe marks, cuts and cracks.
– Brittleness due to aging of outer layer (cracks).
– Distortion, such as splitting of hose layers, bubbles, crushed areas, kinks, twists.
– Damage or distortion of hose fixtures or hose fitting (seal is endangered).

► Check the hydraulic hose lines for damage.

If one of the listed defects is found:
► Have the hydraulic hose lines checked by an **expert person for hydraulic hose lines**.
► Document conspicuous findings, decisions and replacements comprehensibly, see chapter 8.06.

11.2 Checking the hydraulic hose lines for leaks

► Check the crane for leaked hydraulic oil.
► Check the ground under the crane for leaks.

When the hydraulic system leaks:
► Have these leaky areas inspected by authorized and trained service personnel and remedied.

If one of the listed defects is found:
► Have the hydraulic hose lines checked by an **expert person for hydraulic hose lines**.
or
Contact Customer Service at Liebherr-Werk Ehingen GmbH.
► Document conspicuous findings, decisions and replacements comprehensibly, see chapter 8.06.

12 Central lubrication system

12.1 Safety

WARNING
Problems in the central lubrication system!
Failure of lubrication. Corrosion. Limitation of crane function.
Personal injury, property damage, environmental risk
► Remedy the problem with the central lubrication system immediately.

NOTICE
Dirt in the lubrication system!
Damage to central lubrication system. Failure of lubrication.
► Maintain extreme cleanliness during all work.
► Make sure that **no** dirt gets inside the lubrication system.

LWE/LTR 1100-009/25105-02-02/en

copyright © Liebherr-Werk Ehingen GmbH 2023

NOTICE
Crane is **not** being moved for longer than three months!
Insufficient lubrication. Property damage.
- ► Check the function of the central lubrication system.
- ► Carry out intermediate lubrication until lubricant emerges on all lube points.
- ► Repeat the respective crane movement several times.
- ► Carry out intermediate lubrications again.

12.2 Superstructure

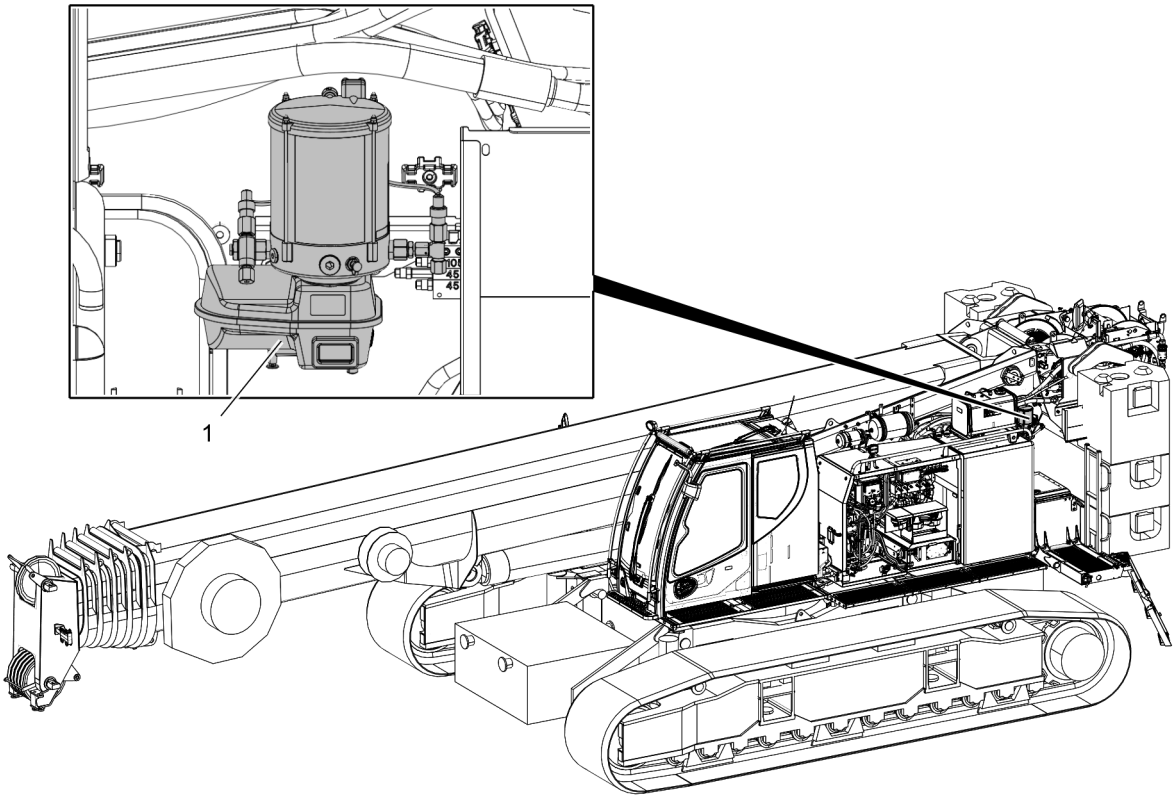

Fig.166288: Position of the central lubrication system on the turntable

1 Central lubrication system

The lube points in the bearings of the following components are supplied with lubricant:
- Boom
- Luffing cylinder
- Slewing ring
- Winch 1
- Winch 2

12.3 Display in the crane cab

Note
- ► Problems with the central lubrication system are displayed on the operating and control unit (BKE) in the crane operator's cab.
- ► Crane operator's cab indicator lights, see chapter 4.01.
- ► Problems with the central lubrication system, see section „Diagnostics and troubleshooting“.

LWE/LTR 1100-009/25105-02-02/en

copyright © Liebherr-Werk Ehingen GmbH 2023

12.4 Operating the central lubrication system

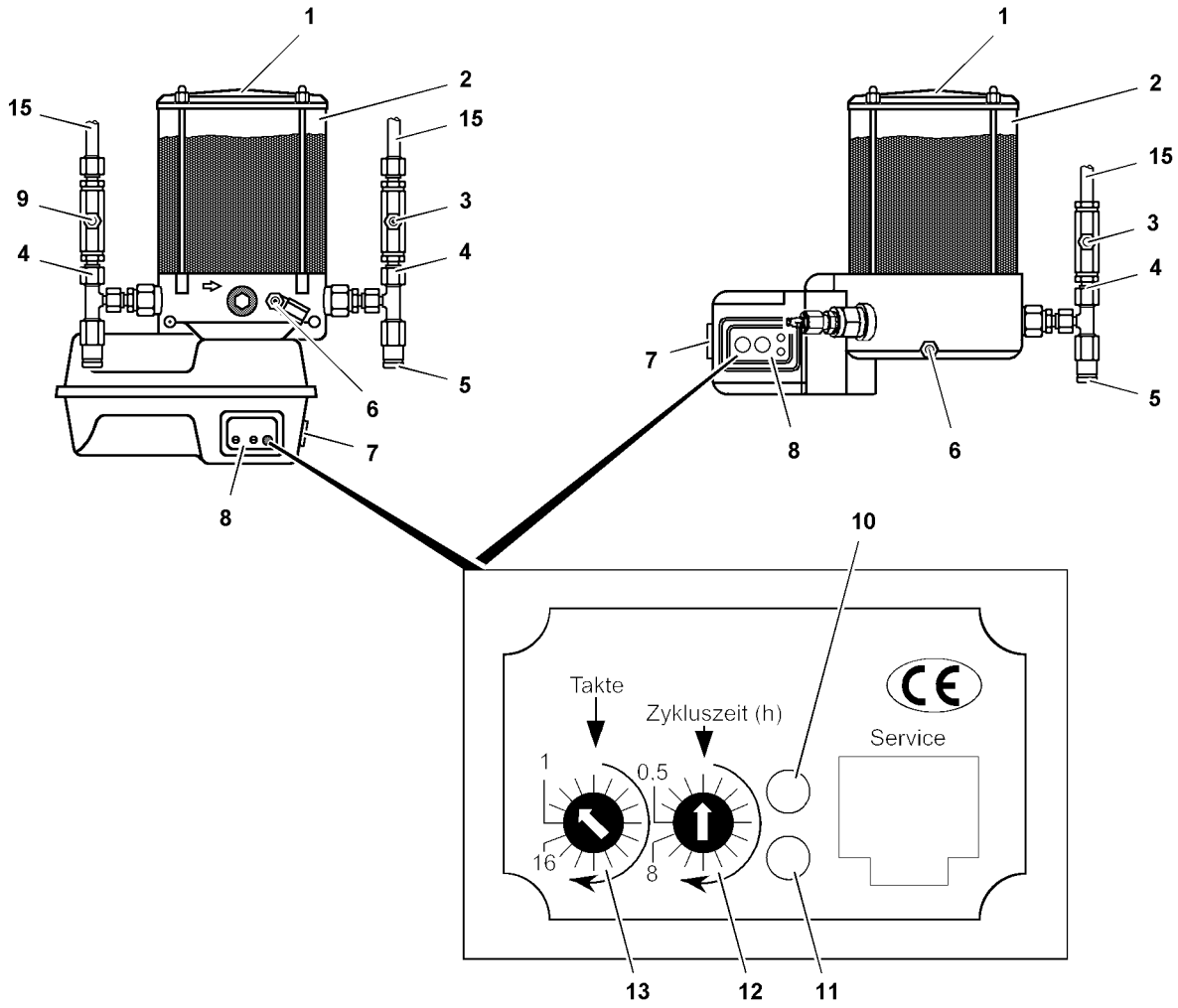

Fig.144842: Variations and elements of the central lubrication system

12.4.1 Display elements on the control element

Note

- ► In the crane operator's cab, operating conditions and problems of the central lubrication system are shown on the indicator light **3**.
- ► Problems, see section „Diagnostics“.
- ► Crane operator's cab indicator lights, see chapter 4.01.

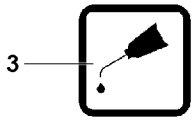

Fig.146332

LWE/LTR 1100-009/25105-02-02/en

copyright © Liebherr-Werk Ehingen GmbH 2023

LED red 11	LED green 10	Operating condition
Lights up for 1.5 seconds	Lights up for 1.5 seconds	Operational readiness after ignition on
Off	Lights up	Lubrication is active (during lube cycles)

*Status of LEDs on control element **8***

12.4.2 Lubrication cycle

Note
The lubrication time and the cycle time are set in the factory!
► Do **not** change the settings.

Cycle time: Time from start of one lubrication to the start of another lubrication.

The cycle time is set with the latched switch **12**.

Lube cycles: Number of strokes, during which lubricant is supplied by the pump cylinder.

The number of lube pulses for a lubrication cycle is set with the latched switch **13**.

12.4.3 Checking the function

Make sure that the following prerequisite is met:
– The ignition is turned on.

Note
► Problems with the central lubrication system, see section „Diagnostics and troubleshooting“.

When lubricant emerges on all lube points, then the central lubrication system functions error-free.

► Check the function: Trigger several lube pulses.
► Carry out intermediate lubrication until lubricant emerges on all lube points.

12.4.4 Activating intermediate lubrication

Manual intermediate lubrication is carried out, for example:
– If the crane has not been moved for longer than three months.
– After washing the crane.

Note
► When a lube pulse is triggered, the pump starts the lubrication cycle again. The lubrication cycle is reset.

Several lube pulses may be required until lubricant emerges in all lube points.

► On the central lubrication system: Press the button **7**.

LWE/LTR 1100-009/25105-02-02/en

copyright © Liebherr-Werk Ehingen GmbH 2023

12.5 Servicing the central lubrication system

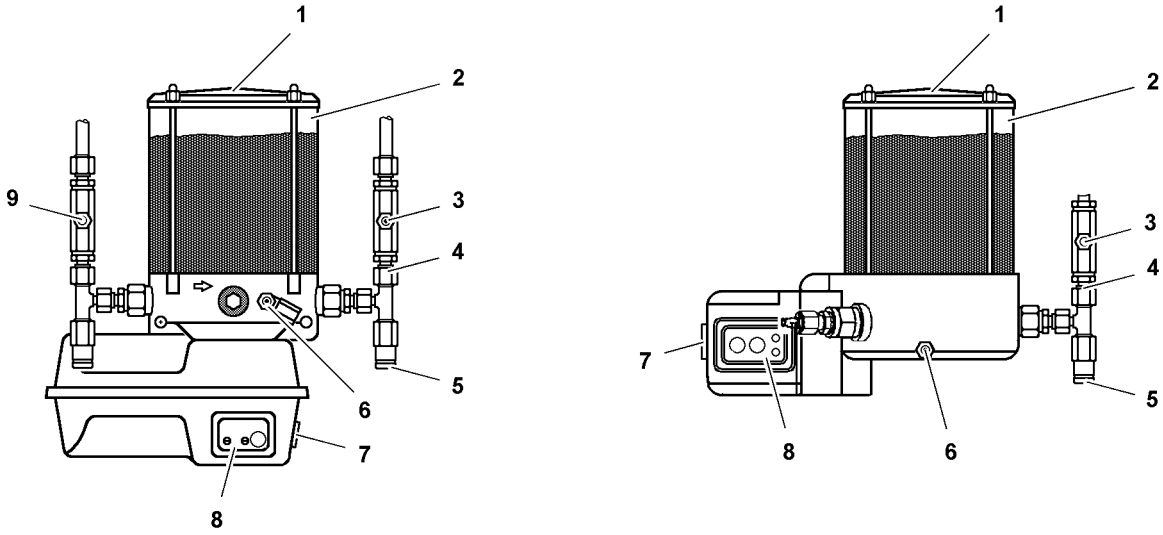

Fig.144843: Types of central lubrication systems with integrated control unit

1	Grease container cover	**4**	Pump outlet	**7**	Intermediate greasing button
2	Grease container	**5**	Pressure relief valve	**8**	Control element
3	Lubrication line grease fitting	**6**	Grease container grease fitting	**9**	Lubrication line grease fitting

Make sure that the following prerequisites are met:
- The diesel engine is turned off.
- The ignition key is pulled out.

12.5.1 Check the fill level in the grease container

The grease container must be filled when the lubricant level has dropped below 1/4 of the container content.

► Check the fill level and fill the grease container if necessary.

12.5.2 Replacing the lubricant

Make sure that the following prerequisites are met:
- The required quantity of lubricant is available, see the service fill.

NOTICE
No lubricant!
Dry run of components. Property damage
► Make sure that the grease container **2** is filled.
► Make sure that all grease fittings are free of contamination.

When the lubricant container is completely empty:
► Bleed, see section „Bleeding the central lubrication system“.
► Fill the lubricant container **2** with a lubricant pump on the grease fitting **6**.

12.5.3 Bleeding the central lubrication system

NOTICE
Insufficient lubrication!
Air in the lubricant pump, lube points running dry.
► Bleed the central lubrication system carefully.

LWE/LTR 1100-009/25105-02-02/en

copyright © Liebherr-Werk Ehingen GmbH 2023

When the lubricant container **2** is completely empty, the central lubrication system must be bled.

Note
► Carry out the bleeding procedure individually for each main line **5**.

► Fill the lubricant container **2** with a lubricant pump via the grease fitting **6**.
► Fill the main lines **5** with an external lubrication pump via the grease fittings **3** until lubricant free of air bubbles emerges in all lube points.
► Unscrew the main line **5** on the pump outlet **4**.
► Trigger intermediate lubrication until there are no more air bubbles in the emerging lubricant at the pump outlet **4**.
► Connect the main line **5**.
► Trigger intermediate lubrication until lubricant emerges in all lube points.

12.5.4 Repair: Filling the lubrication lines

NOTICE
No lubrication!
Dry run of components. Property damage
► After every repair on greased components, fill the lubrication lines with grease.
► Make sure that all grease fittings are free of contamination.

► Fill lube lines with a grease pump on the grease fitting **3** (and grease fitting **9**).
or
Carry out intermediate lubrication until lubricant emerges in all lube points.
► Check repaired lubrication lines for function and leaks.

LWE/LTR 1100-009/25105-02-02/en

copyright © Liebherr-Werk Ehingen GmbH 2023

12.6 Diagnostics and troubleshooting

12.6.1 Problem signals on control element

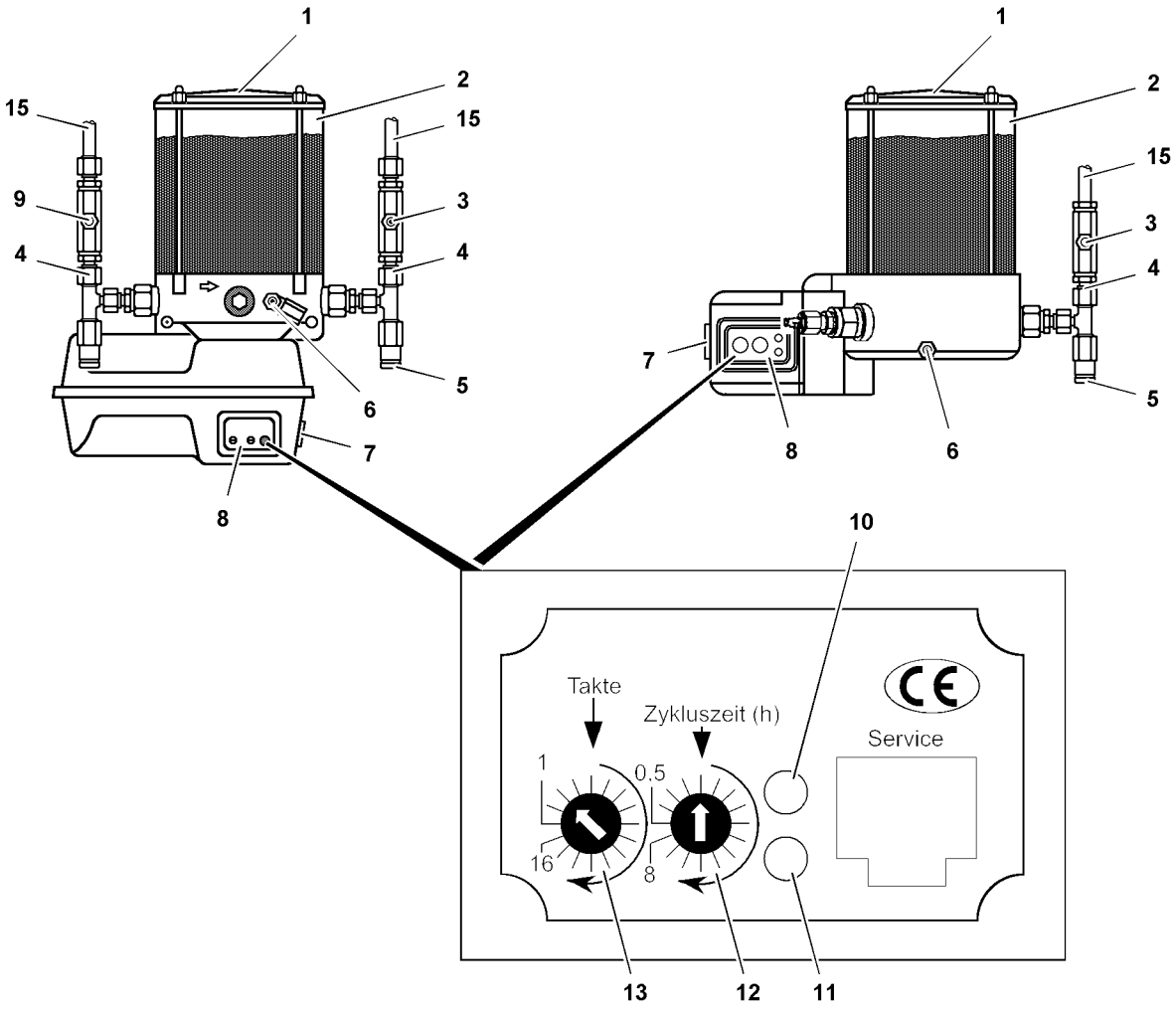

Fig.144842: Elements in the central lubrication system

Note

- ► In the crane operator's cab, operating conditions and problems of the central lubrication system are shown on the indicator light **3**.
- ► Crane operator's cab indicator lights, see chapter 4.01.

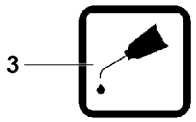

Fig.146332

LWE/LTR 1100-009/25105-02-02/en

copyright © Liebherr-Werk Ehingen GmbH 2023

Status LEDs		Cause	Remedy
LED red 10	**LED green 11**		
Blinks once in two seconds	Blinks once in two seconds	Cycle error	Fix the system; contact Customer Service at Liebherr-Werk Ehingen GmbH.
Blinks once a second	Off	CPU error, memory error	Fix the system; contact Customer Service at Liebherr-Werk Ehingen GmbH.
Lights up	Off	Lubricant level too low (depending on system type)	Fill the lubricant container.

*Diagnostics for problem signals on control element **8***

12.6.2 Problems on central lubrication system

Lubrication system status	Cause	Remedy
The lubrication pump does not work.	Electrical line interrupted, lubrication pump defective	Fix the system **or** contact Customer Service at Liebherr-Werk Ehingen GmbH.
The lubrication pump works but lubricant is not supplied.	Air cushion in delivery piston, minimum fill level fallen below, lubrication pump element defective	Bleed the central lubrication system, fill the lubricant container, fix the system **or** contact Customer Service at Liebherr-Werk Ehingen GmbH.
No lubricant emerges in all lube points	The lubrication pump is defective, the system is blocked or the lubricant container is empty.	See „The lubrication pump does not work“ **or** „Lubricant emerges on the pressure relief valve **5**“.
No lubricant emerges in several lube points or in one lube point	Supply lines to auxiliary distributor broken or leaky, associated lubrication line broken or leaky, screw connections leak	Tighten the screw connections, fix the system **or** contact Customer Service at Liebherr-Werk Ehingen GmbH.
Lubrication pump speed reduced	High system pressure, low ambient temperature	Check system / bearing points, if no damage can be found: Carry out one or two intermediate lubrications.
Lubricant emerges via pressure relief valve **5**	System pressure too high, distributor blocked, system blocked, defective valve spring on pressure relief valve	Check the system, fix the system **or** contact Customer Service at Liebherr-Werk Ehingen GmbH.

Problems and diagnostics on the central lubrication system

12.6.3 Resetting a problem

► Press the button **7**.

Result:

– Problem signal on control element turns off.

When a problem signal occurs again:
► Contact Customer Service at Liebherr-Werk Ehingen GmbH.

LWE/LTR 1100-009/25105-02-02/en

copyright © Liebherr-Werk Ehingen GmbH 2023

13 Travel gear

13.1 Changing the gear oil

WARNING
Impermissible conditions for the gear oil!
Danger of fire. Death, severe bodily injuries, property damage.
► Turn the heating systems off, for example the auxiliary heater or the flame start system.

When the gear oil is filled:
► Exclude heat, sparks, flames and sources of ignition.
► Avoid high temperatures and direct sunlight.

WARNING
Hot components, hot operating materials!
Severe burns, scalding
► Let components cool off to below 50 °C.
► Avoid contact with hands, skin and eyes.
► Wear safety goggles.
► Wear heat-resistant protective equipment: Protective gloves and work attire.

WARNING
Spilled gear oil!
Danger of slipping
► Danger of slipping, pay attention.
► Use personal protective equipment depending on the operating materials.
► Immediately collect spilled gear oil using suitable material. See the safety data sheet from the manufacturer of the operating fluid.

NOTICE
Dirt inside the transmission!
Transmission damage. Increased wear and shorter service life of the components.
► Maintain extreme cleanliness during all work.
► Make sure that **no** dirt gets inside the transmission.

LWE/LTR 1100-009/25105-02-02/en

copyright © Liebherr-Werk Ehingen GmbH 2023

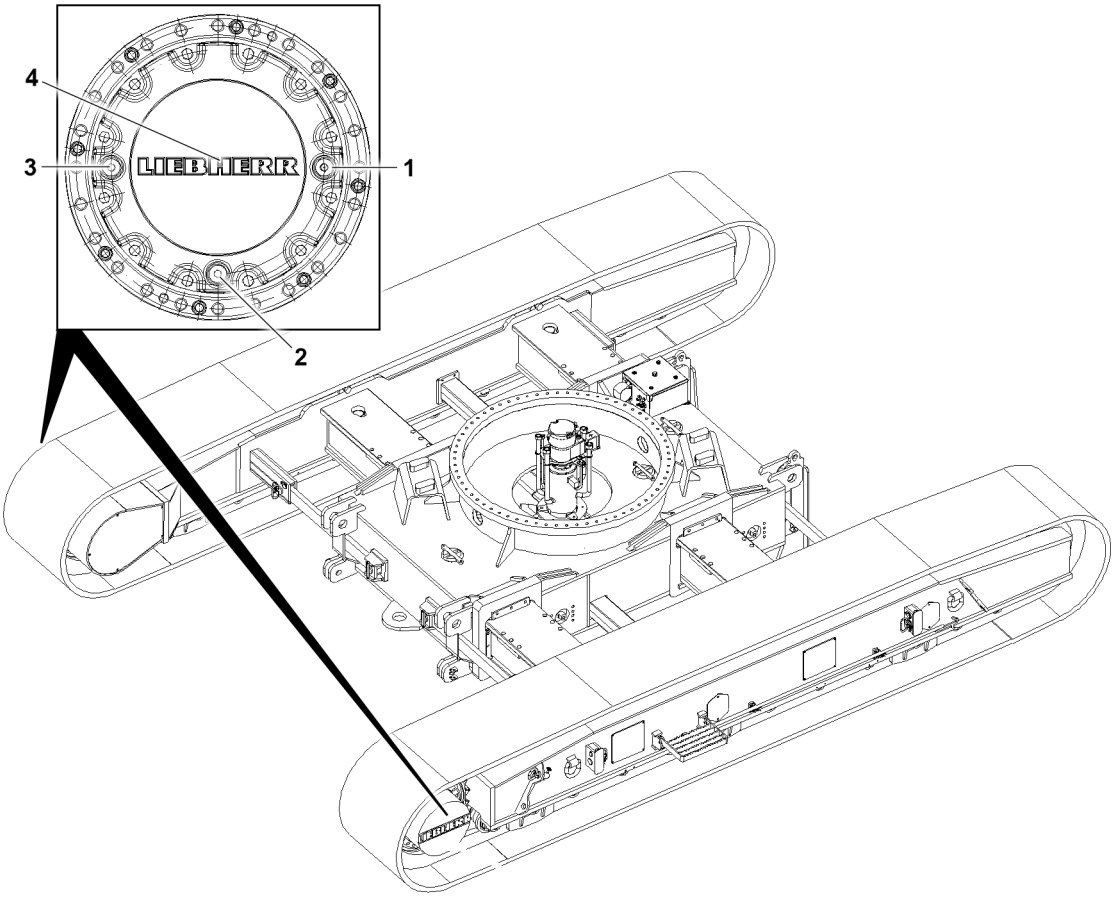

Fig.164814: Travel gear, maintenance ports

1 Control plug, inspection port
2 Drain plug
3 Control plug, inspection port

Make sure that the following prerequisites are met:
- The diesel engine is turned off.
- The ignition key is pulled out.
- The battery master switch is turned off.
- The travel gear has been stopped for at least two minutes: The gear oil has drained back completely.
- The text **4** on the travel gear is horizontal.
- The travel gear is at the operating temperature.
- A suitably sized container for the used gear oil is available.
- The required quantity of gear oil is available, see the service fill.

► Collect the gear oil: Position a container under the drain plug **2**.
► Unscrew the control plug **1** and control plug **3**.
► Drain the gear oil: Unscrew the drain plug **2**.

When the gear oil is completely drained:
► Clean the drain plug **2** and the sealing surface on the housing.
► Screw in the drain plug **2** with a new seal and tighten.
► Until the gear oil starts to overflow in the inspection port **3**: Fill the gear oil in the inspection port **1**.

When the gear oil is completely drained:
► Clean both control plugs **1** and sealing surfaces on the housing.
► Screw in both control plugs **1** with a new seal and tighten.
► Make sure that gear oil is changed in every travel drive.

LWE/LTR 1100-009/25105-02-02/en

copyright © Liebherr-Werk Ehingen GmbH 2023

14 Crawler chain

14.1 Checking the chain tension

The following prerequisites must be met to check the chain tension:
- The crane is horizontally aligned.
- The diesel engine is turned off.
- The ignition key is pulled out.
- The battery master switch is turned off.
- A level rod is available.

WARNING
Crawler chain too loose!
The crawler chain can slip out of the guide from the pulleys, drive wheel and idler.
Increased wear!
► Have the crawler chain tightened immediately by maintenance personnel.

WARNING
Too tightly tensioned crawler chain!
Increased fuel consumption!
Increased wear!
► Have the crawler chain relieved immediately by maintenance personnel.

The chain tension is checked by measuring the sag between the level rod and the crawler chain.

With a length of 1 m to 1.5 m , there must be a sag of 2 cm to 2.5 cm.

When the free length is shorter or larger: Reduce or increase the distance linearly.

The level rod must be placed on at least 4 chain links.

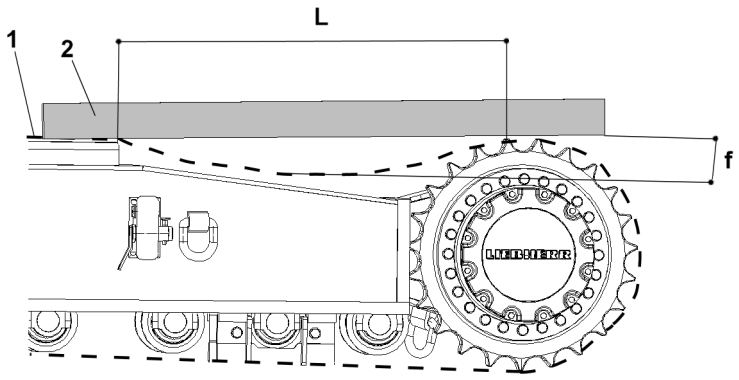

Fig.162773: Checking the chain tension on the top

1	Crawler chain	**f**	Sag
2	Level rod	**L**	Measuring length

► Place the level rod **2** on the crawler chain **1**.
► Measure the maximum sag **f** between the level rod **2** and the crawler chain **1**.

Problem remedy
Is the sag **f** between the level rod **2** and the crawler chain **1** too large?
► Have the crawler chain **1** tightened by maintenance personnel.

Problem remedy
Is the sag **f** between the level rod **2** and the crawler chain **1** too small?
► Have the crawler chain **1** relieved by maintenance personnel.

LWE/LTR 1100-009/25105-02-02/en

copyright © Liebherr-Werk Ehingen GmbH 2023

14.2 Tensioning the crawler chain

WARNING
Crawler chain too loose!
The crawler chain can slip out of the guide from the pulleys, drive wheel and idler.
Increased wear!
► Have the crawler chain tightened immediately by maintenance personnel.

WARNING
Too tightly tensioned crawler chain!
Increased fuel consumption!
Increased wear!
► Have the crawler chain relieved immediately by maintenance personnel.

NOTICE
Foreign matter in crawler chains!

Foreign matter in the crawler chains and on the travel drive can cause damage.
► Before tensioning the crawler chains: Check the crawler chains and the travel drives for foreign particles and clean them if necessary.

Make sure that the following prerequisites are met:
– The crane is in a horizontal position.
– A manual grease gun with pressure gauge is available.

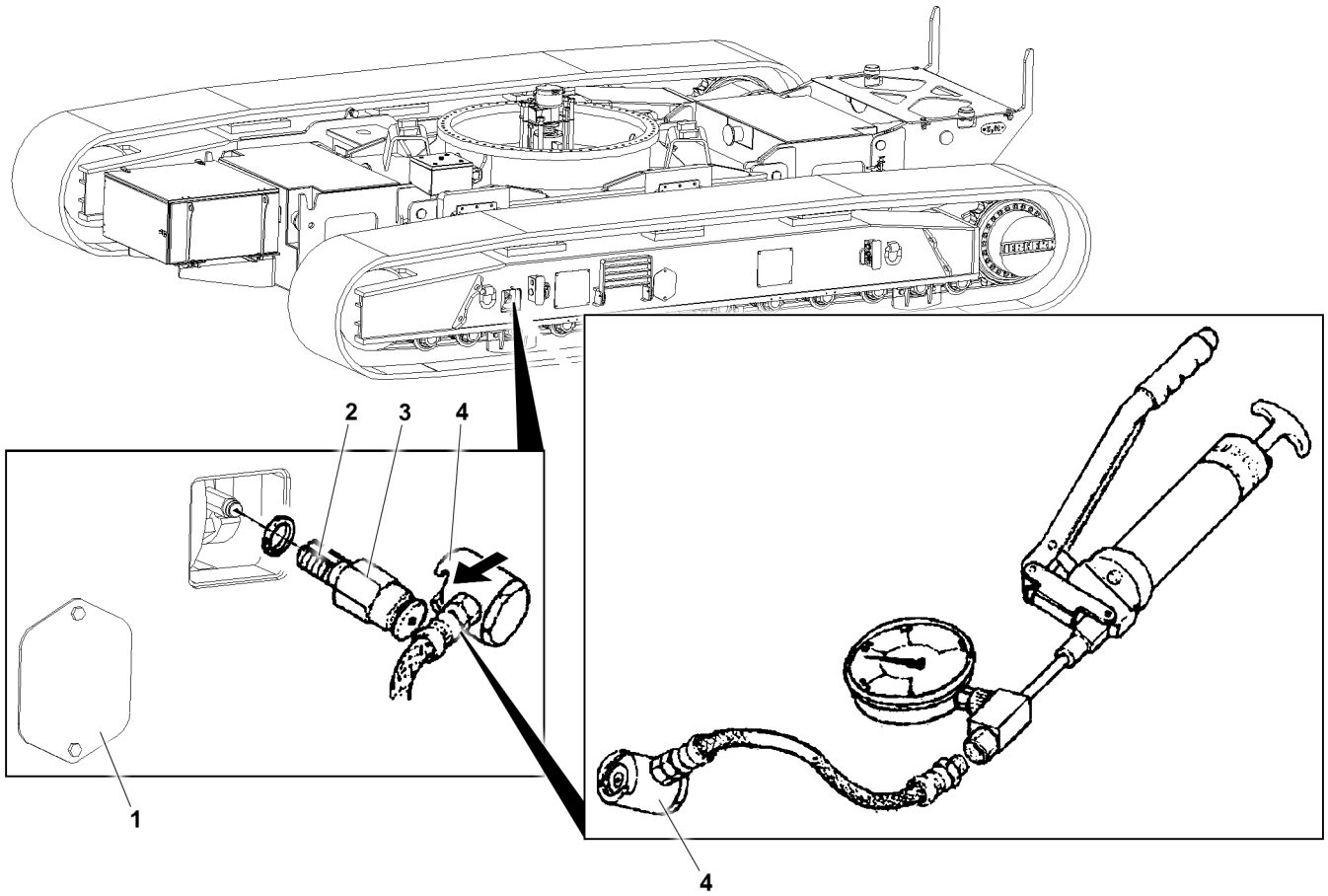

LWE/LTR 1100-009/25105-02-02/en

Fig.164813: Travel gear, maintenance ports

1 Cover
2 Groove
3 Grease fitting
4 Pressure hose

copyright © Liebherr-Werk Ehingen GmbH 2023

- ► Remove the cover **1**.
- ► Push the pressure hose **4** of the manual grease gun to the stop on the grease fitting **3** of the tension cylinder.
- ► Until a pressure of 160 bar to 180 bar is displayed on the pressure gauge: Actuate the manual grease gun.
- ► Remove the pressure hose **4** from the grease fitting **3**.

Problem remedy

The pressure in the pressure hose **4** is too high.

- ► Carefully loosen the pressure hose **4** on the manual grease gun, so that the pressure in the pressure hose **4** is reduced.

- ► Remove the pressure hose **4** from the grease fitting.
- ► Assemble the cover **1**.
- ► Move the crawler chain about one crawler length: Drive the crane straight forward and backward.
- ► Check the chain sag, see section „Checking the chain tension“.

Until the chain sag reaches a permissible value:

- ► Repeat the „Tension the crawler chain“ procedure.

14.3 Relieving the crawler chain

WARNING

Crawler chain too loose!

The crawler chain can slip out of the guide from the pulleys, drive wheel and idler.

Increased wear!

- ► Have the crawler chain tightened immediately by maintenance personnel.

WARNING

Too tightly tensioned crawler chain!

Increased fuel consumption!

Increased wear!

- ► Have the crawler chain relieved immediately by maintenance personnel.

NOTICE

Foreign matter in crawler chains!

Foreign matter in the crawler chains and on the travel drive can cause damage.

- ► Before relieving the crawler chains: Check the crawler chains and the travel drives for foreign particles and clean them if necessary.

LWE/LTR 1100-009/25105-02-02/en

copyright © Liebherr-Werk Ehingen GmbH 2023

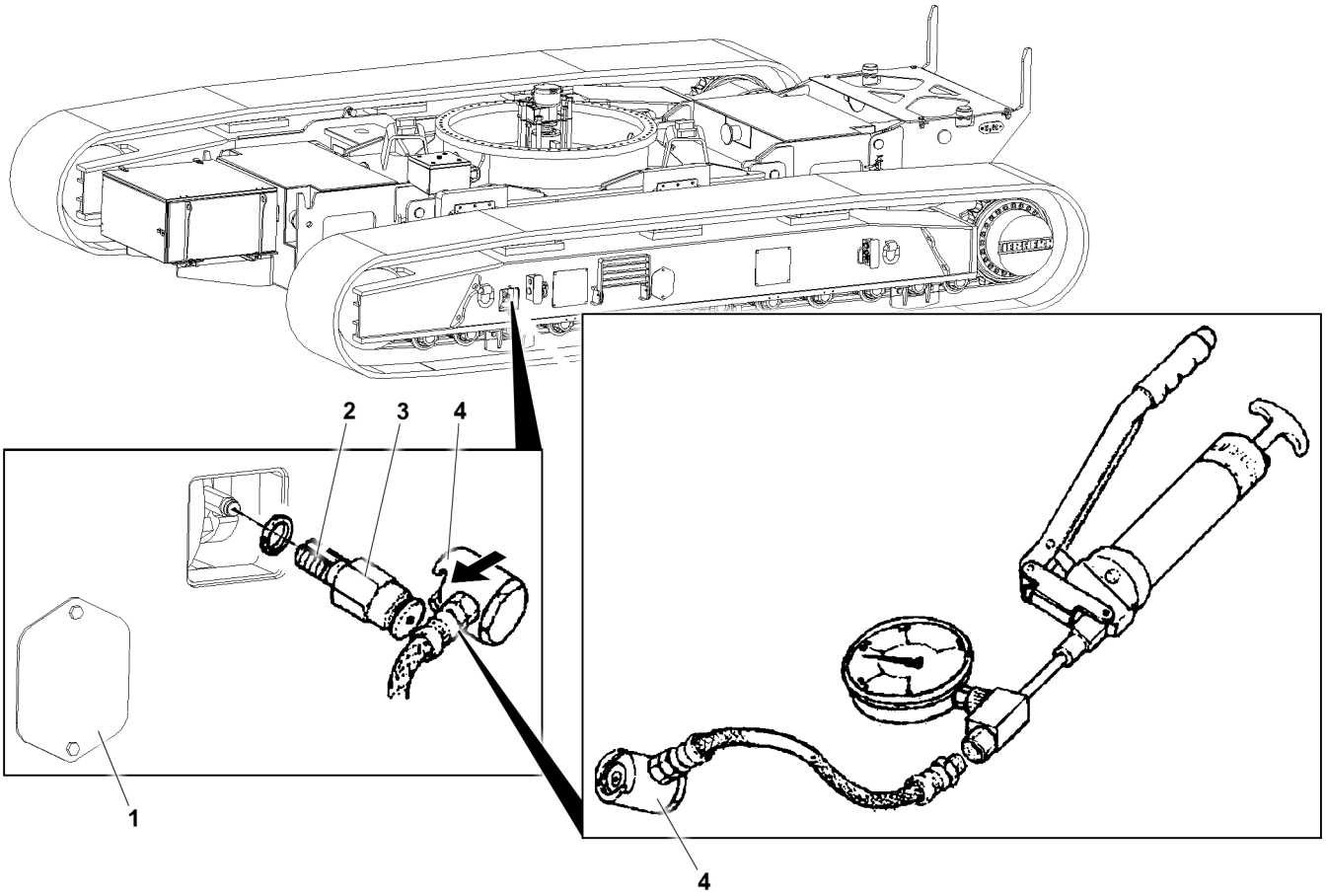

Fig.164813: Travel gear, maintenance ports

1	Cover	**3**	Grease fitting
2	Groove	**4**	Pressure hose

► Screw off the cover **1**.

WARNING
Shooting out of grease!
Bodily injury in the area of the face, especially the eyes.
► Wear safety goggles.
► When releasing the grease fitting, do not look straight into the opening.
► Observe the following steps for the release procedure.

► Loosen the grease fitting **3** with extreme caution.
► Until grease emerges from the groove: Unscrew the grease fitting **3** carefully by 2 or 3 threads.

Result:
– The idler moves back automatically.

If the idler did not move back automatically:
► Put back the idler manually.
► Screw in the grease fitting **3** and tighten.
► Screw on the cover **1**.
► Check the chain sag, see section „Checking the chain tension“.

LWE/LTR 1100-009/25105-02-02/en

copyright © Liebherr-Werk Ehingen GmbH 2023

14.4 Retightening the outrigger pad screws

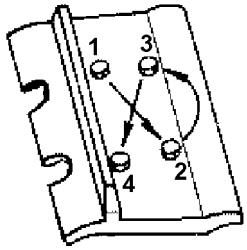

Fig.199143: Travel gear, maintenance ports

1	Cover	**3**	Grease fitting
2	Groove	**4**	Pressure hose

The tightening torque of the screws is approx. 675 Nm.

► Tighten the screws crosswise, see the illustration.

15 Slewing ring connection

15.1 Lubricating the slewing ring connection

WARNING
Impermissible set up configuration when turning the crane superstructure!
The crane can topple over. Death, severe bodily injuries, property damage.
► Enter and activate the load chart for the *360° turning* crane operation in the LICCON overload protection.
► Set up the crane according to the set up configuration for the *360° turning* load chart.

WARNING
Personnel in the slewing range!
Crushing danger, death, severe bodily injuries.
► Monitor the slewing range.
► Make sure that there are **no** persons within the slewing range.
► Before initiating the turning movement, give a warning signal (horn).

WARNING
Obstacle in the slewing range!
Danger of collision, property damage
► Make sure that there is **no** obstacle within the slewing range of the crane and the crane components.

Make sure that the following prerequisites are met:
– The load chart for crane operation *Turning 360°* is entered in the LICCON overload protection and active.
– The crane is equipped according to the set up configuration for a *360° turning* load chart.
– The diesel engine is turned on.

► Manually trigger intermediate lubrication on the central lubrication system.
or
Lubricate with the external lubrication pump.
► Turn the crane superstructure slowly.
► Carry out lubrication until lubricant emerges on the sealing lips.
► Stop the slewing movement of the crane superstructure.

LWE/LTR 1100-009/25105-02-02/en

copyright © Liebherr-Werk Ehingen GmbH 2023

16 Slewing gear

16.1 Safety

WARNING
Impermissible conditions for the gear oil!
Danger of fire. Death, severe bodily injuries, property damage.
► Turn the heating systems off, for example the auxiliary heater or the flame start system.

When the gear oil is filled:
► Exclude heat, sparks, flames and sources of ignition.
► Avoid high temperatures and direct sunlight.

WARNING
Hot components, hot operating materials!
Severe burns, scalding
► Let components cool off to below 50 °C.
► Avoid contact with hands, skin and eyes.
► Wear safety goggles.
► Wear heat-resistant protective equipment: Protective gloves and work attire.

WARNING
Spilled gear oil!
Danger of slipping
► Danger of slipping, pay attention.
► Use personal protective equipment depending on the operating materials.
► Immediately collect spilled gear oil using suitable material. See the safety data sheet from the manufacturer of the operating fluid.

WARNING
Significant oil loss!
Uncontrolled load movements
Death, severe bodily injury, transmission damage
► Contact Customer Service at Liebherr-Werk Ehingen GmbH.

NOTICE
Insufficient oil!
Transmission damage
► Check the oil level and add gear oil if necessary.

NOTICE
Dirt inside the transmission!
Transmission damage. Increased wear and shorter service life of the components.
► Maintain extreme cleanliness during all work.
► Make sure that **no** dirt gets inside the transmission.

LWE/LTR 1100-009/25105-02-02/en

copyright © Liebherr-Werk Ehingen GmbH 2023

16.2 Slewing gear: Changing the gear oil

Make sure that the following prerequisites are met:
- The crane is horizontally aligned.
- The diesel engine is turned off.
- The ignition key is pulled out.
- The battery master switch is turned off.
- The transmission has warmed up.
- A container with sufficient capacity is available.
- The required quantity of gear oil is available, see the service fill.

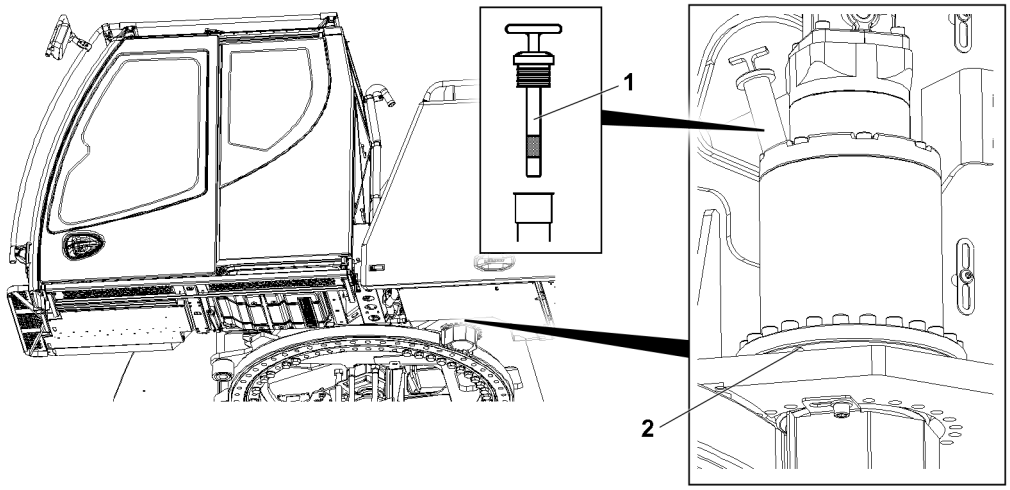

Fig.124879: Slewing gear, changing the gear oil

1 Dipstick **2** Drain plug

NOTICE
Dirt inside the transmission!
Transmission damage. Increased wear and shorter service life of the components.
► Maintain extreme cleanliness during all work.
► Make sure that **no** dirt gets inside the transmission.

► Pull out the dipstick **1**.
► Collect the gear oil: Position a container under the drain plug.
► Drain the gear oil: Unscrew the drain plug **2**.

When the gear oil is drained:
► Clean the drain plug **2** and the sealing surface on the housing.
► Screw in the drain plug **2** with a new seal and tighten.
► Add gear oil in the filler bore until gear oil is visible between the minimum and maximum mark on the dipstick **1**.
► Insert the dipstick **1**.
► Check the oil level.

17 Winch

Winch I is the main hoist gear.

Winch II* is optional.

LWE/LTR 1100-009/25105-02-02/en

copyright © Liebherr-Werk Ehingen GmbH 2023

17.1 Safety

WARNING
Impermissible conditions for the gear oil!
Danger of fire. Death, severe bodily injuries, property damage.
► Turn the heating systems off, for example the auxiliary heater or the flame start system.

When the gear oil is filled:
► Exclude heat, sparks, flames and sources of ignition.
► Avoid high temperatures and direct sunlight.

WARNING
Hot components, hot operating materials!
Severe burns, scalding
► Let components cool off to below 50 °C.
► Avoid contact with hands, skin and eyes.
► Wear safety goggles.
► Wear heat-resistant protective equipment: Protective gloves and work attire.

WARNING
Spilled gear oil!
Danger of slipping
► Danger of slipping, pay attention.
► Use personal protective equipment depending on the operating materials.
► Immediately collect spilled gear oil using suitable material. See the safety data sheet from the manufacturer of the operating fluid.

WARNING
Significant oil loss!
Uncontrolled load movements
Death, severe bodily injury, transmission damage.
► Contact Customer Service at Liebherr-Werk Ehingen GmbH.

NOTICE
Dirt inside the transmission!
Transmission damage. Increased wear and shorter service life of the components.
► Maintain extreme cleanliness during all work.
► Make sure that **no** dirt gets inside the transmission.

17.2 Winch gear

17.3 Winch gear: Changing the gear oil

Make sure that the following prerequisites are met:
– The diesel engine is turned off.
– The ignition key is pulled out.
– The battery master switch is turned off.
– The winch has cooled off for at least 30 min.
– The transmission has warmed up.
– A suitably sized container for the used gear oil is available.
– The required quantity of gear oil is available, see the service fill.

LWE/LTR 1100-009/25105-02-02/en

copyright © Liebherr-Werk Ehingen GmbH 2023

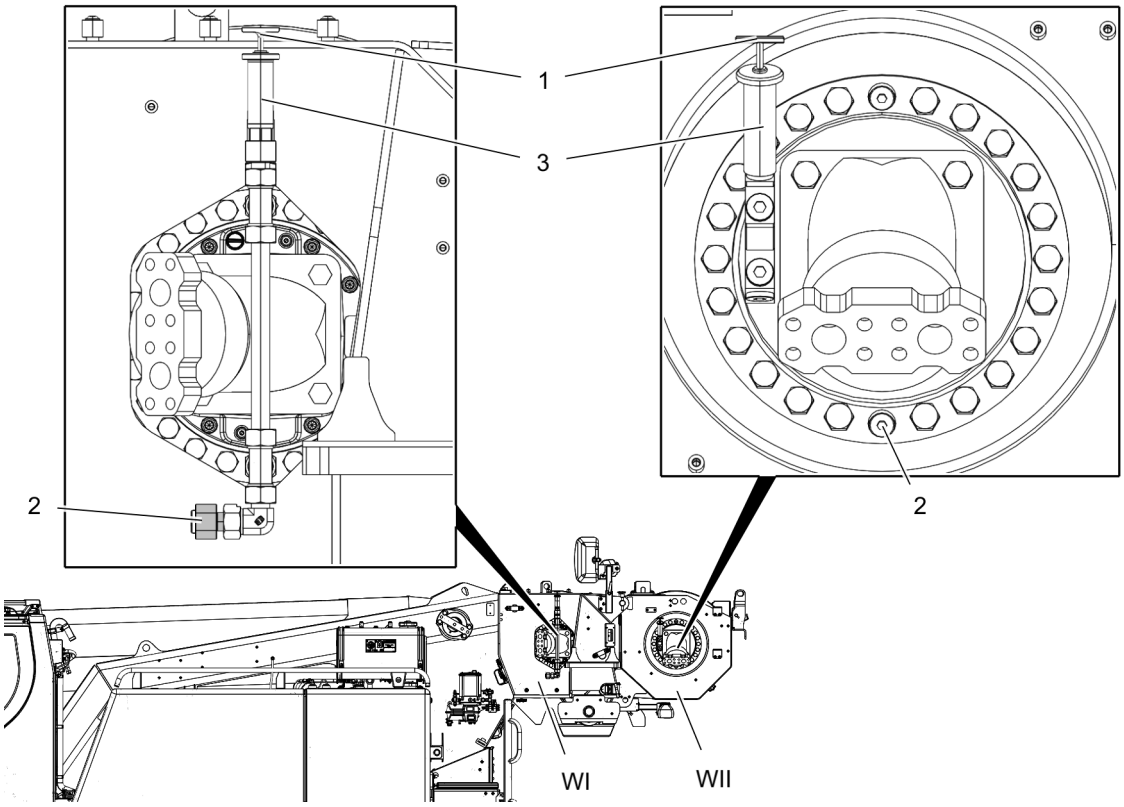

Fig.166284: Winch gear

1 Dipstick
2 Drain plug
3 Filler port

WI Winch 1
WII Winch 2

WARNING
Hot components, hot operating materials!
Severe burns, scalding
- ► Let components cool off to below 50 °C.
- ► Avoid contact with hands, skin and eyes.
- ► Wear safety goggles.
- ► Wear heat-resistant protective equipment: Protective gloves and work attire.

- ► Unscrew the dipstick **1**.
- ► Collect the gear oil: Position a container under the drain plug **2**.
- ► Drain the gear oil: Unscrew the drain plug **2**.

When the gear oil is drained:
- ► Clean the drain plug **2** and the sealing surface on the housing.
- ► Screw in the drain plug **2** with a new seal and tighten.
- ► Until gear oil is visible between the minimum and maximum mark on the dipstick **1**: Fill gear oil in the filler port **3**.
- ► Insert the dipstick **1**.
- ► Make sure that gear oil is changed in every winch.

LWE/LTR 1100-009/25105-02-02/en

copyright © Liebherr-Werk Ehingen GmbH 2023

17.4 Winch brake

17.4.1 Winch brake: Checking the oil level

NOTICE
Insufficient oil!
Property damage to the winch brake.

When the oil level has dropped below the control bore:
► Add gear oil in the filler bore until gear oil runs over in the control bore.

Make sure that the following prerequisites are met:
– Winch 1 is assembled. Optionally, winch 2 is assembled.
– Or: The winches are disassembled and horizontally aligned.
– The crane is horizontally aligned.
– The diesel engine is turned off.
– The ignition key is pulled out.
– The battery master switch is turned off.
– The winch has been stationary for at least 2 min.
– The transmission has warmed up.

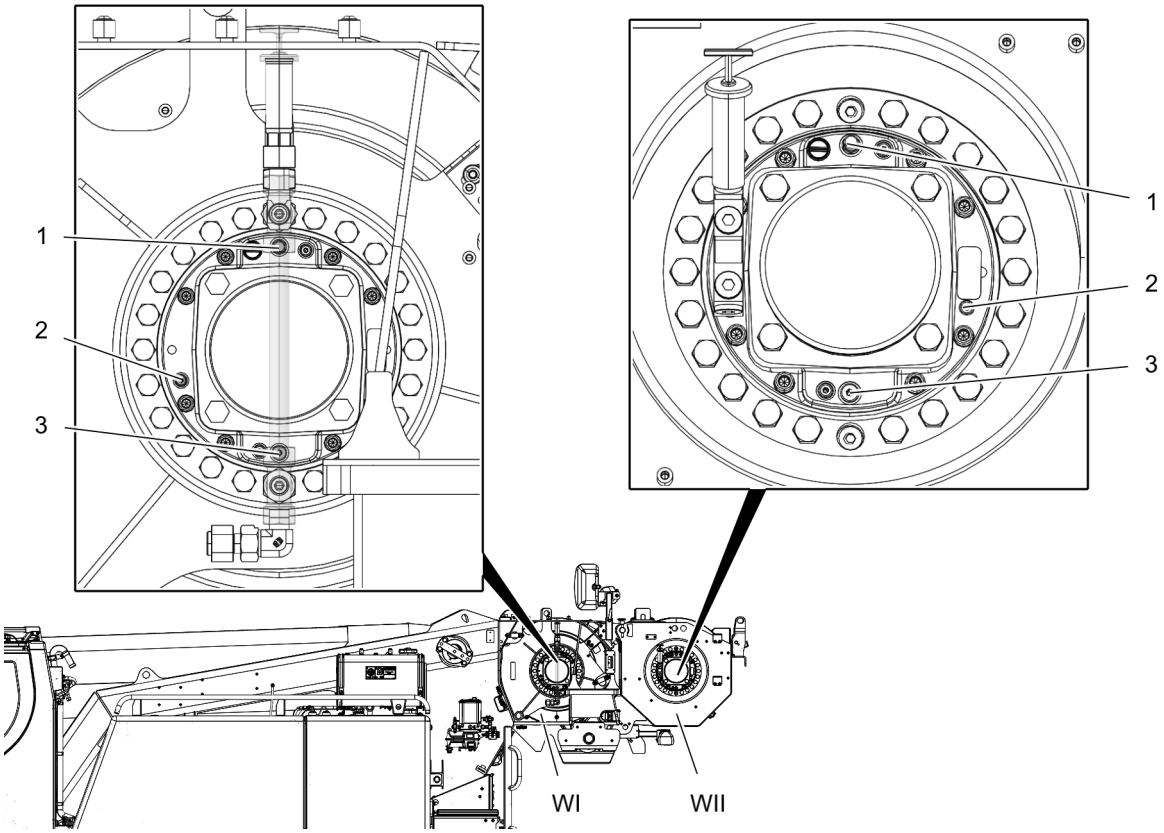

Fig.166285: Winch brake

1 Filler plug, filler port
2 Control plug, inspection port
3 Drain plug

WI Winch 1
WII Winch 2

► Unscrew the control plug **2**.

The oil level must be at the lower edge of the control bore **2**.

► Perform a visual inspection.

LWE/LTR 1100-009/25105-02-02/en

copyright © Liebherr-Werk Ehingen GmbH 2023

If the oil level is **not** at the lower edge of the inspection port **2**:
- ► Unscrew the filler plug **1**.
- ► Until the gear oil starts to overflow in the inspection port **2**: Fill gear oil in the filler port **1**.
- ► Clean the screws and sealing surfaces on the housing.
- ► Screw in the filler plug **1** with a new seal and tighten.
- ► Screw in the control plug **2** with a new seal and tighten.

Problem remedy

Is there excessive oil consumption or loss of oil?
- ► Find the cause and remedy it.

If the cause cannot be remedied:
- ► Contact Customer Service at Liebherr-Werk Ehingen GmbH.

17.4.2 Winch brake: Replacing the brake oil

Make sure that the following prerequisites are met:
- – The diesel engine is turned off.
- – The ignition key is pulled out.
- – The battery master switch is turned off.
- – The winch has cooled off for at least 30 min.
- – The transmission has warmed up.
- – A suitably sized container for the used brake oil is available.
- – The required quantity of brake oil is available, see the service fill.

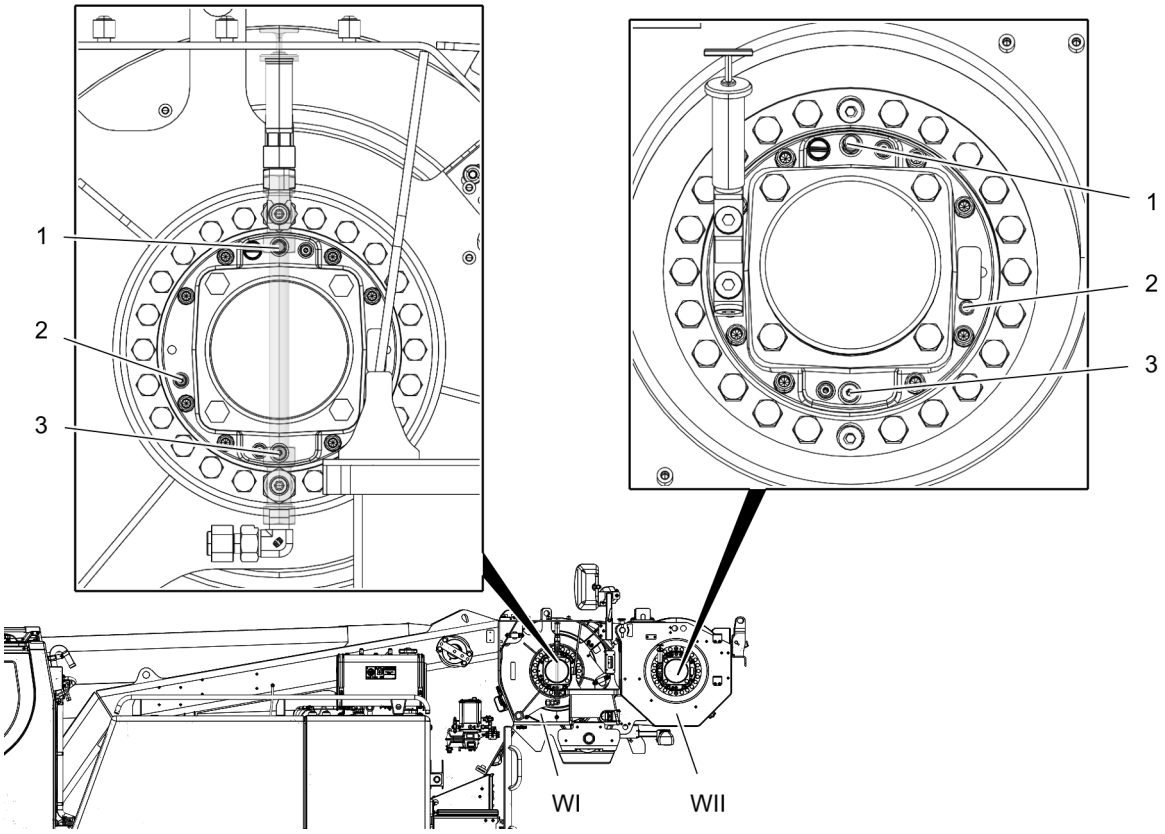

Fig.166285: Winch brake

1 Filler plug, filler port
2 Control plug, inspection port
3 Drain plug

WI Winch 1
WII Winch 2

- ► Unscrew the filler plug **1**.
- ► Unscrew the control plug **2**.
- ► Collect the brake oil: Position a container below the drain plug **3**.

copyright © Liebherr-Werk Ehingen GmbH 2023

► Drain the brake oil: Unscrew the drain plug **3**.

When the brake oil is drained:
► Clean the drain plug **3** and the sealing surface on the housing.
► Screw in the drain plug **3** with a new seal and tighten.
► Until the brake oil starts to overflow in the inspection port **2**: Fill brake oil in the filler port **1**.
► Clean the screws and sealing surfaces on the housing.
► Screw in the filler plug **1** with a new seal and tighten.
► Screw in the control plug **2** with a new seal and tighten.
► Make sure that brake oil is changed in every winch.

17.5 Checking the overflow container

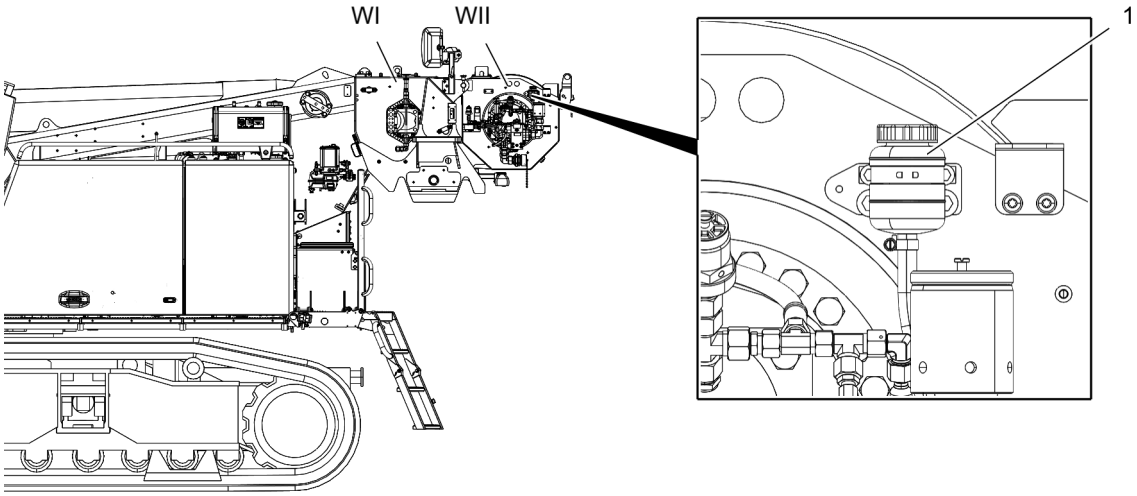

Fig.166281: Overflow container

1 Overflow container
WI Winch 1
WII Winch 2

When hydraulic oil is found in the overflow container **1**:
► Dispose of the hydraulic oil properly.

17.6 Checking the mounting screws

The following illustrations show an example of the location of screw connections on the winches that are screwed into the welded steel structure.

LWE/LTR 1100-009/25105-02-02/en

copyright © Liebherr-Werk Ehingen GmbH 2023

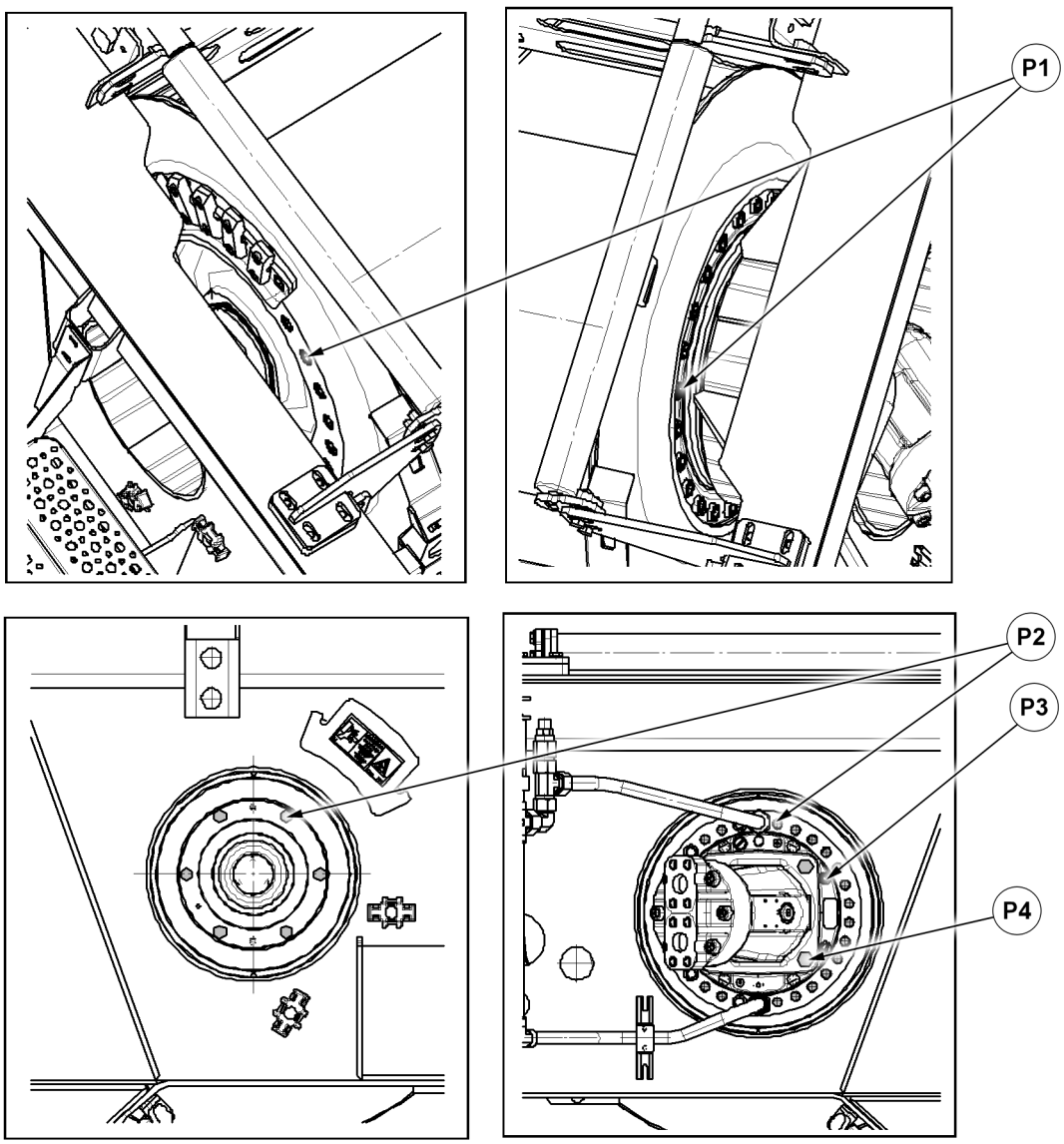

Fig.162766: Example LTM 1230-5.1, main hoist gear

P1 Mounting screws between the rope drum and flanged disk
P2 Mounting screws between the winch and frame
P3 Mounting screws between the transmission and winch
P4 Mounting screws between the engine and transmission

Possible positions for mounting screws	Mounting screws, screw connection
P1	Flanged disk mounting screws (only available for bolted flanged disks)
P2	Steel structure mounting screws
P3	Engine flange mounting screws
P4	Engine mounting screws
P5	Not available

copyright © Liebherr-Werk Ehingen GmbH 2023

17.6.1 Acoustic test of the mounting screws

Acoustic defects during operation that can indicate missing and loose mounting screws:
– Unusual noise generation during winch operation.

► Check winch operation acoustically.

When acoustic defects are found:
► Check the mounting screws on the winch, see „optical test of mounting screws“.
► Contact Customer Service at Liebherr-Werk Ehingen GmbH.

17.6.2 Optical test of the mounting screws

The mounting screws in position **P1** to position **P5** (P5 is not available for the welded steel construction) are glued with screw lock and pretensioned by the manufacturer such that they do not come loose during normal crane operation.

A visual inspection is performed to check if they are seated tightly.

Example of an optically visible defect:
– Missing screws.
– Stress marks due to bored-out screws.
– Cracks in the locking varnish.
– Cracks in the paint.
– Gap between the screw head and head support.

If the screw connection in position **P1** is available, turn all the screws of the screw connection in a visible area:
► Spool the winch up or out.
► For every position **P** of the mounting screws: Check their tightness.

With an optically visible defect is found:
► Contact Customer Service at Liebherr-Werk Ehingen GmbH.

Particular events during which the screw connection can be overloaded and the mounting screws can be permanently stretched are:
– Overload of the crane.
– Ripping off of the load.

When an overload event has occurred: Check the tightness of the mounting screws.

17.7 Checking the tightness of the protective and rope routing devices

Protective and rope routing pulleys are adjusted by the manufacturer such that their function is guaranteed during normal crane operation.

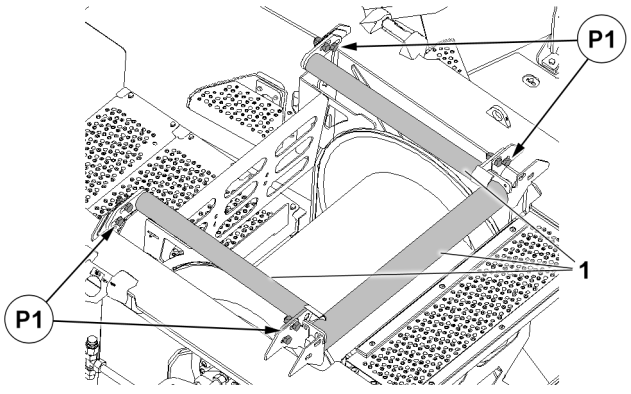

Fig.162767

Example LTM 1300–6.3, main hoist gear
with guide pulleys

LWE/LTR 1100-009/25105-02-02/en

copyright © Liebherr-Werk Ehingen GmbH 2023

P1 Position of the mounting screws

Protective and rope guide pulleys are:
– Guide plates
– Rope guide pulleys

Examples of defects are:
– Facilities shake.
– Stress marks in the adjustment range of the guide plates.
– Loose fastening elements.
– Stress marks due to the running rope.

When defects are found:
► Retighten the fastening elements.
► Check the rope for damage.
► Contact Customer Service at Liebherr-Werk Ehingen GmbH.

17.8 Checking the function of the protective and rope routing devices

The rope guide pulleys are checked in the same way as carrier rollers, see chapter 8.01.

Note
► Check the rope pulleys.

18 Telescopic boom

WARNING
Impermissible extension conditions!
The crane can topple over. Death, severe bodily injuries, property damage.
► For lubrication, adhere to the specified extension conditions of the telescopic boom.
► Do **not** telescope out more telescopes than specified.

WARNING
Personnel in the danger zone!
Death, severe bodily injuries.
► Make sure that during telescoping **no** personnel remains within the danger zone of the telescopic boom.
► Lubricate the telescopic boom solely in resting status.

WARNING
Telescoping the telescopic boom!
Shearing off of fingers.
► During telescoping, do **not** place your fingers in the maintenance port.

Note
► For the gliding surfaces of the telescopic boom, use special grease as lubricant. See the service fill and chapter 7.07.

Make sure that the following prerequisites are met:
– Safety measures against falling have been made.
– Extend the crawler carriers to the **wide** track width.
– The counterweight has been assembled according to the data in the following lubrication chart.
– The LICCON overload protection has been set according to the set up configuration.
– The telescopic boom is aligned in horizontal position to the rear (0°- main boom angle).
– The telescopic boom is telescoped in all the way.

LWE/LTR 1100-009/25105-02-02/en

copyright © Liebherr-Werk Ehingen GmbH 2023

– The *Telescoping* program is selected on the LICCON computer system, see the Crane operating instructions, chapter 4.05.

Note
► The folding jib may remain on the side on the telescopic boom in the transport retainer.

18.1 Lubrication charts

If the following charts are observed, all extension conditions for lubrication can be reached.

The load charts can be used for lubricating the telescopic boom.

With a wide support base, maximum 1.5° ground incline and a telescopic boom angle of 0°, the following counterweights are necessary for lubrication.

Double folding jib	Hook block 500 kg	Central ballast	Turntable ballast
No	No	15 t	10 t
No	Yes	15 t	10 t
Yes	No	15 t	10 t
Yes	Yes	15 t	16 t

Lubrication chart for a wide support base, maximum 1.5° ground incline and a telescopic boom angle of 0°.

18.2 Grease sprayer

WARNING
Impermissible operating pressure!
The grease sprayer **1** can be destroyed, severe bodily injuries, property damage.
► Maintain an operating pressure of 8 bar to 11 bar.

NOTICE
The grease sprayer not separated from the compressed air connection!
The cartridge holder can sling away uncontrolled, severe bodily injuries, property damage.
► Replace the grease cartridge only when the pressure is relieved.

NOTICE
Pressure in the brake circuit too low!
Engagement of brakes, property damage.
► Do **not** operate the grease sprayer when the engine is shut off.

18.2.1 Stainless steel lances

Note
► The grease sprayer **1** is equipped with various stainless steel lances.

LWE/LTR 1100-009/25105-02-02/en

copyright © Liebherr-Werk Ehingen GmbH 2023

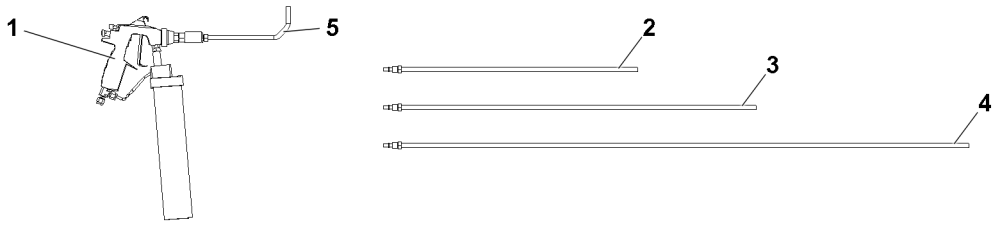

*Fig.147148: Grease sprayer **1** with various stainless steel lances*

1 Grease sprayer
2 Stainless steel lance 500 mm
3 Stainless steel lance 750 mm
4 Stainless steel lance 980 mm
5 Stainless steel lance 90° elbow 230 mm

18.2.2 Replacing the grease cartridge

Note
► The compressed air supply must be disconnected when replacing the grease cartridge.

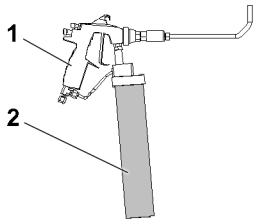

*Fig.147149: Grease sprayer **1***

► Unscrew the cartridge holder **2**.
► Replace the grease cartridge.
► Screw on and tighten the cartridge holder **2**.

18.2.3 Adjustments on the grease sprayer

Note
► The lubrication pattern becomes worse as the temperature drops.

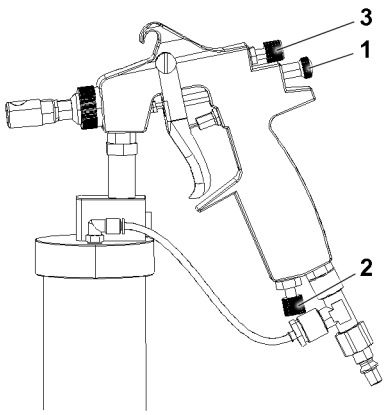

Fig.147606: Grease sprayer

1 Set the grease flow quantity
2 Air volume control
3 Wide and round spray setting (spray pattern is not changed due to the spray lance)

LWE/LTR 1100-009/25105-02-02/en

copyright © Liebherr-Werk Ehingen GmbH 2023

18.2.4 Compressed air supply

Note
► The compressed air supply can be supplied via the compressed air coupling **1** on the crane.

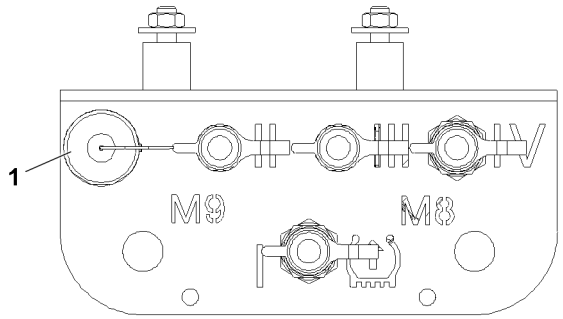

*Fig.147150: Compressed air coupling **1** on the crane*

18.3 Lubricating the inner gliding surfaces before the end piece

Note
► The „Lubricating the inner gliding surfaces before the end piece“ procedure can be combined with the „Lubricating the outer gliding surfaces“ procedure.

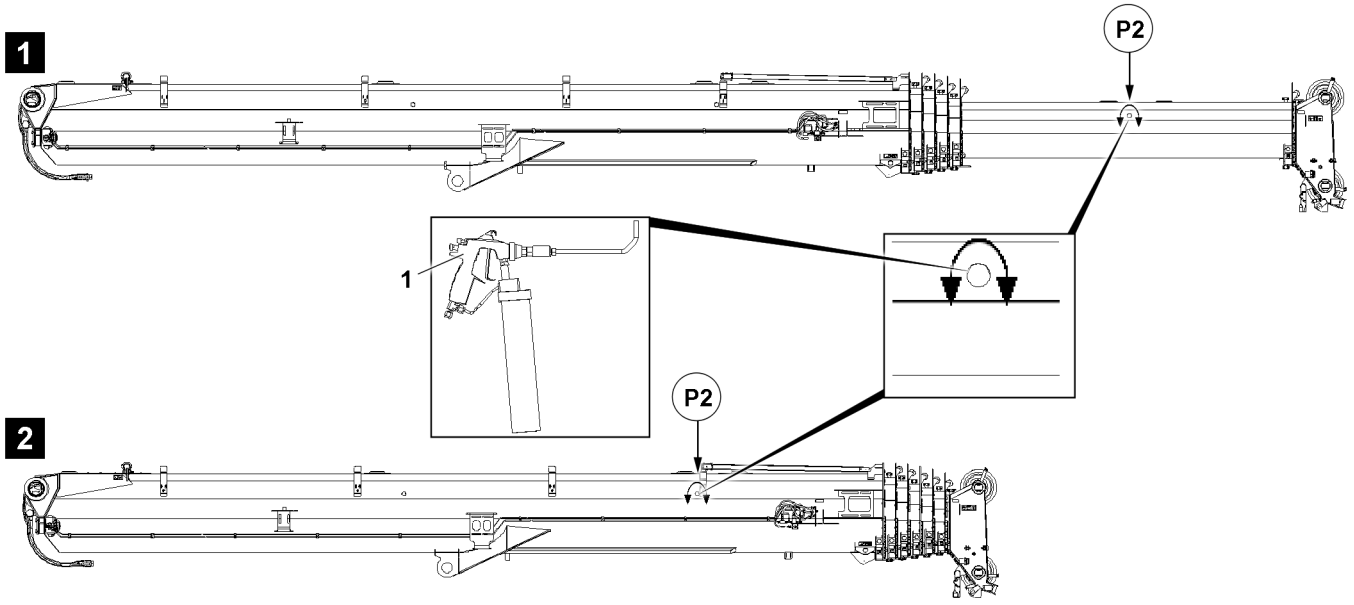

Fig.147147: Extension conditions and maintenance ports

Lubrication is done using a grease sprayer. For notes and operation, see section „Grease sprayer“.

Make sure that the following prerequisite is met:
– A grease sprayer with stainless steel lance 90° elbow 230 mm is available.

► Extend the telescope to the specified extension condition.

When the telescope is extended:
► Lubricate the gliding surfaces in front of the end piece through the maintenance ports in position **P2** with the grease spray and stainless steel lance 90° elbow 230 mm.
► Turn the grease sprayer to the front and back while lubricating in the direction of the arrow.

When the gliding surfaces are lubricated before the end piece:
► Telescope the telescope out to 100 %.

LWE/LTR 1100-009/25105-02-02/en

copyright © Liebherr-Werk Ehingen GmbH 2023

► Telescope the telescope in.

Extension condition	Telescope	Maintenance port in
0/0/0/46/0	5	T 4: Position **P2**
0/0/46/0/0	4	T 3: Position **P2**
0/46/0/0/0	3	T 2: Position **P2**
46/0/0/0/0	2	T 1: Position **P2**
0/0/0/0/0	1	Pivot section: Position **P2**, see illustration **2**

► Extend the telescopic booms one after the other to all extension conditions and lubricate the gliding surfaces before the end piece.

18.4 Lubricating the outer gliding surfaces

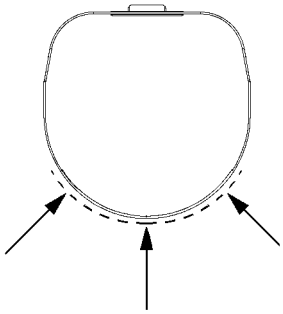

Fig.124866: Telescope cross-section, outer gliding surfaces

Lubrication is done using a grease sprayer. For notes and operation, see section „Grease sprayer“.

Note
Optimum lubrication result:
► The sprayed special grease reaches its optimal lubrication result after four to eight hours.

To grease the outer gliding surfaces, every telescope can be telescoped out individually to 100 %.

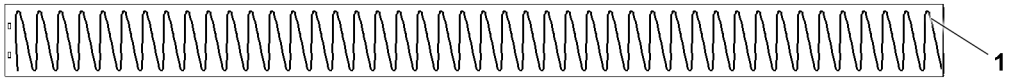

*Fig.147605: The telescope from below with the wave form **1***

► Telescope every telescope out individually to 100 % and use the grease sprayer to spray special grease in the wave form **1** on the outer gliding surfaces.

LWE/LTR 1100-009/25105-02-02/en

copyright © Liebherr-Werk Ehingen GmbH 2023

18.5 Lubricating the inner gliding surfaces

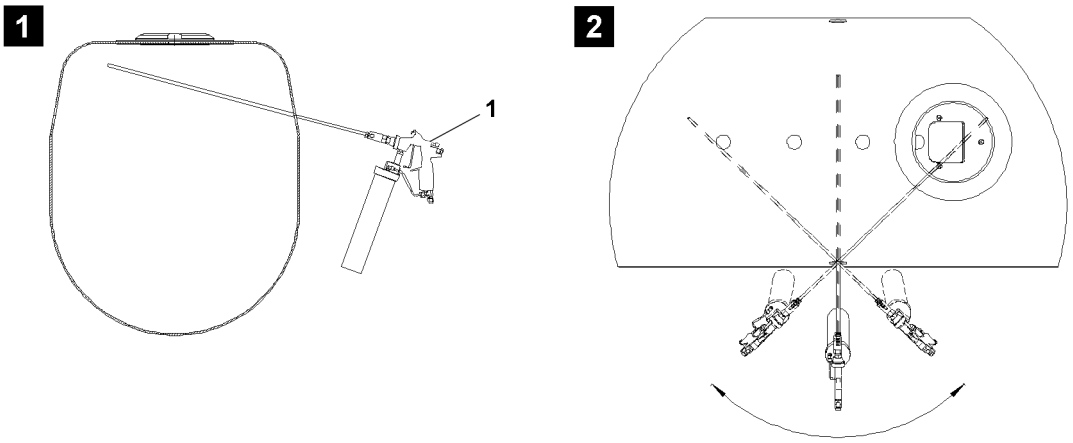

Fig.147131: Telescope cross-section, inner gliding surfaces

The inner gliding surfaces of the telescopes (plastic glide bearing plates) are lubricated through maintenance ports with a grease sprayer **1**.

Lubrication is done using a grease sprayer. For notes and operation, see section „Grease sprayer“.

Make sure that the following prerequisite is met:
- The telescopic boom is telescoped in all the way **0/0/0/0/0**.
- A grease sprayer with a stainless steel lance 980 mm is available.

Note
► The maintenance ports can be accessed from the outside on both sides of the pivot section and the telescopes.

► Lubricate the gliding surfaces on the opposite side through the maintenance ports using the grease sprayer **1**, see illustration **1**.
► Swing the grease sprayer **1** to the front and rear to ensure the largest amount of lubrication possible, see illustration **2**.

LWE/LTR 1100-009/25105-02-02/en

copyright © Liebherr-Werk Ehingen GmbH 2023

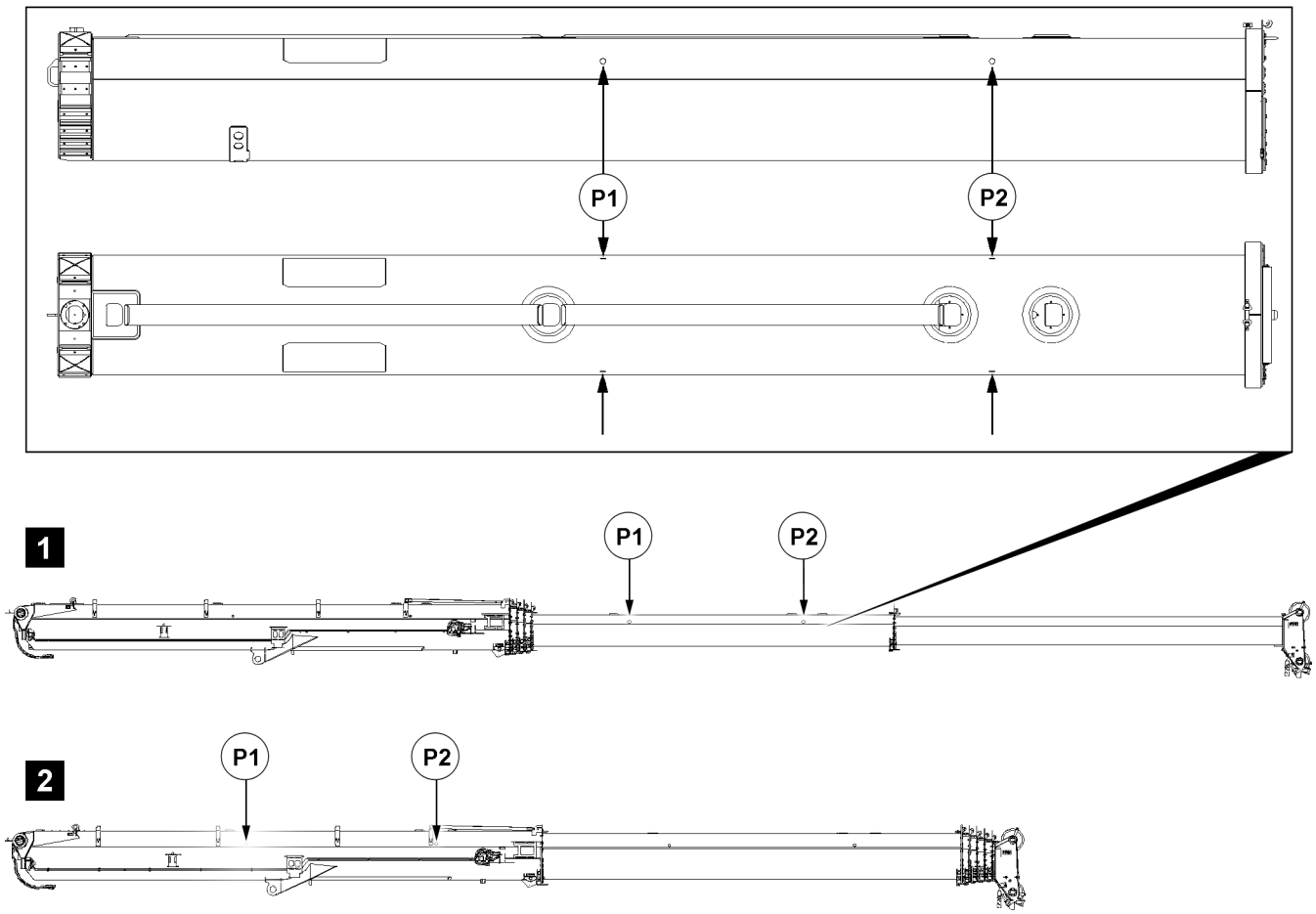

Fig.147146: Extension conditions and maintenance ports

Extension condition	Telescope	Maintenance port in
0/0/0/92/100	5	T 4: Position **P1** and position **P2**
0/0/92/100/0	4	T 3: Position **P1** and position **P2**
0/92/100/0/0	3	T 2: Position **P1** and position **P2**
92/100/0/0/0	2	T 1: Position **P1** and position **P2**
100/0/0/0/0	1	Pivot section: Position **P1** and position **P2**, see illustration **2**

► Telescope the telescopic booms one after the other to all extension conditions and lubricate the inner gliding surfaces of the telescope via the maintenance ports.

18.6 Lubricating the locking pins

Make sure that the following prerequisites are met:
– The telescopic boom is telescoped to extension condition **92/46/0/0/0**.
– A lifting platform is available.

LWE/LTR 1100-009/25105-02-02/en

copyright © Liebherr-Werk Ehingen GmbH 2023

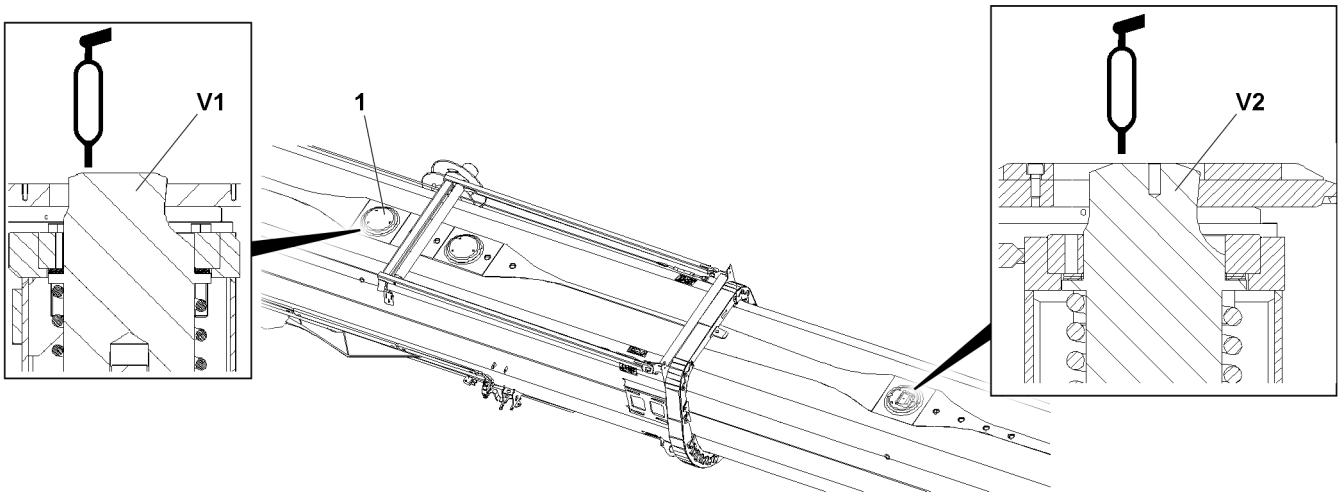

Fig.124867

- ► Remove the cover **1** on the pivot section.
- ► Lubricate the locking pin **V1**.
- ► Assemble the cover **1**.

Extension condition	Locking pin
92/46/0/0/0	V2
0/92/46/0/0	V3
0/0/92/46/0	V4
0/0/0/92/46	V5

- ► Lubricate the locking pin **V2**.

The following steps must be carried out for every additional locking pin.

- ► Telescope the telescopic boom to the next extension condition.
- ► Lubricate the locking pin.

When all locking pins are lubricated:

- ► Telescope the telescopic boom in all the way and lock it.

19 Rope pulleys

19.1 Checking for damage and cracks

WARNING
Damage or cracks!
Danger of accident.
- ► Replace the rope pulley immediately!

Ropes can cause mechanical damage, such as stress marks.

- ► Check the rope pulleys for mechanical damage and cracks
- ► Check the surface and the groove of the rope pulley for smoothness.

In addition to the periodic inspections, there are special events that require an inspection.

LWE/LTR 1100-009/25105-02-02/en

copyright © Liebherr-Werk Ehingen GmbH 2023

If rope pulleys are subjected to any impacts (e.g., with buildings) or are otherwise overloaded:
► Visual inspection: Check the rope pulleys for mechanical damage and cracks.

19.2 Checking the bearing for easy movement

Stiff or blocked rope pulleys or compensation pulleys wear rapidly and unevenly and cause serious rope abrasion.

Ineffective compensation pulleys can lead to irregular rope tension.

► Check the rope pulleys for proper movement in their bearings.

When rope pulleys are **not** easily moveable in their bearings:
► Fix the bearings.

When the crane is at a standstill for a longer period of time:
► Turn the rope pulleys regularly.

20 Crane ropes

20.1 Personal protective equipment

WARNING
Injury due to wires and skin irritation due to lubricant!
► When working with ropes, always wear work gloves.

WARNING
Injuries if protective equipment is **not** worn!
► Wear hard hat, safety shoes and safety goggles.

20.2 Safe and problem-free operation

WARNING
Wear, overload, incorrect use, damage, improper maintenance!
Failure of ropes. Death, severe bodily injuries, property damage.
► Prevent failure of ropes: Observe and adhere to the following notes.

Carry out the following measures to ensure safe and problem-free rope operation:
- Service ropes and rope end connections regularly according to the maintenance intervals.
- Check ropes and rope end connections regularly according to the inspection intervals.
- When it is determined that the ropes should be withdrawn from service, do **not** continue to use them further.
- Exclude contact of rope with components except rope drive elements.
- Exclude contact of rope with structural parts, power lines or other objects within the surrounding area.
- Avoid corrosive and chemical surroundings.
- Avoid excessive soiling.
- Avoid excessive heat influence.
- Ensure proper condition of all elements of rope drive.
- Ensure proper spooling formation on the rope drum.
- Use the entire rope length of hoist ropes.
- Avoid slack rope formation on the drum.
- Do **not** bring outer twists into the rope.
- Avoid shock relief of the rope, such as sudden set down of the load.
- Avoid **non-permissible** angular pull, for example by pulling the load at an angle.

LWE/LTR 1100-009/25105-02-02/en

copyright © Liebherr-Werk Ehingen GmbH 2023

20.3 Temperature operating limits

Adhere the temperature operating limits for steel ropes. The determining factors are wire material, lubricant, rope end connections. See Manufacturer's specifications.

20.4 Qualification Maintenance personnel

Make sure that the following prerequisites are met:
- The maintenance personnel is trained and instructed in maintenance tasks.
- The maintenance personnel is assigned (authorized) for the maintenance by the crane operator.

20.5 Damage to the rope

Rope removal criteria: If severe damage reduces the operational safety, then the rope has reached the removal criteria.

This section provides an overview for possible damage to the rope. For clearer illustration, the distortions on the illustrations are exaggerated.

The displayed ropes show a condition, which is far above the removal criteria.

Damage to the rope causes uneven load distribution in the affected areas.

Damage to the rope is most often localized.

Typical examples of wire rope damage that can be recognized during maintenance work:
- Broken strands
- Wire breaks
- Damage to the rope end connection
- Reduction of rope diameter
- Localized increase of rope diameter
- Corrosion
- Flattenings
- Corkscrew-like distortion
- Basket formation
- Protruding, distorted inlay or braiding
- Loop formation
- Kinking, rope loops (grommets) pulled closed
- Buckles
- Influence of heat or electrical voltage, such as arcing

Occurrence of removal criteria for individual criteria, see chapter 8.04.

20.5.1 Broken strands

A strand consists of several individual wires.

When a complete braid is broken, then the rope must be taken down.

20.5.2 Broken wire

Externally visible broken wires are the result of wear caused by operation.

Additional types of broken wires:
- Broken wire in the inside of the rope
- Broken wire in the strand valleys
- Broken wire on a rope connection

A broken wire does **not** endanger the safety of the rope.

20.5.3 Damage to the rope end connection

Example of rope end connection damage:
- Traces of slipping between the locking clamp and the wire rope

LWE/LTR 1100-009/25105-02-02/en

copyright © Liebherr-Werk Ehingen GmbH 2023

- Corrosion
- Deformation
- Wear

20.5.4 Reduction of rope diameter

The rope diameter changes due to abrasion, settling and external influences.

Abrasion of cover wires of outer strands of rope due to frictional contact. Especially in those areas where ropes are in contact with the rope pulleys during start up or slow down of the load.

Wear is increased by lack of or incorrect lubrication and the effect of dust.

Abrasion reduces the tensile strength of steel ropes because the cross section of the steel is reduced.

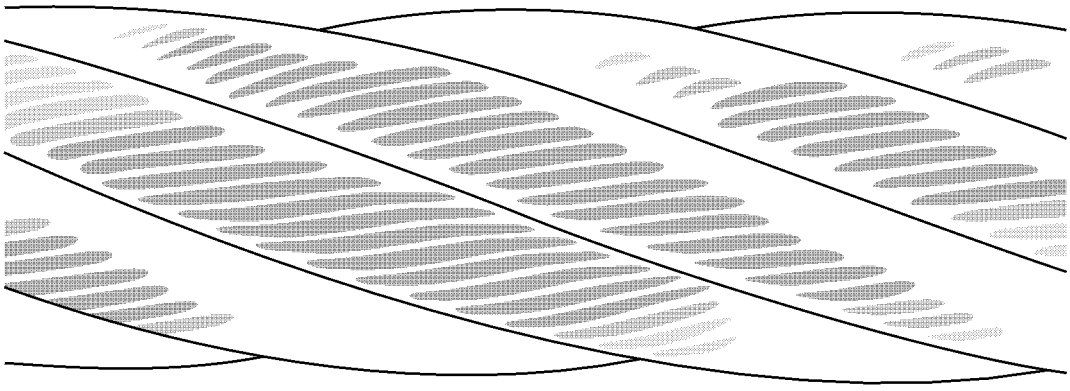

Fig.121001: External abrasion on the rope

When the rope diameter is reduced, the rope must be checked by **expert personnel for crane rope inspection**.

20.5.5 Localized increase of rope diameter

An increase, which occurs over a longer area of the rope can be caused by absorption of moisture in the fiber insert or due to corrosion in the inside of the rope.

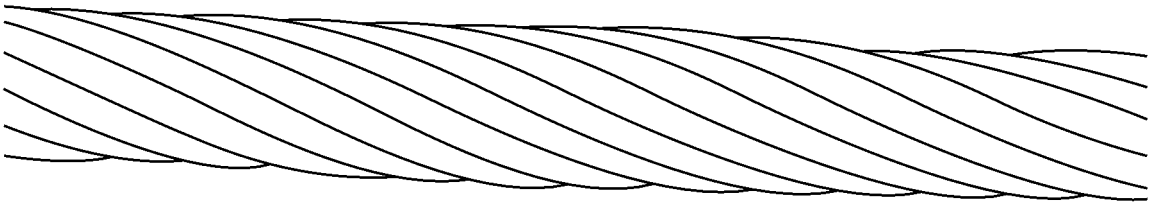

Fig.120992: Increase of rope diameter

When a localized increase of the rope diameter is present, then the rope must be checked by **expert personnel for crane rope inspection**.

20.5.6 Corrosion

Corrosion occurs due to insufficient lubrication, in maritime climates and in an atmosphere polluted by industrial fumes.

External corrosion is indicated by a rough wire surface. A superficial rust film can be wiped off.

LWE/LTR 1100-009/25105-02-02/en

copyright © Liebherr-Werk Ehingen GmbH 2023

Significant corrosion reduces the strength and elasticity of the rope due to the reduction of the rope diameter.

Inner corrosion is hard to detect.

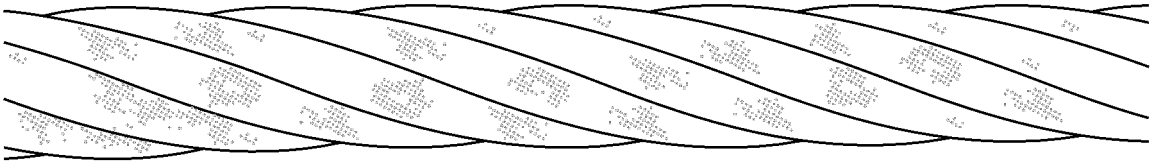

Fig.120994: External corrosion

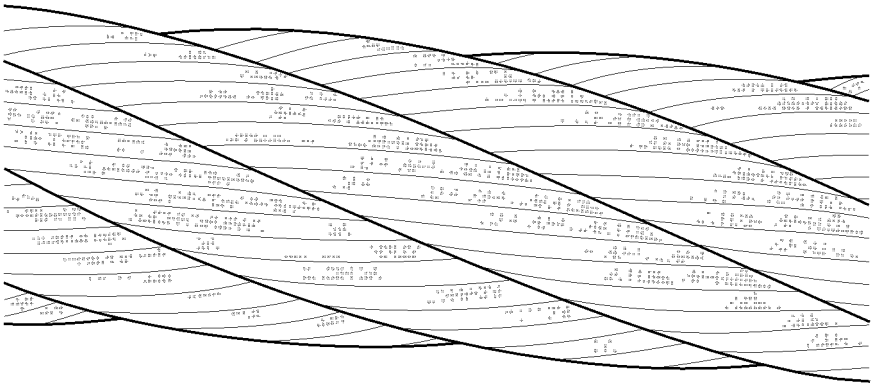

Fig.120995: Magnification of external corrosion for better depiction

When significant corrosion is present, the rope must be checked by **expert personnel for crane rope inspection**.

20.5.7 Flattening

Flattening occurs when the rope runs through the rope pulleys. In this area the rope wears quicker.

Corrosion occurs faster on retaining ropes and guy ropes.

Fig.120997: Localized limited flattening, which leads to broken wires (single layer rope)

LWE/LTR 1100-009/25105-02-02/en

copyright © Liebherr-Werk Ehingen GmbH 2023

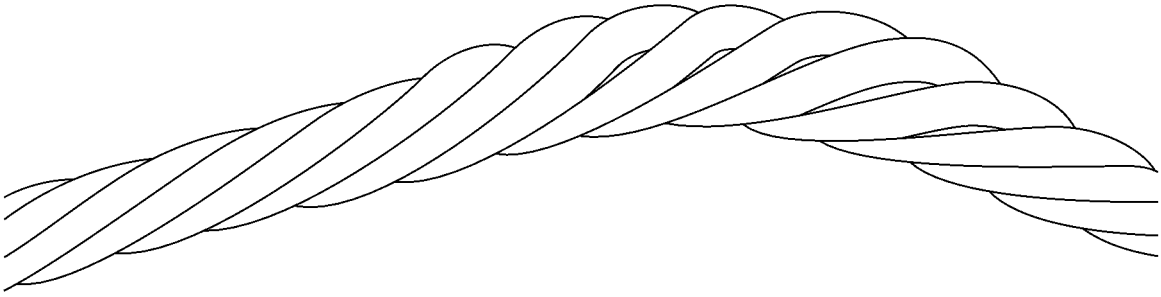

Fig.120996: Flattenings on multi layer windings

When flattening is present, the rope must be checked by **expert personnel for crane rope inspection**.

20.5.8 Corkscrew-like distortion

Distortion where the rope is in the form of a corkscrew along its longitudinal axis.

Corkscrew-like distortion causes rope wear, broken wires and bearing damage on rope pulleys.

Fig.120988: Corkscrew-like distortion

When corkscrew-like distortion is present, the rope must be checked by **expert personnel for crane rope inspection**.

20.5.9 Basket formation

This distortion occurs due to different layers between the outer strand layers and the inside of the rope.

Causes for basket formation are high angular pull angles during the run over the rope pulleys and run-in rope pulleys. Even load distribution over the entire cross-section is not possible.

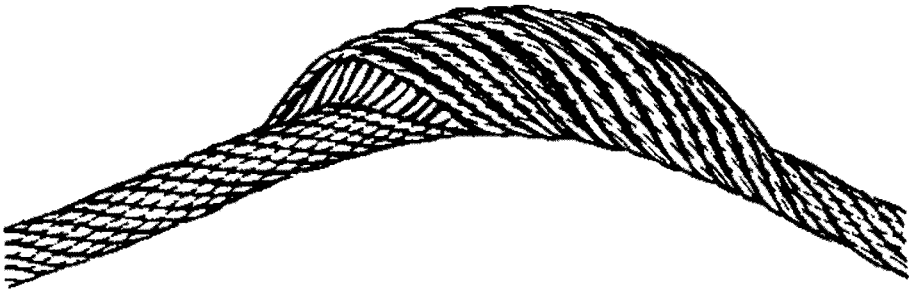

Fig.120989: Basket formation

When basket formation is present, then the rope must be taken down.

copyright © Liebherr-Werk Ehingen GmbH 2023

20.5.10 Protruding, distorted inlay, braiding

This distortion is a special form of basket formation: The insert or the core of the rope protrudes between the outer strands or an outer strand protrudes from the rope banding.

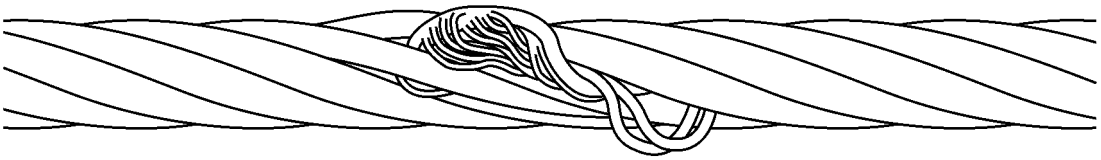

Fig.120990: Protrusion of an insert (rope single layer)

Fig.120991: Distorted or protruding strand

When the insert or a strand protrudes or is distorted, take the rope down. Have **expert personnel for crane rope inspection** check if the rope area with the distortion can be removed.

20.5.11 Loop formation

At loop formation individual wires protrude from the rope banding, when no broken wire ends can be seen.

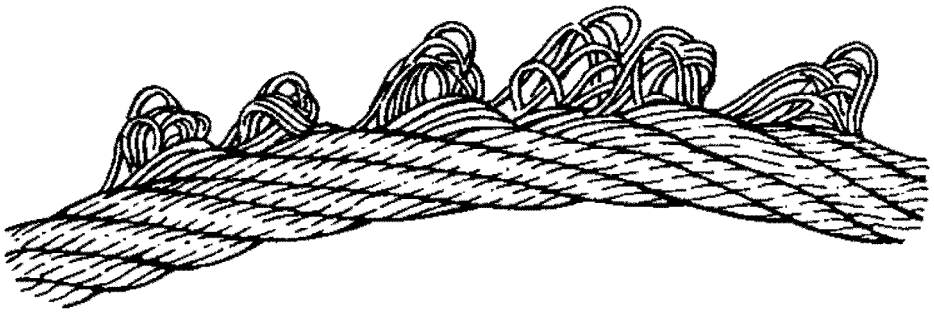

Fig.120993: Emergence of individual wires

When loop formation is present, take the rope down.

20.5.12 Kinking, rope loops (grommets) pulled closed

Deformation, where a loop has formed in the rope, without the possibility to rotate around its own axis during a load. The rope is subjected to significant wear.

The rope is deformed. The strength remains only in part.

LWE/LTR 1100-009/25105-02-02/en

copyright © Liebherr-Werk Ehingen GmbH 2023

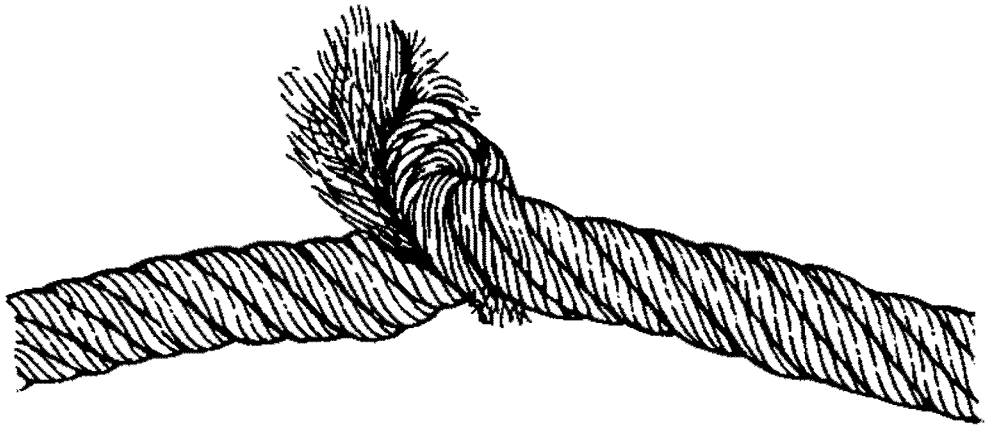

Fig.120998: Severe kinking or knots

When kinking or rope loops are present, take the rope down.

20.5.13 Buckles

Buckles are angular deformations. The rope was damaged due to external influences. Strong deformations of the rope cause stronger wear.

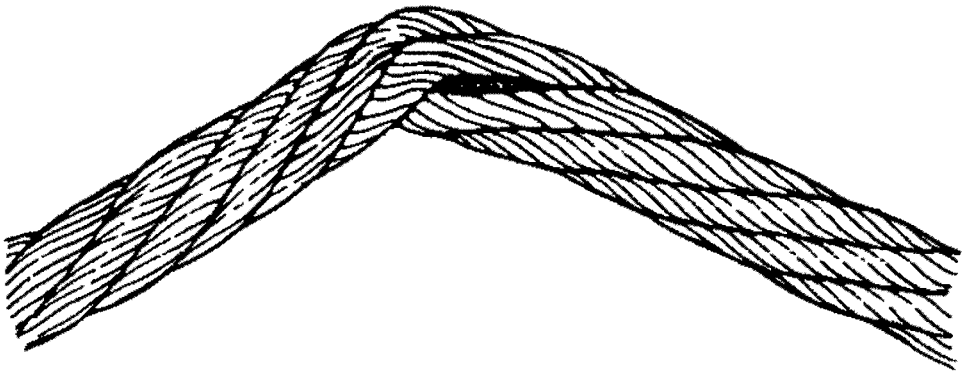

Fig.120999: Severe buckle

When buckles are present, take the rope down.

20.5.14 Effects of heat, arcs

Damage caused to the rope by welding work, for example.

Unusual heat impact is visible by tempering colors and loss of lubricant.

When heat impact has occurred on the rope, then the rope must be taken down.

20.6 Checking the ropes

WARNING
Operation with a damaged rope!
Failure of rope. Death, severe injury, property damage.

When damage, wear and deformations are present:
► Have **expert personnel for crane rope inspection** determine if the rope has to be taken down.

copyright © Liebherr-Werk Ehingen GmbH 2023

The following sections describe the tasks for a **daily visual inspection**.

The crane operator can carry out a daily visual inspection if he is sufficiently trained in the tasks and considered to be able to do so.

20.6.1 Intervals

Intervals and situations where the daily visual inspection must be made:
- Daily, before starting to work
- In case of change of the reeving of the crane rope due to:
  - Transport
  - New reeving
  - Disassembly and assembly

20.6.2 Areas

The visible areas must be checked for damage.

The following areas must be checked with special care:
- Rope end connections
- Safety coils and fixed point on the winch

20.6.3 Documentation of rope condition

Every visible change of the wire rope must be documented in the crane records.

20.6.4 Checking the lubrication

WARNING
Missing lubrication!
Functional problems. Inner and outer corrosion.
- ► Lubricate the rope regularly.
- ► Make sure that the rope is lubricated all around.
- ► Select manual or automatic lubrication procedures.

The lubrication must be checked at least once a **month**.

When the rope shows signs of drying out:
- ► Lubricate the rope, see section „Lubricating the rope“.

20.6.5 Checking for wear and distortion

- ► Check all visible parts of the rope for wear and distortion.
- ► Check the rope end connections and fixed points especially carefully for wear, damage, cracks and distortion.
- ► Check pressed together rope end connection for slipping and traces on the rope.
- ► Check that the rope end connections on the cotter are fit tightly and correctly installed.

Note
- ► The maximum permissible number for broken wires over a certain rope length may **not** be exceeded.
- ► Determine the maximum permissible number of broken wires, see chapter 8.04.

- ► Check the rope end connection and rope area near the rope end connection for broken wires.

When broken wires are present on the rope:
- ► Remove the broken wire, see section „Removing broken wires“.

When broken wires or damage is present on the rope end connection:
- ► Document visible changes of the rope condition.
- ► Have the rope checked by **expert personnel for crane rope inspection**.

LWE/LTR 1100-009/25105-02-02/en

copyright © Liebherr-Werk Ehingen GmbH 2023

When the rope can be shortened without reducing operational safety:
► Shorten the rope, see section „Shortening the rope“.

20.6.6 Checking the rope drive for spooling problems

Lacking pretension of the rope on the winch can cause spooling problems in multi layer spooling.

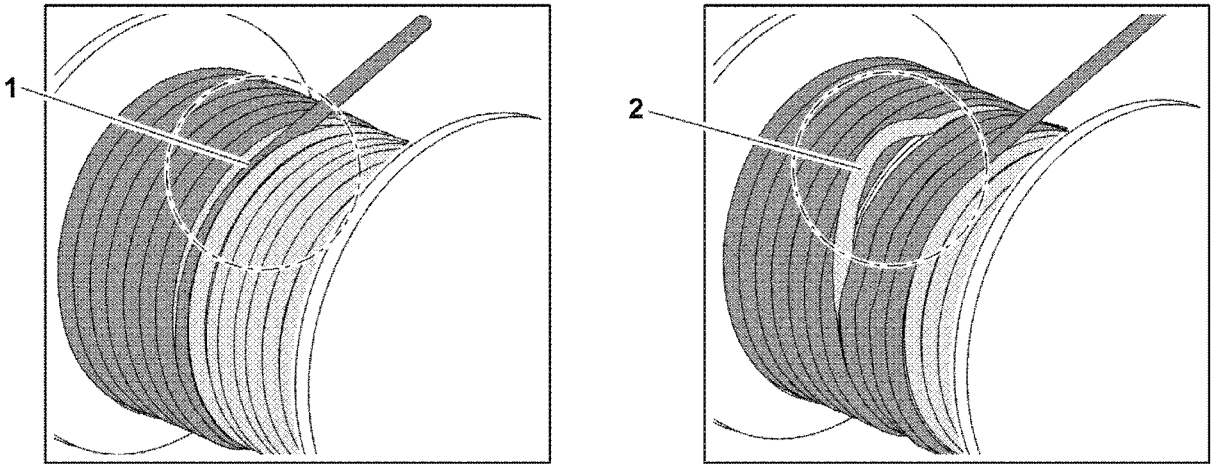

Fig.120967: Possible spooling problems on the rope winch

1 Cutting into the lower rope layers **2** Loop formation in the lower rope layers

► Check the spooling behavior of rope on the rope winch for cutting into the lower rope layers **1**.
► Check the spooling behavior of rope on the rope winch for loop formation in the lower rope layers **2**.

When spooling defects are found:
► Renew the pretension, see section „Renewing the pretension of hoist ropes“.
► Document visible changes of the rope condition.
► Have the rope checked by **expert personnel for crane rope inspection**.

20.6.7 Checking the position of the rope

► Check the correct position of the rope on the rope pulleys.

When the rope is **not** lying correctly on the rope pulley:
► Have the rope and rope pulley checked by **expert personnel for crane rope inspection**.

20.6.8 Checking for corrosion

A superficial „rust film“ can be wiped off.

► Do **not** clean the rope with solvents or cleaners.
► Clean the rope solely with a wire hand brush.
► Check rope for corrosion.

When the rope shows a rough surface:
► Document visible changes of the rope condition and have the rope checked by **expert personnel for crane rope inspection**.

If there is any uncertainly regarding the condition of the rope:
► Take the rope down or contact Liebherr Service.

20.6.9 Checking for flattenings

The rope is stressed more in the cross over area of the spooled up rope layers on the winch. The rope can be flattened as a result.

LWE/LTR 1100-009/25105-02-02/en

copyright © Liebherr-Werk Ehingen GmbH 2023

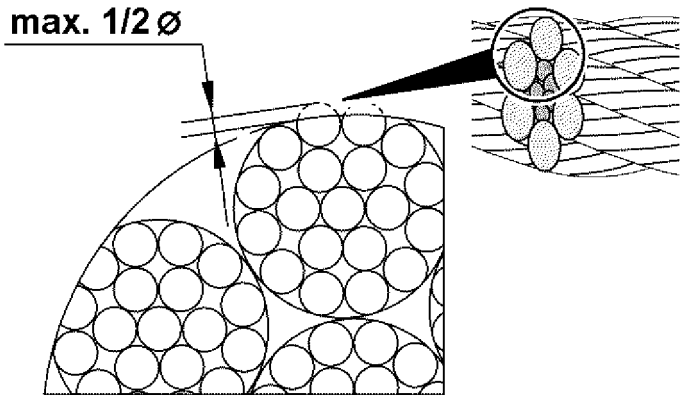

Fig.120966: Maximum flattening of wires on the outer strands

► Check the rope in the ascent zones of the rope spooling on the winch for flattenings.

When the outer braids are flattened more than half of the wire diameter:
► Document visible changes of the rope condition.
► Have the rope inspected by **expert personnel for crane rope inspection** or take the rope down.

When the rope can be shortened without reducing operational safety:
► Shorten the rope on the rope drum fixed point, see section „Shortening the rope“.

20.7 Checking the multi layer spooling for distortions

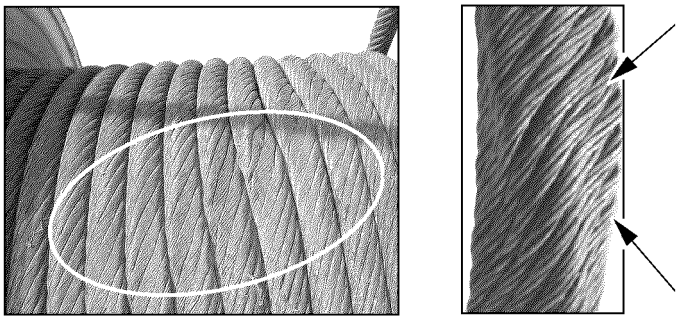

Fig.114002: Distortion of ropes in multi layer spooling

► Check the first rope layer of the winch for crushed areas and distortions.

When distortions are present:
► Have the rope checked by **expert personnel for crane rope inspection**.

20.8 Lubricating the rope

WARNING
Missing lubrication!
Functional problems. Inner and outer corrosion.
► Lubricate the rope regularly.
► Make sure that the rope is lubricated all around.
► Select manual or automatic lubrication procedures.

NOTICE
Too much or incorrect lubricant!
Excessive soiling. Wear on rope, on rope pulley and on winch. Recognition of take down criteria is impeded.
► Use lubricant, which is compatible with the rope and the original lubricant.

LWE/LTR 1100-009/25105-02-02/en

copyright © Liebherr-Werk Ehingen GmbH 2023

► Do **not** clean the rope with solvents or cleaners.
► Clean the rope solely with a wire hand brush.

Areas, which must be lubricated especially well are bending zones on winch and rope pulleys.

► Lubricate the rope.

20.9 Removing broken wires

CAUTION
Broken wires!
When working with a damaged rope, there is a danger of lacerations and pricking injuries.
► Wear protective gloves.

NOTICE
Broken wires!
Damage of other components in crane operation, for example rope pulleys and compensation pulleys.
► Remove broken wires.

Make sure that the following prerequisites are met:
– Suitable pliers are on hand.

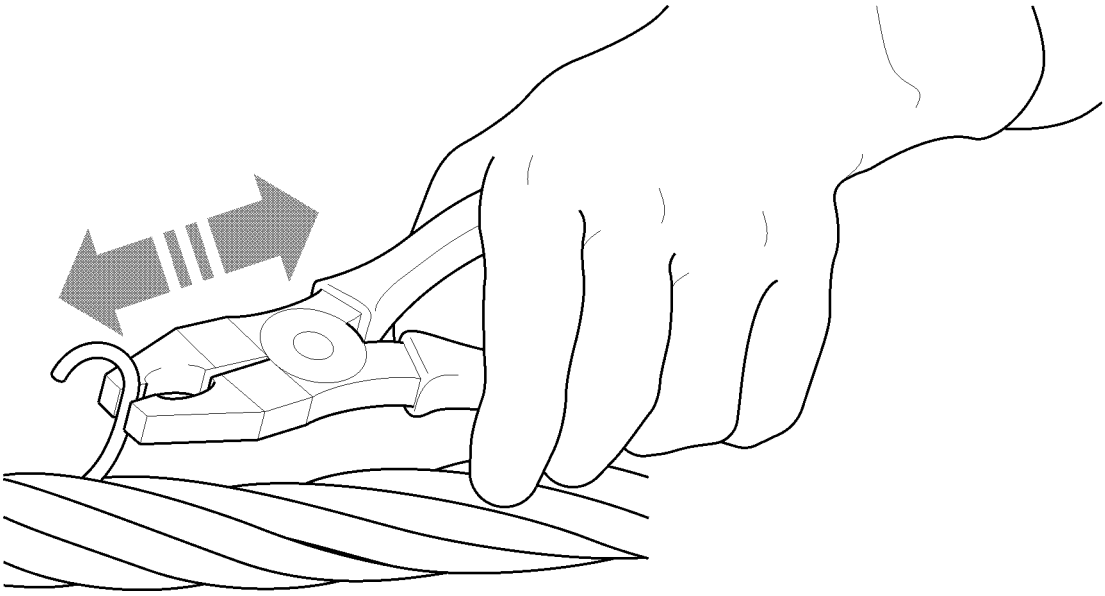

Fig.120979: Removing broken wire

► Grasp the wire on the upper end with pliers. Bend the wire back and forth until the wire breaks off in the braid valley.

The position of a broken wire is important for subsequent inspection. Individual broken wires are counted and are recorded later in the evaluation for withdrawal from service.

► Document the position of the broken wires in the crane record. Inspection checklist, see chapter 8.04.

LWE/LTR 1100-009/25105-02-02/en

copyright © Liebherr-Werk Ehingen GmbH 2023

20.10 Turning an extremely rotation-resistant hoist rope out

WARNING
Damage of rope due to incorrect procedure!
► Use extreme caution for the following procedures.
► Observe the following instructions exactly.

The cause for the turn-in of the hook block can have various reasons.

Check the crane for the following peculiarities:
– Scrub marks: Are hoist rope scrub marks present on the crane components? If scrub marks are present, check the hoist rope run and correct it.
– Rope pulleys: Did the groove diameter become too small?
  • Groove diameter dimensional stability must be present.
  • If this is not the case, the rope pulley must be replaced.
– Rope lubrication: Has the hoist rope been sufficiently lubricated? If the rope surface is dry, the hoist rope must be re-lubricated.

If the crane does not display other peculiarities, the hoist rope must be spun out.

The following sections describe two methods of how to spin out the hoist rope. The methods must be applied in the described sequence.

20.10.1 Spinning out with single strand reeving

► Reeve in the single strand hoist rope.
► Extend the boom to the maximal boom length and hook height.
► Lower hooks to approximately 1 m above the ground and allow the hoist rope to spin out.
► With an empty hook block, carry out one complete hoist cycle.
► Lower the hook again to approximately 1 m above the ground and allow the hoist rope to spin out again.
► Reeve in the number of strands of hoist rope carefully and spin free where the twisting of the hook block is largest.
► Distribute the spin out to the entire rope length: Run at least two entire hoist cycles at maximum boom length and hook height.

Note
When the hook block continues to turn in:
► Spin the rope out, see section „Spinning out by turning the hook block out“.

20.10.2 Spinning out by turning out the hook block

Make sure that the following prerequisites are met:
– The hook block is reeved with the number of strands where the twisting is the largest.

► Extend the boom completely and lower the hook block.
► Fasten a load of approximately 10 % of the nominal rope pull to the hook block.

Before lifting the load, a helper must turn the twisted hook block to a straight position by hand until the rope strands no longer touch each other.

► Continue to turn the hook block by one entire turn.

Result:

– The rope strands touch again.

NOTICE
The hook block turns back under load in a straight position!

When the hook block turns back in a straight position:
► Release the hook block.

LWE/LTR 1100-009/25105-02-02/en

copyright © Liebherr-Werk Ehingen GmbH 2023

- ► Hold the hook block in the prescribed position until the load lifts off the ground.
- ► Move the load until approximately 15 m before the uppermost hook position of the completely extended boom.
- ► Lower load and set it down.

20.11 Renewing the pretension of hoist ropes

WARNING
Lacking pretension of the rope on the winch!
Excessive rope wear in the lower spooling layers, gap formation, rope cutting in.

When the lower rope layers on the winch are hardly used or **not**:
- ► Renew the pretension in the entire rope regularly.

- ► Renew the crane rope pretension, see chapter 4.08.

20.12 Shortening the rope

WARNING
Distortions and mechanical damage!
Operational safety significantly disturbed, uneven load distribution within the rope.
- ► Have the manufacturer check if the distorted and damaged area can be severed.

Visible form changes often occur localized or in short rope sections.

When a safe operation of the rope is ensured, a distorted and damaged area can be severed.

To shorten the rope there are different prerequisites:
- – Rope shows flattenings in the incline range.
- – Broken wires occur solely within the area of the rope end connection, the remaining rope is undamaged.

Cause	Dimension of the cut	Position	Note
Flattenings in the incline range	20 x rope diameter	Winch fixed point	Reset the rope once only.
Broken wires in the area of the rope end connection	Specification of the inspection expert	Rope end	—

Shortening the rope: Differentiation depending on the causes

DANGER
Minimum number of remaining coils on the winch fallen below!
Rope releases or rips off, falling load. Death, severe injury, property damage.
- ► Make sure, after shortening the rope that **at least three remaining coils** remain on the winch in all working positions of the crane.

Make sure that the following prerequisites are met:
- – The rope was shortened by authorized and trained expert personnel.

LWE/LTR 1100-009/25105-02-02/en

copyright © Liebherr-Werk Ehingen GmbH 2023

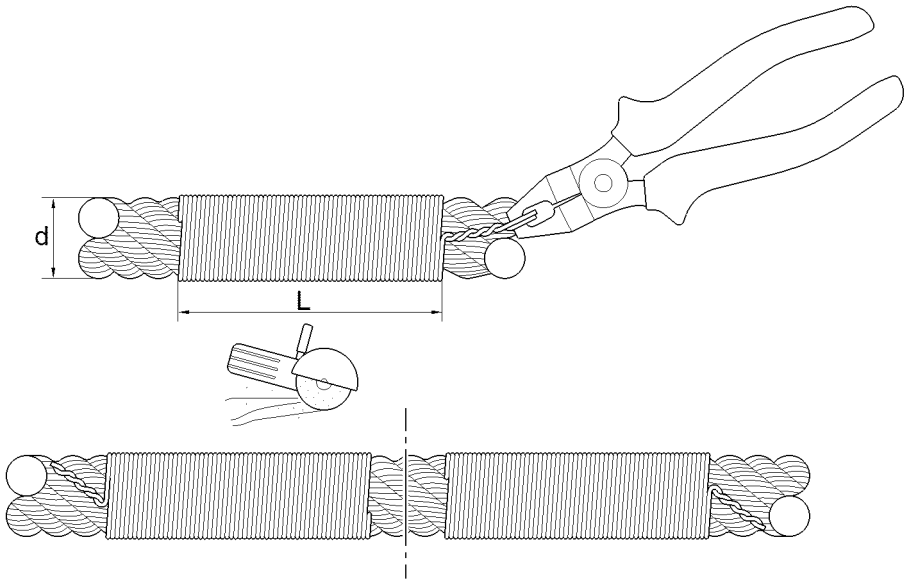

Fig.120972: Tying the rope before shortening it

d Rope nominal diameter **L** Length of tie, at least 2d

The length of the tie **L** must be at least 2 times the nominal rope diameter (2d).

The shortening of the rope in this section applies to a single layer rope. On rotation-resistance, parallel roped ropes it may be necessary to tie several times to prevent the rope from jumping open when it is cut.

- ► Tie the rope on both sides with wire.
- ► Twist the end of the wire with the pliers to prevent them from releasing.

WARNING
Danger of injury due to flying sparks!
- ► Wear safety goggles, safety clothing and safety gloves.

- ► Separate the rope vertically to the rope axis.
- ► Fasten the rope end connections on the rope according to the manufacturer's specifications.
- ► Remove the tie on both ends of the separation point from the rope.

21 Crane cab heating-air conditioner device

21.1 Replacing the filter insert

The crane operator's cab can be tilted upward for maintenance work.

WARNING
Danger of accident!
Personnel can be severely injured or killed.
- ► While the crane operator's cab is tilted, it is prohibited for any persons or objects to remain within the danger zone of the crane operator's cab.
- ► Before stepping on the step, set the crane operator's cab in a horizontal position.

LWE/LTR 1100-009/25105-02-02/en

copyright © Liebherr-Werk Ehingen GmbH 2023

21.1.1 Tilting the crane operator's cab up

Make sure that the following prerequisites are met:
- The sliding door of the crane operator's cab is open and pushed into locking position.
- The cab is horizontally aligned.

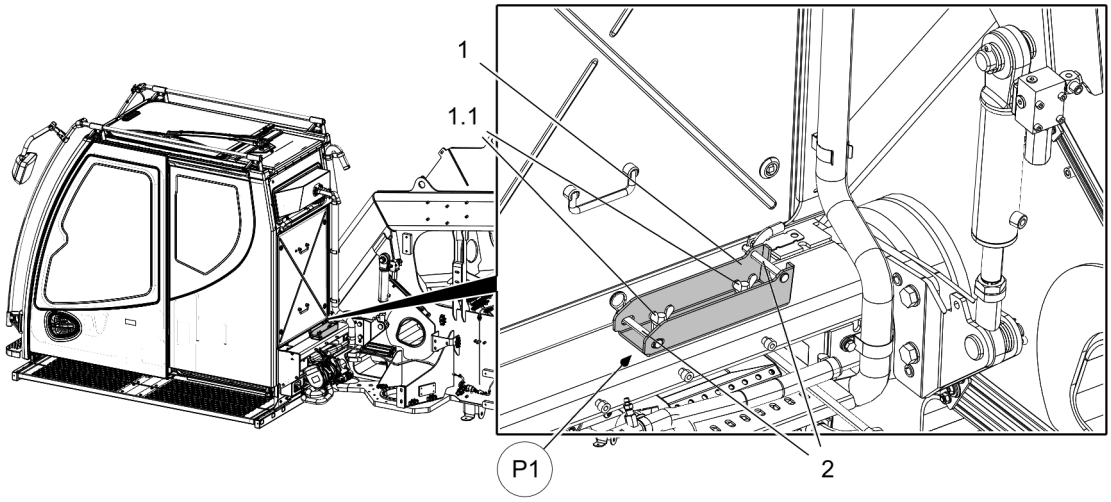

Fig.166286: Crane operator's cab, horizontal position

WARNING
Danger of injuries if sliding door opens in tilted position!
The sliding door can move back suddenly.
Hands can be crushed or injured.
When stepping on the step, persons can slip off.
► Before tilting the crane operator's cab, open the sliding door of the crane operator's cab and slide it into locking position.

When the crane operator's cab is tilted:
► Do **not** step on the step.
► Exit the crane operator's cab with a suitable climbing aid, such as a working platform.

► Release the retaining plate **1** in position **P1**. Remove the retaining elements **1.1**.
► Release and unpin the pin **2**.
► Until the crane operator cab can be secured with the retaining plate **1**: Tilt the crane operator's cab upward.
► Turn the engine off and pull out the ignition key.

LWE/LTR 1100-009/25105-02-02/en

copyright © Liebherr-Werk Ehingen GmbH 2023

21.1.2 Securing the crane operator's cab for maintenance work

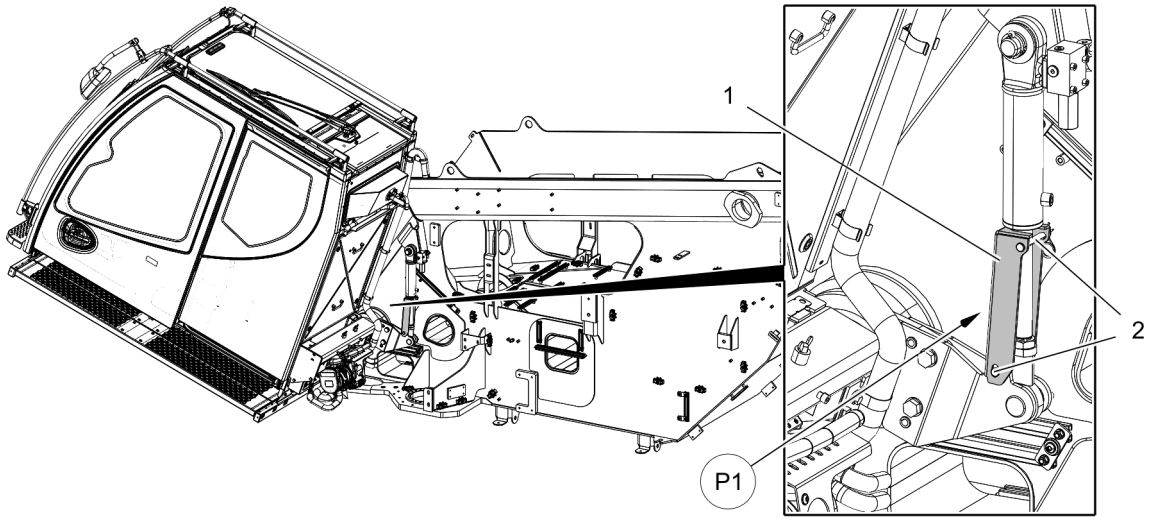

Fig.166287: Crane operator's cab, tilted position

WARNING
Danger of crushing!
If maintenance work is carried out before the crane operator's cab is secured to prevent it from tilting, personnel can be killed or severely injured.
► Secure the crane operator's cab with the retaining plate **1** to prevent it from tilting downward uncontrolled.

► Assemble the retaining plate **1** in position **P1**.
► Secure the retaining plate **1** with the pin **2**.

Result:

– The crane operator's cab is secured.

21.1.3 Replacing the filter insert

Note
► The maintenance interval can change depending on the area of operation.

LWE/LTR 1100-009/25105-02-02/en

copyright © Liebherr-Werk Ehingen GmbH 2023

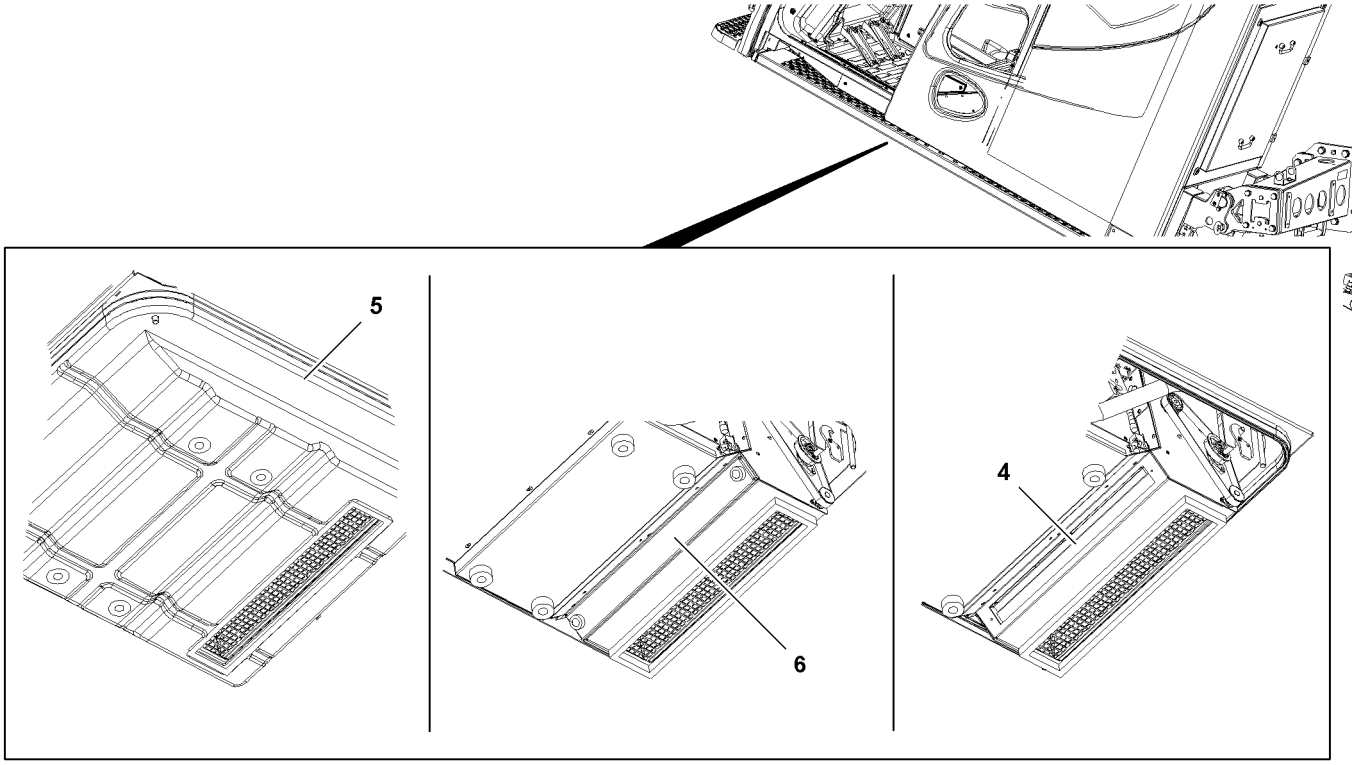

Fig.123690: Filter insert, heating-air conditioning device

- ► Remove the housing **5** and the cover **6**.
- ► Remove the filter insert **4** and replace it.
- ► Install the cover **6** and housing **5**.

21.1.4 Releasing the crane operator's cab

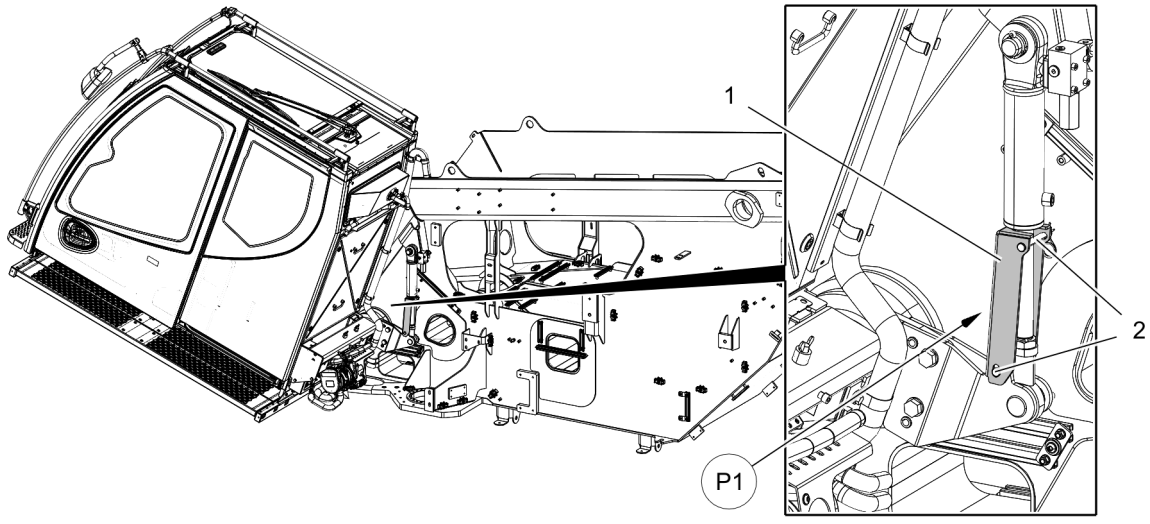

Fig.166287: Crane operator's cab, tilted position

- ► Release the pin **2** in position **P1** and remove it.
- ► Disassemble the retaining plate **1** in position **P1**.
- ► Assemble and secure the retaining plate **1** in the park position.

Result:

– The crane operator's cab is released.

LWE/LTR 1100-009/25105-02-02/en

copyright © Liebherr-Werk Ehingen GmbH 2023

► Align the crane operator's cab horizontally.

22 Crane cab auxiliary heater*

22.1 Checking the water heater

Make sure that the following prerequisites are met:
– The heater and the heating circuit are cold.

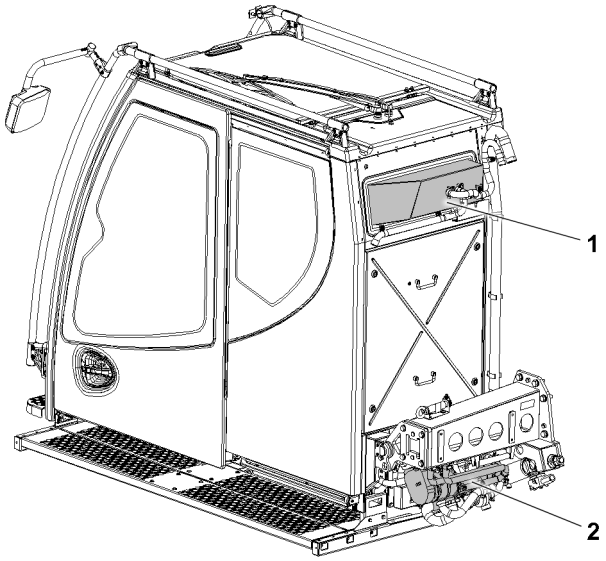

Fig.152567: Water heater, crane cab

1 Air heater **2** Water heater

► Check the electrical connections for corrosion and tight seating.
► Check the exhaust line and combustion air line for damage and free passage.
► Check the hoses for leaks and cracks.
► Check the circulation pump for leaks.
► Check the coolant circuit and coolant pump for leaks and cracks.
► Check the fuel line and fuel filter for leaks and cracks.

When separately installed:
► Check the fuel filter for free passage.
► Replace the fuel filter.

The ratio of corrosion inhibitor - antifreeze in the heating circuit must be 50 % .

► Check the ratio of corrosion inhibitor / antifreeze in the heating circuit.

22.2 Checking the air heater

Make sure that the following prerequisites are met:
– The heater and the heating circuit are cold.

LWE/LTR 1100-009/25105-02-02/en

copyright © Liebherr-Werk Ehingen GmbH 2023

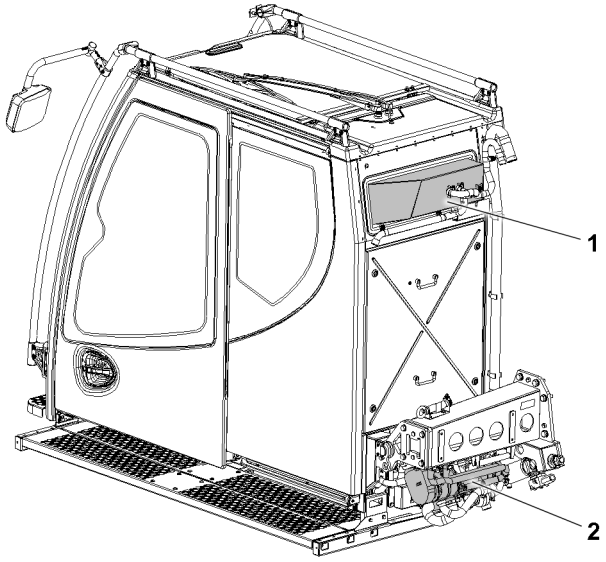

Fig.152567: Water heater, crane cab

1 Air heater **2** Water heater

- ► Check the heated air inlet and heated air outlet for dirt and foreign particles.
- ► Check the electrical connections for corrosion and tight seating.
- ► Check the exhaust line and combustion air line for damage and free passage.
- ► Check the fuel line for leaks and cracks.
- ► Replace the fuel filter.

23 Engine preheating auxiliary heater*

23.1 Checking the water heater

Make sure that the following prerequisite is met:
– The heater and the heating circuit are cold.

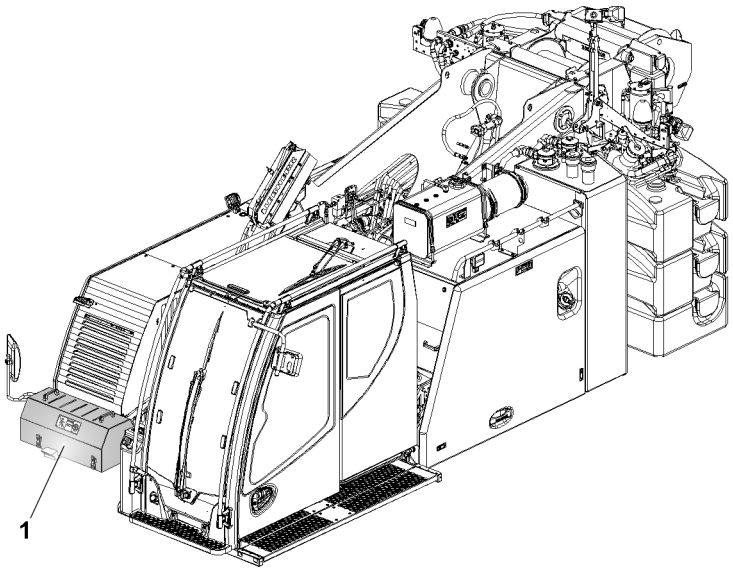

Fig.152571: Heaters, engine preheating

- ► Open the cover **1**.
- ► Check the electrical connections for corrosion and tight seating.

LWE/LTR 1100-009/25105-02-02/en

copyright © Liebherr-Werk Ehingen GmbH 2023

- ► Check the exhaust and combustion air line for damage and free passage.
- ► Check the hoses for leaks and cracks.
- ► Check the circulation pump for leaks.
- ► Check the coolant circuit and coolant pump for leaks and cracks.
- ► Check the fuel line and fuel filter for leaks and cracks.

When separately installed:
- ► Check the fuel filter for free passage.
- ► Replace the fuel filter.

24 Electrical system

24.1 Lights and fuses

NOTICE
Improper repair!
Damage to the electrical system.
- ► Defective fuses may **not** be bypassed with wire or similar.
- ► Only replace defective fuses with fuses that have the same current strength.
- ► Only replace defective lights with lights that have the same output.

When the same fuse or light becomes defective repeatedly:
- ► Check the electrical system.

24.2 Lines

- ► Make sure that all electrical lines are properly routed and fastened in their retainers.
- ► Fix any chafe marks or brittleness in the insulation and coverings immediately.
- ► Any installation lines that are **not** in perfect condition must be immediately and professionally replaced.

24.3 Batteries

24.3.1 Safety

Fast air movements by compressed air in combination with dust, dirt or other deposits can generate electrostatic charge.

WARNING
Compressed air used for cleaning near the battery!
Explosion due to electrostatic charge.
Death, severe bodily injury, property damage.
- ► **Never** use compressed for cleaning near the battery.

WARNING
Discharged batteries!
Danger of accident
- ► Make sure that the batteries are charged while the crane is not in operation.
- ► Charge the batteries only with the Liebherr charger.
- ► Make sure that batteries are charged during the cold season.

Note
- ► All safety signs on the batteries must always be complete and legible.
- ► Observe and adhere to the manufacturer's operating instructions.

LWE/LTR 1100-009/25105-02-02/en

copyright © Liebherr-Werk Ehingen GmbH 2023

Sign	Explanation
	Follow the guidelines on the battery, in the instruction manual and in the Crane operating instructions.
	Wear eye protection.
	Keep children away from acid and batteries.
	Danger of explosion! A highly explosive acoustic mixture is created when charging batteries.
	Warning! Fire, sparks, open flames and smoking are prohibited. Avoid spark formation when handling cables and electrical devices. Avoid short circuits.
	Danger of chemical burns! Battery acid is very caustic, for that reason: Wear protective gloves and eye protection. Do **not** tilt the battery, acid can emerge from the vent openings.
	First aid: If acid is splayed in an eye, rinse it immediately for several minutes with clear water and consult a physician immediately. Neutralize splashed acid on skin or clothing immediately with an antacid or soap and flush with lots of water. If acid was ingested, contact a physician immediately.
	Warning! Do **not** expose batteries unprotected to direct daylight. Discharged batteries can freeze. Store batteries frost free.
	Disposal! Dispose of old batteries at a collection point. During transport, observe the guidelines of the manufacturer. Never dispose of old batteries in general trash.
	Back to the manufacturer! Used batteries with this sign are reusable assets. Send batteries for recycling. Old batteries, which are **not** recycled must be disposed of as hazardous waste under observation of all regulations.

copyright © Liebherr-Werk Ehingen GmbH 2023

24.3.2 Checking the batteries

The following points must be checked on every battery:
- Contamination
- Damage
- Charge condition
- Acid level

Make sure that the following prerequisites are met:
- The diesel engine is turned off.
- The ignition key is pulled out.
- The battery master switch is turned off.
- An assembly scaffolding or a work platform is available.

DANGER
Electrical shock!
Death, severe bodily injuries.
► When working on the electrical system of the crane, disconnect batteries from the electric circuits.
► Avoid spark formation caused by electrostatic charge.

When working on batteries:
► Wear a ground strap.
► Do **not** bring oil, grease, fuel or solvents into contact with the battery casting compound.
► Keep batteries dry and clean.

Access to the crane chassis: Observe and adhere to the information in chapter 2.07.

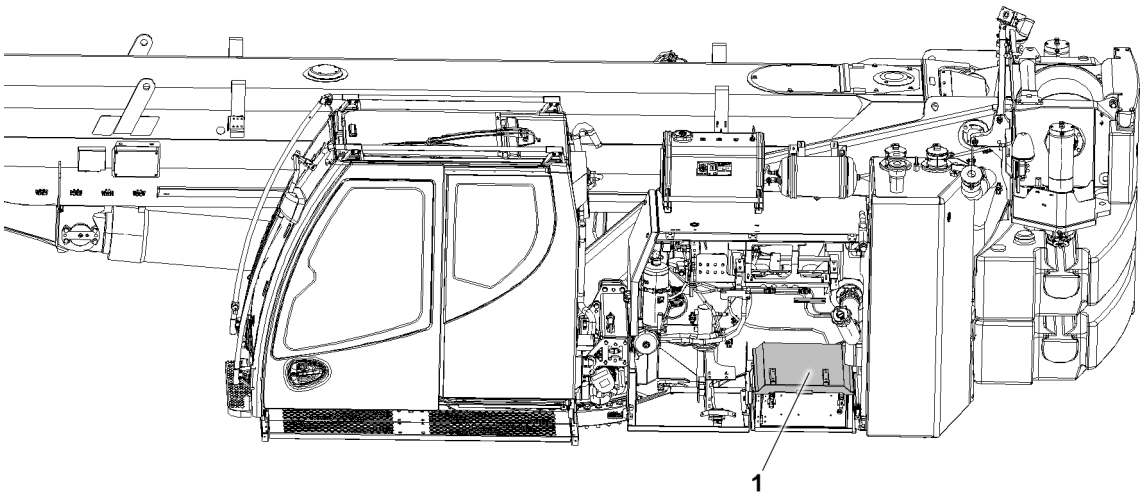

Fig.162772

1 Cover

► Remove the cover **1**.
► Release dirty terminals, clean and grease them with an acid-free and acid-resistant grease.
► Charge batteries in time.
► Make sure that batteries are charged during the cold season.

WARNING
Contact with acid!
Chemical burns, eye damage and skin irritation.
► Make sure that the acid vapors are **not** inhaled and battery acid is not swallowed.
► Make sure that skin, eyes and clothing do **not** come in contact with the battery acid.
► Observe the precautionary measures for handling chemicals.
► Use personal protective equipment (eye protection, protective gloves, clothing).
► Make sure that personnel are aware of first aid measures.

LWE/LTR 1100-009/25105-02-02/en

copyright © Liebherr-Werk Ehingen GmbH 2023

NOTICE
Excessively high or low acid level!
Property damage.
- ► Check the acid level in the battery only with a wooden stick or cardboard strip.
- ► Never check the acid level in the battery with metallic material.
- ► Adhere to the „minimum“ or „maximum“ acid level over the lead plates according to the specifications of the battery manufacturer.

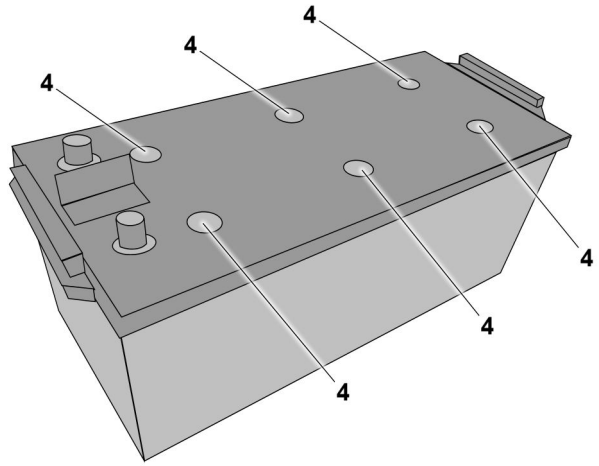

Fig.162368

4 Plug

► Unscrew the plug **4**.

The optimal temperature for measuring the acid level is +20 °C.

The permissible acid level lies between 10 mm and 15 mm above the lead plates.

► Check the battery acid level visually.
► Check the acid collection container.

When there is fluid in the acid collection container:
► Fill the acid in the acid collection container into the batteries.

If required:
► Add distilled water to increase the acid level.
► Wait 30 minutes and check the acid level.

When the seal on the plug **4** is damaged:
► Replace the seal.
► Screw in the plug **4** with a seal and tighten.
► Make sure that acid level is checked in all battery cells.
► Assemble the cover **1**.

Problem remedy
Is the acid level too high?
Too much fluid added.
► Remove fluid from the battery.
► Dispose of the fluid properly.

24.3.3 Charging a battery with the Liebherr charger

The Liebherr charger is integrated in the crane electrical system.

Make sure that the following prerequisites are met:
– The diesel engine is turned off.
– The ignition key is pulled out.
– The battery master switch is turned off.

LWE/LTR 1100-009/25105-02-02/en

copyright © Liebherr-Werk Ehingen GmbH 2023

► Establish the external power supply via an external power source.

Result:
– The batteries are charged automatically.

Problem remedy
Is the indicator light on the battery charger blinking?
The cable is not connected or electrical problem.
► Make sure that power cable plug is inserted completely.

If the problem cannot be remedied:
► Contact Customer Service at Liebherr-Werk Ehingen GmbH.

24.4 Replacing the interior compartment filter of the control cabinet ventilation

An interior filter for the ventilation of the control cabinet is located in the cab.

The filter must be replaced depending on the area of application and contamination.

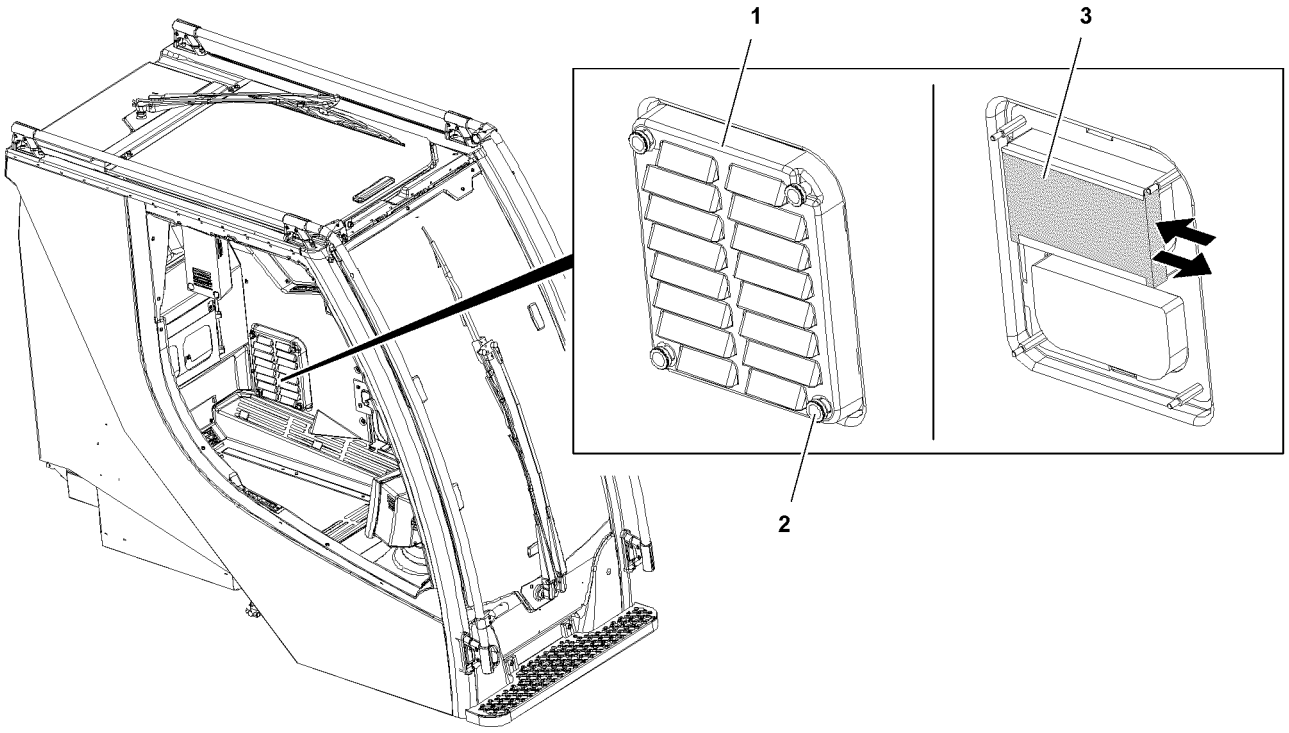

Fig.122791: Control cabinet ventilation

► Release and remove the knurled knobs **2**.
► Remove the cover **1**.
► Pull out the filter **3**.
► Slide in a new filter **3**.
► Place the cover **1** and screw tight with knurled knobs **2**.

LWE/LTR 1100-009/25105-02-02/en

copyright © Liebherr-Werk Ehingen GmbH 2023

7.06 Fill quantities, lubrication chart

1	Fill quantities	3
2	Lubrication schedule	4

LWE/LTR 1100-009/25105-02-02/en

copyright © Liebherr-Werk Ehingen GmbH 2023

LWE/LTR 1100-009/25105-02-02/en

Fig.195219

copyright © Liebherr-Werk Ehingen GmbH 2023

1 Fill quantities

WARNING
Handling poisonous operating fluids and lubricants!
Poisoning, severe health damage.

When operating fluids are to be used, stored and disposed of:
- ► Observe and follow the printed instructions on the original containers.
- ► Store operating fluids exclusively in the closed original container.
- ► Keep children away from operating fluids. Keep operating fluids away from children.
- ► Dispose of operating items and lubricants in an environmentally safe manner.

NOTICE
Damage on aggregates due to impermissible additives!
- ► Make sure that **no** impermissible additives are added to the operating fluids.

Note
- ► Fill quantities and descriptions of service items and lubricants are specified in the Service fill.
- ► Fill the crane chassis, crane superstructure and equipment with the respective operating fluids.
- ► The specified fill quantities (change quantities) are orientation values. The marks on the dipsticks, inspection ports and sight gauges are decisive for filling.
- ► The equipment depends on the purchased scope of delivery.

On mobile cranes with truck chassis:
- ► Observe the maintenance intervals and maintenance notes of the truck chassis manufacturer.

NOTICE
Danger of property damage!
- ► Do **not** mix different oil products!
- ► Do **not** mix synthetic oils with mineral oils!
- ► Adhere to the data in the Service fill!

1.1 Diesel engine

- ► Check the engine oil. See Maintenance intervals and maintenance instructions.
- ► Adhere to the operating instructions of the engine manufacturer.

1.2 Coolant system

NOTICE
Property damage due to impermissible coolant!
- ► Do **not** mix different coolant products.
- ► Do **not** thin Liebherr-Fertig-Mix (Liebherr Ready Made Mix).

When adding coolant:
- ► Use exclusively the same coolant.

Coolants contain corrosion inhibitor - antifreeze fluid.

Add coolant only on the filler neck. See Service fill.

Note
If the coolant is changed:
- ► Contact the Service Dept. at Liebherr-Werk Ehingen GmbH for procedure.
- ► Empty the cooling system completely and flush.

In exceptional cases, the coolant can be supplemented with different coolants.

LWE/LTR 1100-009/25105-02-02/en

copyright © Liebherr-Werk Ehingen GmbH 2023

Note
Supplementing the coolant with different coolants:
► Contact the Service Dept. at Liebherr-Werk Ehingen GmbH for procedure.

► Check the coolant level. See Maintenance intervals and maintenance instructions.

1.3 Transmission

► Check the gear oil. See Maintenance intervals and maintenance instructions.

1.4 Hydraulic system

Note
► The oil level must be in the center of the hydraulic oil level sight gauge at 20 °C oil temperature.

At lower hydraulic oil temperature:
► Warm up the hydraulic oil.

At higher hydraulic oil temperature:
► Cool off the hydraulic oil.
► Retract all hydraulic cylinders completely, for example luffing cylinder, telescoping cylinder.

On vehicles with level regulation:
► Lower the vehicle completely with the level regulation.

► Check the hydraulic oil. See Maintenance intervals and maintenance instructions.

2 Lubrication schedule

Note
► Grease the crane chassis, crane superstructure and equipment with the respective lubricants. See Service fill.
► The equipment depends on the purchased scope of delivery.

On mobile cranes with truck chassis:
► Observe the maintenance intervals and maintenance notes of the truck chassis manufacturer.

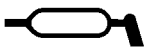

Fig.107729

Note
► Lube points are marked with a symbol.

LWE/LTR 1100-009/25105-02-02/en

copyright © Liebherr-Werk Ehingen GmbH 2023

7.07 Operating fluids and lubricants

1 Specified service fluids and lubricants for Liebherr cranes 3

LWE/LTR 1100-009/25105-02-02/en

copyright © Liebherr-Werk Ehingen GmbH 2023

LWE/LTR 1100-009/25105-02-02/en

Fig.195219

copyright © Liebherr-Werk Ehingen GmbH 2023

1 Specified service fluids and lubricants for Liebherr cranes

Information about the service fluids and lubricants that are approved for a mobile crane from Liebherr-Werk Ehingen GmbH can be found online at **https://lubricants.liebherr.com**.

Note

► Observe and adhere to the specifications and notes in the safety data sheets.

No.	Crane components	Ambient temperature for driving and crane operation	
		-20 °C to +50 °C	**-40 °C to +30 °C**
1.1	Diesel engine **with** Exhaust aftertreatment	**LWE Id. No.: 11100934** **Liebherr Motoroil 5W-30 low ash** **or:** **LWE Id. No.: 10663796** **Liebherr Motoroil 10W-40 low ash** LH-00–ENG$_{LA}$ Observe the instructions of the engine manufacturer	**LWE Id. No.: 11100934** **Liebherr Motoroil 5W-30 low ash** **or:** **LWE Id. No.: 10663796** **Liebherr Motoroil 10W-40 low ash** LH-00–ENG$_{LA}$ Observe the instructions of the engine manufacturer **below -20 °C** with pre-heating
	Note: To improve the cold start ability of the diesel engine at an ambient temperature below -10 °C we recommend the use of Liebherr Motoroil 5W-30 low ash, **LWE Id. no.: 11100934**		
	Cummins B 6.7 **with** Exhaust aftertreatment	**LWE Id. No.: 10663796** **Liebherr Motoroil 10W-40 low ash** CES 20081 **and** 5W-40 **or** CES 20081 **and** 10W-40	CES 20081 **and** 0W-40
	Note: To improve the cold start ability of the Cummins diesel engine at an ambient temperature below -10°C, we recommend the use of engine oil according to CES 20081 **and** SAE viscosity grade 5W-40		
Note: For alternative oil specifications, see the separate engine manufacturer's operating instructions.			

LWE/LTR 1100-009/25105-02-02/en

copyright © Liebherr-Werk Ehingen GmbH 2023

No.	Crane components	Ambient temperature for driving and crane operation	
		-20 °C to +50 °C	-40 °C to +30 °C
1.2	Diesel engine **without** Exhaust aftertreatment	**LWE Id. No.: 10871536** **Liebherr Motoroil 5W-30** **or:** **LWE Id. No.: 861005308** **Liebherr Motoroil 10W-40** LH-00–ENG Observe the instructions of the engine manufacturer	**LWE Id. No.: 10871536** **Liebherr Motoroil 5W-30** **or:** **LWE Id. No.: 861005308** **Liebherr Motoroil 10W-40** LH-00–ENG Observe the instructions of the engine manufacturer **below -20 °C** with pre-heating
	Note: To improve the cold start ability of the diesel engine at an ambient temperature below -10 °C , we recommend the use of Liebherr Motoroil 5W-30, **LWE-Id no.: 10871536**		
	Cummins B 6.7 **without** Exhaust aftertreatment	**LWE Id. No.: 10663796** **Liebherr Motoroil 10W-40 low ash** CES 20078 **and** 5W-40 **or** CES 20078 **and** 10W-40	CES 20078 **and** 0W-40
	Note: To improve the cold start ability of the Cummins diesel engine at an ambient temperature below -10°C, we recommend the use of engine oil according to CES 20078 **and** SAE viscosity grade 5W-40		
Note: For alternative oil specifications, see the separate engine manufacturer's operating instructions.			
2	Drive axle with differentials, planetary gear and installed distributor gear	**LWE Id. No.: 861901008** **Liebherr Gear Hypoid 90 EP** SAE 90 and API GL 5	**LWE Id. No.: 10425142** **Liebherr Syntogear Plus 75W-90** SAE 75W-90 and API GL 5
3	Axle drive ZF DK-7	**LWE Id. No.: 861901008** **Liebherr Gear Hypoid 90 EP** ZF TE-ML 05	**LWE Id. No.: 10425142** **Liebherr Syntogear Plus 75W-90** ZF TE-ML 05
4.1	Vehicle distributor gear KESSLER VG 1800, VG 2400, VG 2550, VG 2600, VG 2700, VG 3750, VG 3751 W 3750, W 3751	**LWE Id. No.: 861901008** **Liebherr Gear Hypoid 90 EP** SAE 90 and API GL 5	**LWE Id. No.: 10425142** **Liebherr Syntogear Plus 75W-90** SAE 75W-90 and API GL 5

LWE/LTR 1100-009/25105-02-02/en

copyright © Liebherr-Werk Ehingen GmbH 2023

No.	Crane components	Ambient temperature for driving and crane operation	
		-20 °C to +50 °C	-40 °C to +30 °C
4.2	Vehicle distributor gear with PTO for crane drive KESSLER VG 2700 with PTO VG 3751 with PTO	**LWE Id. No.: 10425142** **Liebherr Syntogear Plus 75W-90** SAE 75W-90 and API GL 5	**LWE Id. No.: 10425142** **Liebherr Syntogear Plus 75W-90** SAE 75W-90 and API GL 5
4.3	Vehicle distributor gear ZF Passau, STEYR PUCH VG 1200, VG 1600, VG 2000, VG 3800	**LWE Id. No.: 861901008** **Liebherr Gear Hypoid 90 EP** ZF TE-ML 19	**LWE Id. No.: 10425142** **Liebherr Syntogear Plus 75W-90** ZF TE-ML 19
4.4	Distributor gear for the electrohydraulic crane drive	**LWE Id. No.: 861900608** **Liebherr Hydraulic-Gear ATF** or **SAE 75W-90 und API GL 5**	
5	Miter gear for crane drive	**LWE Id. No.: 10425142** **Liebherr Syntogear Plus 75W-90** SAE 75W-90 and API GL 5	**LWE Id. No.: 10425142** **Liebherr Syntogear Plus 75W-90** SAE 75W-90 and API GL 5
6	Displacement gear (drop box) ZF Passau, STEYR PUCH	**LWE Id. No.: 861901008** **Liebherr Gear Hypoid 90 EP** ZF TE-ML 19	**LWE Id. No.: 10425142** **Liebherr Syntogear Plus 75W-90** ZF TE-ML 19
7.1	Pump distributor gear filled with mineral-oil-based gear oil	**LWE Id. No.: 861901008** **Liebherr Gear Hypoid 90 EP** SAE 90 and API GL 5 **NOTICE: May not be mixed with other oils!**	**LWE Id. No.: 10330289** **Liebherr Syntogear Plus 75W-90** SAE 75W-90 and API GL 5 **NOTICE:May not be mixed with other oils!**
7.2	Pump distributor gear filled with polyglycol-oil-based (PG) gear oil	**LWE Id. No.: 10665030** **Liebherr Gear PG 220** CLP PG, DIN 51 502 CLP (PG) 220, DIN 51517-3 **NOTICE: May not be mixed with other oils!**	**LWE Id. No.: 10664125** **Liebherr Gear PG 150** CLP PG, DIN 51 502 CLP (PG) 150, DIN 51517-3 **NOTICE: May not be mixed with other oils!**

LWE/LTR 1100-009/25105-02-02/en

copyright © Liebherr-Werk Ehingen GmbH 2023

No.	Crane components	Ambient temperature for driving and crane operation	
		-20 °C to +50 °C	-40 °C to +30 °C
7.3	Pump distributor gear filled with polyalphaolefine-based (PAO) gear oil	**LWE Id. No.: 10190390** **Liebherr Syntogear Plus 220** CLP HC, DIN 51 502 CLP (HC) 220, DIN 51517-3 **NOTICE: May not be mixed with other oils!**	**LWE Id. No.: 10190390** **Liebherr Syntogear Plus 220** CLP HC, DIN 51 502 CLP (HC) 220, DIN 51517-3 **NOTICE: May not be mixed with other oils!**
7.4	Pump distributor gear LTC 1055-3.1	**LWE Id. No.: 10425142** **Liebherr Syntogear Plus 75W-90** SAE 75W-90 and API GL 5	**LWE Id. No.: 10425142** **Liebherr Syntogear Plus 75W-90** SAE 75W-90 and API GL 5
8.1	Powershift transmission ZF torque converter WG 120, WG 150, WG 180, WG 181, WG 200, WG 201	**LWE Id. No.: 861005308** **Liebherr Motoroil 10W-40** ZF TE-ML 03	**LWE Id. No.: 861900608** **Liebherr Hydraulic-Gear ATF** ZF TE-ML 03 **below -20 °C** run until warm according to the operating instructions
8.2	Powershift transmission ZF torque converter WG 251* ZF ERGOPOWER WG 210, WG 260, WG 310 * also for ambient temperatures above -10 °C	**LWE Id. No.: 861900608** **Liebherr Hydraulic-Gear ATF** ZF TE-ML 03	**LWE Id. No.: 861900608** **Liebherr Hydraulic-Gear ATF** ZF TE-ML 03 **below -20 °C** run until warm according to the operating instructions
9	Powershift transmission CLARK	**LWE Id. No.: 861005308** **Liebherr Motoroil 10W-40** SAE 10W-40 and ACEA E4	**LWE Id. No.: 861900608** **Liebherr Hydraulic-Gear ATF** ATF Dexron II D and ALLISON C4 **below -20 °C** run until warm according to the operating instructions
10	Displacement gear (drop box) ALLISON	**LWE Id. No.: 861005308** **Liebherr Motoroil 10W-40** SAE 10W-40 and API CF, ACEA E4	**LWE Id. No.: 861900608** **Liebherr Hydraulic-Gear ATF** ALLISON C4 **below -20 °C** run until warm according to the operating instructions

LWE/LTR 1100-009/25105-02-02/en

copyright © Liebherr-Werk Ehingen GmbH 2023

No.	Crane components	Ambient temperature for driving and crane operation	
		-20 °C to +50 °C	-40 °C to +30 °C
11.1	Automatic transmission ALLISON CLBT 740, CLBT 750, CLBT 754, CLBT 755 HT 755, HD 4560	**LWE Id. No.: 861900608** **Liebherr Hydraulic-Gear ATF** ALLISON C4	**LWE Id. No.: 861903708** **CASTROL Transynd** ALLISON C4 **below -20 °C** run until warm according to the operating instructions
11.2	Automatic transmission ZF	**LWE Id. No.: 861900608** **Liebherr Hydraulic-Gear ATF** ZF TE-ML 14	**LWE Id. No.: 861900608** **Liebherr Hydraulic-Gear ATF** ZF TE-ML 14 **below -20 °C** run until warm according to the operating instructions
12.1	Automatic transmission ZF AS-Tronic ZF TC-Tronic (basic gear) ZF TC-Tronic HD (basic gear)	**LWE Id. No.: 10218305** **ZF-Ecofluid M** ZF TE-ML 02	**LWE Id. No.: 10218305** **ZF-Ecofluid M** ZF TE-ML 02 **below -20 °C** preheat the gear according to the operating instructions
12.2	Automatic transmission ZF TraXon ZF TraXon Torque (basic gear)	**LWE Id. No.: 10218305** **ZF-Ecofluid M** ZF TE-ML 02	**LWE Id. No.: 10218305** **ZF-Ecofluid M** ZF TE-ML 02 **below -20 °C** preheat the gear according to the operating instructions
13.1	Torque converter coupling ZF TC HD	**LWE Id. No.: 10218305** **ZF-Ecofluid M** ZF TE-ML 02	**LWE Id. No.: 10218305** **ZF-Ecofluid M** ZF TE-ML 02 **below -20 °C** preheat the gear according to the operating instructions
13.2	Torque converter coupling ZF TC 2	**LWE Id. No.: 861900608** **Liebherr Hydraulic-Gear ATF** ZF TE-ML 14	**LWE Id. No.: 861900608** **Liebherr Hydraulic-Gear ATF** ZF TE-ML 14
13.3	Wet starting clutch ZF Dynamic Perform	**LWE Id. No.: 12101837** **ZF-Ecofluid Life Plus** ZF TE-ML 25	**LWE Id. No.: 12101837** **ZF-Ecofluid Life Plus** ZF TE-ML 25
14	Transmission ZF ECO-Split	**LWE Id. No.: 10218305** **ZF-Ecofluid M** ZF TE-ML 02	**LWE Id. No.: 10218305** **ZF-Ecofluid M** ZF TE-ML 02

LWE/LTR 1100-009/25105-02-02/en

copyright © Liebherr-Werk Ehingen GmbH 2023

No.	Crane components	Ambient temperature for driving and crane operation	
		-20 °C to +50 °C	-40 °C to +30 °C
15.1	Slewing gear filled with polyglycol-oil-based (PG) gear oil	**LWE Id. No.: 10665030** **Liebherr Gear PG 220** CLP PG, DIN 51 502 CLP (PG) 220, DIN 51517-3 **NOTICE: May not be mixed with other oils!**	**LWE Id. No.: 10665030** **Liebherr Gear PG 220** CLP PG, DIN 51 502 CLP (PG) 220, DIN 51517-3 **NOTICE: May not be mixed with other oils!**
15.2	Slewing gear filled with polyalphaolefine-based (PAO) gear oil	**LWE Id. No.: 10190390** **Liebherr Syntogear Plus 220** CLP HC, DIN 51 502 CLP (HC) 220, DIN 51517-3 **NOTICE: May not be mixed with other oils!**	**LWE Id. No.: 10190390** **Liebherr Syntogear Plus 220** CLP HC, DIN 51 502 CLP (HC) 220, DIN 51517-3 **NOTICE: May not be mixed with other oils!**
16.1	Rope winch filled with polyglycol-oil-based (PG) gear oil	**LWE Id. No.: 10665030** **Liebherr Gear PG 220** CLP PG, DIN 51 502 CLP (PG) 220, DIN 51517-3 **NOTICE: May not be mixed with other oils!**	**LWE Id. No.: 10665030** **Liebherr Gear PG 220** CLP PG, DIN 51 502 CLP (PG) 220, DIN 51517-3 **NOTICE: May not be mixed with other oils!**
16.2	Rope winch filled with polyalphaolefine-based (PAO) gear oil	**LWE Id. No.: 10190390** **Liebherr Syntogear Plus 220** CLP HC, DIN 51 502 CLP (HC) 220, DIN 51517-3 **NOTICE: May not be mixed with other oils!**	**LWE Id. No.: 10190390** **Liebherr Syntogear Plus 220** CLP HC, DIN 51 502 CLP (HC) 220, DIN 51517-3 **NOTICE: May not be mixed with other oils!**
16.3	Rope winch (tooth flanks) LR 12500-1.0 LR 13000	**LWE Id. No.: 11000948** **Liebherr Universalfett 9900** KPF2N-25, DIN 51502	**LWE Id. No.: 12105012** **Liebherr Universalfett Arctic** KPFHC1N-60, DIN 51502
17.1	Winch of Telescopic boom guying filled with polyglycol-oil-based (PG) gear oil	**LWE Id. No.: 861901208** **Liebherr Gear PG 220** CLP PG 220, DIN 51 502 CLP (PG) 220, DIN 51517-3 **NOTICE: May not be mixed with other oils!**	**LWE Id. No.: 861901208** **Liebherr Gear PG 220** CLP PG 220, DIN 51 502 CLP (PG) 220, DIN 51517-3 **NOTICE: May not be mixed with other oils!**

LWE/LTR 1100-009/25105-02-02/en

copyright © Liebherr-Werk Ehingen GmbH 2023

No.	Crane components	Ambient temperature for driving and crane operation	
		-20 °C to +50 °C	-40 °C to +30 °C
17.2	Winch of Telescopic boom guying filled with polyalphaolefine-based (PAO) gear oil	**LWE Id. No.: 10190390** **Liebherr Syntogear Plus 220** CLP HC, DIN 51 502 CLP (HC) 220, DIN 51517-3 **NOTICE: May not be mixed with other oils!**	**LWE Id. No.: 10190390** **Liebherr Syntogear Plus 220** CLP HC, DIN 51 502 CLP (HC) 220, DIN 51517-3 **NOTICE: May not be mixed with other oils!**
18.1	Crane hydraulics Crane chassis and crane superstructure Observe exceptions, see 18.2 and 18.3	**LWE Id. No.: 861903508** **Liebherr Hydraulic 37**	**LWE Id. No.: 10293807** **Liebherr Hydraulic Plus Arctic**
18.2	Crane hydraulics Crane chassis and crane superstructure LTM 11200-9.1 LTR 11200 LR-crane and LG-crane with LICCON 2 control LTC 1055-3.1	**LWE Id. No.: 10293807** **Liebherr Hydraulic Plus Arctic**	**LWE Id. No.: 10293807** **Liebherr Hydraulic Plus Arctic**
18.3	Crane hydraulics Crane chassis and crane superstructure for crane use in environmentally sensitive areas	**LWE Id. No.: 861000108** **Liebherr Hydraulic Plus 37**	
19	Brake system if hydraulically actuated	**LWE Id. No.: 861000108** **DOT 4** SAE J 1703e	**LWE Id. No.: 861000108** **DOT 4** SAE J 1703e
20	Clutch actuator	**LWE Id. No.: 861000108** **DOT 4** SAE J 1703e	**LWE Id. No.: 861000108** **DOT 4** SAE J 1703e
21	King pin bearing Gear shaft if **not** maintenance-free	**LWE Id. No.: 861301308** **Liebherr Spezialfett 9610 Plus** KP2K-20, DIN 51502	**LWE Id. No.: 10296825** **Liebherr Universalfett Arctic** KPFHC1N-60, DIN 51502
22.1	Glide and roller bearing roller bearing joint	**LWE Id. No.: 861301308** **Liebherr Spezialfett 9610 Plus** KP2K-20, DIN 51502	**LWE Id. No.: 10296825** **Liebherr Universalfett Arctic** KPFHC1N-60, DIN 51502
22.2	Rope pulley bearing	**LWE Id. No.: 10296825** **Liebherr Universalfett Arctic** KPFHC1N-60, DIN 51502	**LWE Id. No.: 10296825** **Liebherr Universalfett Arctic** KPFHC1N-60, DIN 51502

LWE/LTR 1100-009/25105-02-02/en

copyright © Liebherr-Werk Ehingen GmbH 2023

No.	Crane components	Ambient temperature for driving and crane operation	
		-20 °C to +50 °C	-40 °C to +30 °C
23	Central lubrication system	**LWE Id. No.: 861301308** **Liebherr Spezialfett 9610 Plus** KP2K-20, DIN 51502	**LWE Id. No.: 10296825** **Liebherr Universalfett Arctic** KPFHC1N-60, DIN 51502
24.1	Slewing ring connection Roller bearing	**LWE Id. No.: 861301308** **Liebherr Spezialfett 9610 Plus** KP2K-20, DIN 51502	**LWE Id. No.: 10296825** **Liebherr Universalfett Arctic** KPFHC1N-60, DIN 51502
24.2	Slewing ring connection LR 12500-1.0 LR 13000	**LWE Id. No.: 11000948** **Liebherr Universalfett 9900** KPF2N-25, DIN 51502	**LWE Id. No.: 10296825** **Liebherr Universalfett Arctic** KPFHC1N-60, DIN 51502
25.1	Support plate with equalization	**LWE Id. No.: 10877698** **Loctite LB 8104** Silicone oil base **NOTICE: Do not use oils with another base!**	**LWE Id. No.: 10877698** **Loctite LB 8104** Silicone oil base **NOTICE: Do not use oils with another base!**
25.2	Sliding shoes for cab guidance on vehicle frame LTC 1045-3.1 LTC 1050-3.1	**LWE Id. No.: 861303608** **Liebherr Teleskopfett 9613 Plus** KP2K-30, DIN 51502	**LWE Id. No.: 861303608** **Liebherr Teleskopfett 9613 Plus** KP2K-30, DIN 51502
26	Sliding beam Plastic glide bearing Beam for track adjustment	**LWE Id. No.: 861303608** **Liebherr Teleskopfett 9613 Plus** KP2K-30, DIN 51502	**LWE Id. No.: 861303608** **Liebherr Teleskopfett 9613 Plus** KP2K-30, DIN 51502
27.1	Telescopic boom Lower shell outer slide bearing Plastic glide bearing or corner guide top Cylinder guide in telescope end section Lock pocket in telescope end section (only for Telematik)	**LWE Id. No.: 861303608** **Liebherr Teleskopfett 9613 Plus** KP2K-30, DIN 51502	**LWE Id. No.: 861303608** **Liebherr Teleskopfett 9613 Plus** KP2K-30, DIN 51502

LWE/LTR 1100-009/25105-02-02/en

copyright © Liebherr-Werk Ehingen GmbH 2023

No.	Crane components	Ambient temperature for driving and crane operation	
		-20 °C to +50 °C	-40 °C to +30 °C
27.2	Telescopic boom LTC 1045-3.1 LTC 1050-3.1 Lower shell outer slide bearing Plastic glide bearing or corner guide top Cylinder guide in telescope end section Lock pocket in telescope end section (only for Telematik)	**LWE Id. No.: 11651459** **Bechem Berulub TCG 1 V**	**LWE Id. No.: 11651459** **Bechem Berulub TCG 1 V**
27.3	Telescopic boom LTM 1050-3.1 Lower shell outer slide bearing Plastic glide bearing or corner guide top Cylinder guide in telescope end section Lock pocket in telescope end section (only for Telematik)	**LWE Id. No.: 10878154** **Liebherr Sliding Paste TB 1**	**LWE Id. No.: 10878154** **Liebherr Sliding Paste TB 1**
28	Boom lock	**LWE Id. No.: 861301308** **Liebherr Spezialfett 9610 Plus** KP2K-20, DIN 51502	**LWE Id. No.: 10296825** **Liebherr Universalfett Arctic** KPFHC1N-60, DIN 51502
29	Gear ring rotary connection Slewing gear drive pinion	**LWE Id. No.: 861007708** **Liebherr RHS-Fluid** OGPF 0 S-20, DIN 51502	**LWE Id. No.: 861007708** **Liebherr RHS-Fluid** OGPF 0 S-20, DIN 51502
		or **LWE Id. No.: 861301508** **Liebherr gear protection RHY** OGPF 2 S-30, DIN 51502	**or** **LWE Id. No.: 861301508** **Liebherr gear protection RHY** OGPF 2 S-30, DIN 51502
30	Running rope	**LWE Id. No.: 10173371** **Liebherr WR-Lube SC** Adhesive grease	**LWE Id. No.: 10173371** **Liebherr WR-Lube SC** Adhesive grease
		or **LWE Id. No.: 10174262** **Liebherr WR-Lube SC** Adhesive grease	**or** **LWE Id. No.: 10174262** **Liebherr WR-Lube SC** Adhesive grease

LWE/LTR 1100-009/25105-02-02/en

copyright © Liebherr-Werk Ehingen GmbH 2023

No.	Crane components	Ambient temperature for driving and crane operation	
		-20 °C to +50 °C	-40 °C to +30 °C
31	Radiator fluid Diesel engine and heating system	**LWE Id. No.: 10871121** **Liebherr Antifreeze OS Mix** Pre-mixed corrosion inhibitor / antifreeze **NOTICE: May not be diluted and / or mixed with other corrosion inhibitors / antifreeze!**	**LWE Id. No.: 10871121** **Liebherr Antifreeze OS Mix** Pre-mixed corrosion inhibitor / antifreeze **NOTICE: May not be diluted and / or mixed with other corrosion inhibitors / antifreeze!**
32.1	Crawler crane travel gear	see data tag	see data tag
32.2	Crawler crane with telescopic boom travel gear	see data tag	see data tag
33	Recovery winch	See the data tag and manufacturer's specifications	See the data tag and manufacturer's specifications
34	Recovery winch rope	See the manufacturer's specifications	See the manufacturer's specifications
35	Steering uncoupling LTC 1045-3.1 LTC 1050-3.1	**LWE Id. No.: 10800345** **Teflon-Spray**	**LWE Id. No.: 10800345** **Teflon-Spray**
36	Pin connections	**LWE Id. No.: 11000948** **Liebherr Universalfett 9900** KPF2N-25, DIN 51502	**LWE Id. No.: 11000948** **Liebherr Universalfett 9900** KPF2N-25, DIN 51502

LWE/LTR 1100-009/25105-02-02/en

copyright © Liebherr-Werk Ehingen GmbH 2023

8 Inspections of cranes

LWE/LTR 1100-009/25105-02-02/en

copyright © Liebherr-Werk Ehingen GmbH 2023

LWE/LTR 1100-009/25105-02-02/en

copyright © Liebherr-Werk Ehingen GmbH 2023

8.01 Periodic crane inspections

1	General information	2
2	Inspecting load bearing crane structures, especially steel structures	4
3	Inspecting the locking system of the telescopic boom	89
4	Inspection of the screws in the adjustment plates	91
5	Checking the safety ropes and anchor points	92
6	Inspecting the load handling equipment and assembly aids	94
7	Inspecting of fastening equipment	94
8	Inspecting the hydro reservoir	95
9	Inspecting the relapse cylinders	95
10	Inspecting the rope pulleys	96
11	Inspecting the carrier rollers	97
12	Inspecting the extension conditions of sliding beams	98
13	Inspecting the inclination sensor	99
14	Inspecting the function of the overload protection	100
15	Inspecting the pin connections	100
16	Inspecting the slewing ring connection	101
17	Inspecting the mounting of the load bearing equipment	101
18	Inspecting the tele extension with eccentric, illustration 1	103
19	Inspecting the change over pulleys, illustration 2	104
20	Inspecting the oil and fuel tanks	104

LWE/LTR 1100-009/25105-02-02/en

copyright © Liebherr-Werk Ehingen GmbH 2023

1 General information

This crane was tested at the manufacturer's facilities prior to shipment in accordance with the valid ISO, FEM and DIN Standards and DGUV 52 (DGUV 309-001).

The safety level achieved during initial start up may not be attainable during operation.

Examples of the root cause of such deviations include; e.g., wear and tear, corrosion, effects of external forces, changes in the environment and changes to the mode of operation.

The operator is responsible for taking the necessary steps to ensure that the level of safety is maintained.

Periodic inspections are regulated nationally in the BetrSichV.

The crane operator is therefore obligated to have the crane inspected by an **authorized inspector**, at intervals depending on the operational conditions but at least once per year, from the first day of vehicle registration.

Certain conditions of use require however shorter inspection intervals or tests.

Conditions of use, the shorter inspection intervals or inspections between the regular inspections require:
- High utilization of the crane and / or a greater number of load cycles.
- Ramming work and pulling work, see chapter 4.08.
- Operation at low temperatures, see chapter 2.08.
- Lifting of personnel, see chapter 2.04.
- Situations during which the crane was exposed to sudden loads.

When equipment parts from other cranes are used: Make sure that the inspections and inspection intervals are observed also for the replaced equipment parts.

The operator specifies an authorized inspector and assigns him to perform the tests and maintenance required nationally and by Liebherr-Werk Ehingen GmbH to ensure further, safe and reliable crane operation:
- Carry out the inspection tasks required by Liebherr-Werk Ehingen GmbH.
- Additional national inspection intervals must be monitored by the crane operator.

Every 4 operating years, in the 13th Operating year and thereafter at least annually, from the first day of vehicle registration, the crane must be inspected by an **inspection expert**.

Periodic inspection are principally a visual inspection, where the inspector appraises the condition of the crane and its components.

WARNING
There is danger of weakening the supporting components when major changes or repairs are made to the crane!
► In this case, the operator must have the crane reinspected by an inspection expert before putting it back in service!

In addition, all respective local and national regulations apply.

Authorized inspector
Authorized inspectors are those persons who through their professional training, their professional experience and their recent professional activity have the necessary knowledge for the inspection of work equipment.

Authorized inspector for pressure containers
Authorized inspectors for pressure containers are authorized inspectors who additionally:
- Have relevant technical professional training.
- Have at least one year of experience with the manufacture, assembly, operation or maintenance of the equipment or components to be inspected in accordance with BetrSichV.
- Keep their knowledge about pressure-related hazards up to date by participating in training or instruction, in particular with regard to the following topics:
  - Design and manufacturing processes

LWE/LTR 1100-009/25105-02-02/en

copyright © Liebherr-Werk Ehingen GmbH 2023

- Equipment and safeguarding concepts
- Assembly, installation and operation / use
- Intended use
- Risk assessment
- Inspections, inspection periods, inspection procedures including assessment of the results
- Relevant influences and damage symptoms found in practice

Inspection expert

Inspection experts are authorized inspectors who also:

- Have completed training as an engineer or have equivalent knowledge and experience in the subject area with which their activities are involved.
- Have at least three years of experience in the design, construction, maintenance or inspection of cranes, of which at least half a year were involved in the inspection activities of an inspection expert.
- Possess sufficient knowledge of the relevant regulations and rules.
- Have the necessary facilities for inspection and documentation.
- Keep their professional knowledge up to date.

To ensure the high safety standard of the crane, it is recommended, no later than the 12th year, in the 20th year, in the 26th year and then every 4 years, to have the crane undergo a **general inspection** by an **inspection expert**. At that time, in addition to the usual scope of inspection, all load carrying parts of the crane - the complete steel structure with all welding seams as well as all components and connecting devices - are to be subjected to a complete visual inspection. The following procedural notes for repeat inspections are to be observed for that.

The purpose of the inspections is to avoid accidents by detecting deficiencies early on. Any deficiencies found by the inspector must be documented, corrected and subsequently reinspected.

For safe crane operation, important components must be inspected for their percentage of utilization or their reusability. Based on this inspection a statement can be made about the suitability of the components for further operation.

A number of important examples of items that are particularly important during the periodic crane inspections are listed below. We wish to advise that the **authorized inspectors** or **inspection experts** take sole responsibility for the crane inspections that they carry out.

Note

► The inspection may not be solely limited to the following positions shown in the sample component illustrations. Rather the **entire** crane structure must be subjected to a careful inspection!

A checklist is provided in the Crane operating instructions, chapter 8.90, to assist the inspector during the periodic inspections of Liebherr mobile and crawler cranes.

If the inspector has any questions they should be directed through the Service Department of Liebherr-Werk Ehingen GmbH to the technical departments.

WARNING

Danger of accident!

► Adhere to the following inspection guidelines and intervals.

LWE/LTR 1100-009/25105-02-02/en

copyright © Liebherr-Werk Ehingen GmbH 2023

2 Inspecting load bearing crane structures, especially steel structures

2.1 Basic principles and procedure

DANGER
Danger of fatal injury!
The crane structures, particularly steel constructions, have to be checked by an **authorized inspector** or **inspection expert** at least once a year. If this is not the case, they could fail and cause fatal injury or seriously damage the crane!

- ► Crane structures, particularly steel constructions must be checked by an **authorized inspector** or an **inspection expert** at least once a year!
- ► Shorten the inspection intervals when the crane is subjected to above-average load spectrums, for example during handling operation or frequently erecting long boom systems.
- ► When the crane was subjected to excessive operating loads; e.g., due to an unusual impact, the crane structure, especially the steel structures must be inspected immediately!

Crane structures, especially steel structures, such as booms, turntables, chassis, support equipment (e.g., sliding beams or folding outriggers) must be carefully inspected, at the very least during the annual recommended crane inspections. Inspect welding seams especially through an intensive visual inspection.

If paint damage with corrosion (rust) is found on load carrying parts of the crane structure, especially on telescopic booms, lattice booms, lattice jibs, pull rods etc., then the rust must be removed, primed and painted.

In the case of an electrolyte process, such as corrosion in combination with water, atomic hydrogen is created, which leads to hydrogen induced corrosion with resulting cracks in high tensile fine grain construction steel.

If disassembly and assembly work on the crane is required to carry out the inspections, then they must be carried out by taking the manufacturer's data into account or in coordination with the crane manufacturer.

We would like to point out that the framework of mobile cranes is designed for a limited number of stress work cycles. This also determines the utilization or service life of the framework. The service life is not determined solely by the number of stress cycles. It also depends on the loads (load spectrum) applied during the time in operation.

Liebherr mobile and crawler cranes are designed for specific characteristics and movements, such as constant deployment of drive forces, only occasional operation and load conditions according to EN 13000.

Liebherr mobile and crawler cranes are designed for assembly operation and can only perform a limited number of load cycles (N=63000). They are classified according to ISO 4301-2 in Class A1 and assigned according to ISO 4301-1 of collective class Q_1 = light (k_p = 0.125).

Regular overload tests are **not** recommended. An overload check may be necessary after repair welding on load bearing parts. An overload inspection may also be necessary after a general overhaul or other changes to load bearing parts. Contact **Liebherr-Werk Ehingen GmbH** customer service for suitable test loads.

LWE/LTR 1100-009/25105-02-02/en

copyright © Liebherr-Werk Ehingen GmbH 2023

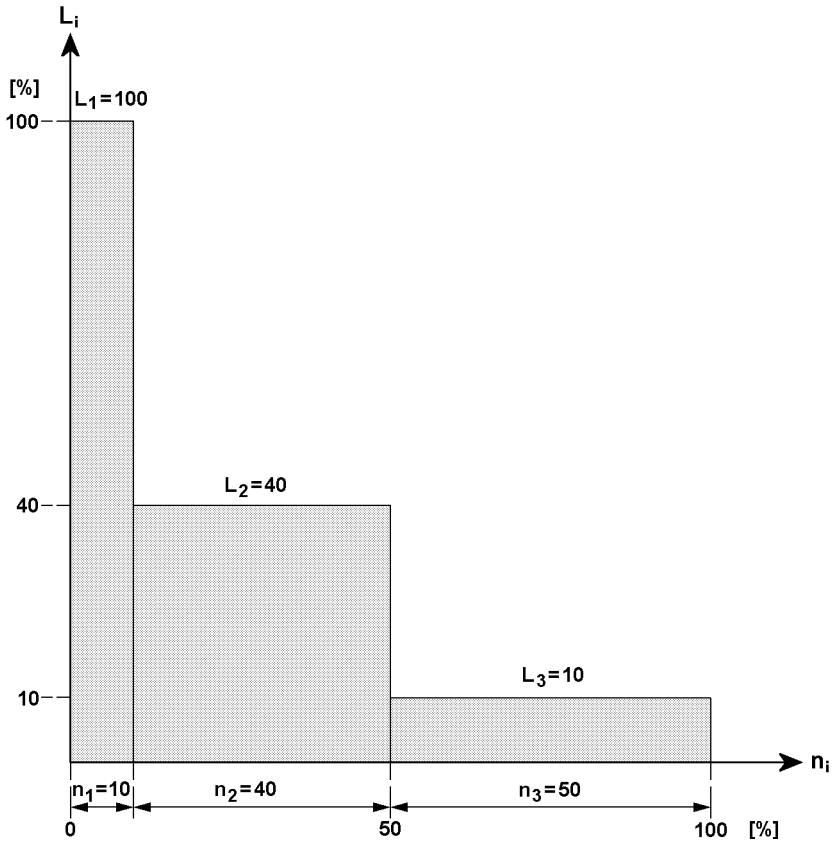

Fig.104716: Load spectrum example: Grouped according to collective class Q_1 = light (k_p = 0.125)

L_i: Load proportion in relation to maximum load [%]

n_i: Load cycles in relation to maximum number [%]

Note

- The service life of Liebherr mobile and crawler cranes can be drastically reduced, for example when used in magnet, grabbing or handling operations!
- Repeated inspection of crane structure, especially the steel structure and the welding seams must then be carried out in shorter intervals than specified.

For that reason, the steel structures and the welding joints must be subjected to a visual intensive inspection by the **authorized inspector** or **inspection expert** during the specified periodic inspections.

If any damage, such as cracks or suspicion of cracks, are apparent on any part of the steel structure, the total extent of the damage must be determined by qualified specialists using appropriate material testing methods, such as magnetic crack detection, ultrasound or x-rays. Thereafter, the qualified personnel must determine whether or not the damaged area can be repaired by welding or by other means.

Note

- The scope and extent of all inspections remain the sole responsibility of the inspectors!
- The scope and results of tests should be documented to permit reproducibility. This documentation forms part of the crane records and should be safely stored during the entire service life of the crane!

2.2 Repair welding

Defects such as cracks or permanent deformations on load-bearing steel components must be immediately reported to Customer Service at **Liebherr-Werk Ehingen GmbH**.

LWE/LTR 1100-009/25105-02-02/en

copyright © Liebherr-Werk Ehingen GmbH 2023

The defect must immediately be appraised by an inspection expert according to standard welding technology rules. The inspection expert must immediately ascertain if the crane can continue to be safely operated due to danger of accident until a repair welding is performed.

Repair welding may solely be made in consultation and under the guidance of Customer Service at **Liebherr-Werk Ehingen GmbH** by authorized and trained expert personnel.

WARNING
Repair welding **not** according to regulations!
Death, severe bodily injuries, property damage.
► Contact Customer Service at **Liebherr-Werk Ehingen GmbH**.
► Coordinate the procedure for repair welding with **Liebherr-Werk Ehingen GmbH**.

Note
Exclusion of liability!
In the case of repair welding that were not carried out by personnel from **Liebherr-Werk Ehingen GmbH** or by authorized personnel from **Liebherr-Werk Ehingen GmbH**, **Liebherr-Werk Ehingen GmbH** excludes all liability for system functionality as well as for the parts.
► Have repair welding performed only by personnel of **Liebherr-Werk Ehingen GmbH** or by personnel authorized by **Liebherr-Werk Ehingen GmbH**.

2.3 Description of test points

All welding seams must be checked completely in the following positions:
– Force transmission points
– Fastening points
– Pipe connections
– Pipe intersections
– Louvered plates
– Inserted plates
– Welded metal springs
– Connections of fork-finger joints
– Double walls
– Welded lifting lugs
– Welded eyehooks

2.4 Examples of test points

The following diagrams are examples of the load bearing welding structures. The welding joints or seams or steel structural zones that require inspection may be present more than once and in various forms. The joints or zones must be inspected all around in the locations identified by arrows.

DANGER
Incomplete welding seam inspection!
Death, severe injuries, property damage.
The following diagrams are provided to assist the inspector. The illustrations are only examples and are not necessarily 100 % complete!
► Check all welding seams to be inspected.

Note
► The welding seams in force transmission points to be inspected are marked by a circle.
► The welding seams to be checked are marked with arrows.

LWE/LTR 1100-009/25105-02-02/en

copyright © Liebherr-Werk Ehingen GmbH 2023

2.4.1 Crane chassis

Vehicle frame

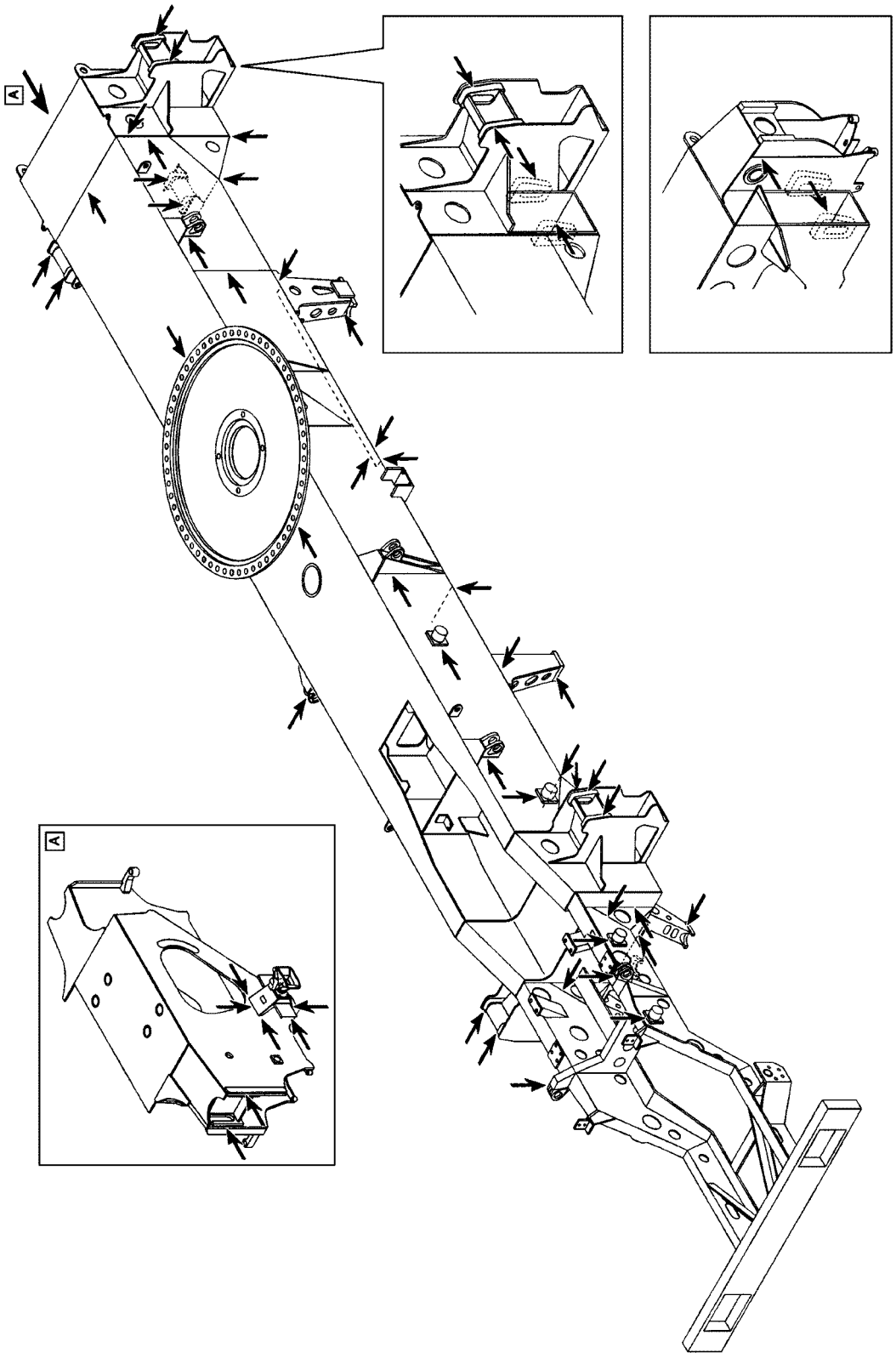

Fig.164852: Example of a vehicle frame

LWE/LTR 1100-009/25105-02-02/en

copyright © Liebherr-Werk Ehingen GmbH 2023

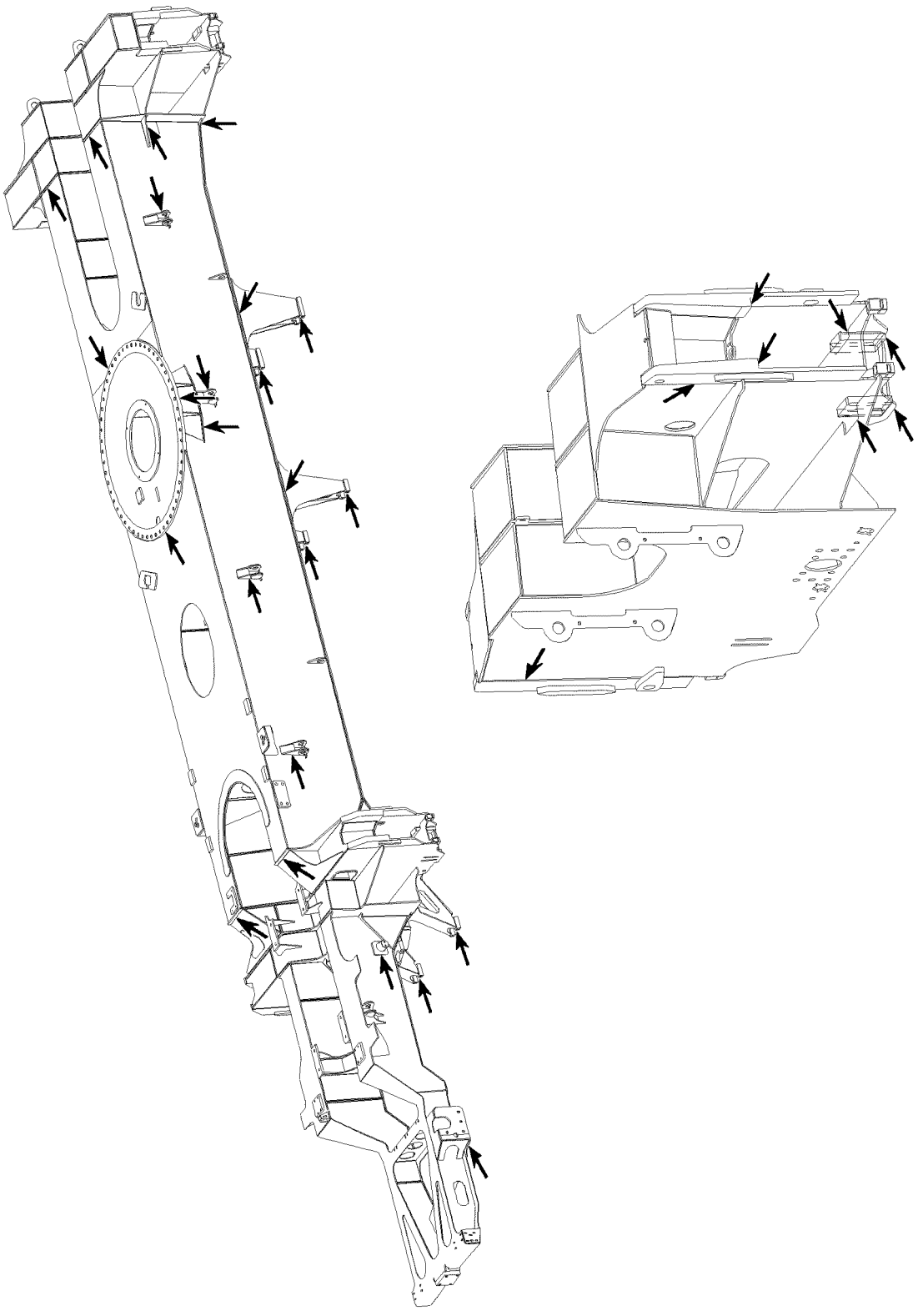

Fig.164853: Example of a vehicle frame

LWE/LTR 1100-009/25105-02-02/en

copyright © Liebherr-Werk Ehingen GmbH 2023

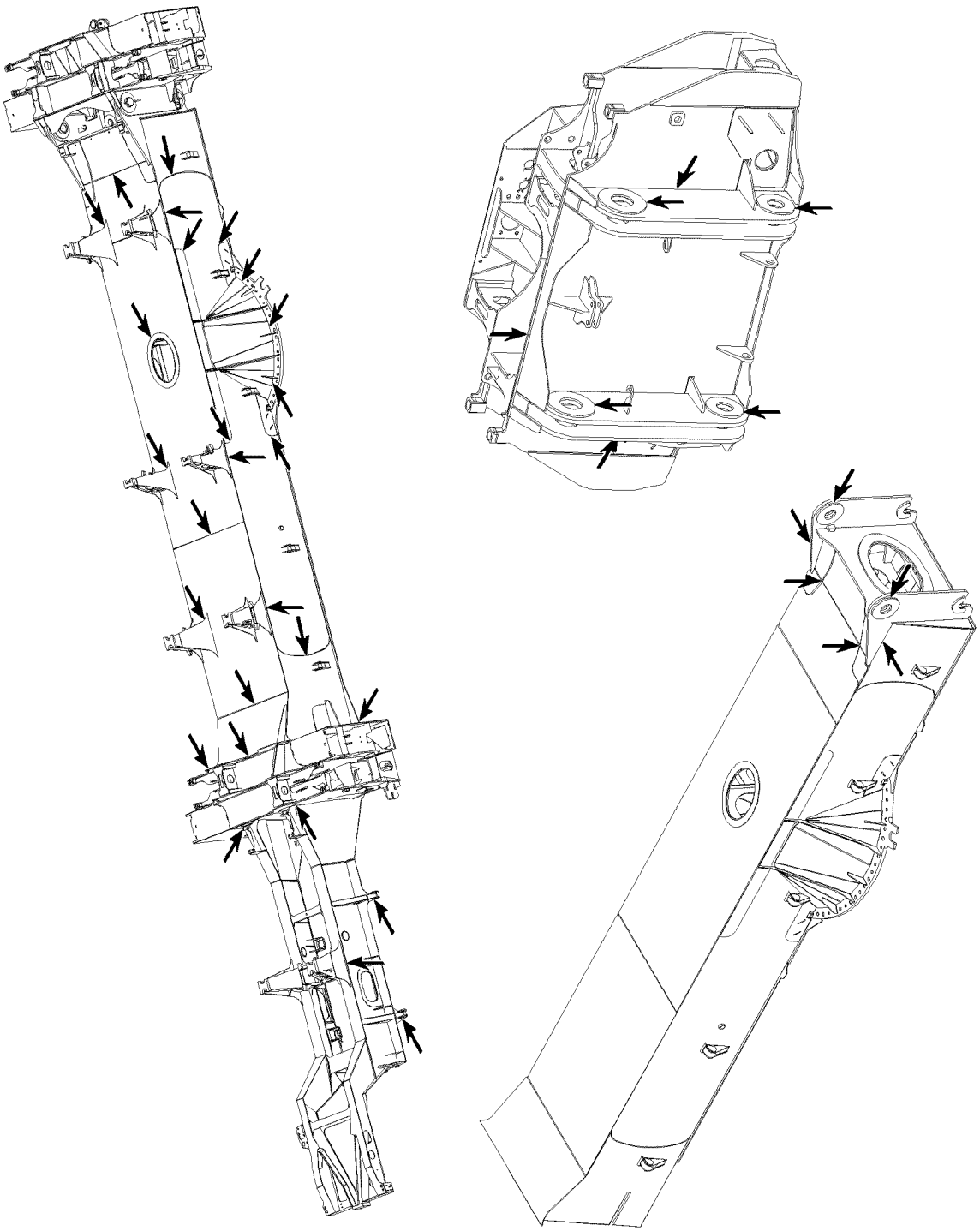

Fig.164854: Example of a vehicle frame

LWE/LTR 1100-009/25105-02-02/en

copyright © Liebherr-Werk Ehingen GmbH 2023

Crawler center section

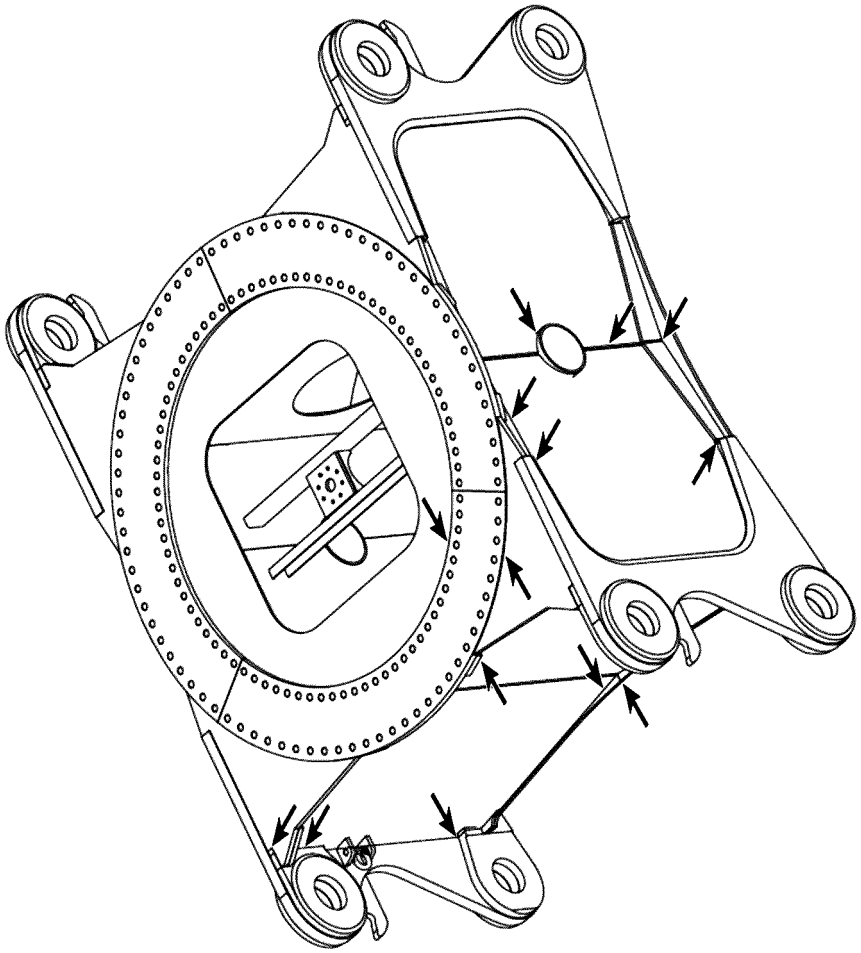

Fig.164865: Example of a crawler center section

LWE/LTR 1100-009/25105-02-02/en

copyright © Liebherr-Werk Ehingen GmbH 2023

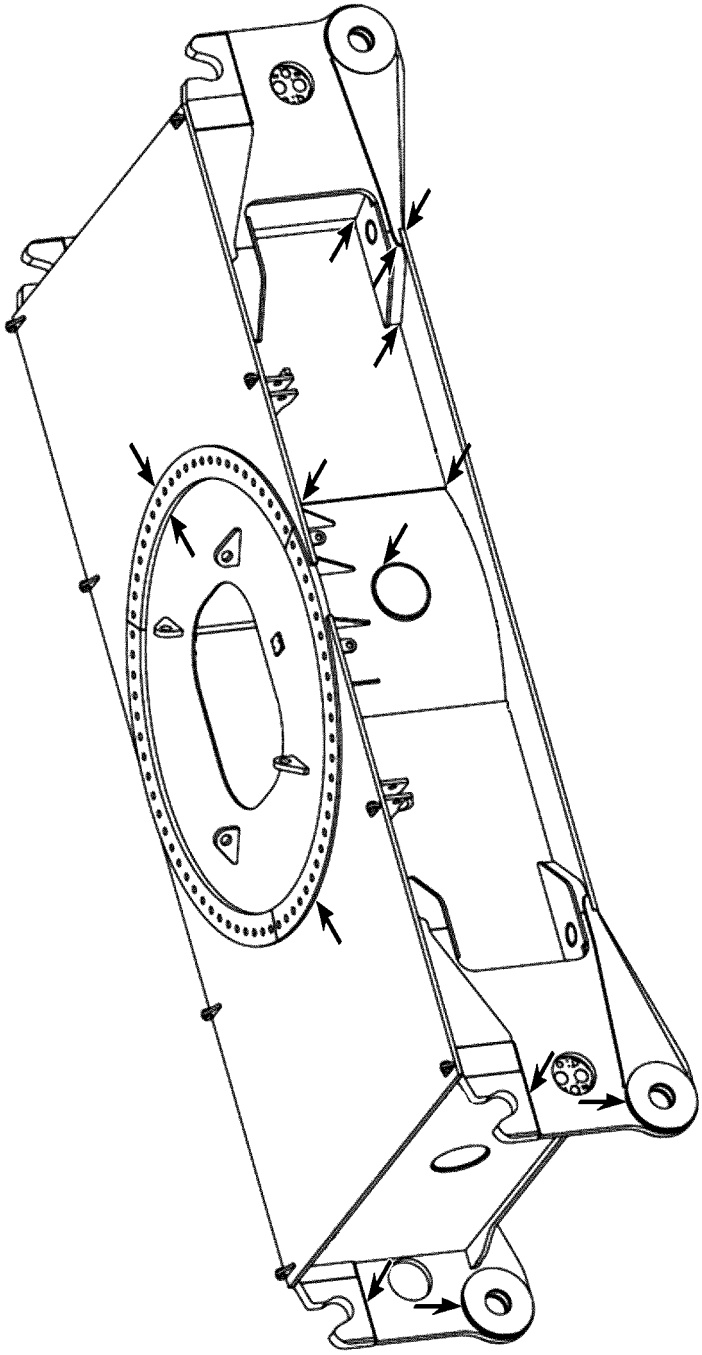

Fig.164866: Example of a crawler center section

LWE/LTR 1100-009/25105-02-02/en

copyright © Liebherr-Werk Ehingen GmbH 2023

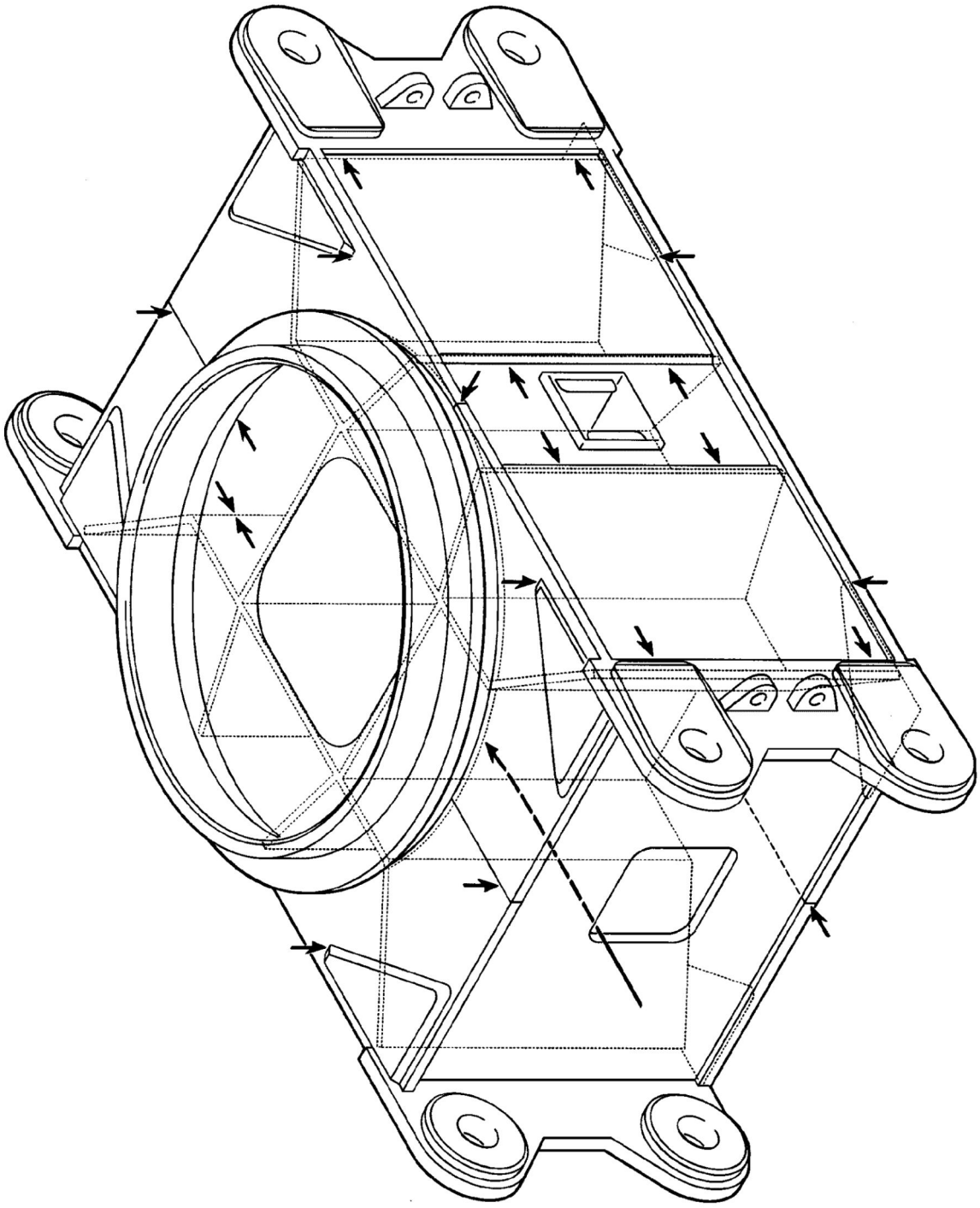

Fig.164867: Example of a crawler center section

LWE/LTR 1100-009/25105-02-02/en

copyright © Liebherr-Werk Ehingen GmbH 2023

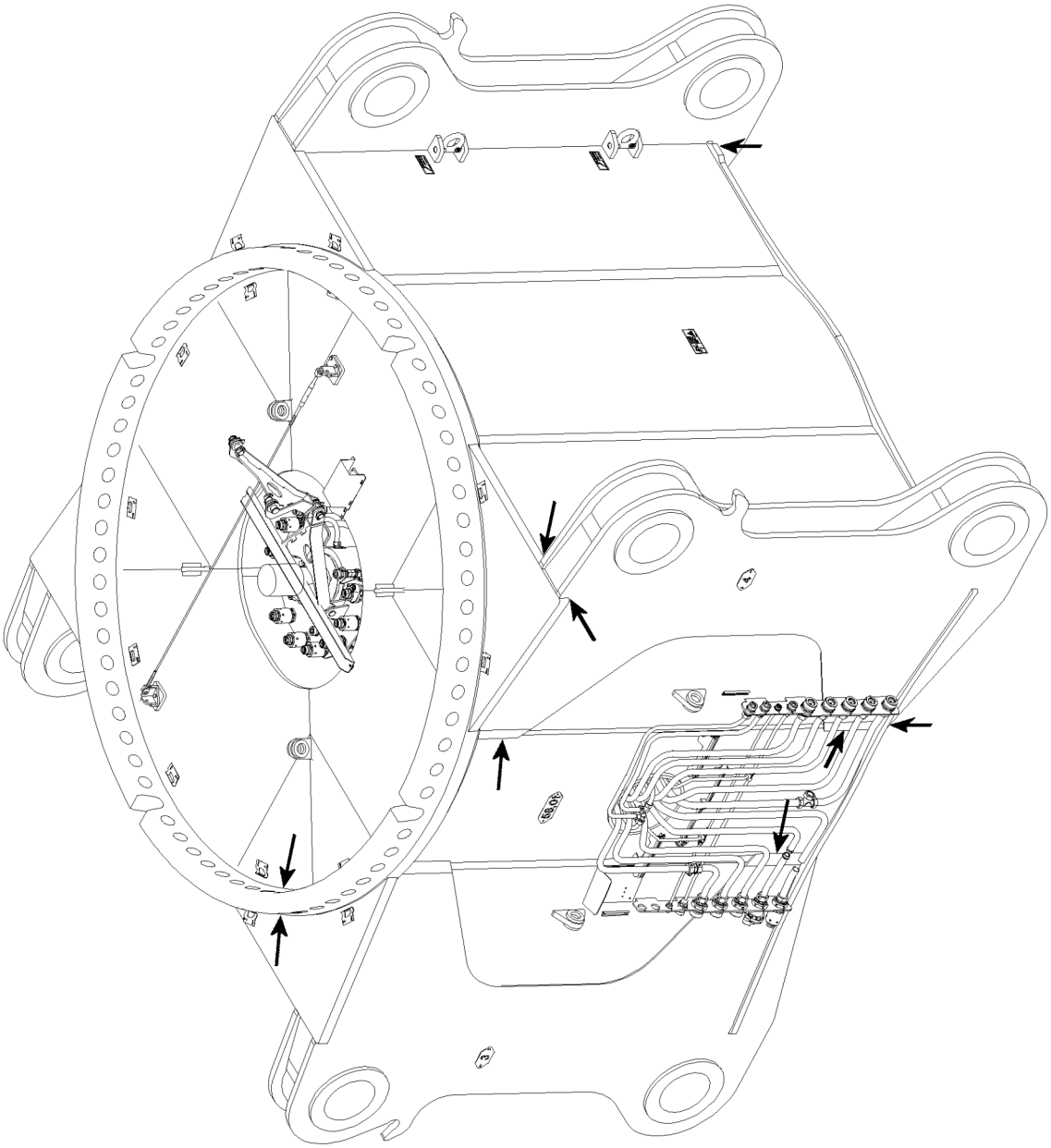

Fig.164868: Example of a crawler center section

LWE/LTR 1100-009/25105-02-02/en

copyright © Liebherr-Werk Ehingen GmbH 2023

Intermediate frame

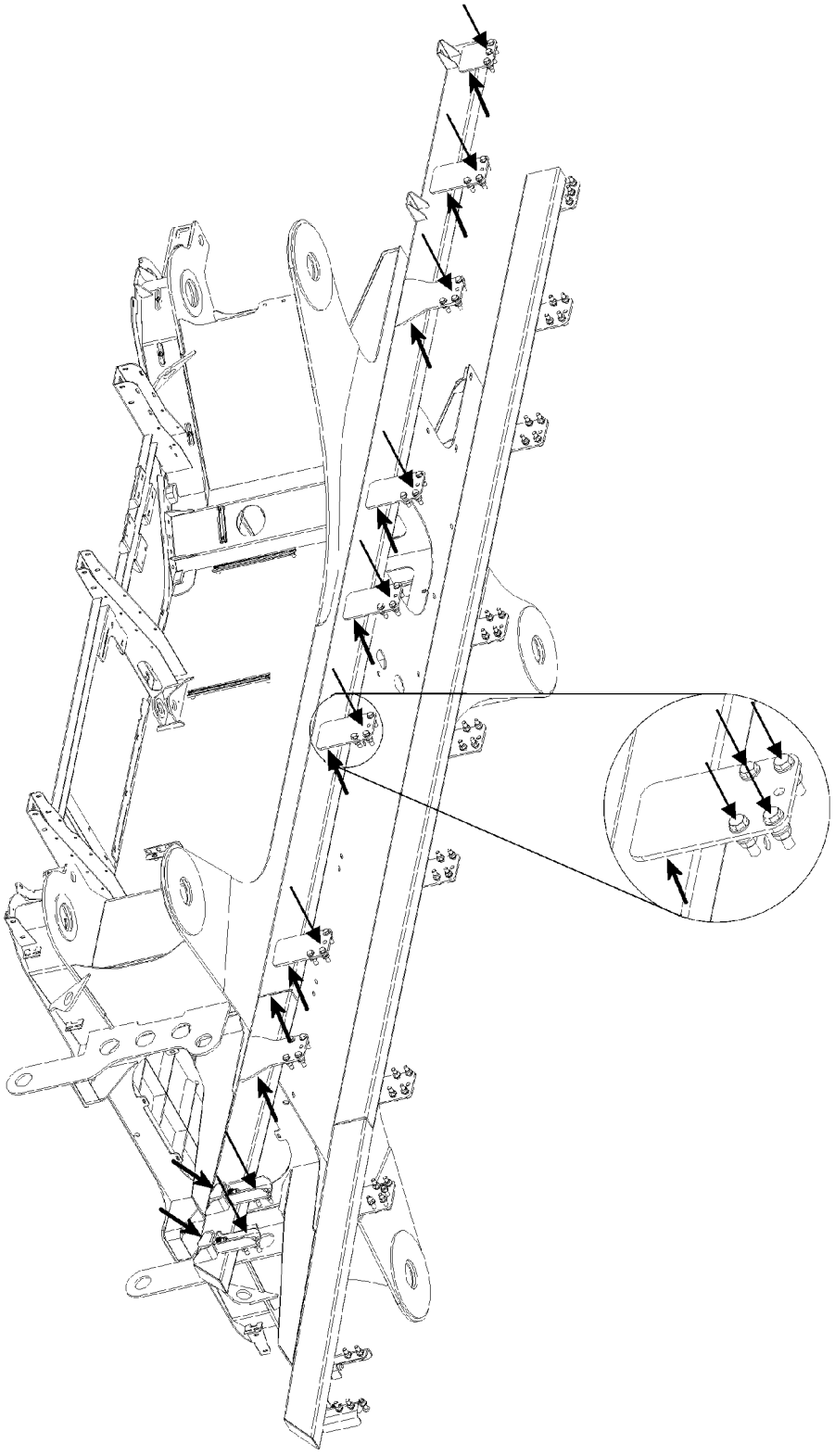

Fig.164856: Example of an intermediate frame

LWE/LTR 1100-009/25105-02-02/en

copyright © Liebherr-Werk Ehingen GmbH 2023

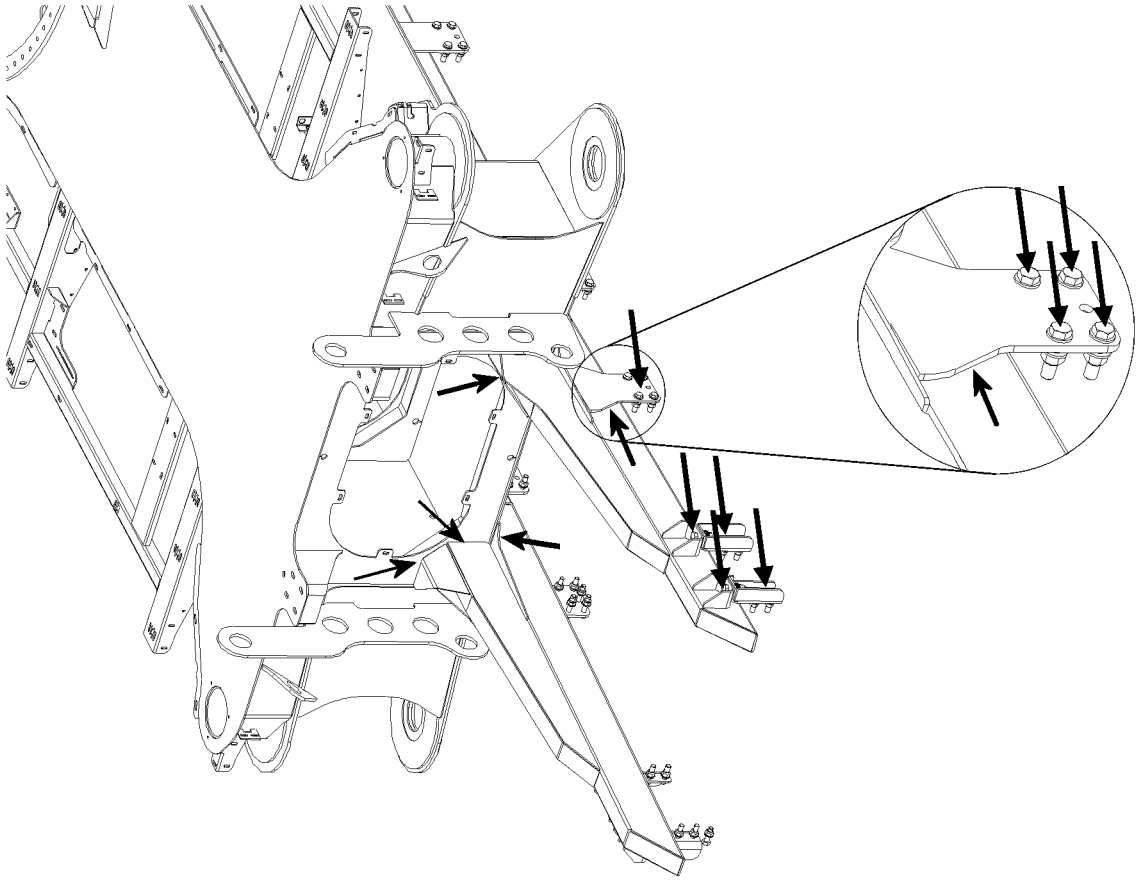

Fig.164857: Example of an intermediate frame

LWE/LTR 1100-009/25105-02-02/en

copyright © Liebherr-Werk Ehingen GmbH 2023

Cross carrier

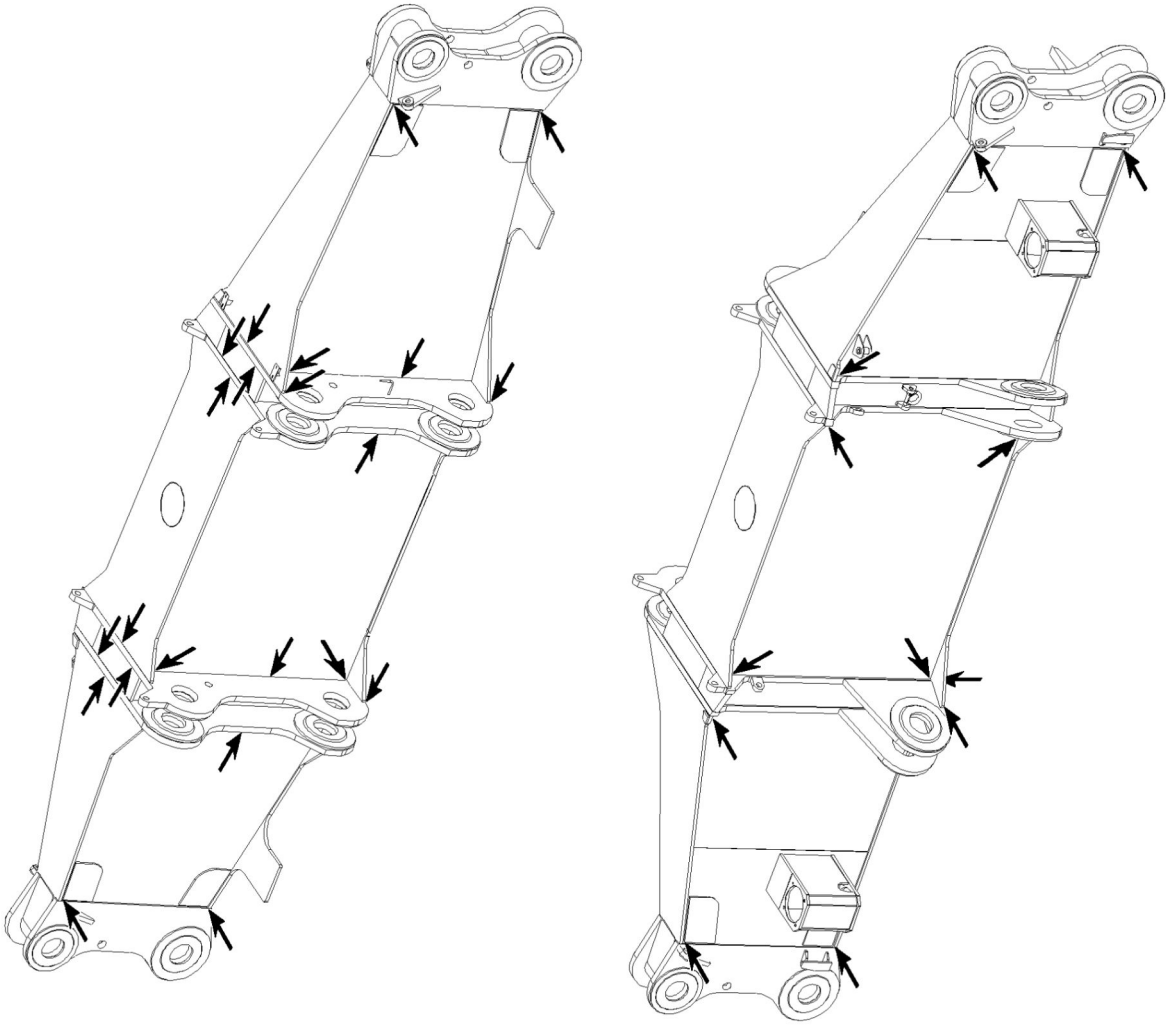

Fig.164869: Example of a cross carrier

LWE/LTR 1100-009/25105-02-02/en

copyright © Liebherr-Werk Ehingen GmbH 2023

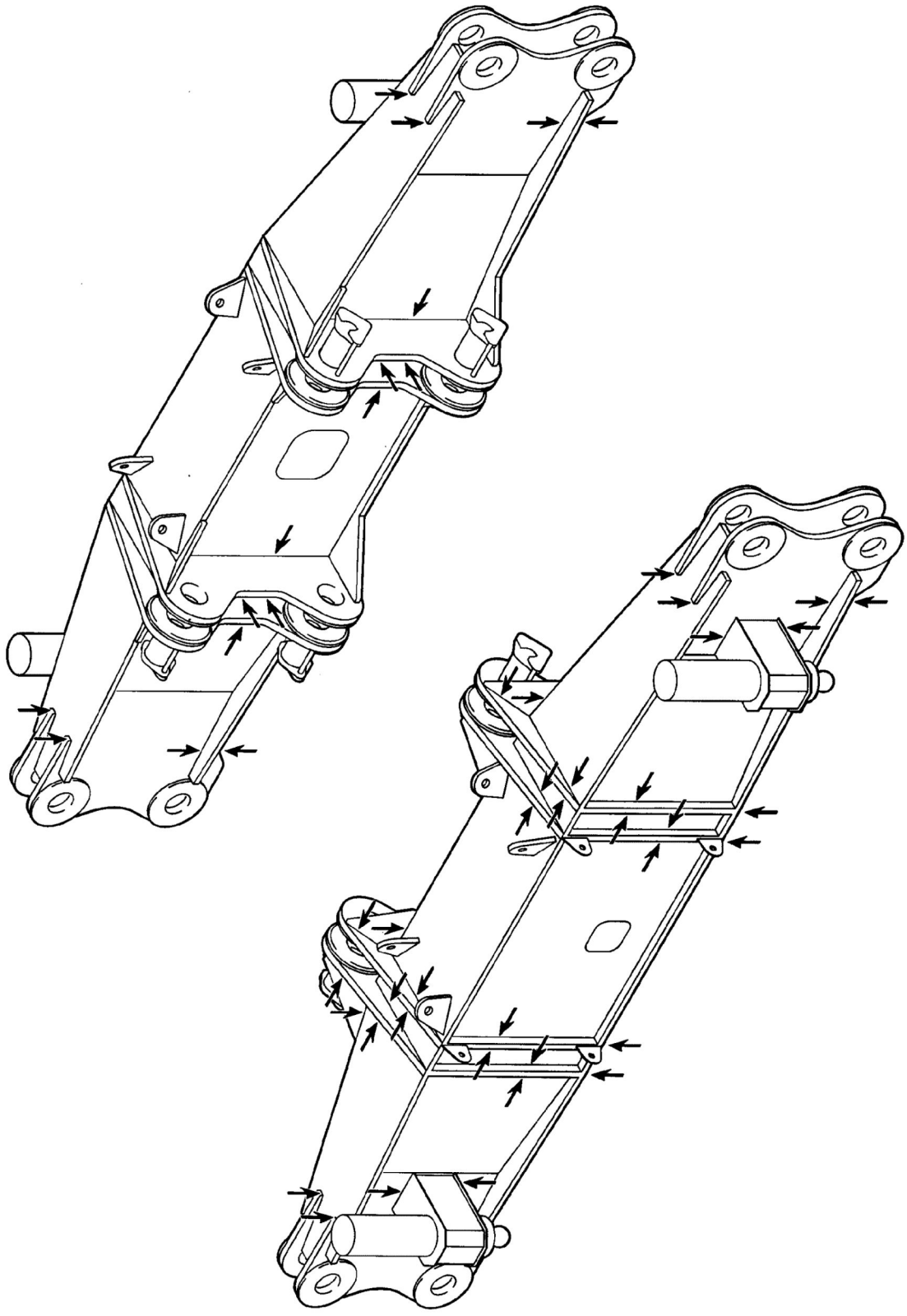

Fig.164870: Example of a cross carrier

LWE/LTR 1100-009/25105-02-02/en

copyright © Liebherr-Werk Ehingen GmbH 2023

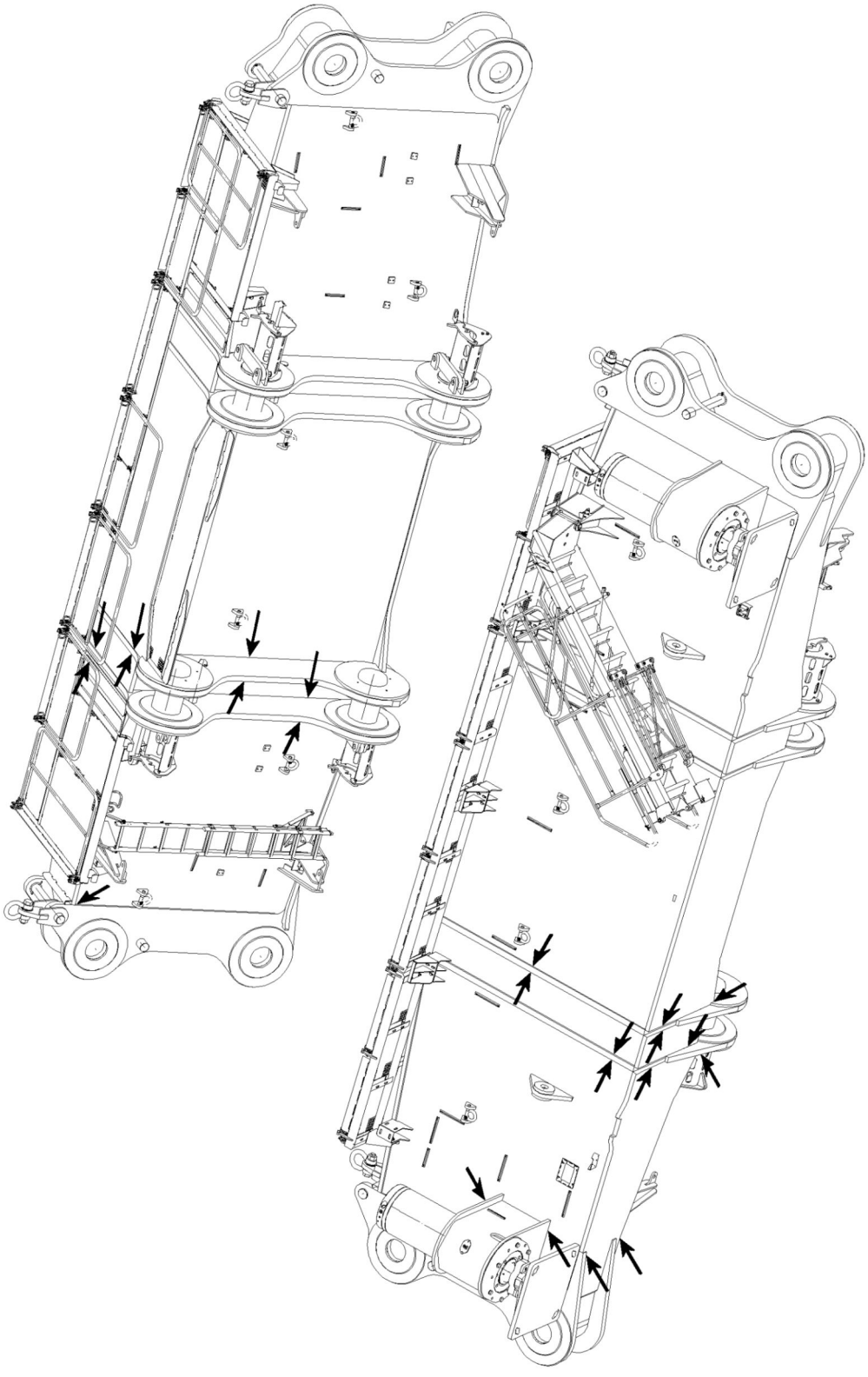

Fig.164871: Example of a cross carrier

LWE/LTR 1100-009/25105-02-02/en

copyright © Liebherr-Werk Ehingen GmbH 2023

Carrier for central ballast

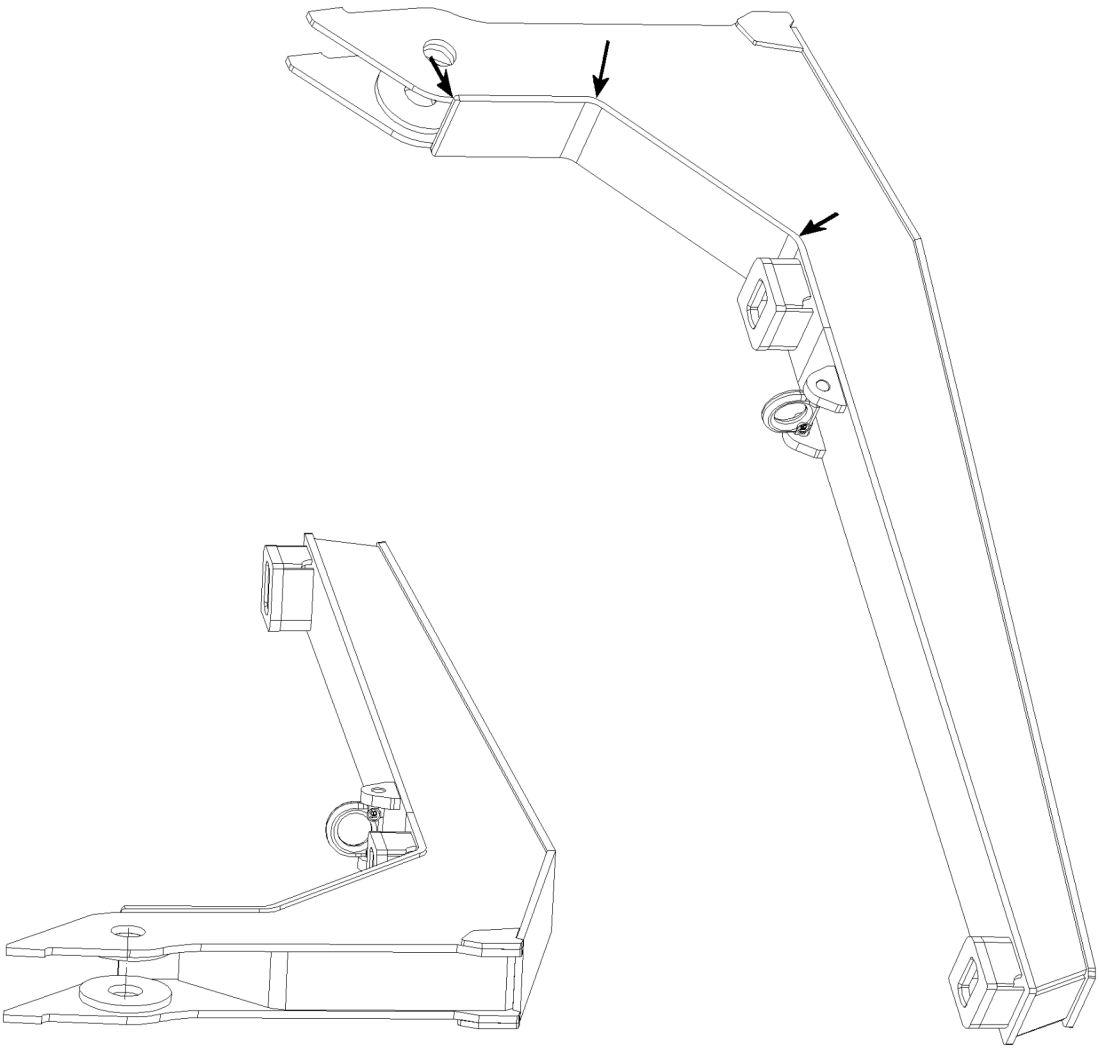

Fig.164872: Example of carrier for central ballast

LWE/LTR 1100-009/25105-02-02/en

copyright © Liebherr-Werk Ehingen GmbH 2023

Crawler carrier

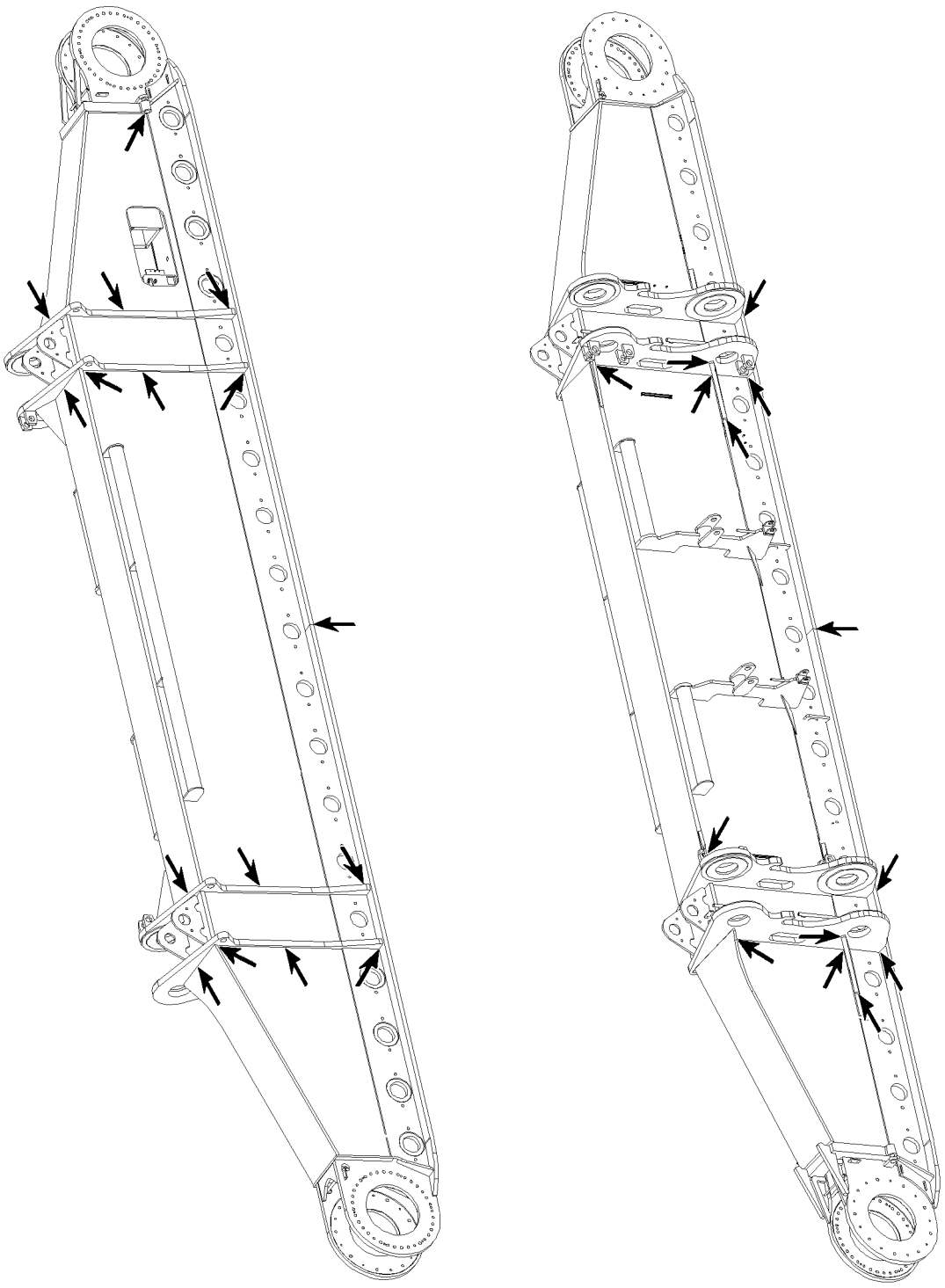

Fig.164873: Example of a crawler carrier

LWE/LTR 1100-009/25105-02-02/en

copyright © Liebherr-Werk Ehingen GmbH 2023

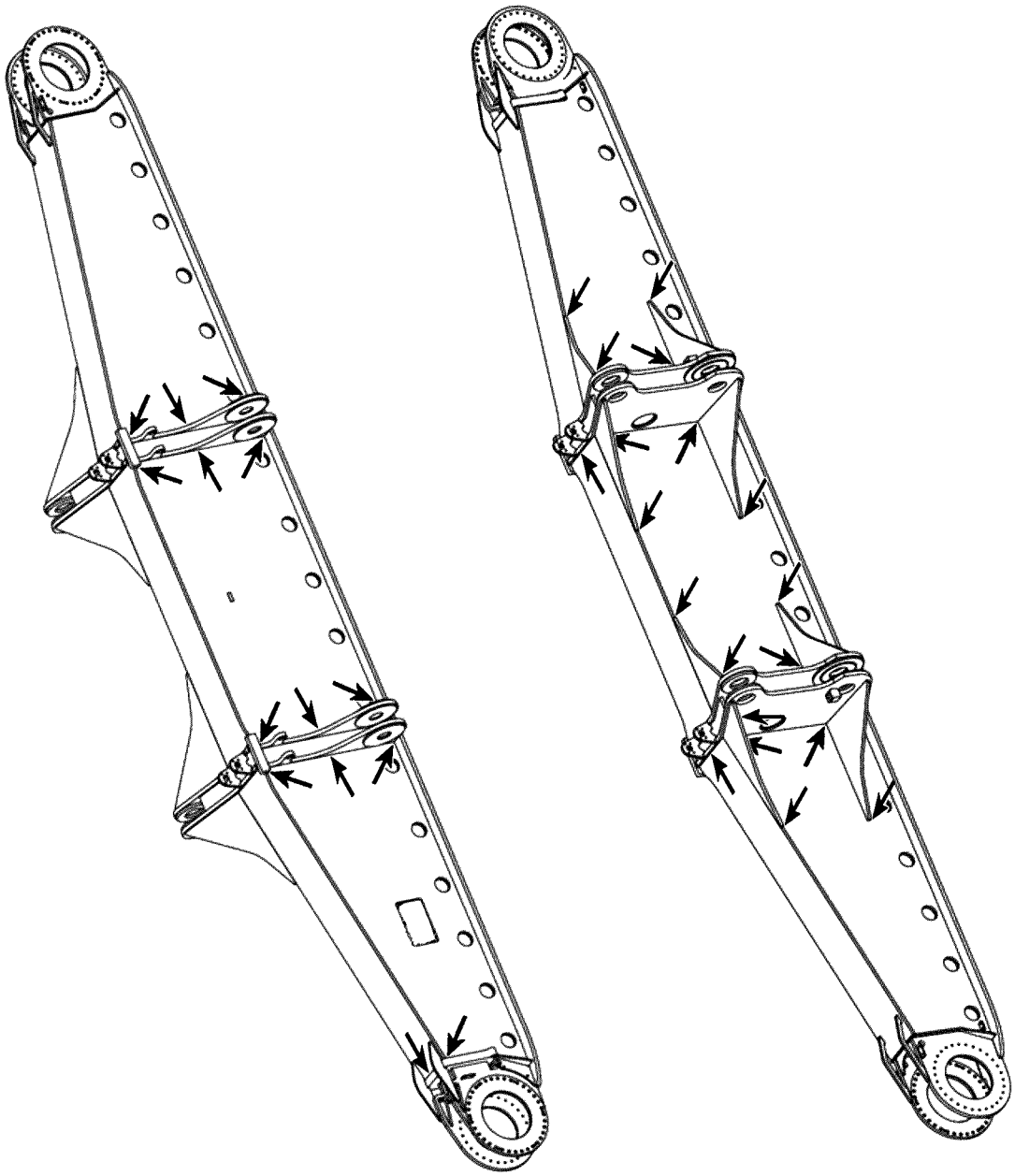

Fig.164874: Example of a crawler carrier

LWE/LTR 1100-009/25105-02-02/en

copyright © Liebherr-Werk Ehingen GmbH 2023

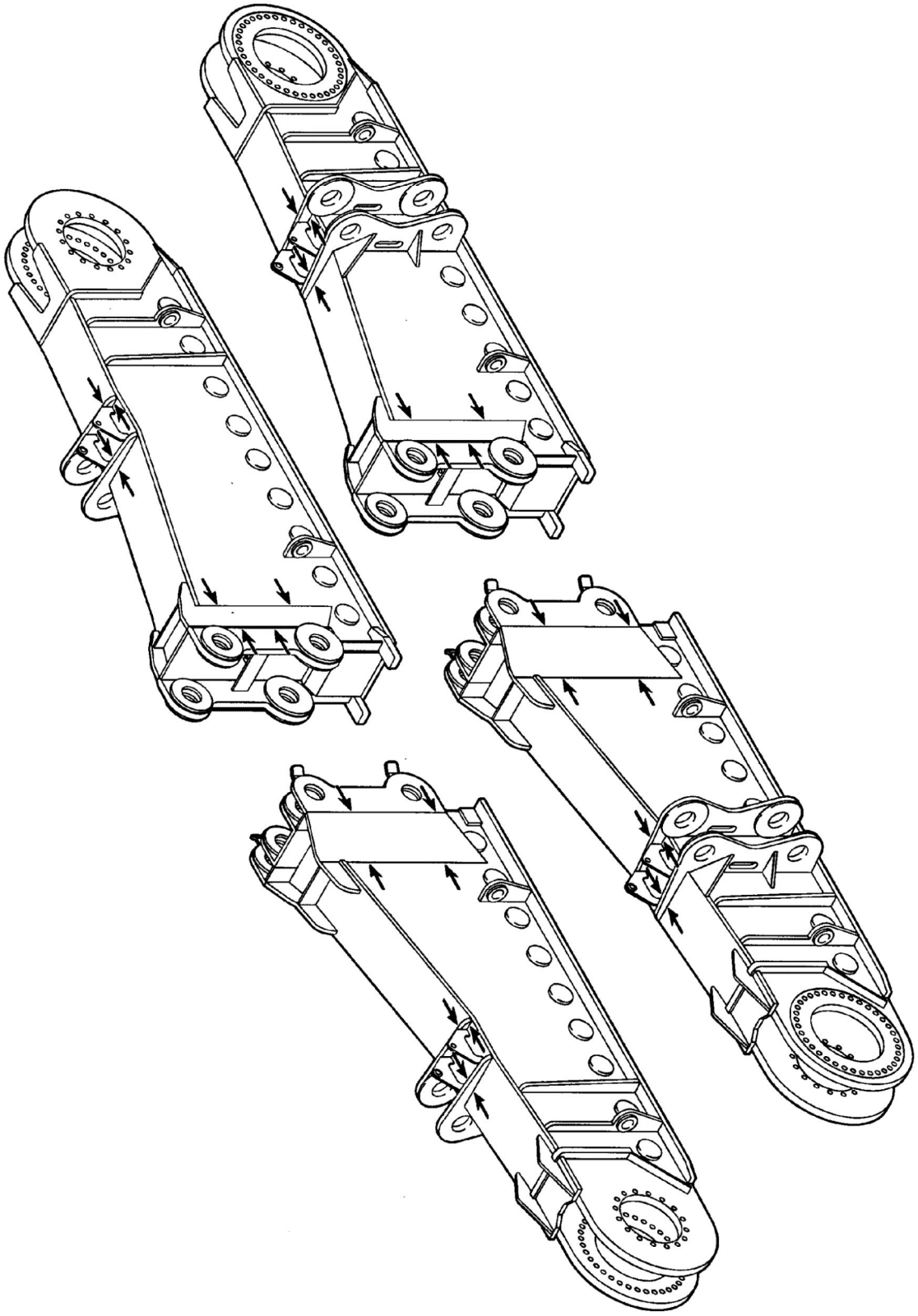

Fig.164875: Example of a crawler carrier

LWE/LTR 1100-009/25105-02-02/en

copyright © Liebherr-Werk Ehingen GmbH 2023

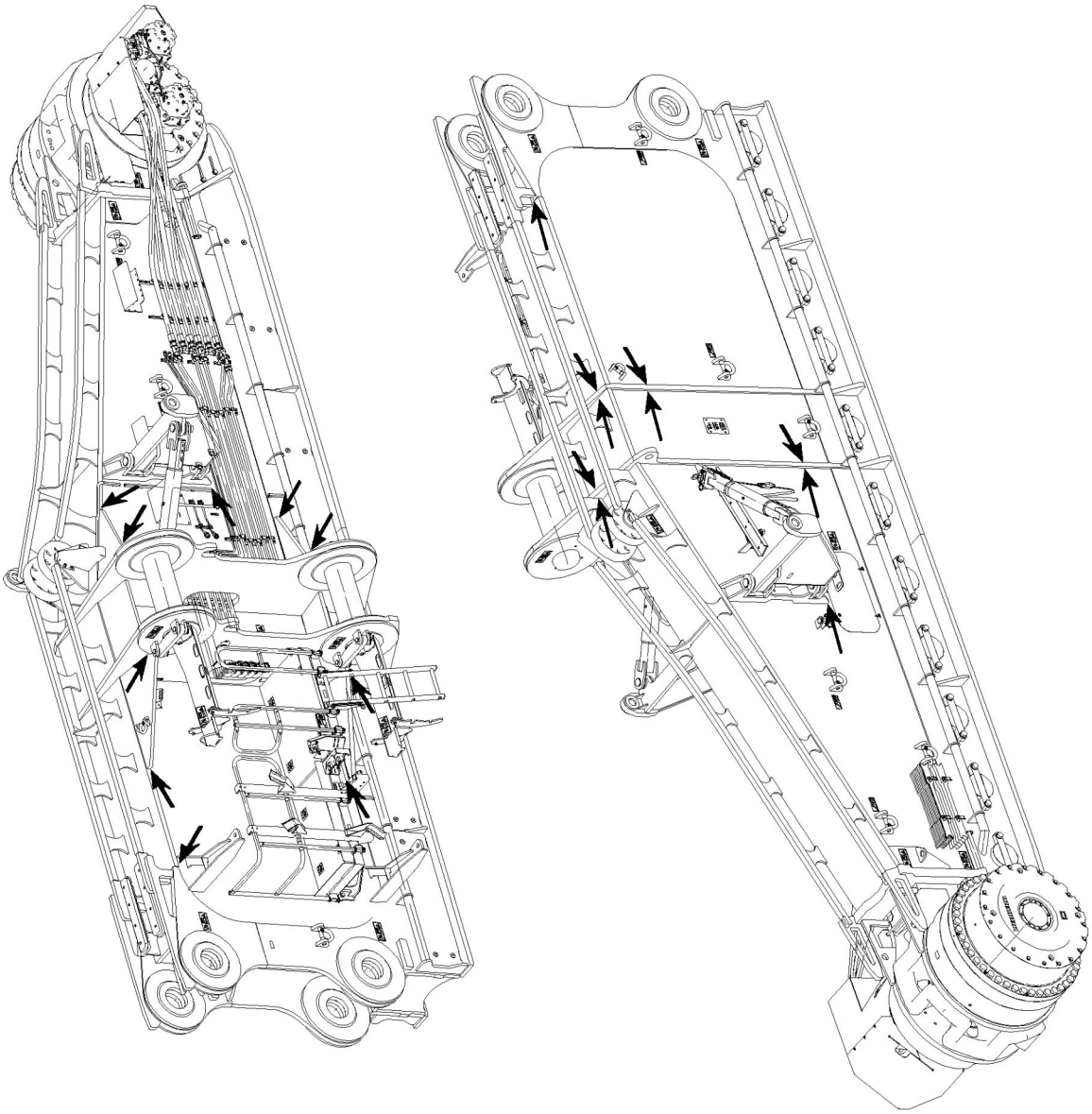

Fig.164876: Example of a crawler carrier

LWE/LTR 1100-009/25105-02-02/en

copyright © Liebherr-Werk Ehingen GmbH 2023

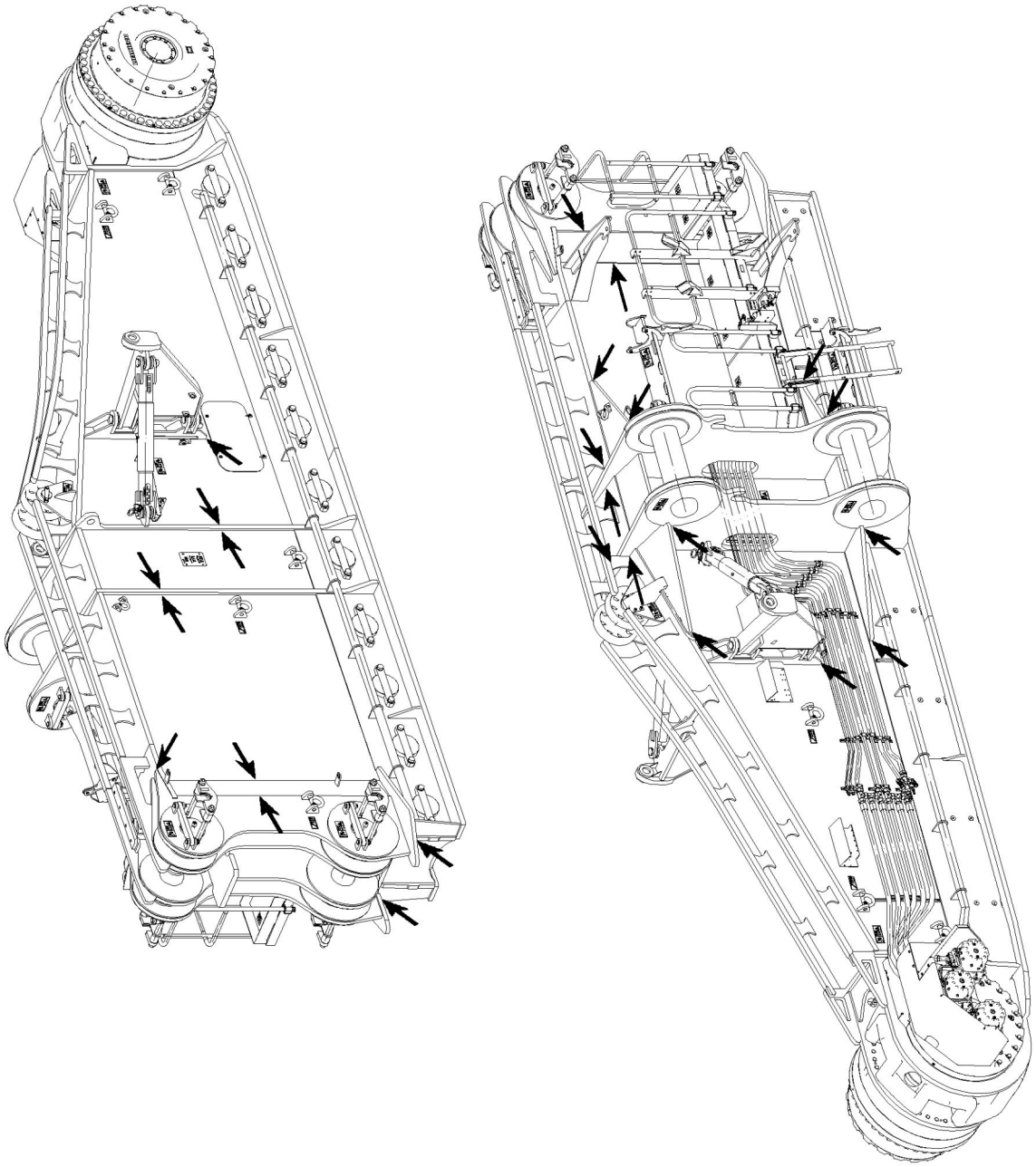

Fig.164877: Example of a crawler carrier

LWE/LTR 1100-009/25105-02-02/en

copyright © Liebherr-Werk Ehingen GmbH 2023

Sliding beam

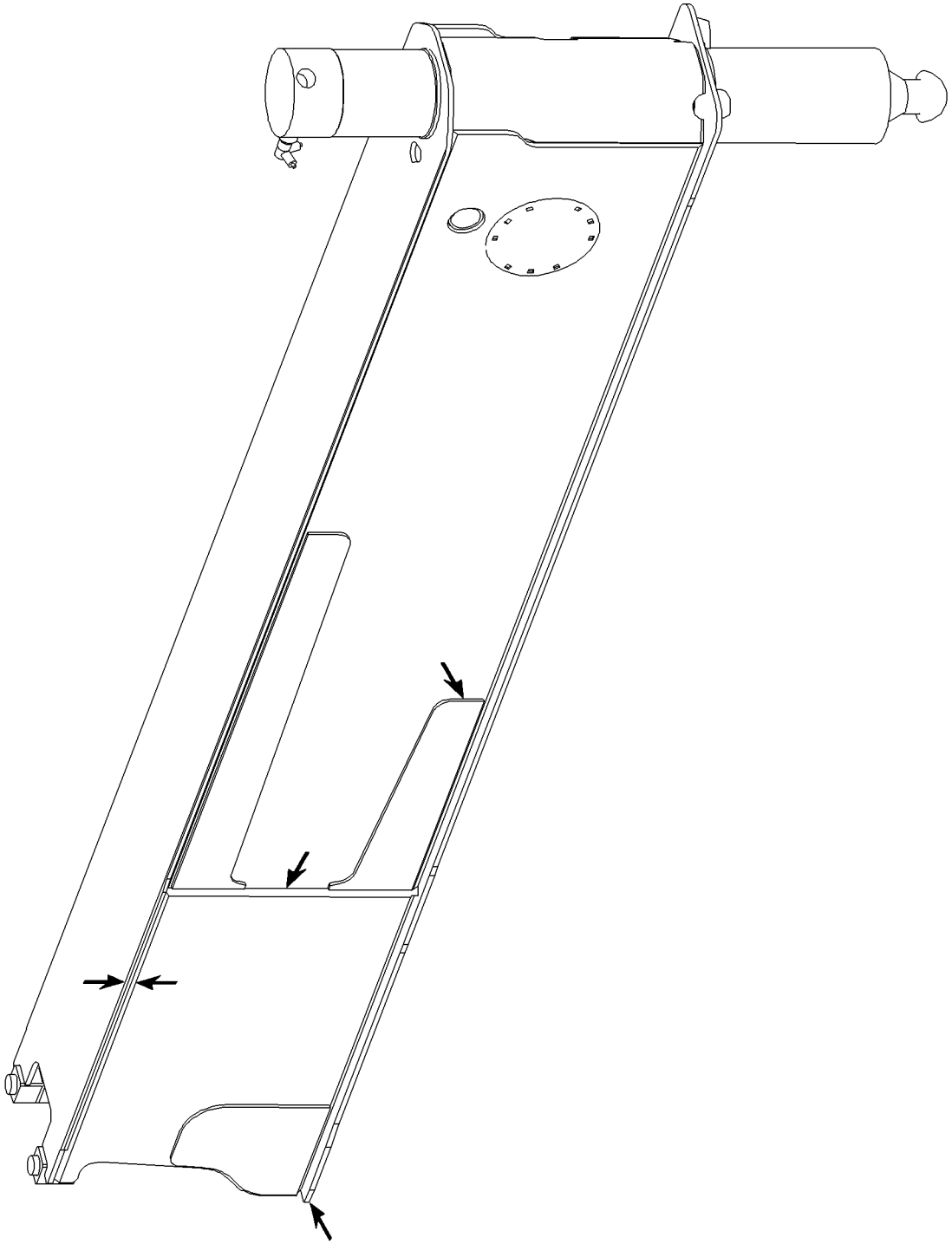

Fig.164858: Example of a sliding beam

LWE/LTR 1100-009/25105-02-02/en

copyright © Liebherr-Werk Ehingen GmbH 2023

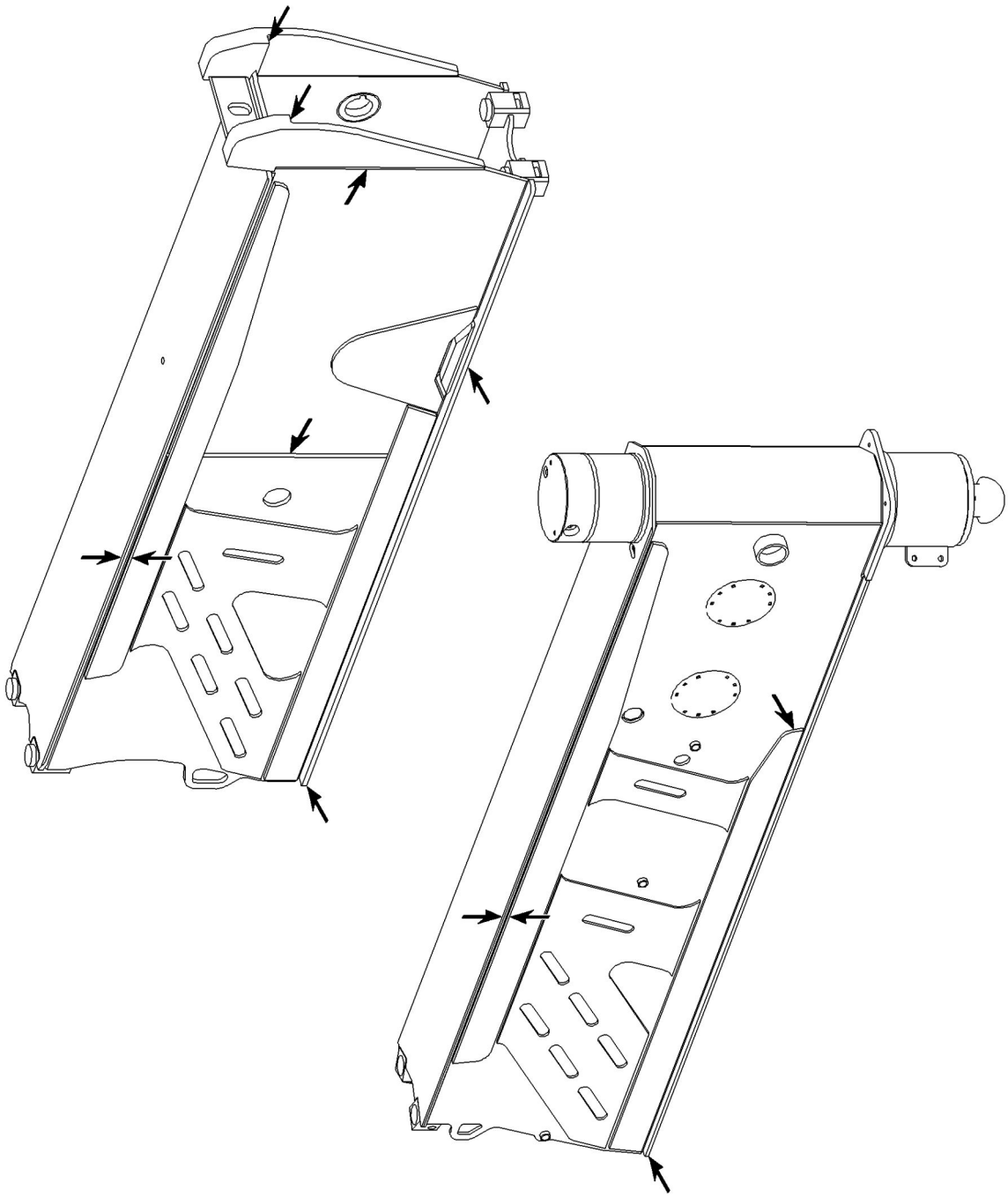

Fig.164859: Example of a sliding beam

LWE/LTR 1100-009/25105-02-02/en

copyright © Liebherr-Werk Ehingen GmbH 2023

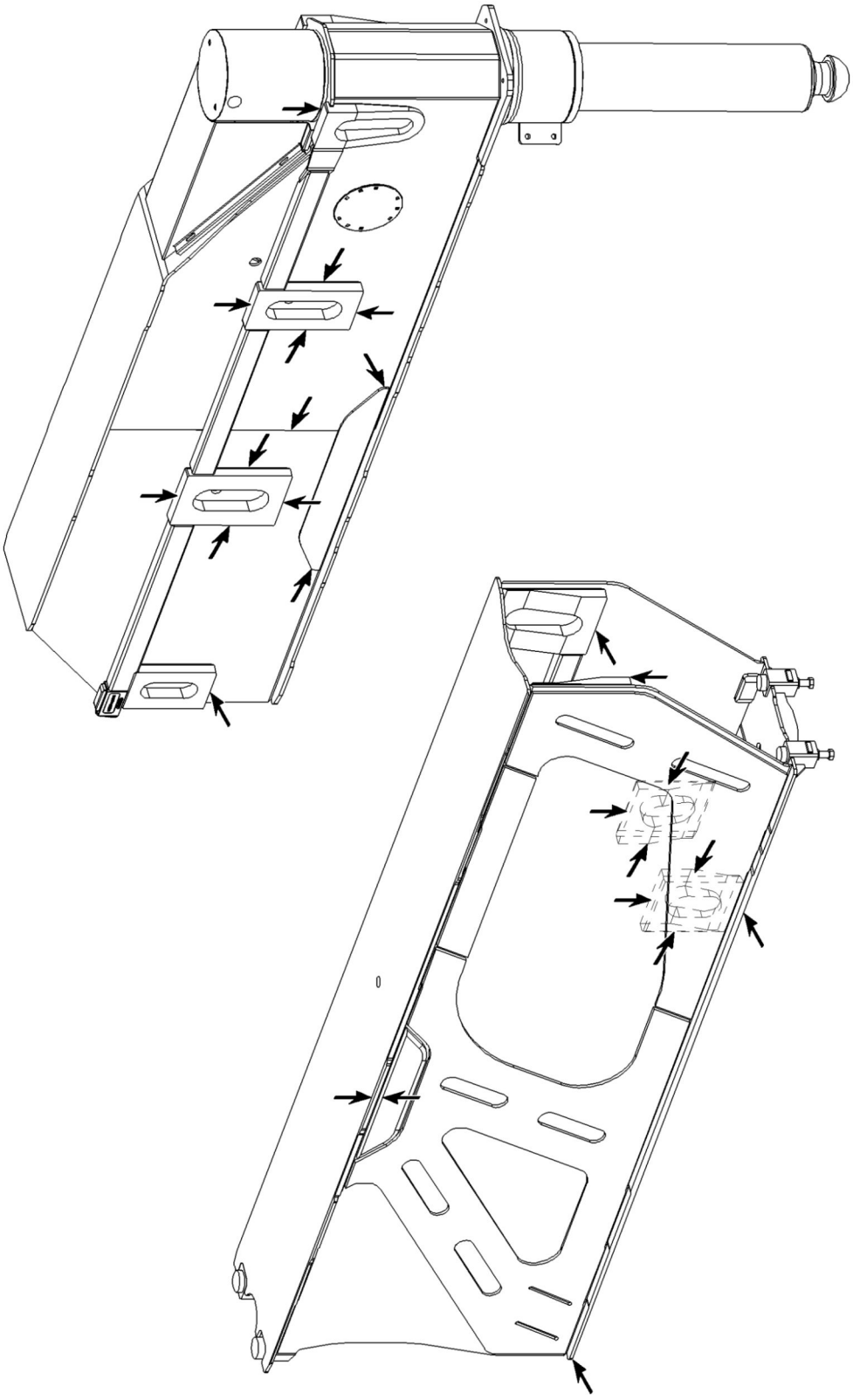

Fig.164860: Example of a sliding beam

LWE/LTR 1100-009/25105-02-02/en

copyright © Liebherr-Werk Ehingen GmbH 2023

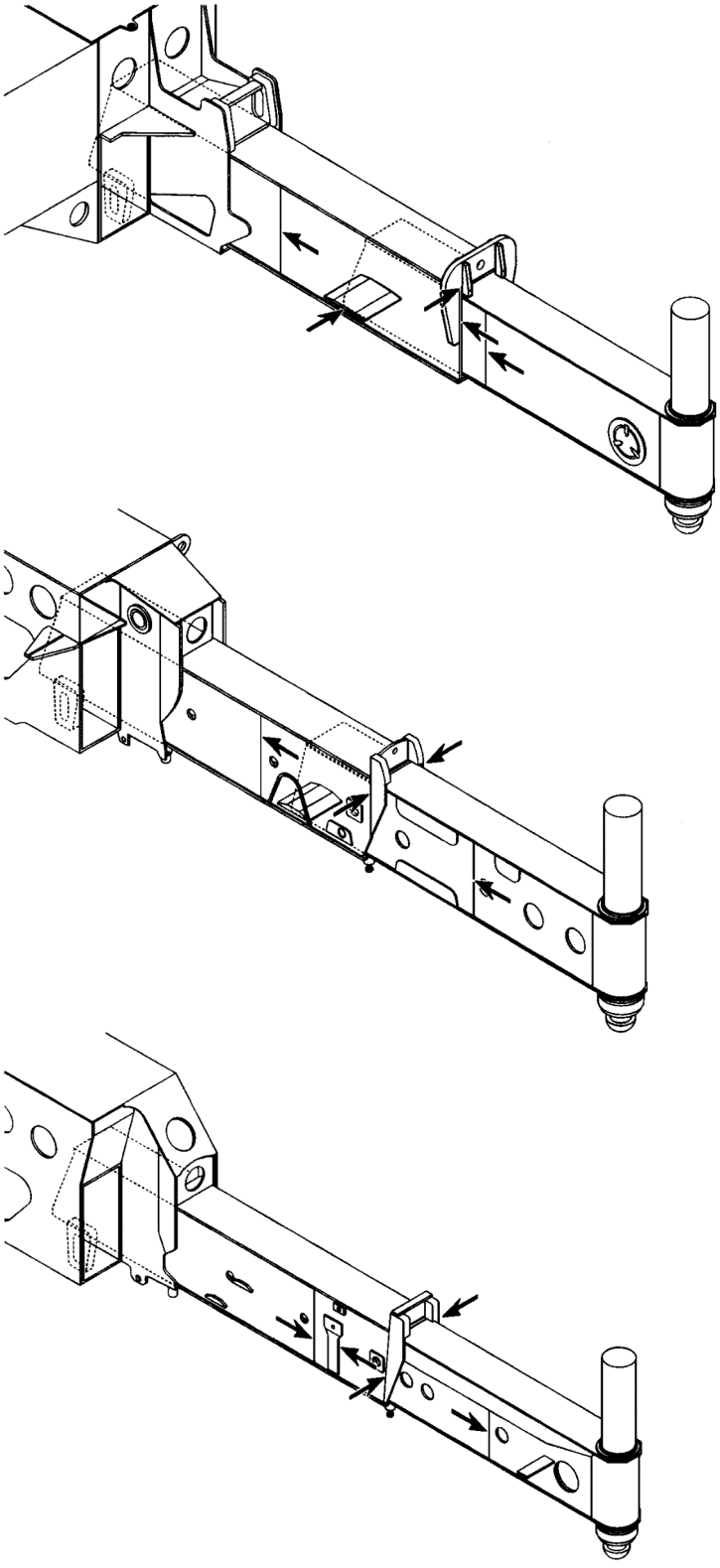

Fig.164861: Example of a sliding beam

LWE/LTR 1100-009/25105-02-02/en

copyright © Liebherr-Werk Ehingen GmbH 2023

Swingable sliding beam

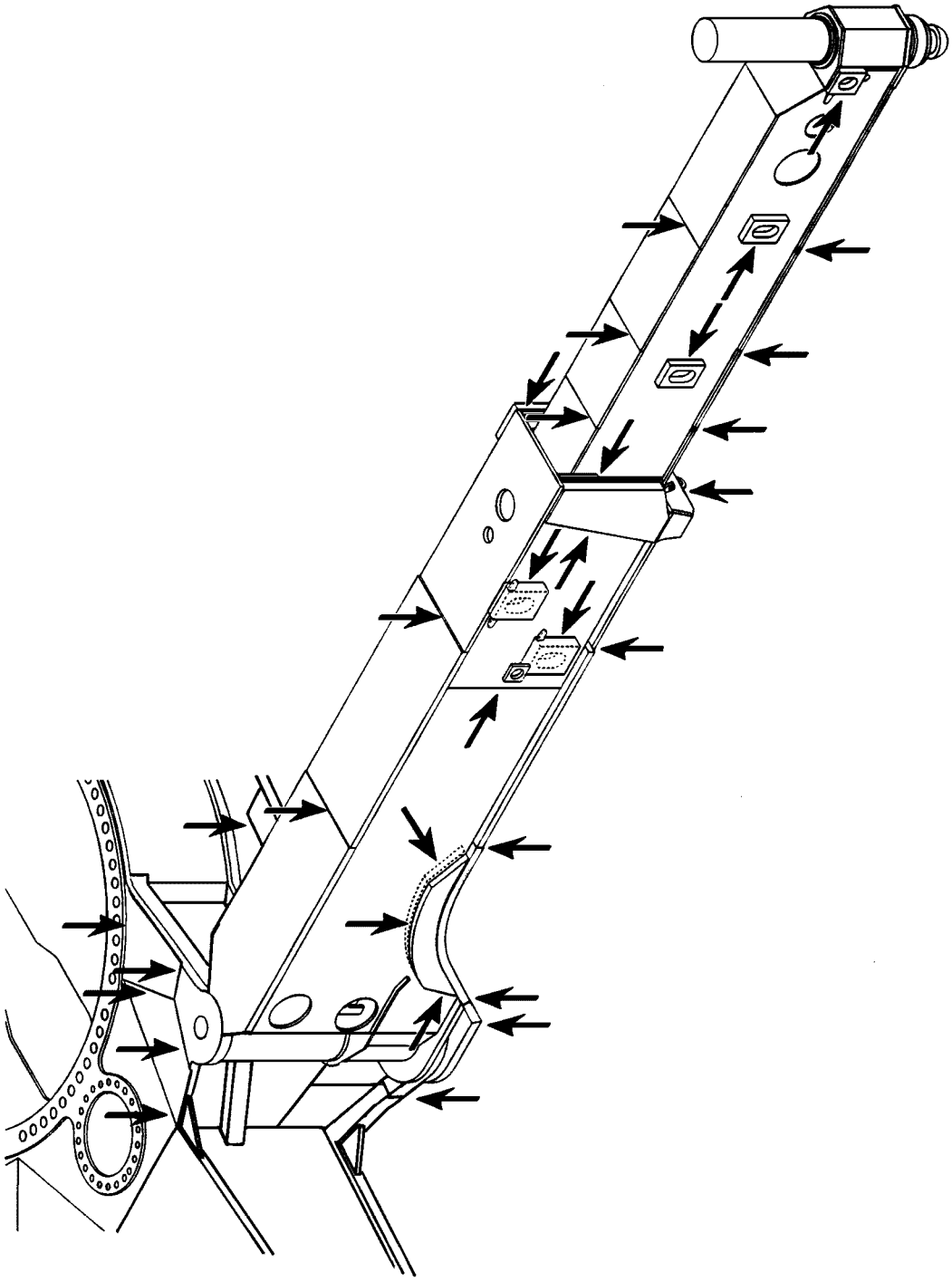

Fig.164862: Example of a swinging sliding beam

LWE/LTR 1100-009/25105-02-02/en

copyright © Liebherr-Werk Ehingen GmbH 2023

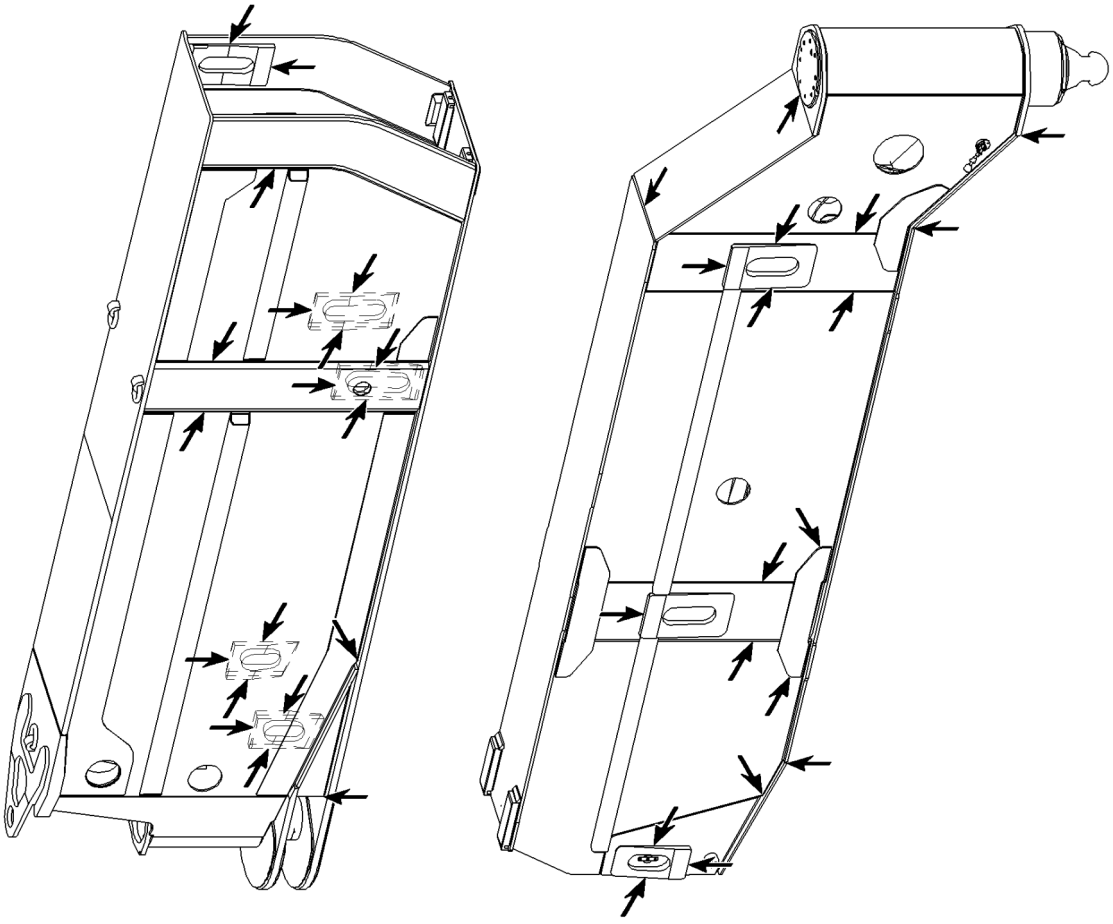

Fig.164863: Example of a swinging sliding beam

LWE/LTR 1100-009/25105-02-02/en

copyright © Liebherr-Werk Ehingen GmbH 2023

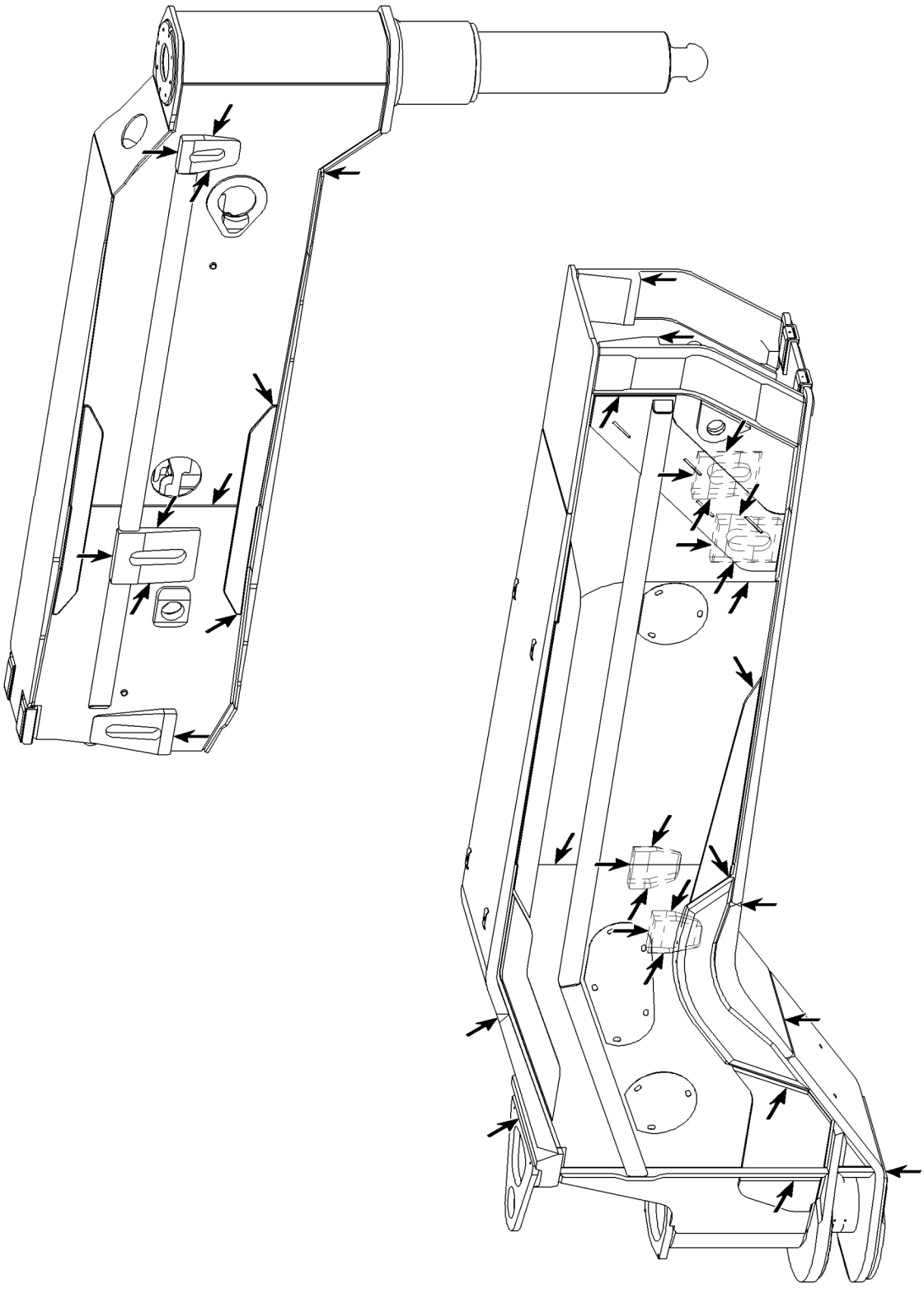

Fig.164864: Example of a swinging sliding beam

LWE/LTR 1100-009/25105-02-02/en

copyright © Liebherr-Werk Ehingen GmbH 2023

Disk wheels

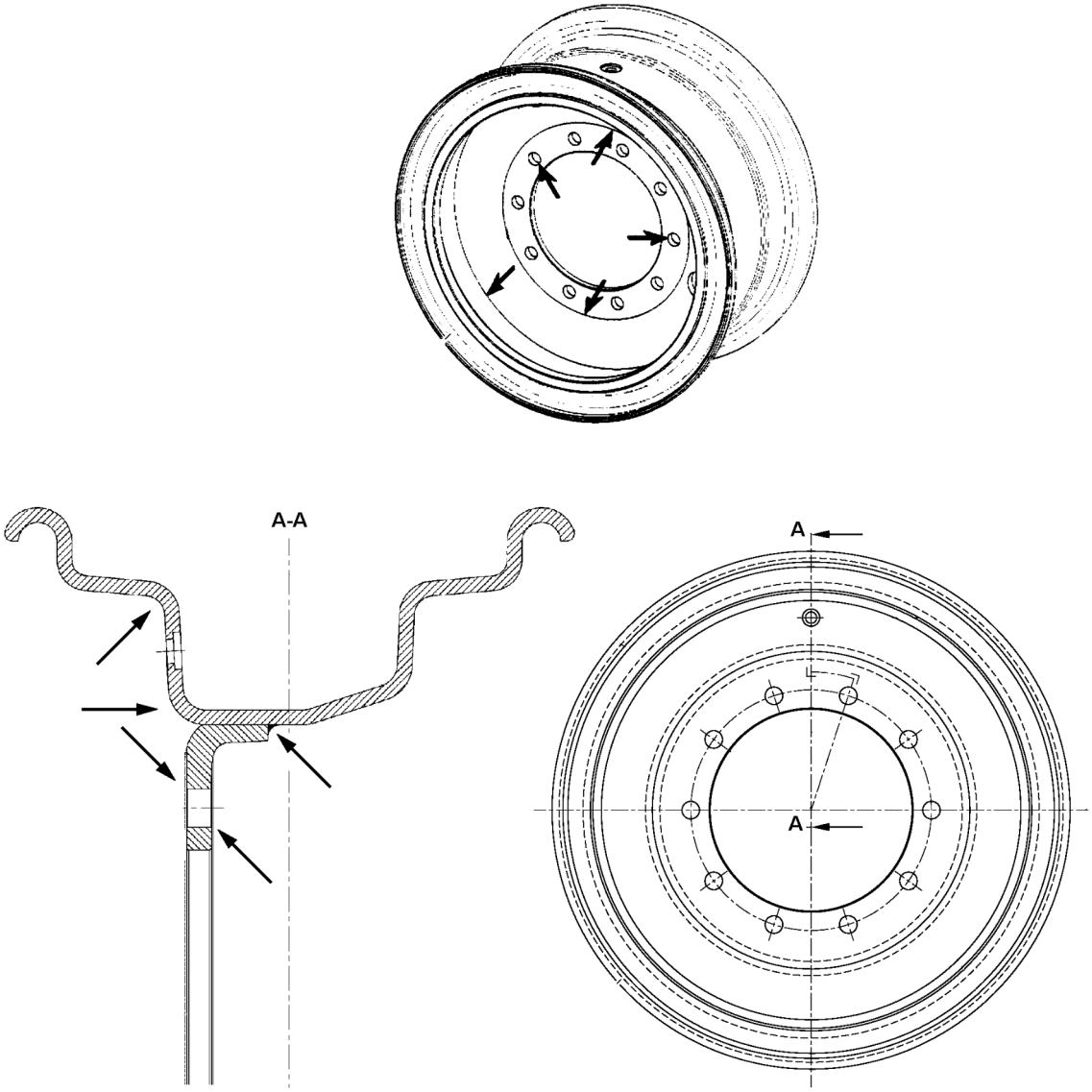

Fig.164850: Example of a 1-part disk wheel

LWE/LTR 1100-009/25105-02-02/en

copyright © Liebherr-Werk Ehingen GmbH 2023

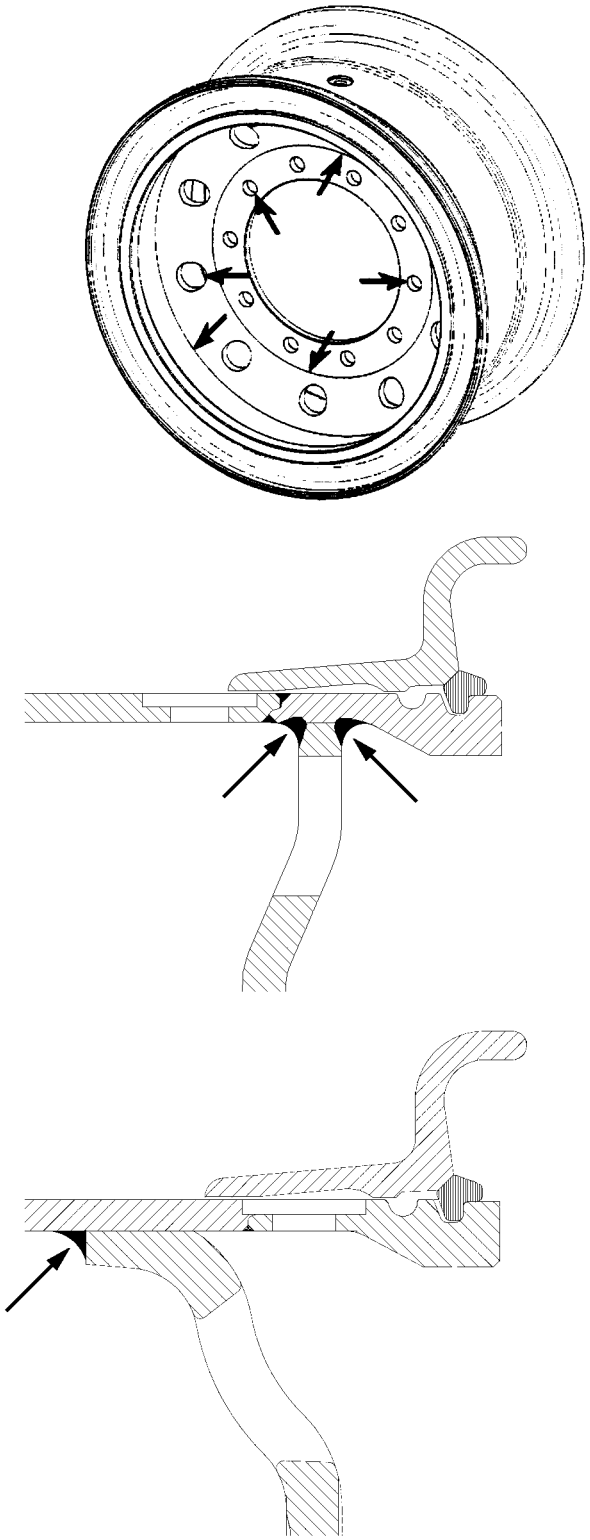

Fig.164851: Example of a 3-part disk wheel

LWE/LTR 1100-009/25105-02-02/en

copyright © Liebherr-Werk Ehingen GmbH 2023

Trailer coupling

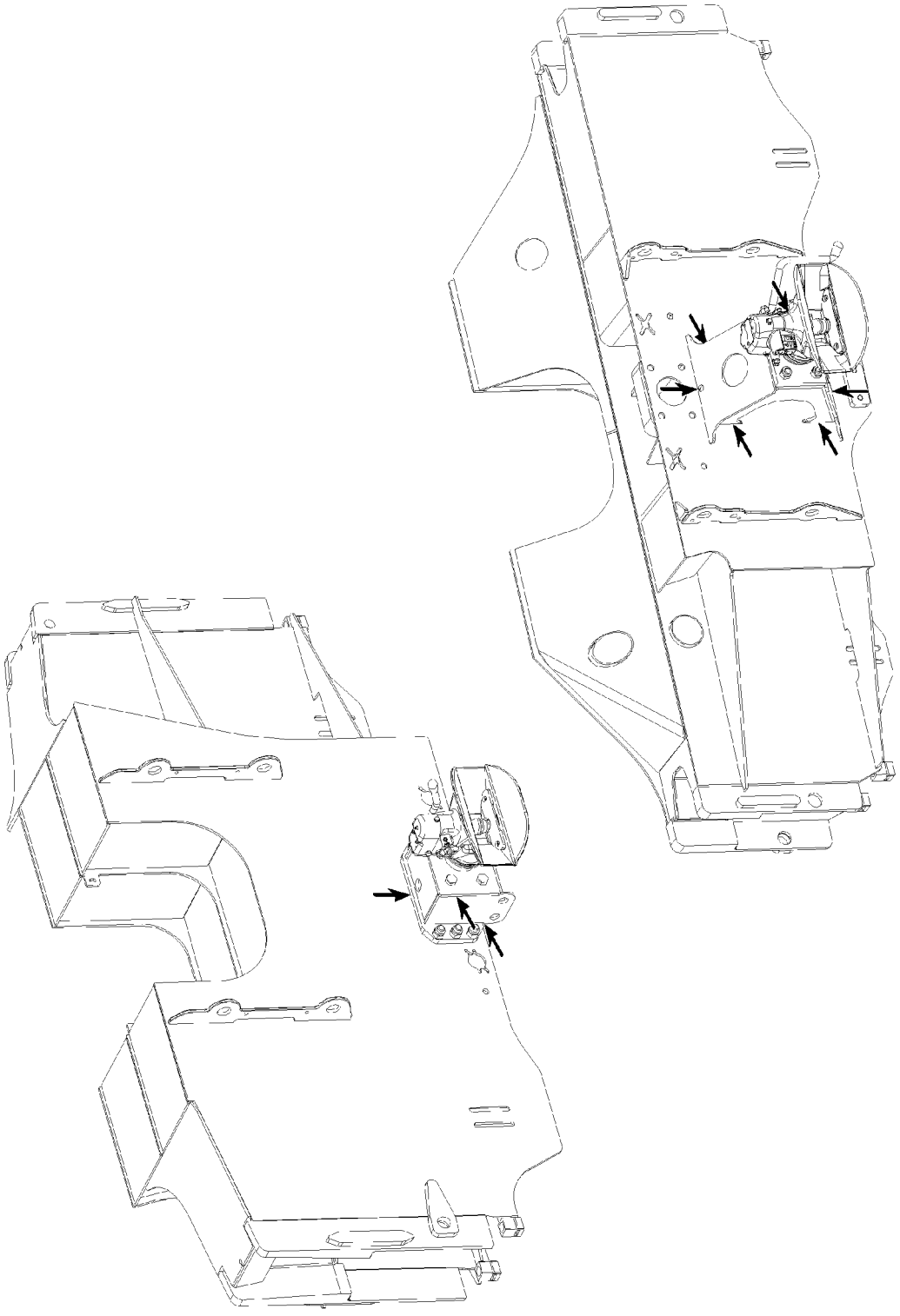

Fig.164855: Example of a trailer coupling

LWE/LTR 1100-009/25105-02-02/en

copyright © Liebherr-Werk Ehingen GmbH 2023

2.4.2 Crane superstructure

Turntable frame

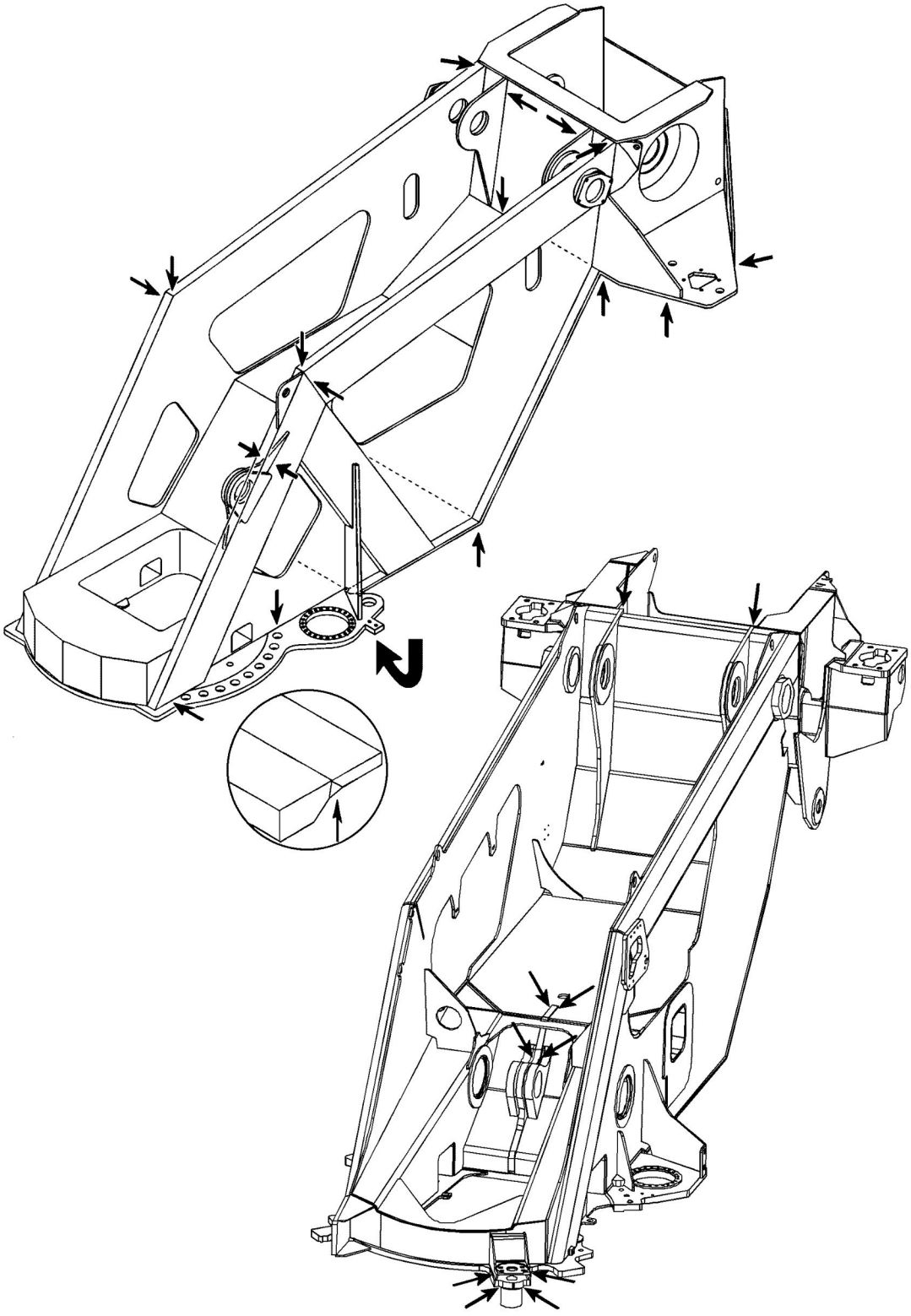

Fig.164878: Example of a turntable frame

LWE/LTR 1100-009/25105-02-02/en

copyright © Liebherr-Werk Ehingen GmbH 2023

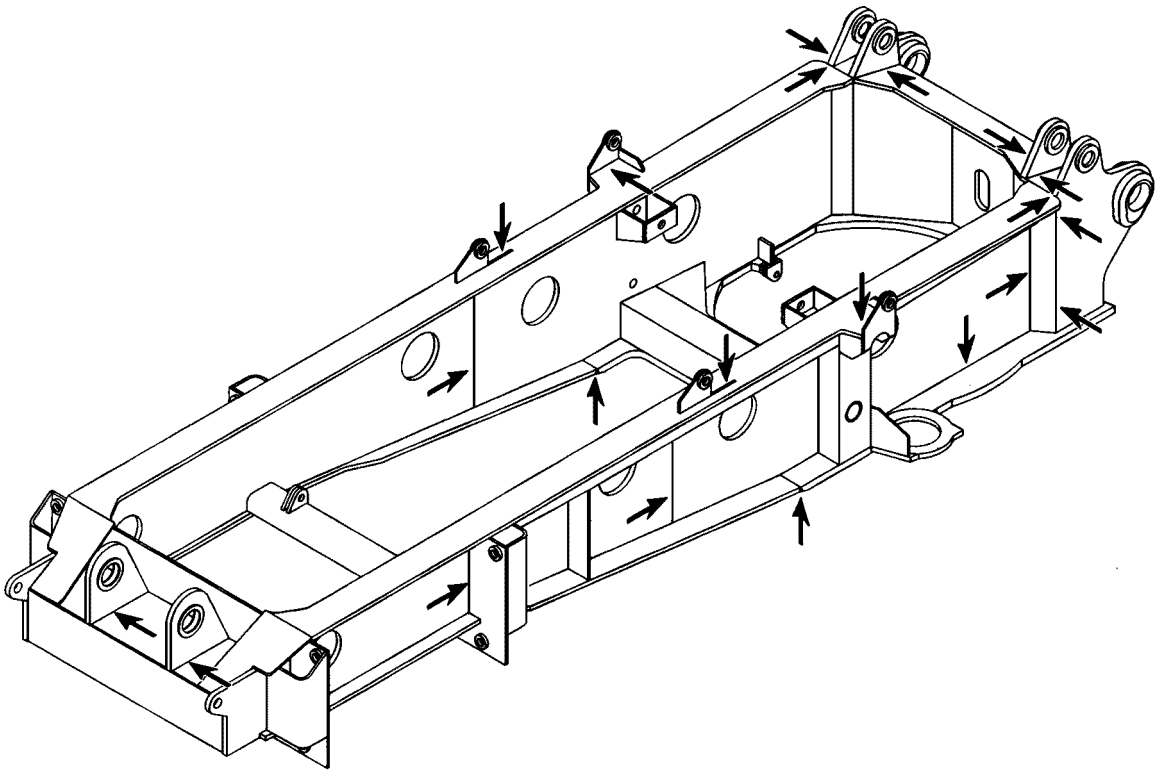

Fig.164879: Example of a turntable frame

LWE/LTR 1100-009/25105-02-02/en

copyright © Liebherr-Werk Ehingen GmbH 2023

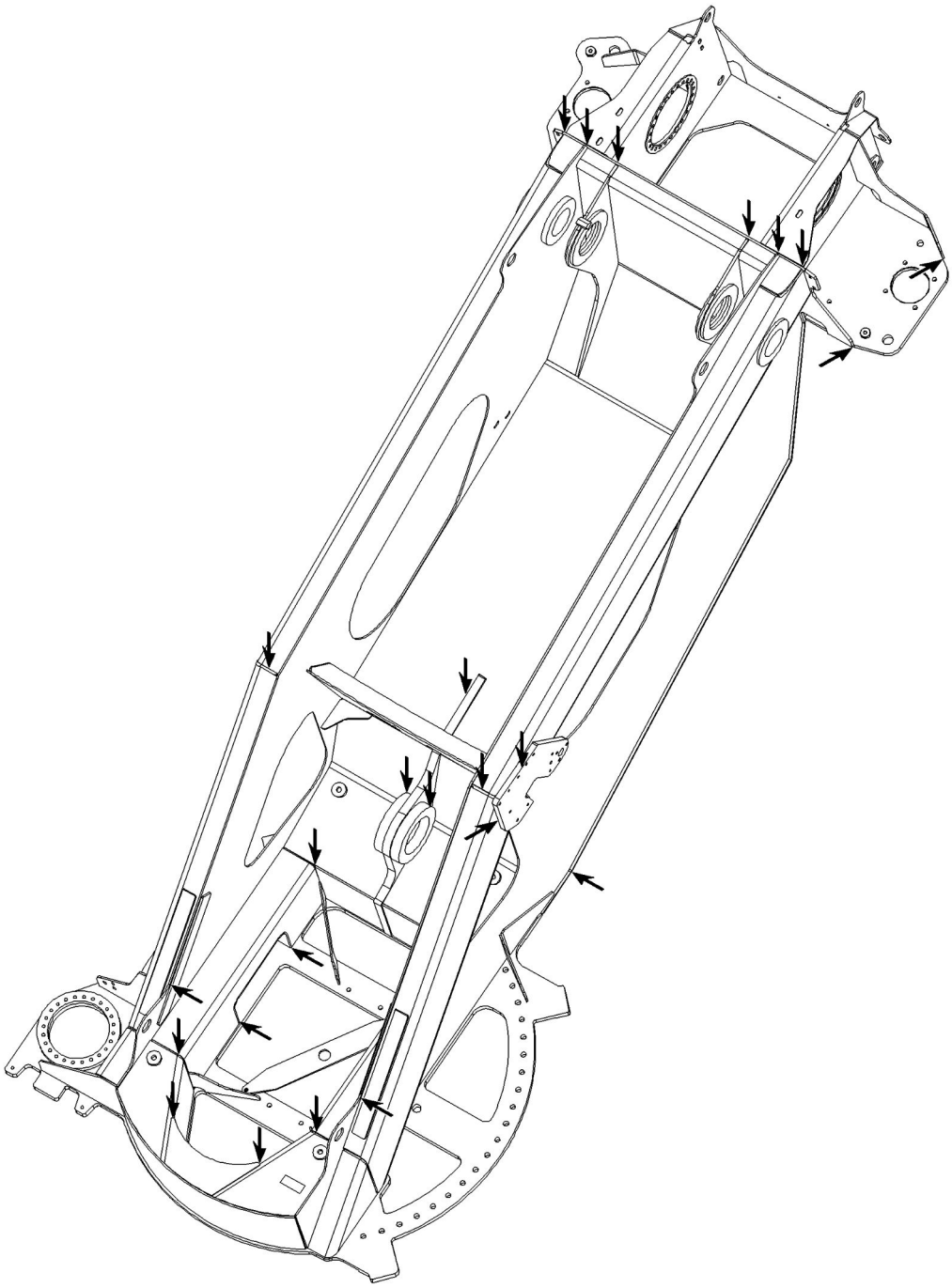

Fig.164880: Example of a turntable frame

LWE/LTR 1100-009/25105-02-02/en

copyright © Liebherr-Werk Ehingen GmbH 2023

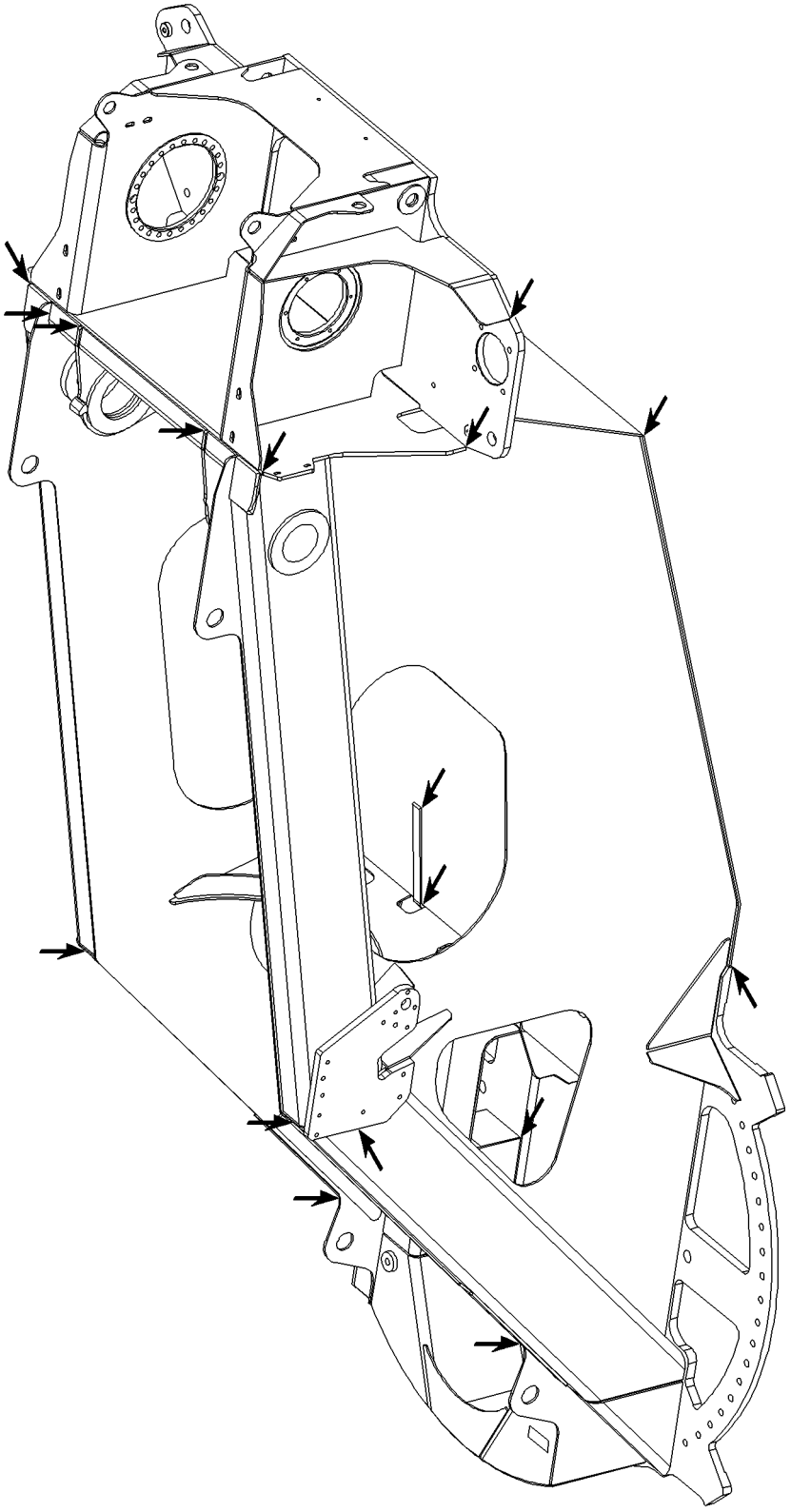

Fig.164881: Example of a turntable frame

LWE/LTR 1100-009/25105-02-02/en

copyright © Liebherr-Werk Ehingen GmbH 2023

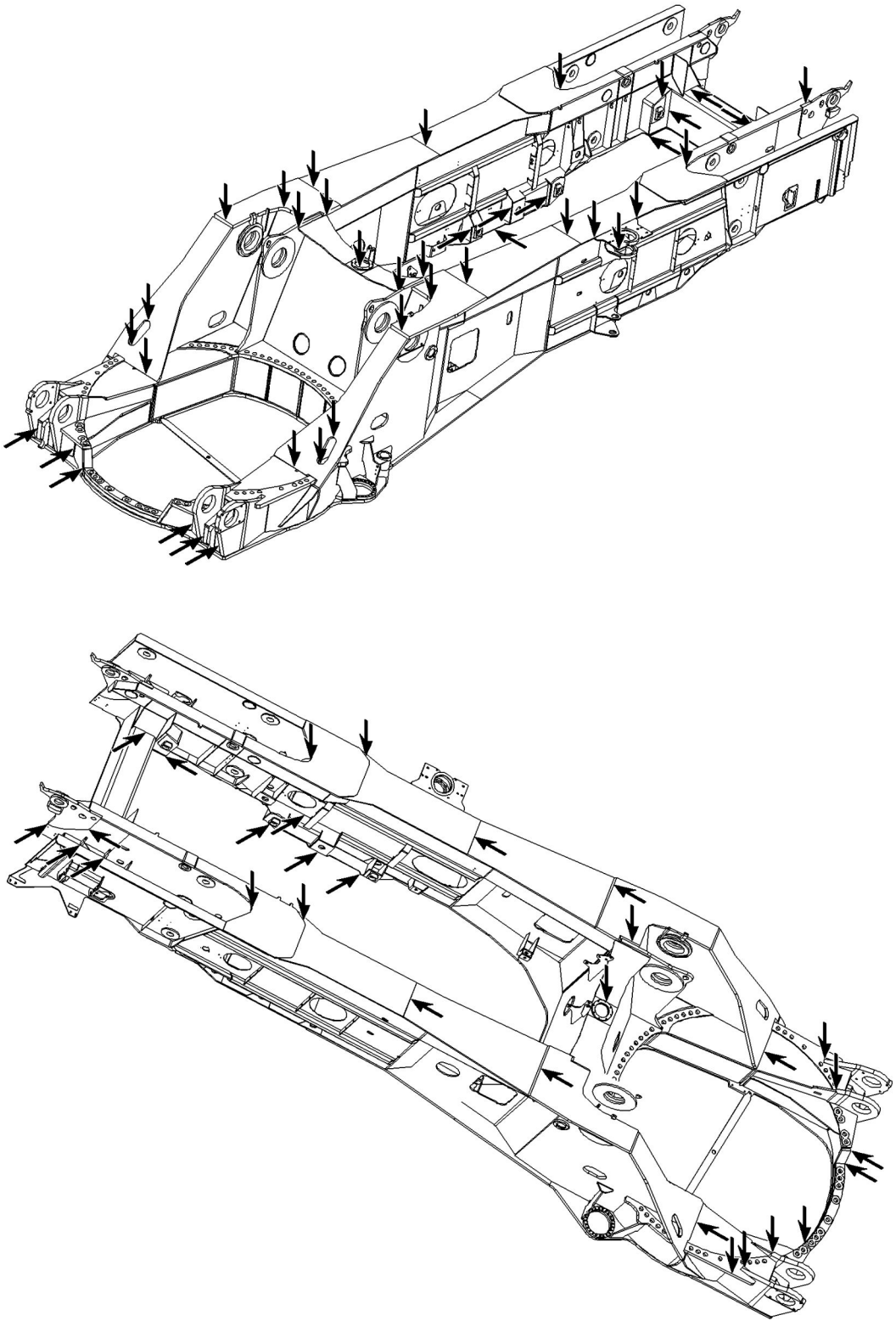

Fig.164882: Example of a turntable frame

LWE/LTR 1100-009/25105-02-02/en

copyright © Liebherr-Werk Ehingen GmbH 2023

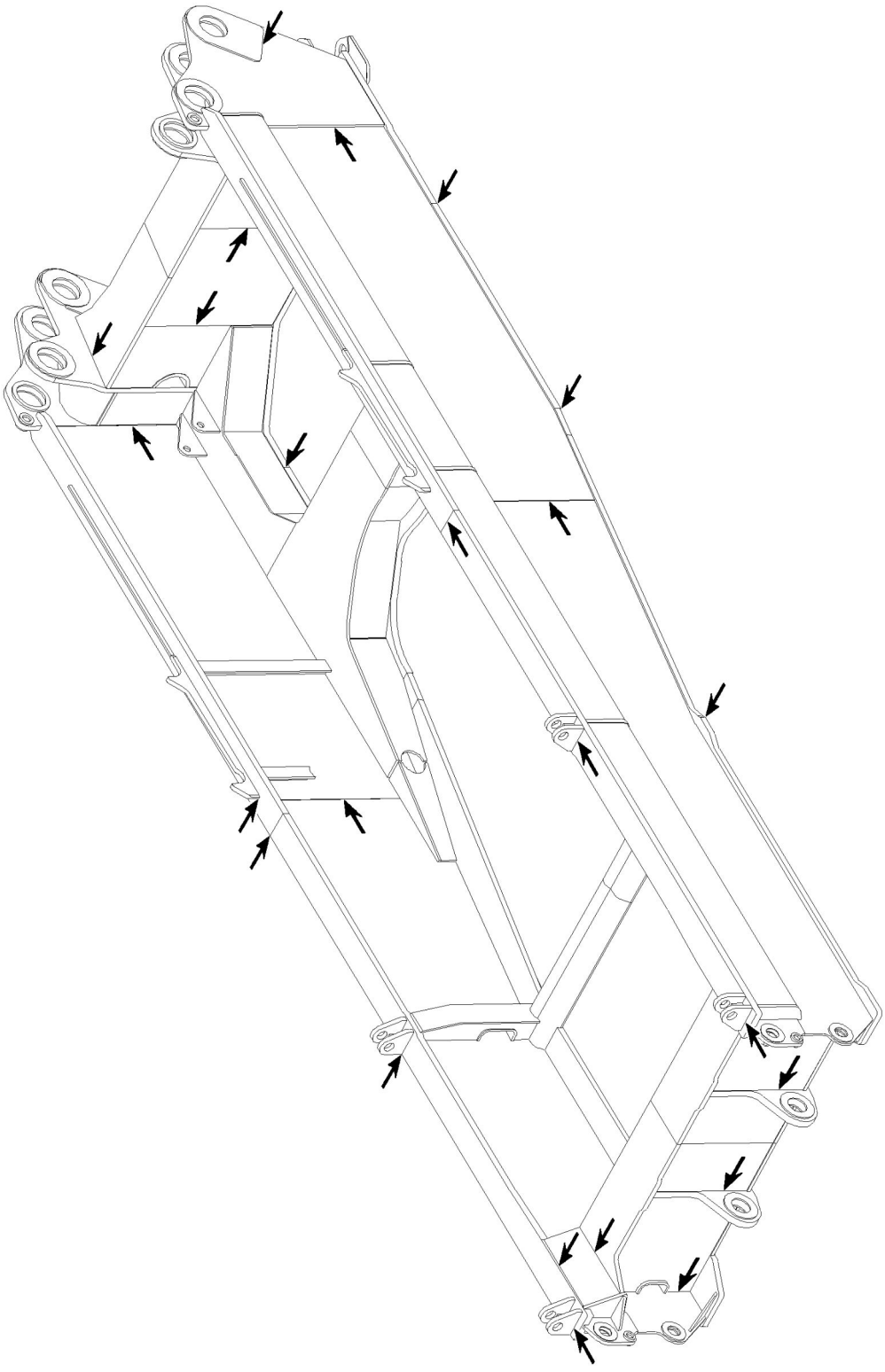

Fig.164883: Example of a turntable frame

LWE/LTR 1100-009/25105-02-02/en

copyright © Liebherr-Werk Ehingen GmbH 2023

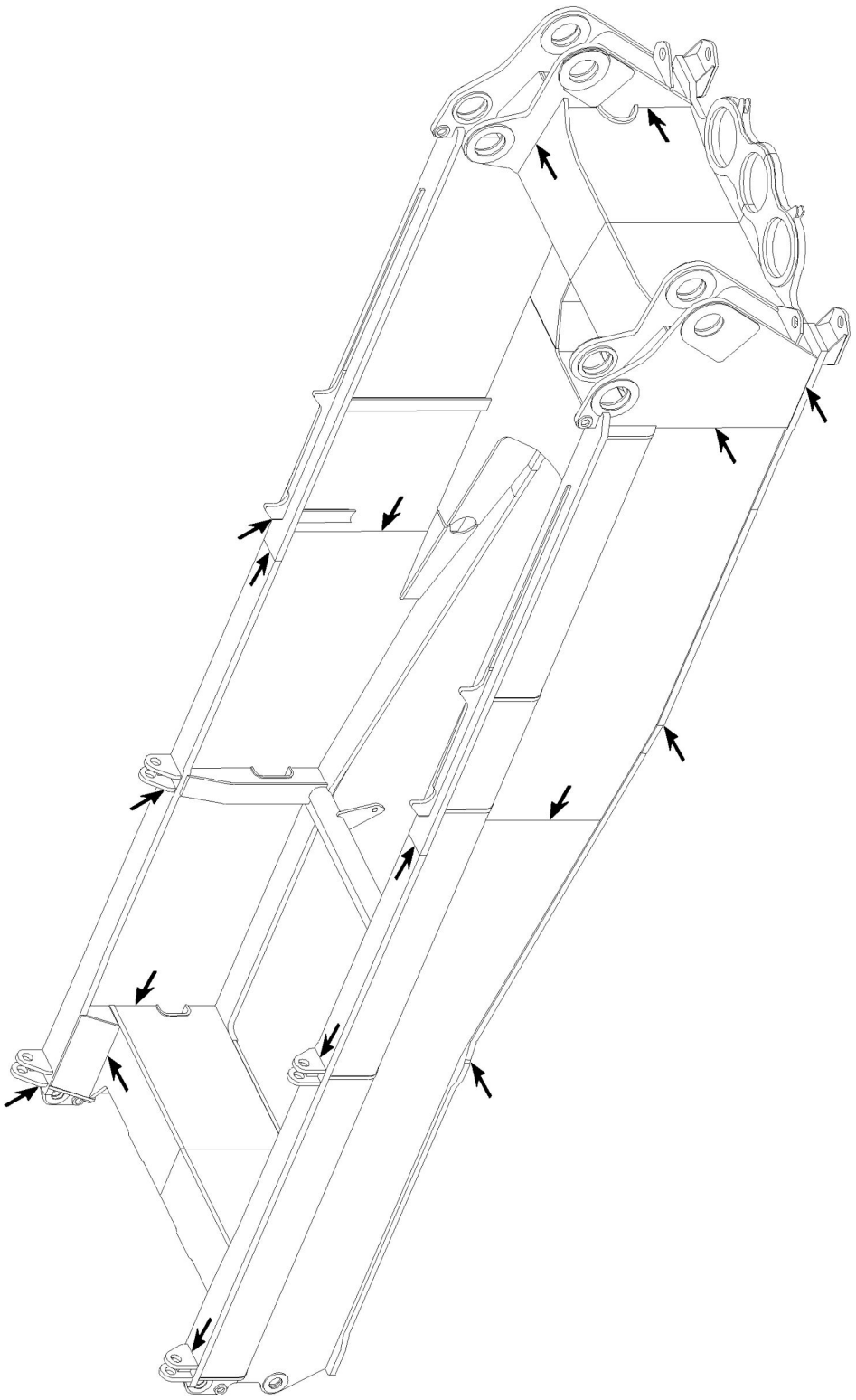

Fig.164884: Example of a turntable frame

LWE/LTR 1100-009/25105-02-02/en

copyright © Liebherr-Werk Ehingen GmbH 2023

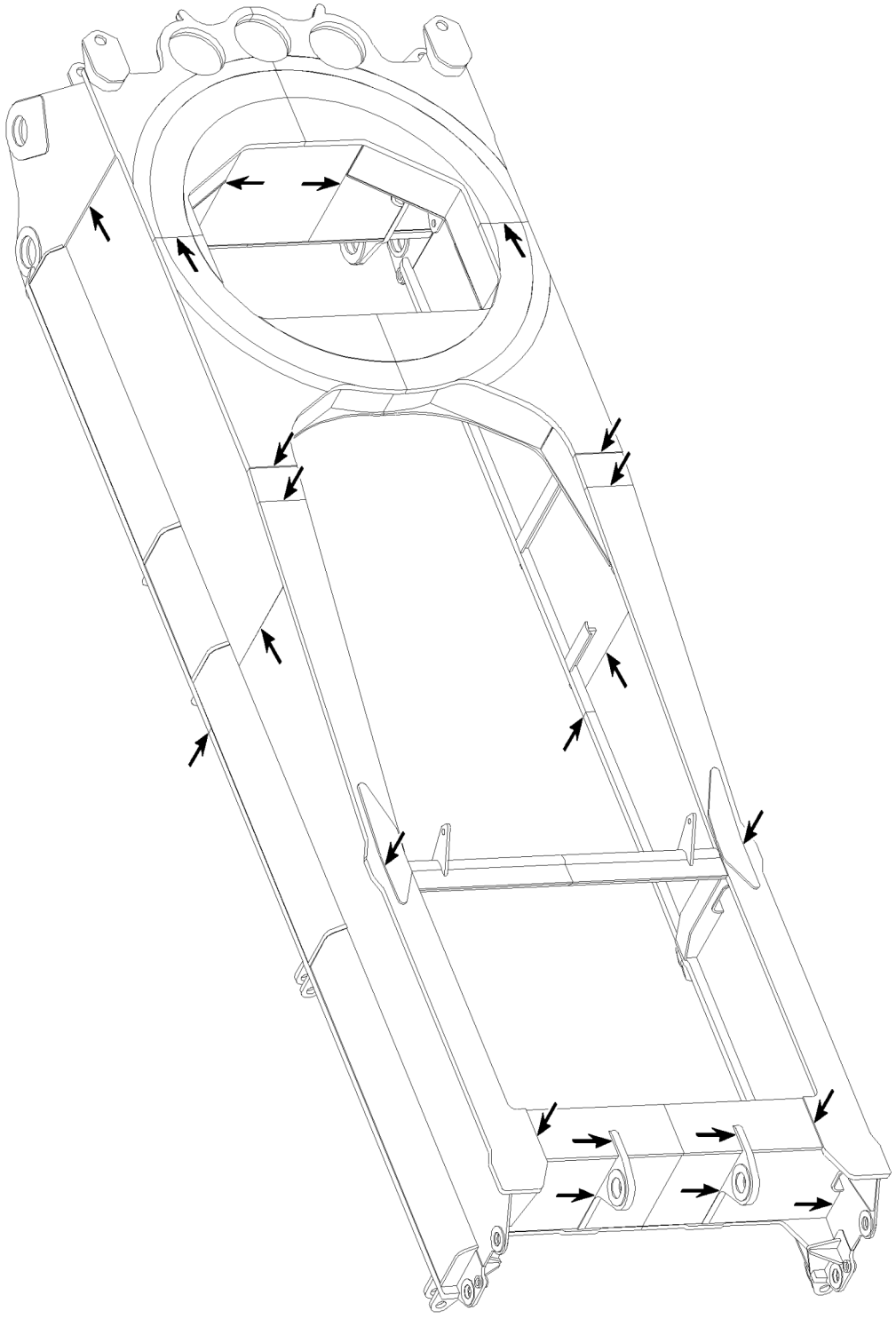

Fig.164885: Example of a turntable frame

LWE/LTR 1100-009/25105-02-02/en

copyright © Liebherr-Werk Ehingen GmbH 2023

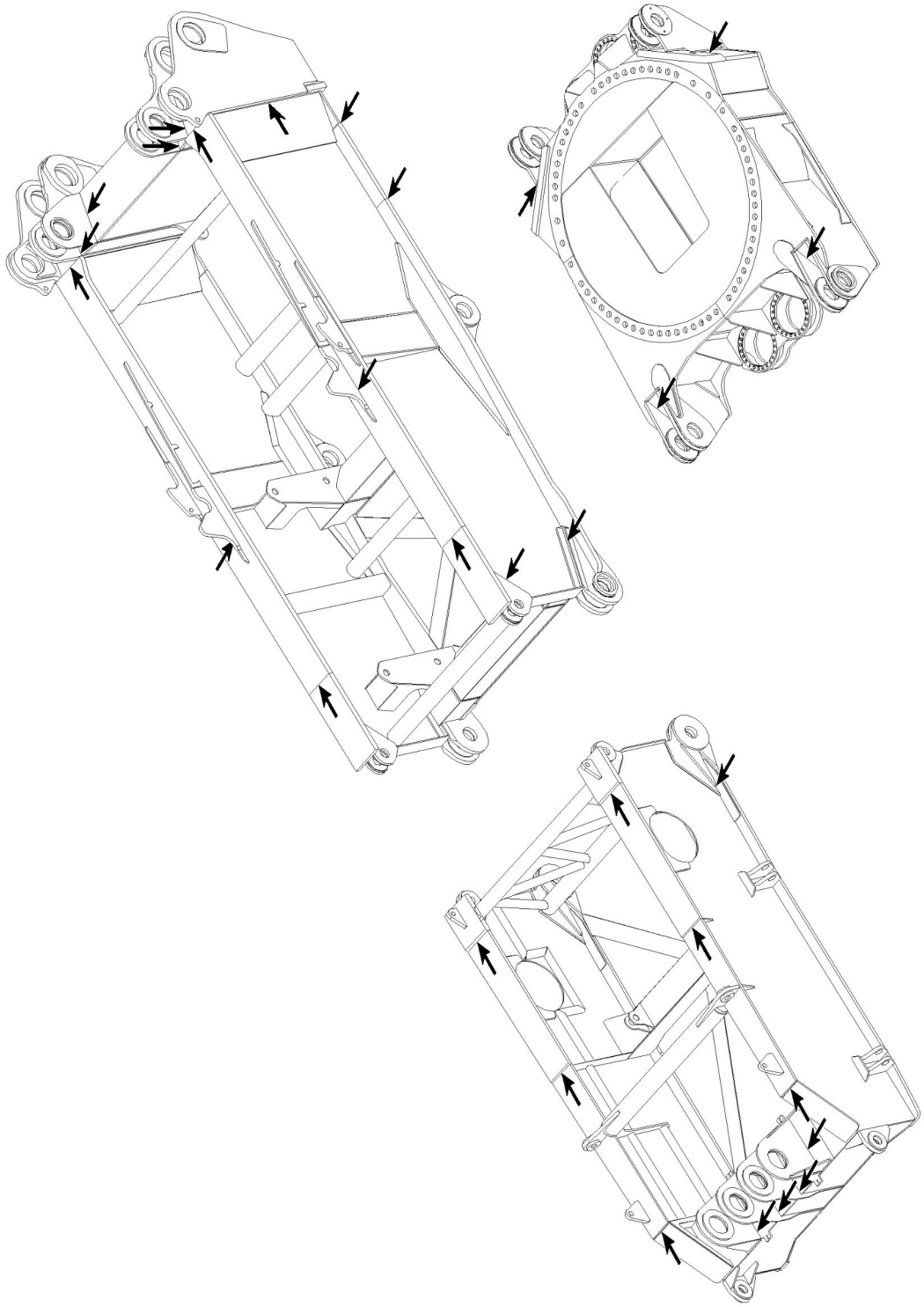

Fig.164886: Example of a turntable frame

LWE/LTR 1100-009/25105-02-02/en

copyright © Liebherr-Werk Ehingen GmbH 2023

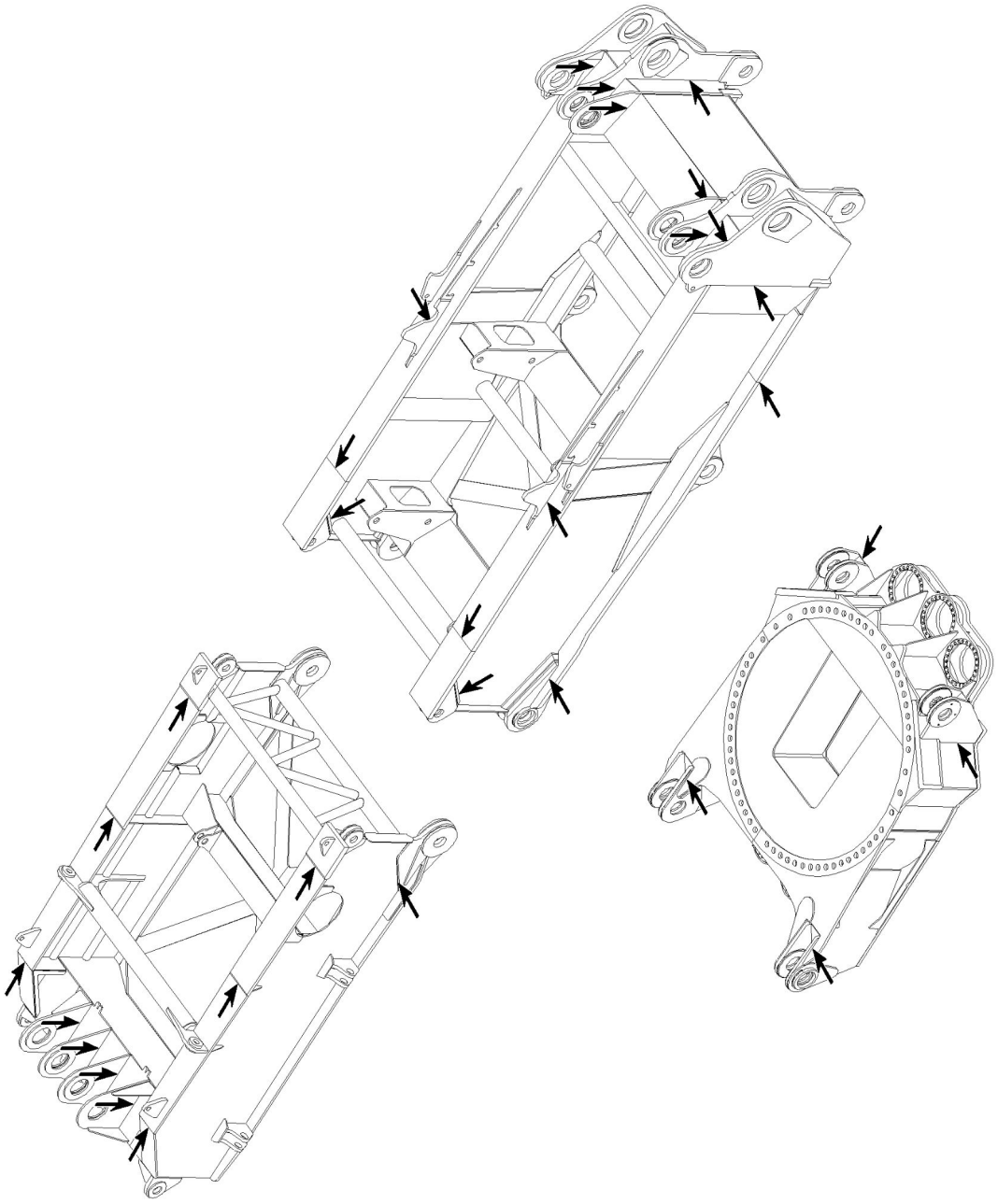

Fig.164887: Example of a turntable frame

LWE/LTR 1100-009/25105-02-02/en

copyright © Liebherr-Werk Ehingen GmbH 2023

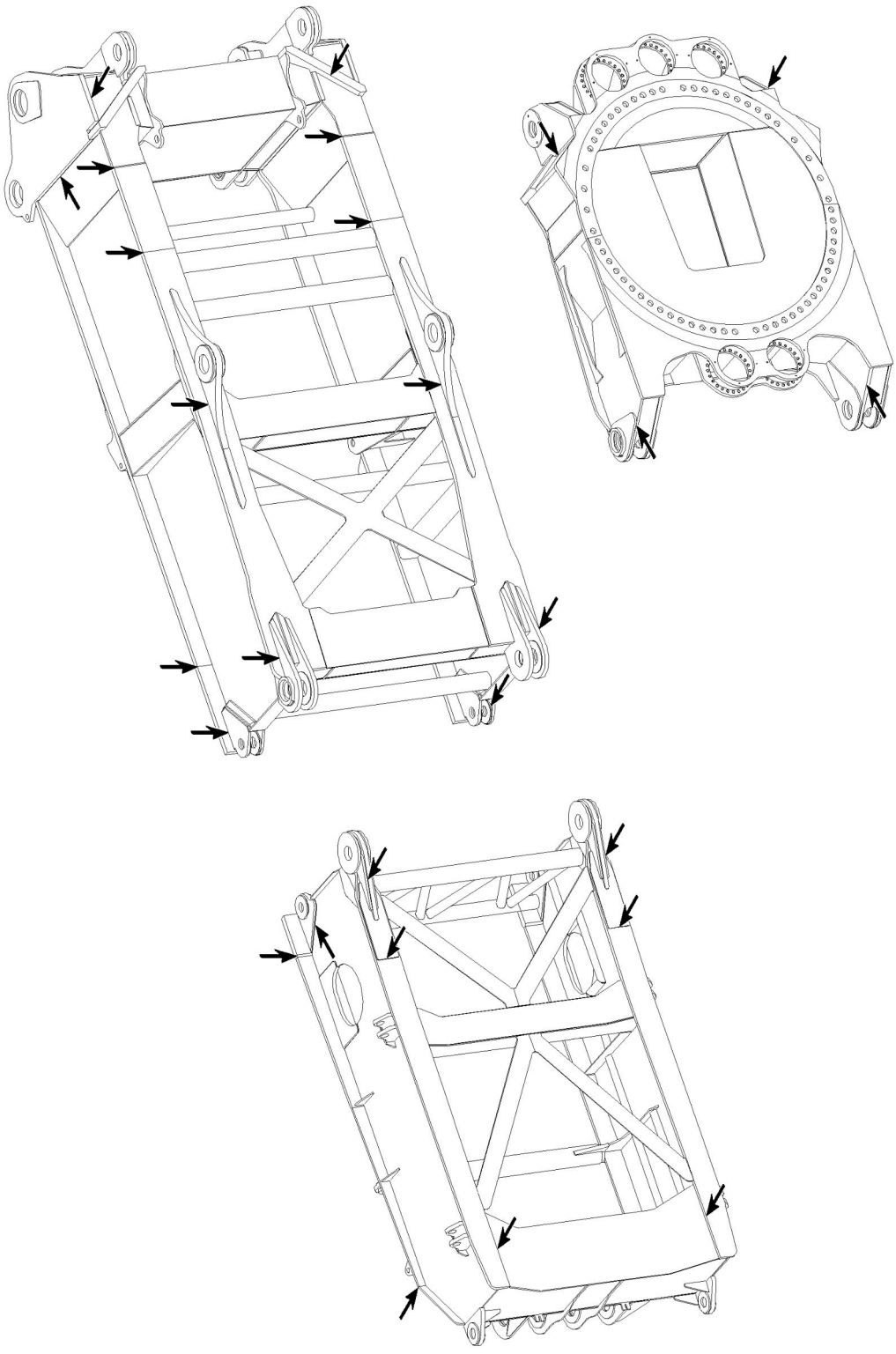

Fig.164888: Example of a turntable frame

LWE/LTR 1100-009/25105-02-02/en

copyright © Liebherr-Werk Ehingen GmbH 2023

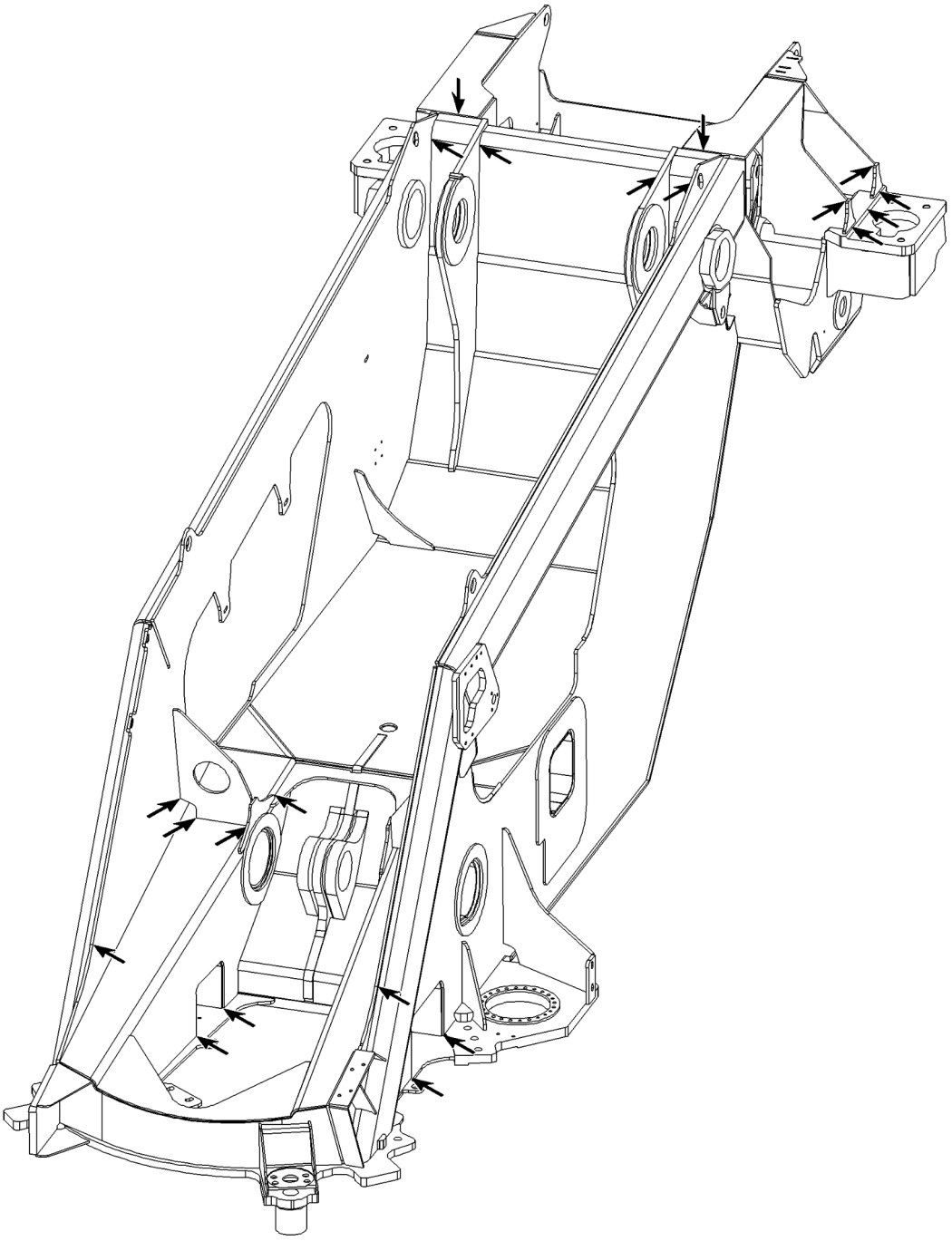

Fig.164889: Example of a turntable frame

LWE/LTR 1100-009/25105-02-02/en

copyright © Liebherr-Werk Ehingen GmbH 2023

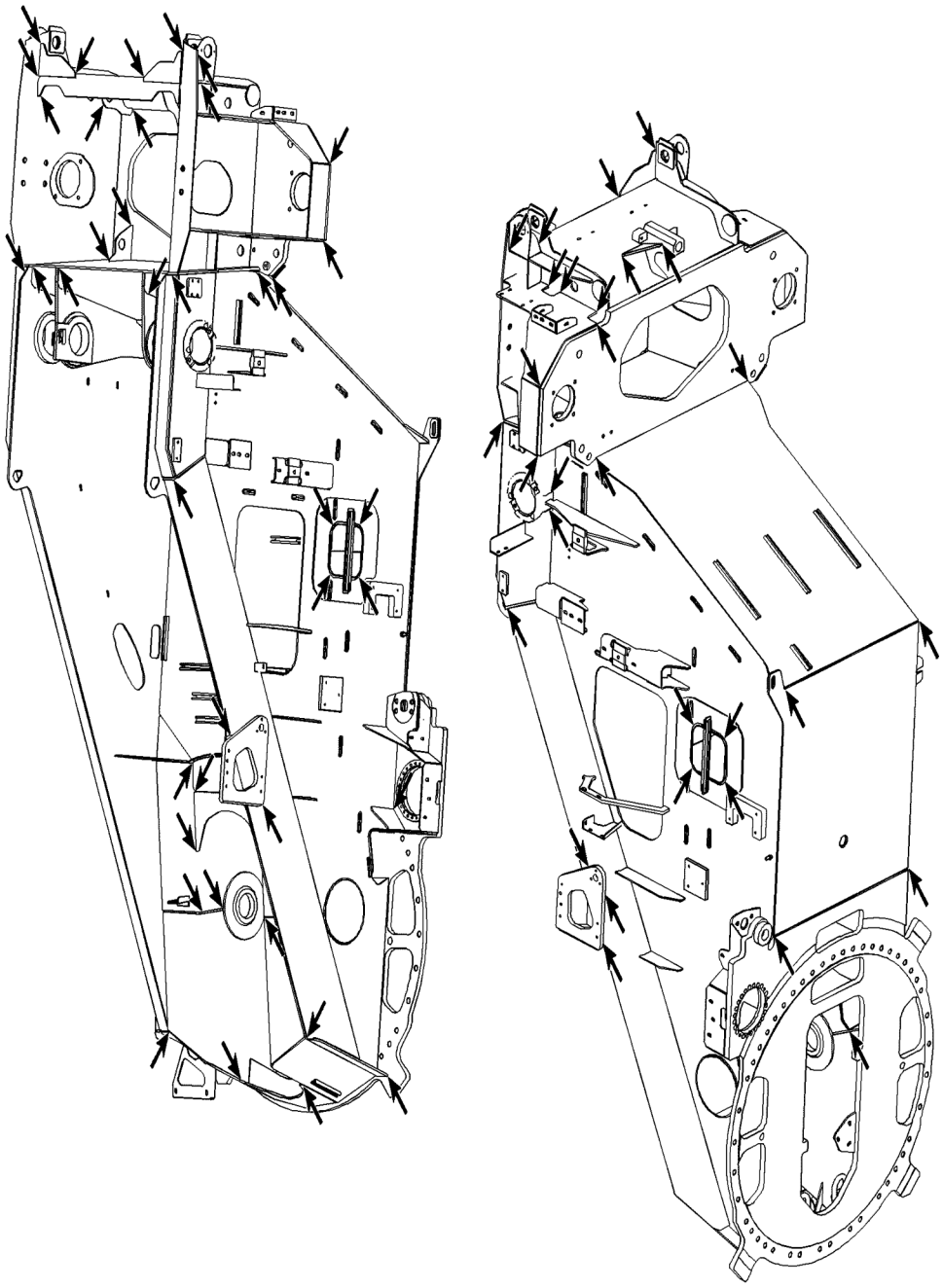

Fig.164890: Example of a turntable frame

LWE/LTR 1100-009/25105-02-02/en

copyright © Liebherr-Werk Ehingen GmbH 2023

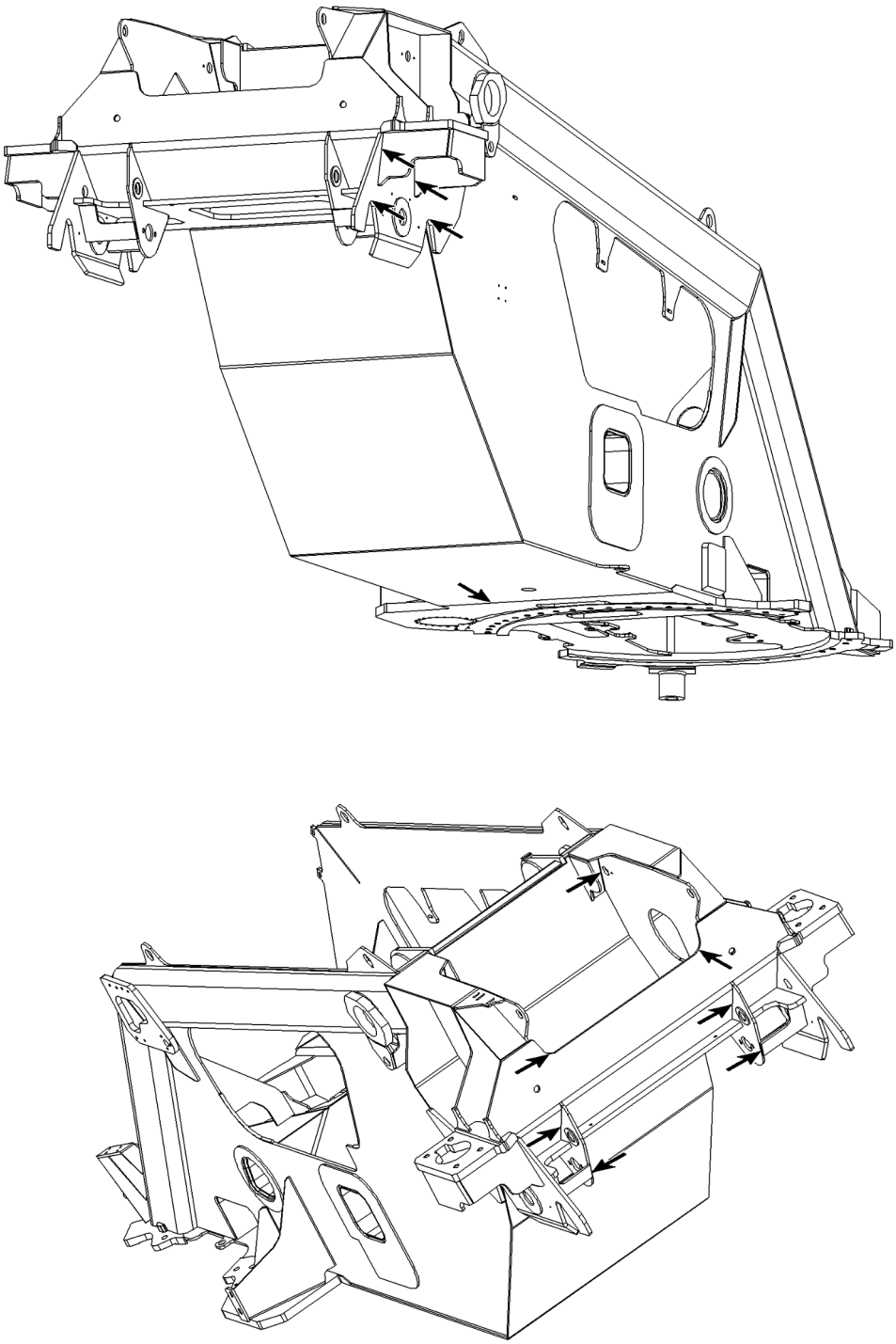

Fig.164891: Example of a turntable frame

LWE/LTR 1100-009/25105-02-02/en

copyright © Liebherr-Werk Ehingen GmbH 2023

Ballast cylinder

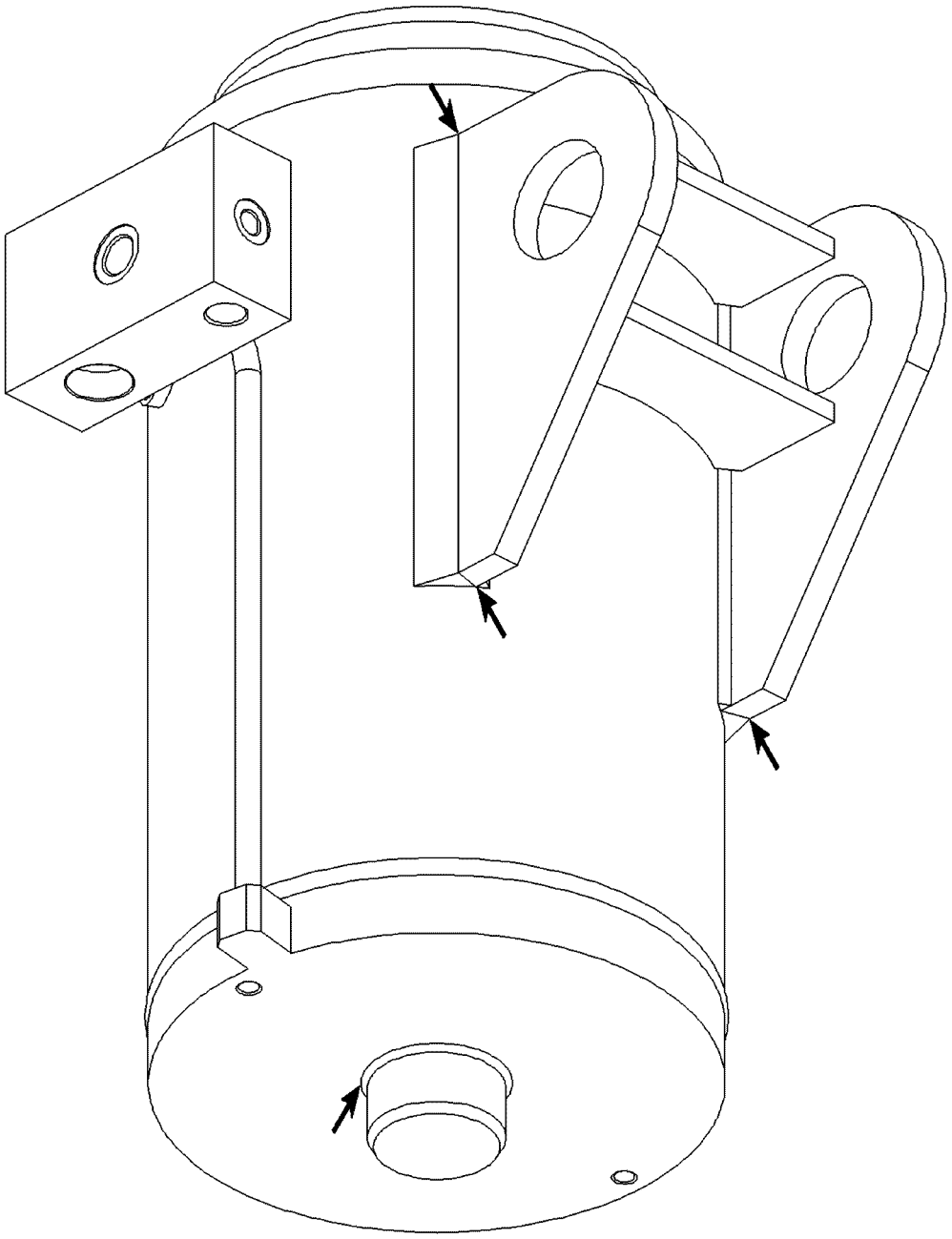

Fig.164892: Example of a ballast cylinder

LWE/LTR 1100-009/25105-02-02/en

copyright © Liebherr-Werk Ehingen GmbH 2023

Receptacle plate

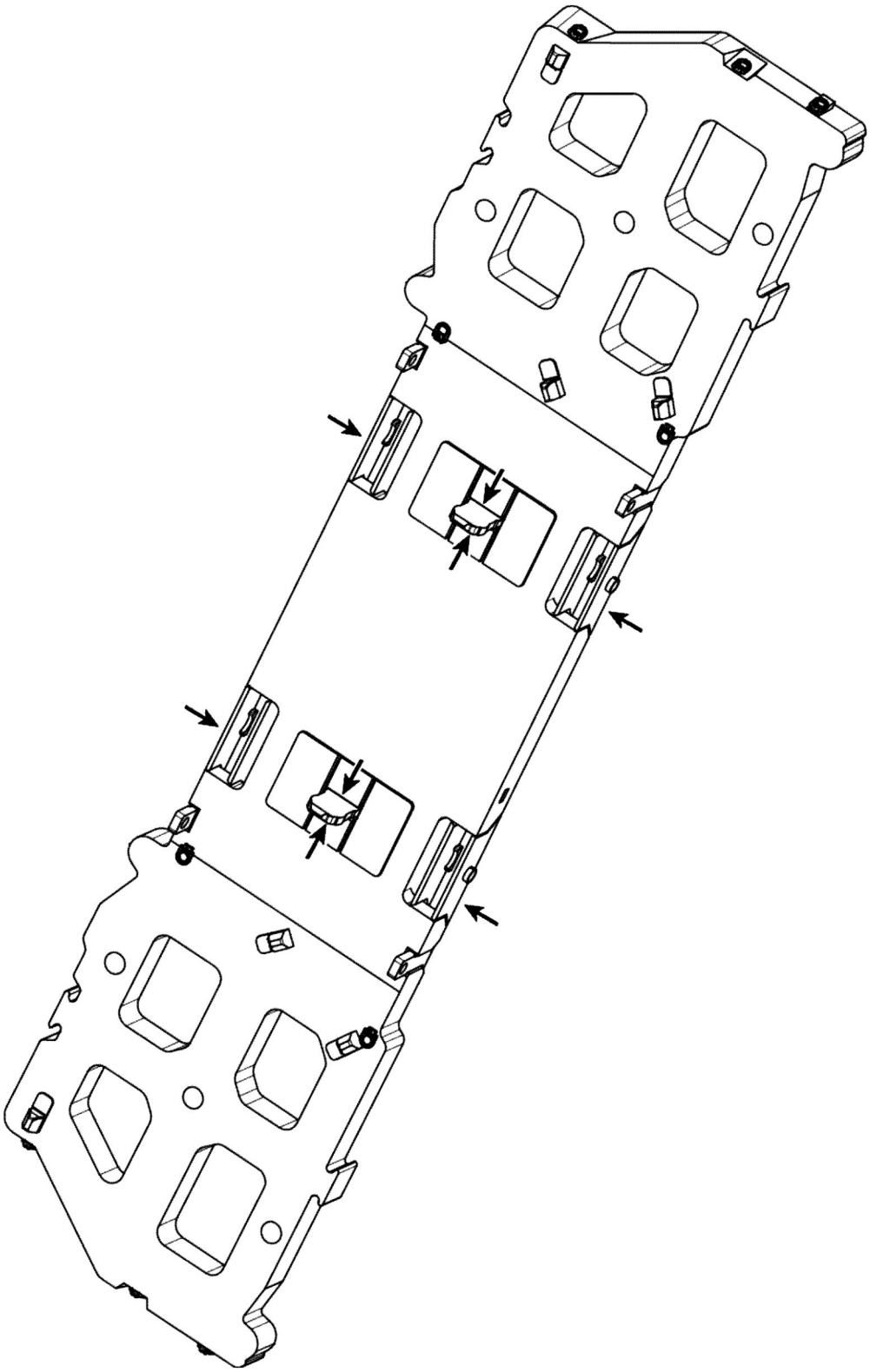

Fig.164893: Example of mounting plate

LWE/LTR 1100-009/25105-02-02/en

copyright © Liebherr-Werk Ehingen GmbH 2023

Base plate

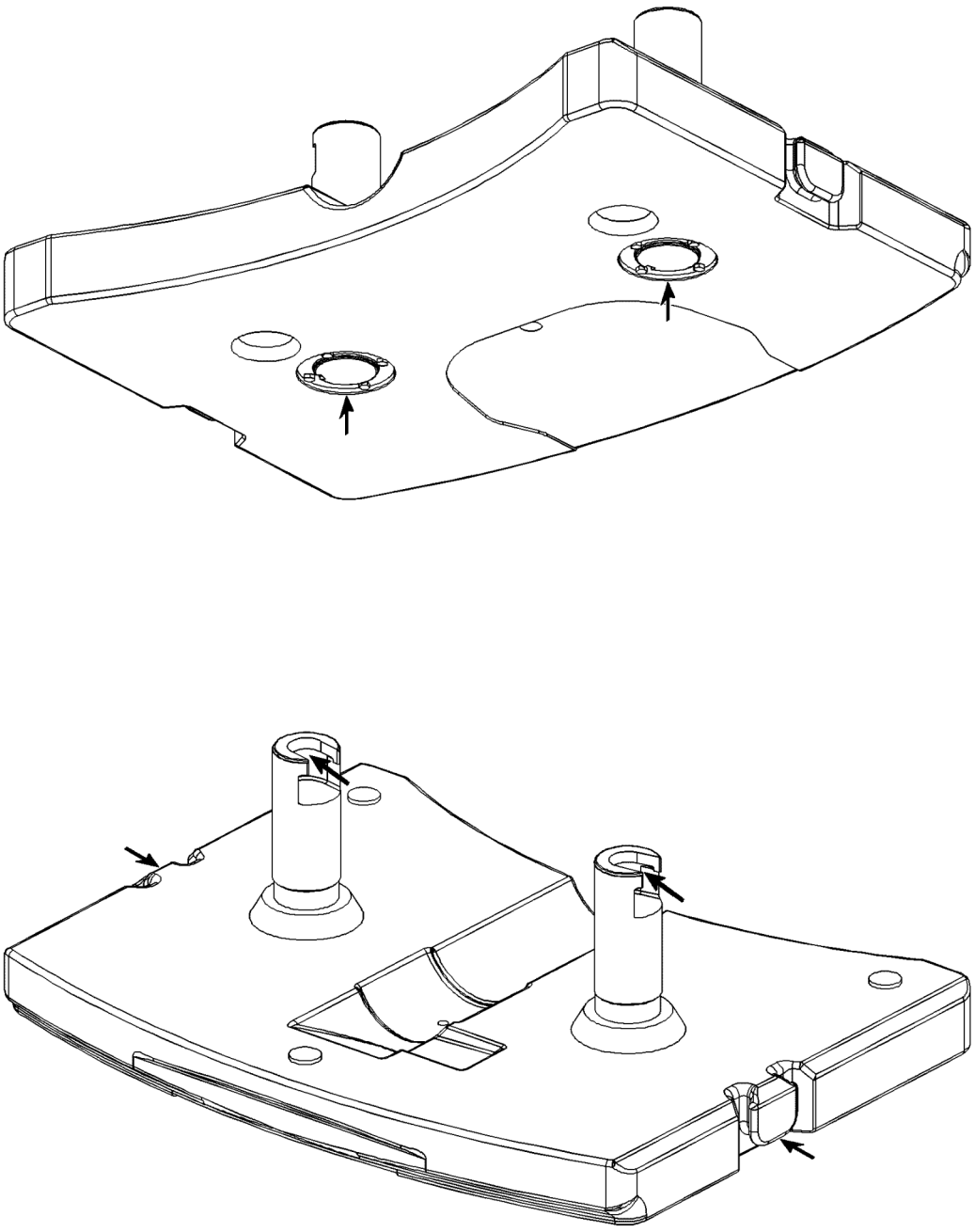

Fig.164894: Example of base plate

LWE/LTR 1100-009/25105-02-02/en

copyright © Liebherr-Werk Ehingen GmbH 2023

2.4.3 Boom

Pivot section

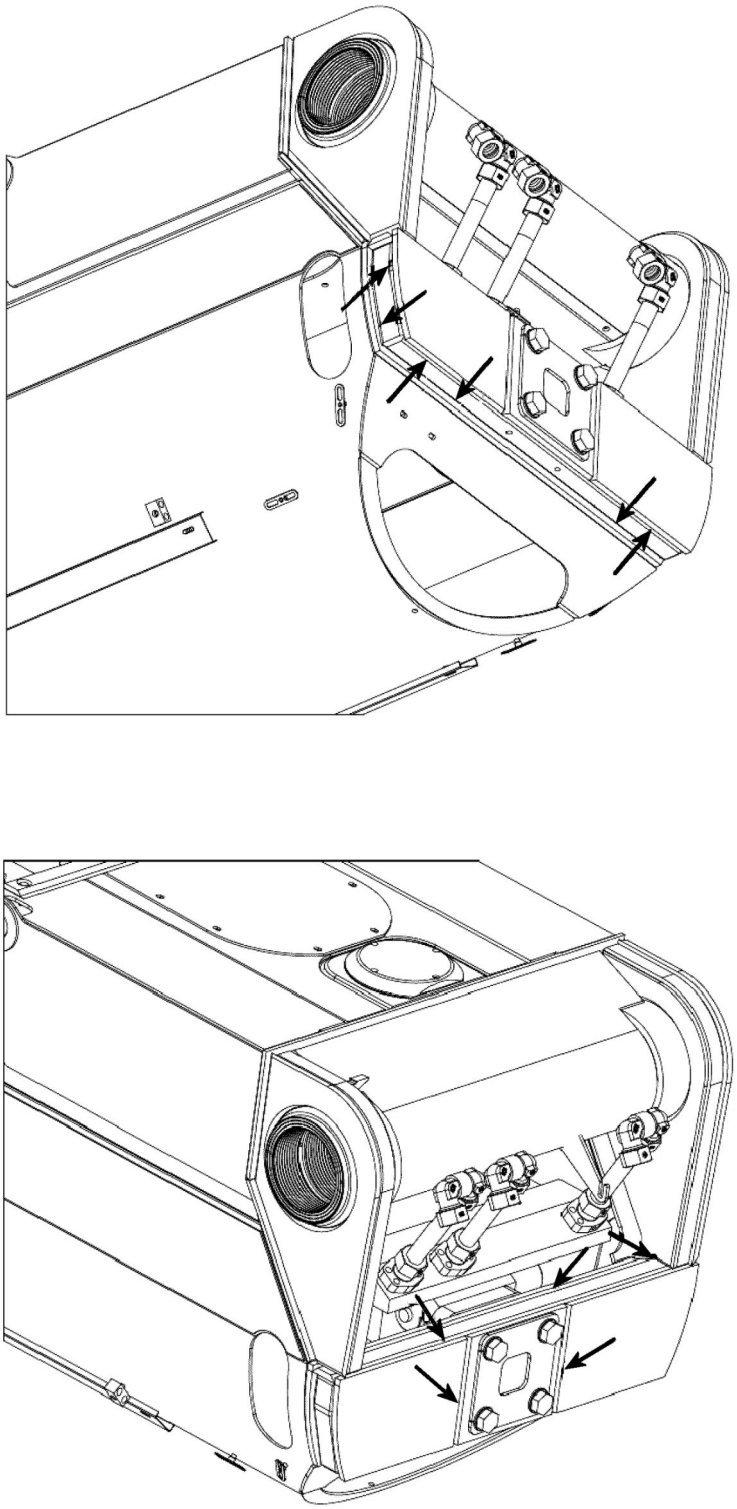

Fig.164895: Example of a pivot section

LWE/LTR 1100-009/25105-02-02/en

copyright © Liebherr-Werk Ehingen GmbH 2023

Telescopic boom

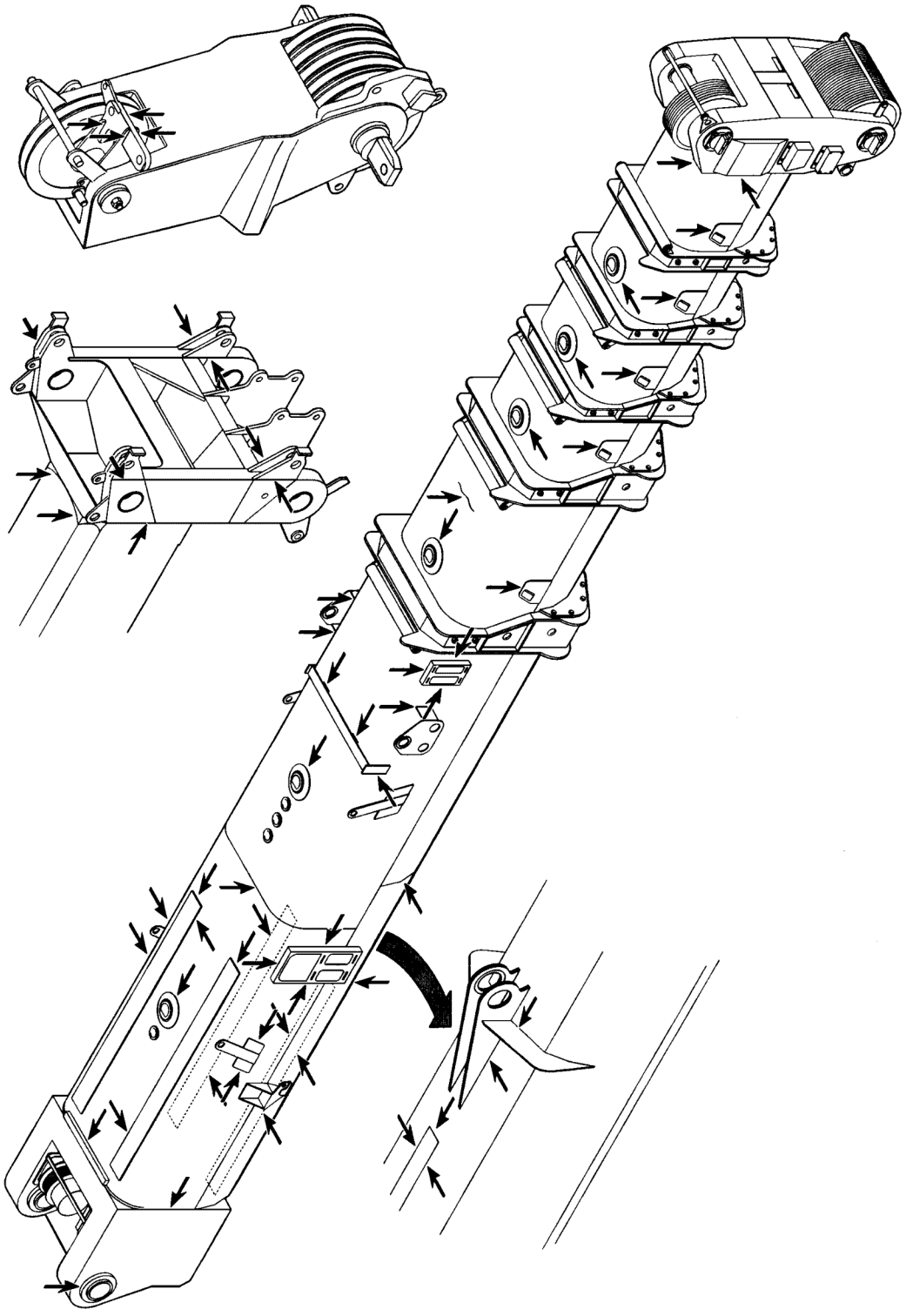

Fig.164896: Example of a telescopic boom

LWE/LTR 1100-009/25105-02-02/en

copyright © Liebherr-Werk Ehingen GmbH 2023

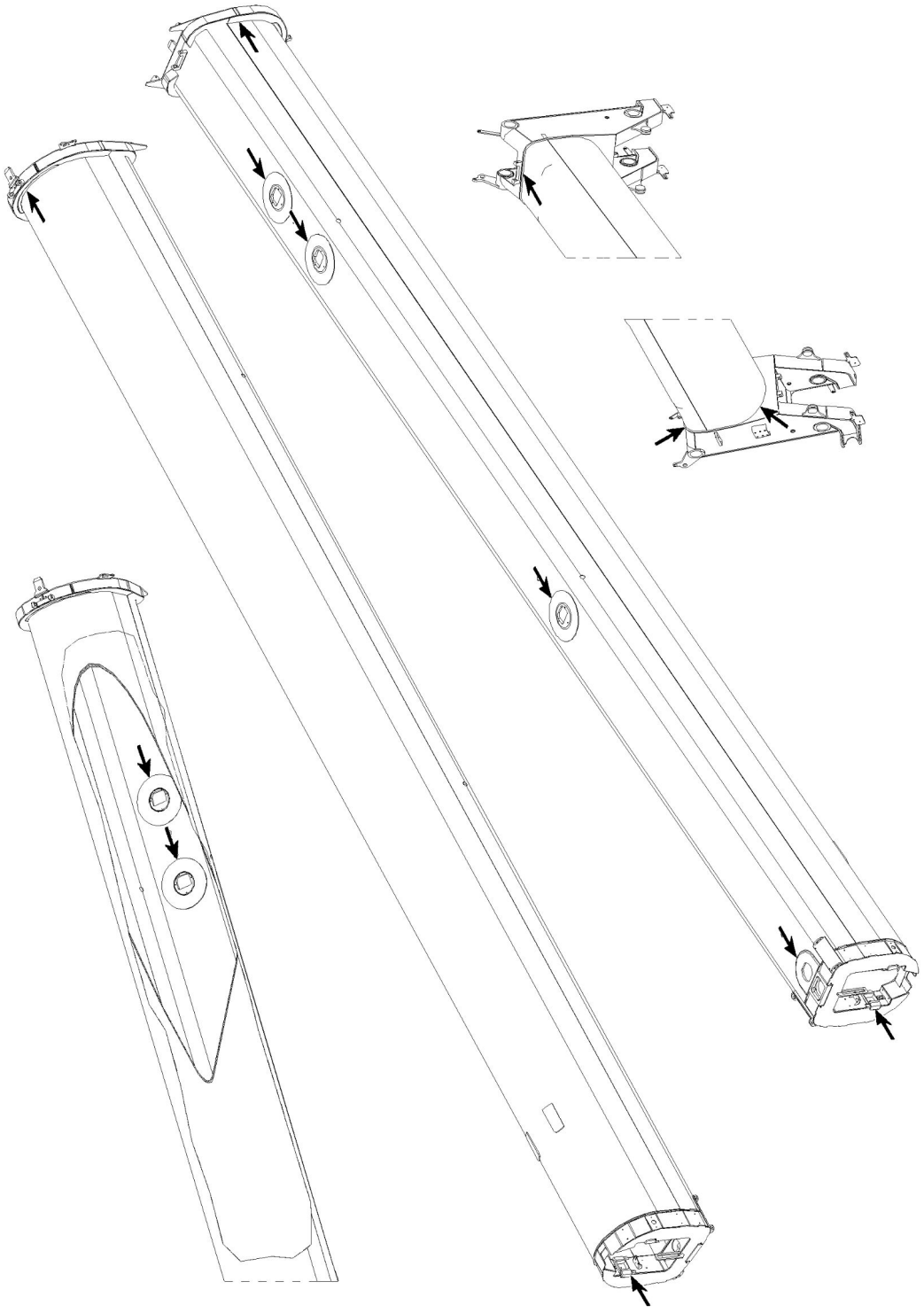

Fig.164897: Example of a telescopic boom

LWE/LTR 1100-009/25105-02-02/en

copyright © Liebherr-Werk Ehingen GmbH 2023

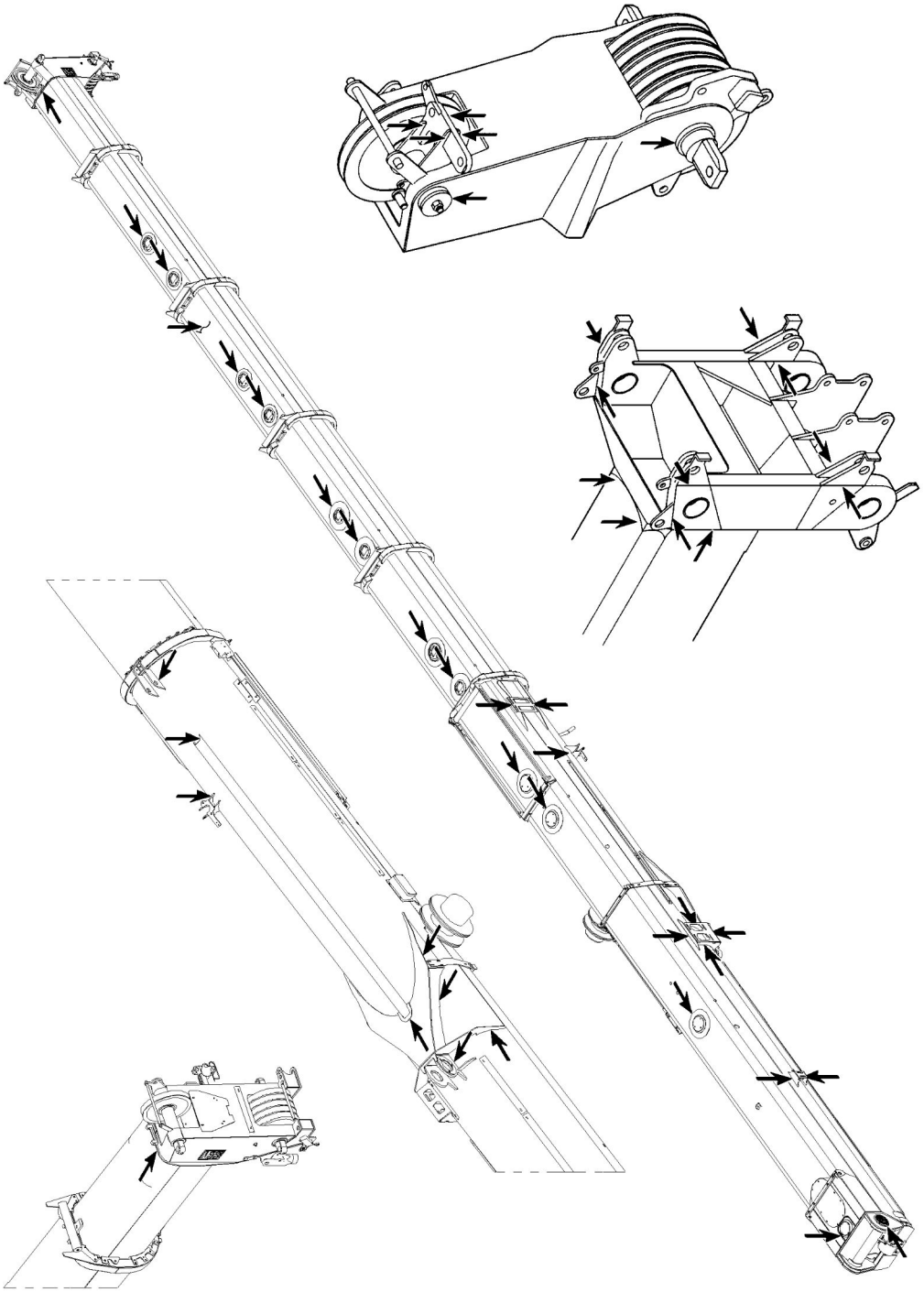

Fig.164898: Example of a telescopic boom

LWE/LTR 1100-009/25105-02-02/en

copyright © Liebherr-Werk Ehingen GmbH 2023

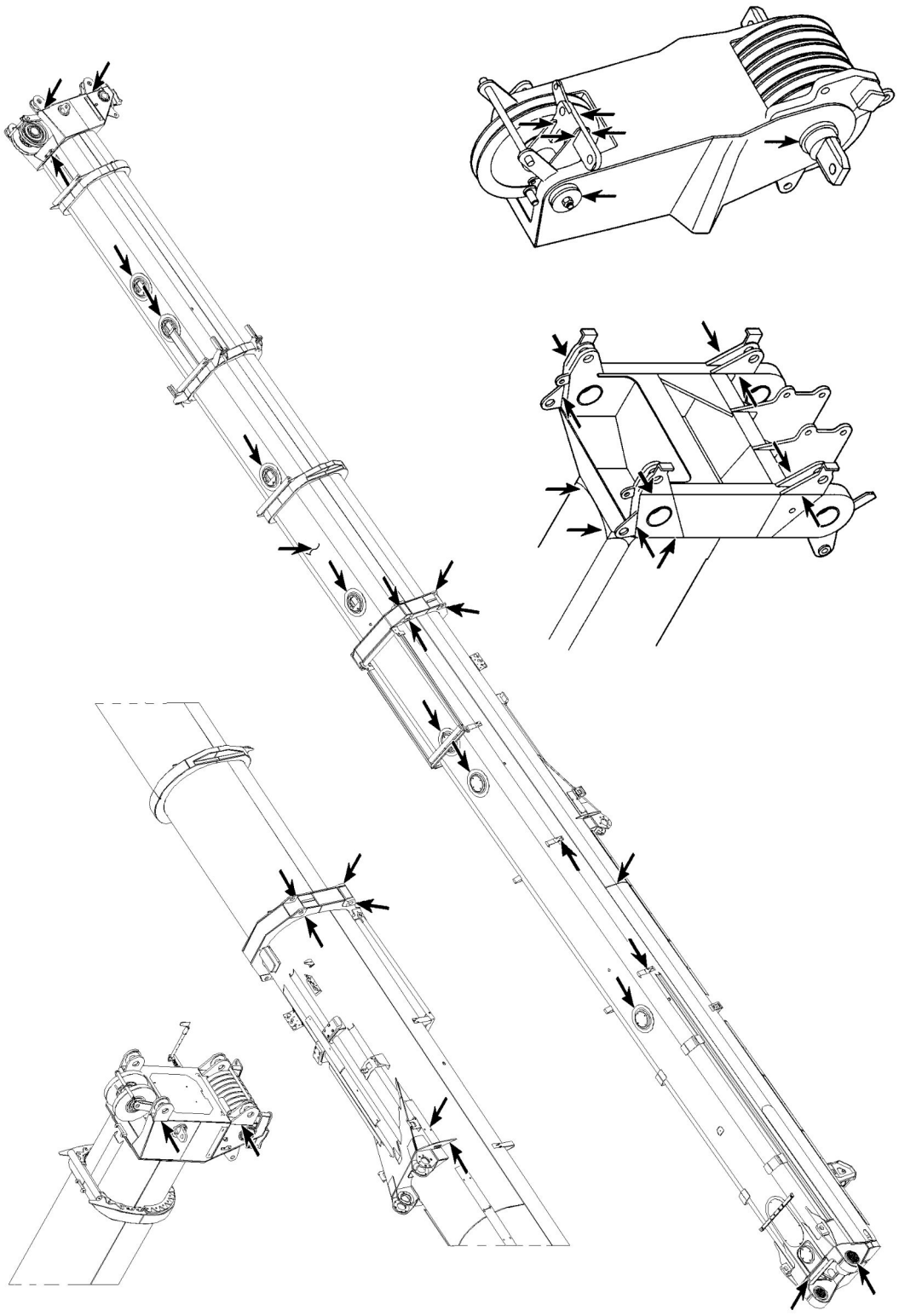

Fig.164899: Example of a telescopic boom

LWE/LTR 1100-009/25105-02-02/en

copyright © Liebherr-Werk Ehingen GmbH 2023

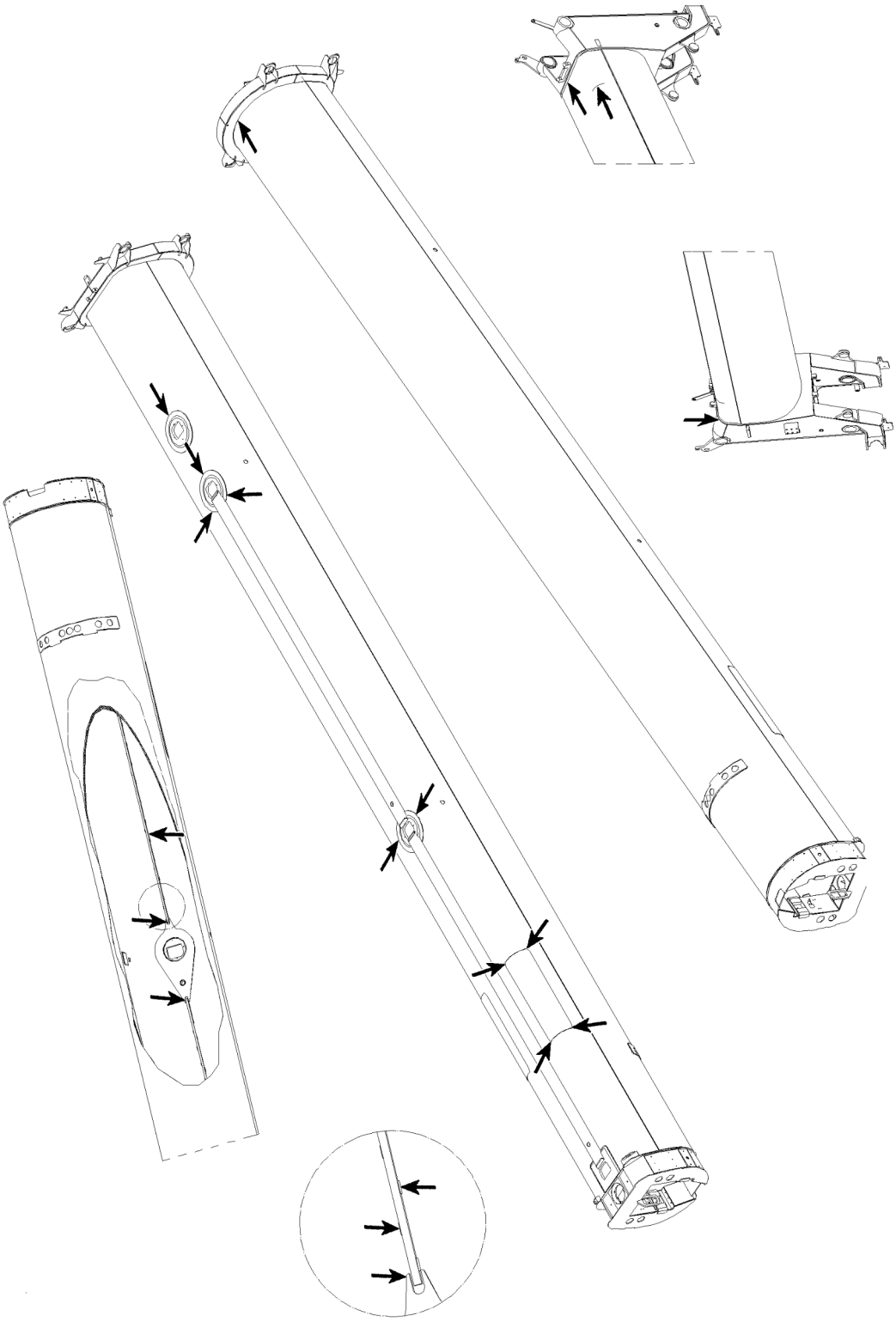

Fig.164900: Example of a telescopic boom

LWE/LTR 1100-009/25105-02-02/en

copyright © Liebherr-Werk Ehingen GmbH 2023

Telescopic boom push out mechanics

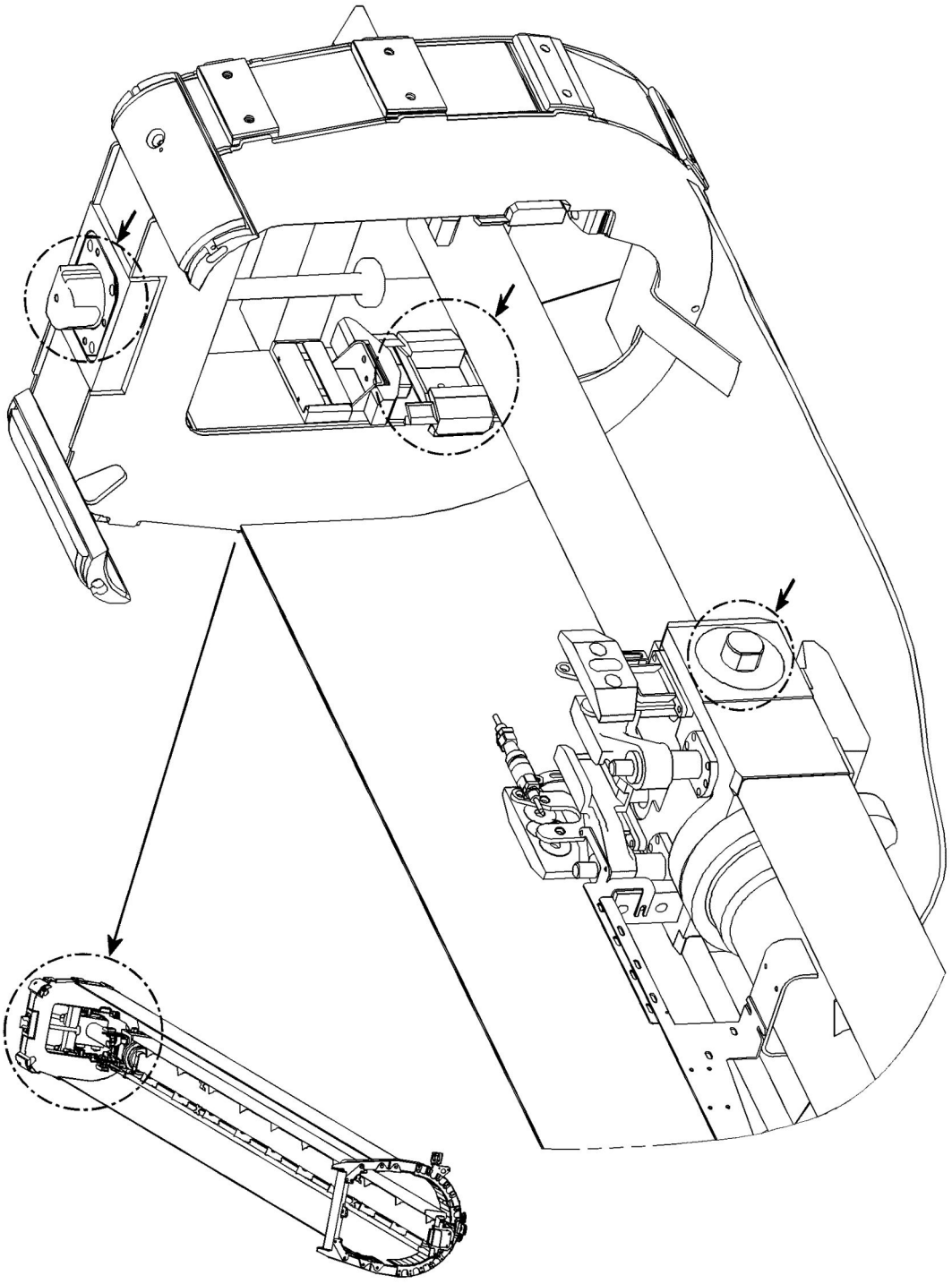

Fig.164901: Example of push out mechanics telescopic boom

LWE/LTR 1100-009/25105-02-02/en

copyright © Liebherr-Werk Ehingen GmbH 2023

Boom nose

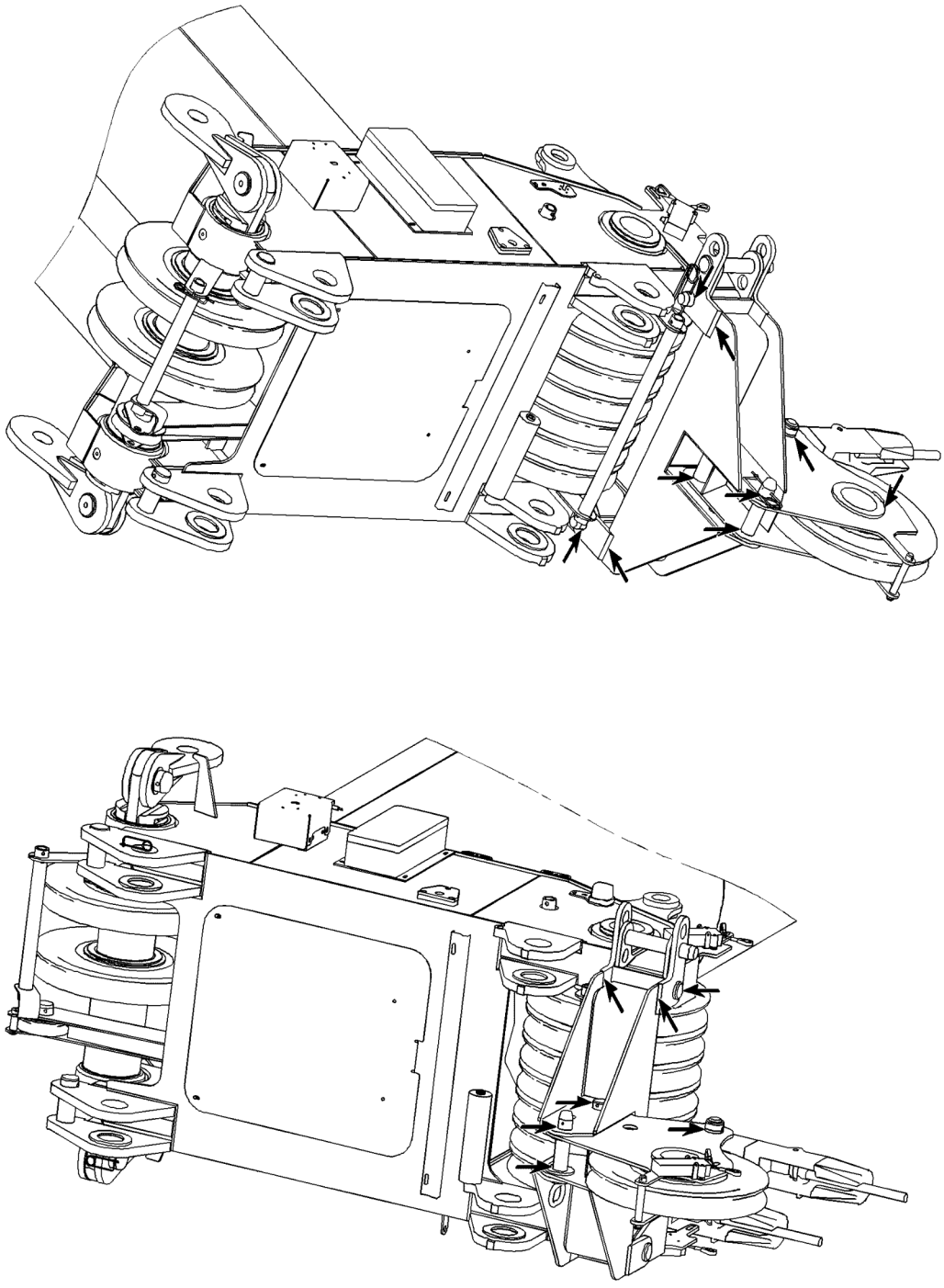

Fig.164902: Example of a boom nose

LWE/LTR 1100-009/25105-02-02/en

copyright © Liebherr-Werk Ehingen GmbH 2023

Dolly console

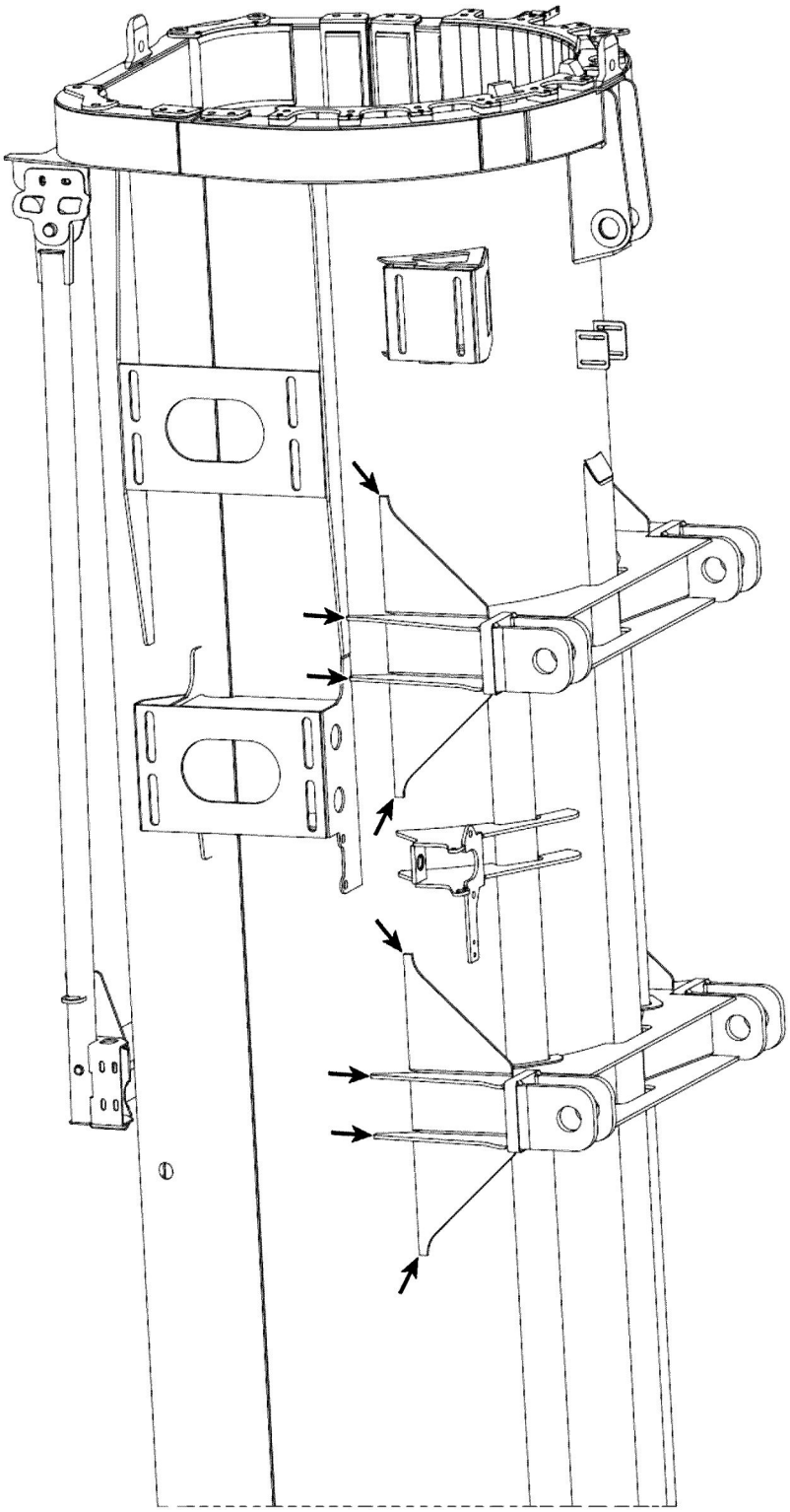

Fig.164903: Example of a dolly console

LWE/LTR 1100-009/25105-02-02/en

copyright © Liebherr-Werk Ehingen GmbH 2023

Lattice jib

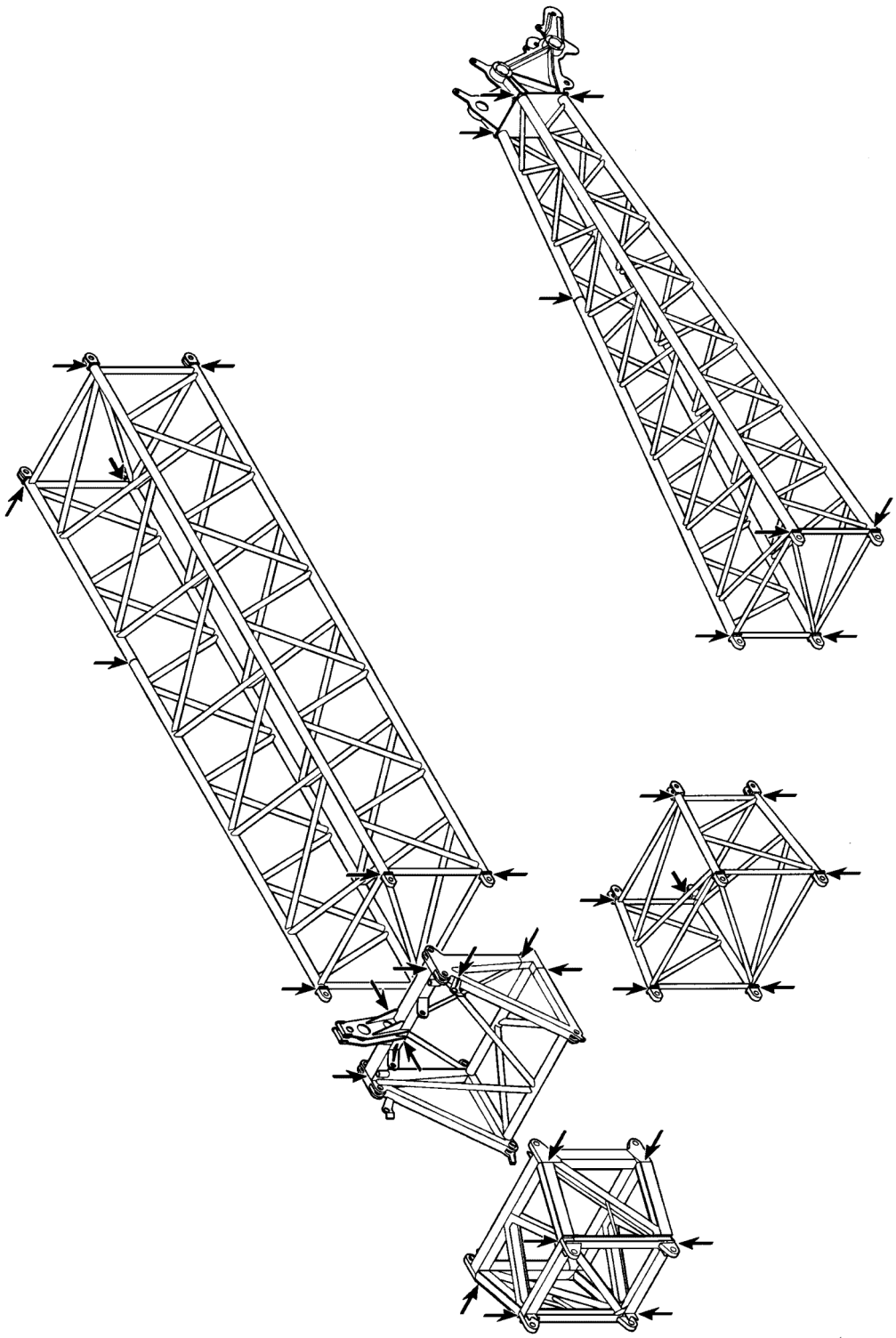

Fig.164904: Example of a lattice jib

LWE/LTR 1100-009/25105-02-02/en

copyright © Liebherr-Werk Ehingen GmbH 2023

NA/WA frame

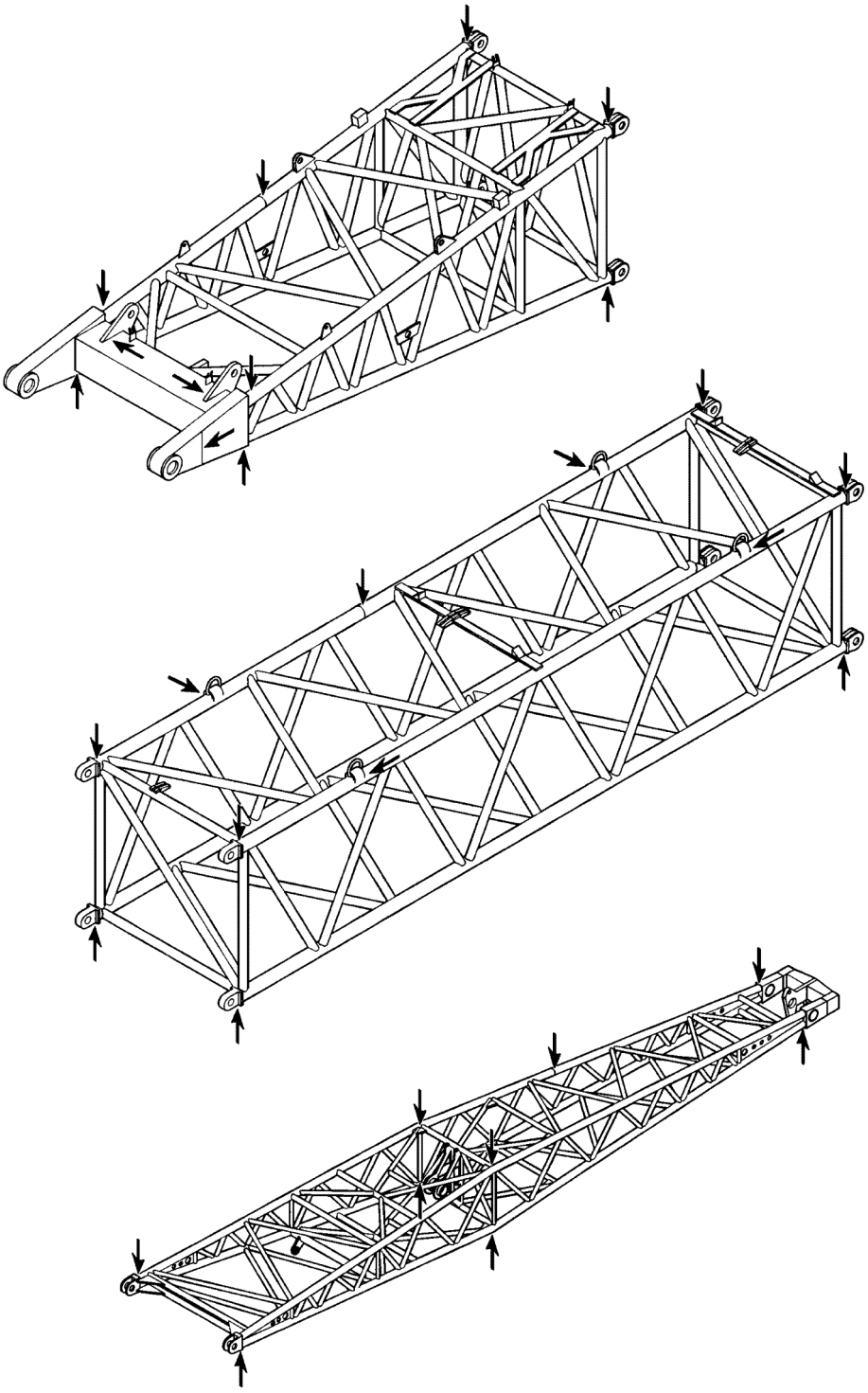

Fig.164905: Example of a NA/WA-frame

LWE/LTR 1100-009/25105-02-02/en

copyright © Liebherr-Werk Ehingen GmbH 2023

End section

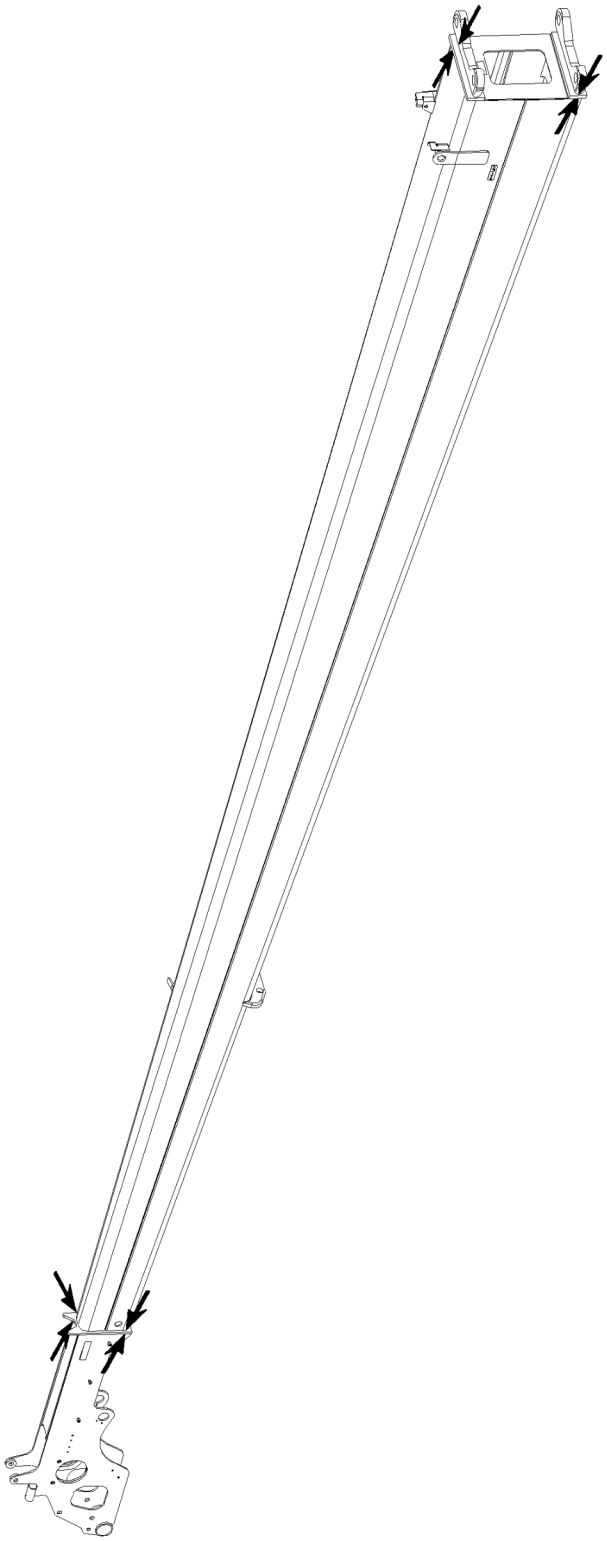

Fig.164906: Example of an end section

copyright © Liebherr-Werk Ehingen GmbH 2023

P-adapter

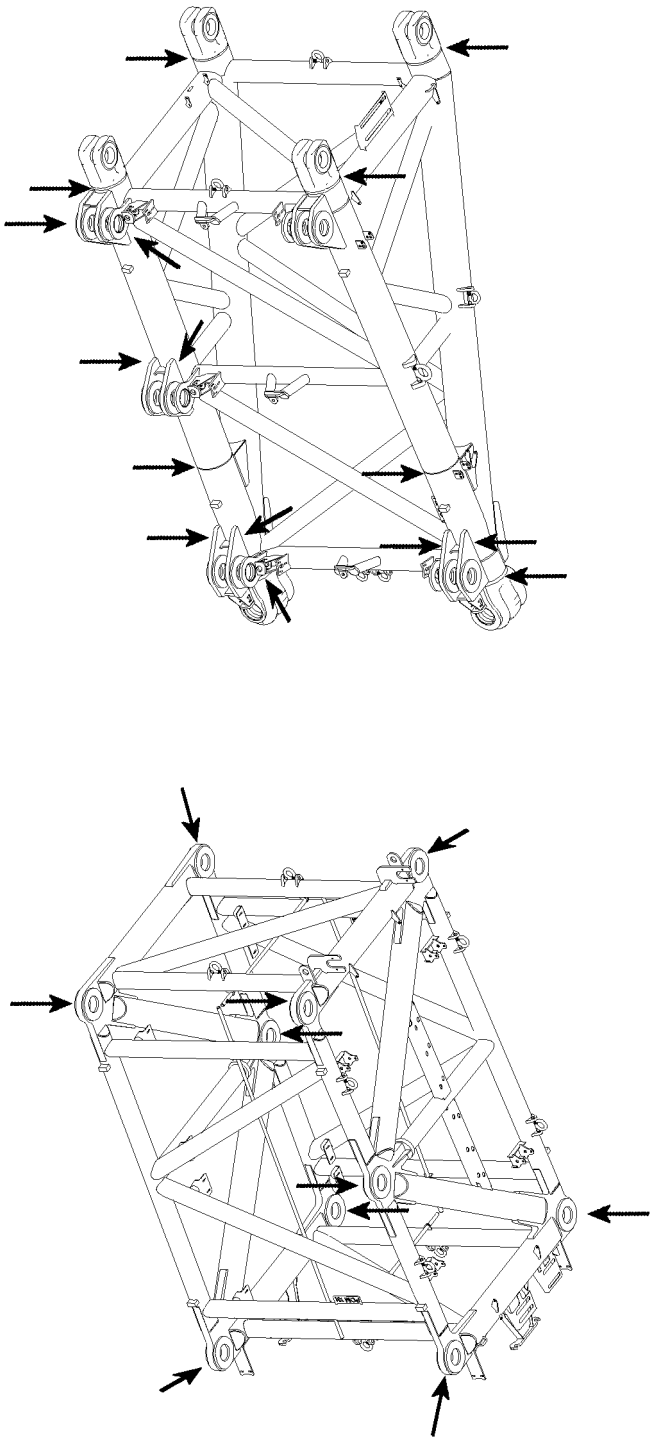

Fig.164914: Example of a P-adapter

LWE/LTR 1100-009/25105-02-02/en

copyright © Liebherr-Werk Ehingen GmbH 2023

Guy rods

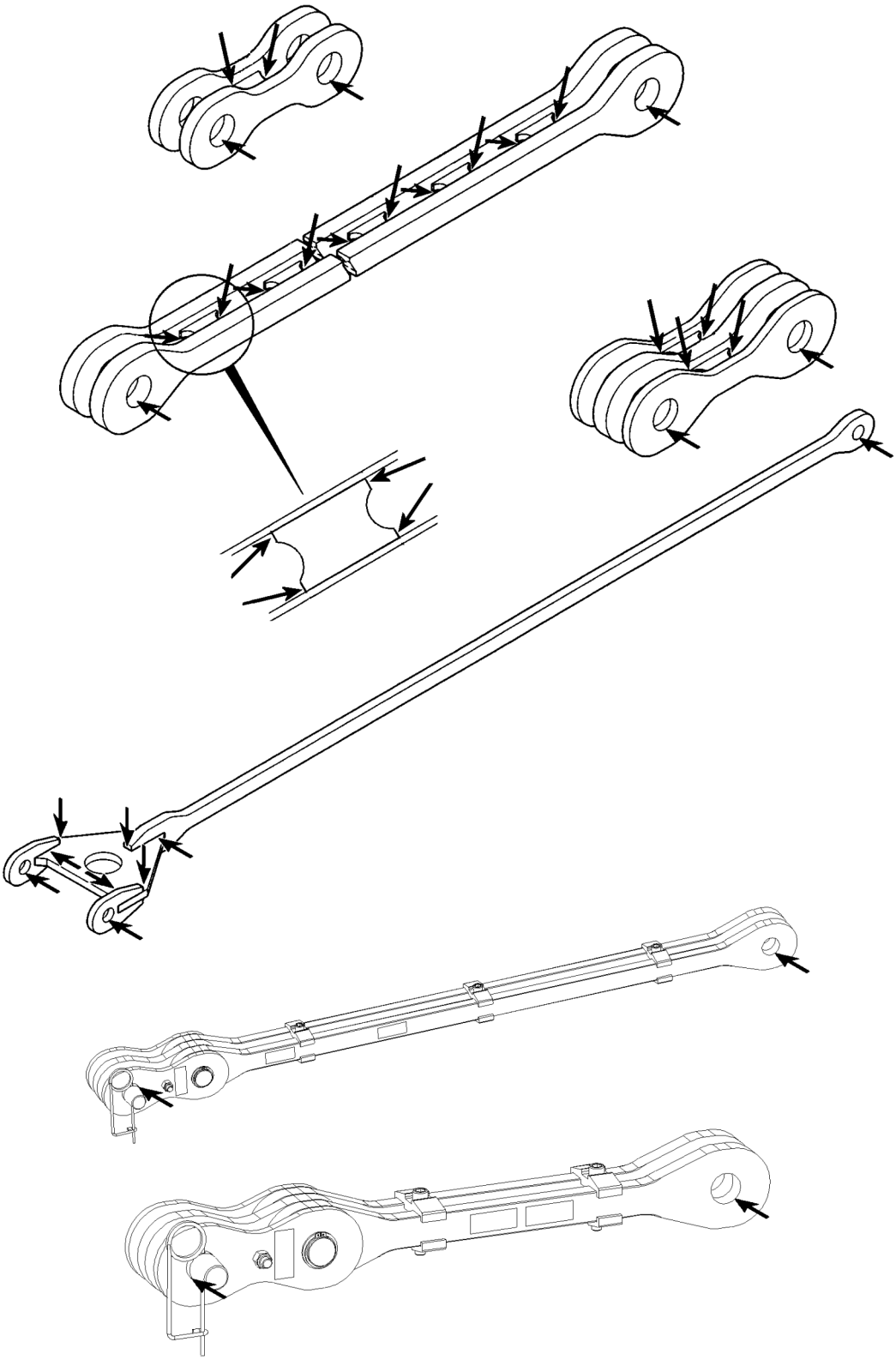

Fig.164915: Example of guy rods

LWE/LTR 1100-009/25105-02-02/en

copyright © Liebherr-Werk Ehingen GmbH 2023

W-connector head

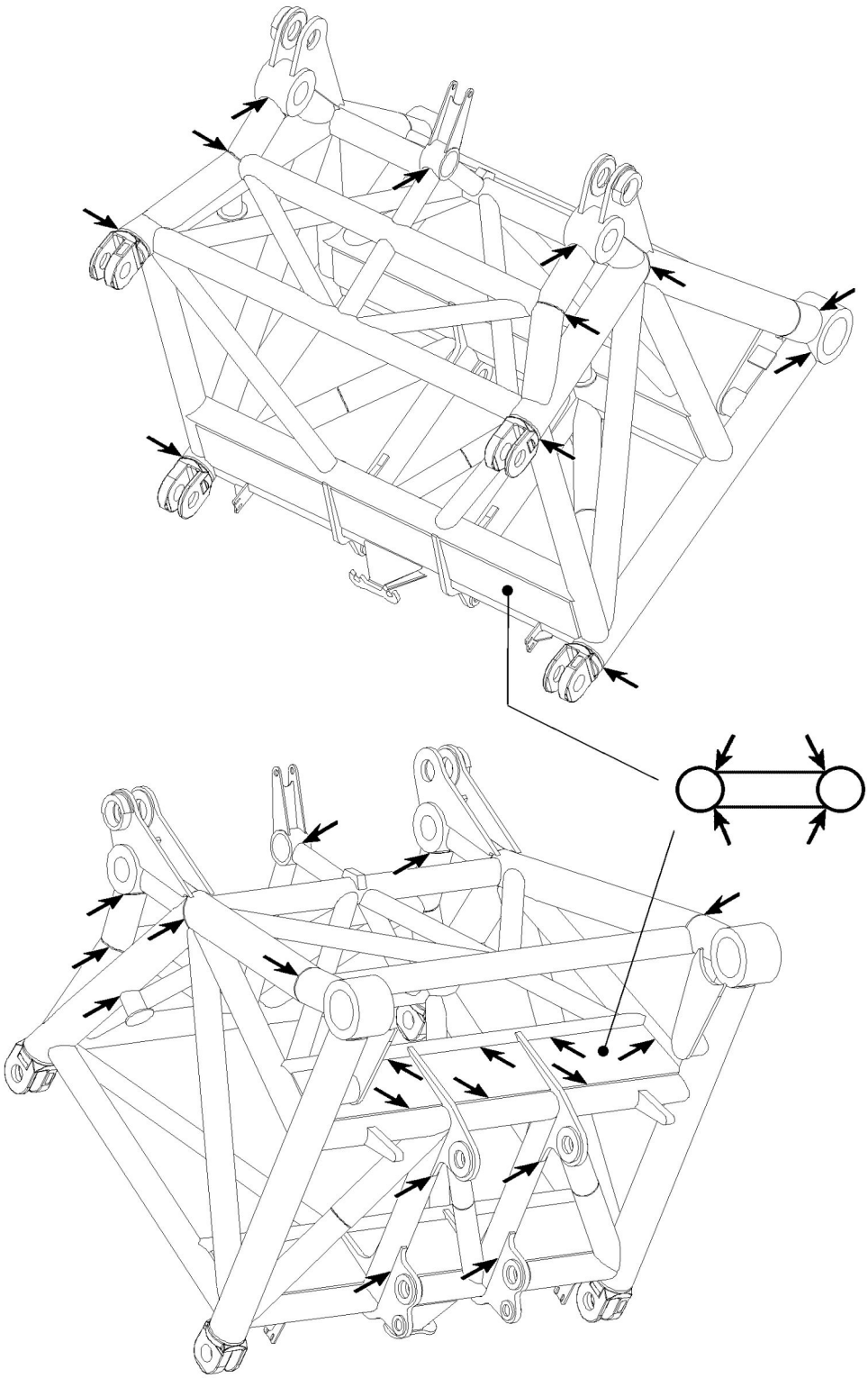

Fig.164910: Example of a W-connector head

LWE/LTR 1100-009/25105-02-02/en

copyright © Liebherr-Werk Ehingen GmbH 2023

Assembly unit with lattice jib

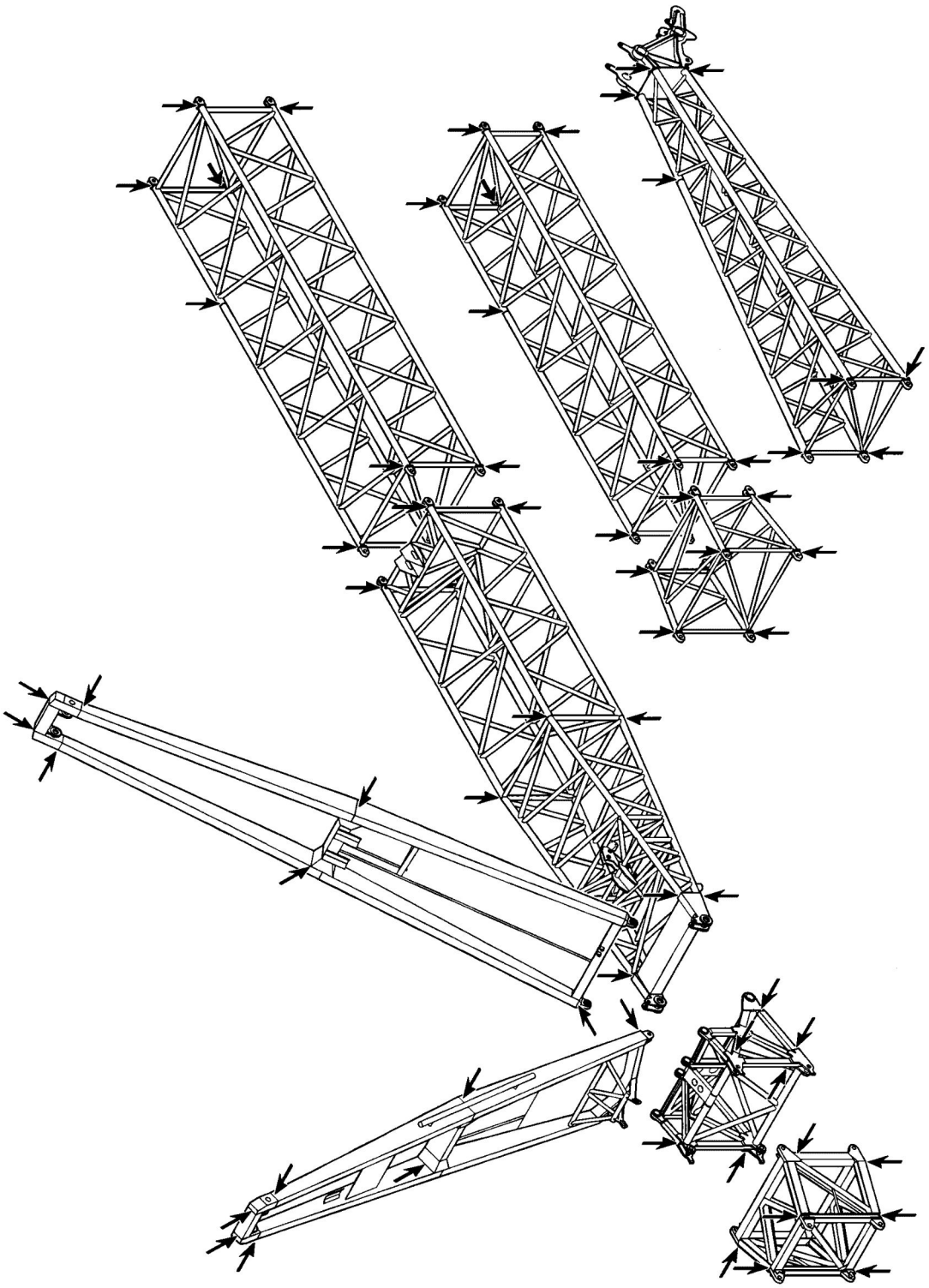

Fig.164911: Example of an assembly unit with lattice jib

LWE/LTR 1100-009/25105-02-02/en

copyright © Liebherr-Werk Ehingen GmbH 2023

NA-frames

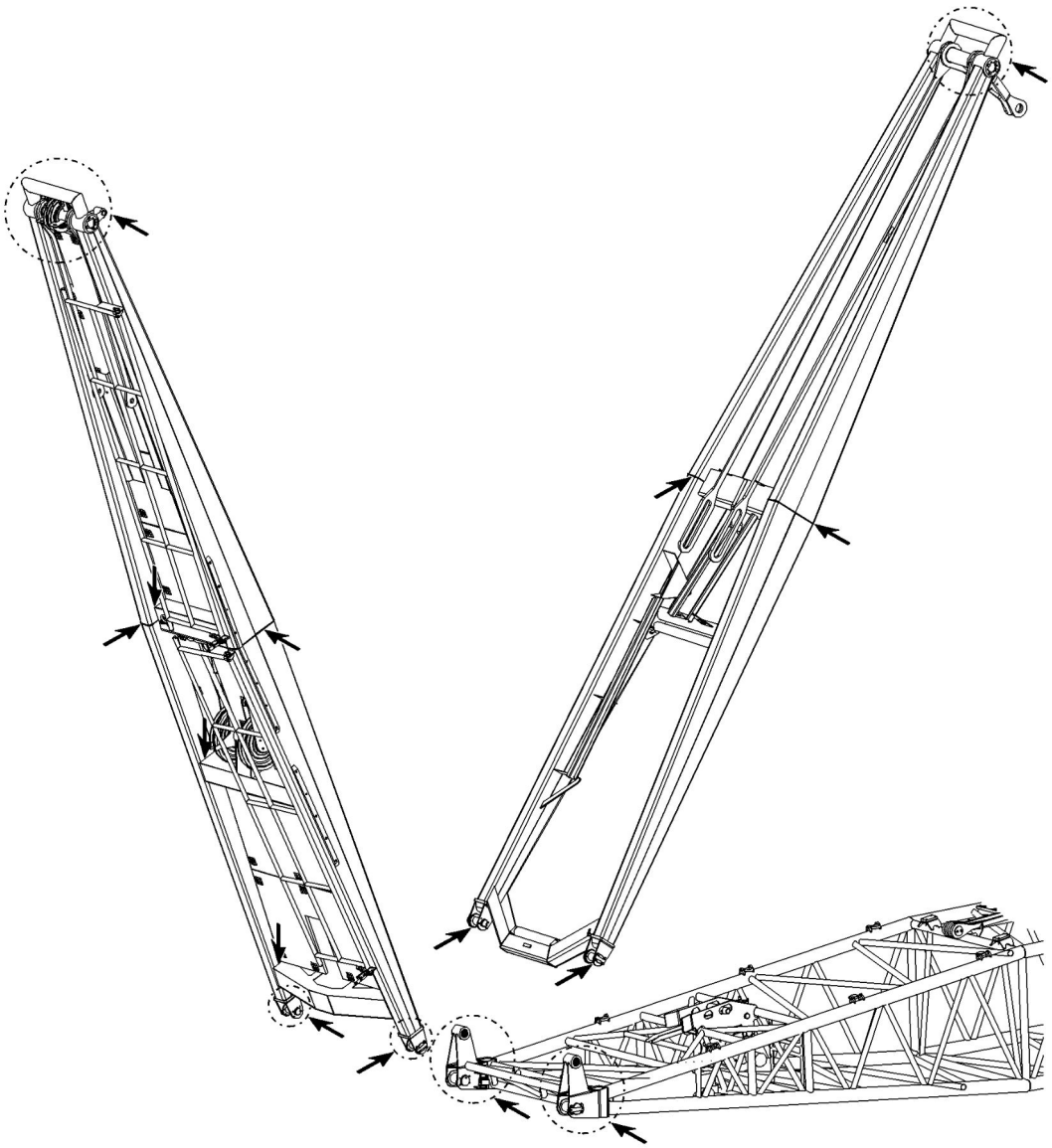

Fig.164912: Example of NA frames

LWE/LTR 1100-009/25105-02-02/en

copyright © Liebherr-Werk Ehingen GmbH 2023

Pulley head

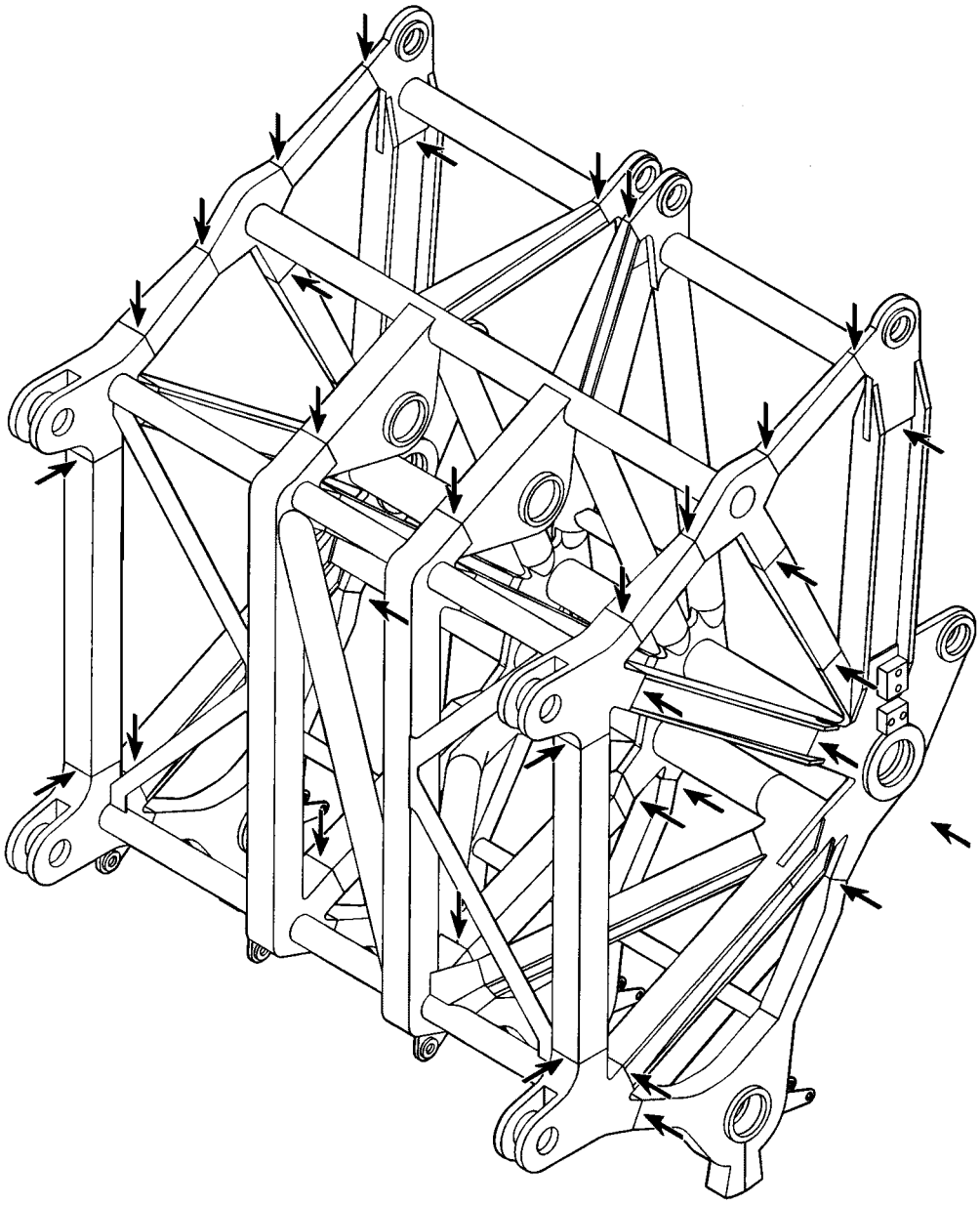

Fig.164913: Example of a pulley head

LWE/LTR 1100-009/25105-02-02/en

copyright © Liebherr-Werk Ehingen GmbH 2023

2.4.4 Equipment

Pivot section, adapter and boom nose

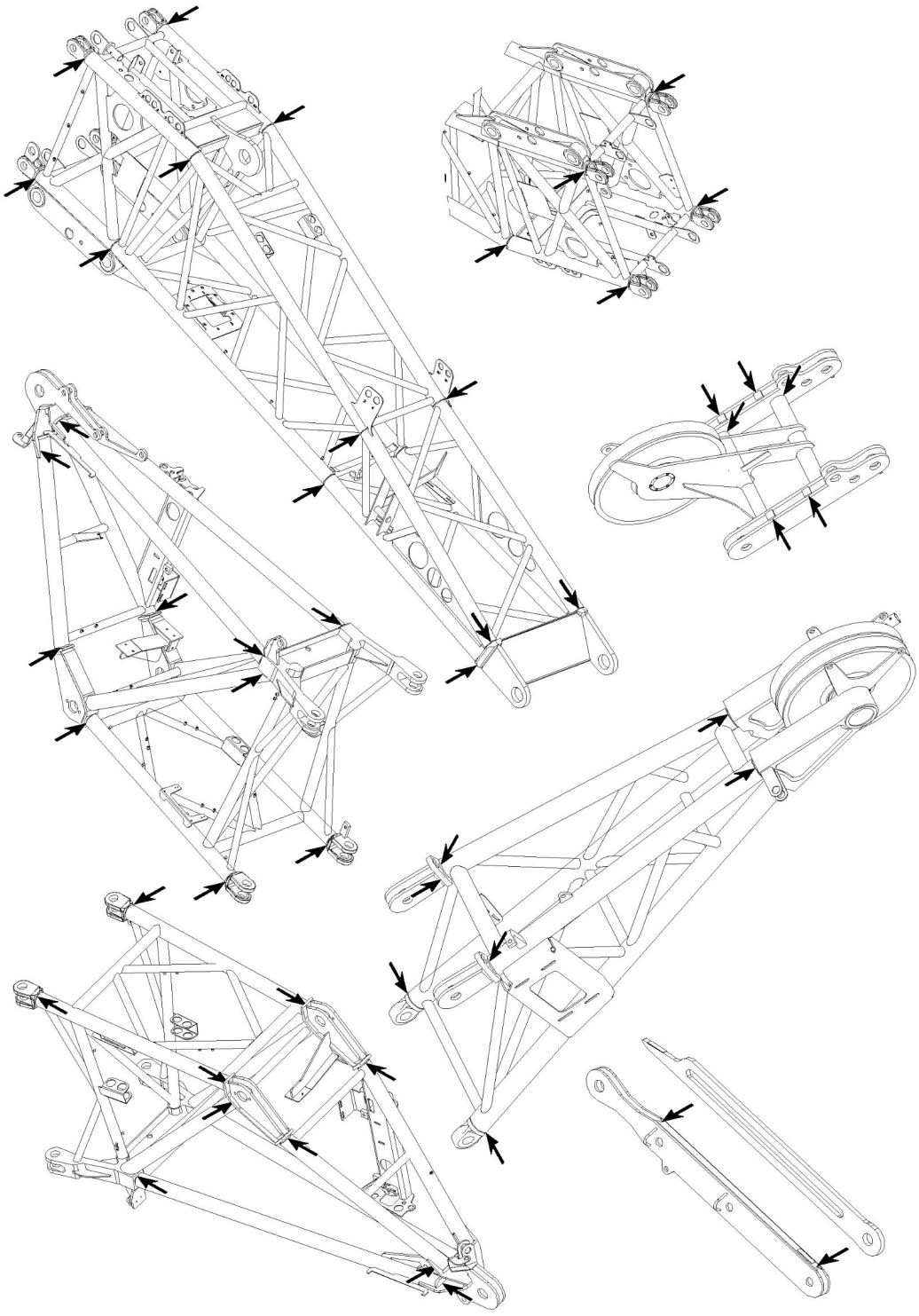

LWE/LTR 1100-009/25105-02-02/en

Fig.164907: Example of a pivot section, adapter and boom nose

copyright © Liebherr-Werk Ehingen GmbH 2023

TA guying

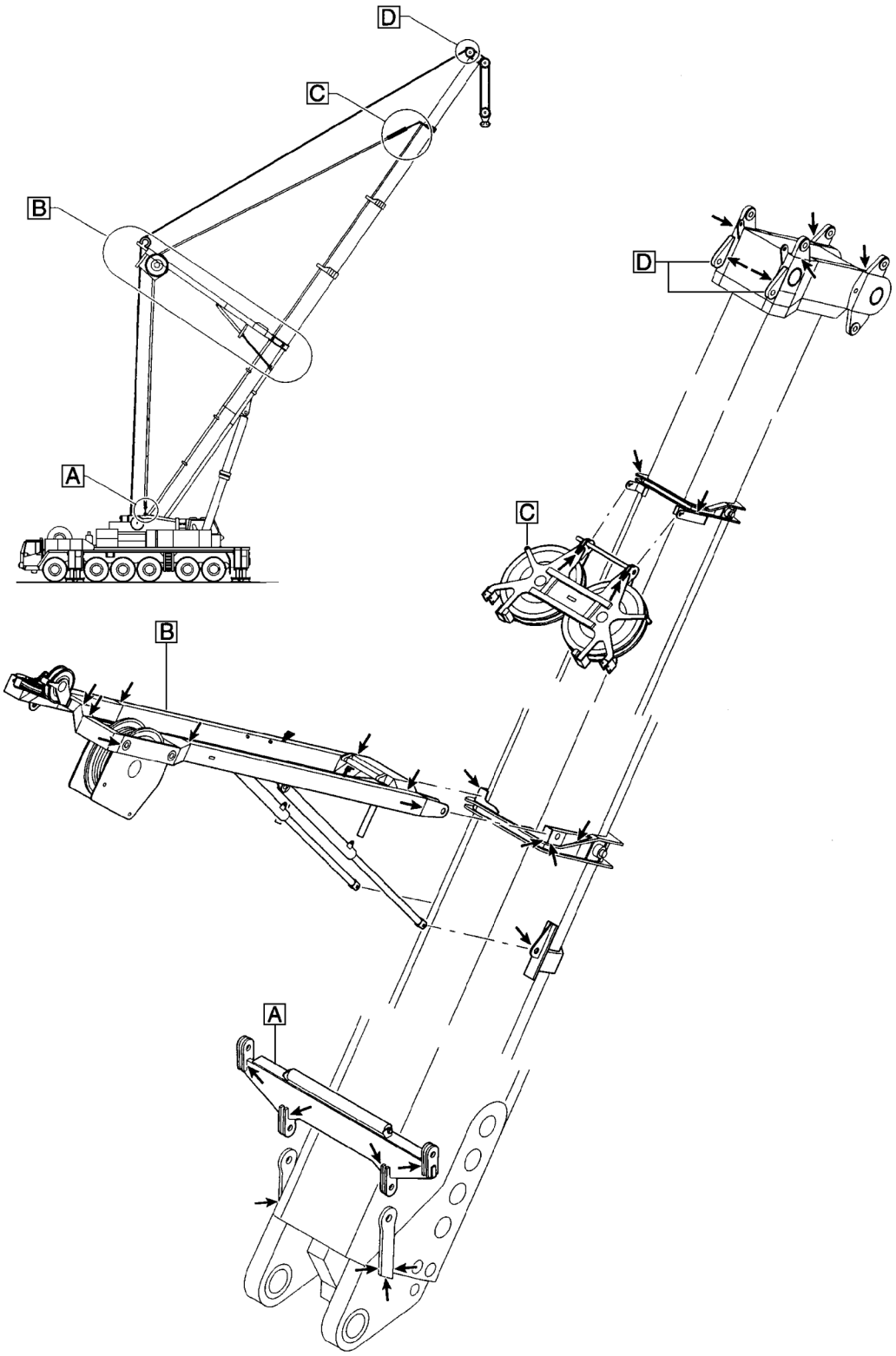

Fig.164916: Example of TA-guying

LWE/LTR 1100-009/25105-02-02/en

copyright © Liebherr-Werk Ehingen GmbH 2023

TY-guying

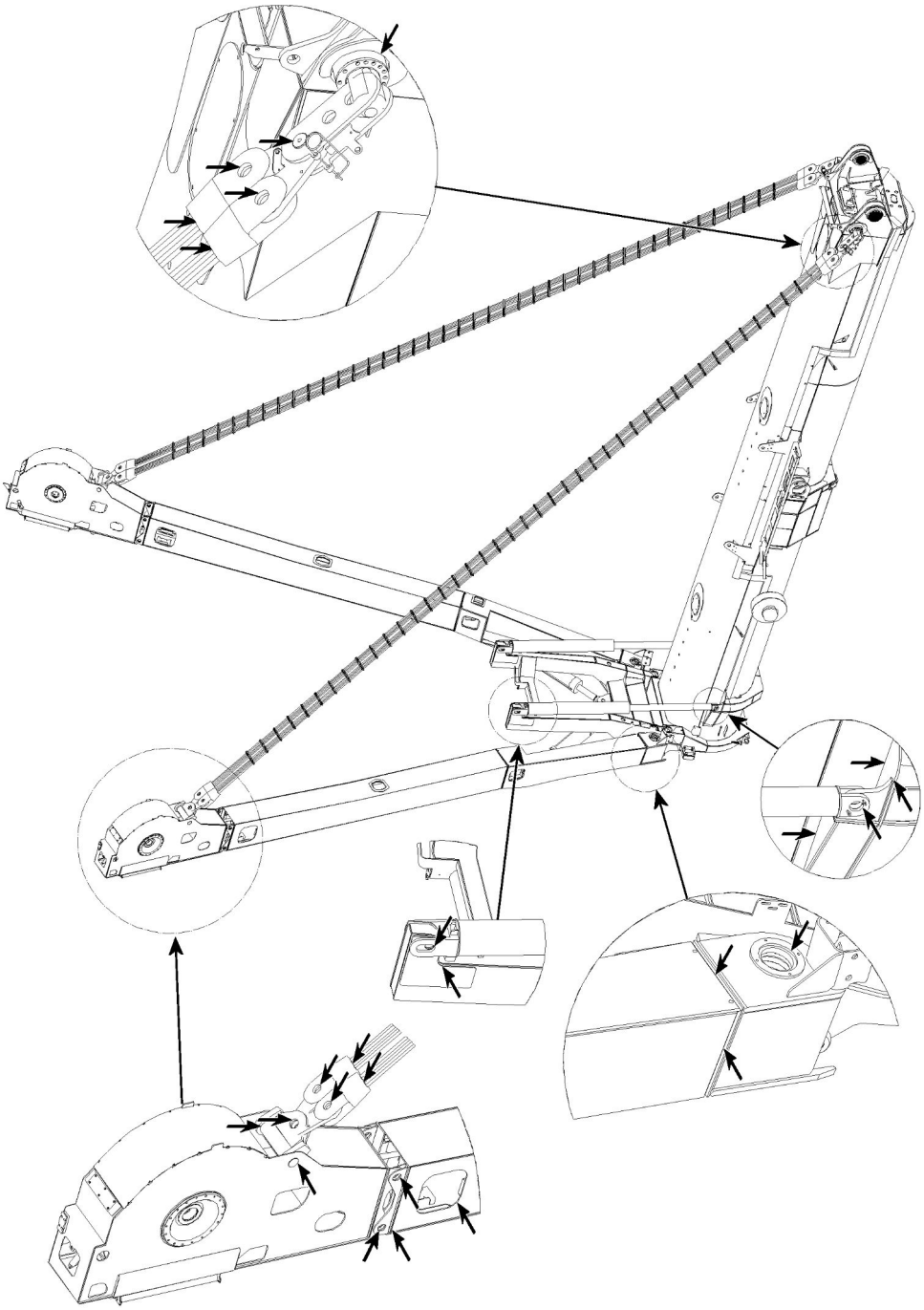

Fig.164917: Example of TY-guying

LWE/LTR 1100-009/25105-02-02/en

copyright © Liebherr-Werk Ehingen GmbH 2023

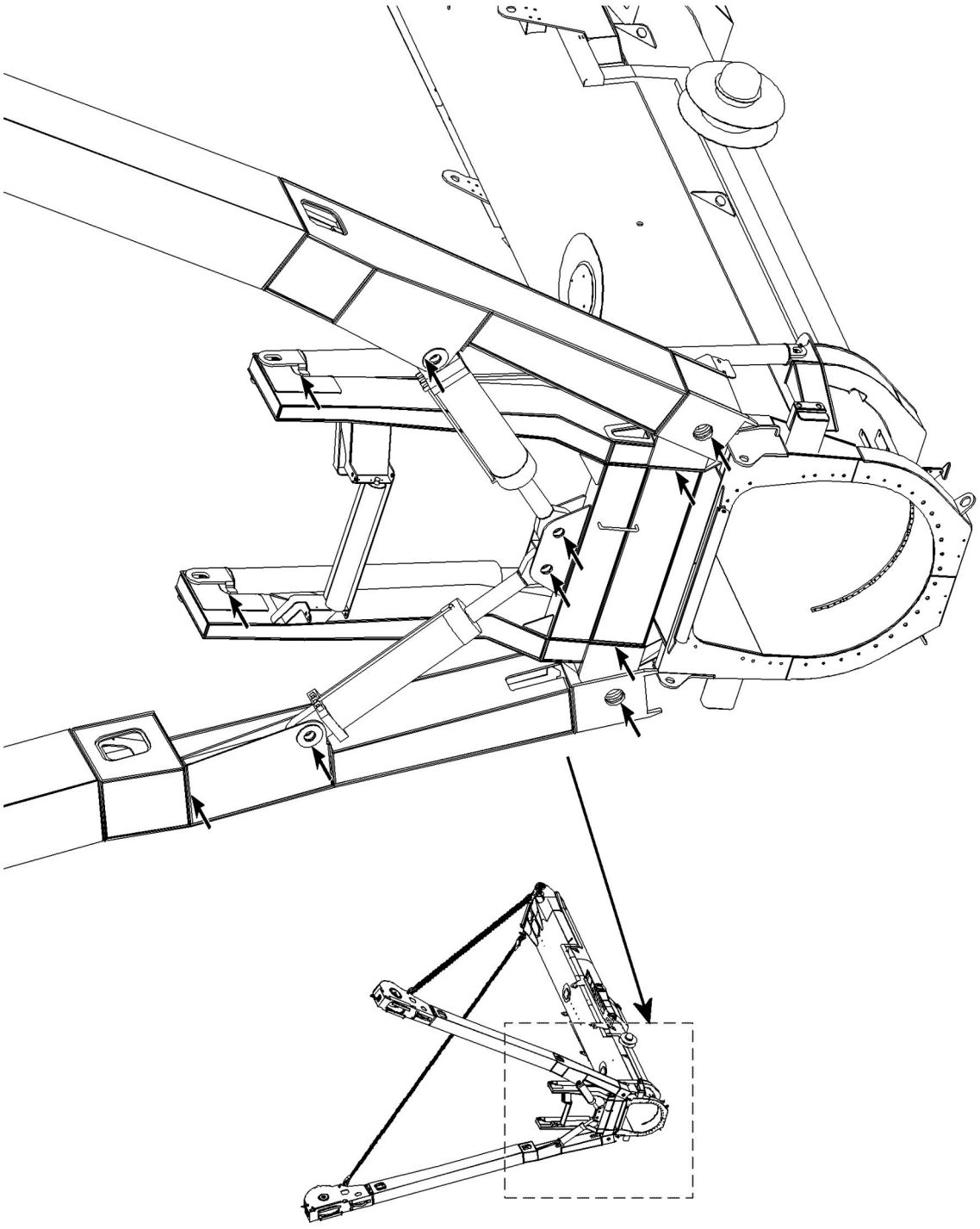

Fig.164918: Example of TY-guying

LWE/LTR 1100-009/25105-02-02/en

copyright © Liebherr-Werk Ehingen GmbH 2023

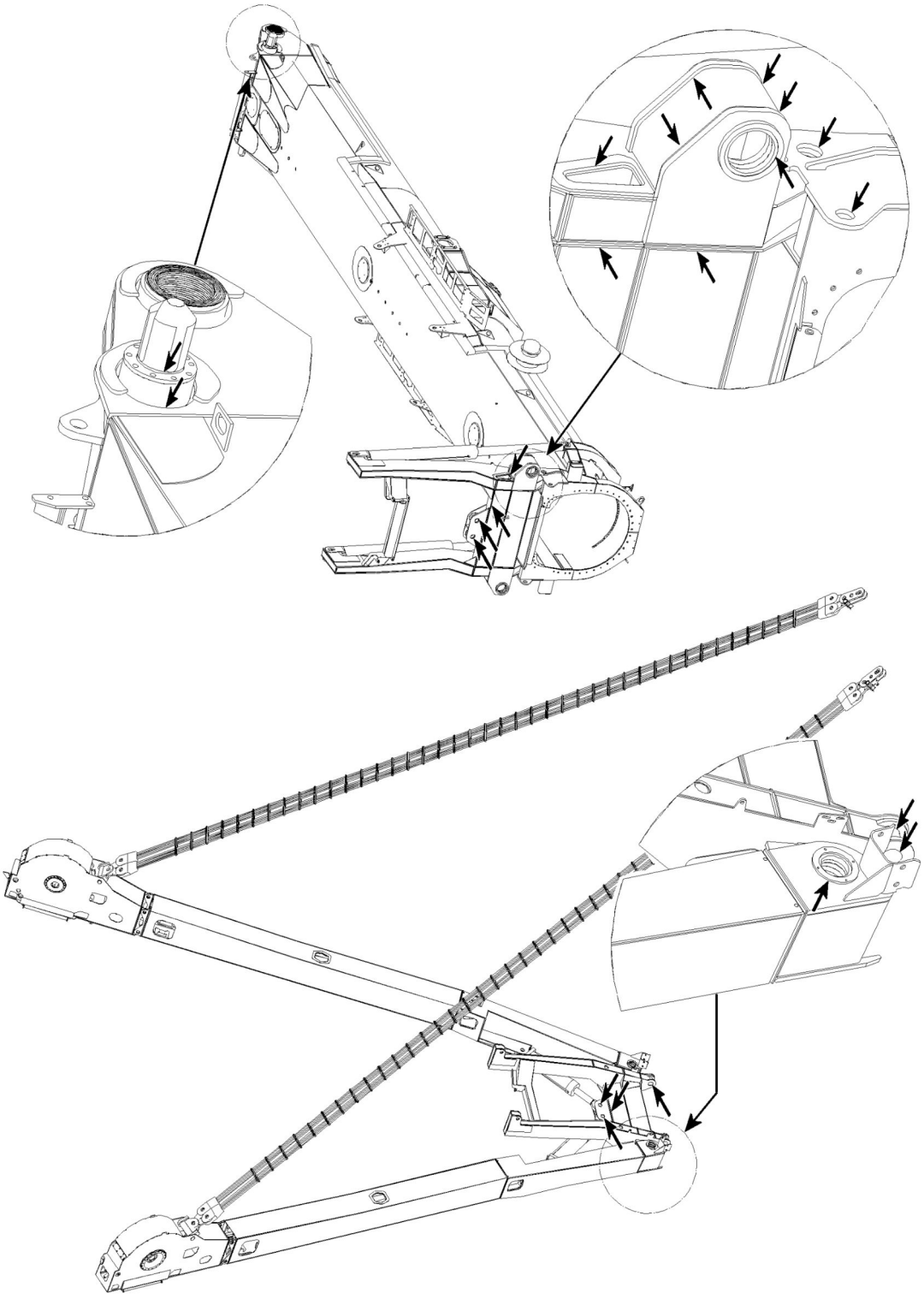

Fig.164919: Example of TY-guying

LWE/LTR 1100-009/25105-02-02/en

copyright © Liebherr-Werk Ehingen GmbH 2023

Folding jib

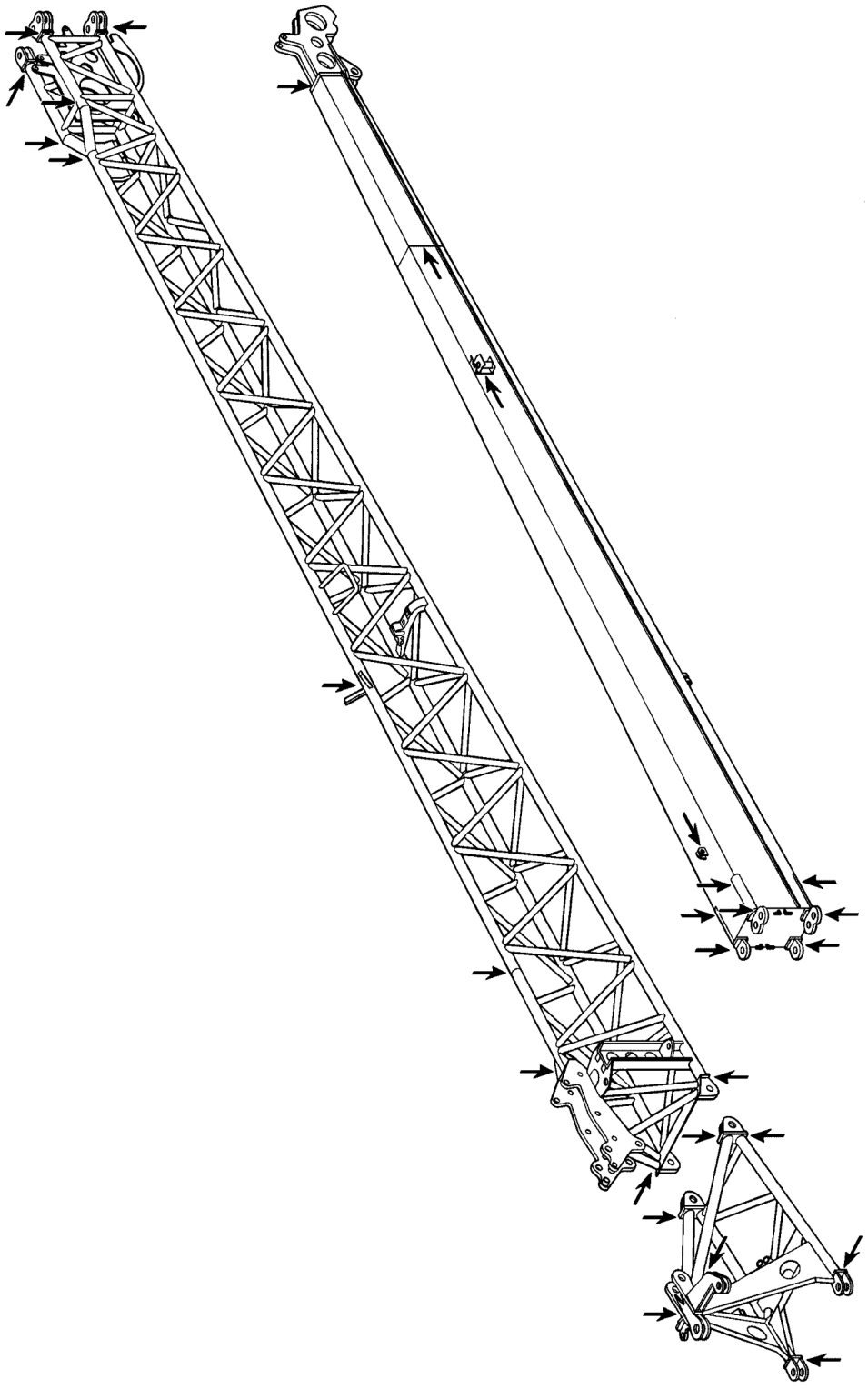

Fig.164908: Example of a folding jib

LWE/LTR 1100-009/25105-02-02/en

copyright © Liebherr-Werk Ehingen GmbH 2023

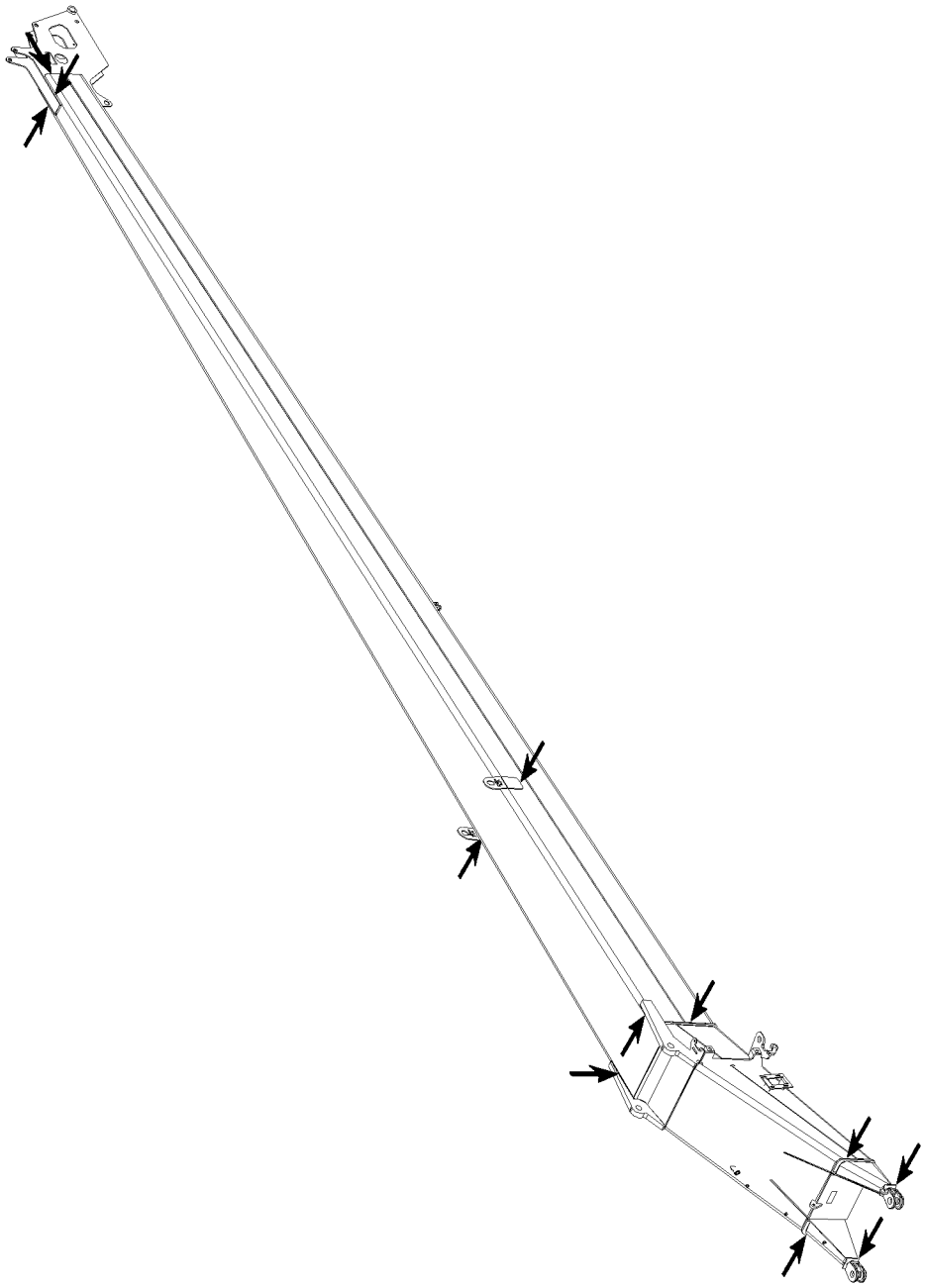

Fig.164909: Example of a folding jib

LWE/LTR 1100-009/25105-02-02/en

copyright © Liebherr-Werk Ehingen GmbH 2023

2.4.5 Ballast trailer

Rocker

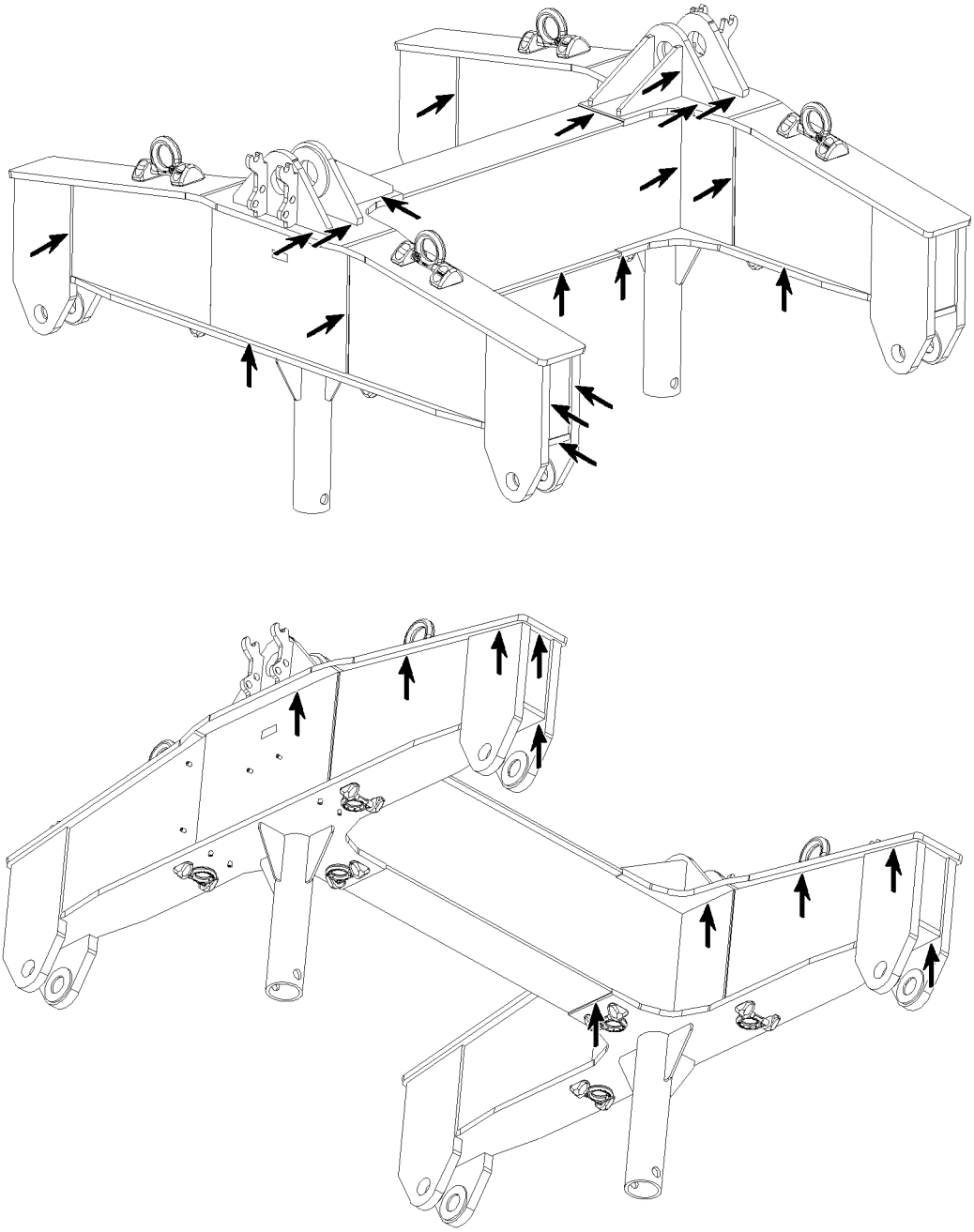

Fig.164927: Example of a rocker

LWE/LTR 1100-009/25105-02-02/en

copyright © Liebherr-Werk Ehingen GmbH 2023

Axle bracket

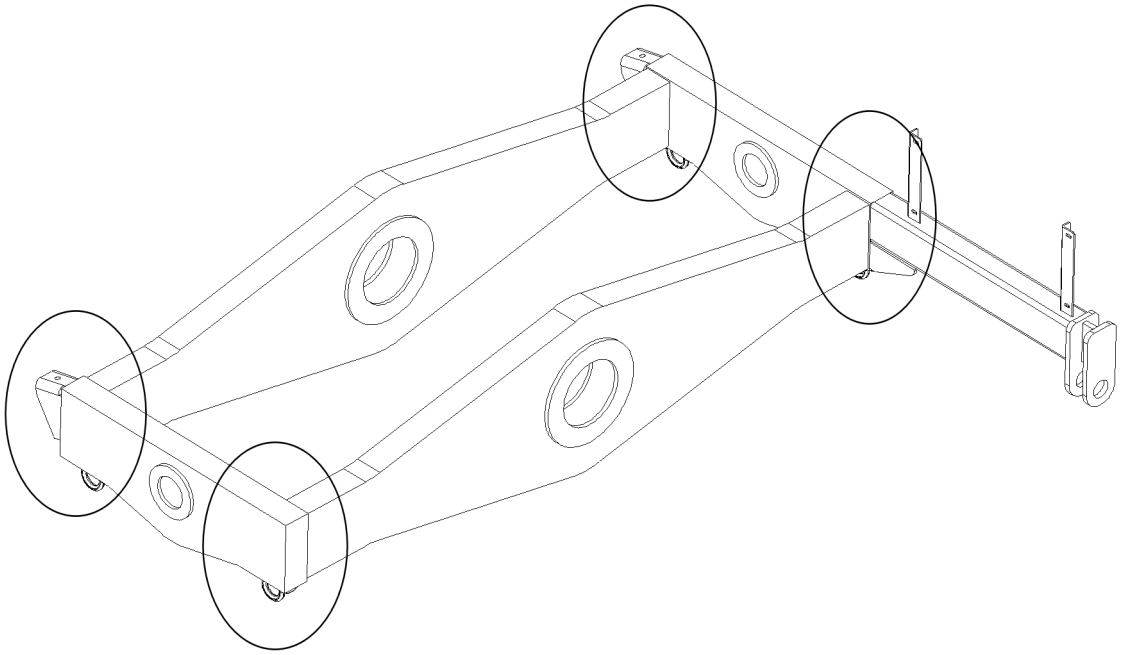

Fig.164928: Example of an axle bracket

LWE/LTR 1100-009/25105-02-02/en

copyright © Liebherr-Werk Ehingen GmbH 2023

Center pivot plate

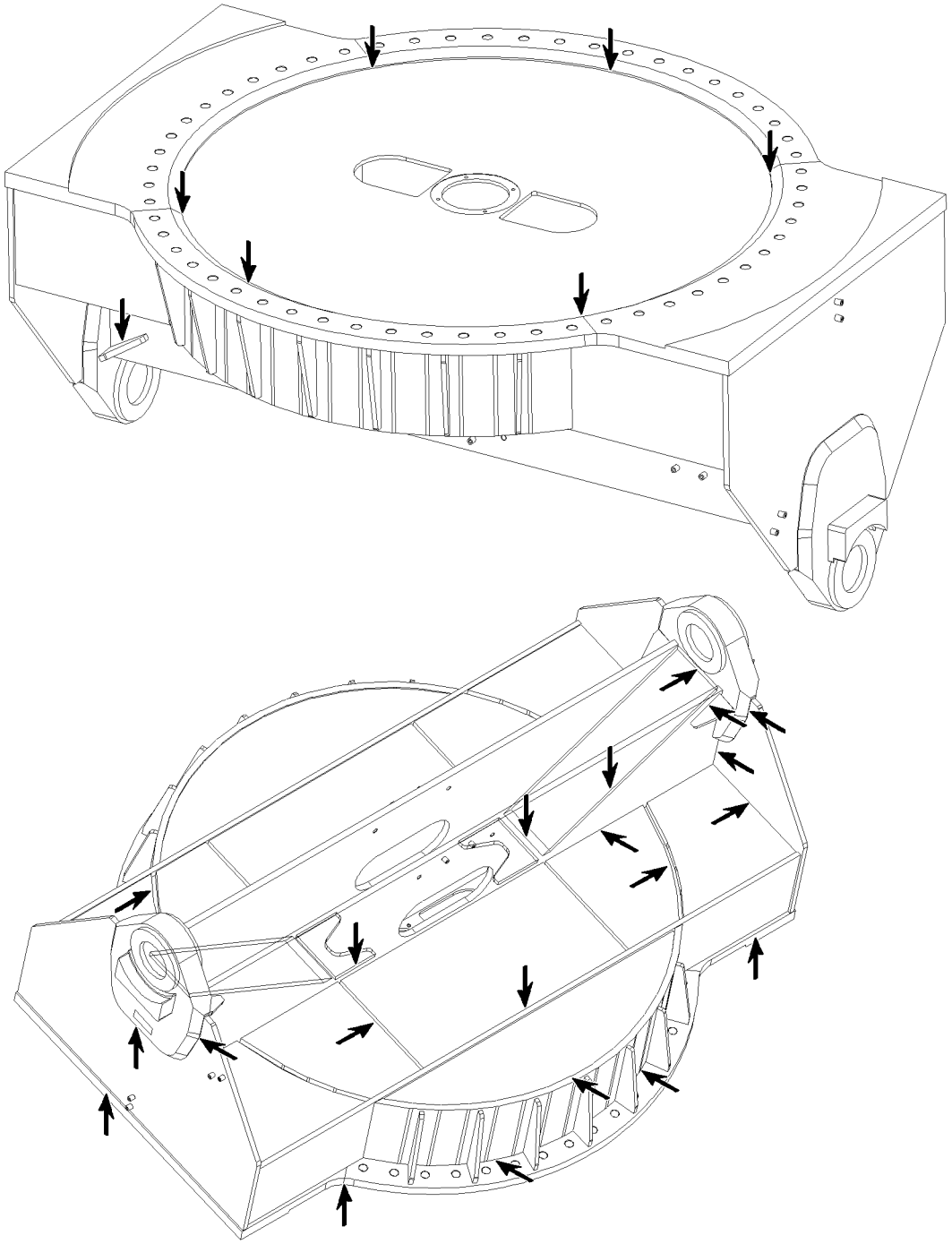

Fig.164929: Example of a center pivot plate

LWE/LTR 1100-009/25105-02-02/en

copyright © Liebherr-Werk Ehingen GmbH 2023

Guide

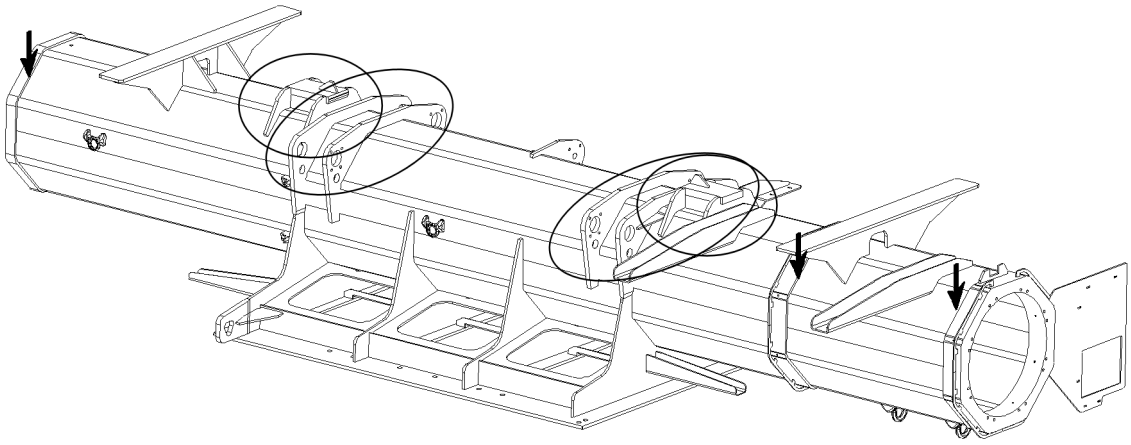

Fig.164930: Example of a guide

LWE/LTR 1100-009/25105-02-02/en

copyright © Liebherr-Werk Ehingen GmbH 2023

Inner pipe

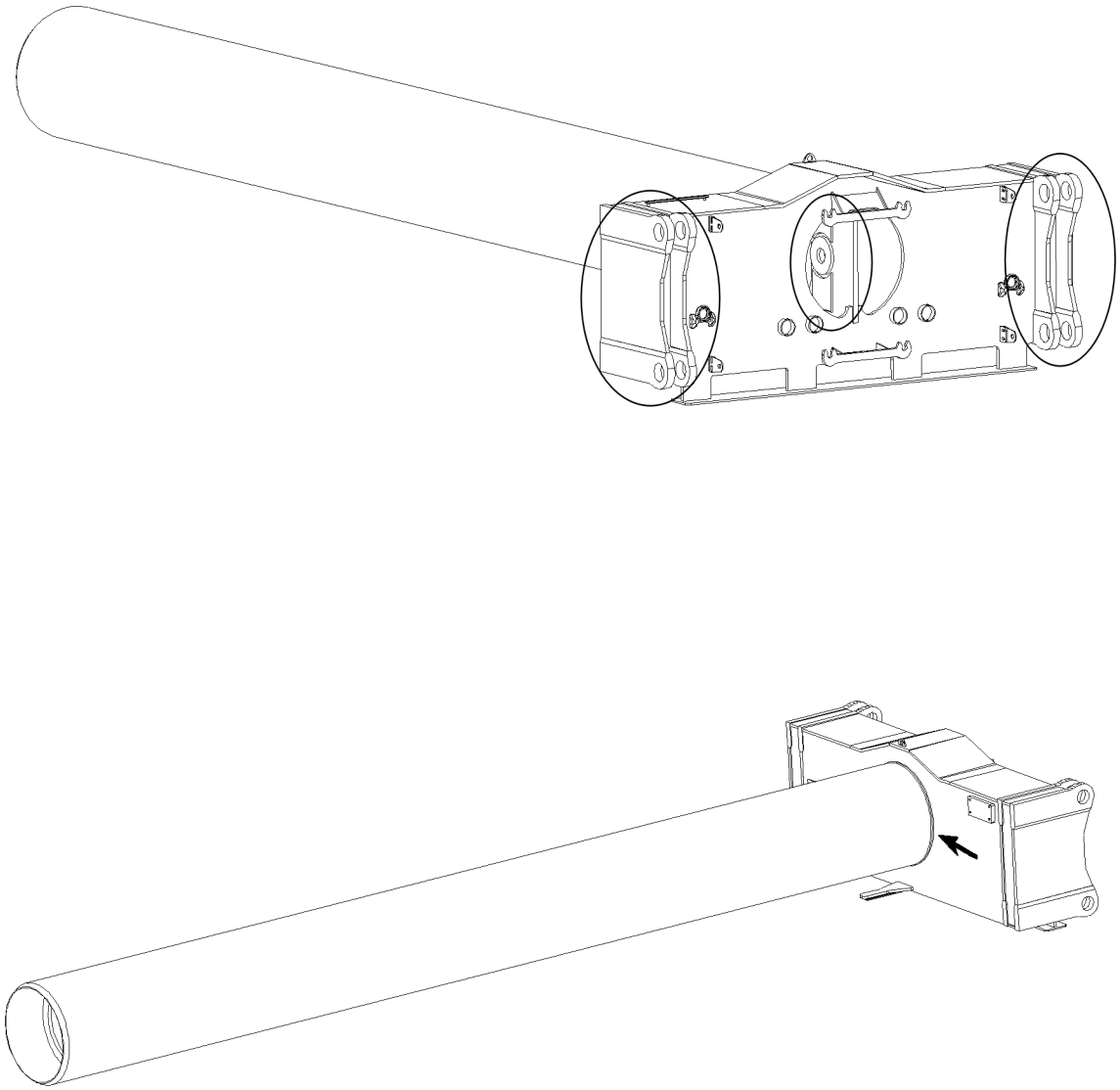

Fig.164931: Example of an inner pipe

LWE/LTR 1100-009/25105-02-02/en

copyright © Liebherr-Werk Ehingen GmbH 2023

Frame

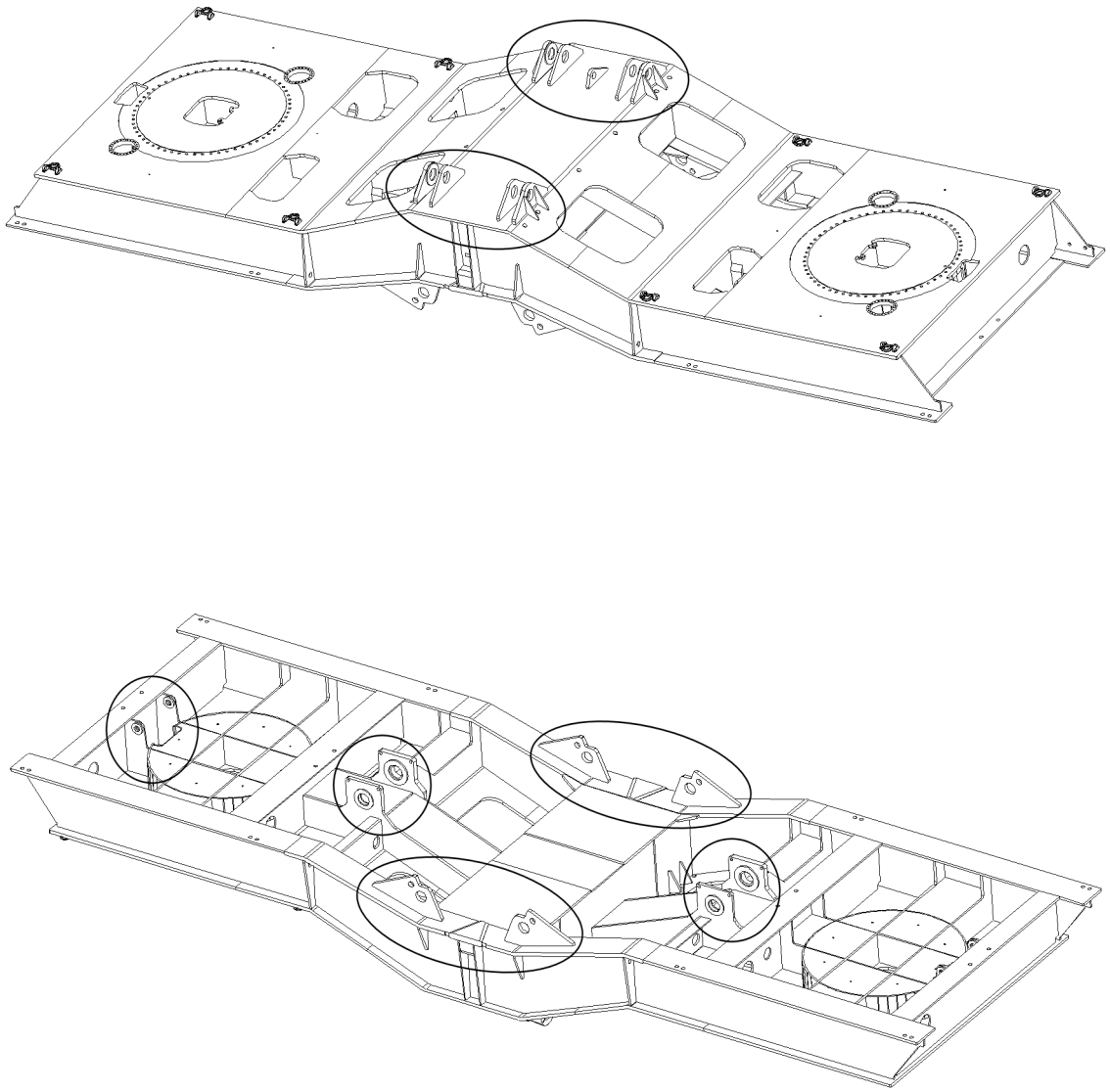

Fig.164932: Example of a frame

LWE/LTR 1100-009/25105-02-02/en

copyright © Liebherr-Werk Ehingen GmbH 2023

2.4.6 Suspended ballast guide „V-frame“

Pivot section

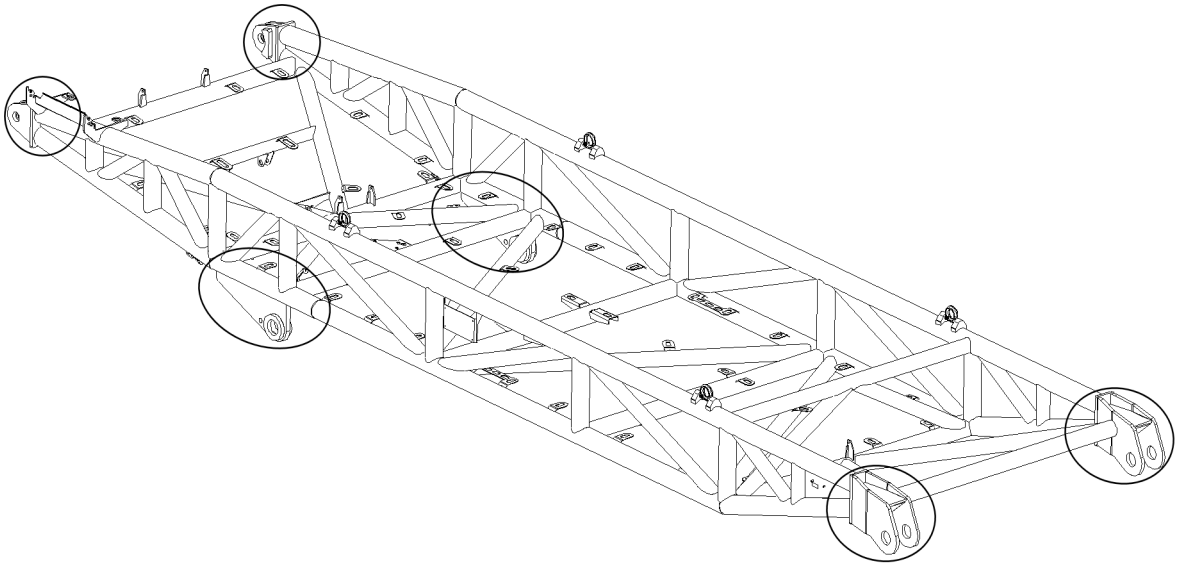

Fig.164933: Example of a pivot section

LWE/LTR 1100-009/25105-02-02/en

copyright © Liebherr-Werk Ehingen GmbH 2023

End-pivot section

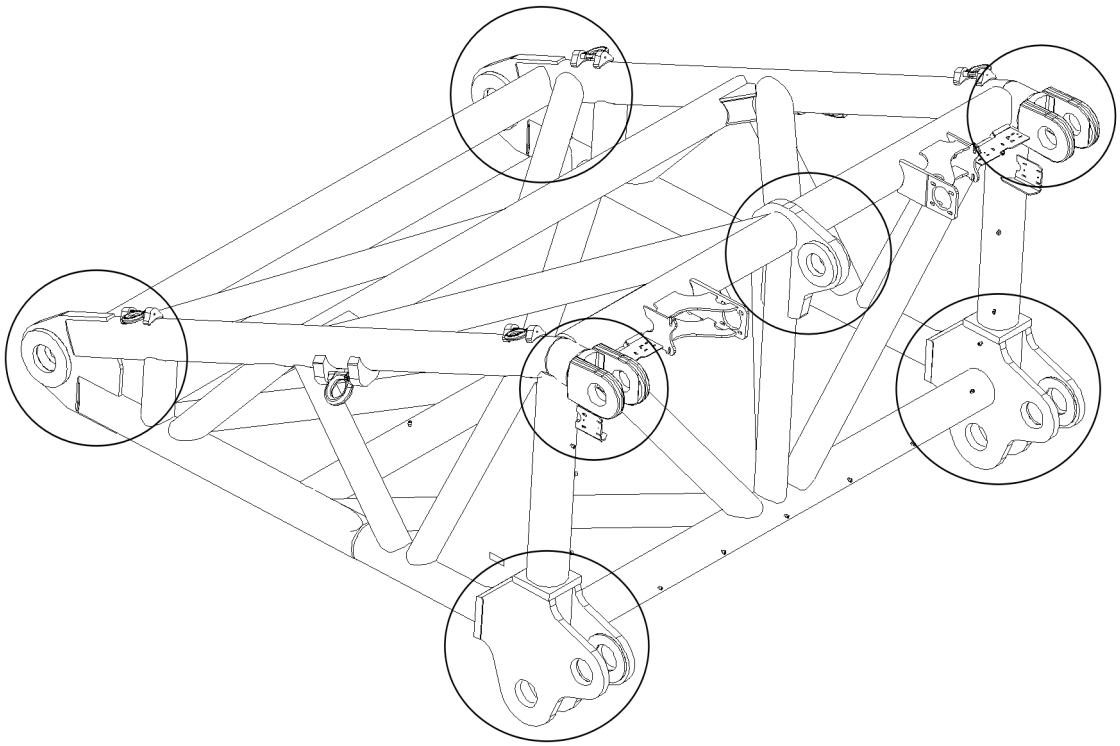

Fig.164934: Example of an end-pivot section

LWE/LTR 1100-009/25105-02-02/en

copyright © Liebherr-Werk Ehingen GmbH 2023

End section

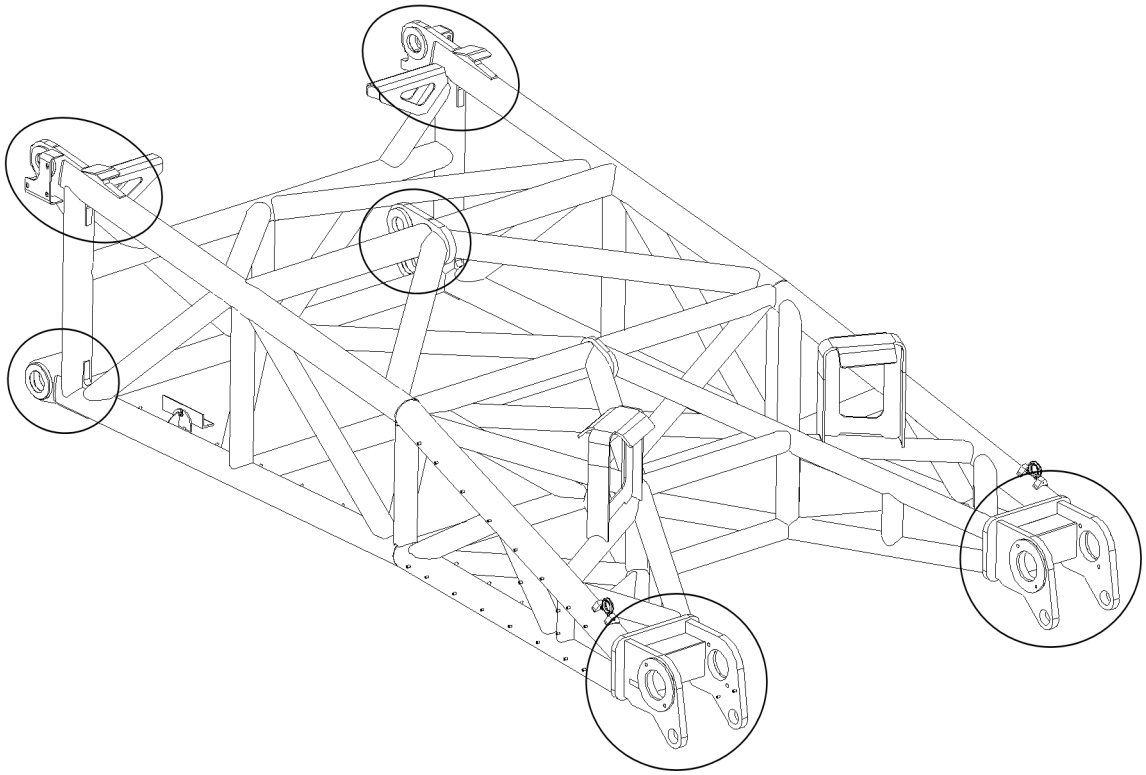

Fig.164935: Example of an end section

LWE/LTR 1100-009/25105-02-02/en

copyright © Liebherr-Werk Ehingen GmbH 2023

Guy rod

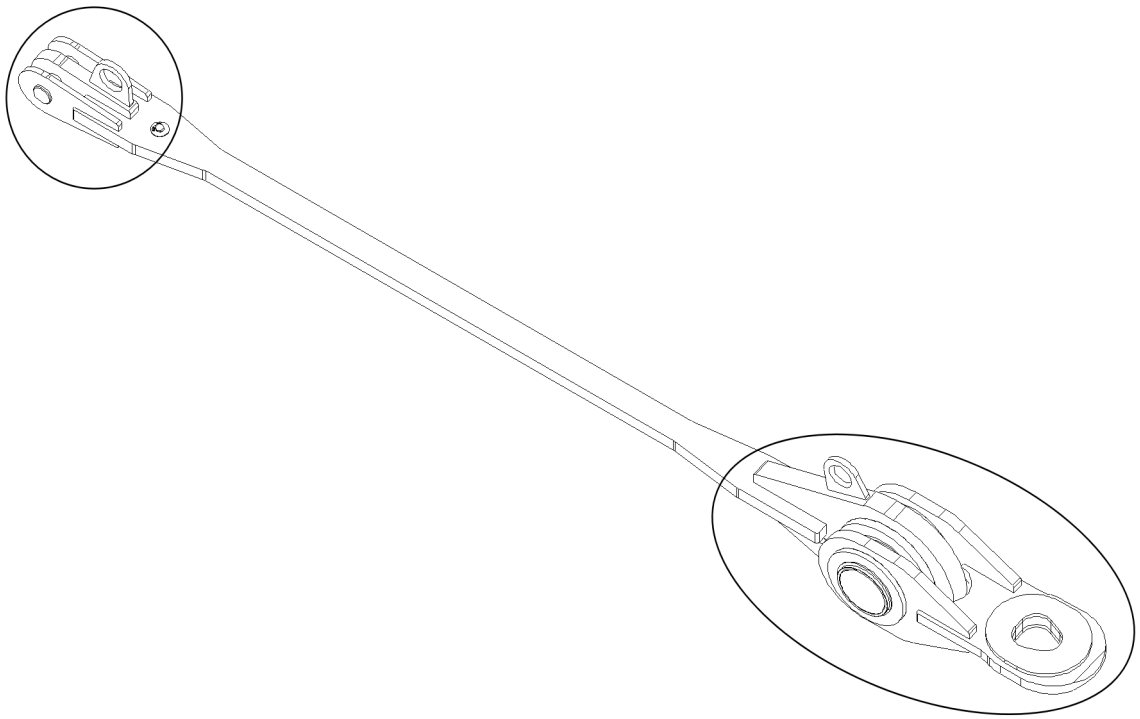

Fig.164936: Example of guy rod

LWE/LTR 1100-009/25105-02-02/en

copyright © Liebherr-Werk Ehingen GmbH 2023

2.5 Inspecting the rigging points and fastening points

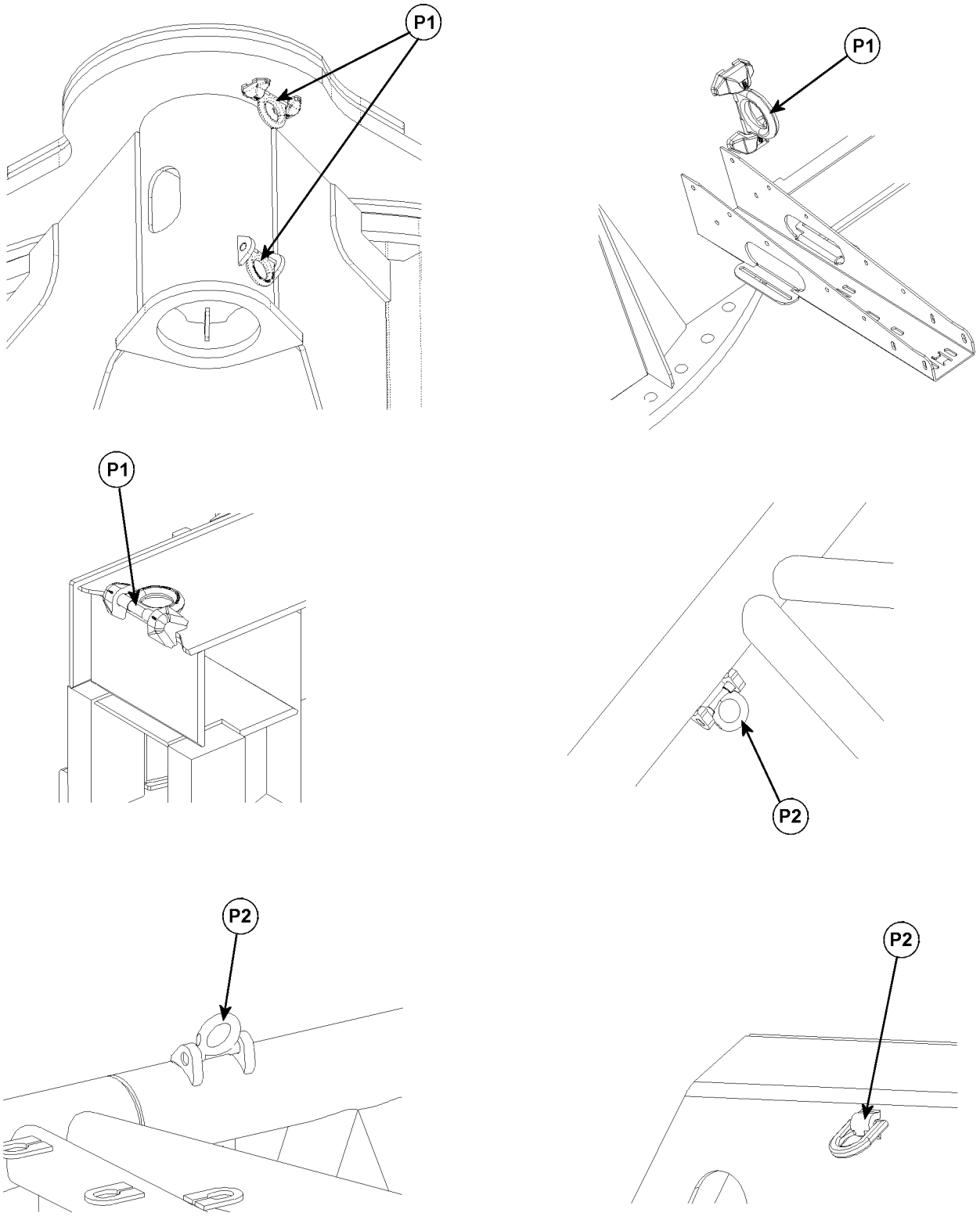

Fig.121160: Examples of rigging points and fastening points

P1 Rigging points **P2** Fastening points

LWE/LTR 1100-009/25105-02-02/en

copyright © Liebherr-Werk Ehingen GmbH 2023

WARNING
Unsafe rigging point or fastening point!
The mobile crane or component can rip free and fall down.

When a rigging point or fastening point is not safe for operation:
► Have the rigging point or fastening point replaced by authorized and trained expert personnel.
► Avoid damage on the rigging device due to a sharp-edged load.

Make sure that the following damage does **not** occur:
– Crushing points
– Shearing points
– Catch points
– Impact points

Inspection criteria:
– Completeness of the rigging point.
– Distortion of carrying parts.
– Mechanical damage such as severe nicks.
– Changes in diameter due to wear.
– Significant corrosion (pitting).
– Cracks on carrying parts.
– Cracks or other damage on the welding seam.

Check the rigging points **P1** and fastening points **P2** before every start up and at regular intervals.

2.6 Inspecting the lattice sections

Note
► The illustration is only an example and is valid for all lattice sections!
► Check all diagonal and frame pipe connections!
► Check all bores of the fork - finger connections!

LWE/LTR 1100-009/25105-02-02/en

copyright © Liebherr-Werk Ehingen GmbH 2023

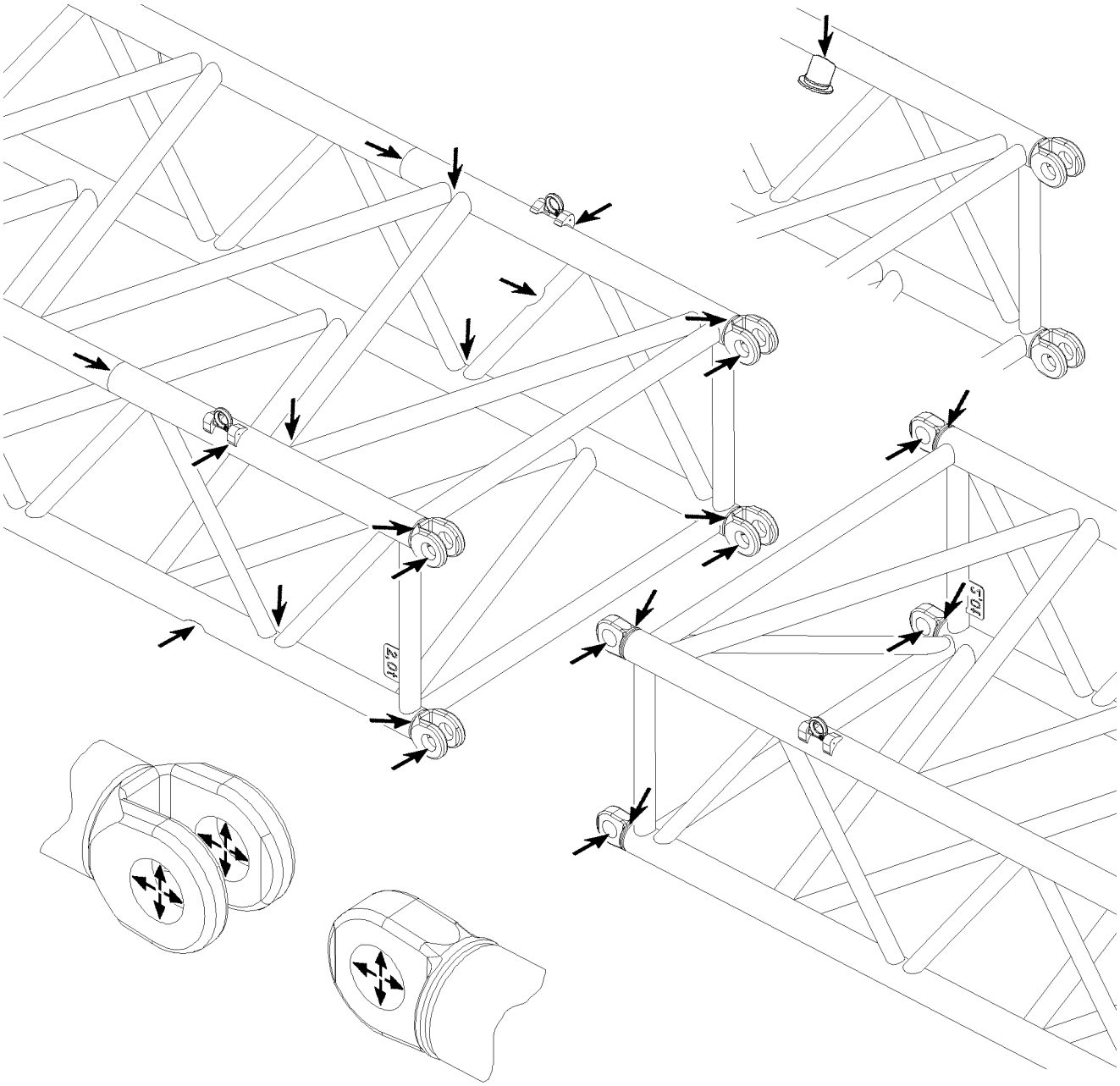

Fig.121023: Example of lattice sections

3 Inspecting the locking system of the telescopic boom

3.1 For cranes with pneumatic boom locking system

- For inspection of function, see chapter 8.11.
- For inspection of pin wear pattern, see chapter 8.11.
- For inspection of wear, see chapter 8.11.
- For inspection of safety control, see chapter 8.11.

LWE/LTR 1100-009/25105-02-02/en

copyright © Liebherr-Werk Ehingen GmbH 2023

3.2 For cranes with the Telematik telescopic boom system

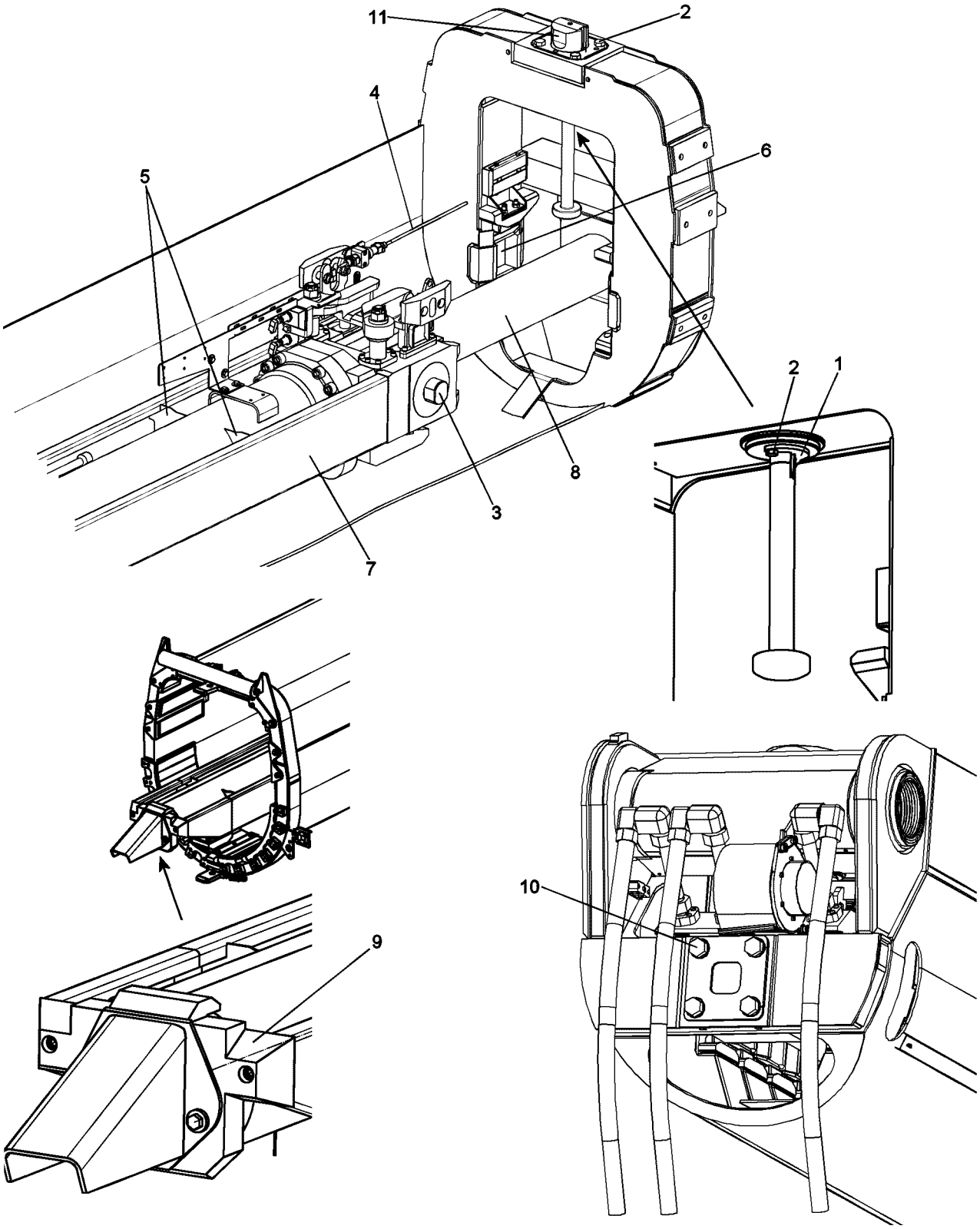

Fig.109286

- Inspection of the pull knob safety **1** and all mounting screws **2** for tight seating
- Inspection of twist guards for cylinder pinning **3** and telescopic boom pinning **11**
- Inspection of the length sensor rope **4** for damage
- Inspection of the cylinder barrel in the area of all welding seams **5** for crack formation
- Inspection of the locking pockets **6** for damage

LWE/LTR 1100-009/25105-02-02/en

copyright © Liebherr-Werk Ehingen GmbH 2023

- Grease the guide rail **7**
- In case of leakage: Inspection of the piston rod **8** for grooves
- Inspection of the wear pattern on the cylinder pinning **3** and the telescopic boom pinning **11**
- Inspection of guide rail **7** for distortion of contour
- Inspection of plastic guide **9** on the cylinder bottom for damage
- Inspection of all mounting screws **10** on the push out cylinder for tight seating

4 Inspection of the screws in the adjustment plates

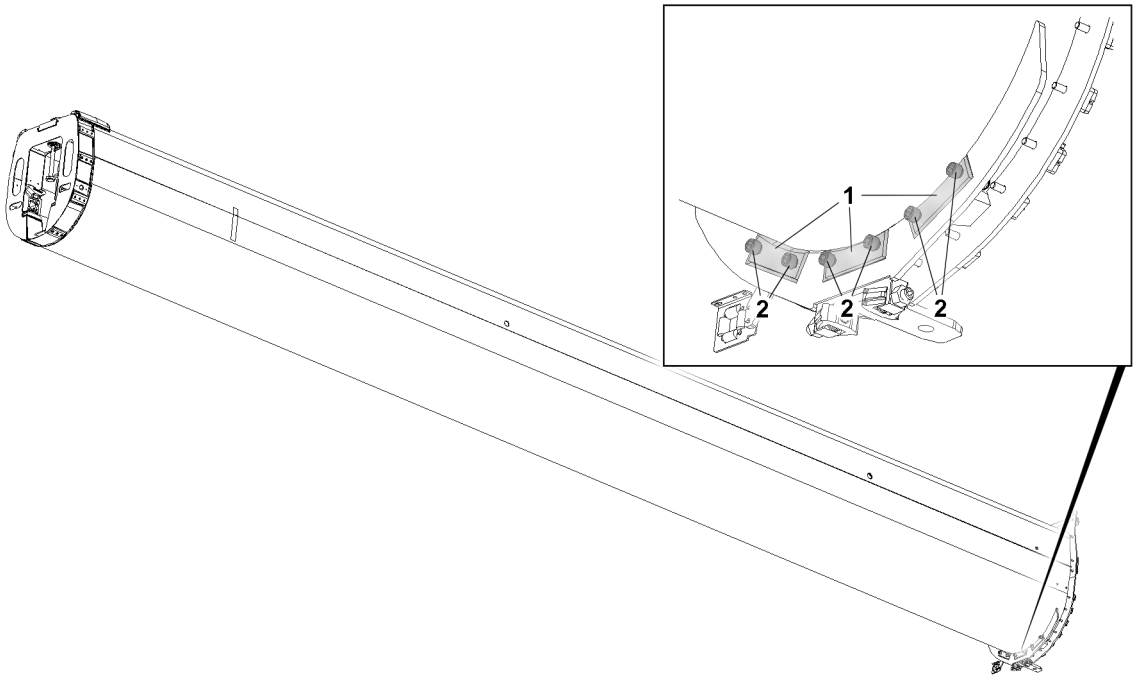

Fig.156447: Exemplary illustration of the adjustment plates on the telescope

The adjustment plates **1** are **not** installed for all crane types.

Check that screws **2** in the adjustment plates **1** are firmly tightened according to the maintenance intervals.

LWE/LTR 1100-009/25105-02-02/en

copyright © Liebherr-Werk Ehingen GmbH 2023

5 Checking the safety ropes and anchor points

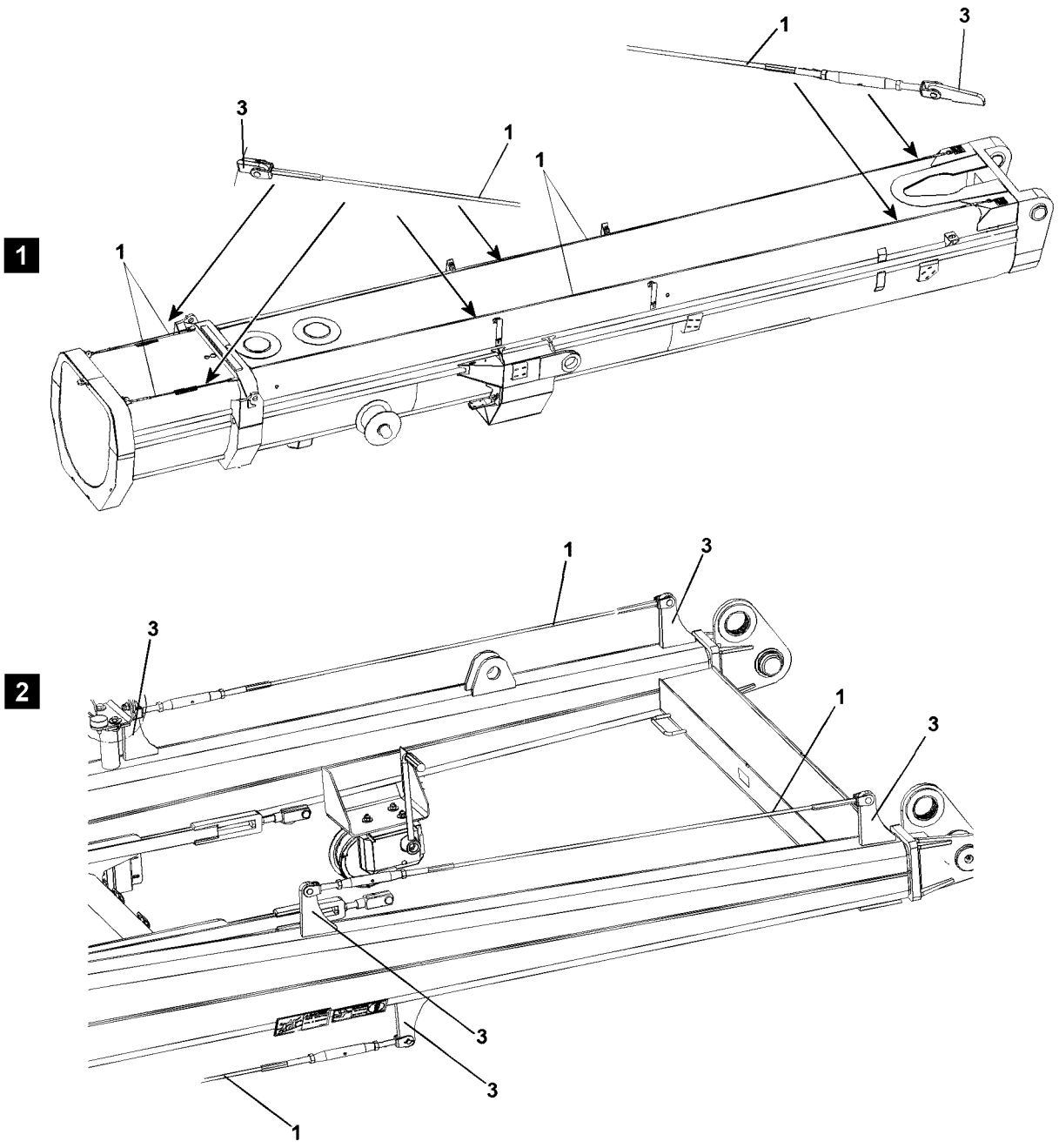

Fig.127130

WARNING
Danger of falls due to damaged safety ropes or anchor points!
The safety ropes **1** and anchor points **3** must be checked **at least once a year** by an **authorized inspector** for safety and damage!
If any defects are found on the safety ropes **1** or anchor points **3** during the inspections, then the safety ropes **1** or anchor points **3** must be replaced immediately by authorized and trained specialists! If this is not observed, assembly personnel could be killed or fatally injured during a fall!

- ► The rope pretension on the safety ropes must be 800 N !
- ► Have damaged safety ropes **1** or anchor points **3** replaced immediately by trained expert personnel!

LWE/LTR 1100-009/25105-02-02/en

copyright © Liebherr-Werk Ehingen GmbH 2023

Note
Document the inspections in writing!
► The scope and results of tests should be documented to permit reproducibility. This documentation forms part of the crane records and should be safely stored during the entire service life of the crane.

5.1 Checking of rope pretension on telescopic booms, illustration 1

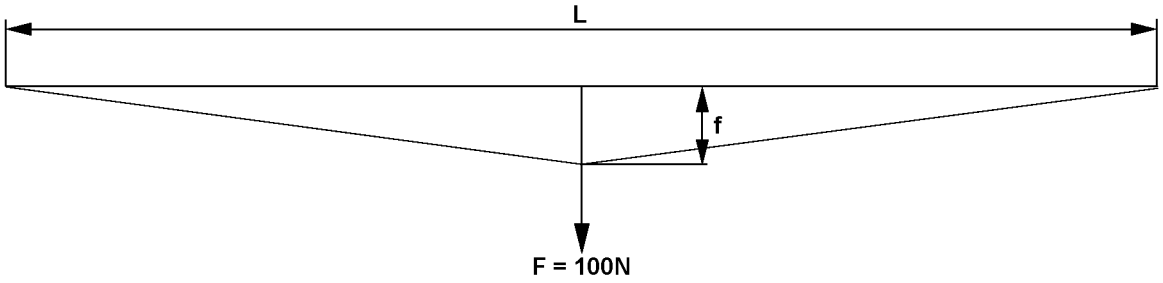

Fig.112738

The rope pretension must be 800 N. This can be checked with the aid of a spring balance, which is pulled centered on the safety rope. If the specified deflection (f) depending on the rope length (L) according to the following charts results for the raised load F = 100 N then the rope pretension of 800 N is set correctly.

Rope pretension is 800 N if:					
Rope length (L)	1.0 m	1.5 m	2.0 m	2.5 m	3.5 m
Deflection (f)	15 mm	25 mm	30 mm	40 mm	55 mm

Rope pretension is 800 N if:					
Rope length (L)	5.5 m	7.5 m	9.5 m	11.5 m	13.5 m
Deflection (f)	85 mm	115 mm	145 mm	180 mm	215 mm

5.2 Inspecting the rope pretension on lattice sections, illustration 2

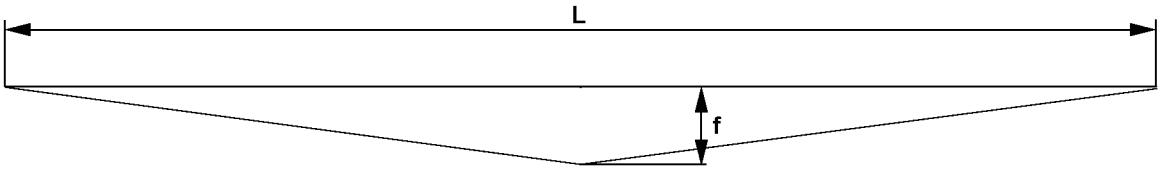

Fig.117747

The rope pretension is 800 N , if a sag (f) according to the chart is present on the safety rope according to the rope length (L).

Rope pretension is 800 N if:					
Rope length (L)	1.0 m	1.5 m	2.0 m	2.5 m	3.5 m
Deflection (f)	0	1 mm	2 mm	3 mm	6 mm

LWE/LTR 1100-009/25105-02-02/en

copyright © Liebherr-Werk Ehingen GmbH 2023

Rope pretension is 800 N if:					
Rope length (L)	5.5 m	7.5 m	9.5 m	11.5 m	13.5 m
Deflection (f)	15 mm	28 mm	45 mm	66 mm	90 mm

6 Inspecting the load handling equipment and assembly aids

WARNING
Load handling equipment and / or assembly aids **not** inspected!
Death, severe bodily injuries, property damage.
► Inspect load handling equipment and / or assembly aids at least once a year.

The recurring inspection of the load handling equipment and / or assembly aids must be carried out once a year.

The inspections of load handling equipment and / or assembly aids must be recorded.

The welding seams must be subjected to a visual inspection.

Check load handling equipment and assembly aids for:
– Damage
– Wear
– Cracks

Replace damaged, worn or ripped load handling equipment and assembly aids immediately.

Repairs on load handling equipment and assembly aids may solely be made in consultation and under the instructions of the Customer Service at **Liebherr-Werk Ehingen GmbH** by authorized and trained expert personnel.

Note
► Document the scope of the inspection and the results in writing and comprehensibly.
► Save the documentation as a part of the crane records for the entire service life of the crane.

7 Inspecting of fastening equipment

WARNING
Fastening equipment **not** inspected!
Death, severe bodily injuries, property damage.
► Check the fastening equipment at least once a year.

The inspections of the fastening equipment must be recorded.

The welding seams must be subjected to a visual inspection.

Inspect the fastening equipment according to the specifications of the corresponding regulations and standards.

Replace damaged, worn or ripped fastening equipment immediately.

Note
► Document the scope of the inspection and the results in writing and comprehensibly.
► Save the documentation as a part of the crane records for the entire service life of the crane.

LWE/LTR 1100-009/25105-02-02/en

copyright © Liebherr-Werk Ehingen GmbH 2023

7.1 Grommets and cable laid fastening rope

Observe and comply with the manufacturer's operating instructions.

WARNING
Damaged grommets and cable laid fastening rope used!
The fastening ropes can fail. The load call fall down.
► Do **not** use grommets and cable laid fastening rope with a corresponding number of wire breaks.
► Do **not** use grommets and cable laid fastening rope with a corresponding amount of damage.

Do **not** use grommets and cable laid fastening rope if there is one of the following numbers of wire breaks:
– Wire breaks of more than 10 wires along a length of 3D
– Wire breaks of more than 15 wires along a length of 6D
– Wire breaks of more than 40 wires along a length of 30D

Do **not** use grommets and cable laid fastening rope in the case of the following damage:
– Strong rope distortion
– Rotary distortion
– Kinks, bends, basket formation
– Corrosion
– Corrosion of the zinc coating
– Opening of the splice
– Loosening or opening of the rope bond
– Displacement of the rope bond from its original position
– Lack of identification

8 Inspecting the hydro reservoir

Note
► The national regulations for pressure container inspection must be observed!

The inspection of the hydro reservoir for specified gas pressure must be carried out by an **authorized inspector**, see chapter 7.04 and chapter 7.05.

9 Inspecting the relapse cylinders

The technical data required for „Inspecting the relapse cylinders“ is provided on the relapse cylinders.

WARNING
Fatal accidents due to defective relapse cylinders!
Loss of oil or corrosion can damage the relapse cylinders!
Safe crane operation is no longer ensured!
► Crane operation with defective relapse cylinders is prohibited!

9.1 Pressure testing the relapse cylinders

The relapse cylinders must be inspected annually by an **authorized inspector**. The purpose of the inspections is to avoid accidents by detecting deficiencies early on.

LWE/LTR 1100-009/25105-02-02/en

copyright © Liebherr-Werk Ehingen GmbH 2023

9.2 Checking the gas pressure and oil fill before start up

WARNING
Fatal accidents due to defective relapse cylinders!
Loss of oil or corrosion can damage the relapse cylinders!
Safe crane operation is no longer ensured!
- ► Before every start up: Carry out a visual inspection for leaks, damage and corrosion on the relapse cylinders.
- ► If any defects are found, the relapse cylinders must be inspected by the cylinder manufacturer!

The gas pressure and the oil fill must be checked by an **authorized inspector** for pressure containers.

9.3 Inspecting the safety controls on the relapse cylinders

Inspecting the interlocking system or limit switches on the relapse cylinders and the boom A-frames, see chapter 8.12.

10 Inspecting the rope pulleys

10.1 Checking for damage and cracks

DANGER
Danger of accident in case of damage or cracks!
- ► Replace rope pulley immediately!

Check the entire rope pulley assemblies for damage and cracks once a year.

If rope pulleys are subjected to any impacts (e.g., with buildings) or are otherwise overloaded, they must be visually inspected for damage or cracks immediately.

10.2 Checking the groove diameter

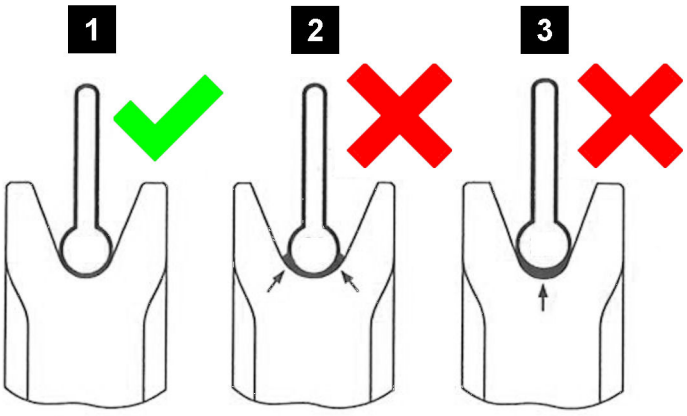

Fig.154258: Checking the groove diameter

1 Groove diameter ok
2 Groove diameter too wide
3 Groove diameter too narrow

NOTICE
Worn rope pulleys!
The functionality and service life of the rope is reduced. Damage on rope.
- ► Before placing the rope, check the groove diameter of rope pulleys.

LWE/LTR 1100-009/25105-02-02/en

copyright © Liebherr-Werk Ehingen GmbH 2023

Visible wear on rope pulleys:
– Reduced groove diameter
– Negative impressions of the rope profile in the groove

Make sure that the following tools are available:
– Groove caliber

Make sure that the following prerequisites are met:
– All components to be inspected are cleaned.
– The rope does **not** obstruct the inspection of the components.

Note
► The actual groove diameter **must** be larger than the actual diameter of the rope!

The groove diameter of rope pulleys and winches must be at least 6 % larger than the nominal rope diameter.

Check the rope pulleys with a groove caliber for wear. When wear exists on the rope grooves: Repair or replace the rope pulleys.

11 Inspecting the carrier rollers

11.1 Performing a visual inspection

DANGER
Damaged carrier rollers!
Breakage and falling components. Death, severe bodily injuries, property damage.
► Carry out a visual inspection according to the maintenance intervals.
► Replace the carrier roller immediately.

The visual inspection must be carried out according to the following criteria:
– Wear
– Damage
– Cracks

Visible wear on carrier rollers:
– Negative imprints of the rope profile on the circumference of the carrier rollers
– Lead-in tracks

11.2 Checking the depth of the lead-in tracks

DANGER
Worn carrier rollers!
Breakage and falling components. Damage to ropes. Death, severe bodily injuries, property damage.
► Check the depth of the lead-in tracks.
► Replace worn carrier rollers immediately.

Make sure that the following prerequisites are met:
– All components to be inspected are cleaned.
– The rope does **not** obstruct the inspection of the components.

LWE/LTR 1100-009/25105-02-02/en

copyright © Liebherr-Werk Ehingen GmbH 2023

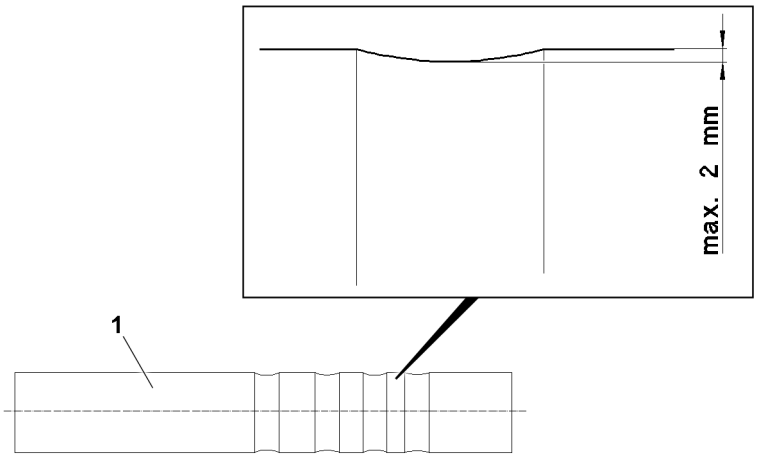

Fig.124864: Permissible depth of the lead-in tracks

1 Carrier roller

The depth of the lead-in tracks may be maximum 2 mm.

11.3 Checking the bearings for easy movement

Stiff or blocked carrier rollers wear unevenly and cause serious rope abrasion.

Ineffective carrier rollers can lead to irregular rope tension.

Tasks to check the carrier rollers:
- Check the carrier rollers for proper movement in their bearings.
- When carrier rollers are **not** easily moveable in their bearings: Fix the bearings.

11.4 Checking the tightening torque

The tightening torque of screws must be checked according to maintenance interval.

12 Inspecting the extension conditions of sliding beams

The extension conditions of the sliding beams must be inspected annually by an **authorized inspector**.

Check the extension conditions on every sliding beam:
- Check if the position 0 % of the LICCON display matches the actual condition of the sliding beam.
- Check if the 100 % position of the LICCON display matches the actual condition of the sliding beam.

LWE/LTR 1100-009/25105-02-02/en

copyright © Liebherr-Werk Ehingen GmbH 2023

13 Inspecting the inclination sensor

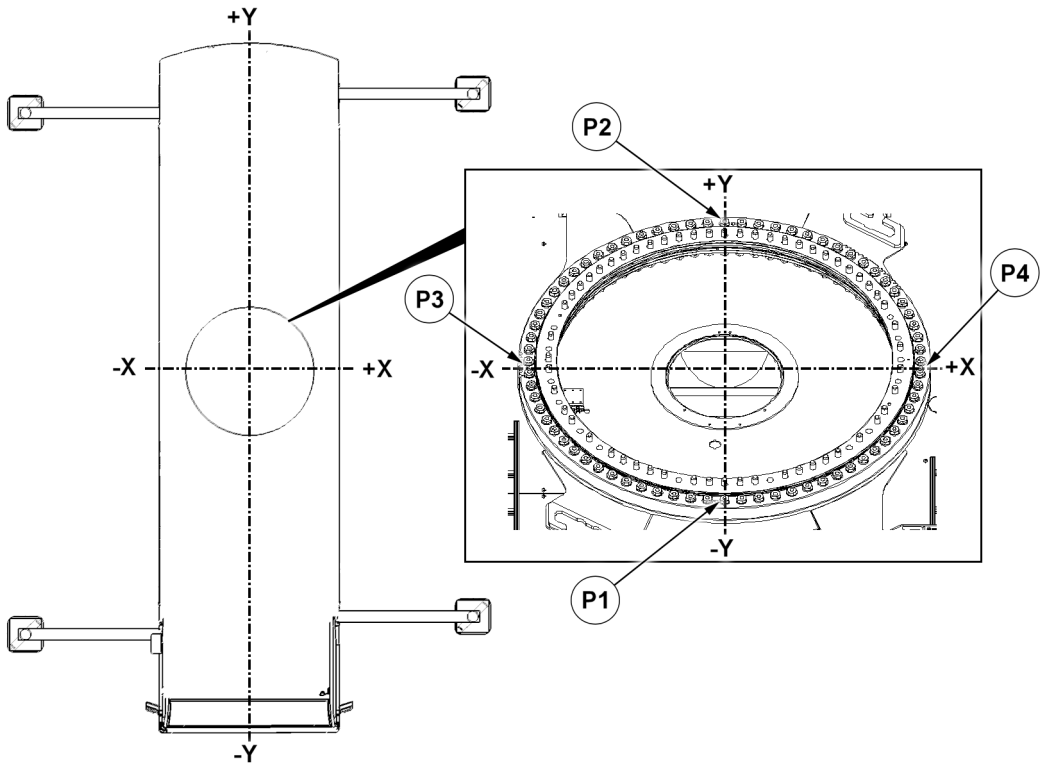

Fig.162529: Slewing ring connection inspection points

X Lateral direction
Y Longitudinal direction
P1 Lateral direction inspection points
P2 Lateral direction inspection points
P3 Longitudinal direction inspection points
P4 Longitudinal direction inspection points

The inclination sensor must be inspected annually by an authorized inspector.

For the test of the inclination sensor on the crane, an independent measuring device, such as a spirit level and a **machined** surface of the slewing ring connection are required. The digital spirit level must have a display accuracy of at least 0.1° or better.

The test of the inclination sensor must be carried out once in the lateral direction and once in the longitudinal direction with respect to the crane chassis.

The average inclinations determined with the digital spirit level must be compared afterward with the displayed incline values on the LICCON monitor or on the BTT.

The maximum permissible difference between the average inclinations of the digital spirit level and the values on the LICCON monitor or the BTT is ≤ 0.2°.

DANGER
Difference of the inclination values greater than 0.2°!
The crane can topple over.
Death, severe bodily injury, property damage.
► Stop crane operation.
► Contact Customer Service at Liebherr-Werk Ehingen GmbH.

Note
Inspection of the inclination sensor in the longitudinal direction with respect to the crane chassis **not** possible!
► Turn the crane superstructure 90°.
► Determine the incline values again.

LWE/LTR 1100-009/25105-02-02/en

copyright © Liebherr-Werk Ehingen GmbH 2023

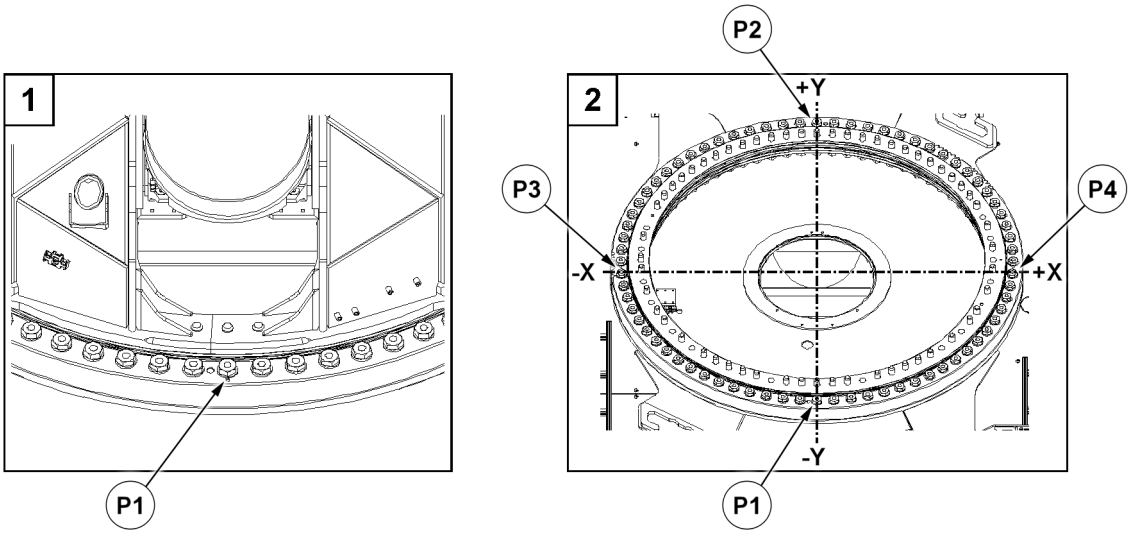

Fig.162524: Slewing ring connection inspection points

X Lateral direction
Y Longitudinal direction
P1 Lateral direction inspection points
P2 Lateral direction inspection points
P3 Longitudinal direction inspection points
P4 Longitudinal direction inspection points

Tasks for inspecting the inclination sensor on the crane
- For cranes with crane support: Support the crane.
- Align the crane horizontally to 0.0°.
- Disassemble the load handling equipment on the boom and remove it.
- For cranes with a telescopic boom: Telescope the telescopic boom in all the way.
- Pin the crane superstructure in the 180° position.
- Free the support surface for the digital spirit level of grease, paint and dirt.
- Check the inclination sensor in the lateral direction:
  Place the digital spirit level in the test point **P1** or test point **P2**.
- Check the inclination sensor in the longitudinal direction:
  Place the digital spirit level in the test point **P3** or test point **P4**.
- Compare the average inclinations determined with the digital spirit level with the displayed incline values on the LICCON monitor or on the BTT.

14 Inspecting the function of the overload protection

Position the longest boom at minimum and maximum radius: Check the load indicator, using the hook block as a test load.

The display reading may not deviate by more than 10 % off the true load value at these two extreme positions.

Measure the indicated radius for the longest boom at its minimum radius and at a boom angle of 45°.

The display readings may not deviate more than 10 % from the measured boom radius.

15 Inspecting the pin connections

WARNING
Pin connections **not** inspected!
Death, severe bodily injuries, property damage.
► Check the pin connections at least once a year.

The periodic inspection of all pin connections must be carried out once a year.

LWE/LTR 1100-009/25105-02-02/en

copyright © Liebherr-Werk Ehingen GmbH 2023

The inspections of the pin connection must be recorded.

Check the pin connections for:
- Properly secured pin connections
- Damage to the pins and / or connector elements
- Damage to the retaining elements

Replace damaged pins immediately.

Immediately replace damaged, bent or broken retaining elements.

Only replace damaged pins with identical pins.

Only replace damaged retaining elements with identical retaining elements.

Note
- ► Document the scope of the inspection and the results in writing and comprehensibly.
- ► Save the documentation as a part of the crane records for the entire service life of the crane.

16 Inspecting the slewing ring connection

16.1 Checking the tilt play

The wear of the slewing ring connection is determined by measuring the tilt play with the ring installed.

The permissible tilt play depends on the type of slewing ring connection.

WARNING
The tilt play of the slewing ring connection is too large!
If the permissible tilt play is exceeded, then safe crane operation is **no** longer possible.
Death, severe bodily injuries, property damage.

When the permissible tilt play is exceeded:
- ► Replace the slewing ring connection.

The determination of the tilt play must be carried out according to the **test instructions** of **Liebherr-Werk Ehingen GmbH**.

Request the test instructions and permissible tilt play: Contact Liebherr Customer Service.

17 Inspecting the mounting of the load bearing equipment

17.1 Checking the tightness of the mounting screws

The mounting screws must be checked for a tight fit during the annual crane inspection.

The mounting screws are pre-stressed at the factory, so that no loosening of the screw connections will occur during normal crane operation.

The screw connection may become overloaded and the mounting screws may be permanently stretched if the crane is overloaded or if the load is pulled free. The mounting screws must be checked immediately for a tight fit after an overload.

Check the tightening torque of the mounting screws of load bearing equipment for a tight fit:
- Slewing ring connection
- Winches
- Slewing gears
- Transmission

LWE/LTR 1100-009/25105-02-02/en

copyright © Liebherr-Werk Ehingen GmbH 2023

– Trailer coupling

If a mounting screw can be tightened, then the mounting screw is loose. Follow the instructions in section „Checking the mounting screws for damage“.

17.2 Checking the mounting screws for damage

Completely unscrew the loose mounting screws and check in detail for damage.

Completely unscrew the adjacent mounting screws and check in detail for damage.

Replace the mounting screw if any of the following damage is present:
– The mounting screw is stretched by more than 2 % (in relation to its original length).
– Cracks, permanent deformation or other damage is visible on the mounting screw.
– The mounting screw is uneven.
– There is pitting.
– The thread is hard to move.

If there is **no** damage, reuse the checked mounting screws (expansion screws) a maximum of two times.

LWE/LTR 1100-009/25105-02-02/en

copyright © Liebherr-Werk Ehingen GmbH 2023

18 Inspecting the tele extension with eccentric, illustration 1

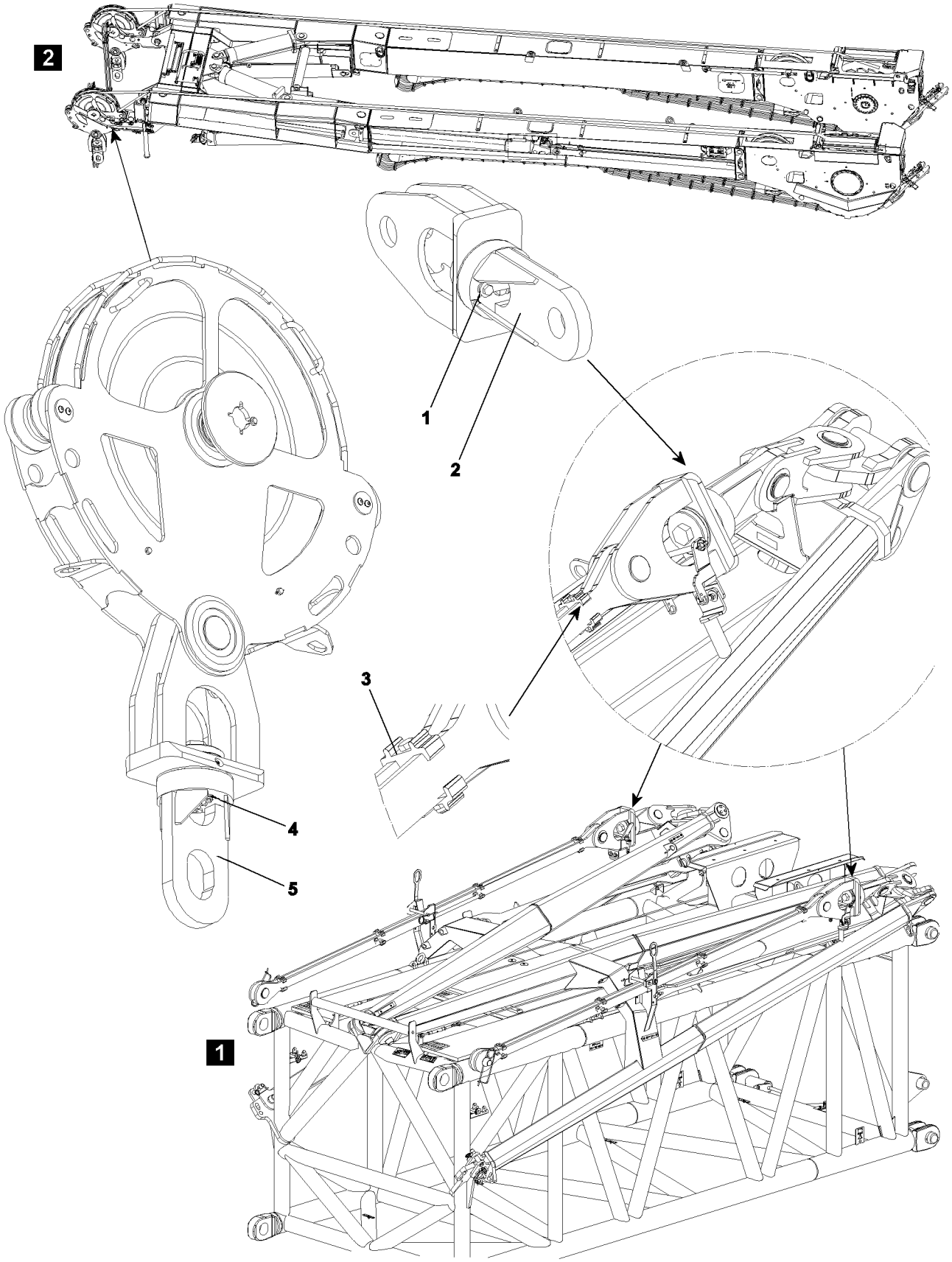

LWE/LTR 1100-009/25105-02-02/en

Fig.109096

copyright © Liebherr-Werk Ehingen GmbH 2023

- Inspection of anti-rotation device **1** for damage and loose screw connection.
- Inspection of swivel **2** for easy turnability.
- Inspection of all clamps **3** for damage and function.

19 Inspecting the change over pulleys, illustration 2

- Inspection of anti-rotation device **4** for damage and loose screw connection.
- Inspection of swivel **5** for easy turnability.

20 Inspecting the oil and fuel tanks

Visually check the oil and fuel tanks at least once a year for leaks and safe mounting.

Repairs may only be carried out by authorized and trained specialists.

Improper repairs; e.g., welding, hard or soft soldering is not permitted, particularly if the Service department at Liebherr-Werk Ehingen GmbH has not been consulted!

LWE/LTR 1100-009/25105-02-02/en

copyright © Liebherr-Werk Ehingen GmbH 2023

8.01.10 Inspection plan

1 Authorized inspector 2

LWE/LTR 1100-009/25105-02-02/en

copyright © Liebherr-Werk Ehingen GmbH 2023

1 Authorized inspector

WARNING
Test regulations not observed!
Death, severe bodily injuries, property damage.
► Carry out all nationally required inspections. Comply with the national inspection frequencies.
► Observe information regarding periodic crane inspections, see chapter 8.01.

1.1 Authorized inspector

The authorized inspector, according to national regulations, has the following responsibilities:
– The authorized inspector carries out inspections and maintenance on the crane in accordance with the manufacturer's inspection schedule to guarantee further, safe and reliable crane operation, whose performance required particular technical competency and that therefore can **not** be performed by maintenance personnel or authorized and trained service personnel. Furthermore, the authorized inspector can carry out acceptances and product certifications, on behalf of a notified body, according to the applicable, valid directives and standards.
– The person assigned for the inspection wears the personal protective equipment necessary for the respective work procedure in accordance with the operating instructions and national regulations.
– The authorized inspector provides the operator with permission and approval for further use of the component and/or the crane.
– The authorized inspector has the authority to prohibit further use of the component and / or the crane.
– The authorized inspector issues a certificate from the notified body upon successful acceptance.

The following chart contains the inspection intervals required by Liebherr-Werk Ehingen GmbH.

From year of construction: Annually [1]	Every 1000 h	Authorized inspector Activities to be performed ● Repeat interval	Chapter	Confirmation
		Crane, entire machine		
●		Check the **steel structures**	8.01, 8.90	
●		Check **all components**	8.01, 8.90	
12 years		Carry out the general inspection	8.01	
20 years		Carry out the general inspection	8.01	
26 years		Carry out the general inspection	8.01	
30 years		Carry out the general inspection	8.01	
		Winches		
●		Check the winches	8.03	
●		Check the remaining theoretical service life If necessary: Carry out the general overhaul	8.03	
Every 10 years		Carry out the general overhaul	8.03	

LWE/LTR 1100-009/25105-02-02/en

copyright © Liebherr-Werk Ehingen GmbH 2023

From year of construction: Annually [1]	Every 1000 h	Authorized inspector Activities to be performed ● Repeat interval	Chapter	Confirmation
		Counterweight		
●		Check the tightening torque of the mounting screws		
		Crane ropes		
●		Check the rope pulleys for wear, damage and cracks (visual inspection). Check the groove diameter. Check the bearings for easy movement.	8.01	
● [4]		Check the crane ropes.	8.04	
		Hydraulic system		
●		Check the brake system.	8.07	
●		Hydraulic supports: Check the extension condition of the sliding beams.	8.01	
●		Have the extension conditions of the sliding beams 0 % and 100 % checked.		
●		Check the hydraulic hose lines.	8.06	
Every 6 months [2]		Check the hydraulic hose lines.	8.06	
		Telescopic boom with Telematik		
●		Check the telescopic boom (Telematik system) for distortion, damage and cracks	8.01	
		Telescopic boom with rope extension mechanism		
●		Check the telescopic boom for distortion, damage and cracks	8.01	
●		Check the change over pulleys of the push out mechanics for damage	8.10	
●		Visually check the pull out rope (flat rope) and pull in rope	8.10	
Every 10 years	Every 20000 h [5]	Disassemble and inspect the boom		
		Boom system		
●		Check lattice sections for cracks, damage and distortion	8.01	
●		Check the hook, hook shaft and thread.	8.05	
		Safety systems		
● [3]		Check the personal protective equipment. Observe the manufacturer documentation.		
● [3]		Check the height rescue system. Observe the manufacturer documentation.		

copyright © Liebherr-Werk Ehingen GmbH 2023

From year of construction: Annually [1]	Every 1000 h	Authorized inspector Activities to be performed ● Repeat interval	Chapter	Confirmation
		Fall protection equipment		
●		Check railings, steps and platforms for damage and safe function.		
●		Check the catwalks and grating for safe function.		
● [3]		Retaining points: Check the hook points (PPE).		
● [3]		Check the safety ropes and anchor points.	8.01	
●		Check the ladders and ladder positioning points.	8.17	
		Rigging points and fastening points		
●		Check the rigging points and fastening points.	8.01	
		Load handling equipment and assembly aids		
●		Check load handling equipment and assembly aids. Observe the manufacturer documentation.	8.01	
		Fastening equipment and load securing devices		
●		Check the fastening equipment and load securing devices. Observe and adhere to the manufacturer's instructions.	8.01	
		Overload protection		
●		Check the length sensor for function.		
●		Check the length sensor rope for damage.		

[1] Shorten the interval of inspection when certain conditions or use and operational conditions are present, see chapter 8.01
[2] If the crane is more than 10 years old
[3] Or after an accident
[4] Check the crane rope immediately in the following situations:
[5] Crane superstructure operating hours

[4] Check the crane rope immediately in the following situations:
- After unusual strain.
- If **non** visible damage is suspected.
- When a rope or rope end connection is damaged.
- When the rope has been placed again after disassembly.
- When the rope has been out of service for longer than 3 months.

LWE/LTR 1100-009/25105-02-02/en

copyright © Liebherr-Werk Ehingen GmbH 2023

8.03 Inspecting of winches

1	Inspecting the hoist and retracting winches	3
2	Inspection of the auxiliary reeving winch, recovery winch and spare wheel winch	5
3	Monitoring the winches	5

LWE/LTR 1100-009/25105-02-02/en

copyright © Liebherr-Werk Ehingen GmbH 2023

LWE/LTR 1100-009/25105-02-02/en

Fig.195219

copyright © Liebherr-Werk Ehingen GmbH 2023

1 Inspecting the hoist and retracting winches

The hoist and retracting winches are designed in sealed planetary gear version. These gears are sized for long service life and the drive shafts and gears are designed for endurance.

Even though the hoist and retracting winches are designed for long life, an external visual inspection is not adequate, since their life can be significantly affected by bad maintenance (insufficient oil), using oil that does not meet specification requirements, defective seals, improper operation or overloading.

The annual inspection must therefore be carried out by an **expert** in accordance with the following specification.

The winches must be inspected by an **authorized inspector** every four years after the initial license.

Within the territorial validity of the BGV D6, after the 10th year in operation, counted from the first day of initial license, when the theoretical service life is not over, the winches must be checked annually by an **authorized inspector**.

1.1 Checking the groove diameter

WARNING
Worn winches!
Damage of flanged disks, high rope wear, operational problems. Broken rope, falling load.
► Before placing the rope, check the groove diameter of winches.

Visible wear on winches:
– Reduced groove diameter.
– Mechanical damage, for example scrub marks or scouring on flanged disks

Make sure that the following tools are available:
– Groove caliber

Make sure that the following prerequisites are met:
– All components to be inspected are cleaned.
– The rope does **not** obstruct the inspection of the components.

Note
► The groove radius may **not** be smaller than the actual diameter of the rope.

The groove diameter of rope pulleys and winches must be at least 6 % larger than the nominal rope diameter.

Check winches with a groove caliber for wear. When wear is present: Fix the winch or replace.

1.2 Inspection intervals

At least once a year, see Crane operating instructions, chapter 7.03.

1.3 Checking the oil level

Check the oil level with the dipstick.

For hoist and retracting winches **without** a dipstick, we recommend that the oil is drained and the amount compared to the specified oil quantity.

1.4 Evaluating oil color

Assume that the oil has been overheated if it is black and / or a burnt oil smell is detected. Change the oil.

LWE/LTR 1100-009/25105-02-02/en

copyright © Liebherr-Werk Ehingen GmbH 2023

1.5 Checking for solid foreign substances

In general, the oil must be analyzed by a qualified laboratory.

For simple testing, the following procedure can be used:
- Drip the used oil on a specified filter fleece.
- Visual inspection with a magnifying glass may reveal coarse particles.
- If coarse particles are found: Have the components of the oil analyzed by a qualified laboratory.

NOTICE
Danger of property damage!
► Repairs may only be carried out by an authorized and trained expert personnel.
► Replace damaged parts and change the gear oil.

1.6 Visual inspection for leaks

The gears must be checked for leaks, since oil losses - in addition to polluting the environment - can lead to gear failure.

1.7 Checking the gear brakes

Check the brakes each time the gears are inspected.

WARNING
Condition of gear and brakes incorrectly transmission evaluated!
The load can fall down, death, property damage.
► Only qualified personnel with specialized knowledge may be used to evaluate gears and brakes.

In order to do so, proceed as follows:
- Make sure that the hoist rope is sufficiently pretensioned, in particular in the lower layer of the winch. See chapter 4.08.
- Attach a load, which creates the maximum rope pull in the uppermost layer of the coil with 1 strand, and raise it just off the ground by luffing it up.
- Block the winch brake:
  - For cranes with LICCON 1: „Release the winch brake“ by unplugging the valve plug from the valve.
  - For cranes with LICCON 2: By activating the setting program for blocking the winch brake.
- Activate the winch in the lowering direction.

The brake may **not** slip during the test, which means that the winch may **not** turn.

WARNING
The brake slips and the winch turns!
The load can fall down, death, property damage.
► Stop crane operation.
► Contact Customer Service at Liebherr-Werk Ehingen GmbH.

1.8 Documenting the completed inspection

The results of the annual inspections and maintenance work, including the steps taken, must be documented by the competent or authorized inspector, including attachments from the inspection labs and qualified service companies if applicable.

This documentation must be filed in the crane inspection log under the heading "Periodic inspections".

LWE/LTR 1100-009/25105-02-02/en

copyright © Liebherr-Werk Ehingen GmbH 2023

2 Inspection of the auxiliary reeving winch, recovery winch and spare wheel winch

The inspection of the auxiliary reeving winch, recovery winch and spare wheel winch regarding scope and content is made according to the manufacturer's instructions.

– Check the auxiliary reeving winch, recovery winch and spare wheel winch according to the manufacturer's instructions.
– Request data about the service life of the auxiliary reeving winch, recovery winch and spare wheel winch from the respective manufacturer.

3 Monitoring the winches

3.1 Theoretical service life

The designer of your crane used a theoretical total operating time when designing and sizing the winches. This resulted in the theoretical service life of the equipment.

The winches of your crane are classified according to ISO 4301/1 as follows:

Winches	Classification
Power train group:	M3
Load spectrum:	L1
Load spectrum factor Km:	0.125
Theoretical service life D:	3200 h

Note

► The „theoretic service life“ is not equal to the real (true) service life of a winch!

The actual service life of the winch is affected by many additional outside factors; for example:

– Overloads caused by unapproved use of the crane.
– Inadequate maintenance: Oil is not changed in a timely manner
– Improper operation:
  • Extreme acceleration or deceleration of the load
  • Load falling into the ropes
– Maintenance errors:
  • Using the wrong type of oil
  • Too much or too little oil
  • Contamination during oil change
– Assembly errors during repair and maintenance
– **Undetected** leaks
– Incorrectly set safety equipment
– Hidden damage from accidents
– Extreme environmental conditions:
  • Low or high temperatures
  • Aggressive atmosphere
  • Dust and dirt

3.2 Used proportion of the theoretical service life

The crane operator is obligated to carry out an inspection of the crane at least once a year.

LWE/LTR 1100-009/25105-02-02/en

copyright © Liebherr-Werk Ehingen GmbH 2023

At this time, the actually used part of the theoretical service life must also be calculated. If necessary, the crane operator must contract an authorized inspector.

For the determination of the used part of the theoretical service life, the actual operating conditions (load spectrum) and the hoist gear operating hours for each inspection interval are to be determined. The operator is responsible for the documentation in the crane inspection log.

3.2.1 Determining the operating conditions (load spectrum)

The load spectrum of the crane is divided into groups, please refer to ISO 4301/1.

Select one of the following load spectrums and record it in the crane inspection log for the respective inspection interval based on the actual operating conditions. A more precise determination of the load spectrum is permissible.

Load spectrum class: Light L1

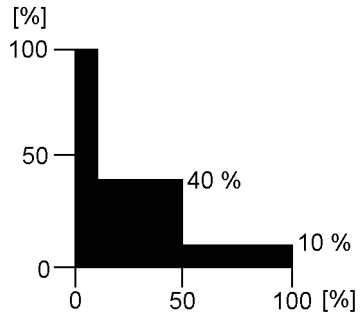

Fig.195234: Graphic illustration Load spectrum L1

Definition:

Power train or parts thereof are subjected to maximum stress only in exceptional cases, but normally only operate at very light loads.

Operating time rates:

10 % of the time at maximum load (dead load and 1/1 working load)
40 % of the time with dead load and 1/3 working load
50 % of the time only with dead load

Factor of load spectrum:

Km = 0.125

Note

► Load spectrum L1 with load spectrum factor Km = 0.125 is normally applied to cranes used for assembly operations!

LWE/LTR 1100-009/25105-02-02/en

copyright © Liebherr-Werk Ehingen GmbH 2023

Load spectrum class: Medium L2

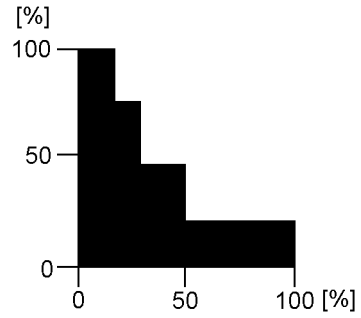

Fig.195235: Graphic illustration Load spectrum L2

Definition:

Power train or parts thereof are subjected to maximum load relatively often, but normally only operate at light load.

Operating time rates:

1/6 of the time at maximum load (dead load and 1/1 working load)
1/6 of the time with dead load and 2/3 working load
1/6 of the time with dead load and 1/3 working load
50 % of the time only with dead load

Factor of load spectrum:

Km = 0.25

Load spectrum class: Heavy L3

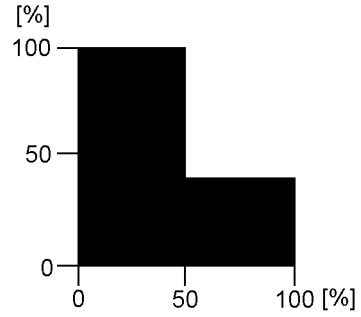

Fig.195236: Graphic illustration Load spectrum L3

Definition:

Power train or parts thereof are frequently subjected to maximum load and normally operate at medium load.

Operating time rates:

50 % of the time at maximum load (dead load and 1/1 working load)
50 % of the time only with dead load

Factor of load spectrum:

Km = 0.5

LWE/LTR 1100-009/25105-02-02/en

copyright © Liebherr-Werk Ehingen GmbH 2023

Load spectrum class: Very heavy L4

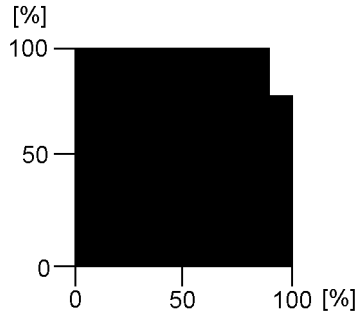

Fig.195237: Graphic illustration Load spectrum L4

Definition:
Power train or parts thereof are regularly subjected to near maximum loads.

Operating time rates:
90 % of the time at maximum load (dead load and 1/1 working load)
10 % of the time only with dead load

Factor of load spectrum:
Km = 1

3.2.2 Determining the effective operating hours T_i

The effective operating hours calculated as follows must be entered into the crane inspection log for the respective inspection interval.

There are four different scenarios:

1. Operating hour meter installed on every winch.
   If an operating hour meter is installed on every winch in your crane, the effective operating hours T_i can be read directly during each inspection.
2. Operating hour meter installed for the overall crane drive.
   The winch proportion of the total superstructure operating hours must be estimated.
   For cranes used in assembly operations, the operating time for the hoist winches can be estimated generally at 20 % of the total operating hours of the superstructure.
3. One operating hour meter is used for both the crane engine and the crane drive
   The winch proportion of the total crane operating hours must be estimated.
   For cranes used in assembly operations, the operating time for the superstructure can be estimated at 60 % of the total operating hours of the crane. If the hoist winch proportion is estimated at 20 % of the superstructure operating hours (see previous item), then the result in relation to the **total** operating hours of the crane is: 12 %.
4. No operating hour meter is available.
   In this case, the operator must estimate and document the actual operating hours of the winch.
   The approximate percentages stated above normally apply to main hoist winches. For auxiliary hoist winches or boom control winches, the proportion of the total operating hours can be significantly less and should therefore be estimated by the operator.

3.2.3 Determining the used proportion of the theoretical service life

For an inspection interval i (max. 1 year), the actually used proportion S_i of the theoretical Service life is derived from the formula:

LWE/LTR 1100-009/25105-02-02/en

copyright © Liebherr-Werk Ehingen GmbH 2023

$$S_i = \frac{Km_i}{Km} \times T_i$$

Fig.195230

Abbreviation	Explanation
S_i	Used proportion of the theoretical service life.
Km	Load spectrum factor that was used to calculate the winch rates. This factor is provided in the Operating instructions.
Km_i	Load spectrum factor for inspection interval i according to section „Determining the operating conditions“.
T_i	Effective operating hours for inspection interval i according to section „Determining the effective operating hours T_i“.

The actually used proportion is subtracted from the remaining theoretical service life D_i after each inspection interval (see example).

If the remaining theoretical service life is not long enough to cover the next projected operating period, a general overhaul of the winch is required.

If the theoretical service life D has been reached (see section on „Theoretical service life“), then the winch may only be operated after conducting a general overhaul.

A general overhaul of the winch is required not later than 10 years after start up.

The general overhaul must be arranged by the operator and carried out by the manufacturer or the manufacturer's authorized representatives and must be documented in the inspection log. After the general overhaul, the manufacturer or the manufacturer's authorized representative will define a new theoretical service life D.

When the design life has not been reached after 10 years, continued operation of the winch without a general overhaul is acceptable, when the crane's authorized inspector has confirmed the accuracy of the actual service life calculation by signing the crane inspection log at each authorized inspection interval.

In such a case, the authorized crane inspector must thoroughly inspect the winch. This comprises at least:
- External visual inspection (leaks damage, deformation, etc.).
- Oil check, especially for metal residues.
- Load test at minimum and maximum rope pull and at maximum possible speed in both cases. At least one layer must be spooled up. Pay particular attention to any unusual noises during this load test.

The authorized crane inspector must confirm this inspection in the crane inspection log and must make a statement regarding suitability of the winch for continued operation. The next inspection must take place before the end of the 12th operating year and annually thereafter.

3.3 Example

According to the manufacturer's operating instructions, a crane with a separate operating hour meter for the travel drive and the crane drive is classified as follows:
- Power train group: M3
- Load spectrum: Light L1
- Factor of load spectrum: Km = 0.125
- Theoretical service life: D = 3200 h

Actual usage proportion S of the theoretical service life is calculated using the individual inspection intervals as follows:

LWE/LTR 1100-009/25105-02-02/en

copyright © Liebherr-Werk Ehingen GmbH 2023

3.3.1 First inspection (first year)

The crane was used for assembly work during the past year:

Load spectrum L1, in other words $Km_1 = 0.125$.

The superstructure operating hour meter indicates 800 h. The winch was operated about 20 % of the time; i.e. $T_1 = 160$ h.

The actual usage proportion S of the theoretical service life at the time of the first inspection is therefore:

$$S_1 = \frac{0{,}125}{0{,}125} \times 160\ h = 160\ h$$

Fig.195231

Remaining theoretical service life:

$D_1 = 3200\ h - 160\ h = 3040\ h$

The above values are recorded in the crane inspection log.

3.3.2 Second inspection (second year)

The crane was used at a harbor for unloading work:

Load spectrum L3, in other words $Km_2 = 0.5$.

The superstructure operating hour meter indicates 2000 h ; i.e., this means that during this period:

2000 h – 800 h = 1200 h (800 h were used during the first year of operation)

The winch was operated about 40 % of the time; i.e. $T_2 = 480$ h.

The actual usage proportion S_2 of the theoretical service life at the time of the second inspection is therefore:

$$S_2 = \frac{0{,}5}{0{,}125} \times 480\ h = 1920\ h$$

Fig.195232

Remaining theoretical service life:

$D_2 = 3040\ h - 1920\ h = 1120\ h$

3.3.3 Third inspection (third year)

The crane was used for assembly work and occasionally at a harbor for unloading work:

Load spectrum L2, in other words $Km_3 = 0.25$.

The superstructure operating hour meter indicates 3000 h ; i.e., this means that during this period:

3000 h – 2000 h = 1000 h (2000 h were used during the first two years of operation)

The winch was operated about 30 % of the time; i.e. $T_3 = 300$ h.

The actual usage proportion S_3 of the theoretical service life at the time of the third inspection is therefore:

LWE/LTR 1100-009/25105-02-02/en

copyright © Liebherr-Werk Ehingen GmbH 2023

$$S_3 = \frac{0{,}25}{0{,}125} \times 300\ h = 600\ h$$

Fig.195233

Remaining theoretical service life:

D_3 = 1120 h – 600 h = 520 h

3.4 Chart for determining the theoretically remaining service life

Chart 1 includes an example.

The remaining theoretical service life is to be documented in chart 2.

LWE/LTR 1100-009/25105-02-02/en

copyright © Liebherr-Werk Ehingen GmbH 2023

Chart to determine the remaining theoretical service life of winch No. 1 (Main hoist winch)

Crane type: LTM 1050
Fabrication No.: 0010 540 08
Put in service : 12345
Serial number of winch according to data tag: 0815
Last general overhaul performed on: .....
Configuration data of winch (see Operating Manual):
Drive gear group: M 3
Load collective: L 1
Factor of load collective Km: 0.125
Theoretical service life D: 3200 hrs.

S_i = Used part of theoretical service life since last inspection
D_i = Remaining theoretical service life
D_{i-1} = Remaining theoretical service life after previous inspection
Km = Factor of load collective, which was taken for calculation of winch. This factor is to be taken from the Operating Manual
Km_i = Factor of load collective in inspection interval i
T_i = Effective operating hours in inspection interval i

(*) In the following pages, carry over the last line from the previous page.

Inspection interval No. (max. annually) i	Date of initial service / data of inspection	Operating conditions since last inspection (load collective)	Factor of load connective Km_i	Total crane operating hours [h]	Operating hours of super-structure [h]	Operating hours of super-structure since last inspection [h]	Operating hours of winch [h]	Operating hours of winch since last inspection T_i [h]	Used part of theoretical service life D: $S_i = \frac{Km_i}{Km} \times T_i$ [h]	Remaining theoretical service life $D_i = D_{i-1} - S_i$ [h]	Name of inspector	Signature	Remarks	Name of expert	Signature
(*) 0	10.06.90	-	-	-	0				0	3200					
1	05.06.91	L1	0,125	-	800	800	-	160 (20 % of 800)	160	3040	Müller				
2	20.05.92	L3	0,5	-	2000	1200	-	480 (40 % of 1200)	1920	1120	Huber				
3	18.05.93	L2	0,25	-	3000	1000	-	300 (30 % of 1000)	600	520	Maier				
4															

C A U T I O N : Perform general overhaul at least once every 10 years! In case of deviation, see guidelines in this chapter.

General overhaul last performed on : .....

Fig. 121551-en: Table 1

copyright © Liebherr-Werk Ehingen GmbH 2023

Chart to determine the remaining theoretical service life of winch No. ....

Crane type: .....
Fabrication No.: .....
Put in service: .....
Serial number of winch according to data tag: .....
Last general overhaul performed on: .....
Configuration data of winch (see Operating Manual): .....
Drive gear group: M.....
Load collective: L.....
Factor of load collective Km: .....
Theoretical service life D: .....

S_i = Used part of theoretical service life since last inspection
D_i = Remaining theoretical service life
D_{i-1} = Remaining theoretical service life after previous inspection
Km = Factor of load collective, which was taken for calculation of winch. This factor is to be taken from the Operating Manual
Km_i = Factor of load collective in inspection interval i
T_i = Effective operating hours in inspection interval i

*) In the following pages, carry over the last line from the previous page.

Inspection interval No. (max. annually) i	Date of initial service data of inspection	Operating conditions since last inspection (load collective)	Factor of load connective Km_i	Total crane operating hours [h]	Operating hours of super-structure [h]	Operating hours of super-structure since last inspection [h]	Operating hours of winch [h]	Operating hours of winch since last inspection T_i [h]	Used part of theoretical service life D: $S_i = \frac{Km_i}{Km} \times T_i$ [h]	Remaining theoretical service life $D_i = D_{i-1} - S_i$ [h]	Name of inspector	Signature	Remarks	Name of expert	Signature
(*)															

C A U T I O N : **Perform general overhaul at least once every 10 years!** In case of deviation, see guidelines in this chapter.

General overhaul last performed on : .....

Fig.121552-en: Table 2

copyright © Liebherr-Werk Ehingen GmbH 2023

LWE/LTR 1100-009/25105-02-02/en

copyright © Liebherr-Werk Ehingen GmbH 2023

8.04 Inspection of crane wire ropes

1	Crane ropes	3
2	Importance of inspection	3
3	Personal protective equipment	3
4	Inspection personnel qualification	3
5	Unscheduled inspection	3
6	Intervals	4
7	Areas	4
8	Documenting inspection results	5
9	Wire ropes and rope end connections	5
10	Degree of severity	8
11	Rope diameter abbreviations	8
12	Distortions and mechanical damage	8
13	Removal criteria overview	8
14	Checking for broken strands	10
15	Determining the number of broken wires	10
16	Checking the rope end connection	15
17	Checking the rope diameter	15
18	Corrosion	18
19	Corkscrew-like distortion	20
20	Basket formation	21
21	Protruding, distorted insert or strand	22
22	Loop formation	23
23	Kinking or rope loops pulled closed	24
24	Buckles	25
25	Effects of heat, arcs	26
26	Combined degree of severity	26
27	Flattenings	26
28	Current inspection checklist	31

LWE/LTR 1100-009/25105-02-02/en

copyright © Liebherr-Werk Ehingen GmbH 2023

LWE/LTR 1100-009/25105-02-02/en

Fig.195219

copyright © Liebherr-Werk Ehingen GmbH 2023

1 Crane ropes

This chapter applies, for example, to the following crane ropes:
- Hoist ropes
- Control ropes for the boom system
- Control ropes of the telescopic boom with rope mechanism: Pull-out ropes and return ropes
- Guy ropes for boom system

2 Importance of inspection

Rope removal criteria: If severe damage reduces the operational safety, then the rope has reached the removal criteria.

The importance of regular inspections is demonstrated by:
- Evaluation of operational safety of ropes
- Determination of rope removal criteria
- Determination of next inspection

3 Personal protective equipment

WARNING
Wires and lubricant!
Severe injury and skin irritation.
► When working with ropes, always wear work gloves.

WARNING
Protective equipment **not** worn!
Severe injuries.
► Wear a hard hat, safety shoes and safety goggles.

4 Inspection personnel qualification

Make sure that the following prerequisites are met:
- Inspection personnel are **expert personnel for crane rope inspection**.
- **Expert personnel for crane rope inspection:**
  - Are trained in the inspection of crane ropes according to **DIN ISO 4309** and have practical experience in the evaluation of rope removal criteria.
  - Have practical experience in the evaluation of rope removal criteria according to **DIN ISO 4309**.
- Inspection personnel is assigned (authorized) to maintenance by the crane operator.

5 Unscheduled inspection

The rope must be inspected in the following situations:
- After unusual strain
- If non visible damage is suspected
- When a rope or the rope end connection is damaged
- When the rope has been placed again after disassembly
- When the rope has been out of service for longer than three months

LWE/LTR 1100-009/25105-02-02/en

copyright © Liebherr-Werk Ehingen GmbH 2023

6 Intervals

Intervals for crane inspection:
- According to determination by **expert personnel for crane rope inspection**
- Or **at least once a year**

Note
► Shortening the inspection interval: The older a rope is the more frequently wire breaks will occur.

Determining factors for determination of inspection intervals are:
- Legal regulations in the country where the crane is operated
- Climate conditions under which the rope drive is utilized
- Power train group
- Results of previous inspections on a current or comparable machine and under comparable operating conditions
- Frequency and type of use of a rope
- Service life of rope

7 Areas

WARNING
Broken wires and distortions on ropes in cross over areas!
Rope performance can be greatly reduced. Rope breakage. Death, severe injuries, property damage.
► Check rope cross over areas with particular diligence.

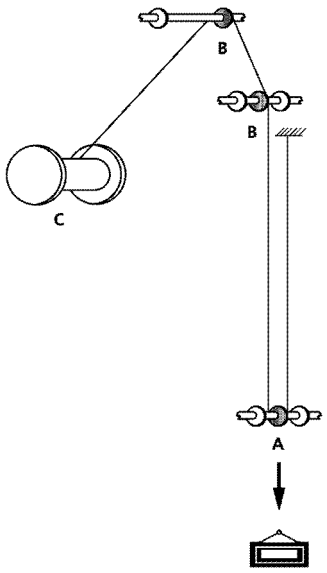

Fig.120969: Important inspection areas for multi-layer spooled up ropes

A Rope sections, which run in the area of the load rise into the lower rope pulleys (the load is raised here).
B Rope intake on the first rope pulley in the area of the load rise
C Rope sections, which are subjected to the strongest effects in the cross over areas (maximum deflection angle).

The rope must be checked along the entire length.

LWE/LTR 1100-009/25105-02-02/en

copyright © Liebherr-Werk Ehingen GmbH 2023

The following areas must be checked with special care:
- Rope end connections
- Safety coils and fixed point on the winch
- Areas of the rope which run through the hook block.
- Areas of the rope that run over the rope pulleys or lay on the rope pulleys.
- Areas of the rope that are spooled on the winch, especially cross over areas.
- Areas of the rope which are laying above the compensation pulleys.
- Areas of the rope which are subjected to abrasion due to external components.
- All areas of the rope that are subjected to temperatures above 60 °C.

8 Documenting inspection results

Note
- ► Document the results of the inspections in an inspection checklist.
- ► Template for an inspection checklist, see section „Current checklist“.

9 Wire ropes and rope end connections

WARNING
Wire rope with impermissible rope end connection!
The wire rope can fail. The load can fall down.
Death, severe bodily injuries, property damage.
- ► Select the permissible rope type for the respective application.
- ► Select the permissible rope end connection for the respective rope type.
- ► Observe and adhere to the safety message on the lock.

Wire rope application	Rope type
Hoist rope	Rotation-resistant rope
Guy rope or control rope	Non-rotation-resistant rope
Auxiliary rope or assembly rope	Non-rotation-resistant rope

Rope type depending on the application

The type of rope that is selected determines the corresponding rope end connections.

9.1 Rotation-resistant ropes with rope end connections

Use rotation-resistant ropes as **hoist ropes**.

Rotation-resistant ropes are special ropes that produce extremely little torque and twisting at the rope end connection when they are under strain.

LWE/LTR 1100-009/25105-02-02/en

copyright © Liebherr-Werk Ehingen GmbH 2023

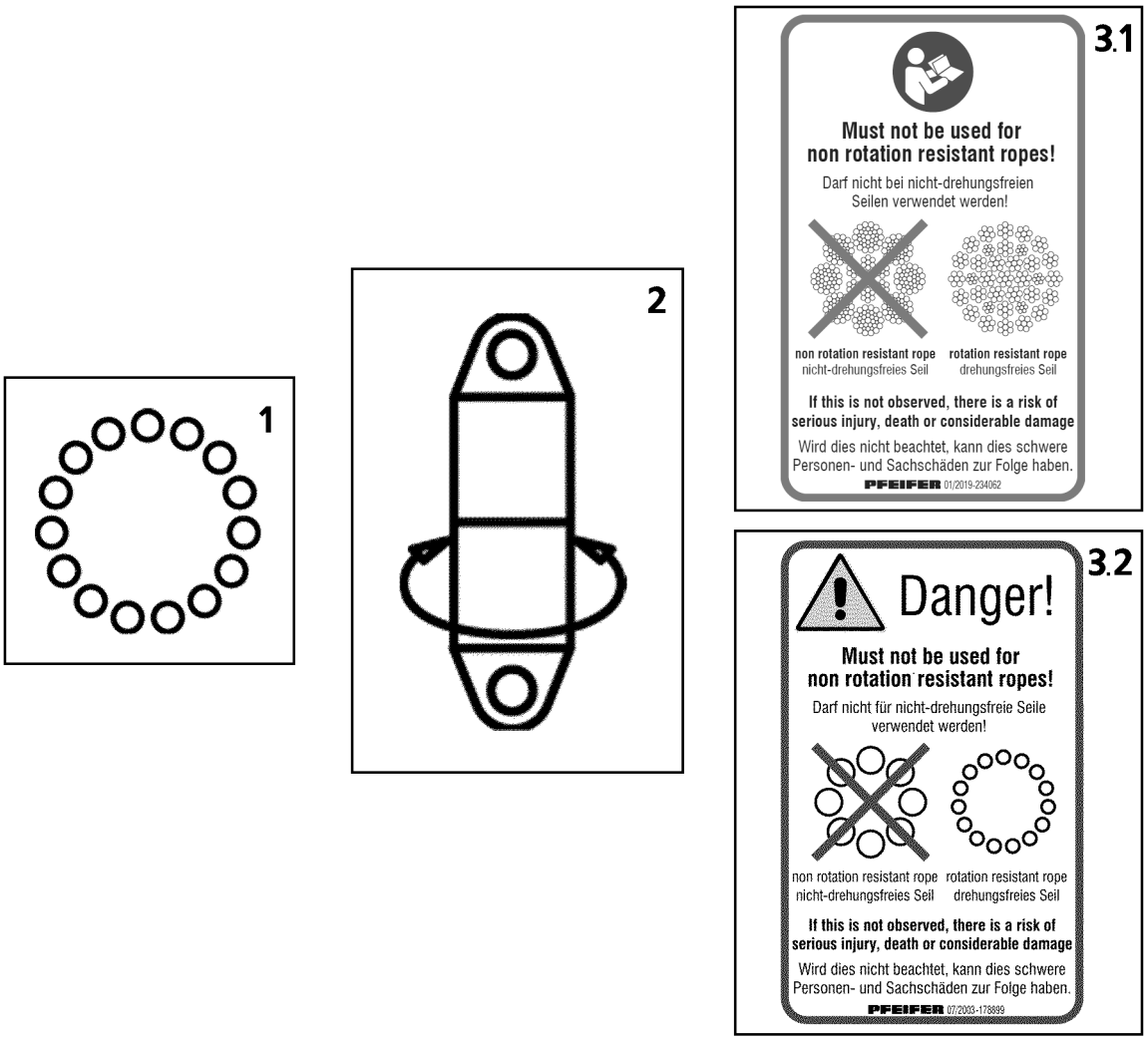

Fig.154083: Icons for rotation-resistant ropes with rope end connections

1 Rotation-resistant rope icon

2 Rotating rope end connection icon

3.1 Variation 1: Safety message on the PFEIFER lock

3.2 Variation 2: Safety message on the PFEIFER lock

Typical rotation-resistant rope structures are wire ropes with 15 to 18 outer strands. Rotation-resistant ropes are symbolically depicted with 15 outer strands (circles), see illustration **1**.

9.1.1 Non-rotating rope end connection

Note

► In the case of rotation-resistant ropes, Liebherr recommends the use of a lock **without** a swivel or a wedge lock. This can reduce the stress on the hoist ropes.

9.1.2 Rotating rope end connection

Note

► In the case of rotation-resistant ropes, Liebherr recommends **not** using a lock **with** a swivel and **not** to use a twist compensator / swivel.

To reduce a problematic turning behavior, the following rope end connections can be used in an individual case and after consultation with Liebherr customer service:

– Lock **with** swivel

LWE/LTR 1100-009/25105-02-02/en

copyright © Liebherr-Werk Ehingen GmbH 2023

– Twist compensator / swivel

9.2 Non-rotation-resistant ropes with rope end connections

WARNING
Wire rope with impermissible rope end connection!
The wire rope can fail. The load can fall down.
Death, severe bodily injuries, property damage.
► Use a lock **without** a swivel or a wedge lock.
► **Never** use a lock **with** a swivel with non-rotation-resistant rope.
► **Never** use a twist compensator / swivel with a rotation-resistant rope.

Use a non-rotation-resistant rope as **guy ropes** or **control ropes**, **auxiliary ropes** or **assembly ropes**.

Non-rotation-resistant ropes generate high torque levels on the rope end connection under strain. For this reason, the rope ends must be protected from twisting using an appropriate rope end connection to prevent the wire rope from untwisting under strain.

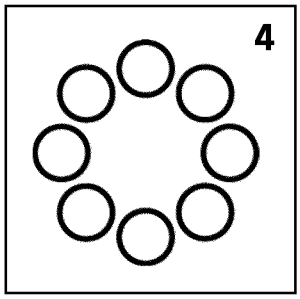

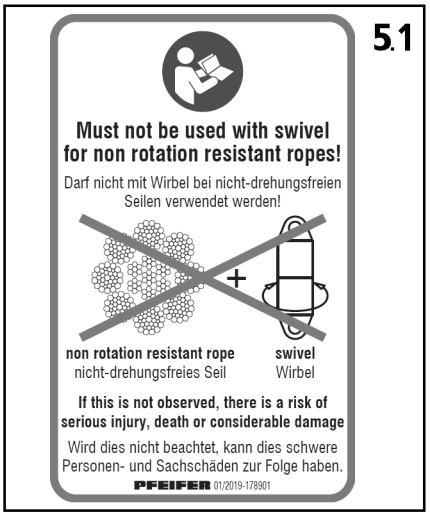

Fig.154084: Icons for non-rotation-resistant ropes with rope end connections

4 Non-rotation-resistant rope icon

5.1 Variation 1: Safety message on the PFEIFER lock / wedge lock

5.2 Variation 2: Safety message on the PFEIFER lock / wedge lock

LWE/LTR 1100-009/25105-02-02/en

copyright © Liebherr-Werk Ehingen GmbH 2023

Typical rotation-resistant rope structures are wire ropes with eight or ten outer strands. Non-rotation-resistant ropes are symbolically depicted with eight outer strands (circles), see illustration **4**.

Only use non-rotation-resistant ropes with the following **non-rotating** rope end connection:
- Lock **without** swivel
- Wedge lock

A non-rotating rope end connection is also the mounting of the rope on the fixed point of the winch drum.

10 Degree of severity

The deciding factor for the removal criteria is which removal criteria are present and to which degree they occur.

When various removal criteria are **not** present to a full degree, then the removal criteria must be evaluated as a total entity. For every individual removal criteria a degree of severity must be determined (percentage value).

For a certain rope section the sum of individual degrees of severity results in a **combined degree of severity**, see section „Combined degree of severity“.

When the combined degree of severity is more than 100 %, then the rope must be taken down.

11 Rope diameter abbreviations

Abbreviations	Description
Rope nominal diameter **d**	Rope diameter, identification of rope
Reference diameter $\mathbf{d}_{ref}$	Measured rope diameter of a straight rope section, directly after placing the rope
6d	Length of 6-fold rope nominal diameter
30d	Length of 30-fold rope nominal diameter

Rope diameter abbreviations

12 Distortions and mechanical damage

WARNING
Distortions and mechanical damage!
Operational safety significantly disturbed, uneven load distribution within the rope.
► Have the manufacturer check if the distorted and damaged area can be severed.

Visible form changes often occur localized or in short rope sections.

When a safe operation of the rope is ensured, a distorted and damaged area can be severed.

13 Removal criteria overview

The following chart provides an overview between removal criteria and the respective method for inspection. The degree at which the removal criteria is reached is described.

The removal criteria is described in detail in the subsequent sections.

LWE/LTR 1100-009/25105-02-02/en

copyright © Liebherr-Werk Ehingen GmbH 2023

Note

When the rope for parallel operation has reached the removal criteria:

► Often, both ropes must be replaced. The new rope has a larger diameter and other elongation characteristics.

Removal criterion	Degree for removal criteria	Inspection method
Broken strands	One strand is broken	Visual check
Broken wires on ropes that run over rope pulleys and are spooled in multiple layers	Maximum number of broken wires reached, see Section Determining the number of broken wires	Count
Broken wire in the strand valleys	Two or more broken wires in strand valleys, on the contact points of two neighboring strands within an angular length (corresponds approx. to 6d)	Count
Broken wires in the area of the rope end connection	Two or more broken wires, according to the decision of **expert personnel for crane rope inspection**	Visual inspection, test with marlin spike
Broken wire nests	On occurrence	Visual check
Reduction rope diameter at even diameter reduction	Maximum reduction of rope diameter reached	Measurement, calculation
Localized increase of rope diameter	Maximum increase of rope diameter reached	Measurement
Significant corrosion	Surface of rope is significantly affected or rust film emerges, according to the decision of **expert personnel for crane rope inspection**	Visual check
Corkscrew-like distortion	Maximum permissible distortion reached	Measurement, calculation
Basket formation	On occurrence	Visual check
Wires or bunches of wires protruding from the rope	On occurrence, if more than one wire protrudes from the rope	Visual check
Flattenings	Larger than half of the diameter of the outer strand, according to decision of **expert personnel for crane rope inspection**	Visual check
Loop formation	Loops on several wires	Visual check
Kinking or remaining distortion	On occurrence	Visual check
Buckles or contusions	On occurrence, according to decision of **expert personnel for crane rope inspection**	Visual check

LWE/LTR 1100-009/25105-02-02/en

copyright © Liebherr-Werk Ehingen GmbH 2023

Removal criterion	Degree for removal criteria	Inspection method
Heat influence, electric voltage	Bluish discoloration, broken or melted wires	Visual check
Damage to the rope end connections: Material cracks, deformation, wear, corrosion, traces of slipping between the locking clamp and rope	According to decision of **expert personnel for crane rope inspection**	Visual inspection
Combined degree of severity	Degree of severity 100 % or above, according to the decision of **expert personnel for crane rope inspection**	Calculation of individual degrees of severity

Removal criteria overview

14 Checking for broken strands

A strand consists of several individual wires.

If a complete strand is broken:

► Take the rope down.

15 Determining the number of broken wires

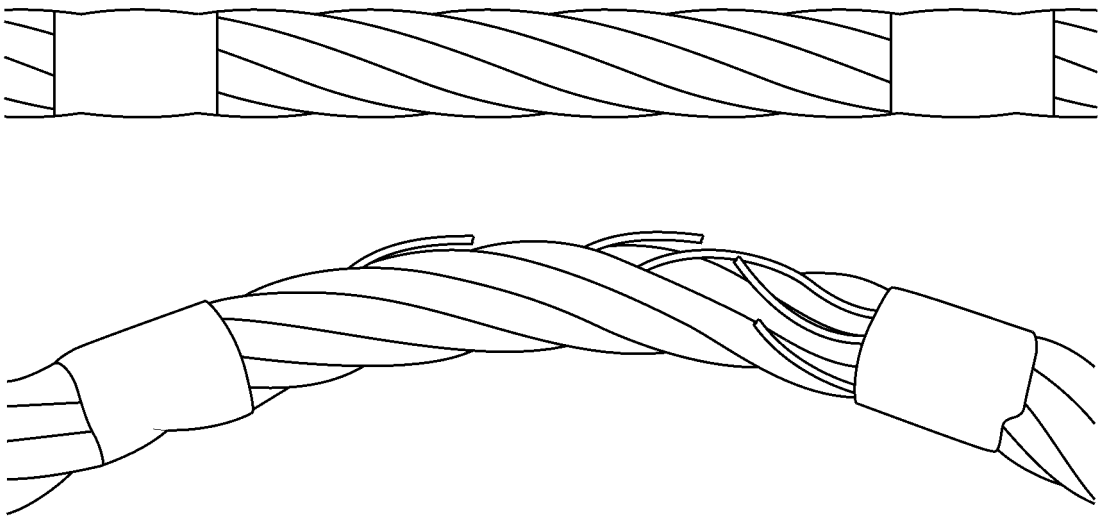

Fig.120980: Determine broken wires by bending

By bending the rope, broken wires can be recognized better.

Make sure that the following prerequisites are met:

– The rope is clean.
– Inspection checklist is on hand.

LWE/LTR 1100-009/25105-02-02/en

copyright © Liebherr-Werk Ehingen GmbH 2023

15.1 Scattered broken wires

The following different rope types each have their own chart for the permissible number of broken wires:
- Single layer and parallel roped ropes
- Rotation-resistant ropes

The charts in this section are valid exclusively for **scattered broken wires**.

15.1.1 Wire break increase rate

The wire break increase rate is an increase of broken wires and can skyrocket with increasing use of the rope.

► Include the inspection checklists for the previous inspection and use it to draw a conclusion for the wire break rate increase.

15.1.2 Single layer and parallel roped ropes

Rope category number RCN	Total number of load carrying wires in the outer strand layer of rope[1] n	Number of visible outer wire breaks[2]					
		Rope sections, which run over steel pulleys and / or wind up on a single layer spooling drum (random distribution of broken wires)				Rope sections, which wind up on a multi layer drum[3]	
		Class M1 to M4, or class unknown[4]				All classes	
		Lang lay		Even lay		Lang lay and even lay	
		Over a length of 6d[5]	Over a length of 30d[5]	Over a length of 6d[5]	Over a length of 30d[5]	Over a length of 6d[5]	Over a length of 30d[5]
01	n ≤ 50	2	4	1	2	4	8
02	51 ≤ n ≤ 75	3	6	2	3	6	12
03	76 ≤ n ≤ 100	4	8	2	4	8	16
04	101 ≤ n ≤ 120	5	10	2	5	10	20
05	121 ≤ n ≤ 140	6	11	3	6	12	22
06	141 ≤ n ≤ 160	6	13	3	6	12	26
07	161 ≤ n ≤ 180	7	14	4	7	14	28
08	181 ≤ n ≤ 200	8	16	4	8	16	32
09	201 ≤ n ≤ 220	9	18	4	9	18	36
10	221 ≤ n ≤ 240	10	19	5	10	20	38
11	241 ≤ n ≤ 260	10	21	5	10	20	42
12	261 ≤ n ≤ 280	11	22	6	11	22	44

LWE/LTR 1100-009/25105-02-02/en

copyright © Liebherr-Werk Ehingen GmbH 2023

Rope category number RCN	Total number of load carrying wires in the outer strand layer of rope[1] n	Number of visible outer wire breaks[2]					
		Rope sections, which run over steel pulleys and / or wind up on a single layer spooling drum (random distribution of broken wires)				Rope sections, which wind up on a multi layer drum[3]	
		Class M1 to M4, or class unknown[4]				All classes	
		Lang lay		Even lay		Lang lay and even lay	
		Over a length of 6d[5]	Over a length of 30d[5]	Over a length of 6d[5]	Over a length of 30d[5]	Over a length of 6d[5]	Over a length of 30d[5]
13	281 ≤ n ≤ 300	12	24	6	12	24	48
	n > 300	0.04 x n	0.08 x n	0.02 x n	0.04 x n	0.08 x n	0.16 x n
Note: Ropes with outer strands in the Seale type, number of wires per strand 19 or less (for example 6 × 19 Seale), are classified in this chart as two lines over the line, which would be defined due to the number of load carrying wires in the outer strands.							

*Number of visible broken wires (reached or exceeded) for removal criteria is reached, for **single-layer** and **parallel** roped ropes according to **DIN ISO 4309***

1) For the purpose of this international standard, fill wires are not considered to be load carrying wires and are not included in the value for n.
2) A broken wire has two ends (counted as one wire).
3) The values apply for damage in the cross over areas and the layers of coils due to deflection angles (not for rope sections, which run only over rope pulleys and do not spool up on the winch).
4) For ropes on the power train of groups M5 to M8 twice the number of broken wires listed can be used.
5) d = Rope nominal diameter

► Check the rope over the entire length for visible broken wires.

When visible broken wires are scattered:
► In the point of a broken wire, mark the rope sections at a length of 30d in both directions.
► Count visible broken wires in the marked rope sections and record them.
► Take the RCN (Rope category number) from the rope manufacturer's documentation.

When the make for single layer and parallel roped ropes is **not** listed in the chart:
► Determine the total number of load carrying wires in the rope: Add all wires in the strands of the outer layer, do **not** count fill wires.
► Compare the number of broken wires of each marked rope section 30d with the number of broken wires in the chart.

When the number of visible broken wires is less than what is listed in the chart:
► Inside the rope section with the most broken wires: Mark the rope section with the most broken wires on a length of 6d.
► Count visible broken wires in the marked rope section 6d and record them.
► Compare the number of broken wires of the marked rope section with the number of broken wires in the chart.

When the number of visible broken wires is equal to or greater than what is listed in the chart:
► Take the rope down.
► Enter the results in the inspection checklist.

LWE/LTR 1100-009/25105-02-02/en

copyright © Liebherr-Werk Ehingen GmbH 2023

15.1.3 Rotation-resistant ropes

Rope category number RCN	Total number of load carrying wires in the outer strands of rope[1] n	Number of visible outer wire breaks[2]			
		Rope sections, which run over steel pulleys and / or wind up on a single layer spooling drum (random distribution of broken wires)		Rope sections, which wind up on a multi layer drum[3]	
		Over a length of 6d[4]	Over a length of 30d[4]	Over a length of 6d[4]	Over a length of 30d[4]
21	4 strands n ≤ 100	2	4	2	4
22	3 or 4 strands n ≥ 100	2	4	4	8
	At least 11 strands in the outer layer				
23–1	71 ≤ n ≤ 100	2	4	4	8
23–2	101 ≤ n ≤ 120	3	5	5	10
23–3	121 ≤ n ≤ 140	3	5	6	11
24	141 ≤ n ≤ 160	3	6	6	13
25	161 ≤ n ≤ 180	4	7	7	14
26	181 ≤ n ≤ 200	4	8	8	16
27	201 ≤ n ≤ 220	4	9	9	18
28	221 ≤ n ≤ 240	5	10	10	19
29	241 ≤ n ≤ 260	5	10	10	21
30	261 ≤ n ≤ 280	6	11	11	22
31	281 ≤ n ≤ 300	6	12	12	24
	n > 300	6	12	12	24
Note: Ropes with outer strands in Seale type, number of wires in each strand 19 or less (for example 18 × 19 Seale - WSC), are classified in this chart as two lines over the line, which would be defined due to the number of load carrying wires in the outer strands.					

*Number of visible broken wires (reached or exceeded) is achieved in the rope removal criteria, for **rotation-resistant** ropes according to **DIN ISO 4309***

1) For the purpose of this international standard, fill wires are not considered to be load carrying wires and are not included in the value for n.
2) A broken wire has two ends (counted as one wire).
3) The values apply for damage in the cross over areas and the layers of coils due to deflection angles (not for rope sections, which run only over rope pulleys and do not spool up on the drum).
4) d = Rope nominal diameter

LWE/LTR 1100-009/25105-02-02/en

► Check the rope over the entire length for visible broken wires.

When visible broken wires are scattered:
► In the point of a broken wire, mark the rope sections at a length of 30d in both directions.
► Count visible broken wires in the marked rope sections and record them.
► Take the RCN (Rope category number) from the rope manufacturer's documentation.

When the make for rotation-resistant ropes is **not** listed in the chart:
► Determine the total number of load carrying wires in the rope: Add all wires in the strands of the outer layer, do **not** count fill wires.

copyright © Liebherr-Werk Ehingen GmbH 2023

► Compare the number of broken wires of each marked rope section 30d with the number of broken wires in the chart.

When the number of visible broken wires is less than what is listed in the chart:
► Inside the rope section with the most broken wires: Mark the rope section with the most broken wires on a length of 6d.
► Count visible broken wires in the marked rope section 6d and record them.
► Compare the number of broken wires of the marked rope section with the number of broken wires in the chart.

When the number of visible broken wires is equal to or greater than what is listed in the chart:
► Take the rope down.
► Enter the results in the inspection checklist.

15.2 Broken wire in the strand valleys

The broken wires in these areas point to the fact that the condition in the inside of the rope is deteriorating.

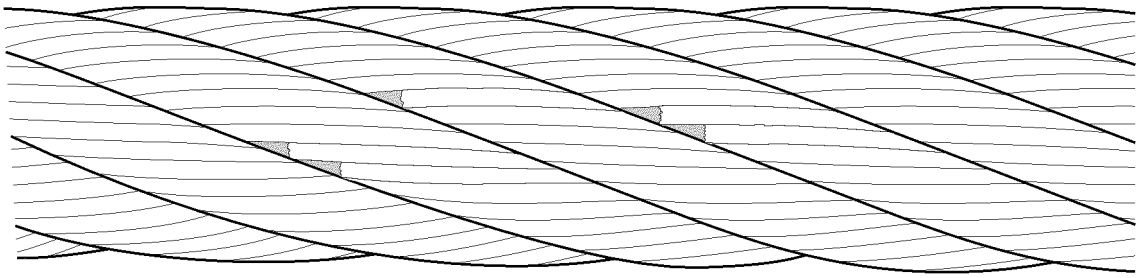

Fig.121005: Broken wire in the strand valleys

When two or more broken wires occur within a rope section of length 6d:
► Take the rope down.

15.3 Broken wires on rope end connections

► Check the area near the rope end connections and carefully check for broken wires.

Loose wires are a sign of broken wires in the rope end connection.

► Use a marlin spike to check for loose wires.

When broken wires are near a rope end connection and two or more wires are affected:
► Take the rope down.
or

When the remaining rope lengths fulfill the minimum number of remaining coils in all operating positions:
Shorten the rope, see chapter 7.05.50.
► Attach the rope end connection.

15.4 Broken wires in rope sections that are not spooled up on the winch

When the broken wires are concentrated on one or two strands, the removal criteria can be present with fewer broken than what is specified in the chart (rope section in the length of 6d).

► Have the rope removal criteria determined by **expert personnel for crane rope inspection**.

LWE/LTR 1100-009/25105-02-02/en

copyright © Liebherr-Werk Ehingen GmbH 2023

15.5 Broken wire nests

When broken wires are very close to each other or when the broken wires are concentrated on one strand, then the rope must be taken down, even with fewer broken wires than what is specified in the chart (rope section 6d).

► Have the rope removal criteria determined by **expert personnel for crane rope inspection**.

16 Checking the rope end connection

The removal criteria are evaluated by the **expert personnel for crane rope inspection**.

Check for broken wires, see section „Broken wires on rope end connections“.

16.1 Pressed rope end connection

Example of a pressed rope end connection: Locking clamp.

► Check the rope end connections for signs of possible slipping between the locking clamp and the wire rope.
► Check the rope end connections for material cracks.
► Check rope end connections for corrosion, deformation and wear.

16.2 Enlarged rope end connection

Example of an enlarged rope end connection: Locking cast sleeve.

► If present: Remove the beam.
► Check rope end connections for corrosion, deformation and wear.

If the rope connection is on a flat rope:
► Check the cone setting, see chapter 8.04.10.

16.3 Detachable rope end connection

Example of a detachable rope end connection: Wedge lock.

► Check that the rope end connections are fit tightly and correctly installed.
► Check the wire rope inside and at the outlet of the rope end connection. Check the rope according to the removal criteria in this chapter.

17 Checking the rope diameter

17.1 Even reduction of the rope diameter

WARNING
Spooling problems due to reduced rope diameter!
► Take the rope down even when the removal criteria according to **DIN ISO 4309** has not yet been reached.

The values in this section do **not** apply for rope sections damaged in cross over areas due to multi layer spooling on a winch.

LWE/LTR 1100-009/25105-02-02/en

copyright © Liebherr-Werk Ehingen GmbH 2023

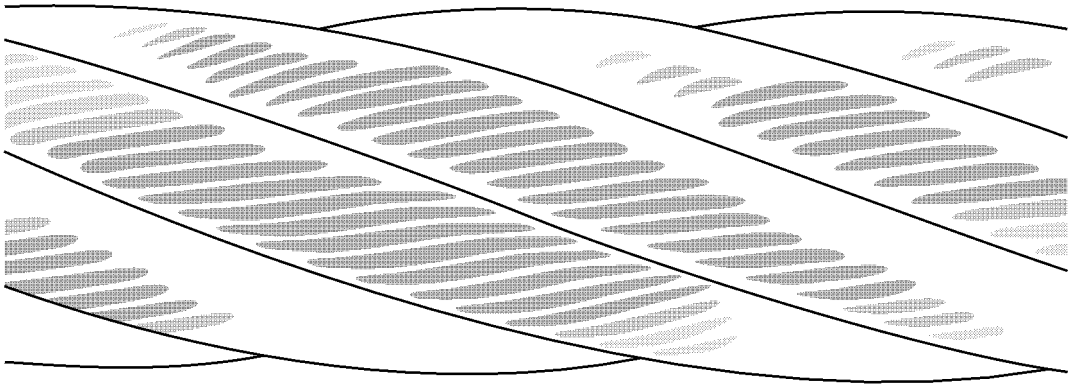

Fig.121001: External abrasion on the rope

The rope diameter changes due to abrasion, settling and external influences.

Abrasion of cover wires of outer strands of rope due to frictional contact. Especially in those areas where ropes are in contact with the rope pulleys during start up or slow down of the load.

Wear is increased by lack of or incorrect lubrication and the effect of dust.

Abrasion reduces the tensile strength of steel ropes because the cross-section of the steel is reduced.

Additional possible causes for reduction of rope diameter:
- Wear inside the rope
- Wear of fiber insert
- Breakage of a steel insert
- Broken inner strands

This section is valid only for the following ropes:
- Ropes, which wind up on single layer winches
- Ropes, which run through a steel rope pulley

$$d_V = \frac{d_{ref} - d_m}{d} \times 100\ \%$$

Fig.121372: Reduction of rope diameter formula

d_V = even reduction of the rope diameter
d_{ref} = rope diameter determined before placement
d_m = measured rope diameter
d = rope nominal diameter: Take the value from inspection checklist.

The following chart applies exclusively for ropes, which wind up on single layer winches and / or run through a steel rope pulley.

Rope type	Even reduction of diameter d_V (as a percentage of nominal rope diameter d)	Classification of degree of severity	
		Description	%
	Less than 6 %	—	0
Single layer rope with fiber insert	6 % and above, but less than 7 %	Light	20
	7 % and above, but less than 8 %	Medium	40
	8 % and above, but less than 9 %	High	60
	9 % and above, but less than 10 %	Very high	80
	10 % and above	**Rope removal criteria**	**100**

LWE/LTR 1100-009/25105-02-02/en

copyright © Liebherr-Werk Ehingen GmbH 2023

Rope type	Even reduction of diameter d_v (as a percentage of nominal rope diameter d)	Classification of degree of severity	
		Description	%
Single layer rope with steel insert or parallel roped rope	Less than 3.5 %	—	0
	3.5 % and above, but less than 4.5 %	Light	20
	4.5 % and above, but less than 5.5 %	Medium	40
	5.5 % and above, but less than 6.5 %	High	60
	6.5 % and above, but less than 7.5 %	Very high	80
	7.5 % and above	**Rope removal criteria**	**100**
Rotation-resistant rope	Less than 1 %	—	0
	1 % and above, but less than 2 %	Light	20
	2 % and above, but less than 3 %	Medium	40
	3 % and above, but less than 4 %	High	60
	4 % and above, but less than 5 %	Very high	80
	5 % and above	**Rope removal criteria**	**100**

Degree of severity and removal criteria depending on rope type and even diameter reduction according to ***DIN ISO 4309***

The medium value from the smallest and the largest measured diameter results in the value for $\mathbf{d}_m$.

- ► Measure rope diameter on several locations and calculate measured diameter $\mathbf{d}_m$.
- ► Calculate even reduction $\mathbf{d}_v$ of rope diameter with formula.
- ► Read the degree of severity in the chart, depending on the rope type.
- ► Document the degree of severity in the inspection checklist.

When the degree of severity has reached 100 %:
- ► Take the rope down.

17.2 Localized reduction of rope diameter

Localized reductions of rope diameter point to the fact that a rope insert may have failed, for example.

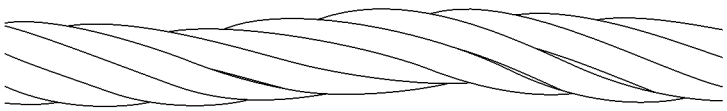

Fig.120983: Localized reduction of rope diameter

- ► Check the rope for localized reduction of rope diameter.

When a localized reduction of the rope diameter is found:
- ► Take the rope down.

LWE/LTR 1100-009/25105-02-02/en

copyright © Liebherr-Werk Ehingen GmbH 2023

17.3 Localized increases of rope diameter

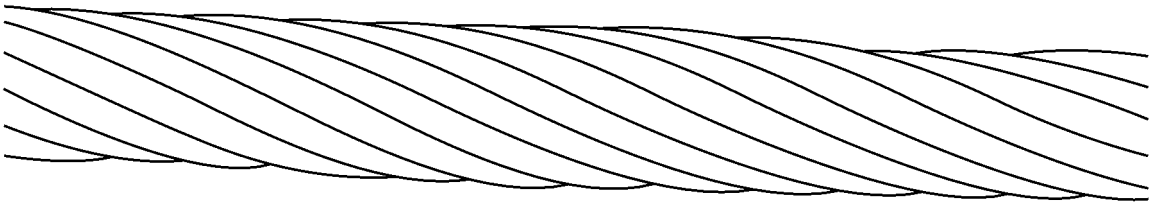

Fig.120992: Localized increase of rope diameter

An increase over a longer area of the rope can be caused by absorption of moisture in the fiber insert or due to corrosion inside of the rope.

Rope insert	Maximum increase of rope diameter during operation
Steel	5 %
Fiber	10 %

► Check the rope for increases in rope diameter.

When the increases exceed the maximum values:
► Take the rope down.

18 Corrosion

Corrosion occurs due to insufficient lubrication, in maritime climates and in an atmosphere polluted by industrial fumes.

External corrosion is indicated by a rough wire surface. A superficial rust film can be wiped off.

Significant corrosion reduces the strength and elasticity of the rope due to the reduction of the rope diameter.

Internal corrosion is hard to detect.

Do not use solvents to clean the **rope**.

Make sure that the following prerequisite is met:
– The rope is clean (wiped and brushed).

18.1 External corrosion

The various types of corrosion are classified and noted with the classification for removal criteria in percentages:

LWE/LTR 1100-009/25105-02-02/en

copyright © Liebherr-Werk Ehingen GmbH 2023

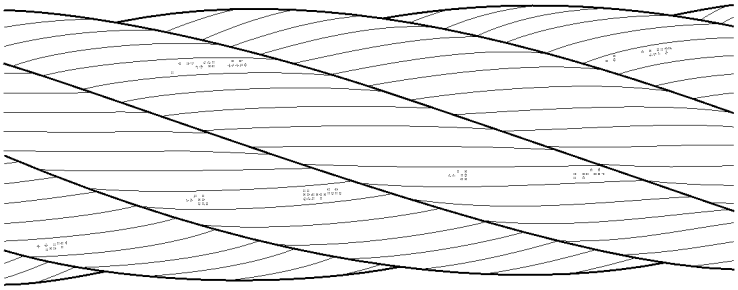

Fig.120984: Light surface corrosion: Classification 0 % of removal criteria

Light superficial corrosion (rust film) can be wiped off.

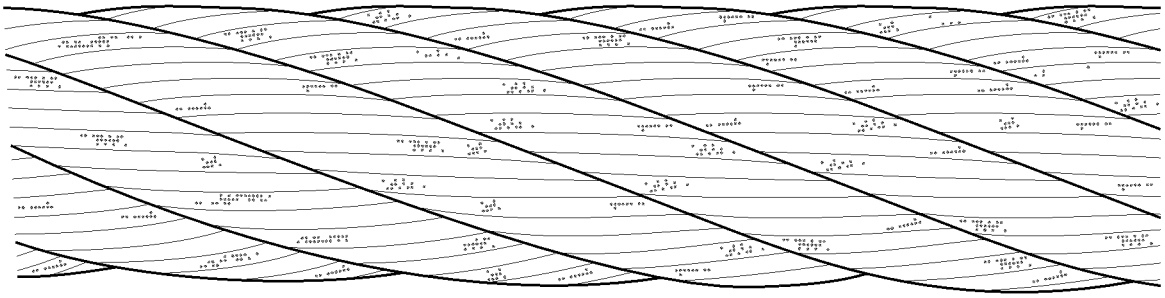

Fig.120985: Surface feels rough: Classification 20 % of removal criteria

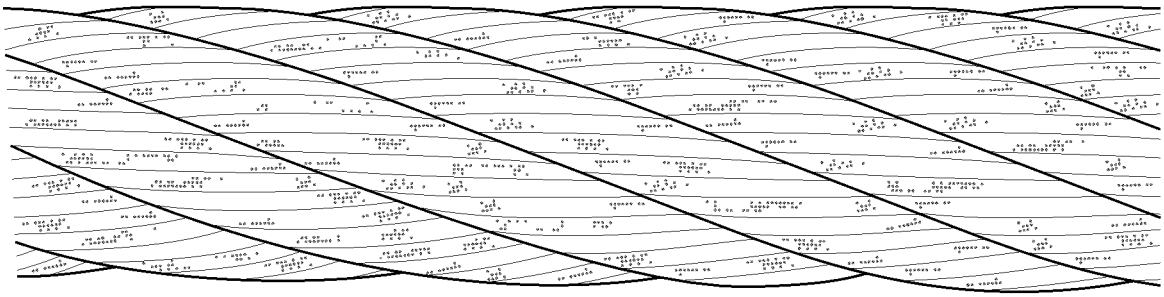

Fig.120986: Surface feels very rough: Classification 60 % of removal criteria

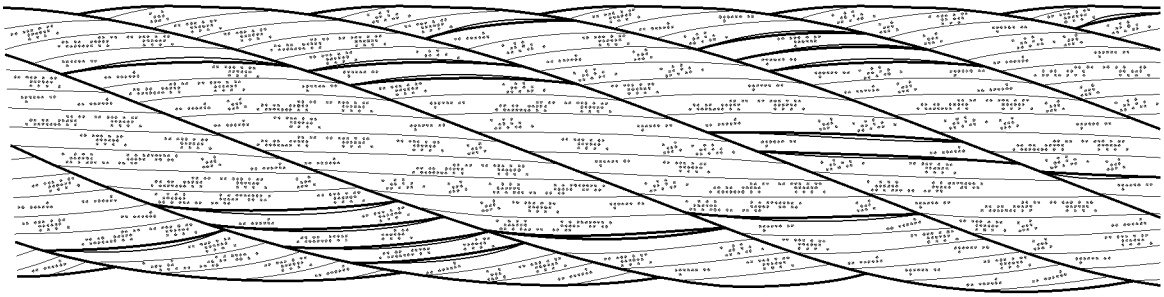

Fig.120987: Surface very decayed, spaces between individual wires can be easily recognized: Classification 100 % of removal criteria

LWE/LTR 1100-009/25105-02-02/en

copyright © Liebherr-Werk Ehingen GmbH 2023

When 100 % of removal criteria is reached:
► Take the rope down.

18.2 Internal corrosion

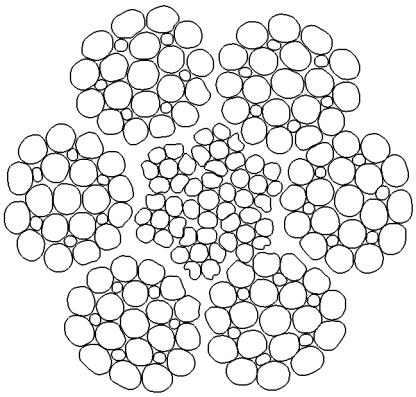

Fig.120982: Corrosion inside the rope

Internal corrosion is present when clearly visible corrosion particles migrate between the valleys of the outer strands: Classification 100 % removal criteria.

When internal corrosion is found:
► Have the rope removal criteria evaluated by **expert personnel for crane rope inspection** or take the rope down.

18.3 Friction corrosion

Friction corrosion occurs as a type of brown powder, which migrates from the inside of the rope to the outside: Classification 100 % of removal criteria.

► Check the rope diligently for friction corrosion.

If friction corrosion is found:
► Have the rope removal criteria evaluated by **expert personnel for crane rope inspection** or take the rope down.

19 Corkscrew-like distortion

Fig.120988: Corkscrew-like distortion

Distortion where the rope is in the form of a corkscrew along its longitudinal axis.

Effects of corkscrew-like distortion:
– Irregular rope drive
– Rope wear
– Broken wire
– Bearing damage on rope pulleys

LWE/LTR 1100-009/25105-02-02/en

copyright © Liebherr-Werk Ehingen GmbH 2023

If the distortion is very pronounced, then other components can be affected in their function when the affected rope section runs through in crane operation.

► Check the entire rope for corkscrew-like distortion.

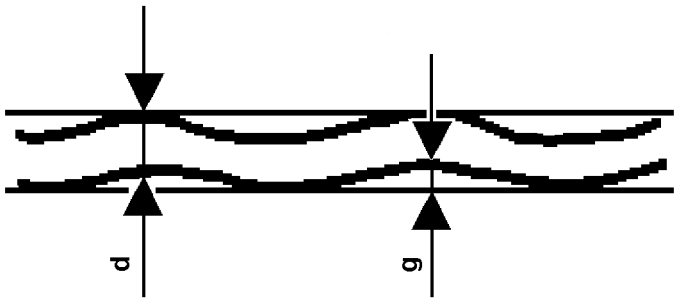

Fig.123988: Example of corkscrew-type distortion

d Rope nominal diameter **g** Distance

Rope section	Conditions for removal criteria, formula
Straight rope section that does **not** run through or around a rope pulley or spool up on a winch	$g \geq \frac{1}{3} \times d$
Straight rope section that runs through or around a rope pulley or spools up on a winch	$g \geq \frac{1}{10} \times d$

When corkscrew-like distortion is present:
► Determine the rope nominal diameter **d** and distance **g** on the rope.
► Check the removal criteria with the formula.

When the removal criteria is reached:
► Take the rope down.

20 Basket formation

This distortion occurs due to different layers between the outer strand layers and the inside of the rope.

Causes for basket formation are high angular pull angles during the run over the rope pulleys and run-in rope pulleys. Even load distribution over the entire cross-section is not possible.

LWE/LTR 1100-009/25105-02-02/en

copyright © Liebherr-Werk Ehingen GmbH 2023

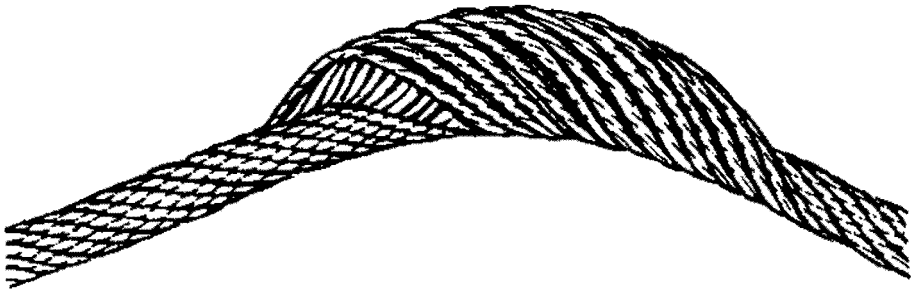

Fig.120989: Basket formation

► Check the entire rope for basket formation.

When basket formation is present:
► Take the rope down.

Start of basket formation with continuous use of the same / similar boom system in parallel operation (only cranes with parallel operation of the hoist winches):

NOTICE
Basket formation on the rope of winch 2 during parallel operation!
In the case of continuous use of the **same / similar** boom system in parallel operation, there is an increased danger of basket formation on the rope of winch 2.

When longer use with the **same** boom system is carried out:
► Increased check of the hoist rope when there are signs that basket formation is starting.

When continuous use with a **similar**[1)] boom system is carried out:
► Increased check of the hoist rope when there are signs that basket formation is starting.

When signs regarding the start of basket formation occur:
► Contact Liebherr Customer Service.

1) Boom systems with small differences in total lengths or with a comparable rope run
► Counteract the start of basket formation in time.

21 Protruding, distorted insert or strand

This distortion is a special form of basket formation. The insert or the core of the rope protrudes between the outer strands or an outer strand protrudes from the rope banding.

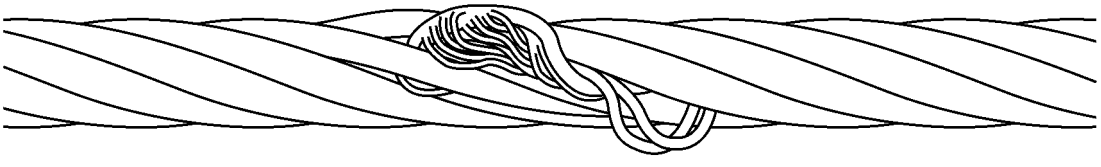

Fig.120990: Protrusion of an insert (rope single layer)

LWE/LTR 1100-009/25105-02-02/en

copyright © Liebherr-Werk Ehingen GmbH 2023

Fig.120991: Distorted or protruding strand

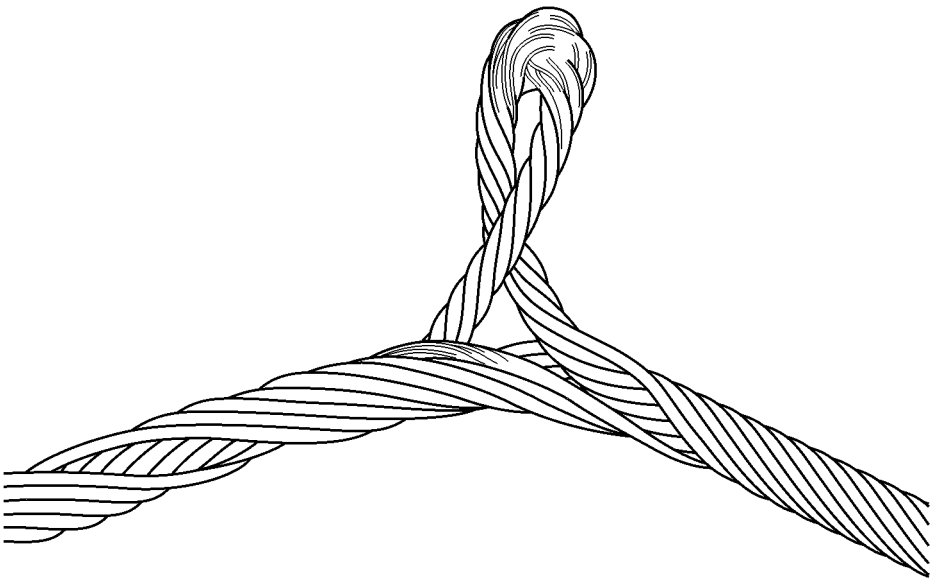

Fig.121373: Protrusion of rope insert on rotation-resistant rope

When the insert or a strand protrudes or is distorted, take the rope down. Have an authorized inspector for crane rope inspection check if the rope area with the distortion can be removed.

► Check the entire rope for protruding, distorted inserts or strands.

If a protruding, distorted insert or strand is present:
► Take the rope down.
► Have **expert personnel for crane rope inspection** check if the rope area with the distortion can be removed.

22 Loop formation

At loop formation individual or several wires protrude from the rope and bulge upward (bird-caging).

These areas are most often on the opposite side of the rope pulley groove.

Make sure that the following prerequisite is met:
– There are **no** broken wire ends.

If only a core wire of the rope insert protrudes through the outer strands, then the rope does not have to be taken down when:
– The wire can be removed.
– The wire does not disturb other elements of the rope drive.

LWE/LTR 1100-009/25105-02-02/en

copyright © Liebherr-Werk Ehingen GmbH 2023

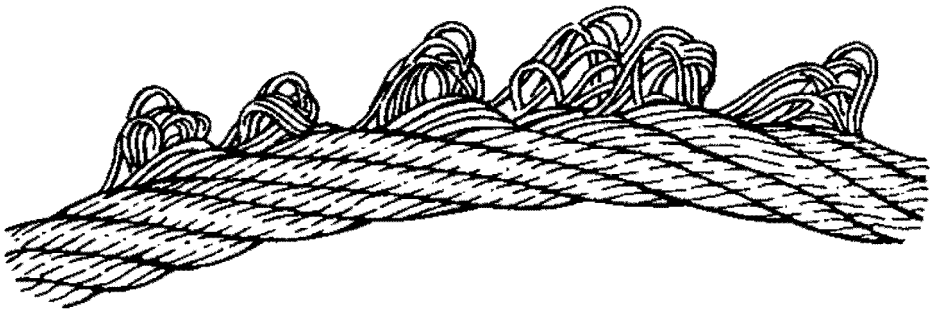

Fig.120993: Emergence of individual wires

► Check rope for loop formation.

When only one core wire protrudes:
► Remove the core wire.

When several wires are affected by the loop formation:
► Take the rope down.

23 Kinking or rope loops pulled closed

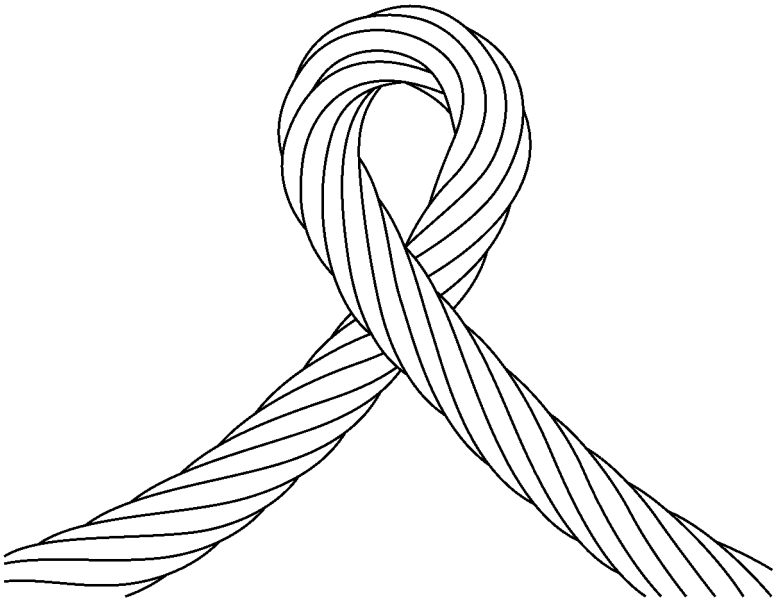

Fig.121007: Kinking or rope loop pulled closed

With this deformation a loop has formed in the rope, without the possibility to rotate around its own axis during a load. The rope is subjected to significant wear.

The rope is significantly distorted. The strength remains only in part.

LWE/LTR 1100-009/25105-02-02/en

copyright © Liebherr-Werk Ehingen GmbH 2023

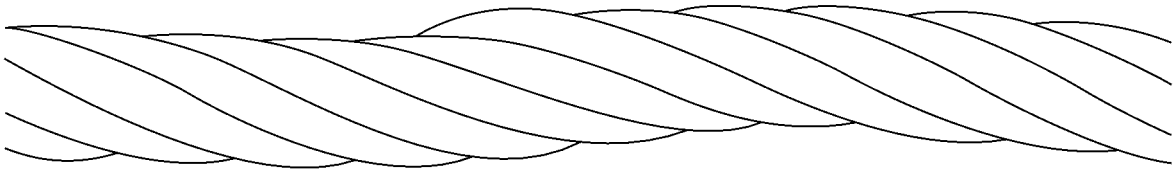

Fig.121002: Positive kinking

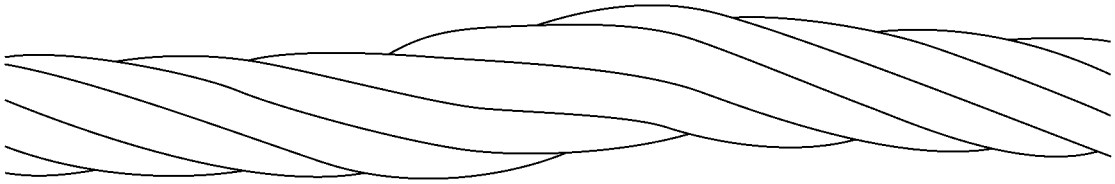

Fig.121003: Negative kinking

► Check the rope for kinking or rope loops pulled closed.

When kinking or rope loops pulled closed occur:
► Take the rope down.

24 Buckles

Buckles are angular deformations. The rope was damaged due to external influences. Strong deformations of the rope cause stronger wear.

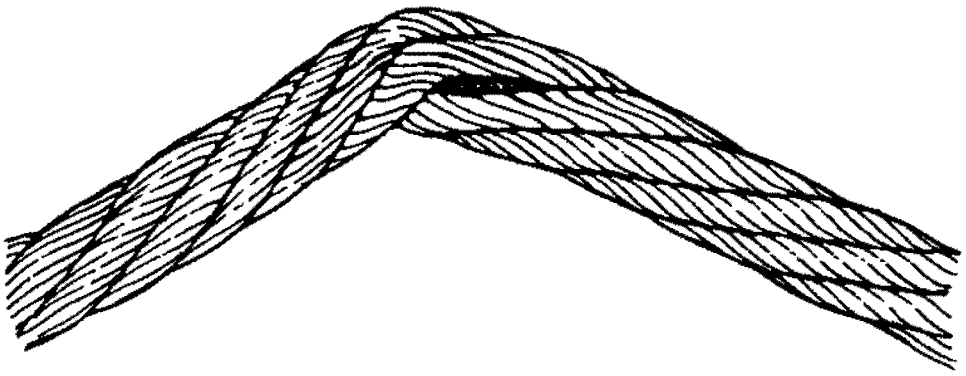

Fig.120999: Severe buckle

A buckle is a serious matter if a fold is visible on the underside of the rope.

When buckles are present:
► Have the rope inspected by **expert personnel for crane rope inspection**.

When a distortion and degree of severity permits further operation:
► Shorten the inspection interval.

LWE/LTR 1100-009/25105-02-02/en

copyright © Liebherr-Werk Ehingen GmbH 2023

When the removal criteria is reached:
► Take the rope down.

25 Effects of heat, arcs

Damage caused to the rope by welding work, for example.

Exceptional thermal effect is visible through tempering colors, the loss of lubricant and by localized melting of wires.

If a thermal effect has occurred on the rope:
► Take the rope down.

26 Combined degree of severity

Note
► For a method to determine the effect of a combined degree of severity and damage on the rope, see **DIN ISO 4309**.

When the condition of the rope deteriorates, then often a combination of various causes occurs.

To determine the degree of severity, the **expert personnel for crane rope inspection** must:
– take different damage within a rope section into account
– evaluate the entire effect of the damage and the distortions
– decide about the operational safety of the rope
– evaluate if inspection intervals must be adjusted
– decide if the rope must be taken down

When the combined degree of severity is more than 100 %, then the rope must be taken down.

27 Flattenings

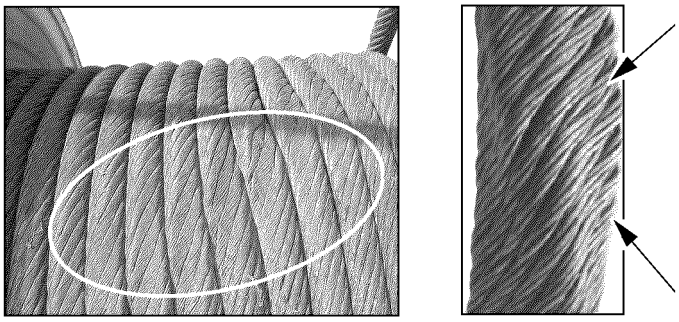

Fig.114002: Flattenings

Effects of flattenings on the rope:
– Rope sections with flattenings that **move over the rope pulleys** tend to have higher wear and a higher number of broken wires.
– Rope pulleys can be damaged.
– Flattenings on **stationary ropes** (guy ropes boom) promote quicker corrosion, especially in the areas where the outer strands have opened.

Flattened rope sections must be checked at shorter intervals for broken wires and corrosion.

LWE/LTR 1100-009/25105-02-02/en

copyright © Liebherr-Werk Ehingen GmbH 2023

27.1 Shortening the intervals

► Check the entire rope for flattenings.

When flattenings are present on stationary ropes:
► Shorten the intervals for rope inspection.

When it is **not** possible to shorten the intervals for the rope inspection:
► Take the rope down.

27.2 Improper mechanical damage

Improper mechanical damage occurs, for example, when the rope is trapped.

► Take the rope down immediately or shorten it, see chapter 7.05.50.

27.3 Operational transverse pressure

Operational transverse pressure causes flattenings, for example in the incline range of multi layer spooling.

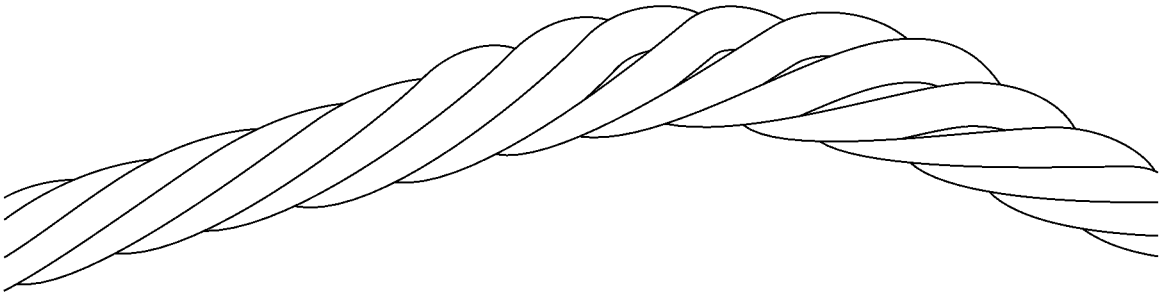

Fig.120996: Flattenings on multi-layer windings

► Check the two lowest rope layers of the winches for crushed areas and distortions.

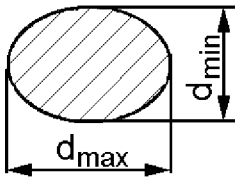

Fig.121006: Largest and smallest diameter in the distortion area

Formula for calculating the distortion		
$V = \frac{d_{max} - d_{min}}{d} \times 100\ \%$	**V**	Rope distortion as a percentage
	d	Rope nominal diameter
	$\mathbf{d}_{max}$	Largest diameter of the distortion area
	$\mathbf{d}_{min}$	Smallest diameter of distortion area

When distortions are present:
► Determine the number of broken wires. See section „Determining the number of broken wires“.

LWE/LTR 1100-009/25105-02-02/en

copyright © Liebherr-Werk Ehingen GmbH 2023

When the number of permissible broken wires is exceeded:
► Take the rope down.
► Calculate the rope distortion **V** with the formula and document it on the inspection checklist.

If the rope distortion **V** is greater than 5 %:
► Check the rope before every assembly and erection procedure.

If the rope distortion **V** is greater than 10 %:
► Document the degree of severity of 50 % in the inspection checklist.

If the rope distortion **V** is greater than 20 %:
► The degree of severity of 100 % is reached: Take the rope down.

Note
Flattenings in the Winch 4 control rope (WIV)
► Observe the following section „Flattenings in the Winch 4 control rope (WIV)“.

27.4 Operational flattenings on ropes on winch 4 (WIV)

This applies only for the following crane types:
– LR1350 up to including LR11000
– LG1750

Operational flattenings on ropes of winch 4 (WIV) can be taken into consideration separately in this section according to the description.

WARNING
Rope destroyed!
Flattenings due to improper mechanical damage, for example by clamping the rope, cannot be evaluated in a standard manner.

When the flattenings did not occur due to a high traverse pressure not caused by operation in the cross over area of the multi-layer coil:
► Take the rope down immediately or remove the damaged section by shortening the rope.

Note
► Flattenings can cause the wire rope to be damaged faster, especially when running over the rope pulleys. Wire breaks occur and the rope pulley can be damaged.
► In the case of stationary ropes, flattened rope sections tend to corrode faster.

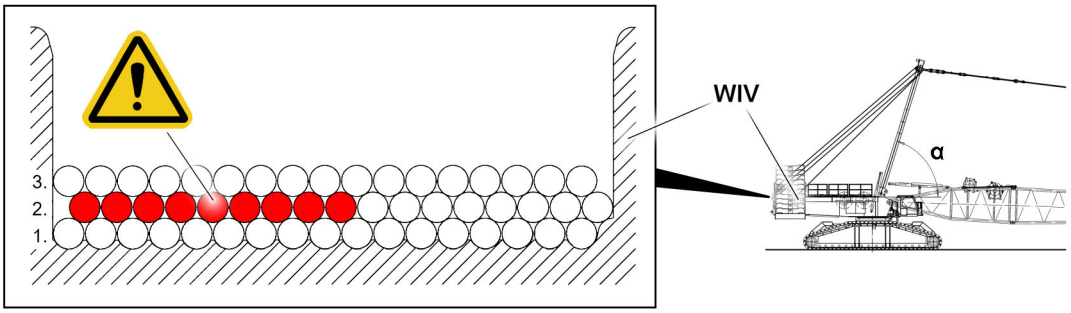

Fig.166542: Example of flattenings in the 2nd Rope layer (sectional view)

For boom systems without the use of a derrick boom, the following applies:

After frequent erection and take-down procedures of long main booms, individual rope coils on the winch **WIV** can have flattenings.

With high strand pull in the rope coils of the 3rd rope layer, the rope coils that are only slightly pretensioned due to operation of the 2nd rope layer are deformed.

LWE/LTR 1100-009/25105-02-02/en

copyright © Liebherr-Werk Ehingen GmbH 2023

The high strand pull in the 3rd rope layer occurs after the guying is almost tensioned. The angle **α** (SA-frame angle position) that therefore occurs depends on the respective crane type and the length of the main boom.

Example: Formation of flattenings caused by operation	
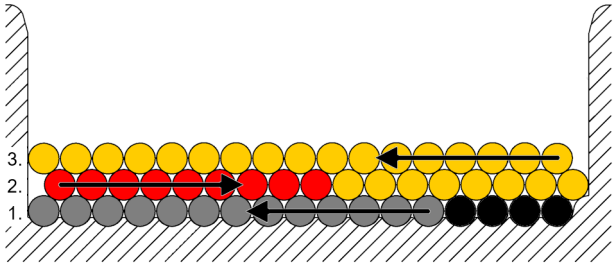	Rope coils with high strand pull
	Distorted areas of the rope coil (flattenings)
	Rope coil slightly pretensioned () **Note**: The first rope position is protected by the winch creasing. Large flattenings here are usually not to be expected.
	Safety coils (example)
	Increase direction of the coil when spooling the winch up

The flattenings occur due to a high traverse pressure caused by operation in the cross over area of the multi-layer coil.

Rope sections with flattenings >20% do not lead to the removal criteria of the rope if the following two conditions are observed:

1. The concerned rope sections are checked before every erection procedure of the main boom by an authorized inspector. When doing so, the permissible number of wire breaks according to ISO 4309 is not exceeded.
2. **In the case of high strand pulls**, the distorted areas remain on the winch drum and are not present inside the rope drive. The minimum angle **α** required for this is determined, documents and not fallen below.

Note
Remark concerning „high rope pulls“

► As the force in test point 1 (for $F1^{actual}$) cannot be used to automatically infer the rope pull of winch 4 (WIV), this value cannot be used for the assessment.

LWE/LTR 1100-009/25105-02-02/en

copyright © Liebherr-Werk Ehingen GmbH 2023

27.4.1 Operational flattenings: Examples of impermissible assembly positions

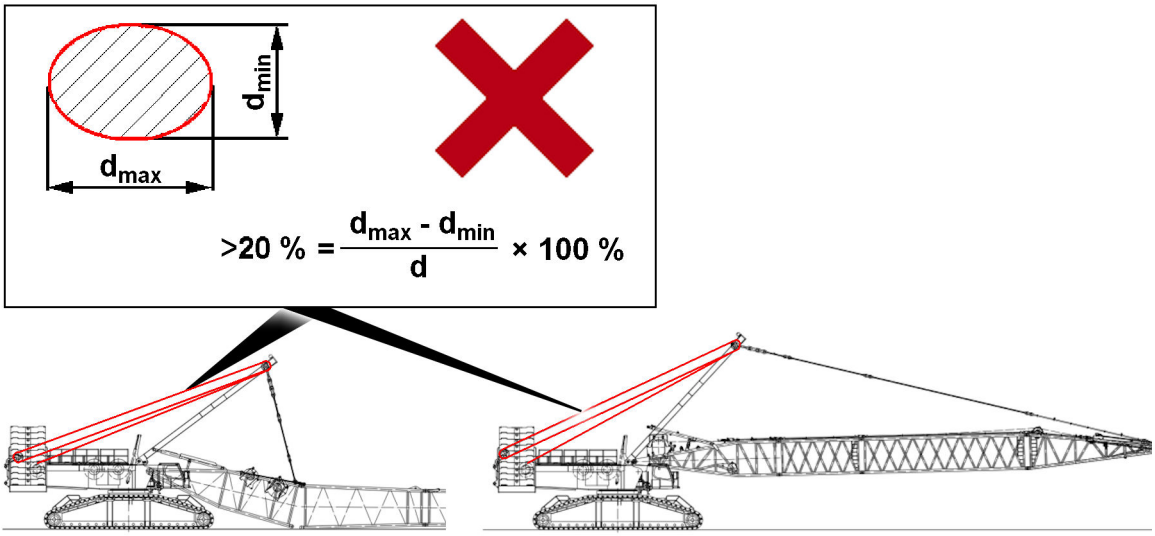

*Fig.166551: **Impermissible with high rope pulls!**- rope section with flattening **>20%** in rope operation*

Individual assembly positions are no longer permissible due to the limited operation **with high rope pulls**:
- SA-frame angle position smaller than the determined minimum angle α° - rope section with flattening **>20%** in rope operation.
- These are for example: closing / opening the main boom with the SA-frame, erecting / taking down the D-boom.

27.4.2 Operational flattenings: Examples of permissible assembly positions

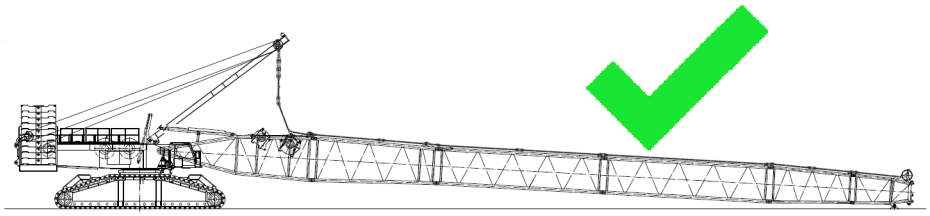

*Fig.166556: **Permissible with moderate rope pulls!**- rope section with flattening **>20%** during rope operation*

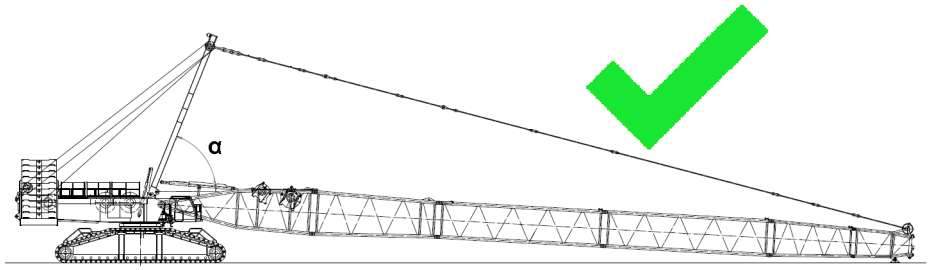

*Fig.166555: **Permissible with a sufficiently large** angle **α!**- Erecting / taking down the main boom*

Assembly positions with moderate rope pulls are permissible with flattening **>20%**, for example:
- Luff the SA-frame down to the front in order to assemble the guy rods.
- Main boom erection / take-down, **sufficiently large** angle **α** present. Rope sections with flattening **>20%** are on winch 4 (WIV) inside the rope coils.

LWE/LTR 1100-009/25105-02-02/en

copyright © Liebherr-Werk Ehingen GmbH 2023

28 Current inspection checklist

Crane and use:

Rope application:		RCN[3]:	Installation date:
Brand name:		Nominal diameter:	Take-down date:
Make[1]:	O Right hand	O Left hand	Minimum tensile strength
Direction of lay[1]:	O Lang's lay	O Ordinary lay	Permissible number of visible external broken wires
Intermediate layer[1]:	O IWRC	O FC O WSC	Datum diameter
Wire surface[1]:	O Bare	O Galvanized	Permissible diameter reduction: 6d: 30d:
Rope end connections:			

Date		Visible external broken wires						Diameter				Corrosion				Damage, deformation				Combined severity level[2]	Name of expert for the wire rope inspection	Signature
		Number in length of		Position in the rope		Severity level[2]		Measured	Actual reduction to datum diameter	Position in the rope	Severity level[2]	Position in the rope	Severity level[2]			Position in the rope	Severity level[2]					
JJ/MM/TT		6d	30d	6d	30d	6d	30d															

[1] Check where applicable.
[2] State extent of damage; slight or 20%; medium or 40%; high or 60%; very high or 80%; take-down or 100%
[3] RCN = Rope Category Number

Fig.121370-en: Template for current inspection checklist

LWE/LTR 1100-009/25105-02-02/en

copyright © Liebherr-Werk Ehingen GmbH 2023

LWE/LTR 1100-009/25105-02-02/en

copyright © Liebherr-Werk Ehingen GmbH 2023

8.05 Inspection of load hooks

1	Safety instructions	2
2	Inspection intervals	2
3	Checking the load hook	2

LWE/LTR 1100-009/25105-02-02/en

copyright © Liebherr-Werk Ehingen GmbH 2023

1 Safety instructions

WARNING
The load hook did **not** pass the inspection!
The load hook can rip. The fastened load can fall down.
Death, severe bodily injuries, property damage.

If the load hook did **not** pass the inspection:
► Replace the load hook with the hook nut.
► Contact Customer Service at Liebherr-Werk Ehingen GmbH.

WARNING
Incorrect remedy of defects!
The load hook can rip. The fastened load can fall down.
Death, severe bodily injuries, property damage.
► Have defects remedied by authorized, trained expert personnel.

WARNING
Welds on the load hook!
The load hook can rip. The fastened load can fall down.
Death, severe bodily injuries, property damage.
► Do **not** weld the load hook, to repair defects, for example.

2 Inspection intervals

To detect defects in time and avoid accidents, observe the following instructions:
– Have the load hook checked as required, however **at least once a year** by an authorized inspector.
– Observe the national regulations concerning the inspection of load hooks.

3 Checking the load hook

The following points must be documented in the crane inspection log:
– Performance of the inspections
– Defects and damage
– Measures for remedying the defects and damage

3.1 Checking the load hook for distortion

3.1.1 Hook shaft

If distortion is visible on the hook shaft:
► Replace the load hook with the hook nut.

3.1.2 Hook jaw

Identifying the manufacturing method

Depending on the moment at which a load hook is delivered, the manufacturing method must be found in the various documentation:

LWE/LTR 1100-009/25105-02-02/en

copyright © Liebherr-Werk Ehingen GmbH 2023

► Manufacturing method, see the technical data in the load hook documentation.
or
Manufacturing method, see the certificate of the load hook manufacturer in the crane inspection log.

Checking the expansion of the hook jaw

The manufacturing method differs by the maximum permissible expansion of the hook jaw, see the following charts:

Load hook manufacturing method	Hook shape	Maximum permissible expansion of the hook jaw in reference to the respective initial dimension
Cast	Double hook	3 %
Forged	Double hook	10 %
Forged	Single hook	10 %

Hook jaw: Dependency between the manufacturing method and maximum permissible expansion

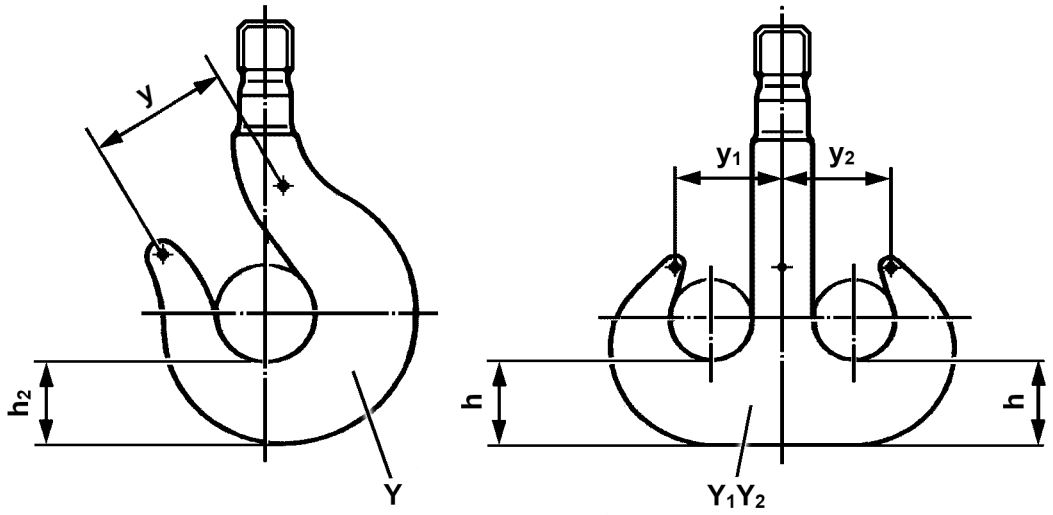

Fig.149076: Description of the measured distances on the load hook

The initial dimensions are indicated on the load hook, see chapter 2.05.10:
– Single hook: Initial dimension **Y**
– Double hook: Initial dimension **Y_1Y_2**

► Single hook: Distance **y** between the punch marks.
► Double hook: Measure the distance **y_1** and distance **y_2** between the punch marks.

When the available expansion of the hook jaw is larger than the maximum permissible expansion:
► Replace the load hook with the hook nut.

3.2 Checking the load hook for surface cracks

Make sure that the following prerequisites are met:
– Distortion is present.

Inspection is required in all points where distortion is present, mainly on the hook jaw.

If it is **not** possible to check the installed load hook:
► Remove the load hook: Contact Customer Service at Liebherr-Werk Ehingen GmbH.
► Prior to the inspection: Put the surfaces into a state in which surface cracks can be detected correctly.
► Check the load hook for surface cracks using a suitable procedure.

LWE/LTR 1100-009/25105-02-02/en

copyright © Liebherr-Werk Ehingen GmbH 2023

An authorized inspector must decide if the surface cracks can be repaired.

When the surface cracks have been repaired:
► Check if the load hook dimensions lie within the permissible tolerances. Contact Customer Service at Liebherr-Werk Ehingen GmbH.

When the surface cracks are **not** permissible:
► Replace the load hook with the hook nut.

3.3 Checking the hook body for wear

3.3.1 Hook base

The wear on the hook base may be maximum 5 % in reference to the respective initial dimension:
– Single hook: Initial dimension h_2
– Double hook: Initial dimensions h

The respective initial dimensions are provided in the following chart:

Hook number	Single hook	Double hook, shape A	Double hook, shape B
	h_2	h	h
	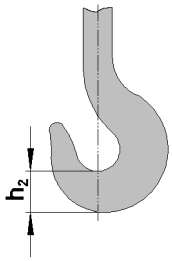	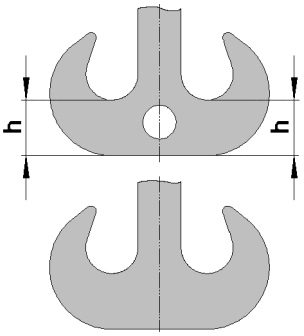	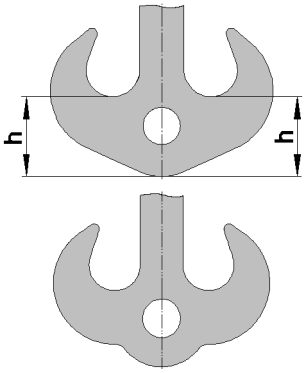
4	67 mm	—	—
5	75 mm	—	—
6	85 mm	75 mm	—
8	95 mm	85 mm	—
10	106 mm	95 mm	130 mm
12	118 mm	106 mm	150 mm
16	132 mm	118 mm	174 mm
20	150 mm	132 mm	196 mm
25	170 mm	150 mm	218 mm
32	—	170 mm	242 mm
40	—	190 mm	271 mm
50	—	212 mm	308 mm
63	—	236 mm	353 mm
80	—	265 mm	399 mm
100	—	300 mm	449 mm
125	—	335 mm	500 mm
160	—	375 mm	530 mm

LWE/LTR 1100-009/25105-02-02/en

copyright © Liebherr-Werk Ehingen GmbH 2023

Hook number	Single hook	Double hook, shape A	Double hook, shape B
	h_2	h	h
200	—	425 mm	600 mm
250	—	475 mm	670 mm
320	—	530 mm	—
400	—	600 mm	—

Initial dimensions for wear on the hook base, single hooks and double hooks

- ► Single hook: Measure the ACTUAL dimension **h_2**.
- ► Double hook: Measure the ACTUAL dimension **h**.
- ► Determine the initial dimension depending on the hook shape with the chart.

When the wear on the hook base is 5 % greater than the initial dimension:
- ► Replace the load hook with the hook nut.

3.3.2 Surfaces

Surfaces with wear must be connected smoothly with the adjacent surfaces.

- ► Check surfaces with wear for sharp edges, grooves or other surface errors.

An authorized inspector must decide if the surface errors can be repaired.

When the surface errors have been repaired:
- ► Check if the load hook dimensions lie within the permissible tolerances. Contact Customer Service at Liebherr-Werk Ehingen GmbH.

When the wear is **not** permissible:
- ► Replace the load hook with the hook nut.

3.4 Checking the double hook for damage

Visible damage indicate **improper** fastening of the load.

Relevant areas for the inspection:
- – Lower area on the hook shaft
- – On every hook: Transition area from the hook shaft to the hook jaw

- ► Check the load hook for visual damage.

An authorized inspector must decide if the damage can be repaired.

When the damage has been repaired:
- ► Check if the load hook dimensions lie within the permissible tolerances. Contact Customer Service at Liebherr-Werk Ehingen GmbH.

When the damage is **not** permissible:
- ► Replace the load hook with the hook nut.

3.5 Checking the load hook for corrosion

Depending on the overall condition of the load hook, an inspection expert must decide if the hook thread must be checked for corrosion nicks.

If the hook thread must be checked:
- ► Determine the Liebherr ID no. and manufacturer of the load hook, see chapter 2.05.10.
- ► Request the assembly instructions for the load hook: Contact Customer Service at Liebherr-Werk Ehingen GmbH.
- ► Remove the load hook: Contact Customer Service at Liebherr-Werk Ehingen GmbH.
- ► Disassemble the hook nut according to the manufacturer's assembly instructions.
- ► Check the hook thread, hook nut and machined surfaces on the hook shaft for corrosion.

LWE/LTR 1100-009/25105-02-02/en

copyright © Liebherr-Werk Ehingen GmbH 2023

An inspection expert must decide if the corrosion nicks can be repaired.

When the corrosion nicks have been repaired:
► Check if the dimensions of the hook thread and the hook shaft lie within the permissible tolerances. Contact Customer Service at Liebherr-Werk Ehingen GmbH.

If an **impermissible** axial play is suspected on the hook nut:
► Contact Customer Service at Liebherr-Werk Ehingen GmbH.

When the corrosion is **not** permissible:
► Replace the load hook with the hook nut.

If the load hook passed the inspection:
► Follow the instructions in the section „Assembling the hook nut“.

3.6 Assembling the hook nut

Make sure that the following prerequisites are met:
– The hook shaft, hook thread and hook nut fulfill all test criteria.
– The axial bearing is free of damage and turns easily.

If the axial bearing does **not** turn easily:
► Clean the axial bearing and replace the lubricant.
or
Replace the axial bearing.

If the axial bearing is damaged:
► Replace the axial bearing.

Before the assembly of the hook nut: Corrosion protection must be applied between the thread sides.

► Grease the threads of the hook nut.
► Assemble the hook nut according to the manufacturer's assembly instructions.

The type of sealing after assembly must correspond to the sealing before the inspection.

► Seal the transition between the hook thread and the hook nut thread.
► Install the load hook.

3.7 Checking the retaining elements

► Check if the anti-rotation device of the hook nut (axle retainer) is tightened.
► Check if the anti-rotation device of the hook nut functions.
► Check the function of the hook guard.

If the retaining element did **not** pass the inspection:
► Contact Customer Service at Liebherr-Werk Ehingen GmbH.

LWE/LTR 1100-009/25105-02-02/en

copyright © Liebherr-Werk Ehingen GmbH 2023

8.06 Inspection of hydraulic hose lines

1	Safety guidelines	3
2	Inspection intervals	3
3	Checking the end of the service life	3
4	Inspecting the hydraulic hose lines for damage	4
5	Inspecting the hydraulic hose lines for leaks	5
6	Documenting the inspection	5
7	Replacing hydraulic hose lines	5

LWE/LTR 1100-009/25105-02-02/en

copyright © Liebherr-Werk Ehingen GmbH 2023

Fig.195219

LWE/LTR 1100-009/25105-02-02/en

copyright © Liebherr-Werk Ehingen GmbH 2023

1 Safety guidelines

WARNING
Damaged and leaky hydraulic hose lines!
Fire, accidents, death, severe injury, property damage.

If leaky areas are found:
► Have these leaky areas inspected immediately by authorized and trained expert personnel and remedied.

If damage is found:
► Have the hydraulic hose lines replaced exclusively by authorized and trained expert personnel.

If it is determined that the service life is over:
► Have the hydraulic hose lines replaced exclusively by authorized and trained expert personnel.

Make sure that the following prerequisite is met:
– A **competent person for hydraulic hose lines** inspects the hydraulic hose lines.

A **competent person for hydraulic hose lines** has the following knowledge:
– Knowledge and experience in hydraulic and mechanics
– Knowledge of all requirements regarding valid standards:
  • ISO 8331
  • ISO 2230
  • ISO 1402
  • ISO/TR
  • EN 853 to EN 857
  • National regulations
– **or:** Knowledge of all requirements regarding the valid German standards, for example:
  • DIN 20066:202-10
  • BGR 237 Feb 2008, BG-Regulation

2 Inspection intervals

The inspection of hydraulic hose lines must be carried out in the following intervals:
– when the crane is **up to 10 years** old, at least one inspection every twelve months
– when the crane is **older than 10 years**, at least one inspection every six months

3 Checking the end of the service life

Hydraulic hose lines have a limited service life.

When hydraulic hose lines are properly stored, installed and used, then the manufacturer guarantees a service life of at least 10 years.

The life expectancy of hydraulic hose lines can deviate significantly from the noted service life of hydraulic hose lines.

Note
Special case: Active rear axle steering!
► The life expectancy of hydraulic hose lines is six years, including a storage period of maximum two years.

The life expectancy of a hydraulic hose line depends on various factors:
– Environmental influences, for example: Temperature, humidity, corrosive air
– Use

LWE/LTR 1100-009/25105-02-02/en

copyright © Liebherr-Werk Ehingen GmbH 2023

- Working cycles
- Number of bending cycles
- Friction
- Fluid

The following factors reduce the life expectancy significantly:
- Heat
- Repeated bending under pressure

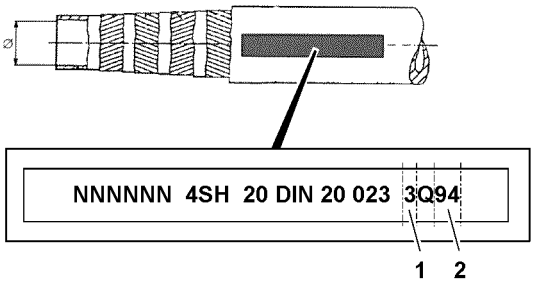

Fig.120159: Example for identification of hydraulic hose lines

The manufacturing date is marked on the fixtures or fittings.

► Read the quarter **1** of manufacture.
► Read the year **2** of manufacture.

When the life expectancy of a hydraulic hose line has been exceeded, then a **competent person** can decide **not** to replace the hydraulic hose line. Document the decisions, see section „Documenting the inspection“.

When the end of the service life is determined:
► Have the hydraulic hose lines replaced exclusively by authorized and trained expert personnel.

4 Inspecting the hydraulic hose lines for damage

Hydraulic hose lines must be replaced when one of the following damage is present:
– Damage on outer surface, such as chafe marks, cuts and cracks
– Brittleness due to aging of outer layer (cracks)
– Distortion, such as splitting of hose layers, bubbles, crushed areas, kinks, rotational stress
– Leakages
– Damage or distortion of hose fixtures or hose fitting (seal is endangered)
– Movement between hose and hose line, hose working itself loose from the fixture or the fitting
– Requirements for installation **not** observed
– Corrosion of fixture or fitting (solidness or function of fitting is endangered)

When the hydraulic hose line is **not** completely accessible:
► Remove the hydraulic hose line.

When the hydraulic hose line is protected with a protective hose:
► Check the hose protection for abrasion Abrasion on a hose protective hose can indicate abrasion on the hydraulic hose line.
► Check hydraulic hose lines for distortion in pressureless and pressurized status and during bending.

When the hydraulic hose line is slightly damaged, then a **competent person** can decide **not** to replace the hydraulic hose line. Document the decisions, see section „Documenting the inspection“.

If damage is found:
► Have the hydraulic hose lines replaced exclusively by authorized and trained expert personnel.

LWE/LTR 1100-009/25105-02-02/en

copyright © Liebherr-Werk Ehingen GmbH 2023

5 Inspecting the hydraulic hose lines for leaks

► Check the crane for escaped hydraulic oil.
► Check the crane for leaks by visually checking the ground under the crane.

When the hydraulic system leaks:
► Have these leaks inspected immediately by authorized and trained expert personnel and remedied.
or
Contact Liebherr Service.

6 Documenting the inspection

Make sure that the following prerequisite is met:
– A **competent person for hydraulic hose lines** documents noticeable observations.

The following data about hydraulic hose lines is documented:
– Installation location
– Condition
– Date
– Time

► Document noticeable observations comprehensibly.

When the life expectancy of a hydraulic hose line has been exceeded of if the hydraulic hose line is slightly damaged, then a **competent person** can decide **not** to replace the hydraulic hose line.

When the hydraulic hose line is **not** replaced:
► Document decisions and replacements comprehensibly.
► Document the date for the next inspection comprehensibly.

7 Replacing hydraulic hose lines

To ensure maximum safety, sealing and service life, the following guidelines apply for replacement of hydraulic hose lines.

WARNING
Impermissible spare parts!
Death, severe injury, property damage.
► Do **not** use repaired or used hydraulic hose lines.
► Use exclusively Original Liebherr spare parts.
► Use exclusively hydraulic hose lines according to manufacturer's specification (including fixtures, rubber piece goods and manufacturing process).

NOTICE
Routing of hydraulic hose lines changed!
Abrasion. Incorrect bending radius. Stress. Shortened service life.
► Keep the routing of hydraulic hose lines.
► Inspect the hydraulic hose lines according to intervals.

► Adhere to the hose bending radii according to the manufacturer's specifications.
► Ensure the routing of hydraulic hose lines according to manufacturer's specifications (pressureless and pressurized condition).
► Ensure the distance between lines and structures.

If necessary:
► Check moving parts in the area of hydraulic hose lines.

LWE/LTR 1100-009/25105-02-02/en

copyright © Liebherr-Werk Ehingen GmbH 2023

When the hydraulic hose line is installed in straight direction:
- ► Ensure a sag of the hose.
- ► Avoid mechanical tension and twisting of the hose during installation.
- ► Fasten the hydraulic hose line according to manufacturer’s specification.
- ► Do not cross hydraulic hose lines for high pressure and low pressure.
- ► Keep hydraulic hose lines away from hot components.

When hydraulic hose lines are in a surrounding with high temperatures:
- ► Install protective insulation according to manufacturer’s specifications.

LWE/LTR 1100-009/25105-02-02/en

copyright © Liebherr-Werk Ehingen GmbH 2023

8.17 Inspection of ladders

1	Safety instructions	3
2	Inspection intervals	3
3	Inspecting the ladders	3
4	Inspection sheet and check list	3

LWE/LTR 1100-009/25105-02-02/en

copyright © Liebherr-Werk Ehingen GmbH 2023

LWE/LTR 1100-009/25105-02-02/en

Fig.195219

copyright © Liebherr-Werk Ehingen GmbH 2023

1 Safety instructions

WARNING
Damaged ladders!
Accident. Death, severe injury, property damage.

If damage is found:
► Have ladders repaired by authorized and trained expert personnel.

If it is determined that the ladder cannot be repaired:
► Scrap the ladder immediately.

Make sure that the following prerequisite is met:
– **Authorized and trained expert personnel** inspects the ladders.

The authorized and trained expert personnel has the following expertise:
– Knowledge, experience and abilities in repairing ladders
– Is familiar with the necessary prerequisites as determined by the contractor for the inspection of ladders
– Has the knowledge about the type, scope and intervals for the required inspections as determined by the contractor

2 Inspection intervals

The inspection of ladders must be carried out in the following intervals:
– The contractor determines the **required** intervals
– But there must be at least one inspection every **12 months**

Intervals depend on:
– Operating conditions
– Frequency of use
– Operational demands during use
– Frequency and severity of defects found during previous inspections

3 Inspecting the ladders

Make sure that the following prerequisites are met:
– Ladder inspection sheets are on hand. For blank form, see section „Inspection form for the inspection of ladders and steps“.
– Check lists are on hand. For a blank form, see section „Check list for the inspection of ladders and steps“.

► For every ladder and every step: Enter the data in the ladder inspection form.
or
Get the ladder inspection form for ladders or steps.
► Check the ladders and steps according to the check list and document the results.
► Collect the ladder inspection forms and check lists in the crane documentation.

4 Inspection sheet and check list

A sample inspection form and check list for the inspection of ladders and steps are shown below.

LWE/LTR 1100-009/25105-02-02/en

copyright © Liebherr-Werk Ehingen GmbH 2023

4.1 Inspection form for the inspection of ladders and steps

Ladder inspection form		
Inventory no. of the ladder / step		
Location / installation location		
Ladder type		Multi-purpose ladder
		Stepladder
		Leaning ladder
		Leaning ladder with transition
		Vertical ladder
		Vertical ladder with transition aid
		Platform ladder
		Step
		Other
Ladder material		Aluminum
		Plastic
		Steel
		Stainless steel
Number of rungs / steps		
Ladder length / ladder shortened to		
Manufacturer / dealer		
Article / type number		
Date of purchase		
Date of selection		
Name of authorized inspector		
Next inspection		

Inspection form for the inspection of ladders and steps

LWE/LTR 1100-009/25105-02-02/en

Fig.151627-en

4.2 Check list for the inspection of ladders and steps

Ensure the recording of the systematic inspection of ladders and steps:
- Summarize the following checklist for an inspection book.

copyright © Liebherr-Werk Ehingen GmbH 2023

Inspection criteria	1. Inspection		2. Inspection		3. Inspection		4. Inspection		5. Inspection	
	Yes	No	Yes	No	Yes	No	Yes	No	Yes	No
1. Operating instructions (decal on the ladder) Present and legible	☐	☐	☐	☐	☐	☐	☐	☐	☐	☐
2. Beams and rungs / stringers and steps										
Loose connections	☐	☐	☐	☐	☐	☐	☐	☐	☐	☐
Damage, cracks, breaks, wear	☐	☐	☐	☐	☐	☐	☐	☐	☐	☐
Dents, kinks	☐	☐	☐	☐	☐	☐	☐	☐	☐	☐
Exposed fibers of glass-fiber reinforced plastic	☐	☐	☐	☐	☐	☐	☐	☐	☐	☐
Paint / glaze significantly damaged (if applicable)	☐	☐	☐	☐	☐	☐	☐	☐	☐	☐
Tie rod loose or damaged (if applicable)	☐	☐	☐	☐	☐	☐	☐	☐	☐	☐
Platform loose or damaged (if applicable)	☐	☐	☐	☐	☐	☐	☐	☐	☐	☐
3. Ladder locks (if applicable)										
Belts, chains, bracing damaged	☐	☐	☐	☐	☐	☐	☐	☐	☐	☐
Hinge spreader damaged	☐	☐	☐	☐	☐	☐	☐	☐	☐	☐
4. Fixtures										
Hinges, articulations, locks damaged or loose	☐	☐	☐	☐	☐	☐	☐	☐	☐	☐
Sliding parts are well lubricated	☐	☐	☐	☐	☐	☐	☐	☐	☐	☐
Locking elements do not engage	☐	☐	☐	☐	☐	☐	☐	☐	☐	☐
5. Feet and accessories										
Feet, tips, caps missing or damaged	☐	☐	☐	☐	☐	☐	☐	☐	☐	☐
Cross beam, feet extension defective	☐	☐	☐	☐	☐	☐	☐	☐	☐	☐
6. Other defects	☐	☐	☐	☐	☐	☐	☐	☐	☐	☐
Result of the inspection										
The ladder is OK and can be used	☐	☐	☐	☐	☐	☐	☐	☐	☐	☐
The ladder may only be used after it is repaired	☐	☐	☐	☐	☐	☐	☐	☐	☐	☐
The ladder must be replaced	☐	☐	☐	☐	☐	☐	☐	☐	☐	☐
DATE, SIGNATURE										
Sent for repair to: DATE, SIGNATURE										
Repair / ladder replaced: DATE, SIGNATURE										

Fig. 149994-en

copyright © Liebherr-Werk Ehingen GmbH 2023

LWE/LTR 1100-009/25105-02-02/en

copyright © Liebherr-Werk Ehingen GmbH 2023

8.90 Inspection chart for cranes

1 Inspection chart for recurring inspections of Liebherr cranes 3

LWE/LTR 1100-009/25105-02-02/en

copyright © Liebherr-Werk Ehingen GmbH 2023

LWE/LTR 1100-009/25105-02-02/en

Fig.195219

copyright © Liebherr-Werk Ehingen GmbH 2023

1 Inspection chart for recurring inspections of Liebherr cranes

The following is a checklist to assist the inspector during the periodic inspections of Liebherr mobile and crawler cranes.

Company:	**Inspector:**
Crane manufacturer: Liebherr	**Crane type:**
Serial number:	**Stock number:**
Year of construction:	**Date:**
Inspector's signature for No. 1 to 22:	

1. inspection category: Crane document						
Component to be inspected	**A**	**B**	**C**	**D**	**E**	**Comments**
Crane inspection log						
Operating and installation instructions						
Crane control log						
Load chart manual						
Job planner						

2. inspection category: Signs / identification						
Component to be inspected	**A**	**B**	**C**	**D**	**E**	**Comments**
Factory tag						
Load data						
Operating instruction label						
Prohibition and command signs						
Other safety signs						

3. inspection category: Travel gear[1]						
Component to be inspected	**A**	**B**	**C**	**D**	**E**	**Comments**
Frame[2]						
Supports[3]						
Axles						
Wheels						
Tires						
Storage						
Transmission						
Universal drive shaft						
Leaf springs / springs						
Shock absorbers						

LWE/LTR 1100-009/25105-02-02/en

copyright © Liebherr-Werk Ehingen GmbH 2023

3. inspection category: Travel gear[1]						
Component to be inspected	**A**	**B**	**C**	**D**	**E**	**Comments**
Steering						
Brakes						
Hydraulic axle suspension						

4. inspection category: Chassis[1]						
Component to be inspected	**A**	**B**	**C**	**D**	**E**	**Comments**
Coverings						
Accessible surfaces						
Counterweight holders[2]						
Towing devices						
Accesses, ladders						
Holding devices, handles						
Platforms, railings						
Retainer for hook block[2]						
Boom support[2]						

5. inspection category: Chassis - driver's cab[1]						
Component to be inspected	**A**	**B**	**C**	**D**	**E**	**Comments**
Doors						
Windows / windshields						
Window wiper						
Mirrors						
Seat						
Heater						
Ventilation						
Sound absorber						
Trip recorder						
First aid kit						
Spare bulbs						
Hazard warning triangle						
Safety vest						

6. inspection category: Chassis - drive[1]						
Component to be inspected	**A**	**B**	**C**	**D**	**E**	**Comments**
Combustion engine						
Exhaust system						
Fuel tank						

LWE/LTR 1100-009/25105-02-02/en

copyright © Liebherr-Werk Ehingen GmbH 2023

6. inspection category: Chassis - drive[1]						
Component to be inspected	**A**	**B**	**C**	**D**	**E**	**Comments**
Urea tank						
Fuel container						
Filter						
Sound absorber						
Engine mount						
Oil levels						
Fuel lines						
Urea lines						
Fuel lines						

7. inspection category: Chassis - hydraulics[1]						
Component to be inspected	**A**	**B**	**C**	**D**	**E**	**Comments**
Oil container						
Filter with maintenance indicator						
Pumps						
Motors						
Valves						
Lines						
Hoses						
Cylinders						
Pressure limiting valves						

8. inspection category: Chassis - compressed air system[1]						
Component to be inspected	**A**	**B**	**C**	**D**	**E**	**Comments**
Compressor						
Filter						
Air tanks						
Valves						
Lines						
Hoses						
Cylinders						

9. inspection category: Chassis - electrical system[1]						
Component to be inspected	**A**	**B**	**C**	**D**	**E**	**Comments**
Motors						
Generators						
Battery						

LWE/LTR 1100-009/25105-02-02/en

copyright © Liebherr-Werk Ehingen GmbH 2023

9. inspection category: Chassis - electrical system[1]						
Component to be inspected	**A**	**B**	**C**	**D**	**E**	**Comments**
Switches / buttons						
Lines						
Fuses						
Resistors						
Lighting						
Brake lights						
Blinkers						
Tail lights						
Working lights						
Signaling systems						
Indicator lights						
Battery switch						
Limit switches: Transmission, steering, drive train						
Support pressure indicator[2]						

10. inspection category: Chassis - control systems[1]						
Component to be inspected	**A**	**B**	**C**	**D**	**E**	**Comments**
Engine regulation						
Transmission						
Couplings						
Circuits						
Brakes						
Steering						
Control displays						
Engine shut off line						
Control of supports[2]						
Axle suspension						
Crane leveling						
Rear axle steering						

11. inspection category: Superstructure						
Component to be inspected	**A**	**B**	**C**	**D**	**E**	**Comments**
Frame						
Coverings						
Treads						
Storage						

LWE/LTR 1100-009/25105-02-02/en

copyright © Liebherr-Werk Ehingen GmbH 2023

11. inspection category: Superstructure						
Component to be inspected	**A**	**B**	**C**	**D**	**E**	**Comments**
Counterweights						
Relapse retainer						
Slewing ring connection: Tilt play						
Slewing ring connection: Mounting screws						
Slewing ring connection: Gears						
Slewing gear: Mounting screws						
Slewing gear: Gears						

12. inspection category: Superstructure - crane operator's cab						
Component to be inspected	**A**	**B**	**C**	**D**	**E**	**Comments**
Doors						
Windows / windshields						
Window wiper						
Mirrors						
Seat						
Heater						
Ventilation						
Muffler						
Joystick for working functions						
Gear shifts						
Retainer: Crushing / shear locations						

13. inspection category: Superstructure - Retaining and protection devices						
Component to be inspected	**A**	**B**	**C**	**D**	**E**	**Comments**
Accesses, ladders						
Handles						
Coverings						
Covers						
Hatches						
Treads						

14. inspection category: Superstructure - drive train						
Component to be inspected	**A**	**B**	**C**	**D**	**E**	**Comments**
Combustion engine						
Exhaust system						
Fuel tank						
Urea tank						

LWE/LTR 1100-009/25105-02-02/en

copyright © Liebherr-Werk Ehingen GmbH 2023

14. inspection category: Superstructure - drive train						
Component to be inspected	**A**	**B**	**C**	**D**	**E**	**Comments**
Fuel container						
Filter						
Sound absorber						
Engine mount						
Fuel lines						
Urea lines						
Fuel lines						

15. inspection category: Superstructure - hydraulic system						
Component to be inspected	**A**	**B**	**C**	**D**	**E**	**Comments**
Oil container						
Filter						
Pumps						
Motors						
Valves						
Lines						
Hoses						
Cylinders						
Pressure limiting valves						
Lowering brake valves						
Brake control: Hoist gear						
Brake control: Slewing gear						

16. inspection category: Superstructure - electrical system						
Component to be inspected	**A**	**B**	**C**	**D**	**E**	**Comments**
Motors						
Generators						
Batteries						
Switches / buttons						
Lines						
Fuses						
Resistors						
Lighting						
Signal lights						

LWE/LTR 1100-009/25105-02-02/en

copyright © Liebherr-Werk Ehingen GmbH 2023

17. inspection category: Superstructure - control systems						
Component to be inspected	**A**	**B**	**C**	**D**	**E**	**Comments**
Engine regulation						
Transmission						
Flexible couplings						
Circuits						
Engine shut off line						
Control displays						

18. inspection category: Superstructure - rope drives						
Component to be inspected	**A**	**B**	**C**	**D**	**E**	**Comments**
Winch 1[3]						
Winch 2[3]						
Winch 3[3]						
Winch 4[3]						
Winch 5[3]						
Winch 6C[3]						
Winch 6[3]						
Assembly winches [3]						
Rope pulleys						
Rope end connection						
Rope for winch 1						
Rope for winch 2						
Rope for winch 3						
Rope for winch 4						
Rope for winch 5						
Rope for winch 6C						
Rope for winch 6						
Rope for assembly winches						
Guy ropes						

19. inspection category: Superstructure - hook						
Component to be inspected	**A**	**B**	**C**	**D**	**E**	**Comments**
Pulleys						
Rope guards on pulleys						
Axle support						
Load hook						
Load hook mounting						
Hook retention						

LWE/LTR 1100-009/25105-02-02/en

copyright © Liebherr-Werk Ehingen GmbH 2023

20. inspection category: Superstructure - safety and switch systems						
Component to be inspected	**A**	**B**	**C**	**D**	**E**	**Comments**
Hoist emergency limit switch I						
Hoist emergency limit switch II						
Lowering emergency limit switch I						
Lowering emergency limit switch II						
Boom emergency limit switch I						
Boom emergency limit switch II						
Luffing jib: Boom limit switch I						
Luffing jib: Boom limit switch II						
Load torque limiter						
Angle indicator: Boom						
Angle indicator: Luffing jib						
Angle indicator: Slewing gear						
Safety equipment: Control						
Working range limitation						
Pressure sensor						
Speed sensor						
Wind sensor						
Sliding beam monitoring						
Support pressure indicator						
Incline indicator						
Length indicator: Boom radius, boom length						
Emergency off system						
Engine stop						

21. inspection category: Boom						
Component to be inspected	**A**	**B**	**C**	**D**	**E**	**Comments**
Weld structure						
Rope pulleys						
Change over pulleys feed mechanism						
Luffing cylinder						
Telescoping cylinder						
Boom extension ropes						
Boom retraction ropes						
Boom bearings						
Boom pinning						
Guy rods						
Guy ropes						

LWE/LTR 1100-009/25105-02-02/en

copyright © Liebherr-Werk Ehingen GmbH 2023

21. inspection category: Boom						
Component to be inspected	**A**	**B**	**C**	**D**	**E**	**Comments**
Control ropes						
Guide ropes						
Safety ropes						
Relapse cylinders						
Pin connections						

22. inspection category: Equipment						
Component to be inspected	**A**	**B**	**C**	**D**	**E**	**Comments**
Weld structure						
Rope pulleys						
Relapse cylinder						
Relapse support						
Oscillation guard						
A-frame bearings						
Pinning of components						
Guy rods with pinning						
Rods with guide rail on A-frame 2 and A-frame 3						
All limit switches with switch mechanism						
Pin connections						

Inspection chart for periodic inspections of Liebherr mobile and crawler cranes

Inspection criteria:

A = Present / complete
B = Condition / maintenance
C = Function
D = Repair / replace
E = Re-inspection required

Evaluation:

Satisfactory = x
Unsatisfactory = -
Not required = 0

Comments:

[1] Inspection of the crane carrier vehicle road worthiness is also fulfilled if it has already been certified by the road traffic department certification authority. For cranes that are not certified for use on public roads, an expert or authorized inspector must conduct the required tests to validate the vehicle's road worthiness.

[2] These inspections must be carried out by an authorized inspector even if it has passed the road traffic department test and is certified.

[3] Inspection of the winches with respect to the actually used proportion of their service life.

LWE/LTR 1100-009/25105-02-02/en

copyright © Liebherr-Werk Ehingen GmbH 2023

Empty page!

LWE/LTR 1100-009/25105-02-02/en

copyright © Liebherr-Werk Ehingen GmbH 2023

90 Appendix

LWE/LTR 1100-009/25105-02-02/en

copyright © Liebherr-Werk Ehingen GmbH 2023

LWE/LTR 1100-009/25105-02-02/en

copyright © Liebherr-Werk Ehingen GmbH 2023

90.01 Preface to the appendix

1 Foreword 3

LWE/LTR 1100-009/25105-02-02/en

copyright © Liebherr-Werk Ehingen GmbH 2023

LWE/LTR 1100-009/25105-02-02/en

Fig.195219

copyright © Liebherr-Werk Ehingen GmbH 2023

1 Foreword

This crane may only be used in a flawless technical condition and according to its mission as well as with constant awareness of safety and dangers. Any problems, which could affect safety, must be fixed immediately.

Note
► Modifications on the crane may only be made with written approval by Liebherr-Werk Ehingen GmbH.

1.1 Change to the operating instructions

Changes to the operating instructions are received in the form of chapters. The chapter to be replaced must be removed from the operating instructions and replaced with the new chapter in the same location.

When you receive a change to the operating instructions:
► Remove the chapter to be replaced from the operating instructions.
► File the new chapter in the same location in the operating instructions.
► Destroy the replaced chapter.
► Fill out the change confirmation form in chapter 90.05 of the operating instructions.

1.2 Update to the operating instructions

Updates to the operating instructions, which you receive in the circular as Customer information, must be filed in the operating instructions in chapter 90.05.

Fig.113870: Customer information decal

When you receive an update to the operating instructions:
► Attach the decals **1**, which are enclosed in the customer information to the footer of the respective chapter. See the following example.

Note
Example: Update to the operating instructions!

If there is an update that concerns the operating instructions, chapter 2.04:
► Attach the decal **1** in the footer of chapter 2.04.

► File the update in chapter 90.05 of the operating instructions.
► Fill out the update confirmation form in chapter 90.05 of the operating instructions.

LWE/LTR 1100-009/25105-02-02/en

copyright © Liebherr-Werk Ehingen GmbH 2023

Empty page!

LWE/LTR 1100-009/25105-02-02/en

copyright © Liebherr-Werk Ehingen GmbH 2023

90.05 Update confirmation

1	Change confirmation form	3
2	Update confirmation	3
3	Customer information	4

LWE/LTR 1100-009/25105-02-02/en

copyright © Liebherr-Werk Ehingen GmbH 2023

LWE/LTR 1100-009/25105-02-02/en

Fig.195219

copyright © Liebherr-Werk Ehingen GmbH 2023

1 Change confirmation form

Chapter	Change	Completed	
		on	by

2 Update confirmation

Chapter	Update	Completed	
		on	by

LWE/LTR 1100-009/25105-02-02/en

copyright © Liebherr-Werk Ehingen GmbH 2023

3 Customer information

LWE/LTR 1100-009/25105-02-02/en

copyright © Liebherr-Werk Ehingen GmbH 2023

Index

1

11952500 – California Proposition 65 Label **2.05 - 2**

3

3-point support **2.04.10 - 25**

7

772563908 – Warning of high voltage **2.05 - 2**
772564008 – Slewing range **2.05 - 3**
772580408 – Limitation of maximum travel speed **2.05 - 3**

9

9402377 – Fastening point / lifting point **2.05 - 12**
9412158 – Reading the operating instructions **2.05 - 7**
97001802 – Falling platform **2.05 - 46**
97003109 – Accessing the step ladder **2.05 - 19**
97003110 – Folding the step ladder in and out **2.05 - 19**
97003112 – Maximum suspended load **2.05 - 26**
97004046 – Safety harness, maximum two persons **2.05 - 7**
97006167 – Identifying the support base **2.05 - 20**, **2.05 - 20**
97008514 – Warning of head injuries **2.05 - 20**
97009799 – Data logger **2.05 - 21**
97011336 - Transport weights of the components **2.05 - 46**
97011689 – Danger of crushing **2.05 - 23**
97011690 – Overload of crane cab is prohibited **2.05 - 23**
97012095 – Maximum load **2.05 - 21**
97012737 – Danger of accident **2.05 - 25**
97012949 – Maximum load **2.05 - 21**
97016304 – Refueling **2.05 - 23**, **2.05 - 24**, **2.05 - 24**
97016392 – Crushing danger for feet **2.05 - 25**
97016911 – Danger of collision **2.05 - 39**
97017585 – Falling telescopic boom during disassembly / assembly **2.05 - 8**
97018351 – Falling telescopic boom during transport **2.05 - 9**
97018564 – Falling telescopic boom during transport **2.05 - 9**
97023034 – Disassembling **2.05 - 26**
97027147 – Overloading of the combi box is prohibited **2.05 - 9**
97033982 – Assembling / disassembling the Derrick pivot section **2.05 - 32**
97036732 – Access via 3-point support **2.05 - 26**
97036733 – Fastening point **2.05 - 10**
97036734 – Rigging point **2.05 - 44**
97036735 – Fastening point for lattice section **2.05 - 14**
97036736 – Fastening point for lattice sections **2.05 - 15**
97036917 – Maximum suspended load **2.05 - 27**
97037383 – Urea **2.05 - 27**
97037625 – Suspended load Fastening points / rigging points **2.05 - 12**
97037871 – Fastening points for lattice sections **2.05 - 16**
97037952 – Danger of fatal injury due to electric shock **2.05 - 28**
97038442 – Fastening point for lattice section **2.05 - 15**
97038452 – Fastening point for lattice sections **2.05 - 15**
97038454 – Fastening point for lattice sections **2.05 - 16**
97039035 – Assembly unit suspended load **2.05 - 18**
97039753 – Danger of stumbling **2.05 - 38**
97041305 – Overload of components **2.05 - 29**
97042730 – Falling luffing cylinder **2.05 - 28**
97042797 – Overload of components **2.05 - 29**
97046488 – Corrosion inhibitor - antifreeze fluids **2.05 - 25**
97047810 – Pinning brackets **2.05 - 29**
97053409 – Entanglement hazard during winch operation **2.05 - 22**
97053410 – Fastening equipment **2.05 - 16**
97057097 – Fastening point to turn the component **2.05 - 17**
97057524 – Fastening point for assembly of lattice sections **2.05 - 17**
97057767 – Fastening points for lattice sections **2.05 - 17**
97059339 – Suspended load Derrick pivot section **2.05 - 18**
97068257 – Fastening point for end section **2.05 - 18**
97068370 – Closing the cab door **2.05 - 22**
97068839 - Transport weights of the components / fastening length of the fastening equipment **2.05 - 47**
97069053 – Storage boxes open **2.05 - 22**
97070905 – Disassembling the auxiliary jib (boom nose) **2.05 - 30**
9707704 – Driving with the outrigger pad **2.05 - 31**
97077304 – Positioning the outrigger pad **2.05 - 30**
97094940 – Spark catcher **2.05 - 44**
97095312 – Suspended load and fastening points for counterweight frame **2.05 - 19**
97096132 – Fastening points for N-assembly unit **2.05 - 14**
97097951 – Counterweight **2.05 - 32**
97100047 – Retaining pins for erection rack **2.05 - 33**
97100629 – Connector pins for erection rack / guy rods **2.05 - 33**
97106824 – Installing the N-assembly unit **2.05 - 13**

LWE/LTR 1100-009/25105-02-02/en

copyright © Liebherr-Werk Ehingen GmbH 2023

97107101 – Unlocking the telescopic boom locking pin **2.05 - 34**
97107199 – Do not unlock the telescopic boom locking pin **2.05 - 34**
97124295 – Load stop **2.05 - 4**
97127242 – Assembly aid **2.05 - 5**
97128894 – Counterweight and counterweight radius **2.05 - 34**
97131530 – Reduced crawler crane track width **2.05 - 35**
97133617 – Hydraulic connection **2.05 - 6**
97137170 – Luffing cylinder and counterweight collision **2.05 - 4**
97140080 – Assembling the fixed lattice jib **2.05 - 13**
971494208 – Limitation of maximum travel speed **2.05 - 35**
97151252 – Hoist device **2.05 - 6**
971539808 – Warning notice for unpinning the auxiliary boom on the pulley head **2.05 - 36**
971539908 – Warning notice for unlocking the auxiliary boom **2.05 - 36**
97155791 – Rigging point **2.05 - 43**
97160549 – Oil change **2.05 - 45**
97164545 – Danger of injury for hands **2.05 - 40**
97164873 – Safety harness, maximum two persons **2.05 - 8**
97165133 – Urea **2.05 - 28**
97165352 – Rigging point **2.05 - 43**
97167015 - Crushing danger for body and limbs **2.05 - 38**
97167192 – Reading the operating instructions **2.05 - 7**
97167222 – Entering prohibited **2.05 - 42**
97167274 – Access for unauthorized personnel prohibited **2.05 - 37**
97167874 – Danger of injury for hands by the rope drive **2.05 - 41**
973974408 - Transport weights of the components **2.05 - 46**
973974608 - Transport weights of the components **2.05 - 46**
976624808 – Fastening the load **2.05 - 48**
977055908 – Fastening point for swingable sliding beam **2.05 - 35**
978673908 – Warning of suspended load **2.05 - 37**
978674008 – Access for unauthorized personnel prohibited **2.05 - 37**
978674108 – Warning of crushing danger **2.05 - 38**
978674308 – Radio remote control **2.05 - 39**
978674408 – Danger of burns to hands **2.05 - 39**
978674508 – Warning of rotating parts **2.05 - 40**
978674608 - Crushing danger for hands **2.05 - 40**
978674808 – Personal protective equipment **2.05 - 41**, **2.05 - 41**
978674908 – Accessing the area is prohibited **2.05 - 42**
978675008 – Access prohibited **2.05 - 42**
978687408 – Rigging point **2.05 - 43**
978867108 – Danger of fatal injury due to electric shock **2.05 - 44**
979383308 – Oil change **2.05 - 45**
979561108 – Counterweight **2.05 - 45**

A

Accelerating, changing the load **2.04 - 40**
Accepting the set up configuration **4.03 - 29**
Accesses to the crane **2.07 - 1**
Access for LTR 1060 and LTR 1100 **2.04 - 33**
Access for LTR 1220 **2.04 - 34**
Access for LTR cranes **2.04 - 32**
Accessible surfaces **2.04 - 14**
Accessible walking surfaces and stepping surfaces **2.07 - 14**
Accessing via the front step **2.04 - 32**
Access to the crane cab below the cab door **2.04 - 29**
Access to the crane cab in front of the crane cab **2.04 - 30**
Access via an extendable step from the rear **2.04 - 31**
Acoustic / visual warnings outside the crane operator's cab **4.20 - 15**
Acoustic / visual warnings within the crane operator's cab **4.20 - 13**
Acoustic and optical warning devices **4.04 - 11**
Acoustic and optical warning signals **4.02 - 3**
Acoustic test of the mounting screws **7.05 - 60**
Acoustic warnings on the LICCON monitor **4.02 - 28**
Activating / deactivating winch 1 **4.05 - 13**
Activating / deactivating winch 2 * **4.05 - 15**
Activating intermediate lubrication **7.04 - 22**, **7.05 - 40**
Activating the bypass at assembly and disassembly **5.01 - 40**
Activating the bypass at crawler assembly and crawler disassembly **5.01 - 39**
Actual load **4.02 - 3**
Actual load (current load) / net load **4.02 - 17**
Actual load display **4.08 - 15**
Actuating the slewing gear brake **4.05 - 17**
Actuation of winches and / or crane movements during assembly / disassembly **5.01 - 41**
Adding diesel fuel **7.04 - 6**, **7.05 - 14**
Adding fuel **7.04 - 41**
Adding hydraulic oil **7.04 - 12**, **7.05 - 29**
Adding urea solution **7.04 - 10**, **7.05 - 21**
Additional controls for certain crawler cranes **5.01 - 11**
Additional controls for cranes on tires on the front and supported on the rear **5.01 - 10**
Additional controls for cranes supported on the front and on tires on the rear **5.01 - 10**
Additional controls for cranes with a derrick boom **5.01 - 11**
Additional controls for cranes with crane support **5.01 - 10**

LWE/LTR 1100-009/25105-02-02/en

copyright © Liebherr-Werk Ehingen GmbH 2023

Additional controls for cranes with luffing auxiliary boom / accessories **5.01 - 11**
Additional controls for freestanding crane operation (on tires) **5.01 - 10**
Additional emergency operating modes **4.02 - 32**
Additional notes **0.01 - 3**
Additional risks **2.04 - 91**
Additional work **4.06 - 35**
Adjusting the brightness of the BTT display **5.31 - 17**
Adjusting the control helm **4.03 - 20**
Adjusting the fan stage **6.02 - 11**
Adjusting the folding jib angle hydraulically * **5.02 - 65**
Adjusting the reeving **4.08 - 14**
Adjusting the temperature **6.02 - 8**, **6.02 - 11**
Adjusting the track width with the Bluetooth Terminal **4.03.50 - 27**
Adjusting the track width with the master switch **4.03.50 - 15**
Adjusting the track width with the radio remote control * **4.03.50 - 37**
Adjustment of the track width **4.03.50 - 1**
Adjustments on the grease sprayer **7.05 - 63**
After a possible lightening strike to the crane **2.04 - 59**
After replacement of components **7.01 - 6**
Aids for working at a height **2.04 - 14**
Air distribution **6.02 - 12**
Air distribution for floorboard area **4.01 - 42**
Air distribution for head area **4.01 - 42**
Air filter system **7.04 - 5**, **7.05 - 26**
Air heater * **4.01 - 11**, **6.02 - 16**
Airplane warning light * **5.02 - 59**, **5.12 - 23**
Air supply **6.02 - 14**
Alarm functions **4.02 - 22**, **4.02 - 67**
Aligning the BTT with the crane **5.31 - 19**
Aligning the crane cab horizontally **4.03 - 24**
Aligning the moveable back pulley **4.06 - 6**
Alignment of the crane **2.04 - 53**
Alpha - α angle **5.70 - 26**
Ambient temperature **0.01 - 12**
Angle adjustment on the fixed lattice jib with mechanical adjustment **5.01 - 50**
Angle guide values **5.70 - 28**
Angle indicator for the folding jib **5.02 - 65**
Angle sensor * **5.02 - 60**
Angle setting 20° **5.02 - 41**, **5.02 - 45**, **5.02 - 49**
Angle setting 40° **5.02 - 41**, **5.02 - 45**, **5.02 - 49**
Angular pull **4.08 - 11**
Applying the parking brake **4.05 - 18**
Areas **7.05 - 76**, **8.04 - 4**
Areas of responsibility for crane transport on floating devices **2.25 - 3**
Areas of responsibility for operating conditions **2.25 - 2**
Armrests **4.03 - 21**
Ascending and descending the crane superstructure **2.07 - 6**
Assembling **4.07 - 10**, **5.09 - 7**, **5.25 - 3**
Assembling / disassembling **5.01 - 31**
Assembling / disassembling boom systems for supporting on ascending terrain (assembly / disassembly diagram) **5.01 - 80**
Assembling / disassembling of boom systems for supporting on descending terrain (assembly / disassembly diagram) **5.01 - 83**
Assembling / disassembling of hydraulic lines **5.01 - 38**
Assembling / disassembling of lattice sections for lattice mast cranes **5.01 - 69**
Assembling / disassembling the adapter on the wedge lock **4.06 - 36**
Assembling / disassembling the booms **5.01 - 42**
Assembling / disassembling the counterweight **5.01 - 41**
Assembling / disassembling the crane components **2.08 - 6**
Assembling / disassembling the electrical lines **5.01 - 37**
Assembling / disassembling the lattice sections on telescopic cranes with a luffing lattice jib **5.01 - 50**
Assembling / disassembling the lattice sections on telescopic cranes with an auxiliary boom, with an auxiliary crane **5.01 - 61**
Assembling / disassembling the lattice sections on telescopic cranes with an auxiliary boom, without an auxiliary crane **5.01 - 65**
Assembling / disassembling the wedge lock **4.06 - 27**
Assembling and disassembling the central ballast **3.03 - 3**
Assembling lattice sections **5.01 - 69**
Assembling the adapter on the wedge lock **4.06 - 37**
Assembling the auxiliary weights **5.19 - 11**, **5.19 - 15**, **5.19 - 19**
Assembling the boom systems on ascending terrain **5.01 - 80**
Assembling the boom systems on descending terrain **5.01 - 83**
Assembling the cable drum on the auxiliary boom **5.70 - 6**
Assembling the cable drum on the fixed jib **5.70 - 6**
Assembling the cable drum on the luffing lattice jib **5.70 - 6**
Assembling the cable drum on the telescopic boom **5.70 - 5**
Assembling the camera on the auxiliary boom **5.70 - 6**
Assembling the camera on the fixed jib **5.70 - 10**
Assembling the camera on the luffing lattice jib **5.70 - 14**
Assembling the camera on the telescopic boom **5.70 - 3**
Assembling the catch bar on the telescopic boom pivot section **5.12 - 39**
Assembling the central ballast **3.01 - 41**, **3.03 - 5**
Assembling the crane **3.01 - 3**
Assembling the crawler carrier, illustration 2 **3.01 - 41**

LWE/LTR 1100-009/25105-02-02/en

copyright © Liebherr-Werk Ehingen GmbH 2023

Assembling the cross beam without wheels **2.04.10 - 16**
Assembling the cross beam with wheels **2.04.10 - 16**
Assembling the double folding jib carried along on the crane **5.02 - 23**
Assembling the end section **5.02 - 29**
Assembling the first crawler carrier **3.01 - 45**
Assembling the fixed lattice jib on the TF-adapter **5.01 - 47**
Assembling the floodlight **5.80 - 2**
Assembling the floodlight without pull relief **5.80 - 2**
Assembling the floodlight with pull relief **5.80 - 3**
Assembling the folding jib **5.02 - 13**
Assembling the hook nut **8.05 - 6**
Assembling the hose couplings in the neutral position (illustration 2) **5.02 - 51**
Assembling the hose couplings in the operating or neutral position **5.02 - 51**
Assembling the hose couplings in the operating position (illustration 1) **5.02 - 51**
Assembling the hydraulic folding jib * **5.31 - 55**
Assembling the hydraulic hose drum **5.02 - 55**
Assembling the ladder **2.04.10 - 14**
Assembling the lattice sections on a luffing lattice jib **5.01 - 57**
Assembling the lattice sections on an auxiliary boom with an auxiliary crane **5.01 - 61**
Assembling the lattice sections on an auxiliary boom without an auxiliary crane **5.01 - 65**
Assembling the load hook **4.06 - 19**
Assembling the pivot section **5.02 - 23**
Assembling the platform ladder **2.04.10 - 16**
Assembling the replacement ballast **5.09 - 9**
Assembling the second crawler carrier, illustration 8 **3.01 - 47**
Assembling the separately transported folding jib in the crane operating position **5.02 - 31**
Assembling the separately transported folding jib in the transport position **5.02 - 33**
Assembling the separately transported folding jib on the crane **5.02 - 31**
Assembling the separately transported special folding jib **5.12 - 19**
Assembling the single folding jib carried along on the crane **5.02 - 17**
Assembling the special folding jib **5.12 - 7**
Assembling the steps in the access position **2.07 - 5**
Assembling the steps in the transport position **2.07 - 5**
Assembling the telescopic boom extension **5.25 - 4**
Assembling the wedge lock **4.06 - 34**
Assembling the wind speed sensor for crane operation **5.75 - 3**
Assembling the wind speed sensor in the transport position **5.75 - 12**
Assembling winch 2 * **5.09 - 7**
Assembly **5.10 - 5**
Assembly / disassembly procedures **4.20 - 4**
Assembly aid **2.05 - 5**
Assembly drawings **5.01 - 33**
Assembly functions menu **5.31 - 51**
Assembly on the auxiliary boom **5.75 - 8**
Assembly on the telescopic boom **5.75 - 6**
Assembly personnel **2.04 - 9**
Assembly position **5.75 - 5**
Assembly unit with lattice jib **8.01 - 67**
Assignment of the crane superstructure to the travel direction **4.10 - 27**
Attaching the crane **3.80 - 8**
Attaching the hoist limit switch weight **4.06 - 23**, **4.06 - 26**
Attaching the hook block **4.03 - 40**
Authorized and trained service technician **2.04 - 10**, **7.01 - 2**
Authorized inspector **2.04 - 11**, **8.01.10 - 2**, **8.01.10 - 2**
Automatic operation **6.02 - 8**
Automatic regeneration of the diesel particle filter **4.03 - 7**
Automatic support * **5.31 - 45**
Auxiliary boom **2.06 - 6**, **4.12 - 3**
Auxiliary boom luffing range **5.70 - 21**
Auxiliary counterweight **1.02 - 5**
Auxiliary equipment **2.08 - 2**
Auxiliary equipment * **1.02 - 4**
Auxiliary guying **5.01 - 14**
Auxiliary heater / engine preheating * **4.01 - 43**
Auxiliary jib **4.12 - 4**
Auxiliary jib on the fixed lattice jib **4.12 - 21**
Auxiliary jib on the luffing lattice jib **4.12 - 24**
Auxiliary jib on the telescopic boom **4.12 - 14**
Auxiliary operator **2.04 - 10**
Auxiliary pulley * **4.06 - 39**
Axle bracket **8.01 - 78**

B

Backrest adjustment **4.03 - 13**, **4.03 - 18**
Ballast cylinder **8.01 - 49**
Ballasting menu **5.31 - 45**
Ballasting menu function keys **5.31 - 46**
Ballast monitoring **3.03 - 6**, **4.07 - 21**
Ballast trailer **8.01 - 77**
Ballast weighing via the ballasting procedure **4.07 - 23**
Ball locking pin **5.01 - 28**
Base plate **8.01 - 51**
Basic principles and procedure **8.01 - 4**
Basic requirements **2.25 - 2**
Basket formation **7.05 - 73**, **8.04 - 21**
Batteries **7.01 - 15**, **7.05 - 88**
Battery voltage individual control display **4.02 - 45**
Before starting to work **2.04 - 79**
Before the start of crane operation **2.04 - 11**
Beta - β angle **5.70 - 27**
Bitt fastening point **5.01 - 35**
Bleeding the central lubrication system **7.04 - 23**, **7.05 - 41**

LWE/LTR 1100-009/25105-02-02/en

copyright © Liebherr-Werk Ehingen GmbH 2023

Bleeding the fuel line **7.04 - 43**
Block position of the relapse cylinders when setting down the load **5.01 - 11**
Boom **1.01 - 7**, **8.01 - 52**
Boom limitations **4.02 - 23**
Boom nose **8.01 - 59**
Boom nose on lattice jib **4.12 - 4**
Boom nose on telescopic boom **4.12 - 3**, **4.12 - 13**
Boom nose on the fixed lattice jib **4.12 - 19**
Boom nose on the luffing lattice jib **4.12 - 23**
Boom nose - telescopic boom **5.10 - 1**
Boom radius **4.02 - 19**
Boom system limit switch **4.04 - 20**
Breaking away fixed loads **4.08 - 13**
Brief description **4.08 - 22**
Bringing the cable drum to the assembly height **5.70 - 3**
Bringing the cab platform into the transport position **2.06 - 12**
Bringing the cab platform into the working position **2.06 - 11**
Bringing the camera to assembly height **5.70 - 2**
Bringing the cross beam into the operating position **2.04.10 - 15**
Bringing the cross beam into the transport position **2.04.10 - 15**
Bringing the leaning ladder into the transport position **2.04.10 - 19**
Bringing the longitudinal platform into the transport position **2.06 - 15**
Bringing the longitudinal platform into the working position **2.06 - 14**
Bringing the railings into the transport position **2.06 - 24**
Bringing the railings into the working position **2.06 - 23**
Bringing the stairs with platform into the working position **2.06 - 17**
Bringing the stairs with the platform into the transport position **2.06 - 20**
Bringing the stepladder into the transport position **2.04.10 - 20**
Broken strands **7.05 - 70**
Broken wire **7.05 - 70**
Broken wire in the strand valleys **8.04 - 14**
Broken wire nests **8.04 - 15**
Broken wires in rope sections that are not spooled up on the winch **8.04 - 14**
Broken wires on rope end connections **8.04 - 14**
BTT - Operating element **5.31 - 1**
BTT operation **5.31 - 67**
Buckles **7.05 - 75**, **8.04 - 25**
Burning-off the burner **7.04 - 43**, **7.04 - 45**
Bypassing at assembly / disassembly **5.01 - 39**
Bypassing at assembly and disassembly **5.01 - 40**
Bypassing at crawler assembly / disassembly **5.01 - 39**
Bypassing the hoist top shut-off **4.20 - 45**, **5.01 - 16**
Bypassing the LICCON overload protection **5.01 - 15**
Bypassing the overload protection **4.04 - 5**, **5.01 - 14**
Bypassing the overload protection: Emergency situation (according to EN 13000) **4.04 - 6**
Bypassing the overload protection: Failure of the overload protection **4.04 - 5**
Bypassing the overload protection: Overload protection failure (according to EN 13000) **4.04 - 5**
Bypassing the PAT overload protection **5.01 - 16**
Bypassing the radio connection **5.31 - 71**
Bypassing the seat contact button **4.05 - 4**
Bypassing track width monitoring **4.02 - 87**
Bypass of hoist limit switch **4.02 - 32**

C

Cable drum **5.70 - 23**
Calculating the required length of transitions on uphill / downhill slopes **4.10 - 4**
Calculation example **4.10 - 5**
Calculation examples **2.04 - 48**
California Proposition 65 **0.01 - 1**
Calling up / closing the system screen **5.31 - 17**
Calling up / masking the crane operation monitoring functions **4.02 - 36**
Calling up the diesel particle filter load condition **4.03 - 6**
Calling up the service system **7.01.10 - 2**
Calling up the Working range limitation program **4.02 - 74**
Camera **5.70 - 1**, **5.70 - 23**
Camera on the auxiliary boom - one cable drum **5.70 - 19**
Camera on the auxiliary boom - two cable drums **5.70 - 19**
Camera on the telescopic boom **5.70 - 18**
Carrier for central ballast **8.01 - 19**
Carrying out crane movement via master switches **6.25 - 27**
Carrying out erection procedures **4.20 - 51**
Carrying out take down procedures **4.20 - 53**
Carrying out the assembly procedures **4.20 - 55**
Carrying out the crane movement **6.25 - 21**
Carrying out the erection / take down procedures **4.20 - 49**
Carrying the setting out **4.02 - 83**
Catch bar-plus system **4.04 - 19**, **5.02 - 3**
Catch bar system **4.04 - 18**
CE marking **0.01 - 6**
Center of gravity display on the LICCON monitor **4.10 - 7**
Center of gravity of the counterweight **2.05 - 49**
Center pivot plate **8.01 - 79**
Central ballast **1.02 - 2**, **3.03 - 1**
Central lubrication system **4.03 - 3**, **7.04 - 19**, **7.05 - 37**
Chain bushing **7.04 - 32**
Chain length (4 links), chain pitch **7.04 - 32**
Chain link **7.04 - 32**
Change confirmation form **90.05 - 3**

LWE/LTR 1100-009/25105-02-02/en

copyright © Liebherr-Werk Ehingen GmbH 2023

Change to the operating instructions **90.01 - 3**
Changing over the mechanical folding jib from 0° to 20° or 40° **5.02 - 37**
Changing over the mechanical folding jib from 20° or 40° to 0° **5.02 - 67**
Changing the angle with the folding jib supported **5.02 - 45**
Changing the angle with the hoist rope **5.02 - 41**, **5.02 - 71**
Changing the angle with the hook block or load hook **5.02 - 49**
Changing the coolant **7.05 - 9**
Changing the engine oil and replacing the oil filter **7.05 - 5**
Changing the folding jib by supporting it. **5.02 - 43**, **5.02 - 73**
Changing the folding jib with the hoist rope **5.02 - 39**, **5.02 - 69**
Changing the folding jib with the hook block or load hook **5.02 - 47**, **5.02 - 75**
Changing the gear oil **7.05 - 45**
Changing the master switch assignment **4.05 - 10**
Changing the set up configuration **4.03 - 29**
Charge air temperature individual control display **4.02 - 45**
Charging a battery with the Liebherr charger **7.05 - 91**
Chart for determining the theoretically remaining service life **8.03 - 11**
Checking for broken strands **8.04 - 10**
Checking for corrosion **7.05 - 77**
Checking for damage and cracks **7.05 - 68**, **8.01 - 96**
Checking for flattenings **7.05 - 77**
Checking for leaks **7.04 - 27**
Checking for solid foreign substances **8.03 - 4**
Checking for wear **7.04 - 30**
Checking for wear and distortion **7.05 - 76**
Checking of rope pretension on telescopic booms, illustration 1 **8.01 - 93**
Checking the air heater **7.05 - 86**
Checking the batteries **7.05 - 90**
Checking the bearing for easy movement **7.05 - 69**
Checking the bearings for easy movement **8.01 - 98**
Checking the breather / vent filter **7.05 - 32**
Checking the chain tension **7.04 - 29**, **7.05 - 47**
Checking the condition of the belt drive **7.05 - 4**
Checking the connection type **5.31 - 17**
Checking the coolant level **7.04 - 4**, **7.05 - 6**
Checking the counterweight **4.07 - 2**
Checking the counterweight plates **4.07 - 8**
Checking the crane **2.04 - 59**
Checking the depth of the lead-in tracks **8.01 - 97**
Checking the double hook for damage **8.05 - 5**
Checking the electrical connections **5.02 - 59**, **5.12 - 23**, **5.70 - 29**, **5.75 - 10**, **5.80 - 4**
Checking the end of the service life **8.06 - 3**
Checking the exhaust system for leaks and damage **7.04 - 11**, **7.05 - 24**
Checking the expansion of the hook jaw **8.05 - 3**
Checking the fill level in the expansion tank **7.04 - 43**
Checking the fill level of the cleaning fluid **7.04 - 45**
Checking the fill level of the fuel container **7.04 - 41**
Checking the fill level of the fuel container * **6.02 - 17**
Checking the fouling indicator on the pressure filter **7.04 - 18**
Checking the fouling indicator on the return filter **7.04 - 17**
Checking the fuel preliminary filter **7.04 - 8**
Checking the function **7.04 - 22**, **7.04 - 43**, **7.04 - 45**, **7.05 - 40**
Checking the function of the protective and rope routing devices **7.05 - 61**
Checking the gas pressure and oil fill before start up **8.01 - 96**
Checking the gear brakes **8.03 - 4**
Checking the gear oil level **7.04 - 27**
Checking the groove diameter **8.01 - 96**, **8.03 - 3**
Checking the heat flange **7.05 - 5**
Checking the hook body for wear **8.05 - 4**
Checking the hydraulic hose lines for damage **7.04 - 19**, **7.05 - 37**
Checking the hydraulic hose lines for leaks **7.04 - 19**, **7.05 - 37**
Checking the labeling **5.01 - 2**
Checking the load hook **8.05 - 2**
Checking the load hook for corrosion **8.05 - 5**
Checking the load hook for distortion **8.05 - 2**
Checking the load hook for surface cracks **8.05 - 3**
Checking the lubrication **7.05 - 76**
Checking the mounting screws **7.05 - 58**
Checking the mounting screws for damage **8.01 - 102**
Checking the multi layer spooling for distortions **7.05 - 78**
Checking the oil level **8.03 - 3**
Checking the oil level in the hydraulic tank **7.04 - 15**
Checking the oil level on the LICCON monitor **7.04 - 2**, **7.05 - 31**
Checking the oil level with the dipstick **7.04 - 39**, **7.05 - 3**
Checking the overflow container **7.05 - 58**
Checking the position of the rope **7.05 - 77**
Checking the pretension pressure of the hydro reservoir **7.05 - 36**
Checking the profile clamps **7.05 - 24**
Checking the retaining elements **5.01 - 22**, **8.05 - 6**
Checking the rope diameter **8.04 - 15**
Checking the rope drive for spooling problems **7.05 - 77**
Checking the rope end connection **8.04 - 15**
Checking the ropes **7.05 - 75**
Checking the safety measures **2.04 - 54**
Checking the safety ropes and anchor points **8.01 - 92**
Checking the steel structures **5.01 - 2**
Checking the tightening torque **8.01 - 98**
Checking the tightness of the mounting screws **8.01 - 101**

LWE/LTR 1100-009/25105-02-02/en

copyright © Liebherr-Werk Ehingen GmbH 2023

Checking the tightness of the protective and rope routing devices **7.05 - 60**
Checking the tilt play **8.01 - 101**
Checking the valve clearance **7.05 - 6**
Checking the water heater **7.05 - 86**, **7.05 - 87**
Checking the wind speed sensor **5.75 - 10**
Check list for the inspection of ladders and steps **8.17 - 4**
Checks before starting to work with the crane **4.08 - 4**
Check the concentration of the antifreeze in the coolant **7.05 - 8**
Check the fill level in the grease container **7.04 - 23**, **7.05 - 41**
Chemicals **2.04 - 2**
Cleaning the dust discharge valve **7.04 - 5**
Cleaning the water manifold **7.05 - 18**
Climate control **4.01 - 39**, **4.03 - 26**, **6.02 - 4**
Climate control button **4.01 - 40**
Climate control systems **6.02 - 3**
Climbing down from lattice sections or booms **2.04 - 27**
Climbing up and down the crane chassis **2.07 - 4**
Climbing up and down using the folding ladder **2.07 - 10**
Climbing up and down with the ladder **2.07 - 11**
Climbing up to the lattice sections or booms **2.04 - 27**
Closing the boom system (via the derrick boom) **5.01 - 91**
Closing the boom system (via the SA-frame) **5.01 - 88**
Closing the boom system - opening the boom system (via the derrick boom) **5.01 - 89**
Closing the boom system - opening the boom system (via the SA-frame) **5.01 - 86**
Closing the end section **5.01 - 44**
Closing the fixed lattice jib **5.01 - 49**
Closing the settings window **4.02 - 82**
Code calibration **5.31 - 7**
Combined degree of severity **8.04 - 26**
Comparison **4.02 - 3**
Component description **5.09 - 5**, **5.25 - 2**
Component overview **5.12 - 5**
Components of the supplied fall arrest system **2.04 - 22**
Compressed air supply **7.05 - 64**
Compressed air system **7.04 - 12**
Compressed air system * **7.05 - 28**
Connecting / disconnecting the supply **6.25 - 23**
Connecting and climbing up the leaning ladder **2.04.10 - 33**
Connecting the BTB and the BTT **5.31 - 7**
Connecting the electrical supply **6.25 - 25**
Connecting the hoist rope to the rope lock **4.06 - 17**
Connecting the hydraulic supply with an external auxiliary aggregate **6.25 - 23**
Connecting the supply lines **5.09 - 7**
Control **1.02 - 3**
Control bore auxiliary function * **4.06 - 31**
Control elements **4.01 - 9**, **4.01 - 10**
Control elements in the set up program **4.02 - 14**
Control floodlight * **5.31 - 63**
Control Floodlight * menu **5.31 - 61**
Control floodlight * menu icon explanation **5.31 - 62**
Controlling crane movements via master switches: Preselecting the crane movements for the master switch **6.25 - 13**
Control measures before crane operation **5.01 - 9**
Control panels **4.01 - 13**
Control platform **4.01 - 5**, **4.03 - 19**
Control release **4.04 - 17**
Conversion chart **0.01 - 14**
Conversion chart for wind force **2.04 - 62**
Coolant **4.03 - 3**
Coolant system **7.06 - 3**
Coolant temperature individual control display **4.02 - 45**
Cooling system **7.04 - 3**, **7.05 - 6**
Corkscrew-like distortion **7.05 - 73**, **8.04 - 20**
Corrosion **7.05 - 71**, **8.04 - 18**
Cotter pin **5.01 - 23**
Counterweight **1.02 - 4**, **4.07 - 1**
Counterweight and / or ballast **2.04 - 82**
Counterweight combinations **4.07 - 7**
Counterweight error message **4.07 - 25**
Crane **1.03 - 5**, **2.04 - 91**, **3.80 - 4**, **7.01 - 12**
Crane and crane components **2.04 - 37**
Crane and crane component transport **3.80 - 1**
Crane cab **2.04 - 28**, **2.06 - 10**, **4.03 - 23**
Crane cab auxiliary heater * **7.04 - 43**, **7.05 - 86**
Crane cab heating-air conditioner device **7.05 - 82**
Crane cab inside and outside **4.01 - 3**
Crane cab window washing system **7.04 - 45**
Crane cab with incline adjustment **2.04 - 35**
Crane cab with securing bracket **2.04 - 35**
Crane chassis **8.01 - 7**
Crane chassis diesel engine **7.01.10 - 4**
Crane chassis walking surfaces and stepping surfaces **2.07 - 14**
Crane components **1.01 - 3**
Crane condition **4.03 - 5**
Crane control emergency control **6.25 - 2**
Crane data **1.03 - 6**
Crane documentation **0.01 - 3**
Crane drive **1.02 - 3**
Crane driver's seat Version 1 **4.03 - 12**
Crane driver's seat Version 2 **4.03 - 17**
Crane driver’s cab **1.02 - 4**
Crane geometry and load information **4.02 - 16**
Crane geometry quick test **4.04 - 3**
Crane grounding **2.04 - 56**
Crane incline **4.02 - 52**
Crane in operation **2.04 - 12**
Crane movement with danger of tipping to the rear shut-off **4.20 - 26**
Crane on floating body **2.25 - 1**

LWE/LTR 1100-009/25105-02-02/en

copyright © Liebherr-Werk Ehingen GmbH 2023

Crane operation **2.04 - 79**, **2.08 - 7**, **4.05 - 1**, **4.08 - 18**, **5.12 - 3**
Crane operation in case of thunderstorms **2.04 - 58**
Crane operation monitoring functions **4.02 - 33**
Crane operation program **4.02 - 15**
Crane operation with a load **2.04 - 80**
Crane operation with auxiliary pulley * **4.06 - 39**
Crane operator **7.02 - 3**
Crane operator's cab heater / engine preheating / air conditioning system **6.02 - 1**
Crane operator (crane driver) **2.04 - 7**
Crane operator maintenance tasks **7.04 - 1**
Crane out of service **2.04 - 13**
Crane rope pretension **4.08 - 20**
Crane ropes **7.05 - 69**, **8.04 - 3**
Crane speeds **1.03 - 7**
Crane superstructure **1.01 - 5**, **1.02 - 2**, **8.01 - 35**
Crane superstructure diesel engine **7.01.10 - 4**
Crane superstructure hours and crane superstructure days maintenance status **7.02 - 23**
Cranes with a telescopic boom **2.08 - 6**, **2.08 - 7**
Cranes with cam limit switch **5.01 - 3**
Cranes with electric mode **0.01 - 12**
Cranes with lattice mast boom **2.08 - 5**, **2.08 - 7**
Cranes with winch speed sensor **5.01 - 3**
Crane transport on floating devices **2.25 - 3**
Crawler carrier **8.01 - 20**
Crawler carrier assembly **3.01 - 1**
Crawler carrier in an incorrect position **4.02 - 84**, **4.02 - 86**
Crawler center section **8.01 - 10**
Crawler chain **7.04 - 29**, **7.05 - 47**
Crawler crane in crawler operation **4.10 - 20**
Crawler travel gear **1.01 - 3**, **1.02 - 2**, **4.02 - 54**
Crawler travel gear hours and crawler travel gear days maintenance status. **7.02 - 19**
Crawler travel gear menu **5.31 - 21**
Creeper gear or very slow movement **2.04 - 70**
Cross beams for platform ladder **2.04.10 - 15**
Cross carrier **8.01 - 16**
Current inspection checklist **8.04 - 31**
Customer information **90.05 - 4**
Cylinders **7.01 - 13**

D

Damage to the rope **7.05 - 70**
Damage to the rope end connection **7.05 - 70**
Danger of crushing **4.08 - 19**
Danger of falling **4.08 - 19**
Dangers on the crane **2.04 - 2**
Danger zone of the crane **2.04 - 12**
Data logger **0.01 - 2**
Data tag **0.01 - 5**
Deactivating the bypass at crawler assembly and crawler disassembly **5.01 - 39**
Decommissioning **7.01 - 14**
Defect during track width monitoring **4.02 - 85**, **4.02 - 86**
Definition of directional data for crawler cranes **0.01 - 13**
Definition of directional data for mobile cranes **0.01 - 13**
Definition of roles **2.04 - 5**
Defrosting the window **6.02 - 13**
Degree of severity **8.04 - 8**
Derrick ballast - suspended ballast **2.04 - 83**
Description **1.03.10 - 2**, **4.05 - 2**, **4.07 - 5**, **5.02 - 7**, **5.75 - 2**, **7.01.10 - 2**
Description of acoustic / visual warnings **4.20 - 11**
Description of intervals and tasks **7.01 - 3**
Description of test points **8.01 - 6**
Description using the example LR 1600-2, SL3F **4.08 - 22**
Destruction of a glass pane **2.04 - 36**
Detachable rope end connection **8.04 - 15**
Detaching / attaching the hook block on the fastening point **5.31 - 61**
Detaching the hook block **4.03 - 38**
Detent pin **5.01 - 26**
Determining the effective operating hours Ti **8.03 - 8**
Determining the exact charge condition of the rechargeable battery **5.31 - 17**
Determining the number of broken wires **8.04 - 10**
Determining the operating conditions (load spectrum) **8.03 - 6**
Determining the used proportion of the theoretical service life **8.03 - 8**
Diagnostics and troubleshooting **7.04 - 25**, **7.05 - 43**
Did an error message appear? **5.31 - 69**
Diesel engine **7.04 - 2**, **7.05 - 3**, **7.06 - 3**
Diesel engine exhaust emissions **2.04 - 2**
Diesel particle filter (DPF) * **4.03 - 6**
Diesel particle filter (DPF)* maintenance status **7.02 - 13**
Diesel particle filter individual control display **4.02 - 44**
Dimensions **1.03 - 5**
Disabling automatic regeneration of the diesel particle filter **4.03 - 8**
Disassembling **4.07 - 28**, **5.09 - 9**, **5.25 - 5**
Disassembling boom systems on ascending terrain **5.01 - 81**
Disassembling boom systems on descending terrain **5.01 - 85**
Disassembling lattice sections **5.01 - 71**
Disassembling the adapter on the wedge lock **4.06 - 37**
Disassembling the auxiliary weights **5.19 - 13**, **5.19 - 16**, **5.19 - 22**
Disassembling the cable drum **5.70 - 31**
Disassembling the camera **5.70 - 30**
Disassembling the catch bar on the telescopic boom pivot section **5.12 - 9**
Disassembling the central ballast **3.03 - 9**
Disassembling the central ballast, illustration 3 **3.01 - 69**

LWE/LTR 1100-009/25105-02-02/en

copyright © Liebherr-Werk Ehingen GmbH 2023

Disassembling the crane **3.01 - 50**
Disassembling the crawler carriers **3.01 - 67**
Disassembling the double folding jib carried on the crane **5.02 - 89**
Disassembling the end section **5.02 - 89**
Disassembling the first crawler carrier **3.01 - 67**
Disassembling the floodlight **5.80 - 4**
Disassembling the folding jib **5.02 - 81**
Disassembling the lattice sections on a luffing lattice jib **5.01 - 59**
Disassembling the lattice sections on an auxiliary boom with an auxiliary crane **5.01 - 63**
Disassembling the lattice sections on an auxiliary boom without an auxiliary crane **5.01 - 67**
Disassembling the load hook **4.06 - 20**
Disassembling the pivot section **5.02 - 91**
Disassembling the replacement ballast **5.09 - 7**
Disassembling the second crawler carrier, illustration 2 **3.01 - 69**
Disassembling the separately transported folding jib **5.02 - 95**
Disassembling the separately transported special folding jib **5.12 - 37**
Disassembling the single folding jib carried along on the crane **5.02 - 85**
Disassembling the special folding jib **5.12 - 29**
Disassembling the telescopic boom extension **5.25 - 6**
Disassembling the wedge lock **4.06 - 38**
Disassembling the wind speed sensor **5.75 - 10**
Disassembling the wind speed sensor in the transport position **5.75 - 3**
Disassembling winch 2 * **5.09 - 9**
Disassembly **5.10 - 11**
Disconnecting the electrical connections **5.12 - 33**, **5.70 - 30**
Disengage the coupling control **4.03 - 31**
Disengaging / engaging the coupling control on the pump distributor gear **4.03 - 30**
Disk wheels **8.01 - 32**
Dismantling the platform ladder **2.04.10 - 18**
Display / operating element BTT **5.31 - 3**
Display * **4.01 - 41**
Display areas in the Set up program **4.02 - 8**
Display areas in the Telescoping program **4.02 - 66**
Display areas of load chart values **4.02 - 9**
Display elements on the control element **7.04 - 21**, **7.05 - 39**
Display for surface pressure and inclination on the LICCON monitor **4.10 - 8**
Display for the inclination on the LICCON monitor **4.10 - 9**
Displaying the engine oil level **4.03 - 4**
Displaying the fuel reserve **4.03 - 3**
Displaying the hydraulic oil temperature **4.03 - 26**
Displaying the lubricants, operating fluids and fill levels on the LICCON monitor **4.03 - 3**
Displaying the set limit values **4.02 - 62**
Displaying the settings window **4.02 - 81**, **4.02 - 91**
Displaying the urea reserve **4.03 - 4**
Display in the crane cab **7.04 - 20**, **7.05 - 38**
Displays **4.01 - 41**
Displays ECO-Mode in settings window **4.02 - 89**
Displays for center of gravity, surface pressure and incline on the LICCON monitor **4.10 - 6**
Display the diesel particle filter load condition (DPF) **4.03 - 4**
Disposing of the gear oil **7.04 - 40**
Disposing of the machine **7.01 - 15**
Distortions and mechanical damage **8.04 - 8**
Distribution of the surface pressure **4.10 - 13**
Divisible hook block * **5.19 - 6**
Documentation of rope condition **7.05 - 76**
Documenting inspection results **8.04 - 5**
Documenting the completed inspection **8.03 - 4**
Documenting the inspection **8.06 - 5**
Dolly console **8.01 - 60**
Do the displays remain dark? **5.31 - 70**
Double cone pin **5.02 - 3**, **5.12 - 2**
Double folding jib, see illustration 3 and 4 **5.02 - 7**
Double folding jib, see illustration 7 **5.02 - 11**
Double folding jib, see illustration 8 **5.02 - 11**
DPF filter element change interval **7.01.10 - 6**
Draining the coolant **7.05 - 9**
Draining the fuel preliminary filter **7.04 - 8**
Draining the sediment in the fuel tank **7.05 - 19**
Draining water from the compressed air tank **7.04 - 12**
Driver's cab and crane cab **7.01 - 11**
Driving / swinging in the specified direction **2.04 - 72**
Driving forward **4.10 - 33**, **4.10 - 39**
Driving from the crane cab **4.10 - 1**
Driving in curves forward to the left **4.10 - 35**, **4.10 - 41**
Driving in curves forward to the right **4.10 - 35**, **4.10 - 41**
Driving in curves in reverse to the left **4.10 - 35**, **4.10 - 41**
Driving in curves in reverse to the right **4.10 - 35**, **4.10 - 43**
Driving in reverse **4.10 - 33**, **4.10 - 39**
Driving out the transport vehicle **3.01 - 25**
Driving the crane: Load chart available **4.10 - 15**
Driving the crane: No load chart is available **4.10 - 17**
Driving the crane on / off the transport vehicle **3.80 - 9**
Driving the crawler crane in normal travel **4.10 - 33**
Driving the crawler crane in parallel travel **4.10 - 39**
Driving the outrigger pad in the cross direction over a cavity with a crawler crane **1.03.10 - 33**
Driving the outrigger pad in the cross direction with a crawler crane **1.03.10 - 29**, **1.03.10 - 32**
Driving uphill / downhill **4.10 - 18**
Driving uphill / downhill by adjusting the angle of the boom system **4.10 - 19**
Driving with a load on the hook **4.10 - 16**
Driving with an extremely reduced load **2.04 - 78**
Driving with a reduced load **2.04 - 78**

LWE/LTR 1100-009/25105-02-02/en

copyright © Liebherr-Werk Ehingen GmbH 2023

Driving with a trailer **2.04 - 78**
Driving without a load on the hook **4.10 - 17**

E

EAC marking **0.01 - 6**
ECO-Mode **4.02 - 88**
ECO-Mode inactive **4.02 - 93**
ECO-Mode in crane operating screen displays **4.02 - 90**
Editing the speed reduction **4.02 - 81**
Effects of heat, arcs **7.05 - 75**, **8.04 - 26**
Electrical connection **5.75 - 10**, **5.80 - 3**
Electrical connections **5.02 - 57**
Electrical connections on the special folding jib **5.12 - 23**
Electrical system **1.02 - 4**, **7.05 - 88**
Emergency control **6.25 - 1**
Emergency crane cab exit **2.04 - 16**
Emergency exit - driver's cab **2.04 - 16**
Emergency exit through an open door **2.04 - 16**
Emergency exit through the open cab door **2.04 - 17**
Emergency exit through the open front window **2.04 - 17**
Emergency exit through the roof window with emergency release **2.04 - 18**
Emergency exit through the side window with emergency release **2.04 - 20**
Emergency hammer * **2.04 - 36**
EMERGENCY OFF switch **4.04 - 16**
Emergency operation LICCON overload protection (EN 13000:2010 active) **4.02 - 31**
Emergency release on the window handle **2.04 - 18**
Emergency situations **4.20 - 5**
Emergency stop (quick stop) **2.04 - 70**
Endangering air traffic **2.04 - 13**
Ending crane operation **2.04 - 87**
Ending emergency control **6.25 - 35**
Ending operation, no longer follow my instructions **2.04 - 70**
End-pivot section **8.01 - 84**
End section **8.01 - 63**, **8.01 - 85**
End section folding jib **5.02 - 4**
Engaging the coupling control **4.03 - 31**
Engaging the rapid gear **4.05 - 7**
Engine **1.02 - 2**, **4.03 - 2**
Engine monitoring functions **5.31 - 31**
Engine oil change interval **7.01.10 - 5**
Engine oil level individual control display **4.02 - 43**
Engine oil maintenance status **7.02 - 11**
Engine oil pressure individual control display **4.02 - 46**
Engine operation menu **5.31 - 27**
Engine preheating **2.08 - 4**
Engine preheating auxiliary heater * **7.04 - 40**, **7.05 - 87**
Engine regulation **4.10 - 23**
Engine rpm **4.05 - 7**
Engine type D 944 A7-03 **1.02 - 3**
Engine type D 944 A7-04 **1.02 - 3**
Engine type D 944 A7-05 **1.02 - 3**
Enlarged rope end connection **8.04 - 15**
Entering and exiting the crane cab **2.07 - 12**
Entering the maximum permissible surface pressure **4.10 - 9**
Environmental / component temperature below -20°C **2.08 - 3**
Equipment **5.01 - 2**, **8.01 - 70**
Equipment and spare parts **0.01 - 13**
Equipment designation **1.01 - 7**
Erecting **5.02 - 63**, **5.12 - 27**
Erecting / taking-down **5.01 - 93**
Erecting / taking down with crawler cranes **5.01 - 95**
Erecting / taking down with mobile cranes **5.01 - 94**
Erection procedure **5.02 - 63**, **5.12 - 27**
Error messages **4.02 - 3**
Establishing an electrical connection for ballast monitoring **4.07 - 22**
Establishing the electrical connection **5.75 - 10**, **5.80 - 4**
Establishing the electrical connections **5.70 - 18**
Establishing the electrical connections on the double folding jib **5.02 - 59**
Establishing the electrical connections on the single folding jib **5.02 - 57**
Establishing the electrical connections on the special folding jib **5.12 - 23**
Establishing the electrical connections to the wind speed sensor and airplane warning light **5.02 - 57**, **5.02 - 59**
Establishing the hydraulic connections **5.02 - 51**
Establishing the hydraulic connections, illustration 9 **3.01 - 47**
EU Declaration of Conformity **0.01 - 6**
Evaluating oil color **8.03 - 3**
Even reduction of the rope diameter **8.04 - 15**
Example **8.03 - 9**
Example of a crane on crawler with derrick boom, suspended ballast and short (main) boom system **2.04 - 50**
Example of crane on crawler with derrick boom, suspended ballast and long (main) boom system **2.04 - 50**
Example of crane on supports **2.04 - 51**
Examples for the distribution of surface pressure **4.10 - 13**
Examples of test points **8.01 - 6**
Examples of the load bearing capacity of the ground **2.04 - 48**
Exceeding the shut off limits of the LICCON overload protection **4.02 - 31**
Exhaust system **7.01 - 11**
Exhaust system * **7.04 - 11**, **7.05 - 23**
Exhaust system cleaning procedure **4.03 - 11**
Extendible step * for cranes on tires **2.04 - 28**
Extending / retracting the crawler carrier **5.31 - 25**
Extending / retracting the crawler carrier **4.01 - 35**
Extending the boom **2.04 - 76**

LWE/LTR 1100-009/25105-02-02/en

copyright © Liebherr-Werk Ehingen GmbH 2023

Extending the crawler carrier **4.03.50 - 19**, **4.03.50 - 39**
Extending the crawler carrier on side „A“ **4.03.50 - 19**, **4.03.50 - 29**
Extending the crawler carrier on side „B“ **4.03.50 - 21**, **4.03.50 - 31**, **4.03.50 - 41**
Extending the crawler carriers from the crane operator's cab **4.03.50 - 19**
Extending the cross carrier **3.01 - 27**, **3.01 - 37**
Extending the cross carrier on side „A“ **3.01 - 28**, **3.01 - 33**
Extending the cross carrier on side „B“ **3.01 - 29**, **3.01 - 34**, **3.01 - 38**
Extending the cross carriers from the crane operator's cab **3.01 - 33**
Extending the cross carriers with the BlueTooth™ Terminal **3.01 - 27**
Extending the cross carriers with the radio remote control * **3.01 - 37**
Extending the support cylinders from the crane operator's cab **3.01 - 17**, **3.01 - 59**
Extending the support cylinders with the BlueTooth™ Terminal **3.01 - 13**, **3.01 - 55**
Extending the support cylinders with the radio remote control * **3.01 - 21**, **3.01 - 63**
Extending the track width with the Bluetooth Terminal **4.03.50 - 27**
Extending the track width with the radio remote control * **4.03.50 - 37**
Extension **5.70 - 24**
Extension ladder **2.04.10 - 24**
External corrosion **8.04 - 18**
Eyehook fastening point **5.01 - 34**

F

Failure of components **4.20 - 5**
Failure of sensor / limit switch **4.02 - 24**
Failure of the overload protection **4.04 - 5**
Fall protection equipment **7.05 - 2**
Fall protection equipment on the crane **2.06 - 1**
Fan * **4.03 - 18**
Fan stage **4.01 - 41**
Fastening **2.04 - 40**
Fastening device **2.04 - 91**
Fastening multiple outrigger pads with a chain **1.03.10 - 7**
Fastening multiple outrigger pads with a round sling **1.03.10 - 6**
Fastening of guy rods **5.01 - 37**
Fastening point **5.10 - 3**
Fastening points **5.02 - 9**, **5.12 - 5**
Fastening positions for assembly / disassembly of the lattice jib **5.01 - 43**
Fastening system 1 **5.19 - 11**
Fastening system 2 **5.19 - 14**
Fastening system 3 **5.19 - 17**
Fastening the fiber guy ropes **5.01 - 7**
Fastening the hook block **5.31 - 59**
Fastening the individual outrigger pad **1.03.10 - 5**
Fastening the lattice sections **5.01 - 34**, **5.01 - 36**
Fastening the load **4.08 - 7**
Fastening the multiple outrigger pads **1.03.10 - 6**
Fastening the outrigger pad **1.03.10 - 5**
Fiber guy ropes **2.04 - 38**, **5.01 - 4**
Filling up the coolant **7.05 - 11**
Fill quantities **7.06 - 3**
Fill quantities, lubrication chart **7.06 - 1**
Filter strainer Variation 1 **7.05 - 22**
Filter strainer Variation 2 **7.05 - 23**
First aid measures after rescue **2.04 - 28**
First inspection (first year) **8.03 - 10**
Fixed lattice jib **4.12 - 6**, **4.12 - 18**
Fixed slewing gear **4.05 - 20**
Flattening **7.05 - 72**
Flattenings **8.04 - 26**
Floating device **2.25 - 2**
Floating device, not supported **2.25 - 3**
Floating device, supported **2.25 - 3**
Floodlight **5.80 - 1**
Flying assembly / disassembly of lattice sections **5.01 - 73**
Flying assembly of lattice sections **5.01 - 73**
Flying disassembly of lattice sections **5.01 - 75**
Folding cross beam **2.04.10 - 15**
Folding in the transport retainers, illustration 1 **3.01 - 69**
Folding in the transport retainers, illustration 7 **3.01 - 47**
Folding jib **1.01 - 7**, **1.02 - 4**, **2.06 - 7**, **4.12 - 5**, **4.12 - 15**, **8.01 - 75**
Folding jib / fixed lattice jib / strong lattice jib hoist rope guide **4.06 - 4**
Folding jib (TK) * **1.01 - 7**
Folding jib hook points **2.06 - 8**
Folding jibs from other crane types **5.02 - 4**
Folding jib - TK **5.02 - 1**
Folding jib variations **5.02 - 7**
Folding jib with angle sensor **5.02 - 60**
Folding jib with hydraulic * angle adjustment **5.02 - 65**
Folding jib without angle sensor **5.02 - 60**
Folding ladder **2.07 - 7**
Folding ladder in the operating position **2.07 - 8**
Folding rope guard **5.19 - 4**
Folding the camera into the operating position **5.70 - 32**
Folding the camera into the transport position **5.70 - 33**
Folding the camera on the winch **5.70 - 32**
Folding the control helm **4.03 - 19**
Folding the rope pulley into operating position, illustrations 3 and 4 **5.10 - 7**
Folding the rope pulley to transport position, illustrations 5 and 6 **5.10 - 11**
Folding the special folding jib into the operating position **5.12 - 17**

LWE/LTR 1100-009/25105-02-02/en

copyright © Liebherr-Werk Ehingen GmbH 2023

Folding the special folding jib into the transport position **5.12 - 33**
For ambient temperatures of -18°C and lower **4.03 - 33**
For an ambient temperature above -18°C **4.03 - 33**
For cranes with pneumatic boom locking system **8.01 - 89**
For cranes with the Telematik telescopic boom system **8.01 - 90**
Foreword **90.01 - 3**
Forms of transport **3.80 - 3**
Frame **1.02 - 2**, **1.02 - 2**, **8.01 - 82**
Freely rotating slewing gear **4.05 - 20**
Friction corrosion **8.04 - 20**
Fuel reserve individual control display **4.02 - 42**
Fuel system **7.04 - 6**, **7.05 - 13**
Function check **5.10 - 9**
Function key line: Manual telescoping **4.02 - 71**
Function key line: Telescoping automatic operation **4.02 - 70**
Function key line (crane operation) **4.02 - 59**
Function key line (Set up) **4.02 - 11**
Function key line (working range limitation) **4.02 - 77**
Function key line (working range limitation) for variation V1 **4.02 - 77**
Function key line (working range limitation) for variation V2 **4.02 - 78**
Function keys in assembly functions menu **5.31 - 53**
Function keys in the crawler travel gear menu **5.31 - 23**
Function keys in the support menu **5.31 - 41**
Function keys in the „Test system“ menu **5.31 - 65**
Function keys Menu Control Floodlight * **5.31 - 62**
Further procedure **5.01 - 52**
Further protective equipment **2.04 - 25**

G

Gamma - γ angle **5.70 - 28**
Gas pressure spring emergency release **2.04 - 19**
General controls before crane operation **5.01 - 9**
General information **8.01 - 2**
General information line **4.02 - 8**
General information regarding the BTT **5.31 - 9**
General notes for assembly **4.06 - 30**
General notes regarding the acoustic / optical warnings to the surrounding crane area **4.20 - 9**
Giving a warning signal **4.05 - 4**
Gravity actuated relapse retainer **4.04 - 20**
Grease sprayer **7.05 - 62**
Grommets and cable laid fastening rope **5.01 - 42**, **8.01 - 95**
Ground connection **1.01 - 8**
Grounding for potential equalization **2.04 - 55**
Grounding the load **2.04 - 56**
Guide **2.04 - 9**, **8.01 - 80**
Guiding crane structures, lattice sections or crane components **5.01 - 33**
Guiding the load **4.08 - 18**
Guying the pivot section in flying mode with the derrick boom **5.01 - 77**
Guying the pivot section in flying mode with the SA-frame **5.01 - 75**
Guy rod **8.01 - 86**
Guy rods **5.01 - 13**, **8.01 - 65**
Guy rods for telescopic cranes with luffing lattice jib **5.01 - 13**
Guy rod transport retainer during assembly **5.01 - 50**
Guy rod transport retainer during disassembly **5.01 - 52**

H

Hand signals **2.04 - 69**
Hand signals for guidance **2.04 - 69**
Heated crane components **2.04 - 4**
Heater / climate control **4.03 - 16**, **4.03 - 16**
Heater / climate control indicator light **4.03 - 16**
Heater / fan stages **4.03 - 16**
Heater control unit operating elements **6.02 - 5**
Height adjustment **4.03 - 15**, **4.03 - 18**
Height-dependent wind speed **2.04 - 63**
High pressure cleaner **7.01 - 9**
Hinged ladders **2.04.10 - 19**
Hoist gear, hoist rope **2.04 - 84**
Hoist gear 1 **1.02 - 3**
Hoist gear 2 **1.02 - 5**, **5.09 - 1**
Hoist gear 2 replacement ballast **1.02 - 3**
Hoist limit switch **4.02 - 25**, **5.02 - 59**, **5.10 - 9**, **5.12 - 23**
Hoist limit switch quick test **4.04 - 11**
Hoist rope **4.06 - 7**
Hoist rope guide for operation with luffing lattice jib **4.06 - 5**
Hoist rope guide for telescopic boom operation **4.06 - 3**
Hoist rope guide with one hoist rope **4.06 - 4**
Hoist rope guide with two hoist ropes **4.06 - 4**
Hoist rope length **4.08 - 15**
Hoist rope lug * **4.06 - 3**
Hoist top shut-off **4.20 - 26**
Holding the luffing lattice jib **5.01 - 47**
Hook base **8.05 - 4**
Hook block **4.03 - 36**, **4.06 - 16**
Hook block / load hook fastening points **5.19 - 3**
Hook blocks **5.19 - 1**
Hook jaw **8.05 - 2**
Hook operation **4.12 - 7**
Hook operation depending on the load **4.12 - 9**
Hook points **2.06 - 3**, **2.06 - 5**, **2.06 - 6**, **2.06 - 10**, **2.06 - 13**, **2.06 - 26**
Hook shaft **8.05 - 2**
Horizontal adjustment **4.03 - 12**, **4.03 - 17**
Horizontal movements **2.04 - 72**
Horn **4.03 - 25**
Horn warning sound **4.02 - 29**
Hydraulically adjustable auxiliary boom **2.04 - 84**

LWE/LTR 1100-009/25105-02-02/en

copyright © Liebherr-Werk Ehingen GmbH 2023

Hydraulically adjustable folding jib (TNZK) * **1.01 - 7**
Hydraulic connections **5.02 - 51**
Hydraulic hose lines **7.04 - 18**, **7.05 - 36**
Hydraulic oil, diesel fuel, operating fluids **2.04 - 4**
Hydraulic oil level individual control display **4.02 - 44**
Hydraulic oil preheating * **4.03 - 26**
Hydraulic oil temperature individual control display **4.02 - 46**
Hydraulic safety valves **4.04 - 19**
Hydraulic system **7.04 - 12**, **7.05 - 29**, **7.06 - 4**
Hydraulic tank **4.03 - 2**
Hydraulic track width adjustment **1.02 - 2**

I

Icon explanation in assembly function menu **5.31 - 51**
Icon explanation in engine operation menu **5.31 - 27**
Icon explanation in support menu **5.31 - 39**
Icon explanation in the crawler travel gear menu **5.31 - 21**
Icon explanation Start screen BTT **5.31 - 11**
Icons for setting the slewing gear operating mode **4.02 - 83**
Icons in the Ballasting menu **5.31 - 46**
Identification of sliding beam **2.05 - 47**
Identification of track width retracted **2.05 - 48**
Identifications on auxiliary weights **2.05.10 - 5**
Identifications on auxiliary weights at delivery **2.05.10 - 5**
Identifications on auxiliary weights for reorder **2.05.10 - 6**
Identifications on single hook or double hook **2.05.10 - 4**
Identifications on the hook block or load hook **2.05.10 - 3**
Identifying the fiber guy rope **5.01 - 5**
Identifying the manufacturing method **8.05 - 2**
Idler **7.04 - 33**
Illustrations **6.25 - 5**
Impact protection **5.01 - 19**
Importance of inspection **8.04 - 3**
Important check before swinging out the hydraulic folding jibs (TNZK operation) **5.02 - 15**
Important information about the BTT **5.31 - 5**
Improper mechanical damage **8.04 - 27**
Incline adjustment **4.03 - 14**, **4.03 - 17**
Increased corrosion **2.25 - 4**
Increasing air distribution in the foot area **6.02 - 13**
Increasing air distribution in the head area **6.02 - 12**
Increasing the hook block weight **2.08 - 7**, **4.08 - 24**
Increasing the reeving number **4.08 - 24**
Indicator lights **4.03 - 35**
Indicator lights on the BKE „652“ **4.01 - 45**
Individual control display of the hydraulic oil temperature, hydraulic circuit 1 **4.02 - 46**
Individual control display of the hydraulic oil temperature, hydraulic circuit 2 **4.02 - 46**
Individual control display of the torque converter temperature **4.02 - 47**
Individual control display of the transmission temperature **4.02 - 45**
Information for the REACH regulation of the European Union **0.01 - 10**
Inner and outer gliding surfaces: Checking the lubrication condition **7.04 - 37**
Inner pipe **8.01 - 81**
Inserting and unpinning the collar pins **5.01 - 18**
Inserting and unpinning the double cone pins horizontally **5.01 - 18**
Inserting and unpinning the double cone pins vertically **5.01 - 19**
Inspecting before start up **2.04 - 89**
Inspecting load bearing crane structures, especially steel structures **8.01 - 4**
Inspecting of fastening equipment **8.01 - 94**
Inspecting of winches **8.03 - 1**
Inspecting the carrier rollers **8.01 - 97**
Inspecting the change over pulleys, illustration 2 **8.01 - 104**
Inspecting the extension conditions of sliding beams **8.01 - 98**
Inspecting the function of the overload protection **8.01 - 100**
Inspecting the hoist and retracting winches **8.03 - 3**
Inspecting the hydraulic hose lines for damage **8.06 - 4**
Inspecting the hydraulic hose lines for leaks **8.06 - 5**
Inspecting the hydro reservoir **8.01 - 95**
Inspecting the inclination sensor **8.01 - 99**
Inspecting the ladders **8.17 - 3**
Inspecting the lattice sections **8.01 - 88**
Inspecting the load handling equipment and assembly aids **8.01 - 94**
Inspecting the locking system of the telescopic boom **8.01 - 89**
Inspecting the mounting of the load bearing equipment **8.01 - 101**
Inspecting the oil and fuel tanks **8.01 - 104**
Inspecting the pin connections **8.01 - 100**
Inspecting the relapse cylinders **8.01 - 95**
Inspecting the rigging points and fastening points **8.01 - 87**
Inspecting the rope pretension on lattice sections, illustration 2 **8.01 - 93**
Inspecting the rope pulleys **8.01 - 96**
Inspecting the safety controls on the relapse cylinders **8.01 - 96**
Inspecting the slewing ring connection **8.01 - 101**
Inspecting the tele extension with eccentric, illustration 1 **8.01 - 103**
Inspection chart for cranes **8.90 - 1**
Inspection chart for recurring inspections of Liebherr cranes **8.90 - 3**
Inspection form for the inspection of ladders and steps **8.17 - 4**

LWE/LTR 1100-009/25105-02-02/en

copyright © Liebherr-Werk Ehingen GmbH 2023

Inspection intervals **8.03 - 3**, **8.05 - 2**, **8.06 - 3**, **8.17 - 3**
Inspection of crane wire ropes **8.04 - 1**
Inspection of hydraulic hose lines **8.06 - 1**
Inspection of ladders **8.17 - 1**
Inspection of load hooks **8.05 - 1**
Inspection of the auxiliary reeving winch, recovery winch and spare wheel winch **8.03 - 5**
Inspection of the screws in the adjustment plates **8.01 - 91**
Inspection personnel qualification **8.04 - 3**
Inspection plan **8.01.10 - 1**
Inspections **4.03 - 2**
Inspection sheet and check list **8.17 - 3**
Installing the AT filter module **7.05 - 25**
Installing the boom nose on the telescopic boom, illustration 1 **5.10 - 5**
Installing the divisible hook block **5.19 - 7**
Instructions for proper handling **5.01 - 6**
Instructions for resuming crane movement **4.20 - 19**
Instructions to personnel **2.04 - 11**
Integrated pneumatic system (IPS) **4.03 - 13**
Intended use **0.01 - 11**, **2.04 - 87**, **2.04 - 89**, **2.04.10 - 2**, **2.25 - 2**
Intermediate frame **8.01 - 14**
Internal corrosion **8.04 - 20**
Interrupting crane operation **2.04 - 84**
Intervals **7.05 - 76**, **8.04 - 4**
Is the radio connection faulty? **5.31 - 70**

J

Jack-up cylinder **1.02 - 5**
Jib boom **1.02 - 4**
Job planning **2.03 - 1**

K

Kinking, rope loops (grommets) pulled closed **7.05 - 74**
Kinking or rope loops pulled closed **8.04 - 24**

L

Labeling of the load carriers **2.05.10 - 1**
Ladder **5.02 - 3**, **5.12 - 2**
Ladder access **2.04.10 - 25**
Ladder categories **2.04.10 - 2**
Ladder inspection **2.04.10 - 12**
Ladders **2.04.10 - 1**, **7.01 - 11**
Ladder safeguards **2.04.10 - 25**
Latch **5.01 - 27**
Lattice jib **8.01 - 61**
Lattice sections **2.04 - 37**
Lattice section with walking surfaces and stepping surfaces **5.01 - 20**
Lead and lead compounds **2.04 - 3**
Leaving the crane, ending work with the crane **2.04 - 12**
Legal prerequisites **2.04 - 88**
Leveling instrument in the BTT **4.04 - 9**
Leveling instrument quick test **4.04 - 9**
Leveling instruments **4.04 - 9**
Leveling instruments in the LICCON monitor **4.04 - 9**
LICCON computer system **4.02 - 1**, **4.03 - 27**, **4.04 - 3**
LICCON job planner **2.04 - 49**
LICCON monitor at system start **4.02 - 4**
LICCON overload protection **4.04 - 3**
LICCON overload protection emergency operation (EN 13000:2010 not active) **4.02 - 32**
Liebherr Customer Service **7.01 - 7**
Lifting / lowering **4.05 - 12**
Lifting / lowering a load with even speed **2.04 - 71**
Lifting / lowering the hook (HOIST WINCH) crane movement **6.25 - 29**
Lifting / lowering the hydraulic folding jib * **5.31 - 57**
Lifting / lowering with winch 1 **4.05 - 13**
Lifting / lowering with winch 2 * **4.05 - 15**
Lifting a joint load **4.12 - 26**
Lifting a joint load solely with the auxiliary boom **4.12 - 26**
Lifting a joint load with two booms **4.12 - 28**
Lifting a load with two cranes **2.04 - 66**
Lifting heights **1.03 - 7**
Lifting of personnel **2.04 - 87**
Lifting slowly **2.04 - 71**
Lifting the boom **2.04 - 75**
Lifting the boom and lower the load at the same time **2.04 - 77**
Lifting the load **4.08 - 11**, **4.08 - 16**
Lifting with main winch **2.04 - 75**
Lifting with the auxiliary winch **2.04 - 75**
Light and / or heavy work **2.04.10 - 25**
Lightning: Protective measures for the crane and load **2.04 - 59**
Lights and fuses **7.05 - 88**
Limiting engine rpm in ECO-Mode **4.02 - 92**
Limit sign auxiliary boom / accessory **4.02 - 24**
Limit signs main boom **4.02 - 23**
Lines **7.05 - 88**
LMB emergency operation **4.01 - 9**
LMB emergency operation for crane control „EN 13000:2010 active“ **4.01 - 9**
Load bearing crane structures **2.08 - 7**
Load burdens on the ground on cranes on crawlers **2.04 - 47**
Load burdens on the ground on cranes on supports **2.04 - 47**
Load handling equipment **1.03 - 6**
Load hook **4.06 - 19**
Loading the crane onto an extra wide transport vehicle **3.01 - 81**
Loading the crane onto the transport vehicle, illustrations 4 and 5 **3.01 - 71**
Loading the crane with auxiliary cranes * **3.80 - 7**

LWE/LTR 1100-009/25105-02-02/en

copyright © Liebherr-Werk Ehingen GmbH 2023

Loading the preassembled lattice jib **5.01 - 50**
Loads on the ground **1.03.10 - 3**
Loads on the ground due to crane operation **2.04 - 47**
Load spectrum class: Heavy L3 **8.03 - 7**
Load spectrum class: Light L1 **8.03 - 6**
Load spectrum class: Medium L2 **8.03 - 7**
Load spectrum class: Very heavy L4 **8.03 - 8**
Load weighing **4.08 - 14**
Load weighing and load display **4.08 - 13**
Localized increase of rope diameter **7.05 - 71**
Localized increases of rope diameter **8.04 - 18**
Localized reduction of rope diameter **8.04 - 17**
Locking pin **5.01 - 25**
Locking the engine rpm **4.05 - 8**
Long guy rods **5.01 - 13**
Longitudinal platform **2.06 - 13**
Loop formation **7.05 - 74**, **8.04 - 23**
Lowering slowly **2.04 - 72**
Lowering the boom **2.04 - 76**
Lowering the boom and lift the load at the same time **2.04 - 77**
Lowering the crane **3.01 - 49**
Lowering the hook block **5.19 - 23**
Lowering the load **4.08 - 17**
Lowering the load while stationary **2.04 - 72**
Lubricating the gear ring and the slewing gear pinion **7.04 - 34**
Lubricating the inner gliding surfaces **7.05 - 66**
Lubricating the inner gliding surfaces before the end piece **7.05 - 64**
Lubricating the ladders **7.05 - 2**
Lubricating the locking pins **7.05 - 67**
Lubricating the outer gliding surfaces **7.05 - 65**
Lubricating the rope **7.05 - 78**
Lubricating the slewing ring connection **7.04 - 35**, **7.05 - 51**
Lubrication charts **7.05 - 62**
Lubrication cycle **7.04 - 22**, **7.05 - 40**
Lubrication schedule **7.06 - 4**
Luffing **4.05 - 10**
Luffing accessory limit switch **4.04 - 20**
Luffing gear **1.02 - 3**
Luffing in with a suspended load **4.20 - 35**
Luffing lattice jib **4.12 - 7**, **4.12 - 22**
Luffing the auxiliary boom / accessory up / down shut-off **4.20 - 22**
Luffing the boom crane movement (LUFFING) **6.25 - 33**
Luffing the boom down **5.19 - 23**
Luffing the hydraulic auxiliary boom * **4.05 - 12**
Luffing the telescopic boom **4.05 - 11**
Luffing the telescopic boom up / down shut-off **4.20 - 21**
Luffing with „hydraulic angle adjustment“ **5.02 - 65**

M

Machine related movements **2.04 - 75**
Main boom length **4.02 - 20**
Maintaining the battery charge **4.03 - 33**
Maintenance **2.08 - 7**, **7.01 - 14**
Maintenance and inspection schedule **7.02 - 1**
Maintenance and service - General **7.01 - 1**
Maintenance intervals **7.01 - 3**
Maintenance is due **7.01.10 - 5**
Maintenance personnel **7.02 - 11**
Maintenance personnel maintenance activities **7.05 - 1**
Maintenance status overview **7.01.10 - 4**
Maintenance technician **2.04 - 10**, **7.01 - 2**
Manual operation **6.02 - 9**
Manual rope winches **5.01 - 12**
Manual support **5.31 - 43**
Manufacturer **0.01 - 1**, **2.04 - 6**
Master switch **4.05 - 3**
Master switch assignment **4.05 - 10**
Master switch assignment for machines with one winch **4.01 - 15**
Master switch assignment for machines with two winches **4.01 - 21**
Maximum climbing ability **4.10 - 18**
Maximum load **4.02 - 17**
Maximum load according to load chart and reeving **4.02 - 3**
Maximum slewing speed **4.05 - 17**
Maximum sound power level **2.05 - 32**
Maximum value F-load display shut-off **4.20 - 27**
Maximum values of F-load display reached **4.20 - 57**
Measurement of wind speed **2.04 - 61**
Measures in case of problems **5.31 - 69**
Mechanically actuating the hoist limit switch, illustration X **5.02 - 57**, **5.12 - 23**
Menu Test system **5.31 - 65**
Minimum rope coils **5.01 - 3**
Minimum rope reeving / minimum hook block weight **2.05 - 50**
Mobile cranes **2.04 - 39**
Monitored auxiliary functions **4.02 - 51**
Monitoring by a designated person **2.04 - 7**
Monitoring functions **4.03 - 5**
Monitoring the surface pressure and center of gravity **4.02 - 47**
Monitoring the turning range **4.05 - 17**
Monitoring the winches **8.03 - 5**
Moveable back pulley * **4.06 - 6**
Movement on the crane **2.04 - 14**
Moving away from me **2.04 - 73**
Moving both track chains **2.04 - 73**
Moving one crawler chain **2.04 - 74**
Moving toward me **2.04 - 73**
Multi-purpose ladder with height adjustment **2.04.10 - 21**

N

NA/WA frame **8.01 - 62**
NA-frames **8.01 - 68**

LWE/LTR 1100-009/25105-02-02/en

copyright © Liebherr-Werk Ehingen GmbH 2023

Negative longitudinal inclination **4.10 - 19**
Noise emission **1.03 - 6**
No load chart is available **4.02 - 31**
Nominal dimensions when assembling the wedge lock **4.06 - 30**
Non-accessible surfaces **2.07 - 14**
Non-intended use **2.25 - 2**
Non-rotating rope end connection **8.04 - 6**
Non-rotation-resistant ropes with rope end connections **8.04 - 7**
Note of sliding beam weight **2.05 - 49**
Note regarding the signs **2.05 - 2**

O

Occurrence of an advance warning **4.02 - 26**
Occurrence of a shut-off in the working range limitation **4.02 - 78**
One-part hoist limit switch weight **4.06 - 25**
Opening / closing the front window of the crane cab **4.03 - 24**
Opening / closing the roof window **4.03 - 25**
Opening the boom system (without derrick boom) **5.01 - 88**, **5.01 - 92**
Opening the end section **5.01 - 46**
Operating and control unit (BKE) **4.01 - 44**
Operating and load conditions **1.03 - 5**
Operating and monitoring instruments on the crane superstructure **4.01 - 1**
Operating buttons on the BKE for release actuations „654“ **4.01 - 49**
Operating buttons on the BKE „653“ **4.01 - 45**
Operating company **2.04 - 6**
Operating condition of crane **4.20 - 6**
Operating conditions **2.25 - 2**
Operating console **4.01 - 44**
Operating ECOMode **4.02 - 91**
Operating elements **4.01 - 10**
Operating elements at speed reduction of master switches **4.02 - 79**
Operating elements for special cases for operation of the LICCON overload protection **4.20 - 3**
Operating elements for the crawler operation **4.10 - 23**
Operating elements in ECO-Mode **4.02 - 89**
Operating elements in the Crane operation program **4.02 - 60**
Operating elements of the LICCON computer system **4.02 - 5**
Operating fluids and lubricants **7.07 - 1**
Operating hour meter **7.01.10 - 3**
Operating instructions **6.02 - 3**
Operating interface **4.02 - 67**
Operating interface in ECO-Mode **4.02 - 89**
Operating interface in the settings window for speed reduction of master switches **4.02 - 80**
Operating interface Working range limitation program **4.02 - 75**
Operating the central lubrication system **7.04 - 21**, **7.05 - 39**
Operating the step from the crane cab **4.03 - 22**
Operating the test system **5.31 - 65**
Operating the timer **6.02 - 14**
Operating with telescopic boom and auxiliary boom **4.08 - 4**
Operational flattenings: Examples of impermissible assembly positions **8.04 - 30**
Operational flattenings: Examples of permissible assembly positions **8.04 - 30**
Operational flattenings on ropes on winch 4 (WIV) **8.04 - 28**
Operational transverse pressure **8.04 - 27**
Operation with two hooks **5.10 - 9**
Optical test of the mounting screws **7.05 - 60**
Optimizing measures for the travel route **4.10 - 4**
Optional equipment and functions **0.01 - 14**
Ordering the filter module **7.05 - 24**
Order of the displays in the crane operation monitoring functions **4.02 - 34**
Outrigger pad **7.04 - 33**
Outrigger pad LWE ID number 914618608 **1.03.10 - 24**
Outrigger pad LWE ID number 914786508 **1.03.10 - 8**
Outrigger pad LWE ID number 914786808 **1.03.10 - 10**
Outrigger pad LWE ID number 914861908 **1.03.10 - 9**
Outrigger pad LWE ID number 915236308 **1.03.10 - 11**
Outrigger pad LWE ID number 915236408/915464608 **1.03.10 - 12**
Outrigger pad LWE ID number 915696408 **1.03.10 - 25**
Outrigger pad LWE ID number 918339808 **1.03.10 - 27**
Outrigger pad LWE ID number 919427108 **1.03.10 - 30**
Outrigger pad LWE ID number 919663108 **1.03.10 - 15**
Outrigger pad LWE ID number 919663508 **1.03.10 - 17**
Outrigger pad LWE ID number 919663608 **1.03.10 - 19**
Outrigger pad LWE ID number 919663708 **1.03.10 - 21**
Outrigger pads **1.03.10 - 1**
Overflow container **7.04 - 40**
Overlapping of working ranges of several cranes **2.04 - 68**
Overload protection **4.02 - 2**
Overload protection quick test **4.04 - 3**
Overview Load chart **4.20 - 19**
Overview of acoustic / optical warnings **4.20 - 9**
Overview of icons for monitoring functions **4.02 - 37**
Overview of the emergency control ball valves **6.25 - 5**

LWE/LTR 1100-009/25105-02-02/en

copyright © Liebherr-Werk Ehingen GmbH 2023

Overview of the emergency control plug connections **6.25 - 5**
Overview of the fastening systems **5.19 - 10**
Overview of the individual control displays **4.02 - 42**
Overview of the retaining elements **5.01 - 22**

P

Packing the filter module for transport **7.05 - 25**
P-adapter **8.01 - 64**
Pairing process **5.31 - 7**
Parking brake slewing gear **4.05 - 18**
Pedal carrier **4.01 - 7**, **4.10 - 23**
Performing a visual inspection **8.01 - 97**
Performing ballasting **5.31 - 48**
Performing ballast weighing **5.31 - 49**
Periodic crane inspections **8.01 - 1**
Permissible incline for ballasting **4.07 - 8**
Permissible load configurations **1.03.10 - 3**
Permissible support pressures on the outrigger pad [A-B-C] **2.05 - 31**
Permissible support pressures on the outrigger pad [A-B-C-D] **2.05 - 31**
Permissible telescopic boom angle when picking up the counterweight **4.07 - 8**
Personal protective equipment **2.04 - 20**, **7.05 - 69**, **8.04 - 3**
Personnel **7.01 - 2**
Personnel and qualification **2.04 - 90**
Picking up and lowering overhead loads **4.08 - 24**
Picking up the counterweight with the BTT **4.07 - 17**
Picking up the fastening equipment **4.08 - 21**
Pin connections **5.01 - 17**
Pinning the counterweight with the turntable **4.07 - 21**
Pinning the crane superstructure **4.05 - 8**, **4.05 - 9**
Pinning the crawler carrier on side „A“ **4.03.50 - 19**, **4.03.50 - 25**, **4.03.50 - 29**, **4.03.50 - 35**, **4.03.50 - 39**, **4.03.50 - 47**
Pinning the crawler carrier on side „B“ **4.03.50 - 21**, **4.03.50 - 23**, **4.03.50 - 31**, **4.03.50 - 33**, **4.03.50 - 41**, **4.03.50 - 45**
Pinning the cross carrier on side „A“ **3.01 - 28**, **3.01 - 34**, **3.01 - 38**
Pinning the cross carrier on side „B“ **3.01 - 30**, **3.01 - 35**, **3.01 - 39**
Pinning the support cylinder in the assembly position **3.01 - 9**
Pinning the support cylinders in the transport position **3.01 - 73**
Pin transport position **5.01 - 21**
Pivot section **8.01 - 52**, **8.01 - 83**
Pivot section, adapter and boom nose **8.01 - 70**
Placement width **1.03.10 - 3**
Placing a shorter crane rope **4.08 - 21**
Placing the hoist rope or the control rope **5.01 - 2**
Placing the ladder **2.06 - 9**
Planning Crane operation **2.03 - 3**
Platform ladder **2.04.10 - 16**
Pneumatic springs **5.01 - 11**
Positioning the connecting forks for pinning **5.01 - 20**
Positioning the folding jib **5.02 - 41**, **5.02 - 45**, **5.02 - 49**, **5.02 - 77**
Positioning the support plate off-center on the outrigger pad lying on the complete surface **1.03.10 - 16**, **1.03.10 - 18**, **1.03.10 - 20**, **1.03.10 - 23**
Positioning the support plate off-center on the outrigger pad over a cavity **1.03.10 - 16**, **1.03.10 - 19**, **1.03.10 - 21**, **1.03.10 - 23**
Positive longitudinal incline **4.10 - 19**
Possible central ballast combinations **3.03 - 3**
Possible makings on the data tag **0.01 - 5**
Possible weighing errors **4.08 - 14**
Power-Save mode **4.02 - 94**
Power-save mode and Stand-by mode in the LICCON computer system **4.02 - 94**
Preface **0.01 - 1**
Preface to the appendix **90.01 - 1**
Preheating the hydraulic oil **2.08 - 4**
Preheating time **2.08 - 3**
Preparatory work before swinging in hydraulic folding jibs **5.02 - 83**
Preparing for crane driving **4.10 - 13**
Preparing for emergency control **6.25 - 7**
Preparing the crane, illustration 3 **3.01 - 43**
Preparing the electrical supply **6.25 - 11**
Preparing the external hydraulic supply (auxiliary aggregate) **6.25 - 9**
Preparing the first crawler carrier **3.01 - 43**
Preparing the hook block **4.06 - 16**
Preparing the hook block for crane operation **5.19 - 12**, **5.19 - 15**, **5.19 - 20**
Preparing the hook block for disassembly **5.19 - 13**, **5.19 - 16**, **5.19 - 21**
Prerequisites **2.04 - 90**
Prerequisites for crane equipment and accessories **2.04 - 88**
Prerequisites for crane operation **4.05 - 3**
Prerequisites for driving the crane (crawler operation) **4.10 - 2**
Prerequisites for driving uphill / downhill without adjusting the angle of the boom system **4.10 - 20**
Prerequisites for lifting of personnel **2.04 - 88**
Prerequisites for operation with lifting cage (cherry picker) **2.04 - 89**
Prerequisites for track adjustment **4.03.50 - 4**
Preselecting lifting / lowering the hook **6.25 - 15**
Preselecting luffing the boom **6.25 - 17**
Preselecting turning the crane superstructure **6.25 - 19**
Pressed rope end connection **8.04 - 15**
Pressure testing the relapse cylinders **8.01 - 95**
Pretensioning the hoist rope with pretensioning ballast with two hook operation **4.08 - 24**
Preventing fires **7.01 - 4**
Prevention of improper machine use **7.01 - 15**

LWE/LTR 1100-009/25105-02-02/en

copyright © Liebherr-Werk Ehingen GmbH 2023

Priority acoustic signal **4.02 - 29**
Problem signals on control element **7.04 - 25**, **7.05 - 43**
Problems on central lubrication system **7.04 - 26**, **7.05 - 44**
Procedure **4.02 - 81**
Procedure for shut-off of crane movement **4.20 - 1**
Procedure for special cases at operation of the LICCON overload protection **4.20 - 31**
Product description **1.02 - 1**
Programming the timer **6.02 - 14**
Protecting against burns **7.01 - 5**
Protecting against the hazards of service fluids **7.01 - 6**
Protecting from scalding **7.01 - 5**
Protecting the crane against corrosion **7.01 - 12**
Protecting the crane against corrosion for shutdown **7.01 - 14**
Protecting the crane against corrosion for storage **7.01 - 13**
Protruding, distorted inlay, braiding **7.05 - 74**
Protruding, distorted insert or strand **8.04 - 22**
PSAgA, rescue equipment and tools **2.04 - 90**
Pulley head **8.01 - 69**
Pulley head height **4.02 - 21**
Putting the fuel system in operation **7.05 - 18**

Q

Qualification Maintenance personnel **7.05 - 70**

R

Radio connection **5.70 - 24**
Railings **2.06 - 23**
Ram work or pulling sheet piles **4.08 - 19**
Rapid gear **4.02 - 33**, **4.05 - 6**
Receptacle plate **8.01 - 50**
Recommendation for safe disposal **7.01 - 15**
Reducing rope pull **2.08 - 6**
Reducing rope unwinding **4.08 - 21**
Reducing the maximum load **2.08 - 7**
Reducing the maximum permissible wind speed * **4.02 - 54**
Reduction of rope diameter **7.05 - 71**
Reeving in the hoist rope **5.10 - 9**
Reeving in the hoist rope with the assembly winch **4.06 - 10**
Reeving in the hoist rope with the auxiliary reeving rope **4.06 - 7**
Reeving out the hoist rope on the telescopic boom head **5.02 - 15**, **5.12 - 11**
Reeving the assembly winch auxiliary rope in from the bottom **4.06 - 12**
Reeving the assembly winch auxiliary rope in from the top **4.06 - 11**
Reeving the hoist rope in **5.02 - 35**, **5.02 - 35**, **5.12 - 21**
Reeving the hoist rope out **4.06 - 13**, **5.02 - 79**, **5.12 - 31**
Reeving the hook block in **4.06 - 16**
Reeving the hook block out **4.06 - 18**
Regenerating at a standstill of the diesel particle filter **4.03 - 9**
Relapse cylinders **5.01 - 11**
Releasing and loading the counterweight **4.07 - 32**
Releasing the button block on the BTT **5.31 - 5**
Releasing the crane operator's cab **7.05 - 85**
Releasing the engine rpm lock **4.05 - 8**
Releasing the hydraulic connections **3.01 - 50**
Releasing the parking brake **4.05 - 18**
Releasing the supply lines **5.09 - 9**
Relieving the crawler chain **7.05 - 49**
Removal criteria overview **8.04 - 8**
Removing broken wires **7.05 - 79**
Removing the boom nose from the telescopic boom **5.10 - 13**
Removing the divisible hook block **5.19 - 7**
Removing the filter module **7.05 - 24**
Removing the hoist limit switch weight **4.06 - 24**, **4.06 - 27**
Removing the hydraulic hose drum **5.02 - 53**
Renewing the pretension of hoist ropes **7.05 - 81**
Repair: Filling the lubrication lines **7.04 - 24**, **7.05 - 42**
Repair welding **8.01 - 5**
Replacement ballast fastening point **5.09 - 5**
Replace the diesel particle filter * **7.05 - 24**
Replacing damaged crane components **7.01 - 6**
Replacing hydraulic hose lines **8.06 - 5**
Replacing the air filter **7.05 - 26**
Replacing the belt drive **7.05 - 5**
Replacing the filter insert **7.05 - 17**, **7.05 - 82**, **7.05 - 84**
Replacing the fuel fine filter **7.05 - 19**
Replacing the granular cartridge of the air dryer **7.05 - 28**
Replacing the grease cartridge **7.05 - 63**
Replacing the heat flange **7.05 - 5**
Replacing the interior compartment filter of the control cabinet ventilation **7.05 - 92**
Replacing the lubricant **7.04 - 23**, **7.05 - 41**
Replacing the oil separator filter insert **7.05 - 6**
Replacing the pressure filter element **7.05 - 35**
Replacing the return filter **7.05 - 33**
Rescue **2.04 - 91**
Resetting a problem **7.04 - 26**, **7.05 - 44**
Resetting the diesel particle filter (DPF) maintenance status **7.01.10 - 7**
Resetting the electrical connections to normal operation **6.25 - 35**
Resetting the engine oil maintenance status **7.01.10 - 7**
Resetting the hydraulic connections to normal operation **6.25 - 37**
Resetting the maintenance interval for the diesel particle filter **7.05 - 26**

LWE/LTR 1100-009/25105-02-02/en

copyright © Liebherr-Werk Ehingen GmbH 2023

Resetting the maintenance status **7.01.10 - 7**
Restoring hoist rope pretension **4.08 - 22**
Resuming crane operation **2.04 - 87**
Retaining clips **5.01 - 29**
Retaining elements **5.01 - 22**
Retaining pin with the ring and spring retainer **5.01 - 30**
Retightening the outrigger pad screws **7.05 - 51**
Retracing the track width with the Bluetooth Terminal **4.03.50 - 31**
Retracting the boom **2.04 - 76**
Retracting the crawler carrier **4.03.50 - 23**, **4.03.50 - 47**
Retracting the crawler carrier on side „A“ **4.03.50 - 25**, **4.03.50 - 35**, **4.03.50 - 47**
Retracting the crawler carrier on side „B“ **4.03.50 - 23**, **4.03.50 - 33**, **4.03.50 - 43**, **4.03.50 - 45**
Retracting the track width with the radio remote control * **4.03.50 - 43**
Retrofitting old ladders **2.04.10 - 3**
Returning to service **7.01 - 14**
Rigging **3.80 - 11**
Rigging device **3.80 - 4**
Rigging plans **3.80 - 3**, **3.80 - 4**
Rigging points **3.80 - 3**
Rigging the guy rods on lattice booms on placed down boom system **5.01 - 95**
Rigidly frozen fiber guy ropes **5.01 - 5**
Rocker **8.01 - 77**
Roof instrument panel **4.01 - 10**
Rope diameter abbreviations **8.04 - 8**
Rope end connections **4.06 - 2**
Rope guard **5.19 - 4**
Rope guard pin **5.19 - 4**
Rope pulleys **5.01 - 2**, **7.05 - 68**
Rope pulleys and hydraulic cylinders **2.08 - 8**
Rope reeving **4.06 - 1**, **4.06 - 40**
Ropes **1.03 - 7**, **5.01 - 2**
Rotating parts **7.01 - 6**
Rotating rope end connection **8.04 - 6**
Rotation-resistant ropes **8.04 - 13**
Rotation-resistant ropes with rope end connections **8.04 - 5**
Rules for the use of personnel protective equipment **2.04 - 20**

S

Safe and problem-free operation **7.05 - 69**
Safety and warning display **0.01 - 2**
Safety equipment **0.01 - 13**, **1.02 - 4**, **4.04 - 1**
Safety equipment on the crane **4.04 - 9**
Safety guidelines **8.06 - 3**
Safety instructions in case of an external power supply **2.04 - 55**
Safety locking pin **5.01 - 24**
Safety of crane transport on floating devices **2.25 - 3**
Safety signs **2.04.10 - 3**
Safe working environment **2.04 - 4**
Saving personnel **2.04 - 28**
Scattered broken wires **8.04 - 11**
Seat cushion adjustment **4.03 - 15**, **4.03 - 18**
Seat heater / seat climate control * **4.03 - 18**
Second inspection (second year) **8.03 - 10**
Securing against falls **7.01 - 4**
Securing against start up **7.01 - 3**
Securing personnel on shut off crane **2.04 - 89**
Securing persons to prevent them from falling **2.04 - 26**
Securing the cable **5.70 - 22**
Securing the counterweight **4.07 - 15**
Securing the crane **3.80 - 12**
Securing the crane operator's cab for maintenance work **7.05 - 84**
Securing the crane properly on the transport vehicle **3.01 - 75**
Securing the ladder **2.06 - 4**, **2.06 - 25**
Securing the ladder in the transport position **2.06 - 27**
Securing the ladder on the folding jib **2.06 - 7**
Securing the load hook on the transport vehicle **5.19 - 8**
Securing the roller set on the crane **5.19 - 8**
Selecting master switch MS1 for the crane movement **6.25 - 15**, **6.25 - 17**, **6.25 - 19**
Selecting master switch MS2 for the crane movement **6.25 - 15**, **6.25 - 17**, **6.25 - 19**
Selecting the cross carrier **3.01 - 33**
Selecting the hoist winch **5.31 - 59**
Selecting the location **2.04 - 40**
Selecting the maintenance status **7.01.10 - 6**
Selecting the telescoping target **4.05 - 28**
Selecting the telescoping target in the Set up program **4.05 - 28**
Selecting the telescoping target with the Telescoping program **4.05 - 29**
Service fluids and lubricants **7.01 - 15**
Service system **7.01.10 - 1**
Service system function key line **7.01.10 - 5**
Service system operating interface **7.01.10 - 3**
Servicing the central lubrication system **7.04 - 23**, **7.05 - 41**
Servicing the fuel preliminary filter **7.05 - 15**
Settings and status displays on the BTT **5.31 - 17**
Setting the contrast on the BTT display **5.31 - 17**
Setting the limit value **4.02 - 63**
Setting the limit values for the load torque limiter for advance warning and shut-off **4.02 - 61**
Setting the operating elements for operating mode of the slewing gear **4.02 - 83**
Setting the operating mode and set up configuration **4.02 - 7**
Setting the operating mode and set up configuration via the function keys **4.02 - 7**
Setting the operating mode and set up configuration with the short code **4.02 - 7**

LWE/LTR 1100-009/25105-02-02/en

copyright © Liebherr-Werk Ehingen GmbH 2023

Setting the operating mode of the slewing gear **4.02 - 82**
Setting up for boom nose on telescopic boom **4.12 - 13**
Setting up for operation with a boom nose on the fixed lattice jib **4.12 - 20**
Setting up for operation with a boom nose on the luffing lattice jib **4.12 - 24**
Setting up for operation with a fixed lattice jib **4.12 - 19**
Setting up for operation with an auxiliary jib on the fixed lattice jib **4.12 - 22**
Setting up for operation with an auxiliary jib on the luffing lattice jib **4.12 - 25**
Setting up for operation with a strong lattice jib **4.12 - 18**
Setting up for operation with folding jib **4.12 - 16**
Setting up for operation with the luffing lattice jib **4.12 - 23**
Setting up for the auxiliary jib on the telescopic boom **4.12 - 15**
Short description of the assembly procedure **3.01 - 5**
Shortening the intervals **8.04 - 27**
Shortening the rope **7.05 - 81**
Short horn warning sound **4.02 - 29**
Showing the horizontal distance **2.04 - 74**
Showing the vertical distance **2.04 - 71**
Shut-off due to error message **4.20 - 28**
Shut-off of crane movement **4.20 - 19**
Shut-off of overload **4.20 - 20**
Shutting off the crane movement **4.02 - 27**
Side panel **4.01 - 11**
Side support * **4.03 - 19**
Side window **2.04 - 36**
Signs **2.05 - 2**
Signs on the crane **2.05 - 1**
Single folding jib, see illustration 1 and 2 **5.02 - 7**
Single folding jib, see illustration 5 **5.02 - 11**
Single folding jib, see illustration 6 **5.02 - 11**
Single hook operation **4.12 - 8**, **5.10 - 9**
Single layer and parallel roped ropes **8.04 - 11**
Slack rope formation **5.19 - 23**
Slewing gear **1.02 - 4**, **4.05 - 19**, **7.04 - 36**, **7.05 - 52**
Slewing gear: Changing the gear oil **7.05 - 53**
Slewing gear: Checking the oil level with the dipstick **7.04 - 37**
Slewing gear brake **4.10 - 25**
Slewing range **4.02 - 55**
Slewing ring connection **7.04 - 34**, **7.05 - 51**
Sliding beam **8.01 - 25**
Slinger **2.04 - 8**
Slip-resistant mats **7.01 - 11**
Slopes and excavations **2.04 - 44**
Sound insulation mats **7.01 - 11**
Special cases for operation of the LICCON overload protection **4.20 - 3**
Special folding jib **2.06 - 9**, **5.12 - 1**, **5.12 - 5**
Special folding jibs from other crane types **5.12 - 5**
Special functions **4.02 - 29**
Special functions LICCON overload protection **4.02 - 30**
Special operating conditions **4.20 - 4**
Specifications for the set up configuration for cranes with lattice mast with LICCON overload protection **5.01 - 33**
Specified service fluids and lubricants for Liebherr cranes **7.07 - 3**
Speed reduction master switch **4.02 - 78**
Speeds **1.03 - 7**
Spinning out by turning out the hook block **7.05 - 80**
Spinning out with single strand reeving **7.05 - 80**
Split pin **5.01 - 23**
Spooling the winch up / out shut-off **4.20 - 25**
Spooling up loose hoist rope **5.19 - 23**
Spring retainer **5.01 - 25**
Stacking the outrigger pads **1.03.10 - 7**
Stainless steel lances **7.05 - 62**
Stairs with platform **2.06 - 16**
Stand-by mode **4.02 - 95**
Starting operation, follow my instructions **2.04 - 69**
Starting procedure **4.03 - 32**
Starting the engine **4.03 - 32**
Starting the Telescoping program **4.02 - 67**
Starting to drive **2.04 - 77**
Starting up the LICCON Computer system and the touch displays **4.01 - 13**
Start menu of the BTT **5.31 - 12**
Start screen BTT **5.31 - 11**
Start up and shut down of crane **4.03 - 1**
Stationary stability **2.04.10 - 3**
Steering ability **4.10 - 15**
Step **4.03 - 21**
Stop (normal stop) **2.04 - 69**
Stopping the mobile crane **2.04 - 78**
Storage **7.01 - 14**
Storage conditions **7.01 - 14**
Strong lattice jib **4.12 - 6**, **4.12 - 17**
Substructure **3.80 - 4**
Suitable distribution of the surface pressure **4.10 - 15**
Superstructure **7.04 - 20**, **7.05 - 38**
Supplied cross beam **2.04.10 - 14**
Supplied fall arrest system **2.04 - 21**
Supplied fire extinguisher **2.04 - 26**
Supplied height rescue system **2.04 - 24**
Support **2.04 - 51**
Supporting and aligning the support plates **3.01 - 9**
Supporting lattice mast booms for erection **5.01 - 79**
Supporting lattice mast booms for take-down **5.01 - 80**
Supporting long lattice mast booms for erection and take-down **5.01 - 79**
Supporting the crane **2.04 - 52**, **2.08 - 4**, **3.01 - 11**, **3.01 - 53**
Supporting the crane with a variable support **2.04 - 52**
Supporting the crane with the support cylinders **3.01 - 13**, **3.01 - 55**
Support menu **5.31 - 37**

LWE/LTR 1100-009/25105-02-02/en

copyright © Liebherr-Werk Ehingen GmbH 2023

Support plates **2.04 - 51**
Surfaces **8.05 - 5**
Suspended ballast guide „V-frame“ **8.01 - 83**
Suspended load fastening point **2.05 - 10**, **2.05 - 11**, **2.05 - 11**
Swingable sliding beam **8.01 - 29**
Swinging the boom nose into operating position, illustrations 1 and 2 **5.10 - 5**
Swinging the boom nose into transport position, illustrations 7 and 8 **5.10 - 13**
Swinging the rope guide pulley into the operating position **5.02 - 35**
Swinging the rope guide pulley into the transport position **5.02 - 79**
Swinging the special folding jib into the operating position **5.12 - 13**
Swinging the special folding jib into the transport position **5.12 - 35**
Switching between automatic operation and manual operation **6.02 - 7**
Switching on crane control from the crane superstructure **4.03 - 37**
Symbols from 2018 **2.04.10 - 9**
Symbols until the end of 2017 **2.04.10 - 4**
System start **4.03 - 28**
System start of the LICCON computer system **4.02 - 4**

T

TA guying **8.01 - 71**
Taking an oil sample **7.01 - 8**
Taking care of the crane **7.01 - 8**
Taking on a load **4.08 - 7**
Taking on a load with cross beam **4.08 - 9**
Taking the counterweight down **4.07 - 28**
Taking the fuel system out of service **7.05 - 16**
Taking the lattice jib down into the roller cart **5.01 - 44**
Technical data **1.03 - 1**
Technical outrigger pad data for cranes with a lattice mast boom **1.03.10 - 24**
Technical safety instructions **2.04 - 1**
Technical safety instructions for assembly and disassembly **5.01 - 1**
Technical track pad data for cranes with a telescopic boom **1.03.10 - 8**
TELEMATIK emergency operation (EN 13000:2010 active) **4.02 - 73**
TELEMATIK emergency operation (EN 13000:2010 not active) **4.02 - 72**
TELEMATIK emergency operation special function **4.02 - 72**
Telematik system **4.05 - 27**
Telescopable load **4.02 - 56**
Telescopic boom **1.02 - 4**, **2.06 - 4**, **4.08 - 21**, **7.04 - 37**, **7.05 - 61**, **8.01 - 53**
Telescopic boom (T) **1.01 - 5**
Telescopic boom distortion because of sunshine on one side **4.08 - 5**
Telescopic boom extension **1.01 - 7**, **5.25 - 1**
Telescopic boom extension designation **5.25 - 2**
Telescopic boom extension fastening points **5.25 - 2**
Telescopic boom limit switch **4.04 - 20**
Telescopic boom push out mechanics **8.01 - 58**
Telescoping **4.05 - 22**
Telescoping crane movement **4.08 - 5**
Telescoping cylinder (pressure too high) shut-off **4.20 - 28**
Telescoping in automatic operation **4.05 - 37**
Telescoping in automatic operation and manual operation **4.05 - 38**
Telescoping in the Crane operation program **4.05 - 30**
Telescoping in the Telescoping program **4.05 - 31**
Telescoping screen **4.02 - 68**
Telescoping the telescopic boom in shut-off **4.20 - 25**
Telescoping the telescopic boom manually **4.05 - 31**
Telescoping the telescopic boom out shut-off (limit length) **4.20 - 24**
Telescoping to the telescoping target **4.05 - 30**
Telescoping under load **4.05 - 36**
Telescoping with master switch MS1 **4.05 - 25**
Telescoping with master switch MS2 **4.05 - 24**
Telescoping with master switch MS3 **4.05 - 26**
Temperature display **4.01 - 42**
Temperature operating limits **7.05 - 70**
Tensioning the crawler chain **7.05 - 48**
Terminology **1.01 - 1**
Terms and abbreviations **2.04 - 89**
The function key line (Telescoping program) **4.02 - 70**
The function keys **5.31 - 29**
The menus (operating functions) **4.01 - 29**
Theoretical service life **8.03 - 5**
The set up program **4.02 - 7**
The Telescoping program **4.02 - 65**
The touch displays **4.01 - 13**
The working range limitation program * **4.02 - 74**
The „floodlight“ menu * (left touch display) **4.01 - 37**
The „Hydraulic oil preheating / telescopic boom disassembly“ menu * (left touch display) **4.01 - 39**
The „Master switch configuration“ menu (left touch display) **4.01 - 19**, **4.01 - 25**
The „Master switch configuration“ menu (right touch display) **4.01 - 15**, **4.01 - 21**
The „Support“ menu (right touch display) **4.01 - 29**
The „Track width adjustment“ menu (right touch display) **4.01 - 33**
Third inspection (third year) **8.03 - 10**
Three hook operation **4.12 - 9**
Three-part multi-purpose ladder **2.04.10 - 21**
Tilting the crane cab **4.03 - 23**
Tilting the crane cab upward **4.03 - 23**
Tilting the crane operator's cab up **7.05 - 83**
Time **4.01 - 42**
Timer **4.01 - 42**

LWE/LTR 1100-009/25105-02-02/en

copyright © Liebherr-Werk Ehingen GmbH 2023

Tire size **7.01 - 7**
To exceed the maximum permissible load moment **4.20 - 37**
To exceed the maximum value of the F-load display in crane operation. **4.20 - 41**
Total (diesel engine) maintenance status **7.02 - 15**
Track adjustment through crawler carrier relief **4.03.50 - 3**, **4.03.50 - 9**
Track adjustment through support **4.03.50 - 7**
Track adjustment without counterweight **4.03.50 - 13**
Track pads **1.02 - 5**
Track roller **7.04 - 33**
Tracks **1.02 - 2**
Track width monitoring without shut-off of crane movement **4.02 - 84**
Track width monitoring with shut off of crane movement * **4.02 - 85**
Track widths and extension conditions **4.03.50 - 4**
Traffic endangerment and environmental damage **2.04 - 13**
Trailer coupling **8.01 - 34**
Transfer (between two cranes or two hooks) **2.04 - 74**
Transferring of responsibility **2.04 - 7**
Transmission **7.06 - 4**
Transport **2.04 - 37**
Transport company **3.80 - 3**
Transporting the camera **5.70 - 32**
Transporting the hook block **4.08 - 9**
Transporting the hook block / load hook **5.19 - 5**
Transporting the ladder **2.06 - 27**
Transporting the wind speed sensor **5.75 - 13**
Transporting with a forklift truck **5.19 - 5**
Transporting with the crane **5.19 - 5**
Transport vehicle **3.80 - 3**
Travel drive **1.02 - 2**
Travel gear **7.04 - 27**, **7.05 - 45**
Travel gear / hydraulic motors / track rollers **4.10 - 5**
Travel operation **2.04 - 77**
Travel route **4.10 - 3**
Travel speeds **1.03 - 7**
Turning **4.05 - 16**
Turning / driving in reverse **2.04 - 78**
Turning an extremely rotation-resistant hoist rope out **7.05 - 80**
Turning backward to the left **4.10 - 37**, **4.10 - 45**
Turning backward to the right **4.10 - 37**, **4.10 - 45**
Turning crawler operating modes on / off **4.10 - 29**
Turning ECO-Mode off **4.02 - 92**
Turning ECO-Mode on **4.02 - 91**
Turning forward to the left **4.10 - 37**, **4.10 - 43**
Turning forward to the right **4.10 - 37**, **4.10 - 43**
Turning manual operation on **6.02 - 7**
Turning normal travel crawler operation on / off **4.10 - 29**
Turning off procedure **4.03 - 34**
Turning off the engine in case of danger **4.03 - 34**
Turning off the hydraulic supply with an external auxiliary aggregate **6.25 - 23**
Turning on automatic operation **6.02 - 7**
Turning on the spot to the left (counterclockwise direction) **4.10 - 37**
Turning on the spot to the right (clockwise) **4.10 - 37**
Turning parallel travel crawler operation on / off **4.10 - 29**
Turning recirculating air off **6.02 - 14**
Turning recirculating air on **6.02 - 14**
Turning the air heater * off **6.02 - 17**
Turning the air heater * on **6.02 - 16**
Turning the auxiliary heater off **6.02 - 9**
Turning the auxiliary heater on **6.02 - 9**
Turning the auxiliary heater on and off **6.02 - 9**
Turning the BTT on using the ignition switch **5.31 - 67**
Turning the BTT on using the ON / OFF button **5.31 - 67**
Turning the climate control system off **6.02 - 10**
Turning the climate control system on **6.02 - 10**
Turning the climate control system on and off **6.02 - 10**
Turning the crane superstructure **4.05 - 21**
Turning the crane superstructure (SLEWING GEAR) crane movement **6.25 - 31**
Turning the defrost window function off **6.02 - 13**
Turning the defrost window function on **6.02 - 13**
Turning the electrical supply off **6.25 - 25**
Turning the engine off **4.03 - 33**
Turning the engine off with the engine stop button **4.03 - 34**
Turning the heater control unit off **6.02 - 6**
Turning the heater control unit on **6.02 - 6**
Turning the heater control unit on and off **6.02 - 6**
Turning the heater control unit on and off manually **6.02 - 6**
Turning the heater control unit on and off via the ignition **6.02 - 6**
Turning the hydraulic oil preheating * on **4.03 - 27**
Turning the hydraulic oil preheating on **2.08 - 4**
Turning the rapid gear off **4.05 - 7**
Turning the rapid gear on / off **4.10 - 31**
Turning the vibration sensor on / off **4.05 - 5**
Turning the warning sound off **4.02 - 29**
Turning the window wiper off **4.03 - 36**
Turning the window wiper on **4.03 - 35**
Turntable **2.06 - 13**
Turntable frame **8.01 - 35**
Turntable lock **5.31 - 47**
Two hook operation **4.12 - 1**, **4.12 - 8**
Two hook operation monitored **4.12 - 11**
Two hook operation monitored / Two hook operation not monitored **4.12 - 10**
Two hook operation not monitored **4.12 - 11**
Two hook operation on individual loads **4.12 - 10**
Two hook operation on joint load **4.12 - 9**
Two-part hoist limit switch weight **4.06 - 22**
TY-guying **8.01 - 72**

LWE/LTR 1100-009/25105-02-02/en

copyright © Liebherr-Werk Ehingen GmbH 2023

U

UKCA marking **0.01 - 6**
UK Declaration of Conformity **0.01 - 8**
Understanding of roles **2.04 - 6**
Unintended use **0.01 - 12**
Unloading / loading the crane from / onto an extra wide transport vehicle **3.01 - 77**
Unloading the base plate and the counterweight **4.07 - 12**
Unloading the crane from an extra wide transport vehicle **3.01 - 77**
Unpinning / pinning the rope retaining pin **5.02 - 79**
Unpinning the crane superstructure **4.05 - 9**
Unpinning the crawler carrier on side „A“ **4.03.50 - 19**, **4.03.50 - 25**, **4.03.50 - 29**, **4.03.50 - 35**, **4.03.50 - 39**, **4.03.50 - 47**
Unpinning the crawler carrier on side „B“ **4.03.50 - 21**, **4.03.50 - 23**, **4.03.50 - 31**, **4.03.50 - 33**, **4.03.50 - 41**, **4.03.50 - 43**
Unpinning the cross carrier on side „A“ **3.01 - 27**, **3.01 - 33**, **3.01 - 37**
Unpinning the cross carrier on side „B“ **3.01 - 28**, **3.01 - 34**, **3.01 - 38**
Unpinning the lattice components **5.01 - 79**
Unscheduled inspection **8.04 - 3**
Update confirmation **90.05 - 1**, **90.05 - 3**
Update to the operating instructions **90.01 - 3**
Upper lumbar area support * **4.03 - 18**
Urea system * **7.04 - 9**, **7.05 - 20**
Urea tank: Replacing the filter strainer in the tank fitting **7.05 - 22**
Urea tank individual control displays **4.02 - 43**
Used proportion of the theoretical service life **8.03 - 5**
User guidelines **2.04.10 - 12**
Using 1-strand height safety equipment **2.04 - 24**
Using 2-strand height safety equipment **2.04 - 24**
Using a hinged ladder as a leaning ladder **2.04.10 - 19**
Using a hinged ladders as a stepladder **2.04.10 - 20**
Using a wedge lock **4.06 - 37**
Using insertion plates in the crawler chains **4.10 - 6**
Using permissible service fluids **7.01 - 6**
Using the Leaning ladder **2.04.10 - 28**
Using the leaning ladder as a transition **2.04.10 - 31**
Using the leaning ladder without the conical end section **2.04.10 - 29**
Using the platform ladder **2.04.10 - 36**
Using the stepladder **2.04.10 - 26**
Using the three-part multi-purpose ladder as a leaning ladder **2.04.10 - 22**
Using the three-part multi-purpose ladder as a stepladder **2.04.10 - 23**
Using the vertical ladder with transition aid **2.04.10 - 35**
Utilization bar diagram (dynamic utilization bar display) **4.02 - 18**

V

Vehicle frame **8.01 - 7**
Vehicle height **2.05 - 3**
Vertical movements **2.04 - 71**
Vibrations **1.03 - 6**
Visual check for damage **4.08 - 4**
Visual inspection for leaks **8.03 - 4**

W

Walking on a boom component **5.01 - 97**
Walking on lattice sections or booms **2.04 - 27**
Walking on the telescopic boom **2.04 - 27**
Walking surfaces and stepping surfaces **2.07 - 13**
Warranty and coverage **7.01 - 7**
Washing the crane **7.01 - 8**
W-connector head **8.01 - 66**
Wedge lock with a bore for a clamp **4.06 - 31**
Wedge lock without a bore for a clamp **4.06 - 32**
Weight **5.09 - 5**
Weight of components **3.80 - 8**
Weights **1.03 - 5**, **5.01 - 12**
Welding work on the load **2.04 - 91**
While working with the crane **2.04 - 12**, **2.04 - 79**
Winch **7.04 - 38**, **7.05 - 53**
Winch 1 **4.05 - 5**
Winch 2 **1.01 - 7**
Winch 2 * designation **5.09 - 5**
Winch 2 * fastening point **5.09 - 5**
Winch 2 or slewing gear **4.05 - 6**
Winch brake **7.05 - 56**
Winch brake: Checking the oil level **7.05 - 56**
Winch brake: Replacing the brake oil **7.05 - 57**
Winch display **4.02 - 57**
Winch gear **7.04 - 39**, **7.05 - 54**
Winch gear: Changing the gear oil **7.05 - 54**
Winch II **2.06 - 25**
Winch limit switch quick test **4.04 - 15**
Winch spooled out limit switch **4.04 - 13**
Wind influences **2.04 - 59**
Wind influences during crane operation **2.04 - 65**
Wind influences during erection and takedown **2.04 - 64**
Wind influences for „Crane out of operation“ **2.04 - 66**
Windows **4.03 - 24**
Window washer fluid **4.03 - 3**
Window washer system **4.03 - 36**
Window wiper / window washer system **4.03 - 35**
Wind speed **4.02 - 53**
Wind speed, wind gust speed and wind direction **2.04 - 61**
Wind speed charts for a variable support **2.04 - 60**
Wind speed sensor **4.04 - 13**
Wind speed sensor / airplane warning light **5.75 - 1**
Wind speed sensor * **5.02 - 59**, **5.12 - 23**
Wind speed sensor quick test **4.04 - 13**
Winter operation **2.08 - 3**

LWE/LTR 1100-009/25105-02-02/en

copyright © Liebherr-Werk Ehingen GmbH 2023

Wire break increase rate **8.04 - 11**
Wire ropes **4.06 - 2**
Wire ropes and rope end connections **4.06 - 2**, **8.04 - 5**
Without marking **0.01 - 6**
Working in low temperatures **2.08 - 1**
Working in the vicinity of overhead electrical lines **4.08 - 19**
Working in the vicinity of transmitters **2.04 - 57**
Working on lattice sections or booms **2.04 - 27**
Working on the telescopic boom head and / or auxiliary boom **2.04 - 26**
Working with a high rope pull **4.08 - 21**
Working with a load **4.08 - 1**

”

„Hoist top“ hoist limit switch **4.04 - 11**
„Lower“ lumbar area support **4.03 - 13**
„Upper“ lumbar area support **4.03 - 14**

LWE/LTR 1100-009/25105-02-02/en

copyright © Liebherr-Werk Ehingen GmbH 2023

LWE/LTR 1100-009/25105-02-02/en

copyright © Liebherr-Werk Ehingen GmbH 2023