# Ersatzteilkatalog
# Spare parts catalogue
# Catalogue de pièces de rechange
# Catálogo de repuestos
# Каталог запасных частей

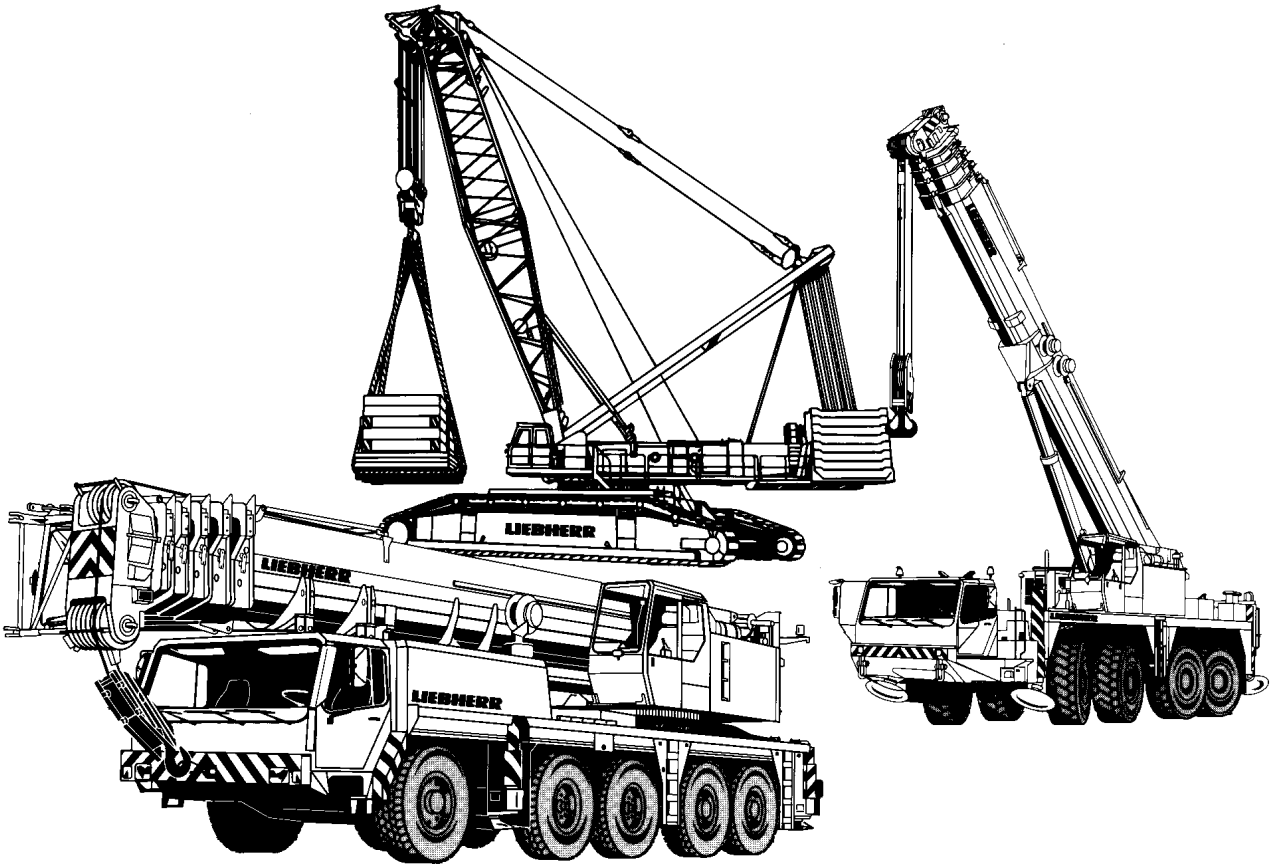

## VORBEMERKUNGEN

Dieser Ersatzteilkatalog soll Ihnen die Ermittlung und Bestellung von Ersatzteilen für die Wartung bzw. Reparatur Ihres LIEBHERR-Kranes erleichtern.
Zum schnelleren Auffinden der Ersatzteile sind im Inhaltsverzeichnis die in Ihrem Kran verwendeten Baugruppen aufgeführt.

**Inhaltsverzeichnis**
Im Inhaltsverzeichnis verweist der Pfeil ( ⇨ ) in der zweiten Textzeile der Baugruppenartikelnr. auf die detaillierte Blatt-Nr. mit Artikel-Nr. hin.
**Bild- und Textseiten**
Die Bild- und Textseiten für die Baugruppen und Einzelteile sind sortiert nach Blatt-Nr.; innerhalb der Blatt-Nr. nach Artikel-Nr. Eine Blatt-Nr. kann aus einer oder mehreren Bild- und / oder Textseiten bestehen.
Jeder weitere Pfeil ( ⇨ ) führt zu einer detaillierten Bild- und / oder Textseite des Artikels. Sind Position-Nummern in Klammern (x) gesetzt, handelt es sich um Einzelteile des vorangegangenen Artikels.
**Numerischer Index**
Der numerische Index ist sortiert nach Artikel-Nr. mit Hinweisen auf Blatt-Nr., Baugruppen-Nr. und Position-Nr.
**Alphabetischer Index**
Der alphabetische Index ist sortiert nach Bezeichnung mit Hinweisen auf Artikel-Nr., Position-Nr., Blatt-Nr. und Baugruppen-Nr.

Für die sachliche Richtigkeit des Kataloges ist ausschließlich der deutsche Text maßgebend.

## PRELIMINARY REMARKS

This spare parts catalog should ease identification and ordering of spare parts of your LIEBHERR crane in respect to maintenance or repair.
In order to locate the spare-parts more quickly, the components used in your crane have been arranged in the table of contents.

**Table of contents**
In the table of contents the arrow ( ⇨ ) in the second text line of the assembly item number indicates the detailed plate number with the item number.
**Picture and text pages**
The picture and text pages for the assemblies and spare parts are sorted according to page number; within the plate number according to the item number. A page number can consist of one or more picture and / or text pages.
Each further arrow ( ⇨ ) leads to a detailed picture and / or text page of item.
Should the position number be displayed in brackets (x), individual parts of the preceding item are now being referred to.
**Numerical index**
The numerical index is sorted according to item no. with notes indicating page no., component no. and position no.
**Alphabetical index**
The alphabetical index is sorted according to description with notes indicating item no., position no., page no. and component no.

Please note that the German text is binding as far as the correctness of parts list entries is concerned.

## REMARQUES PRÉLIMINAIRES

Cette liste des pièces détachées a pour but de vous faciliter la commande de pièces détachées nécessaires à la maintenance ou à la réparation de votre grue LIEBHERR.
Pour permettre de trouver rapidement les pièces détachées, la table des matières reprend les ensembles utilisés sur votre grue.

**Table des matières**
Dans la table des matières, la flèche ( ⇨ ) dans la deuxième ligne de texte du numéro de l'article de l'ensemble indique le n° détaillé de la planche avec le n° de l'article.

**Pages de schémas et de textes**
Les pages de schémas et de texte pour les ensembles et les pièces individuelles sont triées selon le n° de la planche; dans la planche, elles sont triées selon le n° de l'article. Un n° de planche peut être composé d'une ou plusieurs pages de schémas et / ou de texte.
Toute autre flèche ( ⇨ ) conduit à une page de schémas / de texte détaillée concernant l'article. Si les numéros de repère sont entre parenthèses (x), il s'agit de pièces détachées de l'article concerné.

**Index numérique**
L'index numérique est trié suivant le numéro d'article avec indication du numéro de planche, du numéro d'ensemble et du numéro de repère.

**Index alphabétique**
L'index alphabétique est trié suivant la désignation avec indication du numéro d'article, du numéro de repère, du numéro de planche et du numéro d'ensemble.

Des erreurs pouvant s'être glissées dans la traduction des désignations, le constructeur ne peut garantir que l'exactitude du texte allemand qui fera fois.

## OBSERVACIONES PRELIMINARES

Este catálogo de piezas de repuestos sirve para facilitarle en el pedido de repuestos necesarios para el mantenimiento o reparación de su grúa LIEBHERR.
Para encontrar rápidamente las piezas de repuestos, el indice le indica los grupos de componentes utilizados en su grúa.

**Indice**
En el índice, la flecha ( ⇨ ) en la segunda línea de texto del N° de artículo de la unidad de componentes indica el N° de hoja detallada con el N° de artículo.

**Página de ilustración y texto**
Las páginas de ilustración y texto para la unidad de componentes y las piezas individuales están clasificadas según el N° de la hoja, y en la misma hoja, según el N° del artículo. Un N° de hoja puede contener una una o varias páginas de imágenes y / o texto.
Cualquier otra flecha ( ⇨ ) le lleva a una ilustración / texto detallado del artículo. Si los números de posición están entre paréntisis (x), se trata de componentes por unidades del artículo precedente.

**Indice numérico**
El índice numérico está clasificado según el N° de ártículo con indicación del N° de hoja, el N° del grupo de componentes y el N° de posición.

**Indice alfabético**
El índice alfabético está clasificado según la denominación con indicación del N° de artículo, N° de posición, N° de hoja y N° de grupo de componentes.

En caso que se haya presentado errores en la traducción de designaciones, el constructor garantiza como válido sólo la exactitud del texto alemán.

**ПРЕДВАРИТЕЛЬНЫЕ ЗАМЕЧАНИЯ**
Данный каталог запасных частей предназначен для поиска, определения и последующего заказа запасных частей, необходимых для технического обслуживания и ремонта кранов фирмы ЛИБХЕРР.
Для быстрого нахождения запасной детали в Оглавлении приведены используемые в Вашем кране узлы.

**Оглавление**
Стрелка ( ⇨ )в оглавлении, расположенная во второй текстовой строке номера агрегата или узла, указывает на деталированный номер листа с номером артикула.
**Иллюстрации и чертежи**
Иллюстрации, чертежи и текстовые страницы как по всем агрегатам и узлам, так и по отдельным деталям, отсортированы по номеру страницы, а внутри номера страницы - по номерам деталей. Один номер страницы может состоять из нескольких других иллюстраций и текстов к ним.
Кажлая следующая стрелка ( ⇨ ) указывает страницу с подробным рисунком и / или текстом по этому изделию. Когда номер позиции заключен в скобки (x), рассматриваются детали предыдущего артикула.
**Цифровой индекс**
Цифровой индекс сортирован по номеру артикула с указанием номера листа, номера узла и номера позиции.
**Буквенный индекс**
Буквенный индекс сортирован по обозначению с указанием номера артикула, номера позиции, номера листа и номера узла.

Для правильности заказа и определения детали используйте только немецкий текст.

## WIE BESTELLE ICH EIN ERSATZTEIL

Prüfen Sie zunächst, ob der Kran-Typ und die Werk-Nr. auf dem Typenschild Ihres LIEBHERR-Kranes mit dem Kran-Typ und der Werk-Nr. im Ersatzteilkatalog übereinstimmen.

Ihre Bestellung muß folgende Angaben enthalten:

| **anzugeben:** | **zu ersehen:** | **Beispiel:** |
|---|---|---|
| Krantyp | Typenschild | LTM 1080/1 |
| Werk-Nr. | Typenschild | 061044 |
| Bestellmenge | Ihr Bedarf | 1 Stück |
| Artikel-Nr. | Bildseite / Textseite | 927708001 |
| Bezeichnung | Bildseite / Textseite | Seilwinde |
| Versandanschrift | - | - |
| Versandart | - | - |

**ACHTUNG:**
Bei Aggregaten, für die auch Einzelteile bestellt werden können, weist der Pfeil ( ⇨ ) in der zweiten Textzeile der Bezeichnung auf die entsprechende Blatt- und Artikelnummer hin.
Bildseiten der Leitungssysteme (Hydraulik, Pneumatik, Elektrik) beinhalten nicht alle Aggregate.
Diese Aggregate sind auf den Bildseiten zu sehen, die die Einbaulage darstellen.

Für die Lieferung von Ersatzteilen gelten unsere Lieferungs- und Zahlungsbedingungen.

## HOW TO ORDER SPARE PARTS

First check that the crane type and works no. on the type plate of your LIEBHERR crane are identical with the crane type and works no. on the spare parts catalog you are consulting.

Your order must contain the following details:

| **please state:** | **to be found:** | **example:** |
|---|---|---|
| Crane type | Type plate | LTM 1080/1 |
| Works no. | Type plate | 061044 |
| Quantity needed | as required | 1 piece |
| Item no. | Picture page / text page | 927708001 |
| Description | Picture page / text page | Rope winch |
| Delivery address | - | - |
| Delivery method | - | - |

**CAUTION:**
With units to which individual parts can also be ordered, the arrow ( ⇨ ) in the second line of the description text indicates the corresponding page and item number.
Picture pages for the line systems (hydraulic, pneumatic, electric) do not include all units.
This units are shown on the picture pages which represent the installation position.

Parts are supplied subject to our terms of delivery and payment.

## COMMENT COMMANDER UNE PIECE DETACHEE

S'assurer d'abord que le type de grue et le n° de matricule figurant sur la plaque signalétique de votre grue LIEBHERR correspondent bien au type de grue et au n° de matricule indiqués dans la liste de pièces détachées:

Votre commande doit comporter les renseignements suivants:

| **renseignement:** | **où l'obtenir:** | **exemple:** |
|---|---|---|
| Type de grue | Plaque signalétique | LTM 1080/1 |
| N° de matricule | Plaque signalétique | 061044 |
| Quantité | Selon vos besoins | 1 pièce |
| N° d'article | Page de schémas / page de textes | 927708001 |
| Description | Page de schémas / page de textes | Treuil à cable |
| Adresse | - | - |
| Mode d'expédition | - | - |

**ATTENTION:**
Pour les composants pour lesquels il est possible de commander des pièces détachées, la flèche ( ⇨ ) dans la deuxième ligne de texte de la désignation indique le numéro de la planche et de l'article.
Les pages de schémas des systèmes hydraulique, pneumatique et électrique ne comportent pas tous les composants.
Ces composants sont représentés sur les pages de schémas comportant la position de montage.

La livraison de nos pièces détachées est soumise à nos conditions générales de livraison et de paiement.

## ¿COMO HACER EL PEDIDO DE REPUESTO?

Primero verificar si el modelo de grúa y el N° de fabricación indicados en la placa de características de su grúa LIEBHERR coincide con el modelo de grúa y de N° de fabricación del catálogo de repuestos.

Su pedido deberá contener las siguientes informaciones:

| **Informar:** | **De donde obtener:** | **Ejemplo:** |
|---|---|---|
| Modelo de grúa | Placa de características | LTM 1080/1 |
| N° de grúa | Placa de características | 061044 |
| Cantidad pedida | según la necesidad del cliente | 1 unidad |
| N° de artículo | Pág. de ilustración / Pág. de texto | 927708001 |
| Denominación | Pág. de ilustración / Pág. de texto | Cabrestante de cable |
| Dirección de expedición | - | - |
| Modo de expedició | - | - |

**ATENCION:**
Para los componentes, los cuales se puede pedir igualmente en piezas sueltas, la flecha ( ⇨ ) indica en la segunda línea de texto, la denominación del número de la página y del artículo.
Las páginas de ilustraciones de los sistemas conductores (sistema hidráulico, neumático, eléctrico) no contienen todos los componentes.
Estos componentes se pueden ver en las páginas de ilustraciones representando la posición de montaje.

El suministro de los repuestos está sometido a nuestras condiciones generales de entrega y pago.

## КАК ЗАКАЗАТЬ НУЖНУЮ ЗАПАСНУЮ ЧАСТЬ

Прежде всего проверьте, соответствует ли каталог запасных частей типу и заводскому номеру крана, нанесенных на фирменную табличку на кране.

Ваш заказ должен содержать следующие необходимые данные:

| **Данные:** | **Где искать:** | **Пример:** |
|---|---|---|
| Тип крана | Фирменная табличка | LTM 1080/1 |
| Заводской номер | Фирменная табличка | 061044 |
| Количество | По потребности | 1 шт. |
| Номер детали | Чертеж / текстовая страница | 927708001 |
| Наименование детали | Чертеж / текстовая страница | Канатная лебедка |
| Адрес получателя | - | - |
| Вид поставки | - | - |

**Внимание:**
Узлы и агрегаты, для которых возможен заказ отдельных запасных частей, помечены стрелкой ( ⇨ ) во второй строке текста наименования детали, стрелка указывает на номер соответствующего чертежа или номер детали. Чертежи отдельных систем (гидравлической, пневматической, электрической) содержат не все входящие в системы агрегаты. Данные агрегаты находятся на чертежах узлов, в которые они входят.

При поставке заказанных запасных частей действуют наши условия оплаты и поставки.

| Pos. | Item | Quantity | Description | Bezeichnung |
|---|---|---|---|---|
| 2 | 91 71 033 08 | 1 | UNDERCARRIAGE COMPLETE<br>⇨ 1 100 91 71 033 08 | UNTERWAGEN KPL.M.SCHNEL |
| 29 | 91 48 605 08 | 1 | FIXING PARTS SLEWING RING<br>⇨ 1 620 91 48 605 08 | BEFESTIGUNGSTEILE DREHVE |
| 30 | 91 49 493 08 | 1 | CRAWLER OUTFIT 900 3-STEG<br>⇨ 1 300 91 49 493 08 | RAUPENBESTUECKUNG |
| 40 | 91 53 791 08 | 1 | PREPARATION HYDR JACKUP<br>⇨ 1 400 200 91 53 791 08 | HYDRAULIK VORB. |
| 55 | 91 48 606 08 | 1 | TOOLS AND ACCESSORIES<br>⇨ 1 750 91 48 606 08 | WERKZEUG M.ZUBEHOER |
| 62 | 91 49 503 08 | 1 | CRAWLER-TRACK CARRIER<br>⇨ 1 670 300 91 49 503 08 | TRANSPORTRAUPE |
| 66 | 91 54 759 08 | 1 | ELECTR.FOR CRAWLER CARRIER<br>⇨ 1 920 91 54 759 08 | ELEKTRIK RAUPE |
| 72 | 91 62 835 08 | 1 | PLATING FABRIKDATEN<br>⇨ 1 881 000 91 62 835 08 | ZUSATZBESCHILDERUNG |
| 74 | 91 62 974 08 | 1 | PLATING SPIAN<br>⇨ 1 880 91 62 974 08 | BESCHILDERUNG SPANIEN |
| 80 | 91 56 353 08 | 1 | CENTRAL BALLAST 15T<br>⇨ 1 740 91 56 353 08 | ZENTRALBALLAST |
| 98 | 91 69 598 08 | 1 | PERSONAL PROTECTION EQUIPMENT<br>⇨ 1 793 010 91 69 598 08 | PERSOENLICHE SCHUTZAUSRU |
| 103 | 91 51 080 08 | 1 | ASSEMBLY PARTS F.SLEWING PLTF.<br>⇨ 2 102 91 51 080 08 | MONTAGETEILE DREHBUEHNE |
| 105 | 91 81 095 08 | 1 | DRIVE ASSEMBLY CPL.<br>⇨ 2 200 91 81 095 08 | ANTRIEBSAGGREGAT KPL. |
| 107 | 91 46 555 08 | 1 | BATTERY BOX CPL.<br>⇨ 2 260 91 46 555 08 | BATTERIEKASTEN KPL. |
| 108 | 91 50 456 08 | 1 | FUEL TANK ADD-ON UNIT<br>⇨ 2 270 91 50 456 08 | KRAFTSTOFFBEHAELTER ANBA |
| 109 | 91 53 116 08 | 1 | OIL RESERVOIR, EXTENSION<br>⇨ 2 340 91 53 116 08 | OELBEHAELTER ANBAU |
| 111 | 91 81 361 08 | 1 | LUFFING RAM W. PIVOT<br>⇨ 2 350 91 81 361 08 | WIPPZYLINDER M.LAGERUNG |
| 117 | 91 48 668 08 | 1 | ROLLER SLEWING RING<br>⇨ 2 410 91 48 668 08 | ROLLENDREHVERBINDUNG |
| 119 | 91 32 936 08 | 1 | SLEWING GEAR<br>⇨ 2 420 91 32 936 08 | DREHWERK |
| 121 | 91 54 389 08 | 1 | ANGLE THREADED BULKHEAD<br>⇨ 2 430 91 54 389 08 | DREHBUEHNENARRETIERUNG |
| 123 | 77 39 413 08 | 2 | POUCH SOCKET 19-22 SPF<br>⇨ 7 739 413 08 77 39 413 08 | TASCHENSCHLOSS |
| 125 | 91 53 926 08 | 1 | MAIN HOIST GEAR<br>⇨ 2 450 91 53 926 08 | HAUPTHUBWERK |
| 127 | 91 62 289 08 | 1 | ROPE WITH ACCESSORIES 1<br>⇨ 2 451 91 62 289 08 | SEIL F.WINDE 1 |
| 129 | 91 48 594 08 | 1 | CRANE DRIVER'S CABIN CPL.<br>⇨ 2 500 91 48 594 08 | KRANFUEHRERKABINE KPL. |
| 130 | 91 54 183 08 | 1 | BRACING KABINE<br>⇨ 2 790 901 91 54 183 08 | AUSSTEIFUNG |
| 131 | 91 01 533 08 | 1 | CONTROL STAND<br>⇨ 2 502 91 01 533 08 | STEUERSTAND |
| 132 | 91 60 499 08 | 1 | MIRROR ATTACHM.IN CRANE CABIN<br>⇨ 2 790 040 91 60 499 08 | SPIEGELANBAU KRANFUEHRER |
| 135 | 91 53 981 08 | 1 | TURNTABLE PANELLING<br>⇨ 2 510 91 53 981 08 | DREHBUEHNENVERKLEIDUNG |
| 136 | 91 51 084 08 | 1 | FALL PROTECTION<br>⇨ 2 515 91 51 084 08 | ABSTURZSICHERUNG |
| 139 | 91 34 053 08 | 1 | CRANE OPERATOR CAB INSTRUMENTS<br>⇨ 2 530 91 34 053 08 | ELEKTRIK ARMATUREN KRANK |

| Pos. | Item | Quantity | Description | Bezeichnung |
|---|---|---|---|---|
| 141 | 91 48 669 08 | 1 | ELECTR. FOR CONTROL STAND<br>⇨ 2 531 91 48 669 08 | ELEKTRIK STEUERSTAND |
| 143 | 91 54 254 08 | 1 | EL.INSTRUMENTS F.CRANE DRIV.CA<br>⇨ 2 533 91 54 254 08 | ELEKTRIK KRANFUEHRERKABIN |
| 144 | 91 68 708 08 | 1 | MIRROR ATTACHM.AT SLEW.PLATFOR<br>⇨ 2 790 91 68 708 08 | SPIEGELANBAU DREHBUEHNE |
| 147 | 91 50 900 08 | 1 | COUNTERWEIGHT WITH CLAMP<br>⇨ 2 560 91 50 900 08 | GEGENGEWICHT M.BEFESTIG |
| 149 | 91 50 901 08 | 1 | ADDITIONAL BALLAST<br>⇨ 2 570 91 50 901 08 | ZUSATZBALLAST |
| 153 | 91 50 902 08 | 1 | HYDRAULIC BALLASTING<br>⇨ 2 571 91 50 902 08 | HYDRAULISCHE BALLASTIERUN |
| 163 | 91 53 225 08 | 1 | EXHAUST SYSTEM CPL. M.FUNKENFAENGE<br>⇨ 2 680 91 53 225 08 | ABGASANLAGE KPL. |
| 165 | 91 28 102 08 | 1 | AIR FILTER UNIT<br>⇨ 2 681 91 28 102 08 | LUFTFILTERANLAGE |
| 169 | 91 53 002 08 | 1 | CENT. LUBRIC. SYSTEM SUPERST.<br>⇨ 2 711 91 53 002 08 | ZENTRALSCHMIERANLAGE OW |
| 170 | 91 80 907 08 | 1 | SIGNAGE COOLANT OW<br>⇨ 2 881 91 80 907 08 | BESCHILDERUNG KUEHLMITTE |
| 175 | 91 52 291 08 | 1 | DISPATCH ASSY.MECH.PARTS<br>⇨ 2 792 91 52 291 08 | MECH.TEILE VERSANDMONTAG |
| 179 | 91 55 477 08 | 1 | ELECTR. SYSTEM F.SLEWING PLATF<br>⇨ 2 920 91 55 477 08 | EL.ANLAGE DREHBUEHNE |
| 181 | 91 68 959 08 | 1 | SWITCHBOX MOUNTING PARTS<br>⇨ 2 920 91 68 959 08 | EINBAUTEILE SCHALTSCHRAN |
| 183 | 91 49 516 08 | 1 | PNEUM. CRANE OPERATORS CABIN<br>⇨ 2 955 91 49 516 08 | PNEUMATIK KRANFUEHRERKAB |
| 185 | 91 55 482 08 | 1 | HYDRAULICS<br>⇨ 2 970 91 55 482 08 | HYDRAULIK |
| 187 | 91 52 906 08 | 1 | OIL COOLER INSTALLATION<br>⇨ 2 984 91 52 906 08 | OELKUEHLER EINBAU |
| 189 | 91 49 515 08 | 1 | COMPRESSED-AIR SYST.SUPERSTR.<br>⇨ 2 950 91 49 515 08 | DRUCKLUFTANLAGE OW |
| 191 | 91 51 089 08 | 1 | HOSE LINES SUPERSTRUCTURE<br>⇨ 2 997 91 51 089 08 | SCHLAUCHLEITUNGEN OBER |
| 193 | 91 51 090 08 | 1 | PIPELINES SUPERSTRUCTURE<br>⇨ 2 998 91 51 090 08 | ROHRLEITUNGEN OBERWAGE |
| 201 | 91 59 279 08 | 1 | TELESCOPIC BOOM CPL.<br>⇨ 3 100 91 59 279 08 | TELESKOPAUSLEGER KPL. |
| 213 | 91 59 068 08 | 1 | ELECTR. SYSTEM F. BOOM<br>⇨ 3 930 91 59 068 08 | EL.ANLAGE AUSLEGER |
| 217 | 91 05 737 08 | 1 | HYDR.F.TELESCOPIC BOOM<br>⇨ 2 975 152 91 05 737 08 | HYDRAULIK TELE |
| 229 | 91 26 492 08 | 1 | ADDNL.HYDR. FOLDING JIB<br>⇨ 2 975 038 91 26 492 08 | ZUSATZHYDRAULIK KLAPPSPI |
| 299 | 91 78 930 08 | 1 | SLINGING MEAN MONTAGE<br>⇨ 1 790 91 78 930 08 | ANSCHLAGMITTEL |
| 301 | 91 47 871 08 | 1 | AIR COND. UNIT SUPERSTRUCTURE 1100-<br>⇨ 2 831 91 47 871 08 | KLIMAANLAGE OW |
| 310 | 91 42 310 08 | 1 | LOAD HOOK 10E SPF<br>⇨ 4 027 91 42 310 08 | LASTHAKEN |
| 312 | 91 04 457 08 | 1 | HOOK BLOCK 63DM SPF<br>⇨ 4 003 006 91 04 457 08 | HAKENFLASCHE |
| 330 | 91 52 288 08 | 1 | AUXILIARY HOISTING GEAR 2<br>⇨ 2 440 91 52 288 08 | HILFSHUBWERK WINDE 2 |
| 332 | 91 62 290 08 | 1 | AUXILIARY HOIST.ROPE W.ACCESSO<br>⇨ 2 442 91 62 290 08 | HILFSHUBSEIL M.ZUBEHOER |
| 333 | 91 50 610 08 | 1 | HYDR.AUXILIARY HOISTING<br>⇨ 2 971 91 50 610 08 | HYDRAULIK HILFSHUBWERK |

| Pos. | Item | Quantity | Description | Bezeichnung |
|---|---|---|---|---|
| 350 | 91 49 246 08 | 1 | TRANSPORT MOUNTING<br>➪ 3 510 100 91 49 246 08 | TRANSPORTHALTERUNG DKS |
| 351 | 91 05 776 08 | 1 | DOUBLE FOLDING JIB MECH.COMP.<br>➪ 3 500 91 05 776 08 | DOPPELKLAPPSPITZE MECH.K |
| 352 | 91 75 084 08 | 1 | TOOLS<br>➪ 3 750 91 75 084 08 | WERKZEUG KLAPPSPITZE |
| 355 | 91 13 525 08 | 1 | SET OF NAME PLATES FOLDING JIB<br>➪ 3 880 005 91 13 525 08 | BESCHILDERUNG KLAPPSPITZ |
| 356 | 91 54 159 08 | 1 | BOOM NOSE<br>➪ 3 511 91 54 159 08 | MASTNASE |
| 362 | 91 59 294 08 | 1 | EL.2 HOISTING LIMIT SWITCH<br>➪ 3 780 400 91 59 294 08 | ELEKTRIK 2.HUBENDSCHALTE |
| 363 | 91 45 571 08 | 1 | INST.BACK SHEAVE FOR BOOM NOSE<br>➪ 3 280 91 45 571 08 | EINBAU NACKENROLLE |
| 410 | 91 60 938 08 | 1 | TELEDIAGNOSIS MODULE 1<br>➪ 2 780 850 91 60 938 08 | FERNDIAGNOSE MODUL OW LI |
| 412 | 91 68 736 08 | 1 | ADAPTER DATA LOGGER<br>➪ 2 780 952 91 68 736 08 | ADAPTER DATENLOGGER |
| 440 | 91 50 372 08 | 1 | AUXILIARY REEVING CABLE, COMPL 16X18<br>➪ 2 751 91 50 372 08 | HILFSEINSCHERSEIL KPL. |
| 456 | 91 70 947 08 | 1 | CHARGE VOLTAGE REGULATOR<br>➪ 2 780 870 91 70 947 08 | LADESPANNUNGSREGLER |
| 2000 | SK_Z48005 | 1 | SERVICE LTR 1100<br>➪ XSK_Z48005 SK_Z48005 | SERVICE |

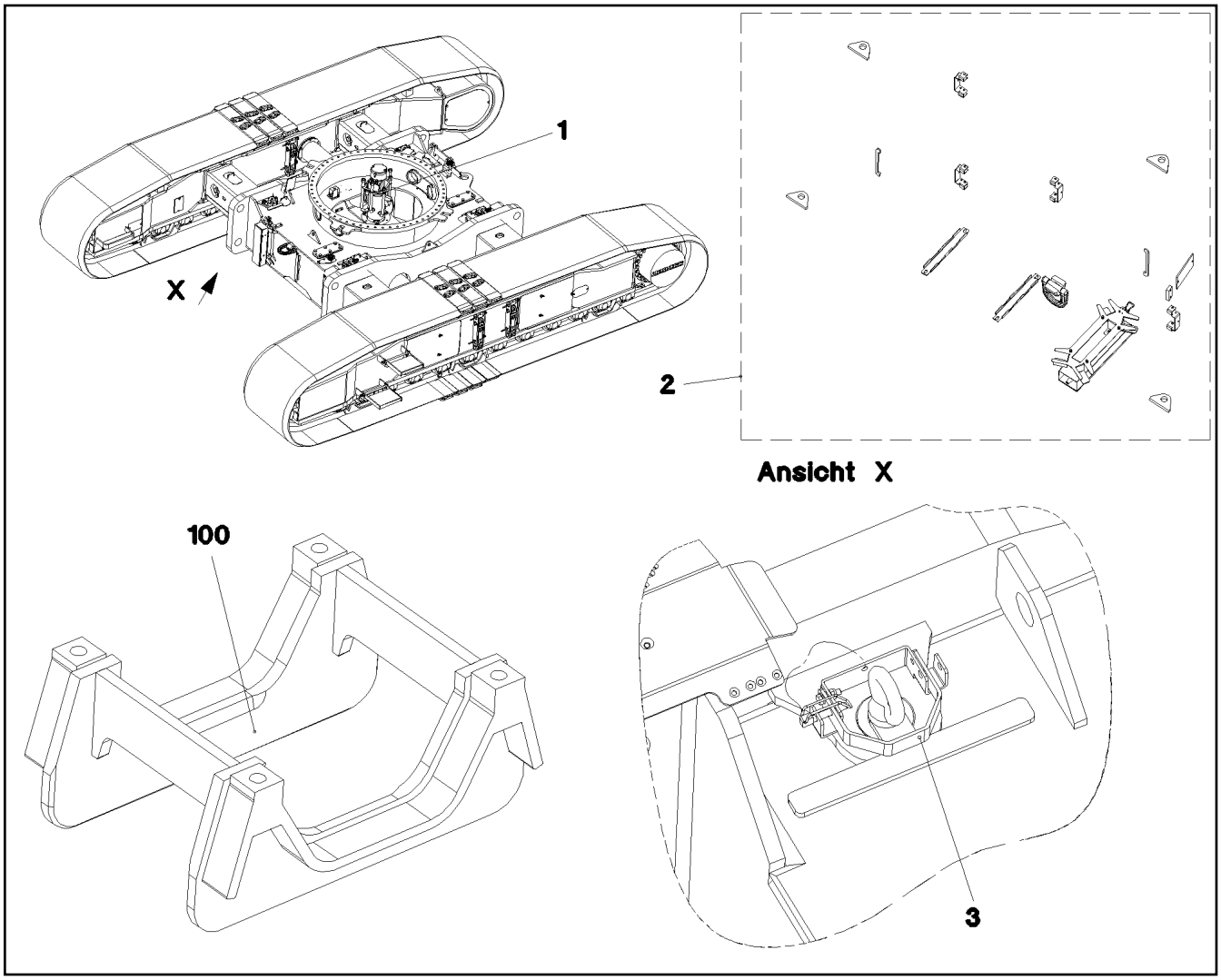


| Pos. | Item | Quantity | Description | Bezeichnung |
|---|---|---|---|---|
| 1 | 96 72 944 08 | 1 | UNDERCARRIAGE CPL. B7B<br>⇨ 1 100 200 96 72 944 08 | UNTERWAGEN KPL. |
| 2 | 96 46 362 08 | 1 | WELDED-ON PART LWE | ANSCHWEISSTEILE LWE |
| 3 | 96 46 363 08 | 1 | MOUNTING PARTS LWE<br>⇨ 1 100 216 96 46 363 08 | MONTAGETEILE LWE |

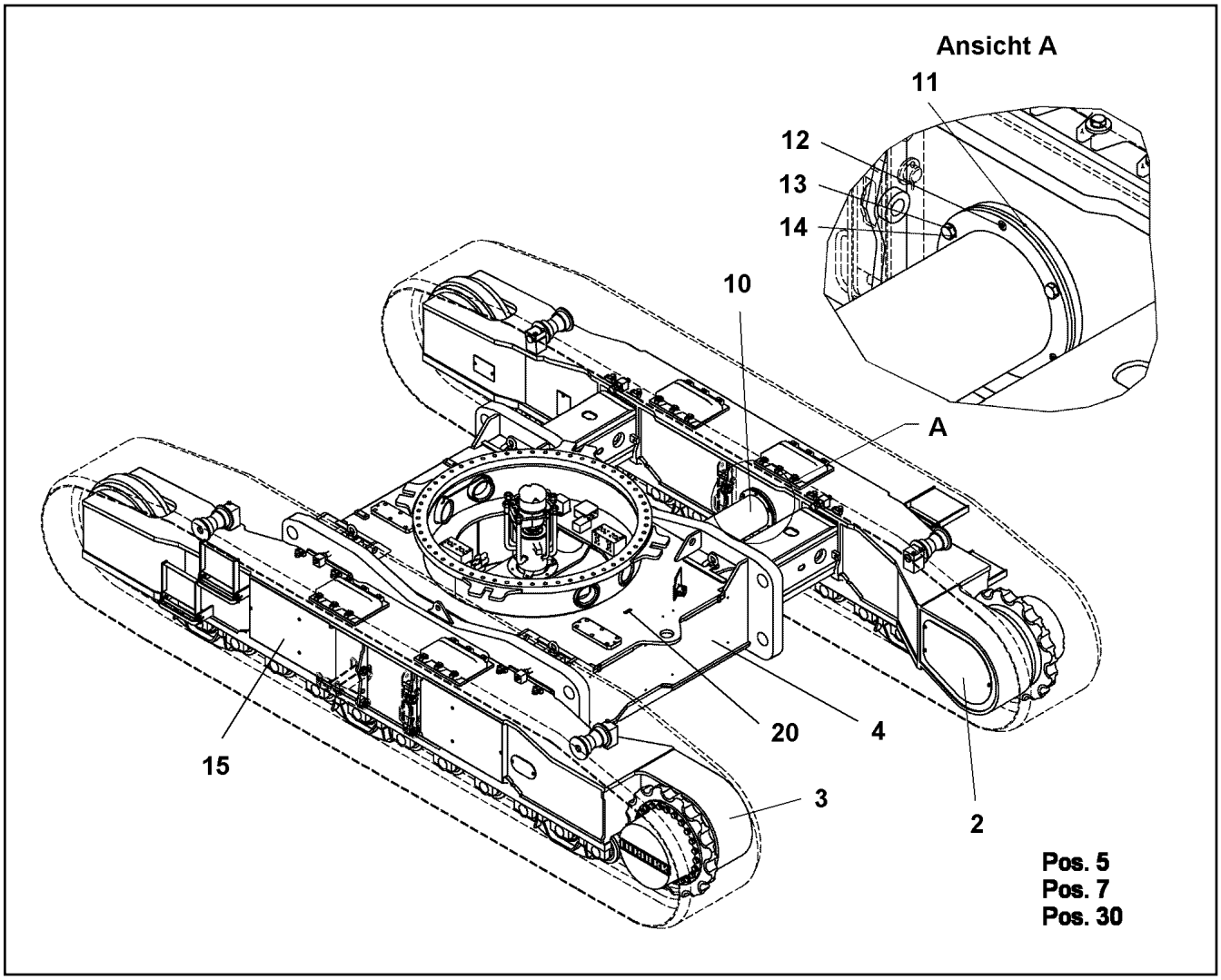


| Pos. | Item | Quantity | Description | Bezeichnung |
|---|---|---|---|---|
| 2 | 96 51 633 08 | 1 | CRAWLER CARRIER RIGHT CPL<br>⇨ 1 100 205 96 51 633 08 | RAUPENTRAEGER KPL.RE. |
| 3 | 96 51 634 08 | 1 | CRAWLER TRACK CARRIER LEFT CPL<br>⇨ 1 100 210 96 51 634 08 | RAUPENTRAEGER KPL.LI. |
| 4 | 99 20 783 14 | 1 | CENTRE PIECE KPL.<br>⇨ 1 100 215 99 20 783 14 | MITTELTEIL |
| 5 | 96 71 367 08 | 1 | UNDERCARRIAGE HYDRAULICS<br>⇨ 1 970 96 71 367 08 | HYDRAULIK UNTERWAGEN |
| 7 | 91 53 489 08 | 1 | HOSE LINES CRAWLER<br>⇨ 1 997 91 53 489 08 | SCHLAUCHLEITUNGEN RAUPE |
| 10 | 91 89 986 14 | 2 | PIPE COMPL. | ROHR KPL. |
| 11 | 97 04 266 7 | 2 | PLATE 8X325X325 S355MC | BLECH |
| 12 | 46 00 182 | 6 | SOCKET HEAD SCREW ISO 4762 M10X20 8. | ZYLINDERSCHRAUBE |
| 13 | 49 00 123 | 6 | HEX SCREW ISO 4017 M16X35 8.8 A3C | SECHSKANTSCHRAUBE |
| 14 | 42 52 216 08 | 6 | SERRATED LOCK WASHER DIN 6798 J 16,5 | FAECHERSCHEIBE |
| 15 | 99 08 404 14 | 1 | COVER NRS<br>⇨ 1 100 220 99 08 404 14 | ABDECKUNG |
| 20 | 97 35 676 08 | 1 | PLATE IDENTIFICATION NUMBER IDENT-N | SCHILD IDENTNR. |
| 30 | 96 72 945 08 | 1 | INSTALLATION PARTS F.HYDRAULIC<br>⇨ 1 100 301 96 72 945 08 | HYDR.INSTALLATIONSTEILE |

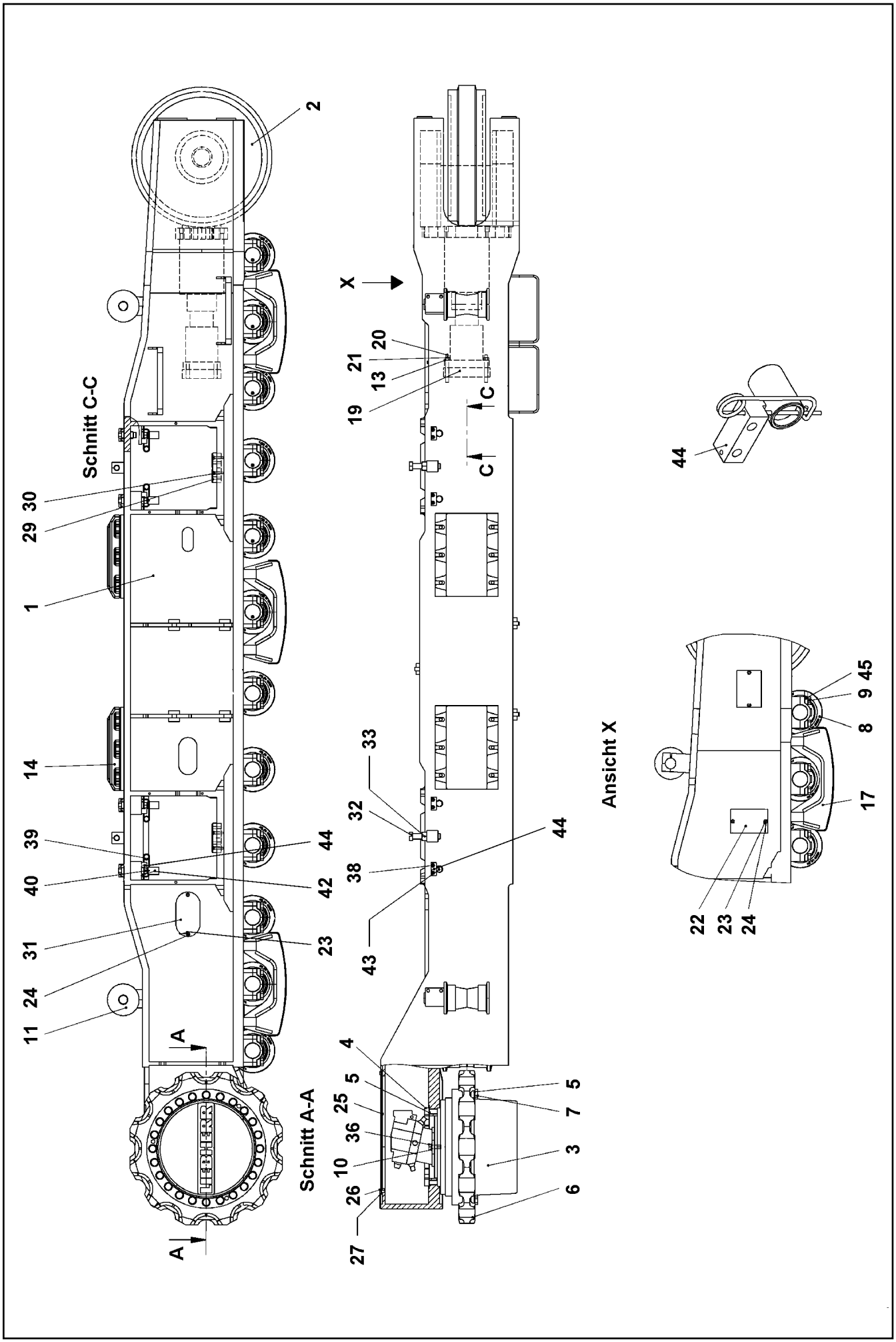


| | | |
|---|---|---|
| 16.2.2017<br>052530<br>LIEBHERR | etk_en_de_048005 LTR 1100<br><br>CRAWLER CARRIER RIGHT CPL<br>RAUPENTRAEGER KPL.RE. | 13 (1/2)<br><br>1 100 205<br>96 51 633 08 |

| Pos. | Item | Quantity | Description | Bezeichnung |
|---|---|---|---|---|
| 1 | 10 22 596 9 | 1 | CRAWLER TRACK CARRIER, RIGHT | RAUPENTRAEGER RE. |
| 2 | 79 02 561 14 | 1 | GUIDE WHEEL UNIT CPL B7X710<br>➪ 1 100 212 79 02 561 14 | LEITRADEINHEIT KPL |
| 3 | 94 44 410 03 | 1 | TRACTION DRIVE FAT 500P031<br>➪ 9 444 410 03 94 44 410 03 | FAHRANTRIEB |
| 4 | 40 43 245 08 | 24 | SOCKET HEAD SCREW ISO 4762 M24X80 10 | ZYLINDERSCHRAUBE |
| 5 | 46 00 146 03 | 48 | WASHER DIN 6916 25 C 45 A3C | SCHEIBE |
| 6 | 74 90 652 14 | 1 | DRIVE WHEEL 983593114 LH-Grau | ANTRIEBSRAD |
| 7 | 40 61 509 14 | 24 | HEX SCREW ISO 4014 M24X100 10.9 A3C SP | SECHSKANTSCHRAUBE |
| 8 | 10 22 581 0 | 12 | RUNNING ROLLER CPL 200X208 982602314 | LAUFROLLE KPL |
| 9 | 46 00 629 | 48 | HEX SCREW ISO 4014 M24X120 8.8 A3C | SECHSKANTSCHRAUBE |
| 10 | 46 00 222 03 | 14 | WASHER DIN 6916 21 C 45 A3C | SCHEIBE |
| 11 | 74 90 653 14 | 2 | CARRYING ROLLER CPL 983593114 LH-Gra<br>➪ 1 100 211 74 90 653 14 | TRAGROLLE KPL |
| 12 | 11 64 237 7 | 4 | HEX SCREW ISO 4014 M16X70 8.8 FLZN SP | SECHSKANTSCHRAUBE |
| 13 | 42 52 216 08 | 20 | SERRATED LOCK WASHER DIN 6798 J 16,5 | FAECHERSCHEIBE |
| 14 | 30 81 151 14 | 2 | SLIPPER 65X340X450 GS-CK 45 983593114 | GLEITSCHUH |
| 15 | 10 87 552 0 | 12 | HEX SCREW ISO 4017 M16X50 8.8 FLZN SP | SECHSKANTSCHRAUBE |
| 16 | 42 13 004 14 | 12 | WASHER DIN 6340 17 C35 A3C | SCHEIBE |
| 17 | 96 46 508 08 | 3 | TRACK GUIDE WELDMENT SPF | KETTENFUEHRUNG SCHWK. |
| 18 | 40 62 072 08 | 12 | HEX SCREW ISO 4017 M20X100 10.9 FLZN | SECHSKANTSCHRAUBE |
| 19 | 97 72 402 08 | 1 | PLATE 50X250X210 S355J2+N | BLECH |
| 20 | 94 89 969 14 | 4 | THREADED ROD DIN 975 M16X150 8.8 | GEWINDESTANGE |
| 21 | 49 00 124 03 | 4 | HEX NUT ISO 4032 M16 8 A3C | SECHSKANTMUTTER |
| 22 | 97 74 410 08 | 2 | PLATE 5X200X130 S355MC | BLECH |
| 23 | 11 65 247 0 | 8 | HEX SCREW ISO 4017 M10X16 8.8 FLZN SP | SECHSKANTSCHRAUBE |
| 24 | 42 52 212 08 | 8 | SERRATED LOCK WASHER DIN 6798 J 10,5 | FAECHERSCHEIBE |
| 25 | 97 65 405 08 | 1 | PLATE 5X670X510 S355MC | BLECH |
| 26 | 11 65 100 6 | 3 | HEX SCREW ISO 4017 M12X20 8.8 FLZN SP | SECHSKANTSCHRAUBE |
| 27 | 10 28 980 4 | 3 | WASHER ISO 7089 12 300HV FLZN SPF | SCHEIBE |
| 29 | 95 62 140 14 | 2 | PIN 160X50 35NICRMOV125 GASN. SPF | BOLZEN |
| 30 | 10 87 557 3 | 6 | SOCKET HEAD SCREW ISO 4762 M10X50 8 | ZYLINDERSCHRAUBE |
| 31 | 97 65 408 08 | 2 | PLATE 5X240X130 S355MC | BLECH |
| 32 | 40 65 269 14 | 2 | HEX SCREW ISO 4017 M30X150 8.8 A3C | SECHSKANTSCHRAUBE |
| 33 | 41 15 152 08 | 2 | HEX NUT ISO 4032 M30 8 A3C | SECHSKANTMUTTER |
| 36 | 46 00 097 | 2 | HEX SCREW ISO 4017 M20X55 8.8 A3C | SECHSKANTSCHRAUBE |
| 38 | 11 62 670 6 | 16 | HEX SCREW ISO 4017 M10X40 8.8 FLZN SP | SECHSKANTSCHRAUBE |
| 39 | 43 31 012 08 | 4 | RETAINING SPRING 4X68 VERZ | SICHERUNGSFEDER |
| 40 | 95 70 959 14 | 4 | THREADED ROD RD36X85 42CRMO4+QT | GEWINDESTANGE |
| 42 | 95 70 957 14 | 4 | THRUST PIECE RD40X60 42CRMO4+QT | DRUCKSTUECK |
| 43 | 95 70 958 14 | 4 | THREADED ROD RD36X95 42CRMO4+QT | GEWINDESTANGE |
| 44 | 97 80 687 08 | 8 | LOCKING PLATE 30X70X30 S355J2+N FE// | SICHERUNGSBLECH |
| 45 | 95 95 526 14 | 48 | WASHER 40/25X18 42CRMO4+QT | SCHEIBE |

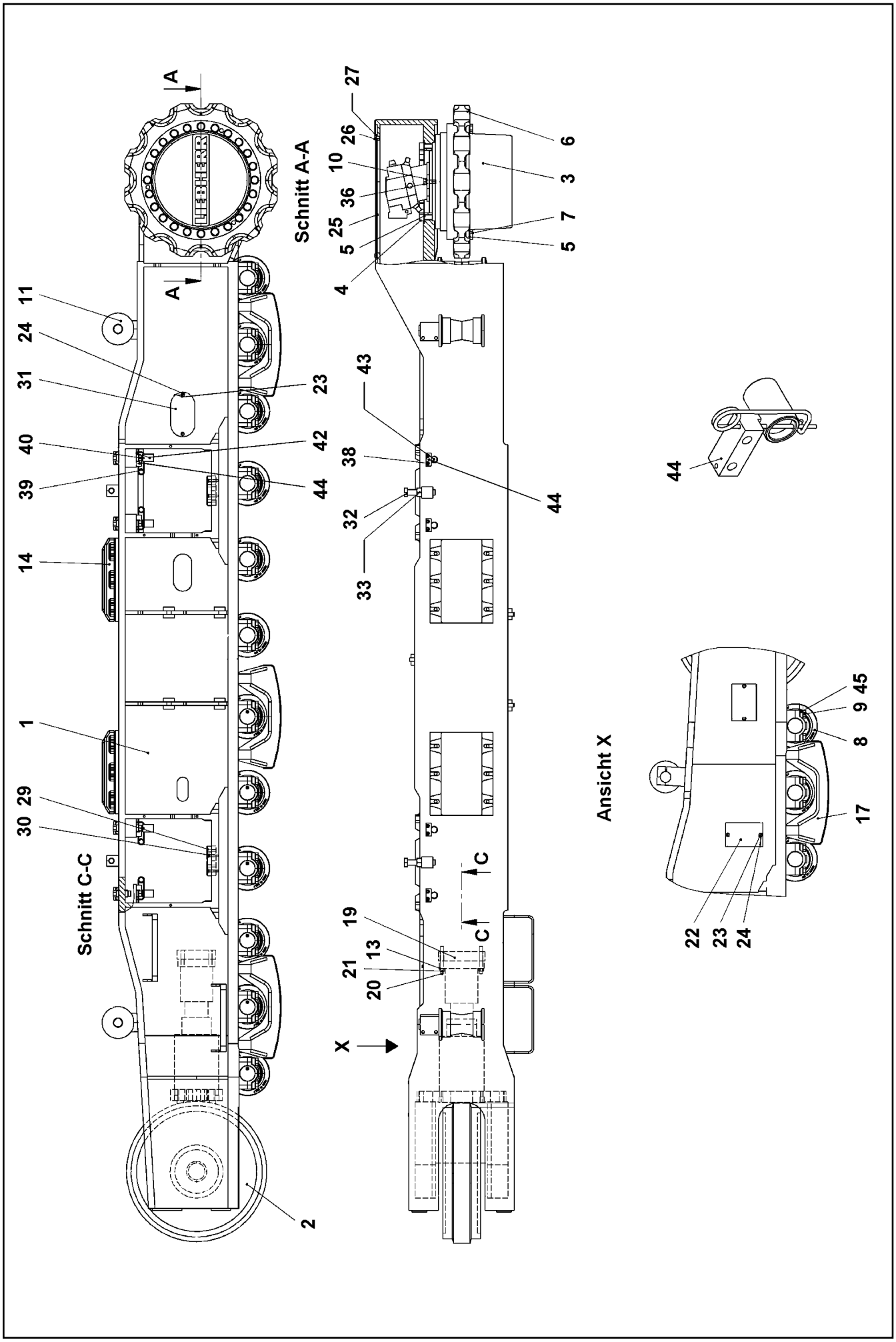


| | | |
|---|---|---|
| 16.2.2017<br>052531<br>LIEBHERR | etk_en_de_048005 LTR 1100<br><br>CRAWLER TRACK CARRIER LEFT CPL<br>RAUPENTRAEGER KPL.LI. | 15 (1/2)<br><br>1 100 210<br>96 51 634 08 |

| Pos. | Item | Quantity | Description | Bezeichnung |
|---|---|---|---|---|
| 1 | 10 22 596 7 | 1 | CRAWLER TRACK CARRIER, LEFT | RAUPENTRAEGER LI. |
| 2 | 79 02 561 14 | 1 | GUIDE WHEEL UNIT CPL B7X710<br>➪ 1 100 212 79 02 561 14 | LEITRADEINHEIT KPL |
| 3 | 94 44 410 03 | 1 | TRACTION DRIVE FAT 500P031<br>➪ 9 444 410 03 94 44 410 03 | FAHRANTRIEB |
| 4 | 40 43 245 01 | 24 | SOCKET HEAD SCREW ISO 4762 M24X80 1 | ZYLINDERSCHRAUBE |
| 5 | 46 00 146 03 | 48 | WASHER DIN 6916 25 C 45 A3C | SCHEIBE |
| 6 | 74 90 652 14 | 1 | DRIVE WHEEL 983593114 LH-Grau | ANTRIEBSRAD |
| 7 | 40 61 509 14 | 24 | HEX SCREW ISO 4014 M24X100 10.9 A3C SP | SECHSKANTSCHRAUBE |
| 8 | 10 22 581 0 | 12 | RUNNING ROLLER CPL 200X208 982602314 | LAUFROLLE KPL |
| 9 | 46 00 629 | 48 | HEX SCREW ISO 4014 M24X120 8.8 A3C | SECHSKANTSCHRAUBE |
| 10 | 46 00 222 03 | 14 | WASHER DIN 6916 21 C 45 A3C | SCHEIBE |
| 11 | 74 90 653 14 | 2 | CARRYING ROLLER CPL 983593114 LH-Gra<br>➪ 1 100 211 74 90 653 14 | TRAGROLLE KPL |
| 12 | 11 64 237 7 | 4 | HEX SCREW ISO 4014 M16X70 8.8 FLZN SP | SECHSKANTSCHRAUBE |
| 13 | 42 52 216 08 | 20 | SERRATED LOCK WASHER DIN 6798 J 16,5 | FAECHERSCHEIBE |
| 14 | 30 81 151 14 | 2 | SLIPPER 65X340X450 GS-CK 45 983593114 | GLEITSCHUH |
| 15 | 10 87 552 0 | 12 | HEX SCREW ISO 4017 M16X50 8.8 FLZN SP | SECHSKANTSCHRAUBE |
| 16 | 42 13 004 14 | 12 | WASHER DIN 6340 17 C35 A3C | SCHEIBE |
| 17 | 96 46 508 08 | 3 | TRACK GUIDE WELDMENT SPF | KETTENFUEHRUNG SCHWK. |
| 18 | 40 62 072 08 | 12 | HEX SCREW ISO 4017 M20X100 10.9 FLZN | SECHSKANTSCHRAUBE |
| 19 | 97 72 402 08 | 1 | PLATE 50X250X210 S355J2+N | BLECH |
| 20 | 94 89 969 14 | 4 | THREADED ROD DIN 975 M16X150 8.8 | GEWINDESTANGE |
| 21 | 49 00 124 03 | 4 | HEX NUT ISO 4032 M16 8 A3C | SECHSKANTMUTTER |
| 22 | 97 74 410 08 | 2 | PLATE 5X200X130 S355MC | BLECH |
| 23 | 11 65 247 0 | 6 | HEX SCREW ISO 4017 M10X16 8.8 FLZN SP | SECHSKANTSCHRAUBE |
| 24 | 42 52 212 08 | 6 | SERRATED LOCK WASHER DIN 6798 J 10,5 | FAECHERSCHEIBE |
| 25 | 97 65 405 08 | 1 | PLATE 5X670X510 S355MC | BLECH |
| 26 | 11 65 100 6 | 3 | HEX SCREW ISO 4017 M12X20 8.8 FLZN SP | SECHSKANTSCHRAUBE |
| 27 | 10 28 980 4 | 3 | WASHER ISO 7089 12 300HV FLZN SPF | SCHEIBE |
| 29 | 95 62 140 14 | 2 | PIN 160X50 35NICRMOV125 GASN. SPF | BOLZEN |
| 30 | 10 87 557 3 | 6 | SOCKET HEAD SCREW ISO 4762 M10X50 8 | ZYLINDERSCHRAUBE |
| 31 | 97 65 408 08 | 1 | PLATE 5X240X130 S355MC | BLECH |
| 32 | 40 65 269 14 | 2 | HEX SCREW ISO 4017 M30X150 8.8 A3C | SECHSKANTSCHRAUBE |
| 33 | 41 15 152 08 | 2 | HEX NUT ISO 4032 M30 8 A3C | SECHSKANTMUTTER |
| 36 | 46 00 097 | 2 | HEX SCREW ISO 4017 M20X55 8.8 A3C | SECHSKANTSCHRAUBE |
| 38 | 11 62 670 6 | 16 | HEX SCREW ISO 4017 M10X40 8.8 FLZN SP | SECHSKANTSCHRAUBE |
| 39 | 43 31 012 08 | 4 | RETAINING SPRING 4X68 VERZ | SICHERUNGSFEDER |
| 40 | 95 70 959 14 | 4 | THREADED ROD RD36X85 42CRMO4+QT | GEWINDESTANGE |
| 42 | 95 70 957 14 | 4 | THRUST PIECE RD40X60 42CRMO4+QT | DRUCKSTUECK |
| 43 | 95 70 958 14 | 4 | THREADED ROD RD36X95 42CRMO4+QT | GEWINDESTANGE |
| 44 | 97 80 687 08 | 8 | LOCKING PLATE 30X70X30 S355J2+N FE// | SICHERUNGSBLECH |
| 45 | 95 95 526 14 | 48 | WASHER 40/25X18 42CRMO4+QT | SCHEIBE |

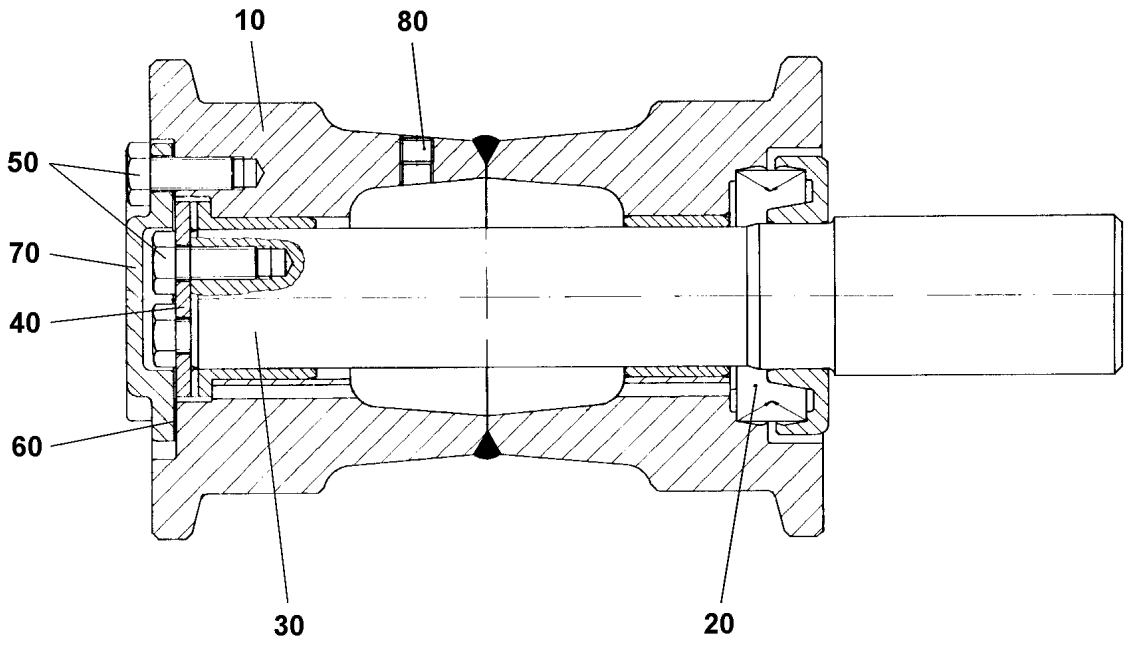


| Pos. | Item | Quantity | Description | Bezeichnung |
|---|---|---|---|---|
| 20 | 74 90 573 14 | 1 | AXIAL FACE SEAL | GLEITRINGDICHTUNG |
| 40 | 74 90 156 14 | 1 | THRUST WASHER | ANLAUFSCHEIBE |
| 50 | 11 63 174 2 | 5 | HEX SCREW ISO 4017 M12X30 8.8 FLZN SP | SECHSKANTSCHRAUBE |
| 60 | 73 63 427 | 1 | SHEET GASKET | DICHTSCHEIBE |
| 80 | 46 00 370 | 1 | SCREW PLUG DIN 906 M12X1,5 ST A3C | VERSCHLUSSSCHRAUBE |

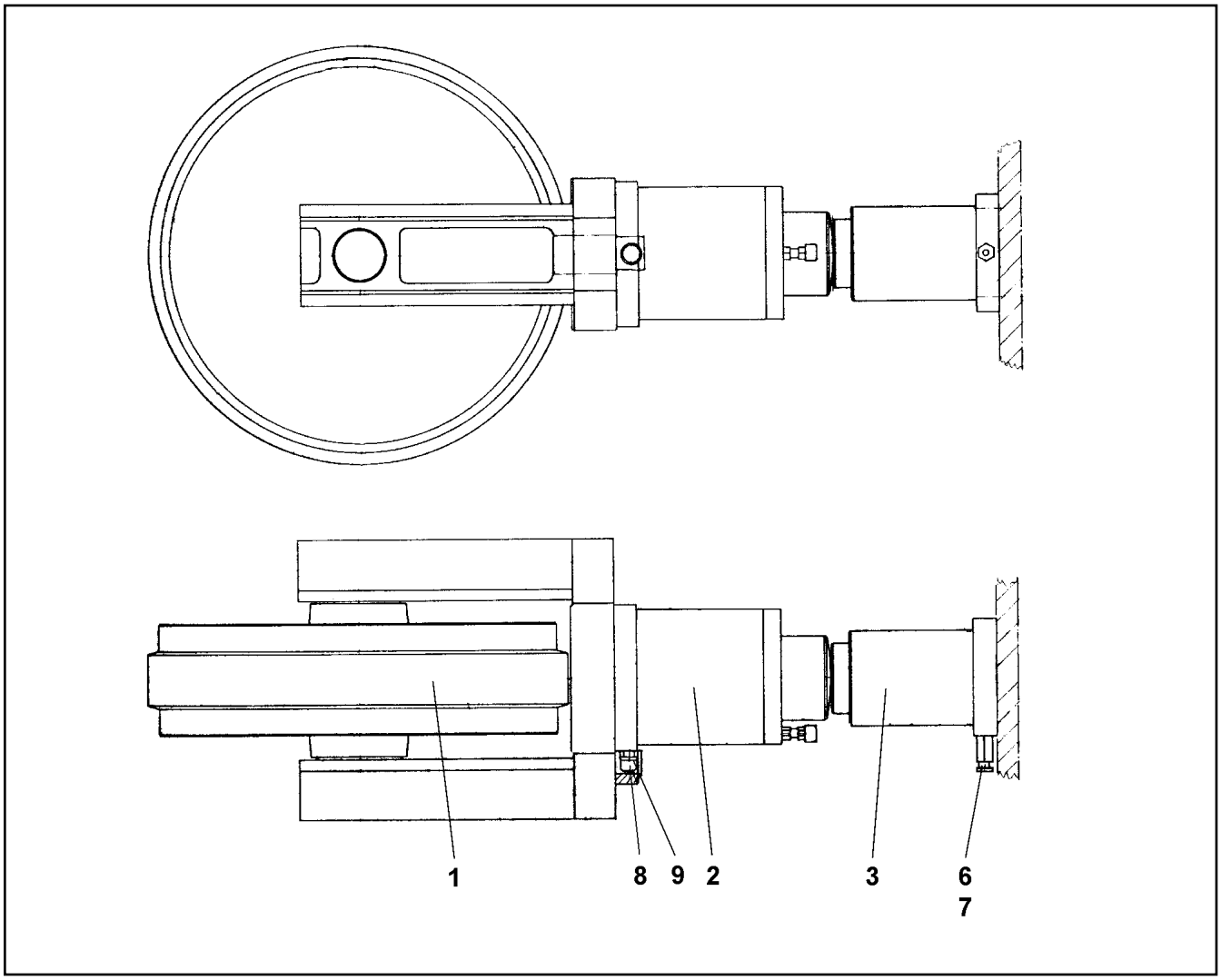


| Pos. | Item | Quantity | Description | Bezeichnung |
|---|---|---|---|---|
| 1 | 74 90 137 14 | 1 | GUIDE WHEEL CPL B7X710<br>⇨ 1 100 214 74 90 137 14 | LEITRAD KPL |
| 2 | 79 03 360 14 | 1 | NITROGEN TENSIONER CPL | STICKSTOFFSPANNER KPL |
| 3 | 74 90 654 14 | 1 | TENSION JACK HYDR CPL<br>⇨ 1 100 213 74 90 654 14 | SPANNER HYDR KPL |
| 6 | 77 43 517 14 | 1 | GREASE NIPPLE | SCHMIERNIPPEL |
| 7 | 71 01 211 14 | 1 | FLAT SEALING RING 17,4X24X1,5 | FLACHDICHTRING |
| 8 | 50 00 569 | 1 | GAS LINE NON-RETURN VALVE | GASRUECKSCHLAGVENTIL |
| 9 | 73 71 064 | 1 | SEAL | DICHTUNG |

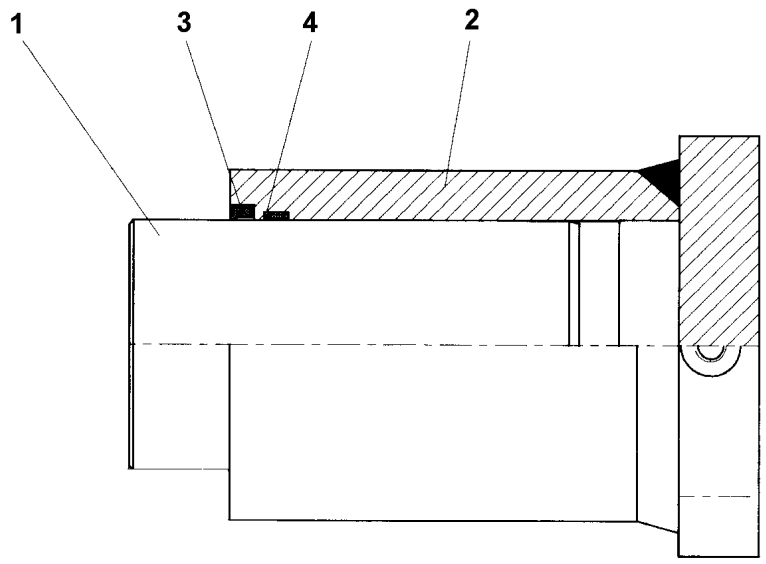


Pos. 5

| Pos. | Item | Quantity | Description | Bezeichnung |
|---|---|---|---|---|
| 1 | 79 02 722 14 | 1 | PISTON | KOLBEN |
| 2 | 79 02 723 14 | 1 | CYL CPL | ZYL KPL |
| 3 | 79 02 724 14 | 1 | ROD SEAL 125X133X6 | NUTRING |
| 4 | 79 02 725 14 | 1 | SUPPORTING RING | STUETZRING |
| 5 | 73 71 745 | 1 | SCRAPER 125X140X9,5 | ABSTREIFER |

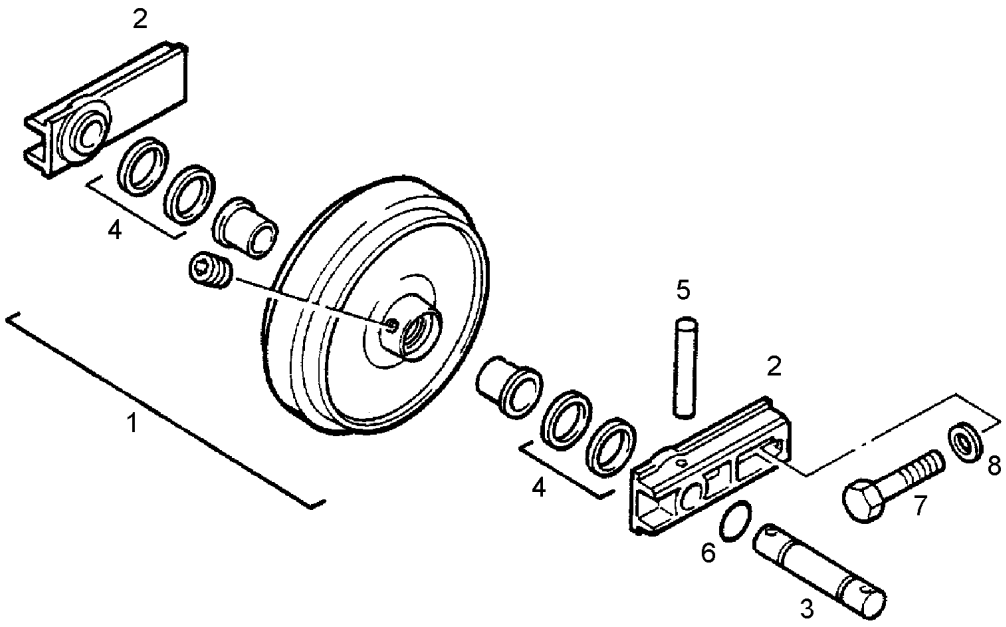


| Pos. | Item | Quantity | Description | Bezeichnung |
|---|---|---|---|---|
| 1 | 74 90 636 14 | 1 | GUIDE WHEEL | LEITRAD |
| 2 | 74 90 637 14 | 2 | SLIDER | GLEITSTUECK |
| 3 | 74 90 153 14 | 1 | AXLE | ACHSE |
| 4 | 74 90 685 14 | 2 | AXIAL FACE SEAL CPL | GLEITRINGDICHTUNG KPL. |
| 5 | 43 20 131 08 | 2 | DOWEL PIN ISO 8752 21X140 | SPANNSTIFT |
| 6 | 72 64 311 14 | 2 | O-RING 88,49X3,53 | O-RING |
| 7 | 40 62 129 01 | 4 | HEX SCREW ISO 4014 M20X110 10.9 A3C SP | SECHSKANTSCHRAUBE |
| 8 | 46 00 013 03 | 4 | WASHER SPRING DIN 128 A 20 A3C | FEDERRING |

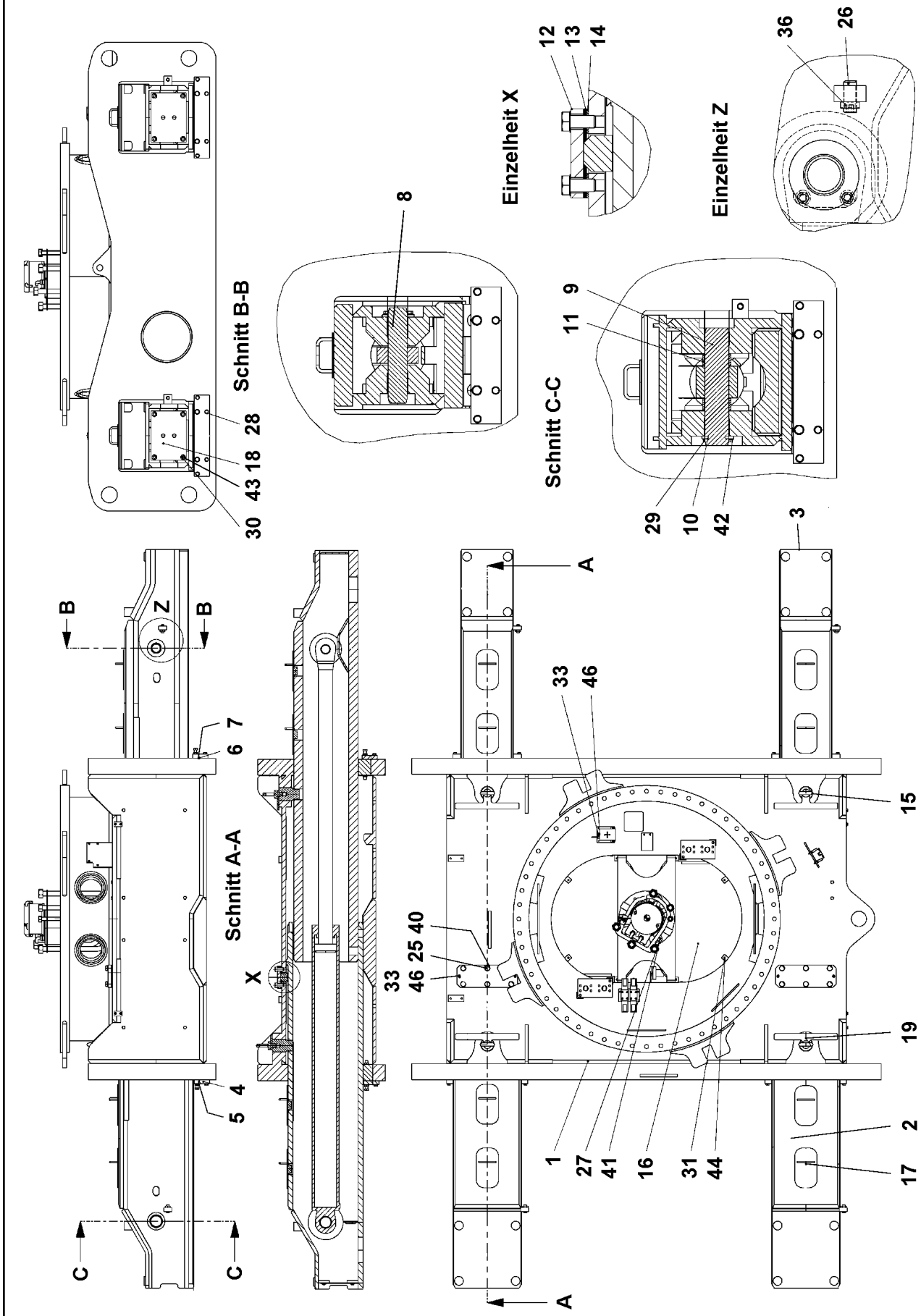


| | | |
|---|---|---|
| 16.2.2017<br>046719<br>LIEBHERR | etk_en_de_048005 LTR 1100<br><br>CENTRE PIECE<br>MITTELTEIL | 21 (1/3)<br><br>1 100 215<br>99 20 783 14 |

| Pos. | Item | Quantity | Description | Bezeichnung |
|---|---|---|---|---|
| 1 | 10 22 299 9 | 1 | CENTRE PART MACHINING | MITTELTEIL BEARBEITUNG |
| 2 | 10 22 427 8 | 2 | TELESC.OUTRIGGER LINKS | SCHIEBEHOLM |
| 3 | 10 22 427 9 | 2 | TELESC.OUTRIGGER RECHTS | SCHIEBEHOLM |
| 4 | 97 07 598 03 | 1 | WEDGING LEFT REAR CPL | VERKEILUNG LI HINTEN KPL |
| 5 | 97 07 604 03 | 1 | WEDGING LEFT FRONT CPL | VERKEILUNG LI VORNE KPL |
| 6 | 97 07 607 03 | 1 | WEDGING RIGHT REAR CPL | VERKEILUNG RE HINTEN KPL |
| 7 | 97 07 601 03 | 1 | WEDGING RIGHT FRONT CPL | VERKEILUNG RE VORNE KPL |
| 8 | 97 72 403 08 | 2 | PIN 65.0X300 35NICRMOV125 SPF | BOLZEN |
| 9 | 95 62 101 14 | 2 | PIN 75X370 35NICRMOV125 | BOLZEN |
| 10 | 96 72 306 03 | 4 | AXLE HOLDER 8X29X100 ST.37 | ACHSHALTER |
| 11 | 97 72 672 08 | 4 | TUBE 88.9X36 S235JRH FE//ZN20//C | ROHR |
| 12 | 95 57 463 03 | 2 | LIMIT STOP CPL | ANSCHLAG KPL. |
| 13 | 95 57 472 03 | 10 | WP DC01 EN 12329 FE/ZN 12 C | WP |
| 14 | 96 72 328 03 | 2 | PLATE 5X140X380 S355MC | BLECH |
| 15 | 96 50 100 08 | 2 | PIN COMPL. 80X130 | BOLZEN KPL. |
| 16 | 95 55 324 03 | 1 | COVER 3X790X1190 RST 37-2 | DECKEL |
| 17 | 96 75 763 08 | 8 | COVER COMPL. | DECKEL KPL. |
| (1) | 96 75 699 08 | 1 | COVER WELDED | DECKEL SCHWK. |
| (2) | 97 72 400 08 | 2 | RUBBER PLATE 184X10X2 GUMMI | GUMMIPLATTE |
| 18 | 95 62 110 14 | 2 | WELD PLATE S315MC RAL7043 | ANSCHWEISSPLATTE |
| 19 | 96 50 100 08 | 2 | PIN COMPL. 80X130 | BOLZEN KPL. |
| 25 | 40 65 207 01 | 12 | HEX SCREW ISO 4017 M20X40 8.8 A3C | SECHSKANTSCHRAUBE |
| 26 | 48 55 098 14 | 4 | GRUB SCREW ISO 4026 M20X50 45H A3C | GEWINDESTIFT |
| 27 | 49 00 123 | 3 | HEX SCREW ISO 4017 M16X35 8.8 A3C | SECHSKANTSCHRAUBE |
| 28 | 11 65 157 8 | 16 | HEX SCREW ISO 4014 M12X50 8.8 FLZN SP | SECHSKANTSCHRAUBE |
| 29 | 11 65 889 2 | 18 | HEX SCREW ISO 4017 M12X25 8.8 FLZN SP | SECHSKANTSCHRAUBE |
| 30 | 11 65 163 2 | 8 | HEX SCREW ISO 4017 M10X20 8.8 FLZN SP | SECHSKANTSCHRAUBE |
| 31 | 11 65 247 0 | 8 | HEX SCREW ISO 4017 M10X16 8.8 FLZN SP | SECHSKANTSCHRAUBE |
| 33 | 40 42 002 | 7 | SOCKET HEAD SCREW ISO 4762 M6X20 8.8 | ZYLINDERSCHRAUBE |
| 36 | 10 54 416 3 | 4 | HEX NUT ISO 4036 M20 ST FLZN SPF | SECHSKANTMUTTER |
| 40 | 42 52 219 08 | 12 | SERRATED LOCK WASHER DIN 6798 J 21 | FAECHERSCHEIBE |
| 41 | 10 28 980 6 | 3 | WASHER ISO 7089 16 300HV FLZN SPF | SCHEIBE |
| 42 | 10 28 980 4 | 24 | WASHER ISO 7089 12 300HV FLZN SPF | SCHEIBE |
| 43 | 11 49 188 9 | 8 | WASHER ISO 7093-1 10 300HV FLZN SPF | SCHEIBE |
| 44 | 10 28 979 5 | 8 | WASHER ISO 7089 10 300HV FLZN SPF | SCHEIBE |
| 46 | 42 52 210 08 | 7 | SERRATED LOCK WASHER DIN 6798 J 6,4 | FAECHERSCHEIBE |

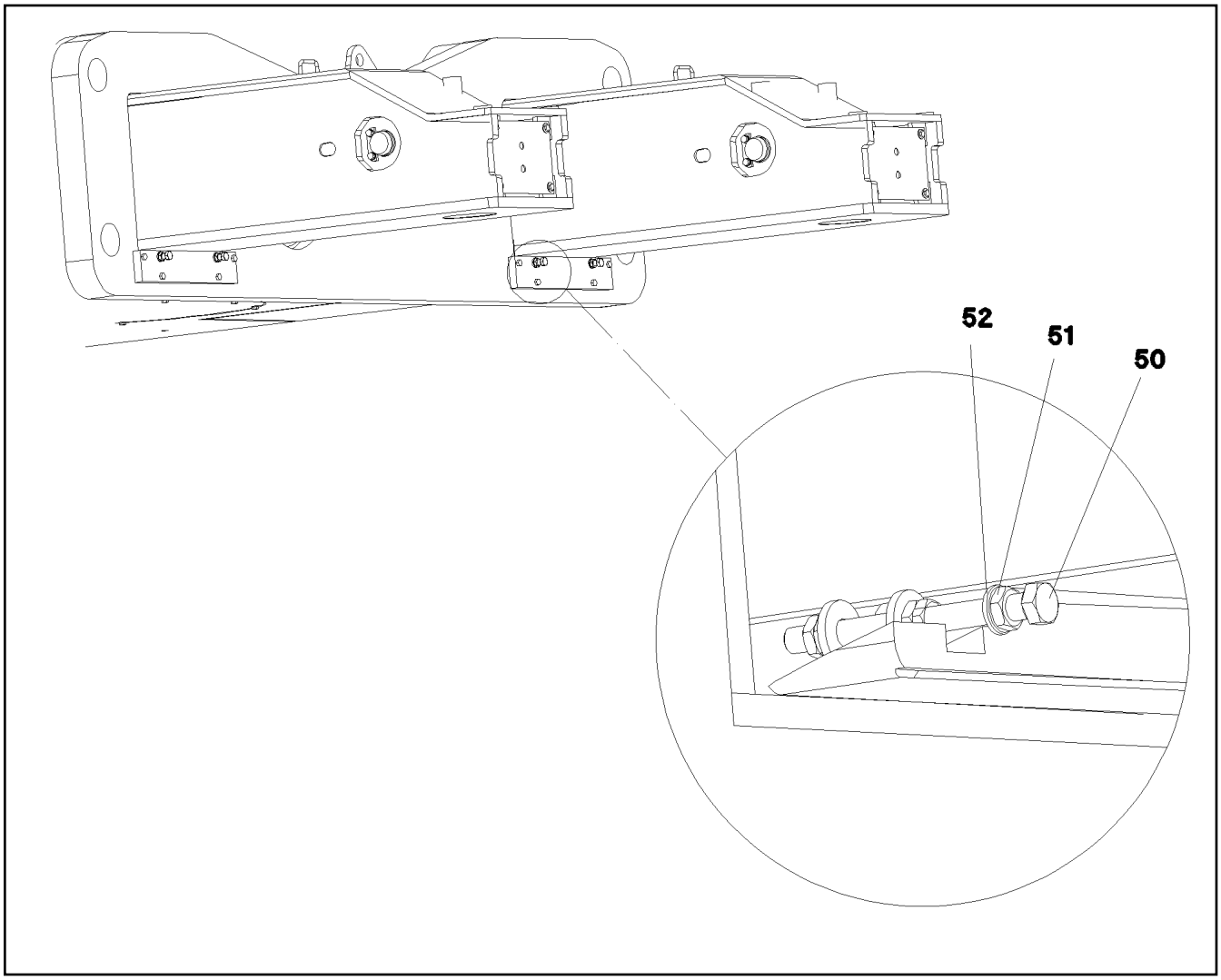


| Pos. | Item | Quantity | Description | Bezeichnung |
|---|---|---|---|---|
| 50 | 40 65 306 14 | 8 | HEX SCREW ISO 4017 M16X180 8.8 A3C | SECHSKANTSCHRAUBE |
| 51 | 41 17 006 08 | 40 | HEX NUT ISO 4035 M16 04 A2K | SECHSKANTMUTTER |
| 52 | 42 15 002 08 | 24 | WASHER DIN 6916 17 -C45 VERZ | SCHEIBE |

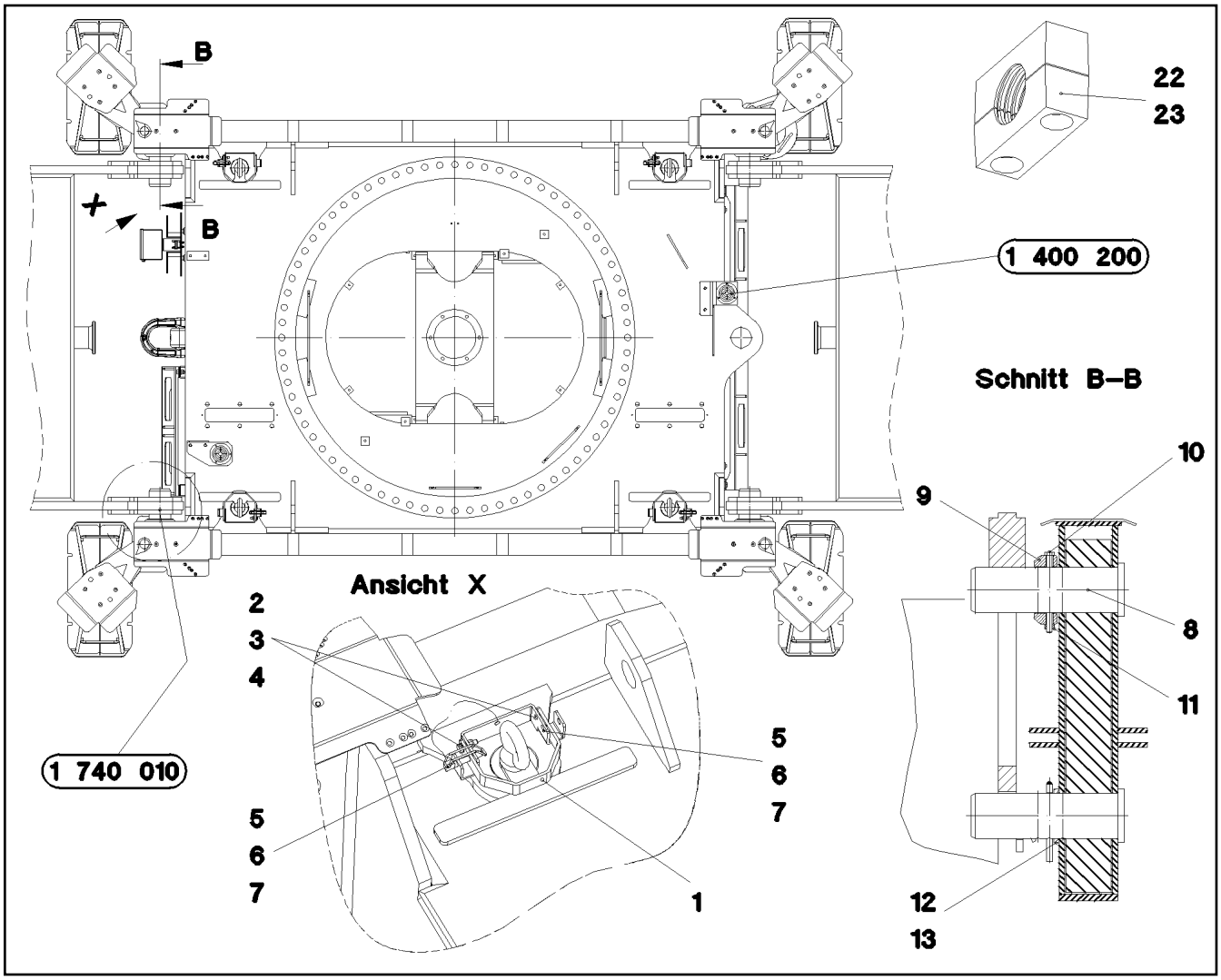


| Pos. | Item | Quantity | Description | Bezeichnung |
|---|---|---|---|---|
| 1 | 97 69 932 08 | 4 | PLATE 5X349X30 S355MC FE//ZN20//C | BLECH |
| 2 | 11 82 652 7 | 8 | HEX SCREW ISO 4017 M8X30 8.8 480H SPF | SECHSKANTSCHRAUBE |
| 3 | 10 28 980 3 | 24 | WASHER ISO 7089 8 300HV 480H SPF | SCHEIBE |
| 4 | 41 19 005 08 | 8 | HEX NUT DIN 985 M8 8 A2C | SECHSKANTMUTTER |
| 5 | 43 32 009 08 | 8 | FORMCLIP 10X55 VERZ | FORMCLIP |
| 6 | 11 16 043 1 | 2 | ROPE 2 2,3KN EDELSTAHL | SEIL |
| 7 | 11 17 056 5 | 16 | FERRULE 2 CU | PRESSKLEMME |
| 8 | 95 66 574 14 | 8 | PIN 118X340 35NICRMOV125 SPF | BOLZEN |
| 9 | 95 66 575 14 | 4 | DISTANCE RING 152X25X50 ST.37.0 FE//ZN | DISTANZRING |
| 10 | 46 00 256 | 4 | HEX SCREW ISO 4014 M12X170 8.8 A3C | SECHSKANTSCHRAUBE |
| 11 | 49 00 546 03 | 4 | HEX NUT ISO 4032 M12 10 A3C SPF | SECHSKANTMUTTER |
| 12 | 42 11 042 08 | 4 | WASHER DIN 1440 100 ST VERZ | SCHEIBE |
| 13 | 43 30 112 08 | 4 | SPLIT PIN ISO 1234 13X125 ST A3C | SPLINT |
| 22 | 73 67 238 | 8 | CLAMP-HALF AEHNL.DIN 3015 S 3 G 38 PP | KLEMMHAELFTE |
| 23 | 40 42 104 01 | 8 | SOCKET HEAD SCREW ISO 4762 M10X110 | ZYLINDERSCHRAUBE |

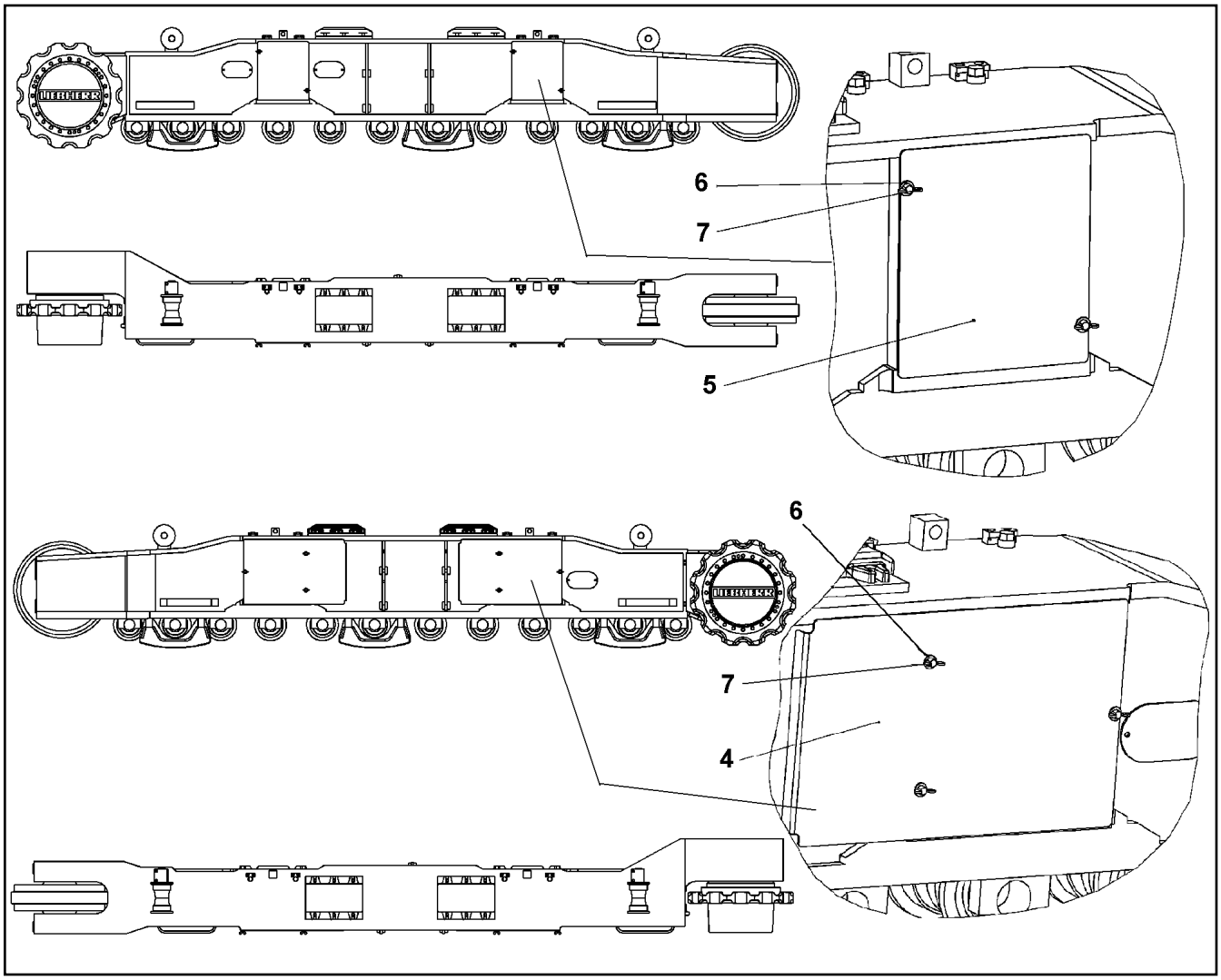


| Pos. | Item | Quantity | Description | Bezeichnung |
|---|---|---|---|---|
| 4 | 95 83 464 14 | 2 | PLATE 4X510X850 S235JR | BLECH |
| 5 | 95 83 404 14 | 2 | PLATE 4X405X460 RST 37-2 | BLECH |
| 6 | 11 49 188 9 | 20 | WASHER ISO 7093-1 10 300HV FLZN SPF | SCHEIBE |
| 7 | 40 09 029 14 | 10 | WING SCREW DIN 316 M10X25 4.6 A3C | FLUEGELSCHRAUBE |

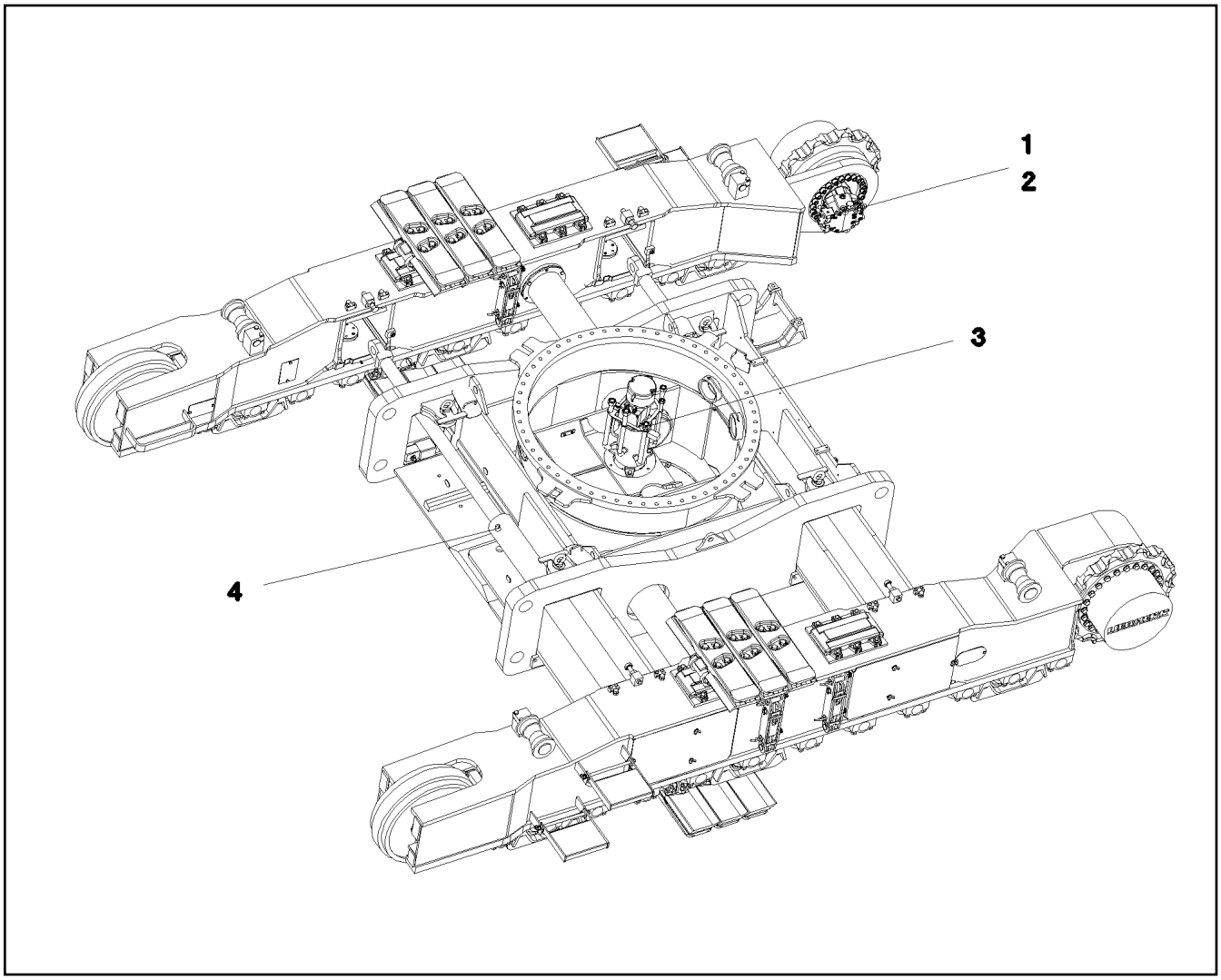


| Pos. | Item | Quantity | Description | Bezeichnung |
|---|---|---|---|---|
| 1 | 59 23 269 14 | 2 | VARIABLE DISPLACEMENT MOTOR A6VE 16<br>⇨ 5 923 269 14 59 23 269 14 | VERSTELLMOTOR |
| 2 | 72 64 018 08 | 2 | O-RING 180X4 NBR70 | O-RING |
| 3 | 10 28 292 8 | 1 | ROTARY FEED THROUGH 6 KANAELE SPF | DREHDURCHFUEHRUNG |
| (31) | 10 49 256 6 | 8 | ROTOR GASKET 150X165,5X6,3 | ROTORDICHTUNG |
| 4 | 11 06 838 7 | 2 | TRACK WIDTH ADJUSTING CYLINDER 140/<br>⇨ X11068387 11 06 838 7 | SPURVERSTELLZYLINDER |

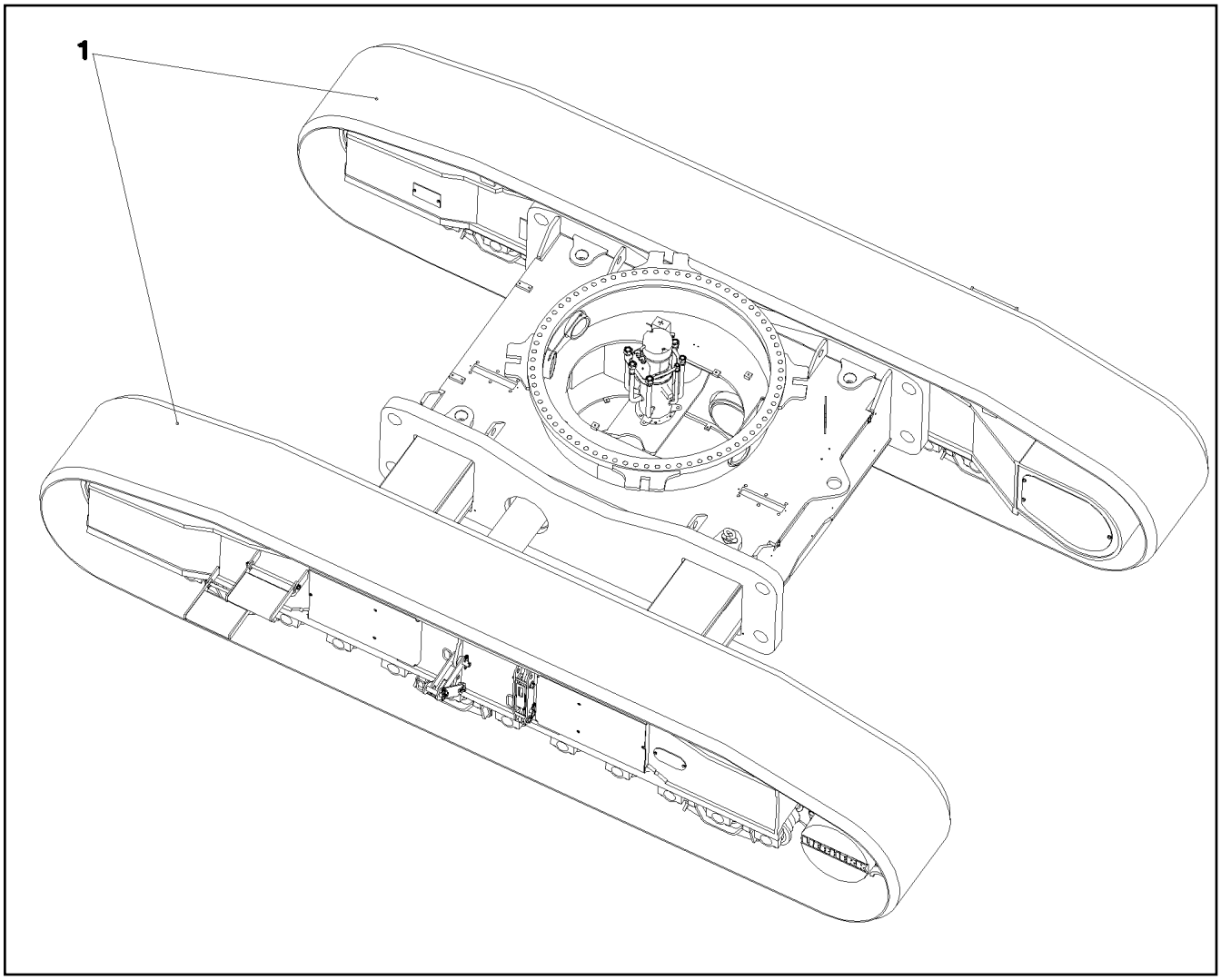


| Pos. | Item | Quantity | Description | Bezeichnung |
|---|---|---|---|---|
| 1 | 99 17 196 14 | 1 | CRAWLER OUTFIT 900 3-STEG 62 GL.<br>⇨ 1 300 005 99 17 196 14 | RAUPENBESTUECKUNG |

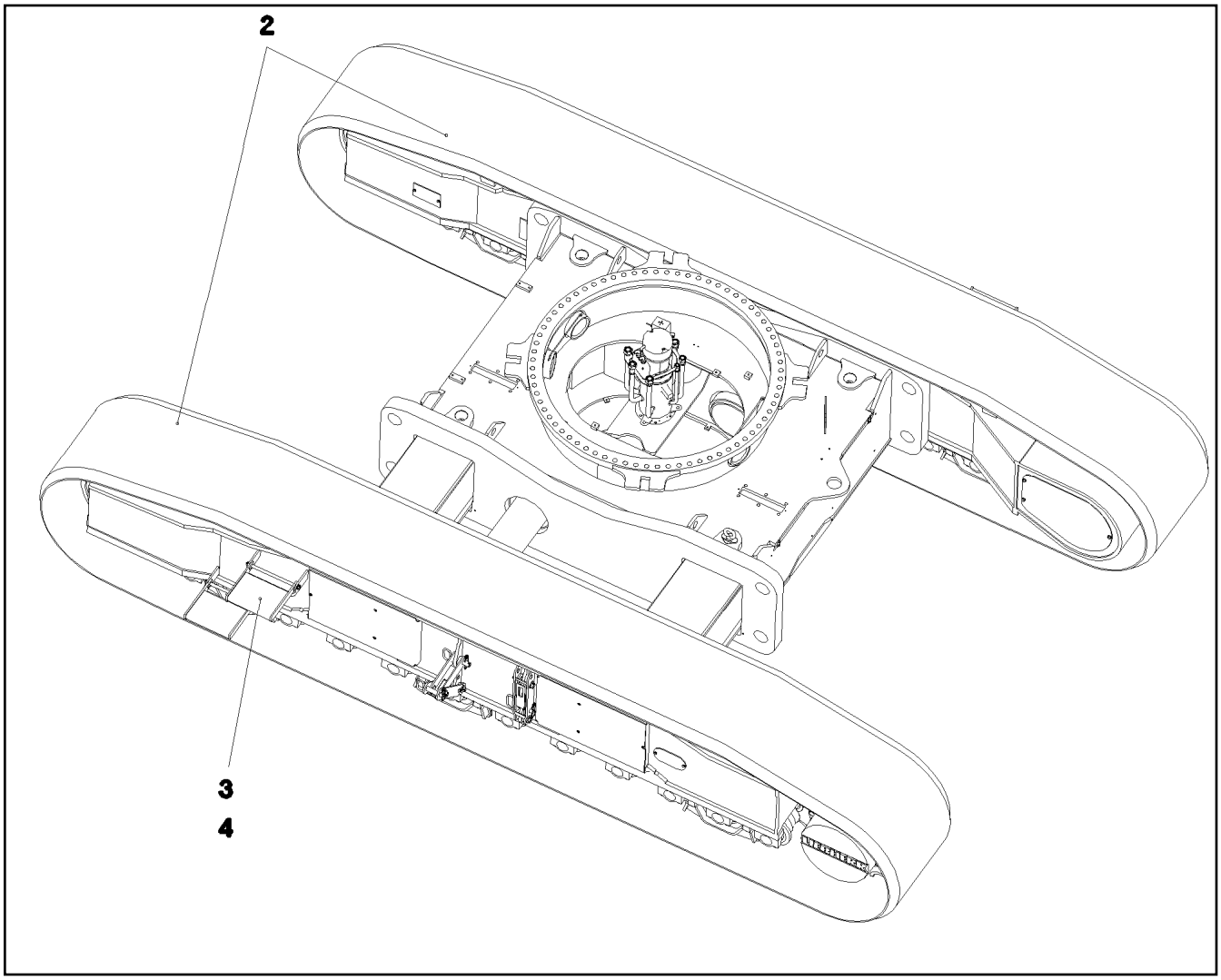


| Pos. | Item | Quantity | Description | Bezeichnung |
|---|---|---|---|---|
| 2 | 91 89 127 14 | 2 | CRAWLER CHAIN<br>⇨ 1 300 006 91 89 127 14 | RAUPENKETTE |
| 3 | 99 14 563 14 | 4 | ACCESS COMPL<br>⇨ 1 300 010 99 14 563 14 | AUFSTIEG KPL. |
| 4 | 43 32 066 08 | 8 | SPRING PLUG B 7 VERZ | FEDERSTECKER |

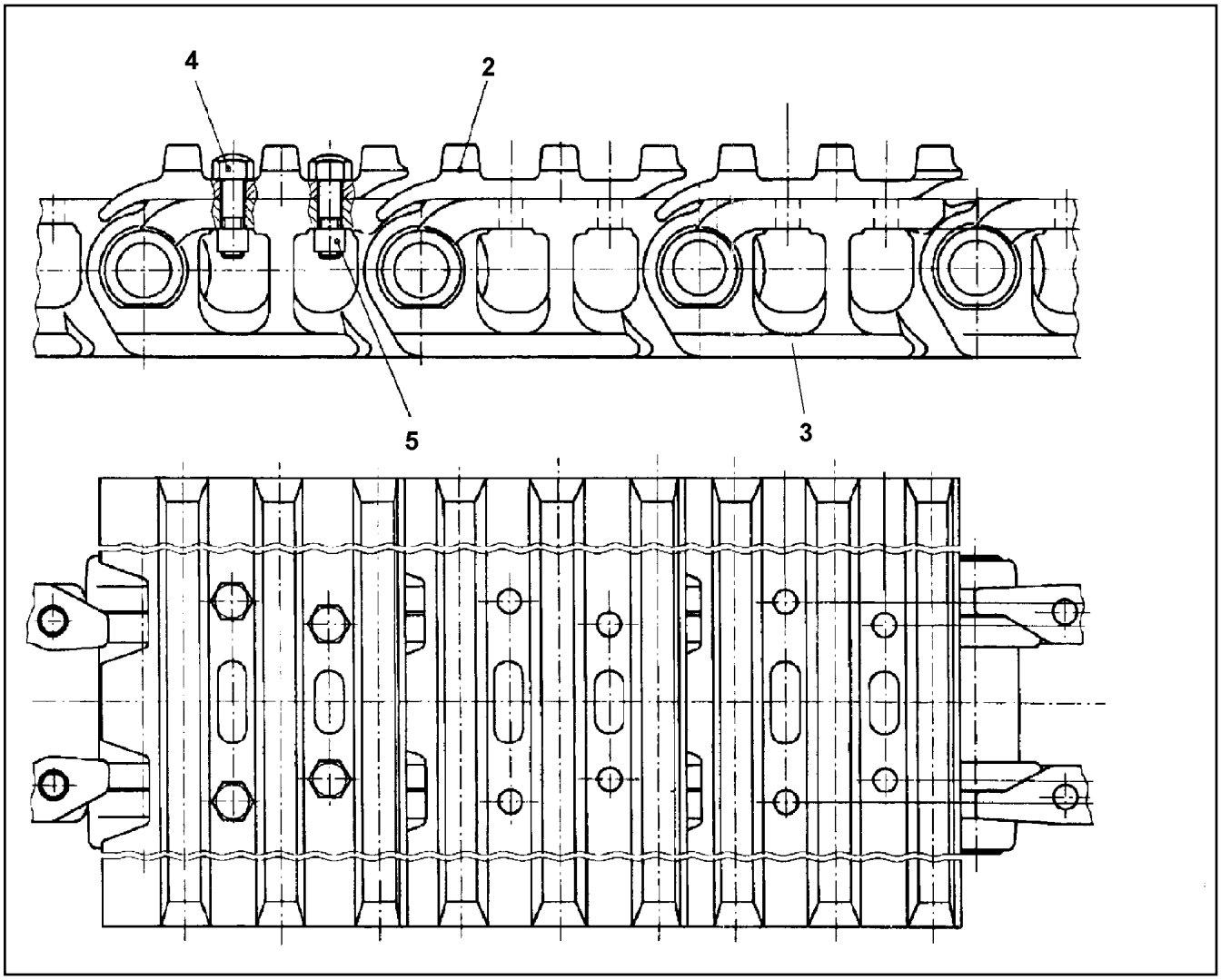


| Pos. | Item | Quantity | Description | Bezeichnung |
|---|---|---|---|---|
| 2 | 79 02 584 14 | 1 | CRAWLER CHAIN CPL 62GL.B7B<br>⇨ 1 300 007 79 02 584 14 | RAUPENKETTE KPL |
| 3 | 78 65 275 14 | 62 | FLOOR PLATE B7B LH-GRAU | BODENPLATTE |
| 4 | 78 65 114 14 | 248 | SCREW UNF7/8X14 12.9 | SCHRAUBE |
| 5 | 10 51 504 8 | 248 | NUT UNF7/8X14 13.9 | MUTTER |

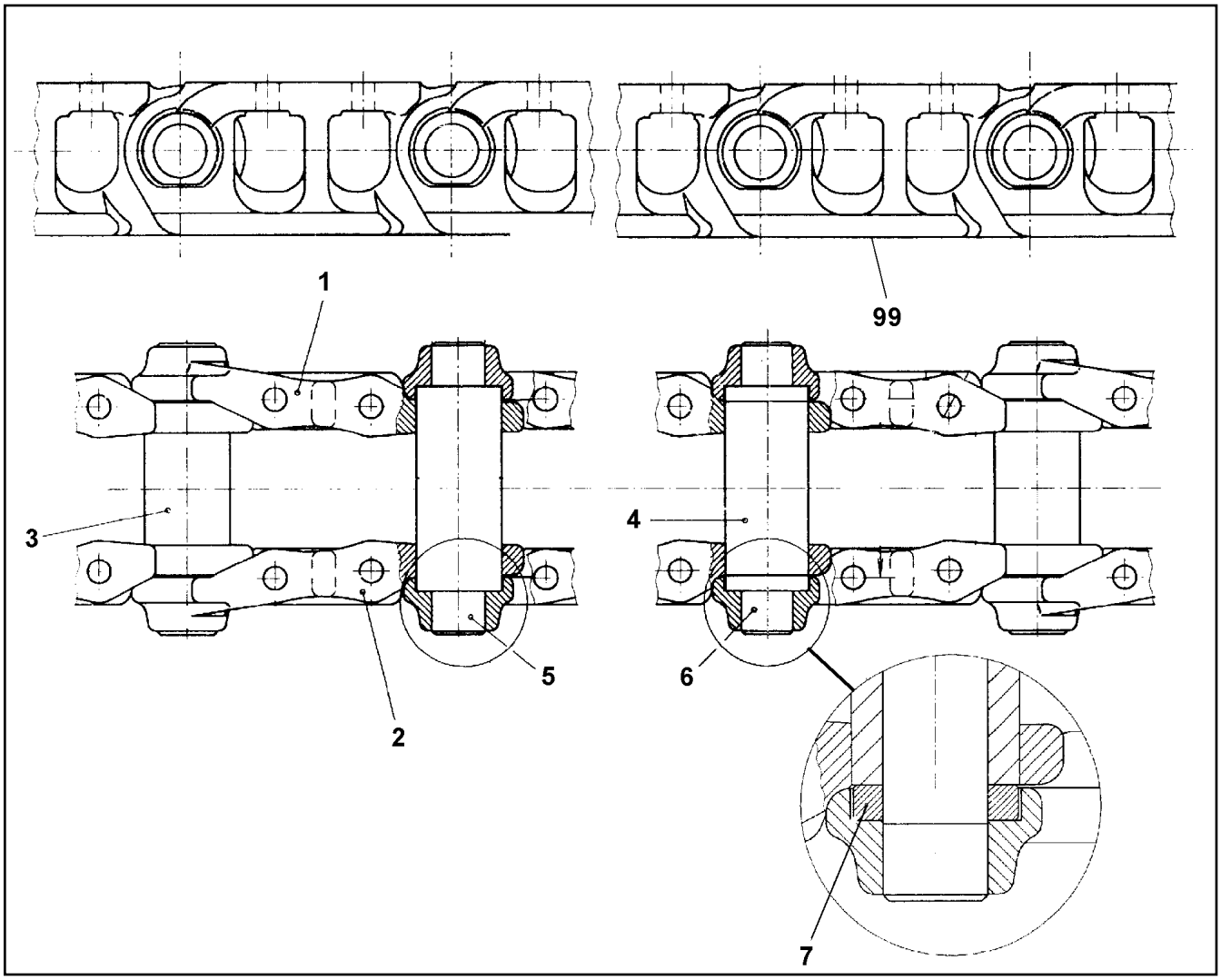


| Pos. | Item | Quantity | Description | Bezeichnung |
|---|---|---|---|---|
| 1 | 78 65 266 14 | 62 | CHAIN LINK | KETTENGLIED |
| 2 | 78 65 267 14 | 62 | CHAIN LINK | KETTENGLIED |
| 3 | 78 65 205 14 | 60 | CHAIN BUSHING 48,74X71,45X184 | KETTENBUCHSE |
| 4 | 78 65 203 14 | 1 | CHAIN END BUSHING 48,74X71,45X158, | KETTENENDBUCHSE |
| 5 | 78 65 204 14 | 60 | CHAIN BOLT | KETTENBOLZEN |
| 6 | 78 65 252 14 | 1 | CHAIN PIN | KETTENENDBOLZEN |
| 7 | 78 65 206 14 | 2 | TERMINAL DISK | SCHLUSSSCHEIBE |
| 99 | 78 65 281 14 | 1 | CHAIN END SEGMENT CPL | KETTENENDSEGMENT KPL |

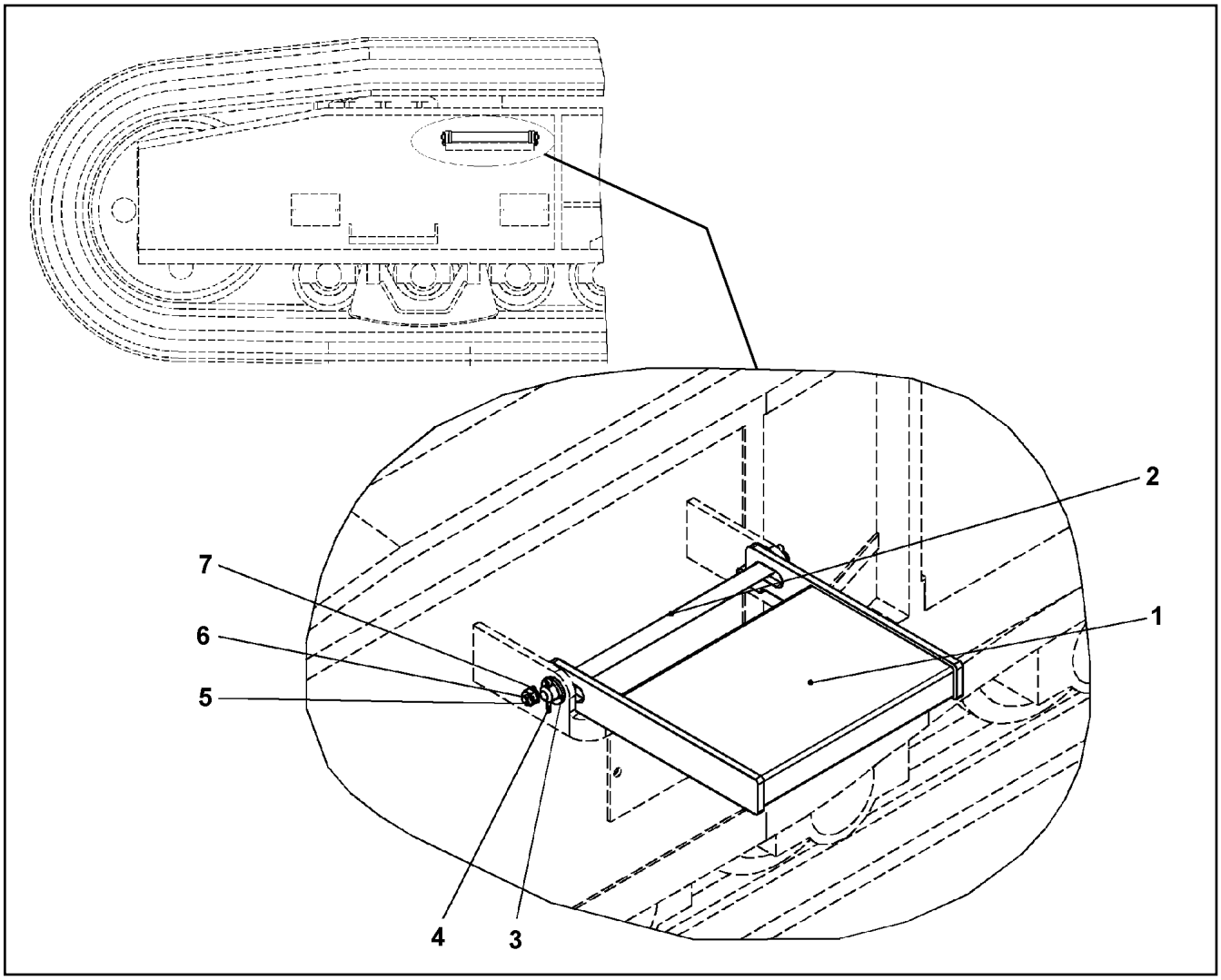


| Pos. | Item | Quantity | Description | Bezeichnung |
|---|---|---|---|---|
| 1 | 10 09 916 1 | 1 | STEP | TRITTSTUFE |
| 2 | 45 25 509 08 | 1 | PIN ISO 2340 B20X400X387 ST FE//ZN20//C | BOLZEN |
| 3 | 42 11 018 08 | 2 | WASHER DIN 1440 22 ST VERZ | SCHEIBE |
| 4 | 43 30 063 14 | 2 | SPLIT PIN ISO 1234 5X32 | SPLINT |
| 5 | 10 41 516 2 | 2 | SOCKET HEAD SCREW ISO 4762 M10X25 8 | ZYLINDERSCHRAUBE |
| 6 | 41 15 031 03 | 2 | HEX NUT ISO 4032 M10 8 A2E | SECHSKANTMUTTER |
| 7 | 10 28 979 5 | 2 | WASHER ISO 7089 10 300HV FLZN SPF | SCHEIBE |

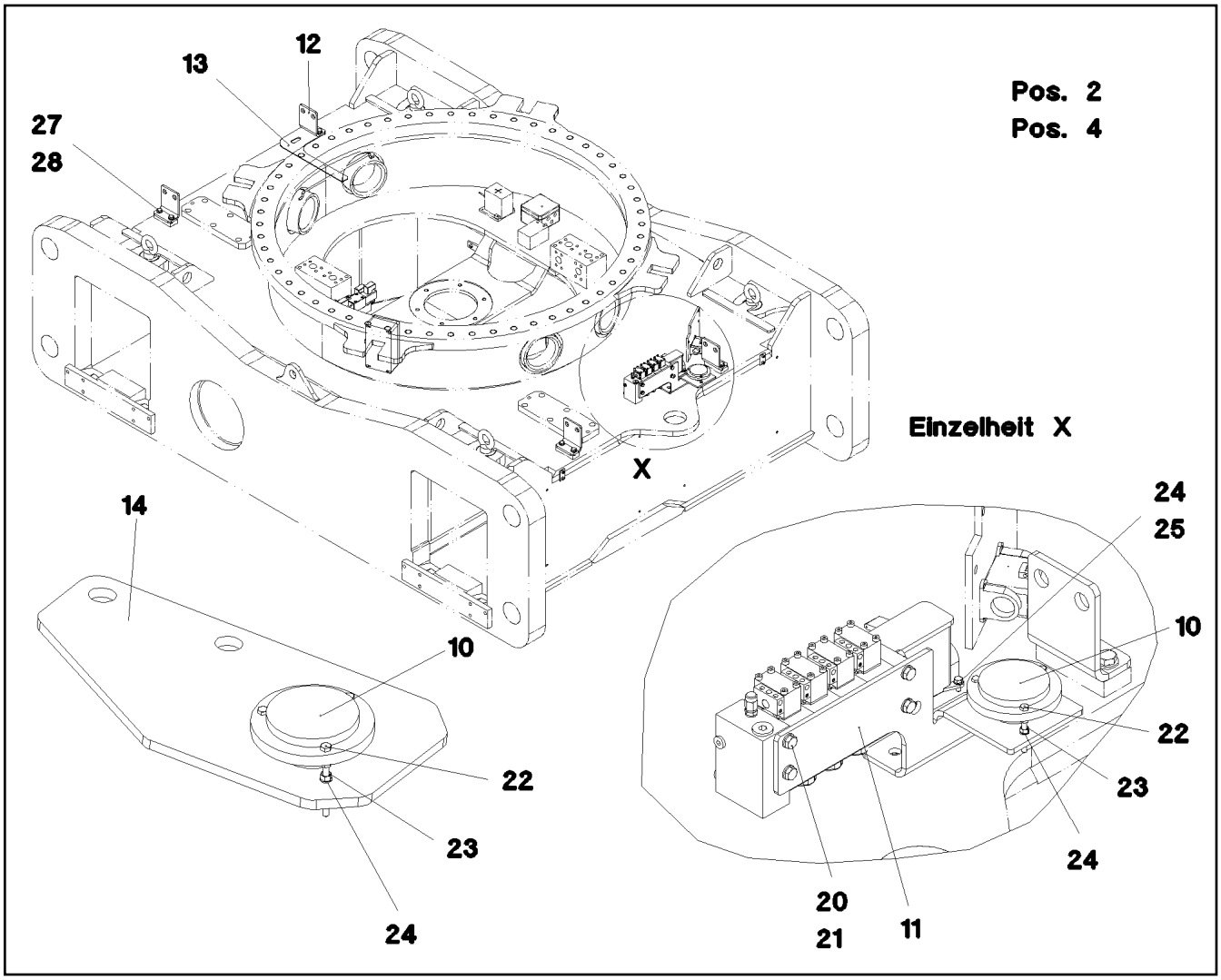


| Pos. | Item | Quantity | Description | Bezeichnung |
|---|---|---|---|---|
| 2 | 99 26 462 14 | 1 | JACK-UP SYSTEM HYDR. NRS<br>⇨ 1 423 101 99 26 462 14 | JACK-UP SYSTEM |
| 4 | 96 43 983 08 | 1 | HOSE LINES SUPPORT SYSTEM<br>⇨ 1 400 201 96 43 983 08 | SCHLAUCHLEITUNGEN ABSTUE |
| 10 | 71 40 008 08 | 2 | SPIRIT LEVEL | LIBELLE |
| 11 | 97 65 415 08 | 1 | PLATE 6X346X227 S355MC | BLECH |
| 12 | 97 65 413 08 | 4 | PLATE 8X100X166 S355MC FE//ZN20//C | BLECH |
| 13 | 97 77 537 08 | 1 | PLATE 4X400X200 S315MC FE//ZN20//C | BLECH |
| 14 | 97 79 053 08 | 1 | PLATE 5X110X210 S355MC FE//ZN20//C | BLECH |
| 20 | 11 65 176 7 | 4 | HEX SCREW ISO 4017 M8X20 8.8 480H SPF | SECHSKANTSCHRAUBE |
| 21 | 42 00 010 14 | 4 | WASHER ISO 7089 8 200HV-A4 | SCHEIBE |
| 22 | 40 65 033 01 | 6 | HEX SCREW ISO 4017 M5X55 8.8 A2C | SECHSKANTSCHRAUBE |
| 23 | 40 01 007 03 | 18 | HEX NUT ISO 4032 M5 8 A2E | SECHSKANTMUTTER |
| 24 | 46 00 305 | 18 | WASHER ISO 7089 5 200HV A3C | SCHEIBE |
| 25 | 40 00 417 | 4 | HEX SCREW ISO 4017 M5X12 8.8 A2C | SECHSKANTSCHRAUBE |
| 27 | 11 65 889 2 | 8 | HEX SCREW ISO 4017 M12X25 8.8 FLZN SP | SECHSKANTSCHRAUBE |
| 28 | 10 28 980 4 | 8 | WASHER ISO 7089 12 300HV FLZN SPF | SCHEIBE |

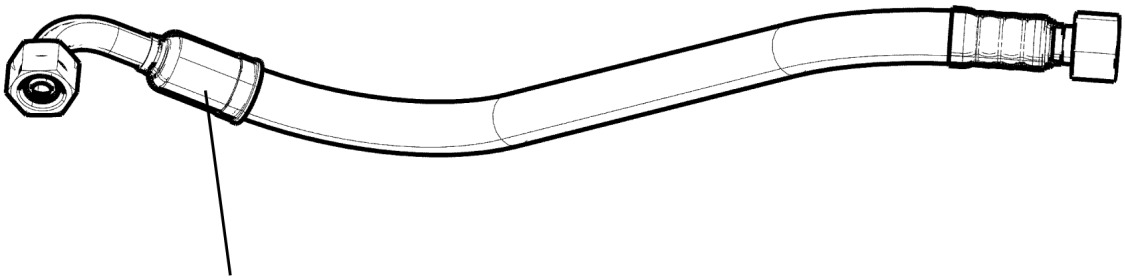

Schlauchnummer
Hose number
Numéro de flexible
Número de flexible
Номера шланга

Die Schlauchnummern auf den Schläuchen entsprechen den Positionen in der Schlauchliste.

The hose numbers from the hoses are in accordance with the items in the hose list.

Les numéros indiqués sur les flexibles correspondent aux repères de la nomenclature des flexibles.

Los números indicados en los flexibles corresponden a las posiciones de la lista de flexibles.

Нанесенные на шлангах номера соответствуют позициям в перечне.

| Pos. | Item | Quantity | Description | Bezeichnung |
|---|---|---|---|---|
| 1 | 60 27 601 08 | 9 | NAME PLATE 25,4X101,6 | BEZEICHNUNGSSCHILD |
| 2 | 60 27 603 08 | 1 | NAME PLATE 25,4X165,1 | BEZEICHNUNGSSCHILD |
| 180 | 96 43 274 08 | 1 | HOSE CPL. 2SN 16X1580 | SCHLAUCH KPL. |
| 181 | 96 43 275 08 | 1 | HOSE CPL. 2SN 10X1480 | SCHLAUCH KPL. |
| 182 | 96 43 276 08 | 1 | HOSE CPL. 2SN 10X790 | SCHLAUCH KPL. |
| 183 | 96 43 277 08 | 1 | HOSE CPL. 2SN 10X3360 | SCHLAUCH KPL. |
| 184 | 96 43 278 08 | 1 | HOSE CPL. 2SN 10X730 | SCHLAUCH KPL. |
| 185 | 96 43 279 08 | 1 | HOSE CPL. 2SN 10X3830 | SCHLAUCH KPL. |
| 186 | 96 43 279 08 | 1 | HOSE CPL. 2SN 10X3830 | SCHLAUCH KPL. |
| 187 | 96 43 280 08 | 1 | HOSE CPL. 2SN 10X3300 | SCHLAUCH KPL. |
| 188 | 96 43 278 08 | 1 | HOSE CPL. 2SN 10X730 | SCHLAUCH KPL. |
| 189 | 96 43 276 08 | 1 | HOSE CPL. 2SN 10X790 | SCHLAUCH KPL. |

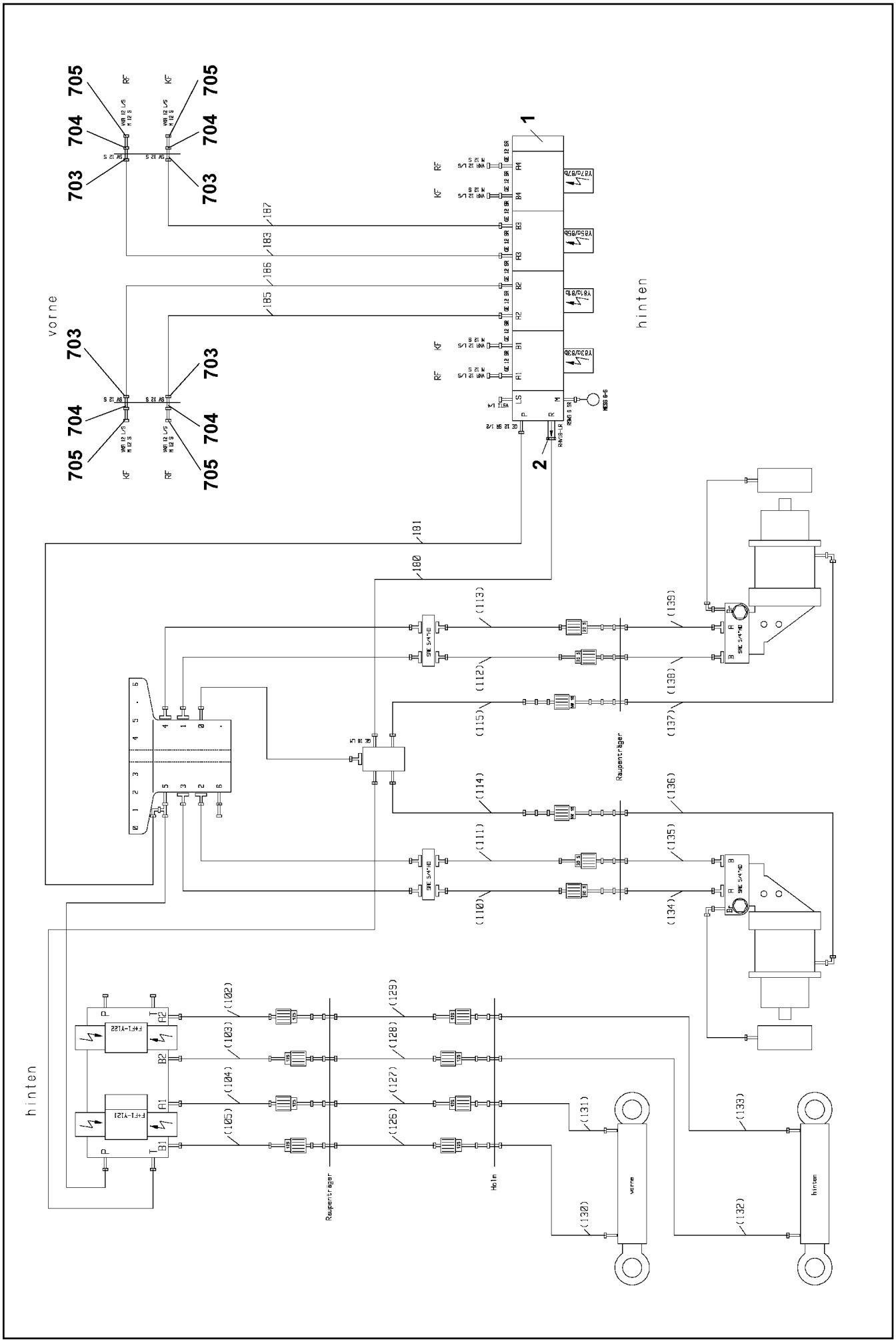


| | | |
|---|---|---|
| 16.2.2017<br>048024<br>LIEBHERR | **etk_en_de_048005 LTR 1100**<br><br>**JACK-UP SYSTEM**<br>**JACK-UP SYSTEM** | 35 (1/2)<br><br>⇨ **1 423 101**<br>**99 26 462 14** |

| Pos. | Item | Quantity | Description | Bezeichnung |
|---|---|---|---|---|
| 1 | 10 22 699 3 | 1 | DIRECTIONAL CTRL. VALVE 420BAR LH-G<br>⇨ X10226993 10 22 699 3 | WEGESCHIEBER |
| 2 | 51 14 315 14 | 1 | NON-RETURN VALVE 0.1BAR | RUECKSCHLAGVENTIL |
| 700 | 47 10 326 08 | 1 | FLANGE JOINT GE 12S G1/2A CR6-FREI | VERSCHRAUBUNG |
| 701 | 47 10 327 08 | 8 | FLANGE JOINT GE 12S G3/8A CR6-FREI | VERSCHRAUBUNG |
| 702 | 47 32 102 14 | 1 | FLANGE JOINT AEHNL.ISO 8434 RSWS 6S C | VERSCHRAUBUNG |
| 703 | 47 40 024 14 | 8 | FLANGE JOINT ISO 8434 SV 12S CR6-FREI | VERSCHRAUBUNG |
| 704 | 47 74 004 14 | 8 | FLANGE JOINT AEHNL.ISO 8434 M 12S M20 | VERSCHRAUBUNG |
| 705 | 47 77 005 14 | 8 | FLANGE JOINT ISO 8434 VKA 12L/S CR6-F | VERSCHRAUBUNG |
| 706 | 24 71 173 02 | 1 | SCREW PLUG VSTI CF | VERSCHLUSSSCHRAUBE |
| 707 | 56 07 616 | 1 | GAUGE CONNECTION M14X1,5 | MESSSTUTZEN |

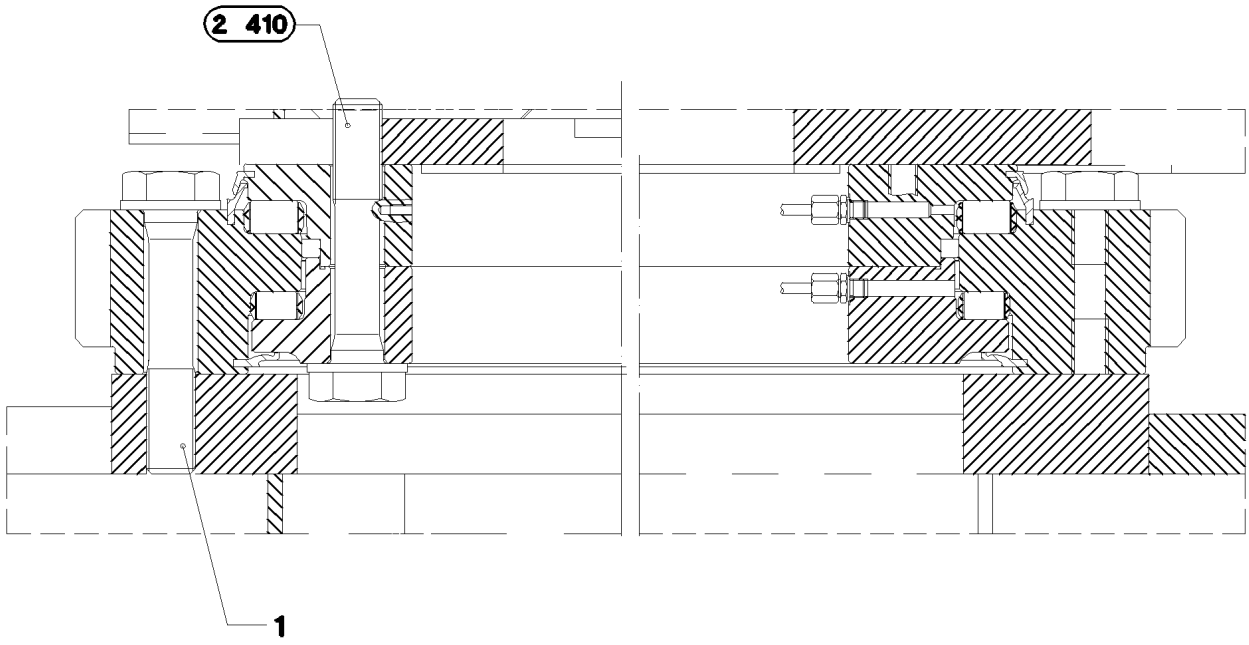


| Pos. | Item | Quantity | Description | Bezeichnung |
|---|---|---|---|---|
| 1 | 40 98 177 08 | 56 | EXPANSION BOLT M27X145 30CRNIMO8 SP | DEHNSCHRAUBE |

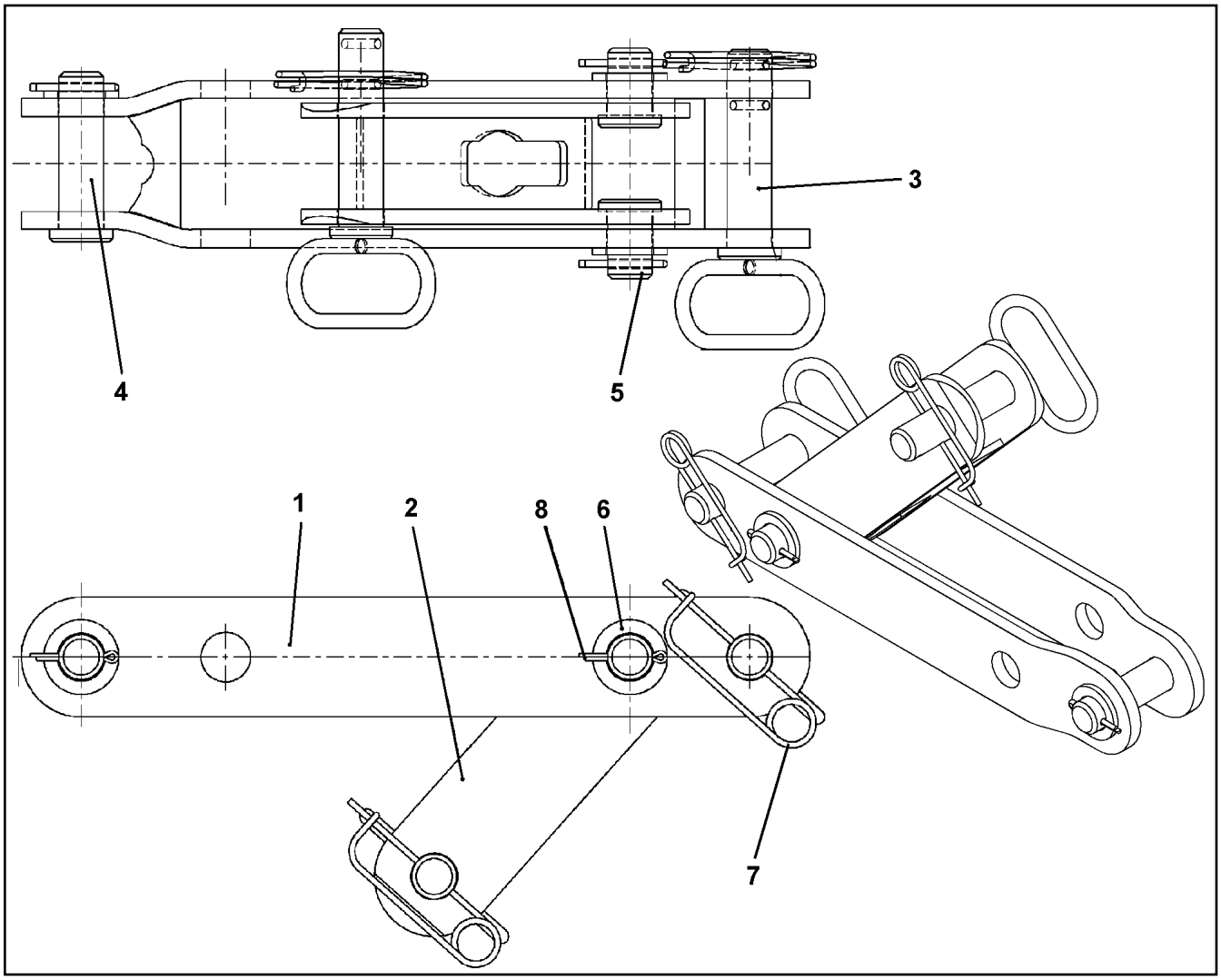


| Pos. | Item | Quantity | Description | Bezeichnung |
|---|---|---|---|---|
| 1 | 96 47 649 08 | 1 | HOLDER | HALTER |
| 2 | 91 90 328 14 | 1 | HOLDER | HALTER |
| 3 | 96 47 650 08 | 2 | PIN COMPL. | BOLZEN KPL. |
| | | | ⇨ 1 630 003 96 47 650 08 | |
| 4 | 45 14 308 08 | 1 | PIN DIN 1436 30X105X97 35NICRMOV125 GA | BOLZEN |
| 5 | 97 72 424 08 | 2 | PIN 30X45X35 35NICRMOV125 GASN. SPF | BOLZEN |
| 6 | 42 11 026 08 | 3 | WASHER DIN 1440 32 ST VERZ | SCHEIBE |
| 7 | 43 31 012 08 | 2 | RETAINING SPRING 4X68 VERZ | SICHERUNGSFEDER |
| 8 | 43 30 066 08 | 3 | SPLIT PIN ISO 1234 5X45 ST A2K | SPLINT |

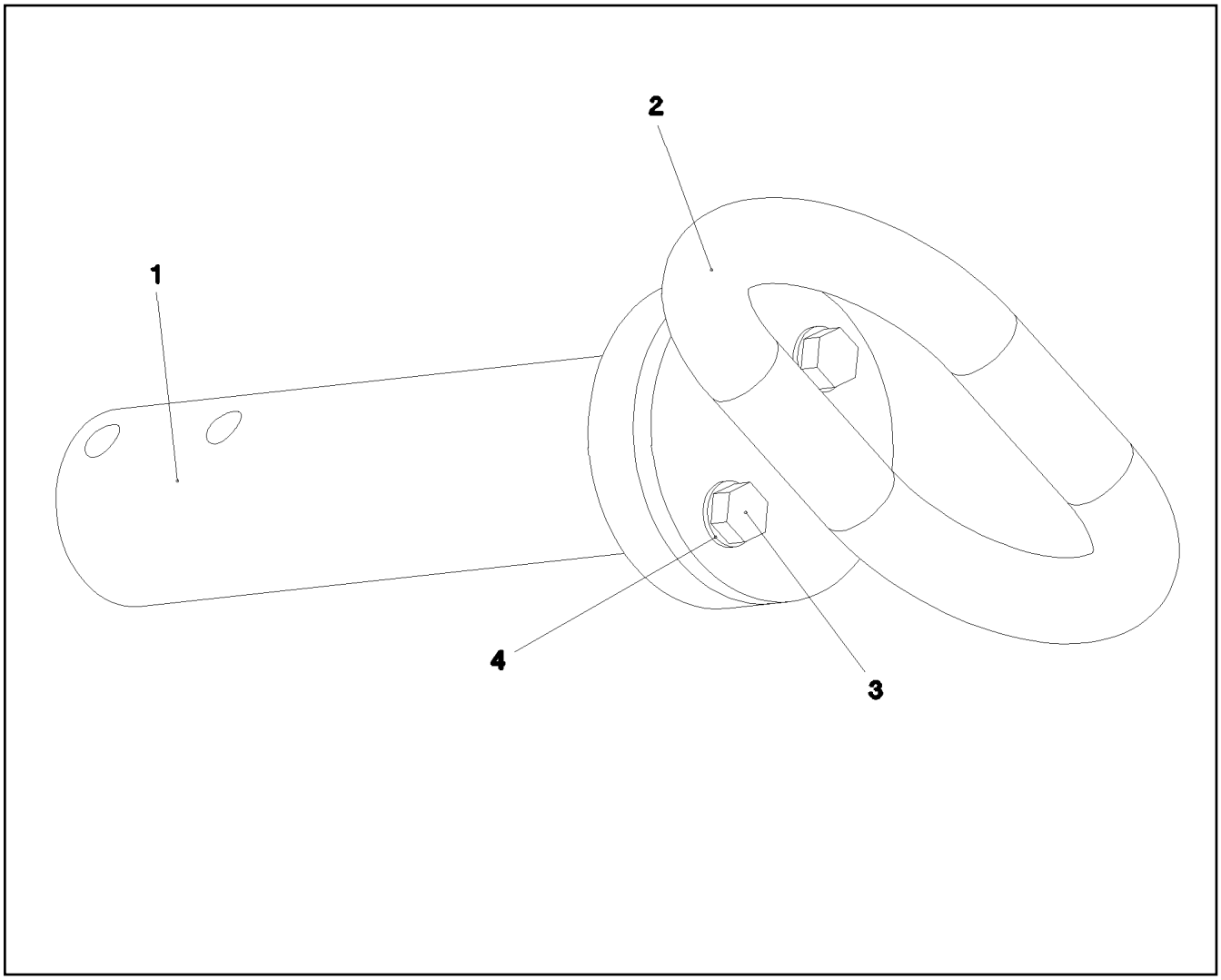


| Pos. | Item | Quantity | Description | Bezeichnung |
|---|---|---|---|---|
| 1 | 97 72 521 08 | 1 | PIN 31X132X95 35NICRMOV125 GASN. SPF | BOLZEN |
| 2 | 96 35 574 08 | 1 | HANDLE WELD.CONST. FE//ZNNI8//CN//T0 | GRIFF SCHWK. |
| 3 | 40 65 060 | 2 | HEX SCREW ISO 4017 M5X10 8.8 A2C | SECHSKANTSCHRAUBE |
| 4 | 46 00 305 | 2 | WASHER ISO 7089 5 200HV A3C | SCHEIBE |

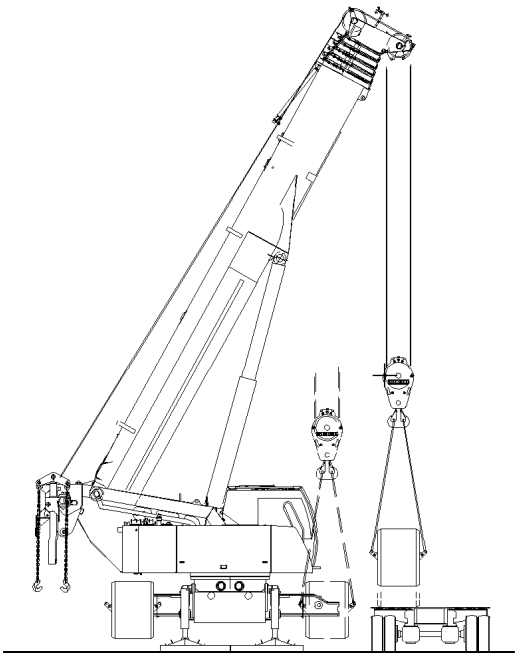

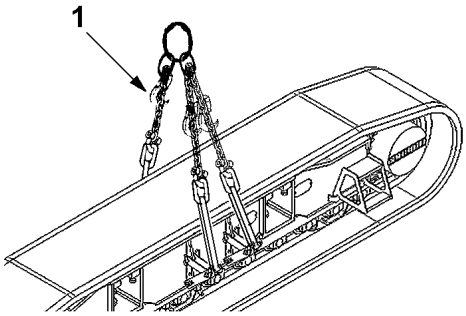


| Pos. | Item | Quantity | Description | Bezeichnung |
|---|---|---|---|---|
| 1 | 99 06 183 14 | 6 | TRANSPORT SUPPORT<br>⇨ 1 630 002 99 06 183 14 | TRANSPORTABSTUETZUNG |

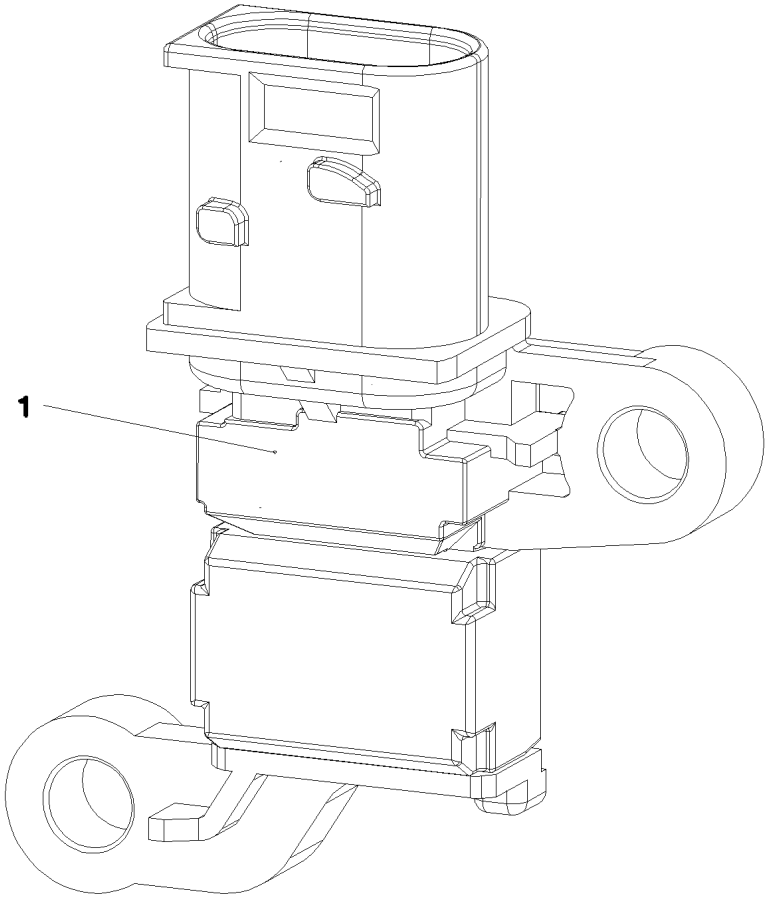


**Pos. 2**

| Pos. | Item | Quantity | Description | Bezeichnung |
|---|---|---|---|---|
| 1 | 10 81 691 3 | 1 | PRESSURE SENSOR -0,08-0 BAR | DRUCKSENSOR |
| 2 | 11 00 056 2 | 1 | ADAPTER CABLE | ADAPTERKABEL |
| 3 | 40 00 417 | 2 | HEX SCREW ISO 4017 M5X12 8.8 A2C | SECHSKANTSCHRAUBE |

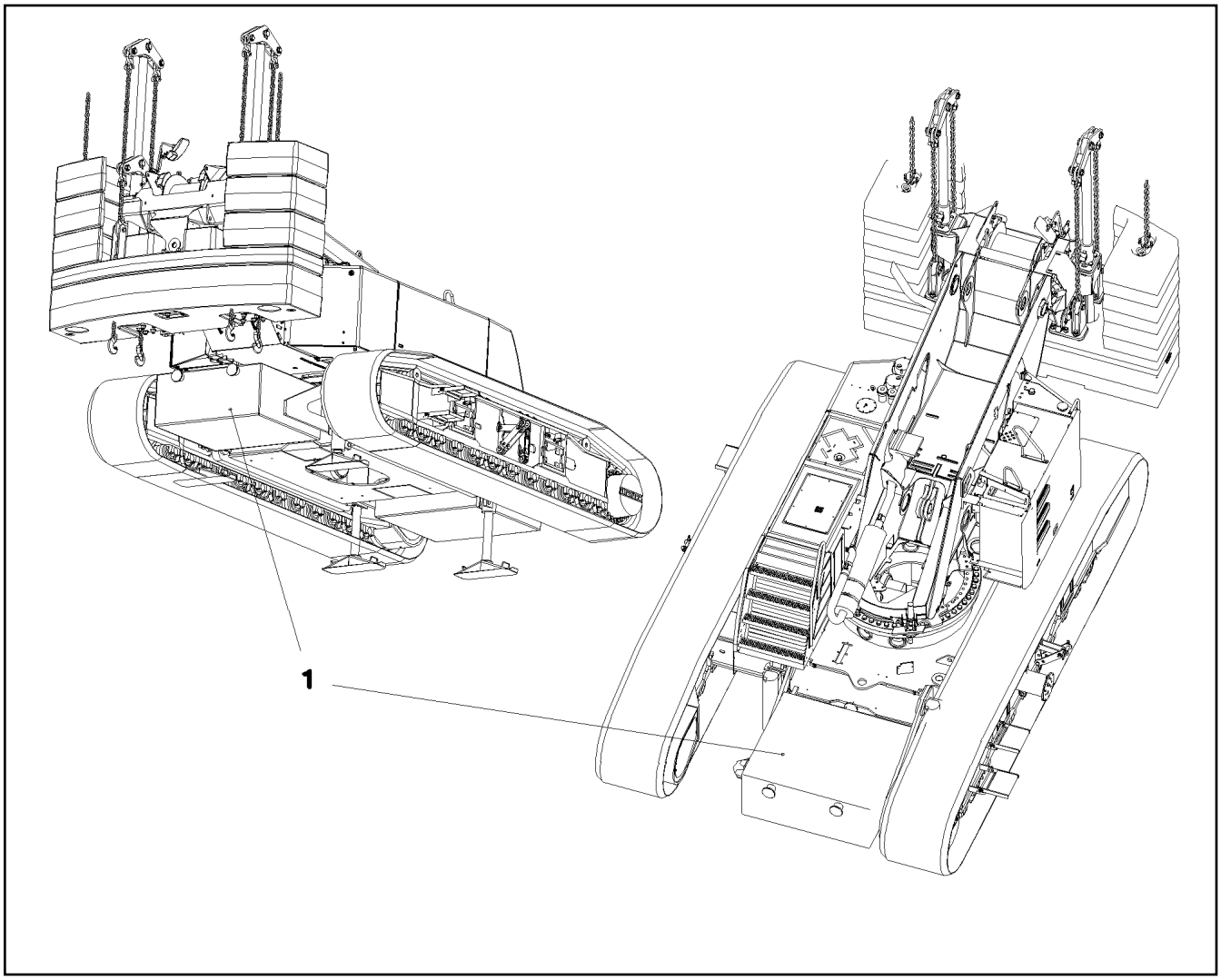


| Pos. | Item | Quantity | Description | Bezeichnung |
|---|---|---|---|---|
| 1 | 91 94 187 14 | 2 | CENTRAL BALLAST 7.5T 983593114 LH GRA | ZENTRALBALLAST |
| 2 | 96 50 675 08 | 1 | MOUNTING PARTS | MONTAGETEILE |
| | | | ⇨ 1 740 010 96 50 675 08 | |

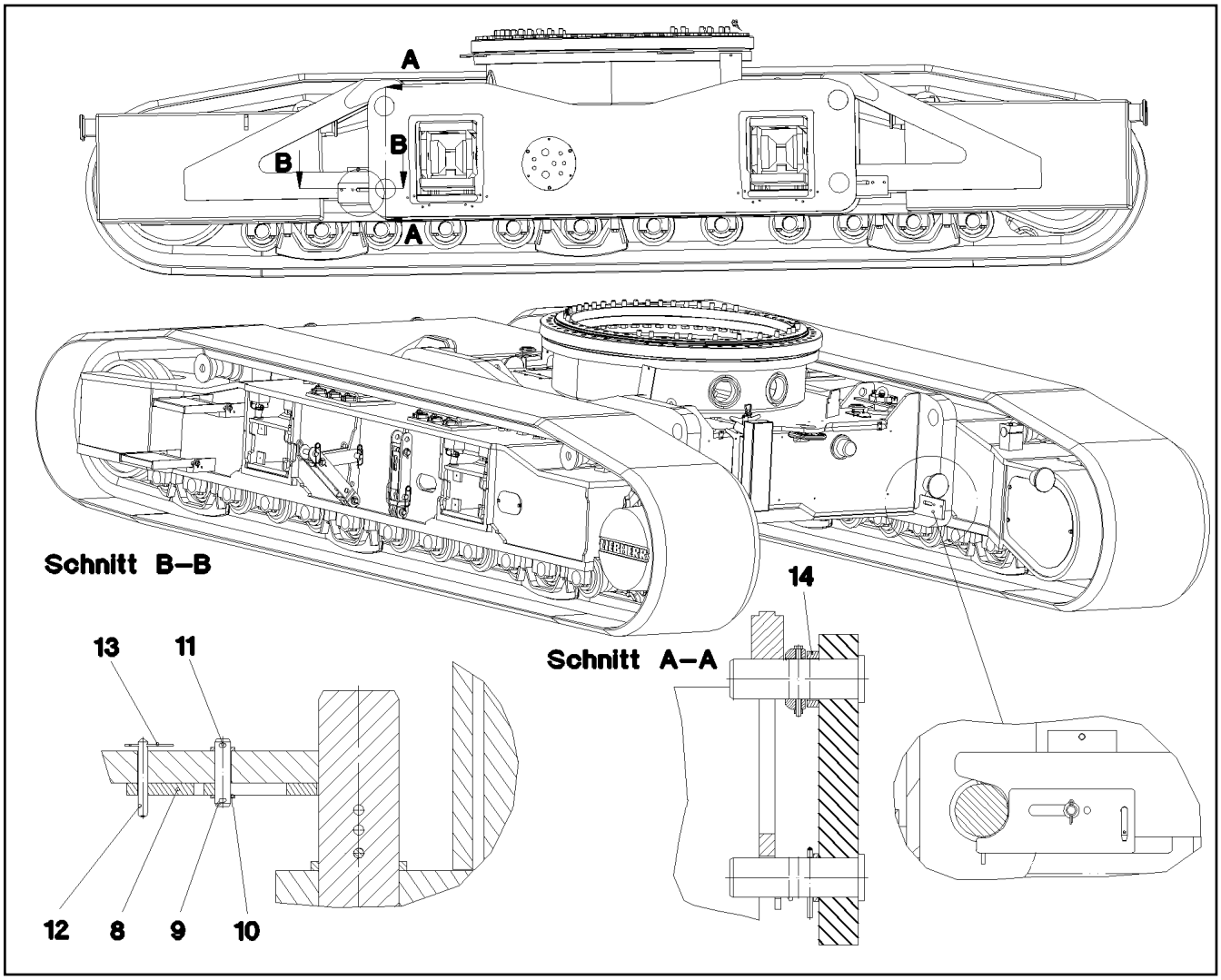


| Pos. | Item | Quantity | Description | Bezeichnung |
|---|---|---|---|---|
| 8 | 97 65 411 08 | 4 | PLATE 15X300X120 S355MC FE//ZN20//C | BLECH |
| 9 | 45 00 220 14 | 4 | PIN DIN EN 22340-B 20H11X85 ST 50-2 K A3 | BOLZEN |
| 10 | 42 11 017 14 | 8 | WASHER DIN EN 28738 20 160HV A3C | SCHEIBE |
| 11 | 43 30 063 14 | 8 | SPLIT PIN ISO 1234 5X32 | SPLINT |
| 12 | 94 20 537 08 | 4 | PIN 12.0X140 S355J2C+C FE//ZN20//C | BOLZEN |
| 13 | 43 32 061 14 | 4 | SPRING PLUG DIN 11024 3.2 A2E | FEDERSTECKER |
| 14 | 97 72 673 08 | 4 | TUBE 139.7X30 S770QL SPF | ROHR |

| Pos. | Item | Quantity | Description | Bezeichnung |
|---|---|---|---|---|
| 1 | 92 85 698 08 | 1 | MAIN TOOLS<br>⇨ 1 750 001 92 85 698 08 | GRUNDWERKZEUG |
| 2 | 92 86 201 08 | 1 | ACCESSORIES<br>⇨ 1 750 002 92 86 201 08 | ZUBEHOER |
| 3 | 52 04 028 08 | 1 | PROTECTIVE PADDING | SCHUTZPOLSTER |
| 4 | 79 00 656 08 | 1 | FLANGE JOINT | VERSCHRAUBUNG |
| 5 | 79 05 339 08 | 2 | FLANGE JOINT | VERSCHRAUBUNG |
| 6 | 88 56 021 14 | 1 | HAND LEVER PRESS | HANDHEBELPRESSE |
| 7 | 79 00 422 14 | 1 | HOSE LINE | SCHLAUCHLEITUNG |
| 8 | 79 00 429 14 | 1 | HOSE LINE X300 | SCHLAUCHLEITUNG |
| 9 | 79 00 427 08 | 1 | QUICK ACTING COUPLING | SCHIEBEKUPPLUNG |
| 10 | 73 61 649 | 1 | SOCKET FOR SPANNER DIN 3124 SW1 5/16 | STECKSCHLUESSELEINSATZ |
| 11 | 88 51 828 08 | 1 | ARTICULATED HOOK WRENCH 155/6 | GELENKHAKENSCHLUESSEL |
| 12 | 88 51 822 08 | 1 | ARTICULATED HOOK WRENCH 60/4 | GELENKHAKENSCHLUESSEL |

| Pos. | Item | Quantity | Description | Bezeichnung |
|---|---|---|---|---|
| 1 | 79 00 454 08 | 1 | ASSEMBLY TOOL BOX | MONTAGEWERKZEUGKASTEN |
| 2 | 88 52 515 08 | 1 | PADLOCK ABUS-64TI/40 TITALIUM | VORHAENGESCHLOSS |
| 10 | 79 00 017 08 | 1 | DOUBLE-HEADED SPANNER DIN 3110 8X10 | DOPPELMAULSCHLUESSEL |
| 11 | 79 00 033 08 | 1 | DOUBLE-HEADED SPANNER DIN 3110 10X1 | DOPPELMAULSCHLUESSEL |
| 12 | 79 00 022 08 | 1 | DOUBLE-HEADED SPANNER DIN 3110 12X1 | DOPPELMAULSCHLUESSEL |
| 13 | 79 00 024 08 | 1 | DOUBLE-HEADED SPANNER DIN 3110 14X1 | DOPPELMAULSCHLUESSEL |
| 14 | 10 65 277 2 | 1 | DOUBLE-HEADED SPANNER SW16X18 CRV- | DOPPELMAULSCHLUESSEL |
| 15 | 79 00 036 08 | 1 | DOUBLE-HEADED SPANNER DIN 3110 17X1 | DOPPELMAULSCHLUESSEL |
| 16 | 79 00 025 08 | 1 | DOUBLE-HEADED SPANNER DIN 3110 19X2 | DOPPELMAULSCHLUESSEL |
| 17 | 79 00 026 08 | 1 | DOUBLE-HEADED SPANNER DIN 3110 24X2 | DOPPELMAULSCHLUESSEL |
| 18 | 79 00 028 08 | 1 | DOUBLE-HEADED SPANNER DIN 3110 30X3 | DOPPELMAULSCHLUESSEL |
| 19 | 79 00 029 08 | 1 | DOUBLE-HEADED SPANNER DIN 3110 36X4 | DOPPELMAULSCHLUESSEL |
| 20 | 79 00 039 08 | 1 | DOUBLE-HEADED SPANNER DIN 3110 46X5 | DOPPELMAULSCHLUESSEL |
| 21 | 88 51 322 08 | 1 | SINGLE-END SPANNER DIN 894 55 | EINMAULSCHLUESSEL |
| 22 | 79 00 046 08 | 1 | SINGLE-END SPANNER DIN 894 60 | EINMAULSCHLUESSEL |
| 29 | 88 51 661 08 | 1 | ALLEN KEY 3 | SECHSKANTSTIFTSCHLUESSE |
| 30 | 79 00 216 08 | 1 | HEXAGON KEY DIN 911 4 GLANZVERN. | INBUSSCHLUESSEL |
| 31 | 79 00 200 08 | 1 | HEXAGON KEY DIN 911 5 GLANZVERN. | INBUSSCHLUESSEL |
| 32 | 79 00 201 08 | 1 | HEXAGON KEY DIN 911 6 GLANZVERN. | INBUSSCHLUESSEL |
| 33 | 79 00 210 08 | 1 | HEXAGON KEY DIN 911 8 GLANZVERN. | INBUSSCHLUESSEL |
| 34 | 79 00 212 08 | 1 | HEXAGON KEY DIN 911 10 GLANZVERN. | INBUSSCHLUESSEL |
| 35 | 79 00 213 08 | 1 | HEXAGON KEY DIN 911 12 GLANZVERN. | INBUSSCHLUESSEL |
| 40 | 10 47 136 3 | 1 | ANGLE SCREW DRIVER TX30 PHOSPHATI | WINKELSCHRAUBENDREHER |
| 41 | 10 04 300 2 | 1 | ANGLE SCREW DRIVER TX 40 BRUENIERT | WINKELSCHRAUBENDREHER |
| 50 | 79 00 320 08 | 1 | SCREWDRIVER 3,5 CRV-VERNICKELT | SCHRAUBENDREHER |
| 51 | 79 00 323 08 | 1 | SCREWDRIVER 5,5 CRV-VERNICKELT | SCHRAUBENDREHER |
| 52 | 79 00 325 08 | 1 | SCREWDRIVER 10 CRV-VERNICKELT | SCHRAUBENDREHER |
| 53 | 79 00 332 08 | 1 | SCREWDRIVER 2 CRV-VERNICKELT | KREUZSCHL.SCHR.DREHER |
| 60 | 79 00 300 08 | 1 | HAND HAMMER DIN 1041 800G | HANDHAMMER |
| 61 | 79 00 311 08 | 1 | LUMP HAMMER DIN 6475 3KG | FAEUSTEL |
| 62 | 79 00 315 08 | 1 | COMBI PLIERS DIN 5244 180 | KOMBIZANGE |
| 63 | 79 00 262 08 | 1 | GRIP DIN 3122 A 3/4" | GRIFF |
| 64 | 79 00 263 08 | 1 | EXTENSION DIN 3123 400X3/4" | VERLAENGERUNG B |
| 65 | 79 00 264 08 | 1 | EXTENSION DIN 3123 200X3/4" | VERLAENGERUNG B |
| 66 | 79 00 285 08 | 1 | SOCKET FOR SPANNER DIN 3129 32X3/4" C | STECKSCHLUESSELEINSATZ |
| 67 | 52 01 904 08 | 1 | TYRE INFLATING HOSE | REIFENFUELLSCHLAUCH |
| 68 | 10 03 229 7 | 1 | OIL DRAINING HOSE COMPL. 1,5M | OELABLASSSCHLAUCH KPL. |
| 70 | 79 00 420 08 | 1 | HAND LEVER PRESS VERZ. | HANDHEBELPRESSE |
| 71 | 79 00 429 08 | 1 | REINFORCED RUBBER HOSE 300 RH-30 M1 | GUMMIPANZERSCHLAUCH |

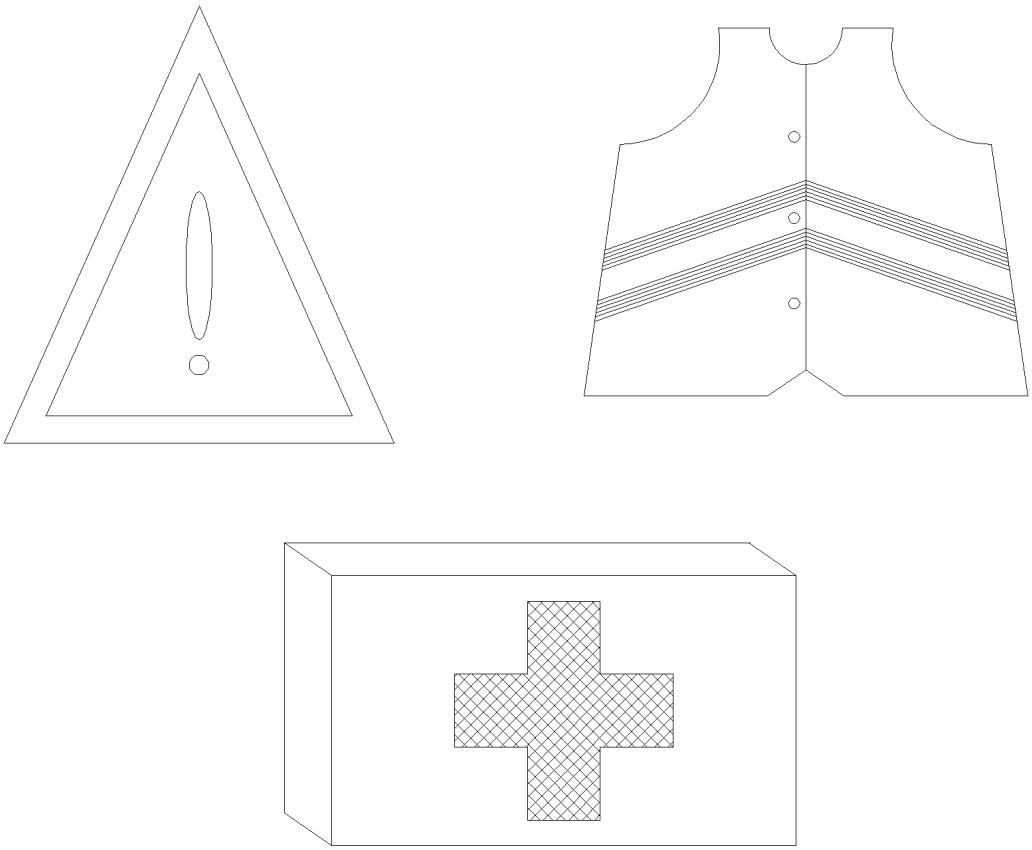

| Pos. | Item | Quantity | Description | Bezeichnung |
|---|---|---|---|---|
| 1 | 10 04 476 2 | 1 | WARNING TRIANGLE 430X45X30 | WARNDREIECK |
| 2 | 60 71 062 08 | 2 | HAZARD WARNING FLASHER 2,4W 6V WEI | SICHERHEITSWARNBLINKLEUC |
| (1) | 60 70 111 08 | 2 | LIGHT BULB DIN 49848 2,4W 6V | GLUEHLAMPE |
| 3 | 61 32 006 08 | 10 | BATTERY 1.5V 16.5AH | BATTERIE |
| 4 | 10 87 460 8 | 1 | FIRE EXTINGUISHER DIN EN 3 | FEUERLOESCHER |
| 5 | 78 90 003 08 | 1 | FIRST AID KIST DIN 13164 260X170X80 | VERBANDSKASTEN |
| 6 | 87 21 019 08 | 1 | SAFETY JACKET DIN 30711 | WARNWESTE |
| 7 | 70 42 711 08 | 2 | HOLLOW KEY | HOHLSCHLUESSEL |

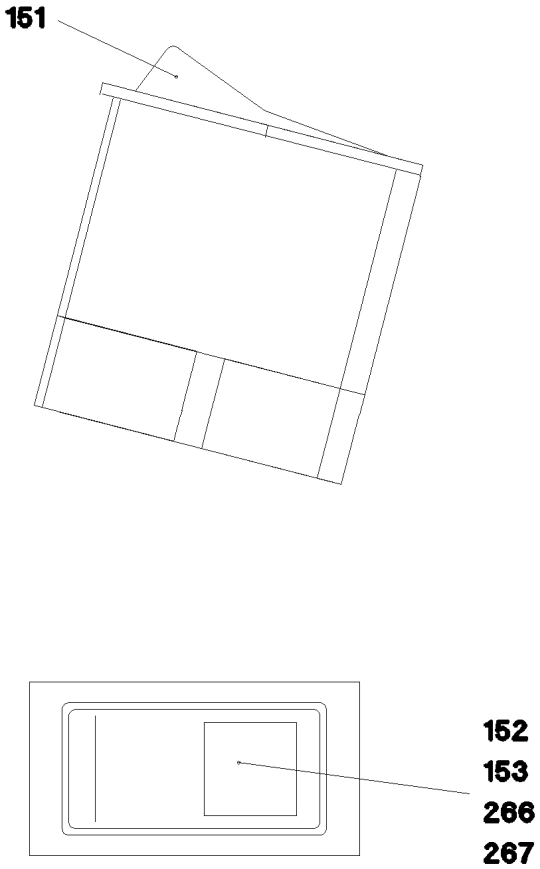


| Pos. | Item | Quantity | Description | Bezeichnung |
|---|---|---|---|---|
| 151 | 60 60 242 08 | 1 | ROCKER SWITCH | KIPPSCHALTER |
| 152 | 60 67 606 08 | 2 | SYMBOL INSERT | SYMBOLEINSATZ |
| 153 | 60 71 354 08 | 1 | CONTROL LIGHT 24V | KONTROLLLEUCHTE |
| 266 | 60 40 073 08 | 1 | FLAT FUSE LINK 20A | FLACHSICHERUNGSEINSATZ |
| 267 | 60 67 633 08 | 1 | SYMBOL INSERT | SYMBOLEINSATZ |

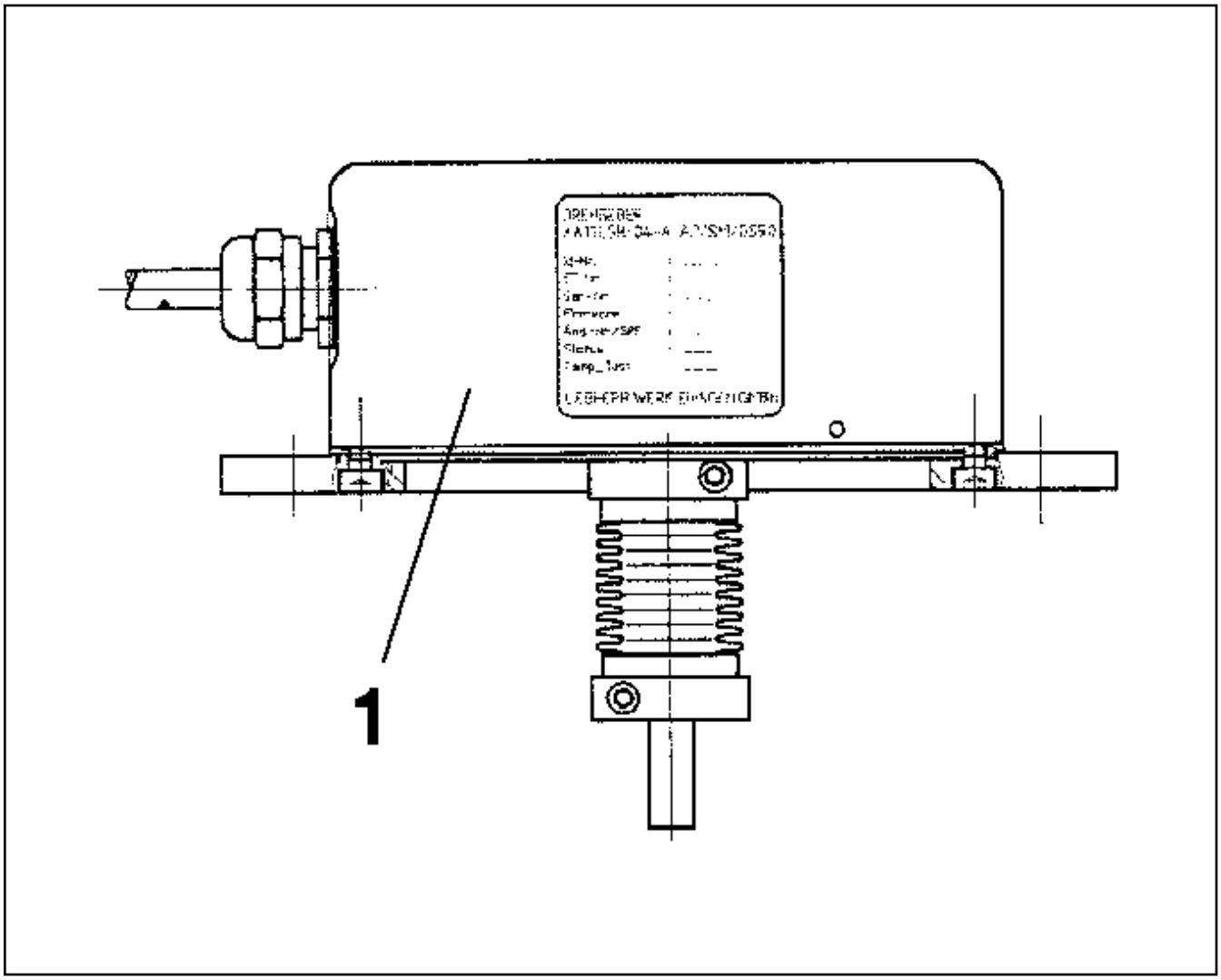


| Pos. | Item | Quantity | Description | Bezeichnung |
|---|---|---|---|---|
| 1 | 69 23 091 08 | 1 | ROTARY ENCODER 360° SPF | DREHGEBER |
| (60) | 96 74 133 08 | 1 | COUPLING ROTARY ENCODER | KUPPLUNG DREHGEBER |

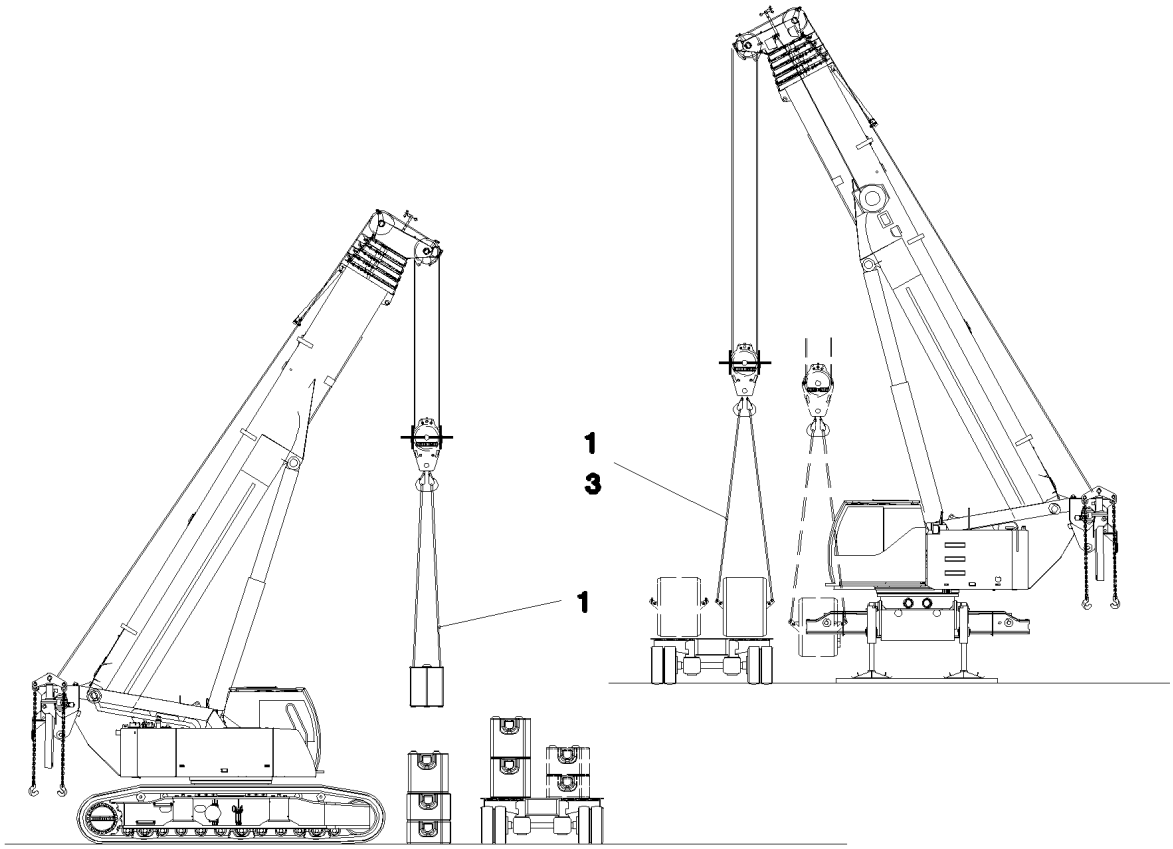


| Pos. | Item | Quantity | Description | Bezeichnung |
|---|---|---|---|---|
| 1 | 77 33 151 08 | 3 | ROPE SLING DIN EN 13414-3 9.7T-8M SPF | ANSCHLAGSEIL |
| 3 | 77 39 303 08 | 4 | SHACKLE 17T SPF | SCHAEKEL |

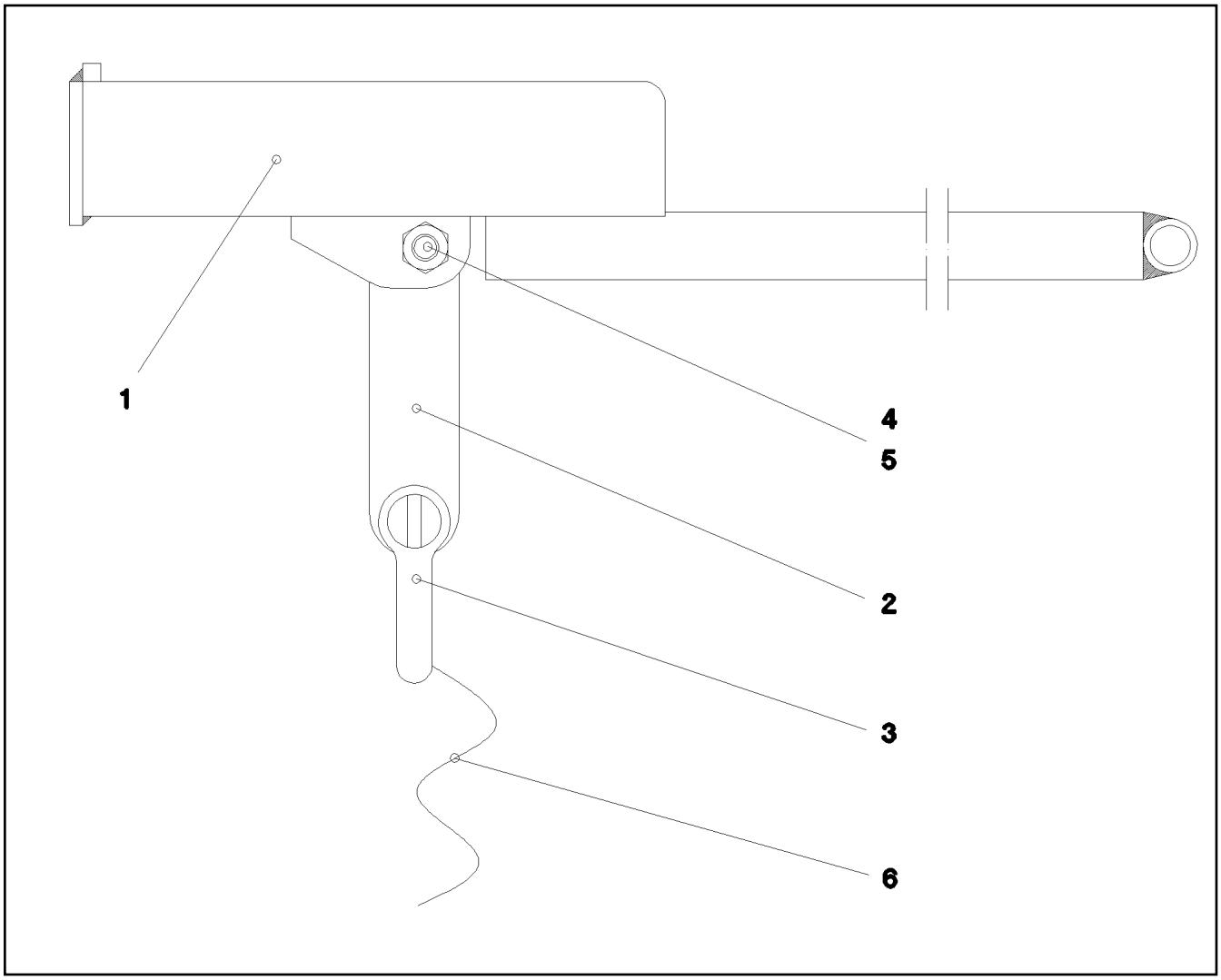


| Pos. | Item | Quantity | Description | Bezeichnung |
|---|---|---|---|---|
| 1 | 92 51 437 08 | 1 | HOSE GUIDE WELDED | SCHLAUCHFUEHRUNG SCHWK. |
| 3 | 77 39 335 08 | 1 | SHACKLE DIN 82101 0,25T NG0,25 ST VERZ | SCHAEKEL |
| 4 | 10 87 558 6 | 1 | SOCKET HEAD SCREW ISO 4762 M6X16 8.8 | ZYLINDERSCHRAUBE |
| 5 | 41 19 004 08 | 1 | HEX NUT DIN 985 M6 8 A2C | SECHSKANTMUTTER |
| 6 | 77 34 045 08 | 1.6 | ROPE 6 0,59KN PERLON | SEIL |

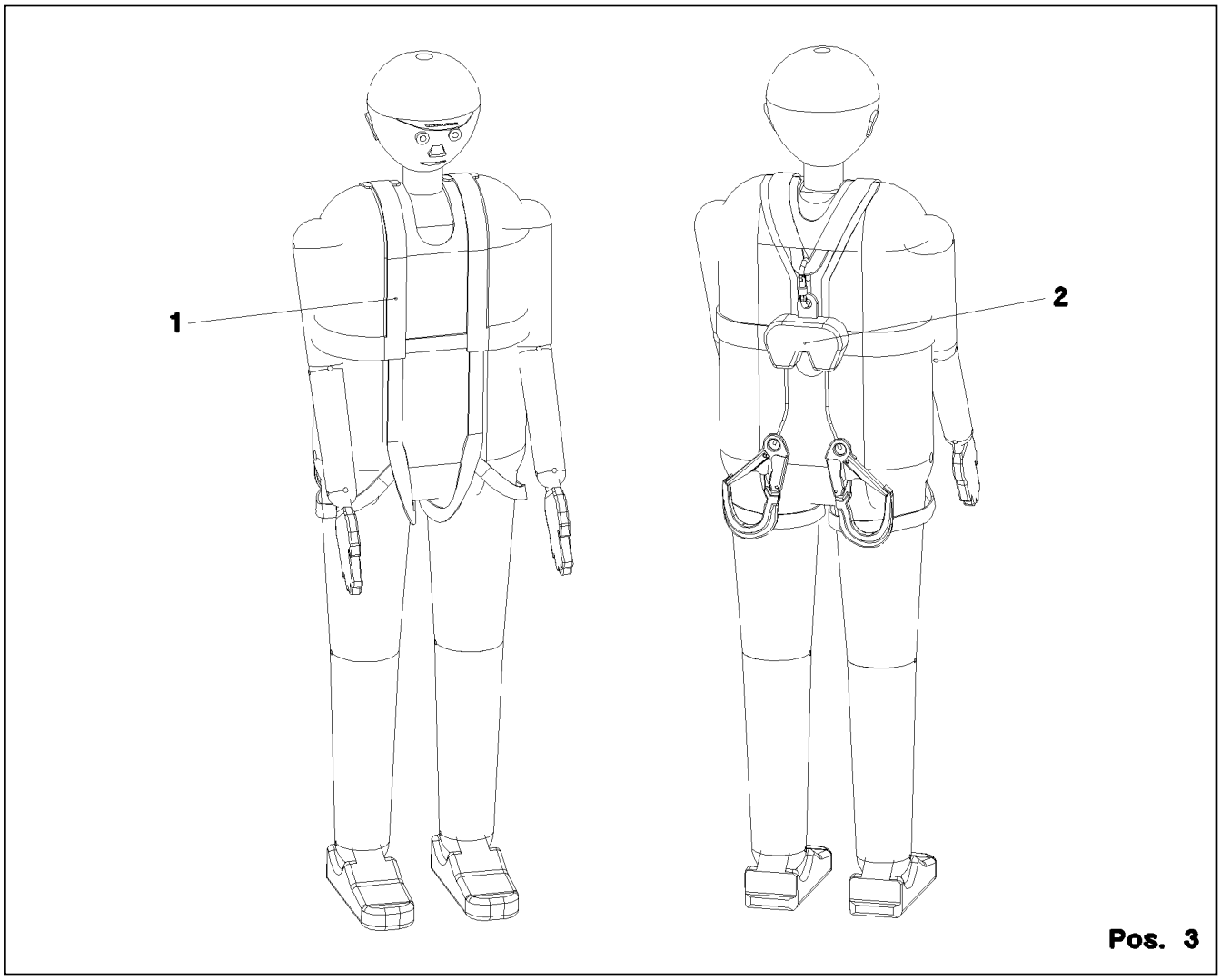


| Pos. | Item | Quantity | Description | Bezeichnung |
|---|---|---|---|---|
| 1 | 11 00 730 5 | 1 | SAFETY HARNESS EN 361 IK G 2 BLH | AUFFANGGURT |
| (1) | 11 32 072 0 | 1 | BAG | BEUTEL |
| 2 | 11 00 730 9 | 1 | HIGHT FIXATION DEVICE EN 360 HWB 2 RL | HOEHENSICHERUNGSGERAET |
| 3 | 11 49 191 0 | 1 | CONNECTING DEVICE EN 354 12X0,69M P | VERBINDUNGSMITTEL |

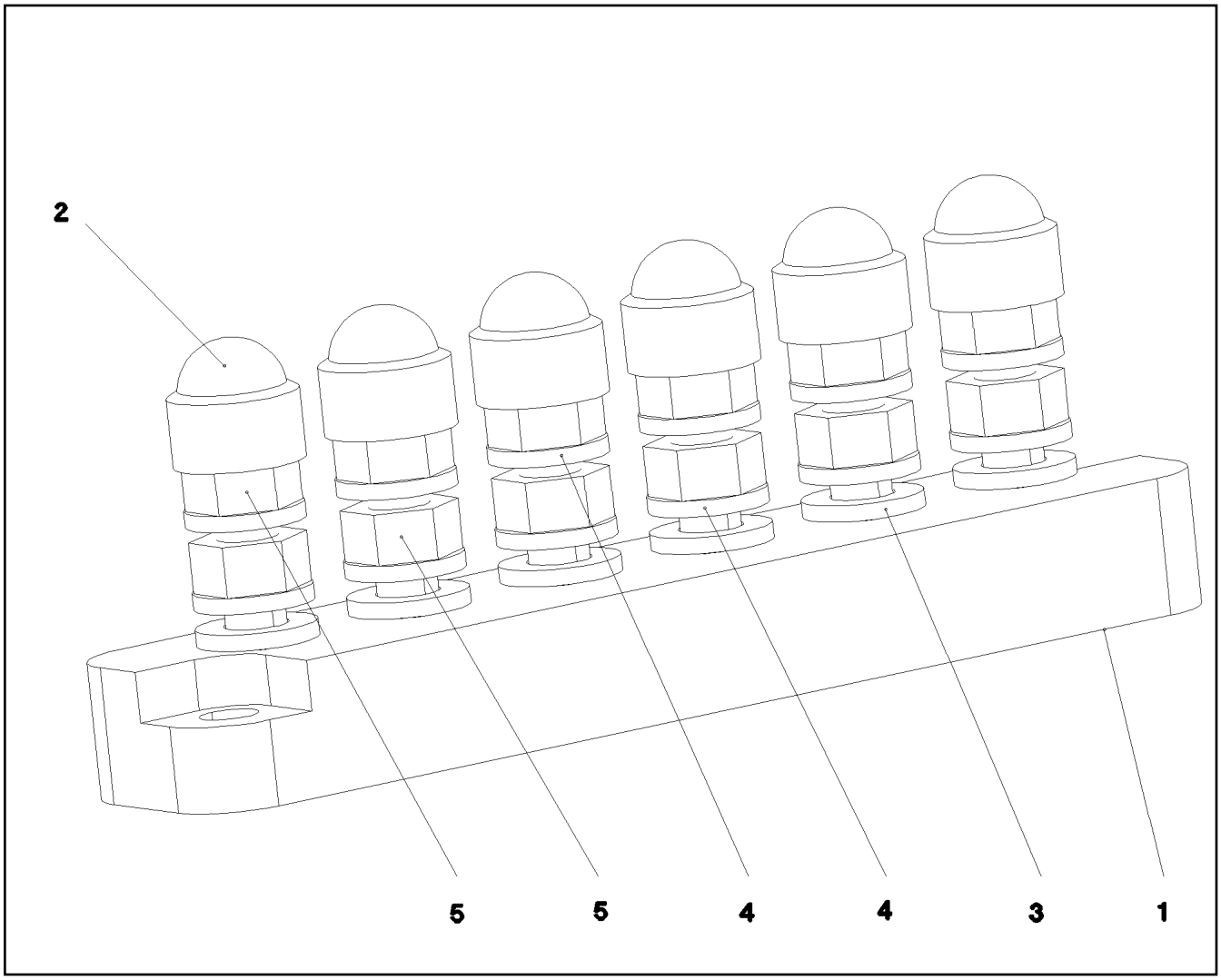


| Pos. | Item | Quantity | Description | Bezeichnung |
|---|---|---|---|---|
| 1 | 60 44 124 08 | 1 | CLAMPING BOARD 6XM6 | KLEMMBRETT |
| 2 | 77 90 201 08 | 6 | PROTECTING CAP SW10 | SCHUTZKAPPE |
| 3 | 10 87 564 7 | 6 | WASHER ISO 7089 6 200HV 480H SPF | SCHEIBE |
| 4 | 11 83 330 8 | 12 | SERRATED LOCK WASHER DIN 6798 A 6.4 F | FAECHERSCHEIBE |
| 5 | 10 87 562 1 | 12 | HEX NUT ISO 4032 M6 8 480H SPF | SECHSKANTMUTTER |

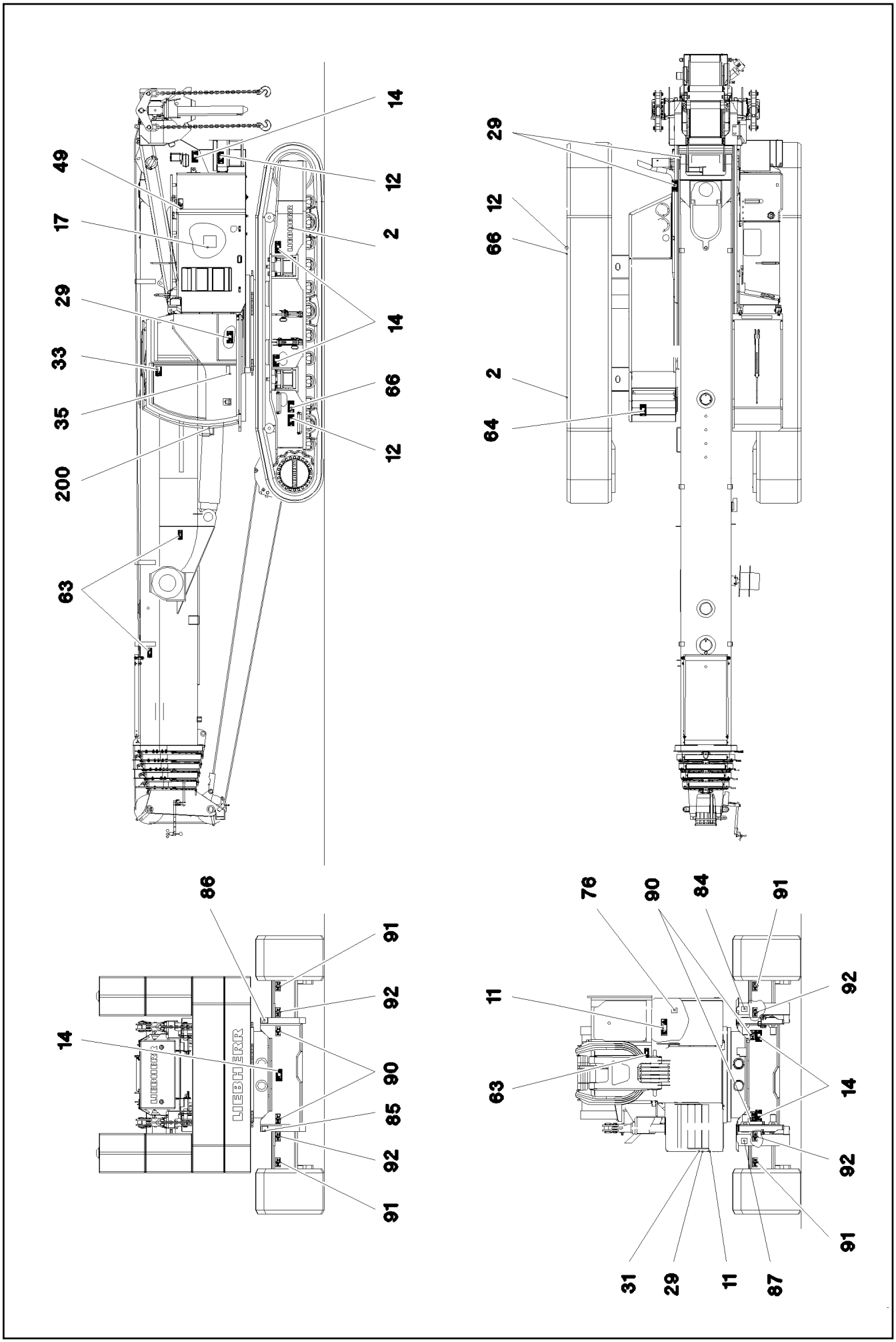


| | | |
|---|---|---|
| 16.2.2017<br>076321<br>LIEBHERR | etk_en_de_048005 LTR 1100<br><br>PLATING SPIAN<br>BESCHILDERUNG SPANIEN | 53 (1/2)<br><br>1 880<br>91 62 974 08 |

| Pos. | Item | Quantity | Description | Bezeichnung |
|---|---|---|---|---|
| 2 | 97 17 499 08 | 2 | SIGN | SCHILD |
| 11 | 97 86 739 08 | 2 | SIGN 290X100 KLEBEFOLIE SPF | SCHILD |
| 12 | 97 86 740 08 | 3 | SIGN 208X88 KLEBEFOLIE SPF | SCHILD |
| 14 | 97 86 741 08 | 9 | SIGN 208X88 KLEBEFOLIE SPF | SCHILD |
| 17 | 77 26 373 08 | 1 | SIGN | SCHILD |
| 29 | 97 86 744 08 | 4 | SIGN 208X88 KLEBEFOLIE SPF | SCHILD |
| 31 | 97 86 745 08 | 1 | SIGN 208X88 KLEBEFOLIE SPF | SCHILD |
| 33 | 97 88 671 08 | 1 | SIGN 168X88 KLEBEFOLIE SPF | SCHILD |
| 35 | 94 12 158 | 1 | CAUTION DECAL ACCID.PREVENTION 60X | WARNSCHILD UNFALLVERHUET |
| 49 | 97 86 747 08 | 1 | SIGN 168X88 KLEBEFOLIE SPF | SCHILD |
| 63 | 97 86 748 08 | 3 | SIGN 168X62 KLEBEFOLIE SPF | SCHILD |
| 64 | 97 86 749 08 | 1 | SIGN 208X88 KLEBEFOLIE SPF | SCHILD |
| 66 | 97 86 750 08 | 2 | SIGN 208X88 KLEBEFOLIE SPF | SCHILD |
| 76 | 97 58 095 08 | 1 | SIGN 105DBA/100X90 KLEBEFOLIE SPF | SCHILD |
| 84 | 97 41 504 08 | 1 | SIGN 1X80X80 KLEBEFOLIE SPF | SCHILD |
| 85 | 97 41 505 08 | 1 | SIGN 1X80X80 KLEBEFOLIE SPF | SCHILD |
| 86 | 97 41 506 08 | 1 | SIGN 1X80X80 KLEBEFOLIE SPF | SCHILD |
| 87 | 97 41 507 08 | 1 | SIGN 1X80X80 KLEBEFOLIE SPF | SCHILD |
| 90 | 97 01 704 4 | 4 | SIGN 168X88 KLEBESCHILD SPF | SCHILD |
| 91 | 97 01 704 5 | 4 | SIGN 168X88 KLEBESCHILD SPF | SCHILD |
| 92 | 97 01 704 6 | 4 | SIGN 168X88 KLEBESCHILD SPF | SCHILD |
| 200 | 46 00 337 | 4 | SOCKET HEAD SCREW ISO 4762 M4X16 8.8 | ZYLINDERSCHRAUBE |

| Pos. | Item | Quantity | Description | Bezeichnung |
|---|---|---|---|---|
| 1 | 77 26 246 08 | 1 | SIGN 6X107X237 G-ALSI12 | SCHILD |

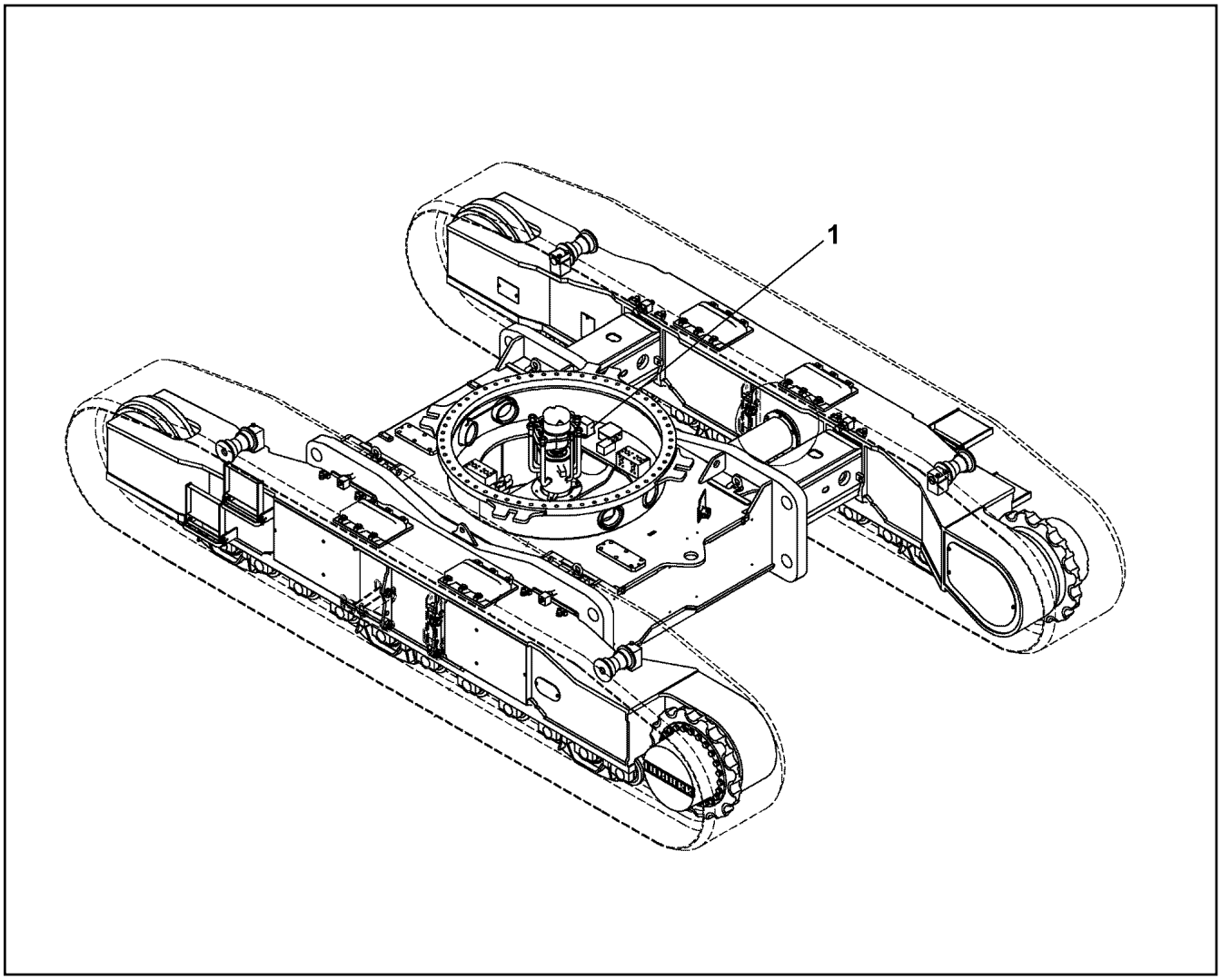


| Pos. | Item | Quantity | Description | Bezeichnung |
|---|---|---|---|---|
| 1 | 96 46 916 08 | 1 | ELECTR.FOR CENTER SECTION<br>⇨ 1 920 307 96 46 916 08 | ELEKTRIK MITTELSTUECK |

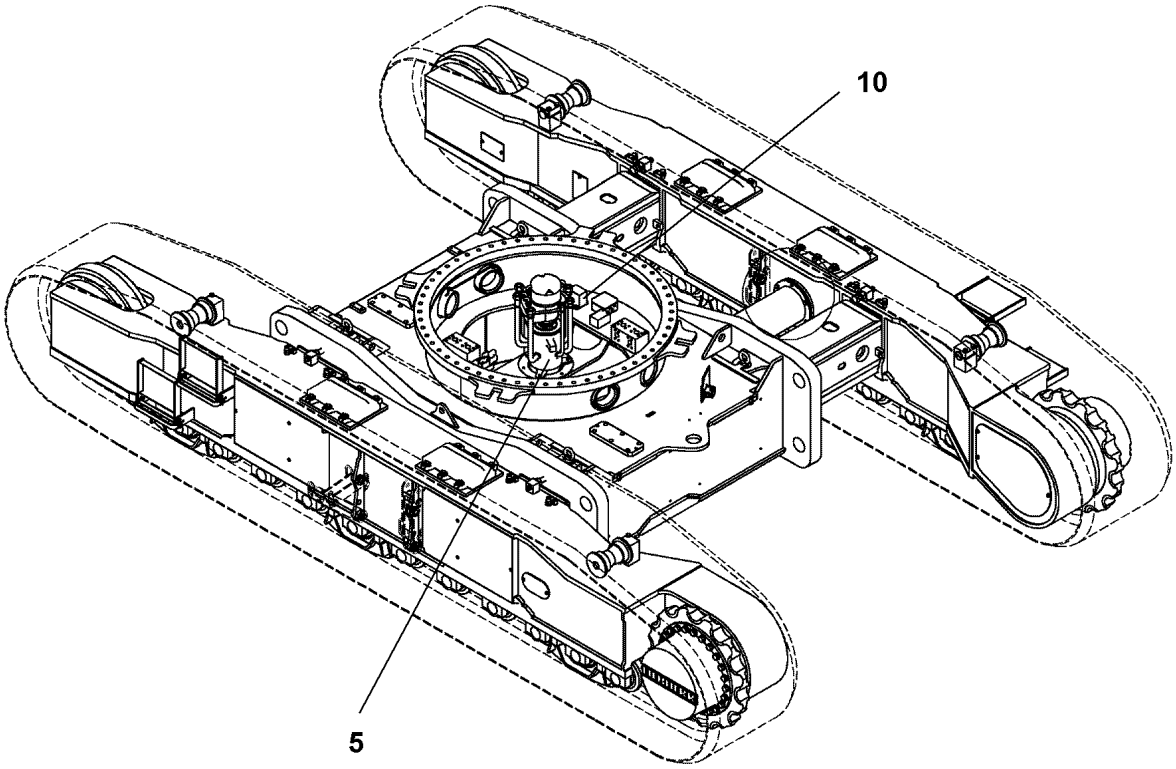


Pos. 2

| Pos. | Item | Quantity | Description | Bezeichnung |
|---|---|---|---|---|
| 2 | 96 46 921 08 | 1 | TERMINAL BOX, PRE-ASSEMBLED S50<br>⇨ 1 920 314 96 46 921 08 | KLEMMKASTEN VORM. |
| 5 | 10 28 517 1 | 1 | COLLECTING RING 15X16A,24V SPF<br>⇨ X10285171 10 28 517 1 | SCHLEIFRINGUEBERTRAEGER |
| 10 | 69 23 081 08 | 1 | INCLINATION SENSOR +/-5° X/Y SPF | NEIGUNGSGEBER |

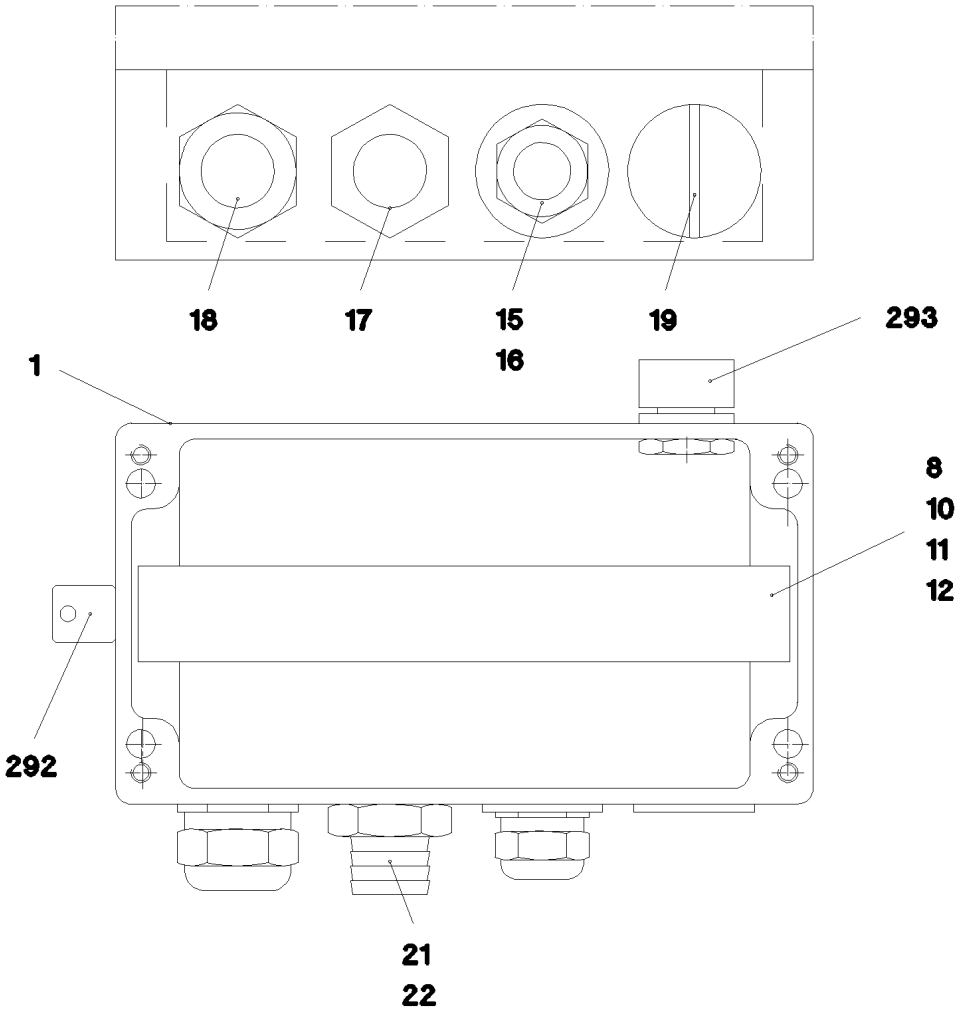


| Pos. | Item | Quantity | Description | Bezeichnung |
|---|---|---|---|---|
| 1 | 97 71 376 08 | 1 | EMPTY CASING DRILLED 120X220X80X0 AL | LEERGEHAEUSE GEBOHRT |
| 8 | 60 27 437 08 | 1 | IDENTIFICATION STRIP 1 - 250 | KENNZEICHNUNGSKARTEN |
| 10 | 60 21 067 08 | 0.205 | TOP HAT RAIL 35X27X7,3X1 | HUTSCHIENE |
| 11 | 10 28 635 4 | 23 | TERMINAL/CLAMP 6,3/2,8X0,8MM² | KLEMME |
| 12 | 60 27 417 08 | 6 | CRAMP | KRAMPE |
| 15 | 60 26 066 08 | 1 | REDUCTION M32X1,5/M25X1,5 MS | REDUKTION |
| 16 | 60 24 243 08 | 1 | CABLE GLAND M25x1,5 MS | KABELVERSCHRAUBUNG |
| 17 | 60 24 415 08 | 1 | HOSE UNION JOINT M32X1,5 MS | SCHLAUCHVERSCHRAUBUNG |
| 18 | 60 24 244 08 | 1 | CABLE GLAND M32X1,5 MS | KABELVERSCHRAUBUNG |
| 19 | 60 24 252 08 | 1 | SCREW PLUG M32X1,5 MS | VERSCHLUSSSCHRAUBE |
| 21 | 96 47 069 08 | 1 | WIRING HARNESS W1066 | KABELSTRANG |
| 22 | 10 87 458 8 | 2 | CABLE TIE 4,8X292-SCHWARZ PA 6.6 SPF | KABELBINDER |
| 292 | 60 25 012 08 | 1 | WATER DRAIN PLUG M12 PA6G SPF | ENTWAESSERUNGSSTOPFEN |
| 293 | 60 25 013 08 | 1 | VENTILATION SCREW G1/2"X30 POLYAMID | ENTLUEFTUNGSSCHRAUBE |

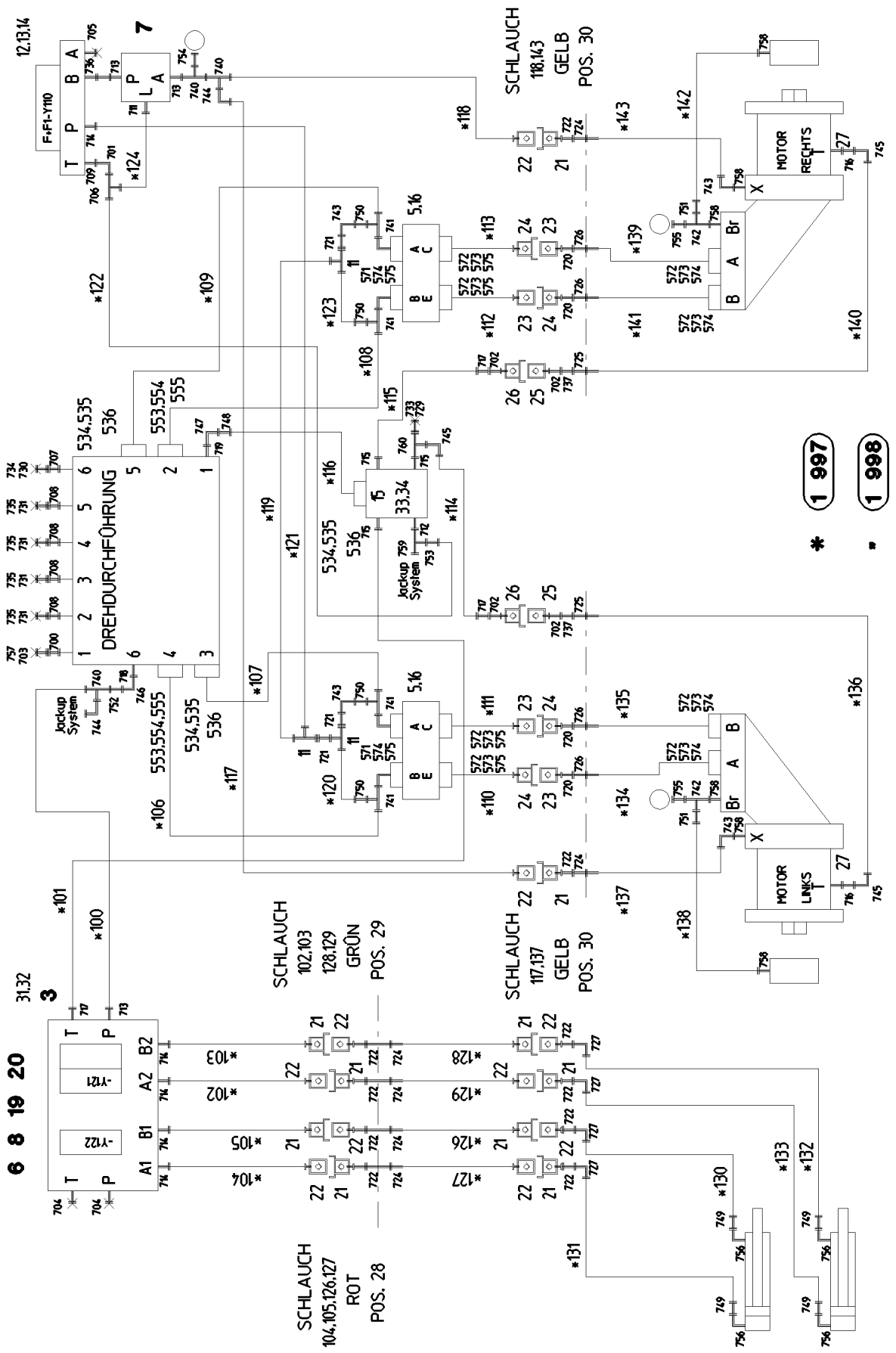
DREHDURCHFÜHRUNG
Jackup System
Jackup System
MOTOR RECHTS
MOTOR LINKS
SCHLAUCH 118,143 GELB POS. 30
SCHLAUCH 102,103 128,129 GRÜN POS. 29
SCHLAUCH 117,137 GELB POS. 30
SCHLAUCH 104,105,126,127 ROT POS. 28
F-F1-Y110
-Y121
-Y122
1 997
1 998

| Pos. | Item | Quantity | Description | Bezeichnung |
|---|---|---|---|---|
| 3 | 51 06 626 14 | 1 | CONNECTING PLATE | ANSCHLUSSPLATTE |
| 5 | 95 64 426 14 | 2 | FLANGE 120X150X217 S355J2+N | FLANSCH |
| 6 | 51 14 647 14 | 1 | PRESSURE LIMITING VALVE NG6 | DRUCKBEGRENZUNGSVENTIL |
| 7 | 51 04 385 14 | 1 | PRESSURE REDUCTION VALVE 400BARL/MI | DRUCKREDUZIERVENTIL |
| 8 | 51 14 091 08 | 2 | DIRECTIONAL CONTROL VALVE 4/3 NG6-3 | WEGEVENTIL |
| (1) | 57 17 127 08 | 2 | MAGNET COIL 24V | MAGNETSPULE |
| (2) | 70 27 459 | 2 | NUT | MUTTER |
| (999) | 57 18 400 08 | 1 | SEAL KIT | DICHTSATZ |
| 11 | 51 14 919 14 | 3 | SHUTTLE VALVE 500BAR CR6-FREI | WECHSELVENTIL |
| 12 | 51 14 327 14 | 1 | DIRECTIONAL CONTROL VALVE 4/2 NG6-3 | WEGEVENTIL |
| | | | ⇨ 5 114 327 14 51 14 327 14 | |
| 13 | 51 06 629 14 | 1 | CONNECTING PLATE CHEMISCH VENICKEL | ANSCHLUSSPLATTE |
| 14 | 40 43 028 08 | 4 | SOCKET HEAD SCREW ISO 4762 M5X50 10 | ZYLINDERSCHRAUBE |
| 15 | 51 14 753 14 | 1 | BLOCK GR.12 | BLOCK |
| 16 | 46 00 167 | 4 | SOCKET HEAD SCREW ISO 4762 M12X140 | ZYLINDERSCHRAUBE |
| 19 | 40 43 028 08 | 4 | SOCKET HEAD SCREW ISO 4762 M5X50 10 | ZYLINDERSCHRAUBE |
| 20 | 40 43 029 14 | 4 | SOCKET HEAD SCREW ISO 4762 M5X90 10. | ZYLINDERSCHRAUBE |
| 21 | 51 17 042 14 | 10 | QUICK-FITTING THREAD COUPLING HDK-H | SCHNELLVERSCHRAUBUNGSK |
| (1) | 51 17 102 14 | 1 | SUPPORTING RING | STUETZRING |
| (2) | 72 64 116 08 | 1 | O-RING 17X2 NBR90 | O-RING |
| (3) | 72 64 642 14 | 1 | O-RING 23X2 | O-RING |
| (4) | 73 64 491 | 1 | DUST PLUG DN6 | STAUBSTECKER |
| 22 | 51 17 043 14 | 10 | QUICK-FITTING THREAD COUPLING HDK-H | SCHNELLVERSCHRAUBUNGSK |
| (1) | 51 17 102 14 | 1 | SUPPORTING RING | STUETZRING |
| (2) | 72 64 116 08 | 1 | O-RING 17X2 NBR90 | O-RING |
| (3) | 72 64 642 14 | 1 | O-RING 23X2 | O-RING |
| (4) | 73 64 488 | 1 | PROTECTIVE INSERT DN6 | SCHUTZSTOPFEN |
| 23 | 51 15 112 14 | 4 | QUICK-FITTING THREAD COUPLING HDK-H | SCHNELLVERSCHRAUBUNGSK |
| (1) | 51 17 101 14 | 1 | SUPPORTING RING | STUETZRING |
| (2) | 72 64 055 08 | 1 | O-RING 54X3 NBR70 | O-RING |
| (3) | 72 64 148 08 | 1 | O-RING 62X4 NBR90 | O-RING |
| (4) | 73 63 032 | 1 | PROTECTIVE INSERT DN25 | SCHUTZSTOPFEN |
| 24 | 51 15 113 14 | 4 | QUICK-FITTING THREAD COUPLING HDK-H | SCHNELLVERSCHRAUBUNGSK |
| (1) | 51 17 101 14 | 1 | SUPPORTING RING | STUETZRING |
| (2) | 72 64 055 08 | 1 | O-RING 54X3 NBR70 | O-RING |
| (3) | 72 64 148 08 | 1 | O-RING 62X4 NBR90 | O-RING |
| (4) | 73 63 030 | 1 | DUST PLUG DN25 | STAUBSTECKER |
| 25 | 51 17 084 14 | 2 | QUICK-FITTING THREAD COUPLING NW16 | SCHNELLVERSCHRAUBUNGSK |
| (1) | 74 05 494 | 1 | SOCKET DUST-PROOF | STAUBMUFFE |
| 26 | 51 17 083 14 | 2 | QUICK-FITTING THREAD COUPLING NW16 | SCHNELLVERSCHRAUBUNGSK |
| (1) | 74 05 495 | 1 | DUST PLUG | STAUBSTECKER |
| 27 | 97 72 532 08 | 2 | FLANGE JOINT 36.0X46 11SMNPB30+C | VERSCHRAUBUNG |
| 28 | 60 30 322 14 | 0.3 | HEATSHRINK SLEEVING 38,1/19X1 ROT | SCHRUMPFSCHLAUCH |
| 29 | 60 30 326 14 | 0.3 | HEATSHRINK SLEEVING 38,1/19X1 GRUEN | SCHRUMPFSCHLAUCH |
| 30 | 60 30 323 14 | 0.6 | HEATSHRINK SLEEVING 38,1/19X1 GELB | SCHRUMPFSCHLAUCH |
| 31 | 40 42 052 08 | 2 | SOCKET HEAD SCREW ISO 4762 M6X70 8.8 | ZYLINDERSCHRAUBE |
| 32 | 10 87 564 7 | 2 | WASHER ISO 7089 6 200HV 480H SPF | SCHEIBE |
| 33 | 46 00 553 | 2 | HEX SCREW ISO 4017 M8X80 8.8 A2C | SECHSKANTSCHRAUBE |
| 34 | 10 28 980 3 | 2 | WASHER ISO 7089 8 300HV 480H SPF | SCHEIBE |
| 534 | 51 05 875 08 | 6 | FLANGE HALF A3P | FLANSCHHAELFTE |
| 535 | 73 67 610 | 3 | PLAIN COMPRESSION RING 32,30X2,80X3, | RECHTECKRING |
| 536 | 10 87 551 6 | 12 | HEX SCREW ISO 4017 M10X35 8.8 FLZN SP | SECHSKANTSCHRAUBE |
| 553 | 51 05 869 08 | 4 | FLANGE HALF SAE 1 6000 PSI CR6-FREI | FLANSCHHAELFTE |
| 554 | 73 67 611 | 2 | PLAIN COMPRESSION RING 40,15X2,80X3, | RECHTECKRING |
| 555 | 11 64 538 4 | 8 | HEX SCREW ISO 4017 M12X40 8.8 FLZN SP | SECHSKANTSCHRAUBE |
| 571 | 47 49 066 08 | 4 | SAE FLANGE CONNECTION WFS65/30-S A3 | SAE-FLANSCHVERBINDUNG |
| 572 | 51 05 866 08 | 16 | FLANGE HALF A3P | FLANSCHHAELFTE |
| 573 | 73 67 612 | 8 | PLAIN COMPRESSION RING 45,05X2,80X3, | RECHTECKRING |
| 574 | 40 65 145 01 | 20 | HEX SCREW ISO 4017 M14X45 8.8 A3C | SECHSKANTSCHRAUBE |
| 575 | 10 87 637 3 | 28 | SOCKET HEAD SCREW ISO 4762 M14X45 8 | ZYLINDERSCHRAUBE |

| Pos. | Item | Quantity | Description | Bezeichnung |
|---|---|---|---|---|
| 700 | 47 00 308 08 | 1 | FLANGE JOINT XG28-L A3P | VERSCHRAUBUNG |
| 701 | 74 03 569 | 1 | FLANGE JOINT EW 10L M16X1,5 CR6-FREI | VERSCHRAUBUNG |
| 702 | 47 55 007 08 | 4 | FLANGE JOINT RI G1AXG1/2 CR6-FREI | VERSCHRAUBUNG |
| 703 | 47 74 017 08 | 1 | BOX NUT DIN 3870 AL28 A3P | UEBERWURFMUTTER |
| 704 | 47 77 042 08 | 2 | STOP PLUG VSTI1/2"ED A3P | STOPFEN |
| 705 | 47 77 041 08 | 1 | STOP PLUG VSTI3/8"ED A3P | STOPFEN |
| 706 | 47 23 302 08 | 1 | FLANGE JOINT EL 10L CR6-FREI | VERSCHRAUBUNG |
| 707 | 47 00 328 08 | 1 | FLANGE JOINT XG20-S A3P | VERSCHRAUBUNG |
| 708 | 47 00 330 08 | 4 | FLANGE JOINT XG30-S CFX | VERSCHRAUBUNG |
| 709 | 47 10 396 08 | 1 | FLANGE JOINT XGE10-LR-ED3/8" A3P | VERSCHRAUBUNG |
| 711 | 73 62 091 | 1 | FLANGE JOINT ISO 8434-1 GE 10L G1/4A C | VERSCHRAUBUNG |
| 712 | 47 10 311 08 | 1 | FLANGE JOINT GE 18L M22X1,5 CR6-FREI | VERSCHRAUBUNG |
| 713 | 47 10 326 08 | 3 | FLANGE JOINT GE 12S G1/2A CR6-FREI | VERSCHRAUBUNG |
| 714 | 47 10 328 08 | 5 | FLANGE JOINT ISO 8434-1 GE 10S G3/8A C | VERSCHRAUBUNG |
| 715 | 47 10 330 08 | 3 | FLANGE JOINT XGE16-SM-ED A3P | VERSCHRAUBUNG |
| 716 | 47 10 331 08 | 2 | FLANGE JOINT XGE16-SR-ED3/4" A3P | VERSCHRAUBUNG |
| 717 | 47 10 332 08 | 3 | FLANGE JOINT XGE16-SR-ED A3P | VERSCHRAUBUNG |
| 718 | 47 10 333 08 | 1 | FLANGE JOINT XGE20-SM-ED A3P | VERSCHRAUBUNG |
| 719 | 47 10 335 08 | 1 | FLANGE JOINT XGE25-SM-ED A3P | VERSCHRAUBUNG |
| 720 | 47 00 111 08 | 4 | FLANGE JOINT SNV30-S A3P | VERSCHRAUBUNG |
| 721 | 47 00 102 08 | 3 | FLANGE JOINT SNV10-S A3P | VERSCHRAUBUNG |
| 722 | 47 00 103 08 | 10 | FLANGE JOINT SNV12-S A3P | VERSCHRAUBUNG |
| 724 | 47 40 324 08 | 6 | FLANGE JOINT XSV12-S A3P | VERSCHRAUBUNG |
| 725 | 47 40 326 08 | 2 | FLANGE JOINT XSV16-S A3P | VERSCHRAUBUNG |
| 726 | 47 40 329 08 | 4 | FLANGE JOINT XSV30-S A3P | VERSCHRAUBUNG |
| 727 | 47 42 324 08 | 4 | FLANGE JOINT WSV 12S A3C | VERSCHRAUBUNG |
| 729 | 47 74 006 08 | 1 | BOX NUT DIN 3870 AS16 A3P | UEBERWURFMUTTER |
| 730 | 47 74 007 08 | 1 | BOX NUT DIN 3870 AS20 A3P | UEBERWURFMUTTER |
| 731 | 47 74 009 08 | 4 | BOX NUT DIN 3870 AS30 A3C | UEBERWURFMUTTER |
| 733 | 47 77 011 08 | 1 | FLANGE JOINT BUZ 16S CR6-FREI | VERSCHRAUBUNG |
| 734 | 47 77 014 08 | 1 | BUTZEN BUZ 20S CR6-FREI | BUTZEN |
| 735 | 47 77 016 08 | 4 | FLANGE JOINT BUZ 30S CR6-FREI | VERSCHRAUBUNG |
| 736 | 47 19 005 08 | 1 | FLANGE JOINT EGESD12-SR-WD A3P | VERSCHRAUBUNG |
| 737 | 47 19 006 08 | 2 | FLANGE JOINT EGESD16-SR-WD A3P | VERSCHRAUBUNG |
| 740 | 76 17 461 | 3 | FLANGE JOINT EL 12S CR6-FREI | VERSCHRAUBUNG |
| 741 | 48 23 318 14 | 4 | FLANGE JOINT ISO 8434 EL 30S CR6-FREI | VERSCHRAUBUNG |
| 742 | 48 24 313 14 | 2 | FLANGE JOINT ISO 8434 ET 10S CR6-FREI | VERSCHRAUBUNG |
| 743 | 76 17 268 | 4 | FLANGE JOINT EW 10S CR6-FREI | VERSCHRAUBUNG |
| 744 | 76 17 354 | 2 | FLANGE JOINT EW 12S CR6-FREI | VERSCHRAUBUNG |
| 745 | 76 17 460 | 3 | FLANGE JOINT EW 16S CR6-FREI | VERSCHRAUBUNG |
| 746 | 74 07 108 | 1 | FLANGE JOINT EW 20S CR6-FREI | VERSCHRAUBUNG |
| 747 | 74 07 119 | 1 | FLANGE JOINT EW 25S CR6-FREI | VERSCHRAUBUNG |
| 748 | 47 54 323 08 | 1 | FLANGE JOINT REDSDN25/20-S A3P | VERSCHRAUBUNG |
| 749 | 47 54 333 08 | 4 | FLANGE JOINT REDSD16/12-S A3P | VERSCHRAUBUNG |
| 750 | 47 54 339 08 | 4 | FLANGE JOINT REDSD30/10-S A3P | VERSCHRAUBUNG |
| 751 | 47 54 320 08 | 2 | FLANGE JOINT REDSDN10/6-S A3P | VERSCHRAUBUNG |
| 752 | 47 54 348 08 | 1 | FLANGE JOINT REDSD20/12-S A3P | VERSCHRAUBUNG |
| 753 | 47 54 303 08 | 1 | FLANGE JOINT REDSD18/10-L A3P | VERSCHRAUBUNG |
| 754 | 74 09 922 | 1 | GAUGE CONNECTION 12S M20X1,5 CR6-F | MESSSTUTZEN |
| 755 | 56 07 617 | 2 | GAUGE CONNECTION DKO 10S M18X1,5 C | MESSSTUTZEN |
| 756 | 47 32 312 08 | 4 | FLANGE JOINT RSWS16-SR-WD A3P | VERSCHRAUBUNG |
| 757 | 47 77 008 08 | 1 | BUTZEN BUZ 28L A3C | BUTZEN |
| 758 | 47 10 082 14 | 6 | FLANGE JOINT ISO 8434 GE 10S M14X1,5 C | VERSCHRAUBUNG |
| 759 | 24 71 285 02 | 1 | FLANGE JOINT EL 18L CR6-FREI | VERSCHRAUBUNG |
| 760 | 74 07 098 | 1 | FLANGE JOINT EL 16S CR6-FREI | VERSCHRAUBUNG |

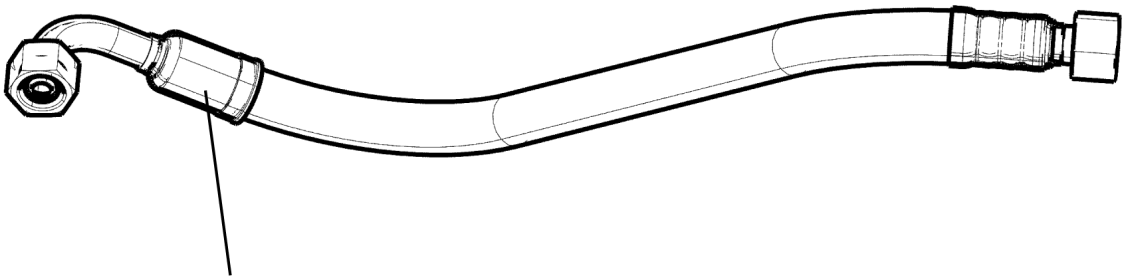

Schlauchnummer
Hose number
Numéro de flexible
Número de flexible
Номера шланга

Die Schlauchnummern auf den Schläuchen entsprechen den Positionen in der Schlauchliste.

The hose numbers from the hoses are in accordance with the items in the hose list.

Les numéros indiqués sur les flexibles correspondent aux repères de la nomenclature des flexibles.

Los números indicados en los flexibles corresponden a las posiciones de la lista de flexibles.

Нанесенные на шлангах номера соответствуют позициям в перечне.

| Pos. | Item | Quantity | Description | Bezeichnung |
|---|---|---|---|---|
| 1 | 60 27 601 08 | 25 | NAME PLATE 25,4X101,6 | BEZEICHNUNGSSCHILD |
| 2 | 60 27 603 08 | 18 | NAME PLATE 25,4X165,1 | BEZEICHNUNGSSCHILD |
| 100 | 96 43 245 08 | 1 | HOSE CPL. 2SN 10X750 | SCHLAUCH KPL. |
| 101 | 96 43 246 08 | 1 | HOSE CPL. 2755 12X2180 | SCHLAUCH KPL. |
| 102 | 96 43 247 08 | 1 | HOSE CPL. 2SN 8X2280 | SCHLAUCH KPL. |
| 103 | 92 96 140 08 | 1 | HOSE CPL. 2SN 8X2350 | SCHLAUCH KPL. |
| 104 | 96 35 930 08 | 1 | HOSE CPL. 2SN 8X2250 | SCHLAUCH KPL. |
| 105 | 96 43 248 08 | 1 | HOSE CPL. 2SN 8X2300 | SCHLAUCH KPL. |
| 106 | 96 43 249 08 | 1 | HOSE CPL. 2755 25X1900 | SCHLAUCH KPL. |
| 107 | 96 43 250 08 | 1 | HOSE CPL. 2755 25X2050 | SCHLAUCH KPL. |
| 108 | 96 43 251 08 | 1 | HOSE CPL. 2755 25X1950 | SCHLAUCH KPL. |
| 109 | 96 43 252 08 | 1 | HOSE CPL. 2755 25X2150 | SCHLAUCH KPL. |
| 110 | 96 43 253 08 | 1 | HOSE CPL. 2755 25X2100 | SCHLAUCH KPL. |
| 111 | 96 43 253 08 | 1 | HOSE CPL. 2755 25X2100 | SCHLAUCH KPL. |
| 112 | 96 43 253 08 | 1 | HOSE CPL. 2755 25X2100 | SCHLAUCH KPL. |
| 113 | 96 43 253 08 | 1 | HOSE CPL. 2755 25X2100 | SCHLAUCH KPL. |
| 114 | 92 22 980 08 | 1 | HOSE CPL. 2755 3,5M | SCHLAUCH KPL. |
| 115 | 92 20 994 08 | 1 | HOSE CPL. 2755 12X2300 | SCHLAUCH KPL. |
| 116 | 96 43 254 08 | 1 | HOSE CPL. 2755 16X450 | SCHLAUCH KPL. |
| 117 | 92 46 186 08 | 1 | HOSE CPL. 2SN 10X3620 | SCHLAUCH KPL. |
| 118 | 92 93 288 08 | 1 | HOSE CPL. 2SN 10X5000 | SCHLAUCH KPL. |
| 119 | 96 43 255 08 | 1 | HOSE CPL. 2SN 8X2300 | SCHLAUCH KPL. |
| 120 | 92 96 305 08 | 1 | HOSE CPL. 2SN 8X600 | SCHLAUCH KPL. |
| 121 | 92 68 722 08 | 1 | HOSE CPL. 2SN 1,2M | SCHLAUCH KPL. |
| 122 | 92 26 464 08 | 1 | HOSE CPL. 2SN 8X3100 | SCHLAUCH KPL. |
| 123 | 92 96 305 08 | 1 | HOSE CPL. 2SN 8X600 | SCHLAUCH KPL. |
| 124 | 92 80 058 08 | 1 | HOSE CPL. 2SN 8X600 | SCHLAUCH KPL. |
| 126 | 96 43 256 08 | 1 | HOSE CPL. 2SN 10X850 | SCHLAUCH KPL. |
| 127 | 96 43 256 08 | 1 | HOSE CPL. 2SN 10X850 | SCHLAUCH KPL. |
| 128 | 92 80 069 08 | 1 | HOSE CPL. 2SN 1,55M | SCHLAUCH KPL. |
| 129 | 92 80 069 08 | 1 | HOSE CPL. 2SN 1,55M | SCHLAUCH KPL. |
| 130 | 96 43 257 08 | 1 | HOSE CPL. 2SN 10X2190 | SCHLAUCH KPL. |
| 131 | 92 76 121 08 | 1 | HOSE CPL. 2SN 10X500 | SCHLAUCH KPL. |
| 132 | 96 43 257 08 | 1 | HOSE CPL. 2SN 10X2190 | SCHLAUCH KPL. |
| 133 | 92 76 121 08 | 1 | HOSE CPL. 2SN 10X500 | SCHLAUCH KPL. |
| 134 | 96 43 258 08 | 1 | HOSE CPL. 2755 25X2960 | SCHLAUCH KPL. |
| 135 | 96 43 259 08 | 1 | HOSE CPL. 2755 25X3040 | SCHLAUCH KPL. |
| 136 | 96 43 260 08 | 1 | HOSE CPL. 2755 12X3550 | SCHLAUCH KPL. |
| 137 | 96 43 261 08 | 1 | HOSE CPL. 2SN 8X3450 | SCHLAUCH KPL. |
| 138 | 96 43 262 08 | 1 | HOSE CPL. 2SN 6X870 | SCHLAUCH KPL. |
| 139 | 96 43 263 08 | 1 | HOSE CPL. 2755 25X2350 | SCHLAUCH KPL. |
| 140 | 92 24 172 08 | 1 | HOSE CPL. 2755 12X2750 | SCHLAUCH KPL. |
| 141 | 96 43 264 08 | 1 | HOSE CPL. 2755 25X2210 | SCHLAUCH KPL. |
| 142 | 96 43 262 08 | 1 | HOSE CPL. 2SN 6X870 | SCHLAUCH KPL. |
| 143 | 96 42 744 08 | 1 | HOSE CPL. 2SN 8X2650 | SCHLAUCH KPL. |

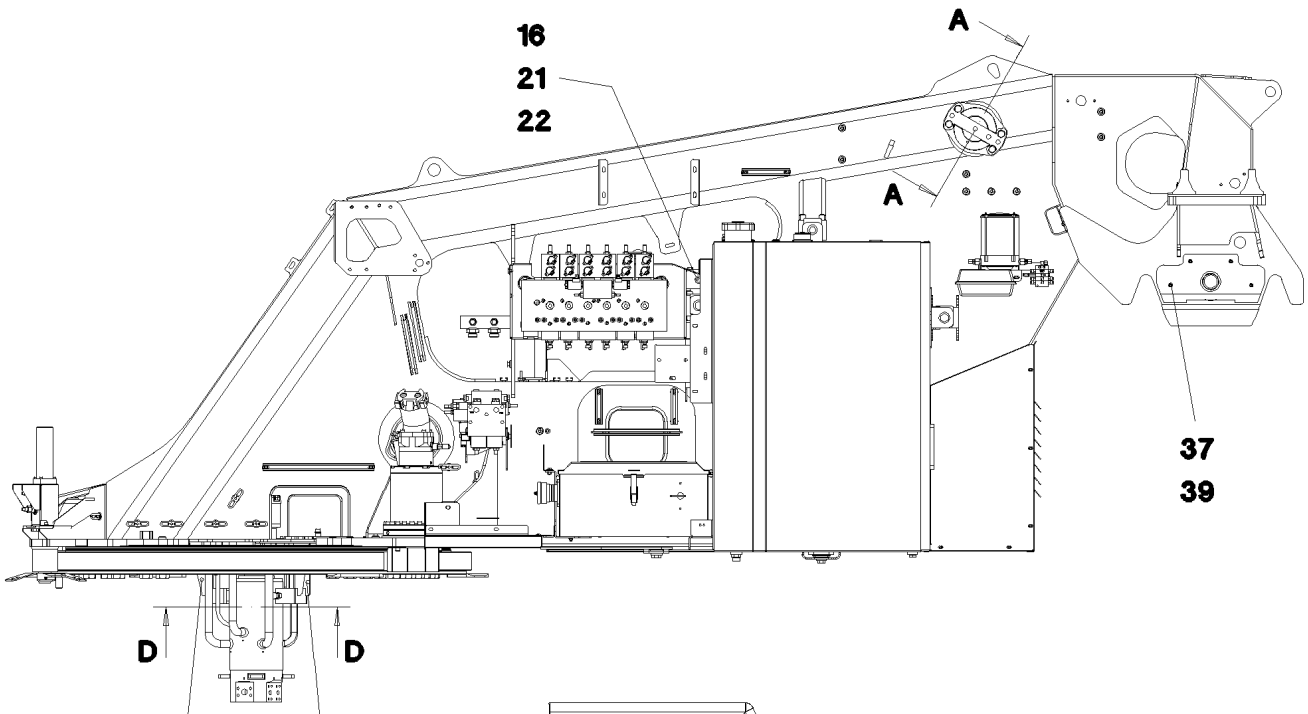


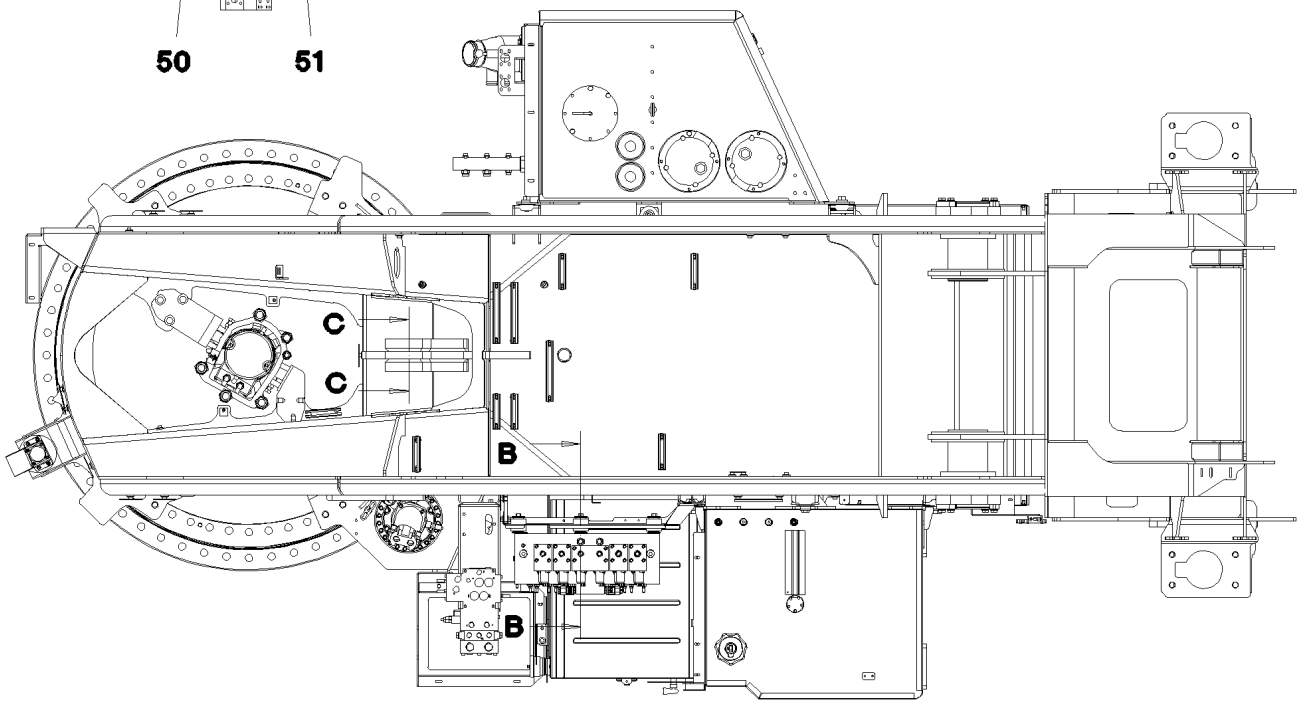


Schnitt C–C

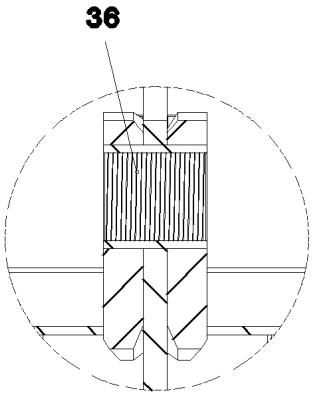


Schnitt A–A

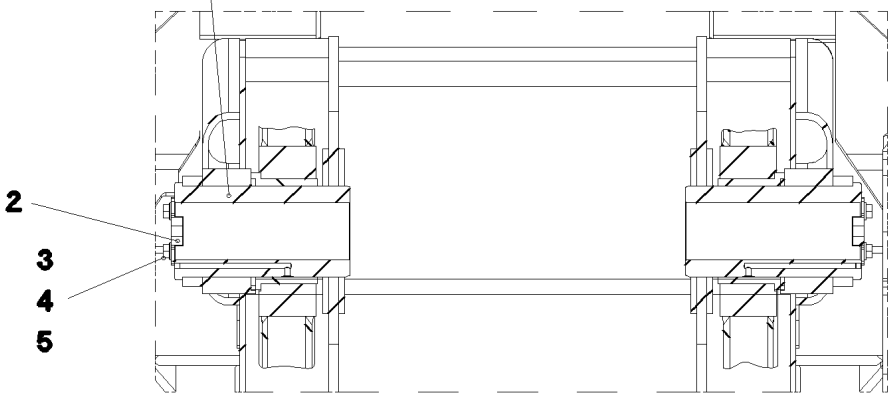

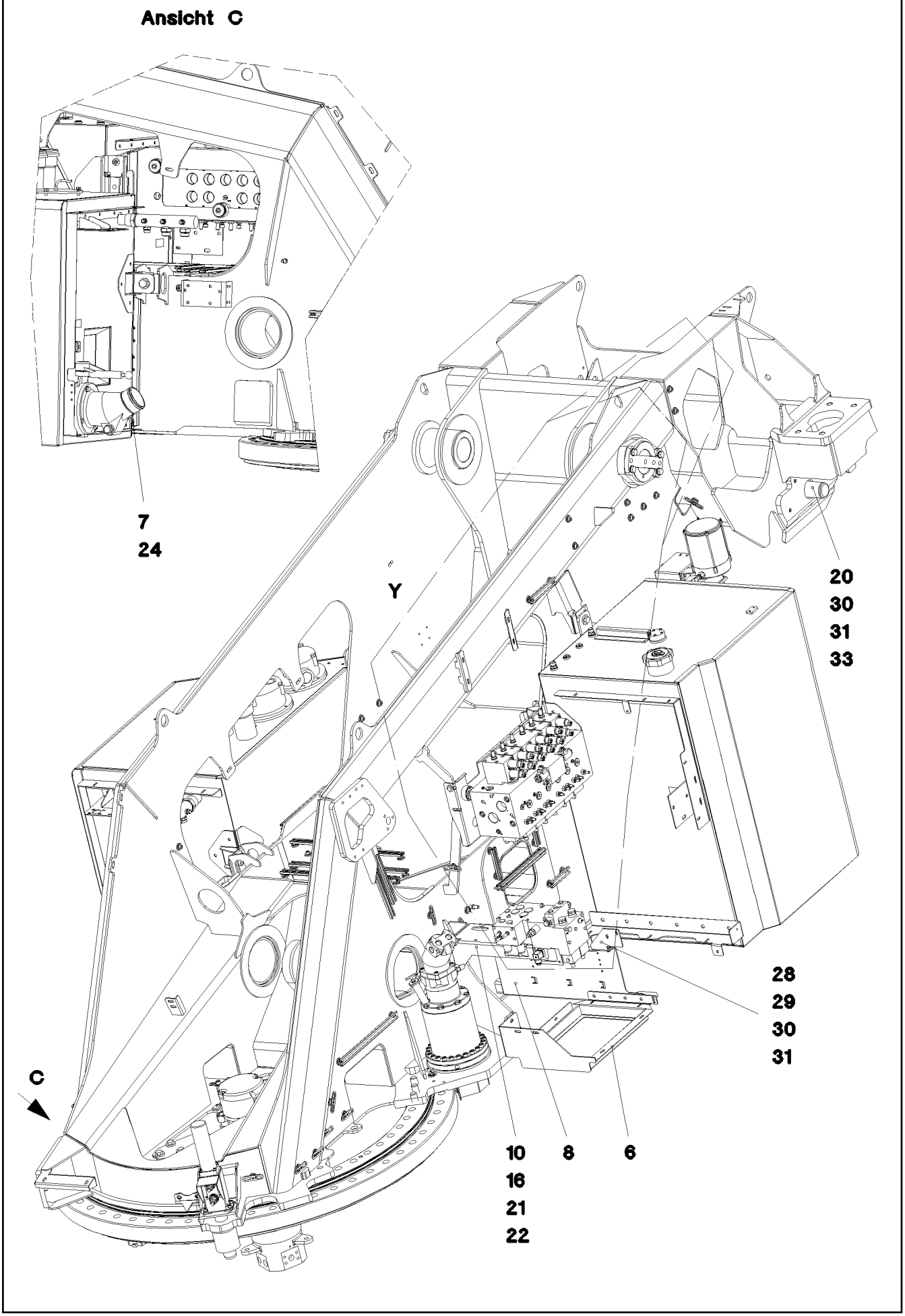
Ansicht C
7
24
Y
20
30
31
33
28
29
30
31
C
10
16
21
22
8
6

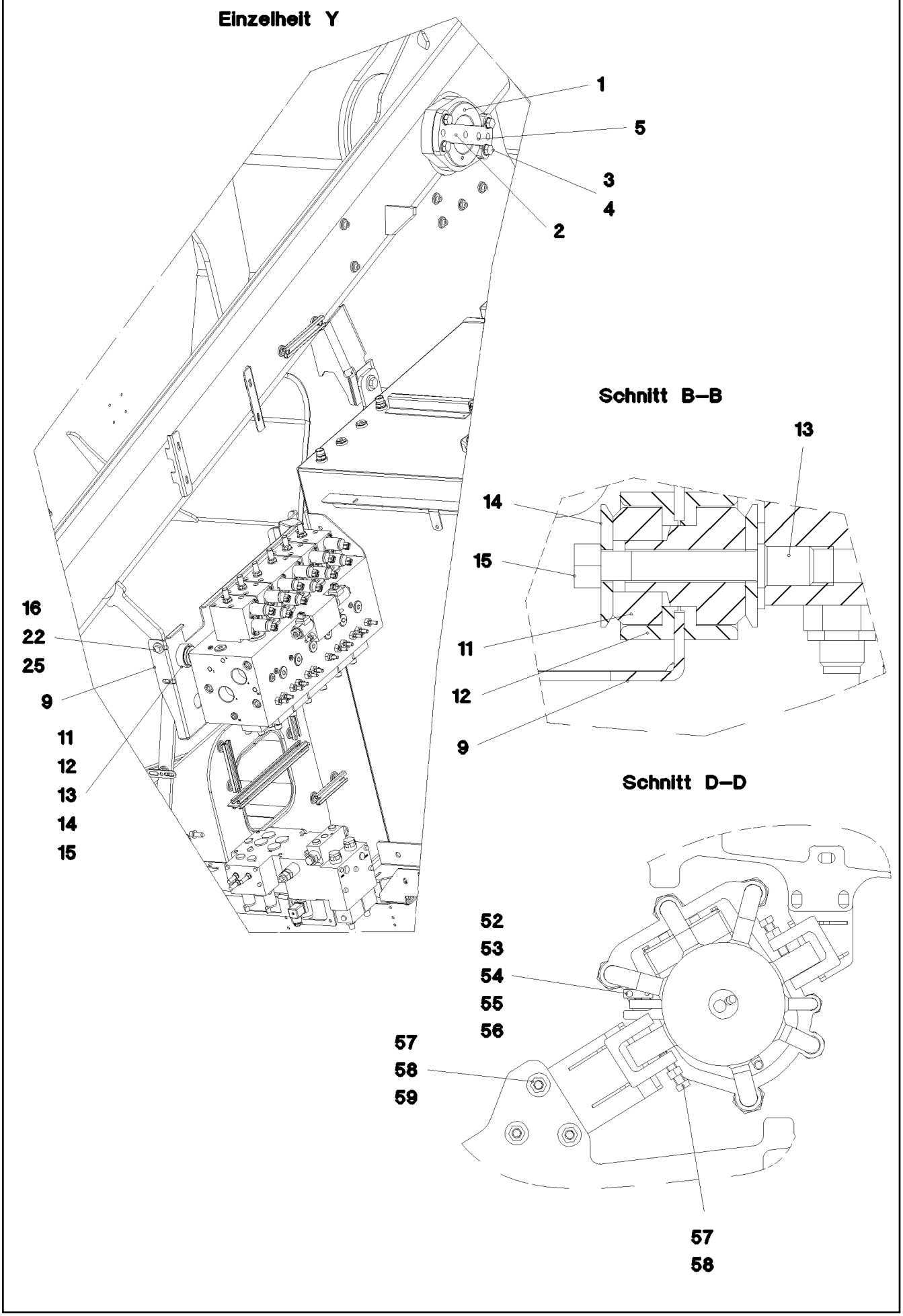
Einzelheit Y
1
5
3
4
2
16
22
25
9
11
12
13
14
15
Schnitt B–B
13
14
15
11
12
9
Schnitt D–D
52
53
54
55
56
57
58
59
57
58

| Pos. | Item | Quantity | Description | Bezeichnung |
|---|---|---|---|---|
| 1 | 95 71 000 08 | 2 | AXLE 170X310 35NICRMOV125 SPF | ACHSE |
| 2 | 95 19 139 08 | 2 | AXLE HOLDER 20x250x119 S690QL | ACHSHALTER |
| 3 | 42 15 002 08 | 8 | WASHER DIN 6916 17 -C45 VERZ | SCHEIBE |
| 4 | 40 66 031 08 | 8 | HEX SCREW ISO 4017 M16X45 10.9 FLZN SP | SECHSKANTSCHRAUBE |
| 5 | 43 20 129 08 | 4 | DOWEL PIN ISO 8752 18X36 | SPANNSTIFT |
| 6 | 96 22 885 08 | 1 | BRACKET WELDED CONST. | KONSOLE SCHWK. |
| 7 | 10 41 285 4 | 4 | BUTTON HEAD SCREW AEHNL.ISO 7380-2 | HALBRUNDKOPFSCHRAUBE |
| 8 | 92 79 359 08 | 1 | BRACKET WELDED CONST. | KONSOLE SCHWK. |
| 9 | 97 50 794 08 | 1 | PLATE 4X440X890 S315MC | BLECH |
| 10 | 97 20 552 08 | 1 | PLATE 4X527X430 S315MC | BLECH |
| 11 | 55 06 406 08 | 3 | RUBBER BEARING 13,51/47,75X19,8 | GUMMILAGER |
| 12 | 97 06 891 08 | 6 | BUSHING 60.3X24 S355J2H | BUCHSE |
| 13 | 97 04 469 08 | 3 | THREADED PIN RD35X94.5 S355J2G3C+C | GEWINDEBOLZEN |
| 14 | 97 08 215 08 | 6 | WASHER 50X5 S355J2C+C | SCHEIBE |
| 15 | 41 15 048 08 | 3 | HEX NUT ISO 4032 M12 10 A3C SPF | SECHSKANTMUTTER |
| 16 | 11 49 188 9 | 16 | WASHER ISO 7093-1 10 300HV FLZN SPF | SCHEIBE |
| 20 | 96 32 604 08 | 2 | LOCKING<br>➪ 2 102 022 96 32 604 08 | VERRIEGELUNG |
| 21 | 11 63 181 6 | 6 | HEX SCREW ISO 4017 M10X25 8.8 FLZN SP | SECHSKANTSCHRAUBE |
| 22 | 41 15 144 08 | 8 | HEX NUT ISO 4032 M10 8 A3C | SECHSKANTMUTTER |
| 24 | 96 22 070 08 | 1 | HOLDER PRE-ASSEMBLY FE//ZNNI8//CN//T0 | HALTER VORM. |
| 25 | 40 00 828 | 2 | HEX SCREW ISO 4017 M10X30 8.8 A3C | SECHSKANTSCHRAUBE |
| 28 | 42 18 009 08 | 2 | WASHER ISO 7093-1 8 200HV A2C | SCHEIBE |
| 29 | 11 65 176 7 | 2 | HEX SCREW ISO 4017 M8X20 8.8 480H SPF | SECHSKANTSCHRAUBE |
| 30 | 10 28 980 3 | 9 | WASHER ISO 7089 8 300HV 480H SPF | SCHEIBE |
| 31 | 11 69 387 5 | 5 | HEX NUT ISO 4032 M8 8 480H SPF | SECHSKANTMUTTER |
| 33 | 11 64 226 1 | 4 | HEX SCREW ISO 4017 M8X25 8.8 480H SPF | SECHSKANTSCHRAUBE |
| 36 | 97 25 034 08 | 1 | BUSHING RD150X130 GZ-CUZN25AL5 | BUCHSE |
| 37 | 97 57 785 08 | 2 | GUIDE PA6G | FUEHRUNG |
| 39 | 10 87 559 9 | 8 | SOCKET HEAD SCREW ISO 4762 M8X25 8.8 | ZYLINDERSCHRAUBE |
| 50 | 96 36 724 08 | 1 | BRACKET WELDED CONST. | KONSOLE SCHWK. |
| 51 | 96 36 726 08 | 1 | BRACKET WELDED CONST. | KONSOLE SCHWK. |
| 52 | 28 81 762 08 | 1 | SHEET 15X30X50 PA6G | PLATTE |
| 53 | 46 00 532 | 2 | HEX SCREW ISO 4017 M6X50 8.8 A2C | SECHSKANTSCHRAUBE |
| 54 | 10 87 562 1 | 2 | HEX NUT ISO 4032 M6 8 480H SPF | SECHSKANTMUTTER |
| 55 | 10 87 564 7 | 4 | WASHER ISO 7089 6 200HV 480H SPF | SCHEIBE |
| 56 | 11 63 174 2 | 1 | HEX SCREW ISO 4017 M12X30 8.8 FLZN SP | SECHSKANTSCHRAUBE |
| 57 | 41 15 050 08 | 8 | HEX NUT ISO 4032 M16 10 A3C SPF | SECHSKANTMUTTER |
| 58 | 10 87 552 1 | 8 | HEX SCREW ISO 4017 M16X60 8.8 FLZN SP | SECHSKANTSCHRAUBE |
| 59 | 46 00 021 | 12 | WASHER DIN 7349 17 200HV FLZN SPF | SCHEIBE |

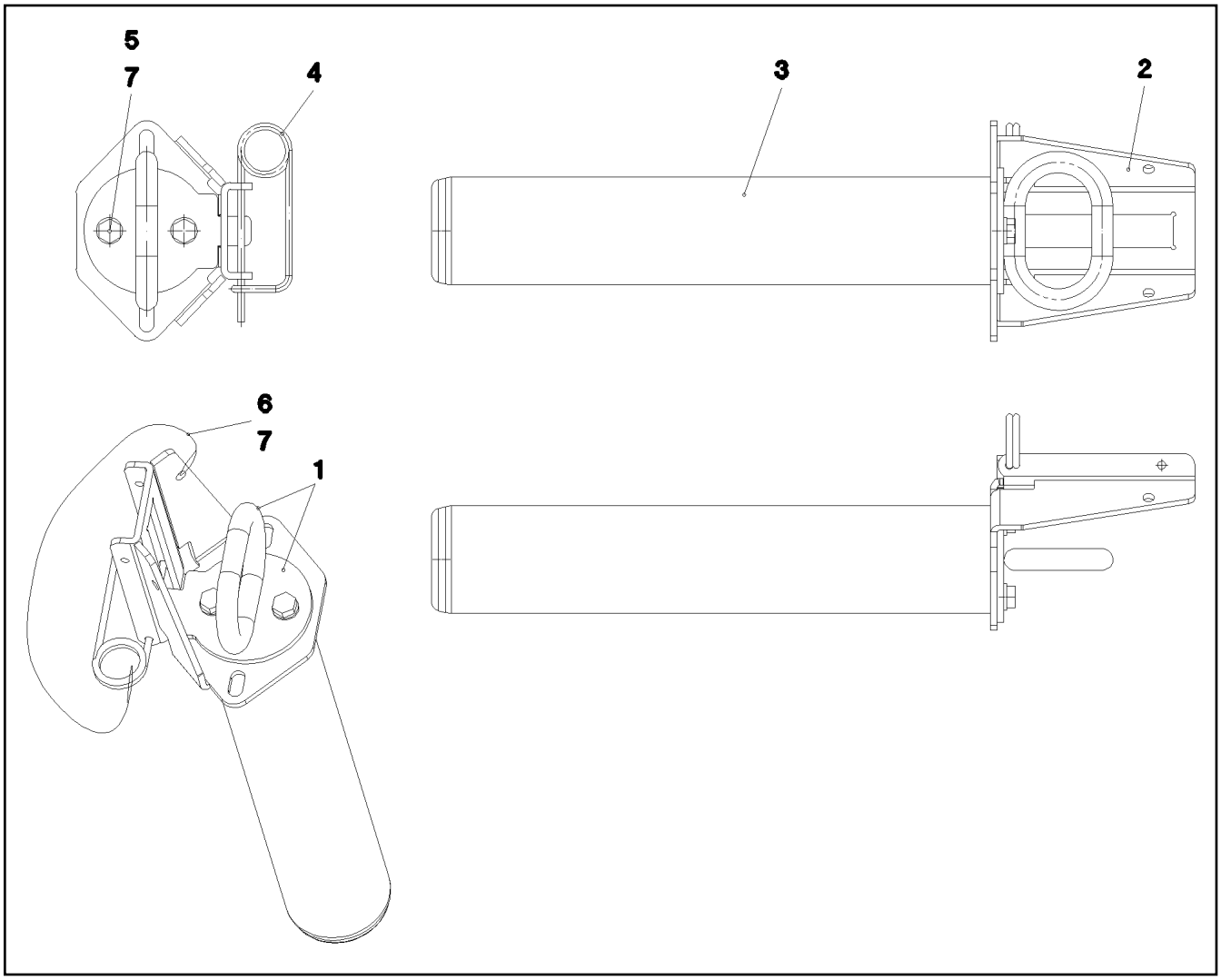


| Pos. | Item | Quantity | Description | Bezeichnung |
|---|---|---|---|---|
| 1 | 96 32 610 08 | 1 | BOLT HANDLE FE//ZNNI8//CN//T0 | BOLZENGRIFF |
| 2 | 97 57 695 08 | 1 | PLATE 4X208X241 S315MC FE//ZNNI8//CN//T | BLECH |
| 3 | 97 57 668 08 | 1 | INTERLOCK BOLT 70.0X342 35NICRMOV125 | VERRIEGELUNGSBOLZEN |
| 4 | 43 31 012 08 | 1 | RETAINING SPRING 4X68 VERZ | SICHERUNGSFEDER |
| 5 | 11 65 176 7 | 2 | HEX SCREW ISO 4017 M8X20 8.8 480H SPF | SECHSKANTSCHRAUBE |
| 6 | 11 16 043 1 | 0.75 | ROPE 2 2,3KN EDELSTAHL | SEIL |
| 7 | 11 17 056 5 | 2 | FERRULE 2 CU | PRESSKLEMME |

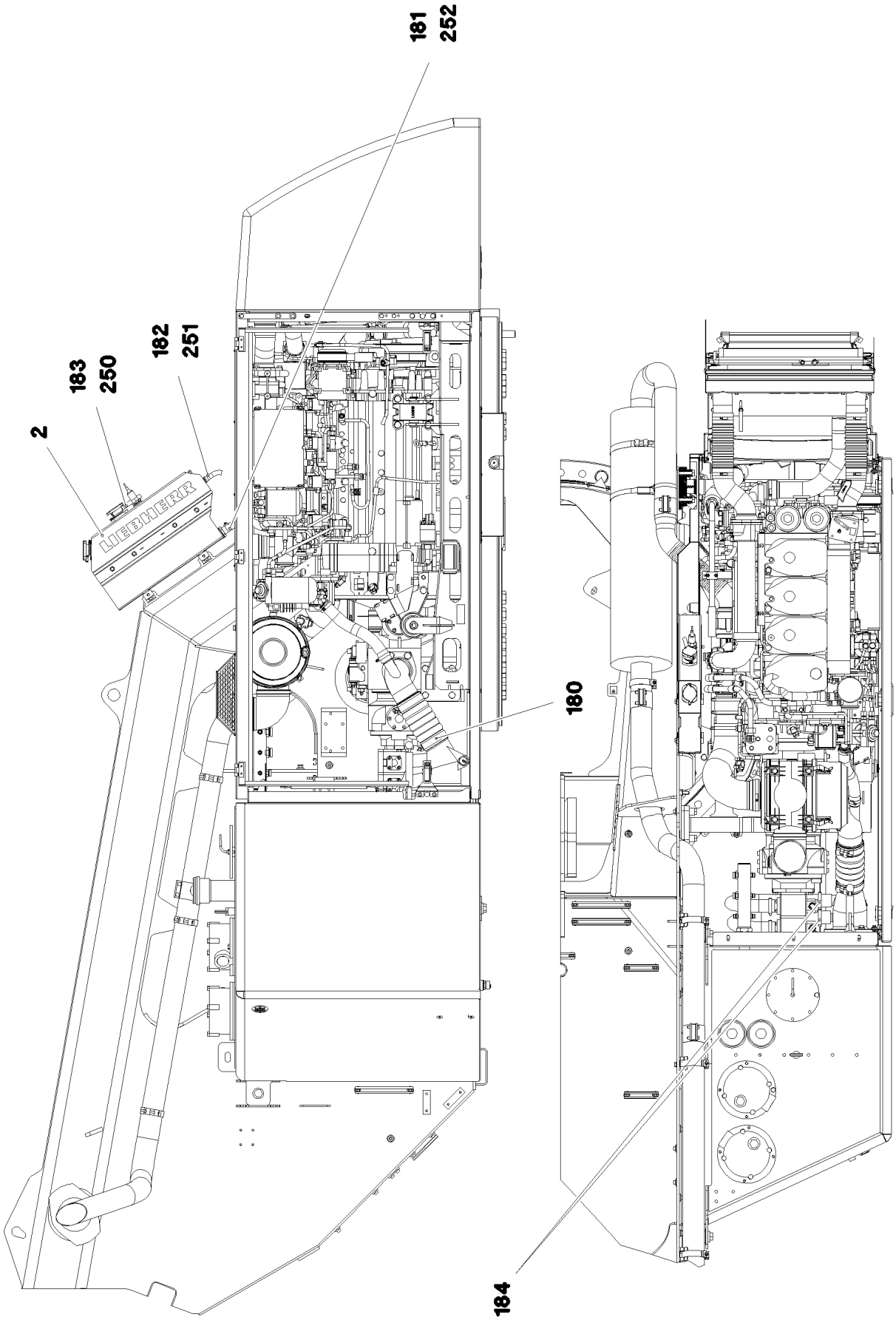
181
252
182
251
183
250
2
180
184

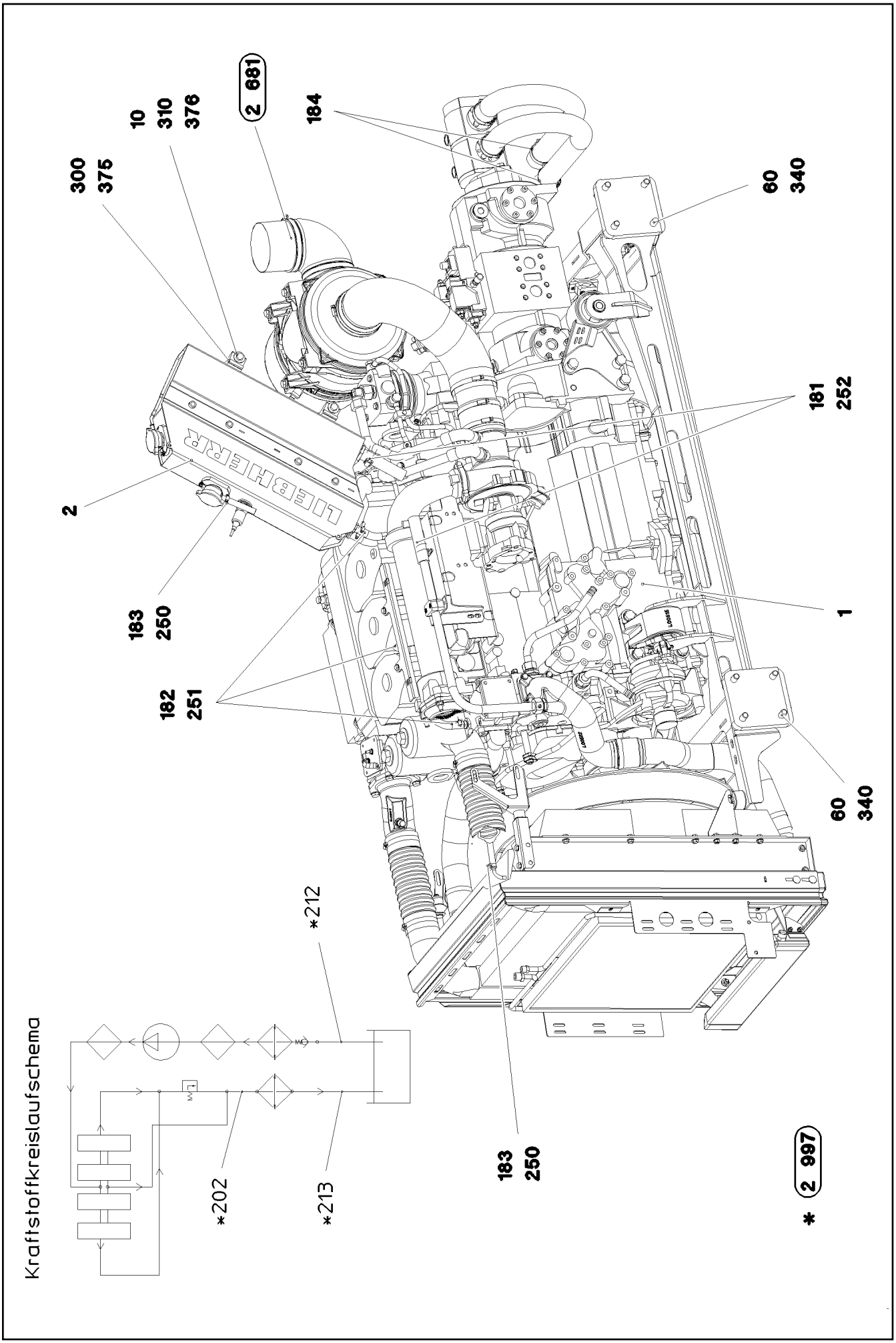


| | | |
|---|---|---|
| 16.2.2017<br>083741<br>LIEBHERR | **etk_en_de_048005 LTR 1100**<br><br>**DRIVE ASSEMBLY CPL.**<br>**ANTRIEBSAGGREGAT KPL.** | 70 (2/3)<br><br>**2 200**<br>**91 81 095 08** |

| Pos. | Item | Quantity | Description | Bezeichnung |
|---|---|---|---|---|
| 1 | 91 81 614 08 | 1 | DRIVE ASSEMBLY, PRE-ASSEMBLED<br>➪ 2 210 91 81 614 08 | ANTRIEBSAGGREGAT VORM. |
| 2 | 96 32 140 08 | 1 | EXPANSION TANK PRE-ASS.<br>➪ 2 200 048 96 32 140 08 | AUSGLEICHSBEHAELTER VORM |
| 10 | 97 03 651 08 | 2 | BEARING BLOCK 40x115x42 ALMG3 | LAGERBOCK |
| 60 | 95 21 770 08 | 8 | DISTANCE SLEEVE 27X22 42CRMO4+QT SP | DISTANZHUELSE |
| 180 | 77 42 238 08 | 1 | HOSE CLAMP DIN 3017-3 108/104-112/25 W | SCHLAUCHSCHELLE |
| 181 | 77 42 085 08 | 2 | HOSE CLAMP 32/25-40/12 W3 | SCHLAUCHSCHELLE |
| 182 | 10 87 202 2 | 4 | HOSE CLAMP DIN 3017-1 12-22/9 W3 | SCHLAUCHSCHELLE |
| 183 | 10 87 202 4 | 2 | HOSE CLAMP DIN 3017-1 8-16/9 W3 | SCHLAUCHSCHELLE |
| 184 | 55 08 380 08 | 2 | HOSE CLAMP 40-60 W3 | SCHLAUCHSCHELLE |
| 250 | 10 87 308 5 | 2.5 | COOLING WATER HOSE DN8 B1 SPF | KUEHLWASSERSCHLAUCH |
| 251 | 11 62 176 9 | 4 | COOLING WATER HOSE DN10 B1 SPF | KUEHLWASSERSCHLAUCH |
| 252 | 11 62 177 2 | 2 | COOLING WATER HOSE DN22 B1 SPF | KUEHLWASSERSCHLAUCH |
| 300 | 11 62 670 6 | 2 | HEX SCREW ISO 4017 M10X40 8.8 FLZN SP | SECHSKANTSCHRAUBE |
| 310 | 11 63 181 6 | 2 | HEX SCREW ISO 4017 M10X25 8.8 FLZN SP | SECHSKANTSCHRAUBE |
| 340 | 46 00 262 | 8 | HEX SCREW ISO 4017 M16X65 8.8 A3C | SECHSKANTSCHRAUBE |
| 375 | 42 00 054 14 | 2 | WASHER LIKE ISO 7089 10 -PA 6.6 | SCHEIBE |
| 376 | 11 49 188 9 | 2 | WASHER ISO 7093-1 10 300HV FLZN SPF | SCHEIBE |

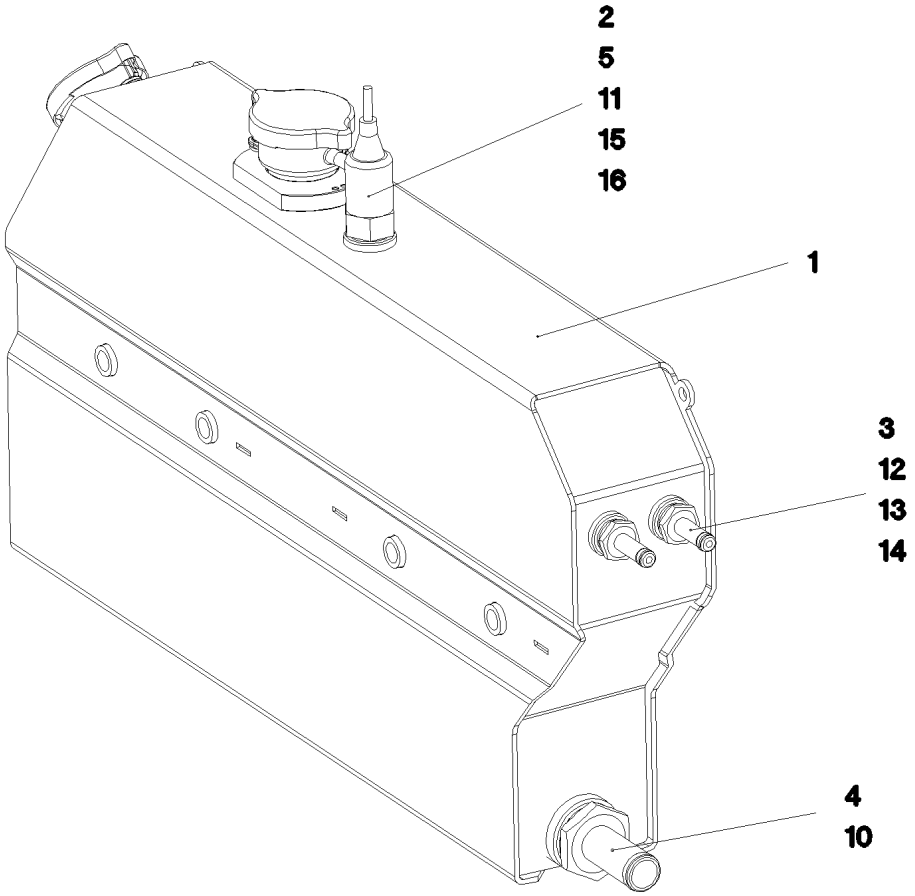


| Pos. | Item | Quantity | Description | Bezeichnung |
|---|---|---|---|---|
| 1 | 96 84 070 08 | 1 | EXPANSION TANK PRE-ASS.<br>⇨ 2 200 048 96 84 070 08 | AUSGLEICHSBEHAELTER VORM |
| 2 | 10 22 814 3 | 1 | LEVEL PROBE L=50 5 V SPF | NIVEAUSONDE |
| 3 | 96 32 324 08 | 2 | CONNECTION PIECE | STUTZEN KPL. |
| 4 | 22 81 103 08 | 1 | FITTINGS RD22/M33X2 MS58 | STUTZEN |
| 5 | 22 81 104 08 | 1 | REDUCING PIECE MS58 | REDUZIERSTUECK |
| 10 | 97 01 153 08 | 1 | FLAT SEALING RING 40X28X3 NBR60 | FLACHDICHTRING |
| 13 | 50 29 237 08 | 2 | COMPRESSION RING | DRUCKRING |
| 14 | 10 11 397 3 | 2 | O-RING 14X2 FPM70 | O-RING |
| 15 | 50 29 328 08 | 1 | COMPRESSION RING DR/R26X31 | DRUCKRING |
| 16 | 72 64 223 08 | 1 | O-RING DIN 3770 25X2,5 FPM70 | O-RING |

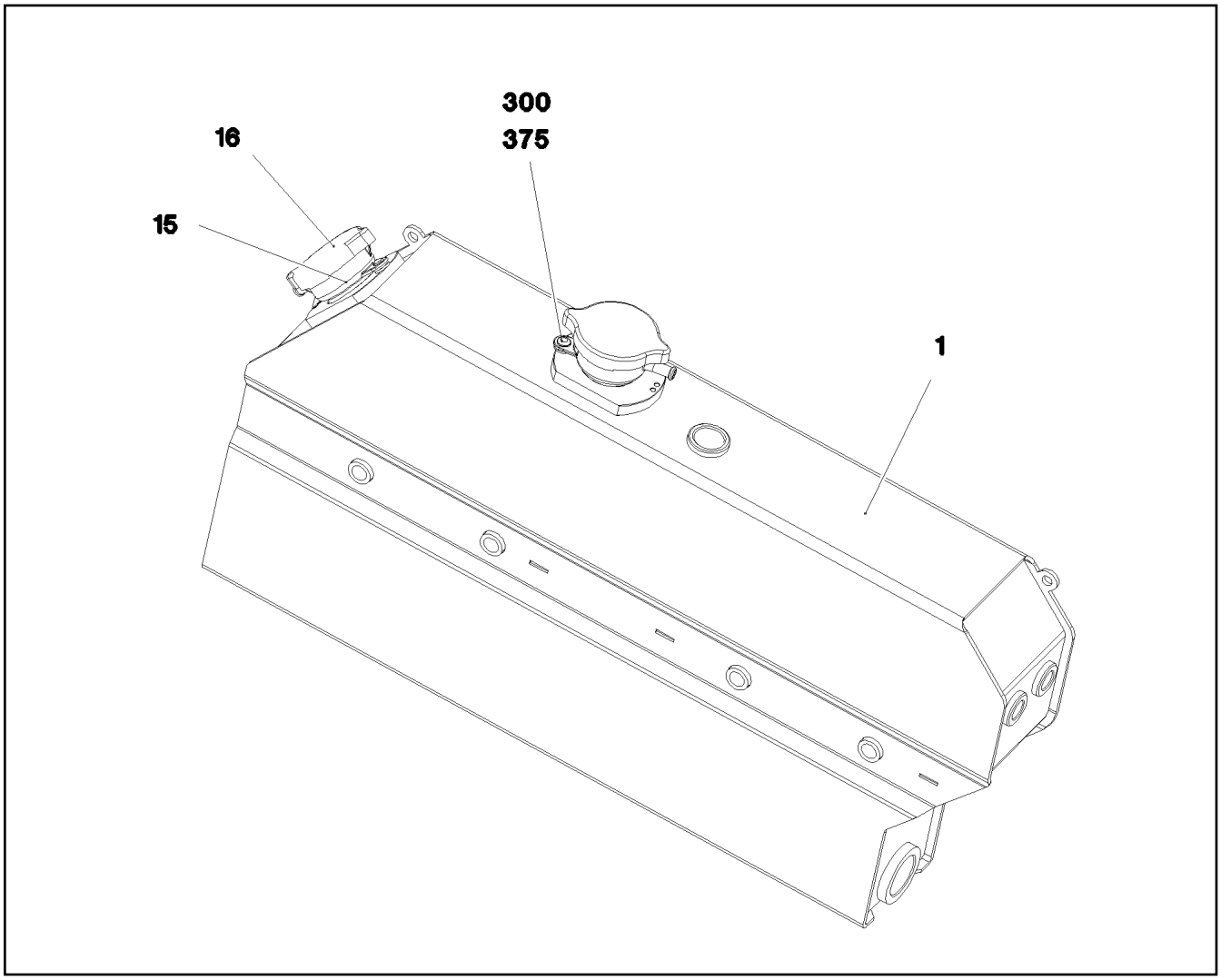


| Pos. | Item | Quantity | Description | Bezeichnung |
|---|---|---|---|---|
| 1 | 96 79 365 08 | 1 | EXPANSION TANK WELDED ALMG3 SPF | AUSGLEICHSBEHAELTER SCH |
| 15 | 10 45 098 1 | 2 | FILLER NECK PA6 | EINFUELLSTUTZEN |
| (9) | 11 00 086 8 | 1 | O-RING DIN 3771 29,51X5,33 FPM75 | O-RING |
| 16 | 11 49 040 6 | 2 | VALVE COVER | VENTILDECKEL |
| 300 | 11 83 504 3 | 2 | BUTTON HEAD SCREW ISO 7380-2 M4X12 0 | HALBRUNDKOPFSCHRAUBE |
| 375 | 11 16 108 4 | 4 | WASHER DIN 7349 4,3 A4 | SCHEIBE |

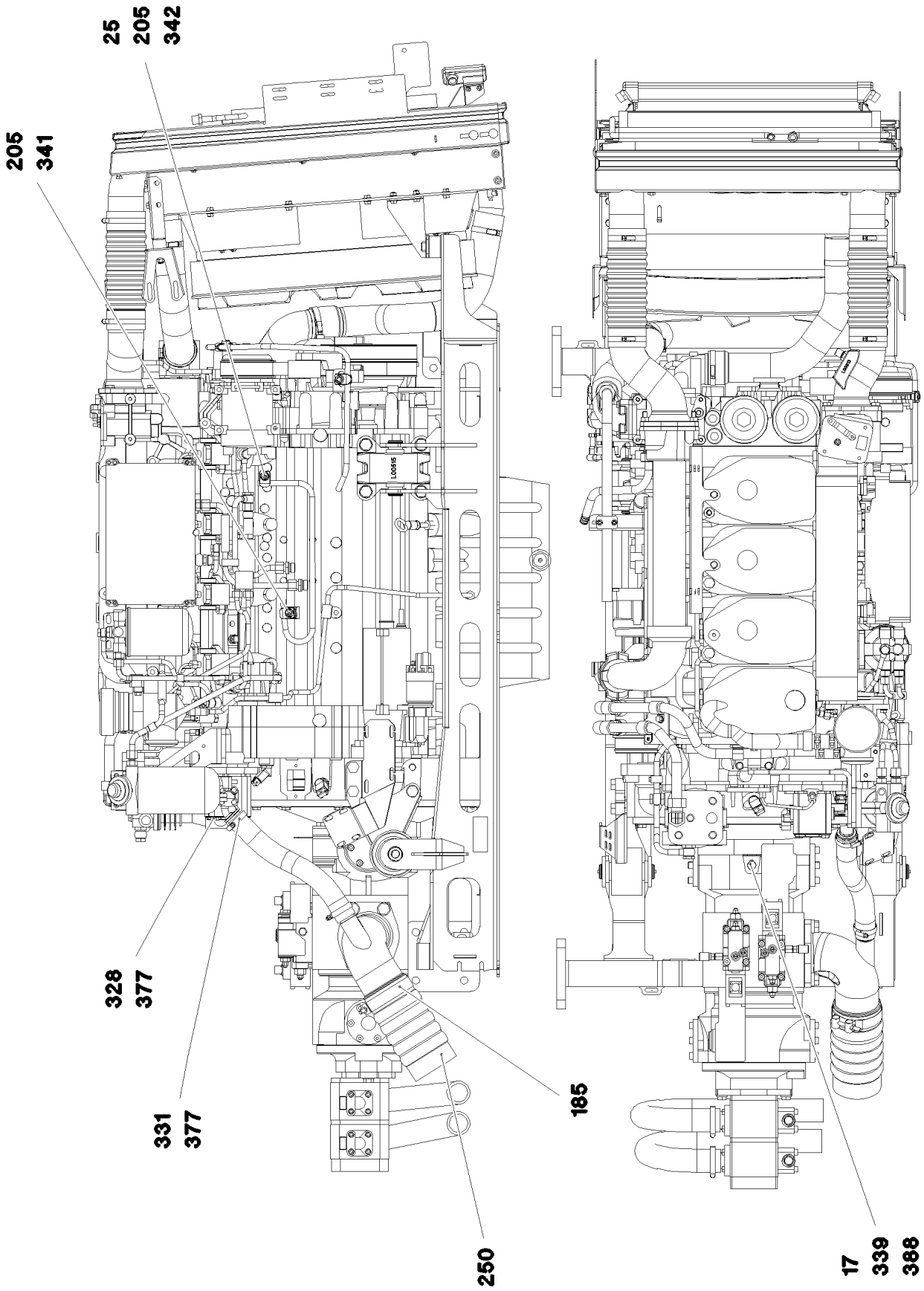


| | | |
|---|---|---|
| 16.2.2017<br>083742<br>LIEBHERR | etk_en_de_048005 LTR 1100<br><br>DRIVE ASSEMBLY, PRE-ASSEMBLED<br>ANTRIEBSAGGREGAT VORM. | 74 (1/7)<br><br>2 210<br>91 81 614 08 |

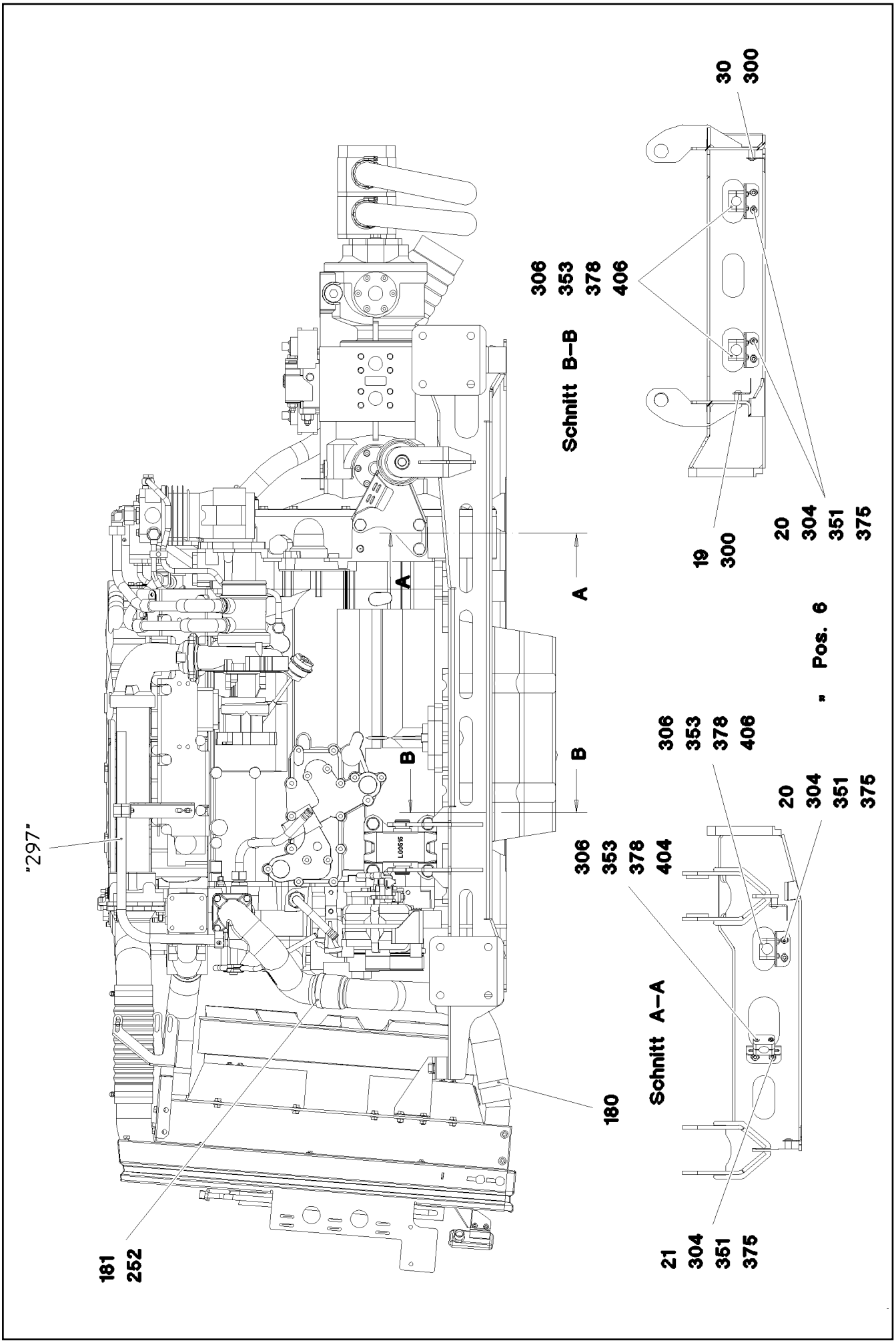
30
300
306
353
378
406
Schnitt B–B
19
300
20
304
351
375
A
A
Pos. 6
B
B
306
353
378
406
20
304
351
375
"297"
L00516
306
353
378
404
Schnitt A–A
180
181
252
21
304
351
375

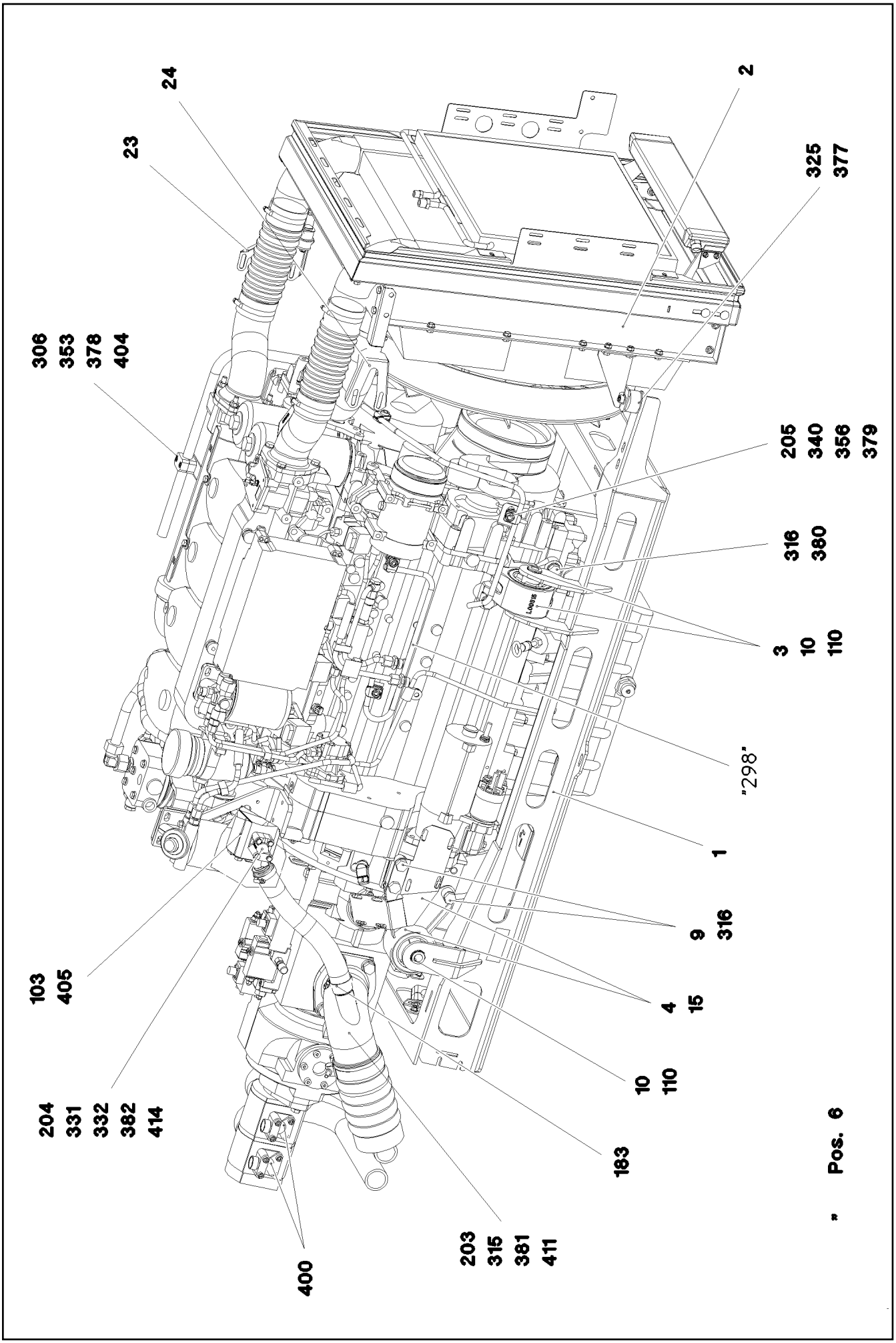
24
23
306
353
378
404
103
405
204
331
332
382
414
400
203
315
381
411
183
10
110
4
15
9
316
1
"298"
3
10
110
316
380
205
340
356
379
2
325
377
" Pos. 6

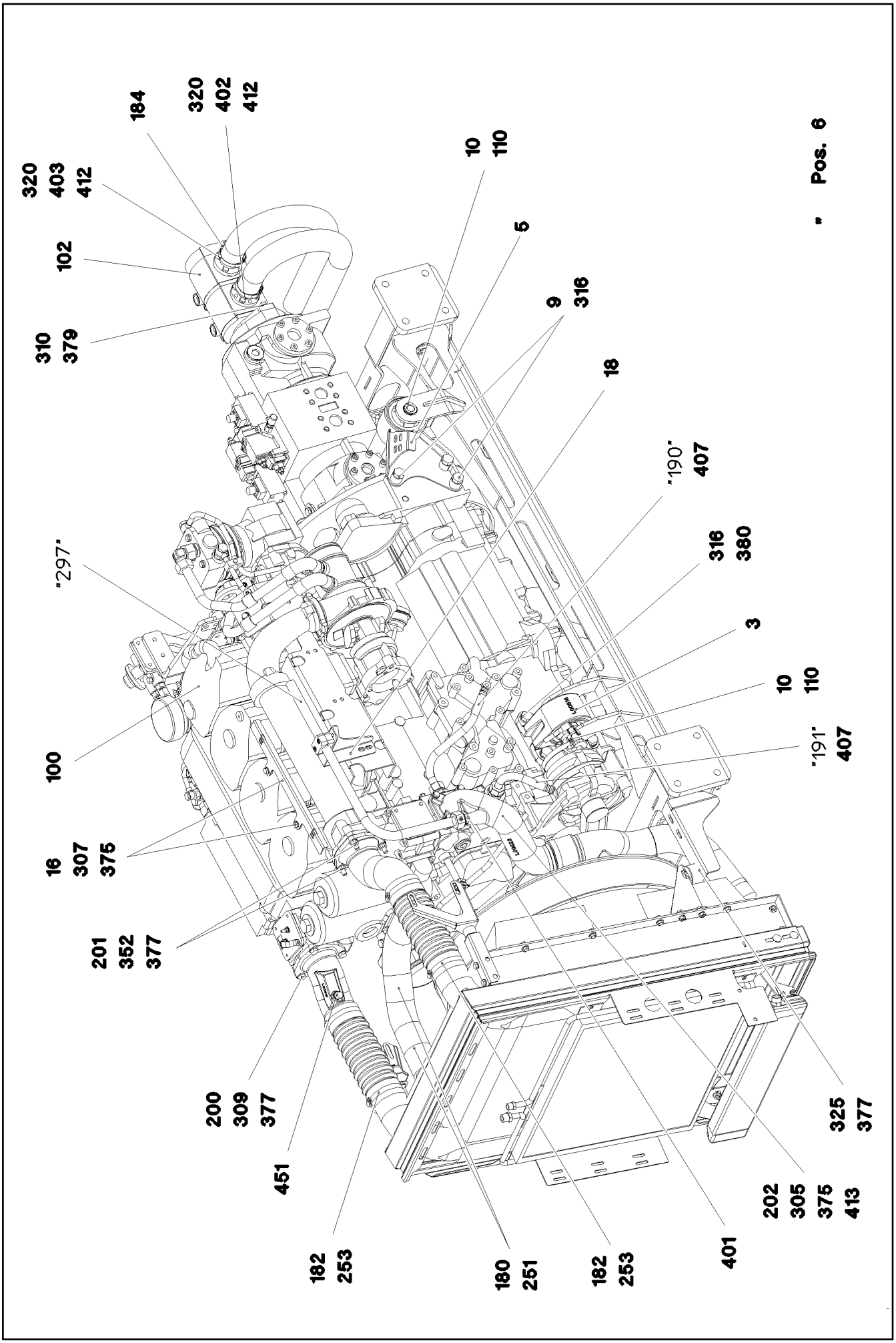
184
320
402
412
320
403
412
102
310
379
10
110
5
9
316
18
"190"
407
316
380
3
10
110
"191"
407
"297"
100
16
307
375
201
352
377
200
309
377
451
182
253
180
251
182
253
401
202
305
375
413
325
377
" Pos. 6

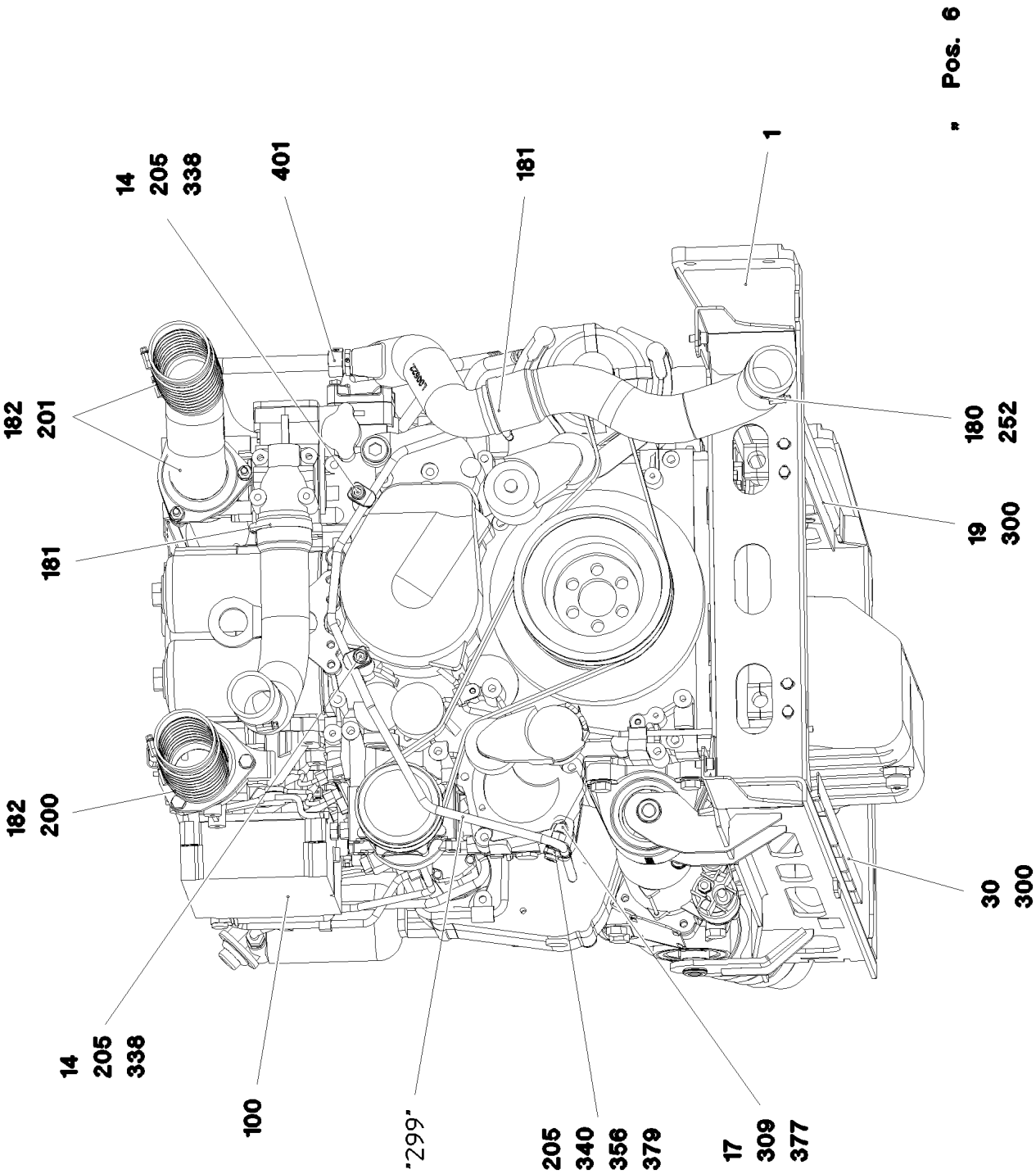
14
205
338
401
181
1
182
201
180
252
181
19
300
182
200
30
300
14
205
338
100
299
205
340
356
379
17
309
377
Pos. 6

| Pos. | Item | Quantity | Description | Bezeichnung |
|---|---|---|---|---|
| 1 | 96 56 364 08 | 1 | EQUIPMENT CARRIER WELDED | AGGREGATETRAEGER SCHWK. |
| 2 | 96 48 137 08 | 1 | RADIATOR, PRE-ASSEMBLED<br>⇨ 2 210 008 96 48 137 08 | KUEHLER VORM. |
| 3 | 96 30 133 08 | 2 | PILLOW BLOCK PRE-ASS. | LAGERBOCK VORM. |
| (1) | 97 36 414 08 | 1 | BEARING BLOCK SPF | LAGERBOCK |
| (2) | 55 04 580 08 | 1 | VIBRATION DAMPER 32/100X70 65NR511 | SCHWINGUNGSDAEMPFER |
| 4 | 96 30 135 08 | 1 | REAR RIGHT PREM PILLOW BLOCK | LAGERBOCK VORM.HI.RE. |
| (1) | 96 30 137 08 | 1 | PILLOW BLOCK WELDED REAR RIGHT | LAGERBOCK SCHWK.HI.RE. |
| (2) | 55 04 580 08 | 1 | VIBRATION DAMPER 32/100X70 65NR511 | SCHWINGUNGSDAEMPFER |
| 5 | 96 30 572 08 | 1 | REAR LEFT PREM PILLOW BLOCK | LAGERBOCK VORM.HI.LI. |
| (1) | 96 30 573 08 | 1 | PILLOW BLOCK WELDED REAR LEFT | LAGERBOCK SCHWK.HI.LI. |
| (2) | 55 04 580 08 | 1 | VIBRATION DAMPER 32/100X70 65NR511 | SCHWINGUNGSDAEMPFER |
| 6 | 96 38 773 08 | 1 | PIPELINES DRIVE ASSEMBLY | ROHRLEITUNGEN ANTRIEBSAG |
| (190) | 96 35 350 08 | 1 | PIPE COMPL. 18X1,5X319 | ROHR KPL. |
| (191) | 96 35 351 08 | 1 | PIPE COMPL. 18X1,5X188 | ROHR KPL. |
| (297) | 96 32 885 08 | 1 | PIPE COMPL. 22X2,5X679 | ROHR KPL. |
| (298) | 97 59 237 08 | 1 | TUBE 12X1,5X598 E235+N | ROHR |
| (299) | 97 33 883 08 | 1 | TUBE 12X1,5X1252 E235+N | ROHR |
| 9 | 95 21 770 08 | 2 | DISTANCE SLEEVE 27X22 42CRMO4+QT SP | DISTANZHUELSE |
| 10 | 97 38 603 08 | 4 | PIN 33.7X126 S355J2H FE//ZNNI8//CN//T0 | BOLZEN |
| 14 | 94 61 046 08 | 2 | TUBE 16X2X70 E235+N VERZ | ROHR |
| 15 | 97 46 006 08 | 1 | PLATE 3X304X194 S355MC FE//ZNNI8//CN//T | BLECH |
| 16 | 97 70 502 08 | 1 | PLATE 2X380X82 DC01 FE//ZNNI8//CN//T0 | BLECH |
| 17 | 95 38 688 08 | 2 | ANGLE 2X40X95 DC01 FE//ZN20//C | WINKEL |
| 18 | 97 42 451 08 | 1 | PLATE 3X155X180 DC01 FE//ZN20//C | BLECH |
| 19 | 97 45 197 08 | 1 | PLATE 2X900X63 DC01 FE//ZNNI8//CN//T0 | BLECH |
| 20 | 97 37 172 08 | 3 | PLATE 3X60X80 DC01 FE//ZN20//C | BLECH |
| 21 | 97 37 173 08 | 1 | PLATE 3X80X68 DC01 FE//ZNNI8//CN//T0 | BLECH |
| 23 | 97 89 159 08 | 1 | PLATE 2X212X144 DC01 FE//ZNNI8//CN//T0 | BLECH |
| 24 | 97 89 160 08 | 1 | PLATE 2X183X140 DC01 FE//ZNNI8//CN//T0 | BLECH |
| 25 | 97 60 496 08 | 1 | TUBE 16.0X30 E235+N | ROHR |
| 30 | 97 67 563 08 | 1 | PLATE 2X900X149 DC01 FE//ZNNI8//CN//T0 | BLECH |
| 100 | 10 15 211 6 | 1 | DRIVE UNIT AG 934 P303<br>⇨ X10152116 10 15 211 6 | ANTRIEBSGRUPPE |
| 102 | 51 21 425 08 | 1 | TWO-STAGE PUMP WP15 SPF<br>⇨ 5 121 425 08 51 21 425 08 | ZWEIFACHZAHNRADPUMPE |
| 103 | 10 09 999 3 | 1 | GEAR PUMP WP09 SPF | ZAHNRADPUMPE |
| (999) | 10 49 271 0 | 1 | SEAL KIT GEAR PUMP | DS ZAHNRADPUMPE |
| 110 | 74 71 224 08 | 8 | DOUBLE LOCKING RING FK7 | DOPPELSICHERUNGSRING |
| 180 | 77 42 080 08 | 2 | HOSE CLAMP 60/50-70/12 W3 | SCHLAUCHSCHELLE |
| 181 | 77 42 143 08 | 2 | HOSE CLAMP 70/60-80/12 W3 | SCHLAUCHSCHELLE |
| 182 | 77 42 064 08 | 4 | HOSE CLAMP 80/70-90/12 W3 | SCHLAUCHSCHELLE |
| 183 | 55 08 495 08 | 2 | HOSE CLAMP 41/35-50/12 W3 | SCHLAUCHSCHELLE |
| 184 | 55 08 380 08 | 2 | HOSE CLAMP 40-60 W3 | SCHLAUCHSCHELLE |
| 185 | 77 42 238 08 | 1 | HOSE CLAMP DIN 3017-3 108/104-112/25 W | SCHLAUCHSCHELLE |
| 200 | 97 36 412 08 | 1 | CHARGE AIR PIPE SPF | LADELUFTROHR |
| 201 | 97 36 413 08 | 1 | CHARGE AIR PIPE SPF | LADELUFTROHR |
| 202 | 97 36 410 08 | 1 | WATER PIPE SPF | WASSERROHR |
| 203 | 97 38 614 08 | 1 | SUCTION PIPE OIL SPF | SAUGROHR-OEL |
| 204 | 97 45 587 08 | 1 | SUCTION PIPE OIL | SAUGROHR-OEL |
| 205 | 38 00 571 08 | 10 | CLAMPING PIECE 12 G20MN5 FE//ZN20//C | KLEMMSTUECK |
| 250 | 97 29 654 08 | 1 | SIPHON PIPE | SAUGSCHLAUCH |
| 251 | 97 36 454 08 | 1 | FORM HOSE SPF | FORMSCHLAUCH |
| 252 | 97 36 455 08 | 1 | FORM HOSE SPF | FORMSCHLAUCH |
| 253 | 55 17 197 08 | 2 | FORM HOSE | FORMSCHLAUCH |
| 300 | 10 41 285 4 | 6 | BUTTON HEAD SCREW AEHNL.ISO 7380-2 | HALBRUNDKOPFSCHRAUBE |
| 304 | 11 65 176 7 | 8 | HEX SCREW ISO 4017 M8X20 8.8 480H SPF | SECHSKANTSCHRAUBE |
| 305 | 40 01 667 | 3 | HEX SCREW ISO 4017 M8X45 8.8 A2C | SECHSKANTSCHRAUBE |
| 306 | 10 87 559 1 | 10 | SOCKET HEAD SCREW ISO 4762 M6X40 8.8 | ZYLINDERSCHRAUBE |
| 307 | 11 65 161 2 | 2 | HEX SCREW ISO 4017 M8X16 8.8 480H SPF | SECHSKANTSCHRAUBE |

| Pos. | Item | Quantity | Description | Bezeichnung |
|---|---|---|---|---|
| 309 | 11 63 181 6 | 4 | HEX SCREW ISO 4017 M10X25 8.8 FLZN SP | SECHSKANTSCHRAUBE |
| 310 | 11 64 234 9 | 2 | HEX SCREW ISO 4017 M12X35 8.8 FLZN SP | SECHSKANTSCHRAUBE |
| 315 | 10 87 551 9 | 4 | HEX SCREW ISO 4017 M16X40 8.8 FLZN SP | SECHSKANTSCHRAUBE |
| 316 | 10 87 552 0 | 14 | HEX SCREW ISO 4017 M16X50 8.8 FLZN SP | SECHSKANTSCHRAUBE |
| 320 | 11 64 226 1 | 8 | HEX SCREW ISO 4017 M8X25 8.8 480H SPF | SECHSKANTSCHRAUBE |
| 325 | 40 42 012 | 2 | SOCKET HEAD SCREW ISO 4762 M10X16 8. | ZYLINDERSCHRAUBE |
| 328 | 40 61 098 08 | 2 | HEX SCREW ISO 4014 M10X105 8.8 A3C | SECHSKANTSCHRAUBE |
| 331 | 46 00 356 | 2 | HEX SCREW ISO 4014 M6X65 8.8 A2C | SECHSKANTSCHRAUBE |
| 332 | 40 01 928 | 2 | HEX SCREW ISO 4014 M6X40 8.8 A2C | SECHSKANTSCHRAUBE |
| 338 | 40 42 130 01 | 2 | SOCKET HEAD SCREW ISO 4762 M12X100 | ZYLINDERSCHRAUBE |
| 339 | 11 65 247 0 | 1 | HEX SCREW ISO 4017 M10X16 8.8 FLZN SP | SECHSKANTSCHRAUBE |
| 340 | 12 20 126 3 | 1 | SOCKET HEAD SCREW ISO 4762 M12X30 8 | ZYLINDERSCHRAUBE |
| 341 | 10 41 516 2 | 1 | SOCKET HEAD SCREW ISO 4762 M10X25 8 | ZYLINDERSCHRAUBE |
| 342 | 40 42 096 01 | 1 | SOCKET HEAD SCREW ISO 4762 M10X55 8. | ZYLINDERSCHRAUBE |
| 351 | 11 69 387 5 | 8 | HEX NUT ISO 4032 M8 8 480H SPF | SECHSKANTMUTTER |
| 352 | 41 15 144 08 | 3 | HEX NUT ISO 4032 M10 8 A3C | SECHSKANTMUTTER |
| 353 | 10 87 562 1 | 10 | HEX NUT ISO 4032 M6 8 480H SPF | SECHSKANTMUTTER |
| 356 | 41 15 143 08 | 1 | HEX NUT ISO 4032 M12 8 A3C | SECHSKANTMUTTER |
| 375 | 10 28 980 3 | 21 | WASHER ISO 7089 8 300HV 480H SPF | SCHEIBE |
| 377 | 10 28 979 5 | 11 | WASHER ISO 7089 10 300HV FLZN SPF | SCHEIBE |
| 378 | 10 87 564 8 | 10 | WASHER ISO 7093-1 6 200HV 480H SPF | SCHEIBE |
| 379 | 10 28 980 4 | 3 | WASHER ISO 7089 12 300HV FLZN SPF | SCHEIBE |
| 380 | 10 28 980 6 | 8 | WASHER ISO 7089 16 300HV FLZN SPF | SCHEIBE |
| 381 | 42 17 008 08 | 4 | WASHER DIN 7989-2 16 ST VERZ | SCHEIBE |
| 382 | 10 87 564 7 | 4 | WASHER ISO 7089 6 200HV 480H SPF | SCHEIBE |
| 388 | 10 28 979 5 | 1 | WASHER ISO 7089 10 300HV FLZN SPF | SCHEIBE |
| 400 | 51 00 334 08 | 2 | FLANGE FITTING A3P | FLANSCHVERSCHRAUBUNG |
| (1) | 51 57 060 08 | 1 | O-RING ARP 568 31,42X2,62 NBR70 | O-RING |
| 401 | 10 03 689 6 | 1 | FLANGE JOINT XGE22-LM-ED M22X1,5 A3P | VERSCHRAUBUNG |
| 402 | 95 36 413 08 | 1 | FLANGE FITTING 70.0X80 S355J2C+C FE// | FLANSCHVERSCHRAUBUNG |
| 403 | 95 36 414 08 | 1 | FLANGE JOINT RD70X70 S355J2C+C | VERSCHRAUBUNG |
| 404 | 60 20 085 08 | 6 | CLAMP-HALF DIN 3015-1 L 3 R 22 PP SW | KLEMMHAELFTE |
| 405 | 51 01 417 08 | 1 | FLANGE FITTING A3P | FLANSCHVERSCHRAUBUNG |
| (1) | 72 64 075 08 | 1 | O-RING 20X2,5 NBR70 | O-RING |
| 406 | 70 05 052 | 4 | CLAMP-HALF DIN 3015-1 L 3 R 25 PP SW | KLEMMHAELFTE |
| 407 | 97 48 847 08 | 2 | FLANGE JOINT 36.0X38 11SMNPB30+C | VERSCHRAUBUNG |
| 411 | 51 46 132 08 | 1 | O-RING ARP 568 98,02X3,53 NBR70 | O-RING |
| 412 | 51 05 870 08 | 2 | O-RING ARP 568 32,92X3,53 NBR90 | O-RING |
| 413 | 51 05 989 08 | 1 | O-RING ARP 568 69,44X3,53 NBR70 | O-RING |
| 414 | 50 26 435 08 | 1 | O-RING 26X2,5 NBR70 | O-RING |
| 451 | 90 76 530 | 1 | TEMPERATURE PROBE CPL. | TEMPERATURFUEHLER KPL. |
| | | | ⇨ 9 076 530 90 76 530 | |

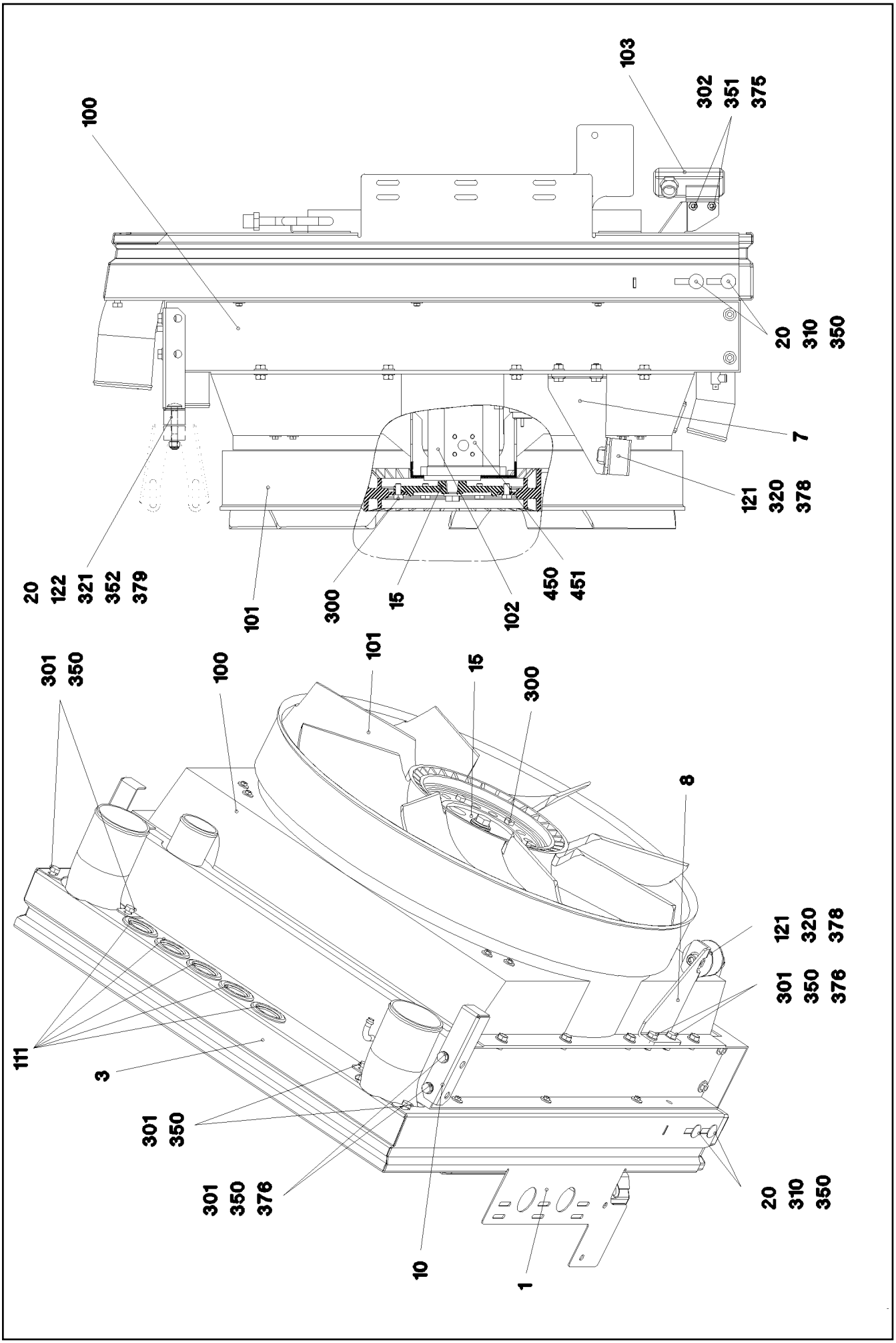


| | | |
|---|---|---|
| 16.2.2017<br>055063<br>LIEBHERR | etk_en_de_048005 LTR 1100<br><br>RADIATOR, PRE-ASSEMBLED<br>KUEHLER VORM. | 81 (1/3)<br><br>⇨ 2 210 008<br>96 48 137 08 |

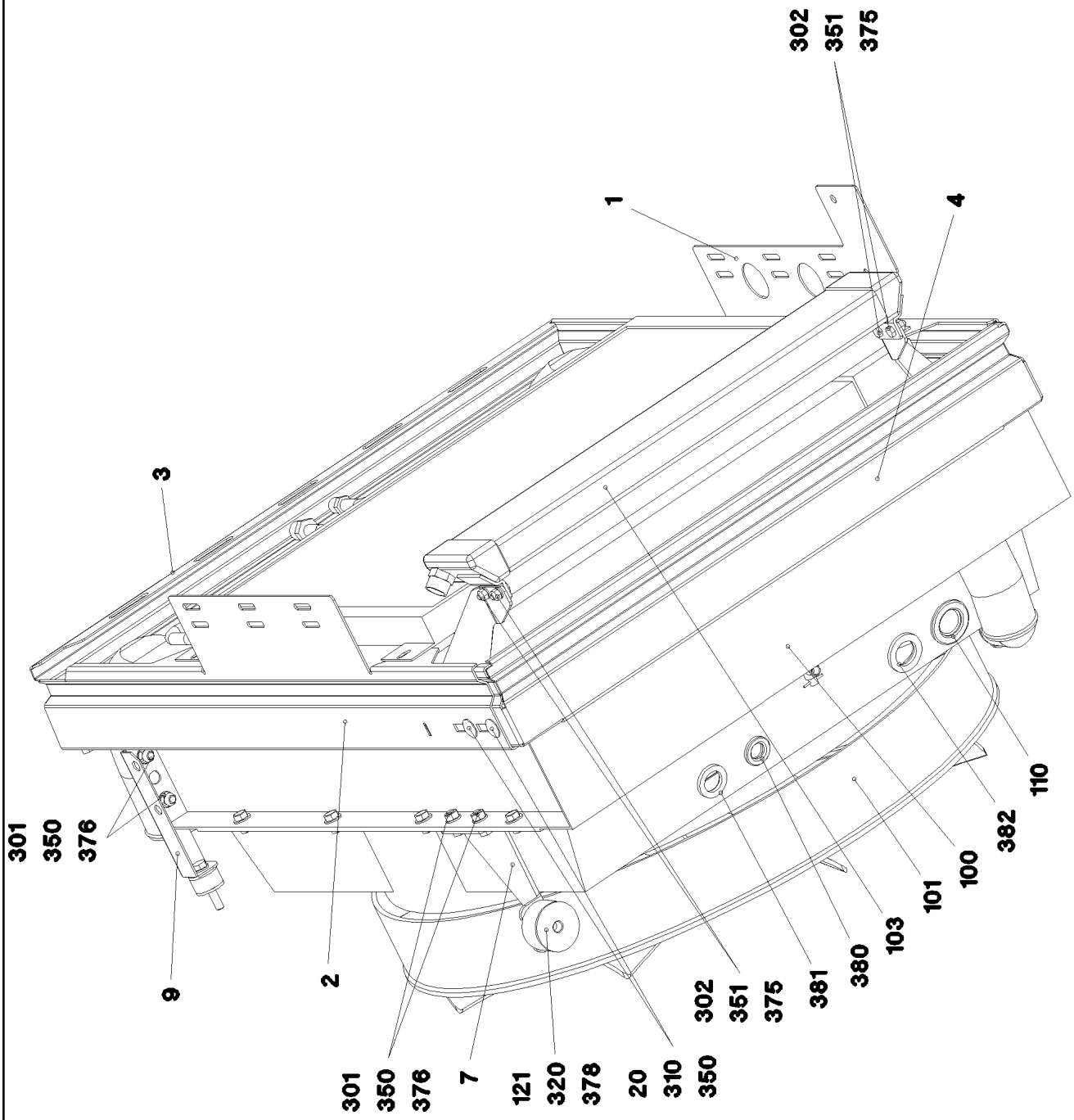


| | | |
|---|---|---|
| 16.2.2017<br>055064<br>LIEBHERR | **etk_en_de_048005 LTR 1100**<br><br>**RADIATOR, PRE-ASSEMBLED**<br>**KUEHLER VORM.** | 82 (2/3)<br><br>⇨ **2 210 008**<br>**96 48 137 08** |

| Pos. | Item | Quantity | Description | Bezeichnung |
|---|---|---|---|---|
| 1 | 96 30 446 08 | 1 | SIDE PANEL WELDED | SEITENBLECH SCHWK. |
| 2 | 96 48 188 08 | 1 | SIDE PANEL WELDED | SEITENBLECH SCHWK. |
| 3 | 97 73 613 08 | 1 | PLATE 2X692X218 DC01 | BLECH |
| 4 | 97 29 707 08 | 1 | PLATE 2X915X156 DC01 | BLECH |
| 7 | 96 00 389 4 | 1 | PLATE WELDED FE//ZNNI8//CN//T0 | BLECH SCHWK. |
| 8 | 96 00 389 5 | 1 | PLATE WELDED FE//ZNNI8//CN//T0 | BLECH SCHWK. |
| 9 | 97 73 511 08 | 1 | PLATE 2X58X171 DC01 FE//ZNNI8//CN//T0 | BLECH |
| 10 | 97 73 512 08 | 1 | PLATE 2X58X171 DC01 FE//ZNNI8//CN//T0 | BLECH |
| 15 | 97 00 037 08 | 1 | FLANGE 25.0X16 9 42CRMO4+QT | FLANSCH |
| 20 | 97 36 182 08 | 6 | WASHER 3X21X21 DC01 FE//ZN20//C | SCHEIBE |
| 100 | 97 73 428 08 | 1 | COMBINATED RADIATOR | KOMBIKUEHLER |
| 101 | 55 06 395 08 | 1 | RING FAN D=654 | RINGLUEFTER |
| 102 | 10 42 993 3 | 1 | GEAR WHEEL MOTOR AZMF 11CM³/U SPF<br>⇨ X10429933 10 42 993 3 | ZAHNRADMOTOR |
| 103 | 55 06 283 08 | 1 | OIL AIR COOLER | OEL-LUFTKUEHLER |
| 110 | 55 30 278 08 | 1 | DIAPHRAGM SOCKET 29/37/44 | MEMBRANTUELLE |
| 111 | 60 27 173 08 | 5 | DIAPHRAGM GROMMET 35,5/47/53 PVC | MEMBRAN-DURCHFUEHRUNG |
| 121 | 72 69 050 08 | 2 | CIRCULAR BEARING C50X30XM10 | RUNDLAGER |
| 122 | 97 02 548 4 | 4 | BUFFER 30X20 GUMMI 50SH | PUFFER |
| 300 | 11 65 161 2 | 6 | HEX SCREW ISO 4017 M8X16 8.8 480H SPF | SECHSKANTSCHRAUBE |
| 301 | 11 65 176 7 | 13 | HEX SCREW ISO 4017 M8X20 8.8 480H SPF | SECHSKANTSCHRAUBE |
| 302 | 40 65 099 | 4 | HEX SCREW ISO 4017 M6X16 8.8 A2C | SECHSKANTSCHRAUBE |
| 310 | 40 28 018 08 | 4 | CHEESE HEAD SCREW DIN 603 M8X20 8.8 | FLACHRUNDSCHRAUBE |
| 320 | 40 42 012 | 2 | SOCKET HEAD SCREW ISO 4762 M10X16 8. | ZYLINDERSCHRAUBE |
| 321 | 40 28 026 14 | 2 | CHEESE HEAD SCREW DIN 603 M8X60 4.6 | FLACHRUNDSCHRAUBE |
| 350 | 10 29 966 9 | 16 | HEX NUT ISO 4032 M8 10 480H SPF | SECHSKANTMUTTER |
| 351 | 41 15 044 08 | 4 | HEX NUT ISO 4032 M6 10 A2C SPF | SECHSKANTMUTTER |
| 352 | 41 34 126 01 | 2 | HEX NUT ISO 7040 M8 8 A2C | SECHSKANTMUTTER |
| 375 | 10 87 564 7 | 4 | WASHER ISO 7089 6 200HV 480H SPF | SCHEIBE |
| 376 | 10 28 980 3 | 16 | WASHER ISO 7089 8 300HV 480H SPF | SCHEIBE |
| 378 | 10 28 979 5 | 2 | WASHER ISO 7089 10 300HV FLZN SPF | SCHEIBE |
| 379 | 97 23 538 08 | 2 | PLATE 4X32X32 ALMG3 H111 | BLECH |
| 380 | 42 15 002 08 | 1 | WASHER DIN 6916 17 -C45 VERZ | SCHEIBE |
| 381 | 42 11 018 08 | 1 | WASHER DIN 1440 22 ST VERZ | SCHEIBE |
| 382 | 42 12 016 08 | 1 | WASHER DIN 1441 26 ST VERZ | SCHEIBE |
| 450 | 51 15 188 08 | 1 | FLANGE FITTING | FLANSCHVERSCHRAUBUNG |
| 451 | 51 01 462 08 | 1 | SUCTION FLANGE | SAUGFLANSCH |

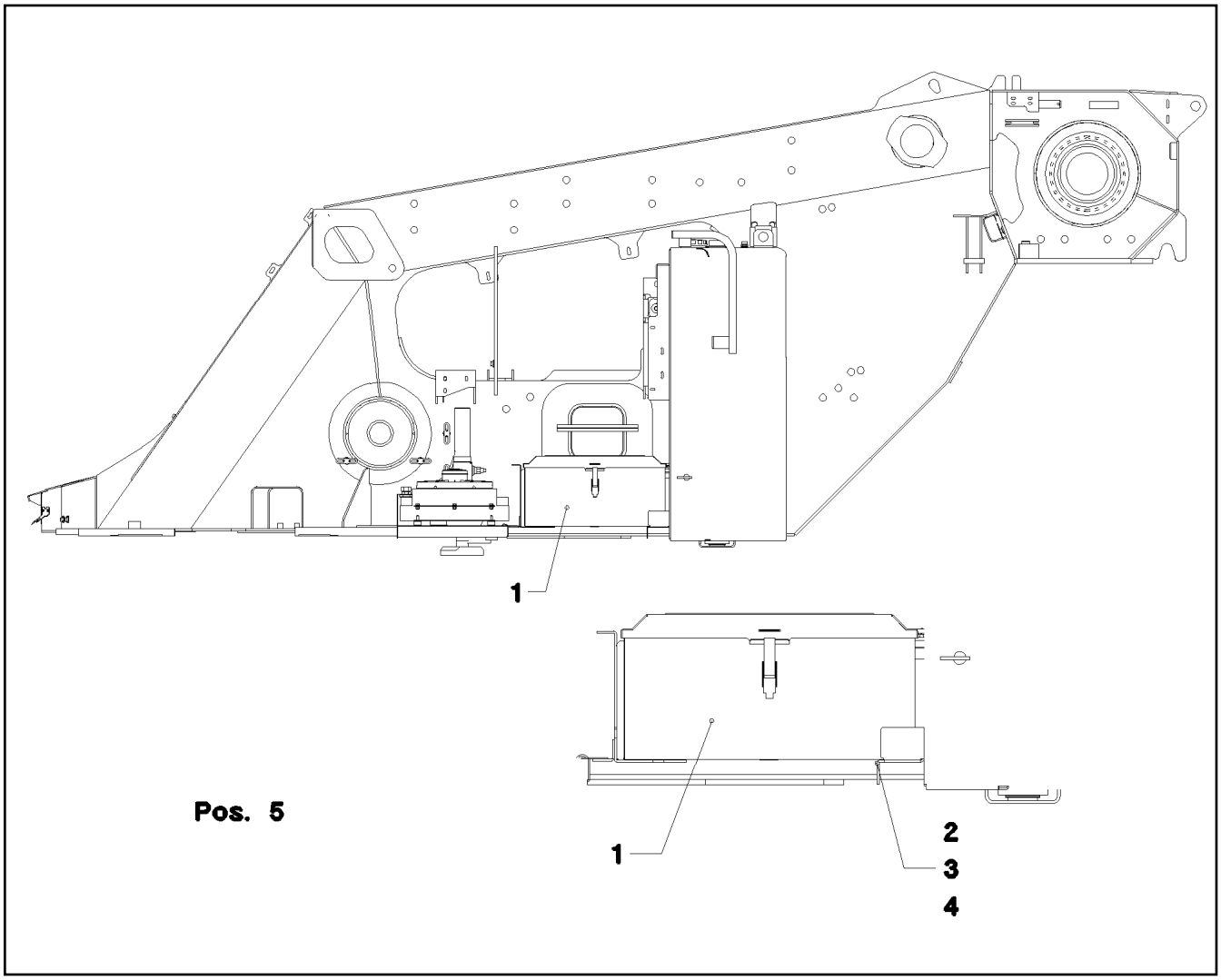


| Pos. | Item | Quantity | Description | Bezeichnung |
|---|---|---|---|---|
| 1 | 96 31 147 08 | 1 | BATTERY BOX, PRE-ASSEMBLED<br>⇨ 2 260 006 96 31 147 08 | BATTERIEKASTEN VORM. |
| 2 | 11 65 176 7 | 6 | HEX SCREW ISO 4017 M8X20 8.8 480H SPF | SECHSKANTSCHRAUBE |
| 3 | 10 28 980 3 | 12 | WASHER ISO 7089 8 300HV 480H SPF | SCHEIBE |
| 4 | 11 69 387 5 | 6 | HEX NUT ISO 4032 M8 8 480H SPF | SECHSKANTMUTTER |
| 5 | 96 31 039 08 | 1 | ELECTRIC FOR BATTERY BOX<br>⇨ 2 920 083 96 31 039 08 | ELEKTRIK BATTERIEKASTEN |

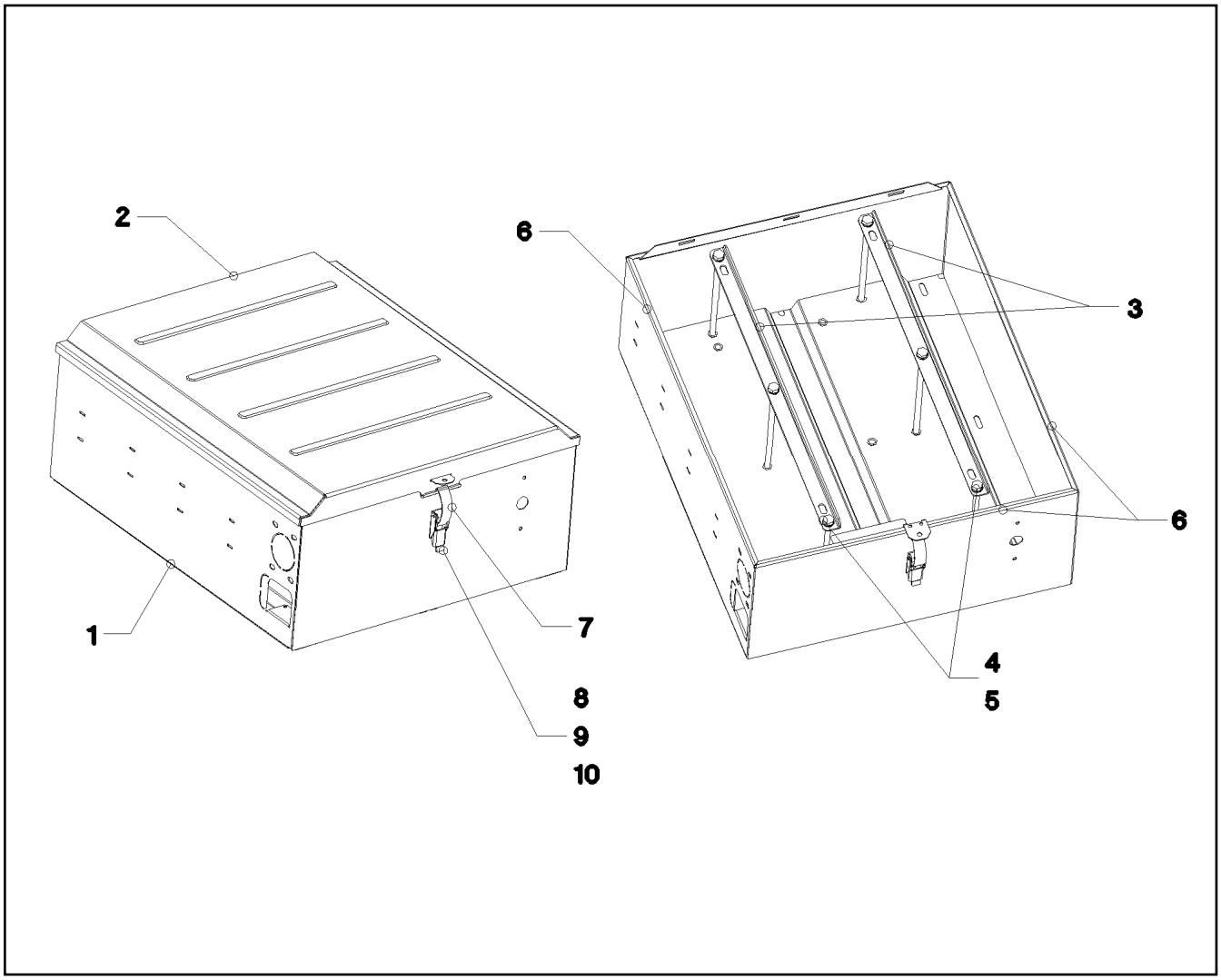


| Pos. | Item | Quantity | Description | Bezeichnung |
|---|---|---|---|---|
| 1 | 96 31 154 08 | 1 | BATTERY BOX ST.CONST. | BATTERIEKASTEN SCHWK. |
| 2 | 92 11 802 08 | 1 | COVER WELDED SPF | DECKEL SCHWK. |
| 3 | 97 02 009 08 | 2 | PLATE 2.5x634x41 DC01 FE//ZNNI8//CN//T0 | BLECH |
| 4 | 40 61 109 08 | 6 | HEX SCREW ISO 4014 M10X240 8.8 A3C | SECHSKANTSCHRAUBE |
| 5 | 10 28 979 5 | 6 | WASHER ISO 7089 10 300HV FLZN SPF | SCHEIBE |
| 6 | 26 21 039 08 | 2.3 | EDGE PROTECTION 1-2X9,5X6,5 | KANTENSCHUTZ |
| 7 | 70 42 317 08 | 1 | CLAMP LOCKING DEVICE HAKEN | SPANNBUEGELVERSCHLUSS |
| 8 | 40 84 021 01 | 2 | PAN-HEAD SCREW ISO 7045 M5X12 4.8 A2 | FLACHKOPFSCHRAUBE |
| 9 | 46 00 305 | 2 | WASHER ISO 7089 5 200HV A3C | SCHEIBE |
| 10 | 41 15 148 08 | 2 | HEX NUT ISO 4032 M5 8 A2C | SECHSKANTMUTTER |

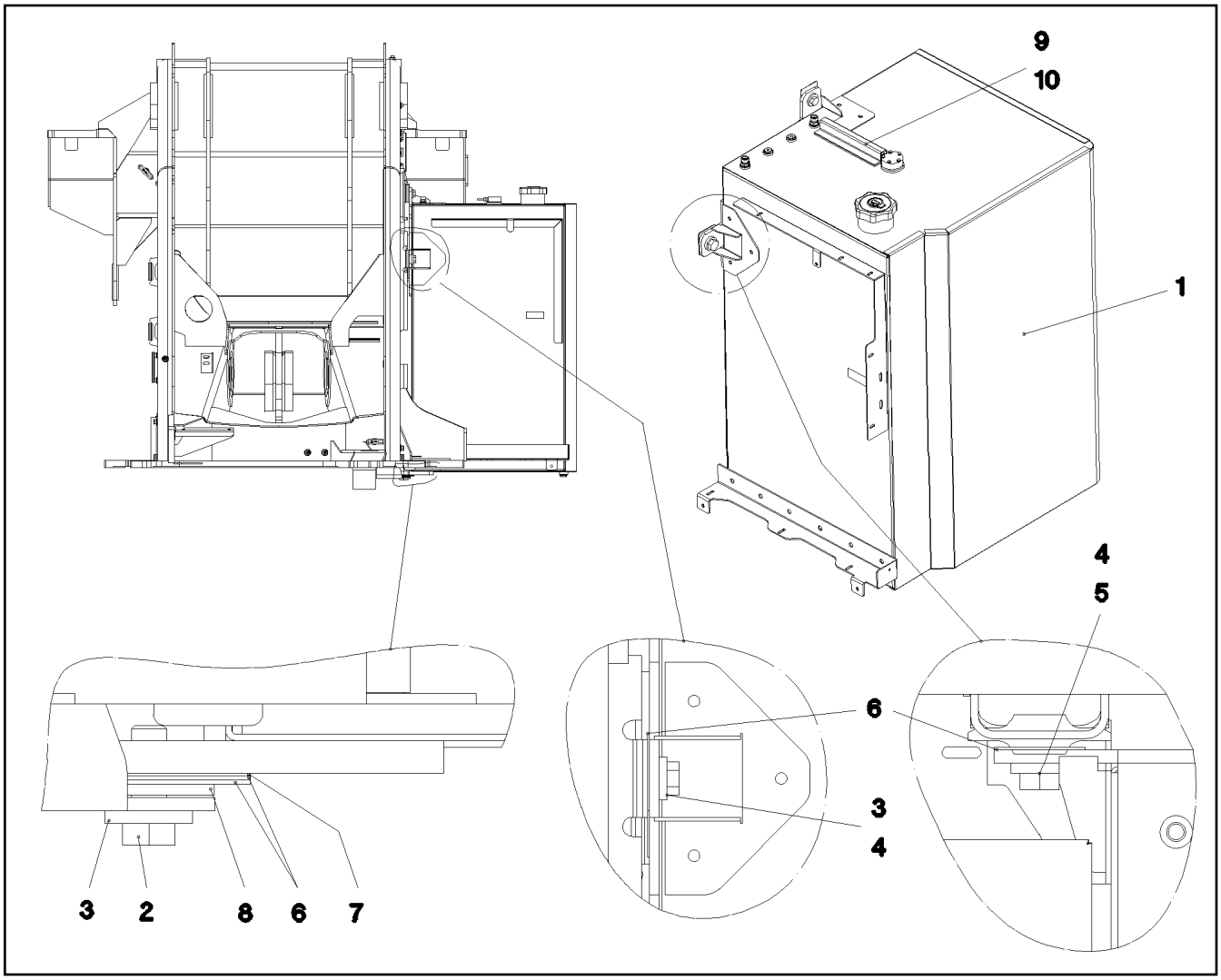


| Pos. | Item | Quantity | Description | Bezeichnung |
|---|---|---|---|---|
| 1 | 96 37 923 08 | 1 | FUEL TANK, PRE-ASSEMBLED<br>⇨ 2 270 001 96 37 923 08 | KRAFTSTOFFBEHAELTER VO |
| 2 | 10 87 580 3 | 3 | HEX SCREW ISO 4017 M16X45 8.8 FLZN SP | SECHSKANTSCHRAUBE |
| 3 | 46 00 021 | 5 | WASHER DIN 7349 17 200HV FLZN SPF | SCHEIBE |
| 4 | 40 65 281 | 1 | HEX SCREW ISO 4017 M20X45 8.8 FLZN SP | SECHSKANTSCHRAUBE |
| 5 | 46 00 604 | 1 | WASHER DIN 7349 21 100HV FLZN SPF | SCHEIBE |
| 6 | 95 35 154 08 | 7 | PLATE 2X70X80 DC01 | BLECH |
| 7 | 95 35 155 08 | 1 | PLATE 1X70X80 DC01 FE//ZNNI8//CN//T0 | BLECH |
| 8 | 95 36 763 08 | 2 | PLATE 5X60X60 S355MC FE//ZN20//C | BLECH |
| 9 | 70 42 324 08 | 0.6 | VELCRO 25MMBREIT | KLETTVERSCHLUSS |
| 10 | 97 58 742 08 | 1 | PLATE 3X255X133 DC01 | BLECH |

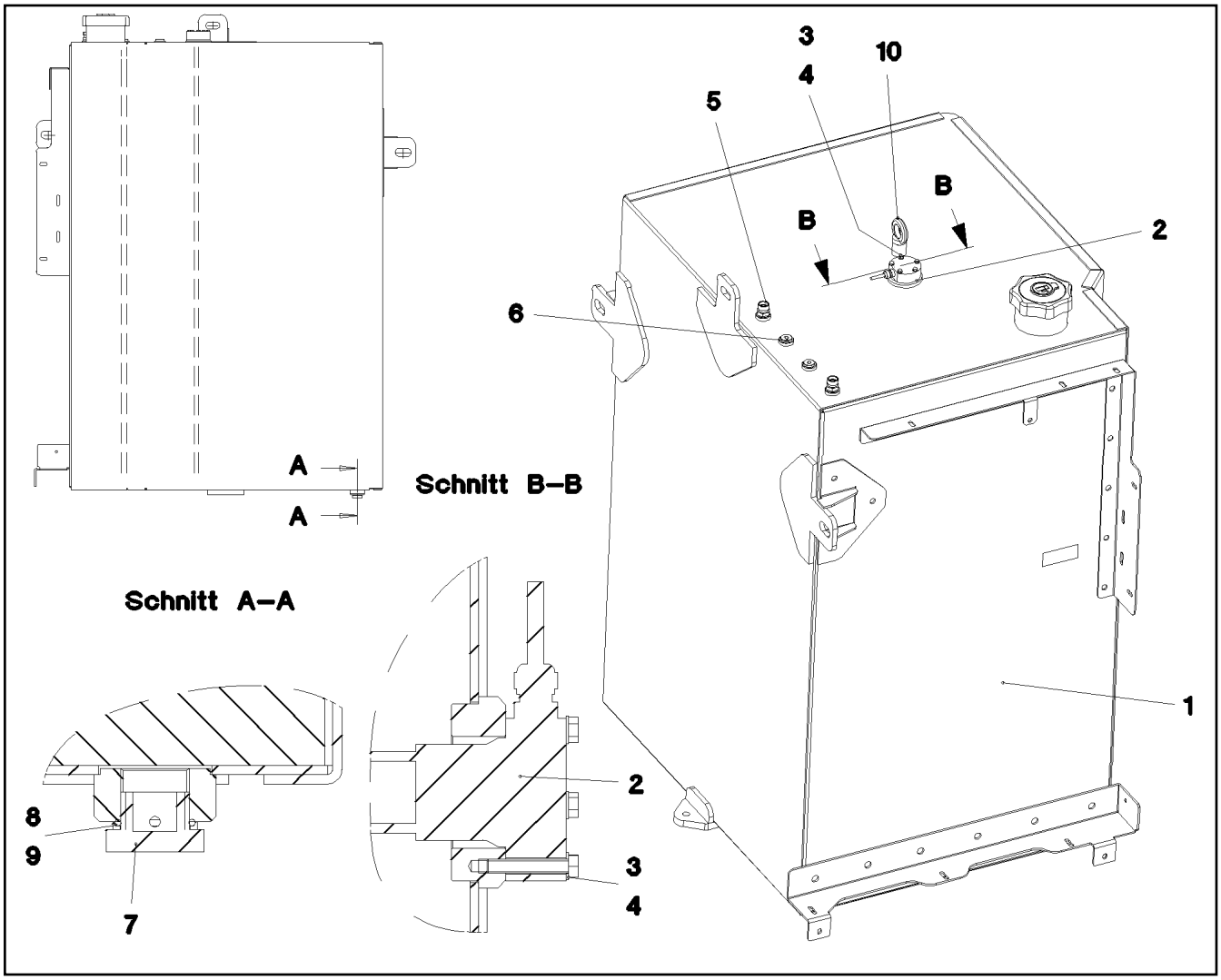


| Pos. | Item | Quantity | Description | Bezeichnung |
|---|---|---|---|---|
| 1 | 96 37 919 08 | 1 | FUEL TANK WELDED CONSTR. 765L/727L | KRAFTSTOFFBEHAELTER SCH |
| 2 | 78 90 156 08 | 1 | TANK SENSOR L=1200 24V SPF | TANKSENSOR |
| (5) | 10 34 693 8 | 1 | FLANGE SEAL | FLANSCHDICHTUNG |
| 3 | 40 65 028 08 | 5 | HEX SCREW ISO 4017 M5X30 8.8 A2C | SECHSKANTSCHRAUBE |
| 4 | 46 00 305 | 5 | WASHER ISO 7089 5 200HV A3C | SCHEIBE |
| 5 | 47 10 309 08 | 2 | FLANGE JOINT XGE15-LM-ED A3P | VERSCHRAUBUNG |
| 6 | 47 77 051 08 | 2 | STOP PLUG VSTIM18X1,5ED A3P | STOPFEN |
| 7 | 50 29 401 08 | 1 | HOLLOW SCREW DIN 74305 22-1-M22X1,5 4 | HOHLSCHRAUBE |
| 8 | 50 29 329 08 | 1 | O-RING 20,3X2,4 NBR70 | O-RING |
| 9 | 50 29 325 08 | 1 | COMPRESSION RING DR/R22X27 | DRUCKRING |
| 10 | 40 26 003 08 | 1 | RING BOLT DIN 580 M12 C15E A3C | RINGSCHRAUBE |

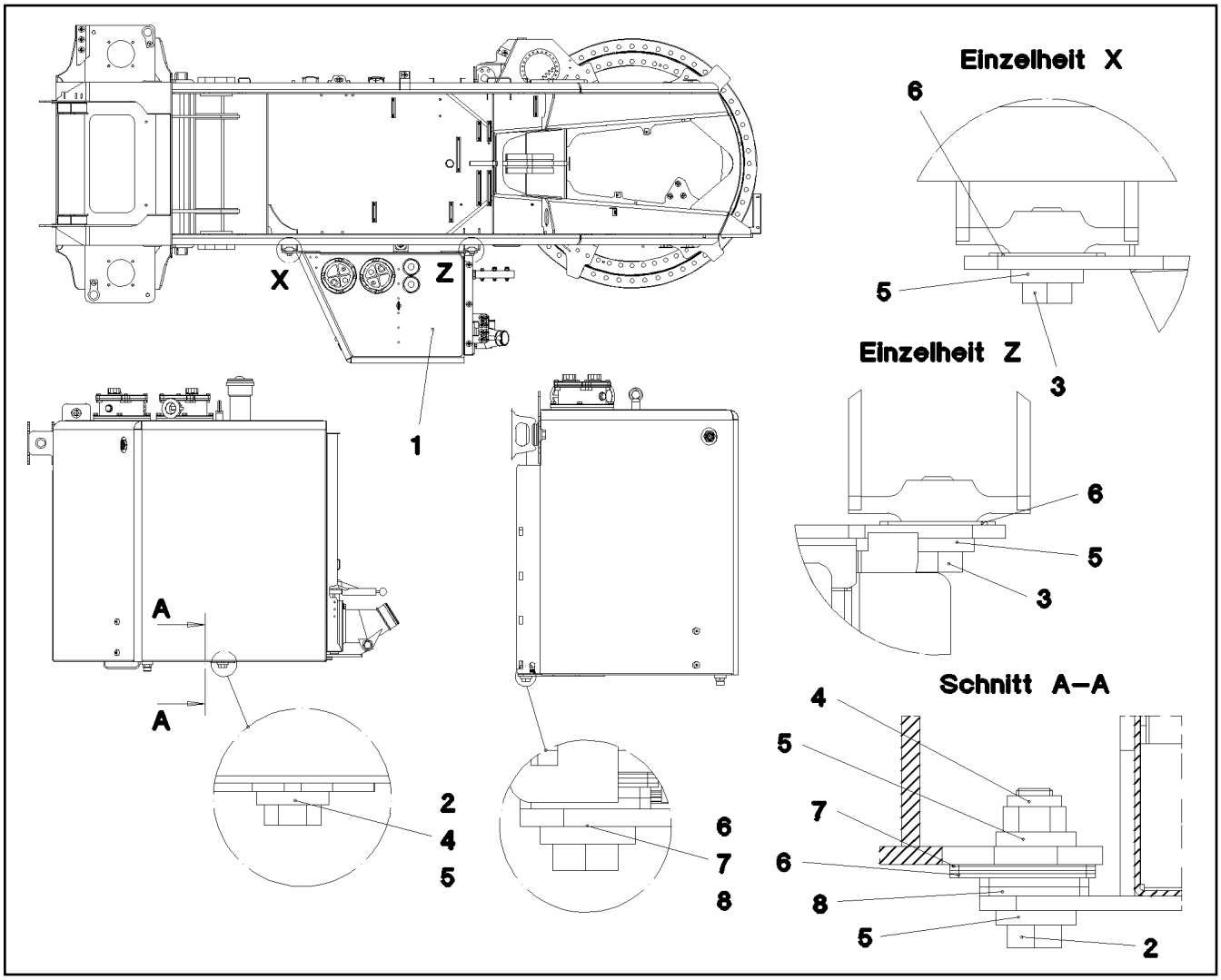


| Pos. | Item | Quantity | Description | Bezeichnung |
|---|---|---|---|---|
| 1 | 96 43 780 08 | 1 | OIL TANK PRE-ASS.<br>⇨ 2 340 004 96 43 780 08 | OELBEHAELTER VORM. |
| 2 | 40 61 228 01 | 1 | HEX SCREW ISO 4014 M20X75 8.8 A3C | SECHSKANTSCHRAUBE |
| 3 | 40 65 281 | 2 | HEX SCREW ISO 4017 M20X45 8.8 FLZN SP | SECHSKANTSCHRAUBE |
| 4 | 41 19 024 08 | 1 | HEX NUT DIN 985 M20 10 A3C | SECHSKANTMUTTER |
| 5 | 46 00 604 | 4 | WASHER DIN 7349 21 100HV FLZN SPF | SCHEIBE |
| 6 | 95 35 154 08 | 5 | PLATE 2X70X80 DC01 | BLECH |
| 7 | 95 35 155 08 | 1 | PLATE 1X70X80 DC01 FE//ZNNI8//CN//T0 | BLECH |
| 8 | 95 36 763 08 | 2 | PLATE 5X60X60 S355MC FE//ZN20//C | BLECH |

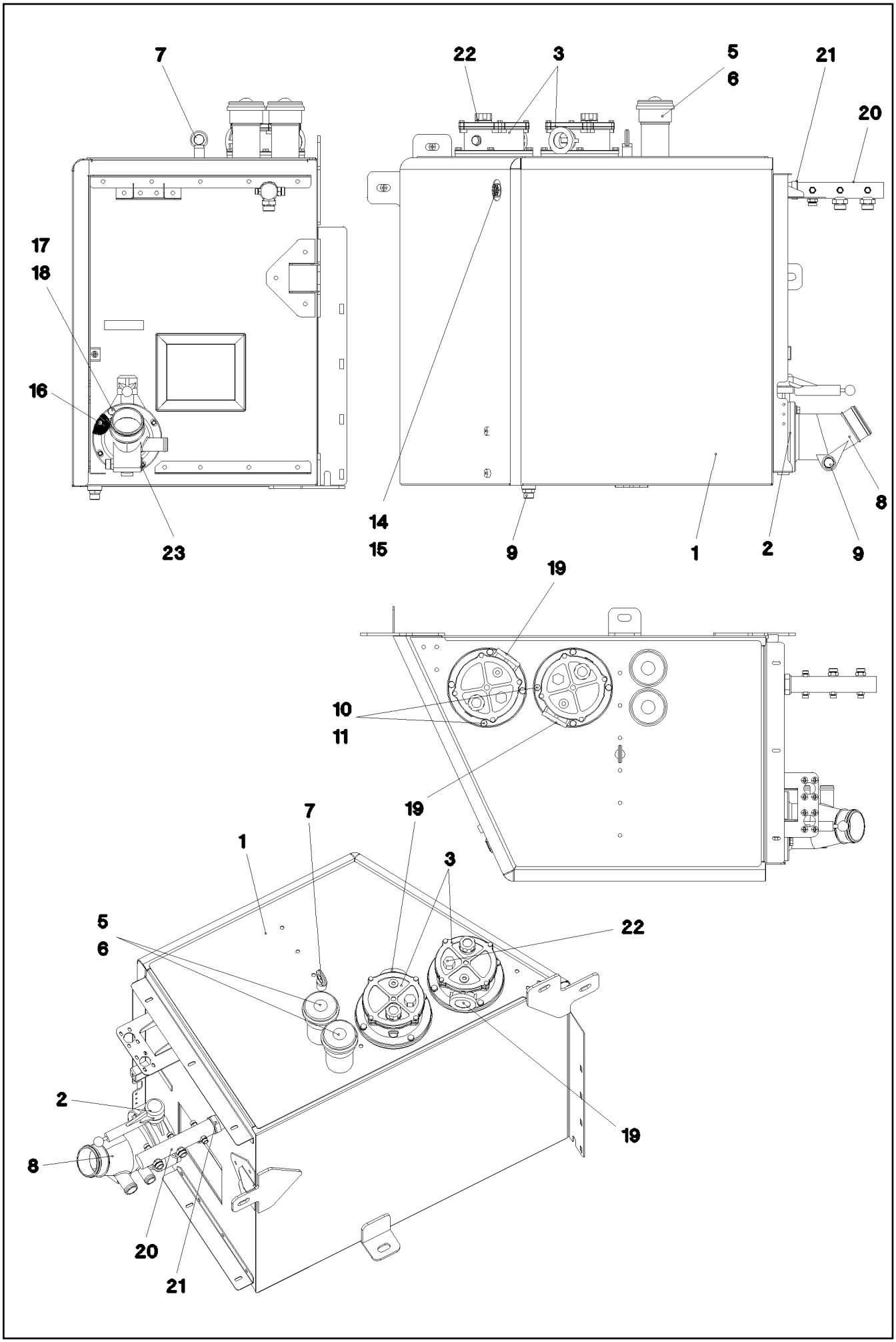


| | | |
|---|---|---|
| 16.2.2017<br>047963<br>LIEBHERR | etk_en_de_048005 LTR 1100<br><br>OIL TANK PRE-ASS.<br>OELBEHAELTER VORM. | 89 (1/2)<br><br>⇨ 2 340 004<br>96 43 780 08 |

| Pos. | Item | Quantity | Description | Bezeichnung |
|---|---|---|---|---|
| 1 | 96 20 154 08 | 1 | OIL TANK ST.CONST. 723L/653L SPF | OELBEHAELTER SCHWK. |
| 2 | 10 47 526 2 | 1 | SHUT OFF DEVICE DN125-FLANSCH SPF<br>➪ X10475262 10 47 526 2 | ABSPERRORGAN |
| 3 | 10 32 665 4 | 2 | RETURN FILTER 955MM<br>➪ X10326654 10 32 665 4 | RUECKLAUFFILTER |
| 5 | 51 06 673 08 | 2 | AERATION FILTER | BELUEFTUNGSFILTER |
| (1) | 51 06 718 08 | 1 | FILTER INSERT 1m³/min 10µm | FILTEREINSATZ |
| 6 | 40 02 312 | 12 | COUNTERSUNK SCREW ISO 7047 M5X16 4. | SENKSCHRAUBE |
| 7 | 40 26 003 08 | 1 | RING BOLT DIN 580 M12 C15E A3C | RINGSCHRAUBE |
| 8 | 97 30 210 08 | 1 | SUCTION PIPE OIL G-ALSI10MG SPF | SAUGROHR-OEL |
| 9 | 78 90 119 08 | 2 | OIL DRAIN PLUG M26X1,5 | OELABLASSSCHRAUBE |
| 10 | 40 65 098 08 | 8 | HEX SCREW ISO 4017 M10X20 8.8 A3C | SECHSKANTSCHRAUBE |
| 11 | 10 28 979 5 | 8 | WASHER ISO 7089 10 300HV FLZN SPF | SCHEIBE |
| 14 | 77 43 201 08 | 1 | OIL SIGHT GLASS G1" ALU | OELSTANDSAUGE |
| 15 | 72 64 045 08 | 1 | O-RING DIN 3771 28X3,55 NBR70 | O-RING |
| 16 | 10 87 556 5 | 4 | SOCKET HEAD SCREW DIN 912 M12X40 8.8 | ZYLINDERSCHRAUBE |
| 17 | 10 87 550 7 | 4 | HEX SCREW ISO 4014 M12X75 8.8 FLZN SP | SECHSKANTSCHRAUBE |
| 18 | 10 28 980 4 | 8 | WASHER ISO 7089 12 300HV FLZN SPF | SCHEIBE |
| 19 | 51 14 501 08 | 2 | NON-RETURN VALVE 100BAR | RUECKSCHLAGVENTIL |
| 20 | 92 59 332 08 | 1 | COLLECTING PIPE FE//ZN20//C | SAMMELROHR |
| 21 | 47 19 036 08 | 1 | FLANGE JOINT EGESD42-LR-WD A3P | VERSCHRAUBUNG |
| 22 | 51 06 693 08 | 1 | CLOGGING INDICATOR A2D-CR3 | VERSCHMUTZUNGSANZEIGE |
| 23 | 47 77 052 08 | 1 | STOP PLUG VSTIM33X2ED A3P | STOPFEN |

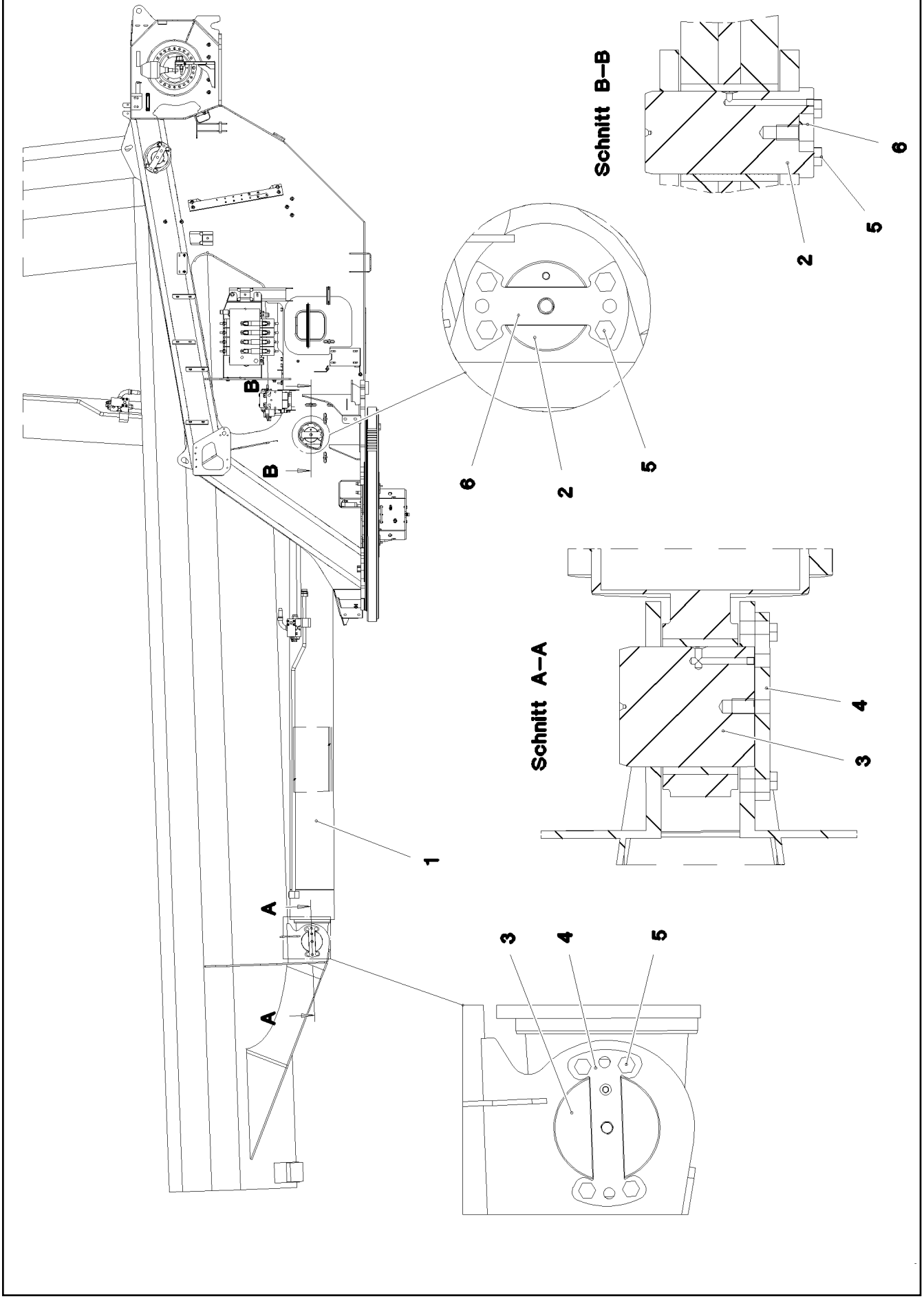


| | | |
|---|---|---|
| 16.2.2017<br>086858<br>LIEBHERR | **etk_en_de_048005 LTR 1100**<br><br>**LUFFING RAM W. PIVOT**<br>**WIPPZYLINDER M.LAGERUNG** | ❑ 91 (1/2)<br><br>⇨ **2 350**<br>**91 81 361 08** |

| Pos. | Item | Quantity | Description | Bezeichnung |
|---|---|---|---|---|
| 1 | 10 87 223 8 | 1 | LUFFING CYLINDER 320/290-3345 SPF<br>⇨ X10872238 10 87 223 8 | WIPPZYLINDER |
| 2 | 97 26 081 08 | 1 | PIN 120.0X225 35NICRMOV125 | BOLZEN |
| 3 | 95 61 648 08 | 1 | PIN 160.0x195 35NICRMOV125 | BOLZEN |
| 4 | 95 19 139 08 | 1 | AXLE HOLDER 20x250x119 S690QL | ACHSHALTER |
| 5 | 40 66 030 08 | 8 | HEX SCREW ISO 4017 M16X40 10.9 FLZN SP | SECHSKANTSCHRAUBE |
| 6 | 97 26 082 08 | 1 | AXLE HOLDER 20X118X220 S690QL | ACHSHALTER |
| 7 | 43 20 129 08 | 4 | DOWEL PIN ISO 8752 18X36 | SPANNSTIFT |

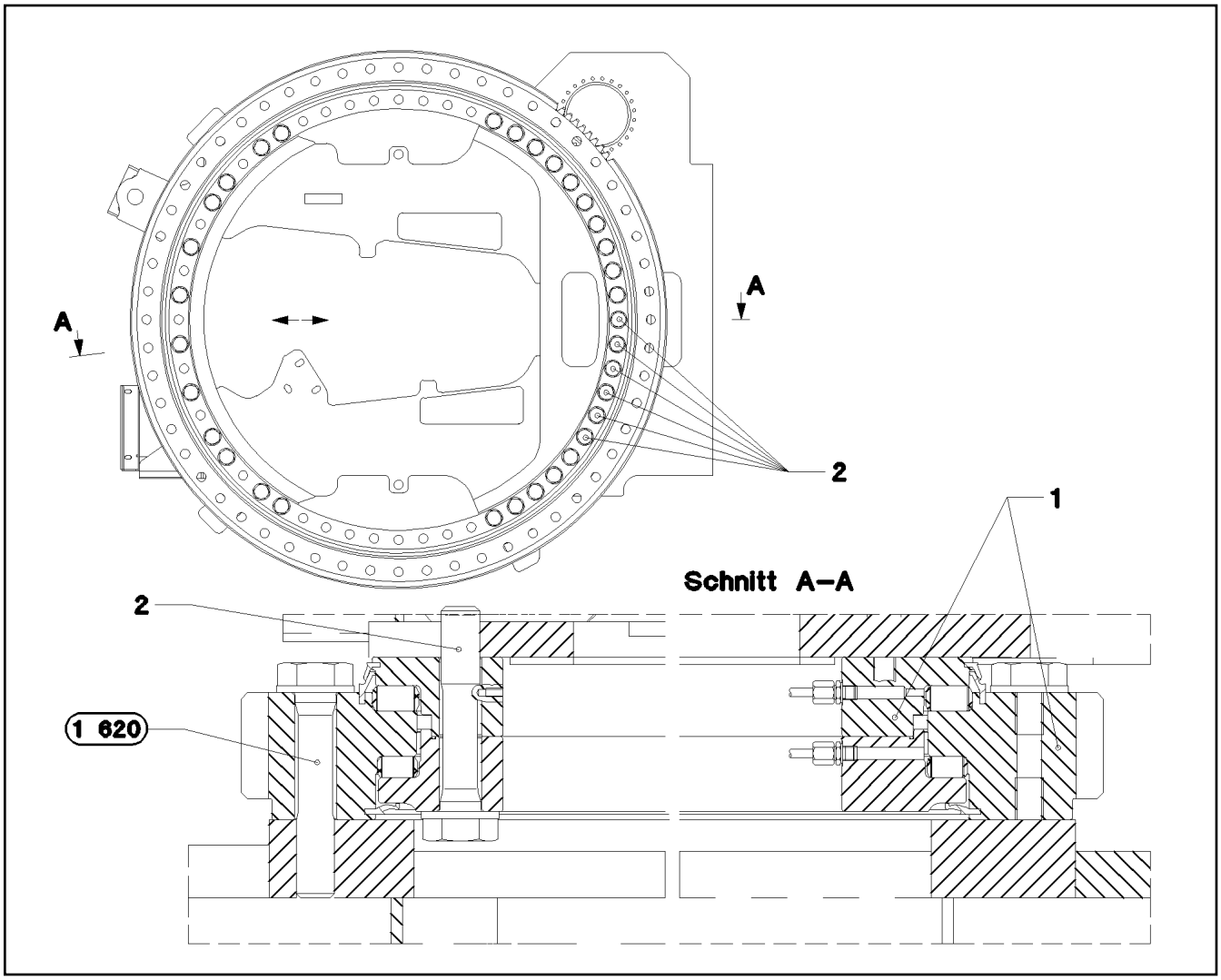


| Pos. | Item | Quantity | Description | Bezeichnung |
|---|---|---|---|---|
| 1 | 93 16 963 01 | 1 | ROLLER SLEWING RING | ROLLENDREHVERBINDUNG |
| 2 | 40 98 177 08 | 33 | EXPANSION BOLT M27X145 30CRNIMO8 SP | DEHNSCHRAUBE |

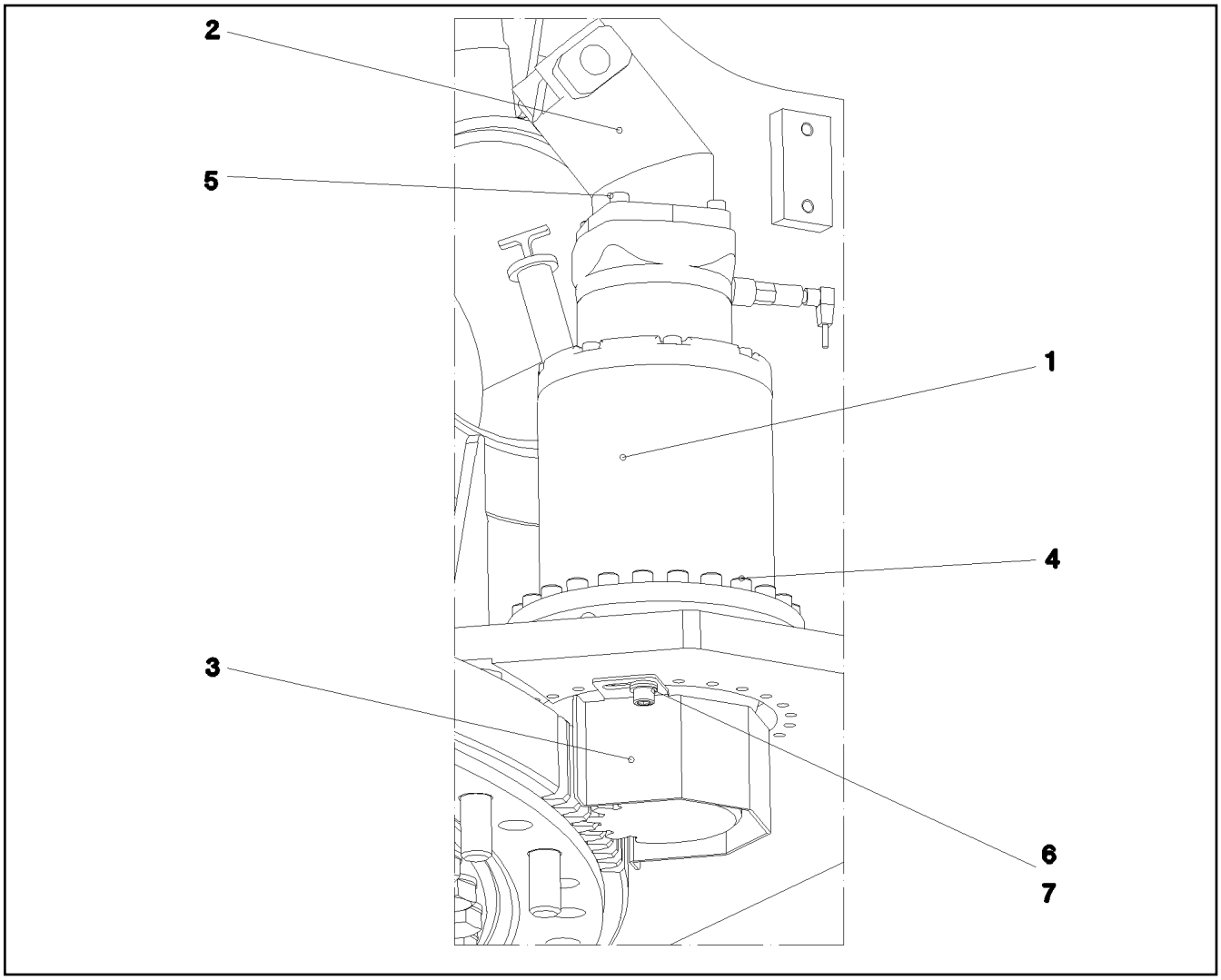


| Pos. | Item | Quantity | Description | Bezeichnung |
|---|---|---|---|---|
| 1 | 93 30 748 01 | 1 | SLEWING GEAR DRIVE DAT 225/458 SPF<br>⇨ 9 330 748 01 93 30 748 01 | DREHWERKANTRIEB |
| 2 | 51 02 294 08 | 1 | HYDRO MOTOR A2FM<br>⇨ 5 102 294 08 51 02 294 08 | HYDROMOTOR |
| 3 | 97 05 962 08 | 1 | PROTECTION GUARD 3x146x437 DC01 FE// | SCHUTZBLECH |
| 4 | 40 43 126 08 | 24 | SOCKET HEAD SCREW ISO 4762 M12X70 10 | ZYLINDERSCHRAUBE |
| 5 | 10 87 557 2 | 4 | SOCKET HEAD SCREW ISO 4762 M10X35 8 | ZYLINDERSCHRAUBE |
| 6 | 10 87 557 7 | 2 | SOCKET HEAD SCREW ISO 4762 M12X20 8 | ZYLINDERSCHRAUBE |
| 7 | 10 28 980 4 | 2 | WASHER ISO 7089 12 300HV FLZN SPF | SCHEIBE |

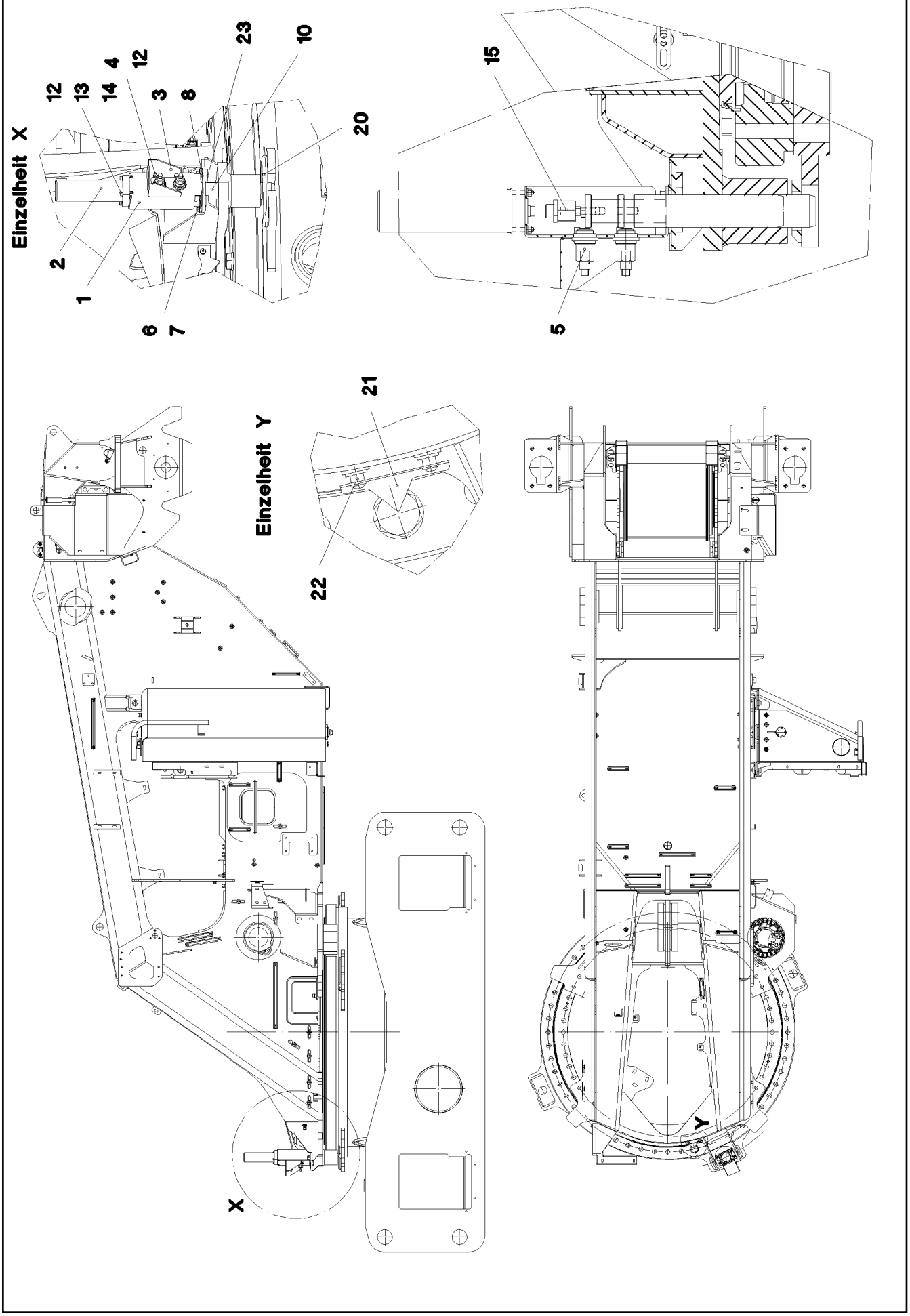
Einzelheit X
12
13
14
4
12
3
8
23
10
20
2
1
6
7
15
5
Einzelheit Y
21
22
X
Y

| Pos. | Item | Quantity | Description | Bezeichnung |
|---|---|---|---|---|
| 1 | 96 45 806 08 | 1 | RETAINER CPL. EDELSTAHL | HALTER KPL. |
| 2 | 51 23 931 08 | 1 | PNEUMATIC CYLINDER 50MM HUB<br>⇨ 5 123 931 08 51 23 931 08 | PNEUMATIKZYLINDER |
| 3 | 97 16 260 08 | 1 | PLATE 2X179X241 DC01 FE//ZNNI8//CN//T0 | BLECH |
| 4 | 40 65 099 | 4 | HEX SCREW ISO 4017 M6X16 8.8 A2C | SECHSKANTSCHRAUBE |
| 5 | 96 19 338 08 | 1 | ADDITIONAL ELECTRICS<br>⇨ 2 920 554 96 19 338 08 | ELEKTRIK DREHBUEHNENARR |
| 6 | 10 87 559 9 | 4 | SOCKET HEAD SCREW ISO 4762 M8X25 8.8 | ZYLINDERSCHRAUBE |
| 7 | 10 28 980 3 | 4 | WASHER ISO 7089 8 300HV 480H SPF | SCHEIBE |
| 8 | 97 13 393 08 | 1 | PLATE 5X125X74 S355MC FE//ZNNI8//CN//T | BLECH |
| 10 | 97 58 682 08 | 1 | PIN 55.0X305 35NICRMOV125 GASN. SPF | BOLZEN |
| 12 | 10 87 564 7 | 8 | WASHER ISO 7089 6 200HV 480H SPF | SCHEIBE |
| 13 | 10 87 562 1 | 4 | HEX NUT ISO 4032 M6 8 480H SPF | SECHSKANTMUTTER |
| 14 | 10 87 559 0 | 4 | SOCKET HEAD SCREW ISO 4762 M6X35 8.8 | ZYLINDERSCHRAUBE |
| 15 | 10 35 601 8 | 1 | FLEXIBLE COUPLING VERZ | AUSGLEICHSKUPPLUNG |
| 20 | 97 52 577 08 | 4 | PLATE 15X95X220 S960QL | BLECH |
| 21 | 97 46 893 08 | 1 | POINTER 2X120X82 X5CRNI18-10 | ZEIGER |
| 22 | 10 41 285 4 | 2 | BUTTON HEAD SCREW AEHNL.ISO 7380-2 | HALBRUNDKOPFSCHRAUBE |
| 23 | 97 22 862 08 | 1 | PLATE 10X126X92 S355MC FE//ZN20//C | BLECH |

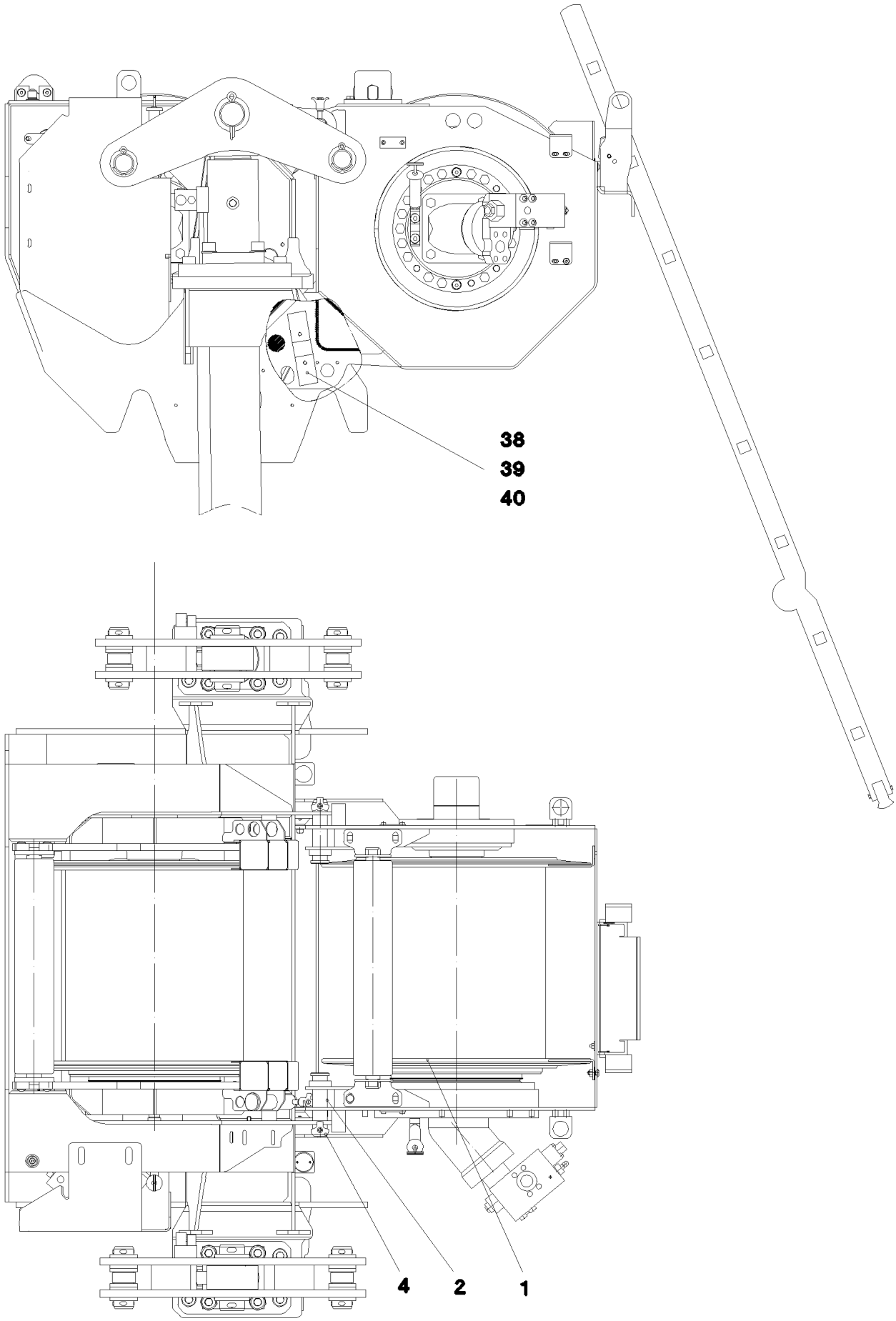
38
39
40
4
2
1

| Pos. | Item | Quantity | Description | Bezeichnung |
|---|---|---|---|---|
| 1 | 96 42 336 08 | 1 | WINCH 2 PRE-ASS.<br>⇨ 2 440 022 96 42 336 08 | WINDE 2 VORM. |
| 2 | 97 17 998 08 | 2 | PIN 50.0X175 35NICRMOV125 GASN. SPF | BOLZEN |
| 4 | 70 40 085 08 | 2 | QUICK RELEASE PIN NIROSTA | KUGELSPERRBOLZEN |
| 38 | 97 17 999 08 | 2 | PLATE 50X200X20 S355J2+N FE//ZNNI8//CN/ | BLECH |
| 39 | 10 41 516 2 | 4 | SOCKET HEAD SCREW ISO 4762 M10X25 8 | ZYLINDERSCHRAUBE |
| 40 | 10 28 979 5 | 4 | WASHER ISO 7089 10 300HV FLZN SPF | SCHEIBE |

| Pos. | Item | Quantity | Description | Bezeichnung |
|---|---|---|---|---|
| 1 | 77 43 726 08 | 1 | COUPLING SLEEVE | KUPPLUNGSMUFFE |
| 2 | 77 43 727 08 | 2 | COUPLING PLUG | KUPPLUNGSSTECKER |
| 3 | 47 10 321 08 | 3 | FLANGE JOINT XGE6-SR-ED A3P | VERSCHRAUBUNG |
| 4 | 77 43 866 08 | 1 | MALE CONNECTOR GSV6 M8X1K | STECKANSCHLUSS |
| 5 | 10 87 314 9 | 5 | TUBE DIN 73378 6X1,5 PA 12-HL | ROHR |

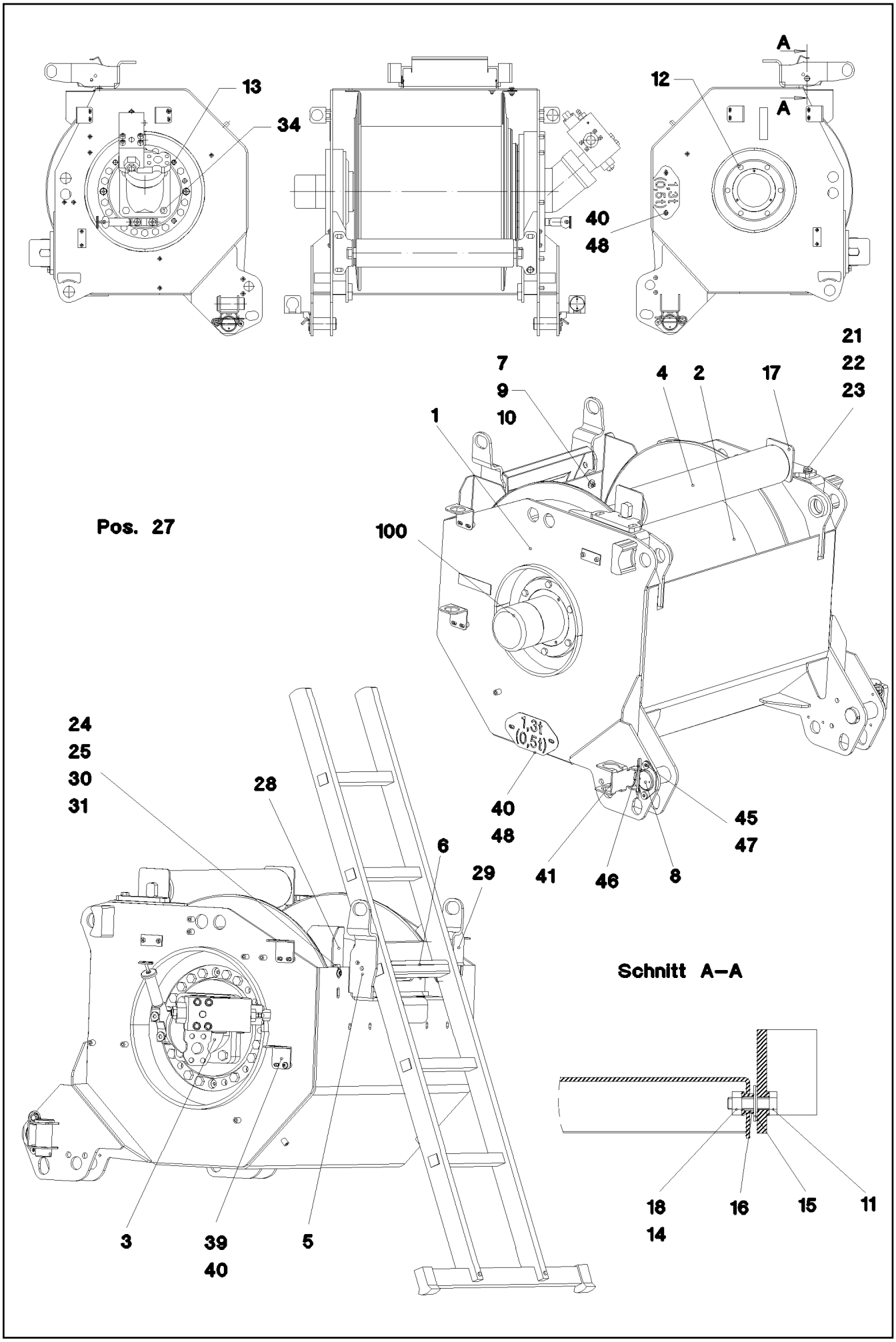


| | | |
|---|---|---|
| 16.2.2017<br>046558<br>LIEBHERR | etk_en_de_048005 LTR 1100<br><br>WINCH 2 PRE-ASS.<br>WINDE 2 VORM. | 100 (1/2)<br><br>⇨ 2 440 022<br>96 42 336 08 |

| Pos. | Item | Quantity | Description | Bezeichnung |
|---|---|---|---|---|
| 1 | 96 20 465 08 | 1 | WINCH | WINDE 2 SCHWK. |
| 2 | 93 87 070 01 | 1 | COMPACT ROPE WINCH KSW 400S741 SPF<br>➪ 9 387 070 01 93 87 070 01 | KOMPAKTSEILWINDE |
| 3 | 51 02 407 08 | 1 | HYDRO MOTOR SPF<br>➪ 5 102 407 08 51 02 407 08 | HYDROMOTOR |
| 4 | 74 90 145 08 | 1 | CARRYING ROLLER 107/8/40X590 GASN. SP | TRAGROLLE |
| 5 | 96 33 834 08 | 1 | CONSOLE | KONSOLE |
| 6 | 97 44 979 08 | 1 | PLATE 3X440X204 X5CRNI18-10 | BLECH |
| 7 | 11 82 652 7 | 2 | HEX SCREW ISO 4017 M8X30 8.8 480H SPF | SECHSKANTSCHRAUBE |
| 8 | 95 37 664 08 | 2 | PIN 55.0X10 3 35NICRMOV125 GASN. SPF | BOLZEN |
| 9 | 42 18 009 08 | 4 | WASHER ISO 7093-1 8 200HV A2C | SCHEIBE |
| 10 | 11 69 387 5 | 2 | HEX NUT ISO 4032 M8 8 480H SPF | SECHSKANTMUTTER |
| 11 | 10 87 551 6 | 2 | HEX SCREW ISO 4017 M10X35 8.8 FLZN SP | SECHSKANTSCHRAUBE |
| 12 | 40 66 010 08 | 6 | HEX SCREW ISO 4017 M10X35 10.9 FLZN SP | SECHSKANTSCHRAUBE |
| 13 | 40 66 031 08 | 22 | HEX SCREW ISO 4017 M16X45 10.9 FLZN SP | SECHSKANTSCHRAUBE |
| 14 | 42 11 008 08 | 4 | WASHER DIN 1440 10 ST VERZ | SCHEIBE |
| 15 | 10 28 980 6 | 2 | WASHER ISO 7089 16 300HV FLZN SPF | SCHEIBE |
| 16 | 97 45 012 08 | 2 | BUSHING 16.0X11 E235+N GALV.VERZ | BUCHSE |
| 17 | 96 20 515 08 | 2 | ROLLER CLAMP WELDED | ROLLENHALTER SCHWK. |
| 18 | 11 00 280 7 | 2 | HEX NUT ISO 4032 M10 10 FLZN SPF | SECHSKANTMUTTER |
| 21 | 11 64 538 4 | 4 | HEX SCREW ISO 4017 M12X40 8.8 FLZN SP | SECHSKANTSCHRAUBE |
| 22 | 10 28 980 4 | 8 | WASHER ISO 7089 12 300HV FLZN SPF | SCHEIBE |
| 23 | 41 15 143 08 | 4 | HEX NUT ISO 4032 M12 8 A3C | SECHSKANTMUTTER |
| 24 | 95 70 687 08 | 3 | PLATE 1X35X100 DC01 FE//ZNNI8//CN//T0 | BLECH |
| 25 | 95 70 688 08 | 3 | PLATE 2X35X100 DC01 FE//ZNNI8//CN//T0 | BLECH |
| 27 | 92 14 441 08 | 1 | CENTRAL LUBRICATING SYSTEM<br>➪ 2 440 012 92 14 441 08 | ZENTRALSCHMIERANLAGE |
| 28 | 97 18 123 08 | 1 | ROPE GUARD LEFT 4X205X173 S315MC FE// | SEILSCHUTZ LI. |
| 29 | 97 18 124 08 | 1 | ROPE GUARD RIGHT 4X205X173 S315MC | SEILSCHUTZ RE. |
| 30 | 41 15 144 08 | 4 | HEX NUT ISO 4032 M10 8 A3C | SECHSKANTMUTTER |
| 31 | 10 87 544 8 | 4 | BUTTON HEAD SCREW ISO 7380-2 M10X25 | HALBRUNDKOPFSCHRAUBE |
| 34 | 10 87 580 3 | 4 | HEX SCREW ISO 4017 M16X45 8.8 FLZN SP | SECHSKANTSCHRAUBE |
| 40 | 10 41 285 4 | 10 | BUTTON HEAD SCREW AEHNL.ISO 7380-2 | HALBRUNDKOPFSCHRAUBE |
| 41 | 97 47 300 08 | 2 | PLATE 4X189X173 S315MC FE//ZNNI8//CN//T | BLECH |
| 45 | 11 65 161 2 | 4 | HEX SCREW ISO 4017 M8X16 8.8 480H SPF | SECHSKANTSCHRAUBE |
| 46 | 43 31 012 08 | 2 | RETAINING SPRING 4X68 VERZ | SICHERUNGSFEDER |
| 47 | 11 84 050 1 | 4 | WASHER DIN 7349 8,4 200HV FLZN SPF | SCHEIBE |
| 48 | 97 53 529 08 | 1 | PLATE 2X200X100 X5CRNI18-10 | BLECH |
| 100 | 91 15 191 08 | 1 | ELECTRIC FOR WINCH 2<br>➪ 2 780 800 91 15 191 08 | ELEKTRIK WINDE 2 |

| Pos. | Item | Quantity | Description | Bezeichnung |
|---|---|---|---|---|
| 1 | 10 81 612 5 | 1 | HOIST ROPE 21X205M -40°C SPF | HUBSEIL |
| 2 | 96 57 037 08 | 1 | HOIST LIM.SWITCH PLUMMET CPL<br>⇨ 3 105 014 96 57 037 08 | HUBENDSCHALTER GEWICHT K |

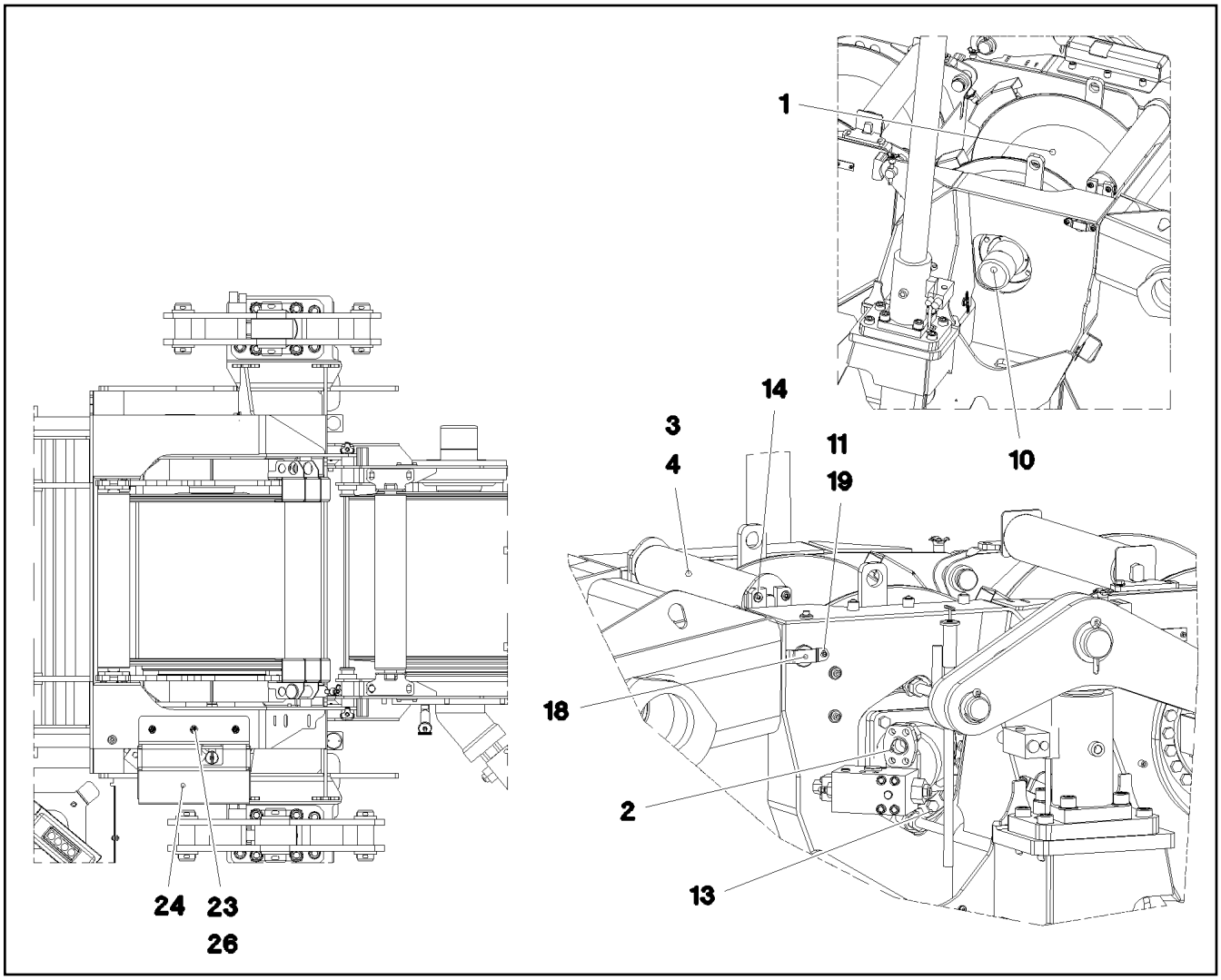


| Pos. | Item | Quantity | Description | Bezeichnung |
|---|---|---|---|---|
| 1 | 96 35 649 08 | 1 | MAIN HOISTING GEAR PRE-ASS.<br>⇨ 2 450 025 96 35 649 08 | HAUPTHUBWERK VORM. |
| 2 | 51 02 407 08 | 1 | HYDRO MOTOR SPF<br>⇨ 5 102 407 08 51 02 407 08 | HYDROMOTOR |
| 3 | 74 90 145 08 | 1 | CARRYING ROLLER 107/8/40X590 GASN. SP | TRAGROLLE |
| 4 | 97 31 054 08 | 2 | AXLE HOLDER 12X108X84 S690QL | ACHSHALTER |
| 10 | 91 27 889 08 | 1 | ELECTRIC FOR WINCH 1<br>⇨ 2 920 200 91 27 889 08 | ELEKTRIK WINDE 1 |
| 11 | 10 87 544 8 | 8 | BUTTON HEAD SCREW ISO 7380-2 M10X25 | HALBRUNDKOPFSCHRAUBE |
| 13 | 10 87 580 3 | 4 | HEX SCREW ISO 4017 M16X45 8.8 FLZN SP | SECHSKANTSCHRAUBE |
| 14 | 40 97 044 08 | 4 | BUTTON HEAD SCREW AEHNL.ISO 7380-2 | HALBRUNDKOPFSCHRAUBE |
| 18 | 97 31 067 08 | 4 | PIN 50.0X13 5 35NICRMOV125 GASN. SPF | BOLZEN |
| 19 | 97 31 147 08 | 4 | PLATE 3X128X30 DC01 FE//ZNNI8//CN//T0 | BLECH |
| 23 | 95 38 734 08 | 5 | SLEEVE 25X20 11SMN37 FE//ZNNI8//CN//T0 | HUELSE |
| 24 | 97 66 381 08 | 1 | PLATE 5X1099X558 X5CRNI18-10 | BLECH |
| 26 | 10 41 285 7 | 5 | BUTTON HEAD SCREW AEHNL.ISO 7380-2 | HALBRUNDKOPFSCHRAUBE |

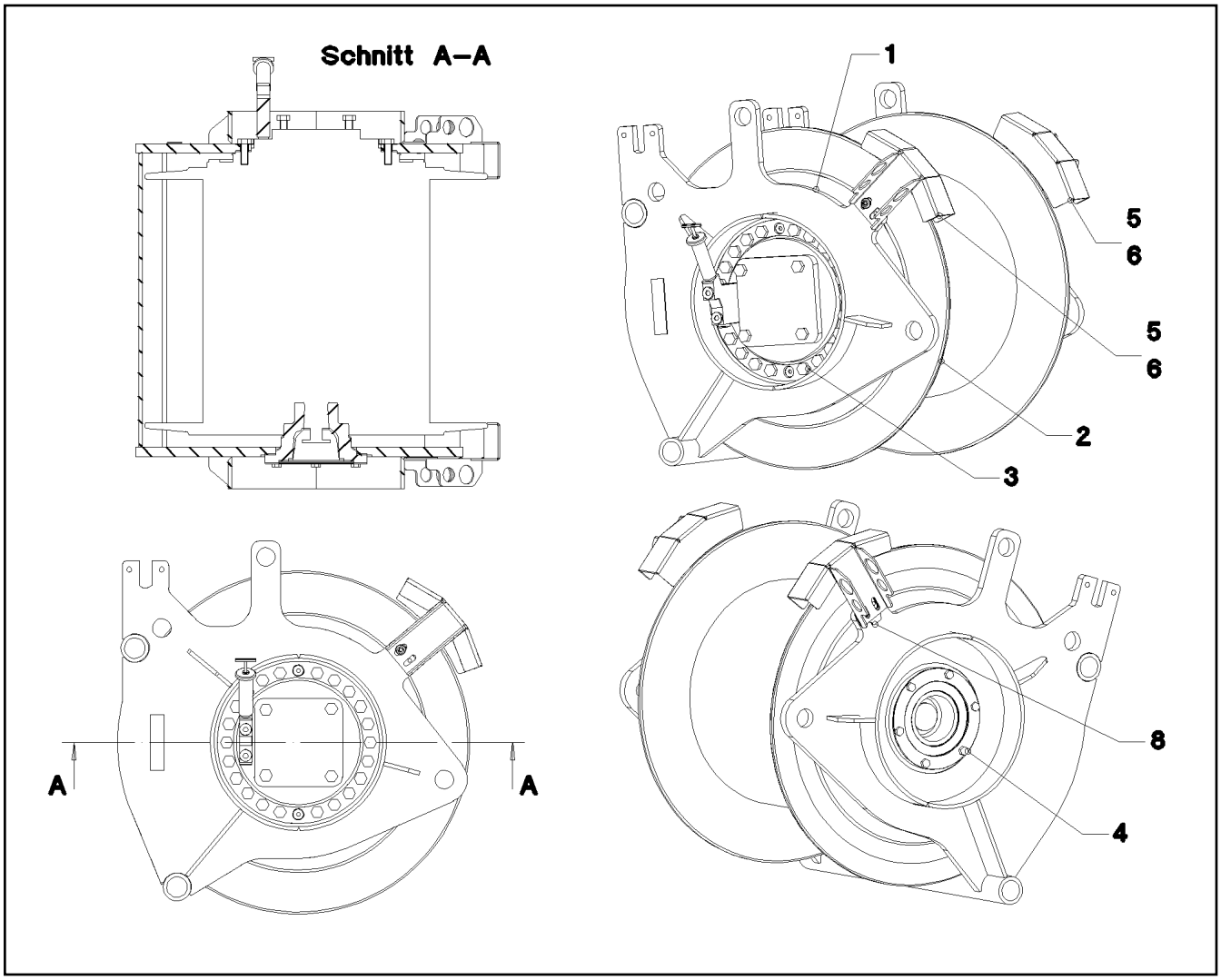


| Pos. | Item | Quantity | Description | Bezeichnung |
|---|---|---|---|---|
| 1 | 96 25 733 08 | 1 | MAIN HOISTING GEAR WELDED | HAUPTHUBWERK SCHWK. |
| 2 | 96 85 586 01 | 1 | COMPACT ROPE WINCH KSW 400S820<br>⇨ 9 685 586 01 96 85 586 01 | KOMPAKTSEILWINDE |
| 3 | 40 66 031 08 | 22 | HEX SCREW ISO 4017 M16X45 10.9 FLZN SP | SECHSKANTSCHRAUBE |
| 4 | 40 66 010 08 | 6 | HEX SCREW ISO 4017 M10X35 10.9 FLZN SP | SECHSKANTSCHRAUBE |
| 5 | 10 87 544 8 | 4 | BUTTON HEAD SCREW ISO 7380-2 M10X25 | HALBRUNDKOPFSCHRAUBE |
| 6 | 97 31 168 08 | 2 | ROPE GUARD LEFT 4X311X318 S315MC | SEILSCHUTZ LI. |
| 8 | 97 35 365 08 | 6 | PLATE 2X50X76 X5CRNI18-10 | BLECH |

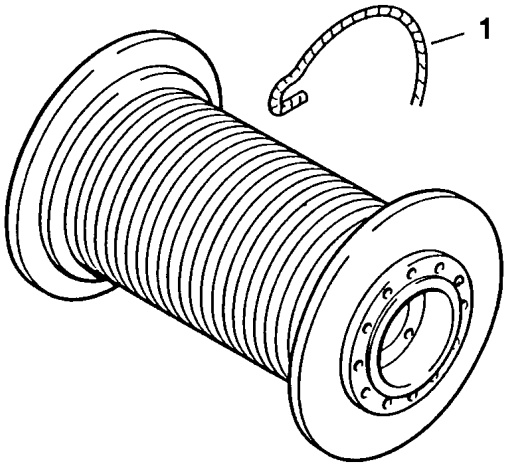


| Pos. | Item | Quantity | Description | Bezeichnung |
|---|---|---|---|---|
| 1 | 10 81 612 5 | 1 | HOIST ROPE 21X205M -40°C SPF | HUBSEIL |

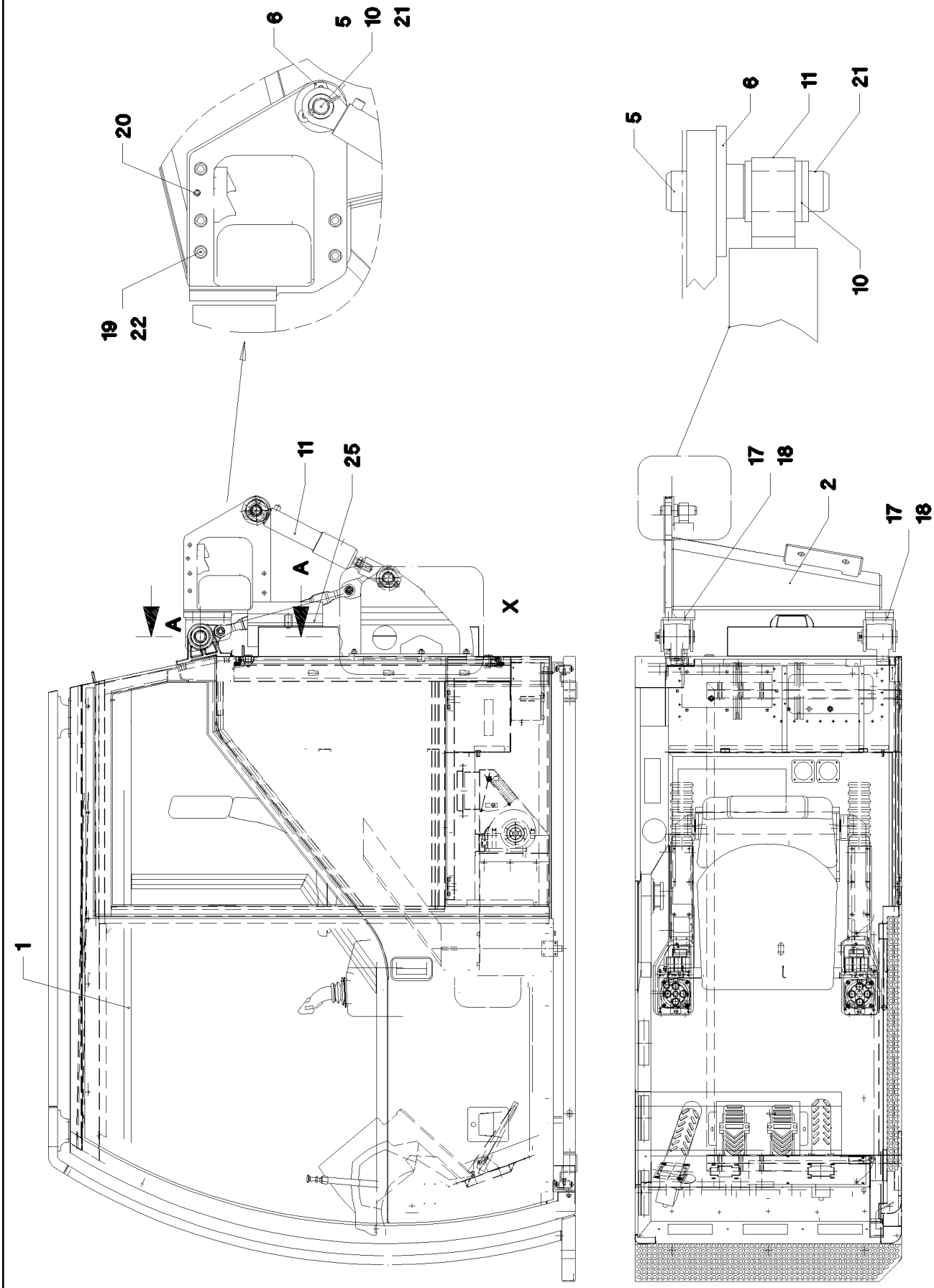


| | | |
|---|---|---|
| 16.2.2017<br>039909<br>LIEBHERR | **etk_en_de_048005 LTR 1100**<br><br>**CRANE DRIVER'S CABIN CPL.**<br>**KRANFUEHRERKABINE KPL.** | 106 (1/3)<br><br>**2 500**<br>**91 48 594 08** |

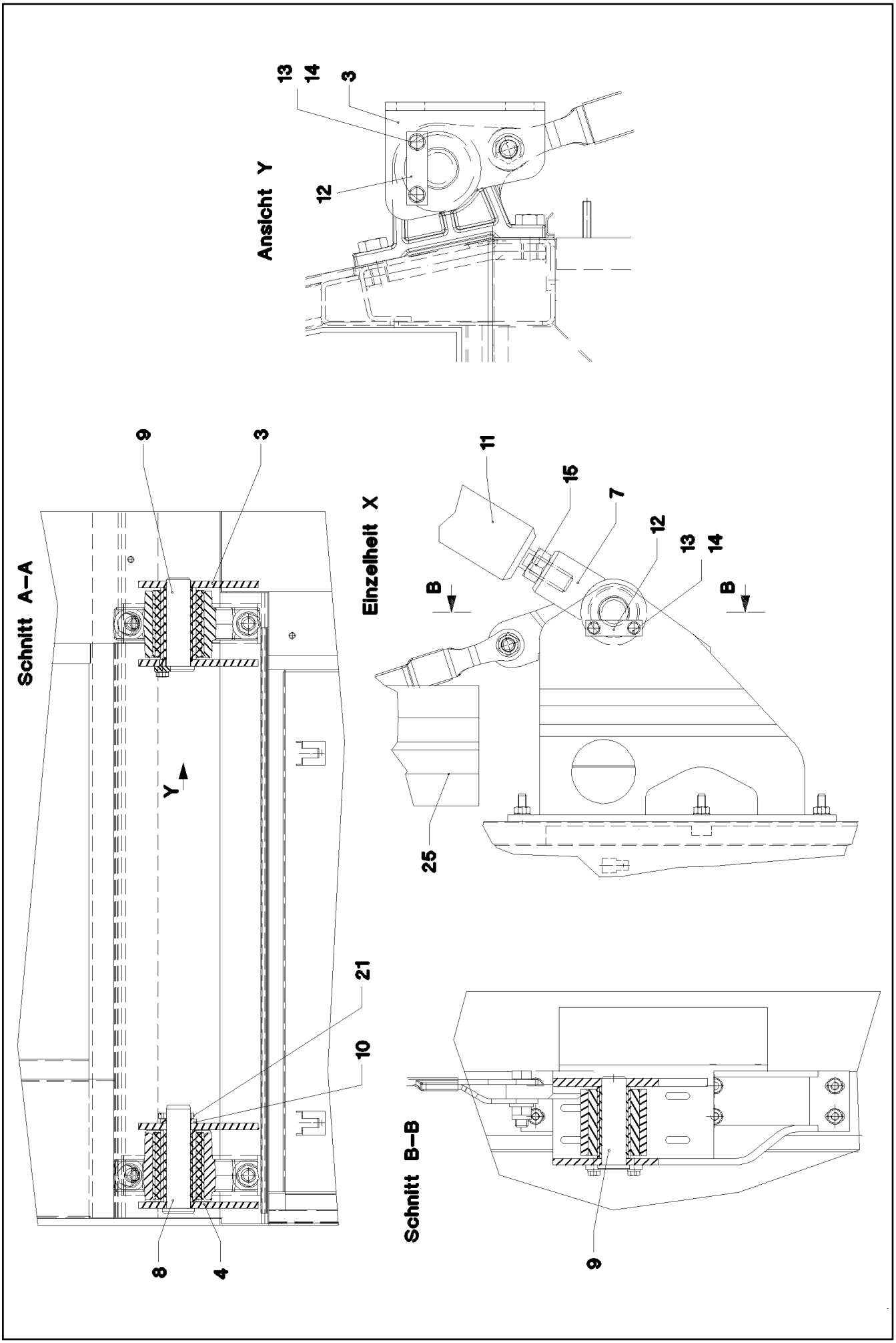
Ansicht Y
13
14
3
12
Schnitt A–A
9
3
Y
21
10
8
4
Einzelheit X
11
15
7
12
13
14
B
B
25
Schnitt B–B
9

| Pos. | Item | Quantity | Description | Bezeichnung |
|---|---|---|---|---|
| 1 | 91 48 769 08 | 1 | CRANE DRIVER'S CABIN,PRE-ASSY.<br>➪ 2 501 000 91 48 769 08 | KRANFUEHRERKABINE VORM. |
| 2 | 92 68 310 08 | 1 | ARM WELDED SPF | KABINENARM SCHWK. |
| 3 | 92 71 528 08 | 1 | PILLOW BLOCK ST.CONST. FE//ZNNI8//CN//T | LAGERBOCK SCHWK. |
| 4 | 92 71 525 08 | 1 | PILLOW BLOCK ST.CONST. FE//ZNNI8//CN//T | LAGERBOCK SCHWK. |
| 5 | 97 07 680 08 | 1 | PIN 100.0X120 42CRMO4+QT | BOLZEN |
| 6 | 40 86 018 08 | 3 | COUNTERSUNK SCREW DIN 7991 M12X45 | SENKSCHRAUBE |
| 7 | 92 10 666 08 | 1 | PILLOW BLOCK PRE-ASS.<br>➪ 2 500 021 92 10 666 08 | LAGERBOCK VORM. |
| 8 | 95 65 956 08 | 1 | PIN 40.0X13 3 S355J2G3 FE//ZNNI8//CN//T0 | BOLZEN |
| 9 | 97 09 954 08 | 2 | PIN 40.0X116 42CRMO4+QT GASN. | BOLZEN |
| 10 | 10 28 981 1 | 5 | WASHER ISO 7089 30 300HV FLZN SPF | SCHEIBE |
| 11 | 10 03 908 5 | 1 | TILT CYLINDER 50/25-165 SPF | KIPPZYLINDER |
| (999) | 10 42 499 4 | 1 | DS HYDRO CYLINDER | DS HYDROZYLINDER |
| 12 | 94 15 054 08 | 2 | FLAT STEEL 6X20X70 S355MC FE//ZNNI8//C | FLACHSTAHL |
| 13 | 11 65 161 2 | 4 | HEX SCREW ISO 4017 M8X16 8.8 480H SPF | SECHSKANTSCHRAUBE |
| 14 | 10 28 980 3 | 4 | WASHER ISO 7089 8 300HV 480H SPF | SCHEIBE |
| 15 | 41 17 010 08 | 1 | HEX NUT ISO 4035 M24 05 A3C | SECHSKANTMUTTER |
| 17 | 10 29 957 4 | 8 | HEX SCREW ISO 4017 M12X35 10.9 FLZN SP | SECHSKANTSCHRAUBE |
| 18 | 10 28 980 4 | 8 | WASHER ISO 7089 12 300HV FLZN SPF | SCHEIBE |
| 19 | 46 00 366 | 5 | HEX SCREW ISO 4017 M12X40 10.9 A3C SP | SECHSKANTSCHRAUBE |
| 20 | 53 01 463 08 | 1 | DOWEL PIN ISO 8752 12X30 | SPANNSTIFT |
| 21 | 10 18 036 4 | 2 | SPLIT PIN ISO 1234 6,3X50 St 480H SPF | SPLINT |
| 22 | 42 15 000 08 | 5 | WASHER EN 14399-6 12 ST A2K | SCHEIBE |
| 25 | 97 37 310 08 | 1 | RUBBER PLATE | GUMMIPLATTE |

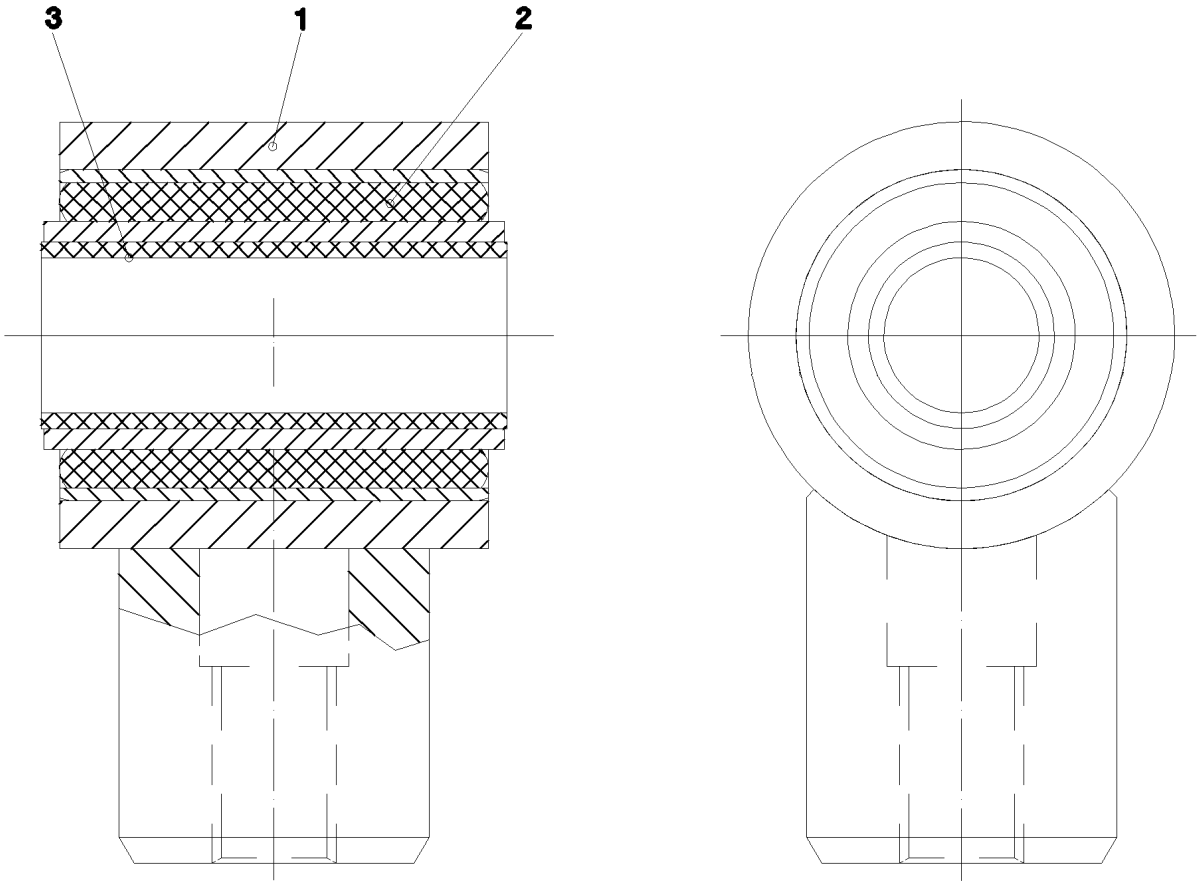


| Pos. | Item | Quantity | Description | Bezeichnung |
|---|---|---|---|---|
| 1 | 97 30 061 08 | 1 | BEARING BLOCK | LAGERBOCK |
| 2 | 72 69 114 08 | 1 | BEARING GUMMI | LAGER |
| 3 | 70 80 130 08 | 1 | FRICTION BEARING 30X36X90 | GLEITLAGER |

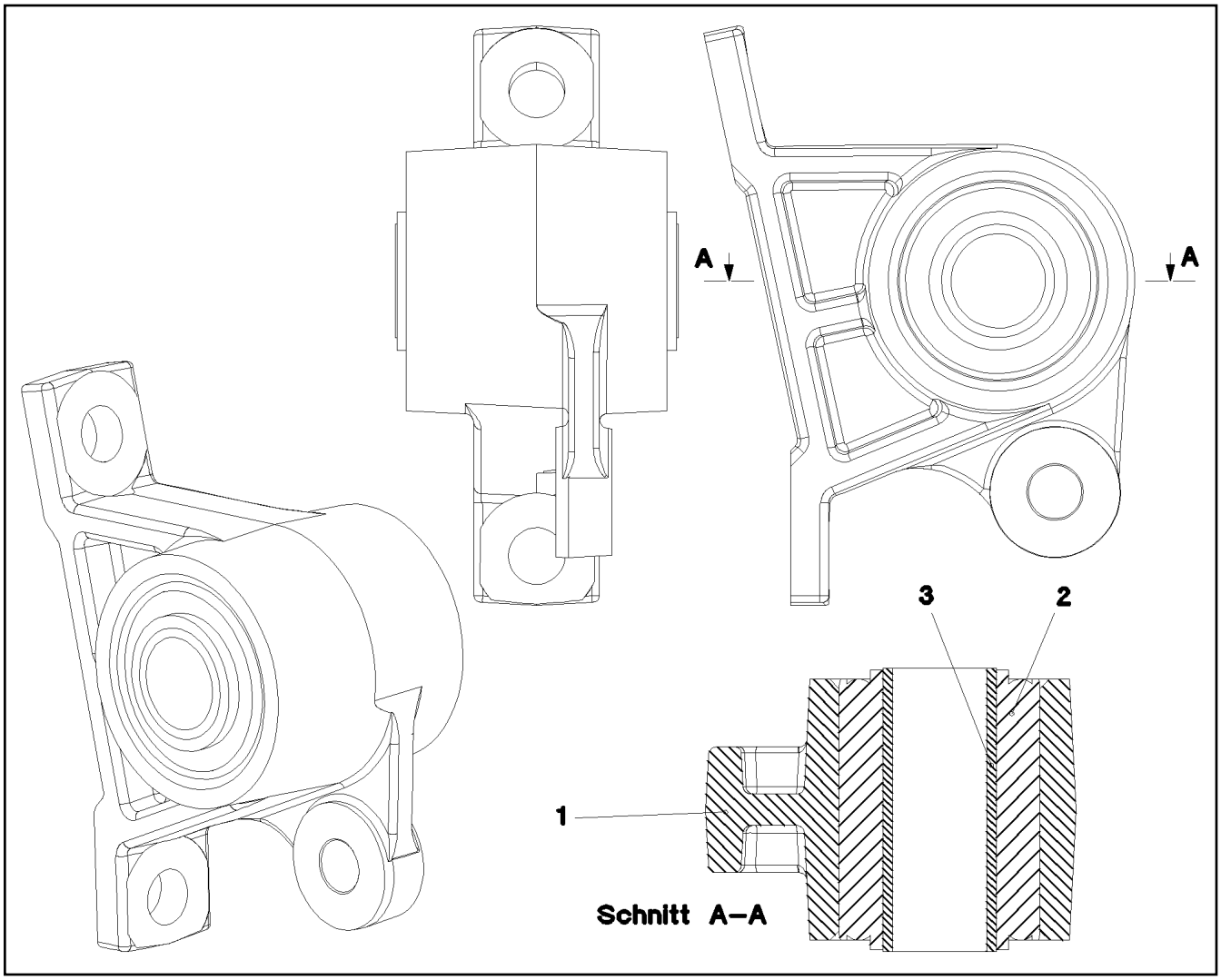


| Pos. | Item | Quantity | Description | Bezeichnung |
|---|---|---|---|---|
| 1 | 38 00 346 08 | 1 | BEARING BLOCK GGG40.3 SPF | LAGERBOCK |
| 2 | 72 69 114 08 | 1 | BEARING GUMMI | LAGER |
| 3 | 70 80 130 08 | 1 | FRICTION BEARING 30X36X90 | GLEITLAGER |

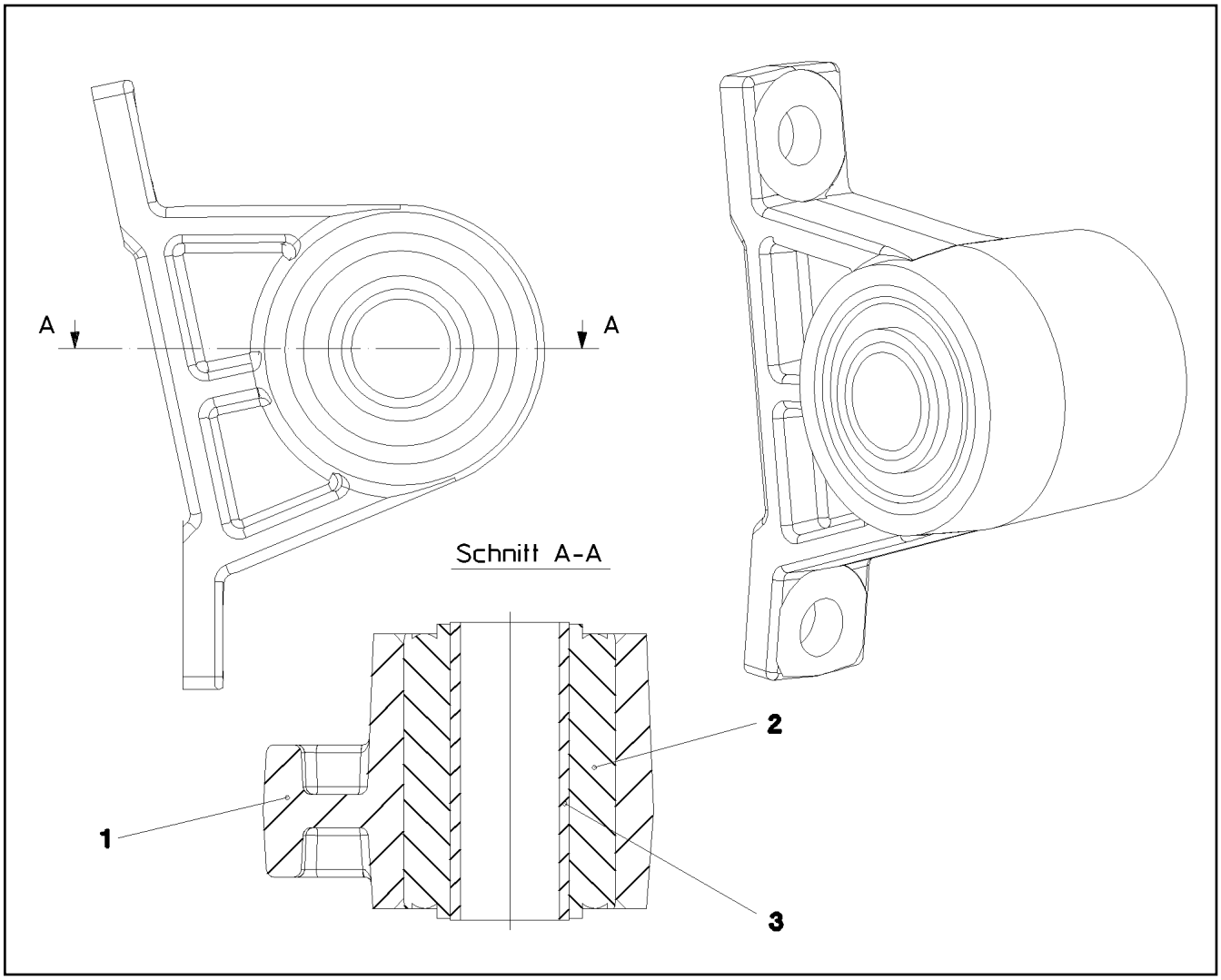


| Pos. | Item | Quantity | Description | Bezeichnung |
|---|---|---|---|---|
| 1 | 38 00 347 08 | 1 | BEARING BLOCK GGG40.3 SPF | LAGERBOCK |
| 2 | 72 69 114 08 | 1 | BEARING GUMMI | LAGER |
| 3 | 70 80 130 08 | 1 | FRICTION BEARING 30X36X90 | GLEITLAGER |

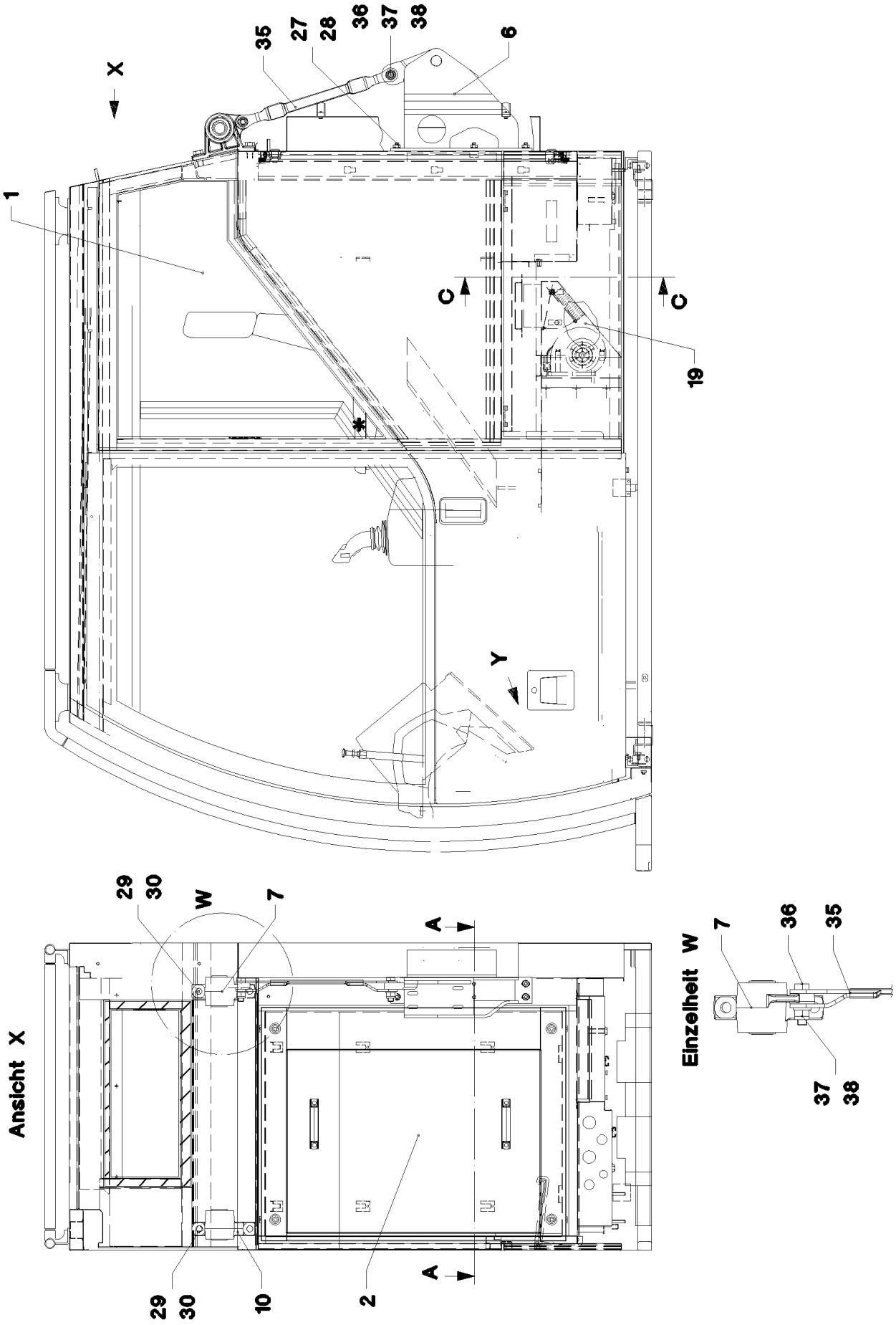


| | | |
|---|---|---|
| 16.2.2017<br>039911<br>LIEBHERR | **etk_en_de_048005 LTR 1100**<br><br>**CRANE DRIVER'S CABIN,PRE-ASSY.**<br>**KRANFUEHRERKABINE VORM.** | ❑ 112 (1/3)<br><br>⇨ **2 501 000**<br>**91 48 769 08** |

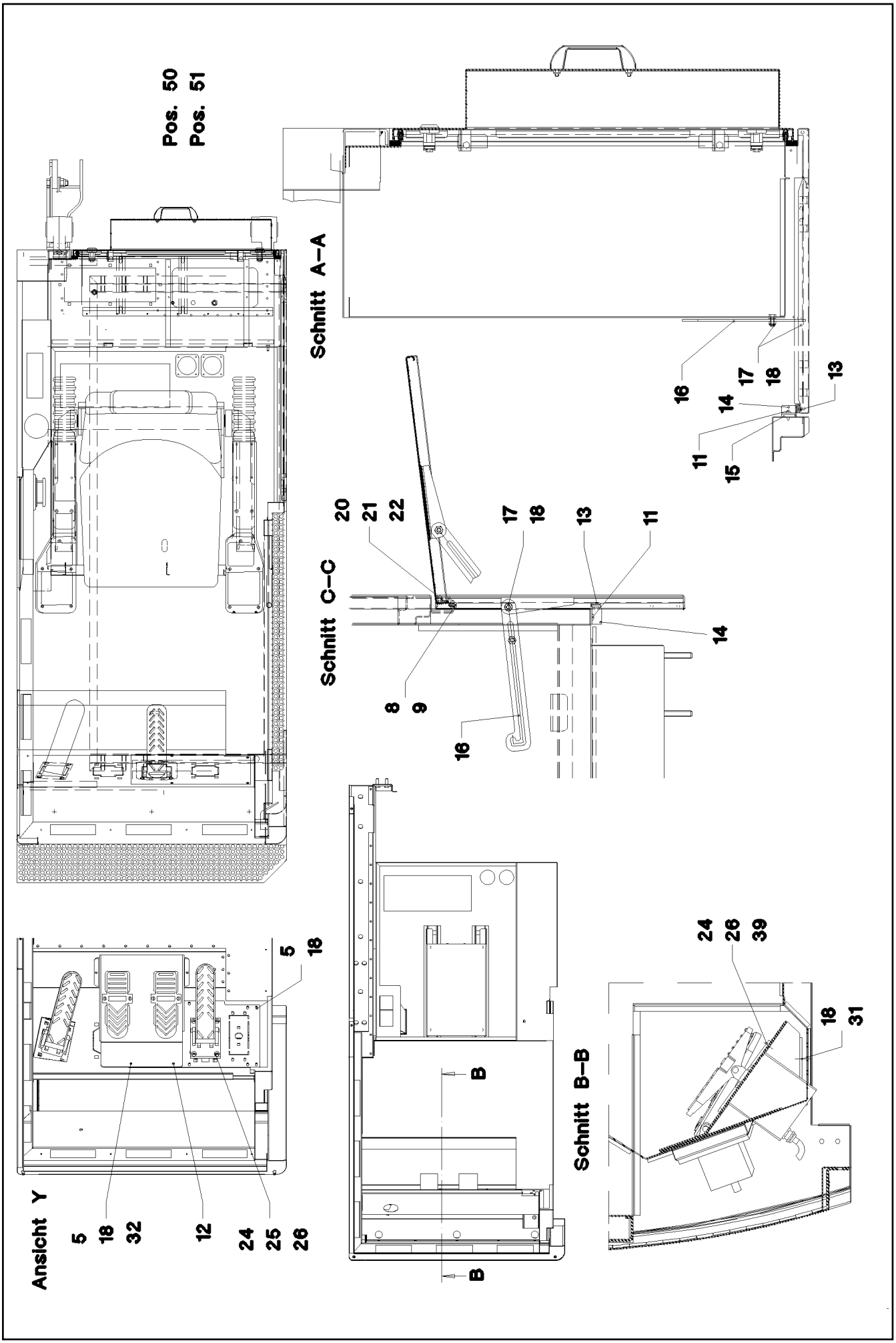


| | | |
|---|---|---|
| 16.2.2017<br>039912<br>LIEBHERR | etk_en_de_048005 LTR 1100<br><br>CRANE DRIVER'S CABIN,PRE-ASSY.<br>KRANFUEHRERKABINE VORM. | ❑ 113 (2/3)<br><br>⇨ 2 501 000<br>91 48 769 08 |

| Pos. | Item | Quantity | Description | Bezeichnung |
|---|---|---|---|---|
| 1 | 91 49 872 08 | 1 | CABIN, GLAZED<br>➪ 2 520 000 91 49 872 08 | KABINE VERGLAST |
| 2 | 96 34 184 08 | 1 | COVER COMPL.<br>➪ 2 501 022 96 34 184 08 | DECKEL KPL. |
| 5 | 11 69 282 4 | 6 | HEX SCREW ISO 4017 M6X12 8.8 480H SPF | SECHSKANTSCHRAUBE |
| 6 | 96 36 933 08 | 1 | HOLDER | HALTER |
| 7 | 92 10 661 08 | 1 | PILLOW BLOCK PRE-ASS.<br>➪ 2 500 022 92 10 661 08 | LAGERBOCK VORM. |
| 8 | 40 02 485 | 4 | PAN-HEAD SCREW ISO 7045 M4X8 4.8 A2C | FLACHKOPFSCHRAUBE |
| 9 | 42 40 003 08 | 4 | WASHER SPRING DIN 127 A 4 FST A2C | FEDERRING |
| 10 | 92 10 663 08 | 1 | PILLOW BLOCK PRE-ASS.<br>➪ 2 500 023 92 10 663 08 | LAGERBOCK VORM. |
| 11 | 40 02 017 | 4 | SHEET-METAL SCREW ISO 7049 ST4,2X13 | BLECHSCHRAUBE |
| 12 | 97 46 406 08 | 1 | PLATE 3.5X377X524 ALMG3 H114 | BLECH |
| 13 | 70 42 126 08 | 4 | BLIND RIVET 3,2X1,8-3,1 | BLINDNIET |
| 14 | 70 42 268 08 | 2 | MAGNET FASTENER | MAGNETVERSCHLUSS |
| 15 | 95 37 446 08 | 1 | PLATE 4X20X46 S315MC FE//ZNNI8//CN//T0 | BLECH |
| 16 | 95 37 507 08 | 1 | PLATE 3X33X208 DC01 FE//ZN20//C | BLECH |
| 17 | 41 19 004 08 | 2 | HEX NUT DIN 985 M6 8 A2C | SECHSKANTMUTTER |
| 18 | 10 87 564 7 | 14 | WASHER ISO 7089 6 200HV 480H SPF | SCHEIBE |
| 19 | 91 45 984 08 | 1 | HEATING, CRANE CABIN LICC1<br>➪ 2 540 91 45 984 08 | HEIZUNG OW |
| 20 | 70 42 290 08 | 2 | STAND | BOCK |
| 21 | 70 42 291 08 | 2 | PIN | STIFT |
| 22 | 50 26 448 08 | 2 | LOCK WASHER DIN 6799 4X0,7 | SICHERUNGSSCHEIBE |
| 24 | 11 64 226 1 | 16 | HEX SCREW ISO 4017 M8X25 8.8 480H SPF | SECHSKANTSCHRAUBE |
| 25 | 41 30 031 08 | 8 | CAGE NUT M8 | KAEFIGMUTTER |
| 26 | 42 40 007 08 | 8 | WASHER SPRING DIN 127 A 8 FST A2C | FEDERRING |
| 27 | 10 87 560 6 | 6 | HEX NUT DIN 985 M10 8 FLZN SPF | SECHSKANTMUTTER |
| 28 | 10 28 979 5 | 6 | WASHER ISO 7089 10 300HV FLZN SPF | SCHEIBE |
| 29 | 40 66 030 08 | 4 | HEX SCREW ISO 4017 M16X40 10.9 FLZN SP | SECHSKANTSCHRAUBE |
| 30 | 42 15 002 08 | 4 | WASHER DIN 6916 17 -C45 VERZ | SCHEIBE |
| 31 | 10 87 552 9 | 2 | HEX SCREW ISO 4017 M6X25 8.8 480H SPF | SECHSKANTSCHRAUBE |
| 32 | 41 30 028 08 | 2 | CAGE NUT M6 | KAEFIGMUTTER |
| 35 | 96 30 554 08 | 1 | TENSION PLATE PRE-ASS. | ZUGLASCHE VORM. |
| 36 | 10 04 159 0 | 2 | FITTED SCREW DIN 609 M16X1,5X60 8.8 A3 | PASSSCHRAUBE |
| 37 | 41 19 020 08 | 2 | HEX NUT DIN 985 M16X1,5 10 A3C | SECHSKANTMUTTER |
| 38 | 42 11 016 08 | 2 | WASHER DIN 1440 18 ST VERZ | SCHEIBE |
| 39 | 41 30 054 08 | 8 | BLIND RIVET NUT M8 ST | BLINDNIETMUTTER |
| 50 | 70 42 801 08 | 1 | GRIP SHELL 136X115X49,5 | GRIFFSCHALE |
| 51 | 70 42 781 08 | 2 | SUPPORT BED | UNTERLAGE |

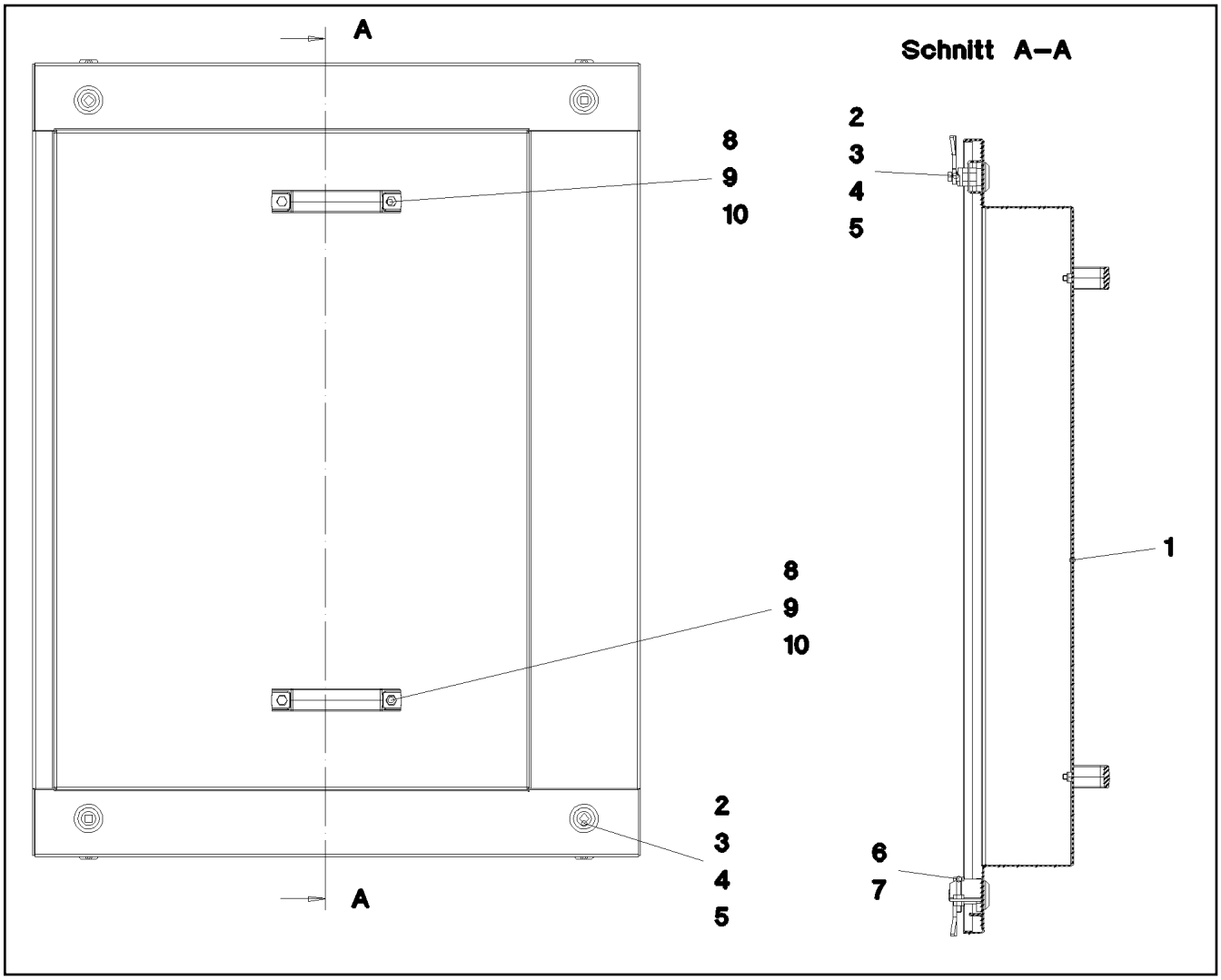


| Pos. | Item | Quantity | Description | Bezeichnung |
|---|---|---|---|---|
| 1 | 96 34 186 08 | 1 | COVER WELDED | DECKEL SCHWK. |
| 2 | 70 42 566 08 | 4 | HOUSING GD-ZN SW GEPULVERT | GEHAEUSE |
| 3 | 70 42 534 08 | 4 | ACTUATION SPIKE GD-ZN SW GEPULVERT | BETAETIGUNGSDORN |
| 4 | 70 42 590 08 | 4 | TONGUE | ZUNGE |
| 5 | 70 42 748 08 | 4 | O-RING 12X2 NBR70 | O-RING |
| 6 | 10 87 562 1 | 4 | HEX NUT ISO 4032 M6 8 480H SPF | SECHSKANTMUTTER |
| 7 | 49 00 595 | 2 | HEX SCREW ISO 4017 M6X35 8.8 A2C | SECHSKANTSCHRAUBE |
| 8 | 70 42 545 08 | 2 | GRIP KUNSTSTOFF | GRIFF |
| 9 | 40 65 099 | 4 | HEX SCREW ISO 4017 M6X16 8.8 A2C | SECHSKANTSCHRAUBE |
| 10 | 41 19 004 08 | 4 | HEX NUT DIN 985 M6 8 A2C | SECHSKANTMUTTER |

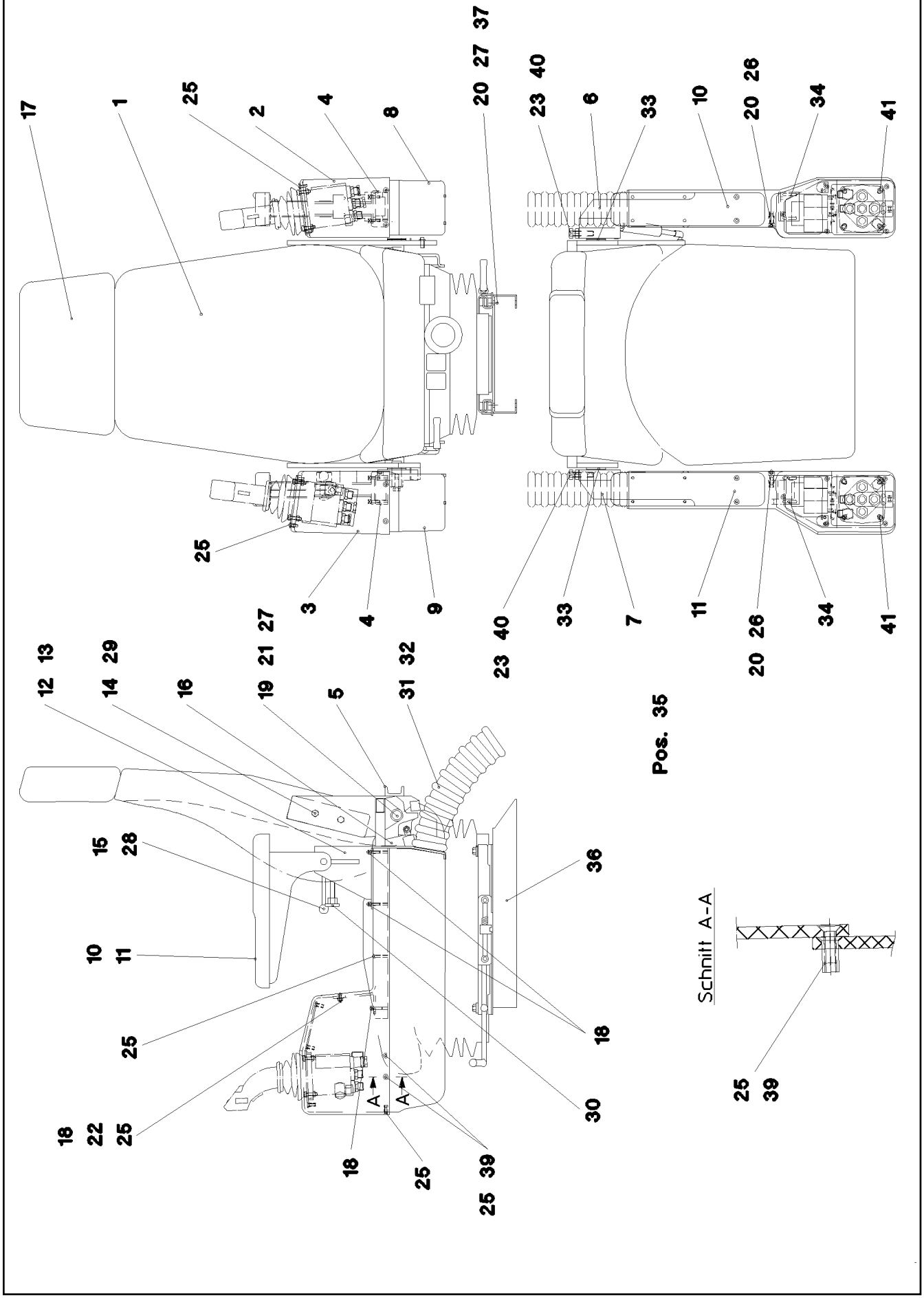


| | | |
|---|---|---|
| 16.2.2017<br>022729<br>LIEBHERR | **etk_en_de_048005 LTR 1100**<br><br>**CONTROL STAND**<br>**STEUERSTAND** | ❑ 116 (1/2)<br><br>⇨ **2 502**<br>**91 01 533 08** |

| Pos. | Item | Quantity | Description | Bezeichnung |
|---|---|---|---|---|
| 1 | 77 41 079 08 | 1 | OPERATOR SEAT 1000/577<br>⇨ 7 741 079 08 77 41 079 08 | FAHRERSITZ |
| 2 | 95 33 654 08 | 1 | ARM REST 563X127 X190 ABS SPF | ARMLEHNE |
| 3 | 95 33 651 08 | 1 | ARM REST 563X132 X190 ABS SPF | ARMLEHNE |
| 4 | 95 35 560 08 | 2 | GUIDE 27X58X360 ENAW6060-T66 | FUEHRUNG |
| 5 | 92 50 027 08 | 1 | BRACKET WELDED CONST. | KONSOLE SCHWK. |
| 6 | 92 50 028 08 | 1 | BRACKET,LEFT WELDED | KONSOLE SCHWK.LI. |
| 7 | 92 50 029 08 | 1 | BRACKET,RIGHT WELDED | KONSOLE SCHWK.RE. |
| 8 | 95 33 655 08 | 1 | ARM REST 558X115 X132 ABS SPF | ARMLEHNE |
| 9 | 95 33 653 08 | 1 | ARM REST 558X122X132 ABS SPF | ARMLEHNE |
| 10 | 92 15 880 08 | 1 | ARMREST CPL.LEFT | ARMAUFLAGE KPL.LI. |
| 11 | 92 15 879 08 | 1 | ARMREST CPL.RIGHT | ARMAUFLAGE KPL.RE. |
| 12 | 92 50 296 08 | 1 | PLATE LEFT WELDMENT | BLECH SCHWK.LINKS |
| 13 | 92 50 297 08 | 1 | PLATE RIGHT WELDMENT | BLECH SCHWK.RECHTS |
| 14 | 95 48 362 08 | 4 | TUBE RD20X5X33 ST.37.4 FE//ZNNI8//CN//T | ROHR |
| 15 | 70 40 048 08 | 2 | CLAMP LEVER | FLACHSPANNHEBEL |
| 16 | 59 10 670 08 | 1 | GAS SPRING 19X60-550N | GASFEDER |
| 17 | 77 41 193 08 | 1 | HEAD REST | KOPFSTUETZE |
| 18 | 46 00 305 | 4 | WASHER ISO 7089 5 200HV A3C | SCHEIBE |
| 19 | 42 18 009 08 | 2 | WASHER ISO 7093-1 8 200HV A2C | SCHEIBE |
| 20 | 10 28 980 3 | 10 | WASHER ISO 7089 8 300HV 480H SPF | SCHEIBE |
| 21 | 42 40 007 08 | 2 | WASHER SPRING DIN 127 A 8 FST A2C | FEDERRING |
| 22 | 41 19 003 08 | 6 | HEX NUT DIN 985 M5 8 A2C | SECHSKANTMUTTER |
| 23 | 46 00 355 | 2 | HEX SCREW ISO 4017 M10X45 8.8 A3C | SECHSKANTSCHRAUBE |
| 25 | 40 86 040 08 | 16 | COUNTERSUNK SCREW DIN 7991 M5X16 8 | SENKSCHRAUBE |
| 26 | 10 87 559 8 | 2 | SOCKET HEAD SCREW ISO 4762 M8X20 8.8 | ZYLINDERSCHRAUBE |
| 27 | 11 65 176 7 | 6 | HEX SCREW ISO 4017 M8X20 8.8 480H SPF | SECHSKANTSCHRAUBE |
| 28 | 40 28 059 08 | 2 | CHEESE HEAD SCREW DIN 603 M8X45 8.8 | FLACHRUNDSCHRAUBE |
| 29 | 46 00 386 | 4 | HEX SCREW ISO 4017 M8X60 8.8 A2C | SECHSKANTSCHRAUBE |
| 30 | 40 97 105 08 | 2 | CHECK SCREW M10 | STELLSCHRAUBE |
| 31 | 55 30 107 08 | 1 | PLASTIC SPIRAL HOSE NW60 KUNSTSTOF | SPIRALSCHLAUCH |
| 32 | 77 42 080 08 | 4 | HOSE CLAMP 60/50-70/12 W3 | SCHLAUCHSCHELLE |
| 33 | 72 08 019 08 | 8 | DISC SPRING DIN 2093 C 40 | TELLERFEDER |
| 34 | 95 36 785 08 | 2 | ANGLE 4X132X195 S315MC FE//ZNNI8//CN//T | WINKEL |
| 35 | 10 29 878 9 | 4 | COUNTERSUNK SCREW ISO 10642 M5X20 | SENKSCHRAUBE |
| 36 | 95 66 602 08 | 1 | PLATE 3X440X387 DC01 | BLECH |
| 37 | 41 30 034 08 | 4 | CAGE NUT M8 | KAEFIGMUTTER |
| 39 | 41 30 046 08 | 4 | BLIND RIVET NUT M5 K=1,5-4,0 AL | BLINDNIETMUTTER |
| 40 | 41 15 144 08 | 2 | HEX NUT ISO 4032 M10 8 A3C | SECHSKANTMUTTER |
| 41 | 40 97 040 08 | 8 | BUTTON HEAD SCREW ISO 7380-2 M6X40 | HALBRUNDKOPFSCHRAUBE |
| 44 | 10 87 547 4 | 10 | BUTTON HEAD SCREW ISO 7380-2 M5X16 | HALBRUNDKOPFSCHRAUBE |
| 45 | 40 97 063 08 | 12 | BUTTON HEAD SCREW ISO 7380-2 M5X35 | HALBRUNDKOPFSCHRAUBE |

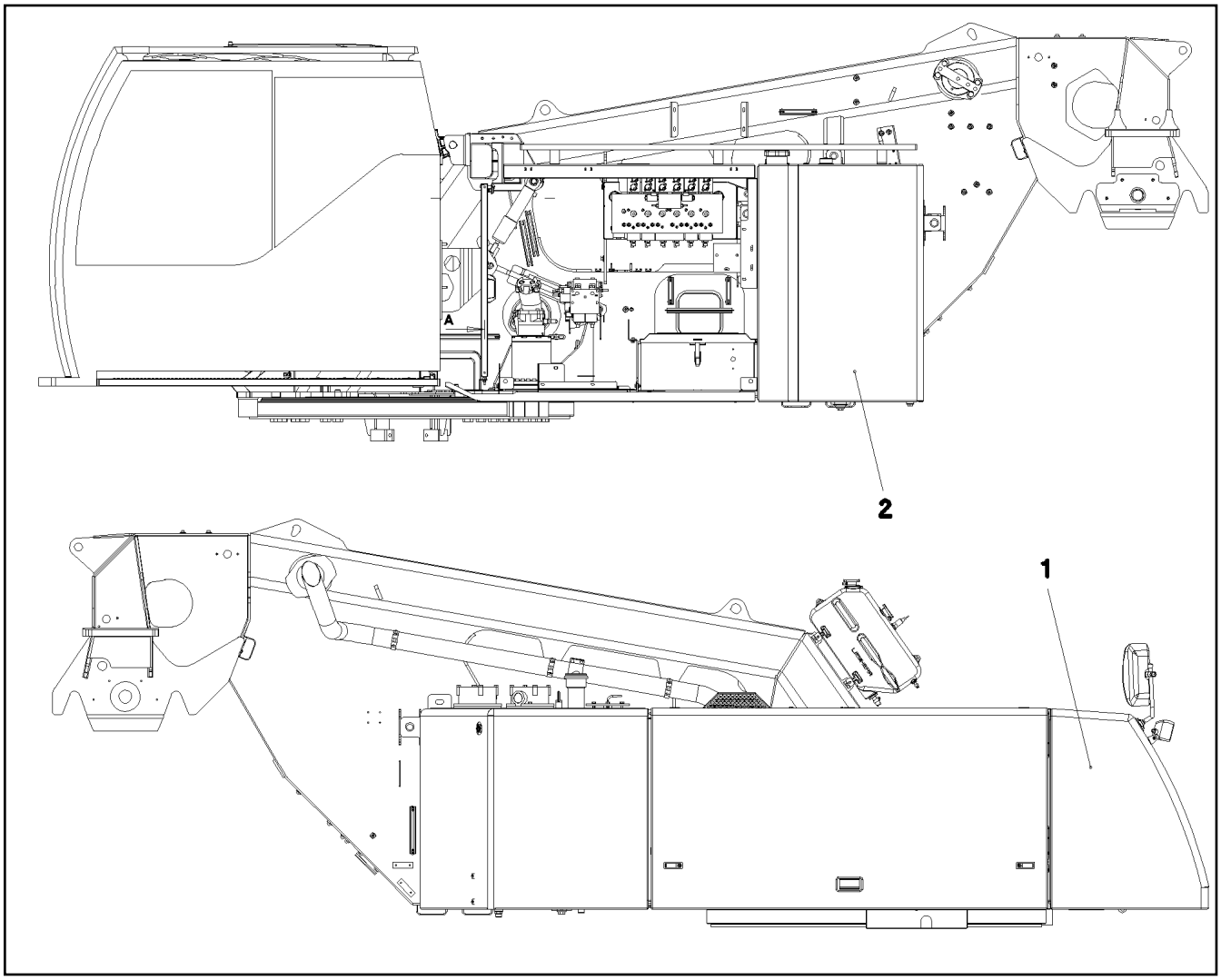


| Pos. | Item | Quantity | Description | Bezeichnung |
|---|---|---|---|---|
| 1 | 96 44 750 08 | 1 | SLEWING PLATFORM PANELLING RIG<br>⇨ 2 510 100 96 44 750 08 | DREHBUEHNENVERKLEIDUNG |
| 2 | 96 41 258 08 | 1 | SLEWING PLATFORM PANELLING LEF<br>⇨ 2 510 200 96 41 258 08 | DREHBUEHNENVERKLEIDUNG |

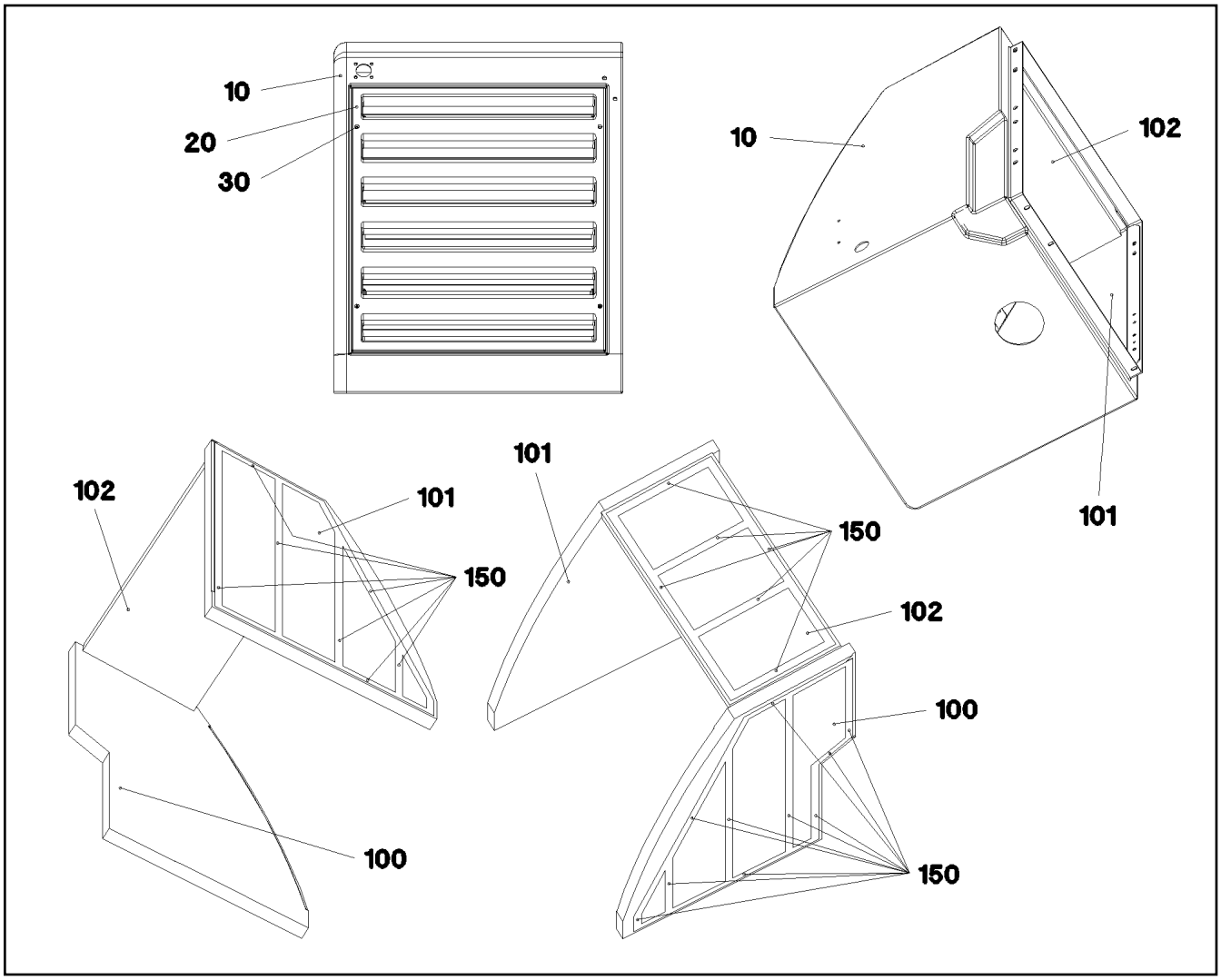


| Pos. | Item | Quantity | Description | Bezeichnung |
|---|---|---|---|---|
| 10 | 96 32 114 08 | 1 | RADIATOR HOOD | KUEHLERHAUBE |
| 20 | 96 26 301 08 | 1 | COOLER GRILL | KUEHLERGRILL |
| 30 | 46 35 125 | 4 | COUNTERSUNK SCREW ISO 7047 M6X30 4. | SENKSCHRAUBE |
| 100 | 97 30 732 08 | 1 | INSULATING MAT 40X975X755 PUR-SCHAU | DAEMMMATTE |
| 101 | 97 30 733 08 | 1 | INSULATING MAT 40X964X749 PUR-SCHAU | DAEMMMATTE |
| 102 | 97 37 676 08 | 1 | INSULATING MAT 40X740X370 PUR-SCHAU | DAEMMMATTE |
| 150 | 80 21 020 08 | 13.5 | ADHESIVE INSULATING STRIP 25MM PS18 | PILZKOPFBAND |

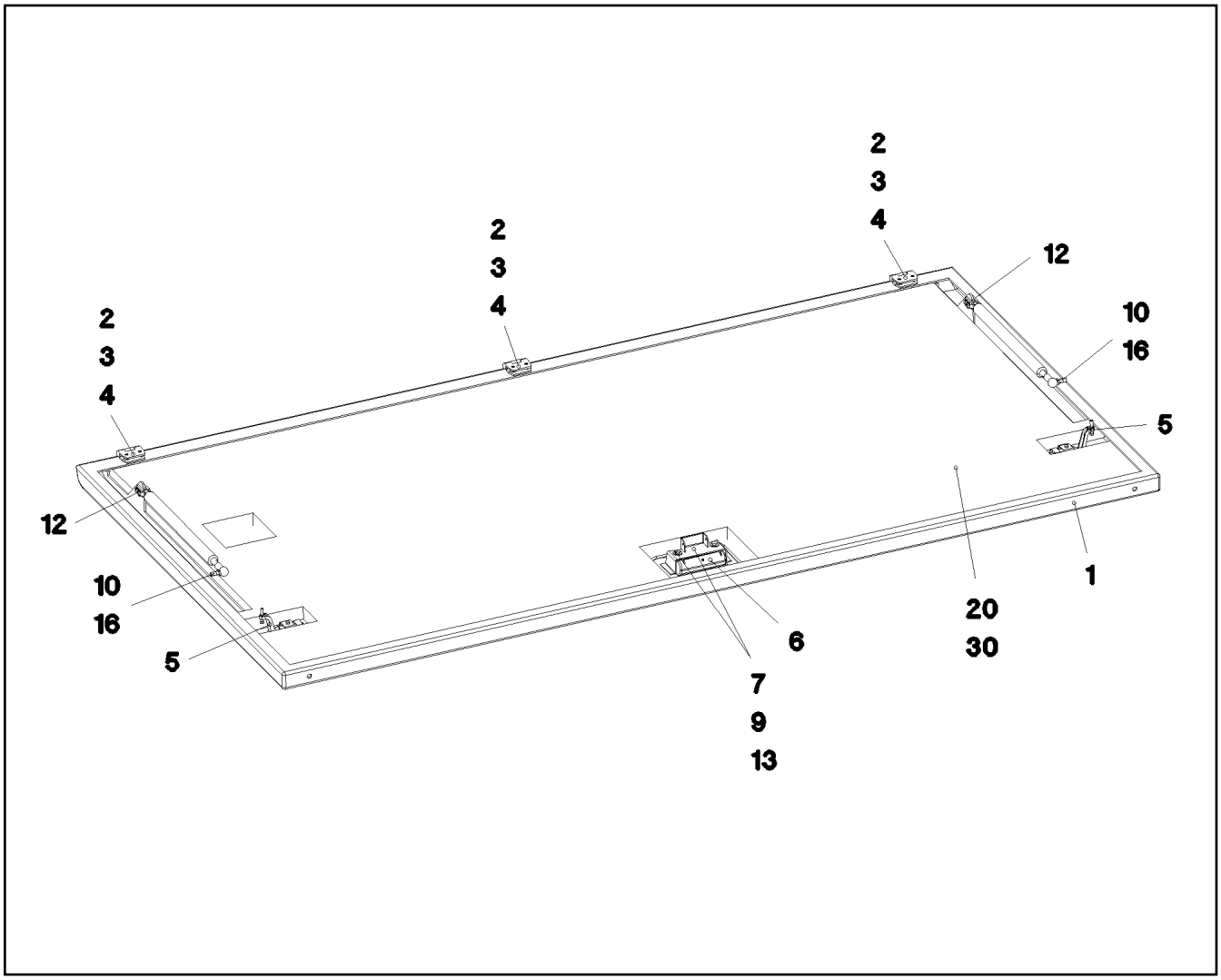


| Pos. | Item | Quantity | Description | Bezeichnung |
|---|---|---|---|---|
| 1 | 92 02 118 08 | 1 | FLAP COMPL. GFK | KLAPPE KPL. |
| 2 | 70 42 281 08 | 3 | HINGE 35X35X50/180° ST FE//ZN12//B | SCHARNIER |
| 3 | 40 86 041 08 | 6 | COUNTERSUNK SCREW AEHNL.DIN 7991 | SENKSCHRAUBE |
| 4 | 95 36 953 08 | 3 | THREADED PLATE 8X20X60 S235JR FE//ZN | GEWINDEPLATTE |
| 5 | 11 45 042 0 | 2 | LEVER FASTENER | HEBELVERSCHLUSS |
| 6 | 95 55 000 08 | 1 | FINGER-HOLD X0 KUNSTSTOFF | GRIFFMULDE |
| 7 | 97 47 423 08 | 1 | PLATE 2X195X66 X5CRNI18-10 | BLECH |
| 9 | 10 87 564 8 | 2 | WASHER ISO 7093-1 6 200HV 480H SPF | SCHEIBE |
| 10 | 59 10 619 08 | 2 | GAS SPRING 23X265-500N | GASFEDER |
| 11 | 10 28 980 3 | 2 | WASHER ISO 7089 8 300HV 480H SPF | SCHEIBE |
| 12 | 72 51 118 08 | 2 | ES PIN 8X16 VERZ | ES BOLZEN |
| 13 | 11 64 249 7 | 2 | HEX SCREW ISO 4017 M6X10 8.8 480H SPF | SECHSKANTSCHRAUBE |
| 16 | 10 29 966 9 | 2 | HEX NUT ISO 4032 M8 10 480H SPF | SECHSKANTMUTTER |
| 20 | 97 47 497 08 | 1 | INSULATING MAT 30X1980X987 POLYESTE | DAEMMMATTE |
| 30 | 80 21 020 08 | 11.13 | ADHESIVE INSULATING STRIP 25MM PS18 | PILZKOPFBAND |

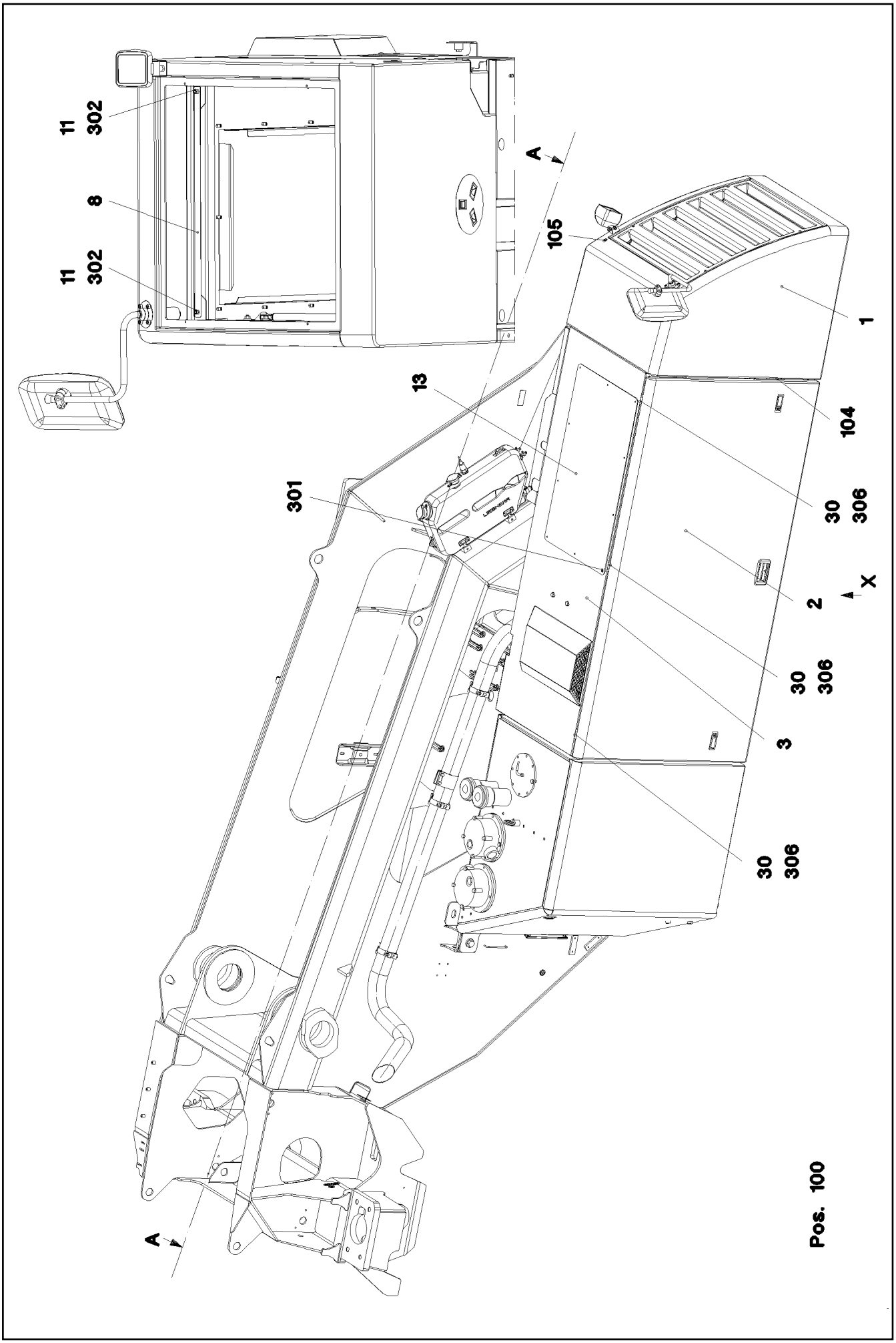
11
302
8
11
302
A
105
1
13
104
301
30
306
2
X
30
306
3
30
306
A
Pos. 100

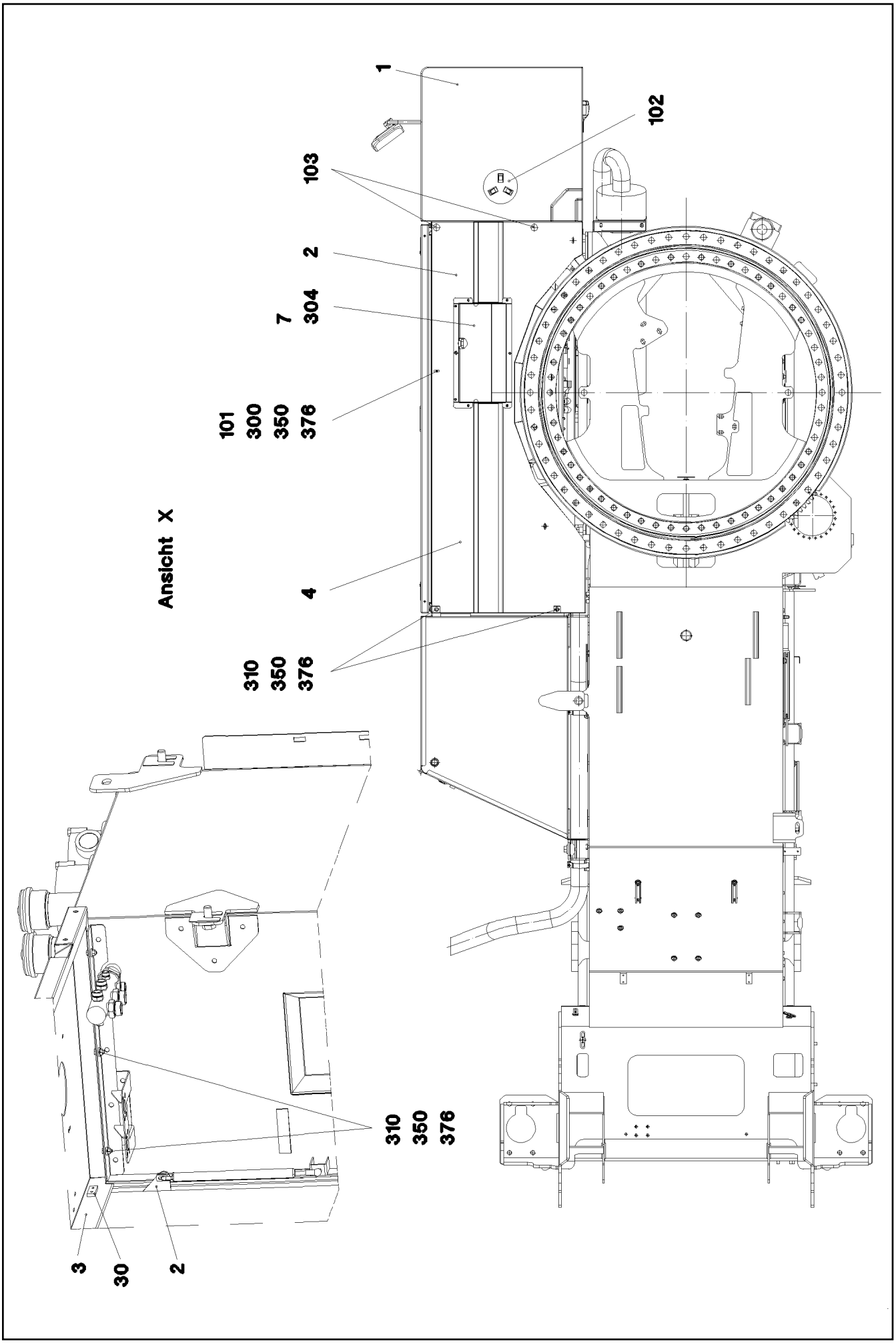


| | | |
|---|---|---|
| 16.2.2017<br>050819<br>LIEBHERR | etk_en_de_048005 LTR 1100<br><br>SLEWING PLATFORM PANELLING RIG<br>DREHBUEHNENVERKLEIDUNG RE. | ❑ 122 (2/8)<br><br>⇨ 2 510 100<br>96 44 750 08 |

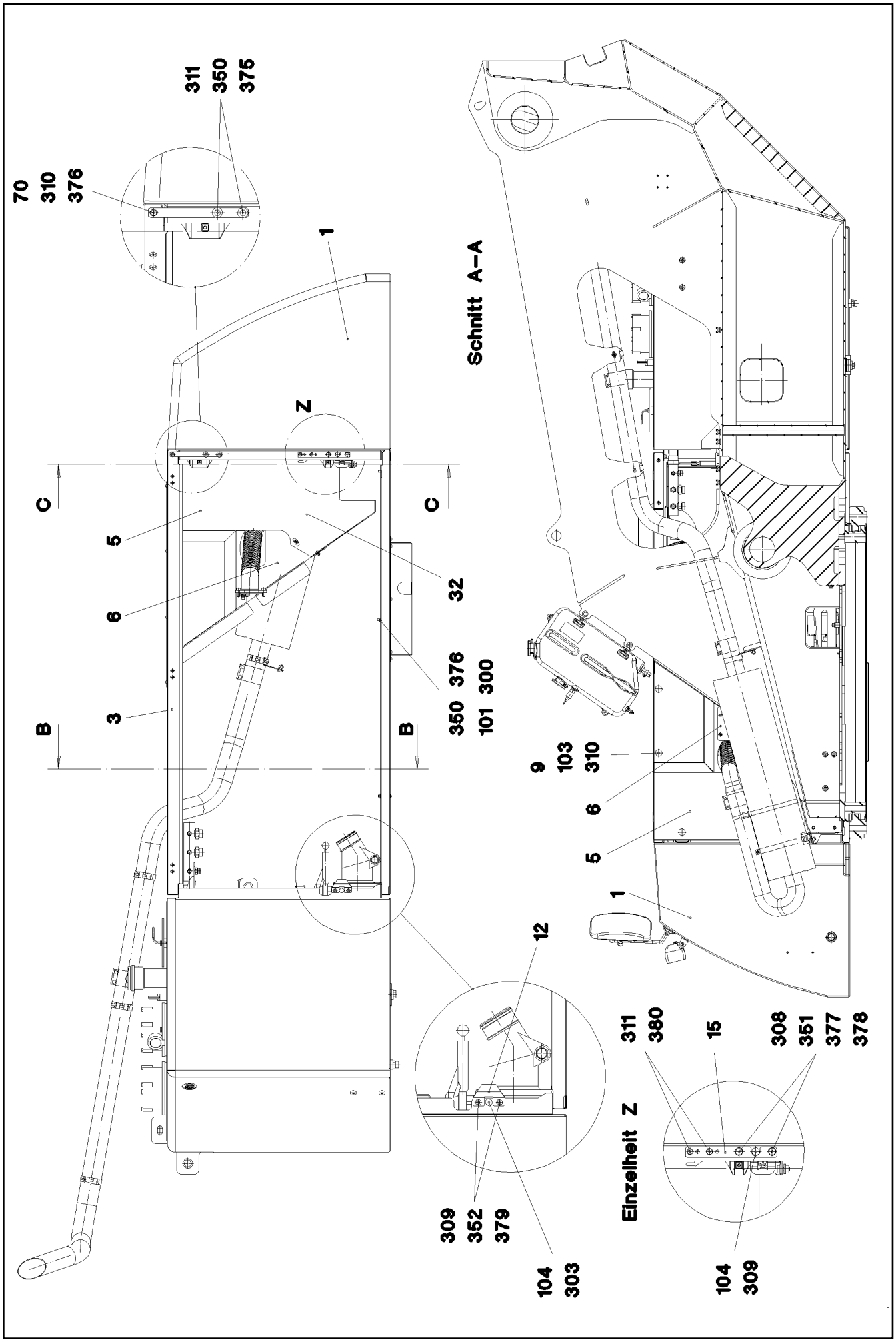


| | | |
|---|---|---|
| 16.2.2017<br>050820<br>LIEBHERR | etk_en_de_048005 LTR 1100<br><br>SLEWING PLATFORM PANELLING RIG<br>DREHBUEHNENVERKLEIDUNG RE. | ❑ 123 (3/8)<br><br>⇨ 2 510 100<br>96 44 750 08 |

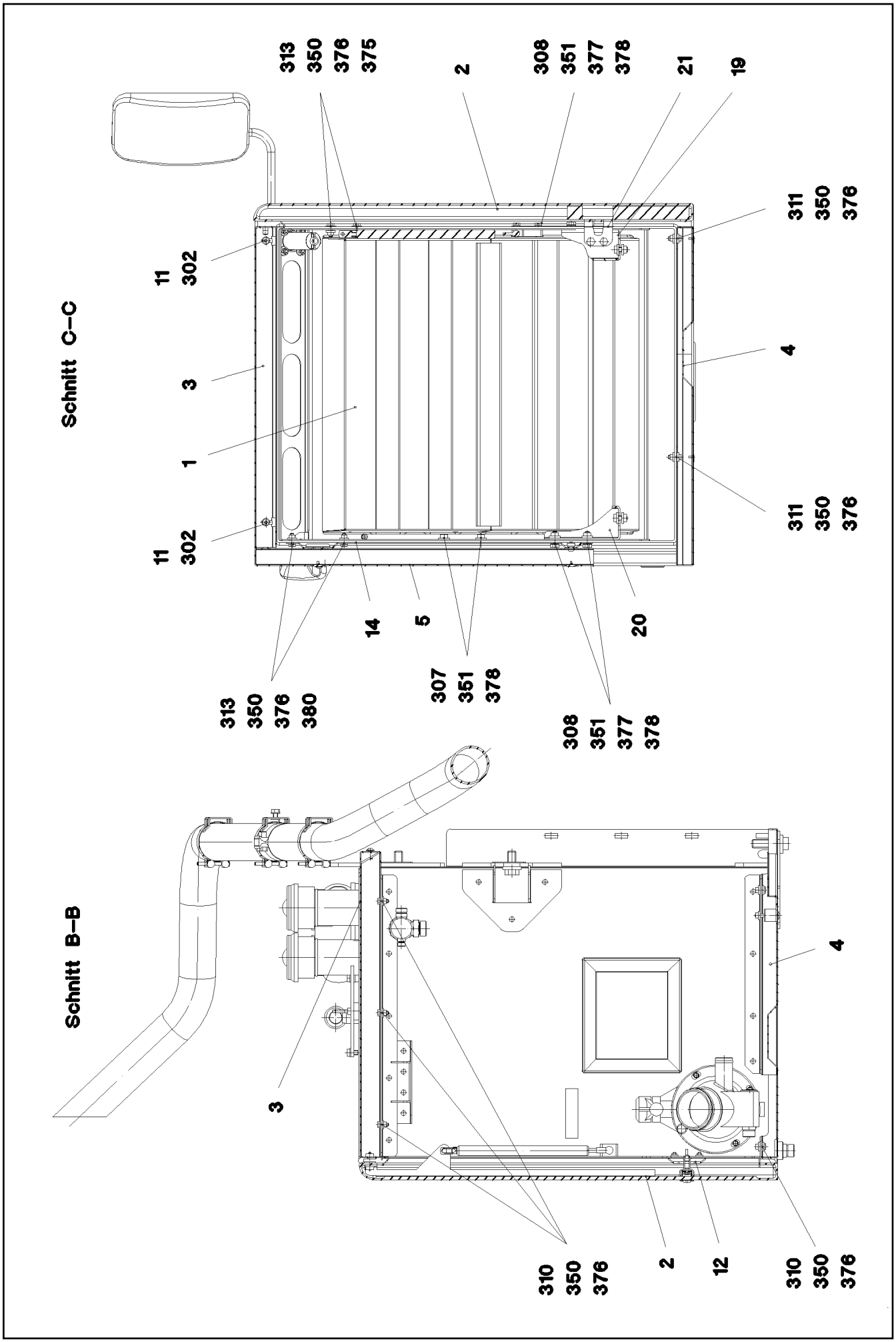
Schnitt C–C
313
350
376
375
2
308
351
377
378
21
19
11
302
3
1
11
302
311
350
376
4
311
350
376
14
5
20
313
350
376
380
307
351
378
308
351
377
378
Schnitt B–B
3
4
310
350
376
2
12
310
350
376

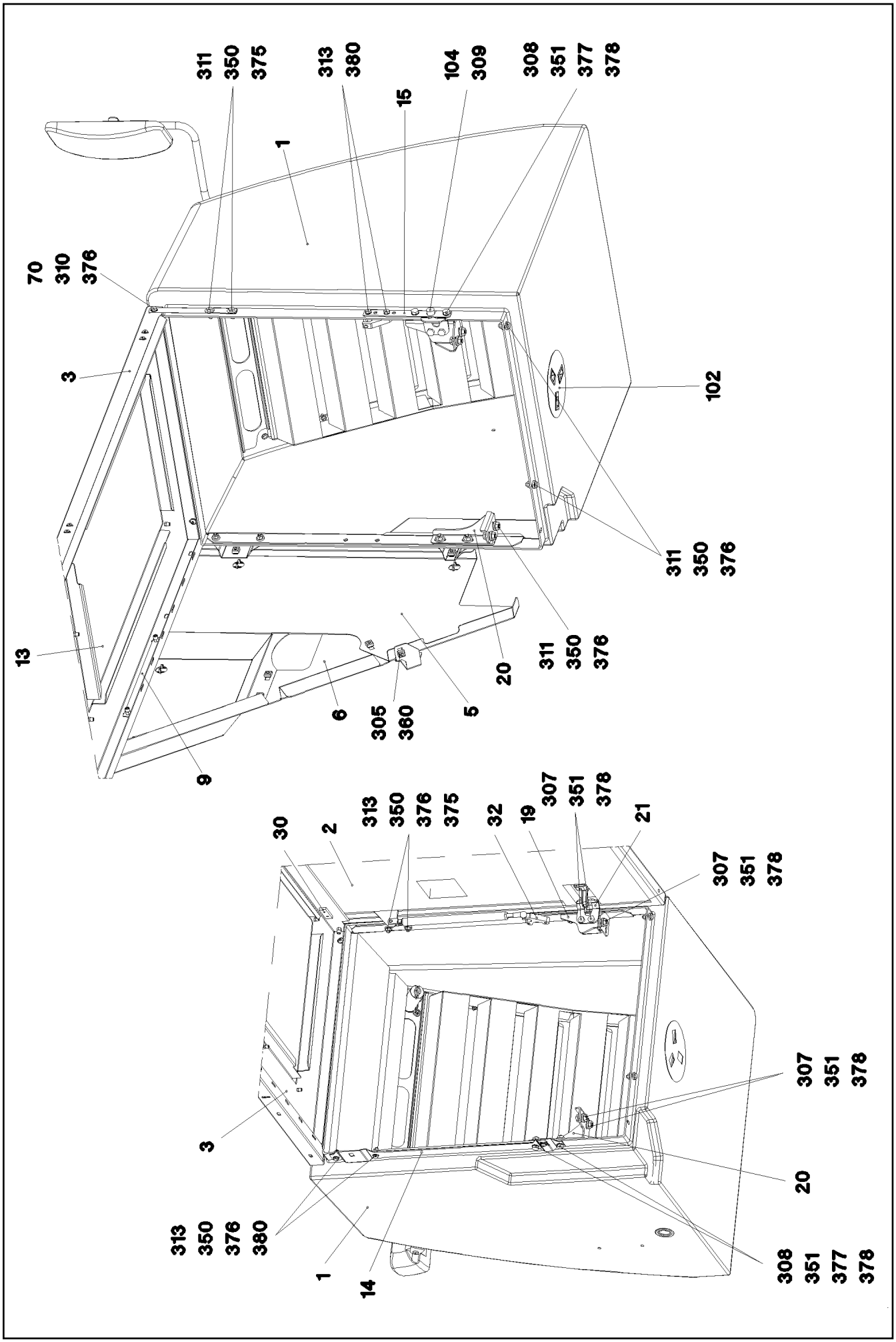


| | | |
|---|---|---|
| 16.2.2017<br>050822<br>LIEBHERR | etk_en_de_048005 LTR 1100<br><br>SLEWING PLATFORM PANELLING RIG<br>DREHBUEHNENVERKLEIDUNG RE. | ❑ 125 (5/8)<br><br>⇨ 2 510 100<br>96 44 750 08 |

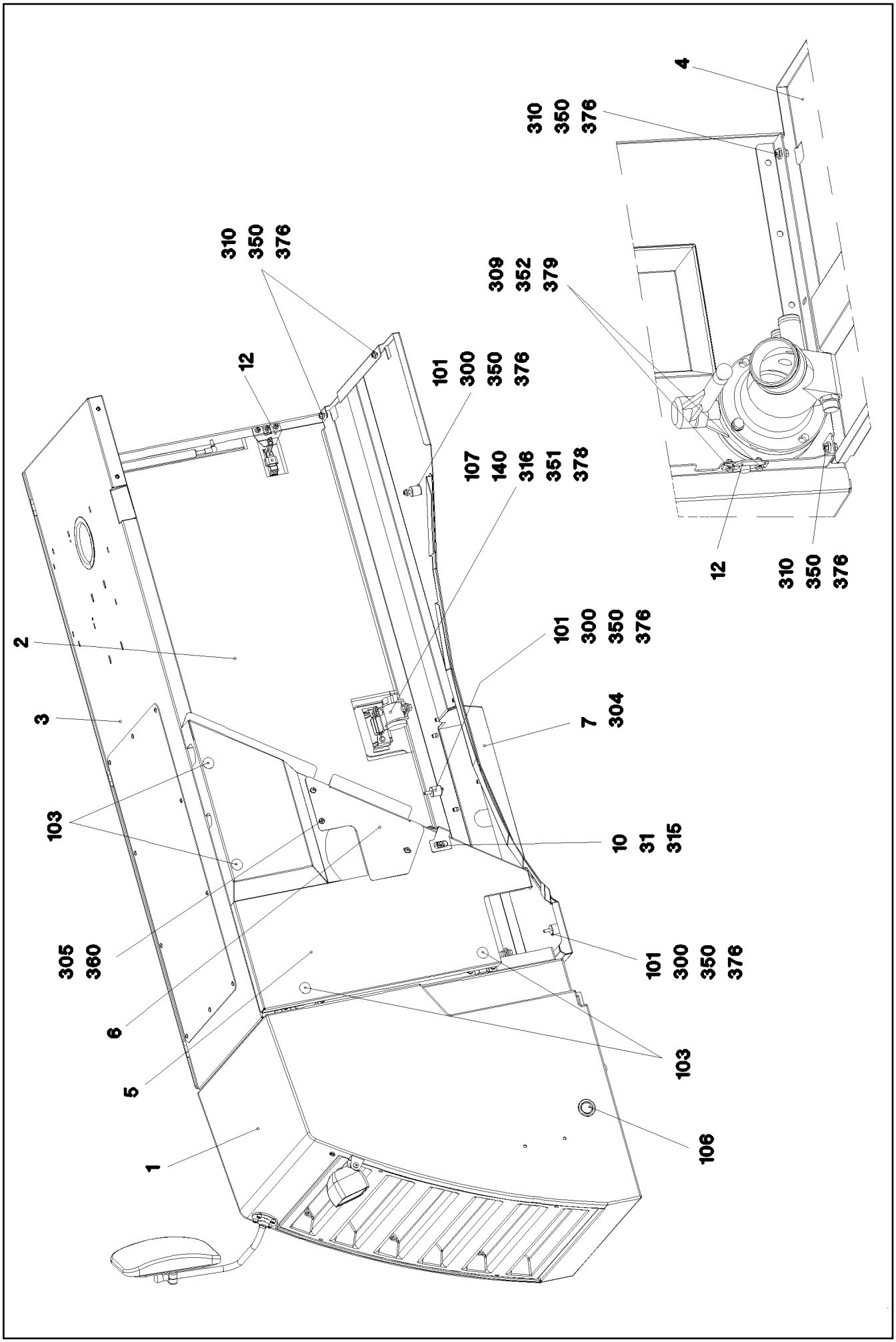


| | | |
|---|---|---|
| 16.2.2017<br>050823<br>LIEBHERR | etk_en_de_048005 LTR 1100<br><br>SLEWING PLATFORM PANELLING RIG<br>DREHBUEHNENVERKLEIDUNG RE. | ❑ 126 (6/8)<br><br>⇨ 2 510 100<br>96 44 750 08 |

| Pos. | Item | Quantity | Description | Bezeichnung |
|---|---|---|---|---|
| 1 | 96 44 046 08 | 1 | RADIATOR HOOD CPL.<br>➩ 2 510 018 96 44 046 08 | KUEHLERHAUBE KPL. |
| 2 | 96 44 614 08 | 1 | FLAP RIGHT PRE-ASS.<br>➩ 2 510 072 96 44 614 08 | KLAPPE VORM.RECHTS |
| 3 | 96 31 626 08 | 1 | COVER PLATE ST.CONST. | DECKBLECH SCHWK. |
| 4 | 96 41 550 08 | 1 | FLOOR SHEET WELDED | BODENBLECH SCHWK. |
| 5 | 97 65 621 08 | 1 | PLATE 2X1144X1092 ALMG3 H111 SPF | BLECH |
| 6 | 97 65 623 08 | 1 | PLATE 2X398X326 ALMG3 H111 SPF | BLECH |
| 7 | 97 59 572 08 | 1 | PLATE 2X438X751 DC01 | BLECH |
| 8 | 96 30 622 08 | 1 | THREADED CARRIER FE//ZNNI8//CN//T0 | GEWINDETRAEGER |
| 9 | 96 30 654 08 | 1 | THREADED CARRIER FE//ZNNI8//CN//T0 | GEWINDETRAEGER |
| 10 | 97 65 667 08 | 1 | PLATE 3X164X86 DC01 FE//ZN20//C | BLECH |
| 11 | 97 55 297 08 | 2 | FRICTION DISK | REIBSCHEIBE |
| 12 | 95 41 137 08 | 1 | PLATE 4x63x90 S315MC FE//ZN20//C | BLECH |
| 13 | 97 75 310 08 | 1 | PLATE 3X930X580 ALMG3 H111 SPF | BLECH |
| 14 | 97 65 622 08 | 1 | PLATE 2X722X83 DC01 FE//ZN20//C | BLECH |
| 15 | 97 30 263 08 | 1 | PLATE 2X235X27 DC01 FE//ZNNI8//CN//T0 | BLECH |
| 19 | 97 38 619 08 | 1 | CONSOLE 4X193X136 S315MC FE//ZN20//C | KONSOLE |
| 20 | 97 38 620 08 | 1 | CONSOLE 4X151X256 S315MC FE//ZNNI8//C | KONSOLE |
| 21 | 97 38 621 08 | 1 | PLATE 4X65X80 S315MC FE//ZN20//C | BLECH |
| 30 | 95 36 953 08 | 3 | THREADED PLATE 8X20X60 S235JR FE//ZN | GEWINDEPLATTE |
| 31 | 95 38 734 08 | 1 | SLEEVE 25X20 11SMN37 FE//ZNNI8//CN//T0 | HUELSE |
| 32 | 97 30 132 08 | 1 | PLATE 15X47X70 S355MC FE//ZNNI8//CN//T | BLECH |
| 70 | 97 48 804 08 | 1 | PLATE 2X236X22 DC01 FE//ZN20//C | BLECH |
| 100 | 96 44 555 08 | 1 | SOUND PROOFING/SOUND INSULAT.<br>➩ 2 510 108 96 44 555 08 | SCHALLDAEMMUNG |
| 101 | 72 69 065 08 | 3 | CIRCULAR BEARING B30X30XM8 | RUNDLAGER |
| 102 | 96 35 445 08 | 1 | COVER COMPL. | DECKEL KPL. |
| (1) | 97 47 926 08 | 1 | PLATE 1X176X176 X5CRNI18-10 | BLECH |
| (2) | 10 29 615 7 | 3 | SNAP LOCK ABS | SCHNAPPVERSCHLUSS |
| (3) | 26 21 039 08 | 0.6 | EDGE PROTECTION 1-2X9,5X6,5 | KANTENSCHUTZ |
| 103 | 59 15 709 08 | 6 | COVER LID 28X30 POLYACETAL | ABDECKKAPPE |
| 104 | 72 69 073 08 | 2 | MEGI BUFFER 20X15-M6 NR 55SHORE A | MEGIPUFFER |
| 105 | 60 27 021 08 | 1 | GROMMET 10/13,5/17,5 PVC | DURCHFUEHRUNGSTUELLE |
| 106 | 60 27 173 08 | 1 | DIAPHRAGM GROMMET 35,5/47/53 PVC | MEMBRAN-DURCHFUEHRUNG |
| 107 | 10 33 448 8 | 1 | TENSION FLANGE 47X2220 | ZUGGURT |
| 140 | 43 31 028 08 | 1 | RETAINING SPRING 3 VERZ | SICHERUNGSFEDER |
| 300 | 10 41 285 4 | 3 | BUTTON HEAD SCREW AEHNL.ISO 7380-2 | HALBRUNDKOPFSCHRAUBE |
| 301 | 10 41 285 1 | 10 | BUTTON HEAD SCREW AEHNL.ISO 7380-2 | HALBRUNDKOPFSCHRAUBE |
| 302 | 10 41 286 1 | 2 | BUTTON HEAD SCREW AEHNL.ISO 7380-2 | HALBRUNDKOPFSCHRAUBE |
| 303 | 10 87 546 8 | 1 | BUTTON HEAD SCREW ISO 7380-2 M6X16 | HALBRUNDKOPFSCHRAUBE |
| 304 | 40 97 041 08 | 8 | BUTTON HEAD SCREW ISO 7380-2 M8X20 | HALBRUNDKOPFSCHRAUBE |
| 305 | 10 41 285 7 | 6 | BUTTON HEAD SCREW AEHNL.ISO 7380-2 | HALBRUNDKOPFSCHRAUBE |
| 306 | 40 86 002 08 | 6 | COUNTERSUNK SCREW DIN 7991 M6X16 8. | SENKSCHRAUBE |
| 307 | 11 63 181 6 | 6 | HEX SCREW ISO 4017 M10X25 8.8 FLZN SP | SECHSKANTSCHRAUBE |
| 308 | 40 00 828 | 4 | HEX SCREW ISO 4017 M10X30 8.8 A3C | SECHSKANTSCHRAUBE |
| 309 | 11 64 489 9 | 3 | HEX SCREW ISO 4017 M6X20 8.8 480H SPF | SECHSKANTSCHRAUBE |
| 310 | 11 65 176 7 | 8 | HEX SCREW ISO 4017 M8X20 8.8 480H SPF | SECHSKANTSCHRAUBE |
| 311 | 11 64 226 1 | 8 | HEX SCREW ISO 4017 M8X25 8.8 480H SPF | SECHSKANTSCHRAUBE |
| 313 | 40 65 076 08 | 6 | HEX SCREW ISO 4017 M8X25 8.8 A2C | SECHSKANTSCHRAUBE |
| 315 | 40 65 068 08 | 1 | HEX SCREW ISO 4017 M8X16 8.8 A2C | SECHSKANTSCHRAUBE |
| 316 | 40 65 098 08 | 1 | HEX SCREW ISO 4017 M10X20 8.8 A3C | SECHSKANTSCHRAUBE |
| 350 | 11 69 387 5 | 12 | HEX NUT ISO 4032 M8 8 480H SPF | SECHSKANTMUTTER |
| 351 | 41 15 144 08 | 11 | HEX NUT ISO 4032 M10 8 A3C | SECHSKANTMUTTER |
| 352 | 10 87 562 1 | 2 | HEX NUT ISO 4032 M6 8 480H SPF | SECHSKANTMUTTER |
| 360 | 41 30 034 08 | 6 | CAGE NUT M8 | KAEFIGMUTTER |
| 375 | 42 18 009 08 | 4 | WASHER ISO 7093-1 8 200HV A2C | SCHEIBE |
| 376 | 11 84 050 1 | 14 | WASHER DIN 7349 8,4 200HV FLZN SPF | SCHEIBE |
| 377 | 10 28 979 5 | 4 | WASHER ISO 7089 10 300HV FLZN SPF | SCHEIBE |
| 378 | 11 65 858 0 | 16 | WASHER DIN 7349 10,5 200HV-St FLZN SPF | SCHEIBE |

| Pos. | Item | Quantity | Description | Bezeichnung |
|---|---|---|---|---|
| 379 | 40 00 648 | 4 | WASHER DIN 7349 6,4 200HV A3C | SCHEIBE |
| 380 | 10 28 980 3 | 5 | WASHER ISO 7089 8 300HV 480H SPF | SCHEIBE |

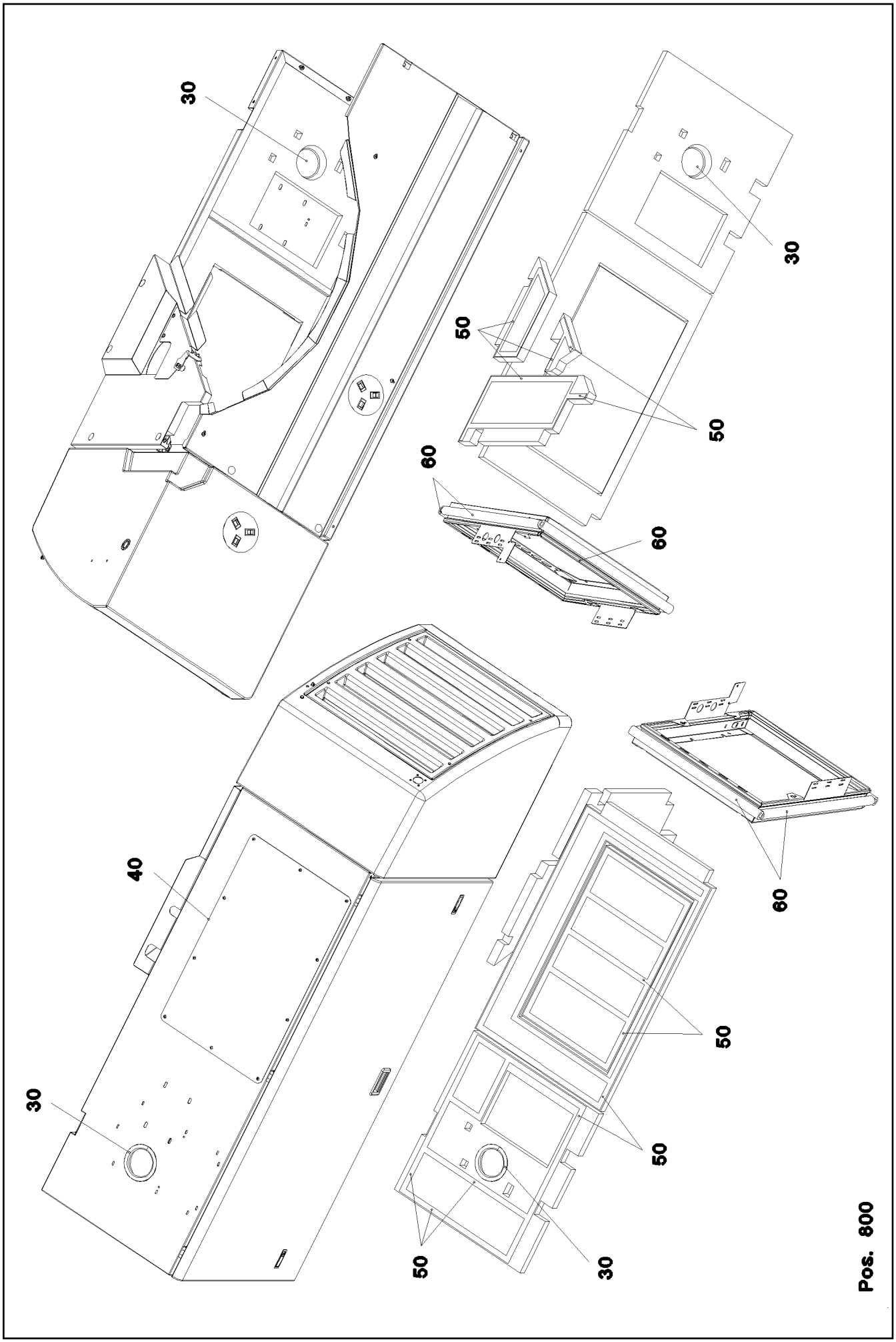


| | | |
|---|---|---|
| 16.2.2017<br>050824<br>LIEBHERR | **etk_en_de_048005 LTR 1100**<br><br>**SOUND PROOFING/SOUND INSULAT.**<br>**SCHALLDAEMMUNG** | ❑ 129 (1/2)<br><br>⇨ **2 510 108**<br>**96 44 555 08** |

| Pos. | Item | Quantity | Description | Bezeichnung |
|---|---|---|---|---|
| 30 | 26 21 055 08 | 0.55 | SEALING PROFILE 1-4X21,5X10 | DICHTPROFIL |
| 40 | 26 21 089 08 | 2.5 | CELL RUBBER 6X3X10000 CELL.RUBBER | ZELLGUMMI |
| 50 | 80 21 020 08 | 12 | ADHESIVE INSULATING STRIP 25MM PS18 | PILZKOPFBAND |
| 60 | 11 00 658 4 | 3.4 | INSULATING HOSE ISO 3302-1 E3 DN40 10 E | ISOLIERSCHLAUCH |
| 800 | 96 40 266 08 | 1 | SOUND PROOFING/SOUND INSULAT. LTM 1 | SCHALLDAEMMUNG |
| | | | ⇨ 9 640 266 08 96 40 266 08 | |

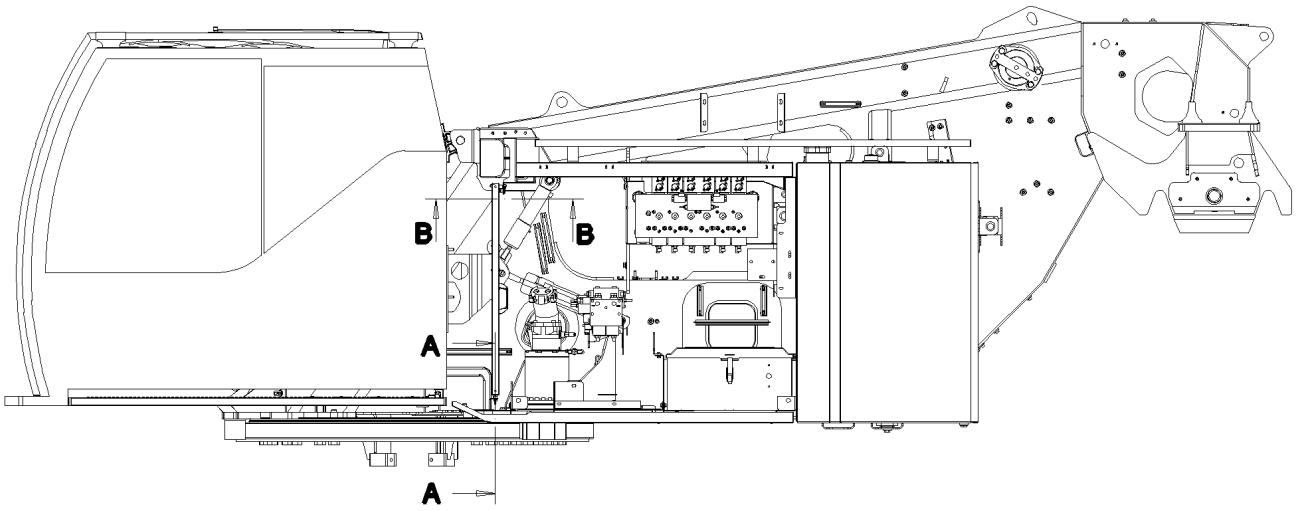


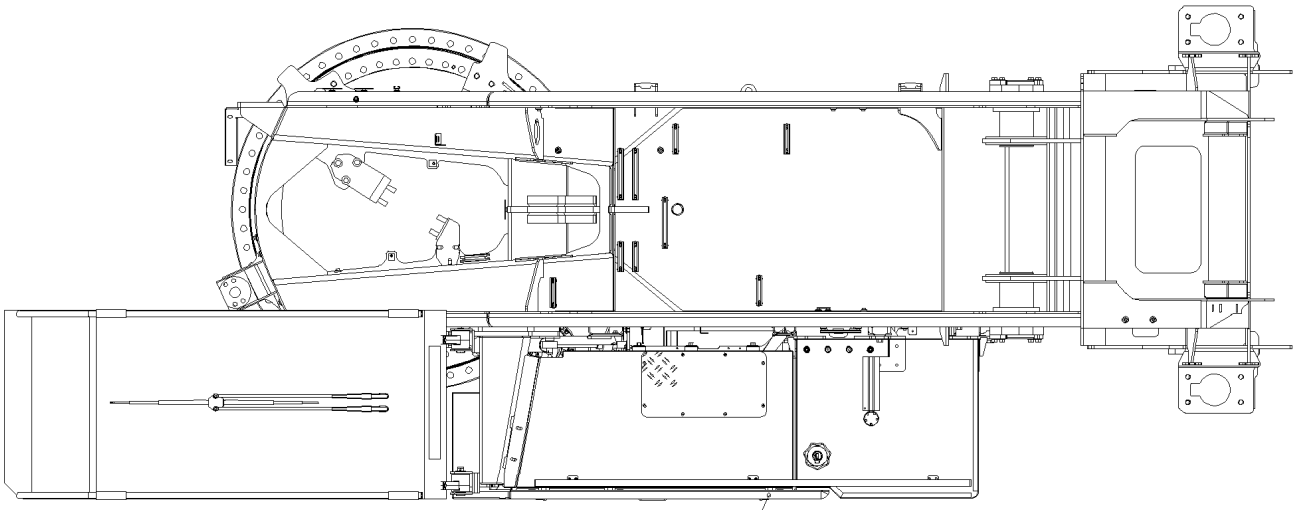

Schnitt B–B

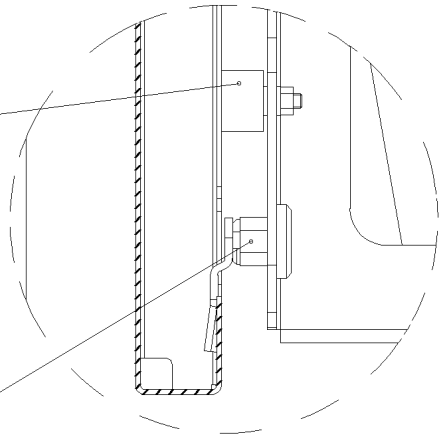


1
40
41

Schnitt A–A

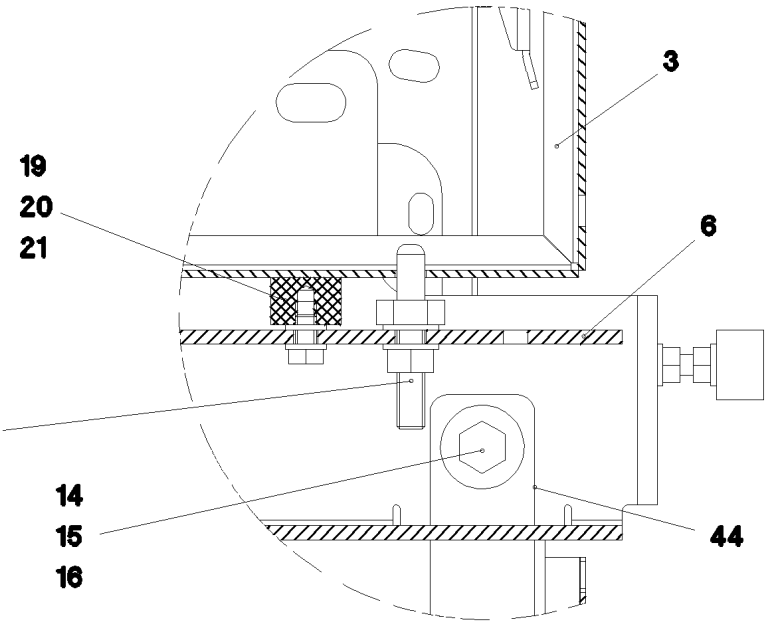

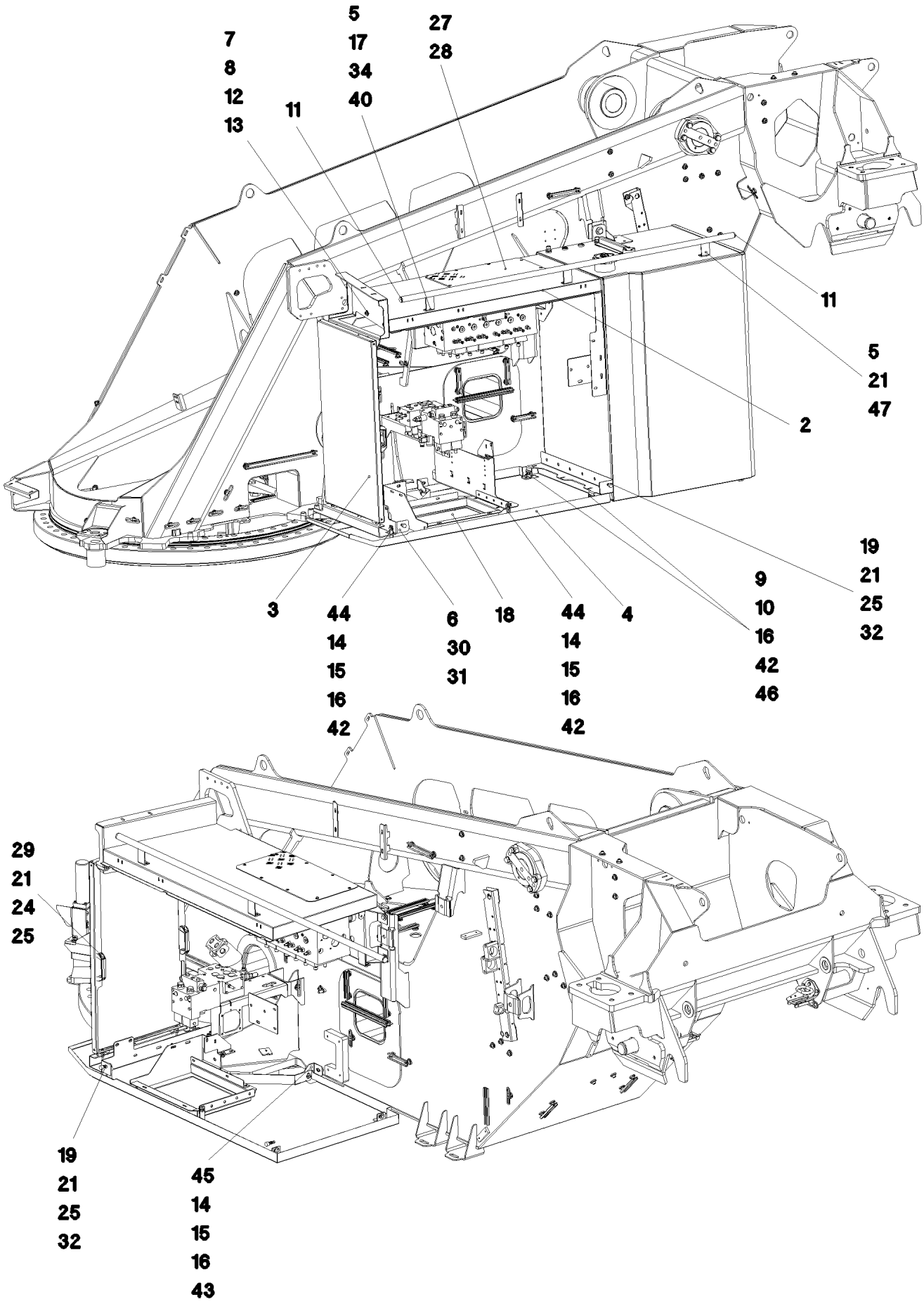


| | | |
|---|---|---|
| 16.2.2017<br>045402<br>LIEBHERR | etk_en_de_048005 LTR 1100<br><br>SLEWING PLATFORM PANELLING LEF<br>DREHBUEHNENVERKLEIDUNG LI. | ❑ 132 (2/3)<br><br>⇨ 2 510 200<br>96 41 258 08 |

| Pos. | Item | Quantity | Description | Bezeichnung |
|---|---|---|---|---|
| 1 | 96 42 011 08 | 1 | FLAP PRE-ASS.<br>⇨ 2 510 201 96 42 011 08 | KLAPPE VORM. |
| 2 | 96 42 019 08 | 1 | COVER PLATE ST.CONST. | DECKBLECH SCHWK. |
| 3 | 97 18 215 08 | 1 | ORIFICE 2X696X1108 ALMG3 H111 SPF | BLENDE |
| 4 | 96 36 794 08 | 1 | FLOOR SHEET WELDED | BODENBLECH SCHWK. |
| 5 | 96 45 328 08 | 1 | GRIP PIPE WELDED | GRIFFROHR SCHWK. |
| 6 | 97 18 217 08 | 1 | PLATE 4X763X326 S315MC | BLECH |
| 7 | 97 18 218 08 | 1 | PLATE 4X531X839 S315MC | BLECH |
| 8 | 11 65 163 2 | 3 | HEX SCREW ISO 4017 M10X20 8.8 FLZN SP | SECHSKANTSCHRAUBE |
| 9 | 96 31 781 08 | 2 | HOLDER FE//ZNNI8//CN//T0 | HALTER |
| 10 | 11 65 176 7 | 2 | HEX SCREW ISO 4017 M8X20 8.8 480H SPF | SECHSKANTSCHRAUBE |
| 11 | 77 90 205 08 | 2 | MULTI-PLATE PLUG PE-LLD | LAMELLENSTOPFEN |
| 12 | 41 15 144 08 | 3 | HEX NUT ISO 4032 M10 8 A3C | SECHSKANTMUTTER |
| 13 | 11 49 188 9 | 6 | WASHER ISO 7093-1 10 300HV FLZN SPF | SCHEIBE |
| 14 | 11 64 226 1 | 4 | HEX SCREW ISO 4017 M8X25 8.8 480H SPF | SECHSKANTSCHRAUBE |
| 15 | 11 69 387 5 | 9 | HEX NUT ISO 4032 M8 8 480H SPF | SECHSKANTMUTTER |
| 16 | 42 18 009 08 | 13 | WASHER ISO 7093-1 8 200HV A2C | SCHEIBE |
| 17 | 93 19 278 08 | 2 | AXLE HOLDER 5X20X46 S700MC | ACHSHALTER |
| 18 | 97 09 288 08 | 1 | PLATE 3X129X50 DC01 FE//ZN20//C | BLECH |
| 19 | 72 69 073 08 | 4 | MEGI BUFFER 20X15-M6 NR 55SHORE A | MEGIPUFFER |
| 20 | 11 64 249 7 | 2 | HEX SCREW ISO 4017 M6X10 8.8 480H SPF | SECHSKANTSCHRAUBE |
| 21 | 10 87 564 7 | 20 | WASHER ISO 7089 6 200HV 480H SPF | SCHEIBE |
| 22 | 40 97 109 08 | 2 | CARRYING BOLT M8 | STUETZSCHRAUBE |
| 23 | 10 28 980 3 | 4 | WASHER ISO 7089 8 300HV 480H SPF | SCHEIBE |
| 24 | 11 64 489 9 | 4 | HEX SCREW ISO 4017 M6X20 8.8 480H SPF | SECHSKANTSCHRAUBE |
| 25 | 10 87 562 1 | 12 | HEX NUT ISO 4032 M6 8 480H SPF | SECHSKANTMUTTER |
| 26 | 72 66 122 08 | 2 | MEGI BUFFER | MEGIPUFFER |
| 27 | 97 51 516 08 | 1 | PLATE 3.5X590X310 ALMG3 H114 | BLECH |
| 28 | 40 73 502 08 | 8 | HEX SCREW DIN 6921 M6X16 8.8 A2C | SECHSKANTSCHRAUBE |
| 29 | 70 42 545 08 | 2 | GRIP KUNSTSTOFF | GRIFF |
| 30 | 11 64 538 4 | 2 | HEX SCREW ISO 4017 M12X40 8.8 FLZN SP | SECHSKANTSCHRAUBE |
| 31 | 10 00 637 0 | 2 | WASHER DIN 7349 13 200HV FLZN SPF | SCHEIBE |
| 32 | 40 01 998 | 2 | HEX SCREW ISO 4017 M6X40 8.8 A2C | SECHSKANTSCHRAUBE |
| 34 | 10 41 285 2 | 4 | BUTTON HEAD SCREW AEHNL.ISO 7380-2 | HALBRUNDKOPFSCHRAUBE |
| 35 | 70 42 533 08 | 2 | HOUSING GD-ZN SW GEPULVERT | GEHAEUSE |
| 36 | 70 42 534 08 | 2 | ACTUATION SPIKE GD-ZN SW GEPULVERT | BETAETIGUNGSDORN |
| 37 | 70 42 748 08 | 2 | O-RING 12X2 NBR70 | O-RING |
| 38 | 70 42 551 08 | 2 | TONGUE | ZUNGE |
| 39 | 70 42 711 08 | 1 | HOLLOW KEY | HOHLSCHLUESSEL |
| 40 | 95 36 953 08 | 5 | THREADED PLATE 8X20X60 S235JR FE//ZN | GEWINDEPLATTE |
| 41 | 40 86 002 08 | 6 | COUNTERSUNK SCREW DIN 7991 M6X16 8. | SENKSCHRAUBE |
| 42 | 40 97 041 08 | 5 | BUTTON HEAD SCREW ISO 7380-2 M8X20 | HALBRUNDKOPFSCHRAUBE |
| 43 | 10 41 285 4 | 1 | BUTTON HEAD SCREW AEHNL.ISO 7380-2 | HALBRUNDKOPFSCHRAUBE |
| 44 | 97 08 360 08 | 3 | PLATE 4X30X128 S315MC FE//ZN20//C | BLECH |
| 45 | 97 08 366 08 | 1 | ANGLE 4x145x80 S315MC FE//ZNNI8//CN//T0 | WINKEL |
| 46 | 41 30 032 08 | 2 | CAGE NUT M8 A2/ST A2K | KAEFIGMUTTER |
| 47 | 11 69 282 4 | 2 | HEX SCREW ISO 4017 M6X12 8.8 480H SPF | SECHSKANTSCHRAUBE |

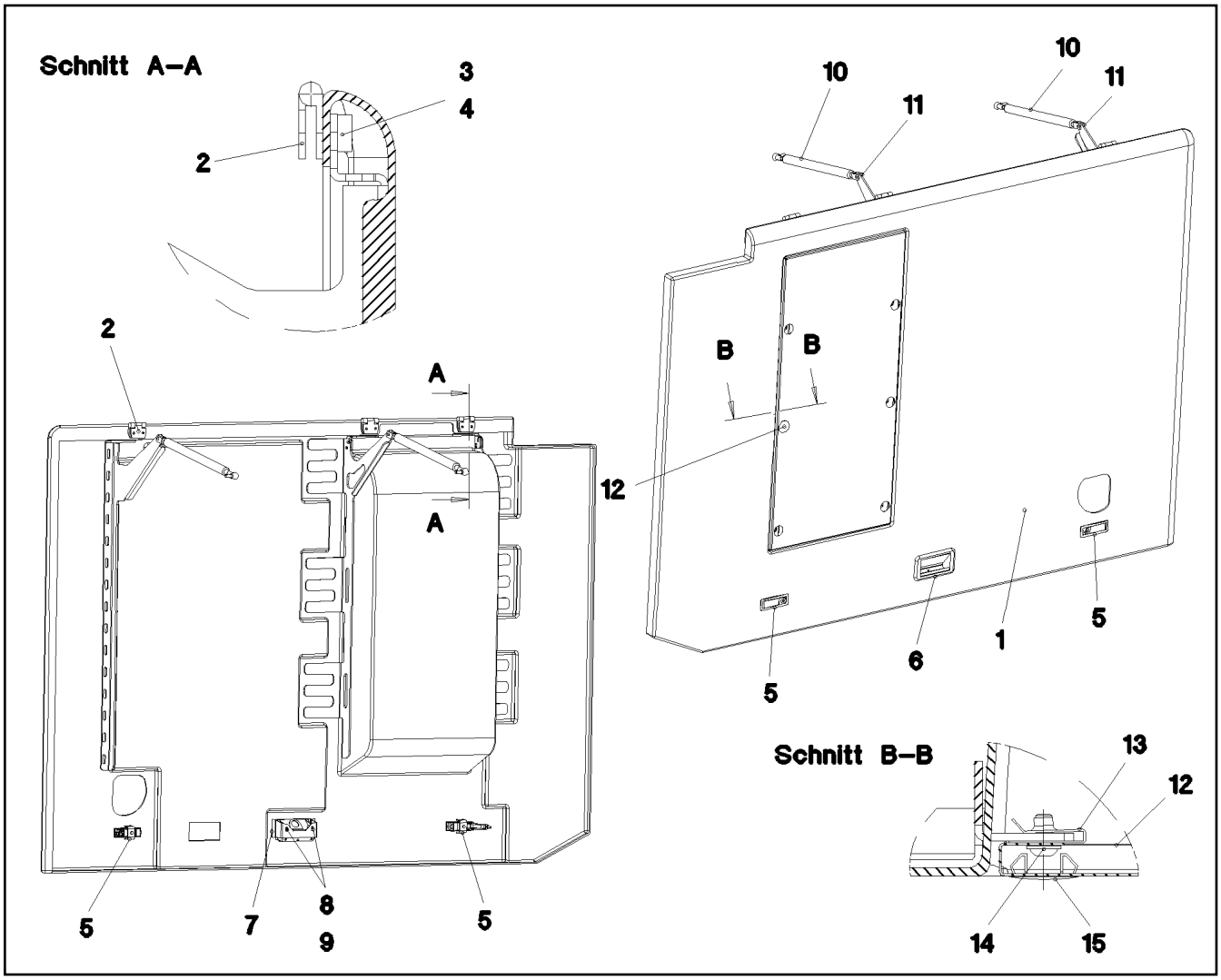


| Pos. | Item | Quantity | Description | Bezeichnung |
|---|---|---|---|---|
| 1 | 96 42 021 08 | 1 | FLAP COMPL. | KLAPPE KPL. |
| 2 | 70 42 281 08 | 3 | HINGE 35X35X50/180° ST FE//ZN12//B | SCHARNIER |
| 3 | 40 86 041 08 | 6 | COUNTERSUNK SCREW AEHNL.DIN 7991 | SENKSCHRAUBE |
| 4 | 95 36 953 08 | 3 | THREADED PLATE 8X20X60 S235JR FE//ZN | GEWINDEPLATTE |
| 5 | 11 45 042 0 | 2 | LEVER FASTENER | HEBELVERSCHLUSS |
| 6 | 95 55 000 08 | 1 | FINGER-HOLD X0 KUNSTSTOFF | GRIFFMULDE |
| 7 | 70 42 297 08 | 1 | CONSOLE | KONSOLE |
| 8 | 11 69 282 4 | 2 | HEX SCREW ISO 4017 M6X12 8.8 480H SPF | SECHSKANTSCHRAUBE |
| 9 | 10 87 564 8 | 2 | WASHER ISO 7093-1 6 200HV 480H SPF | SCHEIBE |
| 10 | 59 10 619 08 | 2 | GAS SPRING 23X265-500N | GASFEDER |
| 11 | 72 51 118 08 | 2 | ES PIN 8X16 VERZ | ES BOLZEN |
| 12 | 96 33 731 08 | 1 | SHUTTER GLUED SPF | BLENDE GEKLEBT |
| 13 | 41 30 070 08 | 6 | SHEET METAL NUT M8 | BLECHMUTTER |
| 14 | 10 41 285 7 | 6 | BUTTON HEAD SCREW AEHNL.ISO 7380-2 | HALBRUNDKOPFSCHRAUBE |
| 15 | 59 15 709 08 | 6 | COVER LID 28X30 POLYACETAL | ABDECKKAPPE |

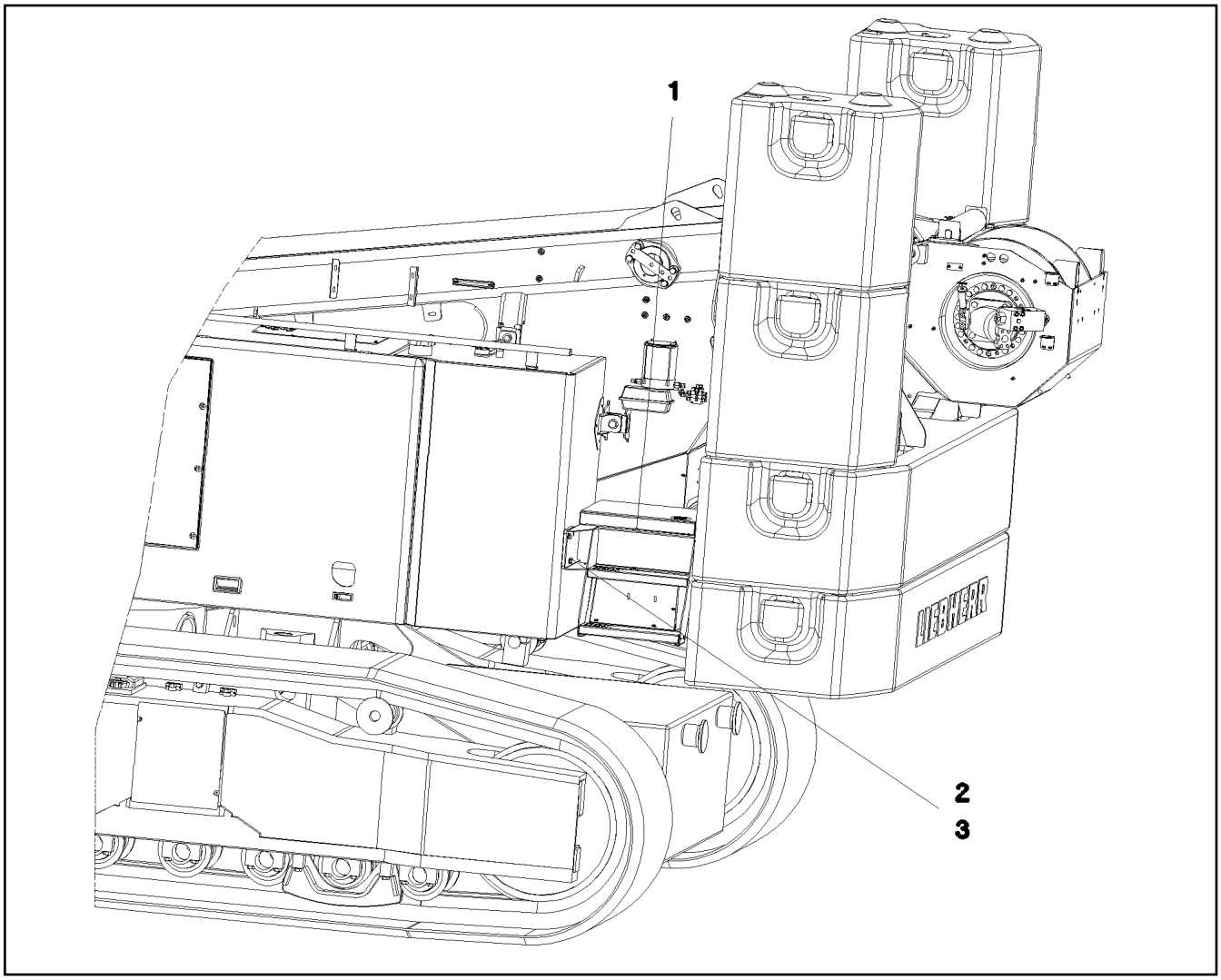


| Pos. | Item | Quantity | Description | Bezeichnung |
|---|---|---|---|---|
| 1 | 96 42 014 08 | 1 | PLATFORM, PRE-ASSEMBLED<br>⇨ 2 515 007 96 42 014 08 | PODEST VORM. |
| 2 | 11 00 272 4 | 6 | HEX SCREW ISO 4017 M12X20 10.9 FLZN SP | SECHSKANTSCHRAUBE |
| 3 | 42 15 000 08 | 6 | WASHER EN 14399-6 12 ST A2K | SCHEIBE |

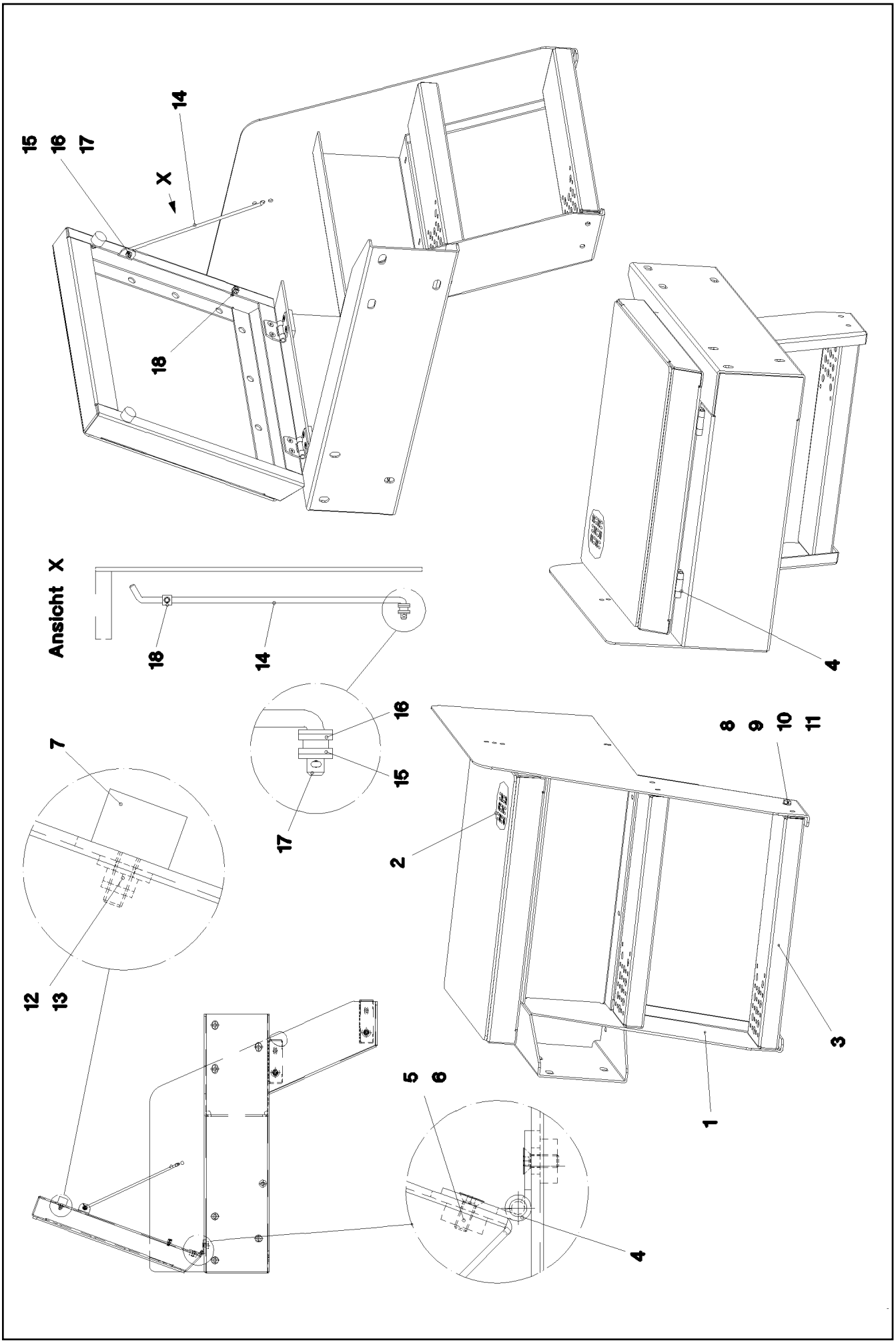


| | | |
|---|---|---|
| 16.2.2017<br>044980<br>LIEBHERR | **etk_en_de_048005 LTR 1100**<br><br>**PLATFORM, PRE-ASSEMBLED**<br>**PODEST VORM.** | ❑ 136 (1/2)<br><br>⇨ **2 515 007**<br>**96 42 014 08** |

| Pos. | Item | Quantity | Description | Bezeichnung |
|---|---|---|---|---|
| 1 | 96 42 015 08 | 1 | BRACKET WELDED CONST. | KONSOLE SCHWK. |
| 2 | 96 43 884 08 | 1 | COVER WELDED | DECKEL SCHWK. |
| 3 | 97 23 508 08 | 2 | TREAD ELOXIERT | AUFSTIEGSTRITT |
| 4 | 10 29 468 4 | 2 | HINGE 35X35X50/180° NIROSTA ROHBLANK | SCHARNIER |
| 5 | 95 36 953 08 | 4 | THREADED PLATE 8X20X60 S235JR FE//ZN | GEWINDEPLATTE |
| 6 | 40 86 002 08 | 8 | COUNTERSUNK SCREW DIN 7991 M6X16 8. | SENKSCHRAUBE |
| 7 | 72 66 122 08 | 2 | MEGI BUFFER | MEGIPUFFER |
| 8 | 11 65 176 7 | 8 | HEX SCREW ISO 4017 M8X20 8.8 480H SPF | SECHSKANTSCHRAUBE |
| 9 | 10 28 980 3 | 8 | WASHER ISO 7089 8 300HV 480H SPF | SCHEIBE |
| 10 | 42 18 009 08 | 8 | WASHER ISO 7093-1 8 200HV A2C | SCHEIBE |
| 11 | 41 19 005 08 | 8 | HEX NUT DIN 985 M8 8 A2C | SECHSKANTMUTTER |
| 12 | 40 00 648 | 2 | WASHER DIN 7349 6,4 200HV A3C | SCHEIBE |
| 13 | 41 19 004 08 | 2 | HEX NUT DIN 985 M6 8 A2C | SECHSKANTMUTTER |
| 14 | 97 67 995 08 | 1 | BRACKET 6.0X314 S235JRG2 FE//ZNNI8//CN/ | BUEGEL |
| 15 | 60 27 172 08 | 1 | GROMMET 6/9/12 PVC | DURCHFUEHRUNGSTUELLE |
| 16 | 10 87 564 7 | 2 | WASHER ISO 7089 6 200HV 480H SPF | SCHEIBE |
| 17 | 43 30 018 08 | 1 | SPLIT PIN ISO 1234 2X12 ST A3C | SPLINT |
| 18 | 70 42 805 08 | 1 | CABLE CLAMP POLYAMID | LEITUNGSHALTER |

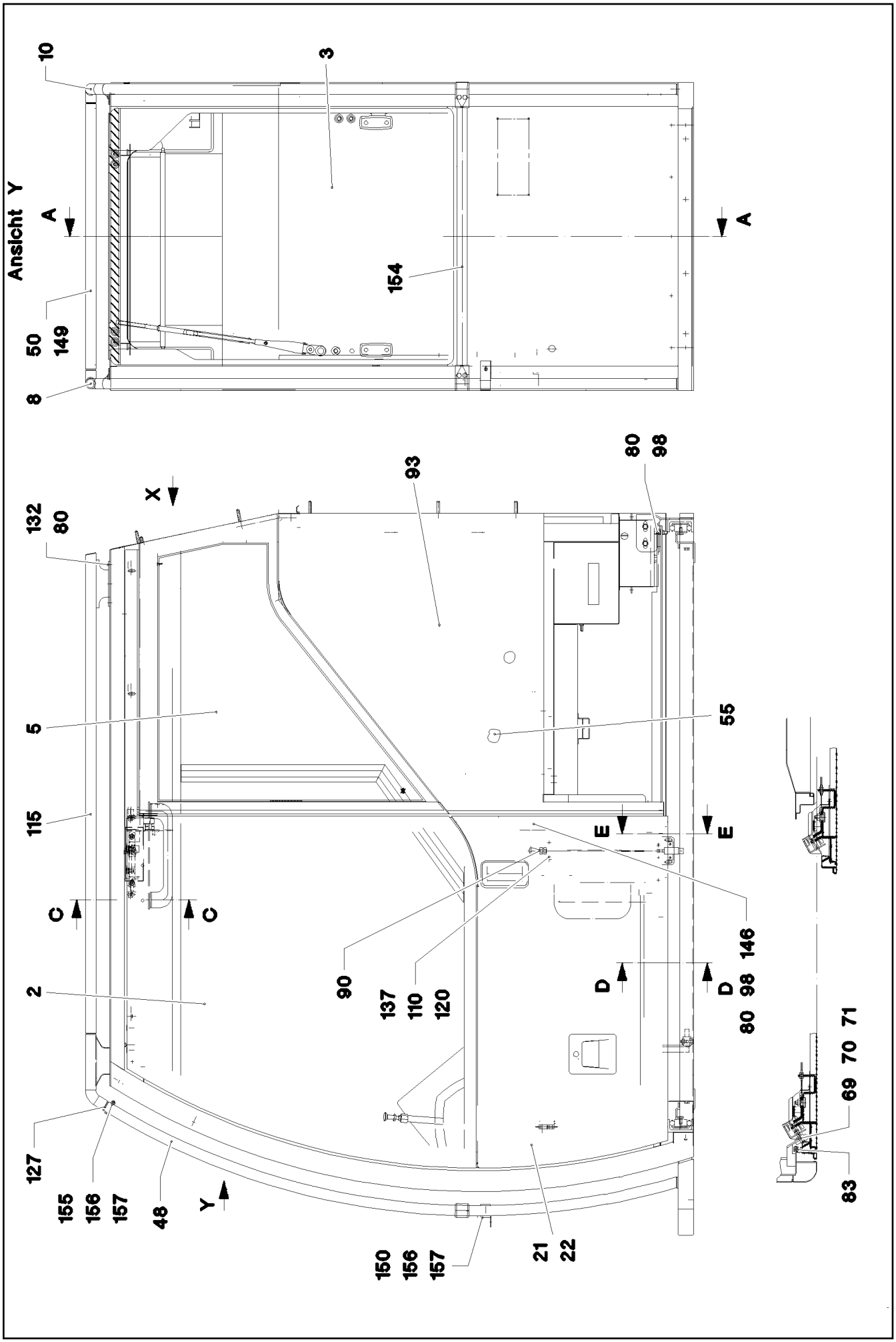


| | | |
|---|---|---|
| 16.2.2017<br>039981<br>LIEBHERR | etk_en_de_048005 LTR 1100<br><br>CABIN, GLAZED<br>KABINE VERGLAST | 138 (1/6)<br><br>2 520 000<br>91 49 872 08 |

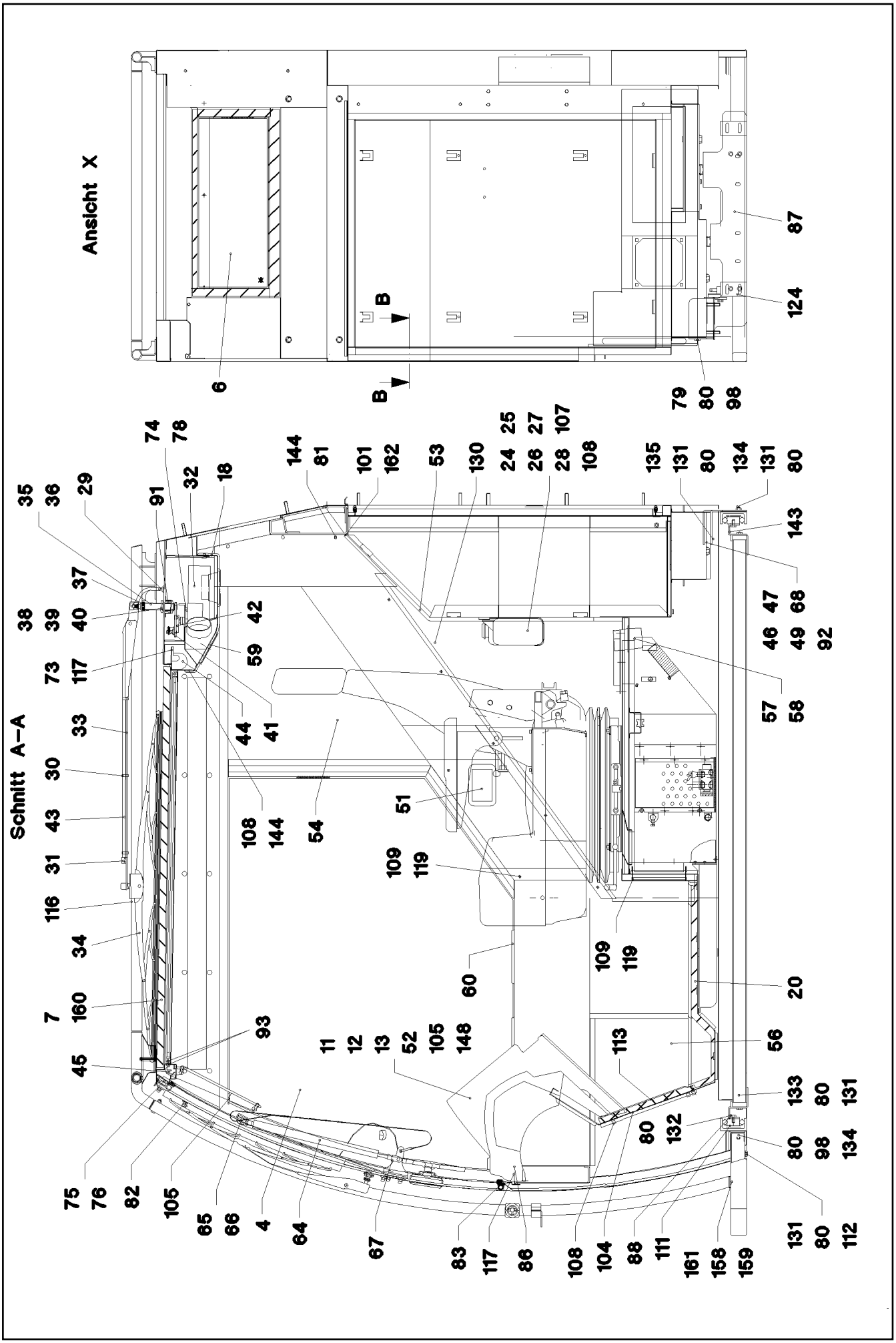


| | | |
|---|---|---|
| 16.2.2017<br>039982<br>LIEBHERR | etk_en_de_048005 LTR 1100<br><br>CABIN, GLAZED<br>KABINE VERGLAST | 139 (2/6)<br><br>2 520 000<br>91 49 872 08 |

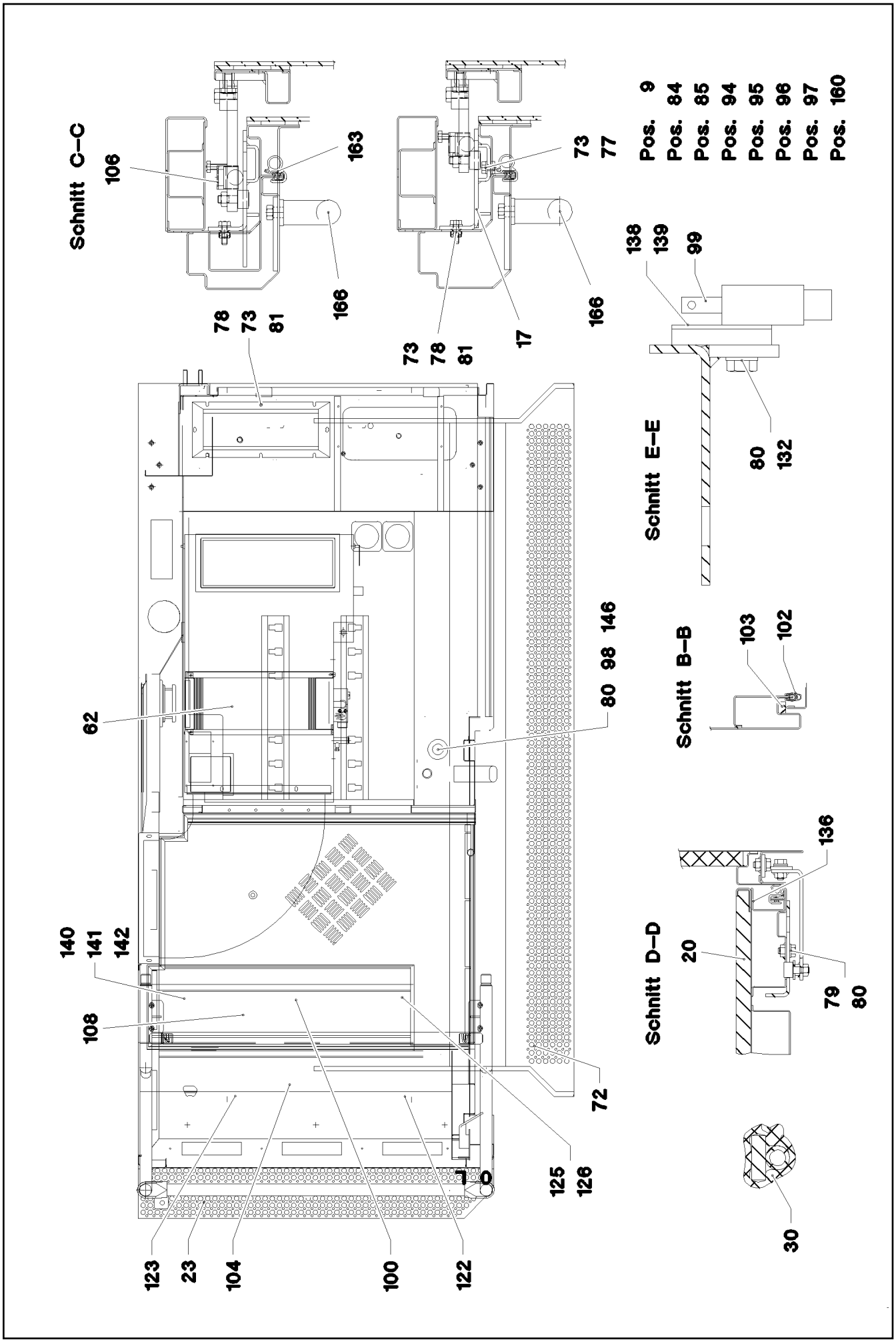
Schnitt C–C
106
163
166
78
73
81
73
78
81
17
166
73
77
Pos. 9
Pos. 84
Pos. 85
Pos. 94
Pos. 95
Pos. 96
Pos. 97
Pos. 160
138
139
99
Schnitt E–E
80
132
Schnitt B–B
103
102
62
80 98 146
Schnitt D–D
136
20
79
80
140
141
142
108
72
125
126
30
123
23
104
100
122

| Pos. | Item | Quantity | Description | Bezeichnung |
|---|---|---|---|---|
| 2 | 91 10 037 08 | 1 | DOOR CPL.<br>➪ 2 522 91 10 037 08 | TUER KPL. |
| 3 | 92 48 796 08 | 1 | FRONT WINDOW CPL.<br>➪ 2 520 001 92 48 796 08 | FRONTSCHEIBE KPL. |
| 4 | 72 57 406 08 | 1 | SIDE PANE 4MM SPF | SEITENSCHEIBE |
| 5 | 72 57 407 08 | 1 | SIDE PANE 4MM ESG-GLAS SPF | SEITENSCHEIBE |
| 6 | 72 57 408 08 | 1 | REAR WINDOW 4MM SPF | HECKSCHEIBE |
| 7 | 72 57 409 08 | 1 | ROOF WINDOW 20MM SPF | DACHSCHEIBE |
| 8 | 38 00 199 08 | 1 | HOLDER | HALTER |
| 9 | 91 49 864 08 | 1 | CABIN SHEET METAL SECTIONS RAL 7037 | KABINE BLECHTEILE |
| (1) | 91 49 865 08 | 1 | CABIN NIBBLING PARTS | KABINE NIBBELTEILE |
| (2) | 92 11 781 08 | 1 | DOOR ST.CONST. | TUER SCHWK. |
| 10 | 38 00 201 08 | 1 | HOLDER | HALTER |
| 11 | 97 03 425 08 | 1 | SEALING FRAME | DICHTRAHMEN |
| 12 | 92 13 430 08 | 1 | INSTRUMENT BOX CPL.<br>➪ 2 520 018 92 13 430 08 | ARMATURENKASTEN KPL. |
| 13 | 95 57 391 08 | 1 | PLATE 1,5X200X310 DC01 FE//ZN20//C | BLECH |
| 18 | 92 50 859 08 | 1 | INSIDE ROOF LINING CPL.<br>➪ 2 520 020 92 50 859 08 | HIMMEL KPL. |
| 20 | 95 67 926 08 | 1 | FLOOR MAT GUMMI+PU SPF | BODENMATTE |
| 21 | 77 32 071 08 | 1 | SIGN | SCHILD |
| 22 | 70 42 127 08 | 2 | BLIND RIVET 3,2X4,3-5,9 | BLINDNIET |
| 23 | 72 58 641 08 | 1 | PEDESTAL ALMG3 SPF | PODEST |
| 24 | 59 10 553 08 | 1 | CONTAINER 3L | BEHAELTER |
| 25 | 60 72 246 08 | 1 | HOLDER | HALTER |
| 26 | 59 10 554 08 | 2 | PUMP MP41 SPF | PUMPE |
| 27 | 59 10 555 08 | 2 | SPOUT 6,5/6,5/2 GUMMI | TUELLE |
| 28 | 59 10 053 08 | 6 | HOSE DN4-PVC 740081 | SCHLAUCH |
| 29 | 59 10 510 08 | 1 | SWIVEL ELBOW | WINKELSTUTZEN |
| 30 | 59 10 509 08 | 3 | CLAMP | KLAMMER |
| 31 | 59 10 574 08 | 1 | NOZZLE 104 | DUESE |
| 32 | 59 10 534 08 | 1 | WIPER MOTOR | WISCHERMOTOR |
| 33 | 59 10 631 08 | 1 | WIPER ARM | WISCHERARM |
| 34 | 59 10 634 08 | 1 | WIPER BLADE | WISCHERBLATT |
| 35 | 59 10 632 08 | 1 | BEARING BOLT | LAGERBOLZEN |
| 36 | 59 10 633 08 | 1 | WIPER BEARING | WISCHLAGER |
| 37 | 59 10 636 08 | 1 | CAP | KAPPE |
| 38 | 71 02 074 08 | 2 | WASHER 20,2X25X3XA GUMMI | SCHEIBE |
| 39 | 59 10 635 08 | 2 | WASHER | SCHEIBE |
| 40 | 59 10 640 08 | 2 | NUT M20X1 VERZ | MUTTER |
| 41 | 59 10 428 08 | 1 | PIVOT ROD | GELENKSTANGE |
| 42 | 59 10 630 08 | 1 | MOTOR LEVER | MOTORHEBEL |
| 43 | 59 10 513 08 | 1 | HOSE DN3,5 GUMMI | SCHLAUCH |
| 44 | 11 00 696 3 | 1 | BLIND | ROLLO |
| (1) | 10 87 267 2 | 1 | REGULATION REPAIR KIT | RS VERSTELLUNG |
| 45 | 11 00 696 4 | 1 | BLIND<br>➪ X11006964 11 00 696 4 | ROLLO |
| 46 | 94 55 691 08 | 1 | SCREW-ON CONNECTION X0 | EINSCHRAUBSTUTZEN |
| 47 | 51 07 543 08 | 1 | NOZZLE 0,4 | DUESE |
| 48 | 92 68 899 08 | 2 | RAILING ST.CONST. | RELING SCHWK. |
| 49 | 47 09 004 08 | 1 | PRESSURE GAUGE CONNECTION | MANOMETERANSCHLUSS |
| 50 | 95 67 938 08 | 1 | TUBE 30.0X77 0 X5CRNI18-10 | ROHR |
| 51 | 73 66 731 | 1 | ASH TRAY 92X57,5X26 | ASCHENBECHER |
| 52 | 59 15 722 08 | 5 | COVER LID 12,7 | ABDECKKAPPE |
| 53 | 95 66 755 08 | 1 | INSULATING MAT 10X770X894 PUR-SCHAU | DAEMMMATTE |
| 54 | 95 66 682 08 | 1 | INSULATING MAT 18X535X788 PUR-SCHAU | DAEMMMATTE |
| 55 | 95 66 683 08 | 1 | INSULATING MAT 18X714X759 PUR-SCHAU | DAEMMMATTE |
| 56 | 95 66 684 08 | 1 | INSULATING MAT 18X312X352 PUR-SCHAU | DAEMMMATTE |
| 57 | 28 85 002 08 | 2 | PIPE SOCKET KUNSTSTOFF | ROHRSTUTZEN |
| 58 | 70 42 076 08 | 8 | MANDRIL RIVET 4X10,3 | DORNNIET |

| Pos. | Item | Quantity | Description | Bezeichnung |
|---|---|---|---|---|
| 59 | 57 05 205 08 | 2 | AIR DISCHARGER D=98MM T=3MM PA | LUFTAUSSTROEMER |
| 60 | 55 30 186 08 | 3 | RECTANGULAR NOZZLE | RECHTECKDUESE |
| 62 | 95 66 761 08 | 1 | FLOOR MAT 16X572X724 HSG/ZP30S-16 | BODENMATTE |
| 64 | 59 15 099 08 | 1 | GAS SPRING 23X325-400N | GASFEDER |
| 65 | 94 44 120 08 | 1 | PIN 12X40 CUZN39PB3 | BOLZEN |
| 66 | 70 42 712 08 | 1 | SAFETY DEVICE 8X0,94 | SL-SICHERUNG |
| 67 | 72 51 118 08 | 1 | ES PIN 8X16 VERZ | ES BOLZEN |
| 68 | 55 20 237 08 | 1 | EXHAUST SILENCER | SCHALLDAEMPFER |
| 69 | 70 42 736 08 | 1 | CLOSING PIN | SCHLIESSBOLZEN |
| 70 | 70 42 737 08 | 1 | THREADED PLATE | GEWINDEPLATTE |
| 71 | 11 18 271 7 | 1 | WASHER ISO 7093-1 12 300HV FLZN SPF | SCHEIBE |
| 72 | 95 66 291 08 | 1 | PEDESTAL x0 ALMG3 SPF | PODEST |
| 73 | 10 87 564 7 | 16 | WASHER ISO 7089 6 200HV 480H SPF | SCHEIBE |
| 74 | 42 40 005 08 | 3 | WASHER SPRING DIN 127 A 6 FST A2C | FEDERRING |
| 75 | 41 19 004 08 | 4 | HEX NUT DIN 985 M6 8 A2C | SECHSKANTMUTTER |
| 76 | 40 70 312 08 | 4 | COUNTERSUNK SCREW ISO 2009 M6X16 4. | SENKSCHRAUBE |
| 77 | 11 64 249 7 | 1 | HEX SCREW ISO 4017 M6X10 8.8 480H SPF | SECHSKANTSCHRAUBE |
| 78 | 11 64 489 9 | 15 | HEX SCREW ISO 4017 M6X20 8.8 480H SPF | SECHSKANTSCHRAUBE |
| 79 | 11 65 176 7 | 8 | HEX SCREW ISO 4017 M8X20 8.8 480H SPF | SECHSKANTSCHRAUBE |
| 80 | 10 28 980 3 | 50 | WASHER ISO 7089 8 300HV 480H SPF | SCHEIBE |
| 81 | 41 30 028 08 | 23 | CAGE NUT M6 | KAEFIGMUTTER |
| 82 | 96 49 682 08 | 1 | SPRAY NOZZLE | SPRITZDUESE |
| | | | ➪ 2 520 101 96 49 682 08 | |
| 83 | 26 21 095 08 | 4 | DOOR SEAL 2-4X14,8X30 EPDM | TUERDICHTUNG |
| 84 | 87 00 030 08 | 2.5 | SILICONE RUBBER Palette 200kg +HAERTE | SILIKONKAUTSCHUK |
| 85 | 81 12 051 08 | 1 | ADHESIVE CLEANER 250ML | HAFTREINIGER |
| 86 | 26 21 089 08 | 1.2 | CELL RUBBER 6X3X10000 CELL.RUBBER | ZELLGUMMI |
| 87 | 95 66 267 08 | 1 | PLATE 4X751X215 S315MC | BLECH |
| 88 | 95 66 268 08 | 1 | PLATE 4x440x161 S315MC | BLECH |
| 90 | 72 40 148 08 | 1 | LOCKING CABLE L=365MM | VERRIEGELUNGSZUG |
| | | | ➪ 2 520 040 72 40 148 08 | |
| 91 | 93 48 135 08 | 2 | TUBE 30X4X15 E355+N VERZ | ROHR |
| 92 | 92 12 641 08 | 1 | PIPE COMPL. 6X1X55 | ROHR KPL. |
| 93 | 10 87 579 3 | 9 | SHEET-METAL SCREW ISO 7049 ST4,2X9,5 | BLECHSCHRAUBE |
| 94 | 81 12 033 08 | 1 | ADHESIVE Kartoon 20stück | KLEBER |
| 95 | 81 12 029 08 | 1 | ADHESIVE 300ML -40/+90 °C | KLEBER |
| 96 | 81 12 035 08 | 1 | PRIMER 250ML | PRIMER |
| 97 | 81 12 031 08 | 1 | TOOLING AGENT KANISTER5L +5/+35 °C | ABGLAETTMITTEL |
| 98 | 41 19 005 08 | 26 | HEX NUT DIN 985 M8 8 A2C | SECHSKANTMUTTER |
| 99 | 70 42 111 08 | 1 | SPRING-LOADED LOCK VERZ | FEDERRIEGEL |
| 100 | 96 74 259 08 | 1 | CYLINDER MODIFICATION KIT | UMBAUSATZ ZYLINDER |
| (1) | 11 63 184 2 | 1 | PNEUMATIC CYLINDER ST/AL | PNEUMATIKZYLINDER |
| (2) | 97 42 614 08 | 2 | UNION PIECE RETOUCH 20X0 | VERSCHRAUBUNG NACHARBEI |
| 102 | 95 37 112 08 | 1 | SEALING FRAME 651X860 PVC | DICHTRAHMEN |
| 103 | 10 02 810 7 | 3.1 | CELL RUBBER 16X8 CELL.RUBBER | ZELLGUMMI |
| 104 | 41 30 028 08 | 2 | CAGE NUT M6 | KAEFIGMUTTER |
| 105 | 40 93 405 08 | 8 | SHEET-METAL SCREW ISO 7051 ST3,5X16 S | BLECHSCHRAUBE |
| 107 | 46 35 128 | 2 | PAN-HEAD SCREW ISO 7045 M6X30 4.8 A2 | FLACHKOPFSCHRAUBE |
| 108 | 10 04 259 3 | 13 | BLIND RIVET NUT M6 K=1,0-3,5 ST A2C | BLINDNIETMUTTER |
| 109 | 55 30 849 08 | 10 | WASHER | SCHEIBE |
| 110 | 41 30 026 08 | 2 | CAGE NUT M5 | KAEFIGMUTTER |
| 111 | 70 42 780 08 | 2 | LINEAR GUIDE 04-420 VERZ | LINEARFUEHRUNG |
| 112 | 11 65 158 3 | 3 | HEX SCREW ISO 4014 M8X60 8.8 480H SPF | SECHSKANTSCHRAUBE |
| 113 | 95 70 441 08 | 1 | INSULATING MAT 18x815x215 | DAEMMMATTE |
| 115 | 92 71 304 08 | 1 | RAILING ST.CONST. | RELING SCHWK. |
| 116 | 92 71 305 08 | 1 | RAILING ST.CONST. | RELING SCHWK. |
| 117 | 40 82 809 08 | 6 | SHEET-METAL SCREW DIN 7983 4,8X19 ST | BLECHSCHRAUBE |
| 119 | 40 82 808 08 | 10 | SHEET-METAL SCREW ISO 7051 ST4,8X13 S | BLECHSCHRAUBE |
| 120 | 95 67 459 08 | 1 | STOPPING WEDGE 28X35X80 PA6G | AUFLAUFKEIL |
| 122 | 95 70 358 08 | 1 | PLATE 4X75X111 S315MC FE//ZNNI8//CN//T | BLECH |

| Pos. | Item | Quantity | Description | Bezeichnung |
|---|---|---|---|---|
| 123 | 95 70 359 08 | 1 | PLATE 4X75X128 S315MC FE//ZNNI8//CN//T | BLECH |
| 124 | 95 70 378 08 | 2 | PLATE 4X68X75 S315MC FE//ZNNI8//CN//T0 | BLECH |
| 125 | 72 50 004 08 | 1 | FORKED LINK DIN 71751 A 8X32 VERZ | GABELGELENK |
| 126 | 72 51 101 08 | 1 | ES PIN 10X20 VERZ | ES BOLZEN |
| 127 | 72 64 108 08 | 4 | O-RING 21X2 NBR70 | O-RING |
| 130 | 95 70 208 08 | 1 | IMITATION LEATHER LINING 11x914x989 | KUNSTLEDERVERKLEIDUNG |
| 131 | 11 69 387 5 | 3 | HEX NUT ISO 4032 M8 8 480H SPF | SECHSKANTMUTTER |
| 132 | 11 65 161 2 | 18 | HEX SCREW ISO 4017 M8X16 8.8 480H SPF | SECHSKANTSCHRAUBE |
| 133 | 40 01 463 | 6 | HEX SCREW ISO 4014 M8X80 8.8 A2C | SECHSKANTSCHRAUBE |
| 134 | 46 00 157 | 6 | COUNTERSUNK SCREW DIN 7991 M8X20 8. | SENKSCHRAUBE |
| 135 | 40 97 070 08 | 4 | HAMMER HEAD BOLT M8X20 8.8 480H SPF | HAMMERKOPFSCHRAUBE |
| 136 | 10 87 638 0 | 4 | SHEET-METAL SCREW ISO 7049 ST3,5X6,5 | BLECHSCHRAUBE |
| 137 | 11 69 004 2 | 2 | SOCKET HEAD SCREW ISO 4762 M5X12 8.8 | ZYLINDERSCHRAUBE |
| 138 | 40 01 521 | 4 | SOCKET HEAD SCREW ISO 4762 M5X10 8.8 | ZYLINDERSCHRAUBE |
| 139 | 46 00 305 | 4 | WASHER ISO 7089 5 200HV A3C | SCHEIBE |
| 140 | 10 87 551 6 | 1 | HEX SCREW ISO 4017 M10X35 8.8 FLZN SP | SECHSKANTSCHRAUBE |
| 141 | 41 15 144 08 | 1 | HEX NUT ISO 4032 M10 8 A3C | SECHSKANTMUTTER |
| 142 | 10 28 979 5 | 1 | WASHER ISO 7089 10 300HV FLZN SPF | SCHEIBE |
| 143 | 95 70 952 08 | 1 | PLATE 4X440X161 S315MC | BLECH |
| 144 | 10 87 546 8 | 10 | BUTTON HEAD SCREW ISO 7380-2 M6X16 | HALBRUNDKOPFSCHRAUBE |
| 146 | 72 66 158 08 | 1 | RUBBER-METAL STOP BUFFER 50X61-M8X | MEGI-ANSCHLAGPUFFER |
| 148 | 28 39 069 08 | 0.8 | SYNTHETIC FOAM 40x40x2000 | SCHAUMSTOFF |
| 149 | 10 29 225 3 | 2 | CLOSE TOLERANCE GROOVED PIN ISO 874 | PASSKERBSTIFT |
| 150 | 40 65 326 14 | 1 | HEX SCREW ISO 4017 M6X20 A4-70 | SECHSKANTSCHRAUBE |
| 154 | 96 34 947 08 | 1 | RAILING CROSSBAR | RELING QUERSTANGE |
| 155 | 40 61 032 08 | 2 | HEX SCREW ISO 4014 M6X40 A2-70 | SECHSKANTSCHRAUBE |
| 156 | 41 19 030 08 | 3 | HEX NUT DIN 985 M6 A2-70 | SECHSKANTMUTTER |
| 157 | 10 03 569 4 | 3 | WASHER ISO 7092 6 200HV-A2 | SCHEIBE |
| 158 | 40 65 901 05 | 2 | HEX SCREW ISO 4017 M8X25 A2-70 | SECHSKANTSCHRAUBE |
| 159 | 42 00 607 05 | 2 | WASHER ISO 7089 8 200HV-A2 | SCHEIBE |
| 160 | 87 00 034 08 | 1 | SIKA-SIL N-PLUS SCHWARZ | SIKA-SIL |
| 161 | 97 23 538 08 | 2 | PLATE 4X32X32 ALMG3 H111 | BLECH |
| 162 | 40 97 053 08 | 3 | BUTTON HEAD SCREW ISO 7380-2 M4X12 | HALBRUNDKOPFSCHRAUBE |
| 163 | 11 69 578 6 | 5 | SECTION 2-4X15X27 EPDM | KANTENSCHUTZPROFIL |
| 164 | 40 82 505 08 | 4 | SHEET-METAL SCREW ISO 7049 4,8X32-C-H | BLECHSCHRAUBE |
| 165 | 97 03 453 3 | 1 | SEAL 15X130X 120 POLYOLEFIN | DICHTUNG |
| 166 | 96 84 504 08 | 1 | ATTACHMENT GRIP | HANDGRIFF ANBAU |
| | | | ⇨ 2 520 041 96 84 504 08 | |

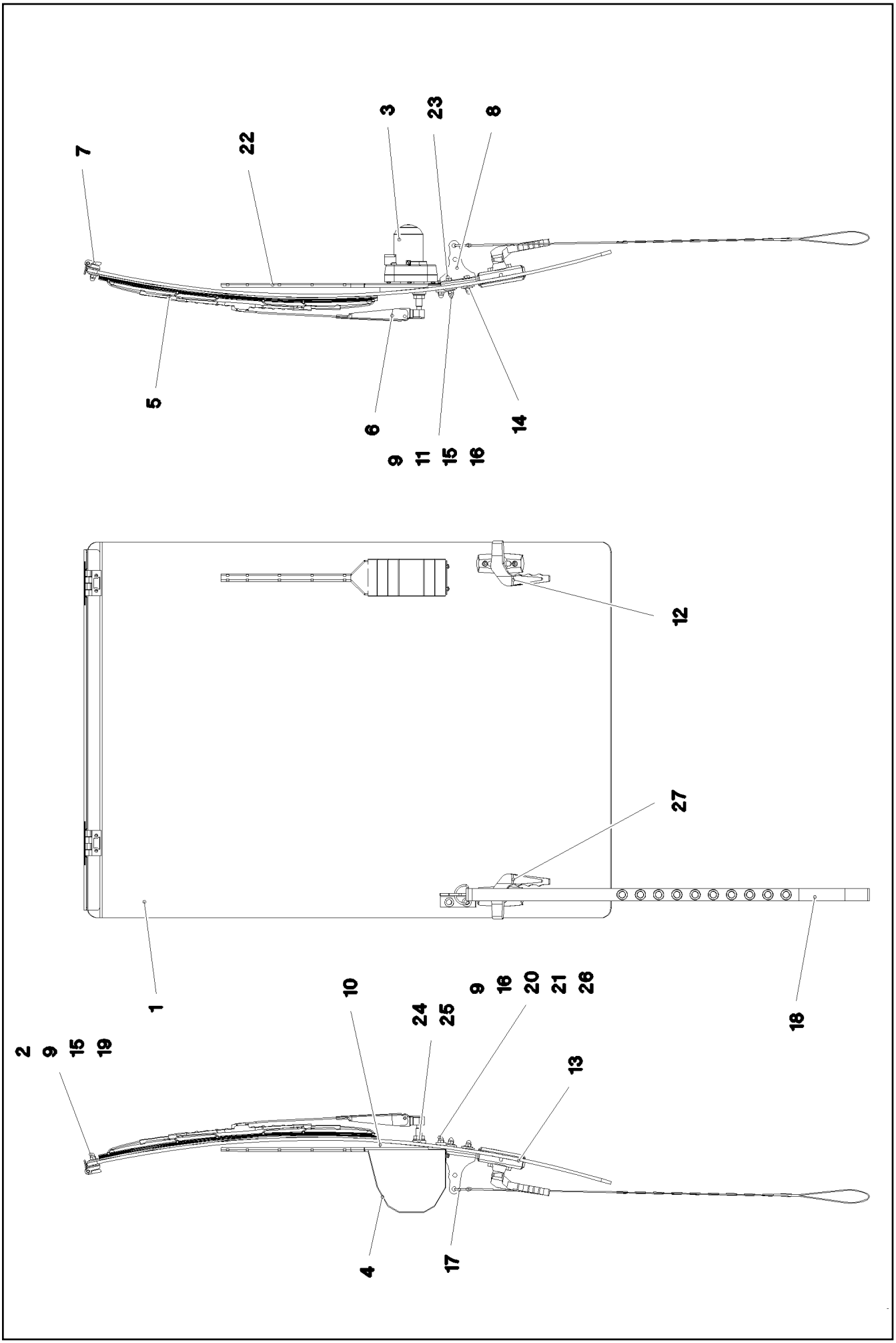


| | | |
|---|---|---|
| 16.2.2017<br>018720<br>LIEBHERR | **etk_en_de_048005 LTR 1100**<br><br>**FRONT WINDOW CPL.**<br>**FRONTSCHEIBE KPL.** | ❑ 144 (1/2)<br><br>⇨ **2 520 001**<br>**92 48 796 08** |

| Pos. | Item | Quantity | Description | Bezeichnung |
|---|---|---|---|---|
| 1 | 92 68 891 08 | 1 | FRONT WINDOW GLUED SPF | FRONTSCHEIBE GEKLEBT |
| 3 | 59 10 672 08 | 1 | WIPER MOTOR<br>⇨ 5 910 672 08 59 10 672 08 | WISCHERMOTOR |
| 4 | 92 50 132 08 | 1 | PANELLING | VERKLEIDUNG SCHWK. |
| 5 | 59 10 775 08 | 1 | WIPER BLADE | WISCHERBLATT |
| 6 | 59 10 666 08 | 1 | WIPER ARM | WISCHERARM |
| 8 | 95 65 560 08 | 1 | PLATE 4X70X102 S315MC | BLECH |
| 9 | 10 21 936 1 | 3 | CAP NUT DIN 1587 M6 A2-70 | HUTMUTTER |
| 10 | 28 81 990 08 | 1 | SHEET 16X66X130 PA6G | PLATTE |
| 11 | 28 81 303 08 | 2 | SPACER PIECE RD25 PA6G SCHWARZ | DISTANZSTUECK |
| 12 | 59 10 668 08 | 1 | HANDLE | HANDGRIFF |
| 13 | 40 93 609 08 | 4 | SOCKET HEAD SCREW DIN 7984 M6X12 08. | ZYLINDERSCHRAUBE |
| 14 | 28 81 998 08 | 1 | SUPPORT BED 0 PA6G | UNTERLAGE |
| 15 | 10 87 564 8 | 4 | WASHER ISO 7093-1 6 200HV 480H SPF | SCHEIBE |
| 16 | 10 87 552 9 | 3 | HEX SCREW ISO 4017 M6X25 8.8 480H SPF | SECHSKANTSCHRAUBE |
| 17 | 77 90 332 08 | 1 | WIRE BRACKET | DRAHTBUEGEL |
| 18 | 59 10 638 08 | 1 | RETAINING STRAP 25X795 POLYESTER | HALTEGURT |
| 20 | 28 30 915 08 | 1 | WASHER RD20X5,7 PA6G | SCHEIBE |
| 21 | 28 30 916 08 | 1 | BUSHING RD13,5X8 PA6G | BUCHSE |
| 22 | 92 68 890 08 | 1 | PLATE WELDED | BLECH SCHWK. |
| 23 | 10 87 579 3 | 2 | SHEET-METAL SCREW ISO 7049 ST4,2X9,5 | BLECHSCHRAUBE |
| 24 | 28 30 913 08 | 1 | WASHER RD26X5,7 PA6G | SCHEIBE |
| 25 | 28 30 914 08 | 1 | BUSHING RD19,5X7 PA6G | BUCHSE |
| 26 | 10 87 564 7 | 1 | WASHER ISO 7089 6 200HV 480H SPF | SCHEIBE |
| 27 | 70 42 322 08 | 1 | HAND GRIP CPL. | HANDGRIFF KPL. |

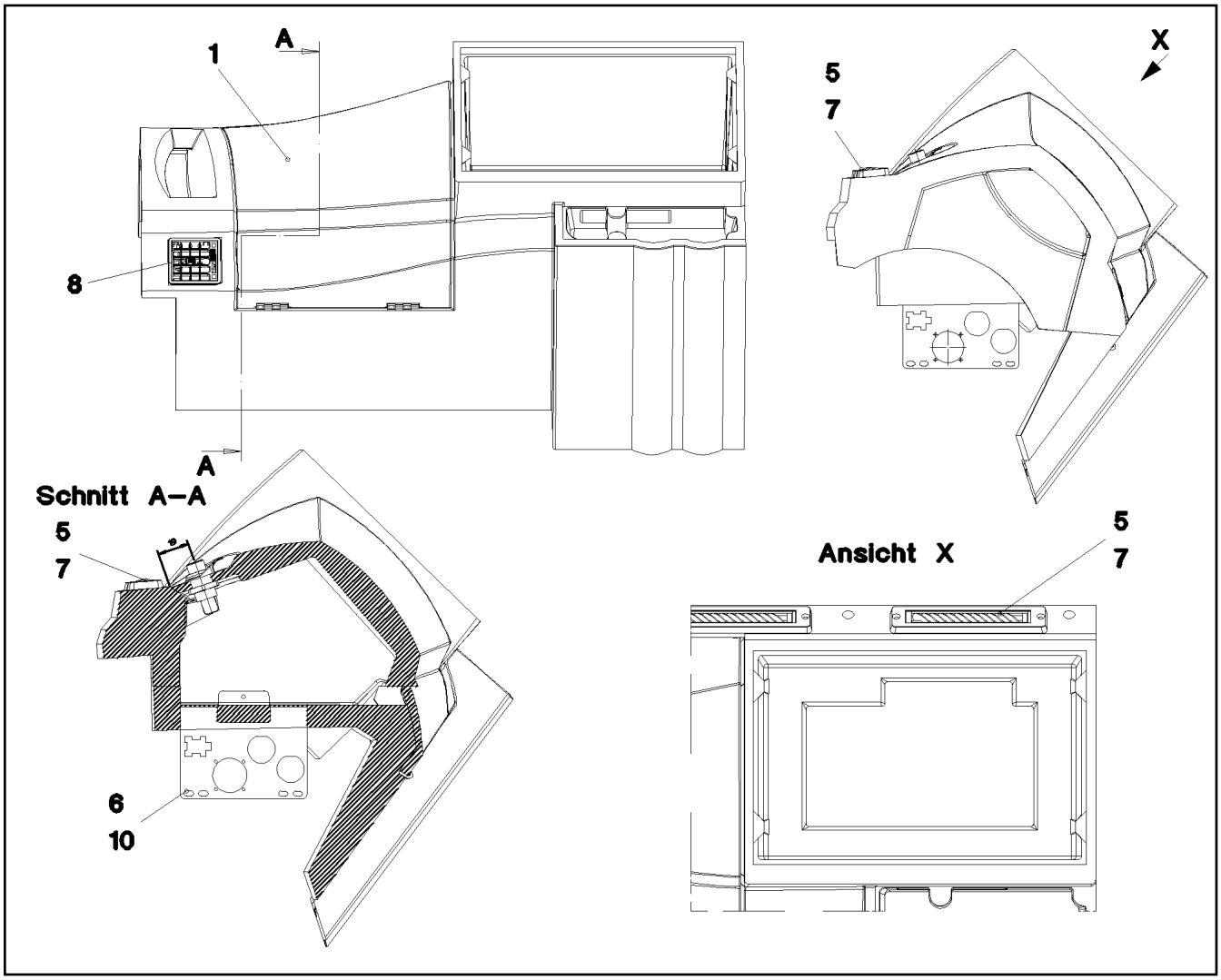


| Pos. | Item | Quantity | Description | Bezeichnung |
|---|---|---|---|---|
| 1 | 92 17 203 08 | 1 | INSTRUMENT BOX DELIVERY SCOPE<br>⇨ 2 520 021 92 17 203 08 | ARMATURENKASTEN LIEFERU |
| 5 | 59 10 059 08 | 6 | SHEET-METAL SCREW DIN 7982 3,5X16-C-H | BLECHSCHRAUBE |
| 6 | 10 87 579 3 | 2 | SHEET-METAL SCREW ISO 7049 ST4,2X9,5 | BLECHSCHRAUBE |
| 7 | 55 31 860 08 | 3 | ROLLING NOZZLE | WALZENDUESE |
| 8 | 59 10 562 08 | 1 | NOZZLE | DUESE |
| 10 | 95 60 688 08 | 1 | PLATE 1.5X245X164 DC01 | BLECH |

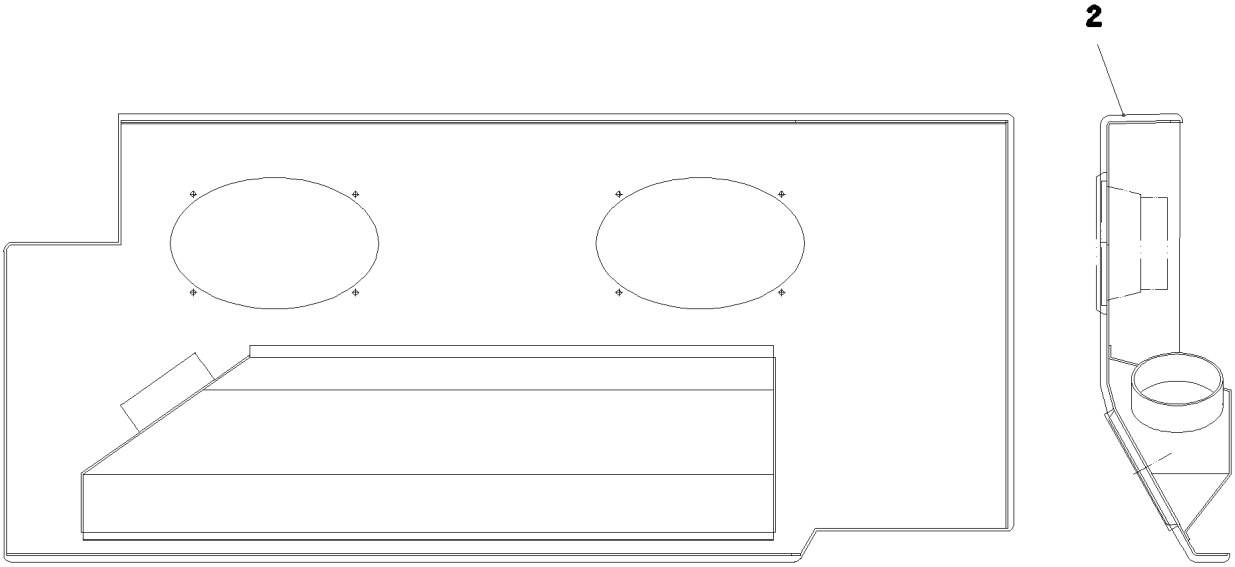


| Pos. | Item | Quantity | Description | Bezeichnung |
|---|---|---|---|---|
| 2 | 95 65 065 08 | 1 | INSULATING MAT 5X470X870 | DAEMMMATTE |

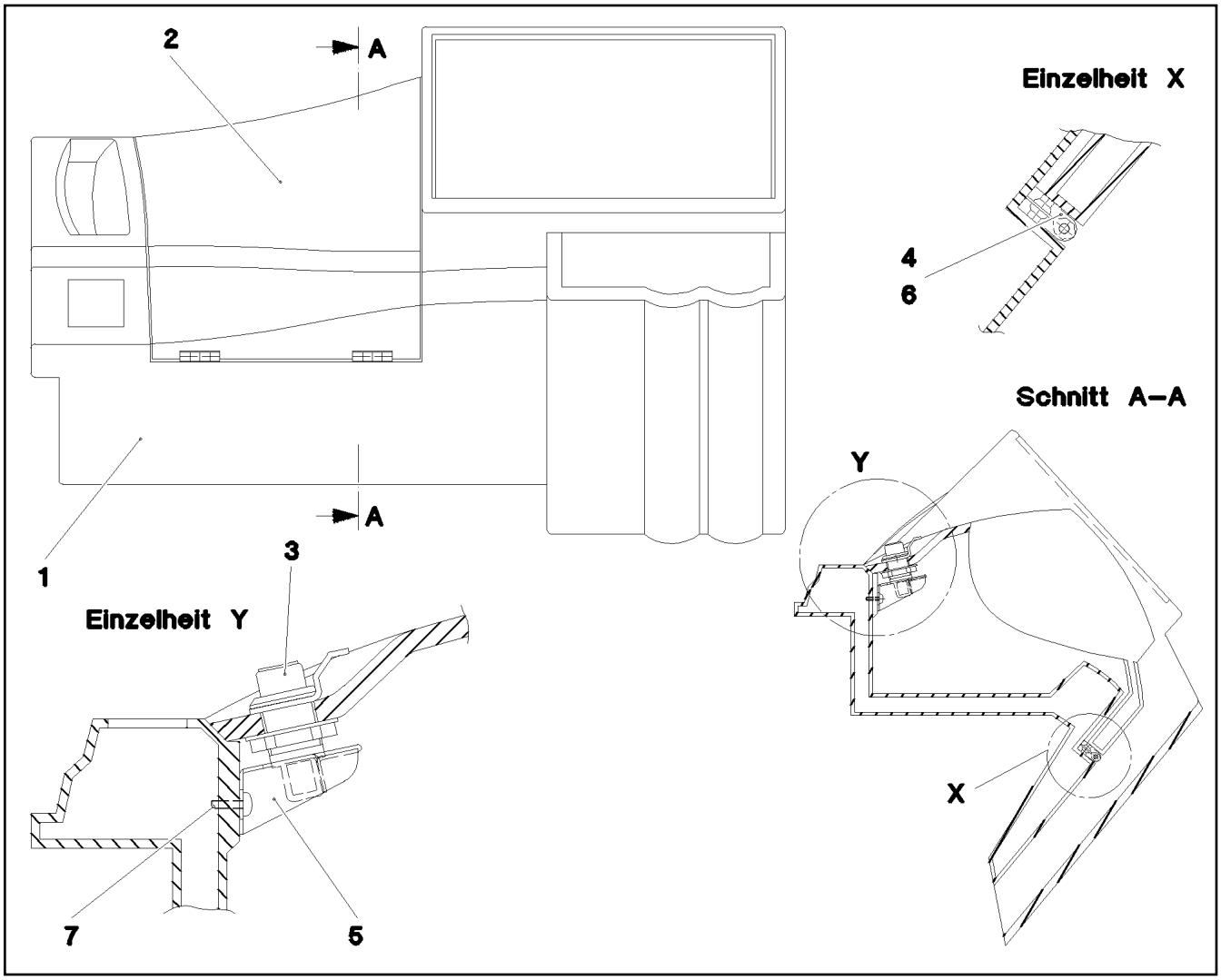


| Pos. | Item | Quantity | Description | Bezeichnung |
|---|---|---|---|---|
| 1 | 59 10 706 08 | 1 | CONTROL PANEL CONSOL | ARMATURENKASTEN |
| 2 | 59 10 707 08 | 1 | COVER | DECKEL |
| 3 | 70 42 315 08 | 1 | SNAP LOCK | SCHNAPPVERSCHLUSS |
| 4 | 70 42 582 08 | 2 | HINGE 20X20X40/180° GD-ZN SW GEPULV | SCHARNIER |
| 5 | 95 60 636 08 | 1 | PLATE 1,5X94X105 DC01 | BLECH |
| 6 | 40 86 058 14 | 8 | COUNTERSUNK SCREW DIN 7991 M4X12 8. | SENKSCHRAUBE |
| 7 | 40 97 053 08 | 2 | BUTTON HEAD SCREW ISO 7380-2 M4X12 | HALBRUNDKOPFSCHRAUBE |

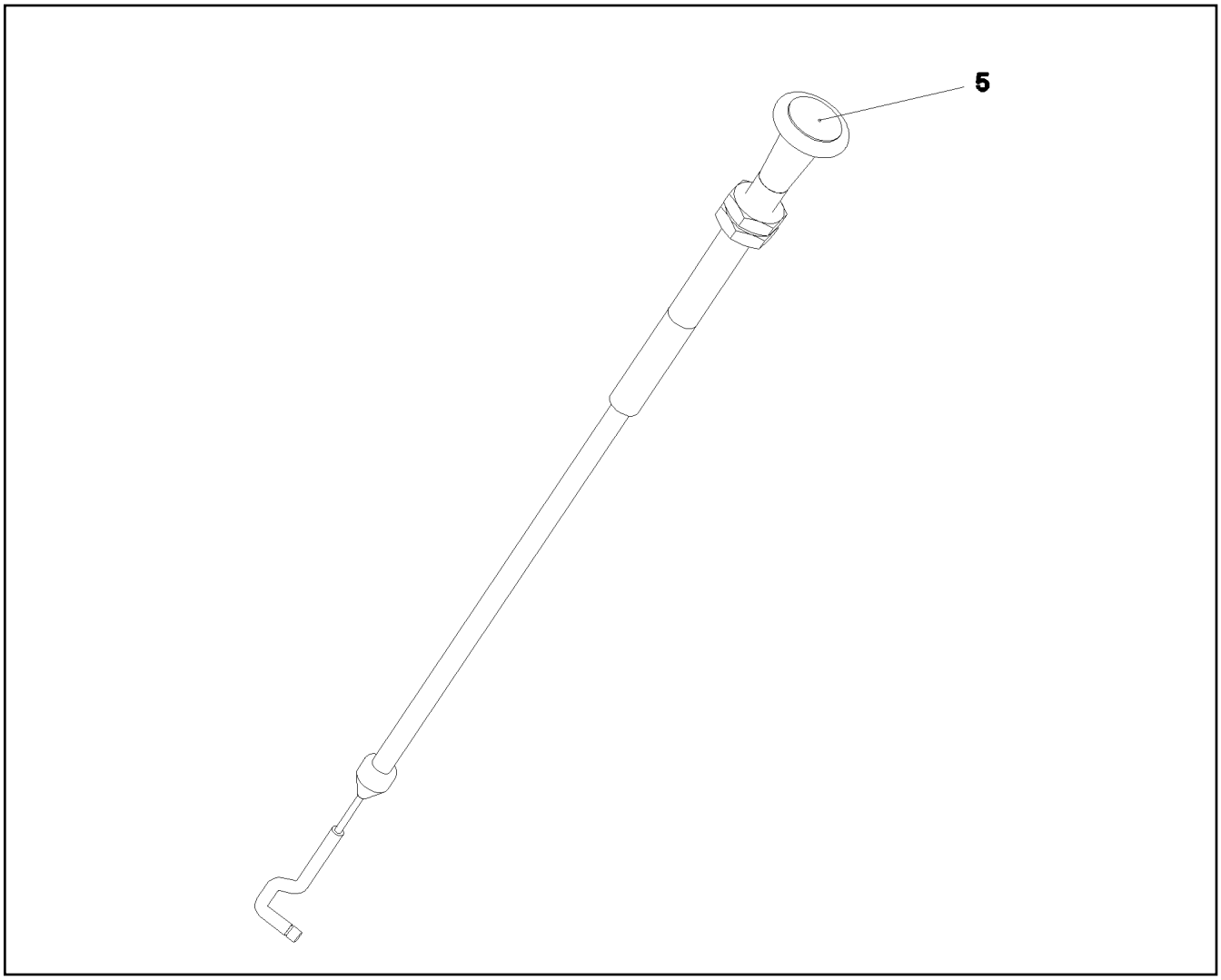


| Pos. | Item | Quantity | Description | Bezeichnung |
|---|---|---|---|---|
| 5 | 10 80 091 6 | 1 | KNURLED BUTTON PA | RAENDELKNOPF |

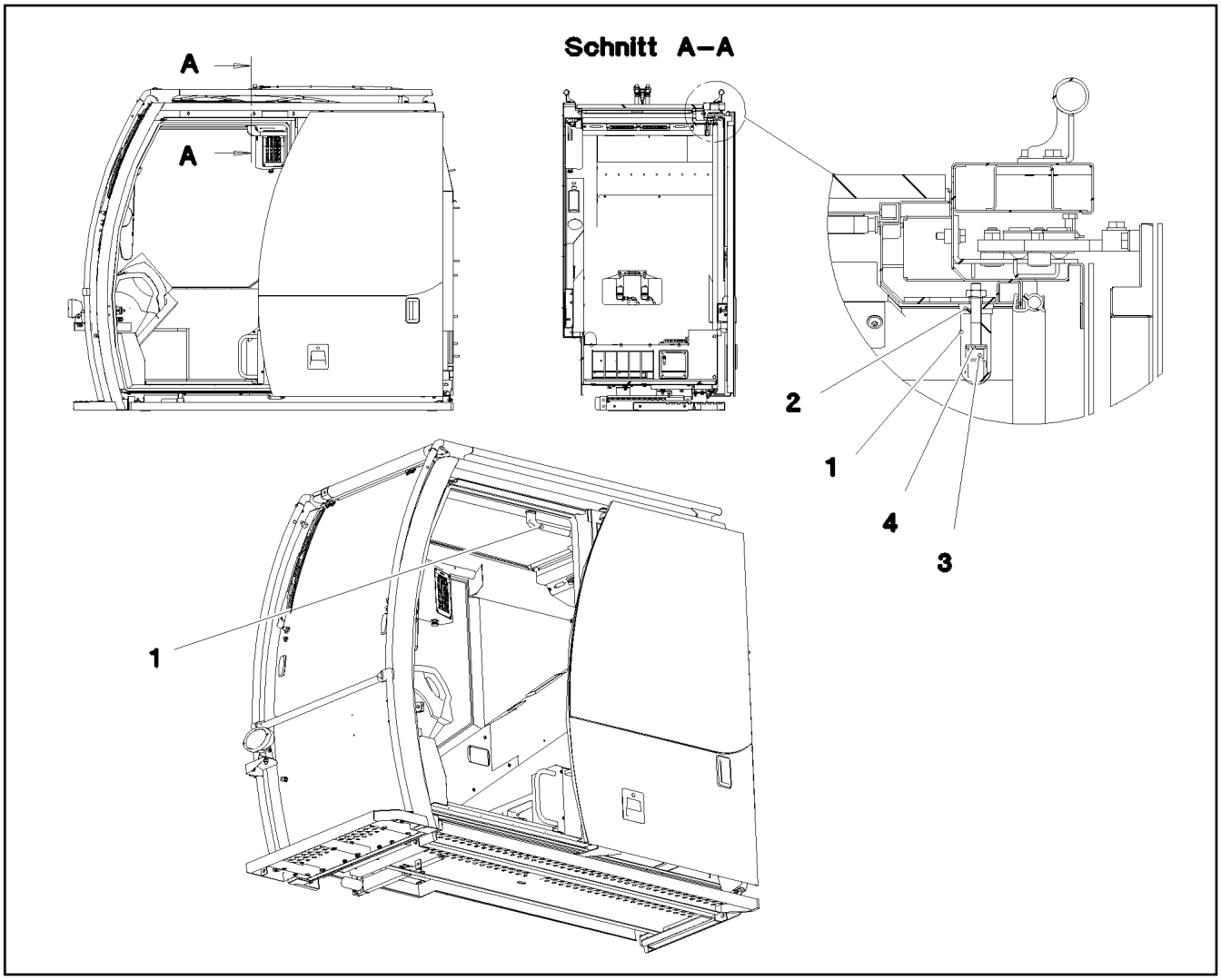


| Pos. | Item | Quantity | Description | Bezeichnung |
|---|---|---|---|---|
| 1 | 10 33 152 6 | 1 | HANDGRIP 300X25X59,2X254 | HALTEGRIFF |
| 2 | 97 00 759 7 | 2 | PLATE 4X48X29 S315MC RAL 9005,M,GT SP | BLECH |
| 3 | 10 87 557 0 | 2 | SOCKET HEAD SCREW ISO 4762 M8X55 8.8 | ZYLINDERSCHRAUBE |
| 4 | 10 28 980 3 | 4 | WASHER ISO 7089 8 300HV 480H SPF | SCHEIBE |

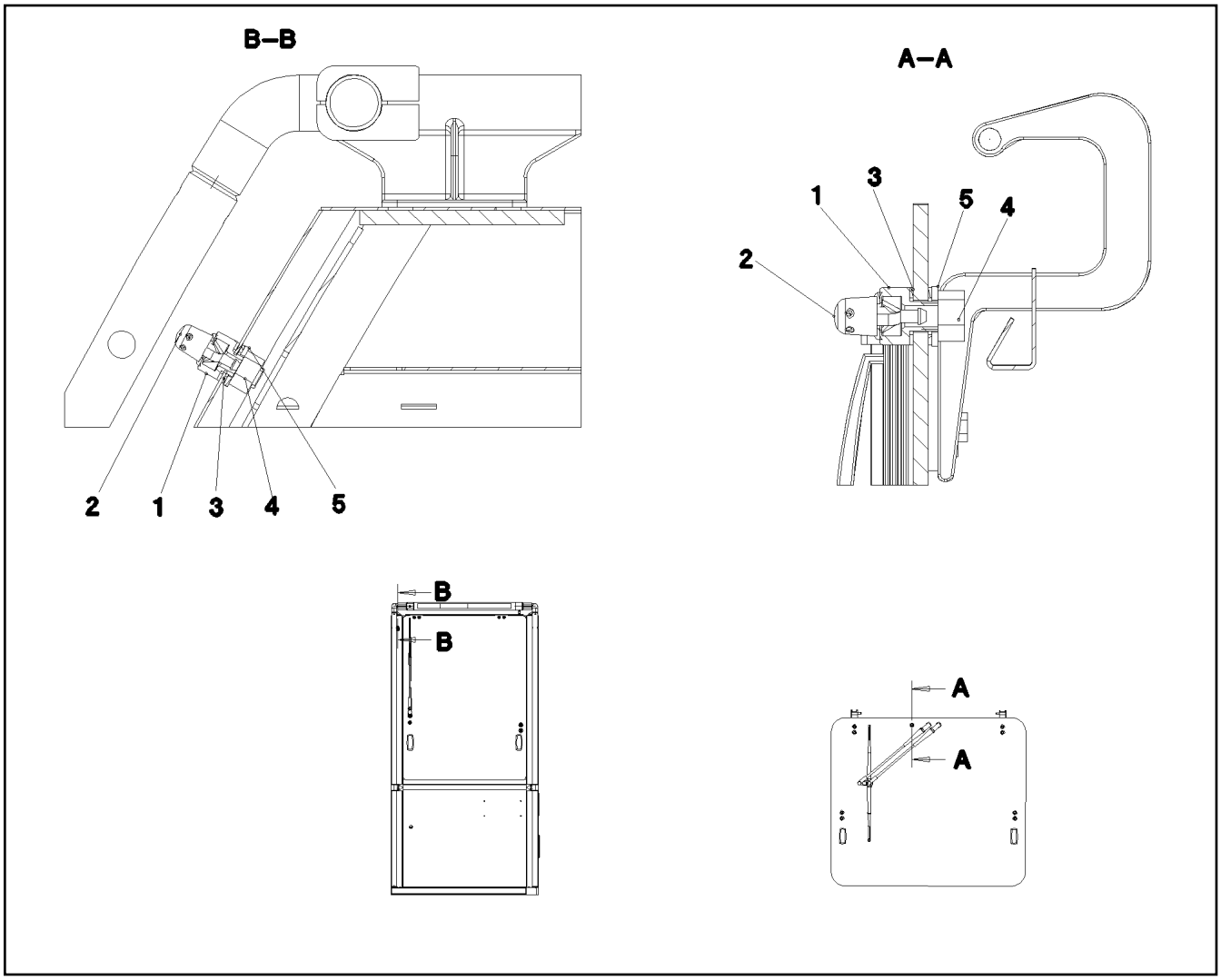


| Pos. | Item | Quantity | Description | Bezeichnung |
|---|---|---|---|---|
| 1 | 97 02 447 4 | 1 | ADAPTER BUSHING 25X32 X5CRNI18-10 | ADAPTERBUCHSE |
| 2 | 59 10 547 08 | 1 | SPRAY NOZZLE | SPRITZDUESE |
| 3 | 59 15 631 08 | 2 | WASHER GUMMI | SCHEIBE |
| 4 | 59 15 592 08 | 1 | HEX NUT ISO 8675 M12X1 04 A2K | SECHSKANTMUTTER |
| 5 | 59 15 630 08 | 2 | KNURLED WASHER | BOERDELSCHEIBE |

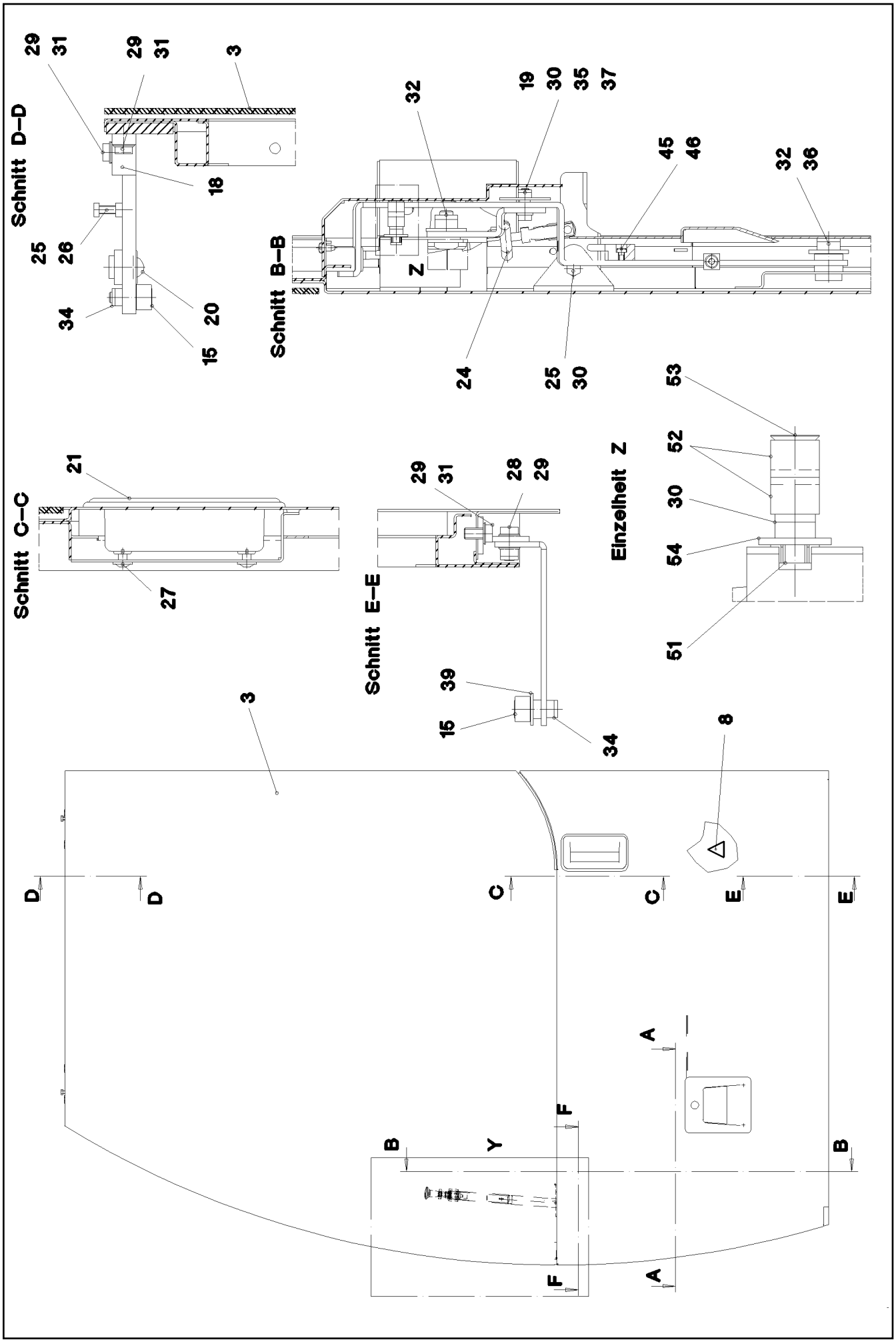


| | | |
|---|---|---|
| 16.2.2017<br>028346<br>LIEBHERR | etk_en_de_048005 LTR 1100<br><br>DOOR CPL.<br>TUER KPL. | ❑ 152 (1/3)<br><br>⇨ 2 522<br>91 10 037 08 |

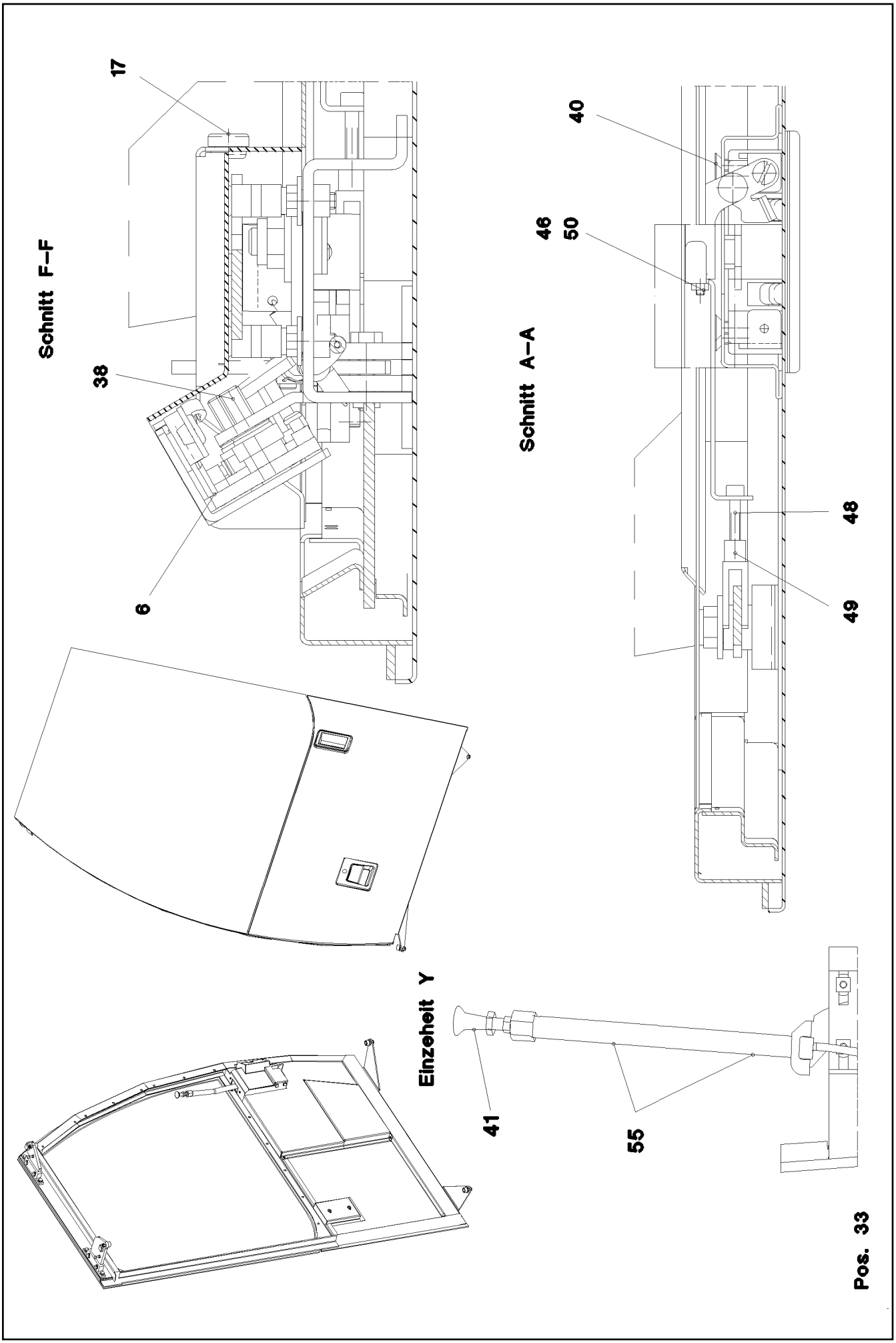
Schnitt F–F
17
38
6
Schnitt A–A
40
46
50
48
49
Einzelheit Y
41
55
Pos. 33

| Pos. | Item | Quantity | Description | Bezeichnung |
|---|---|---|---|---|
| 3 | 72 57 410 08 | 1 | DOOR PANE 4MM SPF | TUERSCHEIBE |
| 6 | 70 42 764 08 | 1 | LOCK WITH FALLING LATCH | DREHFALLENSCHLOSS |
| 8 | 95 65 247 08 | 1 | INSULATING MAT 18X942X470 PUR-SCHAU | DAEMMMATTE |
| 15 | 74 66 919 08 | 4 | CAM ROLLER | KURVENROLLE |
| 17 | 72 66 108 08 | 2 | BUTTON GUMMI | KNOPF |
| 20 | 74 90 039 08 | 2 | CUP WHEEL | TOPFROLLE |
| 21 | 70 42 287 08 | 1 | FINGER-HOLD 130.5X70X36 KUNSTSTOFF | GRIFFMULDE |
| 24 | 72 01 085 08 | 1 | TENSION SPRING | ZUGFEDER |
| 25 | 10 87 552 9 | 3 | HEX SCREW ISO 4017 M6X25 8.8 480H SPF | SECHSKANTSCHRAUBE |
| 26 | 10 87 562 1 | 2 | HEX NUT ISO 4032 M6 8 480H SPF | SECHSKANTMUTTER |
| 27 | 10 87 546 8 | 2 | BUTTON HEAD SCREW ISO 7380-2 M6X16 | HALBRUNDKOPFSCHRAUBE |
| 28 | 11 65 176 7 | 4 | HEX SCREW ISO 4017 M8X20 8.8 480H SPF | SECHSKANTSCHRAUBE |
| 29 | 10 28 980 3 | 20 | WASHER ISO 7089 8 300HV 480H SPF | SCHEIBE |
| 30 | 41 19 004 08 | 4 | HEX NUT DIN 985 M6 8 A2C | SECHSKANTMUTTER |
| 31 | 11 65 161 2 | 12 | HEX SCREW ISO 4017 M8X16 8.8 480H SPF | SECHSKANTSCHRAUBE |
| 32 | 10 87 560 6 | 2 | HEX NUT DIN 985 M10 8 FLZN SPF | SECHSKANTMUTTER |
| 33 | 10 87 579 3 | 10 | SHEET-METAL SCREW ISO 7049 ST4,2X9,5 | BLECHSCHRAUBE |
| 34 | 41 19 005 08 | 8 | HEX NUT DIN 985 M8 8 A2C | SECHSKANTMUTTER |
| 35 | 11 64 489 9 | 1 | HEX SCREW ISO 4017 M6X20 8.8 480H SPF | SECHSKANTSCHRAUBE |
| 36 | 11 49 188 9 | 2 | WASHER ISO 7093-1 10 300HV FLZN SPF | SCHEIBE |
| 37 | 10 87 564 7 | 1 | WASHER ISO 7089 6 200HV 480H SPF | SCHEIBE |
| 38 | 46 35 059 | 2 | COUNTERSUNK SCREW ISO 10642 M8X35 | SENKSCHRAUBE |
| 39 | 42 18 009 08 | 2 | WASHER ISO 7093-1 8 200HV A2C | SCHEIBE |
| 40 | 40 86 002 08 | 4 | COUNTERSUNK SCREW DIN 7991 M6X16 8. | SENKSCHRAUBE |
| 41 | 72 40 160 08 | 1 | LOCKING CABLE L=430MM | VERRIEGELUNGSZUG |
| (5) | 10 80 091 6 | 1 | KNURLED BUTTON PA | RAENDELKNOPF |
| 45 | 97 01 940 08 | 1 | STOPPING WEDGE | AUFLAUFKEIL |
| 46 | 40 83 000 08 | 3 | SOCKET HEAD SCREW DIN 7984 M4X10 08. | ZYLINDERSCHRAUBE |
| 48 | 40 00 899 | 1 | SOCKET HEAD SCREW ISO 4762 M5X30 8.8 | ZYLINDERSCHRAUBE |
| 49 | 72 51 002 08 | 1 | YOKE DIN 71752 6X24 VERZ.GELB PASS. | GABELKOPF |
| 50 | 41 15 142 08 | 1 | HEX NUT ISO 4032 M4 8 A2C | SECHSKANTMUTTER |
| 51 | 41 30 029 08 | 2 | CAGE NUT M6 | KAEFIGMUTTER |
| 52 | 50 26 088 08 | 4 | SEALING RING | DICHTRING |
| 53 | 49 02 007 | 2 | COUNTERSUNK SCREW DIN 7991 M6X40 8. | SENKSCHRAUBE |
| 54 | 10 87 564 8 | 2 | WASHER ISO 7093-1 6 200HV 480H SPF | SCHEIBE |
| 55 | 60 30 169 08 | 0.35 | HEATSHRINK SLEEVING 27 - 8 | SCHRUMPFSCHLAUCH |

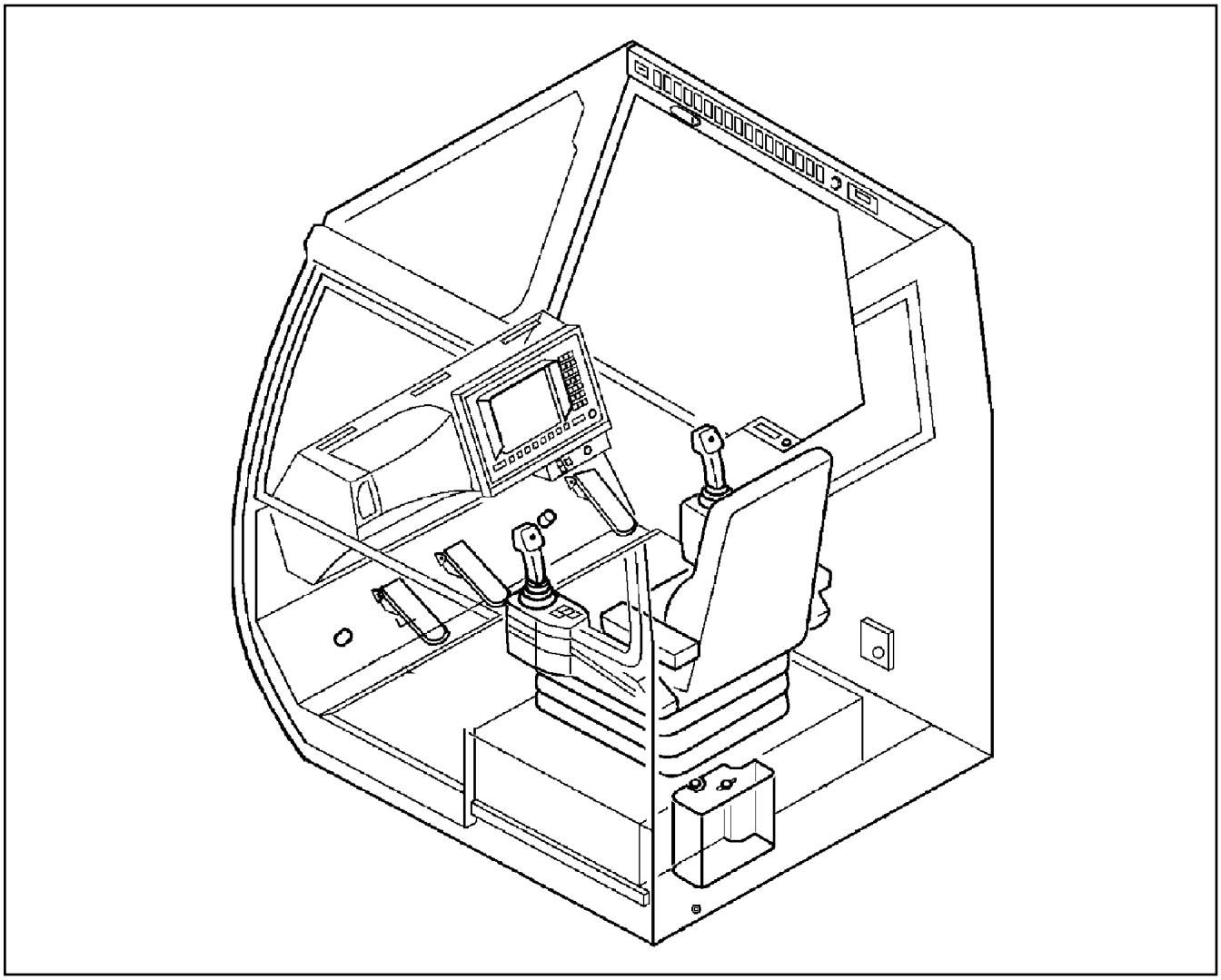

| Pos. | Item | Quantity | Description | Bezeichnung |
|---|---|---|---|---|
| 3 | 96 19 448 08 | 1 | DASHBOARD FRONT, PRE-ASSEMBLED<br>⇨ 2 530 002 96 19 448 08 | ARMATURENBRETT VORM.VOR |
| 4 | 91 32 850 08 | 1 | LICCON CONSOLE LCD2 KOMPAT. SPF<br>⇨ 2 913 91 32 850 08 | LICCON KONSOLE LCD2 |

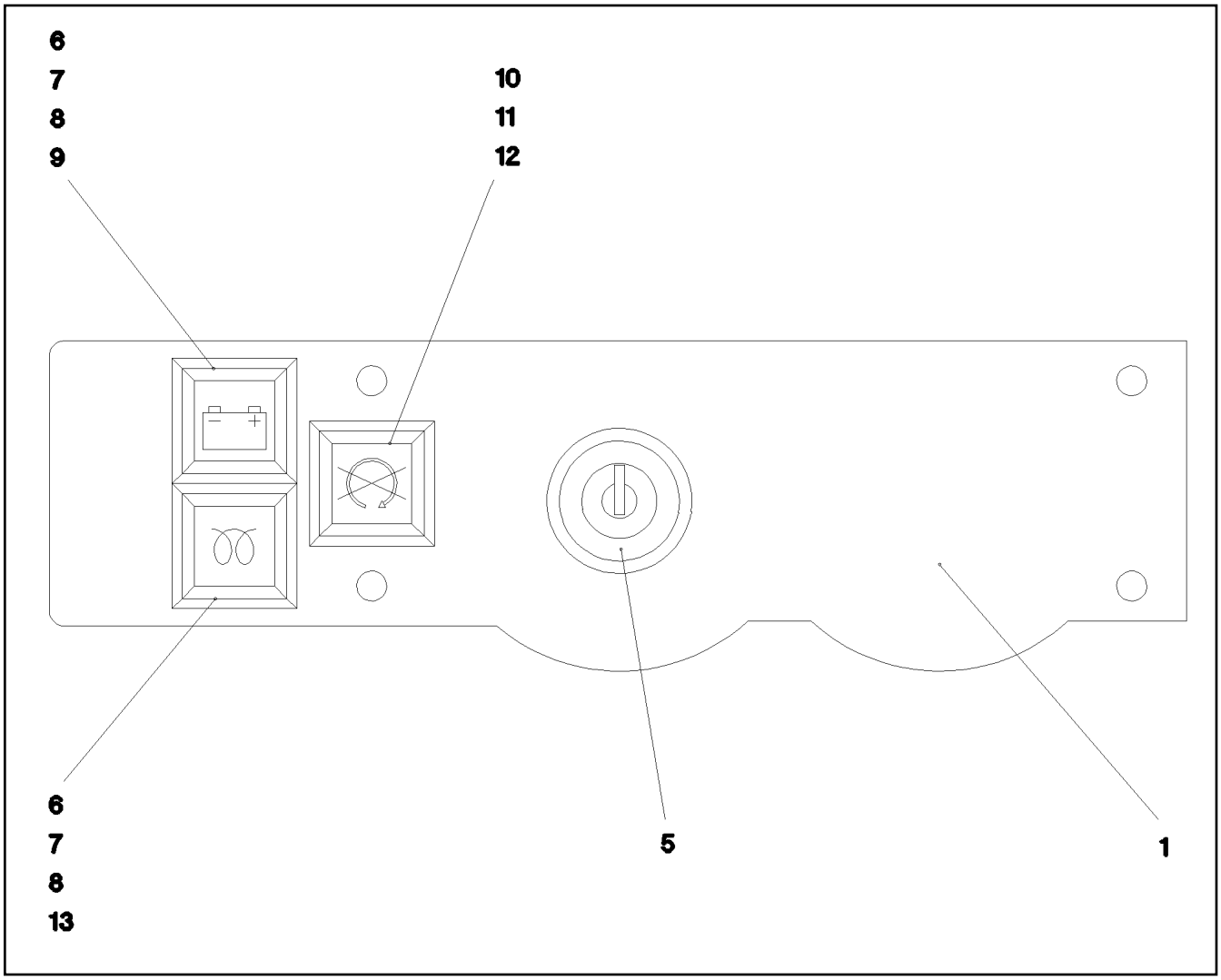


| Pos. | Item | Quantity | Description | Bezeichnung |
|---|---|---|---|---|
| 1 | 97 16 054 08 | 1 | DASHBOARD 2X228X66 DC01 | ARMATURENBRETT |
| 5 | 60 61 943 08 | 1 | IGNITION STARTER SWITCH<br>⇨ 6 061 943 08 60 61 943 08 | ZUENDSTARTSCHALTER |
| 6 | 60 61 435 08 | 2 | INDICATOR LAMP | LEUCHTMELDER |
| 7 | 60 70 087 08 | 2 | LIGHT BULB 1,2W 30V | GLUEHLAMPE |
| 8 | 60 61 445 08 | 2 | LAMP SOCKET | LAMPENFASSUNG |
| 9 | 60 61 443 08 | 1 | SPHERICAL CAP | KALOTTE |
| 10 | 60 61 431 08 | 1 | PUSH-BUTTON CAP FLACH ROT | TASTERKAPPE |
| 11 | 60 61 430 08 | 1 | PUSH BUTTON | DRUCKTASTE |
| 12 | 60 61 437 08 | 1 | LUMINOUS PUSH BUTTON CONTACTOR 2 | LEUCHTTASTKONTAKTGEBER |
| 13 | 60 61 442 08 | 1 | SPHERICAL CAP | KALOTTE |
| 14 | 60 70 117 08 | 1 | LIGHT BULB 1,2W 48V | GLUEHLAMPE |

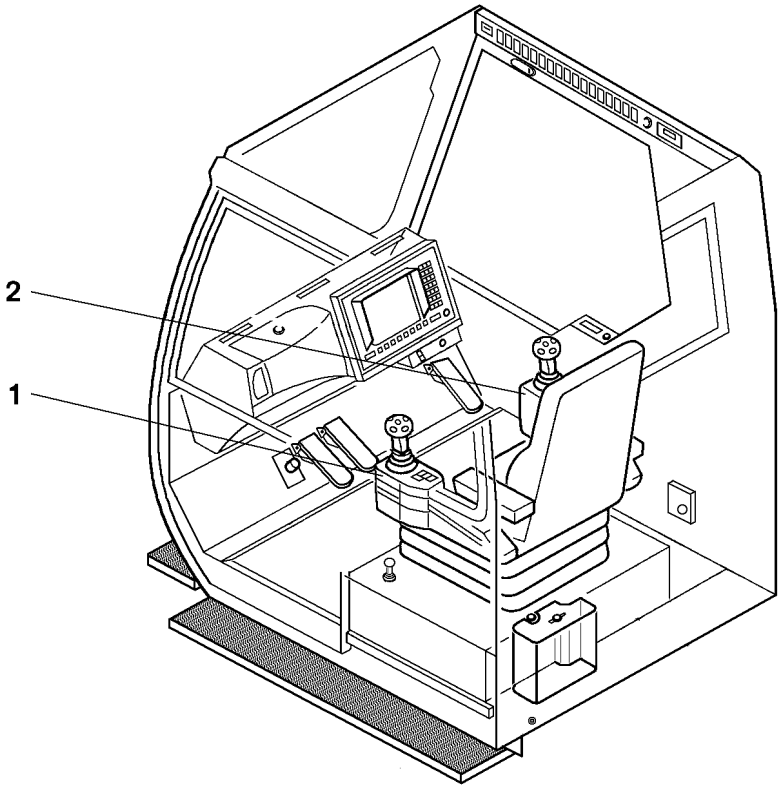


| Pos. | Item | Quantity | Description | Bezeichnung |
|---|---|---|---|---|
| 1 | 96 36 738 08 | 1 | ELECTRIC FOR ARMREST LEFT<br>⇨ 2 531 001 96 36 738 08 | ELEKTRIK ARMLEHNE LI. |
| 2 | 96 36 739 08 | 1 | ELECTRIC FOR ARMREST RIGHT<br>⇨ 2 531 002 96 36 739 08 | ELEKTRIK ARMLEHNE RE. |

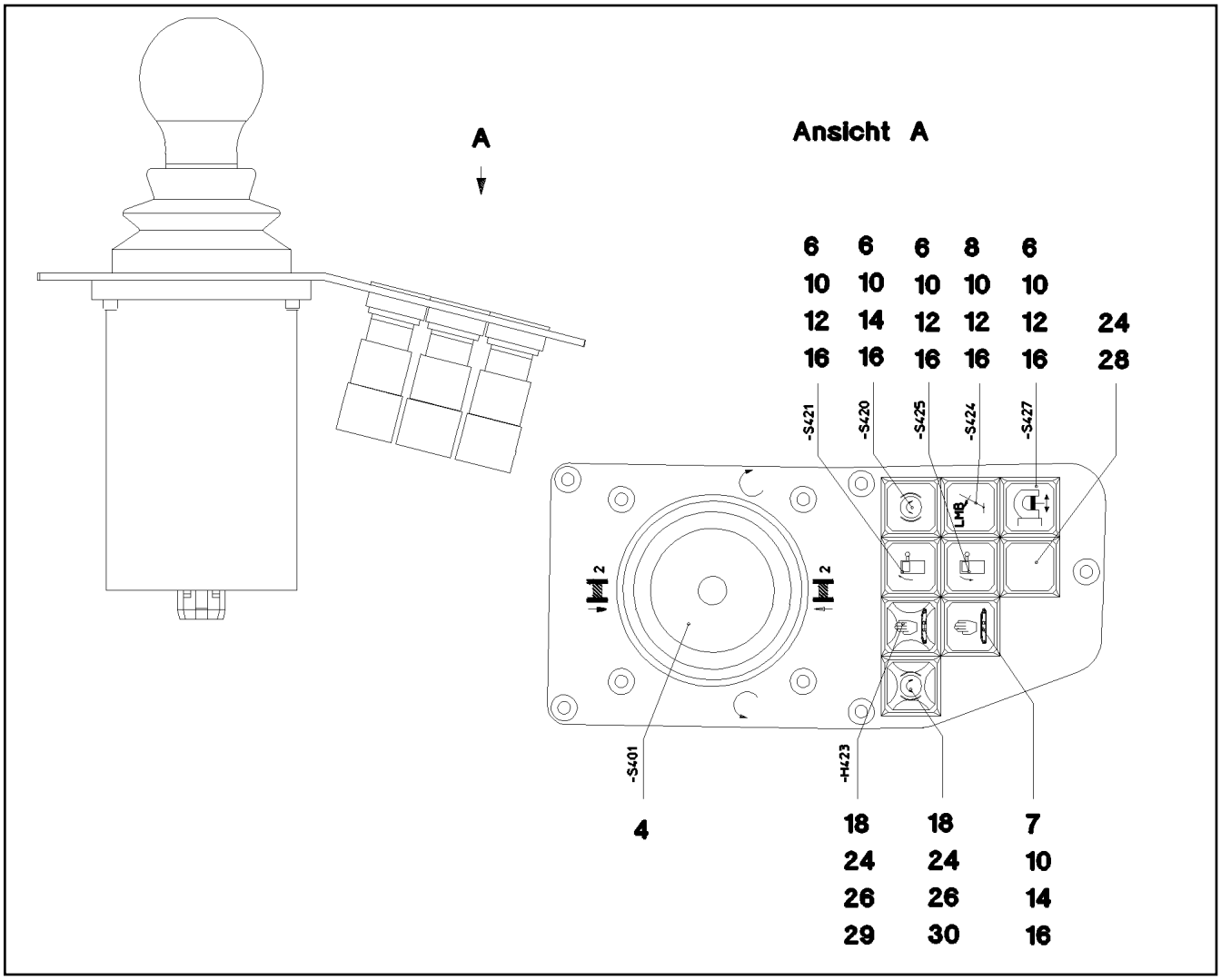


| Pos. | Item | Quantity | Description | Bezeichnung |
|---|---|---|---|---|
| 1 | 97 17 745 08 | 1 | DASHBOARD | ARMATURENBRETT |
| 4 | 60 60 950 08 | 1 | MASTER SWITCH ST2000-LSB-LH/11 SPF<br>⇨ 6 060 950 08 60 60 950 08 | MEISTERSCHALTER |
| 6 | 60 61 451 08 | 4 | PUSH-BUTTON CAP FLACH GRUEN | TASTERKAPPE |
| 7 | 60 61 439 08 | 1 | PUSH-BUTTON CAP FLACH GELB | TASTERKAPPE |
| 8 | 60 61 431 08 | 1 | PUSH-BUTTON CAP FLACH ROT | TASTERKAPPE |
| 10 | 60 61 430 08 | 6 | PUSH BUTTON | DRUCKTASTE |
| 12 | 60 61 437 08 | 5 | LUMINOUS PUSH BUTTON CONTACTOR 2 | LEUCHTTASTKONTAKTGEBER |
| 14 | 60 61 447 08 | 1 | LUMINOUS SWITCH CONTACT SENDER 2 | LEUCHTSCHALTKONTAKTGEBE |
| 16 | 60 70 117 08 | 5 | LIGHT BULB 1,2W 48V | GLUEHLAMPE |
| 18 | 60 70 087 08 | 2 | LIGHT BULB 1,2W 30V | GLUEHLAMPE |
| 24 | 60 61 435 08 | 3 | INDICATOR LAMP | LEUCHTMELDER |
| 26 | 60 61 445 08 | 2 | LAMP SOCKET | LAMPENFASSUNG |
| 28 | 60 61 440 08 | 1 | KEYPAD BUTTON | TASTE |
| 29 | 60 61 442 08 | 1 | SPHERICAL CAP | KALOTTE |
| 30 | 60 61 443 08 | 1 | SPHERICAL CAP | KALOTTE |

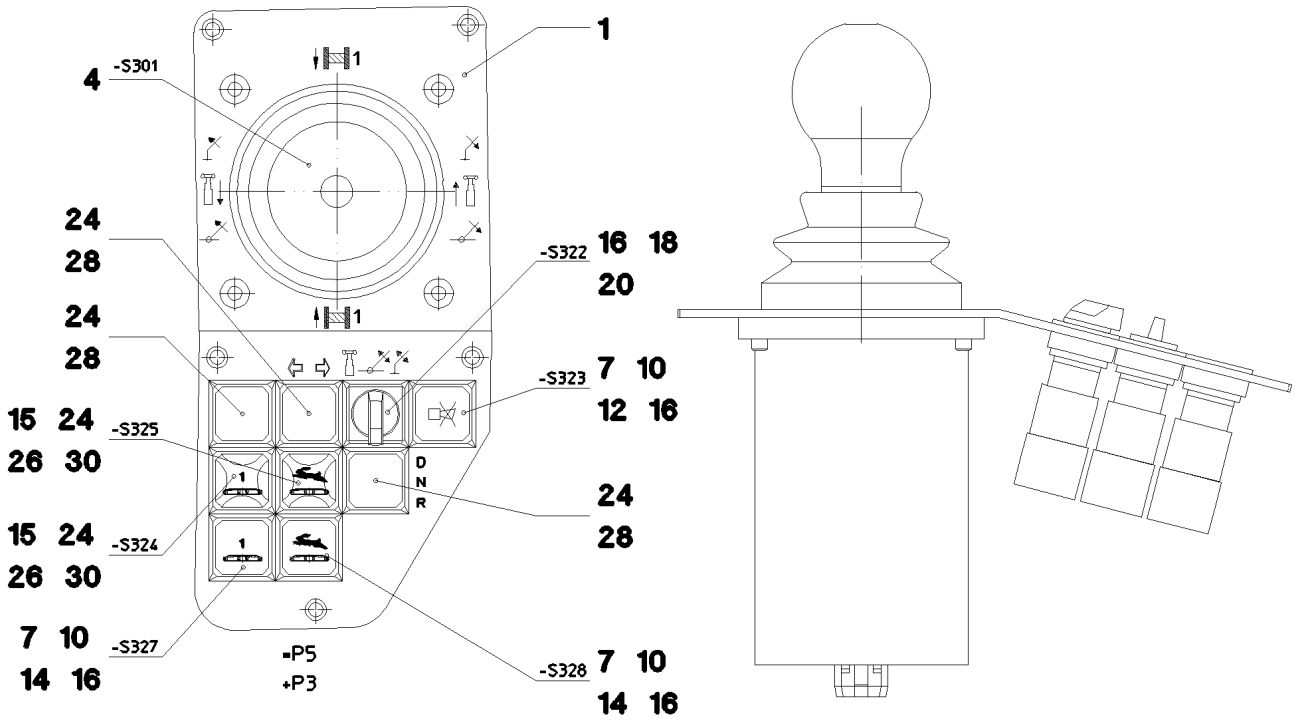


| Pos. | Item | Quantity | Description | Bezeichnung |
|---|---|---|---|---|
| 1 | 97 17 746 08 | 1 | DASHBOARD | ARMATURENBRETT |
| 4 | 60 60 950 08 | 1 | MASTER SWITCH ST2000-LSB-LH/11 SPF<br>⇨ 6 060 950 08 60 60 950 08 | MEISTERSCHALTER |
| 7 | 60 61 439 08 | 3 | PUSH-BUTTON CAP FLACH GELB | TASTERKAPPE |
| 10 | 60 61 430 08 | 3 | PUSH BUTTON | DRUCKTASTE |
| 12 | 60 61 437 08 | 1 | LUMINOUS PUSH BUTTON CONTACTOR 2 | LEUCHTTASTKONTAKTGEBER |
| 14 | 60 61 447 08 | 2 | LUMINOUS SWITCH CONTACT SENDER 2 | LEUCHTSCHALTKONTAKTGEBE |
| 15 | 60 70 087 08 | 2 | LIGHT BULB 1,2W 30V | GLUEHLAMPE |
| 16 | 60 70 117 08 | 4 | LIGHT BULB 1,2W 48V | GLUEHLAMPE |
| 18 | 60 61 666 08 | 1 | SELECTOR SWITCH | STELLWAEHLER |
| 20 | 60 61 452 08 | 1 | LUMINOUS PUSH BUTTON CONTACTOR 2 | LEUCHTTASTKONTAKTGEBER |
| 24 | 60 61 435 08 | 5 | INDICATOR LAMP | LEUCHTMELDER |
| 26 | 60 61 445 08 | 2 | LAMP SOCKET | LAMPENFASSUNG |
| 28 | 60 61 440 08 | 3 | KEYPAD BUTTON | TASTE |
| 30 | 60 61 442 08 | 2 | SPHERICAL CAP | KALOTTE |

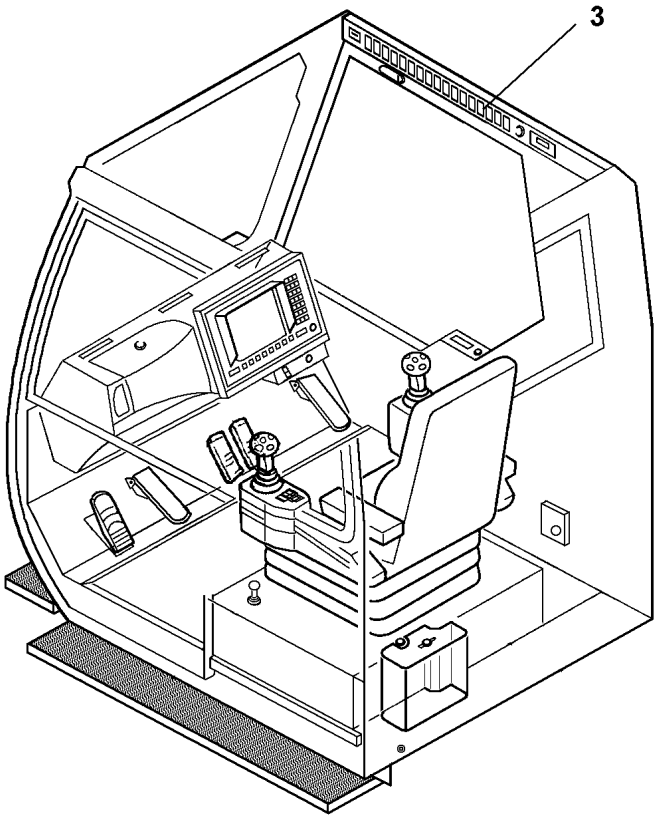


**Pos. 4**
**Pos. 5**

| Pos. | Item | Quantity | Description | Bezeichnung |
|---|---|---|---|---|
| 3 | 96 41 568 08 | 1 | DASHBOARD ROOF, PRE-ASSEMBLED<br>⇨ 2 533 001 96 41 568 08 | ARMATURENBRETT DACH VO |
| 4 | 96 46 345 08 | 1 | CABLE LIST DRIVER'S CABIN | KABELLISTE KRANFUEHRERK |
| (1) | 96 46 346 08 | 1 | WIRING HARNESS W156 | KABELSTRANG |
| (2) | 96 41 571 08 | 1 | WIRING HARNESS W159 | KABELSTRANG |
| 5 | 96 28 388 08 | 1 | ELECTRIC ADD-ON PARTS CABIN<br>⇨ 2 533 003 96 28 388 08 | ELEKTRIK ANBAUTEILE KABINE |

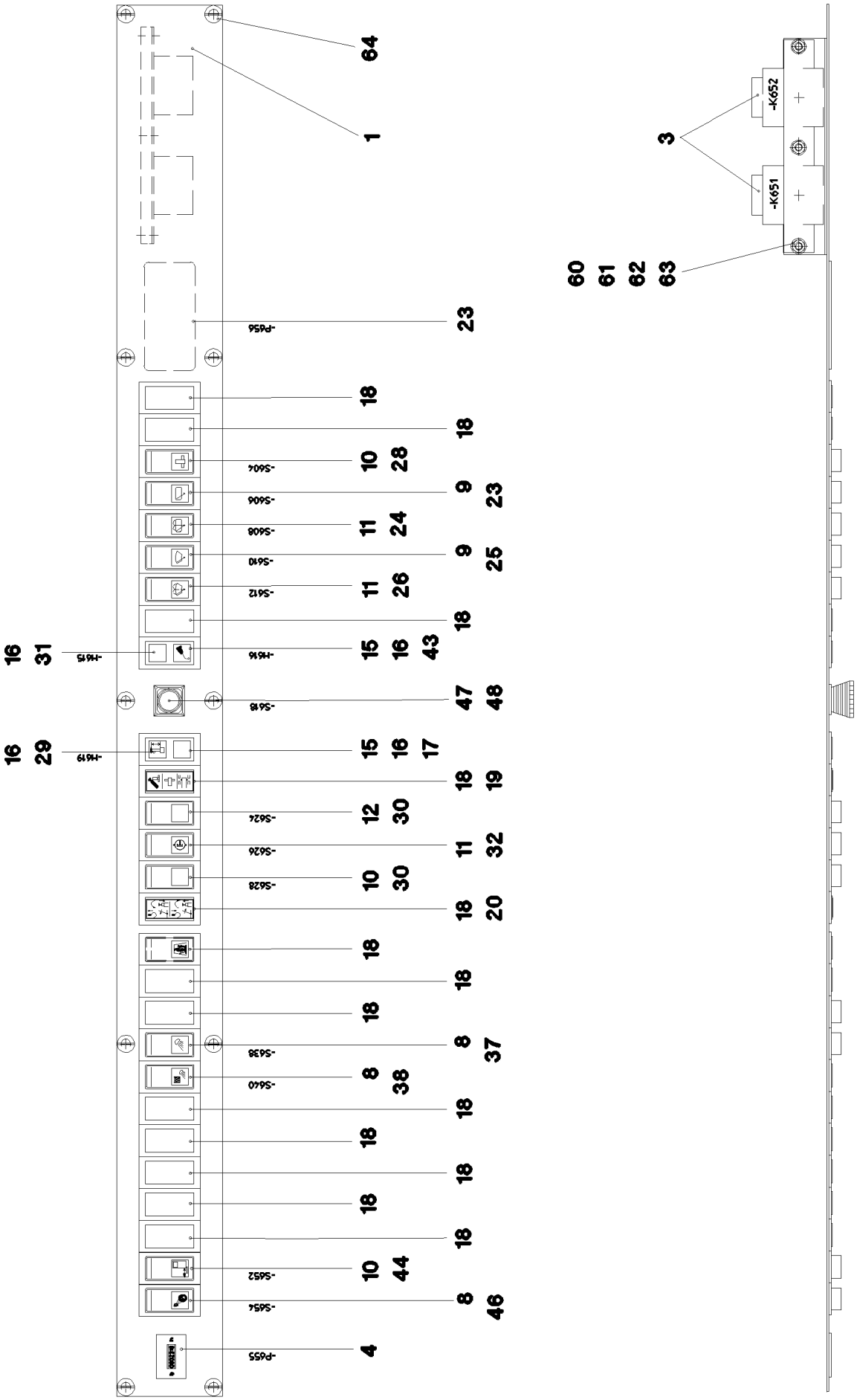


| | | |
|---|---|---|
| 16.2.2017<br>045404<br>LIEBHERR | **etk_en_de_048005 LTR 1100**<br><br>**DASHBOARD ROOF, PRE-ASSEMBLED**<br>**ARMATURENBRETT DACH VORM.** | 161 (1/2)<br><br>**2 533 001**<br>**96 41 568 08** |

| Pos. | Item | Quantity | Description | Bezeichnung |
|---|---|---|---|---|
| 1 | 96 32 139 08 | 1 | CONTROL PANEL ROOF | ARMATURENBRETT DACH |
| 3 | 60 61 962 08 | 2 | CONTROL GEAR 6POL 24V SPF | STEUERGERAET |
| 4 | 69 17 985 08 | 1 | OPERATING HOURS COUNTER STUNDEN | BETRIEBSSTUNDENZAEHLER |
| 8 | 60 60 242 08 | 3 | ROCKER SWITCH | KIPPSCHALTER |
| 9 | 60 60 279 08 | 2 | ROCKER SWITCH | KIPPSCHALTER |
| 10 | 60 60 248 08 | 3 | ROCKER SWITCH | KIPPSCHALTER |
| (1) | 60 02 233 | 2 | LAMP | LAMPE |
| 11 | 60 60 258 08 | 3 | ROCKER SWITCH | KIPPSCHALTER |
| 12 | 60 60 288 08 | 1 | ROCKER SWITCH | KIPPSCHALTER |
| 15 | 60 71 354 08 | 2 | CONTROL LIGHT 24V | KONTROLLLEUCHTE |
| (1) | 60 70 097 08 | 2 | LIGHT BULB 1,3W 24V | GLUEHLAMPE |
| 16 | 60 72 250 08 | 4 | REFLECTOR | REFLEKTOR |
| 17 | 60 67 633 08 | 1 | SYMBOL INSERT | SYMBOLEINSATZ |
| 18 | 60 67 620 08 | 13 | ORIFICE | BLENDE |
| 19 | 77 26 177 08 | 1 | SIGN | SCHILD |
| 20 | 77 26 442 08 | 1 | SIGN | SCHILD |
| 23 | 60 67 702 08 | 1 | SYMBOL INSERT | SYMBOLEINSATZ |
| 24 | 60 67 784 08 | 1 | SYMBOL INSERT | SYMBOLEINSATZ |
| 25 | 60 67 701 08 | 1 | SYMBOL INSERT | SYMBOLEINSATZ |
| 26 | 60 67 718 08 | 1 | SYMBOL INSERT | SYMBOLEINSATZ |
| 28 | 60 67 671 08 | 1 | SYMBOL INSERT | SYMBOLEINSATZ |
| 29 | 60 67 757 08 | 1 | SYMBOL INSERT | SYMBOLEINSATZ |
| 30 | 60 67 669 08 | 2 | SYMBOL INSERT | SYMBOLEINSATZ |
| 31 | 60 67 725 08 | 1 | SYMBOL INSERT | SYMBOLEINSATZ |
| 32 | 60 67 827 08 | 1 | SYMBOL INSERT | SYMBOLEINSATZ |
| 37 | 60 67 643 08 | 1 | SYMBOL INSERT | SYMBOLEINSATZ |
| 38 | 60 67 817 08 | 1 | SYMBOL INSERT | SYMBOLEINSATZ |
| 43 | 60 67 617 08 | 1 | SYMBOL INSERT | SYMBOLEINSATZ |
| 44 | 60 67 914 08 | 1 | SYMBOL INSERT | SYMBOLEINSATZ |
| 46 | 60 67 770 08 | 1 | SYMBOL INSERT | SYMBOLEINSATZ |
| 47 | 60 61 441 08 | 1 | EMERGENCY STOP BUTTON | NOT-AUS TASTE |
| 48 | 60 61 438 08 | 1 | TOUCH CONTACT TRANSMITTER 2OE+2S | TASTKONTAKTGEBER |
| 60 | 40 02 308 | 3 | PAN-HEAD SCREW ISO 7045 M6X12 4.8 A2 | FLACHKOPFSCHRAUBE |
| 61 | 10 87 564 7 | 6 | WASHER ISO 7089 6 200HV 480H SPF | SCHEIBE |
| 62 | 42 51 009 08 | 3 | TOOTH LOCK WASHER DIN 6797 A 6,4 | ZAHNSCHEIBE |
| 63 | 10 87 562 1 | 3 | HEX NUT ISO 4032 M6 8 480H SPF | SECHSKANTMUTTER |
| 64 | 70 42 298 08 | 10 | CRIMP LOCK | QUETSCHVERSCHLUSS |

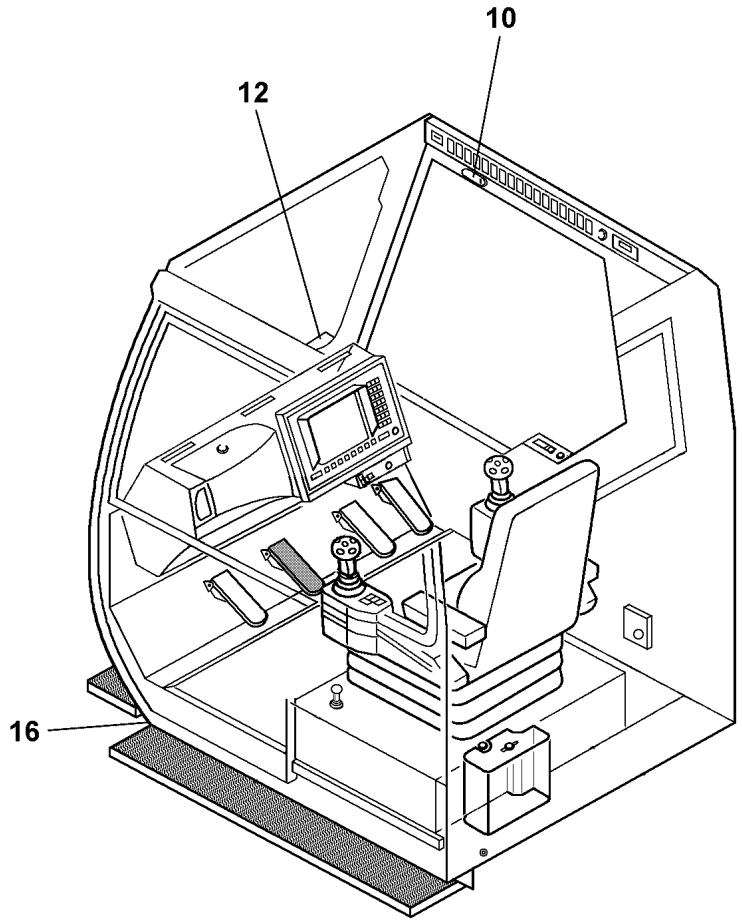


**Pos. 5**
**Pos. 18**
**Pos. 19**

| Pos. | Item | Quantity | Description | Bezeichnung |
|---|---|---|---|---|
| 5 | 91 01 520 08 | 1 | ELECTRIC FOR FLASHLIGHT<br>⇨ 2 920 585 91 01 520 08 | ELEKTRIK BLITZLEUCHTE |
| 10 | 60 71 361 08 | 1 | INTERNAL LIGHT 10W 24V GLASKLAR | INNENLEUCHTE |
| 11 | 60 70 028 08 | 1 | LIGHT BULB DIN 72601 10W 24V | GLUEHLAMPE |
| 12 | 60 71 445 08 | 1 | WORK LIGHT 55/70W 12/24V | ARBEITSSCHEINWERFER |
| 13 | 60 70 211 08 | 1 | LIGHT BULB DIN 72601 70W 24V | GLUEHLAMPE |
| 16 | 61 40 031 08 | 1 | HORN 24V | HORN |
| 17 | 59 15 709 08 | 1 | COVER LID 28X30 POLYACETAL | ABDECKKAPPE |
| 18 | 76 24 428 | 1 | ANTENNA 147MM | ANTENNE |
| 19 | 61 40 307 08 | 1 | LOUDSPEAKER OVAL 12V 90DBA SPF | LAUTSPRECHER OVAL |
| 20 | 10 87 550 3 | 2 | HEX SCREW EN 1665 M5X10 10.9 480H SPF | SECHSKANTSCHRAUBE |
| 24 | 60 24 113 08 | 1 | BLANK SOCKET PG11 MS | BLINDBUCHSE |
| 25 | 60 25 020 08 | 1 | COUNTER NUT PG11 MS | GEGENMUTTER |

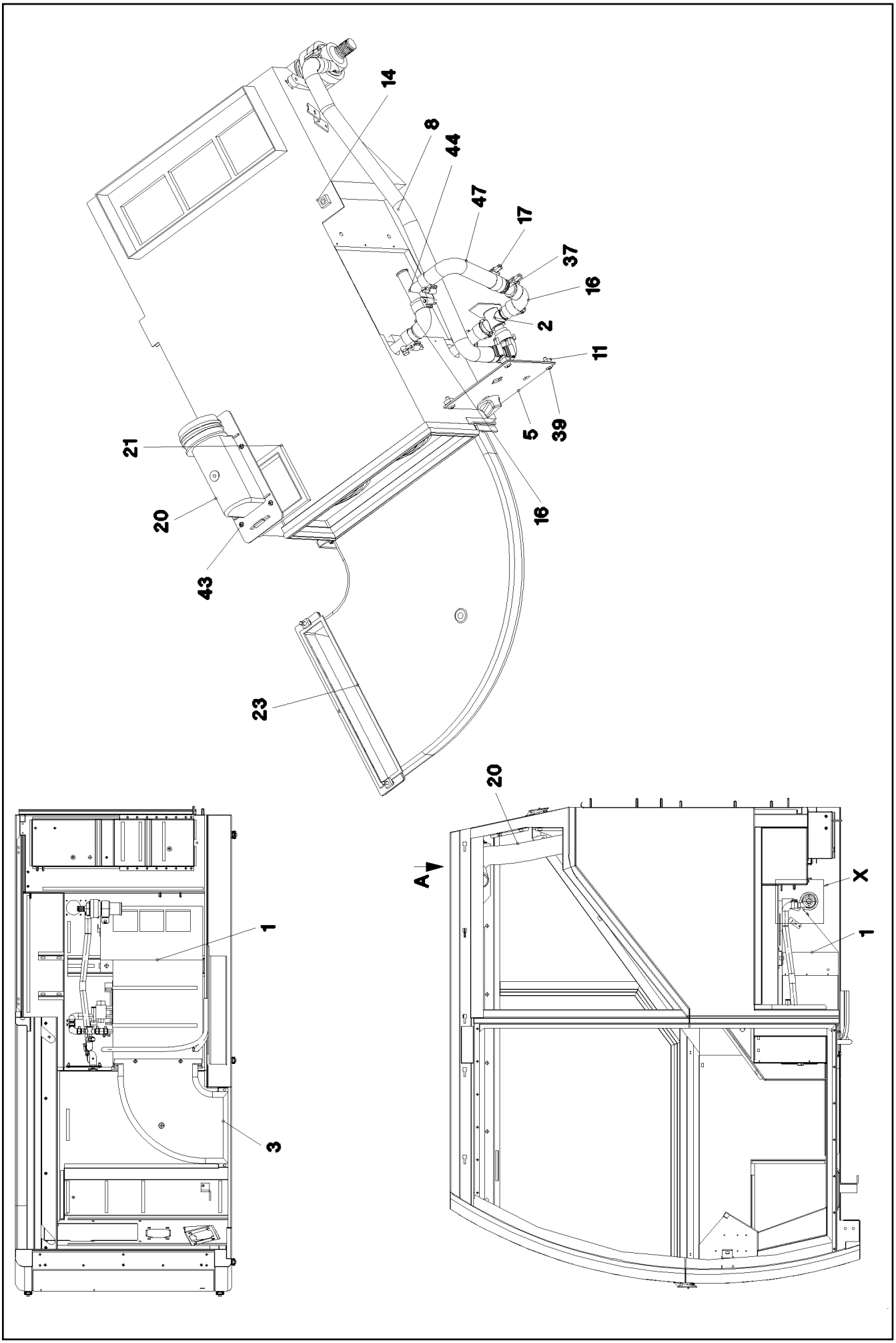


| | | |
|---|---|---|
| 16.2.2017<br>022636<br>LIEBHERR | **etk_en_de_048005 LTR 1100**<br><br>**HEATING, CRANE CABIN**<br>**HEIZUNG OW** | ❑ 164 (1/3)<br><br>⇨ **2 540**<br>**91 45 984 08** |

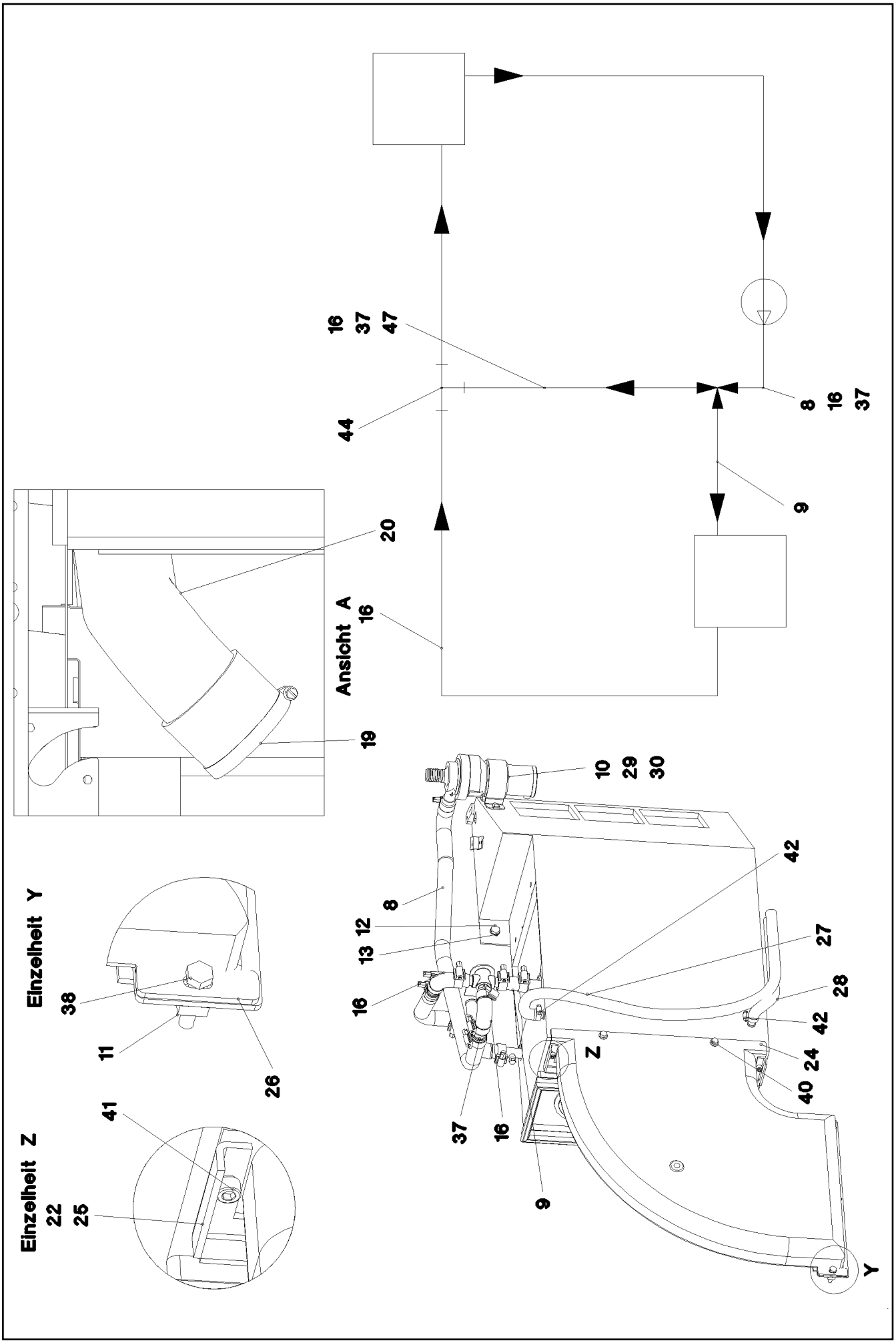


| | | |
|---|---|---|
| 16.2.2017<br>071364<br>LIEBHERR | **etk_en_de_048005 LTR 1100**<br><br>**HEATING, CRANE CABIN**<br>**HEIZUNG OW** | 165 (2/3)<br><br>**2 540**<br>**91 45 984 08** |

| Pos. | Item | Quantity | Description | Bezeichnung |
|---|---|---|---|---|
| 1 | 55 30 022 08 | 1 | WATER HEATING SYSTEM<br>➪ 5 530 022 08 55 30 022 08 | WASSERHEIZGERAET |
| 2 | 55 30 854 08 | 1 | THREE-WAY TAP<br>➪ 5 530 854 08 55 30 854 08 | DREIWEGEHAHN |
| 3 | 74 03 054 08 | 1 | AIR DUCT PE | LUFTFUEHRUNG |
| 4 | 91 27 894 08 | 1 | EL. FOR SUPPLEMENTARY HEATING<br>➪ 2 920 284 91 27 894 08 | ELEKTRIK HEIZUNG |
| 5 | 59 16 694 08 | 1 | SUBPLATE | MONTAGEPLATTE |
| 8 | 97 02 543 5 | 1 | FORM HOSE SPF | FORMSCHLAUCH |
| 9 | 10 87 308 9 | 0.05 | COOLING WATER HOSE DN15 B1 SPF | KUEHLWASSERSCHLAUCH |
| 10 | 10 87 564 7 | 2 | WASHER ISO 7089 6 200HV 480H SPF | SCHEIBE |
| 11 | 41 30 028 08 | 6 | CAGE NUT M6 | KAEFIGMUTTER |
| 12 | 11 69 004 8 | 3 | HEX SCREW ISO 4017 M8X12 8.8 480H SPF | SECHSKANTSCHRAUBE |
| 13 | 10 28 980 3 | 1 | WASHER ISO 7089 8 300HV 480H SPF | SCHEIBE |
| 14 | 41 30 031 08 | 1 | CAGE NUT M8 | KAEFIGMUTTER |
| 16 | 55 31 734 08 | 3 | HOSE 15/18 | SCHLAUCH |
| 17 | 11 11 807 7 | 16 | HOSE CLAMP 21/16-27/12 W3 | SCHLAUCHSCHELLE |
| 19 | 77 42 064 08 | 1 | HOSE CLAMP 80/70-90/12 W3 | SCHLAUCHSCHELLE |
| 20 | 55 31 795 08 | 1 | HEATING HOSE 70X2400 | HEIZUNGSSCHLAUCH |
| 21 | 26 21 091 08 | 0.45 | CELL RUBBER 8X10 | ZELLGUMMI |
| 22 | 26 21 089 08 | 0.36 | CELL RUBBER 6X3X10000 CELL.RUBBER | ZELLGUMMI |
| 23 | 26 21 089 08 | 0.43 | CELL RUBBER 6X3X10000 CELL.RUBBER | ZELLGUMMI |
| 24 | 26 21 089 08 | 0.39 | CELL RUBBER 6X3X10000 CELL.RUBBER | ZELLGUMMI |
| 25 | 97 20 971 08 | 1 | PLATE 3X473X25 DC01 RAL 7037,SDGL,GT | BLECH |
| 26 | 97 20 972 08 | 2 | PLATE 3X15X50 ALMG3 H111 | BLECH |
| 27 | 50 28 104 08 | 0.85 | BRAKE HOSE DIN 74310 DN11-DBSL | BREMSSCHLAUCH |
| 28 | 50 28 104 08 | 0.4 | BRAKE HOSE DIN 74310 DN11-DBSL | BREMSSCHLAUCH |
| 29 | 55 30 545 08 | 1 | CIRCULATING PUMP U4840 | UMWAELZPUMPE |
| 30 | 40 65 099 | 2 | HEX SCREW ISO 4017 M6X16 8.8 A2C | SECHSKANTSCHRAUBE |
| 37 | 55 31 730 08 | 2 | CONNECTING PIPE 18X1,5X60 PA66GF30 | VERBINDUNGSROHR |
| 38 | 46 00 102 | 2 | HEX SCREW ISO 4017 M6X30 8.8 A2C | SECHSKANTSCHRAUBE |
| 39 | 46 00 723 | 4 | PAN-HEAD SCREW ISO 7045 M6X16 4.8 A2 | FLACHKOPFSCHRAUBE |
| 40 | 40 73 502 08 | 2 | HEX SCREW DIN 6921 M6X16 8.8 A2C | SECHSKANTSCHRAUBE |
| 41 | 10 87 558 6 | 4 | SOCKET HEAD SCREW ISO 4762 M6X16 8.8 | ZYLINDERSCHRAUBE |
| 42 | 10 87 202 2 | 2 | HOSE CLAMP DIN 3017-1 12-22/9 W3 | SCHLAUCHSCHELLE |
| 43 | 59 10 070 08 | 4 | SHEET-METAL SCREW DIN 7981 4,2X16-C-H | BLECHSCHRAUBE |
| 44 | 55 31 281 08 | 1 | TEE 18X18 L=75 GELB GEBR.PASS. | T-STUECK |
| 47 | 97 02 544 6 | 1 | FORM HOSE SPF | FORMSCHLAUCH |

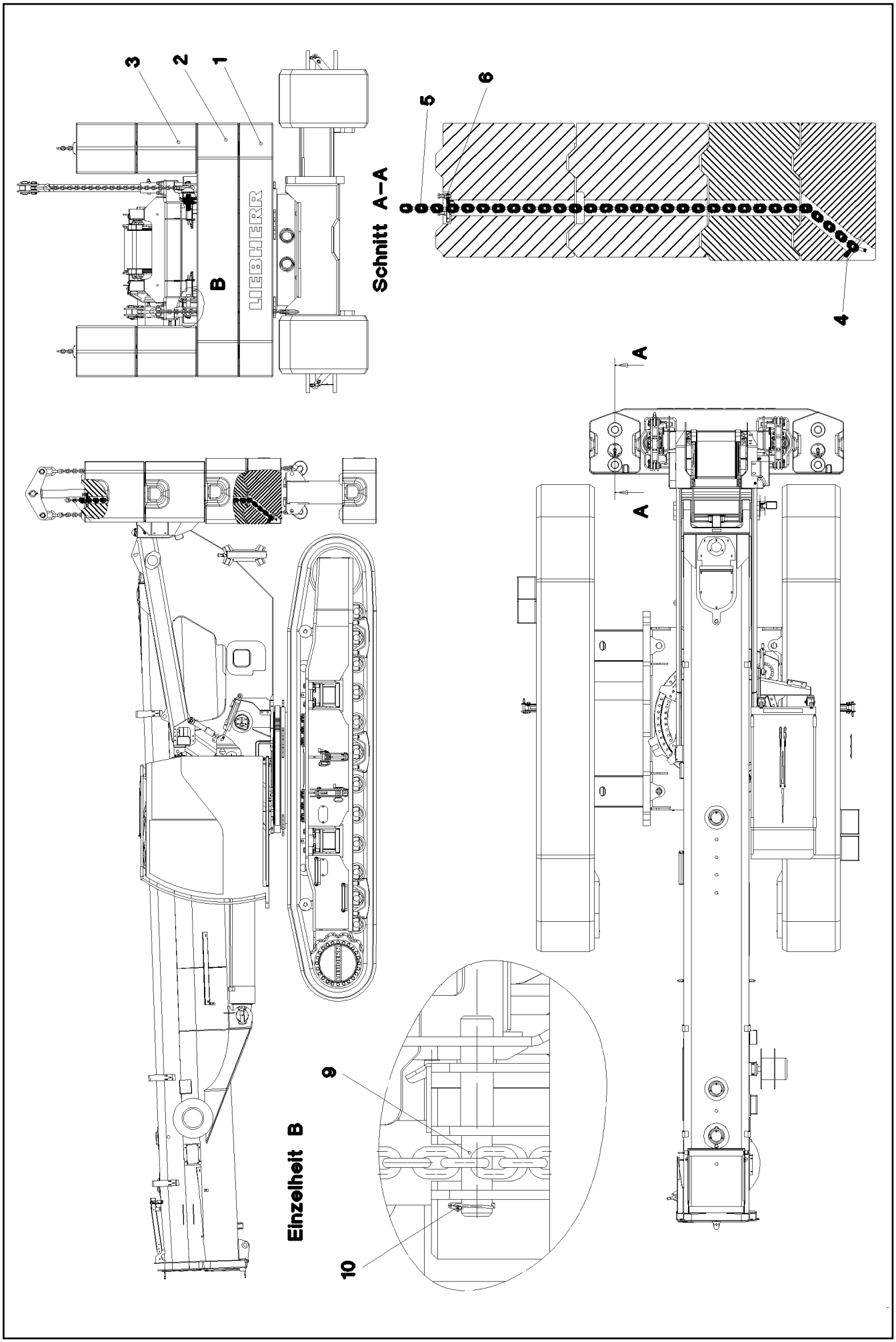


| | | |
|---|---|---|
| 16.2.2017<br>046550<br>LIEBHERR | etk_en_de_048005 LTR 1100<br><br>COUNTERWEIGHT WITH CLAMP<br>GEGENGEWICHT M.BEFESTIGUNG | ❑ 167 (1/2)<br><br>⇨ 2 560<br>91 50 900 08 |

| Pos. | Item | Quantity | Description | Bezeichnung |
|---|---|---|---|---|
| 1 | 96 37 332 08 | 1 | COUNTERWEIGHT CPL. SPF | GEGENGEWICHT KPL. |
| 2 | 38 00 617 08 | 1 | COUNTERWEIGHT EN-GJL-200 SPF | GEGENGEWICHT |
| 3 | 38 00 619 08 | 2 | COUNTERWEIGHT EN-GJL-200 SPF | GEGENGEWICHT |
| 4 | 96 44 249 08 | 2 | CHAIN MOUNT WELDED CONSTR. | KETTENAUFNAHME SCHWK. |
| 5 | 10 32 680 3 | 2 | CHAIN DIN EN 818-2 10T-2.976M GK 8W DA | KETTE |
| 6 | 96 40 606 08 | 2 | CHAIN HOLDER CPL.<br>⇨ 2 560 045 96 40 606 08 | KETTENHALTER KPL. |
| 9 | 97 57 621 08 | 4 | LOCATING BOLT 65.0X330 35NICRMOV125 | AUFNAHMEBOLZEN |
| 10 | 11 10 158 6 | 4 | SAFETY PLUG W HINGE-LID 8X62X7,5X53 V | SICHERHEITSKLAPPSTECKER |

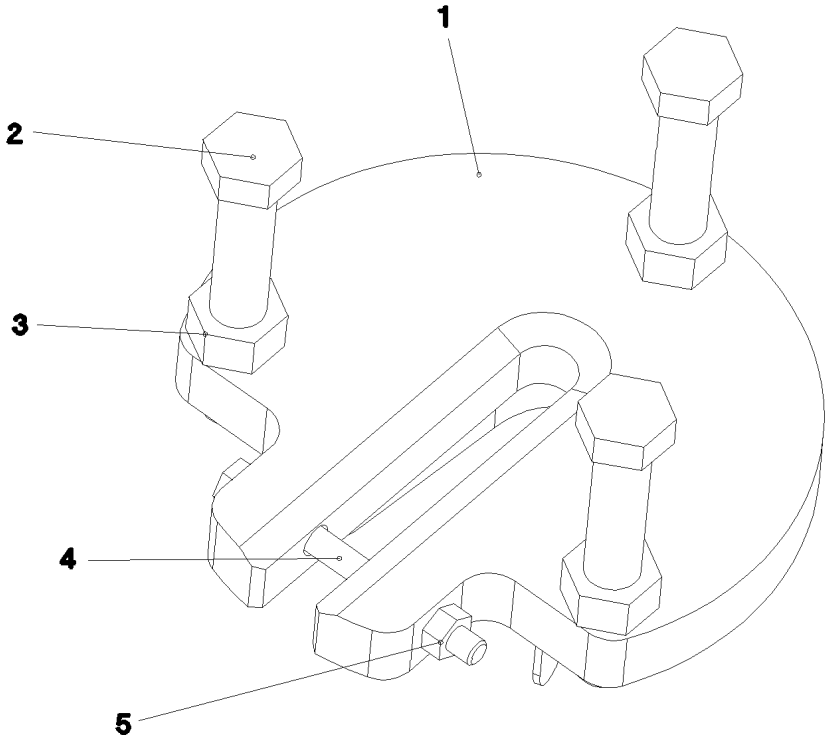


| Pos. | Item | Quantity | Description | Bezeichnung |
|---|---|---|---|---|
| 1 | 96 47 653 08 | 1 | CAIN MOUNTING | KETTENHALTER |
| 2 | 10 87 551 8 | 3 | HEX SCREW ISO 4017 M16X100 8.8 FLZN SP | SECHSKANTSCHRAUBE |
| 3 | 10 87 561 7 | 3 | HEX NUT ISO 4032 M16 8 FLZN SPF | SECHSKANTMUTTER |
| 4 | 10 87 551 4 | 1 | HEX SCREW ISO 4014 M8X85 8.8 480H SPF | SECHSKANTSCHRAUBE |
| 5 | 11 69 387 5 | 1 | HEX NUT ISO 4032 M8 8 480H SPF | SECHSKANTMUTTER |

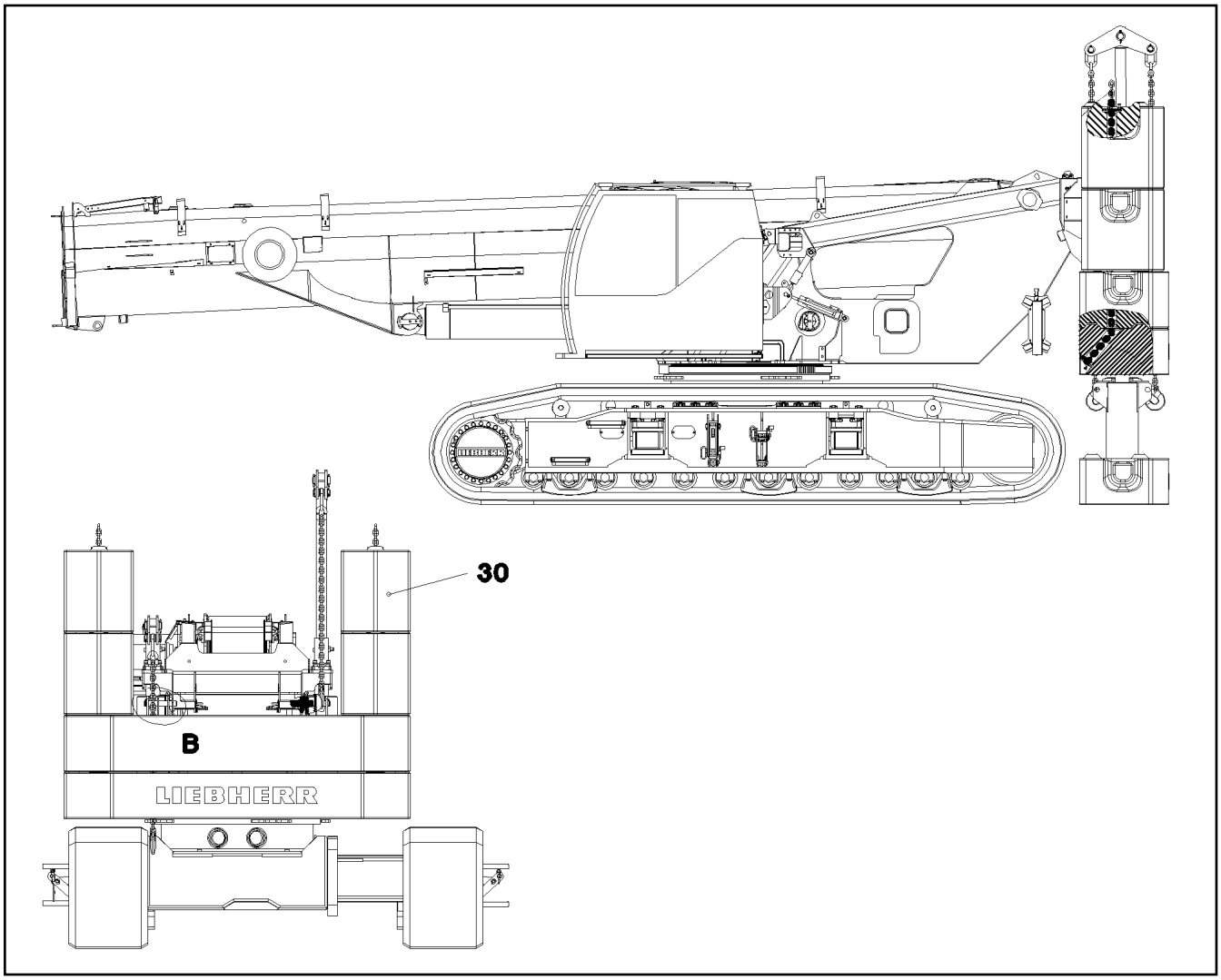


| Pos. | Item | Quantity | Description | Bezeichnung |
|---|---|---|---|---|
| 30 | 38 00 619 08 | 2 | COUNTERWEIGHT EN-GJL-200 SPF | GEGENGEWICHT |

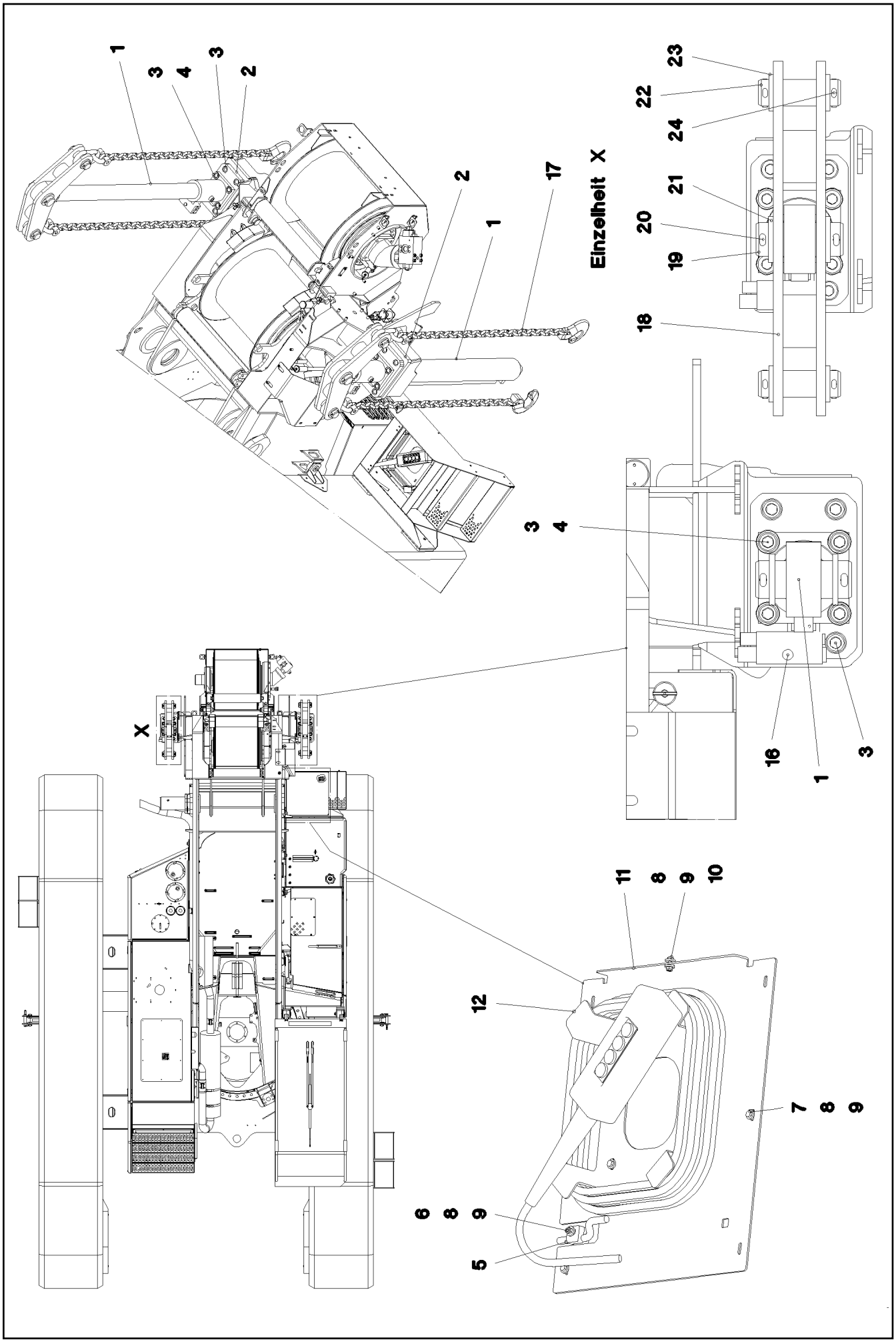


| | | |
|---|---|---|
| 16.2.2017<br>044990<br>LIEBHERR | **etk_en_de_048005 LTR 1100**<br><br>**HYDRAULIC BALLASTING**<br>**HYDRAULISCHE BALLASTIERUNG** | ❑ 171 (1/2)<br><br>⇨ **2 571**<br>**91 50 902 08** |

| Pos. | Item | Quantity | Description | Bezeichnung |
|---|---|---|---|---|
| 1 | 10 32 633 4 | 2 | BALLAST EXTENSION RAM 110/100-1465 SP | BALLASTIERZYLINDER |
| (999) | 10 80 171 3 | 1 | SEAL KIT BALLASTING CYLINDER | DS BALLASTIERZYLINDER |
| 2 | 97 57 618 08 | 2 | KEY PLATE 40X310X200 S960QL+Z25 | KEILPLATTE |
| 3 | 40 42 143 05 | 16 | SOCKET HEAD SCREW ISO 4762 M24X60 8. | ZYLINDERSCHRAUBE |
| 4 | 46 00 146 | 16 | WASHER EN 14399-6 24 300-370HV FLZN SP | SCHEIBE |
| 5 | 60 20 124 08 | 1 | CLAMP, CPL.. L 0G 12 PP | SCHELLE KPL. |
| 6 | 11 82 028 4 | 1 | SOCKET HEAD SCREW ISO 4762 M6X30 8.8 | ZYLINDERSCHRAUBE |
| 7 | 11 64 489 9 | 11 | HEX SCREW ISO 4017 M6X20 8.8 480H SPF | SECHSKANTSCHRAUBE |
| 8 | 41 19 004 08 | 12 | HEX NUT DIN 985 M6 8 A2C | SECHSKANTMUTTER |
| 9 | 40 00 648 | 23 | WASHER DIN 7349 6,4 200HV A3C | SCHEIBE |
| 11 | 97 66 111 08 | 1 | PLATE 3X583X481 DC01 | BLECH |
| 12 | 97 66 112 08 | 1 | PLATE 3X460X398 DC01 FE//ZN20//C | BLECH |
| 16 | 51 16 363 14 | 2 | LOWERING BRAKE VALVE 420BAR | SENKBREMSVENTIL |
| (999) | 51 01 840 01 | 1 | SEAL KIT BBV6 NBR | DICHTUNGSSATZ |
| 17 | 10 32 681 6 | 4 | CHAIN SUSPENSION 10T-2132M DAC SPF | KETTENGEHAENGE |
| 18 | 91 85 786 14 | 2 | COMPENSATOR 983593114 LH-GRAU | WIPPE |
| 19 | 48 55 010 14 | 2 | PIN ISO 2340 B 70H11X180 35NICRMOV125 | BOLZEN |
| 20 | 43 30 109 08 | 4 | SPLIT PIN ISO 1234 13X100 ST A2K | SPLINT |
| 21 | 42 11 039 08 | 4 | WASHER DIN 1440 70 ST VERZ | SCHEIBE |
| 22 | 45 00 448 14 | 4 | PIN DIN EN 22340 B55X170 42CRMO4+QT | BOLZEN |
| 23 | 42 11 034 08 | 8 | WASHER DIN 1440 55 ST VERZ | SCHEIBE |
| 24 | 43 30 103 08 | 8 | SPLIT PIN ISO 1234 10X80 ST A3C | SPLINT |

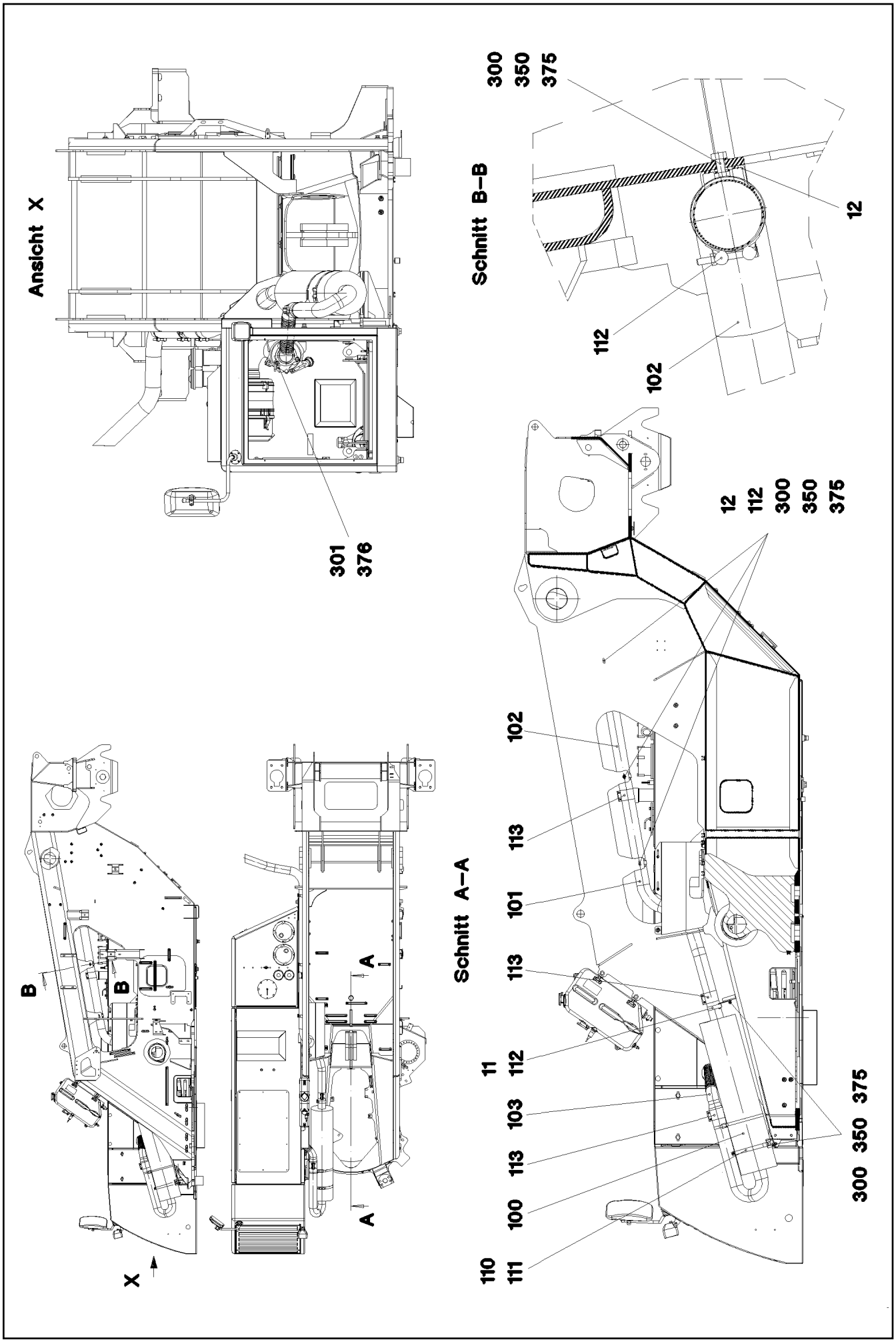


| | | |
|---|---|---|
| 16.2.2017<br>046559<br>LIEBHERR | etk_en_de_048005 LTR 1100<br><br>EXHAUST SYSTEM CPL.<br>ABGASANLAGE KPL. | ❑ 173 (1/2)<br><br>⇨ 2 680<br>91 53 225 08 |

| Pos. | Item | Quantity | Description | Bezeichnung |
|---|---|---|---|---|
| 11 | 97 09 068 08 | 1 | PLATE 0 Edelstahl | BLECH |
| 12 | 95 71 203 08 | 3 | CONSOLE 3x122x55 Edelstahl | KONSOLE |
| 100 | 97 10 021 08 | 1 | SPARK ARRESTER Edelstahl | FUNKENFAENGER |
| 101 | 97 17 015 08 | 1 | EXHAUST DUCT EDELSTAHL | ABGASLEITUNG |
| 102 | 97 27 698 08 | 1 | EXHAUST DUCT EDELSTAHL | ABGASLEITUNG |
| 103 | 97 65 053 08 | 1 | FLEXIBLE EXHAUST PIPE | ABGASLEITUNG FLEXIBEL |
| 110 | 55 20 751 08 | 1 | BEARING BLOCK | LAGERBOCK |
| 111 | 55 20 752 08 | 1 | TIGTENING STRAP 260,4//19 | SPANNBAND |
| 112 | 77 42 252 08 | 4 | HOSE CLAMP 89-94X25 ST | SCHLAUCHSCHELLE |
| 113 | 55 20 975 08 | 3 | FLAT CLIP 88,9 EDELSTAHL | FLACHSCHELLE |
| 300 | 11 63 181 6 | 7 | HEX SCREW ISO 4017 M10X25 8.8 FLZN SP | SECHSKANTSCHRAUBE |
| 301 | 11 63 174 2 | 3 | HEX SCREW ISO 4017 M12X30 8.8 FLZN SP | SECHSKANTSCHRAUBE |
| 350 | 11 00 280 7 | 7 | HEX NUT ISO 4032 M10 10 FLZN SPF | SECHSKANTMUTTER |
| 375 | 10 28 979 5 | 10 | WASHER ISO 7089 10 300HV FLZN SPF | SCHEIBE |
| 376 | 42 15 000 08 | 3 | WASHER EN 14399-6 12 ST A2K | SCHEIBE |

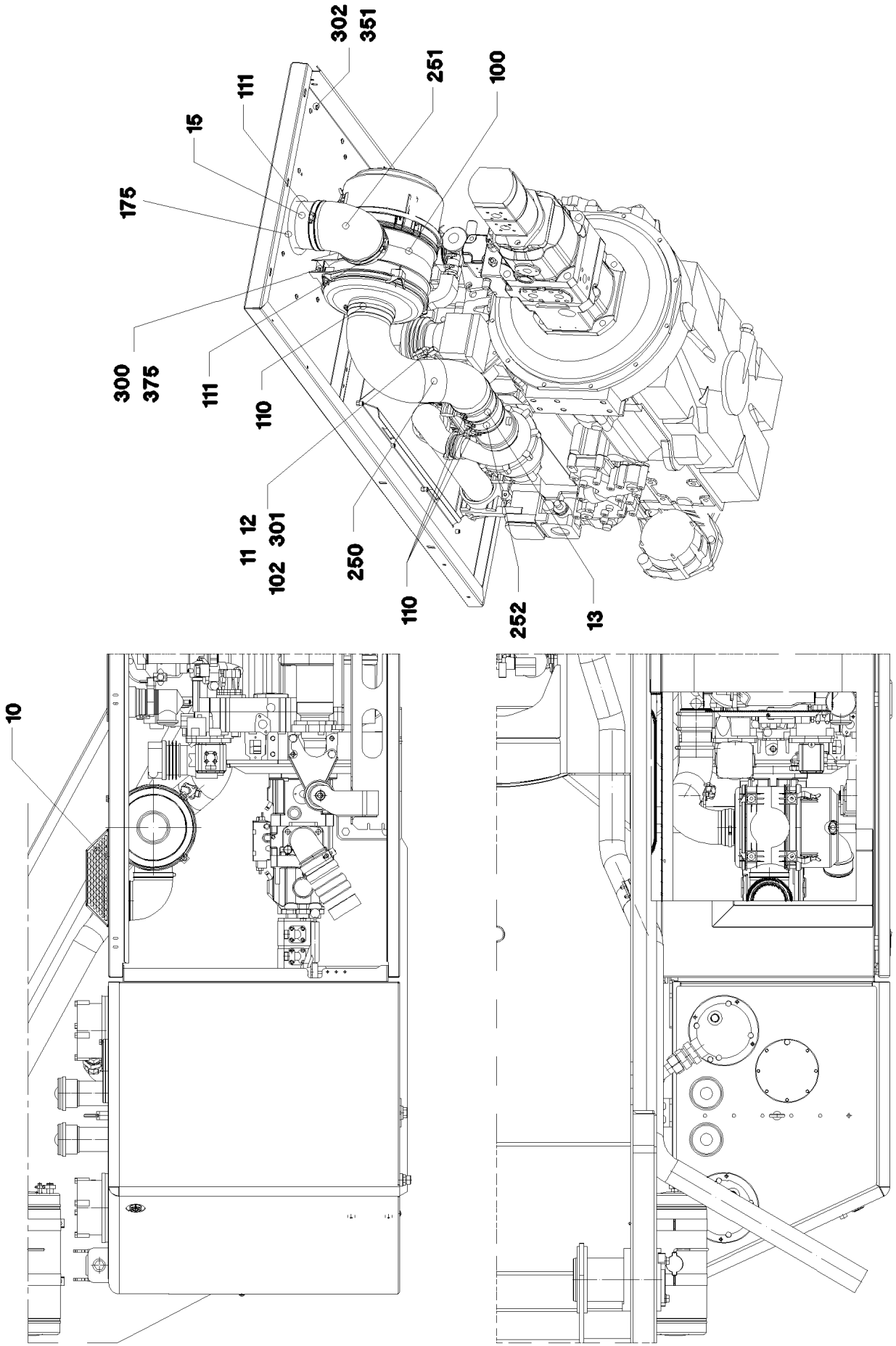
302
351
251
100
111
15
175
300
375
111
110
11 12
102 301
250
110
252
13
10

| Pos. | Item | Quantity | Description | Bezeichnung |
|---|---|---|---|---|
| 10 | 97 36 381 08 | 1 | AIR SCOOP 1.5X473X733 DC01+ZE SPF | LUFTHUTZE |
| 11 | 97 22 606 08 | 1 | FLANGE PLATE 10X59X24 S355MC FE//ZNNI | FLANSCHPLATTE |
| 12 | 97 22 607 08 | 1 | FLANGE 35.0X23 S355J2G3 FE//ZN20//C | FLANSCH |
| 13 | 97 08 796 4 | 1 | TUBE ST12 SPF | ROHR |
| 15 | 97 37 568 08 | 1 | TUBE | ROHR |
| 100 | 10 09 998 1 | 1 | AIR FILTER NLG15M³/MIN PP GF 30<br>⇨ X10099981 10 09 998 1 | LUFTFILTER |
| 102 | 96 65 122 08 | 1 | SENSOR COMPL.<br>⇨ 1 681 021 96 65 122 08 | SENSOR KPL. |
| 110 | 77 42 176 08 | 4 | HOSE CLAMP 120/110-130/12 W3 | SCHLAUCHSCHELLE |
| 111 | 77 42 842 08 | 2 | HOSE CLAMP 130/120-140/12 W3 | SCHLAUCHSCHELLE |
| 175 | 26 21 055 08 | 0.35 | SEALING PROFILE 1-4X21,5X10 | DICHTPROFIL |
| 250 | 97 37 569 08 | 1 | FORM HOSE | FORMSCHLAUCH |
| 251 | 10 09 996 9 | 1 | ELBOW 90° DI=130 GUMMI | KRUEMMER |
| 252 | 94 28 754 08 | 1 | RUBBER HOSE 100X6X75 EPDM | GUMMISCHLAUCH |
| 300 | 40 00 828 | 4 | HEX SCREW ISO 4017 M10X30 8.8 A3C | SECHSKANTSCHRAUBE |
| 301 | 10 41 285 1 | 8 | BUTTON HEAD SCREW AEHNL.ISO 7380-2 | HALBRUNDKOPFSCHRAUBE |
| 351 | 41 30 028 08 | 8 | CAGE NUT M6 | KAEFIGMUTTER |
| 375 | 11 65 858 0 | 4 | WASHER DIN 7349 10,5 200HV-St FLZN SPF | SCHEIBE |

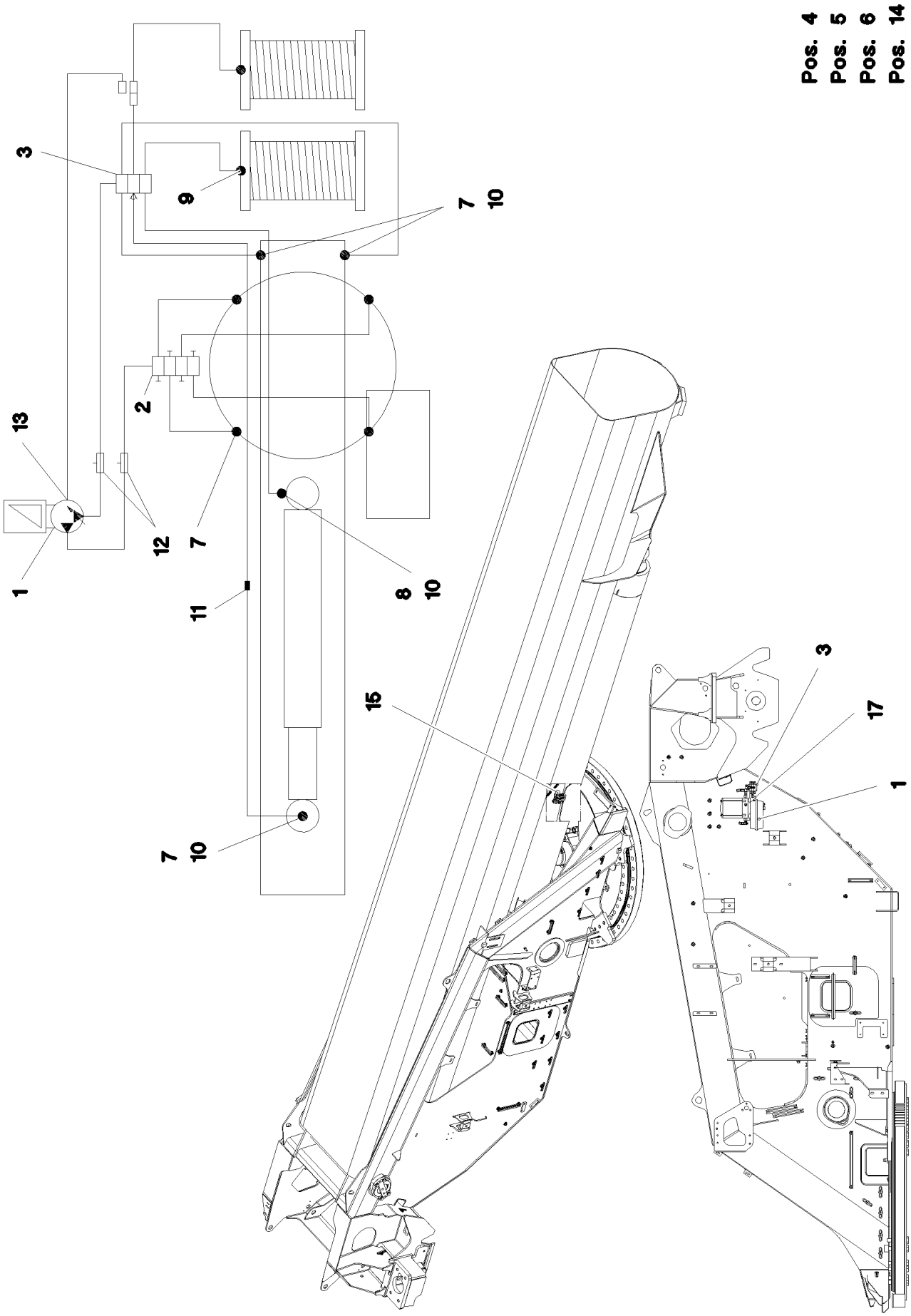


| | | |
|---|---|---|
| 16.2.2017<br>045845<br>LIEBHERR | etk_en_de_048005 LTR 1100<br><br>CENT. LUBRIC. SYSTEM SUPERST.<br>ZENTRALSCHMIERANLAGE OW | ❑ 177 (1/2)<br><br>⇨ 2 711<br>91 53 002 08 |

| Pos. | Item | Quantity | Description | Bezeichnung |
|---|---|---|---|---|
| 1 | 10 32 706 5 | 1 | ELECTRIC PUMP<br>➪ X10327065 10 32 706 5 | ELEKTROPUMPE |
| 2 | 11 00 291 4 | 1 | DISTRIBUTION BLOCK 4/4<br>➪ X11002914 11 00 291 4 | VERTEILERKOMBINATION |
| 3 | 10 02 823 5 | 1 | DISTRIBUTION BLOCK | VERTEILERKOMBINATION |
| (1) | 77 43 781 08 | 1 | NON-RETURN VALVE | RUECKSCHLAGVENTIL |
| 4 | 12 20 461 4 | 4 | SOCKET HEAD SCREW ISO 4762 M5X35 8.8 | ZYLINDERSCHRAUBE |
| 5 | 41 15 148 08 | 4 | HEX NUT ISO 4032 M5 8 A2C | SECHSKANTMUTTER |
| 6 | 46 00 305 | 4 | WASHER ISO 7089 5 200HV A3C | SCHEIBE |
| 7 | 77 43 867 08 | 7 | MALE CONNECTOR WSV 6 M10X1K MS | STECKANSCHLUSS |
| 8 | 77 43 874 08 | 1 | MALE CONNECTOR GSV6 M10X1K | STECKANSCHLUSS |
| 9 | 77 43 866 08 | 1 | MALE CONNECTOR GSV6 M8X1K | STECKANSCHLUSS |
| 10 | 77 43 734 08 | 4 | EXTENSION M10X21-SW13 | VERLAENGERUNG |
| 11 | 77 43 742 08 | 1 | FLANGE JOINT G 6LL | VERSCHRAUBUNG |
| 12 | 77 43 751 08 | 2 | PASSAGE NIPPLE BLOCK | DURCHGANGSNIPPELBLOCK |
| (1) | 57 15 786 08 | 1 | HYDRAULIC-TYPE LUBRICAT.NIPPLE DIN 71 | KEGELSCHMIERNIPPEL |
| 13 | 77 43 728 08 | 1 | PUMP RETURN FLOW | PUMPENRUECKLAUF |
| 14 | 10 87 314 9 | 40 | TUBE DIN 73378 6X1,5 PA 12-HL | ROHR |
| 15 | 95 36 969 08 | 1 | PLATE 4X30X105 S315MC FE//ZN20//C | BLECH |
| 17 | 95 41 415 08 | 1 | PLATE 4X270X157 S315MC FE//ZNNI8//CN//T | BLECH |

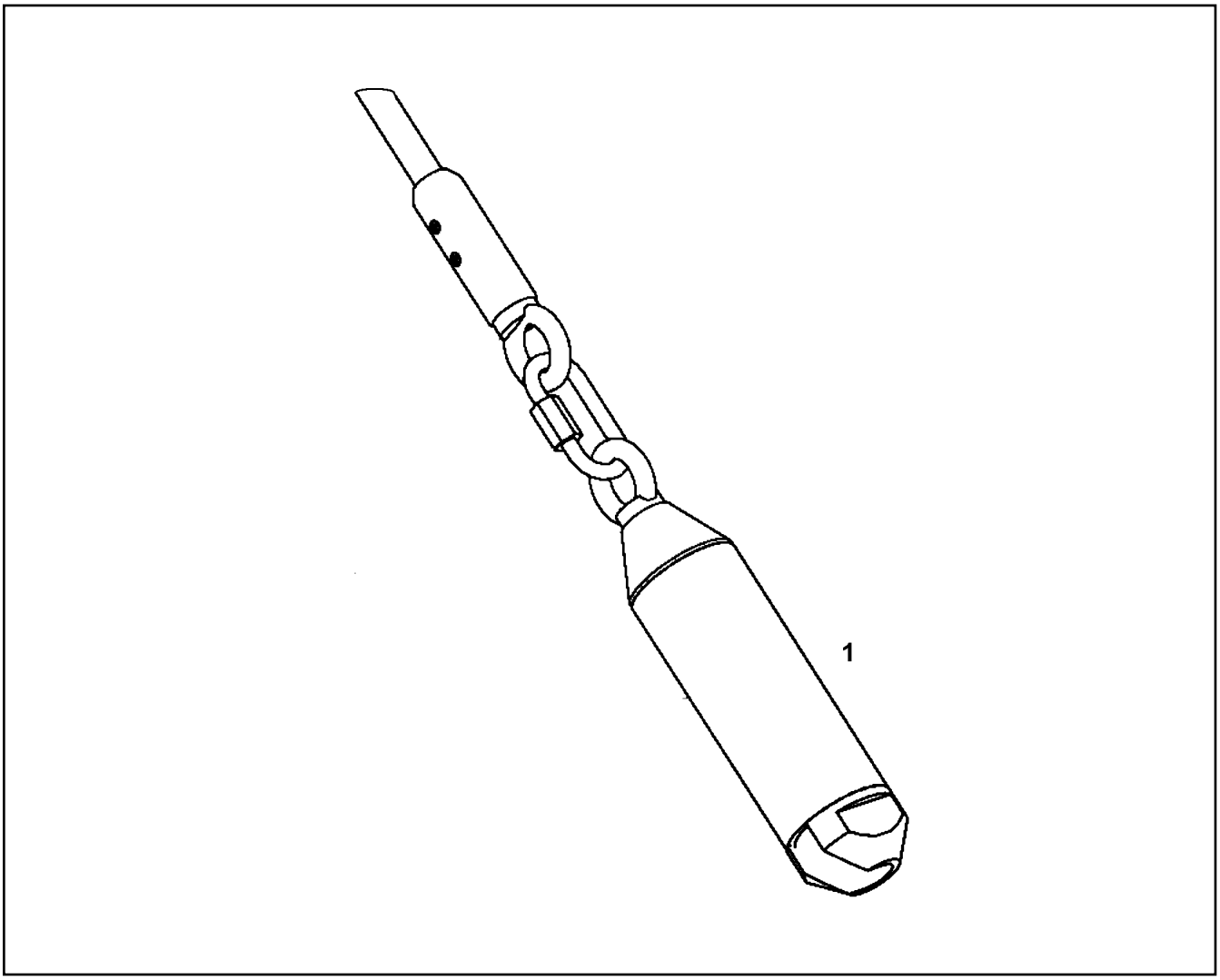


| Pos. | Item | Quantity | Description | Bezeichnung |
|---|---|---|---|---|
| 1 | 11 49 379 3 | 1 | SLEEVE | HUELSE |

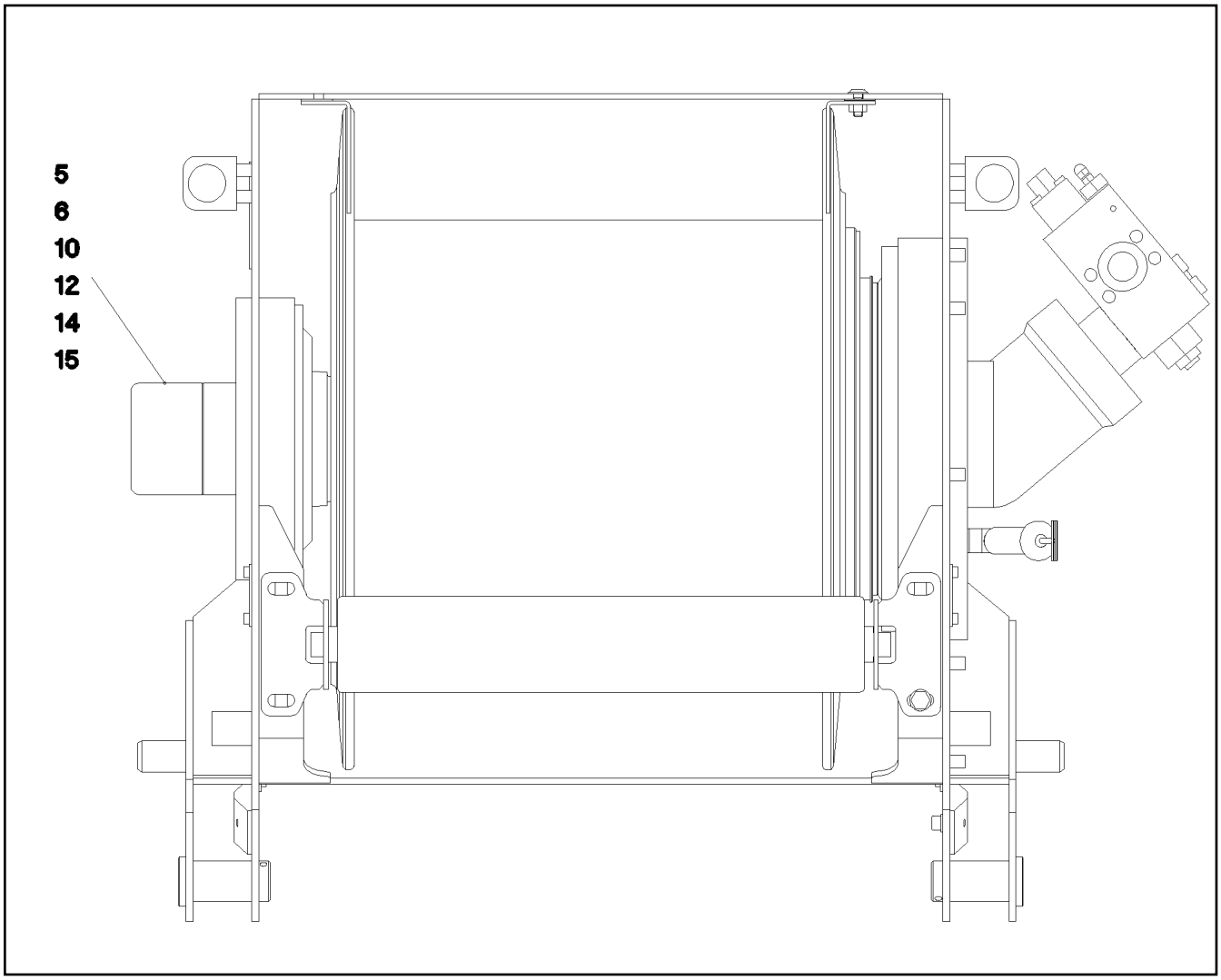


| Pos. | Item | Quantity | Description | Bezeichnung |
|---|---|---|---|---|
| 5 | 60 60 516 08 | 1 | GEAR CAM LIMITSWITCH 45° SPF<br>⇨ 6 060 516 08 60 60 516 08 | GETRIEBENOCKENENDSCHAL |
| 6 | 60 60 126 08 | 1 | DRIVE FLANGE EDELSTAHL | ANTRIEBSFLANSCH |
| 10 | 40 42 002 | 3 | SOCKET HEAD SCREW ISO 4762 M6X20 8.8 | ZYLINDERSCHRAUBE |
| 12 | 42 40 005 08 | 3 | WASHER SPRING DIN 127 A 6 FST A2C | FEDERRING |
| 14 | 92 06 423 08 | 1 | LEAD W306A | LEITUNG |
| 15 | 92 73 180 08 | 1 | LEAD W325 | LEITUNG |

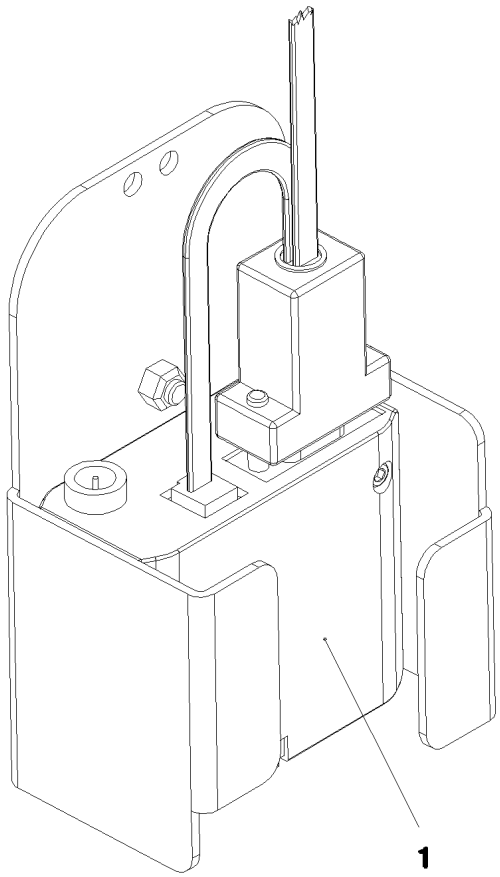


**Pos. 20**

| Pos. | Item | Quantity | Description | Bezeichnung |
|---|---|---|---|---|
| 1 | 96 37 908 08 | 1 | GSM MODULE LICCON 1<br>⇨ 2 780 854 96 37 908 08 | GSM-MODUL |
| 20 | 10 28 444 4 | 1 | SIM-CARD | SIM-KARTE |

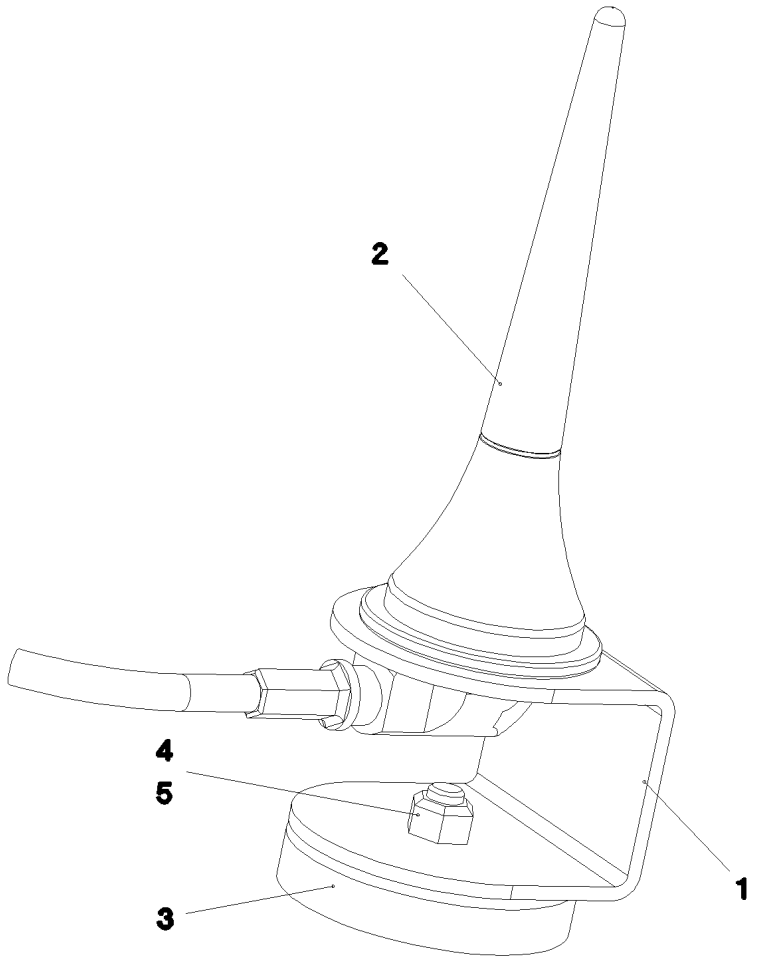


| Pos. | Item | Quantity | Description | Bezeichnung |
|---|---|---|---|---|
| 1 | 97 26 310 08 | 1 | PLATE 2X103X40 ALMG3 H111 | BLECH |
| 2 | 10 28 963 1 | 1 | ANTENNA | ANTENNE |
| 3 | 61 70 001 08 | 1 | PERMANENT MAGNET 9V | DAUERMAGNET |
| 4 | 40 86 040 08 | 1 | COUNTERSUNK SCREW DIN 7991 M5X16 8 | SENKSCHRAUBE |
| 5 | 41 19 003 08 | 1 | HEX NUT DIN 985 M5 8 A2C | SECHSKANTMUTTER |

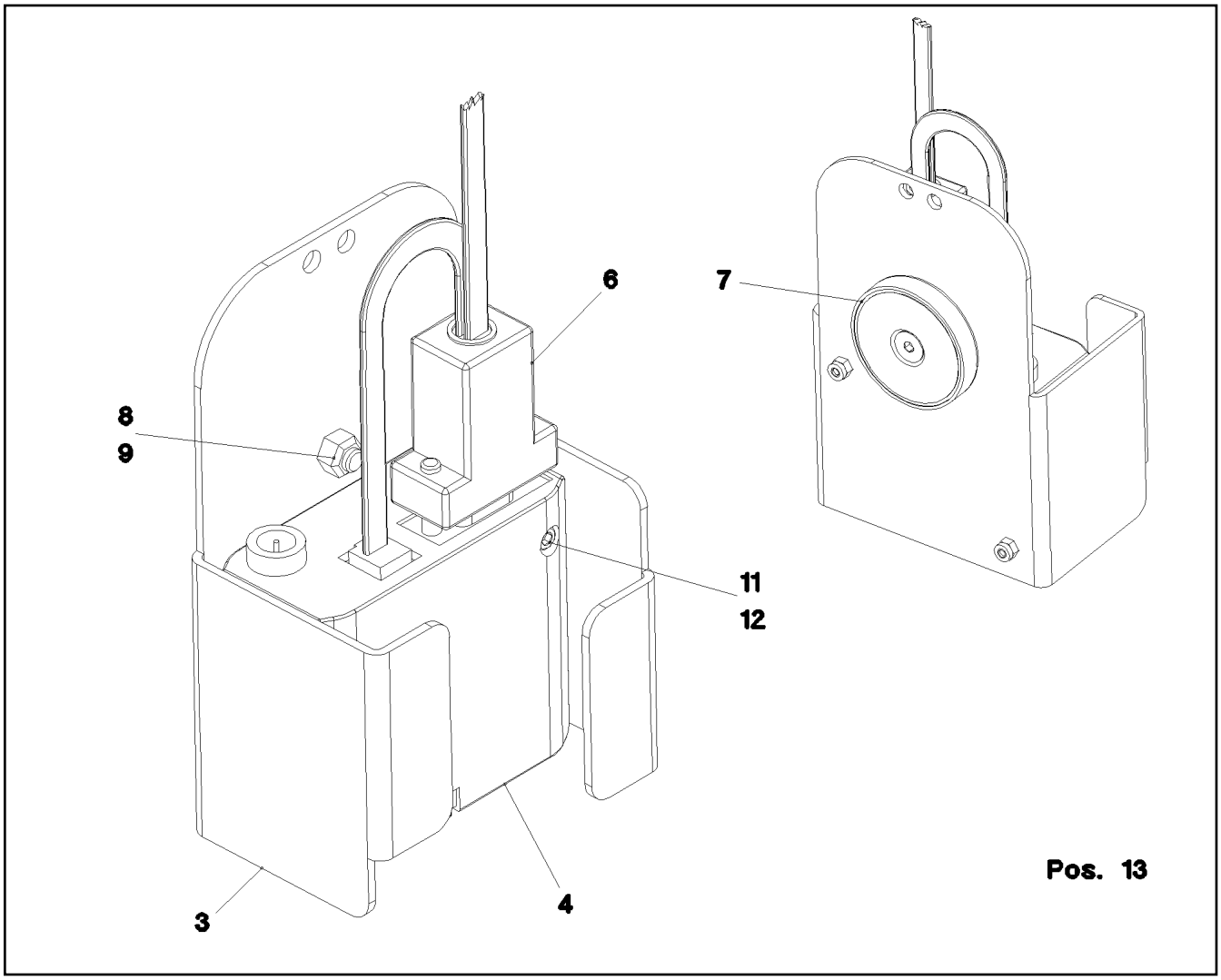


| Pos. | Item | Quantity | Description | Bezeichnung |
|---|---|---|---|---|
| 3 | 97 47 409 08 | 1 | PLATE 2X214X142 ALMG3 H111 | BLECH |
| 4 | 96 28 688 08 | 1 | GSM-MODULE PROGRAMMED LICCON1 SP | GSM-MODUL PROGRAMMIERT |
| (10) | 10 65 269 9 | 1 | GSM MODULE MC55I QUAD-BAND | GSM-MODUL |
| 6 | 96 24 499 08 | 1 | LEAD W634 | LEITUNG |
| 7 | 61 70 001 08 | 1 | PERMANENT MAGNET 9V | DAUERMAGNET |
| 8 | 40 86 040 08 | 1 | COUNTERSUNK SCREW DIN 7991 M5X16 8 | SENKSCHRAUBE |
| 9 | 41 19 003 08 | 1 | HEX NUT DIN 985 M5 8 A2C | SECHSKANTMUTTER |
| 11 | 40 42 002 08 | 2 | SOCKET HEAD SCREW ISO 4762 M3X35 8.8 | ZYLINDERSCHRAUBE |
| 12 | 10 87 639 9 | 2 | HEX NUT DIN 985 M3 8 480H SPF | SECHSKANTMUTTER |
| 13 | 60 32 022 08 | 2 | CABLE TIE 2,5X98-BLACK PA 6.6 | KABELBINDER |

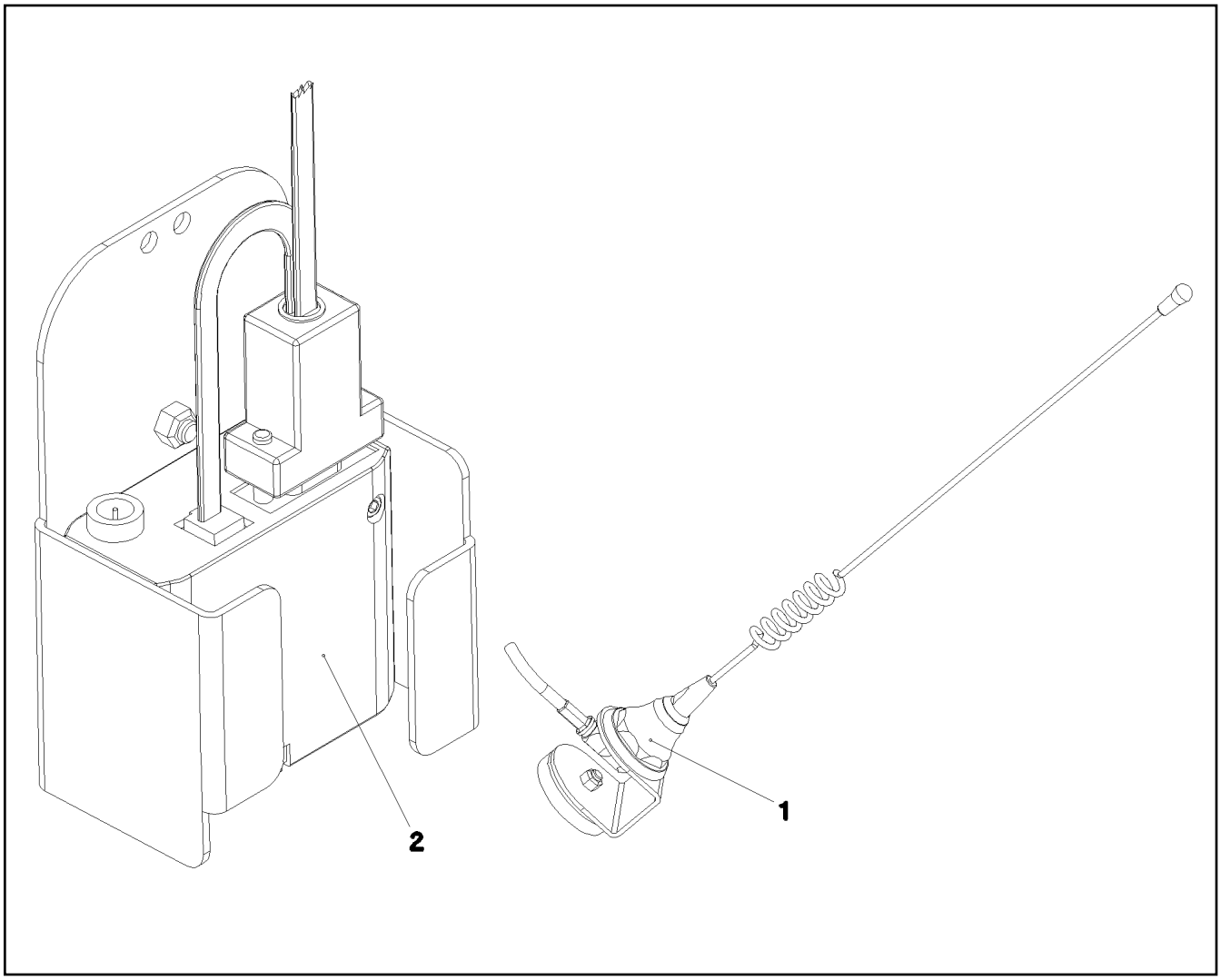


| Pos. | Item | Quantity | Description | Bezeichnung |
|---|---|---|---|---|
| 1 | 96 24 498 08 | 1 | RADIO ANTENNA PRE-ASS.<br>⇨ 2 780 851 96 24 498 08 | FUNKANTENNE VORM. |
| 2 | 96 24 845 08 | 1 | GSM-MODULE PRE-ASS.LICCON 1<br>⇨ 2 780 852 96 24 845 08 | GSM-MODUL VORM.LICCON 1 |

| Pos. | Item | Quantity | Description | Bezeichnung |
|---|---|---|---|---|
| 2 | 96 72 125 08 | 1 | WIRING HARNESS W554 | KABELSTRANG |
| 3 | 11 06 853 5 | 1 | REGULATOR TEMP.GESTEUERT | REGLER |
| 4 | 10 80 026 6 | 1 | TEMPERATURE SENSOR -50/+125°C SPF | TEMPERATURFUEHLER |
| 5 | 60 40 077 08 | 1 | FLAT FUSE LINK 3A | FLACHSICHERUNGSEINSATZ |
| 6 | 11 08 184 1 | 1 | MEASURING STRIP | MESSSTREIFEN |

| Pos. | Item | Quantity | Description | Bezeichnung |
|---|---|---|---|---|
| 1 | 96 46 911 08 | 1 | WIRING HARNESS W400 | KABELSTRANG |
| 3 | 96 67 851 08 | 1 | PLATING DATA LOGGER<br>⇨ 2 780 953 96 67 851 08 | ZUSATZBESCHILDERUNG |

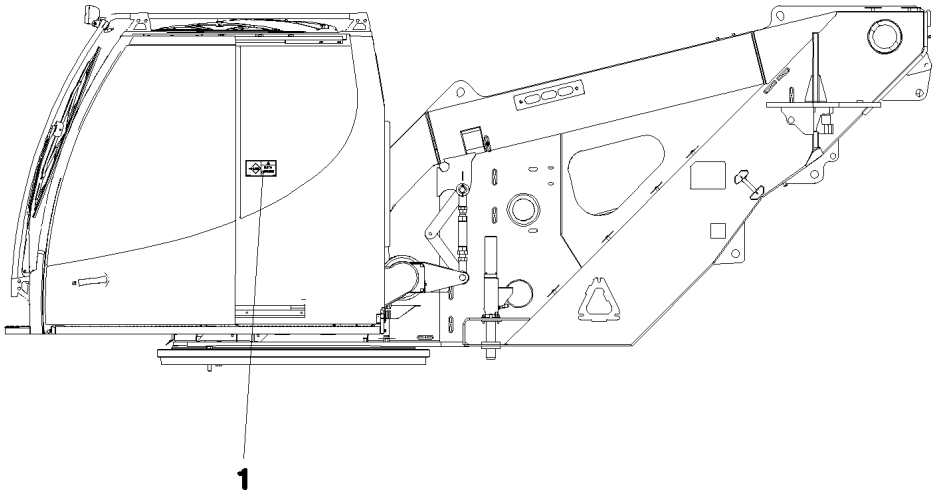


| Pos. | Item | Quantity | Description | Bezeichnung |
|---|---|---|---|---|
| 1 | 97 00 979 9 | 1 | SIGN 168X88 KLEBEFOLIE SPF | SCHILD |

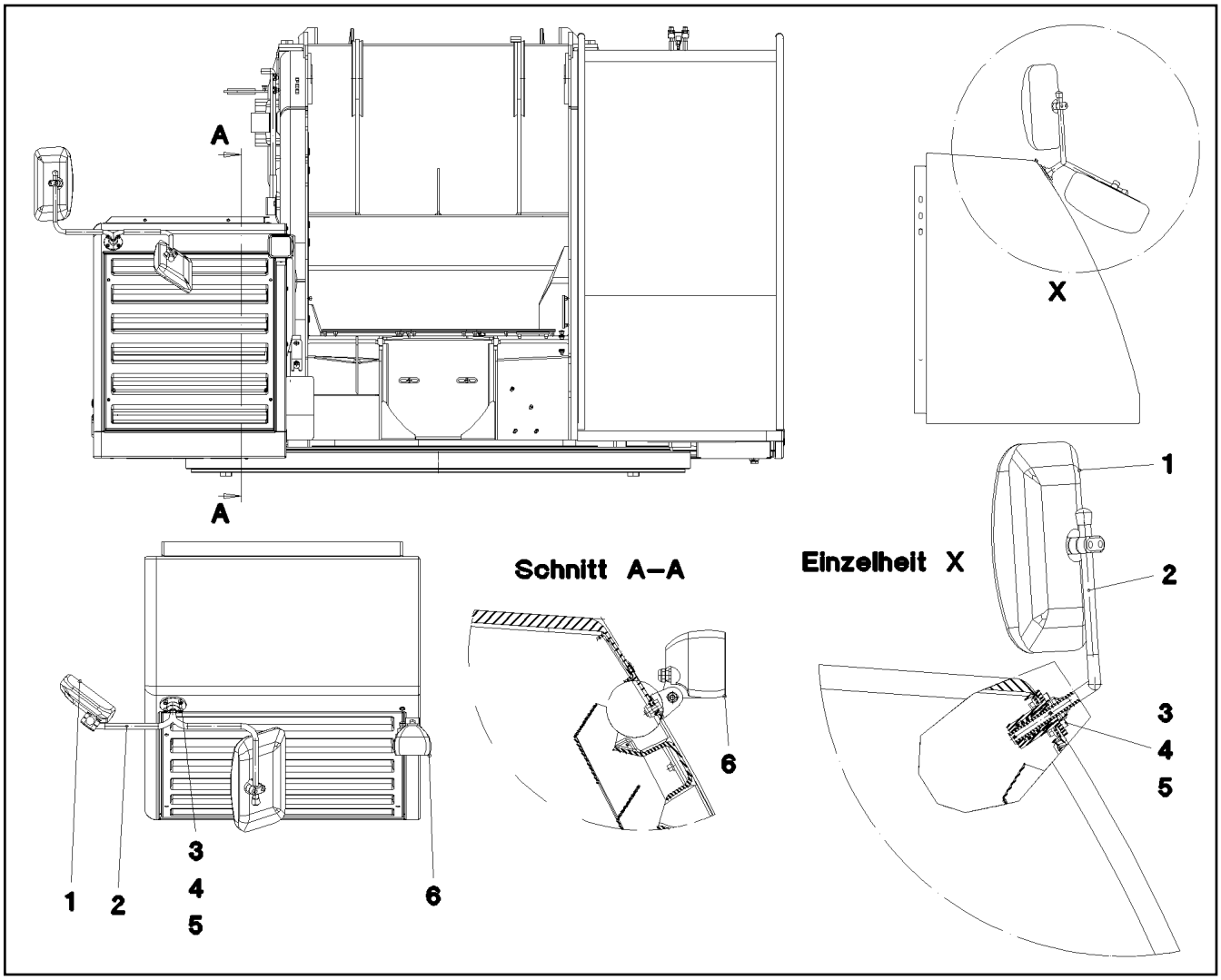


| Pos. | Item | Quantity | Description | Bezeichnung |
|---|---|---|---|---|
| 1 | 59 10 709 08 | 1 | WIDE ANGLE MIRROR 316X178 | WEITWINKELSPIEGEL |
| (1) | 10 67 511 6 | 1 | PLATE GLAS 315X178 | SPIEGELGLAS |
| 2 | 96 67 077 08 | 1 | MIRROR RETAINER PRE-ASS.<br>⇨ 2 790 024 96 67 077 08 | SPIEGELHALTER VORM. |
| 3 | 10 87 559 9 | 4 | SOCKET HEAD SCREW ISO 4762 M8X25 8.8 | ZYLINDERSCHRAUBE |
| 4 | 41 19 005 08 | 4 | HEX NUT DIN 985 M8 8 A2C | SECHSKANTMUTTER |
| 5 | 11 84 050 1 | 4 | WASHER DIN 7349 8,4 200HV FLZN SPF | SCHEIBE |

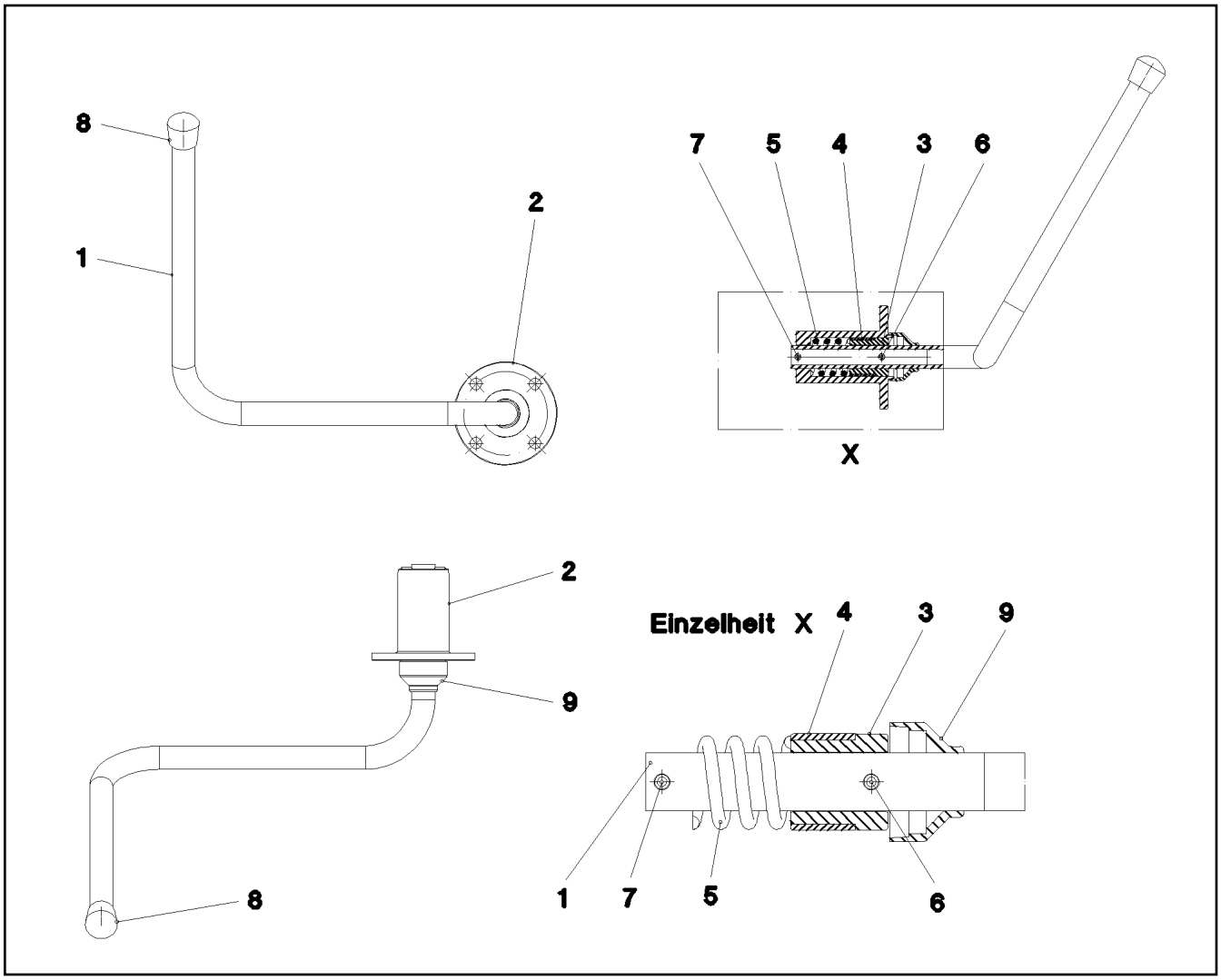


| Pos. | Item | Quantity | Description | Bezeichnung |
|---|---|---|---|---|
| 1 | 97 00 854 9 | 1 | TUBE 18.0X622 X5CRNI18-10 | ROHR |
| 2 | 97 00 854 8 | 1 | GUIDE 80.0X76 35NICRMOV125 SPF | FUEHRUNG |
| 3 | 97 39 987 08 | 1 | BUSHING 35.0X30 42CRMO4+QT SPF | BUCHSE |
| 4 | 10 21 589 3 | 1 | FRICTION BEARING 30X20 KUNSTSTOFF W | GLEITLAGER |
| 5 | 11 00 342 6 | 1 | PRESSURE SPRING 4X25X41 EN 10270-3 | DRUCKFEDER |
| 6 | 43 20 043 08 | 1 | DOWEL PIN ISO 8752 5X28 | SPANNSTIFT |
| 7 | 54 07 092 08 | 1 | DOWEL PIN ISO 8752 5X36 | SPANNSTIFT |
| 8 | 59 10 644 08 | 1 | CAP | KAPPE |
| 9 | 10 21 589 2 | 1 | COVER LID 36X22 PVC-SW | ABDECKKAPPE |

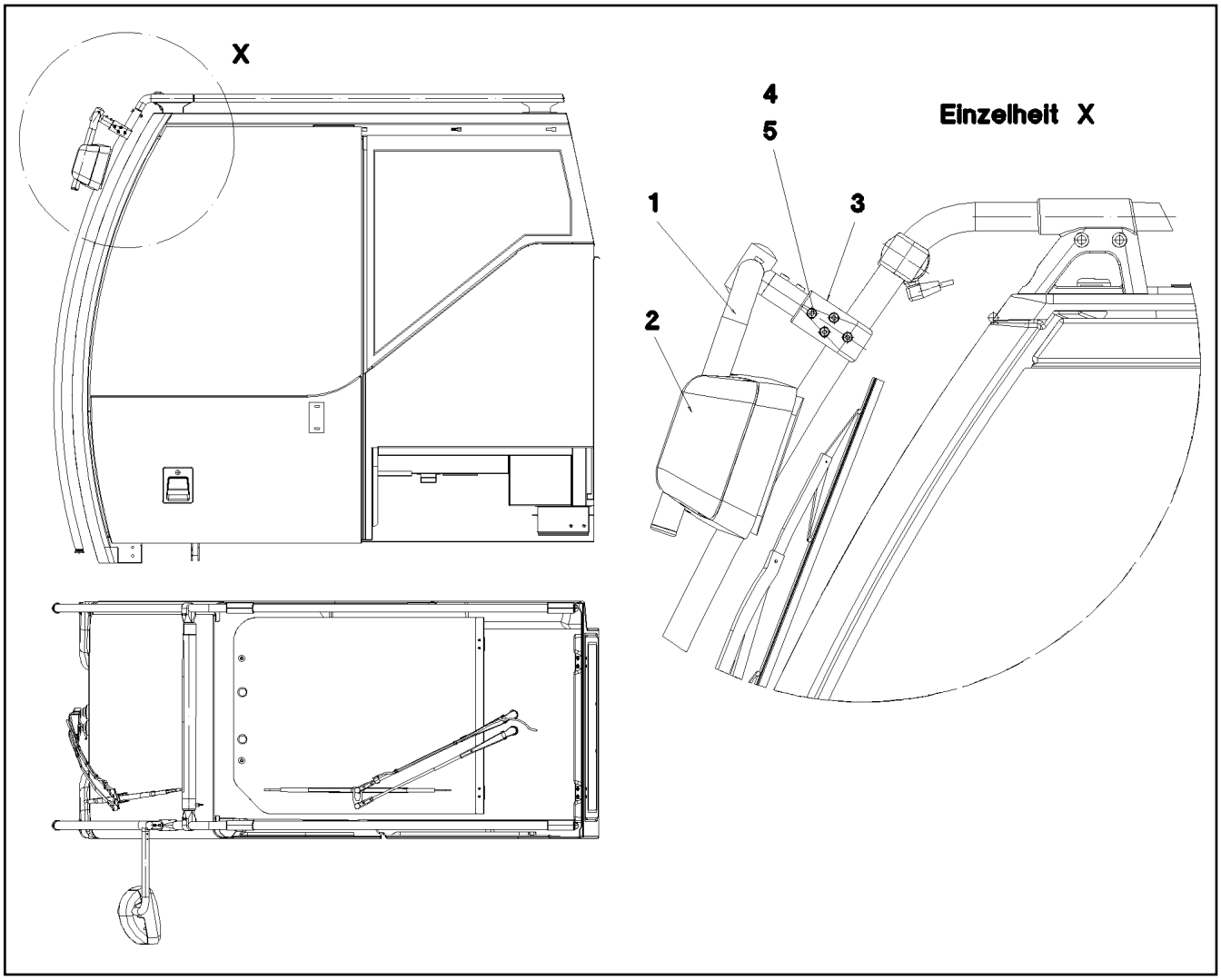


| Pos. | Item | Quantity | Description | Bezeichnung |
|---|---|---|---|---|
| 1 | 97 93 206 08 | 1 | MIRROR SUPPORT 28X2 ST.37.4 KTL-BES | SPIEGELHALTER |
| 2 | 59 10 695 08 | 1 | WIDE ANGLE MIRROR 219X170 | WEITWINKELSPIEGEL |
| (1) | 10 28 684 0 | 1 | REAR VISION MIRROR UNIT 203X154 | GLASEINHEIT |
| (2) | 10 65 050 7 | 1 | COVER | ABDECKUNG |
| 3 | 97 94 895 08 | 1 | HOLDER 40X80X40 G-ALMG3 | HALTER |
| 4 | 10 87 560 1 | 1 | SOCKET HEAD SCREW ISO 4762 M8X50 8.8 | ZYLINDERSCHRAUBE |
| 5 | 10 87 561 4 | 1 | HEX NUT DIN 985 M8 8 480H SPF | SECHSKANTMUTTER |

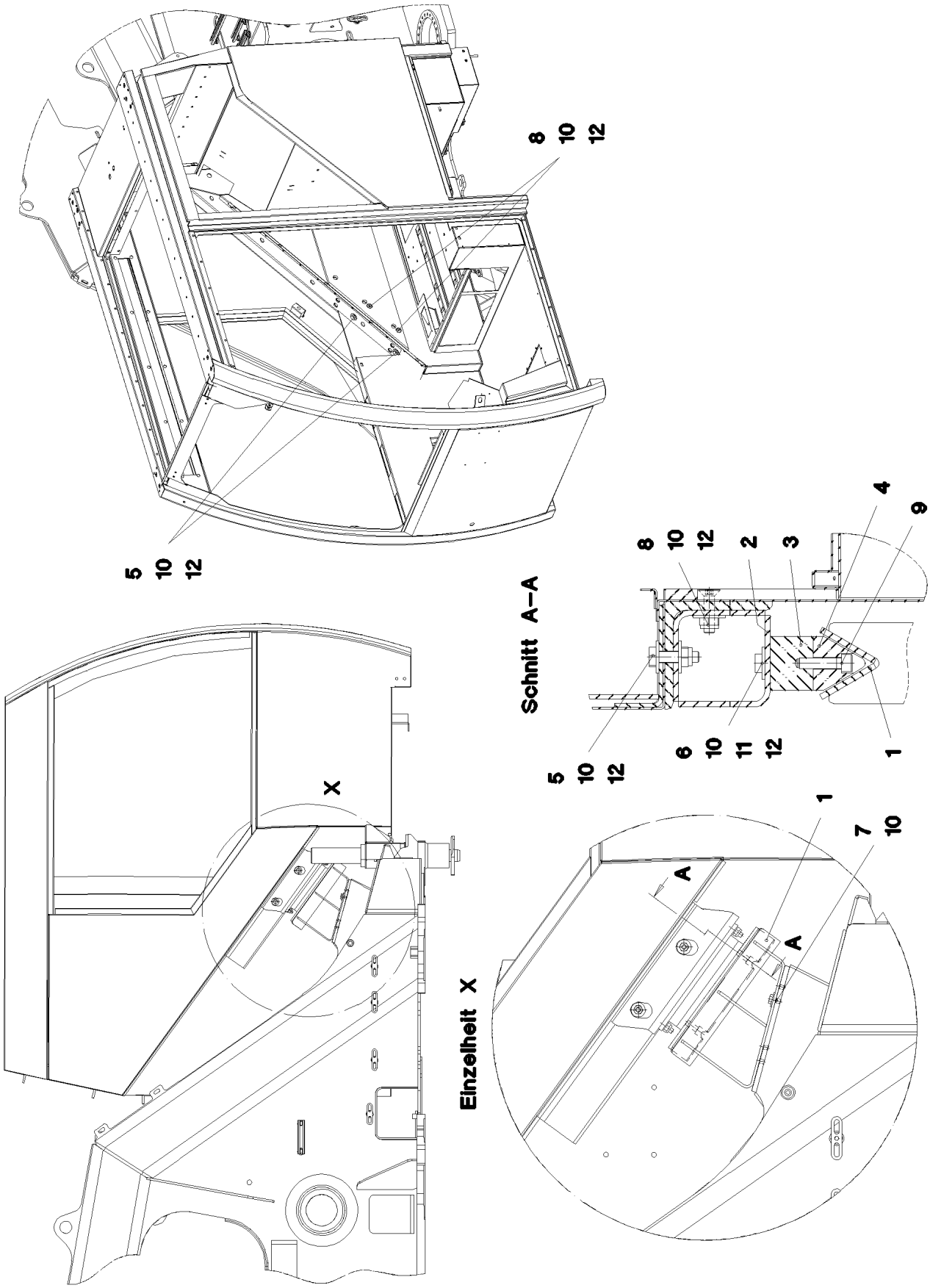


| | | |
|---|---|---|
| 16.2.2017<br>050826<br>LIEBHERR | **etk_en_de_048005 LTR 1100**<br><br>**BRACING**<br>**AUSSTEIFUNG** | ❑ 191 (1/2)<br><br>⇨ **2 790 901**<br>**91 54 183 08** |

| Pos. | Item | Quantity | Description | Bezeichnung |
|---|---|---|---|---|
| 1 | 96 45 139 08 | 1 | BRACKET WELDED CONST. | KONSOLE SCHWK. |
| 2 | 96 47 958 08 | 1 | RECTANGULAR PIPE WELDMENT T ZN O | VIERKANTROHR SCHWK. |
| 3 | 97 73 088 08 | 1 | RUBBER-METAL RAIL X270 | METALLGUMMISCHIENE |
| 4 | 97 67 674 08 | 1 | WEDGE 48.3X50X310 PA6G | KEIL |
| 5 | 49 01 287 | 2 | HEX SCREW ISO 4017 M10X40 10.9 A3C SP | SECHSKANTSCHRAUBE |
| 6 | 40 66 010 08 | 2 | HEX SCREW ISO 4017 M10X35 10.9 FLZN SP | SECHSKANTSCHRAUBE |
| 7 | 11 65 163 2 | 4 | HEX SCREW ISO 4017 M10X20 8.8 FLZN SP | SECHSKANTSCHRAUBE |
| 8 | 46 01 465 | 2 | COUNTERSUNK SCREW DIN 7991 M10X40 | SENKSCHRAUBE |
| 9 | 11 69 062 8 | 2 | SOCKET HEAD SCREW ISO 4762 M10X40 8 | ZYLINDERSCHRAUBE |
| 10 | 11 49 188 9 | 12 | WASHER ISO 7093-1 10 300HV FLZN SPF | SCHEIBE |
| 11 | 10 28 979 5 | 2 | WASHER ISO 7089 10 300HV FLZN SPF | SCHEIBE |
| 12 | 10 87 560 6 | 6 | HEX NUT DIN 985 M10 8 FLZN SPF | SECHSKANTMUTTER |

| Pos. | Item | Quantity | Description | Bezeichnung |
|---|---|---|---|---|
| 5 | 77 39 088 08 | 1 | ROPE CLAMP 20-22 GR.7/8" | SEILKLEMME |
| 6 | 77 39 133 08 | 1 | ROPE CLAMP DIN 1142 S22 VERZ | SEILKLEMME |
| 9 | 92 51 415 08 | 1 | HOSE GUIDE PRE-ASS.<br>⇨ 1 792 004 92 51 415 08 | SCHLAUCHFUEHRUNG VORM. |
| 10 | 92 51 852 08 | 1 | HOSE CPL. 2SN 8X13000 | SCHLAUCH KPL. |
| 11 | 92 51 853 08 | 1 | HOSE CPL. 2SN 8X13000 | SCHLAUCH KPL. |
| 12 | 51 45 684 08 | 5 | GRUB SCREW DIN 915 M12X70 45H A2K | GEWINDESTIFT |
| 13 | 77 39 247 08 | 1 | OVAL LOAD RING 26X140X260 SPF | OVALRING |

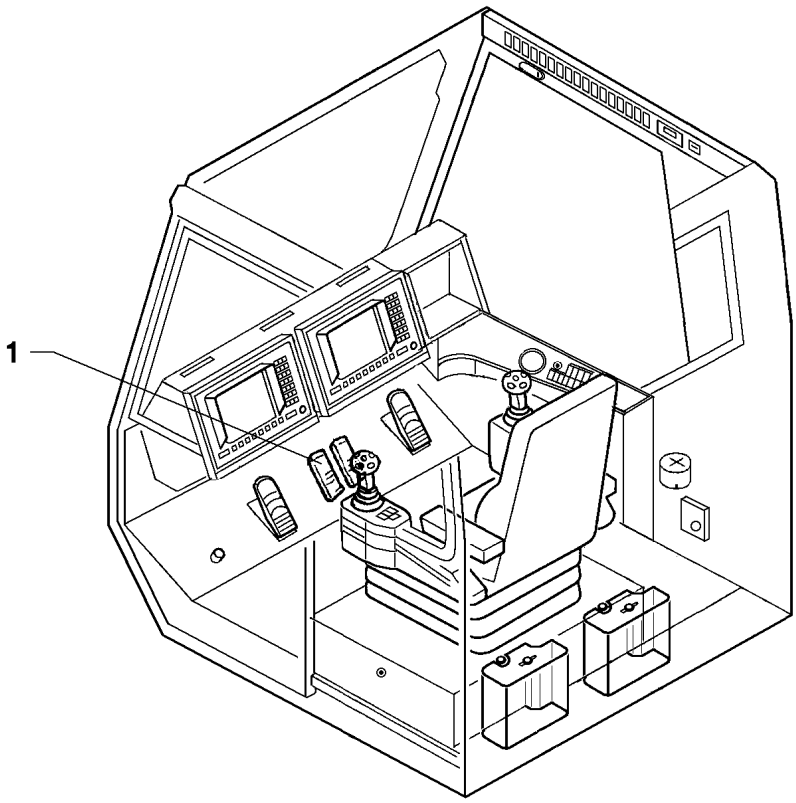


| Pos. | Item | Quantity | Description | Bezeichnung |
|---|---|---|---|---|
| 1 | 69 23 097 08 | 2 | PEDAL TRANSDUCER 20° SPF<br>⇨ 6 923 097 08 69 23 097 08 | PEDALGEBER |

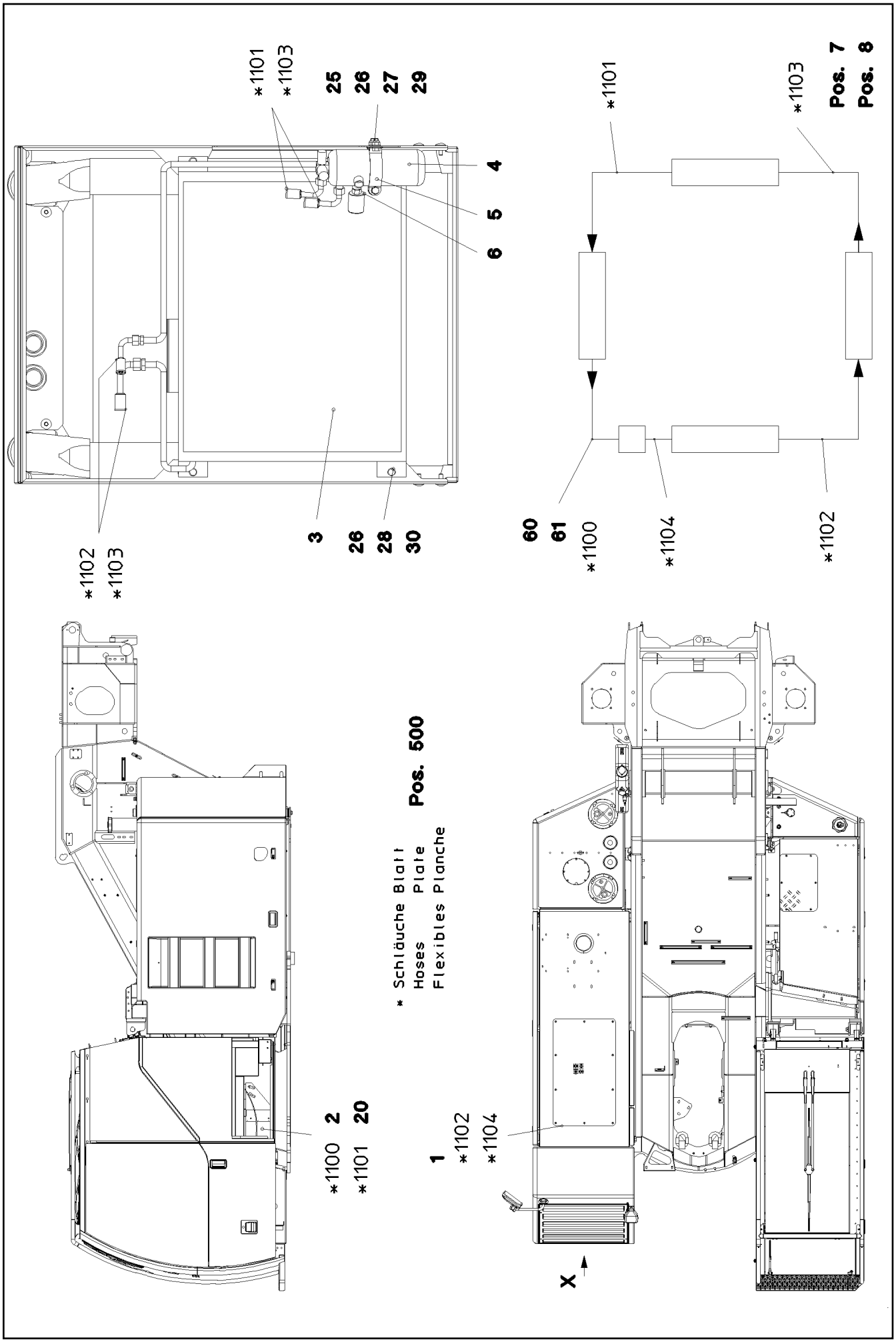
*1101
*1103
25
26
27
29
4
5
6
3
26
28
30
*1102
*1103
*1101
*1103
Pos. 7
Pos. 8
60
61
*1100
*1104
*1102
Pos. 500
* Schläuche Blatt
Hoses Plate
Flexibles Planche
*1100 2
*1101 20
1
*1102
*1104
X

| Pos. | Item | Quantity | Description | Bezeichnung |
|---|---|---|---|---|
| 1 | 90 80 525 | 1 | AIR COND. COMPRESSOR ADD-ON<br>➪ 9 080 525 90 80 525 | KLIMAKOMPRESSOR ANBAU |
| 2 | 55 31 882 08 | 1 | AIR COND. EVAPORATOR RFK<br>➪ 5 531 882 08 55 31 882 08 | KLIMANACHRUESTVERDAMPFE |
| 3 | 55 31 899 08 | 1 | CAPACITOR | KONDENSATOR |
| 4 | 57 14 890 08 | 1 | DRYER | TROCKNER |
| 5 | 77 42 097 08 | 1 | RETAINER CLIP 75/25 | SPANNSCHELLE |
| 6 | 57 14 891 08 | 1 | PRESSURE SWITCH 1,5-26 BAR | DRUCKSCHALTER |
| 7 | 92 01 827 08 | 1 | ELECTR. FOR AIR-CONDITIONING<br>➪ 1 780 182 92 01 827 08 | ELEKTRIK KLIMAANLAGE |
| 8 | 70 20 440 | 1.6 | REFRIGERANT 12KG FLASCHE R134A | KAELTEMITTEL |
| 20 | 55 30 310 08 | 1 | SIGN | SCHILD |
| 25 | 41 19 005 08 | 2 | HEX NUT DIN 985 M8 8 A2C | SECHSKANTMUTTER |
| 26 | 10 28 980 3 | 10 | WASHER ISO 7089 8 300HV 480H SPF | SCHEIBE |
| 27 | 11 65 176 7 | 2 | HEX SCREW ISO 4017 M8X20 8.8 480H SPF | SECHSKANTSCHRAUBE |
| 28 | 11 69 387 5 | 4 | HEX NUT ISO 4032 M8 8 480H SPF | SECHSKANTMUTTER |
| 29 | 42 18 009 08 | 2 | WASHER ISO 7093-1 8 200HV A2C | SCHEIBE |
| 30 | 11 65 161 2 | 4 | HEX SCREW ISO 4017 M8X16 8.8 480H SPF | SECHSKANTSCHRAUBE |
| 60 | 10 21 652 9 | 1 | BRACKET ST | BUEGEL |
| 61 | 10 21 653 4 | 2 | CLIP 23 ST | CLIP |
| 500 | 96 38 140 08 | 1 | HOSE LINES AIR CONDITIONING 1100-4.1<br>➪ 2 831 021 96 38 140 08 | SCHLAUCHLEITUNGEN KLIMA O |

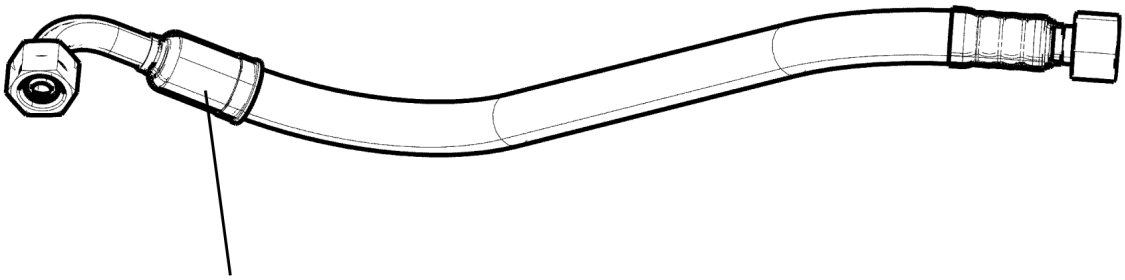

Schlauchnummer
Hose number
Numéro de flexible
Número de flexible
Номера шланга

Die Schlauchnummern auf den Schläuchen entsprechen den Positionen in der Schlauchliste.

The hose numbers from the hoses are in accordance with the items in the hose list.

Les numéros indiqués sur les flexibles correspondent aux repères de la nomenclature des flexibles.

Los números indicados en los flexibles corresponden a las posiciones de la lista de flexibles.

Нанесенные на шлангах номера соответствуют позициям в перечне.

| Pos. | Item | Quantity | Description | Bezeichnung |
|---|---|---|---|---|
| 1 | 60 27 601 08 | 5 | NAME PLATE 25,4X101,6 | BEZEICHNUNGSSCHILD |
| 1100 | 96 40 962 08 | 1 | HOSE CPL. GH134 13X7300 | SCHLAUCH KPL. |
| 1101 | 96 38 574 08 | 1 | HOSE CPL. GH134 8X8900 | SCHLAUCH KPL. |
| 1102 | 96 37 121 08 | 1 | HOSE CPL. GH134 10X1100 | SCHLAUCH KPL. |
| 1103 | 96 37 122 08 | 1 | HOSE CPL. GH134 8X700 | SCHLAUCH KPL. |
| 1104 | 96 38 196 08 | 1 | HOSE CPL. GH134 13X260 | SCHLAUCH KPL. |

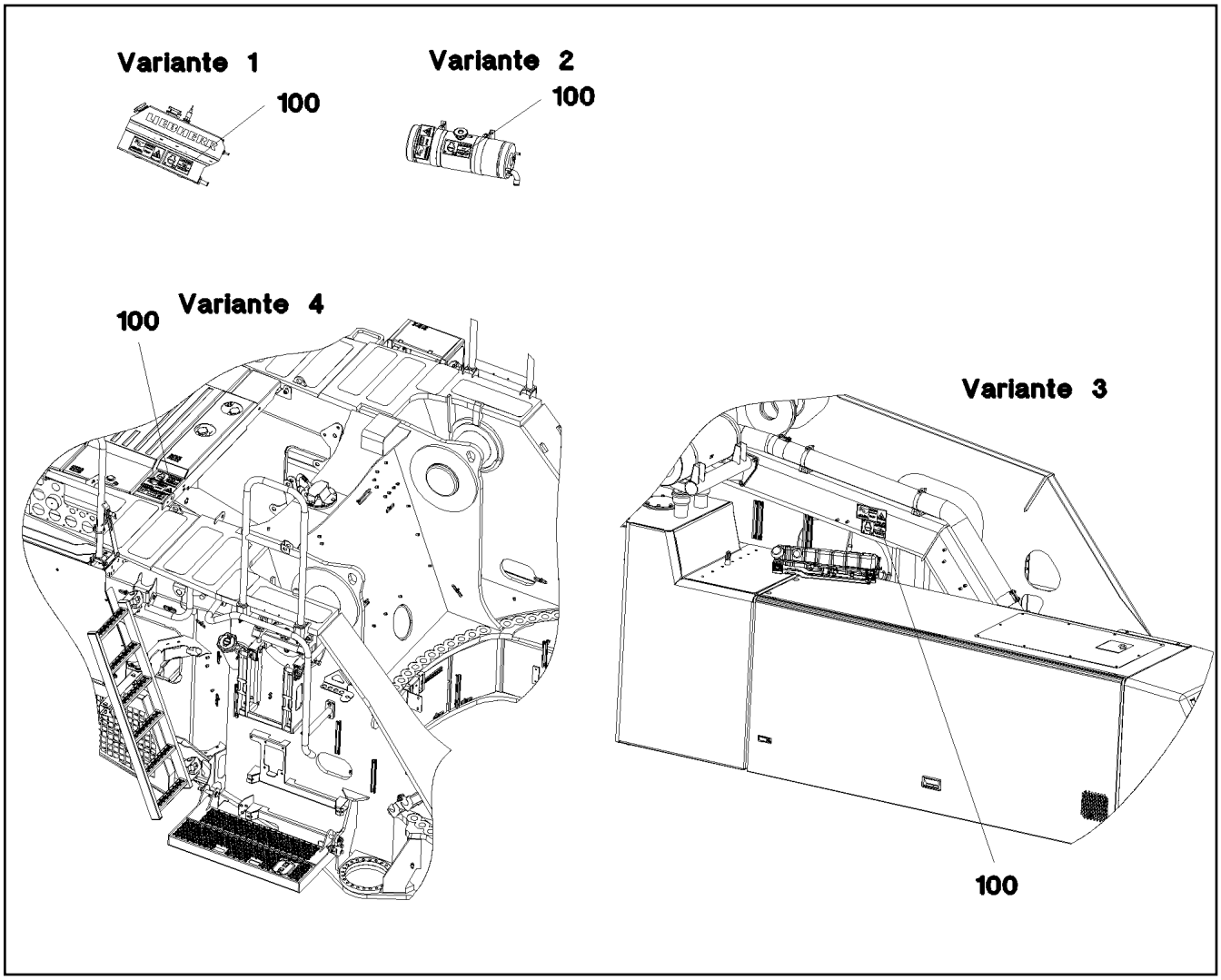


| Pos. | Item | Quantity | Description | Bezeichnung |
|---|---|---|---|---|
| 100 | 97 06 068 9 | 1 | SIGN 168X88 KLEBEFOLIE SPF | SCHILD |

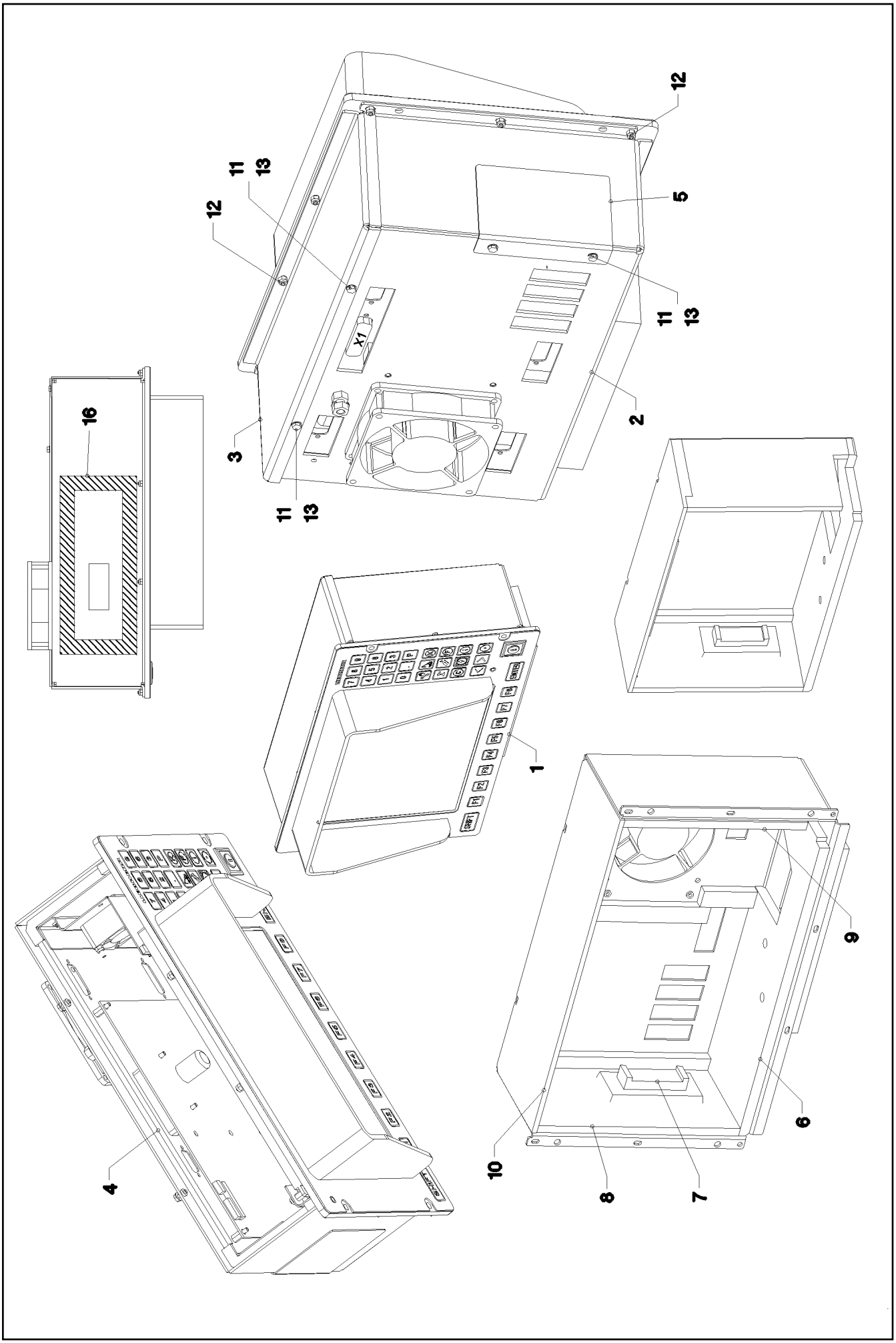


| | | |
|---|---|---|
| 16.2.2017<br>033730<br>LIEBHERR | **etk_en_de_048005 LTR 1100**<br><br>**LICCON CONSOLE LCD2**<br>**LICCON KONSOLE LCD2** | ❑ 200 (1/2)<br><br>⇨ **2 913**<br>**91 32 850 08** |

| Pos. | Item | Quantity | Description | Bezeichnung |
|---|---|---|---|---|
| 1 | 96 20 599 08 | 1 | FOIL KEYPAD PRE-ASS.<br>⇨ 2 913 003 96 20 599 08 | FOLIENTASTATUR VORM. |
| 2 | 96 20 460 08 | 1 | HOUSING PRE-ASSEMBLED<br>⇨ 2 913 004 96 20 460 08 | GEHAEUSE VORM. |
| 3 | 97 17 070 08 | 1 | COVER 2X341X116 ALMG3 H111 | DECKEL |
| 4 | 96 28 696 08 | 1 | INTERIOR HOUSING PRE-ASS.<br>⇨ 2 913 005 96 28 696 08 | INNENGEHAEUSE VORM. |
| 5 | 97 09 808 08 | 1 | PLATE 1X95X78 ALMG3 H111 | BLECH |
| 6 | 97 18 507 08 | 1 | INSULATING MAT BOTTOM 9X97X315 | DAEMMMATTE UNTEN |
| 7 | 97 18 511 08 | 1 | INSULATING MAT-LOCK 21X36X84 | DAEMMMATTE VERSCHLUSS |
| 8 | 97 18 512 08 | 1 | LEFT-HAND INSULATING MAT 19X94X183 | DAEMMMATTE LINKS |
| 9 | 97 18 513 08 | 1 | INSULATION MAT RIGHT 19X94X183 | DAEMMMATTE RECHTS |
| 10 | 97 18 514 08 | 1 | INSULATING MAT TOP 11.5X94X315 | DAEMMMATTE OBEN |
| 11 | 40 65 000 08 | 4 | HEX SCREW ISO 4017 M3X8 8.8 A2C | SECHSKANTSCHRAUBE |
| 12 | 10 87 639 9 | 10 | HEX NUT DIN 985 M3 8 480H SPF | SECHSKANTMUTTER |
| 13 | 42 52 205 08 | 4 | SERRATED LOCK WASHER DIN 6798 J 3,2 | FAECHERSCHEIBE |
| 16 | 97 36 626 08 | 1 | SEALING FRAME | DICHTRAHMEN |

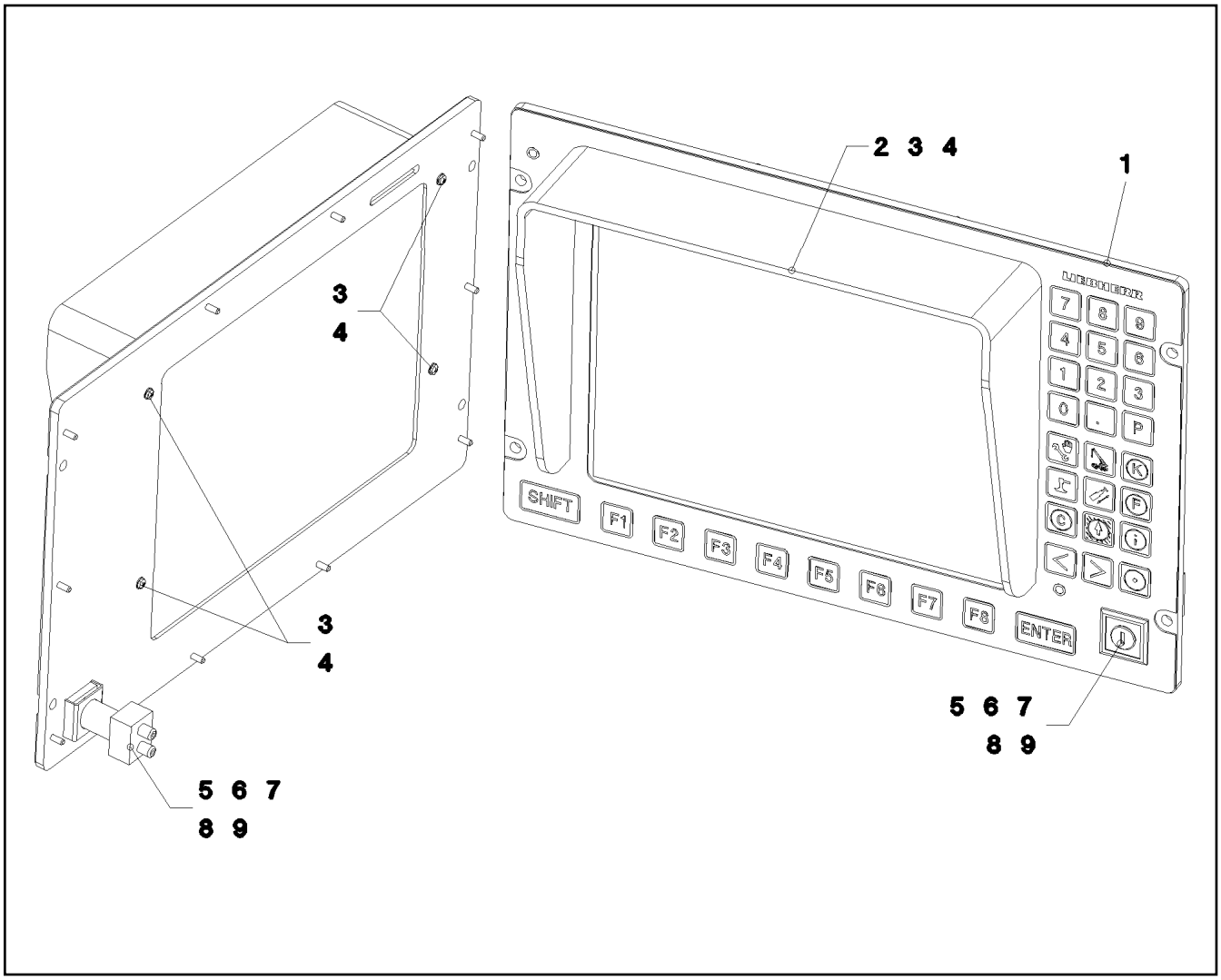


| Pos. | Item | Quantity | Description | Bezeichnung |
|---|---|---|---|---|
| 1 | 69 18 849 08 | 1 | KEY PAD | FOLIENTASTATUR |
| 2 | 10 27 921 0 | 1 | ANTIDAZZLE 242X171X55 BLACK RAL9005 | BLENDENSCHUTZ |
| 3 | 42 51 004 08 | 4 | TOOTH LOCK WASHER DIN 6797 A 2,7 | ZAHNSCHEIBE |
| 4 | 40 83 112 08 | 4 | PAN-HEAD SCREW ISO 7045 M2,5X12 4.8 A2 | FLACHKOPFSCHRAUBE |
| 5 | 61 10 022 08 | 1 | PLATE 1X35X22 ALMG3 | BLECH |
| 6 | 69 27 013 08 | 1 | KEY SWITCH | SCHLUESSELSCHALTER |
| 7 | 69 27 014 08 | 1 | SWITCHING ELEMENT | SCHALTELEMENT |
| 8 | 69 26 004 08 | 1 | FRONT FRAME | FRONTRAHMEN |
| 9 | 96 20 750 08 | 1 | WIRING HARNESS W648 | KABELSTRANG |

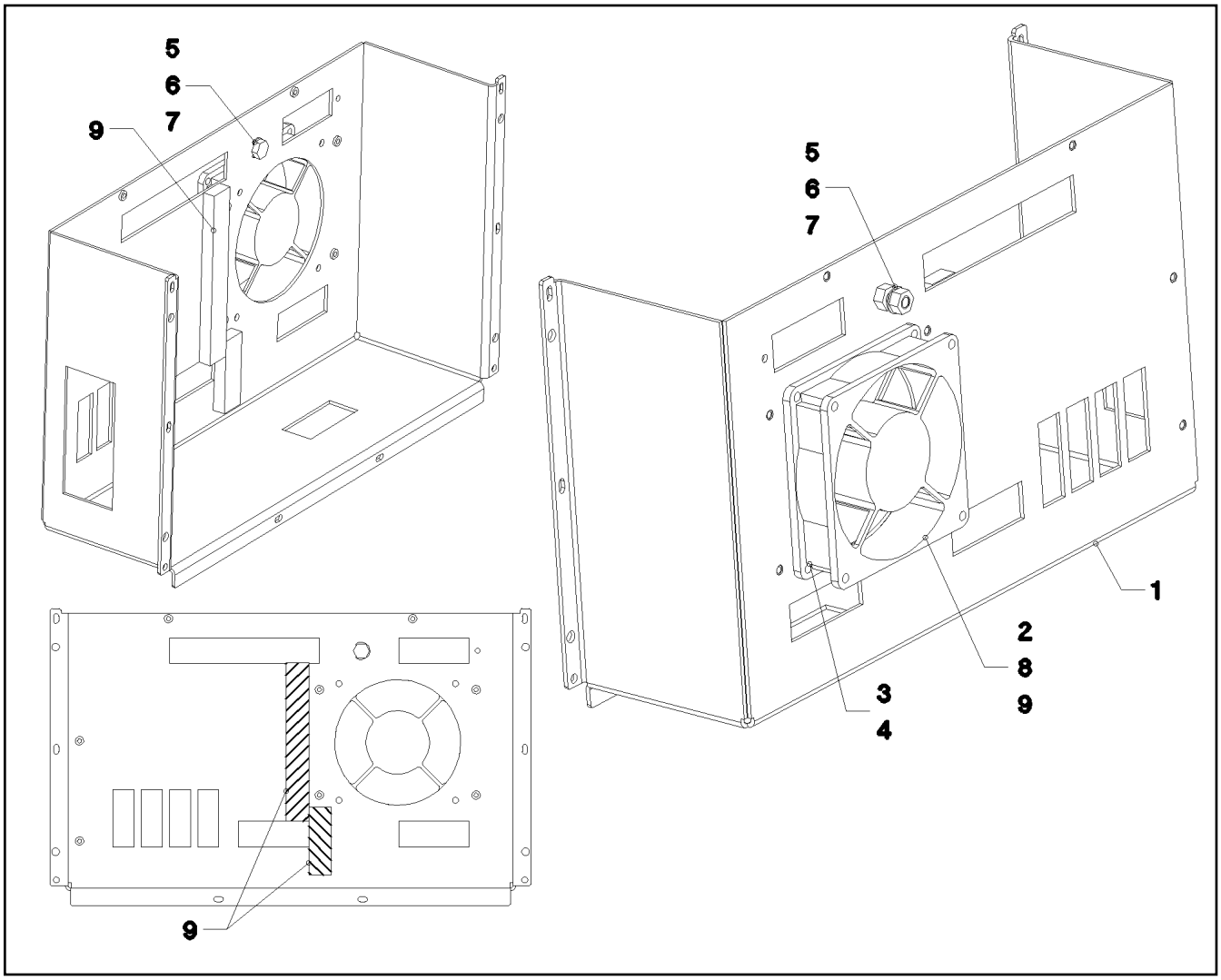


| Pos. | Item | Quantity | Description | Bezeichnung |
|---|---|---|---|---|
| 1 | 92 99 369 08 | 1 | HOUSING | GEHAEUSE |
| 2 | 61 07 145 08 | 1 | FAN | LUEFTER |
| 3 | 70 42 076 08 | 4 | MANDRIL RIVET 4X10,3 | DORNNIET |
| 4 | 40 01 645 | 4 | WASHER ISO 7089 4 200HV A3C | SCHEIBE |
| 5 | 40 65 099 | 1 | HEX SCREW ISO 4017 M6X16 8.8 A2C | SECHSKANTSCHRAUBE |
| 6 | 10 87 562 1 | 2 | HEX NUT ISO 4032 M6 8 480H SPF | SECHSKANTMUTTER |
| 7 | 42 52 210 08 | 2 | SERRATED LOCK WASHER DIN 6798 J 6,4 | FAECHERSCHEIBE |
| 8 | 60 32 022 08 | 2 | CABLE TIE 2,5X98-BLACK PA 6.6 | KABELBINDER |
| 9 | 10 02 810 7 | 0.16 | CELL RUBBER 16X8 CELL.RUBBER | ZELLGUMMI |

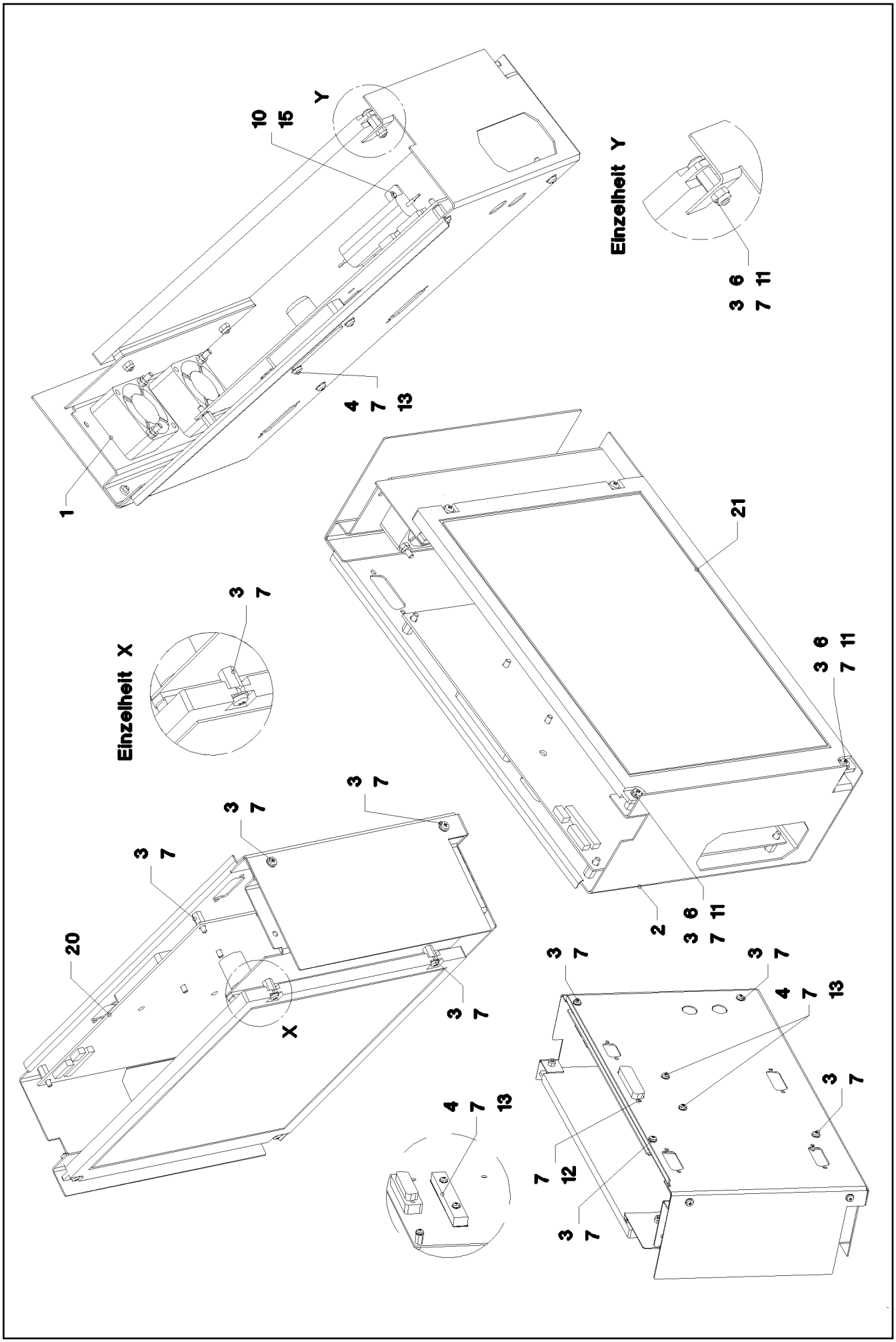


| | | |
|---|---|---|
| 16.2.2017<br>033733<br>LIEBHERR | **etk_en_de_048005 LTR 1100**<br><br>**INTERIOR HOUSING PRE-ASS.**<br>**INNENGEHAEUSE VORM.** | ❑ 204 (1/2)<br><br>⇨ **2 913 005**<br>**96 28 696 08** |

| Pos. | Item | Quantity | Description | Bezeichnung |
|---|---|---|---|---|
| 1 | 96 20 732 08 | 1 | FAN PLATE PRE-ASS.<br>⇨ 2 913 006 96 20 732 08 | LUEFTERBLECH VORM. |
| 2 | 97 17 132 08 | 1 | PLATE 1X467X259 ALMG3 H111 | BLECH |
| 3 | 40 84 005 01 | 8 | PAN-HEAD SCREW ISO 7045 M3X6 4.8 A2C | FLACHKOPFSCHRAUBE |
| 4 | 40 84 007 01 | 2 | PAN-HEAD SCREW ISO 7045 M3X16 4.8 A2 | FLACHKOPFSCHRAUBE |
| 6 | 10 87 639 9 | 2 | HEX NUT DIN 985 M3 8 480H SPF | SECHSKANTMUTTER |
| 7 | 42 52 205 08 | 12 | SERRATED LOCK WASHER DIN 6798 J 3,2 | FAECHERSCHEIBE |
| 10 | 70 42 121 08 | 2 | BLIND RIVET 3,0X3,2-5,0 | BLINDNIET |
| 11 | 10 00 924 4 | 2 | DISTANCE STUD M3X8 STEEL ZINC COATE | ABSTANDSBOLZEN |
| 12 | 10 03 021 0 | 2 | DISTANCE STUD M3X4,7 STEEL A2C SPF | ABSTANDSBOLZEN |
| 13 | 10 00 812 5 | 1 | HEAT SINK 84X12X7,7 ALU | KUEHLKOERPER |
| 15 | 63 50 576 08 | 1 | RESISTOR 15R 5% 50W 50W | WIDERSTAND |
| 20 | 10 04 375 9 | 1 | CONTROLLER BOARD KOMP. | CONTROLLERBOARD |
| 21 | 96 20 762 08 | 1 | DISPLAY TFT PRE-ASS. TFT | DISPLAY VORM. |

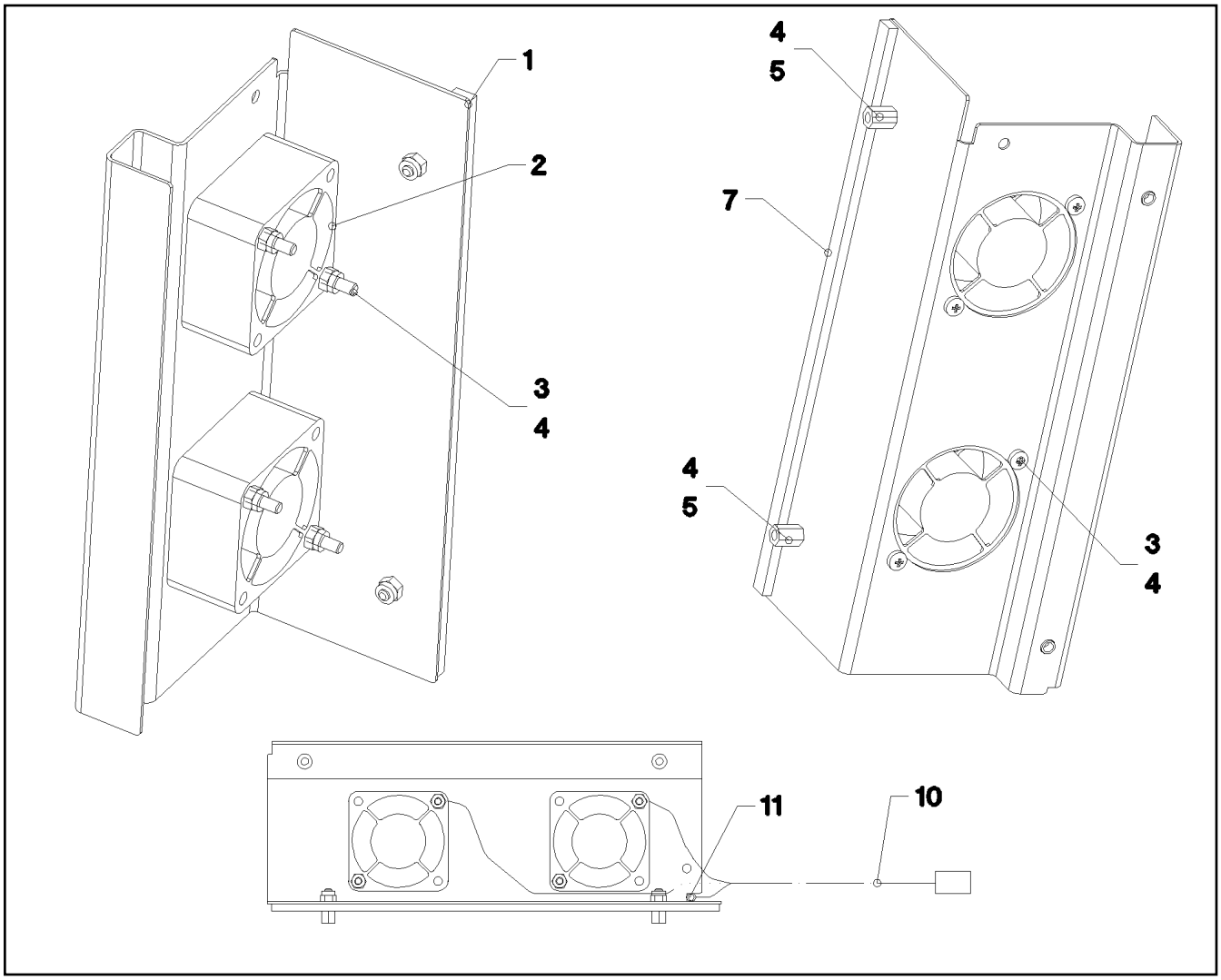


| Pos. | Item | Quantity | Description | Bezeichnung |
|---|---|---|---|---|
| 1 | 92 99 370 08 | 1 | FAN PLATE | LUEFTERBLECH |
| 2 | 61 07 146 08 | 2 | FAN | LUEFTER |
| 3 | 40 83 114 08 | 4 | PAN-HEAD SCREW ISO 7045 M3X30 4.8 A2 | FLACHKOPFSCHRAUBE |
| 4 | 10 87 639 9 | 6 | HEX NUT DIN 985 M3 8 480H SPF | SECHSKANTMUTTER |
| 5 | 10 00 924 4 | 2 | DISTANCE STUD M3X8 STEEL ZINC COATE | ABSTANDSBOLZEN |
| 7 | 26 21 089 08 | 0.18 | CELL RUBBER 6X3X10000 CELL.RUBBER | ZELLGUMMI |
| 10 | 96 20 761 08 | 1 | WIRING HARNESS W647 | KABELSTRANG |
| 11 | 60 32 022 08 | 1 | CABLE TIE 2,5X98-BLACK PA 6.6 | KABELBINDER |

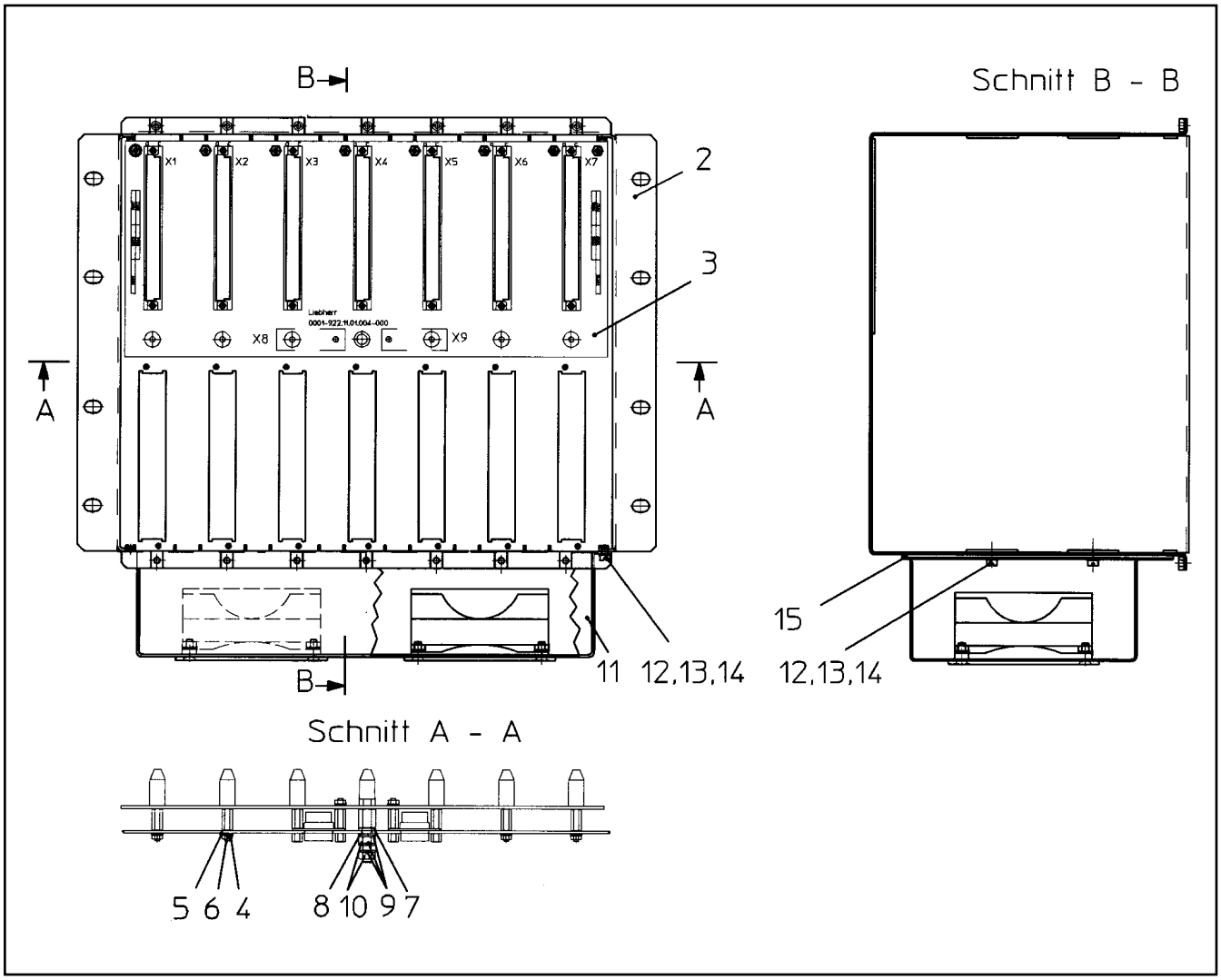


| Pos. | Item | Quantity | Description | Bezeichnung |
|---|---|---|---|---|
| 2 | 61 10 011 08 | 1 | EMPTY CASING | LEERGEHAEUSE |
| 3 | 92 84 311 08 | 1 | BUS PCB | BUSPLATINE |
| | | | ⇨ 2 922 001 92 84 311 08 | |
| 4 | 51 45 994 08 | 12 | PAN-HEAD SCREW ISO 7045 M3X8 4.8 A2C | FLACHKOPFSCHRAUBE |
| 5 | 46 00 814 | 12 | WASHER ISO 7089 3 200HV A3C | SCHEIBE |
| 6 | 42 51 005 08 | 12 | TOOTH LOCK WASHER DIN 6797 A 3,2 | ZAHNSCHEIBE |
| 7 | 66 00 430 08 | 1 | INSULATING BUSHING KUNSTSTOFF SPF | ISOLIERBUCHSE |
| 8 | 42 00 522 14 | 1 | WASHER AEHNL.ISO 7089 5 PA 6.6 NATUR | SCHEIBE |
| 9 | 46 00 305 | 3 | WASHER ISO 7089 5 200HV A3C | SCHEIBE |
| 10 | 41 15 148 08 | 2 | HEX NUT ISO 4032 M5 8 A2C | SECHSKANTMUTTER |
| 11 | 92 32 870 08 | 1 | FAN UNIT | LUEFTEREINHEIT |
| | | | ⇨ 2 913 102 92 32 870 08 | |
| 12 | 10 87 547 2 | 4 | PAN-HEAD SCREW ISO 7045 M4X6 4.8 480H | FLACHKOPFSCHRAUBE |
| 13 | 40 01 645 | 4 | WASHER ISO 7089 4 200HV A3C | SCHEIBE |
| 14 | 42 51 007 08 | 4 | TOOTH LOCK WASHER DIN 6797 A 4,3 | ZAHNSCHEIBE |
| 15 | 28 81 799 08 | 1 | FAN SCREEN 1X286X173 DR ACRYL | LUEFTERMASKE |

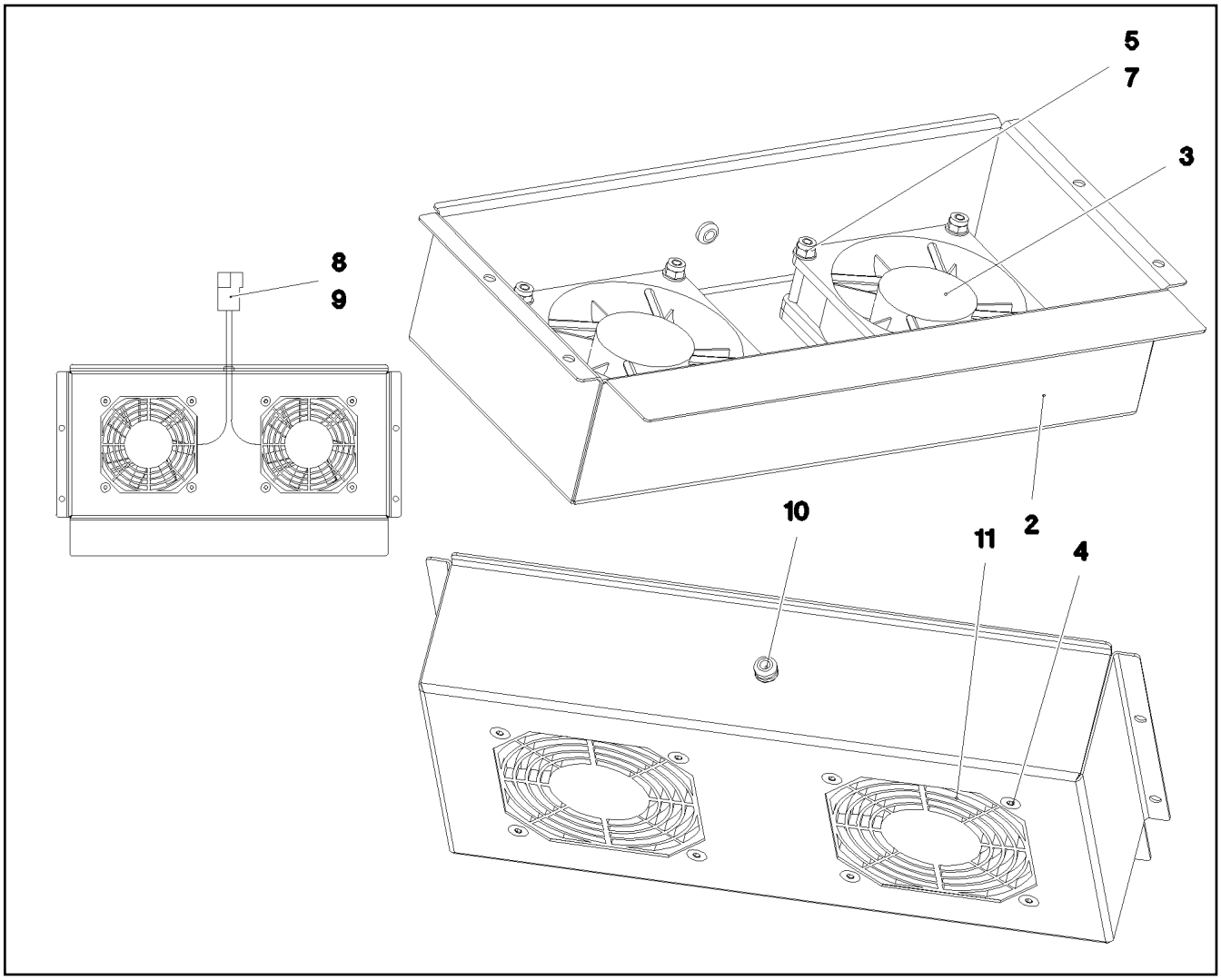


| Pos. | Item | Quantity | Description | Bezeichnung |
|---|---|---|---|---|
| 2 | 61 10 012 08 | 1 | HOUSING 1X400X273 DC01-A-M | GEHAEUSE |
| 3 | 61 03 886 14 | 2 | FAN 80X80X25 | LUEFTER |
| 4 | 10 87 638 8 | 8 | COUNTERSUNK SCREW DIN 7991 M4X35 8 | SENKSCHRAUBE |
| 5 | 40 01 645 | 8 | WASHER ISO 7089 4 200HV A3C | SCHEIBE |
| 7 | 41 19 002 08 | 8 | HEX NUT DIN 985 M4 8 A2C | SECHSKANTMUTTER |
| 8 | 60 23 059 08 | 1 | FLAT PLUG HOUSING FASTIN-FASTON | FLACHSTECKERGEHAEUSE |
| 9 | 60 23 048 08 | 2 | FLAT PLUG | FLACHSTECKER |
| 10 | 60 27 024 08 | 1 | GROMMET 4/6/9 PVC | DURCHFUEHRUNGSTUELLE |
| 11 | 61 04 133 08 | 2 | GUARD | SCHUTZGITTER |

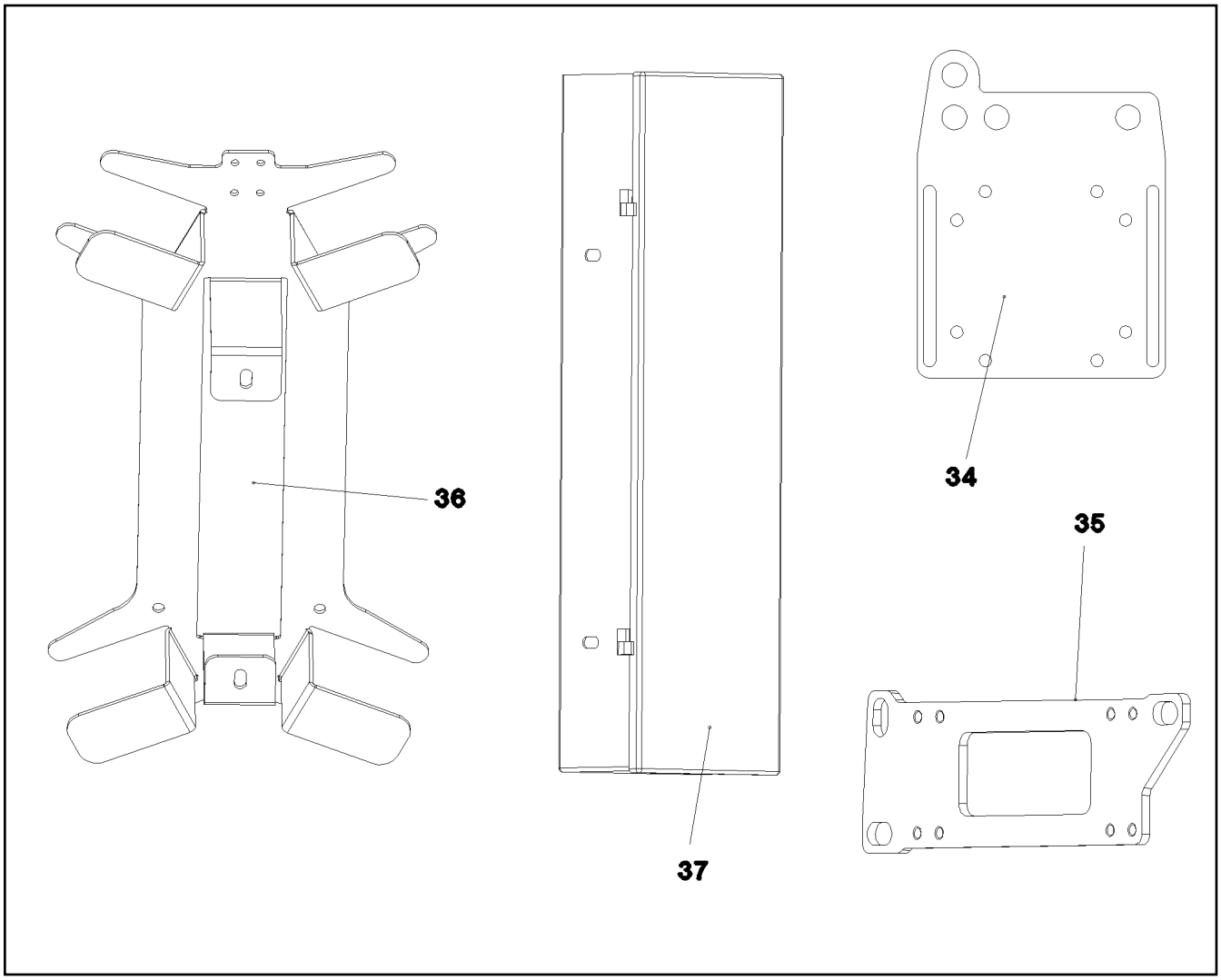


| Pos. | Item | Quantity | Description | Bezeichnung |
|---|---|---|---|---|
| 10 | 96 53 715 08 | 1 | LIMIT SWITCH ADD-ON AUSLEGERSTEIL<br>⇨ 2 920 551 96 53 715 08 | ENDSCHALTER ANBAU |
| 11 | 96 53 714 08 | 1 | EL.ADD-ON SET-LIMIT SWITCHES +<br>⇨ 2 920 593 96 53 714 08 | EL.GEBER U.ENDSCHALTER |
| 12 | 96 41 599 08 | 1 | CABLE LIST ELECTRICAL SYSTEM<br>⇨ 2 920 013 96 41 599 08 | KABELLISTE EL.ANLAGE |
| 15 | 92 12 998 08 | 1 | AUXILIA.SONIC ALARM DEVICE SLI | ELEKTRIK ZUSATZGLOCKE LM |
| (5) | 61 40 047 08 | 1 | ALARM 24V | SIGNALWECKER |
| (6) | 60 26 062 08 | 1 | REDUCTION M20X1,5/M16X1,5 MS | REDUKTION |
| (7) | 60 24 408 08 | 1 | HOSE UNION JOINT 0° MS | SCHLAUCHVERSCHRAUBUNG |
| 16 | 96 36 299 08 | 1 | ELECTR.FOR SLEWING GEAR | ELEKTRIK DREHWERKSBREMS |
| (1) | 10 29 006 8 | 1 | PEDAL TRANSDUCER 23° SPF | PEDALGEBER |
| 20 | 96 31 865 08 | 1 | ELECTR. FOR WORK AREA LIGHT<br>⇨ 2 920 362 96 31 865 08 | ELEKTRIK ARBEITSSCHEINWER |
| 21 | 96 43 785 08 | 1 | AUDIBLE WARNING DEVICE | AKUSTISCHE WARNUNG |
| 22 | 96 41 093 08 | 1 | CONTROL DESK SUPPORT<br>⇨ 2 920 904 96 41 093 08 | STEUERPULT ABSTUETZUNG |
| 24 | 92 08 459 08 | 1 | COMPLEMENT ELECTR., CAB<br>⇨ 2 920 563 92 08 459 08 | ELEKTRIK GASVERSTELLUNG |
| 26 | 92 88 195 08 | 1 | ELECTRIC FAN ATTACHMENT<br>⇨ 2 830 041 92 88 195 08 | ELEKTRIK FUSSWIPPE |
| 27 | 96 36 055 08 | 1 | OPERATOR PANEL BALLAST P13<br>⇨ 2 920 574 96 36 055 08 | BEDIENPULT BALLAST |
| 28 | 70 05 052 | 10 | CLAMP-HALF DIN 3015-1 L 3 R 25 PP SW | KLEMMHAELFTE |
| 29 | 40 42 111 | 2 | SOCKET HEAD SCREW ISO 4762 M6X55 8.8 | ZYLINDERSCHRAUBE |
| 30 | 10 87 458 8 | 100 | CABLE TIE 4,8X292-SCHWARZ PA 6.6 SPF | KABELBINDER |

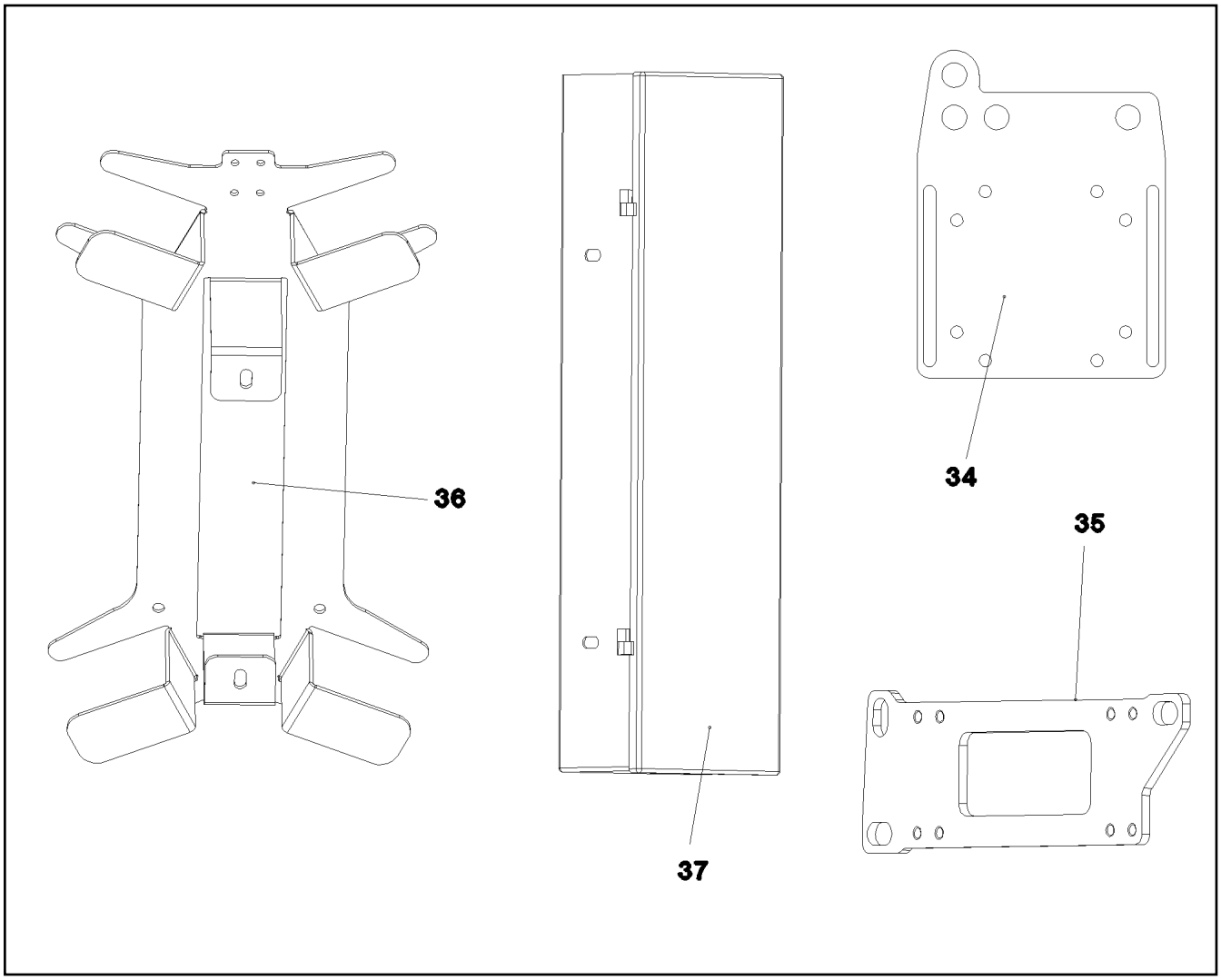


| Pos. | Item | Quantity | Description | Bezeichnung |
|---|---|---|---|---|
| 31 | 10 87 559 1 | 2 | SOCKET HEAD SCREW ISO 4762 M6X40 8.8 | ZYLINDERSCHRAUBE |
| 32 | 10 87 562 1 | 2 | HEX NUT ISO 4032 M6 8 480H SPF | SECHSKANTMUTTER |
| 33 | 42 40 005 08 | 2 | WASHER SPRING DIN 127 A 6 FST A2C | FEDERRING |
| 34 | 95 56 879 08 | 1 | PLATE 4X100X132 S315MC FE//ZN20//C | BLECH |
| 35 | 95 56 681 08 | 1 | PLATE 4X196X63 S315MC FE//ZN20//C | BLECH |
| 37 | 60 45 327 08 | 1 | HOUSING 140X540X100 SPF | GEHAEUSE |

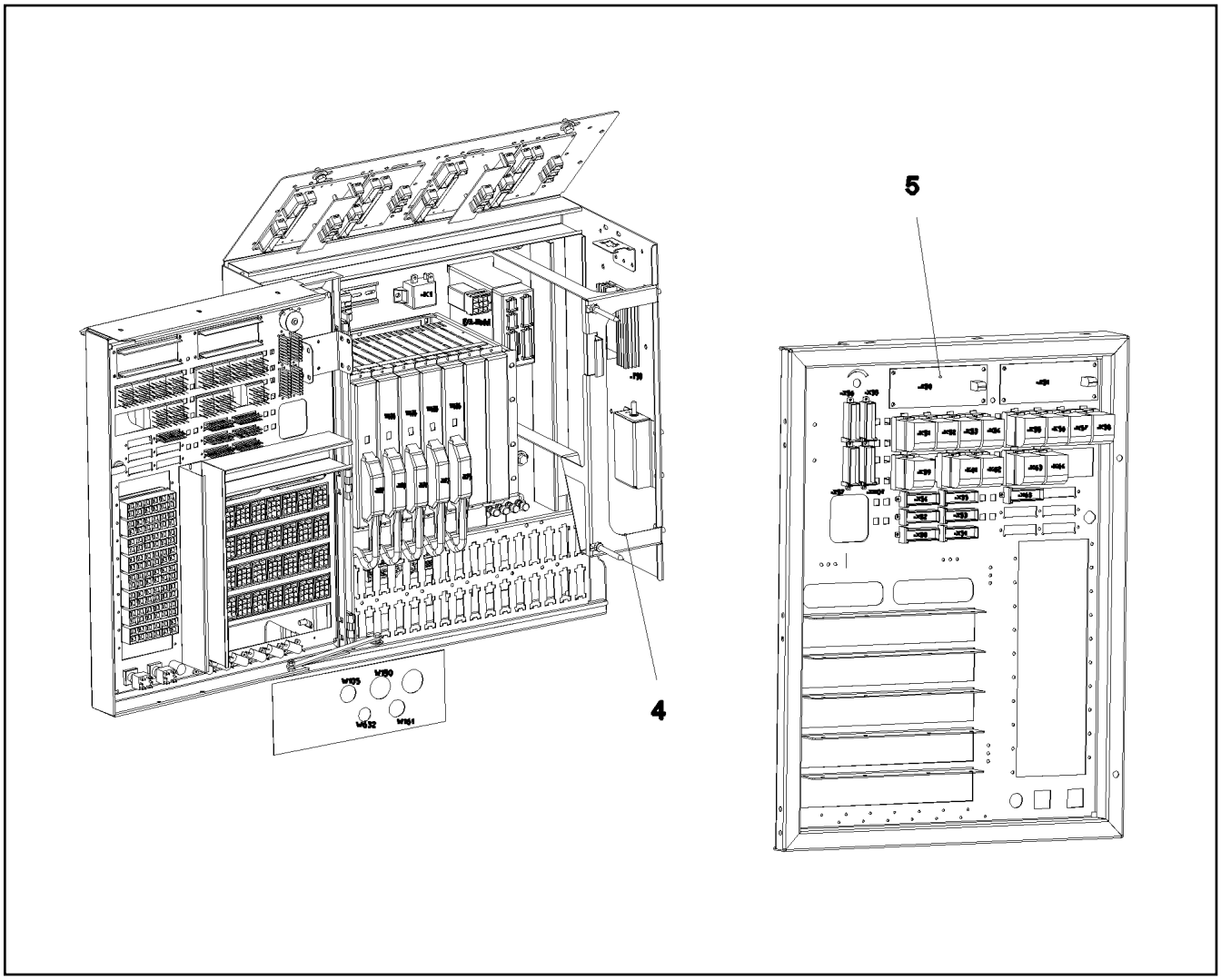


| Pos. | Item | Quantity | Description | Bezeichnung |
|---|---|---|---|---|
| 4 | 96 68 587 08 | 1 | BASE ASSEMBLY<br>⇨ 2 932 042 96 68 587 08 | GRUNDAUFBAU |
| 5 | 96 46 061 08 | 1 | SWING FRAME RELAY CONTROL SYST<br>⇨ 2 932 119 96 46 061 08 | SCHWENKRAHMEN RELAISST |

| Pos. | Item | Quantity | Description | Bezeichnung |
|---|---|---|---|---|
| 14 | 96 33 229 08 | 1 | LEAD W168 | LEITUNG |
| 15 | 96 36 341 08 | 1 | WIRING HARNESS WL150A | KABELSTRANG |
| 16 | 96 31 670 08 | 1 | WIRING HARNESS W160 | KABELSTRANG |
| 20 | 96 31 466 08 | 1 | LEAD WL290 | LEITUNG |
| 22 | 92 12 258 08 | 1 | LEAD WL292 | LEITUNG |
| 29 | 55 31 869 08 | 1 | CABLE HARNESS 3300MM | KABELBAUM |
| 31 | 96 35 880 08 | 1 | WIRING HARNESS W301 | KABELSTRANG |
| 32 | 96 35 881 08 | 1 | WIRING HARNESS W302 | KABELSTRANG |
| 34 | 96 41 600 08 | 1 | WIRING HARNESS W304 | KABELSTRANG |
| 61 | 92 07 890 08 | 1 | LEAD WL631 | LEITUNG |
| 62 | 96 38 781 08 | 1 | LEAD WL632 | LEITUNG |

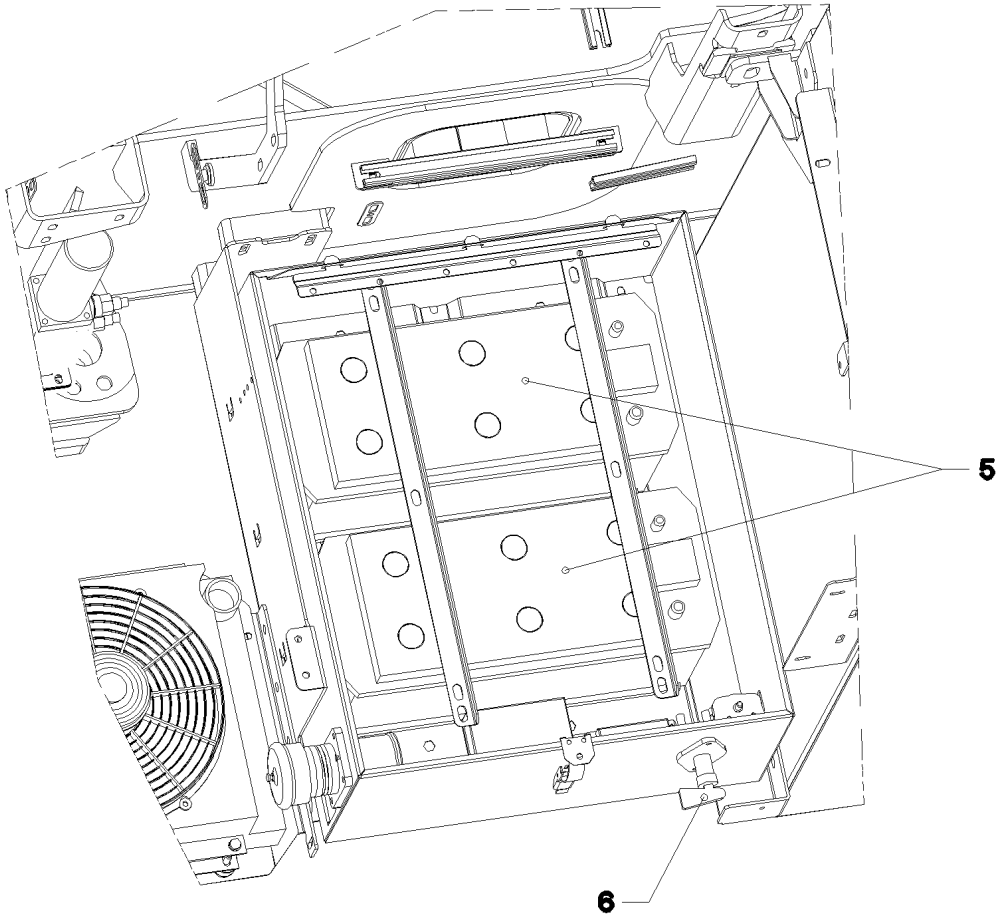


**Pos. 7**
**Pos. 8**
**Pos. 9**
**Pos. 10**
**Pos. 11**
**Pos. 14**
**Pos. 21**
**Pos. 22**
**Pos. 30**

| Pos. | Item | Quantity | Description | Bezeichnung |
|---|---|---|---|---|
| 5 | 10 44 993 4 | 2 | BATTERY 12V 170AH SPF | BATTERIE |
| (1) | 10 28 030 2 | 2 | FLAME ARRESTOR | RUECKZUENDSICHERUNG |
| 6 | 60 60 709 08 | 1 | BATTERY MAIN SWITCH<br>⇨ 6 060 709 08 60 60 709 08 | BATTERIEHAUPTSCHALTER |
| 7 | 63 01 053 08 | 1 | RELAY 24V/1S SPF | RELAIS |
| 8 | 60 45 016 08 | 1 | FUSE BOX SMALL 6-POL, LEER | SICHERUNGSDOSE |
| 9 | 60 40 071 08 | 1 | FLAT FUSE LINK 10A 32 | FLACHSICHERUNGSEINSATZ |
| 10 | 92 39 303 08 | 1 | LEAD W3 | LEITUNG |
| 11 | 96 29 469 08 | 1 | LEAD W291 | LEITUNG |
| 14 | 96 29 470 08 | 1 | LEAD W294 | LEITUNG |
| 21 | 61 32 066 08 | 1 | BATTERY TERMINAL CLAMP MINUS VERZI | BATTERIEKLEMME |
| 22 | 61 32 065 08 | 1 | BATTERY TERMINAL CLAMP PLUS VERZINN | BATTERIEKLEMME |

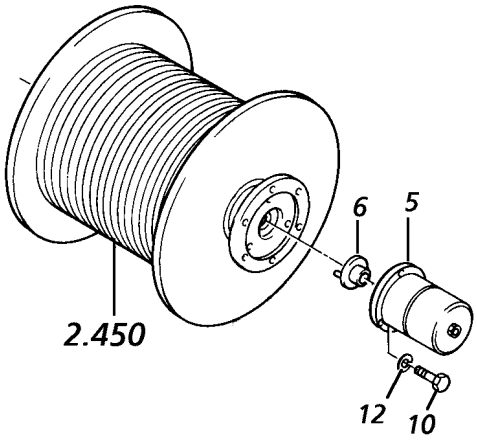


| Pos. | Item | Quantity | Description | Bezeichnung |
|---|---|---|---|---|
| 5 | 60 60 516 08 | 1 | GEAR CAM LIMITSWITCH 45° SPF<br>⇨ 6 060 516 08 60 60 516 08 | GETRIEBENOCKENENDSCHAL |
| 6 | 60 60 126 08 | 1 | DRIVE FLANGE EDELSTAHL | ANTRIEBSFLANSCH |
| 10 | 40 65 099 | 3 | HEX SCREW ISO 4017 M6X16 8.8 A2C | SECHSKANTSCHRAUBE |
| 12 | 42 40 005 08 | 3 | WASHER SPRING DIN 127 A 6 FST A2C | FEDERRING |

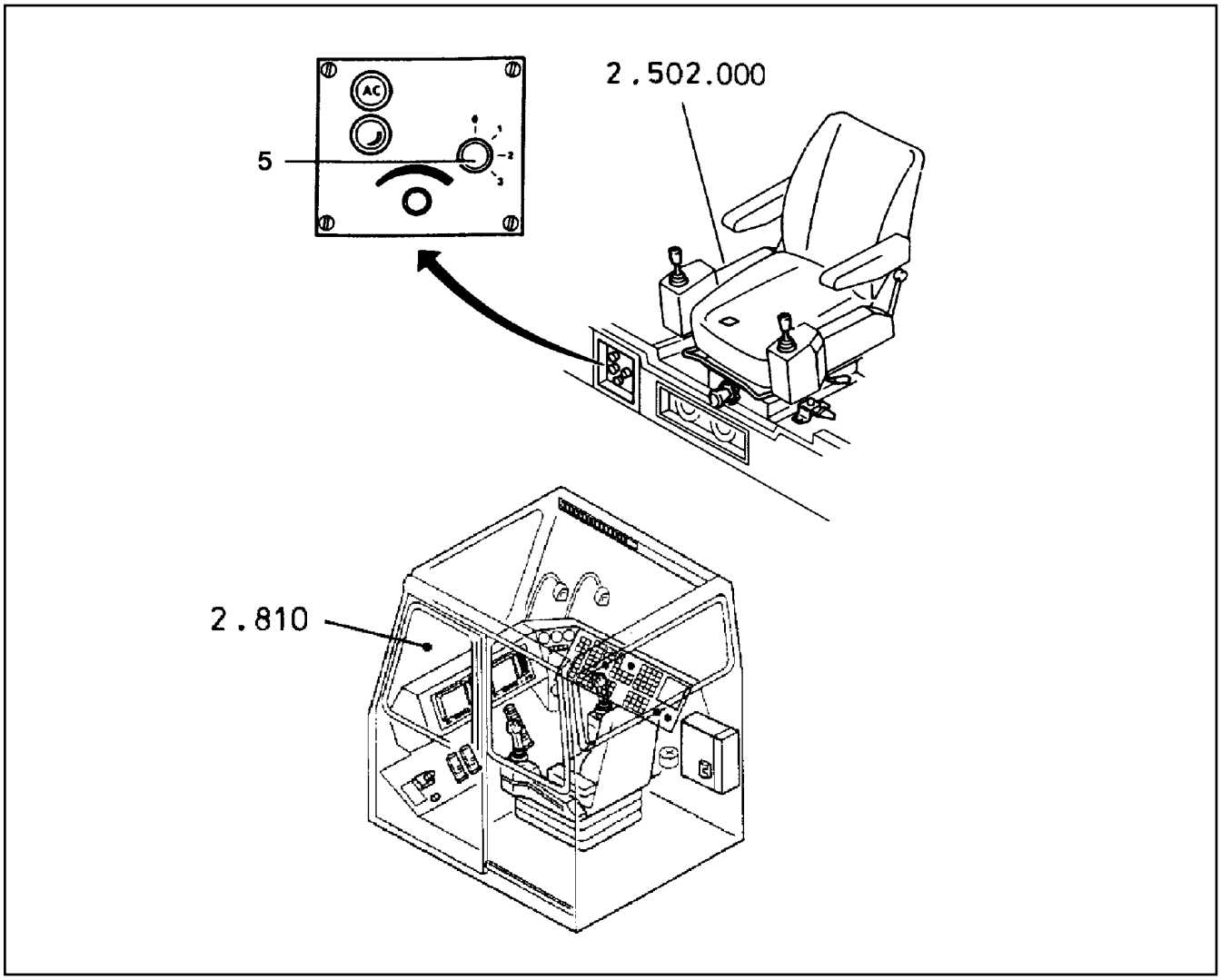


| Pos. | Item | Quantity | Description | Bezeichnung |
|---|---|---|---|---|
| 5 | 60 60 262 08 | 1 | ROTARY SWITCH 4-STUFIG | DREHSCHALTER |

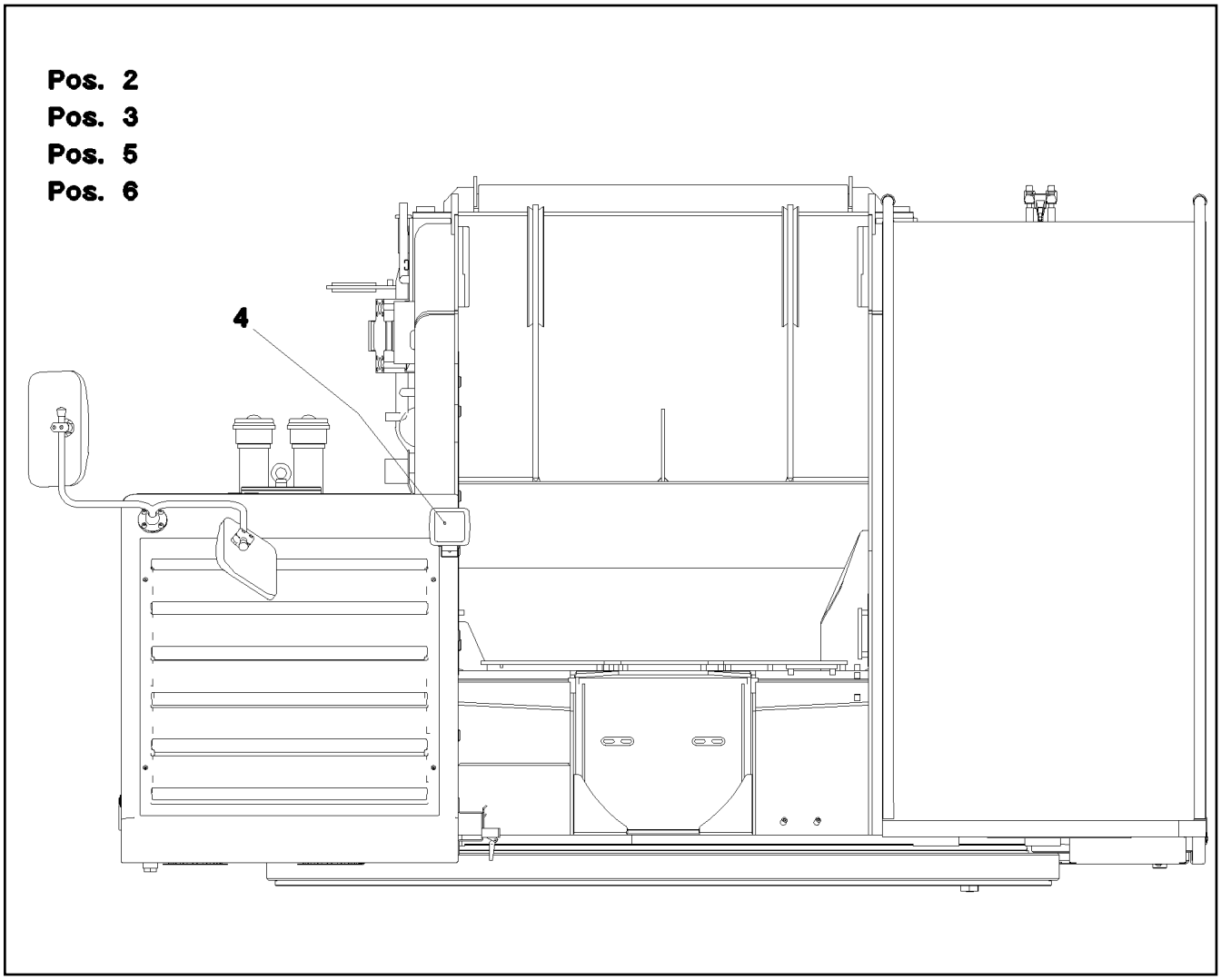


| Pos. | Item | Quantity | Description | Bezeichnung |
|---|---|---|---|---|
| 2 | 60 24 225 08 | 1 | CABLE GLAND PG9 | KABELVERSCHRAUBUNG |
| 3 | 60 25 019 08 | 1 | COUNTER NUT PG9 MS | GEGENMUTTER |
| 4 | 60 71 509 08 | 1 | WORK LIGHT 70W 24V<br>⇨ 6 071 509 08 60 71 509 08 | ARBEITSSCHEINWERFER |
| 5 | 60 70 211 08 | 1 | LIGHT BULB DIN 72601 70W 24V | GLUEHLAMPE |
| 6 | 60 27 021 08 | 1 | GROMMET 10/13,5/17,5 PVC | DURCHFUEHRUNGSTUELLE |

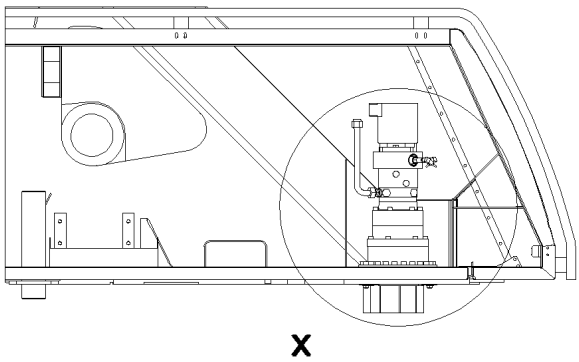


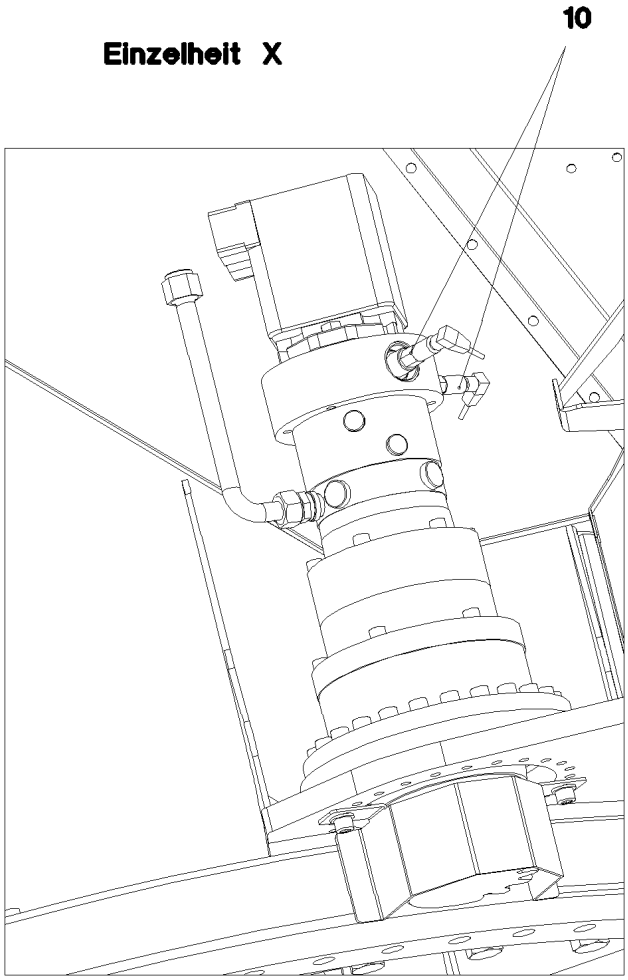


| Pos. | Item | Quantity | Description | Bezeichnung |
|---|---|---|---|---|
| 10 | 69 27 015 08 | 2 | PROXIMITY SWITCH BERUEHRUNGSLOS | NAEHERUNGSSCHALTER |

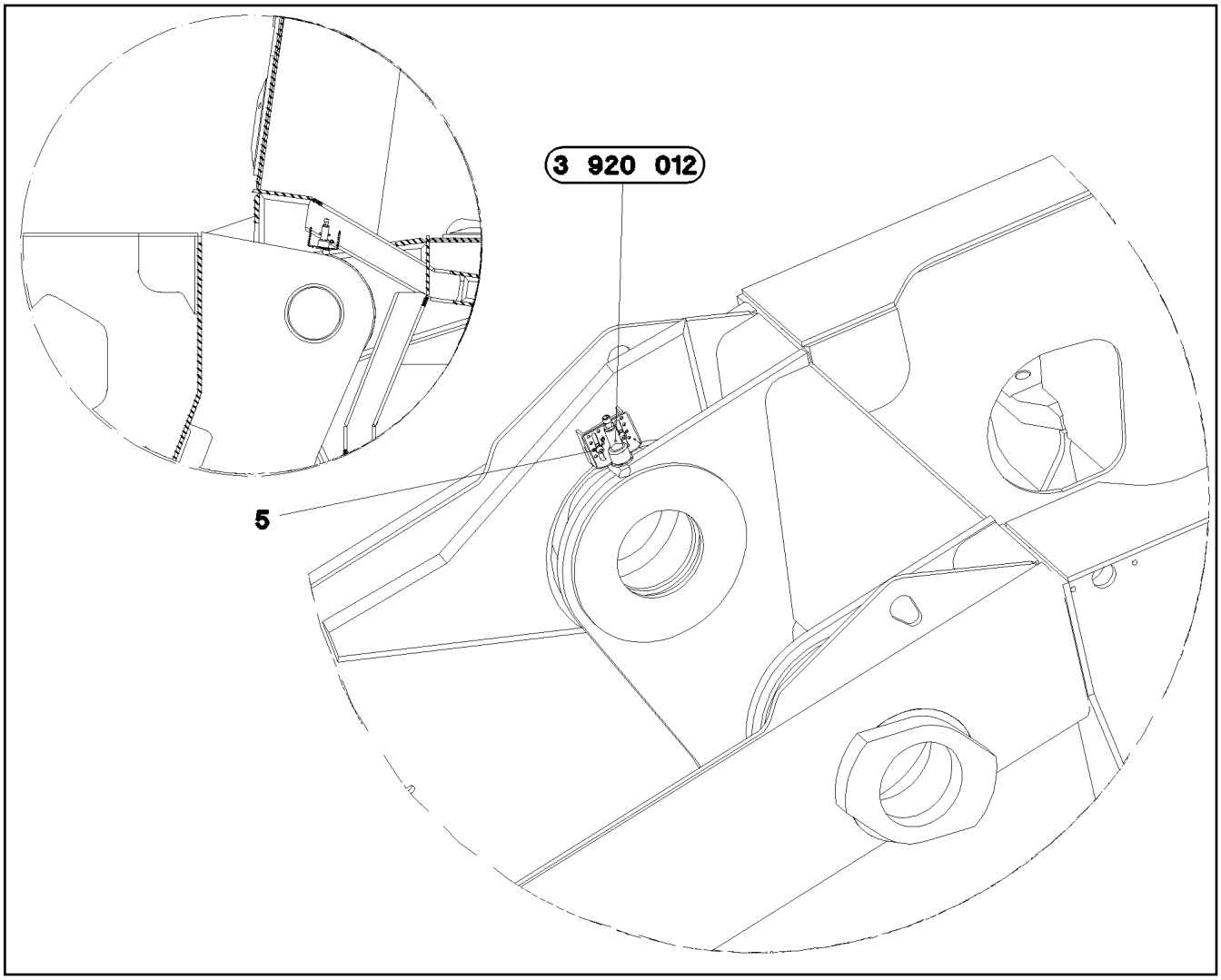


| Pos. | Item | Quantity | Description | Bezeichnung |
|---|---|---|---|---|
| 5 | 43 20 065 08 | 2 | DOWEL PIN ISO 8752 6X40 | SPANNSTIFT |

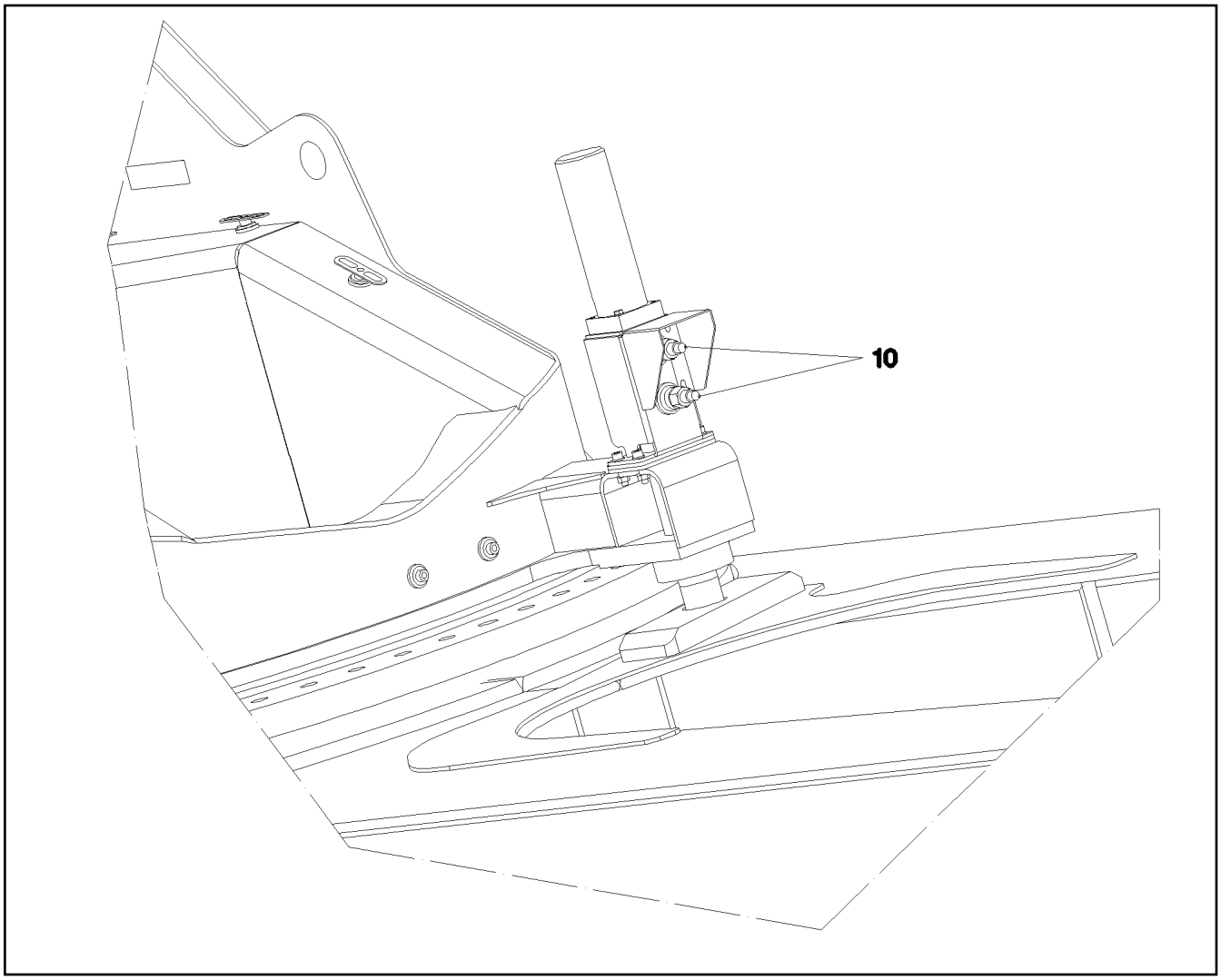


| Pos. | Item | Quantity | Description | Bezeichnung |
|---|---|---|---|---|
| 10 | 69 27 015 08 | 2 | PROXIMITY SWITCH BERUEHRUNGSLOS | NAEHERUNGSSCHALTER |

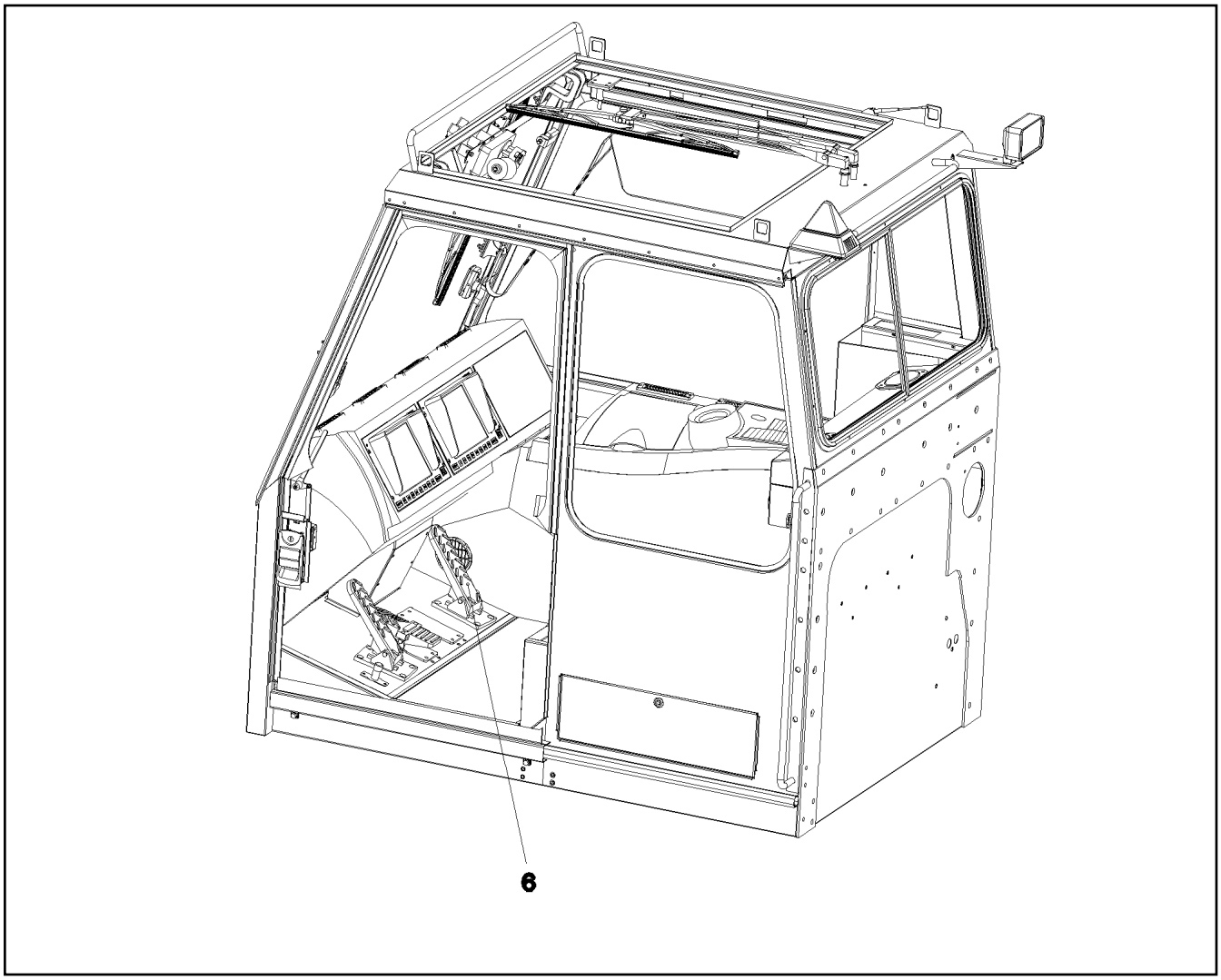


| Pos. | Item | Quantity | Description | Bezeichnung |
|---|---|---|---|---|
| 6 | 60 60 168 08 | 1 | PEDAL TRANSDUCER 23° SPF | PEDALGEBER |

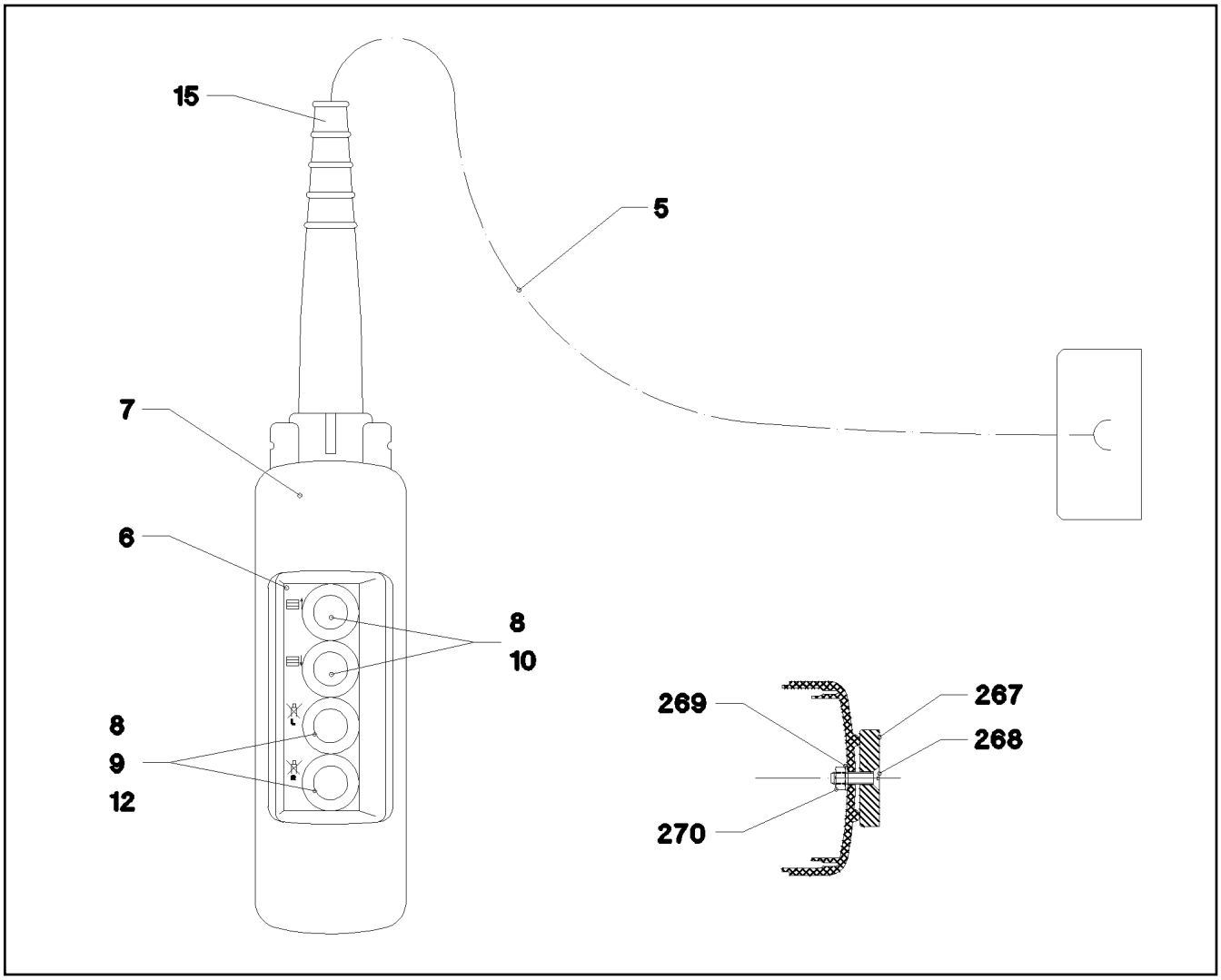


| Pos. | Item | Quantity | Description | Bezeichnung |
|---|---|---|---|---|
| 5 | 96 36 056 08 | 1 | LEAD W252 | LEITUNG |
| 6 | 97 06 454 08 | 1 | PLATE-COUNTERWEIGHT 40X120 AL-BL 1M | SCHILD BALLAST |
| 7 | 60 66 523 08 | 1 | EMPTY CASING 440X80X70 | LEERGEHAEUSE |
| 8 | 60 66 525 08 | 4 | FRONT ELEMENT | FRONTELEMENT |
| 10 | 10 02 893 2 | 2 | AUXILIARY SWITCH BLOCK 1OE+2S | HILFSSCHALTERBLOCK |
| 12 | 60 66 533 08 | 4 | AUXILIARY SWITCH BLOCK 1OE | HILFSSCHALTERBLOCK |
| 15 | 10 87 202 2 | 1 | HOSE CLAMP DIN 3017-1 12-22/9 W3 | SCHLAUCHSCHELLE |
| 267 | 61 70 001 08 | 2 | PERMANENT MAGNET 9V | DAUERMAGNET |
| 268 | 40 06 035 08 | 2 | COUNTERSUNK SCREW ISO 2010 M5X18 M | SENKSCHRAUBE |
| 269 | 42 40 004 08 | 2 | WASHER SPRING DIN 128 A 5 FST A2C | FEDERRING |
| 270 | 41 15 148 08 | 2 | HEX NUT ISO 4032 M5 8 A2C | SECHSKANTMUTTER |

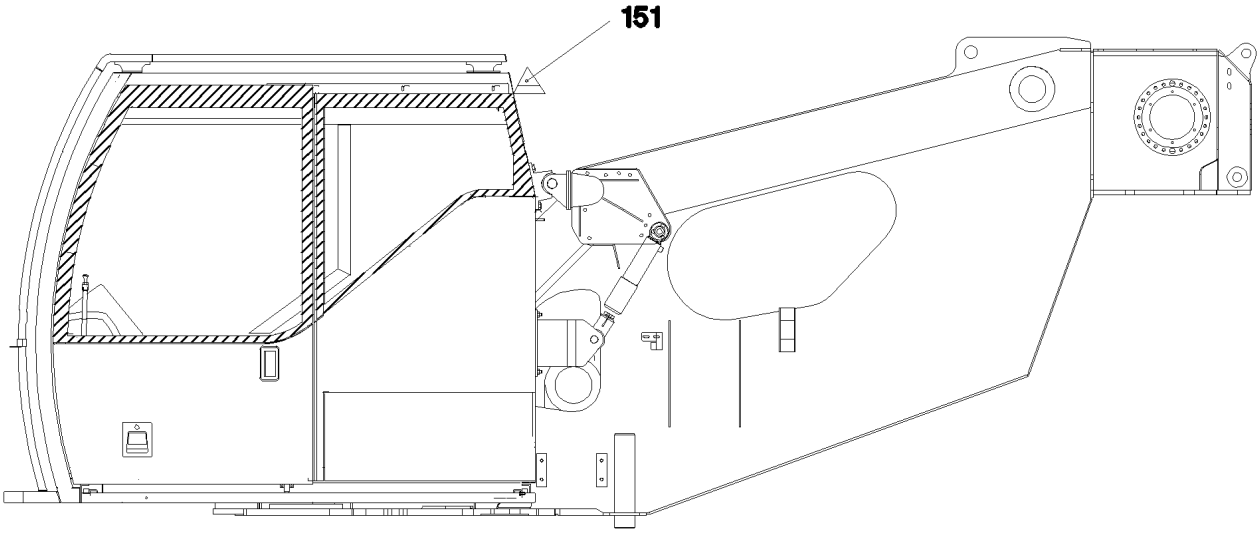


| Pos. | Item | Quantity | Description | Bezeichnung |
|---|---|---|---|---|
| 5 | 92 93 436 08 | 1 | LEAD W157E | LEITUNG |
| 10 | 97 03 743 08 | 1 | ANGLE 2.5X170X167 DC01 | WINKEL |
| 11 | 11 69 387 5 | 2 | HEX NUT ISO 4032 M8 8 480H SPF | SECHSKANTMUTTER |
| 12 | 42 40 007 08 | 2 | WASHER SPRING DIN 127 A 8 FST A2C | FEDERRING |
| 13 | 10 28 980 3 | 2 | WASHER ISO 7089 8 300HV 480H SPF | SCHEIBE |
| 15 | 40 02 612 | 3 | PAN-HEAD SCREW ISO 7045 M6X20 4.8 A2 | FLACHKOPFSCHRAUBE |
| 16 | 10 87 564 7 | 3 | WASHER ISO 7089 6 200HV 480H SPF | SCHEIBE |
| 17 | 42 40 005 08 | 3 | WASHER SPRING DIN 127 A 6 FST A2C | FEDERRING |
| 18 | 10 87 562 1 | 3 | HEX NUT ISO 4032 M6 8 480H SPF | SECHSKANTMUTTER |
| 151 | 60 71 386 08 | 1 | FLASHING LIGHT 13,2W 24V ROT | BLITZLEUCHTE |
| (1) | 57 15 119 08 | 1 | FLASHTUBE 24V | BLITZROEHRE |
| (2) | 57 15 561 08 | 1 | BOARD 24V | PLATINE |
| (3) | 57 15 562 08 | 1 | HOOD | HAUBE |
| (4) | 10 30 062 1 | 1 | FLOOR PLATE | BODENPLATTE |
| 266 | 60 24 226 08 | 1 | CABLE GLAND PG11 | KABELVERSCHRAUBUNG |
| 267 | 60 25 020 08 | 1 | COUNTER NUT PG11 MS | GEGENMUTTER |

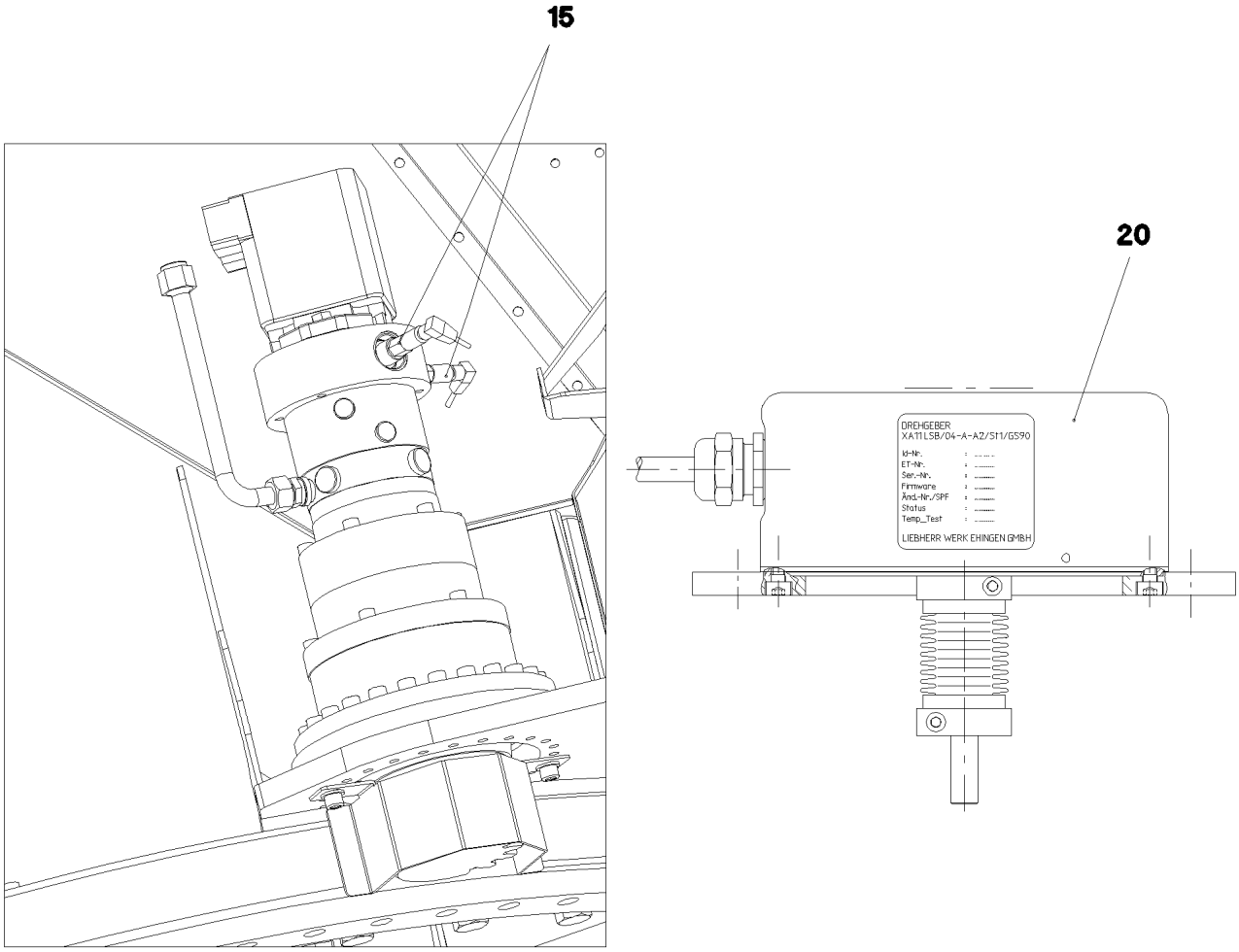


| Pos. | Item | Quantity | Description | Bezeichnung |
|---|---|---|---|---|
| 15 | 92 11 635 08 | 1 | ELECTR.FOR SLEWING GEAR<br>⇨ 2 920 407 92 11 635 08 | ELEKTRIK DREHWERK |
| 20 | 91 43 393 08 | 1 | ELECTRIC SLEWING SENSOR<br>⇨ 1 780 650 91 43 393 08 | ELEKTRIK DREHWERTGEBER |

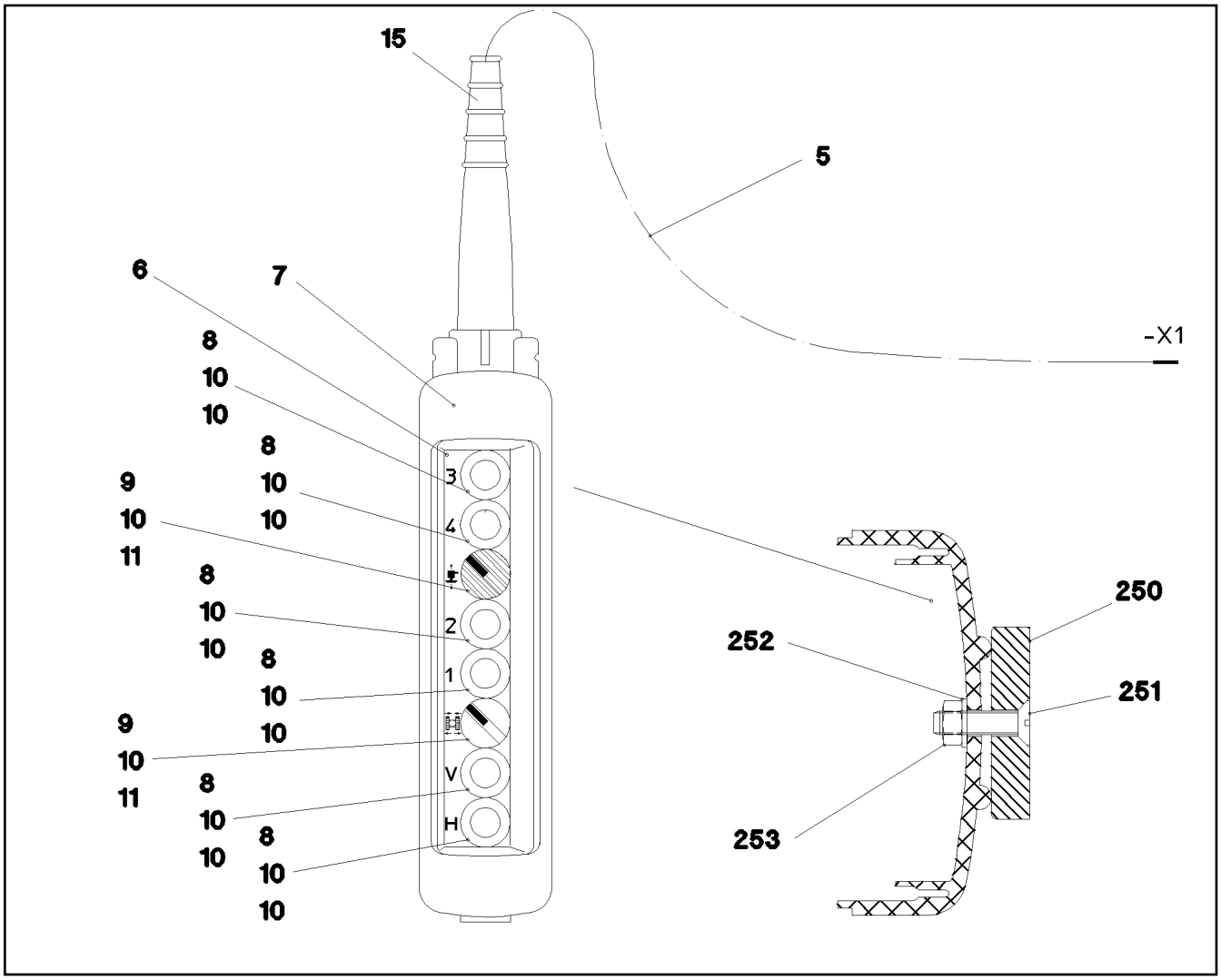


| Pos. | Item | Quantity | Description | Bezeichnung |
|---|---|---|---|---|
| 5 | 96 41 095 08 | 1 | LEAD W1067 | LEITUNG |
| 6 | 97 58 637 08 | 1 | BOARD CONTROL PANEL AL-BL | SCHILD BEDIENPULT |
| 7 | 60 66 537 08 | 1 | EMPTY CASING 560X370X70 | LEERGEHAEUSE |
| 8 | 60 66 525 08 | 6 | FRONT ELEMENT | FRONTELEMENT |
| 9 | 60 66 524 08 | 2 | FRONT ELEMENT 1W | FRONTELEMENT |
| 10 | 60 66 532 08 | 14 | AUXILIARY SWITCH BLOCK 1S | HILFSSCHALTERBLOCK |
| 11 | 60 66 533 08 | 2 | AUXILIARY SWITCH BLOCK 1OE | HILFSSCHALTERBLOCK |
| 15 | 10 87 202 2 | 1 | HOSE CLAMP DIN 3017-1 12-22/9 W3 | SCHLAUCHSCHELLE |
| 250 | 61 70 001 08 | 2 | PERMANENT MAGNET 9V | DAUERMAGNET |
| 251 | 40 06 035 08 | 2 | COUNTERSUNK SCREW ISO 2010 M5X18 M | SENKSCHRAUBE |
| 252 | 42 40 004 08 | 2 | WASHER SPRING DIN 128 A 5 FST A2C | FEDERRING |
| 253 | 41 15 148 08 | 2 | HEX NUT ISO 4032 M5 8 A2C | SECHSKANTMUTTER |

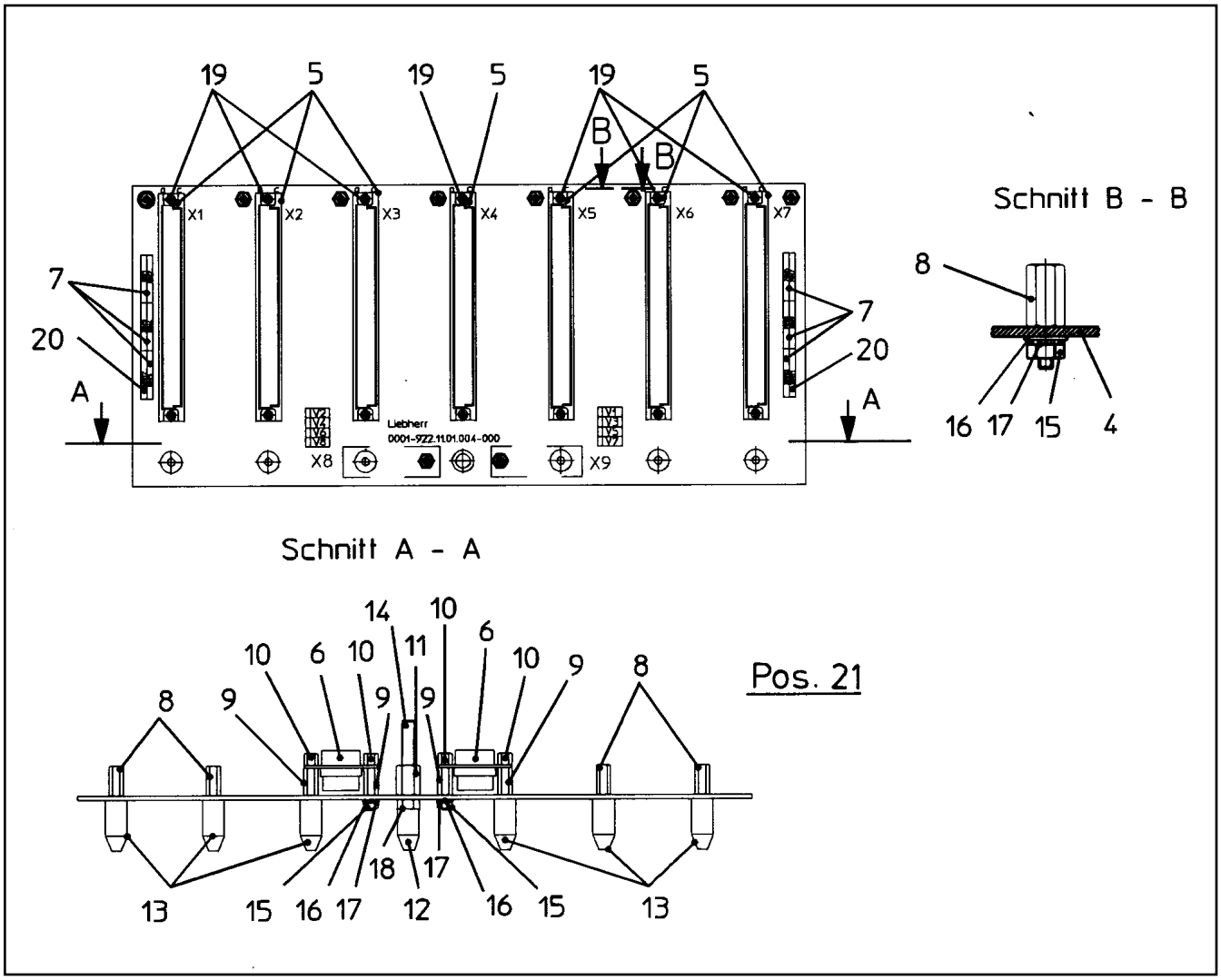


| Pos. | Item | Quantity | Description | Bezeichnung |
|---|---|---|---|---|
| 4 | 66 10 179 08 | 1 | PRINTED CIRCUIT BOARD(PCB) SPF | LEITERPLATTE |
| 5 | 60 23 212 08 | 7 | MULTIPLE PLUG SOCKET 64-POL SPF | STECKERLEISTE |
| 6 | 60 23 219 08 | 2 | FEMALE PLUG 9-POL GERADE SPF | BUCHSENSTECKER |
| 7 | 63 50 842 08 | 10 | RESISTOR NETWORK 22K X8 2% 0,125W 8X | WIDERSTANDSNETZWERK |
| 8 | 66 00 460 08 | 12 | DISTANCE STUD M3X13 ST A2K SPF | ABSTANDSBOLZEN |
| 9 | 66 00 428 08 | 4 | DISTANCE STUD M3X12 ST VERZ SPF | ABSTANDSBOLZEN |
| 10 | 66 00 422 08 | 4 | DISTANCE STUD M3X5 ST SPF | ABSTANDSBOLZEN |
| 11 | 66 00 429 08 | 1 | DISTANCE STUD M5X12 ST SPF | ABSTANDSBOLZEN |
| 12 | 66 00 419 08 | 1 | GUIDING CONE M5 PA6G SPF | FUEHRUNGSKONUS |
| 13 | 66 00 420 08 | 6 | GUIDING CONE M3 MS SPF | FUEHRUNGSKONUS |
| 14 | 66 00 416 08 | 1 | THREADED PIN DIN 976-1 M5X45 STAHL A2 | GEWINDEBOLZEN |
| 15 | 41 15 157 08 | 10 | HEX NUT ISO 4032 M3 8 A2C | SECHSKANTMUTTER |
| 16 | 46 00 253 | 10 | WASHER ISO 7089 3,5 200HV A3C | SCHEIBE |
| 17 | 42 51 005 08 | 10 | TOOTH LOCK WASHER DIN 6797 A 3,2 | ZAHNSCHEIBE |
| 18 | 41 15 148 08 | 1 | HEX NUT ISO 4032 M5 8 A2C | SECHSKANTMUTTER |
| 19 | 44 33 003 08 | 14 | TUBULAR RIVET DIN 7340 B2,5X0,3X5 MS | ROHRNIET |
| 20 | 63 50 855 08 | 2 | RESISTOR NETWORK 1K X8 5%1W 8X 9SIL | WIDERSTANDSNETZWERK |
| 21 | 66 03 006 08 | 8 | DIODE SPF | DIODE |

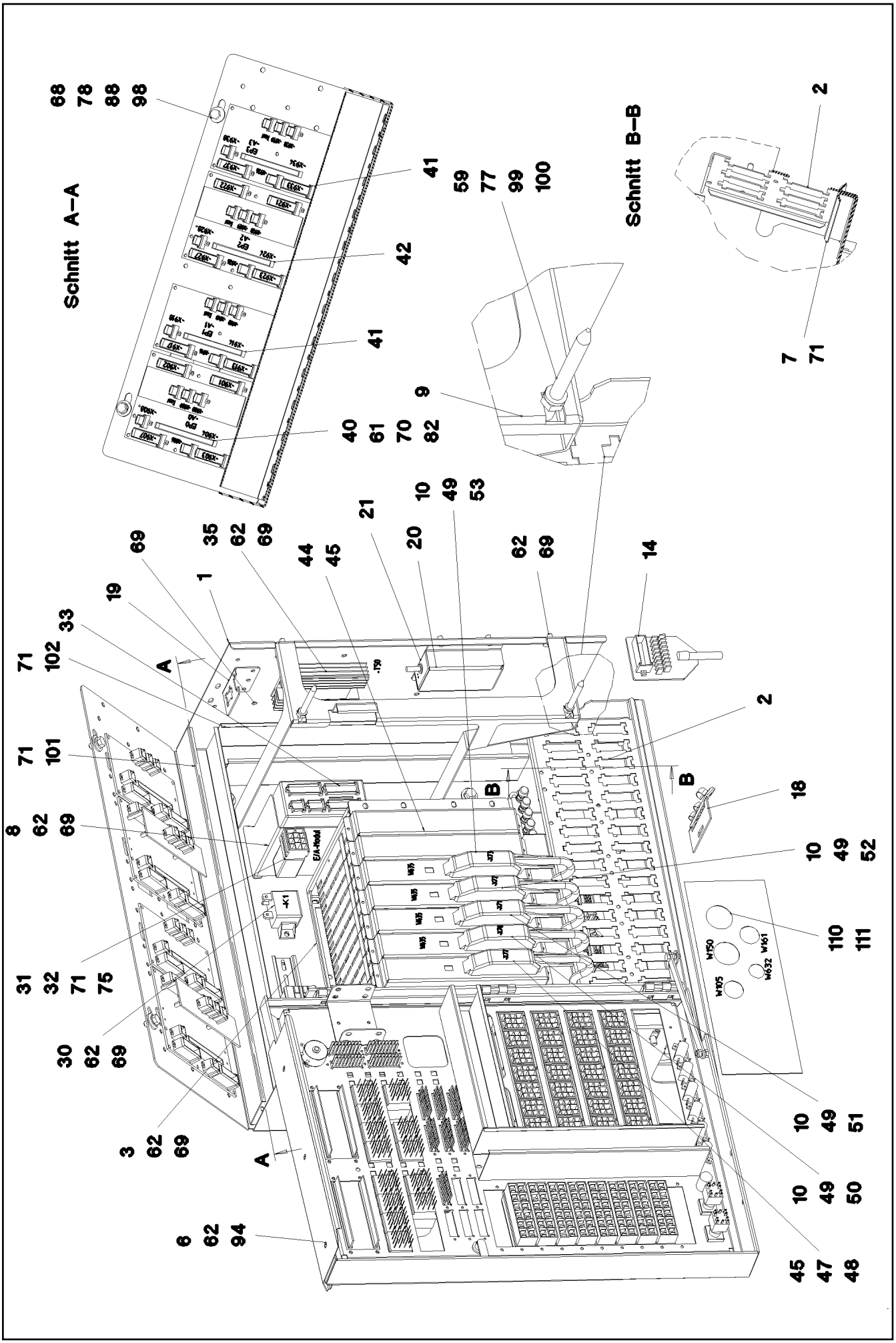


| | | |
|---|---|---|
| 16.2.2017<br>066690<br>LIEBHERR | etk_en_de_048005 LTR 1100<br><br>BASE ASSEMBLY<br>GRUNDAUFBAU | 226 (1/4)<br><br>2 932 042<br>96 68 587 08 |

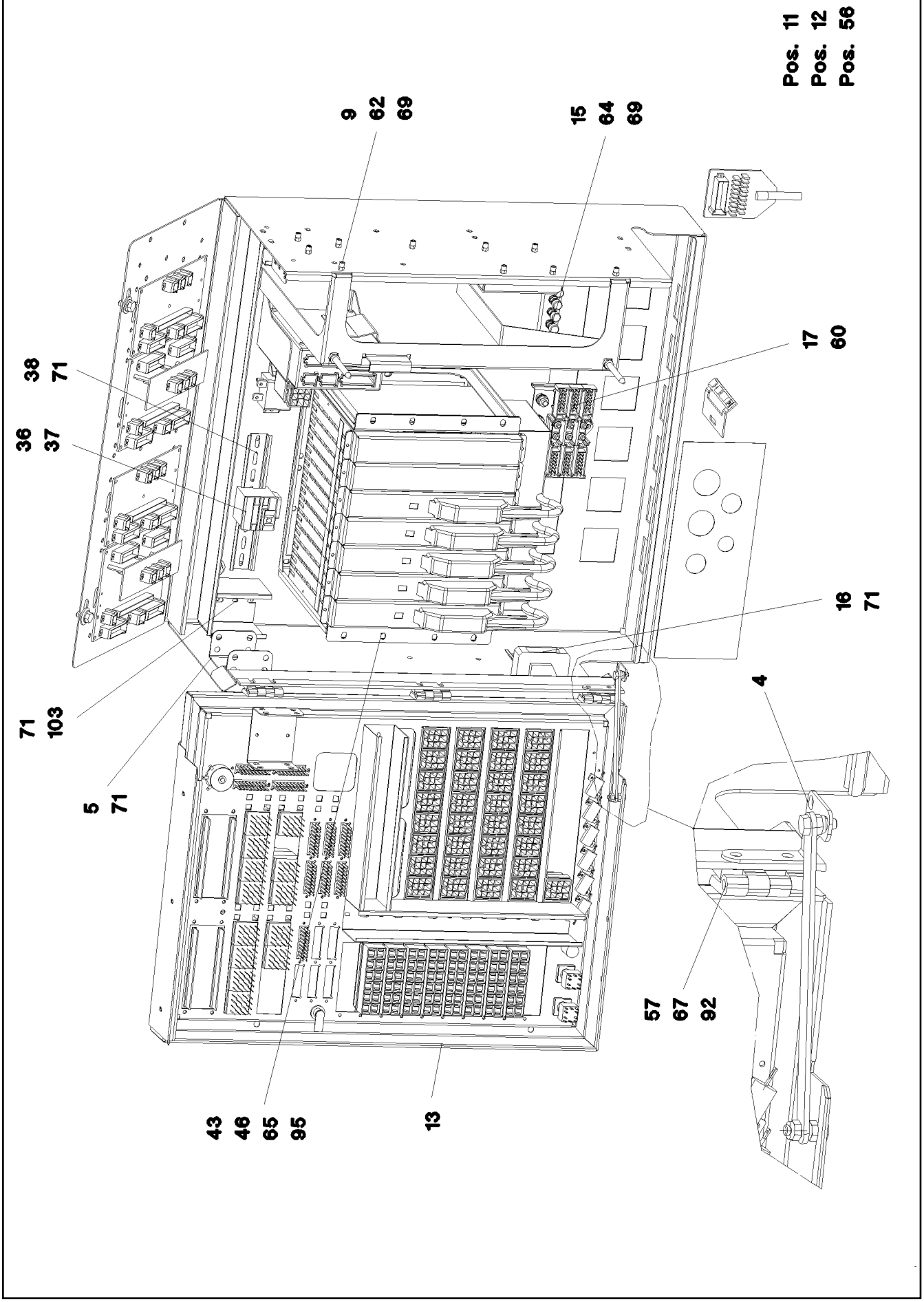


| | | |
|---|---|---|
| 16.2.2017<br>066691<br>LIEBHERR | etk_en_de_048005 LTR 1100<br><br>BASE ASSEMBLY<br>GRUNDAUFBAU | 227 (2/4)<br><br>2 932 042<br>96 68 587 08 |

| Pos. | Item | Quantity | Description | Bezeichnung |
|---|---|---|---|---|
| 1 | 97 45 632 08 | 1 | PLATE 2X1090X1326 DC01 | BLECH |
| 2 | 95 35 264 08 | 1 | PLUG PLATE 1.5X585X202 DC01 | STECKERBLECH |
| 3 | 97 14 053 08 | 1 | PLATE 1.5X272X796 DC01 | BLECH |
| 4 | 95 35 272 08 | 1 | PLATE 2X42X86 DC01 FE//ZN20//C | BLECH |
| 5 | 95 35 266 08 | 1 | PLATE 1,5X65X155 DC01 FE//ZN20//C | BLECH |
| 6 | 97 45 335 08 | 1 | PLATE 1X171X405 DC01 FE//ZN20//C | BLECH |
| 7 | 95 52 153 08 | 1 | PLATE 1.5x628x55 DC01 | BLECH |
| 8 | 97 29 623 08 | 1 | PLATE 1.5X158X338 DC01 FE//ZNNI8//CN//T | BLECH |
| 9 | 97 45 664 08 | 1 | PLATE 2X1162X241 DC01 FE//ZN20//C | BLECH |
| 10 | 92 12 112 08 | 4 | LEAD W635X1050 | LEITUNG |
| 11 | 92 26 706 08 | 1 | LEAD W636 | LEITUNG |
| 12 | 96 68 588 08 | 1 | CABLES, BASIC CONSTRUCTION CPL | DRAEHTE GRUNDAUFBAU KPL. |
| (2) | 96 68 589 08 | 1 | BASIC WIRING CONST.PRE-ASSEMB. | DRAEHTE GRUNDAUFBAU VO |
| (8) | 60 14 001 08 | 1.5 | CORRUGATED PIPE DN34 PP-MOD | WELLROHR |
| (150) | 60 23 223 08 | 5 | HOUSING 25-POL SPF | GEHAEUSE |
| (151) | 60 23 233 08 | 30 | FLAT PLUG HOUSING 18-POL | FLACHSTECKERGEHAEUSE |
| (152) | 60 23 002 08 | 23 | PLUG SHELL 18-POL | STECKERGEHAEUSE |
| (154) | 60 23 360 08 | 5 | PLUG SHELL 14-POL | STECKERGEHAEUSE |
| (155) | 60 23 014 08 | 1 | HOUSING 8-POL | GEHAEUSE |
| (156) | 60 23 255 08 | 2 | HOUSING 6-POL | GEHAEUSE |
| (157) | 60 23 313 08 | 9 | HOUSING 4-POLE | GEHAEUSE |
| (158) | 60 22 097 08 | 3 | ATTACHABLE SLEEVE HOUSING 2-POL | STECKHUELSENGEHAEUSE |
| (159) | 60 23 059 08 | 1 | FLAT PLUG HOUSING FASTIN-FASTON | FLACHSTECKERGEHAEUSE |
| (161) | 10 04 699 9 | 8 | PLUG 8-POL | STECKER |
| (162) | 10 04 700 0 | 8 | PLUG 8-POL | STECKER |
| (163) | 10 04 700 1 | 8 | PLUG 8-POL | STECKER |
| (164) | 60 23 370 08 | 2 | CONNECTOR PLUG A AX | ANSCHLUSSSTECKER |
| (204) | 11 08 260 5 | 5 | INSULATING HOSE DN12X0,65 PUR SPF | ISOLIERSCHLAUCH |
| (205) | 60 32 019 08 | 0.01 | TESA-TAPE GREY OR WHITE 19X50M ROHG | TESABAND |
| (211) | 60 32 003 08 | 100 | CABLE TIE 3,6X140-SCHWARZ PA 6.6 | KABELBINDER |
| (212) | 60 32 004 08 | 100 | CABLE TIE 3,6X200-SCHWARZ PA 6.6 | KABELBINDER |
| (213) | 60 32 022 08 | 100 | CABLE TIE 2,5X98-BLACK PA 6.6 | KABELBINDER |
| 13 | 96 46 064 08 | 1 | SWING FRAME FUSE AND RELAY<br>⇨ 2 932 095 96 46 064 08 | SCHWENKRAHMEN SICHERUN |
| 14 | 66 00 245 08 | 1 | ADAPTOR 18-POL SPF | ADAPTER |
| 15 | 92 26 483 08 | 1 | TERMINAL BOARD PRE-ASS.<br>⇨ 1 830 102 92 26 483 08 | KLEMMBRETT VORM. |
| 16 | 96 32 480 08 | 1 | TERMINAL STRIP<br>⇨ 2 932 167 96 32 480 08 | KLEMMENLEISTE |
| 17 | 92 68 911 08 | 1 | GROUND RAIL<br>⇨ 2 932 166 92 68 911 08 | VERTEILER MASSE |
| 18 | 92 26 129 08 | 1 | GROUND RAIL<br>⇨ 2 932 215 92 26 129 08 | VERTEILER MASSE |
| 19 | 97 68 803 08 | 1 | PLATE 1.5X67X79 DC01 FE//ZNNI8//CN//T0 | BLECH |
| 20 | 97 65 362 08 | 1 | PLATE 2X162X142 ALMG3 H111 | BLECH |
| 21 | 10 34 043 8 | 1 | DATALOGGER LDL2 DIGITAL SPF | DATENLOGGER |
| 30 | 63 01 201 08 | 1 | CUTOFF RELAY 24V/1S | TRENNRELAIS |
| 31 | 63 01 229 08 | 1 | PLUG BASE 9-POLE | RELAISSTECKSOCKEL |
| 32 | 10 02 485 7 | 1 | RESISTANCE MODULE PBTG-GF20 SPF | WIDERSTANDSMODUL |
| 33 | 66 01 020 08 | 1 | E/A-MODULE A SPF | E/A-MODUL |
| 35 | 10 35 540 9 | 1 | VOLTAGE TRANSFORMER 24V 12V 36W SP | SPANNUNGSWANDLER |
| 36 | 69 18 022 08 | 1 | OPERATING HOURS COUNTER STUNDEN | BETRIEBSSTUNDENZAEHLER |
| 37 | 97 12 910 08 | 1 | PLATE OPER. HOUR METER TRAVELL | SCHILD BETRIEBSSTUNDENZ. |
| 38 | 60 21 067 08 | 0.2 | TOP HAT RAIL 35X27X7,3X1 | HUTSCHIENE |
| 40 | 92 68 082 08 | 1 | INPUT BOARD CPL. EP0 | EINGANGSPLATINE KPL. |
| 41 | 91 43 948 08 | 2 | INPUT BOARD | EINGANGSPLATINE |
| 42 | 96 28 366 08 | 1 | INPUT BOARD CPL. EP2<br>⇨ 2 932 214 96 28 366 08 | EINGANGSPLATINE KPL. |
| 43 | 91 23 538 08 | 1 | ASSEMBLY FRAME 56TE<br>⇨ 2 913 100 91 23 538 08 | BAUGRUPPENTRAEGER |

| Pos. | Item | Quantity | Description | Bezeichnung |
|---|---|---|---|---|
| 44 | 61 10 016 08 | 2 | ORIFICE 1,5X40X262 | BLENDE |
| 45 | 61 10 017 08 | 3 | ORIFICE 1,5X19,5X111 | BLENDE |
| 46 | 77 26 448 08 | 1 | SIGN | SCHILD |
| 47 | 96 19 563 08 | 1 | POWER SUPPLY 4 | NETZTEIL 4 |
| 48 | 92 16 203 08 | 1 | PLUG-IN CARD G0 COMM.SP.4 PROG. | EINSCHUBKARTE G0 |
| 49 | 91 44 006 08 | 4 | CENTRAL UNIT C1 8X2A GEPRUEFT | ZENTRALEINHEIT C1 |
| 50 | 91 03 958 08 | 1 | PLUG-IN CARD G0Z0 PROG-SP.10 PROG. | EINSCHUBKARTE G0Z0 |
| 51 | 91 00 655 08 | 1 | PLUG-IN CARD G0Z1 PROG-SP.6 PROG. | EINSCHUBKARTE G0Z1 |
| 52 | 91 00 656 08 | 1 | PLUG-IN CARD G0Z2 PROG-SP.6 PROG. | EINSCHUBKARTE G0Z2 |
| 53 | 91 00 659 08 | 1 | PLUG-IN CARD G0Z3 PROG-SP.6 PROG. | EINSCHUBKARTE G0Z3 |
| 56 | 60 27 614 08 | 70 | NAME PLATE 20X8 | BEZEICHNUNGSSCHILD |
| 57 | 10 87 117 7 | 3 | SCREW-ON HINGE 25X25X50/180° AISI 316 | ANSCHRAUBSCHARNIER |
| 59 | 95 37 301 08 | 2 | THREADED PIN RD8X96 8.8 VERZ | GEWINDEBOLZEN |
| 60 | 40 82 000 08 | 2 | SHEET-METAL SCREW DIN 7971 ST3,9X9,5 | BLECHSCHRAUBE |
| 61 | 40 01 016 08 | 28 | SOCKET HEAD SCREW DIN 84 M4X10 8.8 A3 | ZYLINDERSCHRAUBE |
| 62 | 10 87 550 3 | 32 | HEX SCREW EN 1665 M5X10 10.9 480H SPF | SECHSKANTSCHRAUBE |
| 64 | 40 02 307 | 2 | PAN-HEAD SCREW ISO 7045 M5X20 4.8 A2 | FLACHKOPFSCHRAUBE |
| 65 | 40 73 502 08 | 8 | HEX SCREW DIN 6921 M6X16 8.8 A2C | SECHSKANTSCHRAUBE |
| 66 | 11 64 489 9 | 1 | HEX SCREW ISO 4017 M6X20 8.8 480H SPF | SECHSKANTSCHRAUBE |
| 67 | 40 86 040 08 | 6 | COUNTERSUNK SCREW DIN 7991 M5X16 8 | SENKSCHRAUBE |
| 68 | 11 65 161 2 | 9 | HEX SCREW ISO 4017 M8X16 8.8 480H SPF | SECHSKANTSCHRAUBE |
| 69 | 10 04 259 2 | 29 | BLIND RIVET NUT M5 K=1,0-3,5 ST A2C | BLINDNIETMUTTER |
| 70 | 41 30 062 08 | 28 | BLIND RIVET NUT M4 K=1,0-3,0 | BLINDNIETMUTTER |
| 71 | 70 42 323 08 | 25 | BLIND RIVET 4,0X10,5 | BLINDNIET |
| 75 | 40 01 645 | 1 | WASHER ISO 7089 4 200HV A3C | SCHEIBE |
| 76 | 10 87 564 8 | 2 | WASHER ISO 7093-1 6 200HV 480H SPF | SCHEIBE |
| 77 | 10 28 980 3 | 2 | WASHER ISO 7089 8 300HV 480H SPF | SCHEIBE |
| 78 | 42 18 009 08 | 9 | WASHER ISO 7093-1 8 200HV A2C | SCHEIBE |
| 82 | 42 52 207 08 | 28 | SERRATED LOCK WASHER DIN 6798 J 4,3 | FAECHERSCHEIBE |
| 86 | 42 52 210 08 | 1 | SERRATED LOCK WASHER DIN 6798 J 6,4 | FAECHERSCHEIBE |
| 88 | 42 52 211 08 | 9 | SERRATED LOCK WASHER DIN 6798 J 8.4 | FAECHERSCHEIBE |
| 92 | 41 19 003 08 | 6 | HEX NUT DIN 985 M5 8 A2C | SECHSKANTMUTTER |
| 94 | 41 30 026 08 | 3 | CAGE NUT M5 | KAEFIGMUTTER |
| 95 | 41 30 028 08 | 8 | CAGE NUT M6 | KAEFIGMUTTER |
| 96 | 10 87 562 1 | 1 | HEX NUT ISO 4032 M6 8 480H SPF | SECHSKANTMUTTER |
| 98 | 41 30 031 08 | 9 | CAGE NUT M8 | KAEFIGMUTTER |
| 99 | 41 30 034 08 | 2 | CAGE NUT M8 | KAEFIGMUTTER |
| 100 | 41 19 005 08 | 2 | HEX NUT DIN 985 M8 8 A2C | SECHSKANTMUTTER |
| 101 | 60 14 046 08 | 0.62 | CABLE CHANNEL 60X40/2000 | KABELKANAL |
| 102 | 60 14 073 08 | 0.45 | CABLE CHANNEL 60X60/2000 | KABELKANAL |
| 103 | 60 14 073 08 | 0.08 | CABLE CHANNEL 60X60/2000 | KABELKANAL |
| 110 | 60 25 024 08 | 1 | COUNTER NUT PG29 MS | GEGENMUTTER |
| 111 | 60 25 016 08 | 1 | STOPPER PLUG PG29 MS | BLINDSTOPFEN |

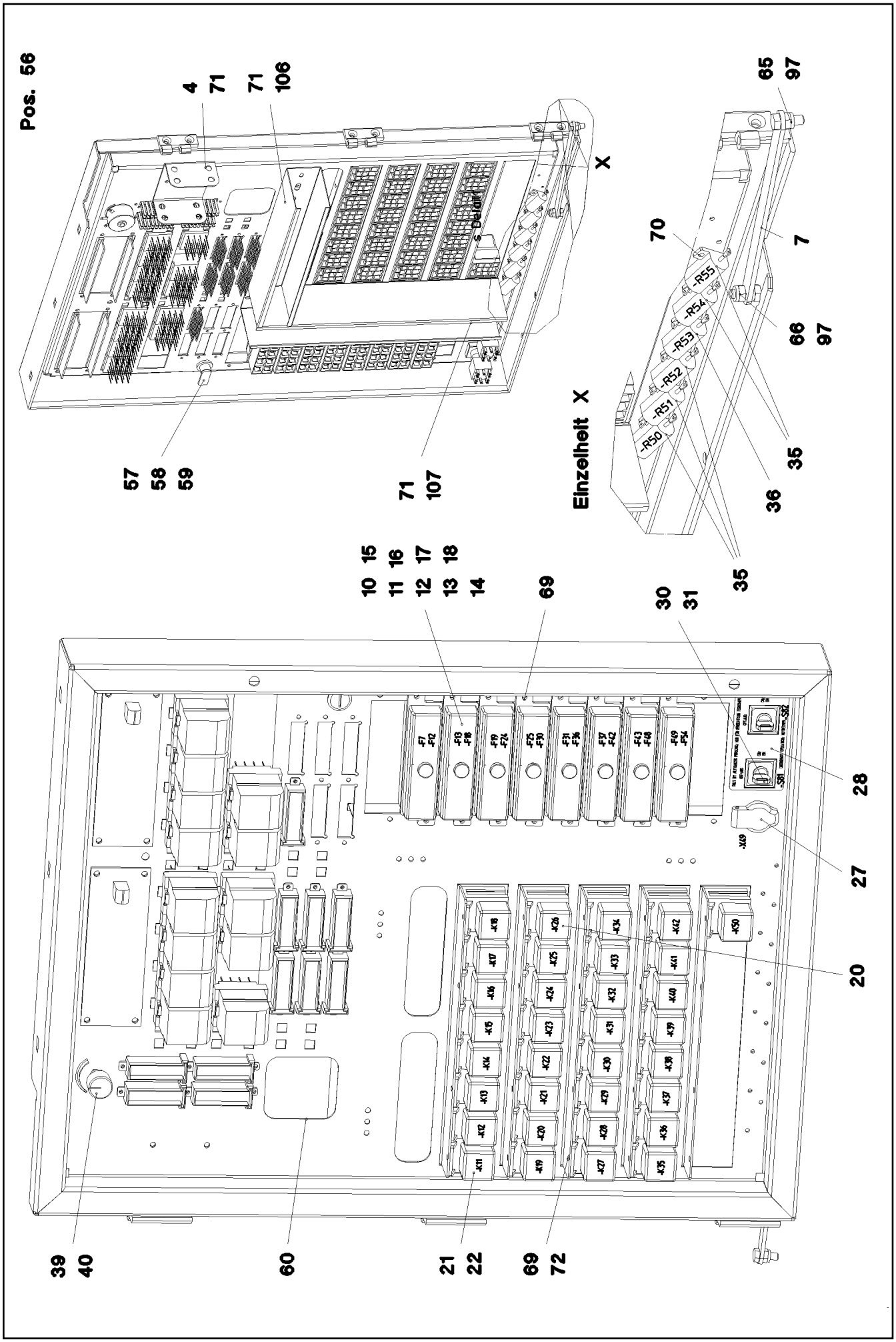


| | | |
|---|---|---|
| 16.2.2017<br>050832<br>LIEBHERR | etk_en_de_048005 LTR 1100<br><br>SWING FRAME FUSE AND RELAY<br>SCHWENKRAHMEN SICHERUNGEN | 230 (1/2)<br><br>⇨ 2 932 095<br>96 46 064 08 |

| Pos. | Item | Quantity | Description | Bezeichnung |
|---|---|---|---|---|
| 4 | 95 35 266 08 | 1 | PLATE 1,5X65X155 DC01 FE//ZN20//C | BLECH |
| 7 | 95 35 273 08 | 1 | PLATE 3X14X189 DC01 FE//ZN20//C | BLECH |
| 10 | 60 45 016 08 | 8 | FUSE BOX SMALL 6-POL, LEER | SICHERUNGSDOSE |
| 11 | 60 27 355 08 | 35 | INSERTION BRIDGE | EINLEGEBRUECKE |
| 12 | 60 41 040 08 | 2 | BLADE-TYPE ELECTRIC FUSE 2A | FLACHSICHERUNG |
| 13 | 60 40 069 08 | 8 | FLAT FUSE LINK 5A 32 | FLACHSICHERUNGSEINSATZ |
| 14 | 60 40 070 08 | 9 | FLAT FUSE LINK 7,5A | FLACHSICHERUNGSEINSATZ |
| 15 | 60 40 071 08 | 12 | FLAT FUSE LINK 10A 32 | FLACHSICHERUNGSEINSATZ |
| 16 | 60 40 072 08 | 5 | FLAT FUSE LINK 15A | FLACHSICHERUNGSEINSATZ |
| 17 | 60 40 073 08 | 4 | FLAT FUSE LINK 20A | FLACHSICHERUNGSEINSATZ |
| 18 | 60 40 074 08 | 1 | FLAT FUSE LINK 30A | FLACHSICHERUNGSEINSATZ |
| 20 | 63 01 051 08 | 1 | RELAY 24V/1S 26X26X24MM SPF | RELAIS |
| 21 | 63 01 229 08 | 33 | PLUG BASE 9-POLE | RELAISSTECKSOCKEL |
| 22 | 63 01 215 08 | 32 | RELAY 24V 10A SPF | RELAIS |
| 27 | 60 52 039 08 | 1 | BUILT-IN SOCKET 2-POL | EINBAUSTECKDOSE |
| 28 | 97 65 409 08 | 1 | SIGN | SCHILD |
| 30 | 60 61 433 08 | 2 | ROTARY LOCK 1W | DREHSCHLOSS |
| (1) | 10 87 343 4 | 1 | KEY | SCHLUESSEL |
| 31 | 60 61 446 08 | 2 | TOUCH CONTACT TRANSMITTER 2OE+2S | TASTKONTAKTGEBER |
| 35 | 63 50 169 08 | 5 | RESISTOR 30R 1% 25W | WIDERSTAND |
| 36 | 63 50 170 08 | 1 | RESISTOR 47R 1% 25W | WIDERSTAND |
| 39 | 63 51 137 08 | 1 | POTENTIOMETER 68R 10W SPF | POTENTIOMETER |
| 40 | 63 50 452 08 | 1 | TURNING KNOB | DREHKNOPF |
| 56 | 60 27 614 08 | 50 | NAME PLATE 20X8 | BEZEICHNUNGSSCHILD |
| 57 | 70 42 573 08 | 1 | TONGUE 13,5 | ZUNGE |
| 58 | 70 42 572 08 | 1 | ACTUATION SPIKE 1,5 | BETAETIGUNGSDORN |
| 59 | 70 42 571 08 | 1 | HOUSING | GEHAEUSE |
| 60 | 26 21 039 08 | 0.295 | EDGE PROTECTION 1-2X9,5X6,5 | KANTENSCHUTZ |
| 65 | 40 65 099 | 1 | HEX SCREW ISO 4017 M6X16 8.8 A2C | SECHSKANTSCHRAUBE |
| 66 | 11 64 489 9 | 1 | HEX SCREW ISO 4017 M6X20 8.8 480H SPF | SECHSKANTSCHRAUBE |
| 69 | 70 42 076 08 | 32 | MANDRIL RIVET 4X10,3 | DORNNIET |
| 70 | 70 42 127 08 | 12 | BLIND RIVET 3,2X4,3-5,9 | BLINDNIET |
| 71 | 70 42 323 08 | 6 | BLIND RIVET 4,0X10,5 | BLINDNIET |
| 72 | 40 01 645 | 16 | WASHER ISO 7089 4 200HV A3C | SCHEIBE |
| 97 | 41 19 004 08 | 3 | HEX NUT DIN 985 M6 8 A2C | SECHSKANTMUTTER |
| 106 | 60 14 046 08 | 0.35 | CABLE CHANNEL 60X40/2000 | KABELKANAL |
| 107 | 60 14 046 08 | 0.295 | CABLE CHANNEL 60X40/2000 | KABELKANAL |

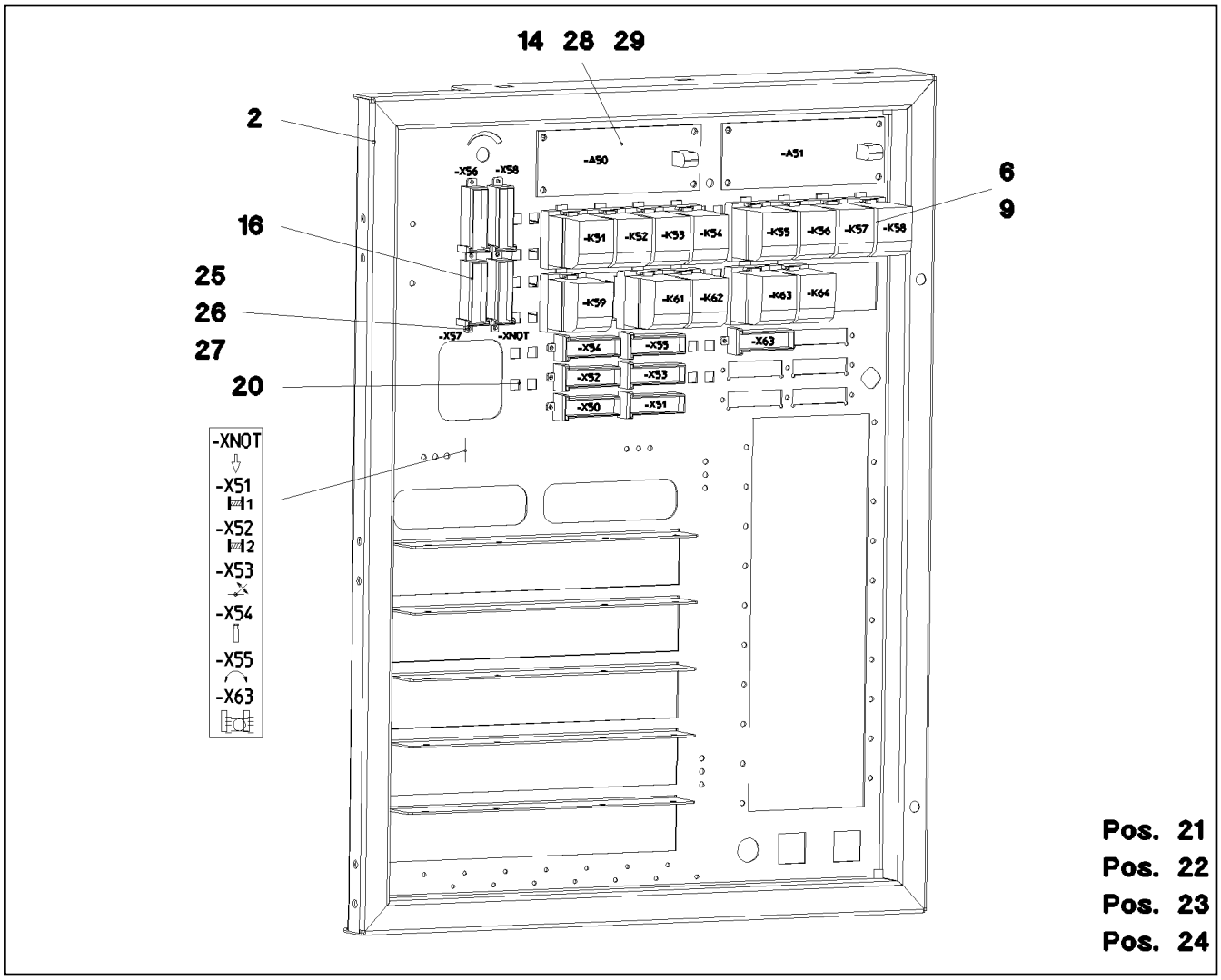


| Pos. | Item | Quantity | Description | Bezeichnung |
|---|---|---|---|---|
| 2 | 97 45 329 08 | 1 | PLATE 1.5X647X828 DC01 | BLECH |
| 6 | 63 01 021 08 | 13 | RELAY 24V | RELAIS |
| 9 | 63 01 023 08 | 13 | SOCKET | FASSUNG |
| 14 | 66 01 015 08 | 2 | DIODE VARISTOR MODULE SPF | DIODEN VARISTORENMODUL |
| 16 | 60 23 250 08 | 11 | PLUG 18-POL 15A SPF | STECKER |
| 20 | 61 10 461 08 | 12 | WIRE CLIP | DRAHTHALTER |
| 21 | 60 21 710 08 | 26 | ADHESIVE LABELS | HAFTETIKETT |
| 22 | 60 04 409 08 | 20 | STRAND 1 0,35 | SCHALTLITZE |
| 23 | 60 23 154 08 | 370 | CLIP | CLIP |
| 24 | 60 32 022 08 | 10 | CABLE TIE 2,5X98-BLACK PA 6.6 | KABELBINDER |
| 25 | 40 84 006 01 | 17 | PAN-HEAD SCREW ISO 7045 M3X10 4.8 A2 | FLACHKOPFSCHRAUBE |
| 26 | 41 15 157 08 | 22 | HEX NUT ISO 4032 M3 8 A2C | SECHSKANTMUTTER |
| 27 | 42 52 205 08 | 17 | SERRATED LOCK WASHER DIN 6798 J 3,2 | FAECHERSCHEIBE |
| 28 | 70 42 076 08 | 8 | MANDRIL RIVET 4X10,3 | DORNNIET |
| 29 | 40 01 645 | 8 | WASHER ISO 7089 4 200HV A3C | SCHEIBE |

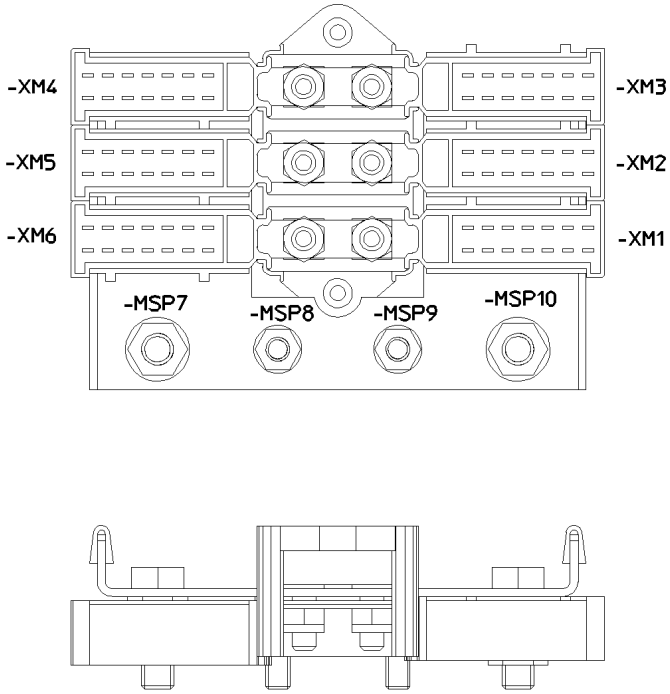


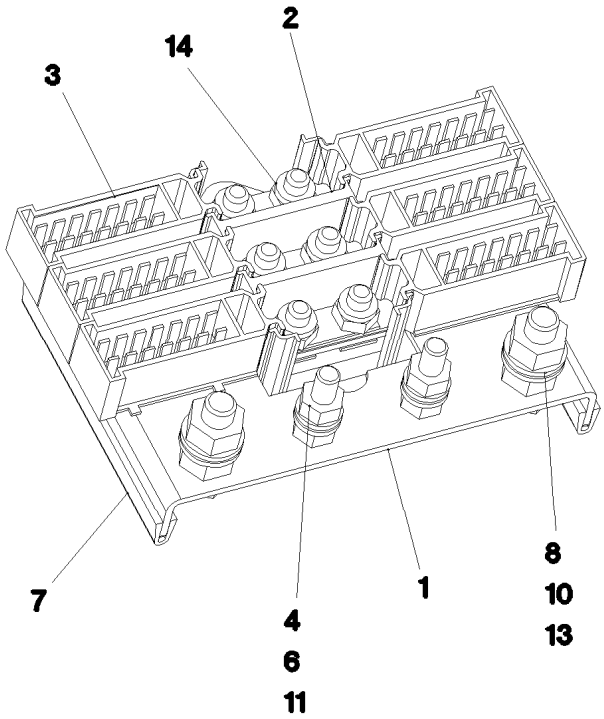


**Pos. 12**

| Pos. | Item | Quantity | Description | Bezeichnung |
|---|---|---|---|---|
| 1 | 95 63 963 08 | 1 | PLATE 2X144X80 DC01 FE//ZNNI8//CN//T0 | BLECH |
| 2 | 60 23 364 08 | 1 | CABLE CONNECTOR | KABELVERBINDER |
| 3 | 60 23 365 08 | 6 | PLUG SHELL 14-POL | STECKERGEHAEUSE |
| 4 | 10 87 564 7 | 4 | WASHER ISO 7089 6 200HV 480H SPF | SCHEIBE |
| 6 | 10 87 562 1 | 4 | HEX NUT ISO 4032 M6 8 480H SPF | SECHSKANTMUTTER |
| 7 | 26 21 039 08 | 0.16 | EDGE PROTECTION 1-2X9,5X6,5 | KANTENSCHUTZ |
| 8 | 11 64 226 1 | 2 | HEX SCREW ISO 4017 M8X25 8.8 480H SPF | SECHSKANTSCHRAUBE |
| 10 | 10 29 966 9 | 4 | HEX NUT ISO 4032 M8 10 480H SPF | SECHSKANTMUTTER |
| 11 | 10 87 552 9 | 2 | HEX SCREW ISO 4017 M6X25 8.8 480H SPF | SECHSKANTSCHRAUBE |
| 12 | 60 27 614 08 | 10 | NAME PLATE 20X8 | BEZEICHNUNGSSCHILD |
| 13 | 10 28 980 3 | 4 | WASHER ISO 7089 8 300HV 480H SPF | SCHEIBE |
| 14 | 41 19 004 08 | 6 | HEX NUT DIN 985 M6 8 A2C | SECHSKANTMUTTER |

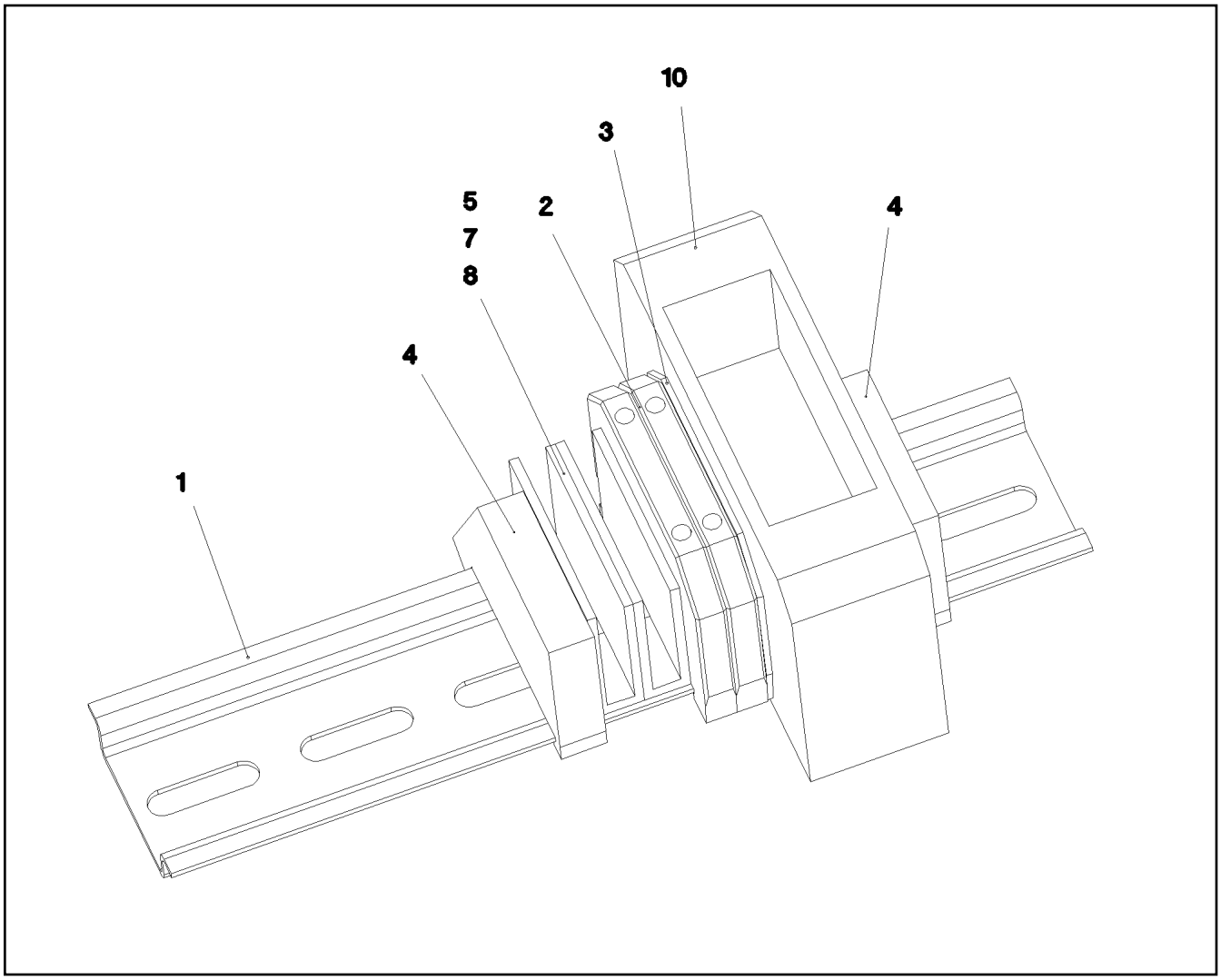


| Pos. | Item | Quantity | Description | Bezeichnung |
|---|---|---|---|---|
| 1 | 60 21 067 08 | 0.15 | TOP HAT RAIL 35X27X7,3X1 | HUTSCHIENE |
| 2 | 60 27 616 08 | 2 | TERMINAL MARKER 0,2-2,5MM² | MESSERTRENNKLEMME |
| 3 | 10 28 635 3 | 1 | COVER | DECKEL |
| 4 | 60 21 101 08 | 2 | END HOLDER | ENDHALTER |
| 5 | 10 28 635 4 | 2 | TERMINAL/CLAMP 6,3/2,8X0,8MM² | KLEMME |
| 7 | 60 27 417 08 | 2 | CRAMP | KRAMPE |
| 8 | 60 27 629 08 | 1 | IDENTIFICATION STRIPS | BEZEICHNUNGSSTREIFEN |
| 10 | 96 19 694 08 | 1 | INSERTION MODULE | BESTUECKUNGSMODUL |

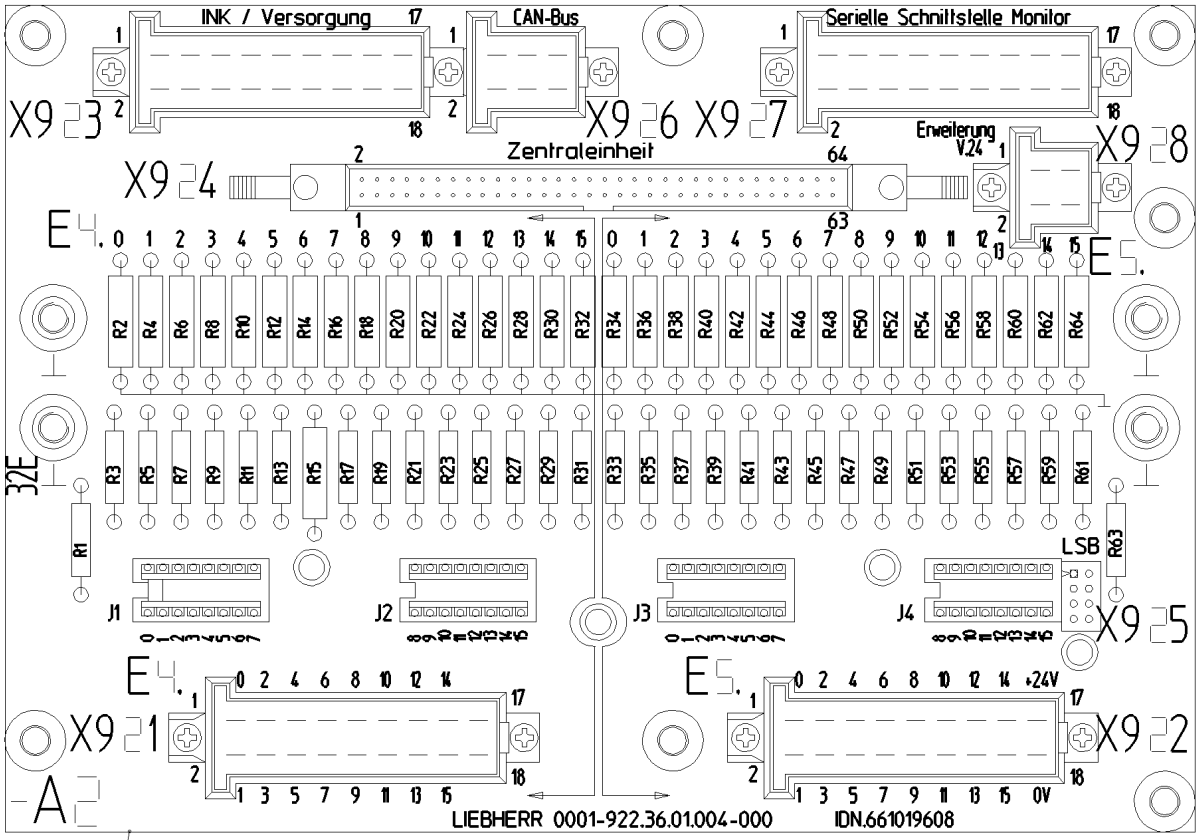


5

**Pos. 6**
**Pos. 8**
**Pos. 9**

| Pos. | Item | Quantity | Description | Bezeichnung |
|---|---|---|---|---|
| 5 | 92 08 065 08 | 1 | INPUT BOARD | EINGANGSPLATINE |
| 6 | 92 08 669 08 | 1 | POWER SUPPLY LSB 1-FACH | STROMVERSORGUNG |
| 8 | 51 45 994 08 | 4 | PAN-HEAD SCREW ISO 7045 M3X8 4.8 A2C | FLACHKOPFSCHRAUBE |
| 9 | 42 52 205 08 | 4 | SERRATED LOCK WASHER DIN 6798 J 3,2 | FAECHERSCHEIBE |

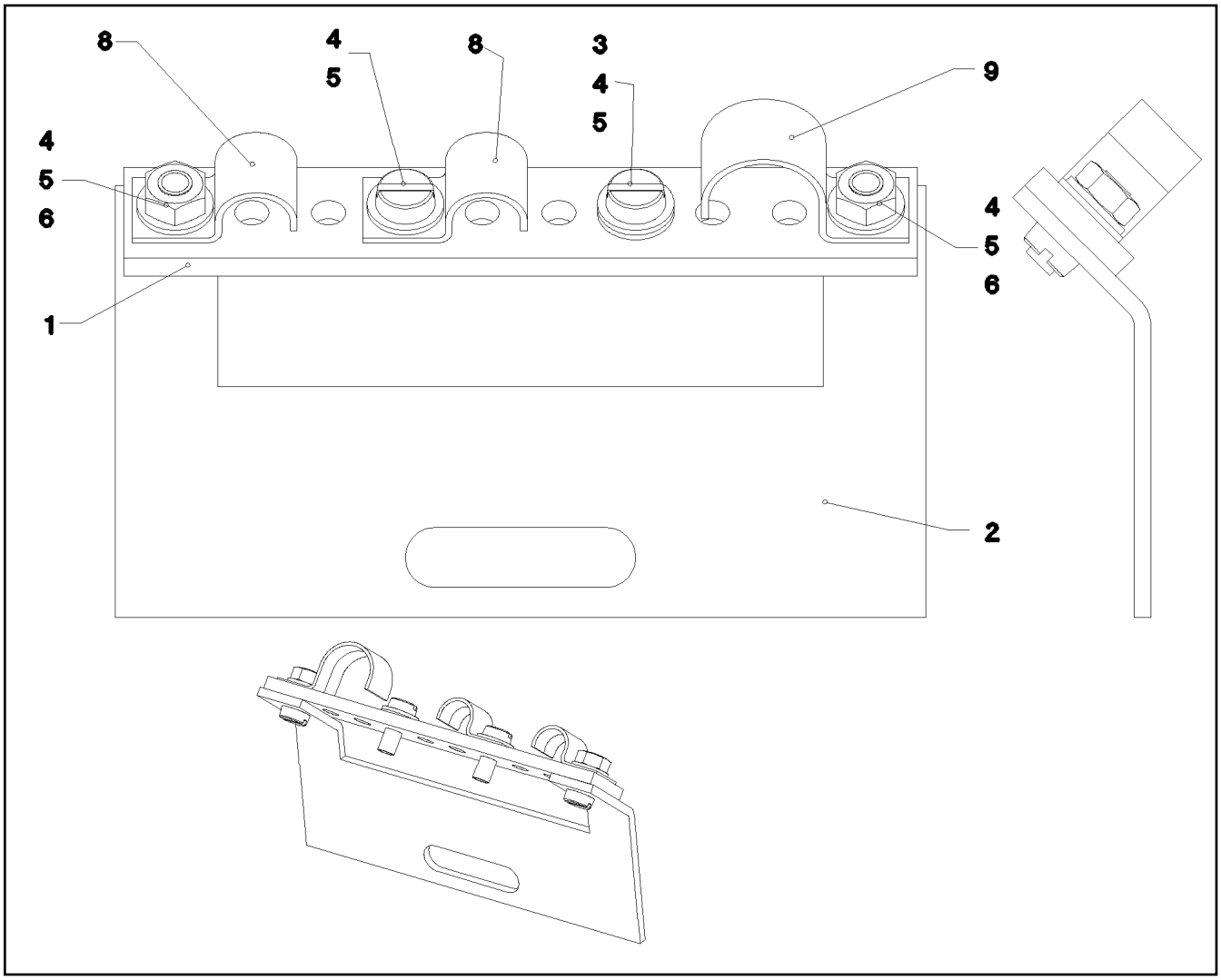


| Pos. | Item | Quantity | Description | Bezeichnung |
|---|---|---|---|---|
| 1 | 60 21 018 08 | 0.095 | NEUTRAL CONDUCTOR BAR 15X3X1000 | LEITERSCHIENE |
| 2 | 95 37 009 08 | 1 | PLATE 2X54X95 DC01 FE//ZN20//C | BLECH |
| 3 | 40 01 645 | 1 | WASHER ISO 7089 4 200HV A3C | SCHEIBE |
| 4 | 42 52 207 08 | 4 | SERRATED LOCK WASHER DIN 6798 J 4,3 | FAECHERSCHEIBE |
| 5 | 40 01 016 08 | 4 | SOCKET HEAD SCREW DIN 84 M4X10 8.8 A3 | ZYLINDERSCHRAUBE |
| 6 | 41 15 142 08 | 2 | HEX NUT ISO 4032 M4 8 A2C | SECHSKANTMUTTER |
| 8 | 60 20 032 08 | 1 | FASTENING CLAMP 8 | BEFESTIGUNGSSCHELLE |
| 9 | 60 20 033 08 | 2 | FASTENING CLAMP 13 | BEFESTIGUNGSSCHELLE |

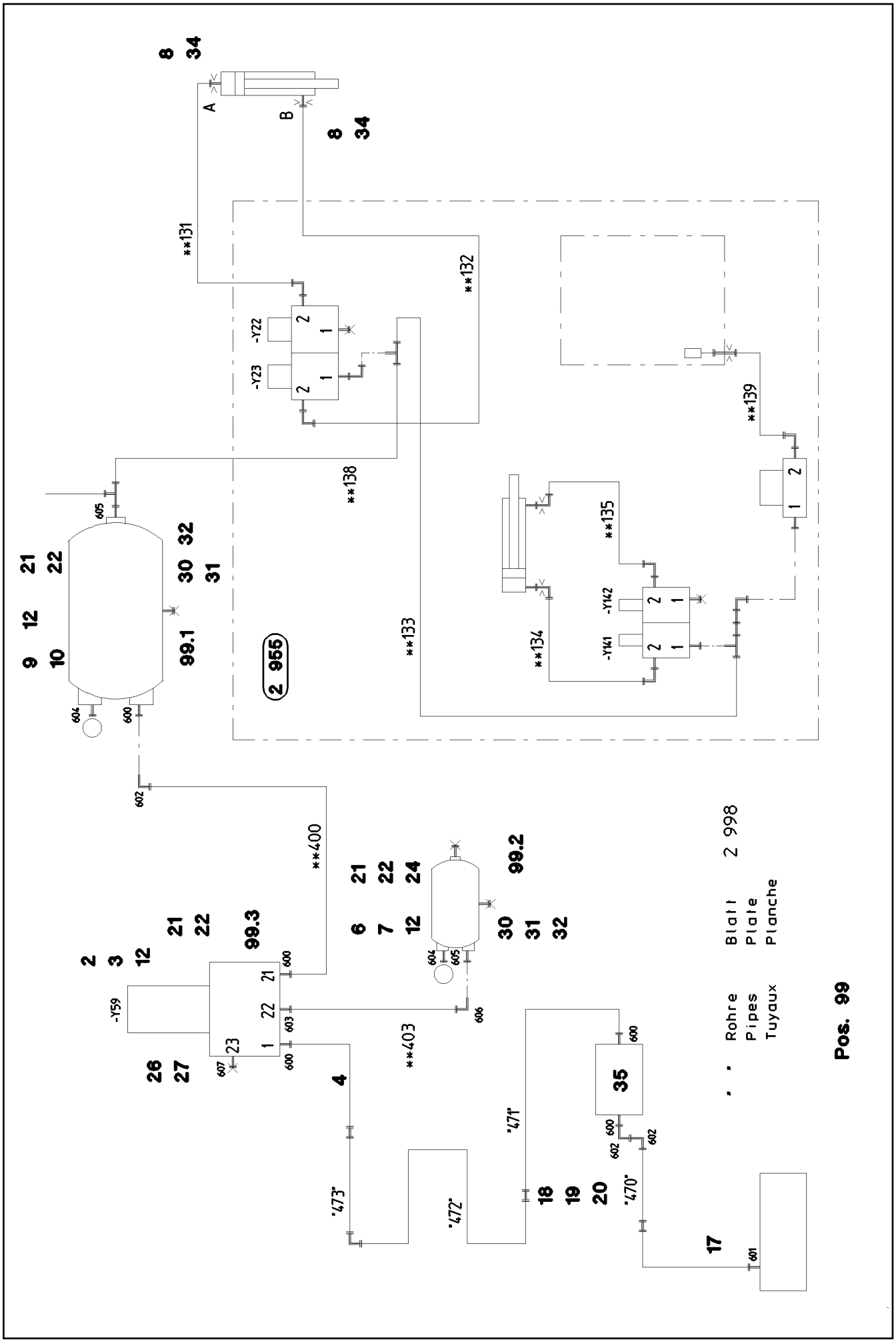


| | | |
|---|---|---|
| 16.2.2017<br>041219<br>LIEBHERR | etk_en_de_048005 LTR 1100<br><br>COMPRESSED-AIR SYST.SUPERSTR.<br>DRUCKLUFTANLAGE OW | 237 (1/2)<br><br>⇨ 2 950<br>91 49 515 08 |

| Pos. | Item | Quantity | Description | Bezeichnung |
|---|---|---|---|---|
| 2 | 50 26 573 08 | 1 | AIR DRYER<br>⇨ 5 026 573 08 50 26 573 08 | LUFTTROCKNER |
| 3 | 50 26 616 08 | 1 | SILENCER | GERAEUSCHDAEMPFER |
| 4 | 51 05 005 08 | 1 | TEFLON HOSE DN16 750 CR6-FREI | TEFLONSCHLAUCH |
| 6 | 50 29 871 08 | 1 | AIR TANK DIN 74281 4,5L 15,5BAR ST RAL 9 | LUFTBEHAELTER |
| 7 | 77 42 113 08 | 1 | TIGTENING STRAP 206/206/30 ST | SPANNBAND |
| 8 | 51 07 543 08 | 2 | NOZZLE 0,4 | DUESE |
| 9 | 50 26 577 08 | 1 | AIR TANK EN 286-2 20L 15.5BAR ALMG2.7 R | LUFTBEHAELTER |
| 10 | 77 42 105 08 | 2 | TIGTENING STRAP 240-280/260/30 ST | SPANNBAND |
| 12 | 11 69 387 5 | 10 | HEX NUT ISO 4032 M8 8 480H SPF | SECHSKANTMUTTER |
| 17 | 51 05 010 08 | 1 | HOSE DN16 500 | SCHLAUCH |
| 18 | 60 20 022 08 | 36 | CLAMP-HALF DIN 3015-1 18 AL | KLEMMHAELFTE |
| 19 | 60 20 180 08 | 18 | CARRIER RAIL NUT DIN 3015-1 L TM M6 W1 | TRAGSCHIENENMUTTER |
| 20 | 10 87 558 8 | 18 | SOCKET HEAD SCREW ISO 4762 M6X25 8.8 | ZYLINDERSCHRAUBE |
| 21 | 11 65 176 7 | 8 | HEX SCREW ISO 4017 M8X20 8.8 480H SPF | SECHSKANTSCHRAUBE |
| 22 | 42 18 009 08 | 16 | WASHER ISO 7093-1 8 200HV A2C | SCHEIBE |
| 24 | 40 97 041 08 | 2 | BUTTON HEAD SCREW ISO 7380-2 M8X20 | HALBRUNDKOPFSCHRAUBE |
| 26 | 40 70 038 08 | 3 | HEX SCREW DIN 961 M12X1,5X25 10.9 A3C | SECHSKANTSCHRAUBE |
| 27 | 11 49 188 9 | 3 | WASHER ISO 7093-1 10 300HV FLZN SPF | SCHEIBE |
| 30 | 50 29 401 08 | 3 | HOLLOW SCREW DIN 74305 22-1-M22X1,5 4 | HOHLSCHRAUBE |
| 31 | 50 29 325 08 | 3 | COMPRESSION RING DR/R22X27 | DRUCKRING |
| 32 | 50 29 329 08 | 3 | O-RING 20,3X2,4 NBR70 | O-RING |
| 34 | 97 06 941 08 | 2 | FLANGE JOINT 20X0 | VERSCHRAUBUNG |
| 35 | 50 26 664 08 | 1 | COMPRESSED AIR VESSEL 1L 10BAR | DRUCKLUFTBEHAELTER |
| 99 | 96 36 804 08 | 1 | MECHANICAL AUXILIARIES | MECH.BEFESTIGUNGSTEILE |
| (1) | 95 37 816 08 | 2 | PLATE 3X40X300 DC01 FE//ZN20//C | BLECH |
| (2) | 97 51 429 08 | 1 | PLATE 4X405X73 S315MC FE//ZN20//C | BLECH |
| (3) | 97 51 432 08 | 1 | PLATE 4X220X150 S315MC FE//ZN20//C | BLECH |
| 600 | 47 10 311 08 | 5 | FLANGE JOINT GE 18L M22X1,5 CR6-FREI | VERSCHRAUBUNG |
| 601 | 47 66 078 08 | 1 | FLANGE JOINT XGE18-LM-ED M26X1,5 A3P | VERSCHRAUBUNG |
| 602 | 24 71 083 02 | 3 | FLANGE JOINT EW 18L M26X1,5 CR6-FREI | VERSCHRAUBUNG |
| 603 | 47 10 397 08 | 1 | FLANGE JOINT ISO 8434-1 GE 10L M12X1,5 | VERSCHRAUBUNG |
| 604 | 47 56 009 08 | 2 | TEST CONNECTION A3P | PRUEFANSCHLUSS |
| 605 | 47 10 398 08 | 2 | FLANGE JOINT XGE10-LM-ED M22X1,5 A3P | VERSCHRAUBUNG |
| 606 | 74 03 569 | 1 | FLANGE JOINT EW 10L M16X1,5 CR6-FREI | VERSCHRAUBUNG |
| 607 | 47 77 043 08 | 1 | STOP PLUG VSTI M12X1,5 A3P | STOPFEN |

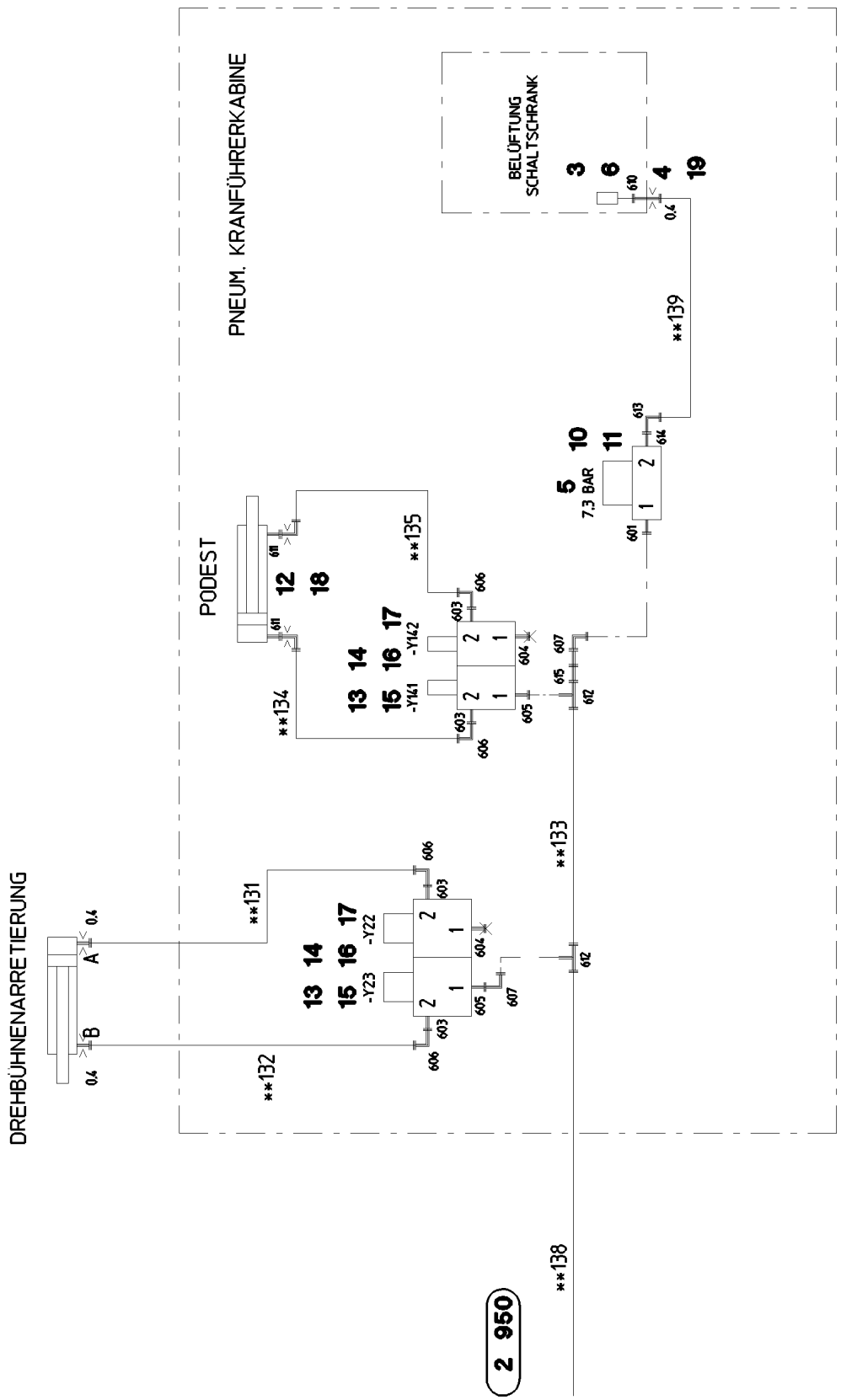
PNEUM. KRANFÜHRERKABINE
BELÜFTUNG
SCHALTSCHRANK
3
6
4
19
610
0.4
**139
10
11
5
7.3 BAR
613
614
601
2
1
PODEST
12
18
611
**135
606
603
604
605
607
615
612
17
-Y142
14
16
13
15
-Y141
**134
**133
**131
-Y22
-Y23
**132
DREHBÜHNENARRETIERUNG
A
B
**138
2 950

| Pos. | Item | Quantity | Description | Bezeichnung |
|---|---|---|---|---|
| 3 | 55 20 237 08 | 1 | EXHAUST SILENCER | SCHALLDAEMPFER |
| 4 | 51 07 543 08 | 1 | NOZZLE 0,4 | DUESE |
| 5 | 50 26 628 08 | 1 | OVERFLOW VALVE | UEBERSTROEMVENTIL |
| 6 | 92 12 641 08 | 1 | PIPE COMPL. 6X1X55 | ROHR KPL. |
| 10 | 50 29 329 08 | 2 | O-RING 20,3X2,4 NBR70 | O-RING |
| 11 | 50 29 325 08 | 2 | COMPRESSION RING DR/R22X27 | DRUCKRING |
| 12 | 95 67 891 08 | 2 | CONNECTING LUG | VERBINDUNGSSTUTZEN |
| 13 | 50 26 596 08 | 4 | SOLENOID VALVE 12.5BAR | MAGNETVENTIL |
| (998) | 10 87 707 3 | 1 | REPAIR KIT SOLENOID VALVE | RS MAGNETVENTIL |
| 14 | 46 00 183 | 4 | HEX SCREW ISO 4014 M8X110 8.8 A2C | SECHSKANTSCHRAUBE |
| 15 | 11 69 387 5 | 4 | HEX NUT ISO 4032 M8 8 480H SPF | SECHSKANTMUTTER |
| 16 | 50 26 088 08 | 2 | SEALING RING | DICHTRING |
| 17 | 94 73 392 08 | 2 | ANGLE 3X95X40 DC01 FE//ZN20//C | WINKEL |
| 18 | 51 07 544 08 | 2 | NOZZLE 0,6 MS | DUESE |
| 19 | 94 55 691 08 | 1 | SCREW-ON CONNECTION X0 | EINSCHRAUBSTUTZEN |
| 601 | 47 10 398 08 | 1 | FLANGE JOINT XGE10-LM-ED M22X1,5 A3P | VERSCHRAUBUNG |
| 603 | 47 10 302 08 | 4 | FLANGE JOINT XGE6-SM-ED A3P | VERSCHRAUBUNG |
| 604 | 47 77 043 08 | 2 | STOP PLUG VSTI M12X1,5 A3P | STOPFEN |
| 605 | 47 10 397 08 | 2 | FLANGE JOINT ISO 8434-1 GE 10L M12X1,5 | VERSCHRAUBUNG |
| 606 | 47 25 315 08 | 4 | FLANGE JOINT EW 6S M14X1,5 CR6-FREI | VERSCHRAUBUNG |
| 607 | 74 03 569 | 2 | FLANGE JOINT EW 10L M16X1,5 CR6-FREI | VERSCHRAUBUNG |
| 610 | 47 09 003 08 | 1 | PRESSURE GAUGE CONNECTION MAS 6-L | MANOMETERANSCHLUSS |
| 611 | 47 10 300 08 | 2 | FLANGE JOINT XGE6-LR-ED A3P | VERSCHRAUBUNG |
| 612 | 48 24 303 14 | 2 | FLANGE JOINT ISO 8434 ET 10L M16X1,5 C | VERSCHRAUBUNG |
| 613 | 24 70 217 02 | 1 | FLANGE JOINT EW 6L CR6-FREI | VERSCHRAUBUNG |
| 614 | 50 29 461 08 | 1 | FLANGE JOINT GA6-LM22X1,5 A3P | VERSCHRAUBUNG |
| 615 | 47 00 101 08 | 1 | FLANGE JOINT SNV10-L CFX | VERSCHRAUBUNG |

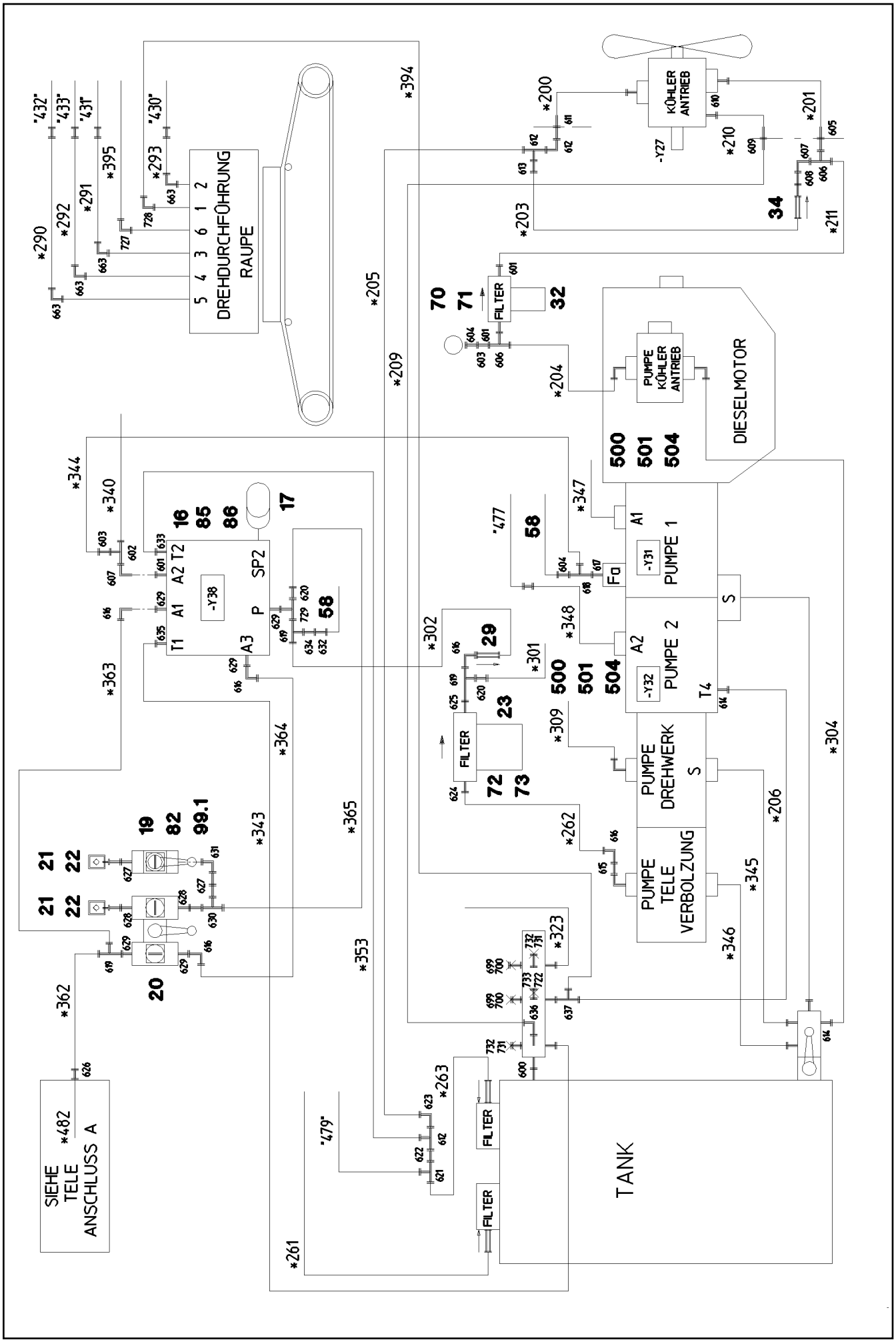
DREHDURCHFÜHRUNG RAUPE
KÜHLER ANTRIEB
-Y27
FILTER
PUMPE KÜHLER ANTRIEB
DIESELMOTOR
PUMPE 1
PUMPE 2
-Y31
-Y32
-Y38
PUMPE DREHWERK
PUMPE TELE VERBOLZUNG
SIEHE TELE ANSCHLUSS A
TANK

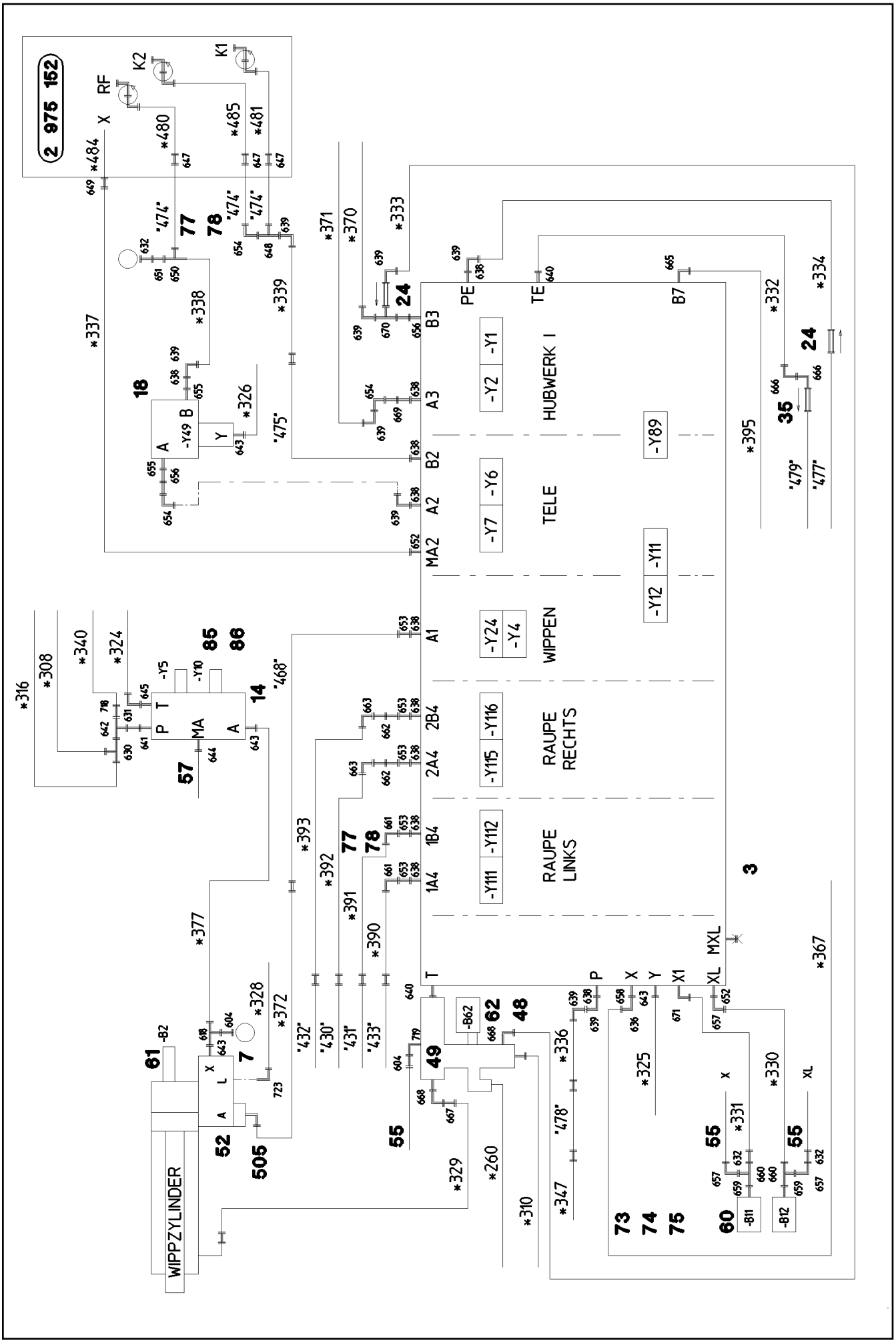
2 975 152
K1
K2
RF
X
HUBWERK I
TELE
WIPPEN
RAUPE RECHTS
RAUPE LINKS
WIPPZYLINDER
-Y1
-Y2
-Y6
-Y7
-Y89
-Y11
-Y12
-Y24
-Y4
-Y115
-Y116
-Y111
-Y112
-Y149
-Y5
-Y10
-B2
-B62
-B811
-B812
PE
TE
B7
B3
A3
B2
A2
MA2
A1
2B4
2A4
1B4
1A4
MXL
XL
X1
Y
P
T
A
B
MA
L

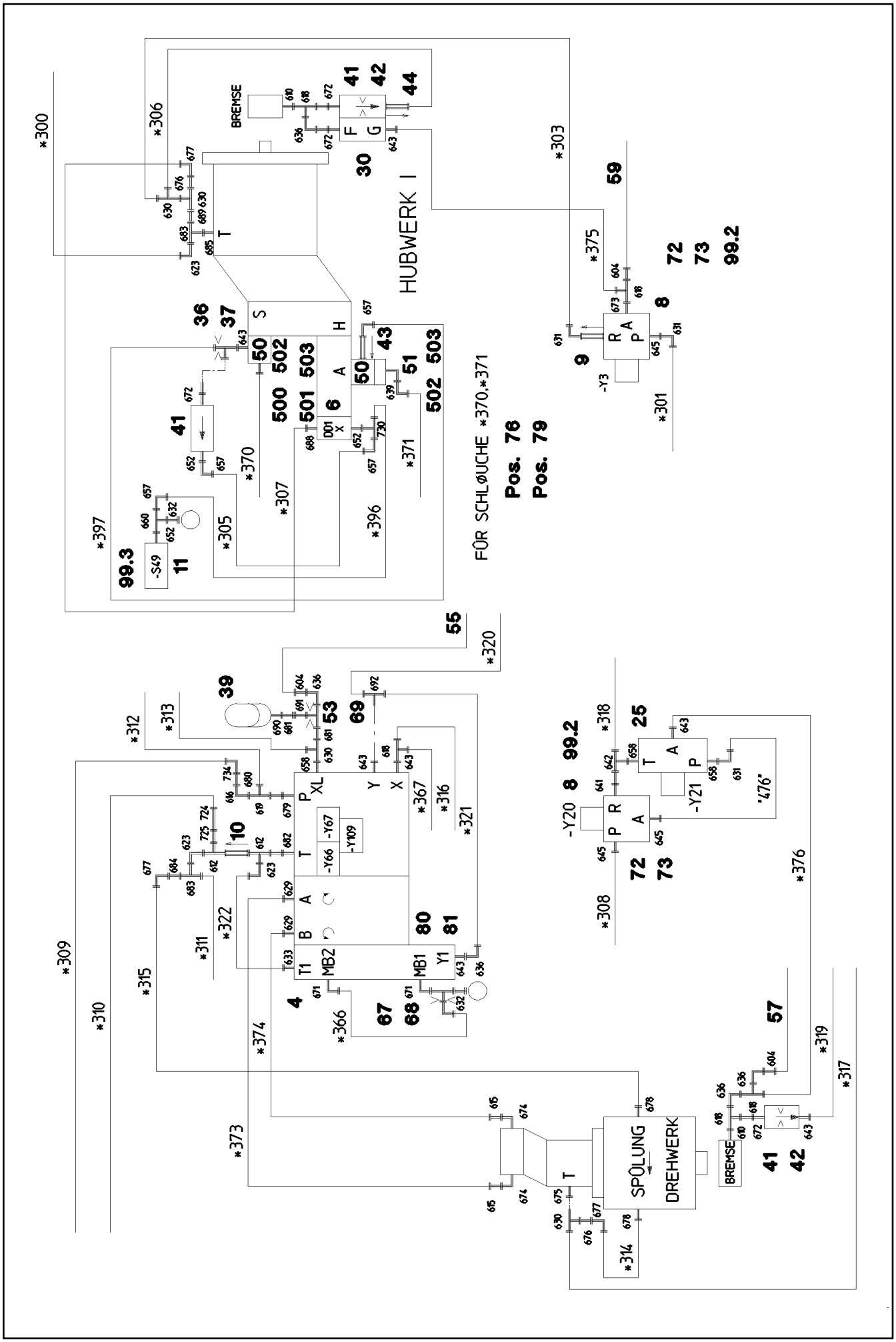
HUBWERK I
BREMSE
FÜR SCHLØUCHE *370,*371
Pos. 76
Pos. 79
SPÜLUNG
DREHWERK
BREMSE
-S49
-Y3
-Y20
-Y21
-Y66
-Y67
-Y109
MB2
MB1
DD1
'476'

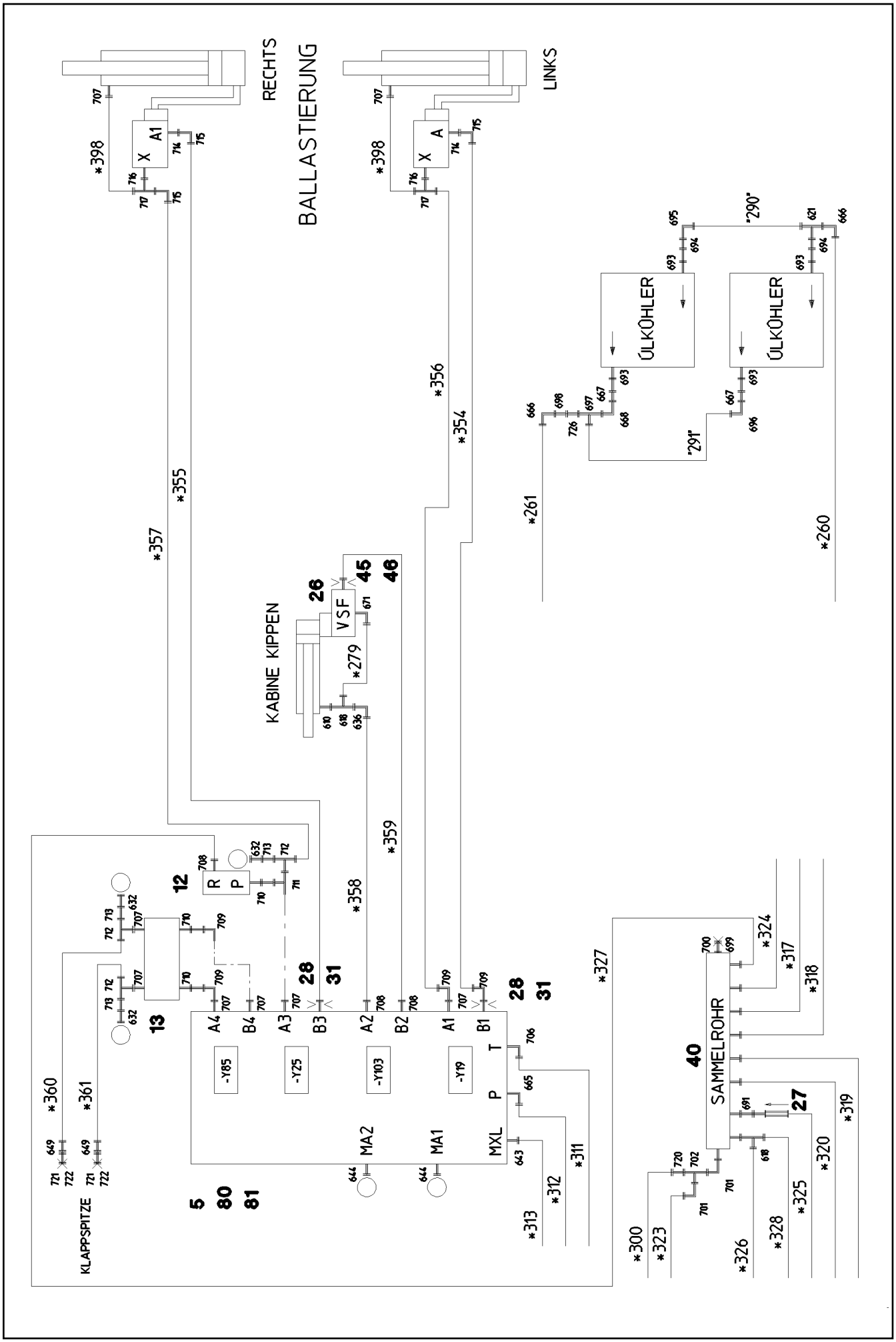
BALLASTIERUNG
RECHTS
LINKS
KABINE KIPPEN
KLAPPSPITZE
ÚLKÚHLER
ÚLKÚHLER
SAMMELROHR
VSF
-Y85
-Y25
-Y103
-Y19
MA2
MA1
MXL
A4
B4
A3
B3
A2
B2
A1
B1
T
P
R
P
X
A1
X
A
*398
*398
*355
*357
*356
*354
*261
*260
*279
*358
*359
*360
*361
*327
*324
*317
*318
*319
*320
*325
*328
*326
*300
*323
*313
*312
*311
"290"
"291"
5
80
81
12
13
26
28
31
28
31
45
46
40
27

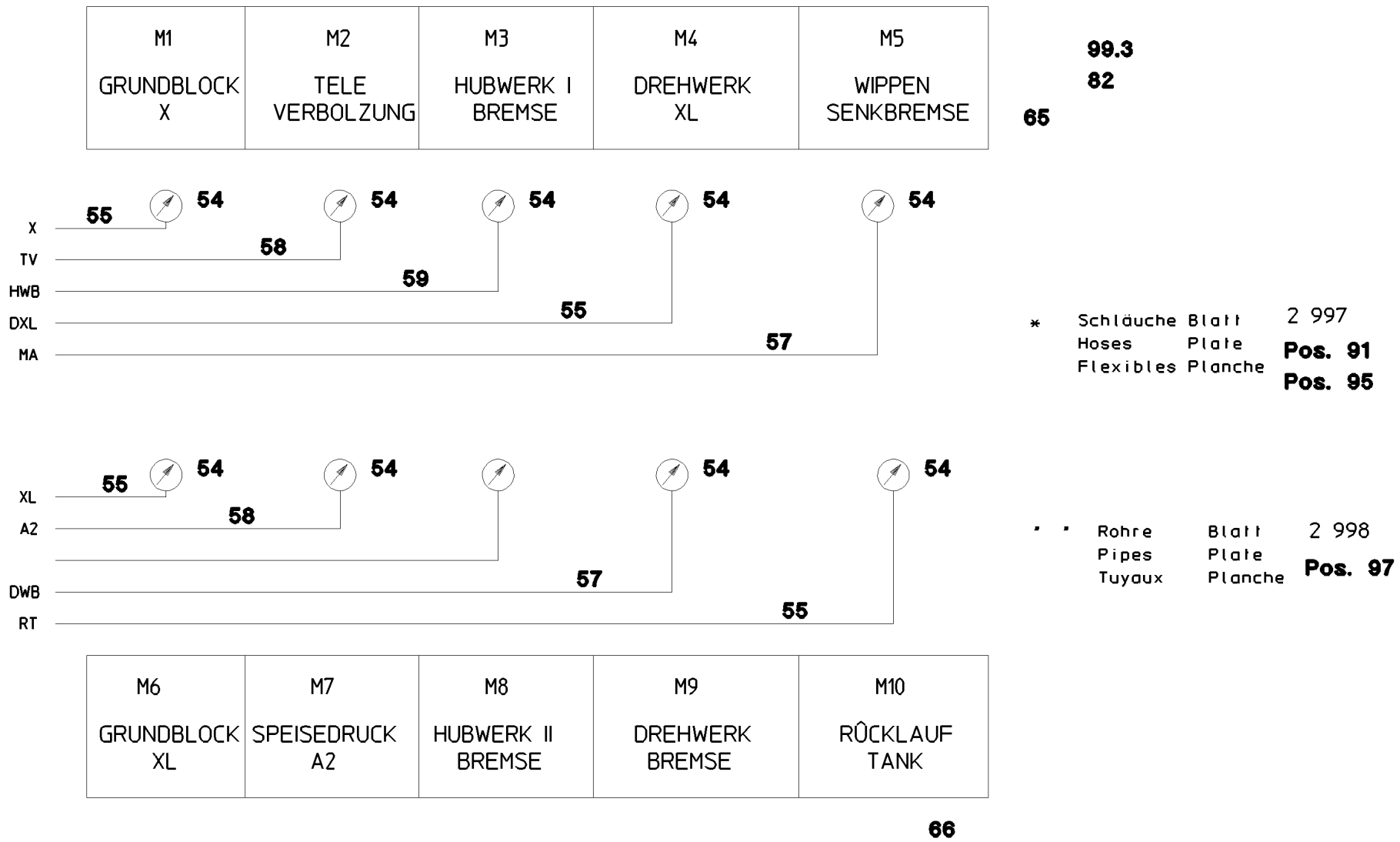
M1
GRUNDBLOCK
X
M2
TELE
VERBOLZUNG
M3
HUBWERK I
BREMSE
M4
DREHWERK
XL
M5
WIPPEN
SENKBREMSE
99.3
82
65
54
55
58
59
57
X
TV
HWB
DXL
MA
XL
A2
DWB
RT
M6
GRUNDBLOCK
XL
M7
SPEISEDRUCK
A2
M8
HUBWERK II
BREMSE
M9
DREHWERK
BREMSE
M10
RÛCKLAUF
TANK
66
* Schläuche Blatt 2 997
Hoses Plate Pos. 91
Flexibles Planche Pos. 95
* * Rohre Blatt 2 998
Pipes Plate Pos. 97
Tuyaux Planche

| Pos. | Item | Quantity | Description | Bezeichnung |
|---|---|---|---|---|
| 3 | 10 28 524 3 | 1 | CONTROL BLOCK SPF<br>➪ X10285243 10 28 524 3 | STEUERBLOCK |
| 4 | 10 10 109 3 | 1 | SLEWING GEAR VALVE SPF<br>➪ X10101093 10 10 109 3 | DREHWERKSVENTIL |
| 5 | 51 13 078 08 | 1 | CONTROL PLATE<br>➪ 5 113 078 08 51 13 078 08 | STEUERLEISTE |
| 6 | 10 28 584 5 | 1 | LOWERING BRAKE VALVE 420BAR 400L/MI | SENKBREMSVENTIL |
| (1) | 10 34 659 9 | 1 | STRAINER FILTER | SIEBFILTER |
| (999) | 10 80 076 6 | 1 | DS LOWERING BRAKE VALVE | DS SENKBREMSVENTIL |
| 7 | 51 13 199 08 | 1 | LOWERING BRAKE VALVE SPF<br>➪ 5 113 199 08 51 13 199 08 | SENKBREMSVENTIL |
| 8 | 51 14 444 08 | 2 | DIRECTIONAL CONTROL VALVE 3/2 350BA<br>➪ 5 114 444 08 51 14 444 08 | WEGEVENTIL |
| 9 | 51 14 606 08 | 1 | NON-RETURN VALVE | RUECKSCHLAGVENTIL |
| 10 | 51 14 439 08 | 1 | NON-RETURN VALVE 160BAR | RUECKSCHLAGVENTIL |
| 11 | 51 06 769 08 | 1 | PRESSURE SWITCH 10-100/400 BAR | DRUCKSCHALTER |
| 12 | 51 14 177 08 | 1 | PRESSURE LIMITING VALVE pmax=700BAR<br>➪ 5 114 177 08 51 14 177 08 | DRUCKBEGRENZUNGSVENTIL |
| 13 | 51 14 502 08 | 1 | PRESSURE LIMITING VALVE pmax=350BAR | DRUCKBEGRENZUNGSVENTIL |
| (23) | 71 01 040 08 | 2 | SEALING RING DIN 7603 A 18X22X1,5 CU | DICHTRING |
| 14 | 51 14 869 08 | 1 | CONTROL PLATE 60BAR<br>➪ 5 114 869 08 51 14 869 08 | STEUERLEISTE |
| 15 | 51 14 469 08 | 1 | NON-RETURN VALVE 160BAR FE//ZN12//C | RUECKSCHLAGVENTIL |
| 16 | 10 33 367 2 | 1 | CONTROL BLOCK 120BAR NG12 SPF<br>➪ X10333672 10 33 367 2 | STEUERBLOCK |
| 17 | 51 06 446 08 | 1 | DIAPHRAGM ACCUMULATOR 0,7L 25BAR | MEMBRANSPEICHER |
| 18 | 10 43 033 1 | 1 | DIRECTIONAL SEAT VALVE 350BAR SPF<br>➪ X10430331 10 43 033 1 | WEGESITZVENTIL |
| 19 | 51 06 976 08 | 1 | BALL VALVE BKH12-L-10 A3C<br>➪ 5 106 976 08 51 06 976 08 | KUGELHAHN |
| 20 | 10 33 368 6 | 1 | BALL VALVE COMBINATION DN13-G1/2 A3C | KUGELHAHNKOMBINATION |
| (7) | 50 29 332 08 | 2 | O-RING 10X2,2 NBR70 | O-RING |
| (8) | 72 64 184 08 | 4 | O-RING 22X2 NBR90 | O-RING |
| 21 | 51 15 058 08 | 2 | COUPLING SLEEVE B2 12-L | KUPPLUNGSMUFFE |
| (1) | 57 10 825 08 | 1 | SHEET GASKET 7,6X15,8X1 VITON | DICHTSCHEIBE |
| (2) | 57 10 826 08 | 1 | O-RING 17X2 FPM70 | O-RING |
| (3) | 57 10 827 08 | 1 | O-RING 22X1,5 FPM70 | O-RING |
| (4) | 57 10 828 08 | 1 | SUPPORTING RING 17,5X20,9X1 PTFE | STUETZRING |
| 22 | 10 46 691 4 | 2 | HEX CAP NUT RD32X3 SPF | VERSCHLUSSMUTTER |
| 23 | 51 06 708 08 | 1 | LINE FILTER<br>➪ 5 106 708 08 51 06 708 08 | LEITUNGSFILTER |
| 24 | 51 14 917 08 | 2 | NON-RETURN VALVE 250BAR A3C | RUECKSCHLAGVENTIL |
| 25 | 51 13 066 08 | 1 | CONTROL BLOCK<br>➪ 5 113 066 08 51 13 066 08 | STEUERBLOCK |
| 26 | 10 21 831 0 | 1 | LOAD HOLDING VALVE 280BAR 10L/MIN SP<br>➪ X10218310 10 21 831 0 | LASTHALTEVENTIL |
| 27 | 51 04 124 08 | 1 | NON-RETURN VALVE 400BAR CF | RUECKSCHLAGVENTIL |
| 28 | 95 59 195 08 | 2 | FLANGE JOINT | VERSCHRAUBUNG |
| 29 | 51 04 120 08 | 1 | NON-RETURN VALVE | RUECKSCHLAGVENTIL |
| 30 | 51 14 972 08 | 1 | FLOW REGULATING CHECK VALVE | DROSSELRUECKSCHLAGVENTI |
| 31 | 51 10 626 08 | 2 | NOZZLE D 2,0 M10X10 ST | DUESE |
| 32 | 51 06 681 08 | 1 | PRESSURE FILTER<br>➪ 5 106 681 08 51 06 681 08 | DRUCKFILTER |
| 34 | 51 04 135 08 | 1 | NON-RETURN VALVE 250BAR | RUECKSCHLAGVENTIL |
| 35 | 51 14 586 08 | 1 | NON-RETURN VALVE 100BAR | RUECKSCHLAGVENTIL |
| 36 | 97 37 938 08 | 1 | CONNECTING LUG | VERBINDUNGSSTUTZEN |
| 37 | 10 10 109 2 | 1 | NOZZLE 1,3 MS SPF | DUESE |
| 39 | 51 06 451 08 | 1 | DIAPHRAGM ACCUMULATOR 0,075L 40BAR | MEMBRANSPEICHER |
| 40 | 92 78 922 08 | 1 | COLLECTING PIPE | SAMMELROHR |
| 41 | 51 06 711 08 | 3 | FILTER CARTRIDGE 0,005m³/min 25µm | FILTERPATRONE |

| Pos. | Item | Quantity | Description | Bezeichnung |
|---|---|---|---|---|
| 42 | 51 10 627 08 | 2 | NOZZLE 0,5 MS | DUESE |
| 43 | 51 14 324 08 | 1 | NON-RETURN VALVE 400BAR | RUECKSCHLAGVENTIL |
| 44 | 51 13 118 08 | 1 | NON-RETURN VALVE RHV 10-LR | RUECKSCHLAGVENTIL |
| 45 | 95 59 195 08 | 1 | FLANGE JOINT | VERSCHRAUBUNG |
| 46 | 51 10 629 08 | 1 | NOZZLE 0,5 MS | DUESE |
| 48 | 71 01 030 08 | 1 | SEALING RING DIN 7603 A 14X20X1,5 CU | DICHTRING |
| 49 | 10 03 310 9 | 1 | COLLECTING PIPE VERZ SPF | SAMMELROHR |
| 50 | 51 15 192 08 | 2 | SAE INTERMEDIATE FLANGE 1 1/4" A3C SP | SAE-ZWISCHENFLANSCH |
| 51 | 47 49 067 08 | 1 | SAE FLANGE CONNECTION WFS 38S 1 1/4 | SAE-FLANSCHVERBINDUNG |
| 52 | 47 49 069 08 | 1 | SAE FLANGE CONNECTION WFS64/30-S A3 | SAE-FLANSCHVERBINDUNG |
| (1) | 51 05 870 08 | 1 | O-RING ARP 568 32,92X3,53 NBR90 | O-RING |
| 53 | 51 10 622 08 | 1 | NOZZLE DIN 913 D=0,6 M10X10 MS | DUESE |
| 54 | 47 56 033 08 | 9 | MEASURING COUPLING SPF | MESSKUPPLUNG |
| 55 | 51 05 692 08 | 4 | HOSE DN2X630 | SCHLAUCH |
| 57 | 47 09 018 08 | 2 | MEASURING HOSE DN2 1000 | MESSSCHLAUCH |
| 58 | 51 05 013 08 | 2 | HOSE 3200 | MINIMESS-SCHLAUCH |
| 59 | 47 09 017 08 | 1 | MEASURING HOSE DN2 4000 | MESSSCHLAUCH |
| 60 | 96 24 299 08 | 1 | PRESSURE TRANSDUCER LOAD SENSI | DRUCKGEBER LOAD SENSING |
| (1) | 10 81 373 8 | 2 | PRESSURE SENSOR 0-400/400 BAR LSB PL: | DRUCKAUFNEHMER |
| 61 | 96 24 300 08 | 1 | PRESSURE TRANSDUCER LUFFING CY | DRUCKGEBER WIPPZYLINDER |
| (1) | 10 81 618 5 | 1 | PRESSURE SENSOR 0-400/400 BAR LSB PL: | DRUCKAUFNEHMER |
| 62 | 96 20 863 08 | 1 | TEMPER. SENSOR HYDRAULIC OIL | TEMPERATURGEBER HYDRAUL |
| (1) | 69 11 831 08 | 1 | TEMPERATURE SENSOR -30/+130°C SPF | TEMPERATURGEBER |
| 65 | 97 24 954 08 | 1 | SIGN FOLIE | SCHILD |
| 66 | 97 24 953 08 | 1 | SIGN FOLIE | SCHILD |
| 67 | 97 13 426 08 | 1 | CONNECTING PIECE REMACHINING ELSD | STUTZEN NACHARBEIT |
| 68 | 51 07 544 08 | 1 | NOZZLE 0,6 MS | DUESE |
| 69 | 95 36 006 08 | 1 | CONNECTING LUG EL 10LX51 | VERBINDUNGSSTUTZEN |
| 70 | 40 00 417 | 4 | HEX SCREW ISO 4017 M5X12 8.8 A2C | SECHSKANTSCHRAUBE |
| 71 | 42 18 006 08 | 4 | WASHER DIN 9021 5,3 140HV A2C | SCHEIBE |
| 72 | 40 65 099 | 8 | HEX SCREW ISO 4017 M6X16 8.8 A2C | SECHSKANTSCHRAUBE |
| 73 | 10 87 564 8 | 10 | WASHER ISO 7093-1 6 200HV 480H SPF | SCHEIBE |
| 74 | 41 19 004 08 | 2 | HEX NUT DIN 985 M6 8 A2C | SECHSKANTMUTTER |
| 75 | 40 42 059 08 | 2 | SOCKET HEAD SCREW ISO 4762 M6X120 8. | ZYLINDERSCHRAUBE |
| 76 | 40 42 056 08 | 4 | SOCKET HEAD SCREW DIN 912 M6X90 8.8 | ZYLINDERSCHRAUBE |
| 77 | 40 02 418 | 14 | SOCKET HEAD SCREW ISO 4762 M6X65 8.8 | ZYLINDERSCHRAUBE |
| 78 | 50 05 219 | 10 | LID PLATE DIN 3015-1 L-DP 5 W1-ZN | DECKPLATTE |
| 79 | 95 40 160 08 | 2 | PLATE 3X85X30 DC01 FE//ZNNI8//CN//T0 | BLECH |
| 80 | 11 65 176 7 | 6 | HEX SCREW ISO 4017 M8X20 8.8 480H SPF | SECHSKANTSCHRAUBE |
| 81 | 10 28 980 3 | 6 | WASHER ISO 7089 8 300HV 480H SPF | SCHEIBE |
| 82 | 10 41 285 4 | 4 | BUTTON HEAD SCREW AEHNL.ISO 7380-2 | HALBRUNDKOPFSCHRAUBE |
| 85 | 11 65 163 2 | 7 | HEX SCREW ISO 4017 M10X20 8.8 FLZN SP | SECHSKANTSCHRAUBE |
| 86 | 11 49 188 9 | 7 | WASHER ISO 7093-1 10 300HV FLZN SPF | SCHEIBE |
| 91 | 96 43 131 08 | 1 | HOSE LINES ADDITIONAL PARTS DB<br>⇨ 2 970 061 96 43 131 08 | SCHLAUCHLEITUNGEN ZUSATZ |
| 95 | 96 43 157 08 | 1 | HOSE LINES OIL COOLER ELEKTR.<br>⇨ 2 970 103 96 43 157 08 | SCHLAUCHLEITUNGEN OELKU |
| 97 | 96 39 180 08 | 1 | PIPELINES OIL COOLER ELEKTR. | ROHRLEITUNGEN OELKUEHLE |
| (290) | 96 35 336 08 | 1 | PIPE COMPL. 42X3X440 | ROHR KPL. |
| (291) | 96 35 337 08 | 1 | PIPE COMPL. 35X2X473 | ROHR KPL. |
| 99 | 96 22 207 08 | 1 | MECHANICAL AUXILIARIES<br>⇨ 2 970 092 96 22 207 08 | MECH.BEFESTIGUNGSTEILE |
| 500 | 51 05 866 08 | 6 | FLANGE HALF A3P | FLANSCHHAELFTE |
| 501 | 51 05 867 08 | 3 | O-RING ARP 568 37,69X3,53 NBR90 | O-RING |
| 502 | 40 42 314 08 | 4 | SOCKET HEAD SCREW DIN 912 M14X70 8.8 | ZYLINDERSCHRAUBE |
| 503 | 40 61 108 | 4 | HEX SCREW ISO 4014 M14X70 8.8 A3C | SECHSKANTSCHRAUBE |
| 504 | 40 65 145 01 | 8 | HEX SCREW ISO 4017 M14X45 8.8 A3C | SECHSKANTSCHRAUBE |
| 505 | 10 87 556 5 | 4 | SOCKET HEAD SCREW DIN 912 M12X40 8.8 | ZYLINDERSCHRAUBE |
| 600 | 47 19 036 08 | 1 | FLANGE JOINT EGESD42-LR-WD A3P | VERSCHRAUBUNG |
| 601 | 47 10 310 08 | 3 | FLANGE JOINT XGE15-LR-ED A3P | VERSCHRAUBUNG |

| Pos. | Item | Quantity | Description | Bezeichnung |
|---|---|---|---|---|
| 602 | 47 23 004 14 | 1 | FLANGE JOINT EL 15L CR6-FREE | VERSCHRAUBUNG |
| 603 | 47 54 301 08 | 2 | FLANGE JOINT RED 15/10L A3C | VERSCHRAUBUNG |
| 604 | 51 06 290 08 | 7 | GAUGE CONNECTION DKO 10L | MESSSTUTZEN |
| 605 | 47 40 305 08 | 1 | FLANGE JOINT XSV15-L A3P | VERSCHRAUBUNG |
| 606 | 47 24 304 08 | 2 | FLANGE JOINT ET 15L M22X1,5 CR6-FREE | VERSCHRAUBUNG |
| 607 | 76 15 379 | 2 | FLANGE JOINT EW 15L CR6-FREE | VERSCHRAUBUNG |
| 608 | 47 00 112 08 | 1 | FLANGE JOINT GZ 15L A3P | VERSCHRAUBUNG |
| 609 | 47 40 303 08 | 1 | FLANGE JOINT XSV10-L A3P | VERSCHRAUBUNG |
| 610 | 47 10 397 08 | 4 | FLANGE JOINT ISO 8434-1 GE 10L M12X1,5 | VERSCHRAUBUNG |
| 611 | 47 40 307 08 | 1 | FLANGE JOINT SV 18L CR6-FREI | VERSCHRAUBUNG |
| 612 | 24 71 285 02 | 5 | FLANGE JOINT EL 18L CR6-FREI | VERSCHRAUBUNG |
| 613 | 47 54 356 08 | 1 | FLANGE JOINT RED 18/15L A3C | VERSCHRAUBUNG |
| 614 | 47 10 315 08 | 2 | FLANGE JOINT XGE28-LM-ED A3P | VERSCHRAUBUNG |
| 615 | 47 54 321 08 | 3 | FLANGE JOINT REDSDN20/16-S A3P | VERSCHRAUBUNG |
| 616 | 76 17 460 | 6 | FLANGE JOINT EW 16S CR6-FREI | VERSCHRAUBUNG |
| 617 | 47 10 305 08 | 1 | FLANGE JOINT XGE10-LM-ED A3P | VERSCHRAUBUNG |
| 618 | 47 23 302 08 | 9 | FLANGE JOINT EL 10L CR6-FREI | VERSCHRAUBUNG |
| 619 | 74 07 098 | 4 | FLANGE JOINT EL 16S CR6-FREI | VERSCHRAUBUNG |
| 620 | 47 54 333 08 | 2 | FLANGE JOINT REDSD16/12-S A3P | VERSCHRAUBUNG |
| 621 | 47 04 314 08 | 2 | FLANGE JOINT T 42L A3C | VERSCHRAUBUNG |
| 622 | 47 54 317 08 | 1 | FLANGE JOINT RED 42/18L CR6-FREI | VERSCHRAUBUNG |
| 623 | 24 71 083 02 | 4 | FLANGE JOINT EW 18L M26X1,5 CR6-FREI | VERSCHRAUBUNG |
| 624 | 47 10 331 08 | 1 | FLANGE JOINT XGE16-SR-ED3/4" A3P | VERSCHRAUBUNG |
| 625 | 47 19 019 08 | 1 | FLANGE JOINT EGE 16S G3/4 A3P | VERSCHRAUBUNG |
| 626 | 47 00 327 08 | 1 | FLANGE JOINT XG16-S A3P | VERSCHRAUBUNG |
| 627 | 47 00 113 08 | 2 | FLANGE JOINT SNV12-L A3P | VERSCHRAUBUNG |
| 628 | 47 19 038 08 | 2 | FLANGE JOINT EGE 12L G1/2 A3P | VERSCHRAUBUNG |
| 629 | 47 10 332 08 | 7 | FLANGE JOINT XGE16-SR-ED A3P | VERSCHRAUBUNG |
| 630 | 24 71 286 02 | 6 | FLANGE JOINT EL 12L M18X1,5 CR6-FREI | VERSCHRAUBUNG |
| 631 | 24 71 177 02 | 5 | FLANGE JOINT EW 12L M18X1,5 CR6-FREI | VERSCHRAUBUNG |
| 632 | 47 56 015 08 | 9 | TEST POINT FITTING BMA3 6S | MESSANSCHLUSS |
| 633 | 47 10 312 08 | 2 | FLANGE JOINT XGE18-LR-ED A3P | VERSCHRAUBUNG |
| 634 | 47 54 331 08 | 1 | FLANGE JOINT REDSD16/6-S CFX | VERSCHRAUBUNG |
| 635 | 47 10 375 08 | 1 | FLANGE JOINT XGE18-LR-ED3/4" A3P | VERSCHRAUBUNG |
| (1) | 72 64 079 08 | 1 | O-RING 16X2 NBR70 | O-RING |
| 636 | 74 03 569 | 8 | FLANGE JOINT EW 10L M16X1,5 CR6-FREI | VERSCHRAUBUNG |
| 637 | 74 07 120 | 1 | FLANGE JOINT EL 28L CR6-FREI | VERSCHRAUBUNG |
| 638 | 47 10 344 08 | 11 | FLANGE JOINT XGEV38-SR-WD A3P | VERSCHRAUBUNG |
| 639 | 47 25 318 08 | 10 | FLANGE JOINT EWSD38-S A3P | VERSCHRAUBUNG |
| 640 | 47 10 347 08 | 2 | FLANGE JOINT XGE42-LR-ED A3P | VERSCHRAUBUNG |
| 641 | 47 19 012 08 | 2 | FLANGE JOINT EGESD12-LR-WD A3P | VERSCHRAUBUNG |
| 642 | 24 71 056 02 | 2 | FLANGE JOINT ET 12L M18X1,5 CR6-FREI | VERSCHRAUBUNG |
| 643 | 73 62 091 | 12 | FLANGE JOINT ISO 8434-1 GE 10L G1/4A C | VERSCHRAUBUNG |
| 644 | 47 56 026 08 | 3 | TEST POINT FITTING EMA3 G1/4 CR6-FREI | MESSANSCHLUSS |
| 645 | 47 10 308 08 | 4 | FLANGE JOINT XGE12-LR-ED A3P | VERSCHRAUBUNG |
| 647 | 47 00 331 08 | 3 | FLANGE JOINT XG38-S A3P | VERSCHRAUBUNG |
| 648 | 47 23 319 08 | 1 | FLANGE JOINT ELSD38-S A3P | VERSCHRAUBUNG |
| 649 | 47 00 324 08 | 3 | FLANGE JOINT XG10-S A3P | VERSCHRAUBUNG |
| 650 | 47 04 330 08 | 1 | FLANGE JOINT XT38-S A3P | VERSCHRAUBUNG |
| 651 | 47 54 081 08 | 1 | FLANGE JOINT REDSD38/6-S A3P | VERSCHRAUBUNG |
| 652 | 47 10 321 08 | 5 | FLANGE JOINT XGE6-SR-ED A3P | VERSCHRAUBUNG |
| 653 | 47 54 353 08 | 5 | FLANGE JOINT REDSDN38/30-S CFX | VERSCHRAUBUNG |
| 654 | 47 02 334 08 | 3 | FLANGE JOINT XW38-S A3P | VERSCHRAUBUNG |
| 655 | 47 55 033 08 | 2 | ADAPTOR RI11/4-EDX11/2 A3P | ADAPTER |
| 656 | 47 19 040 08 | 2 | FLANGE JOINT EGESD38-SR-WD A3P | VERSCHRAUBUNG |
| 657 | 47 25 315 08 | 8 | FLANGE JOINT EW 6S M14X1,5 CR6-FREI | VERSCHRAUBUNG |
| 658 | 47 10 353 08 | 4 | FLANGE JOINT XGE12-LR-ED1/4" A3P | VERSCHRAUBUNG |
| 659 | 47 07 002 08 | 2 | FLANGE JOINT XGAI6-SR A3P | VERSCHRAUBUNG |
| 660 | 47 23 312 08 | 3 | FLANGE JOINT ELSD6-S A3P | VERSCHRAUBUNG |
| 661 | 48 25 316 14 | 2 | FLANGE JOINT ISO 8434 EW 30S CR6-FREI | VERSCHRAUBUNG |

| Pos. | Item | Quantity | Description | Bezeichnung |
|---|---|---|---|---|
| 662 | 47 00 111 08 | 2 | FLANGE JOINT SNV30-S A3P | VERSCHRAUBUNG |
| 663 | 47 02 330 08 | 6 | FLANGE JOINT XW30-S A3P | VERSCHRAUBUNG |
| 665 | 47 32 312 08 | 2 | FLANGE JOINT RSWS16-SR-WD A3P | VERSCHRAUBUNG |
| 666 | 48 25 308 14 | 4 | FLANGE JOINT ISO 8434 EW 42L CR6-FREI | VERSCHRAUBUNG |
| 667 | 47 54 304 08 | 3 | FLANGE JOINT REDSD35/28-L CFX | VERSCHRAUBUNG |
| 668 | 48 25 309 14 | 3 | FLANGE JOINT ISO 8434 EW 35L M45X2 CR6 | VERSCHRAUBUNG |
| 669 | 47 00 107 08 | 1 | FLANGE JOINT SNV38-S A3P | VERSCHRAUBUNG |
| 670 | 48 24 318 14 | 1 | FLANGE JOINT ISO 8434 ET 38S CR6-FREI | VERSCHRAUBUNG |
| 671 | 47 32 306 08 | 4 | FLANGE JOINT RSWS6-SR-WD A3P | VERSCHRAUBUNG |
| 672 | 47 19 011 08 | 4 | FLANGE JOINT EGESD10-LR-WD A3P | VERSCHRAUBUNG |
| 673 | 47 10 396 08 | 1 | FLANGE JOINT XGE10-LR-ED3/8" A3P | VERSCHRAUBUNG |
| 674 | 47 66 110 08 | 2 | FLANGE JOINT RSWS20-SM-WD A3P | VERSCHRAUBUNG |
| 675 | 47 10 307 08 | 1 | FLANGE JOINT ISO 8434-1 GE 12L M16X1,5 | VERSCHRAUBUNG |
| (1) | 50 12 437 08 | 1 | O-RING ARP 568 10,52X1,83 NBR90 | O-RING |
| 676 | 47 54 302 08 | 2 | FLANGE JOINT REDSDN12/6-L A3P | VERSCHRAUBUNG |
| 677 | 24 70 217 02 | 3 | FLANGE JOINT EW 6L CR6-FREI | VERSCHRAUBUNG |
| 678 | 47 10 301 08 | 2 | FLANGE JOINT XGE6-LM-ED A3P | VERSCHRAUBUNG |
| 679 | 47 19 006 08 | 1 | FLANGE JOINT EGESD16-SR-WD A3P | VERSCHRAUBUNG |
| 680 | 47 50 336 08 | 1 | FLANGE JOINT XGR20/16-S A3P | VERSCHRAUBUNG |
| 681 | 47 54 314 08 | 2 | FLANGE JOINT REDSD12/10-L A3P | VERSCHRAUBUNG |
| 682 | 47 19 013 08 | 1 | FLANGE JOINT EGESD18-LR-WD A3P | VERSCHRAUBUNG |
| 683 | 24 71 084 02 | 2 | FLANGE JOINT ET 18L CR6-FREI | VERSCHRAUBUNG |
| 684 | 47 54 307 08 | 1 | FLANGE JOINT REDSD18/6-L A3P | VERSCHRAUBUNG |
| 685 | 47 10 311 08 | 1 | FLANGE JOINT GE 18L M22X1,5 CR6-FREI | VERSCHRAUBUNG |
| 688 | 47 10 300 08 | 1 | FLANGE JOINT XGE6-LR-ED A3P | VERSCHRAUBUNG |
| 689 | 47 54 363 08 | 1 | FLANGE JOINT REDSD18/12-L A3P | VERSCHRAUBUNG |
| 690 | 47 07 013 08 | 1 | FLANGE JOINT XGAI12-LR A3P | VERSCHRAUBUNG |
| 691 | 47 00 101 08 | 2 | FLANGE JOINT SNV10-L CFX | VERSCHRAUBUNG |
| 692 | 48 24 303 14 | 1 | FLANGE JOINT ISO 8434 ET 10L M16X1,5 C | VERSCHRAUBUNG |
| 693 | 47 19 015 08 | 4 | FLANGE JOINT EGESD28-LR-WD A3P | VERSCHRAUBUNG |
| 694 | 47 54 313 08 | 2 | FLANGE JOINT REDSDN42/28-L CR6-FREI | VERSCHRAUBUNG |
| 695 | 47 02 314 08 | 1 | FLANGE JOINT XW42-L A3P | VERSCHRAUBUNG |
| 696 | 47 02 311 08 | 1 | FLANGE JOINT W 35L A3C | VERSCHRAUBUNG |
| 697 | 48 23 308 14 | 1 | FLANGE JOINT ISO 8434 EL 35L CR6-FREI | VERSCHRAUBUNG |
| 698 | 47 00 309 08 | 1 | FLANGE JOINT XG42-L A3P | VERSCHRAUBUNG |
| 699 | 47 77 001 08 | 3 | BLANKING PLUG ISO 8434-1 PL 18L CR6-F | VERSCHLUSSSTOPFEN |
| 700 | 47 74 024 08 | 3 | BOX NUT DIN 3870 AL18 A3P | UEBERWURFMUTTER |
| 701 | 47 25 306 08 | 2 | FLANGE JOINT EWSD22-L A3P | VERSCHRAUBUNG |
| 702 | 24 71 386 02 | 1 | FLANGE JOINT EL 22L CR6-FREI | VERSCHRAUBUNG |
| 706 | 47 66 106 08 | 1 | FLANGE JOINT RSWS18-LR-WD A3P | VERSCHRAUBUNG |
| 707 | 47 10 326 08 | 8 | FLANGE JOINT GE 12S G1/2A CR6-FREI | VERSCHRAUBUNG |
| 708 | 47 10 348 08 | 3 | FLANGE JOINT XGE12-LR-ED1/2" A3P | VERSCHRAUBUNG |
| 709 | 76 17 354 | 4 | FLANGE JOINT EW 12S CR6-FREI | VERSCHRAUBUNG |
| 710 | 47 19 018 08 | 3 | FLANGE JOINT EGE 12S G1/2A CR6-FREI | VERSCHRAUBUNG |
| 711 | 76 17 461 | 1 | FLANGE JOINT EL 12S CR6-FREI | VERSCHRAUBUNG |
| 712 | 48 24 314 14 | 3 | FLANGE JOINT ISO 8434 ET 12S CR6-FREI | VERSCHRAUBUNG |
| 713 | 47 54 329 08 | 3 | FLANGE JOINT REDSD12/6-S CFX | VERSCHRAUBUNG |
| 714 | 47 10 328 08 | 2 | FLANGE JOINT ISO 8434-1 GE 10S G3/8A C | VERSCHRAUBUNG |
| 715 | 76 17 268 | 3 | FLANGE JOINT EW 10S CR6-FREI | VERSCHRAUBUNG |
| 716 | 47 10 045 14 | 2 | FLANGE JOINT ISO 8434 GE 10S G1/4 CR6-F | VERSCHRAUBUNG |
| 717 | 48 24 313 14 | 2 | FLANGE JOINT ISO 8434 ET 10S CR6-FREI | VERSCHRAUBUNG |
| 718 | 47 50 317 08 | 1 | FLANGE JOINT XGR15/12-L A3P | VERSCHRAUBUNG |
| 719 | 47 66 102 08 | 1 | FLANGE JOINT RSWS10-LM-WD A3P | VERSCHRAUBUNG |
| 720 | 47 54 360 08 | 1 | FLANGE JOINT REDSD22/18-L A3P | VERSCHRAUBUNG |
| 721 | 47 74 003 08 | 2 | BOX NUT DIN 3870 AS10 A3P | UEBERWURFMUTTER |
| 722 | 47 77 004 08 | 3 | BLANKING PLUG ISO 8434-1 PL 10L/S CR6-F | VERSCHLUSSSTOPFEN |
| 723 | 47 32 305 08 | 1 | FLANGE JOINT RSWS10-LR-WD A3P | VERSCHRAUBUNG |
| 724 | 47 50 307 08 | 1 | FLANGE JOINT GR 22/18L A3C | VERSCHRAUBUNG |
| 725 | 47 00 104 08 | 2 | FLANGE JOINT GZ 18L CR6-FREI | VERSCHRAUBUNG |
| 726 | 47 54 367 08 | 1 | FLANGE JOINT REDSD42/35-L A3P | VERSCHRAUBUNG |

| Pos. | Item | Quantity | Description | Bezeichnung |
|---|---|---|---|---|
| 727 | 47 02 327 08 | 1 | FLANGE JOINT W 20S CR6-FREI | VERSCHRAUBUNG |
| 728 | 47 02 308 08 | 1 | FLANGE JOINT W 28L A3C | VERSCHRAUBUNG |
| 729 | 48 24 315 14 | 1 | FLANGE JOINT ISO 8434 ET 16S CR6-FREI | VERSCHRAUBUNG |
| 730 | 47 24 312 08 | 1 | FLANGE JOINT ET 6S CR6-FREI | VERSCHRAUBUNG |
| 731 | 47 77 005 08 | 2 | BLANKING PLUG ISO 8434-1 PL 12L/S CR6-F | VERSCHLUSSSTOPFEN |
| 732 | 47 74 016 08 | 2 | BOX NUT DIN 3870 AL12 A3C | UEBERWURFMUTTER |
| 733 | 47 74 015 08 | 1 | BOX NUT DIN 3870 AL10 A3P | UEBERWURFMUTTER |
| 734 | 74 07 108 | 1 | FLANGE JOINT EW 20S CR6-FREI | VERSCHRAUBUNG |

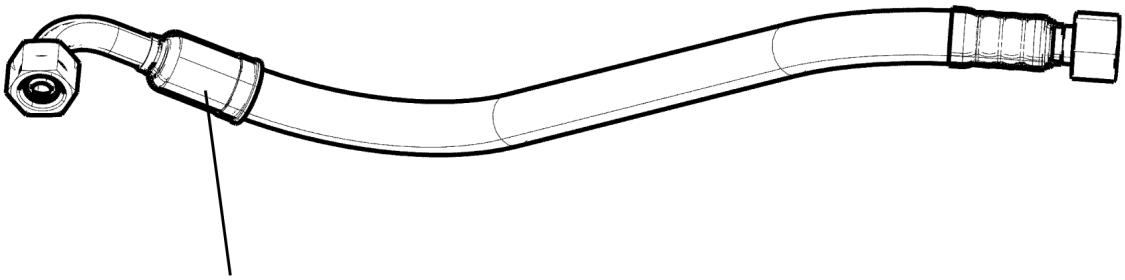

Schlauchnummer
Hose number
Numéro de flexible
Número de flexible
Номера шланга

Die Schlauchnummern auf den Schläuchen entsprechen den Positionen in der Schlauchliste.

The hose numbers from the hoses are in accordance with the items in the hose list.

Les numéros indiqués sur les flexibles correspondent aux repères de la nomenclature des flexibles.

Los números indicados en los flexibles corresponden a las posiciones de la lista de flexibles.

Нанесенные на шлангах номера соответствуют позициям в перечне.

| Pos. | Item | Quantity | Description | Bezeichnung |
|---|---|---|---|---|
| 1 | 60 27 601 08 | 3 | NAME PLATE 25,4X101,6 | BEZEICHNUNGSSCHILD |
| 2 | 60 27 602 08 | 2 | NAME PLATE 25,4X165,1 | BEZEICHNUNGSSCHILD |
| 3 | 60 27 603 08 | 3 | NAME PLATE 25,4X165,1 | BEZEICHNUNGSSCHILD |
| 370 | 96 35 999 08 | 1 | HOSE CPL. GH506 31X1920 | SCHLAUCH KPL. |
| 371 | 96 42 866 08 | 1 | HOSE CPL. F6000 31X1770 | SCHLAUCH KPL. |
| 372 | 96 37 009 08 | 1 | HOSE CPL. GH506 31X1850 | SCHLAUCH KPL. |
| 373 | 92 28 852 08 | 1 | HOSE CPL. 2755 12X600 | SCHLAUCH KPL. |
| 374 | 92 37 099 08 | 1 | HOSE CPL. 2755 12X480 | SCHLAUCH KPL. |
| 375 | 96 36 979 08 | 1 | HOSE CPL. 2SN 8X360 | SCHLAUCH KPL. |
| 376 | 92 06 102 08 | 1 | HOSE CPL. 2SN 8X960 | SCHLAUCH KPL. |
| 377 | 92 61 197 08 | 1 | HOSE CPL. 1SC 8X2300 | SCHLAUCH KPL. |

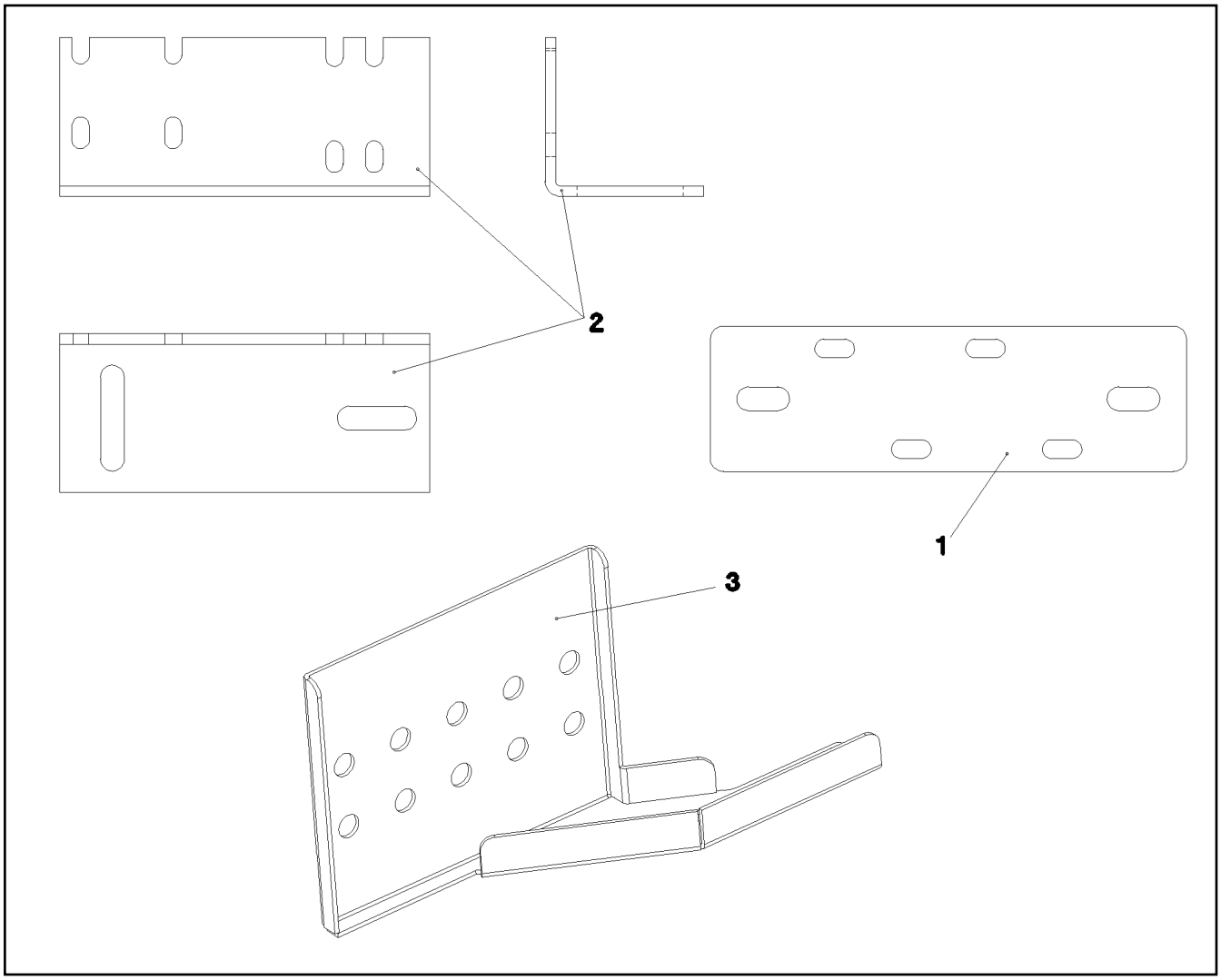


| Pos. | Item | Quantity | Description | Bezeichnung |
|---|---|---|---|---|
| 1 | 95 43 136 08 | 1 | PLATE 4X55X180 S315MC FE//ZNNI8//CN//T | BLECH |
| 2 | 95 36 490 08 | 1 | PLATE 4X140X113 S315MC FE//ZN20//C | BLECH |
| 3 | 97 23 093 08 | 1 | PLATE 3X387X299 DC01 FE//ZN20//C | BLECH |

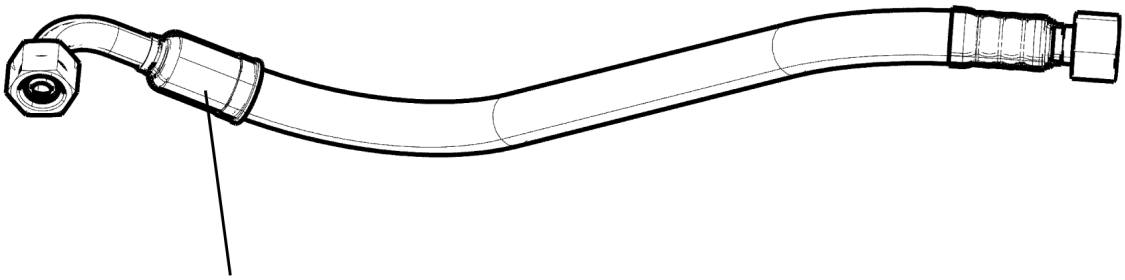

Schlauchnummer
Hose number
Numéro de flexible
Número de flexible
Номера шланга

Die Schlauchnummern auf den Schläuchen entsprechen den Positionen in der Schlauchliste.

The hose numbers from the hoses are in accordance with the items in the hose list.

Les numéros indiqués sur les flexibles correspondent aux repères de la nomenclature des flexibles.

Los números indicados en los flexibles corresponden a las posiciones de la lista de flexibles.

Нанесенные на шлангах номера соответствуют позициям в перечне.

| Pos. | Item | Quantity | Description | Bezeichnung |
|---|---|---|---|---|
| 1 | 60 27 601 08 | 1 | NAME PLATE 25,4X101,6 | BEZEICHNUNGSSCHILD |
| 2 | 60 27 603 08 | 6 | NAME PLATE 25,4X165,1 | BEZEICHNUNGSSCHILD |
| 260 | 96 60 513 08 | 1 | HOSE CPL. GH663 38X2200 | SCHLAUCH KPL. |
| 261 | 96 68 696 08 | 1 | HOSE CPL. GH663 38X1480 | SCHLAUCH KPL. |
| 262 | 92 76 316 08 | 1 | HOSE CPL. 2SN 12X380 | SCHLAUCH KPL. |
| 263 | 96 36 991 08 | 1 | HOSE CPL. GH663 38X470 | SCHLAUCH KPL. |

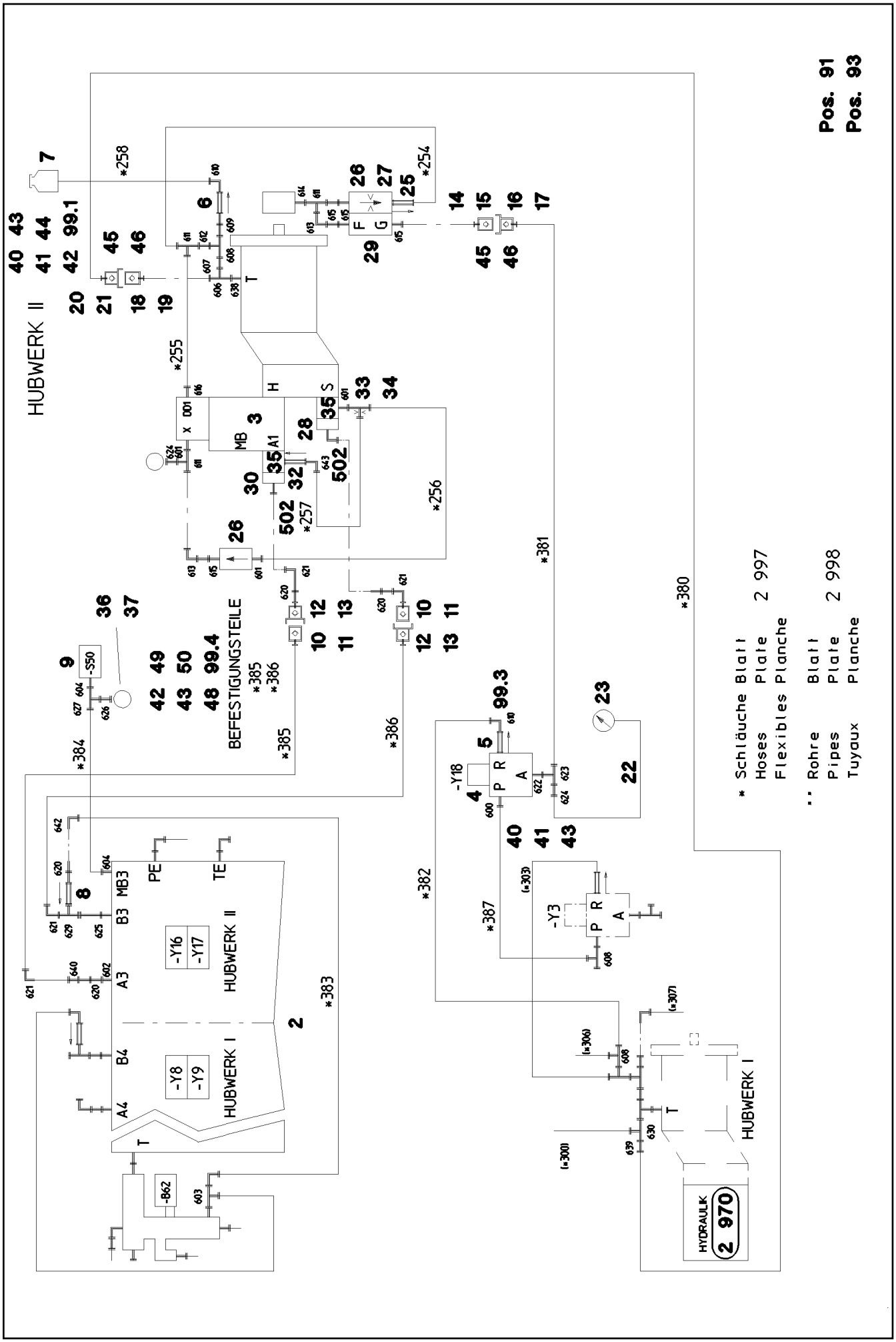
HUBWERK II
BEFESTIGUNGSTEILE
HUBWERK II
HUBWERK I
HUBWERK I
HYDRAULIK
2 970
* Schläuche Blatt 2 997
Hoses Plate
Flexibles Planche
** Rohre Blatt 2 998
Pipes Plate
Tuyaux Planche
Pos. 91
Pos. 93

| Pos. | Item | Quantity | Description | Bezeichnung |
|---|---|---|---|---|
| 2 | 10 29 147 4 | 1 | CONTROL BLOCK SPF<br>⇨ X10291474 10 29 147 4 | STEUERBLOCK |
| 3 | 10 29 358 6 | 1 | LOWERING BRAKE VALVE 420BAR SPF<br>⇨ X10293586 10 29 358 6 | SENKBREMSVENTIL |
| 4 | 51 14 444 08 | 1 | DIRECTIONAL CONTROL VALVE 3/2 350BA<br>⇨ 5 114 444 08 51 14 444 08 | WEGEVENTIL |
| 5 | 51 14 606 08 | 1 | NON-RETURN VALVE | RUECKSCHLAGVENTIL |
| 6 | 51 14 815 08 | 1 | NON-RETURN VALVE pmax10BAR | RUECKSCHLAGVENTIL |
| 7 | 50 28 073 08 | 1 | EQUALIZING RESERVOIR 0,2L POLYETHY | AUSGLEICHSBEHAELTER |
| (1) | 11 63 212 5 | 1 | CONTAINER SCREW JOINT | BEHAELTERVERSCHRAUBUNG |
| 8 | 51 14 917 08 | 1 | NON-RETURN VALVE 250BAR A3C | RUECKSCHLAGVENTIL |
| 9 | 51 06 769 08 | 1 | PRESSURE SWITCH 10-100/400 BAR | DRUCKSCHALTER |
| 10 | 51 15 122 08 | 2 | COUPLING SLEEVE B8 38-S | KUPPLUNGSMUFFE |
| 11 | 10 46 691 7 | 2 | HEX CAP NUT RD79X4 SPF | VERSCHLUSSMUTTER |
| 12 | 51 15 123 08 | 2 | COUPLING PLUG B8 38-S | KUPPLUNGSSTECKER |
| 13 | 10 46 691 3 | 2 | SCREW PLUG RD79X4 SPF | VERSCHLUSSSCHRAUBE |
| 14 | 51 15 084 08 | 1 | COUPLING SLEEVE B2 10-L | KUPPLUNGSMUFFE |
| 15 | 10 46 691 4 | 1 | HEX CAP NUT RD32X3 SPF | VERSCHLUSSMUTTER |
| 16 | 51 15 083 08 | 1 | COUPLING PLUG B2 10-L | KUPPLUNGSSTECKER |
| 17 | 10 46 691 0 | 1 | SCREW PLUG RD32X3 SPF | VERSCHLUSSSCHRAUBE |
| 18 | 51 15 005 08 | 1 | COUPLING SLEEVE B3 15-L | KUPPLUNGSMUFFE |
| 19 | 10 46 691 5 | 1 | HEX CAP NUT RD36X3 SPF | VERSCHLUSSMUTTER |
| 20 | 51 15 004 08 | 1 | COUPLING PLUG B3 15-L | KUPPLUNGSSTECKER |
| 21 | 10 46 691 1 | 1 | SCREW PLUG RD36X3 SPF | VERSCHLUSSSCHRAUBE |
| 22 | 51 05 013 08 | 1 | HOSE 3200 | MINIMESS-SCHLAUCH |
| 23 | 47 56 033 08 | 1 | MEASURING COUPLING SPF | MESSKUPPLUNG |
| 25 | 51 13 118 08 | 1 | NON-RETURN VALVE RHV 10-LR | RUECKSCHLAGVENTIL |
| 26 | 51 06 711 08 | 2 | FILTER CARTRIDGE 0,005m³/min 25µm | FILTERPATRONE |
| 27 | 51 10 627 08 | 1 | NOZZLE 0,5 MS | DUESE |
| 28 | 47 49 067 08 | 1 | SAE FLANGE CONNECTION WFS 38S 1 1/4 | SAE-FLANSCHVERBINDUNG |
| 29 | 51 14 972 08 | 1 | FLOW REGULATING CHECK VALVE | DROSSELRUECKSCHLAGVENTI |
| 30 | 51 07 024 08 | 1 | SAE FLANGE CONNECTION GFS65/38-PS | SAE-FLANSCHVERBINDUNG |
| (1) | 51 05 867 08 | 1 | O-RING ARP 568 37,69X3,53 NBR90 | O-RING |
| 32 | 51 14 324 08 | 1 | NON-RETURN VALVE 400BAR | RUECKSCHLAGVENTIL |
| 33 | 95 36 006 08 | 1 | CONNECTING LUG EL 10LX51 | VERBINDUNGSSTUTZEN |
| 34 | 10 10 109 2 | 1 | NOZZLE 1,3 MS SPF | DUESE |
| 35 | 51 15 192 08 | 2 | SAE INTERMEDIATE FLANGE 1 1/4" A3C SP | SAE-ZWISCHENFLANSCH |
| 36 | 40 65 023 08 | 2 | HEX SCREW ISO 4017 M5X16 8.8 A2C | SECHSKANTSCHRAUBE |
| 37 | 46 00 305 | 2 | WASHER ISO 7089 5 200HV A3C | SCHEIBE |
| 40 | 11 64 489 9 | 4 | HEX SCREW ISO 4017 M6X20 8.8 480H SPF | SECHSKANTSCHRAUBE |
| 41 | 10 87 564 8 | 4 | WASHER ISO 7093-1 6 200HV 480H SPF | SCHEIBE |
| 42 | 41 19 004 08 | 6 | HEX NUT DIN 985 M6 8 A2C | SECHSKANTMUTTER |
| 43 | 10 41 285 4 | 6 | BUTTON HEAD SCREW AEHNL.ISO 7380-2 | HALBRUNDKOPFSCHRAUBE |
| 44 | 10 87 202 2 | 1 | HOSE CLAMP DIN 3017-1 12-22/9 W3 | SCHLAUCHSCHELLE |
| 45 | 11 16 043 1 | 1.5 | ROPE 2 2,3KN EDELSTAHL | SEIL |
| 46 | 11 17 056 5 | 8 | FERRULE 2 CU | PRESSKLEMME |
| 48 | 60 20 095 08 | 16 | CLAMP-HALF AEHNL.DIN 3015 S 4 R 54 PP S | KLEMMHAELFTE |
| 49 | 95 40 160 08 | 1 | PLATE 3X85X30 DC01 FE//ZNNI8//CN//T0 | BLECH |
| 50 | 40 42 305 08 | 4 | SOCKET HEAD SCREW DIN 912 M6X145 8.8 | ZYLINDERSCHRAUBE |
| 91 | 96 43 144 08 | 1 | HOSE LINES HOISTING GEAR<br>⇨ 2 971 012 96 43 144 08 | SCHLAUCHLEITUNGEN HUBW |
| 99 | 96 46 240 08 | 1 | MECHANICAL AUXILIARIES | MECH.BEFESTIGUNGSTEILE |
| (1) | 95 37 609 08 | 1 | PLATE 3X45X120 DC01 FE//ZN20//C | BLECH |
| (3) | 95 36 490 08 | 1 | PLATE 4X140X113 S315MC FE//ZN20//C | BLECH |
| (4) | 97 68 223 08 | 1 | PLATE 4X324X189 S315MC FE//ZNNI8//CN//T | BLECH |
| 502 | 40 42 314 08 | 8 | SOCKET HEAD SCREW DIN 912 M14X70 8.8 | ZYLINDERSCHRAUBE |
| 600 | 47 10 308 08 | 1 | FLANGE JOINT XGE12-LR-ED A3P | VERSCHRAUBUNG |
| 601 | 73 62 091 | 3 | FLANGE JOINT ISO 8434-1 GE 10L G1/4A C | VERSCHRAUBUNG |
| 602 | 47 10 344 08 | 1 | FLANGE JOINT XGEV38-SR-WD A3P | VERSCHRAUBUNG |
| 603 | 48 23 308 14 | 1 | FLANGE JOINT ISO 8434 EL 35L CR6-FREI | VERSCHRAUBUNG |

| Pos. | Item | Quantity | Description | Bezeichnung |
|---|---|---|---|---|
| 604 | 47 10 321 08 | 2 | FLANGE JOINT XGE6-SR-ED A3P | VERSCHRAUBUNG |
| 606 | 47 23 004 14 | 1 | FLANGE JOINT EL 15L CR6-FREE | VERSCHRAUBUNG |
| 607 | 47 54 318 08 | 1 | FLANGE JOINT RED 15/12L CR6-FREI | VERSCHRAUBUNG |
| 608 | 24 71 286 02 | 3 | FLANGE JOINT EL 12L M18X1,5 CR6-FREI | VERSCHRAUBUNG |
| 609 | 47 00 113 08 | 1 | FLANGE JOINT SNV12-L A3P | VERSCHRAUBUNG |
| 610 | 24 71 177 02 | 2 | FLANGE JOINT EW 12L M18X1,5 CR6-FREI | VERSCHRAUBUNG |
| 611 | 47 23 302 08 | 3 | FLANGE JOINT EL 10L CR6-FREI | VERSCHRAUBUNG |
| 612 | 47 54 314 08 | 1 | FLANGE JOINT REDSD12/10-L A3P | VERSCHRAUBUNG |
| 613 | 74 03 569 | 2 | FLANGE JOINT EW 10L M16X1,5 CR6-FREI | VERSCHRAUBUNG |
| 614 | 47 10 397 08 | 1 | FLANGE JOINT ISO 8434-1 GE 10L M12X1,5 | VERSCHRAUBUNG |
| 615 | 47 19 011 08 | 4 | FLANGE JOINT EGESD10-LR-WD A3P | VERSCHRAUBUNG |
| 616 | 47 10 300 08 | 1 | FLANGE JOINT XGE6-LR-ED A3P | VERSCHRAUBUNG |
| 620 | 47 00 107 08 | 4 | FLANGE JOINT SNV38-S A3P | VERSCHRAUBUNG |
| 621 | 47 25 318 08 | 4 | FLANGE JOINT EWSD38-S A3P | VERSCHRAUBUNG |
| 622 | 47 10 396 08 | 1 | FLANGE JOINT XGE10-LR-ED3/8" A3P | VERSCHRAUBUNG |
| 623 | 48 24 303 14 | 1 | FLANGE JOINT ISO 8434 ET 10L M16X1,5 C | VERSCHRAUBUNG |
| 624 | 51 06 290 08 | 2 | GAUGE CONNECTION DKO 10L | MESSSTUTZEN |
| 625 | 47 19 040 08 | 1 | FLANGE JOINT EGESD38-SR-WD A3P | VERSCHRAUBUNG |
| 626 | 47 56 015 08 | 1 | TEST POINT FITTING BMA3 6S | MESSANSCHLUSS |
| 627 | 47 23 312 08 | 1 | FLANGE JOINT ELSD6-S A3P | VERSCHRAUBUNG |
| 629 | 48 24 318 14 | 1 | FLANGE JOINT ISO 8434 ET 38S CR6-FREI | VERSCHRAUBUNG |
| 630 | 24 71 285 02 | 1 | FLANGE JOINT EL 18L CR6-FREI | VERSCHRAUBUNG |
| 638 | 47 19 042 08 | 1 | FLANGE JOINT EGESD15-LM-WD A3P | VERSCHRAUBUNG |
| 639 | 47 54 356 08 | 1 | FLANGE JOINT RED 18/15L A3C | VERSCHRAUBUNG |
| 640 | 47 00 331 08 | 1 | FLANGE JOINT XG38-S A3P | VERSCHRAUBUNG |
| 642 | 47 02 334 08 | 1 | FLANGE JOINT XW38-S A3P | VERSCHRAUBUNG |
| 643 | 47 25 315 08 | 1 | FLANGE JOINT EW 6S M14X1,5 CR6-FREI | VERSCHRAUBUNG |

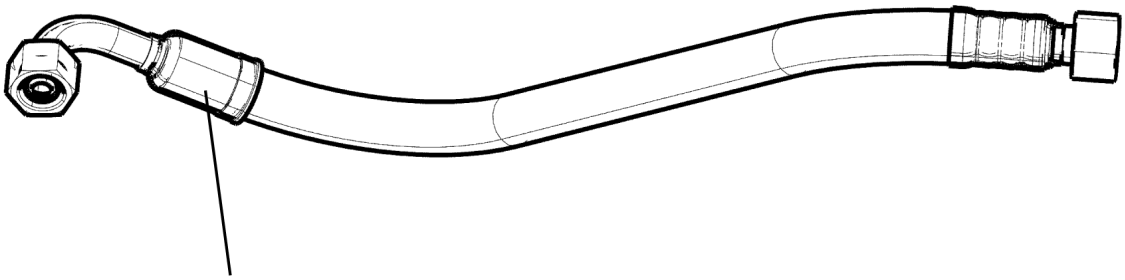

Schlauchnummer
Hose number
Numéro de flexible
Número de flexible
Номера шланга

Die Schlauchnummern auf den Schläuchen entsprechen den Positionen in der Schlauchliste.

The hose numbers from the hoses are in accordance with the items in the hose list.

Les numéros indiqués sur les flexibles correspondent aux repères de la nomenclature des flexibles.

Los números indicados en los flexibles corresponden a las posiciones de la lista de flexibles.

Нанесенные на шлангах номера соответствуют позициям в перечне.

| Pos. | Item | Quantity | Description | Bezeichnung |
|---|---|---|---|---|
| 1 | 60 27 601 08 | 10 | NAME PLATE 25,4X101,6 | BEZEICHNUNGSSCHILD |
| 2 | 60 27 603 08 | 3 | NAME PLATE 25,4X165,1 | BEZEICHNUNGSSCHILD |
| 254 | 92 63 787 08 | 1 | HOSE CPL. 1SC 8X360 | SCHLAUCH KPL. |
| 255 | 96 21 730 08 | 1 | HOSE CPL. 2TE 6X370 | SCHLAUCH KPL. |
| 256 | 92 66 576 08 | 1 | HOSE CPL. 2SN 8X350 | SCHLAUCH KPL. |
| 257 | 96 35 996 08 | 1 | HOSE CPL. 2SN 6X380 | SCHLAUCH KPL. |
| 258 | 96 33 352 08 | 1 | HOSE CPL. 2TE 10X430 | SCHLAUCH KPL. |
| 380 | 92 62 891 08 | 1 | HOSE CPL. 2TE 1,0M | SCHLAUCH KPL. |
| 381 | 92 88 756 08 | 1 | HOSE CPL. 2SN 8X1750 | SCHLAUCH KPL. |
| 382 | 92 88 722 08 | 1 | HOSE CPL. 2TE 10X620 | SCHLAUCH KPL. |
| 383 | 96 35 995 08 | 1 | HOSE CPL. 1SN 32X450 | SCHLAUCH KPL. |
| 384 | 92 09 786 08 | 1 | HOSE CPL. 2SN 6X1180 | SCHLAUCH KPL. |
| 385 | 96 42 864 08 | 1 | HOSE CPL. F6000 31X3180 | SCHLAUCH KPL. |
| 386 | 96 42 865 08 | 1 | HOSE CPL. GH506 31X3700 | SCHLAUCH KPL. |
| 387 | 92 92 213 08 | 1 | HOSE CPL. 2SN 10X900 | SCHLAUCH KPL. |

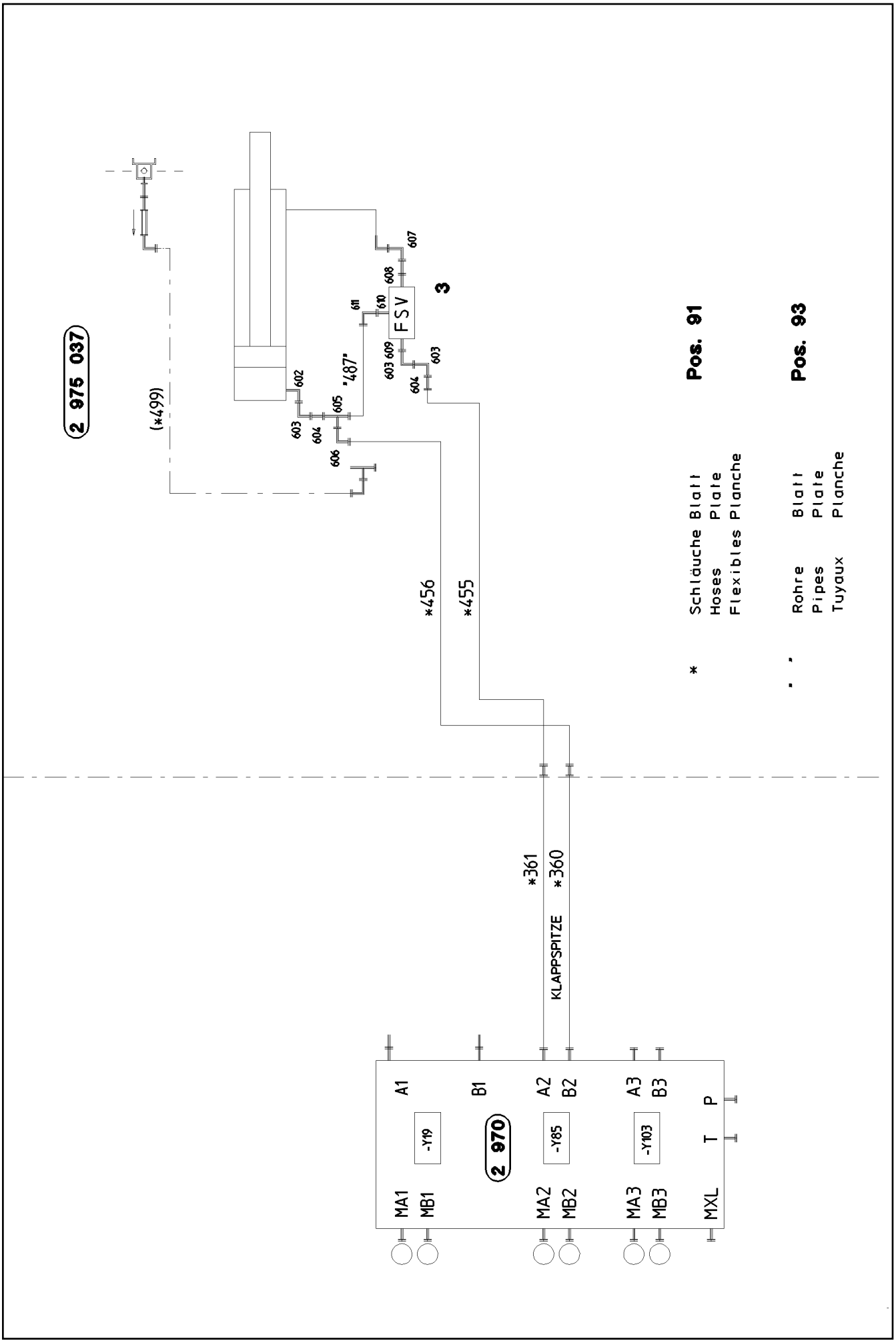
2 975 037
(*499)
602
603
604
605
606
"487"
611
610
FSV
603 609
604
603
608
607
3
*456
*455
*361
*360
KLAPPSPITZE
A1
B1
A2
B2
A3
B3
P
T
MA1
MB1
MA2
MB2
MA3
MB3
MXL
-Y19
2 970
-Y85
-Y103
Pos. 91
* Schläuche Blatt
Hoses Plate
Flexibles Planche
Pos. 93
Rohre Blatt
Pipes Plate
Tuyaux Planche

| Pos. | Item | Quantity | Description | Bezeichnung |
|---|---|---|---|---|
| 3 | 51 14 794 08 | 1 | LOAD HOLDING VALVE<br>⇨ 5 114 794 08 51 14 794 08 | LASTHALTEVENTIL |
| 91 | 96 20 364 08 | 1 | HOSE LINES FOLDING JIB | SCHLAUCHLEITUNGEN KLAPPS |
| (1) | 60 27 601 08 | 4 | NAME PLATE 25,4X101,6 | BEZEICHNUNGSSCHILD |
| (455) | 96 22 582 08 | 1 | HOSE CPL. 2SN 6X11900 | SCHLAUCH KPL. |
| (456) | 96 22 580 08 | 1 | HOSE CPL. 2SN 6X11750 | SCHLAUCH KPL. |
| 93 | 96 22 655 08 | 1 | PIPE COND. FOLDING SEAT | ROHRLEITUNGEN KLAPPSPITZ |
| (487) | 96 22 613 08 | 1 | PIPE COMPL. 6X1X210 | ROHR KPL. |
| 602 | 47 32 105 08 | 1 | FLANGE JOINT RSWS10-SM-WD A3P | VERSCHRAUBUNG |
| 603 | 76 17 268 | 3 | FLANGE JOINT EW 10S CR6-FREI | VERSCHRAUBUNG |
| 604 | 47 54 320 08 | 2 | FLANGE JOINT REDSDN10/6-S A3P | VERSCHRAUBUNG |
| 605 | 47 23 312 08 | 1 | FLANGE JOINT ELSD6-S A3P | VERSCHRAUBUNG |
| 606 | 47 25 315 08 | 1 | FLANGE JOINT EW 6S M14X1,5 CR6-FREI | VERSCHRAUBUNG |
| 607 | 76 17 354 | 1 | FLANGE JOINT EW 12S CR6-FREI | VERSCHRAUBUNG |
| 608 | 47 19 005 08 | 1 | FLANGE JOINT EGESD12-SR-WD A3P | VERSCHRAUBUNG |
| 609 | 47 10 328 08 | 1 | FLANGE JOINT ISO 8434-1 GE 10S G3/8A C | VERSCHRAUBUNG |
| 610 | 47 10 300 08 | 1 | FLANGE JOINT XGE6-LR-ED A3P | VERSCHRAUBUNG |
| 611 | 24 70 217 02 | 1 | FLANGE JOINT EW 6L CR6-FREI | VERSCHRAUBUNG |

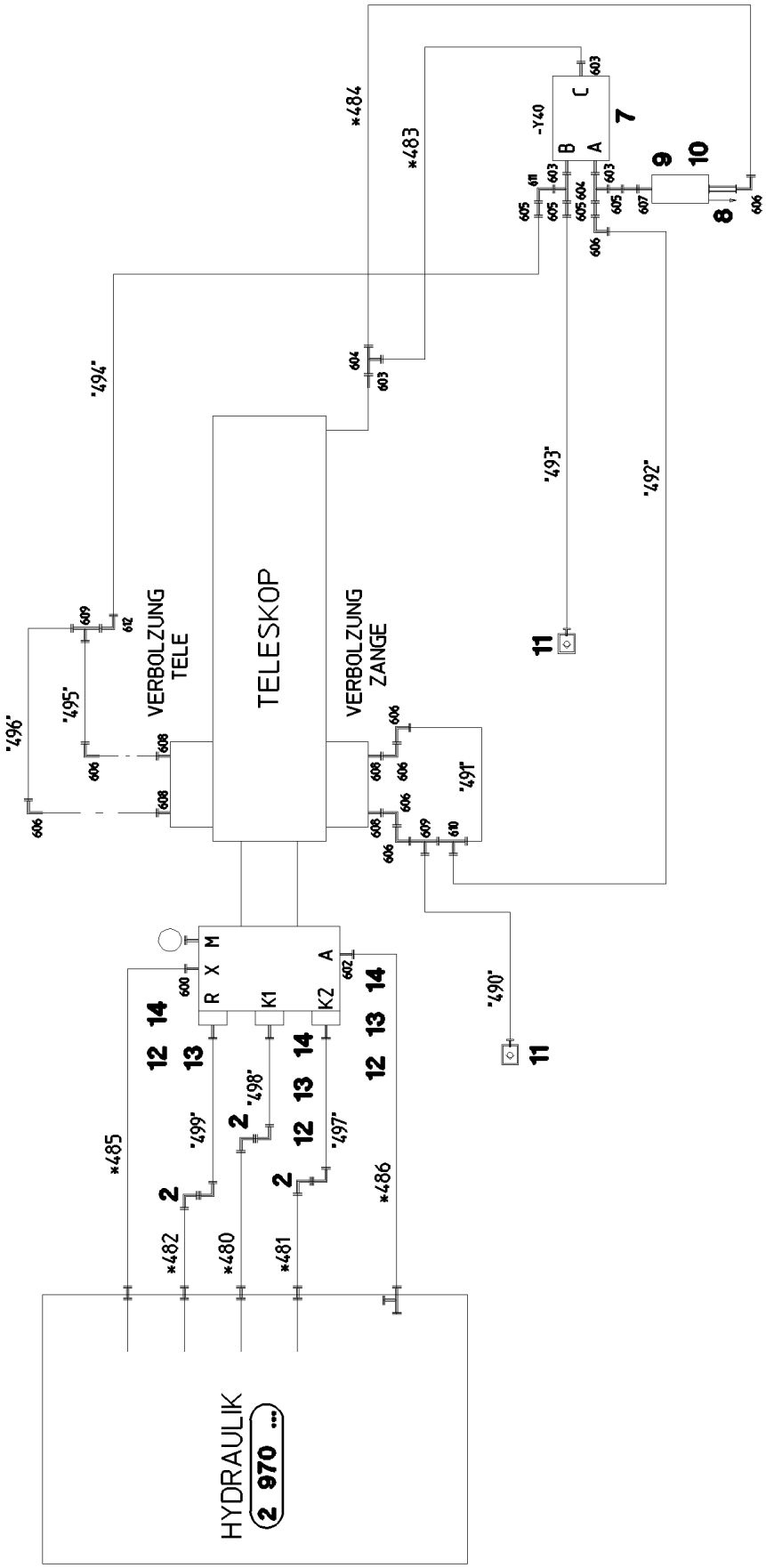


* Schläuche Blatt 2 997
Hoses Plate
Flexibles Planche

** Rohre Blatt 2 998
Pipes Plate
Tuyaux Planche

| Pos. | Item | Quantity | Description | Bezeichnung |
|---|---|---|---|---|
| 2 | 47 42 340 08 | 3 | SWIVEL SCREW JOINT DG105 38S CF | DREHVERSCHRAUBUNG |
| 7 | 51 14 936 08 | 1 | DIRECTIONAL CONTROL VALVE 3/2 320BA | WEGEVENTIL |
| (21) | 57 11 355 08 | 1 | MAGNET 24V | MAGNET |
| 8 | 51 14 937 08 | 1 | NON-RETURN VALVE 250BAR | RUECKSCHLAGVENTIL |
| 9 | 51 06 711 08 | 1 | FILTER CARTRIDGE 0,005m³/min 25µm | FILTERPATRONE |
| 10 | 51 10 627 08 | 1 | NOZZLE 0,5 MS | DUESE |
| 11 | 51 15 150 08 | 2 | COUPLING PLUG B2 10-L | KUPPLUNGSSTECKER |
| 12 | 51 15 178 08 | 3 | FLANGE STUB PIPE 38S | FLANSCHSTUTZEN |
| 13 | 40 42 151 01 | 12 | SOCKET HEAD SCREW ISO 4762 M14X40 8. | ZYLINDERSCHRAUBE |
| 14 | 51 05 867 08 | 3 | O-RING ARP 568 37,69X3,53 NBR90 | O-RING |
| 600 | 47 10 321 08 | 1 | FLANGE JOINT XGE6-SR-ED A3P | VERSCHRAUBUNG |
| 602 | 47 10 332 08 | 1 | FLANGE JOINT XGE16-SR-ED A3P | VERSCHRAUBUNG |
| 603 | 47 10 348 08 | 4 | FLANGE JOINT XGE12-LR-ED1/2" A3P | VERSCHRAUBUNG |
| 604 | 24 71 286 02 | 3 | FLANGE JOINT EL 12L M18X1,5 CR6-FREI | VERSCHRAUBUNG |
| 605 | 47 54 314 08 | 4 | FLANGE JOINT REDSD12/10-L A3P | VERSCHRAUBUNG |
| 606 | 74 03 569 | 8 | FLANGE JOINT EW 10L M16X1,5 CR6-FREI | VERSCHRAUBUNG |
| 607 | 47 19 011 08 | 1 | FLANGE JOINT EGESD10-LR-WD A3P | VERSCHRAUBUNG |
| 608 | 73 62 091 | 4 | FLANGE JOINT ISO 8434-1 GE 10L G1/4A C | VERSCHRAUBUNG |
| 609 | 47 23 302 08 | 2 | FLANGE JOINT EL 10L CR6-FREI | VERSCHRAUBUNG |
| 610 | 47 04 303 08 | 1 | FLANGE JOINT XT10-L A3P | VERSCHRAUBUNG |
| 611 | 24 71 177 02 | 1 | FLANGE JOINT EW 12L M18X1,5 CR6-FREI | VERSCHRAUBUNG |
| 612 | 47 02 303 08 | 1 | FLANGE JOINT XW10-L A3P | VERSCHRAUBUNG |

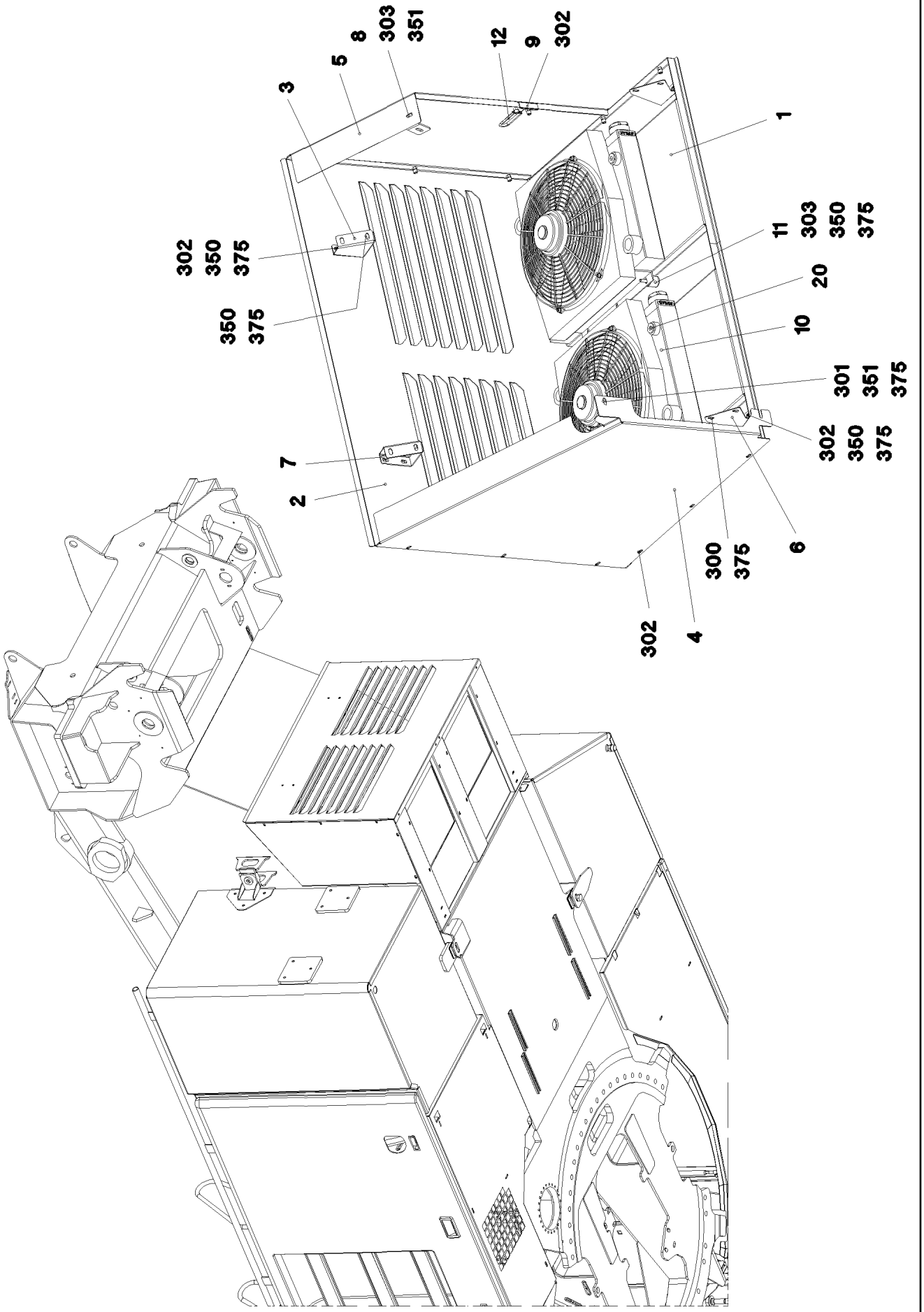


| | | |
|---|---|---|
| 16.2.2017<br>045843<br>LIEBHERR | **etk_en_de_048005 LTR 1100**<br><br>**OIL COOLER INSTALLATION**<br>**OELKUEHLER EINBAU** | 265 (1/2)<br><br>**2 984**<br>**91 52 906 08** |

| Pos. | Item | Quantity | Description | Bezeichnung |
|---|---|---|---|---|
| 1 | 96 41 044 08 | 1 | FLOOR SHEET | BODENBLECH |
| 2 | 96 41 045 08 | 1 | REAR SHUTTER | HECKBLENDE |
| 3 | 97 50 770 08 | 1 | PLATE 3X151X144 DC01 FE//ZN20//C | BLECH |
| 4 | 97 50 846 08 | 1 | PLATE 2X856X894 DC01 | BLECH |
| 5 | 96 44 197 08 | 1 | ORIFICE | BLENDE |
| 6 | 97 50 847 08 | 2 | PLATE 2X171X133 DC01 FE//ZN20//C | BLECH |
| 7 | 97 51 599 08 | 1 | PLATE 3X151X144 DC01 FE//ZN20//C | BLECH |
| 8 | 97 37 208 08 | 1 | ANGLE 4X113X40 S315MC FE//ZNNI8//CN//T | WINKEL |
| 9 | 97 66 347 08 | 1 | PLATE 2X60X88 DC01 FE//ZN20//C | BLECH |
| 10 | 10 09 734 5 | 2 | OIL AIR COOLER<br>⇨ X10097345 10 09 734 5 | OEL-LUFTKUEHLER |
| 11 | 72 69 065 08 | 8 | CIRCULAR BEARING B30X30XM8 | RUNDLAGER |
| 12 | 26 21 039 08 | 0.25 | EDGE PROTECTION 1-2X9,5X6,5 | KANTENSCHUTZ |
| 20 | 91 11 097 08 | 2 | ELECTRIC FOR OIL COOLER | ELEKTRIK OELKUEHLER |
| (2) | 69 11 832 08 | 1 | THERMAL SWITCH SCHALTEND | THERMOSCHALTER |
| (3) | 71 01 023 08 | 1 | SEALING RING DIN 7603 A 13X18X1,5 CU | DICHTRING |
| 300 | 11 69 004 8 | 8 | HEX SCREW ISO 4017 M8X12 8.8 480H SPF | SECHSKANTSCHRAUBE |
| 301 | 11 65 176 7 | 4 | HEX SCREW ISO 4017 M8X20 8.8 480H SPF | SECHSKANTSCHRAUBE |
| 302 | 40 97 041 08 | 22 | BUTTON HEAD SCREW ISO 7380-2 M8X20 | HALBRUNDKOPFSCHRAUBE |
| 303 | 10 41 285 4 | 10 | BUTTON HEAD SCREW AEHNL.ISO 7380-2 | HALBRUNDKOPFSCHRAUBE |
| 350 | 11 69 387 5 | 16 | HEX NUT ISO 4032 M8 8 480H SPF | SECHSKANTMUTTER |
| 351 | 41 30 034 08 | 5 | CAGE NUT M8 | KAEFIGMUTTER |
| 375 | 10 28 980 3 | 20 | WASHER ISO 7089 8 300HV 480H SPF | SCHEIBE |

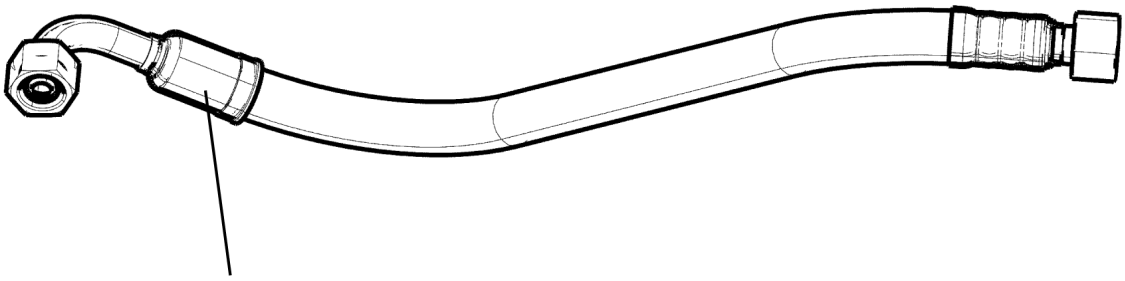

Schlauchnummer
Hose number
Numéro de flexible
Número de flexible
Номера шланга

Die Schlauchnummern auf den Schläuchen entsprechen den Positionen in der Schlauchliste.

The hose numbers from the hoses are in accordance with the items in the hose list.

Les numéros indiqués sur les flexibles correspondent aux repères de la nomenclature des flexibles.

Los números indicados en los flexibles corresponden a las posiciones de la lista de flexibles.

Нанесенные на шлангах номера соответствуют позициям в перечне.

| Pos. | Item | Quantity | Description | Bezeichnung |
|---|---|---|---|---|
| 1 | 60 27 601 08 | 69 | NAME PLATE 25,4X101,6 | BEZEICHNUNGSSCHILD |
| 2 | 60 27 602 08 | 16 | NAME PLATE 25,4X165,1 | BEZEICHNUNGSSCHILD |
| 3 | 60 27 603 08 | 26 | NAME PLATE 25,4X165,1 | BEZEICHNUNGSSCHILD |
| 150 | 50 28 104 08 | 1 | BRAKE HOSE DIN 74310 DN11-DBSL | BREMSSCHLAUCH |
| 151 | 50 28 104 08 | 0.7 | BRAKE HOSE DIN 74310 DN11-DBSL | BREMSSCHLAUCH |
| 200 | 92 02 441 08 | 1 | HOSE CPL. 2TE 16X220 | SCHLAUCH KPL. |
| 201 | 92 14 394 08 | 1 | HOSE CPL. 2SN 12X220 | SCHLAUCH KPL. |
| 202 | 96 35 952 08 | 1 | HOSE CPL. 2TE 12X2200 | SCHLAUCH KPL. |
| 203 | 92 62 890 08 | 1 | HOSE CPL. 2TE 12X500 | SCHLAUCH KPL. |
| 204 | 92 76 166 08 | 1 | HOSE CPL. 2SN 12X1240 | SCHLAUCH KPL. |
| 205 | 92 96 438 08 | 1 | HOSE CPL. 2TE 16X2800 | SCHLAUCH KPL. |
| 206 | 92 96 415 08 | 1 | HOSE CPL. 1SN 25X800 | SCHLAUCH KPL. |
| 209 | 92 60 719 08 | 1 | HOSE CPL. 1SC 8X3000 | SCHLAUCH KPL. |
| 210 | 92 60 418 08 | 1 | HOSE CPL. 1SC 8X320 | SCHLAUCH KPL. |
| 211 | 92 76 847 08 | 1 | HOSE CPL. 2SN 12X3000 | SCHLAUCH KPL. |
| 212 | 96 42 856 08 | 1 | HOSE CPL. 2TE 16X4800 | SCHLAUCH KPL. |
| 213 | 96 42 857 08 | 1 | HOSE CPL. 2TE 12X7400 | SCHLAUCH KPL. |
| 279 | 96 55 621 08 | 1 | HOSE CPL. 2SN 6X190 | SCHLAUCH KPL. |
| 290 | 96 37 118 08 | 1 | HOSE CPL. 4SH 25X300 | SCHLAUCH KPL. |
| 291 | 96 36 988 08 | 1 | HOSE CPL. 4SH 25X1380 | SCHLAUCH KPL. |
| 292 | 96 36 989 08 | 1 | HOSE CPL. 4SH 25X1180 | SCHLAUCH KPL. |
| 293 | 96 36 990 08 | 1 | HOSE CPL. 4SH 25X810 | SCHLAUCH KPL. |
| 300 | 92 70 439 08 | 1 | HOSE CPL. 2TE 3,3M | SCHLAUCH KPL. |
| 301 | 96 36 980 08 | 1 | HOSE CPL. 2SN 10X5600 | SCHLAUCH KPL. |
| 302 | 96 33 364 08 | 1 | HOSE CPL. 2SN 12X1300 | SCHLAUCH KPL. |
| 303 | 92 61 200 08 | 1 | HOSE CPL. 2TE 0,6M | SCHLAUCH KPL. |
| 304 | 77 42 367 08 | 0.37 | SIPHON PIPE SAE100 R4 DN35-304 | SAUGSCHLAUCH |
| 305 | 92 24 554 08 | 1 | HOSE CPL. 2SN 6X400 | SCHLAUCH KPL. |
| 306 | 96 36 981 08 | 1 | HOSE CPL. 1SC 8X960 | SCHLAUCH KPL. |
| 307 | 96 24 553 08 | 1 | HOSE CPL. 2TE 6X1000 | SCHLAUCH KPL. |
| 308 | 92 62 690 08 | 1 | HOSE CPL. 2TE 10X250 | SCHLAUCH KPL. |
| 309 | 92 53 428 08 | 1 | HOSE CPL. 2755 16X3000 | SCHLAUCH KPL. |
| 310 | 92 93 218 08 | 1 | HOSE CPL. 2TE 1,36M | SCHLAUCH KPL. |
| 311 | 92 84 584 08 | 1 | HOSE CPL. 2TE 1,36M | SCHLAUCH KPL. |
| 312 | 92 76 318 08 | 1 | HOSE CPL. 2SN 12X1200 | SCHLAUCH KPL. |
| 313 | 96 36 982 08 | 1 | HOSE CPL. 2SN 8X1300 | SCHLAUCH KPL. |
| 314 | 92 09 917 08 | 1 | HOSE CPL. 2TE 6X350 | SCHLAUCH KPL. |
| 315 | 96 31 967 08 | 1 | HOSE CPL. 2TE 6X960 | SCHLAUCH KPL. |
| 316 | 92 87 618 08 | 1 | HOSE CPL. 1SC 0,7M | SCHLAUCH KPL. |
| 317 | 92 61 290 08 | 1 | HOSE CPL. 2TE 10X940 | SCHLAUCH KPL. |
| 318 | 92 75 662 08 | 1 | HOSE CPL. 2TE 1,2M | SCHLAUCH KPL. |
| 319 | 92 60 492 08 | 1 | HOSE CPL. 1SC 8X1040 | SCHLAUCH KPL. |
| 320 | 96 23 339 08 | 1 | HOSE CPL. 1SC 0,54M | SCHLAUCH KPL. |
| 321 | 92 60 969 08 | 1 | HOSE CPL. 1SC 0,4M | SCHLAUCH KPL. |
| 322 | 92 61 374 08 | 1 | HOSE CPL. 2TE 16X520 | SCHLAUCH KPL. |
| 323 | 92 96 444 08 | 1 | HOSE CPL. 2TE 20X2700 | SCHLAUCH KPL. |
| 324 | 92 60 476 08 | 1 | HOSE CPL. 2TE 0,88M | SCHLAUCH KPL. |
| 325 | 92 61 198 08 | 1 | HOSE CPL. 1SC 8X660 | SCHLAUCH KPL. |
| 326 | 96 28 609 08 | 1 | HOSE CPL. 1SC 8X820 | SCHLAUCH KPL. |
| 327 | 92 61 116 08 | 1 | HOSE CPL. 2TE 10X900 | SCHLAUCH KPL. |
| 328 | 92 63 748 08 | 1 | HOSE CPL. 1SC 8X2500 | SCHLAUCH KPL. |
| 329 | 92 99 226 08 | 1 | HOSE CPL. 1SN 25X1900 | SCHLAUCH KPL. |
| 330 | 92 07 273 08 | 1 | HOSE CPL. 2SN 6X760 | SCHLAUCH KPL. |
| 331 | 92 26 459 08 | 1 | HOSE CPL. 2SN 6X660 | SCHLAUCH KPL. |
| 332 | 96 61 454 08 | 1 | HOSE CPL. GH663-240,49M | SCHLAUCH KPL. |
| 333 | 96 39 197 08 | 1 | HOSE CPL. 1SN 32X350 | SCHLAUCH KPL. |
| 334 | 96 36 985 08 | 1 | HOSE CPL. F6000 31X520 | SCHLAUCH KPL. |
| 336 | 96 36 986 08 | 1 | HOSE CPL. F6000 31X720 | SCHLAUCH KPL. |
| 337 | 92 09 752 08 | 1 | HOSE CPL. 2SN 6X1200 | SCHLAUCH KPL. |
| 338 | 96 29 964 08 | 1 | HOSE CPL. GH506 31X820 | SCHLAUCH KPL. |

| Pos. | Item | Quantity | Description | Bezeichnung |
|---|---|---|---|---|
| 339 | 92 88 753 08 | 1 | HOSE CPL. GH506 31X2750 | SCHLAUCH KPL. |
| 340 | 92 84 591 08 | 1 | HOSE CPL. 2TE 12X3400 | SCHLAUCH KPL. |
| 343 | 92 60 465 08 | 1 | HOSE CPL. 2TE 1,3M | SCHLAUCH KPL. |
| 344 | 92 76 807 08 | 1 | HOSE CPL. 1SC 8X1160 | SCHLAUCH KPL. |
| 345 | 77 42 365 08 | 0.76 | SIPHON PIPE SAE100 R4 DN42-304 NBR | SAUGSCHLAUCH |
| 346 | 77 42 367 08 | 0.76 | SIPHON PIPE SAE100 R4 DN35-304 | SAUGSCHLAUCH |
| 347 | 96 42 858 08 | 1 | HOSE CPL. F6000 31X540 | SCHLAUCH KPL. |
| 348 | 96 42 859 08 | 1 | HOSE CPL. F6000 31X460 | SCHLAUCH KPL. |
| 353 | 92 66 073 08 | 1 | HOSE CPL. 2TE 16X660 | SCHLAUCH KPL. |
| 354 | 92 96 484 08 | 1 | HOSE CPL. 2SN 8X4500 | SCHLAUCH KPL. |
| 355 | 96 36 993 08 | 1 | HOSE CPL. 2SN 8X6100 | SCHLAUCH KPL. |
| 356 | 92 96 484 08 | 1 | HOSE CPL. 2SN 8X4500 | SCHLAUCH KPL. |
| 357 | 96 36 994 08 | 1 | HOSE CPL. 2SN 8X5900 | SCHLAUCH KPL. |
| 358 | 92 96 389 08 | 1 | HOSE CPL. 2SN 8X1400 | SCHLAUCH KPL. |
| 359 | 96 36 995 08 | 1 | HOSE CPL. 2SN 8X1550 | SCHLAUCH KPL. |
| 360 | 96 21 863 08 | 1 | HOSE CPL. 2SN 8X1700 | SCHLAUCH KPL. |
| 361 | 96 22 416 08 | 1 | HOSE CPL. 2SN 8X1600 | SCHLAUCH KPL. |
| 362 | 92 76 783 08 | 1 | HOSE CPL. 2SN 12X1750 | SCHLAUCH KPL. |
| 363 | 96 33 363 08 | 1 | HOSE CPL. 2SN 12X1340 | SCHLAUCH KPL. |
| 364 | 92 76 318 08 | 1 | HOSE CPL. 2SN 12X1200 | SCHLAUCH KPL. |
| 365 | 96 22 417 08 | 1 | HOSE CPL. 2SN 10X2000 | SCHLAUCH KPL. |
| 366 | 96 24 749 08 | 1 | HOSE CPL. 2SN 6X280 | SCHLAUCH KPL. |
| 367 | 92 60 975 08 | 1 | HOSE CPL. 1SC 8X560 | SCHLAUCH KPL. |
| 368 | 96 23 355 08 | 1 | HOSE CPL. HPC 4X450 | SCHLAUCH KPL. |
| 369 | 92 32 291 08 | 1 | HOSE CPL. HPC 4X5100 | SCHLAUCH KPL. |
| 390 | 96 36 996 08 | 1 | HOSE CPL. 4SH 25X1140 | SCHLAUCH KPL. |
| 391 | 96 36 997 08 | 1 | HOSE CPL. 4SH 25X1040 | SCHLAUCH KPL. |
| 392 | 96 36 997 08 | 1 | HOSE CPL. 4SH 25X1040 | SCHLAUCH KPL. |
| 393 | 96 36 998 08 | 1 | HOSE CPL. 4SH 25X920 | SCHLAUCH KPL. |
| 394 | 92 97 210 08 | 1 | HOSE CPL. 1SN 25X2900 | SCHLAUCH KPL. |
| 395 | 92 19 740 08 | 1 | HOSE CPL. 2755 12X2850 | SCHLAUCH KPL. |
| 396 | 92 09 842 08 | 1 | HOSE CPL. 2SN 6X540 | SCHLAUCH KPL. |
| 397 | 96 36 999 08 | 1 | HOSE CPL. 2SN 6X540 | SCHLAUCH KPL. |
| 398 | 96 37 000 08 | 2 | HOSE CPL. 2SN 8X280 | SCHLAUCH KPL. |
| 480 | 92 87 533 08 | 1 | HOSE CPL. GH506 31X2000 | SCHLAUCH KPL. |
| 481 | 92 55 190 08 | 1 | HOSE CPL. GH506 31X1900 | SCHLAUCH KPL. |
| 482 | 92 55 190 08 | 1 | HOSE CPL. GH506 31X1900 | SCHLAUCH KPL. |
| 483 | 92 93 614 08 | 1 | HOSE CPL. 2SN 8X330 | SCHLAUCH KPL. |
| 484 | 92 15 367 08 | 1 | HOSE CPL. 2SN 8X260 | SCHLAUCH KPL. |
| 485 | 96 22 573 08 | 1 | HOSE CPL. 2SN 6X2900 | SCHLAUCH KPL. |
| 486 | 92 45 055 08 | 1 | HOSE CPL. 2SN 12X3000 | SCHLAUCH KPL. |

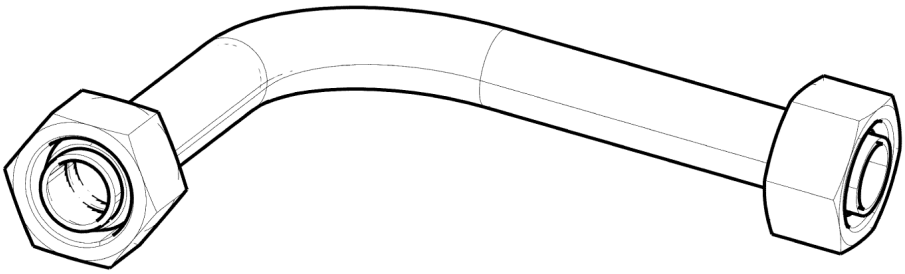

Die Positionsnummern der Rohre auf den Bildtafeln entsprechen den Positionen in der Rohrliste.

The pipe numbers from the illustrations are in accordance with the items in the pipe list.

Les numéros des tuyaux sur les illustrations correspondent aux repères de la nomenclature des tuyaux.

Los números de tubos en las ilustraciones corresponden a las posiciones de la lista de tubos.

Номера позиций труб на изображениях соответствуют позициям в перечне труб.

| Pos. | Item | Quantity | Description | Bezeichnung |
|---|---|---|---|---|
| 430 | 96 35 338 08 | 1 | PIPE COMPL. 30X4X575 | ROHR KPL. |
| 431 | 96 35 339 08 | 1 | PIPE COMPL. 30X4X576 | ROHR KPL. |
| 432 | 96 35 340 08 | 1 | PIPE COMPL. 30X4X658 | ROHR KPL. |
| 433 | 96 35 341 08 | 1 | PIPE COMPL. 30X4X651 | ROHR KPL. |
| 468 | 96 35 344 08 | 1 | PIPE COMPL. 38X4X610 | ROHR KPL. |
| 470 | 96 32 884 08 | 1 | PIPE COMPL. 18X1,5X829 | ROHR KPL. |
| 471 | 96 21 400 08 | 1 | PIPE COMPL. 18X1,5X2889 | ROHR KPL. |
| 472 | 96 21 897 08 | 1 | PIPE COMPL. 18X1,5X2161 | ROHR KPL. |
| 473 | 96 35 345 08 | 1 | PIPE COMPL. 18X1,5X832 | ROHR KPL. |
| 474 | 92 12 968 08 | 3 | PIPE COMPL. 38X4X356 | ROHR KPL. |
| 475 | 92 12 969 08 | 1 | PIPE COMPL. 38X4X453 | ROHR KPL. |
| 476 | 92 68 945 08 | 1 | PIPE COMPL. 12X1,5X165 | ROHR KPL. |
| 477 | 92 12 971 08 | 1 | PIPE COMPL. 38X4X1612 | ROHR KPL. |
| 478 | 92 12 972 08 | 1 | PIPE COMPL. 38X4X1490 | ROHR KPL. |
| 479 | 92 12 973 08 | 1 | PIPE COMPL. 42X3X1287 | ROHR KPL. |
| 490 | 92 15 126 08 | 1 | PIPE COMPL. 10X1,5X214 | ROHR KPL. |
| 491 | 92 15 127 08 | 1 | PIPE COMPL. 10X1,5X134 | ROHR KPL. |
| 492 | 92 15 128 08 | 1 | PIPE COMPL. 10X1,5X679 | ROHR KPL. |
| 493 | 92 15 129 08 | 1 | PIPE COMPL. 10X1,5X992 | ROHR KPL. |
| 494 | 92 15 130 08 | 1 | PIPE COMPL. 10X1,5X167 | ROHR KPL. |
| 495 | 92 15 131 08 | 1 | PIPE COMPL. 10X1,5X174 | ROHR KPL. |
| 496 | 92 15 132 08 | 1 | PIPE COMPL. 10X1,5X278 | ROHR KPL. |
| 497 | 92 12 974 08 | 1 | PIPE COMPL. 38X5X153 | ROHR KPL. |
| 498 | 92 12 975 08 | 1 | PIPE COMPL. 38X5X258 | ROHR KPL. |
| 499 | 92 12 976 08 | 1 | PIPE COMPL. 38X5X206 | ROHR KPL. |

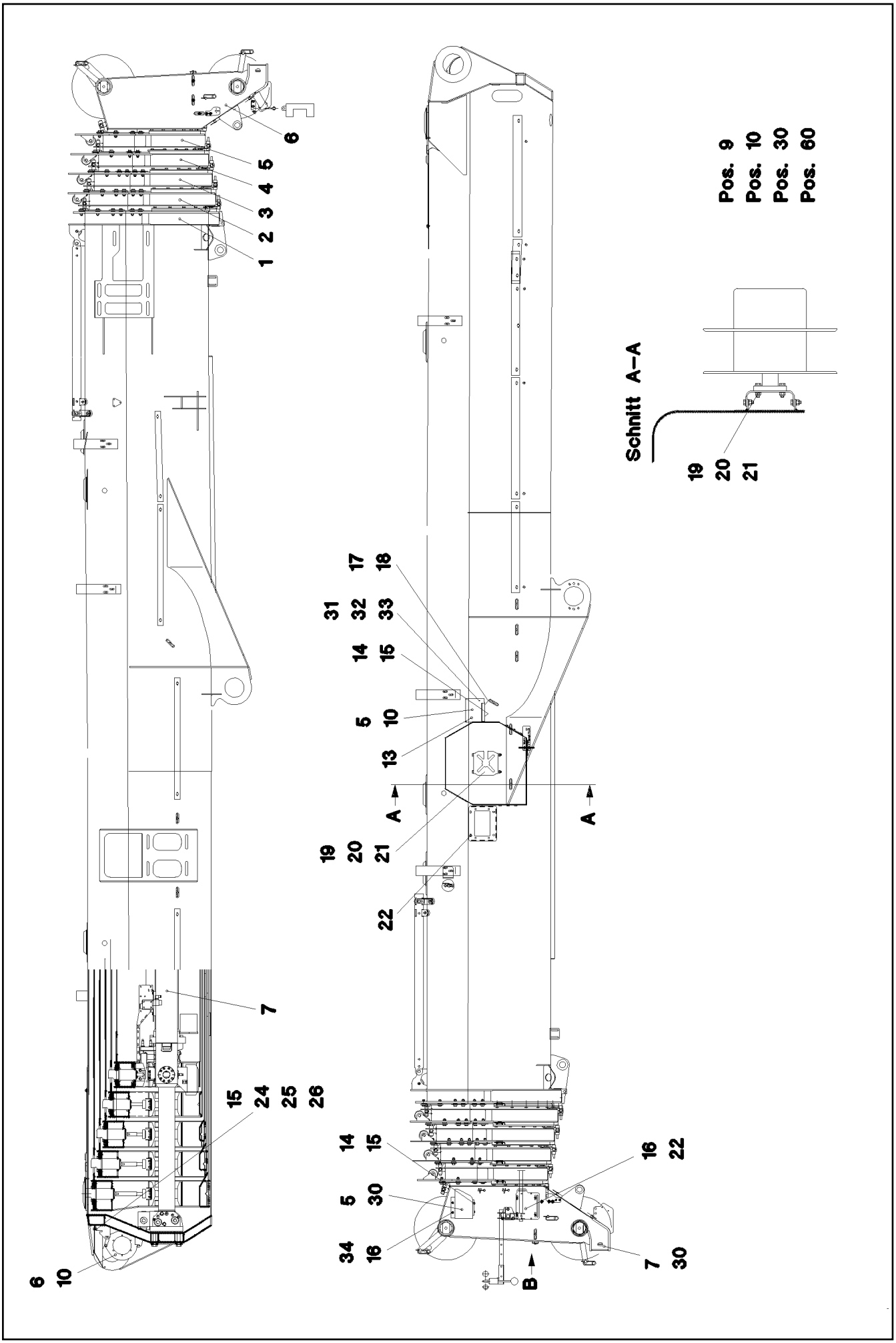


| | | |
|---|---|---|
| 16.2.2017<br>065186<br>LIEBHERR | etk_en_de_048005 LTR 1100<br><br>TELESCOPIC BOOM CPL.<br>TELESKOPAUSLEGER KPL. | 272 (1/2)<br><br>3 100<br>91 59 279 08 |

| Pos. | Item | Quantity | Description | Bezeichnung |
|---|---|---|---|---|
| 1 | 91 60 312 08 | 1 | PIVOT SECTION, PRE-ASSEMBLED<br>➪ 3 101 91 60 312 08 | ANLENKSTUECK VORM. |
| 2 | 91 62 543 08 | 1 | TELESCOPIC SECTION 1 PRE-ASSEM<br>➪ 3 102 000 91 62 543 08 | TELESKOP 1 VORM. |
| 3 | 91 62 544 08 | 1 | TELESCOPIC SECT.2 PRE-ASSEMBL<br>➪ 3 103 000 91 62 544 08 | TELESKOP 2 VORM. |
| 4 | 91 62 545 08 | 1 | TELESCOPIC SECT.3 PRE-ASSEMB<br>➪ 3 104 000 91 62 545 08 | TELESKOP 3 VORM. |
| 5 | 91 62 546 08 | 1 | TELESCOPIC SECT.IV PRE-ASSEMBL<br>➪ 3 105 000 91 62 546 08 | TELESKOP 4 VORM. |
| 6 | 91 60 313 08 | 1 | TELESCOPIC SECT.5 PRE-ASSEMBLE<br>➪ 3 106 000 91 60 313 08 | TELESKOP 5 VORM. |
| 7 | 91 57 885 08 | 1 | MECHANICAL EXTENSION SYSTEM<br>➪ 3 330 91 57 885 08 | AUSSCHUBMECHANIK |
| 10 | 96 20 157 08 | 1 | SENSOR ASSEMBLY BASIC BOOM<br>➪ 3 930 482 96 20 157 08 | GEBERANBAU GRUNDAUSLEGE |
| 13 | 97 36 305 08 | 1 | PLATE 2X383X342 DC01 FE//ZNNI8//CN//T0 | BLECH |
| 14 | 11 82 652 7 | 4 | HEX SCREW ISO 4017 M8X30 8.8 480H SPF | SECHSKANTSCHRAUBE |
| 15 | 10 28 980 3 | 7 | WASHER ISO 7089 8 300HV 480H SPF | SCHEIBE |
| 16 | 10 41 285 4 | 4 | BUTTON HEAD SCREW AEHNL.ISO 7380-2 | HALBRUNDKOPFSCHRAUBE |
| 17 | 11 65 161 2 | 4 | HEX SCREW ISO 4017 M8X16 8.8 480H SPF | SECHSKANTSCHRAUBE |
| 18 | 42 18 009 08 | 4 | WASHER ISO 7093-1 8 200HV A2C | SCHEIBE |
| 19 | 10 87 560 7 | 4 | HEX NUT DIN 985 M12 8 FLZN SPF | SECHSKANTMUTTER |
| 20 | 10 28 980 4 | 4 | WASHER ISO 7089 12 300HV FLZN SPF | SCHEIBE |
| 21 | 11 64 538 4 | 4 | HEX SCREW ISO 4017 M12X40 8.8 FLZN SP | SECHSKANTSCHRAUBE |
| 22 | 40 01 063 08 | 8 | SOCKET HEAD SCREW DIN 84 M6X35 5.8 V | ZYLINDERSCHRAUBE |
| 24 | 95 64 701 08 | 1 | PLATE 2X680X420 DC01 | BLECH |
| 25 | 11 65 161 2 | 3 | HEX SCREW ISO 4017 M8X16 8.8 480H SPF | SECHSKANTSCHRAUBE |
| 26 | 41 30 032 08 | 3 | CAGE NUT M8 A2/ST A2K | KAEFIGMUTTER |
| 30 | 96 20 935 08 | 1 | SENSOR ASSEMBLY HEAD PIECE<br>➪ 3 930 483 96 20 935 08 | GEBERANBAU KOPFSTUECK |
| 31 | 40 01 016 08 | 2 | SOCKET HEAD SCREW DIN 84 M4X10 8.8 A3 | ZYLINDERSCHRAUBE |
| 32 | 41 19 002 08 | 2 | HEX NUT DIN 985 M4 8 A2C | SECHSKANTMUTTER |
| 33 | 42 18 005 08 | 2 | WASHER DIN 9021 4 A2C | SCHEIBE |
| 34 | 95 05 190 08 | 1 | HOOD 2X357X267 DC01 FE//ZN20//C | HAUBE |

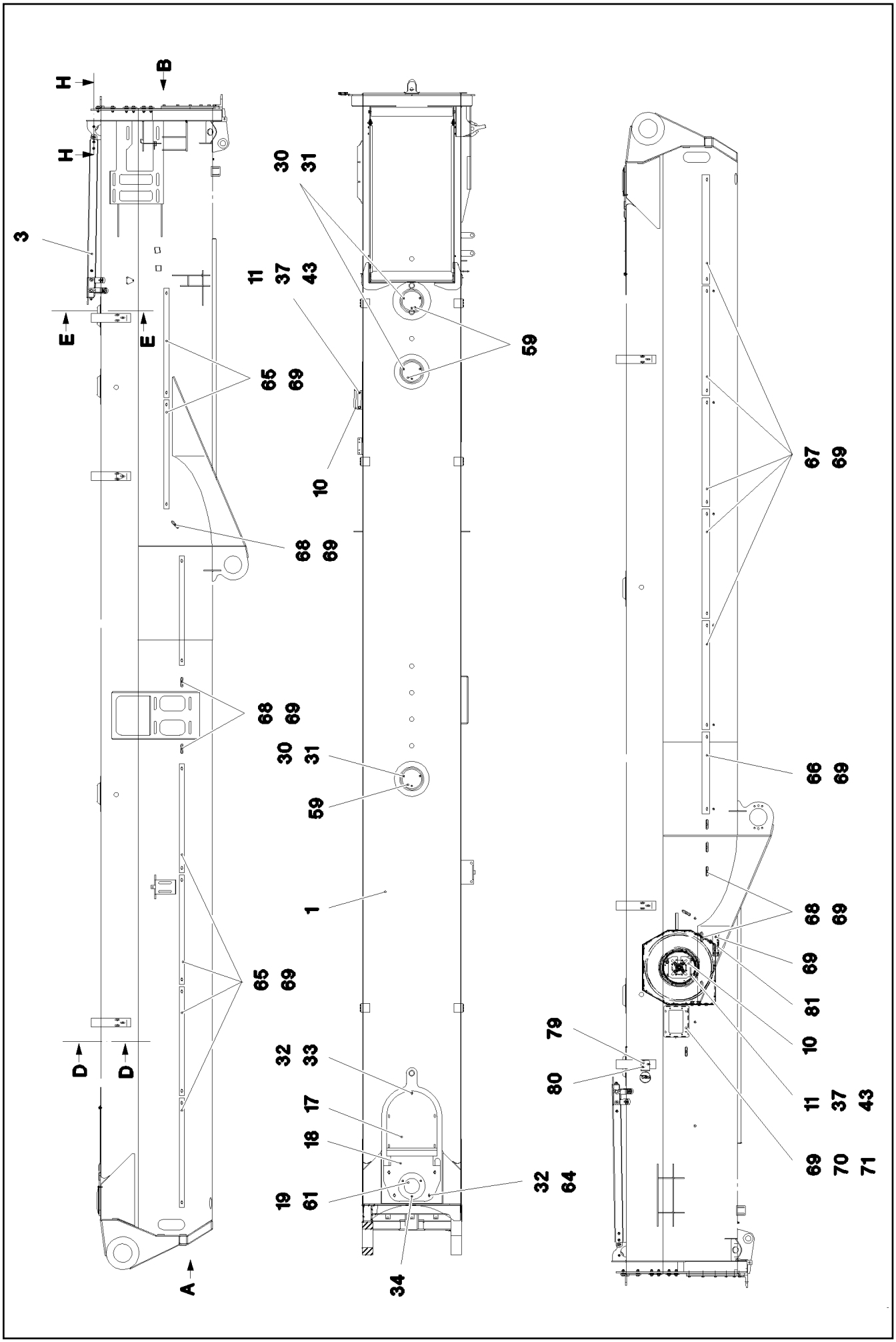


| | | |
|---|---|---|
| 16.2.2017<br>065600<br>LIEBHERR | etk_en_de_048005 LTR 1100<br><br>PIVOT SECTION, PRE-ASSEMBLED<br>ANLENKSTUECK VORM. | 274 (1/5)<br><br>3 101<br>91 60 312 08 |

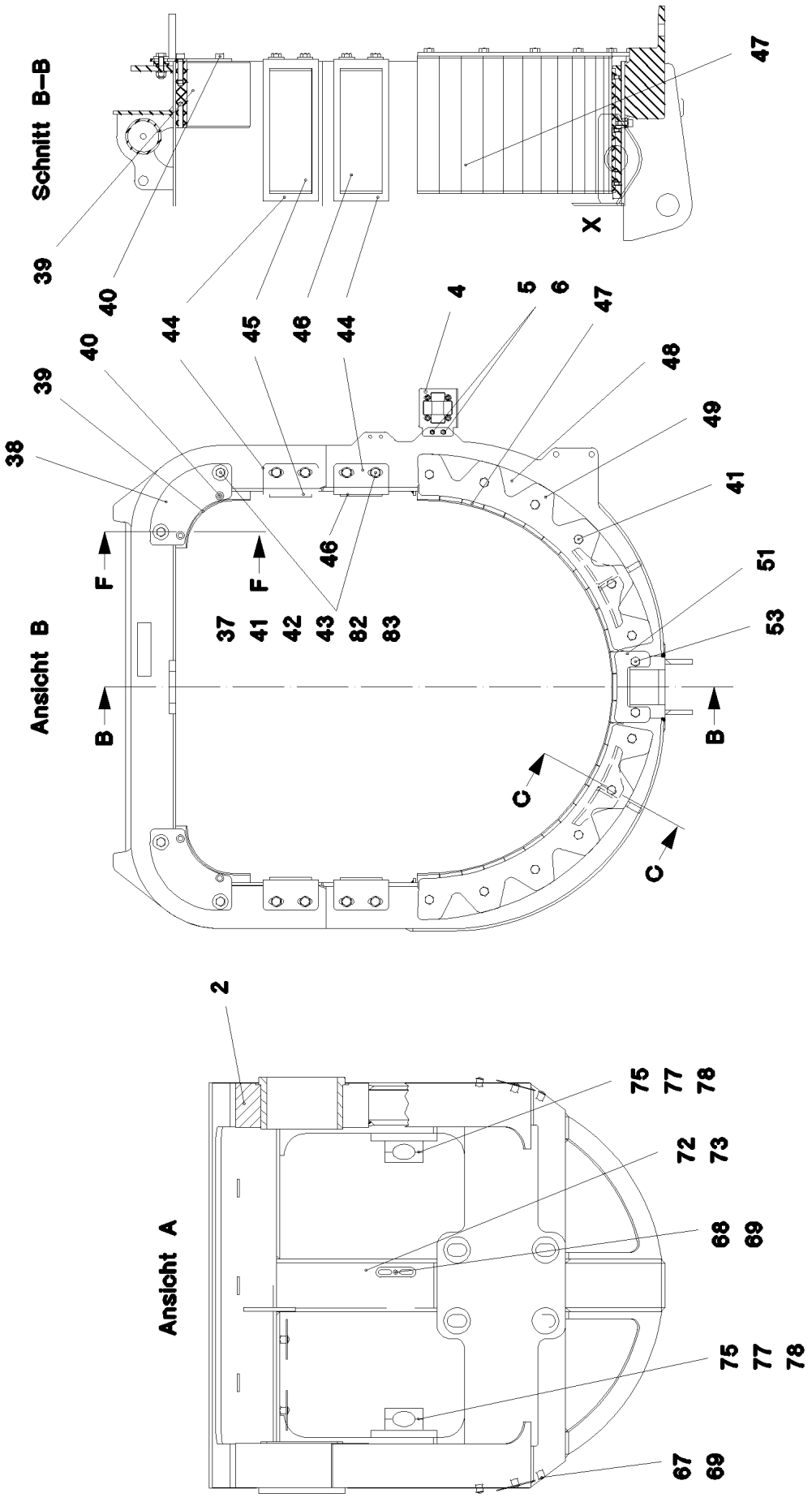
Schnitt B–B
39
40
44
45
46
44
4
5
6
47
X
47
Ansicht B
38
39
40
44
45
46
44
4
5
6
47
48
49
41
51
53
F
F
37
41
42
43
82
83
46
B
B
C
C
Ansicht A
2
75
77
78
72
73
68
69
75
77
78
67
69

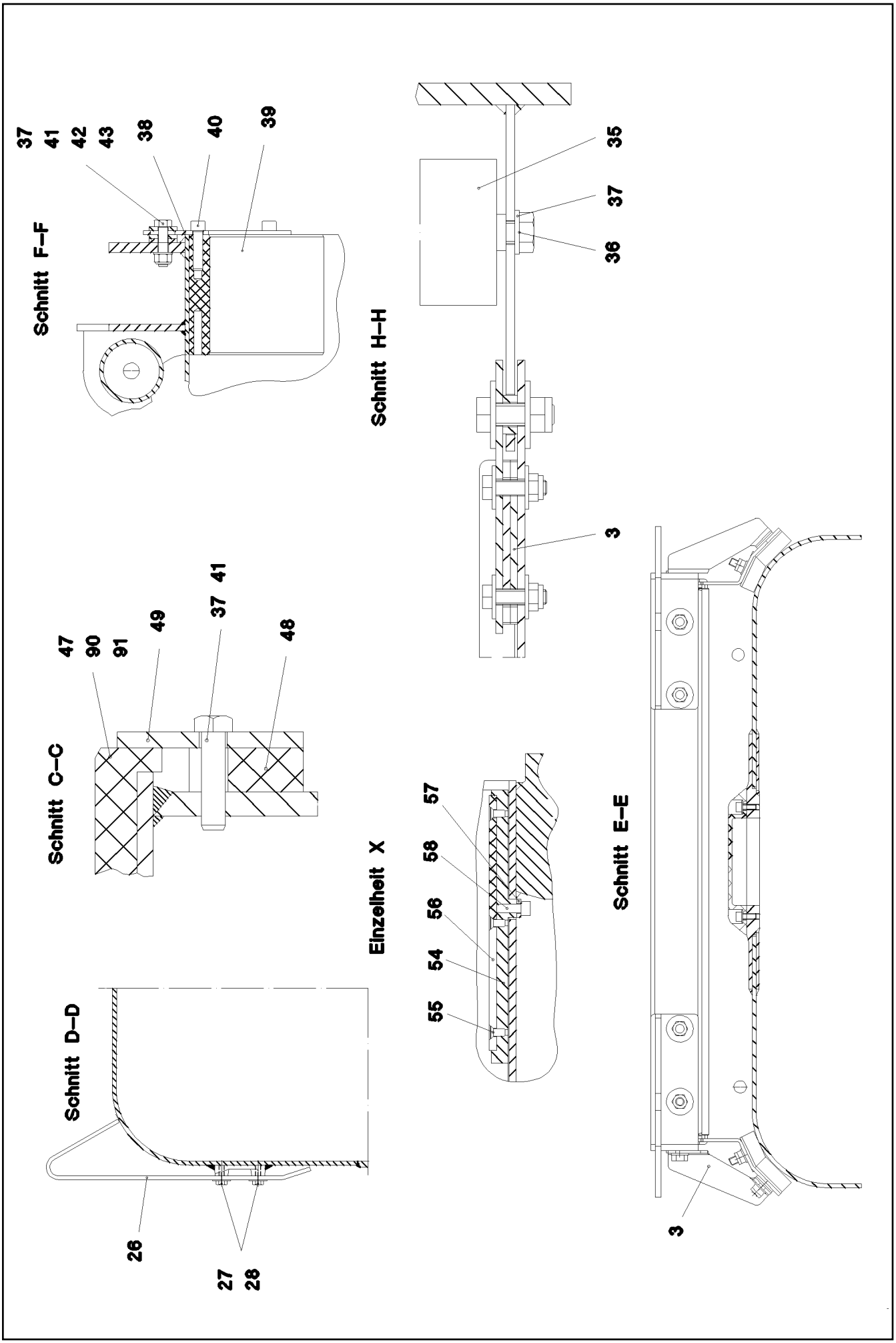
Schnitt F–F
37
41
42
43
38
40
39
Schnitt H–H
35
37
36
3
Schnitt C–C
47
90
91
49
37
41
48
Einzelheit X
57
58
56
54
55
Schnitt E–E
3
Schnitt D–D
26
27
28

| Pos. | Item | Quantity | Description | Bezeichnung |
|---|---|---|---|---|
| 1 | 91 60 328 08 | 1 | PIVOT PIECE ST. CONST. SPF | ANLENKSTUECK SCHWK. |
| 2 | 70 43 388 08 | 2 | BEARING BUSHING 195X117 GZ-CUZN25AL | LAGERBUCHSE |
| 3 | 96 64 471 08 | 1 | HOIST ROPE GUIDE PIVOT PIECE | HUBSEILFUEHRUNG ANLENKS |
| 4 | 97 37 747 08 | 1 | ROLLER ORIFICE FE//ZNNI8//CN//T0 | ROLLENMUNDSTUECK |
| 5 | 46 00 102 | 2 | HEX SCREW ISO 4017 M6X30 8.8 A2C | SECHSKANTSCHRAUBE |
| 6 | 41 19 003 05 | 2 | HEX NUT ISO 7040 M6 8 A2C | SECHSKANTMUTTER |
| 7 | 10 87 564 7 | 4 | WASHER ISO 7089 6 200HV 480H SPF | SCHEIBE |
| 10 | 97 21 333 08 | 1 | PLATE 5X200X309 S355MC | BLECH |
| 11 | 11 64 234 9 | 4 | HEX SCREW ISO 4017 M12X35 8.8 FLZN SP | SECHSKANTSCHRAUBE |
| 17 | 92 13 686 08 | 1 | COVER WELDED | DECKEL SCHWK. |
| 18 | 96 01 619 6 | 1 | COVER WELDED | DECKEL SCHWK. |
| 19 | 28 81 840 08 | 1 | COVER RD245X17 PA6G | DECKEL |
| 26 | 95 55 239 08 | 6 | PLATE 5X80X488 S355MC FE//ZN20//C | BLECH |
| 27 | 11 65 161 2 | 15 | HEX SCREW ISO 4017 M8X16 8.8 480H SPF | SECHSKANTSCHRAUBE |
| 28 | 42 18 009 08 | 18 | WASHER ISO 7093-1 8 200HV A2C | SCHEIBE |
| 30 | 10 87 559 8 | 9 | SOCKET HEAD SCREW ISO 4762 M8X20 8.8 | ZYLINDERSCHRAUBE |
| 31 | 10 28 980 3 | 9 | WASHER ISO 7089 8 300HV 480H SPF | SCHEIBE |
| 32 | 11 65 858 0 | 9 | WASHER DIN 7349 10,5 200HV-St FLZN SPF | SCHEIBE |
| 33 | 11 65 163 2 | 5 | HEX SCREW ISO 4017 M10X20 8.8 FLZN SP | SECHSKANTSCHRAUBE |
| 34 | 46 00 157 | 3 | COUNTERSUNK SCREW DIN 7991 M8X20 8. | SENKSCHRAUBE |
| 35 | 74 90 093 08 | 1 | CARRYING ROLLER 80/5/20X750 GALV.VER | TRAGROLLE |
| 36 | 11 63 174 2 | 2 | HEX SCREW ISO 4017 M12X30 8.8 FLZN SP | SECHSKANTSCHRAUBE |
| 37 | 10 28 980 4 | 32 | WASHER ISO 7089 12 300HV FLZN SPF | SCHEIBE |
| 38 | 95 54 506 08 | 2 | PLATE 5X184X184 S960QL | BLECH |
| 39 | 28 30 824 08 | 2 | SLIDER 128X150X167 PA6G+OEL SPF | GLEITSTUECK |
| 40 | 11 84 014 0 | 4 | SOCKET HEAD SCREW ISO 4762 M12X50 8 | ZYLINDERSCHRAUBE |
| 41 | 11 84 013 6 | 12 | HEX SCREW ISO 4017 M12X50 8.8 FLZN | SECHSKANTSCHRAUBE |
| 42 | 10 17 935 6 | 36 | WASHER DIN 6340 13 FLZN SPF | SCHEIBE |
| 43 | 40 02 564 | 18 | HEX NUT ISO 7040 M12 8 A3C | SECHSKANTMUTTER |
| 44 | 95 70 325 08 | 4 | PLATE 4x383x125 S315MC FE//ZN20//C | BLECH |
| 45 | 28 30 943 08 | 2 | BEARING PLATE 14X105X290 PA6G+OEL SP | LAGERPLATTE |
| 46 | 28 30 944 08 | 2 | BEARING PLATE 12x105x290 PA6G+OEL SP | LAGERPLATTE |
| 47 | 28 30 825 08 | 26 | SLIDE PLATE 33X50X310 PA6G+OEL SPF | GLEITPLATTE |
| 48 | 28 30 863 08 | 2 | DISTANCE PLATE 22X165X674 PA6G | DISTANZPLATTE |
| 49 | 95 70 666 08 | 2 | PLATE 8X456X517 S960QL | BLECH |
| 51 | 95 70 329 08 | 1 | PLATE 8x160x79 S960QL | BLECH |
| 53 | 40 66 087 08 | 2 | HEX SCREW ISO 4017 M12X25 10.9 FLZN SP | SECHSKANTSCHRAUBE |
| 54 | 95 54 507 08 | 1 | PLATE 60X308X36 S960QL FE//FLZN10//NC | BLECH |
| 55 | 40 86 003 08 | 3 | COUNTERSUNK SCREW DIN 7991 M8X16 8. | SENKSCHRAUBE |
| 56 | 28 30 826 08 | 1 | SLIDE PLATE 8X60X280 PA6G+OEL SPF | GLEITPLATTE |
| 57 | 95 54 508 08 | 1 | PLATE 5X20X80 S960QL | BLECH |
| 58 | 10 41 516 2 | 2 | SOCKET HEAD SCREW ISO 4762 M10X25 8 | ZYLINDERSCHRAUBE |
| 59 | 28 30 954 08 | 3 | COVER RD200X25 PA6G | DECKEL |
| 61 | 95 37 449 08 | 2 | PLATE 2X245X245 DC01 FE//ZN20//C | BLECH |
| 64 | 40 00 828 | 4 | HEX SCREW ISO 4017 M10X30 8.8 A3C | SECHSKANTSCHRAUBE |
| 65 | 95 37 141 08 | 7 | U-PROFILE 1X1000X74 DC01 FE//ZNNI8//CN/ | U-PROFIL |
| 66 | 95 67 372 08 | 1 | U-PROFILE 1X750X98 DC01 FE//ZNNI8//CN/ | U-PROFIL |
| 67 | 95 59 272 08 | 5 | U-PROFILE 1X1000X98 DC01 FE//ZNNI8//CN/ | U-PROFIL |
| 68 | 95 36 500 08 | 16 | CABLE CLAMP 2X22X90 DC01 FE//ZN20//C | KABELHALTER |
| 69 | 10 41 285 4 | 48 | BUTTON HEAD SCREW AEHNL.ISO 7380-2 | HALBRUNDKOPFSCHRAUBE |
| 70 | 97 23 359 08 | 1 | PLATE 4X290X230 S315MC FE//ZNNI8//CN//T | BLECH |
| 71 | 41 30 029 08 | 4 | CAGE NUT M6 | KAEFIGMUTTER |
| 72 | 70 05 052 | 2 | CLAMP-HALF DIN 3015-1 L 3 R 25 PP SW | KLEMMHAELFTE |
| 73 | 11 82 028 4 | 2 | SOCKET HEAD SCREW ISO 4762 M6X30 8.8 | ZYLINDERSCHRAUBE |
| 75 | 74 13 103 | 4 | CLAMP-HALF DIN 3015-1 L6R 50,8 PP SW | KLEMMHAELFTE |
| 77 | 12 20 278 4 | 4 | SOCKET HEAD SCREW ISO 4762 M6X60 8.8 | ZYLINDERSCHRAUBE |
| 78 | 60 20 180 08 | 4 | CARRIER RAIL NUT DIN 3015-1 L TM M6 W1 | TRAGSCHIENENMUTTER |
| 79 | 97 43 646 08 | 1 | PLATE 5X80X166 S700MC | BLECH |
| 80 | 11 82 652 7 | 3 | HEX SCREW ISO 4017 M8X30 8.8 480H SPF | SECHSKANTSCHRAUBE |
| 81 | 97 48 958 08 | 1 | PLATE 2X200X60 DC01 | BLECH |

| Pos. | Item | Quantity | Description | Bezeichnung |
|---|---|---|---|---|
| 82 | 11 65 889 1 | 12 | HEX SCREW ISO 4014 M12X55 8.8 FLZN SP | SECHSKANTSCHRAUBE |
| 83 | 11 18 271 7 | 12 | WASHER ISO 7093-1 12 300HV FLZN SPF | SCHEIBE |

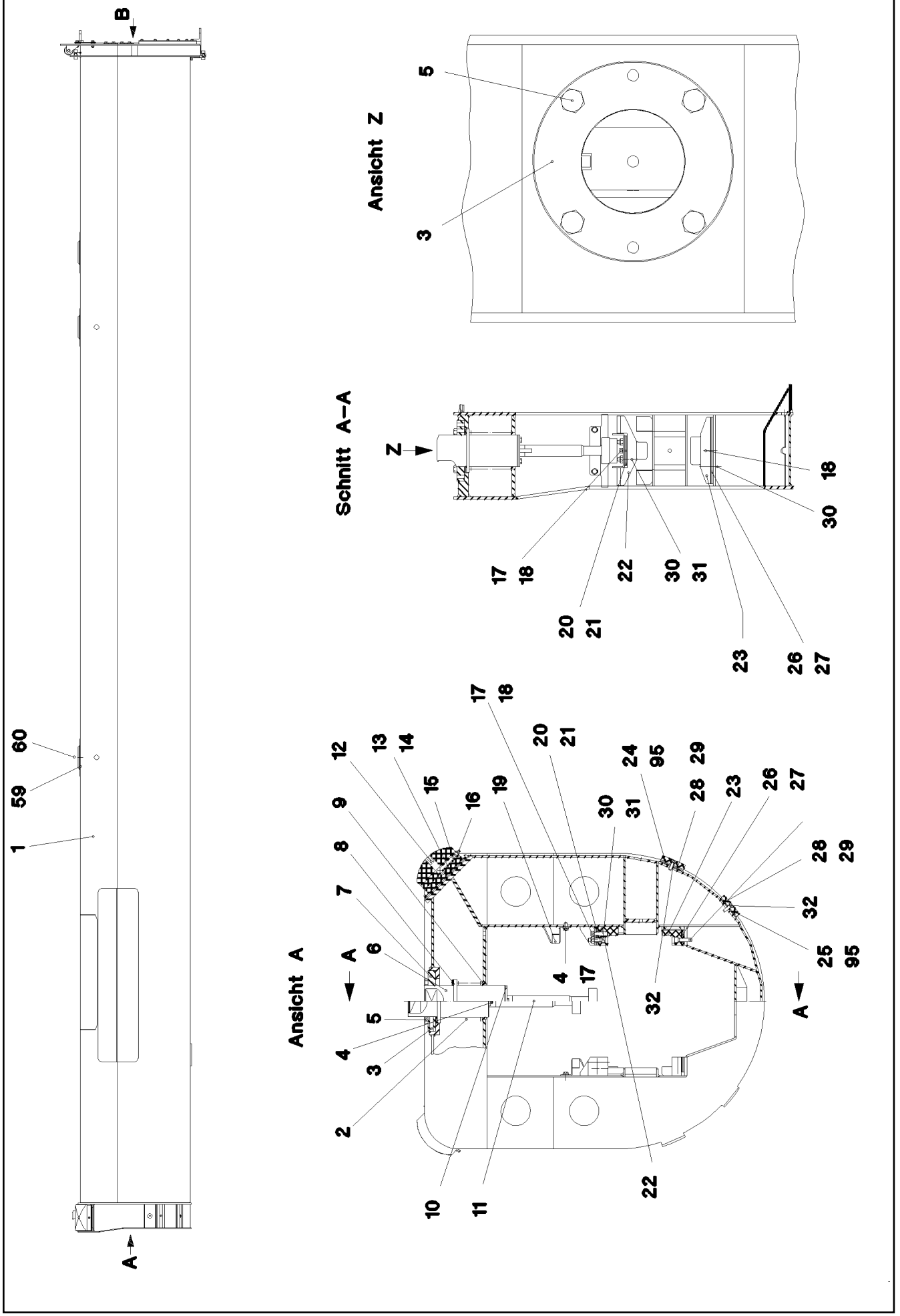


| | | |
|---|---|---|
| 16.2.2017<br>065603<br>LIEBHERR | etk_en_de_048005 LTR 1100<br><br>TELESCOPIC SECTION 1 PRE-ASSEM<br>TELESKOP 1 VORM. | 279 (1/3)<br><br>3 102 000<br>91 62 543 08 |

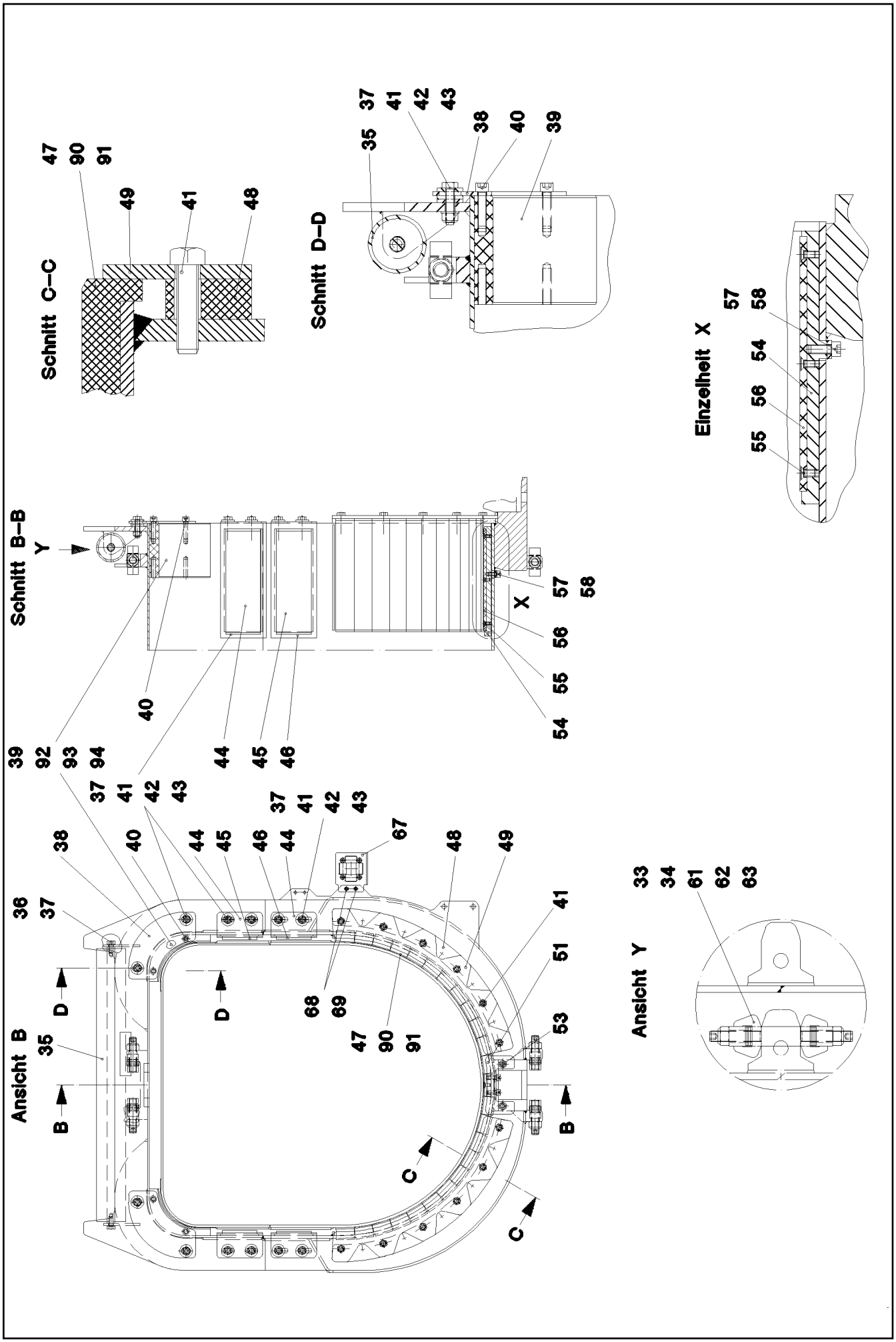
Schnitt C–C
47
90
91
49
41
48
Schnitt D–D
35
37
41
42
43
38
40
39
Einzelheit X
57
58
54
56
55
Schnitt B–B
Y
39
92
93
94
37
41
42
43
40
44
45
46
X
57
58
56
55
54
Ansicht B
36
37
38
40
44
45
46
44
37
41
42
43
67
48
49
41
51
53
35
D
D
68
69
47
90
91
B
B
C
C
Ansicht Y
33
34
61
62
63

| Pos. | Item | Quantity | Description | Bezeichnung |
|---|---|---|---|---|
| 1 | 91 45 069 08 | 1 | TELESCOPIC SECTION 1 WELD.CONS | TELESKOP 1 SCHWK. |
| 2 | 72 00 096 08 | 1 | PRESSURE SPRING 10X105X150 SPF | DRUCKFEDER |
| 3 | 43 06 708 08 | 1 | PARALLEL PIN ISO 2338 10H11X50 30CRNI | ZYLINDERSTIFT |
| 4 | 11 65 161 2 | 6 | HEX SCREW ISO 4017 M8X16 8.8 480H SPF | SECHSKANTSCHRAUBE |
| 5 | 40 65 191 | 4 | HEX SCREW ISO 4017 M12X70 8.8 A3C | SECHSKANTSCHRAUBE |
| 6 | 95 70 110 08 | 1 | PIN 125.0X233 35NICRMOV125 | BOLZEN |
| 7 | 95 70 111 08 | 1 | COVER RD175X22 S960QL | DECKEL |
| 8 | 95 70 112 08 | 4 | PLATE 2X124X124 DC01 FE//ZN20//C | BLECH |
| 9 | 95 70 113 08 | 1 | BUSHING RD115X13 S960QL | BUCHSE |
| 10 | 97 01 483 08 | 1 | PLATE 5x69x44 S960QL | BLECH |
| 11 | 95 70 114 08 | 1 | MUSHROOM-SHAPED DRAWING BOLT 75x3 | ZIEHPILZ |
| 12 | 28 30 935 08 | 2 | BEARING PLATE 75X140X230 PA6G+OEL SP | LAGERPLATTE |
| 15 | 70 45 008 08 | 2 | BUSHING 16X140 9SM28K | BUCHSE |
| 16 | 77 43 242 | 2 | HYDRAULIC-TYPE LUBRICAT.NIPPLE DIN 71 | KEGELSCHMIERNIPPEL |
| 17 | 10 28 980 3 | 6 | WASHER ISO 7089 8 300HV 480H SPF | SCHEIBE |
| 18 | 49 01 162 | 4 | SOCKET HEAD SCREW ISO 4762 M8X30 8.8 | ZYLINDERSCHRAUBE |
| 19 | 95 70 252 08 | 2 | PLATE 2.5x229x148 DC01 FE//ZN20//C | BLECH |
| 22 | 28 30 936 08 | 2 | BEARING PLATE 53X87X200 PA6G+OEL SP | LAGERPLATTE |
| 23 | 28 30 937 08 | 2 | BEARING PLATE 53X57X192 PA6G+OEL SP | LAGERPLATTE |
| 24 | 28 30 938 08 | 2 | BEARING PLATE 14x70x202 PA6G+OEL SPF | LAGERPLATTE |
| 25 | 28 30 939 08 | 2 | BEARING PLATE 12X70X202 PA6G+OEL SP | LAGERPLATTE |
| 30 | 11 69 062 8 | 8 | SOCKET HEAD SCREW ISO 4762 M10X40 8 | ZYLINDERSCHRAUBE |
| 31 | 10 87 560 6 | 4 | HEX NUT DIN 985 M10 8 FLZN SPF | SECHSKANTMUTTER |
| 32 | 10 87 556 1 | 8 | SOCKET HEAD SCREW DIN 6912 M8X25 8.8 | ZYLINDERSCHRAUBE |
| 33 | 97 24 267 08 | 4 | GUIDE ISO 8062-3DCTG6 30X50X78 G18NI | EINWEISER |
| 34 | 41 19 024 08 | 4 | HEX NUT DIN 985 M20 10 A3C | SECHSKANTMUTTER |
| 35 | 74 90 093 08 | 1 | CARRYING ROLLER 80/5/20X750 GALV.VER | TRAGROLLE |
| 36 | 11 63 174 2 | 2 | HEX SCREW ISO 4017 M12X30 8.8 FLZN SP | SECHSKANTSCHRAUBE |
| 37 | 10 28 980 4 | 14 | WASHER ISO 7089 12 300HV FLZN SPF | SCHEIBE |
| 38 | 95 54 506 08 | 2 | PLATE 5X184X184 S960QL | BLECH |
| 40 | 11 84 014 0 | 4 | SOCKET HEAD SCREW ISO 4762 M12X50 8 | ZYLINDERSCHRAUBE |
| 41 | 11 84 013 6 | 24 | HEX SCREW ISO 4017 M12X50 8.8 FLZN | SECHSKANTSCHRAUBE |
| 42 | 10 17 935 6 | 36 | WASHER DIN 6340 13 FLZN SPF | SCHEIBE |
| 43 | 10 87 560 7 | 12 | HEX NUT DIN 985 M12 8 FLZN SPF | SECHSKANTMUTTER |
| 44 | 95 70 325 08 | 4 | PLATE 4x383x125 S315MC FE//ZN20//C | BLECH |
| 45 | 28 30 943 08 | 2 | BEARING PLATE 14X105X290 PA6G+OEL SP | LAGERPLATTE |
| 46 | 28 30 944 08 | 2 | BEARING PLATE 12x105x290 PA6G+OEL SP | LAGERPLATTE |
| 48 | 28 30 948 08 | 2 | DISTANCE PLATE 22X148X622 PA6G | DISTANZPLATTE |
| 49 | 95 70 327 08 | 2 | PLATE 8X420X477 S960QL | BLECH |
| 51 | 95 70 329 08 | 1 | PLATE 8x160x79 S960QL | BLECH |
| 53 | 40 66 087 08 | 2 | HEX SCREW ISO 4017 M12X25 10.9 FLZN SP | SECHSKANTSCHRAUBE |
| 54 | 95 54 507 08 | 1 | PLATE 60X308X36 S960QL FE//FLZN10//NC | BLECH |
| 55 | 40 86 003 08 | 3 | COUNTERSUNK SCREW DIN 7991 M8X16 8. | SENKSCHRAUBE |
| 56 | 28 30 826 08 | 1 | SLIDE PLATE 8X60X280 PA6G+OEL SPF | GLEITPLATTE |
| 57 | 95 54 508 08 | 1 | PLATE 5X20X80 S960QL | BLECH |
| 58 | 10 41 516 2 | 2 | SOCKET HEAD SCREW ISO 4762 M10X25 8 | ZYLINDERSCHRAUBE |
| 59 | 28 30 945 08 | 3 | COVER RD200X12 PA6G | DECKEL |
| 60 | 46 00 157 | 9 | COUNTERSUNK SCREW DIN 7991 M8X20 8. | SENKSCHRAUBE |
| 61 | 11 69 132 7 | 12 | WASHER ISO 7092 20 300HV FLZN SPF | SCHEIBE |
| 62 | 42 50 514 08 | 8 | SPRING WASHER DIN 137 B 20 | FEDERSCHEIBE |
| 63 | 40 44 076 08 | 4 | GRUB SCREW ISO 4026 M20X90 8.8 A3C | GEWINDESTIFT |
| 67 | 97 37 747 08 | 1 | ROLLER ORIFICE FE//ZNNI8//CN//T0 | ROLLENMUNDSTUECK |
| 68 | 10 87 552 9 | 2 | HEX SCREW ISO 4017 M6X25 8.8 480H SPF | SECHSKANTSCHRAUBE |
| 69 | 41 19 004 08 | 2 | HEX NUT DIN 985 M6 8 A2C | SECHSKANTMUTTER |

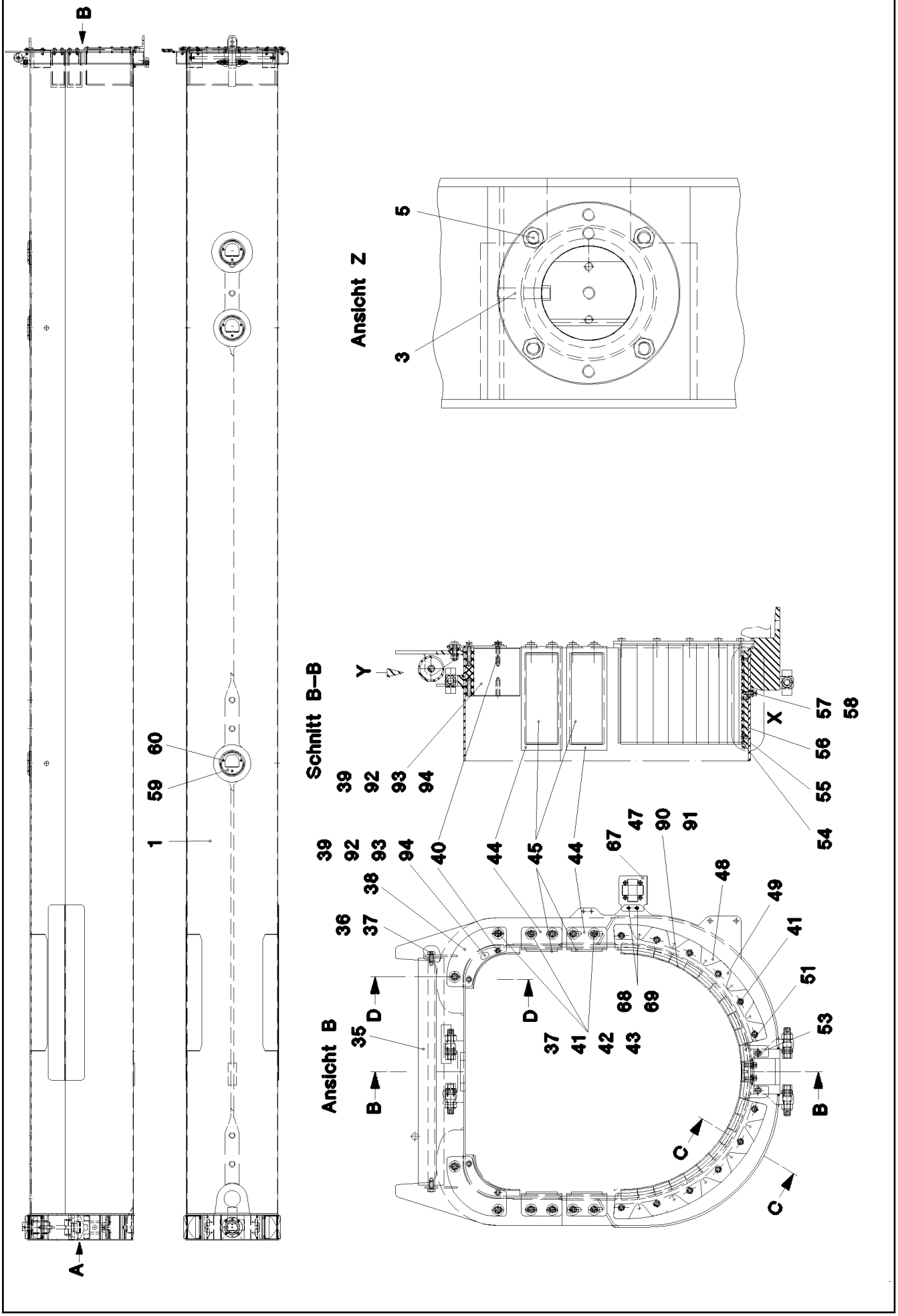
B
A
60
59
1
Ansicht Z
5
3
Schnitt B–B
Y
39
92
93
94
40
44
45
44
67
47
90
91
57
58
X
56
55
54
48
49
41
51
53
36
37
38
35
D
D
B
B
68
69
37
41
42
43
C
C
Ansicht B

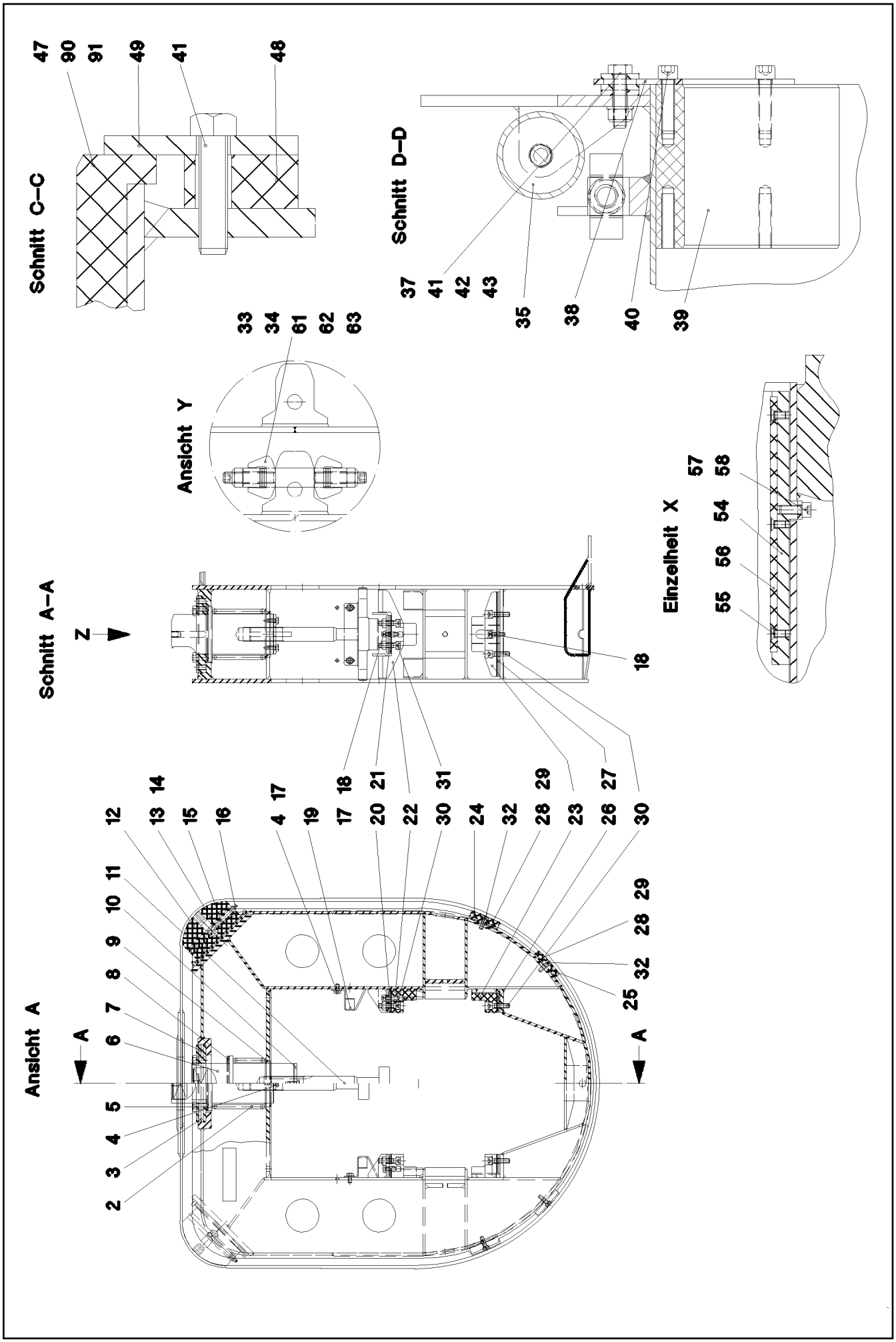


| | | |
|---|---|---|
| 16.2.2017<br>065606<br>LIEBHERR | etk_en_de_048005 LTR 1100<br><br>TELESCOPIC SECT.2 PRE-ASSEMBL<br>TELESKOP 2 VORM. | 283 (2/3)<br><br>3 103 000<br>91 62 544 08 |

| Pos. | Item | Quantity | Description | Bezeichnung |
|---|---|---|---|---|
| 1 | 91 45 070 08 | 1 | TELESCOPIC SECT.2 WELD.CONSTR | TELESKOP 2 SCHWK. |
| 2 | 72 00 096 08 | 1 | PRESSURE SPRING 10X105X150 SPF | DRUCKFEDER |
| 3 | 43 06 708 08 | 1 | PARALLEL PIN ISO 2338 10H11X50 30CRNI | ZYLINDERSTIFT |
| 4 | 11 65 161 2 | 6 | HEX SCREW ISO 4017 M8X16 8.8 480H SPF | SECHSKANTSCHRAUBE |
| 5 | 40 65 191 | 4 | HEX SCREW ISO 4017 M12X70 8.8 A3C | SECHSKANTSCHRAUBE |
| 6 | 95 70 110 08 | 1 | PIN 125.0X233 35NICRMOV125 | BOLZEN |
| 7 | 95 70 111 08 | 1 | COVER RD175X22 S960QL | DECKEL |
| 8 | 95 70 112 08 | 4 | PLATE 2X124X124 DC01 FE//ZN20//C | BLECH |
| 9 | 95 70 113 08 | 1 | BUSHING RD115X13 S960QL | BUCHSE |
| 10 | 97 01 483 08 | 1 | PLATE 5x69x44 S960QL | BLECH |
| 11 | 95 70 379 08 | 1 | MUSHROOM-SHAPED DRAWING BOLT 75x2 | ZIEHPILZ |
| 12 | 28 30 672 08 | 2 | BEARING PLATE 75X140X200 PA6G+OEL SP | LAGERPLATTE |
| 15 | 70 45 008 08 | 2 | BUSHING 16X140 9SM28K | BUCHSE |
| 16 | 77 43 242 | 2 | HYDRAULIC-TYPE LUBRICAT.NIPPLE DIN 71 | KEGELSCHMIERNIPPEL |
| 17 | 10 28 980 3 | 6 | WASHER ISO 7089 8 300HV 480H SPF | SCHEIBE |
| 18 | 49 01 162 | 4 | SOCKET HEAD SCREW ISO 4762 M8X30 8.8 | ZYLINDERSCHRAUBE |
| 19 | 95 70 252 08 | 2 | PLATE 2.5x229x148 DC01 FE//ZN20//C | BLECH |
| 22 | 28 30 936 08 | 2 | BEARING PLATE 53X87X200 PA6G+OEL SP | LAGERPLATTE |
| 23 | 28 30 937 08 | 2 | BEARING PLATE 53X57X192 PA6G+OEL SP | LAGERPLATTE |
| 24 | 28 30 938 08 | 2 | BEARING PLATE 14x70x202 PA6G+OEL SPF | LAGERPLATTE |
| 25 | 28 30 939 08 | 2 | BEARING PLATE 12X70X202 PA6G+OEL SP | LAGERPLATTE |
| 30 | 11 69 062 8 | 8 | SOCKET HEAD SCREW ISO 4762 M10X40 8 | ZYLINDERSCHRAUBE |
| 31 | 10 87 560 6 | 4 | HEX NUT DIN 985 M10 8 FLZN SPF | SECHSKANTMUTTER |
| 32 | 10 87 556 1 | 8 | SOCKET HEAD SCREW DIN 6912 M8X25 8.8 | ZYLINDERSCHRAUBE |
| 33 | 97 24 267 08 | 4 | GUIDE ISO 8062-3DCTG6 30X50X78 G18NI | EINWEISER |
| 34 | 41 19 024 08 | 4 | HEX NUT DIN 985 M20 10 A3C | SECHSKANTMUTTER |
| 35 | 74 90 114 08 | 1 | CARRYING ROLLER 80/5/20X700 GALV.VER | TRAGROLLE |
| 36 | 11 63 174 2 | 2 | HEX SCREW ISO 4017 M12X30 8.8 FLZN SP | SECHSKANTSCHRAUBE |
| 37 | 10 28 980 4 | 14 | WASHER ISO 7089 12 300HV FLZN SPF | SCHEIBE |
| 38 | 95 54 506 08 | 2 | PLATE 5X184X184 S960QL | BLECH |
| 40 | 11 84 014 0 | 4 | SOCKET HEAD SCREW ISO 4762 M12X50 8 | ZYLINDERSCHRAUBE |
| 41 | 11 84 013 6 | 24 | HEX SCREW ISO 4017 M12X50 8.8 FLZN | SECHSKANTSCHRAUBE |
| 42 | 10 17 935 6 | 36 | WASHER DIN 6340 13 FLZN SPF | SCHEIBE |
| 43 | 10 87 560 7 | 12 | HEX NUT DIN 985 M12 8 FLZN SPF | SECHSKANTMUTTER |
| 44 | 95 70 325 08 | 4 | PLATE 4x383x125 S315MC FE//ZN20//C | BLECH |
| 45 | 28 30 943 08 | 4 | BEARING PLATE 14X105X290 PA6G+OEL SP | LAGERPLATTE |
| 48 | 28 30 949 08 | 2 | DISTANCE PLATE 22X141X583 PA6G | DISTANZPLATTE |
| 49 | 95 70 381 08 | 2 | PLATE 8X395X448 S960QL | BLECH |
| 51 | 95 70 329 08 | 1 | PLATE 8x160x79 S960QL | BLECH |
| 53 | 40 66 087 08 | 2 | HEX SCREW ISO 4017 M12X25 10.9 FLZN SP | SECHSKANTSCHRAUBE |
| 54 | 95 54 507 08 | 1 | PLATE 60X308X36 S960QL FE//FLZN10//NC | BLECH |
| 55 | 40 86 003 08 | 3 | COUNTERSUNK SCREW DIN 7991 M8X16 8. | SENKSCHRAUBE |
| 56 | 28 30 826 08 | 1 | SLIDE PLATE 8X60X280 PA6G+OEL SPF | GLEITPLATTE |
| 57 | 95 54 508 08 | 1 | PLATE 5X20X80 S960QL | BLECH |
| 58 | 10 41 516 2 | 2 | SOCKET HEAD SCREW ISO 4762 M10X25 8 | ZYLINDERSCHRAUBE |
| 59 | 28 30 945 08 | 3 | COVER RD200X12 PA6G | DECKEL |
| 60 | 46 00 157 | 9 | COUNTERSUNK SCREW DIN 7991 M8X20 8. | SENKSCHRAUBE |
| 61 | 11 69 132 7 | 12 | WASHER ISO 7092 20 300HV FLZN SPF | SCHEIBE |
| 62 | 42 50 514 08 | 8 | SPRING WASHER DIN 137 B 20 | FEDERSCHEIBE |
| 63 | 40 44 076 08 | 4 | GRUB SCREW ISO 4026 M20X90 8.8 A3C | GEWINDESTIFT |
| 67 | 97 37 747 08 | 1 | ROLLER ORIFICE FE//ZNNI8//CN//T0 | ROLLENMUNDSTUECK |
| 68 | 10 87 552 9 | 2 | HEX SCREW ISO 4017 M6X25 8.8 480H SPF | SECHSKANTSCHRAUBE |
| 69 | 41 19 004 08 | 2 | HEX NUT DIN 985 M6 8 A2C | SECHSKANTMUTTER |

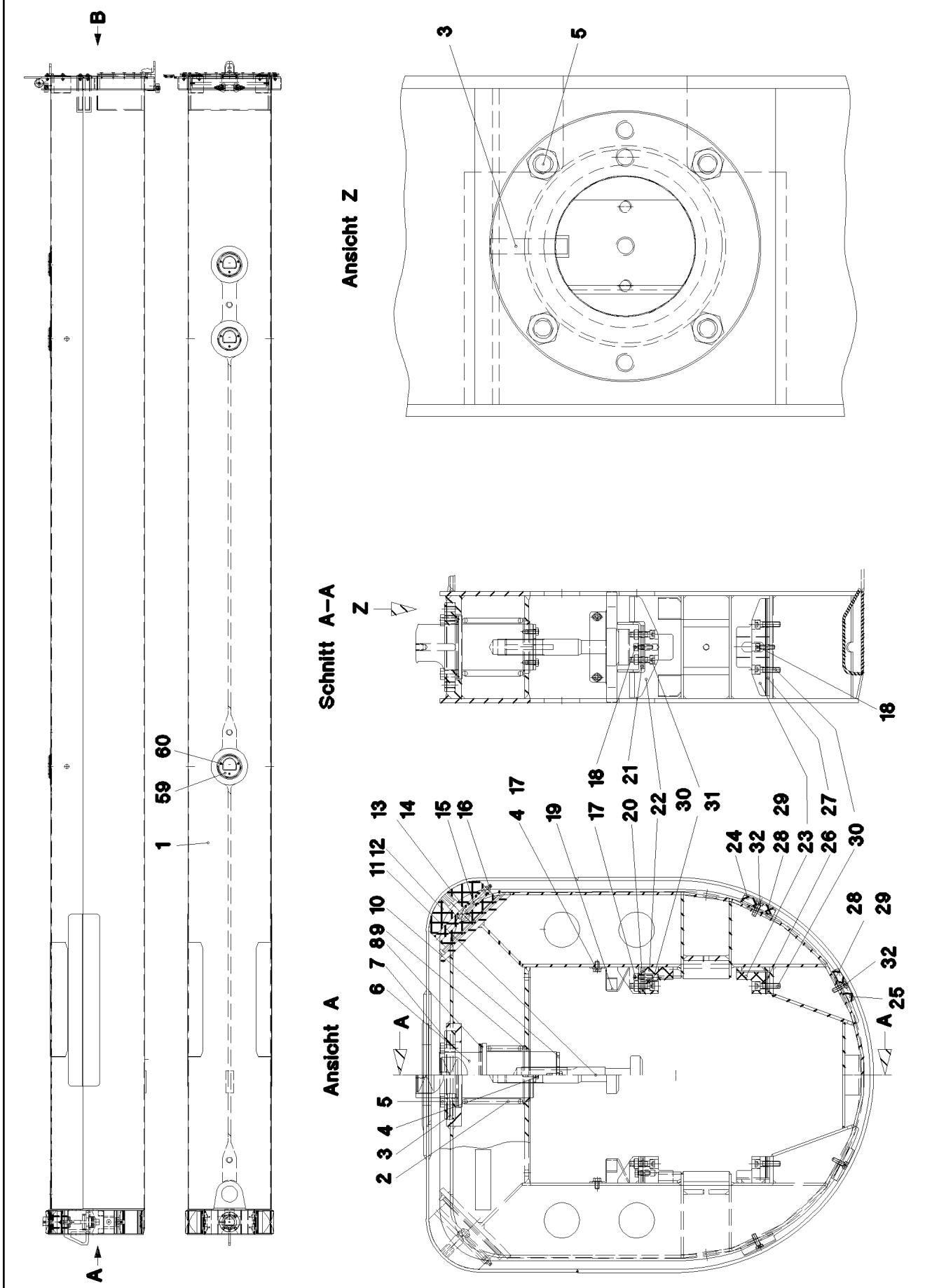


| | | |
|---|---|---|
| 16.2.2017<br>065607<br>LIEBHERR | etk_en_de_048005 LTR 1100<br><br>TELESCOPIC SECT.3 PRE-ASSEMB<br>TELESKOP 3 VORM. | 285 (1/3)<br><br>3 104 000<br>91 62 545 08 |

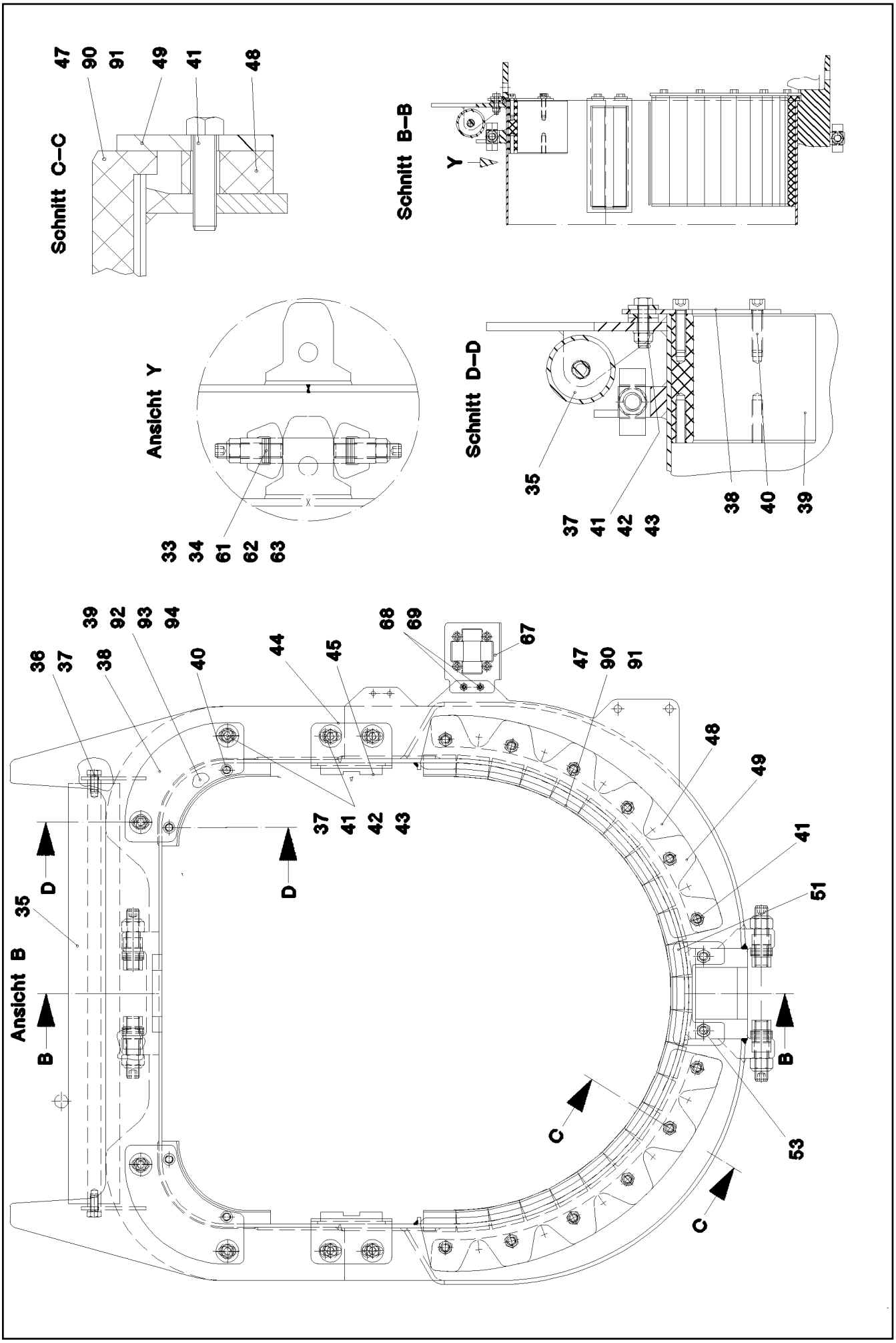
Schnitt C–C
47
90
91
49
41
48
Schnitt B–B
Y
Ansicht Y
33
34
61
62
63
Schnitt D–D
35
37
41
42
43
38
40
39
Ansicht B
36
37
38
39
92
93
94
40
44
45
68
69
67
47
90
91
48
49
41
51
53
35
37
41
42
43
D
D
B
B
C
C

| Pos. | Item | Quantity | Description | Bezeichnung |
|---|---|---|---|---|
| 1 | 91 45 071 08 | 1 | TELESCOPIC SECT.3 WELD.CONST | TELESKOP 3 SCHWK. |
| 2 | 72 00 096 08 | 1 | PRESSURE SPRING 10X105X150 SPF | DRUCKFEDER |
| 3 | 43 06 708 08 | 1 | PARALLEL PIN ISO 2338 10H11X50 30CRNI | ZYLINDERSTIFT |
| 4 | 11 65 161 2 | 6 | HEX SCREW ISO 4017 M8X16 8.8 480H SPF | SECHSKANTSCHRAUBE |
| 5 | 40 65 191 | 4 | HEX SCREW ISO 4017 M12X70 8.8 A3C | SECHSKANTSCHRAUBE |
| 6 | 95 70 110 08 | 1 | PIN 125.0X233 35NICRMOV125 | BOLZEN |
| 7 | 95 70 111 08 | 1 | COVER RD175X22 S960QL | DECKEL |
| 8 | 95 70 112 08 | 4 | PLATE 2X124X124 DC01 FE//ZN20//C | BLECH |
| 9 | 95 70 113 08 | 1 | BUSHING RD115X13 S960QL | BUCHSE |
| 10 | 97 01 483 08 | 1 | PLATE 5x69x44 S960QL | BLECH |
| 11 | 95 70 563 08 | 1 | MUSHROOM-SHAPED DRAWING BOLT 75x2 | ZIEHPILZ |
| 12 | 28 30 672 08 | 2 | BEARING PLATE 75X140X200 PA6G+OEL SP | LAGERPLATTE |
| 15 | 70 45 008 08 | 2 | BUSHING 16X140 9SM28K | BUCHSE |
| 16 | 77 43 242 | 2 | HYDRAULIC-TYPE LUBRICAT.NIPPLE DIN 71 | KEGELSCHMIERNIPPEL |
| 17 | 10 28 980 3 | 6 | WASHER ISO 7089 8 300HV 480H SPF | SCHEIBE |
| 18 | 49 01 162 | 4 | SOCKET HEAD SCREW ISO 4762 M8X30 8.8 | ZYLINDERSCHRAUBE |
| 19 | 95 70 252 08 | 2 | PLATE 2.5x229x148 DC01 FE//ZN20//C | BLECH |
| 22 | 28 30 936 08 | 2 | BEARING PLATE 53X87X200 PA6G+OEL SP | LAGERPLATTE |
| 23 | 28 30 937 08 | 2 | BEARING PLATE 53X57X192 PA6G+OEL SP | LAGERPLATTE |
| 24 | 28 30 938 08 | 2 | BEARING PLATE 14x70x202 PA6G+OEL SPF | LAGERPLATTE |
| 25 | 28 30 939 08 | 2 | BEARING PLATE 12X70X202 PA6G+OEL SP | LAGERPLATTE |
| 30 | 11 69 062 8 | 8 | SOCKET HEAD SCREW ISO 4762 M10X40 8 | ZYLINDERSCHRAUBE |
| 31 | 10 87 560 6 | 4 | HEX NUT DIN 985 M10 8 FLZN SPF | SECHSKANTMUTTER |
| 32 | 10 87 556 1 | 8 | SOCKET HEAD SCREW DIN 6912 M8X25 8.8 | ZYLINDERSCHRAUBE |
| 33 | 97 24 267 08 | 4 | GUIDE ISO 8062-3DCTG6 30X50X78 G18NI | EINWEISER |
| 34 | 41 19 024 08 | 4 | HEX NUT DIN 985 M20 10 A3C | SECHSKANTMUTTER |
| 35 | 74 90 092 08 | 1 | CARRYING ROLLER 80/5/20X650 GALV.VER | TRAGROLLE |
| 36 | 11 63 174 2 | 2 | HEX SCREW ISO 4017 M12X30 8.8 FLZN SP | SECHSKANTSCHRAUBE |
| 37 | 10 28 980 4 | 10 | WASHER ISO 7089 12 300HV FLZN SPF | SCHEIBE |
| 38 | 95 54 506 08 | 2 | PLATE 5X184X184 S960QL | BLECH |
| 40 | 11 84 014 0 | 4 | SOCKET HEAD SCREW ISO 4762 M12X50 8 | ZYLINDERSCHRAUBE |
| 41 | 11 84 013 6 | 20 | HEX SCREW ISO 4017 M12X50 8.8 FLZN | SECHSKANTSCHRAUBE |
| 42 | 10 17 935 6 | 24 | WASHER DIN 6340 13 FLZN SPF | SCHEIBE |
| 43 | 10 87 560 7 | 8 | HEX NUT DIN 985 M12 8 FLZN SPF | SECHSKANTMUTTER |
| 44 | 95 70 325 08 | 2 | PLATE 4x383x125 S315MC FE//ZN20//C | BLECH |
| 45 | 28 30 947 08 | 2 | BEARING PLATE 18x105x290 PA6G+OEL SP | LAGERPLATTE |
| 48 | 28 30 950 08 | 2 | DISTANCE PLATE 22X137X551 PA6G | DISTANZPLATTE |
| 49 | 95 70 562 08 | 2 | PLATE 8X394X423 S960QL | BLECH |
| 51 | 97 02 983 08 | 1 | PLATE 8x160x79 S700MC | BLECH |
| 53 | 40 66 087 08 | 2 | HEX SCREW ISO 4017 M12X25 10.9 FLZN SP | SECHSKANTSCHRAUBE |
| 59 | 28 30 945 08 | 3 | COVER RD200X12 PA6G | DECKEL |
| 60 | 46 00 157 | 9 | COUNTERSUNK SCREW DIN 7991 M8X20 8. | SENKSCHRAUBE |
| 61 | 11 69 132 7 | 12 | WASHER ISO 7092 20 300HV FLZN SPF | SCHEIBE |
| 62 | 42 50 514 08 | 8 | SPRING WASHER DIN 137 B 20 | FEDERSCHEIBE |
| 63 | 40 44 076 08 | 4 | GRUB SCREW ISO 4026 M20X90 8.8 A3C | GEWINDESTIFT |
| 67 | 97 37 747 08 | 1 | ROLLER ORIFICE FE//ZNNI8//CN//T0 | ROLLENMUNDSTUECK |
| 68 | 10 87 552 9 | 2 | HEX SCREW ISO 4017 M6X25 8.8 480H SPF | SECHSKANTSCHRAUBE |
| 69 | 41 19 004 08 | 2 | HEX NUT DIN 985 M6 8 A2C | SECHSKANTMUTTER |

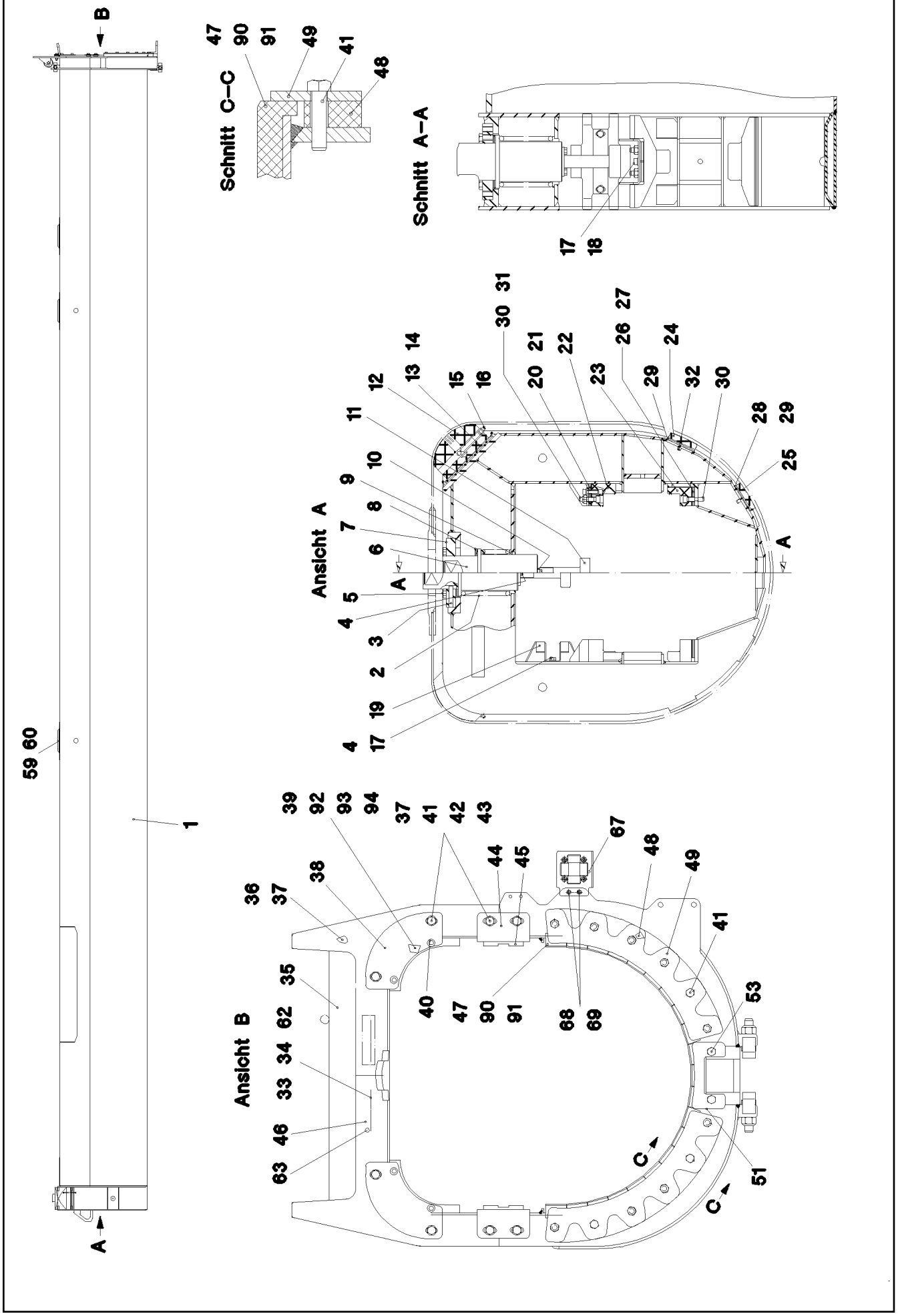


| | | |
|---|---|---|
| 16.2.2017<br>065609 | etk_en_de_048005 LTR 1100 | 288 (1/2) |
| LIEBHERR | TELESCOPIC SECT.IV PRE-ASSEMBL<br>TELESKOP 4 VORM. | 3 105 000<br>91 62 546 08 |

| Pos. | Item | Quantity | Description | Bezeichnung |
|---|---|---|---|---|
| 1 | 91 45 072 08 | 1 | TELESCOPIC SECT.4 WELD.CONSTR | TELESKOP 4 SCHWK. |
| 2 | 72 00 093 08 | 1 | PRESSURE SPRING 10X100X150 X10CRNI | DRUCKFEDER |
| 3 | 43 06 708 08 | 1 | PARALLEL PIN ISO 2338 10H11X50 30CRNI | ZYLINDERSTIFT |
| 4 | 11 65 161 2 | 4 | HEX SCREW ISO 4017 M8X16 8.8 480H SPF | SECHSKANTSCHRAUBE |
| 5 | 40 65 191 | 4 | HEX SCREW ISO 4017 M12X70 8.8 A3C | SECHSKANTSCHRAUBE |
| 6 | 95 70 176 08 | 1 | PIN 115.0X228 35NICRMOV125 | BOLZEN |
| 7 | 95 70 177 08 | 1 | COVER RD165X22 S960QL | DECKEL |
| 8 | 95 70 188 08 | 4 | PLATE 2X114X114 DC01 FE//ZN20//C | BLECH |
| 9 | 95 37 261 08 | 1 | BUSHING RD110X13 S960QL GASN. | BUCHSE |
| 10 | 95 47 627 08 | 1 | PLATE 5X41X63 S960QL | BLECH |
| 11 | 95 47 666 08 | 1 | SCREW RD70X164 35NICRMOV125 | SCHRAUBE |
| 12 | 28 30 940 08 | 2 | BEARING PLATE 75X140X190 PA6G+OEL SP | LAGERPLATTE |
| 15 | 70 45 008 08 | 2 | BUSHING 16X140 9SM28K | BUCHSE |
| 16 | 77 43 242 | 2 | HYDRAULIC-TYPE LUBRICAT.NIPPLE DIN 71 | KEGELSCHMIERNIPPEL |
| 17 | 10 28 980 3 | 4 | WASHER ISO 7089 8 300HV 480H SPF | SCHEIBE |
| 18 | 49 01 162 | 4 | SOCKET HEAD SCREW ISO 4762 M8X30 8.8 | ZYLINDERSCHRAUBE |
| 19 | 95 70 207 08 | 1 | PLATE 2.5x225x268 DC01 FE//ZN20//C | BLECH |
| 22 | 28 30 936 08 | 2 | BEARING PLATE 53X87X200 PA6G+OEL SP | LAGERPLATTE |
| 23 | 28 30 937 08 | 2 | BEARING PLATE 53X57X192 PA6G+OEL SP | LAGERPLATTE |
| 24 | 28 30 941 08 | 2 | BEARING PLATE 14X70X192 PA6G+OEL SP | LAGERPLATTE |
| 25 | 28 30 942 08 | 2 | BEARING PLATE 12X70X192 PA6G+OEL SP | LAGERPLATTE |
| 30 | 11 69 062 8 | 8 | SOCKET HEAD SCREW ISO 4762 M10X40 8 | ZYLINDERSCHRAUBE |
| 31 | 10 87 560 6 | 4 | HEX NUT DIN 985 M10 8 FLZN SPF | SECHSKANTMUTTER |
| 32 | 10 87 556 1 | 8 | SOCKET HEAD SCREW DIN 6912 M8X25 8.8 | ZYLINDERSCHRAUBE |
| 33 | 97 24 267 08 | 4 | GUIDE ISO 8062-3DCTG6 30X50X78 G18NI | EINWEISER |
| 34 | 11 69 132 7 | 12 | WASHER ISO 7092 20 300HV FLZN SPF | SCHEIBE |
| 35 | 74 90 107 08 | 1 | CARRYING ROLLER 80/5/20X600 GALV.VER | TRAGROLLE |
| 36 | 11 63 174 2 | 2 | HEX SCREW ISO 4017 M12X30 8.8 FLZN SP | SECHSKANTSCHRAUBE |
| 37 | 10 28 980 4 | 10 | WASHER ISO 7089 12 300HV FLZN SPF | SCHEIBE |
| 38 | 95 54 506 08 | 2 | PLATE 5X184X184 S960QL | BLECH |
| 40 | 11 84 014 0 | 4 | SOCKET HEAD SCREW ISO 4762 M12X50 8 | ZYLINDERSCHRAUBE |
| 41 | 11 84 013 6 | 20 | HEX SCREW ISO 4017 M12X50 8.8 FLZN | SECHSKANTSCHRAUBE |
| 42 | 10 17 935 6 | 24 | WASHER DIN 6340 13 FLZN SPF | SCHEIBE |
| 43 | 10 87 560 7 | 8 | HEX NUT DIN 985 M12 8 FLZN SPF | SECHSKANTMUTTER |
| 44 | 95 70 325 08 | 2 | PLATE 4x383x125 S315MC FE//ZN20//C | BLECH |
| 45 | 28 30 947 08 | 2 | BEARING PLATE 18x105x290 PA6G+OEL SP | LAGERPLATTE |
| 46 | 41 19 024 08 | 4 | HEX NUT DIN 985 M20 10 A3C | SECHSKANTMUTTER |
| 48 | 28 30 951 08 | 2 | DISTANCE PLATE 22X306X425 PA6G | DISTANZPLATTE |
| 49 | 95 70 399 08 | 2 | PLATE 8X315X425 S960QL | BLECH |
| 51 | 97 02 983 08 | 1 | PLATE 8x160x79 S700MC | BLECH |
| 53 | 40 66 087 08 | 2 | HEX SCREW ISO 4017 M12X25 10.9 FLZN SP | SECHSKANTSCHRAUBE |
| 59 | 28 30 945 08 | 3 | COVER RD200X12 PA6G | DECKEL |
| 60 | 46 00 157 | 9 | COUNTERSUNK SCREW DIN 7991 M8X20 8. | SENKSCHRAUBE |
| 62 | 42 50 514 08 | 8 | SPRING WASHER DIN 137 B 20 | FEDERSCHEIBE |
| 63 | 40 44 076 08 | 4 | GRUB SCREW ISO 4026 M20X90 8.8 A3C | GEWINDESTIFT |
| 67 | 97 37 747 08 | 1 | ROLLER ORIFICE FE//ZNNI8//CN//T0 | ROLLENMUNDSTUECK |
| 68 | 10 87 552 9 | 2 | HEX SCREW ISO 4017 M6X25 8.8 480H SPF | SECHSKANTSCHRAUBE |
| 69 | 41 19 004 08 | 2 | HEX NUT DIN 985 M6 8 A2C | SECHSKANTMUTTER |

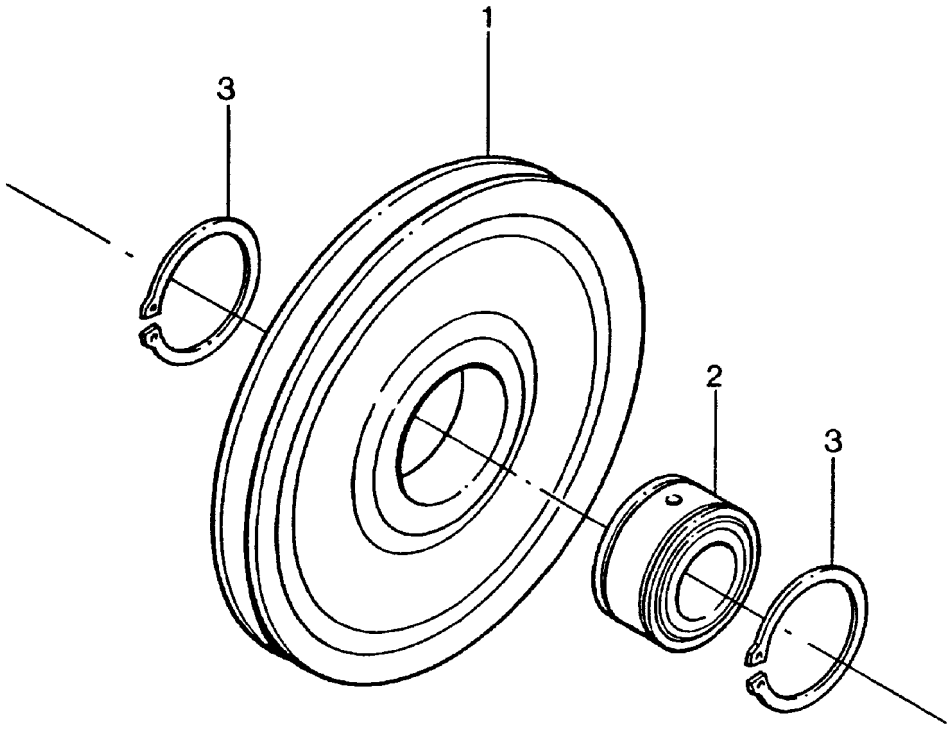


| Pos. | Item | Quantity | Description | Bezeichnung |
|---|---|---|---|---|
| 1 | 28 81 577 08 | 1 | ROPE PULLEY RD525X56 PA6G SPF | SEILROLLE |
| 2 | 74 59 025 08 | 1 | ROLLER BEARING 100X150X67 | WAELZLAGER |
| 3 | 42 80 083 08 | 2 | LOCKING RING DIN 471 150X4 | SICHERUNGSRING |

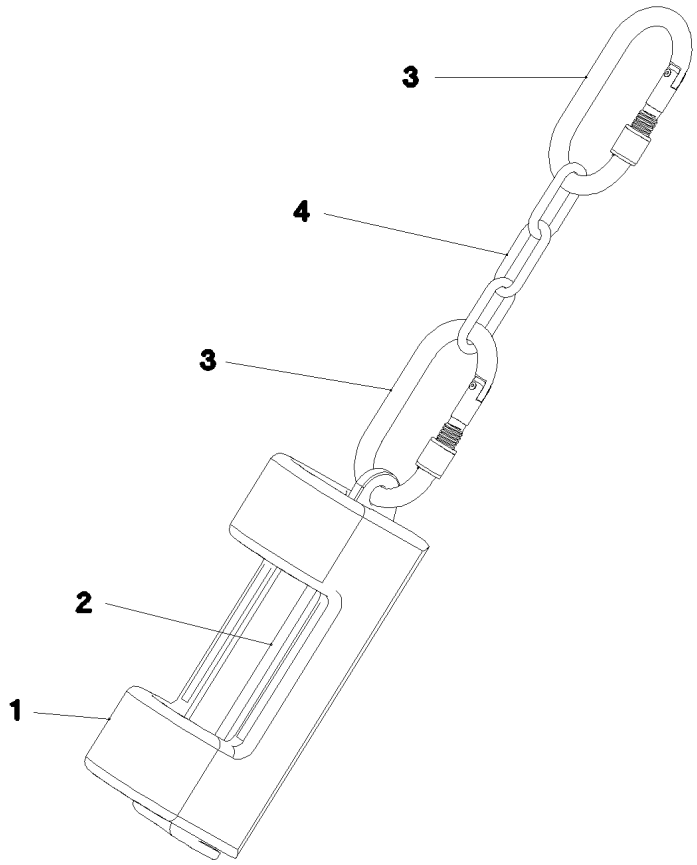


| Pos. | Item | Quantity | Description | Bezeichnung |
|---|---|---|---|---|
| 1 | 38 82 612 08 | 1 | WEIGHT 80X105X230 EN-GJS400-18 | GEWICHT |
| 2 | 38 82 613 08 | 1 | WEIGHT 50X52X262 EN-GJS400-18 FE//ZN20 | GEWICHT |
| 3 | 10 47 304 0 | 2 | SCREW CARABINER OVAL 130X12 S355J2G | SCHRAUBKARABINER |
| 4 | 10 66 397 0 | 2 | CHAIN DIN 763 7X49 0.3t ST35 VERZ | KETTE |

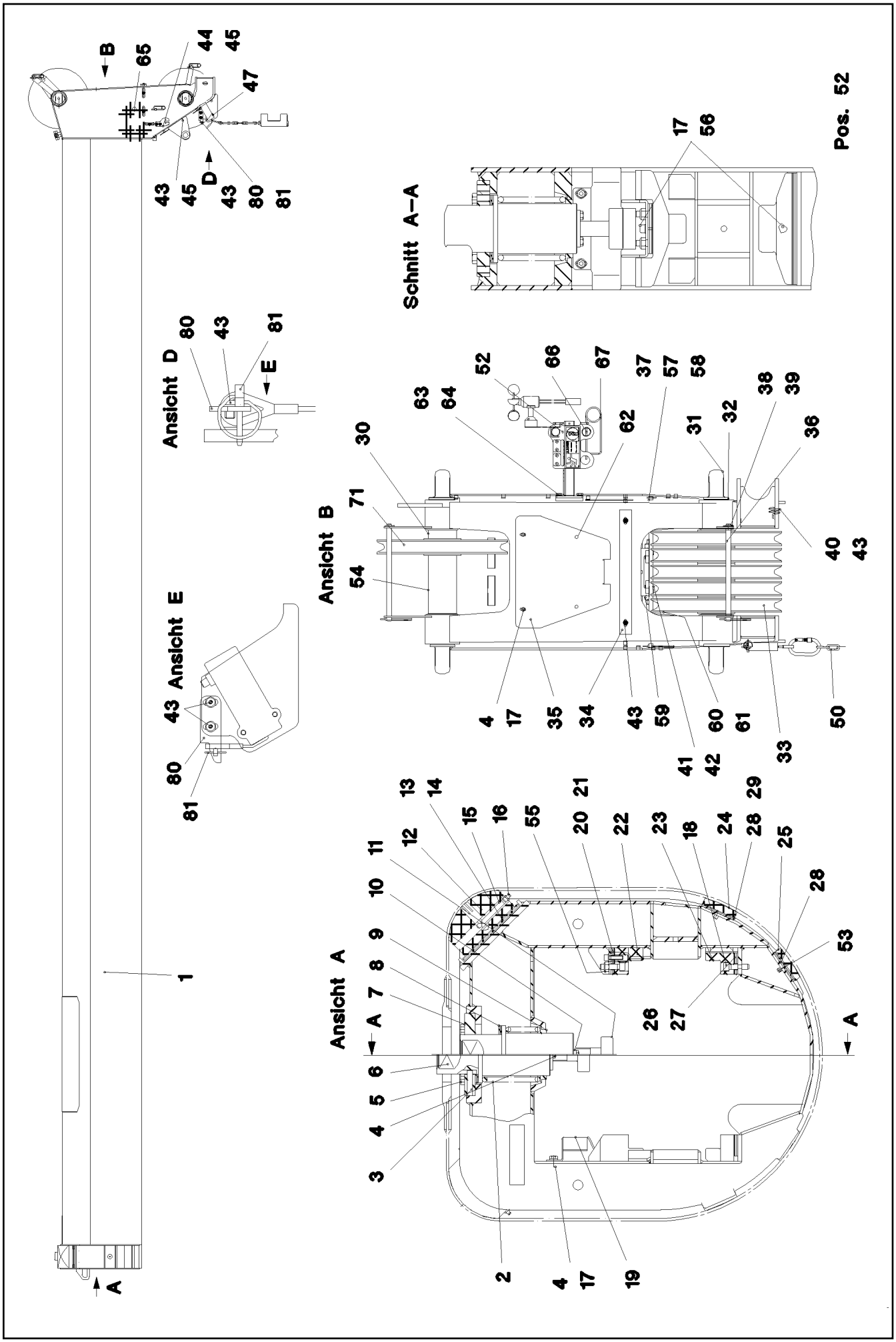


| | | |
|---|---|---|
| 16.2.2017<br>065610<br>LIEBHERR | etk_en_de_048005 LTR 1100<br><br>TELESCOPIC SECT.5 PRE-ASSEMBLE<br>TELESKOP 5 VORM. | 292 (1/3)<br><br>3 106 000<br>91 60 313 08 |

| Pos. | Item | Quantity | Description | Bezeichnung |
|---|---|---|---|---|
| 1 | 91 62 607 08 | 1 | TELESCOPIC SECT.5 WELD.CONSTR. | TELESKOP 5 SCHWK. |
| 2 | 72 00 093 08 | 1 | PRESSURE SPRING 10X100X150 X10CRNI | DRUCKFEDER |
| 3 | 43 06 708 08 | 1 | PARALLEL PIN ISO 2338 10H11X50 30CRNI | ZYLINDERSTIFT |
| 4 | 11 65 161 2 | 4 | HEX SCREW ISO 4017 M8X16 8.8 480H SPF | SECHSKANTSCHRAUBE |
| 5 | 40 65 191 | 4 | HEX SCREW ISO 4017 M12X70 8.8 A3C | SECHSKANTSCHRAUBE |
| 6 | 95 70 176 08 | 1 | PIN 115.0X228 35NICRMOV125 | BOLZEN |
| 7 | 95 70 177 08 | 1 | COVER RD165X22 S960QL | DECKEL |
| 8 | 95 70 188 08 | 4 | PLATE 2X114X114 DC01 FE//ZN20//C | BLECH |
| 9 | 95 37 261 08 | 1 | BUSHING RD110X13 S960QL GASN. | BUCHSE |
| 10 | 95 47 627 08 | 1 | PLATE 5X41X63 S960QL | BLECH |
| 11 | 95 47 667 08 | 1 | SCREW RD70X120 35NICRMOV125 | SCHRAUBE |
| 12 | 28 30 940 08 | 2 | BEARING PLATE 75X140X190 PA6G+OEL SP | LAGERPLATTE |
| 15 | 70 45 008 08 | 2 | BUSHING 16X140 9SM28K | BUCHSE |
| 16 | 77 43 242 | 2 | HYDRAULIC-TYPE LUBRICAT.NIPPLE DIN 71 | KEGELSCHMIERNIPPEL |
| 17 | 10 28 980 3 | 6 | WASHER ISO 7089 8 300HV 480H SPF | SCHEIBE |
| 18 | 11 69 062 8 | 4 | SOCKET HEAD SCREW ISO 4762 M10X40 8 | ZYLINDERSCHRAUBE |
| 19 | 95 70 189 08 | 1 | PLATE 2.5x227x177 DC01 FE//ZN20//C | BLECH |
| 22 | 28 30 936 08 | 2 | BEARING PLATE 53X87X200 PA6G+OEL SP | LAGERPLATTE |
| 23 | 28 30 937 08 | 2 | BEARING PLATE 53X57X192 PA6G+OEL SP | LAGERPLATTE |
| 24 | 28 30 941 08 | 2 | BEARING PLATE 14X70X192 PA6G+OEL SP | LAGERPLATTE |
| 25 | 28 30 942 08 | 2 | BEARING PLATE 12X70X192 PA6G+OEL SP | LAGERPLATTE |
| 30 | 94 03 800 08 | 1 | DISTANCE TUBE RD114,3X6,3X33 S355J2H | DISTANZROHR |
| 31 | 95 36 561 08 | 2 | AXLE RD110X818 35NICRMOV125 GASN. | ACHSE |
| 32 | 10 87 565 2 | 2 | LOCKING RING DIN 471 100X3 480H SPF | SICHERUNGSRING |
| 33 | 96 42 835 08 | 5 | ROPE PULLEY CPL. SPF<br>➪ 3 106 001 96 42 835 08 | SEILROLLE KPL. |
| 34 | 95 37 139 08 | 1 | U-PROFILE 1X500X74 DC01 FE//ZNNI8//CN/ | U-PROFIL |
| 35 | 95 18 924 08 | 1 | COVER 1.5X450X381 DC01 FE//ZN20//C | DECKEL |
| 36 | 45 25 491 08 | 2 | PIN DIN EN 22340 B20X390X374 S355J2C+C | BOLZEN |
| 37 | 45 01 188 08 | 1 | PIN ISO 2340 B16X610X595 ST.50-2K FE//ZN | BOLZEN |
| 38 | 43 31 012 08 | 2 | RETAINING SPRING 4X68 VERZ | SICHERUNGSFEDER |
| 39 | 43 30 055 08 | 2 | SPLIT PIN ISO 1234 4X40 ST A3C | SPLINT |
| 40 | 72 00 144 08 | 2 | CABLE CLAMP | KABELHALTER |
| 41 | 42 50 514 08 | 4 | SPRING WASHER DIN 137 B 20 | FEDERSCHEIBE |
| 42 | 11 69 132 7 | 16 | WASHER ISO 7092 20 300HV FLZN SPF | SCHEIBE |
| 43 | 10 41 285 4 | 31 | BUTTON HEAD SCREW AEHNL.ISO 7380-2 | HALBRUNDKOPFSCHRAUBE |
| 44 | 95 54 418 08 | 2 | PLATE S315MC FE//ZN20//C | BLECH |
| 45 | 95 36 500 08 | 14 | CABLE CLAMP 2X22X90 DC01 FE//ZN20//C | KABELHALTER |
| 47 | 40 01 466 | 2 | HEX SCREW ISO 4014 M8X45 8.8 A2C | SECHSKANTSCHRAUBE |
| 50 | 96 57 037 08 | 1 | HOIST LIM.SWITCH PLUMMET CPL<br>➪ 3 105 014 96 57 037 08 | HUBENDSCHALTER GEWICHT K |
| 52 | 96 35 560 08 | 1 | MOUNTING WELDED T ZN O | HALTERUNG SCHWK. |
| 53 | 10 87 556 1 | 8 | SOCKET HEAD SCREW DIN 6912 M8X25 8.8 | ZYLINDERSCHRAUBE |
| 54 | 95 18 923 08 | 1 | DISTANCE TUBE 114.3X234 S355J2H FE//ZN | DISTANZROHR |
| 55 | 10 87 560 6 | 4 | HEX NUT DIN 985 M10 8 FLZN SPF | SECHSKANTMUTTER |
| 56 | 49 01 162 | 4 | SOCKET HEAD SCREW ISO 4762 M8X30 8.8 | ZYLINDERSCHRAUBE |
| 57 | 43 31 028 08 | 1 | RETAINING SPRING 3 VERZ | SICHERUNGSFEDER |
| 58 | 43 30 038 08 | 1 | SPLIT PIN ISO 1234 3,2X32 ST A2K | SPLINT |
| 59 | 41 19 024 08 | 4 | HEX NUT DIN 985 M20 10 A3C | SECHSKANTMUTTER |
| 60 | 97 24 267 08 | 4 | GUIDE ISO 8062-3DCTG6 30X50X78 G18NI | EINWEISER |
| 61 | 40 44 076 08 | 4 | GRUB SCREW ISO 4026 M20X90 8.8 A3C | GEWINDESTIFT |
| 62 | 59 15 722 08 | 2 | COVER LID 12,7 | ABDECKKAPPE |
| 63 | 11 65 100 6 | 3 | HEX SCREW ISO 4017 M12X20 8.8 FLZN SP | SECHSKANTSCHRAUBE |
| 64 | 10 28 980 4 | 3 | WASHER ISO 7089 12 300HV FLZN SPF | SCHEIBE |
| 65 | 95 37 494 08 | 1 | PLATE 4X190X250 S315MC FE//ZNNI8//CN//T | BLECH |
| 66 | 96 34 985 08 | 1 | PIPE WELDED | ROHR SCHWK. |
| 67 | 43 31 025 08 | 1 | RETAINING SPRING 5X122 A3C | SICHERUNGSFEDER |
| 68 | 77 39 335 08 | 1 | SHACKLE DIN 82101 0,25T NG0,25 ST VERZ | SCHAEKEL |
| 69 | 46 00 355 | 1 | HEX SCREW ISO 4017 M10X45 8.8 A3C | SECHSKANTSCHRAUBE |
| 70 | 10 87 560 6 | 1 | HEX NUT DIN 985 M10 8 FLZN SPF | SECHSKANTMUTTER |

| Pos. | Item | Quantity | Description | Bezeichnung |
|---|---|---|---|---|
| 71 | 92 73 100 08 | 1 | ROPE PULLEY CPL. SPF<br>⇨ 3 105 002 92 73 100 08 | SEILROLLE KPL. |
| 72 | 11 49 188 9 | 2 | WASHER ISO 7093-1 10 300HV FLZN SPF | SCHEIBE |
| 73 | 41 15 144 08 | 1 | HEX NUT ISO 4032 M10 8 A3C | SECHSKANTMUTTER |
| 80 | 97 91 320 08 | 1 | PLATE 4X110X34 S315MC FE//ZNNI8//CN//T | BLECH |
| 81 | 43 32 013 08 | 1 | SAFETY PLUG W HINGE-LID 5X32 VERZ | SICHERHEITSKLAPPSTECKER |

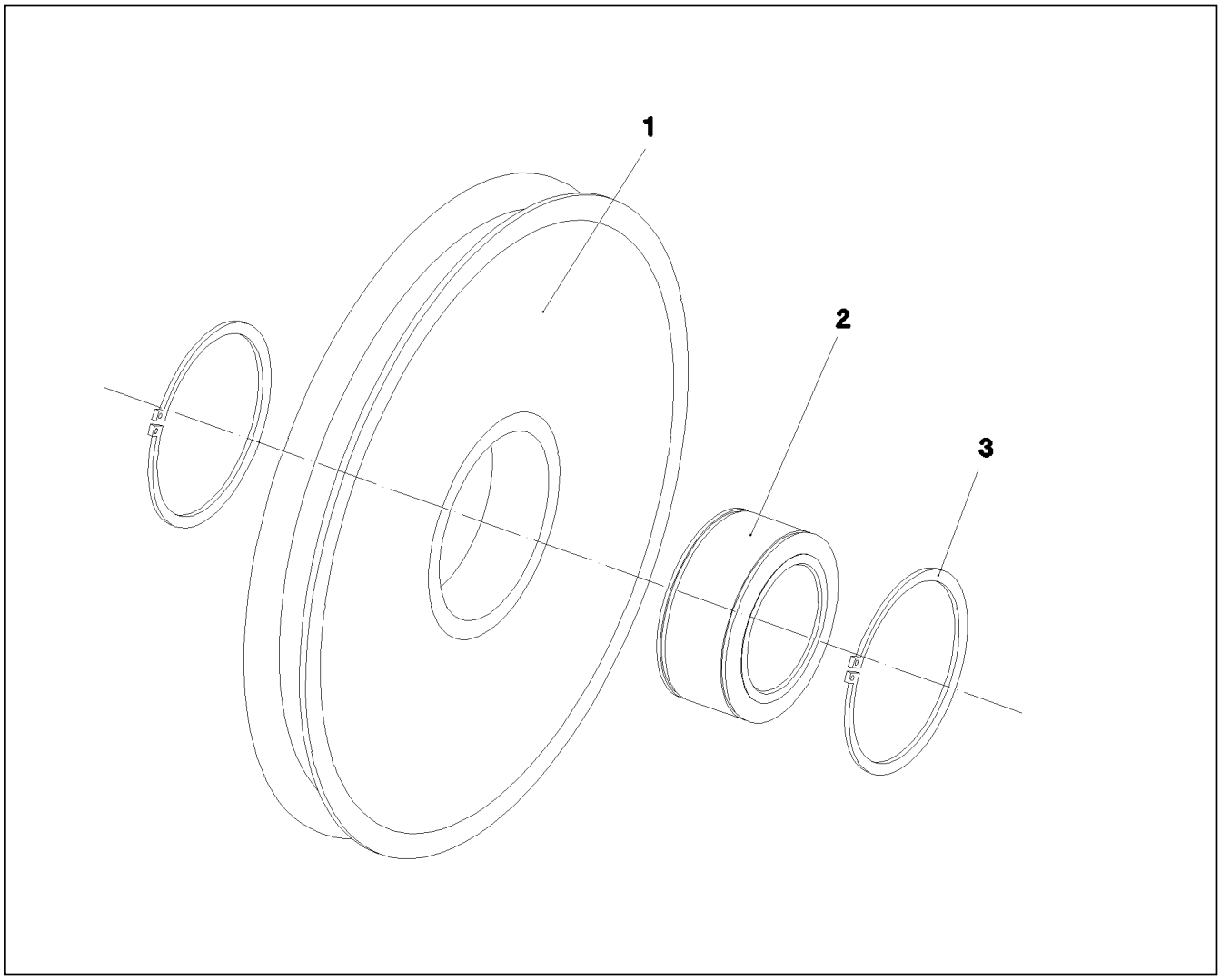


| Pos. | Item | Quantity | Description | Bezeichnung |
|---|---|---|---|---|
| 1 | 97 62 491 08 | 1 | ROPE PULLEY 525X56 S355J2G3 SPF | SEILROLLE |
| 2 | 74 59 025 08 | 1 | ROLLER BEARING 100X150X67 | WAELZLAGER |
| 3 | 42 80 083 08 | 2 | LOCKING RING DIN 471 150X4 | SICHERUNGSRING |
| 1050 | 11 11 111 08 | -99.75 | WEIGHT ALLOWANCE | GEWICHTSZUSCHLAG |

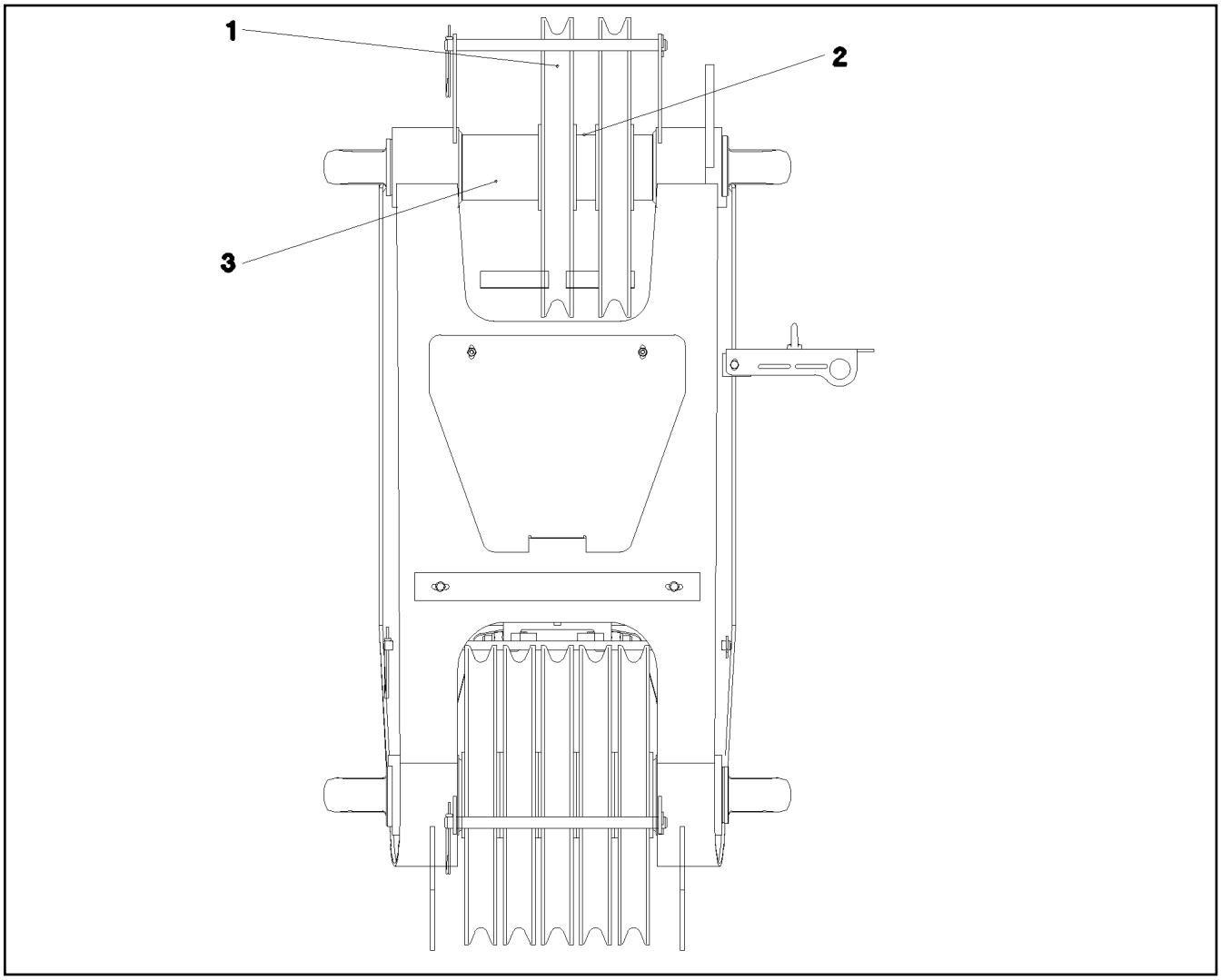


| Pos. | Item | Quantity | Description | Bezeichnung |
|---|---|---|---|---|
| 1 | 92 73 100 08 | 1 | ROPE PULLEY CPL. SPF<br>⇨ 3 105 002 92 73 100 08 | SEILROLLE KPL. |
| 2 | 94 03 800 08 | 1 | DISTANCE TUBE RD114,3X6,3X33 S355J2H | DISTANZROHR |
| 3 | 95 31 623 08 | 1 | TUBE 114,3X6,3X132 S355J2H FE//ZN20//C | ROHR |

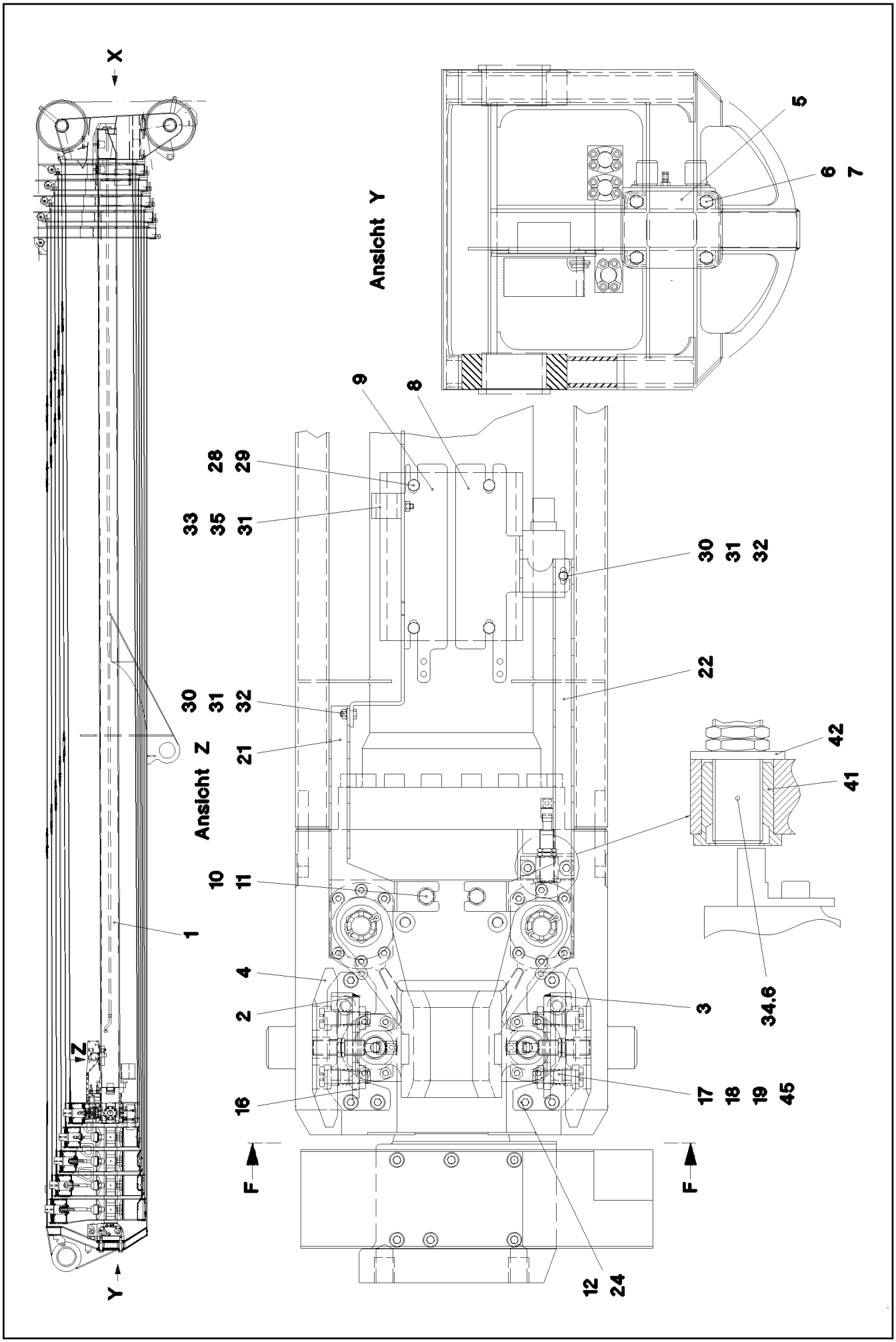


| | | |
|---|---|---|
| 16.2.2017<br>053708<br>LIEBHERR | etk_en_de_048005 LTR 1100<br><br>MECHANICAL EXTENSION SYSTEM<br>AUSSCHUBMECHANIK | 297 (1/3)<br><br>3 330<br>91 57 885 08 |

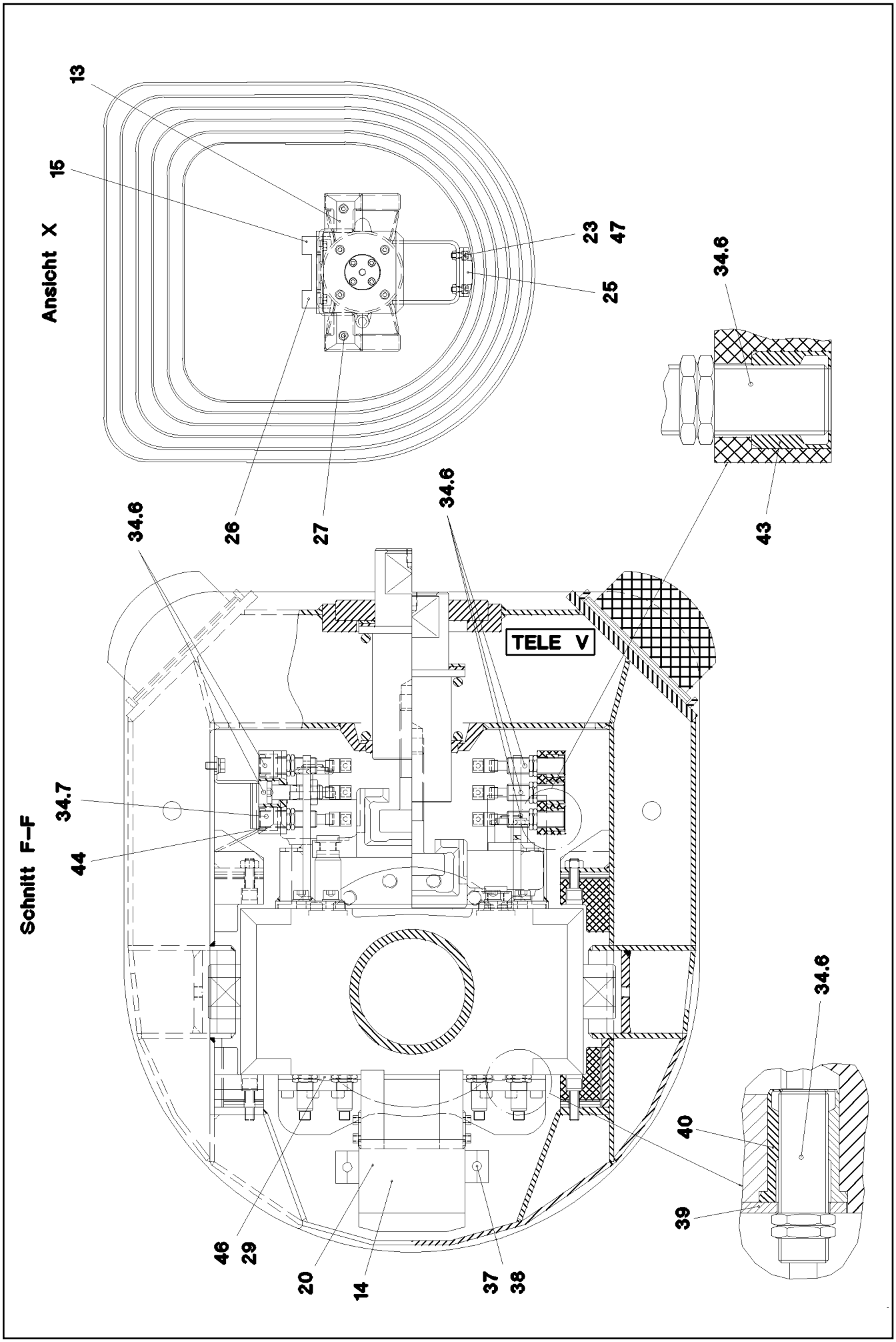
Ansicht X
13
15
23
47
25
26
27
34.6
43
Schnitt F–F
34.6
34.6
34.7
44
TELE V
46
29
20
14
37
38
40
39
34.6

| Pos. | Item | Quantity | Description | Bezeichnung |
|---|---|---|---|---|
| 1 | 10 47 300 1 | 1 | TELESCOPIC CYLINDER 180/135-9275 SPF<br>➪ X10473001 10 47 300 1 | TELESKOPZYLINDER |
| 2 | 92 57 213 08 | 1 | BRACKET,LEFT WELDED FE//ZN20//C | KONSOLE SCHWK.LI. |
| 3 | 92 57 214 08 | 1 | BRACKET,RIGHT WELDED FE//ZN20//C | KONSOLE SCHWK.RE. |
| 4 | 28 30 907 08 | 2 | SLIDER 30X90X190 PA6G+OEL SPF | GLEITSTUECK |
| 5 | 95 67 586 08 | 1 | PLATE 10X220X290 S960QL | BLECH |
| 6 | 40 62 227 08 | 4 | HEX SCREW ISO 4014 M24X135 10.9 FLZN | SECHSKANTSCHRAUBE |
| 7 | 46 00 146 | 4 | WASHER EN 14399-6 24 300-370HV FLZN SP | SCHEIBE |
| 8 | 95 41 800 08 | 1 | CONSOLE 4X260X239 S315MC FE//ZN20//C | KONSOLE |
| 9 | 95 38 436 08 | 1 | HOLDER 4X186X408 S315MC FE//ZN20//C | HALTER |
| 10 | 11 65 163 2 | 2 | HEX SCREW ISO 4017 M10X20 8.8 FLZN SP | SECHSKANTSCHRAUBE |
| 11 | 10 28 979 5 | 8 | WASHER ISO 7089 10 300HV FLZN SPF | SCHEIBE |
| 12 | 42 02 008 08 | 18 | WASHER ISO 7092 12 200HV A3C | SCHEIBE |
| 13 | 28 30 924 08 | 1 | SLIDER 50.0X372X207 PA6G+OEL SPF | GLEITSTUECK |
| 14 | 28 30 925 08 | 1 | SLIDER 100X115X250 PA6G+OEL SPF | GLEITSTUECK |
| 15 | 28 30 839 08 | 1 | SLIDER 40X170X575 PA6G+OEL SPF | GLEITSTUECK |
| 16 | 74 40 102 08 | 1 | SNAP HOOK DIN 5299 C60X6-120 ST VERZ | KARABINERHAKEN |
| 17 | 95 64 142 08 | 4 | SCREW 25X25X65 8.8 SPF | SCHRAUBE |
| 18 | 41 17 006 08 | 4 | HEX NUT ISO 4035 M16 04 A2K | SECHSKANTMUTTER |
| 19 | 72 00 094 08 | 4 | PRESSURE SPRING 1,6X18,2X44 | DRUCKFEDER |
| 20 | 46 00 054 | 4 | SOCKET HEAD SCREW ISO 4762 M12X70 8. | ZYLINDERSCHRAUBE |
| 21 | 95 50 448 08 | 1 | HOLDER 3X272X326 DC01 FE//ZN20//C | HALTER |
| 22 | 95 50 449 08 | 1 | HOLDER 3X272X501 DC01 FE//ZN20//C | HALTER |
| 23 | 12 20 126 3 | 4 | SOCKET HEAD SCREW ISO 4762 M12X30 8 | ZYLINDERSCHRAUBE |
| 24 | 10 41 516 2 | 6 | SOCKET HEAD SCREW ISO 4762 M10X25 8 | ZYLINDERSCHRAUBE |
| 25 | 28 30 926 08 | 1 | SLIDER 30X115X165 PA6G+OEL SPF | GLEITSTUECK |
| 26 | 40 42 031 | 4 | SOCKET HEAD SCREW ISO 4762 M12X25 8. | ZYLINDERSCHRAUBE |
| 27 | 40 01 654 | 6 | SOCKET HEAD SCREW ISO 4762 M12X55 8. | ZYLINDERSCHRAUBE |
| 28 | 11 65 161 2 | 6 | HEX SCREW ISO 4017 M8X16 8.8 480H SPF | SECHSKANTSCHRAUBE |
| 29 | 10 28 980 3 | 10 | WASHER ISO 7089 8 300HV 480H SPF | SCHEIBE |
| 30 | 40 65 099 | 2 | HEX SCREW ISO 4017 M6X16 8.8 A2C | SECHSKANTSCHRAUBE |
| 31 | 10 87 562 1 | 4 | HEX NUT ISO 4032 M6 8 480H SPF | SECHSKANTMUTTER |
| 32 | 10 87 564 7 | 4 | WASHER ISO 7089 6 200HV 480H SPF | SCHEIBE |
| 33 | 70 05 052 | 4 | CLAMP-HALF DIN 3015-1 L 3 R 25 PP SW | KLEMMHAELFTE |
| 34 | 92 95 081 08 | 1 | SENSOR INSTALL.TELESCOP.MECHAN<br>➪ 3 930 464 92 95 081 08 | GEBERANBAU AUSSCHUBMEC |
| 35 | 10 87 559 1 | 2 | SOCKET HEAD SCREW ISO 4762 M6X40 8.8 | ZYLINDERSCHRAUBE |
| 37 | 60 20 078 08 | 8 | CLAMP-HALF DIN 3015-1 10 PP SW | KLEMMHAELFTE |
| 38 | 10 87 559 2 | 4 | SOCKET HEAD SCREW ISO 4762 M6X45 8.8 | ZYLINDERSCHRAUBE |
| 39 | 95 59 178 08 | 2 | COVER RD74X4 S315MC FE//ZN20//C | DECKEL |
| 40 | 95 59 179 08 | 4 | SLEEVE 32X41 X12CRNIS188 | HUELSE |
| 41 | 95 59 180 08 | 2 | SLEEVE 32X30 X12CRNIS188 | HUELSE |
| 42 | 10 28 980 7 | 2 | WASHER ISO 7089 18 300HV FLZN SPF | SCHEIBE |
| 43 | 95 56 000 08 | 5 | SLEEVE 25X21 X12CRNIS188 | HUELSE |
| 44 | 95 56 036 08 | 1 | SLEEVE 25X20 S355J2G3C+C | HUELSE |
| 45 | 95 64 143 08 | 4 | WASHER RD22X1 DC01+ZE | SCHEIBE |
| 46 | 10 87 559 9 | 4 | SOCKET HEAD SCREW ISO 4762 M8X25 8.8 | ZYLINDERSCHRAUBE |
| 47 | 10 87 560 7 | 4 | HEX NUT DIN 985 M12 8 FLZN SPF | SECHSKANTMUTTER |

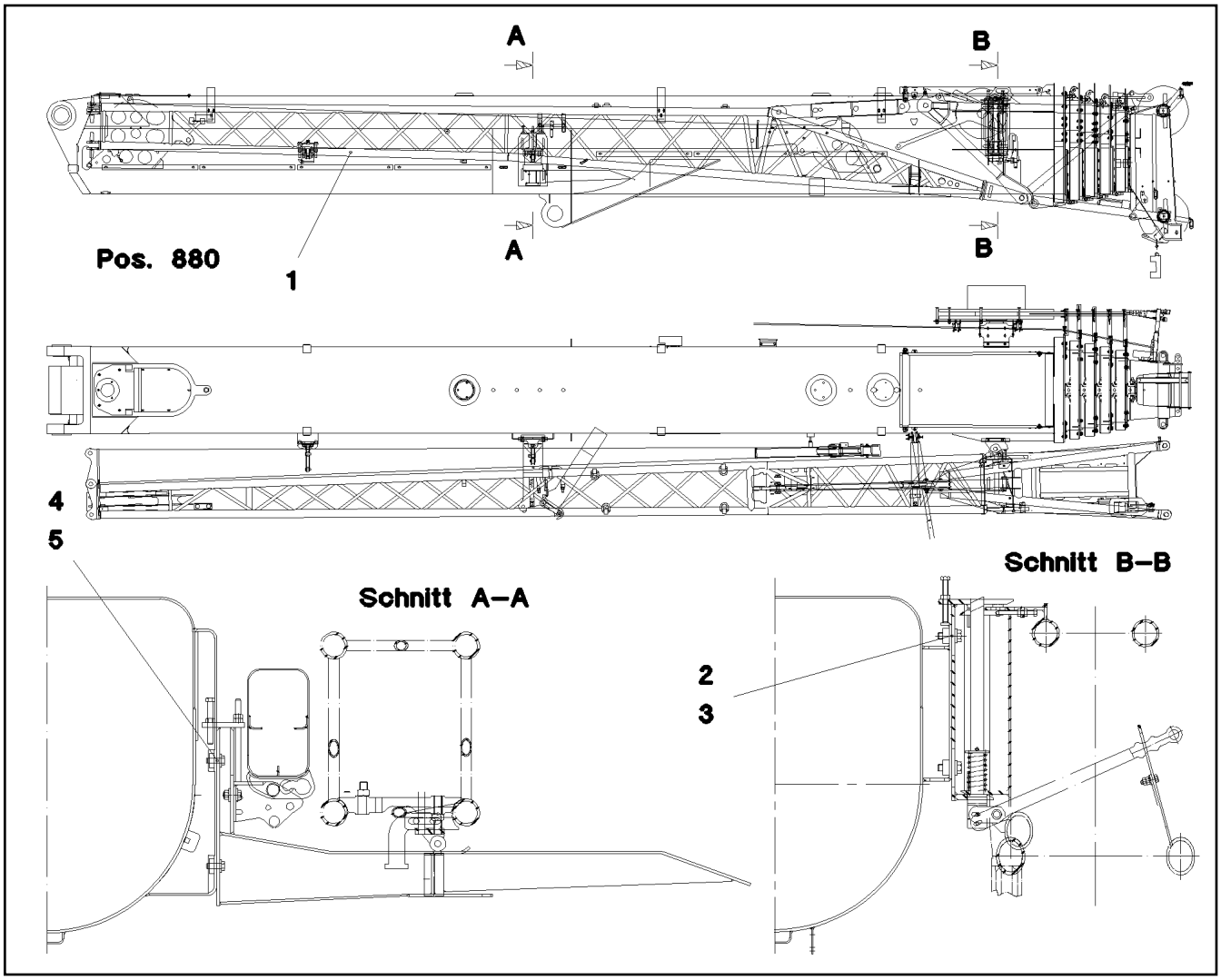


| Pos. | Item | Quantity | Description | Bezeichnung |
|---|---|---|---|---|
| 1 | 91 55 133 08 | 1 | DOUBLE FOLDING JIB MECH. ASS.<br>⇨ 3 500 020 91 55 133 08 | DOPPELKLAPPSPITZE MECH. |
| 2 | 94 93 614 08 | 1 | SUPPORT BED 1X200X70 DC01 FE//ZNNI8//C | UNTERLAGE |
| 3 | 94 93 622 08 | 1 | SUPPORT BED 2X200X70 DC01 FE//ZNNI8//C | UNTERLAGE |
| 4 | 94 93 809 08 | 1 | SUPPORT BED 1X280X70 DC01 FE//ZNNI8//C | UNTERLAGE |
| 5 | 94 93 810 08 | 1 | SUPPORT BED 2X280X70 DC01 FE//ZNNI8//C | UNTERLAGE |
| 880 | 96 61 397 08 | 1 | SIGNS DKS<br>⇨ 3 880 005 96 61 397 08 | BESCHILDERUNG |

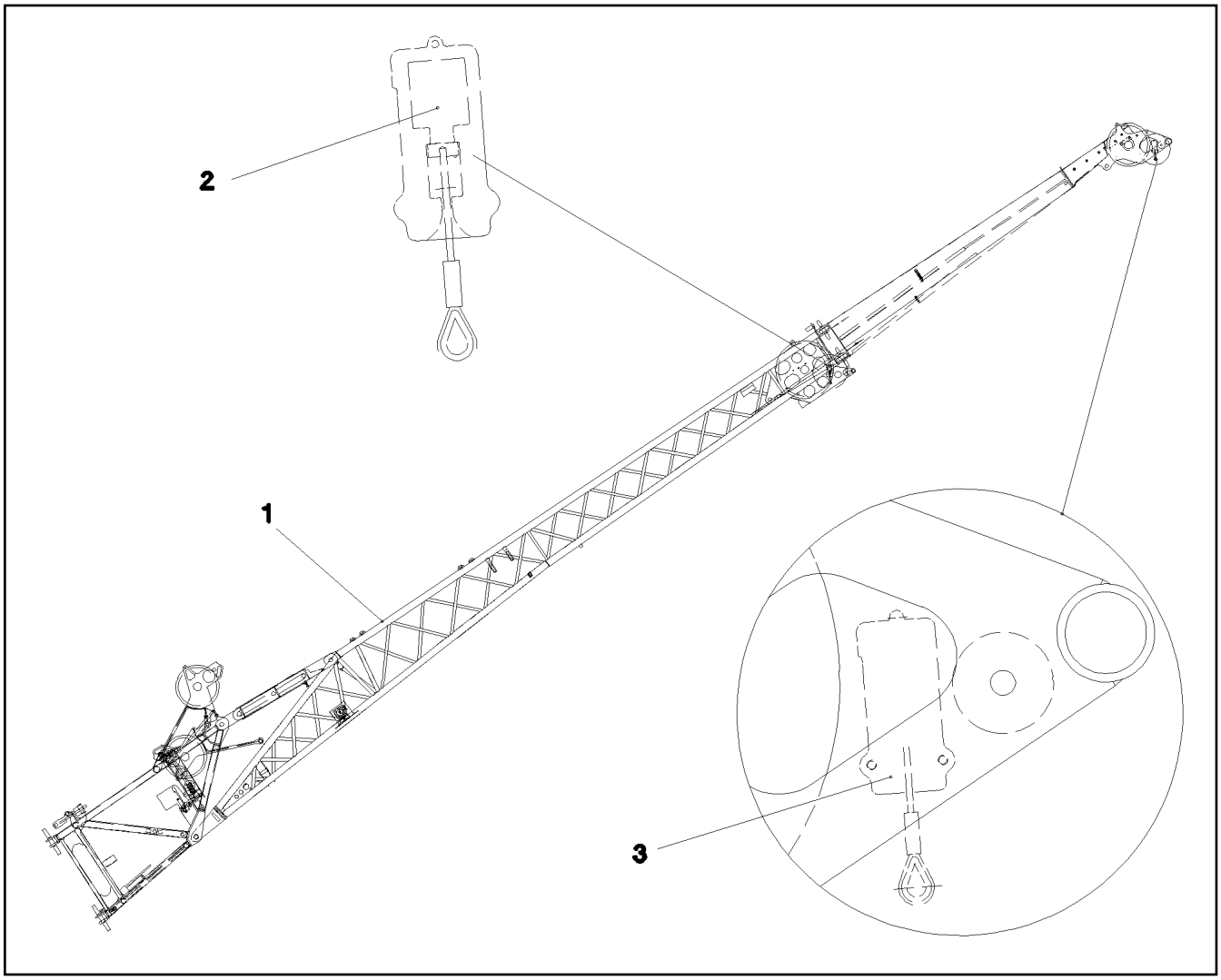


| Pos. | Item | Quantity | Description | Bezeichnung |
|---|---|---|---|---|
| 1 | 91 05 788 08 | 1 | MECH. DOUBLE FOLD JIB PREMOUNT<br>⇨ 3 501 91 05 788 08 | DOPPELKLAPPSPITZE MECH.VO |
| 2 | 96 20 959 08 | 1 | ELECTRIC F.BASE SECTION<br>⇨ 3 931 032 96 20 959 08 | ELEKTRIK ANLENKSTUECK |
| 3 | 96 20 960 08 | 1 | ELECTR. FOR HEAD SECTION<br>⇨ 3 931 100 96 20 960 08 | ELEKTRIK KOPFSTUECK |

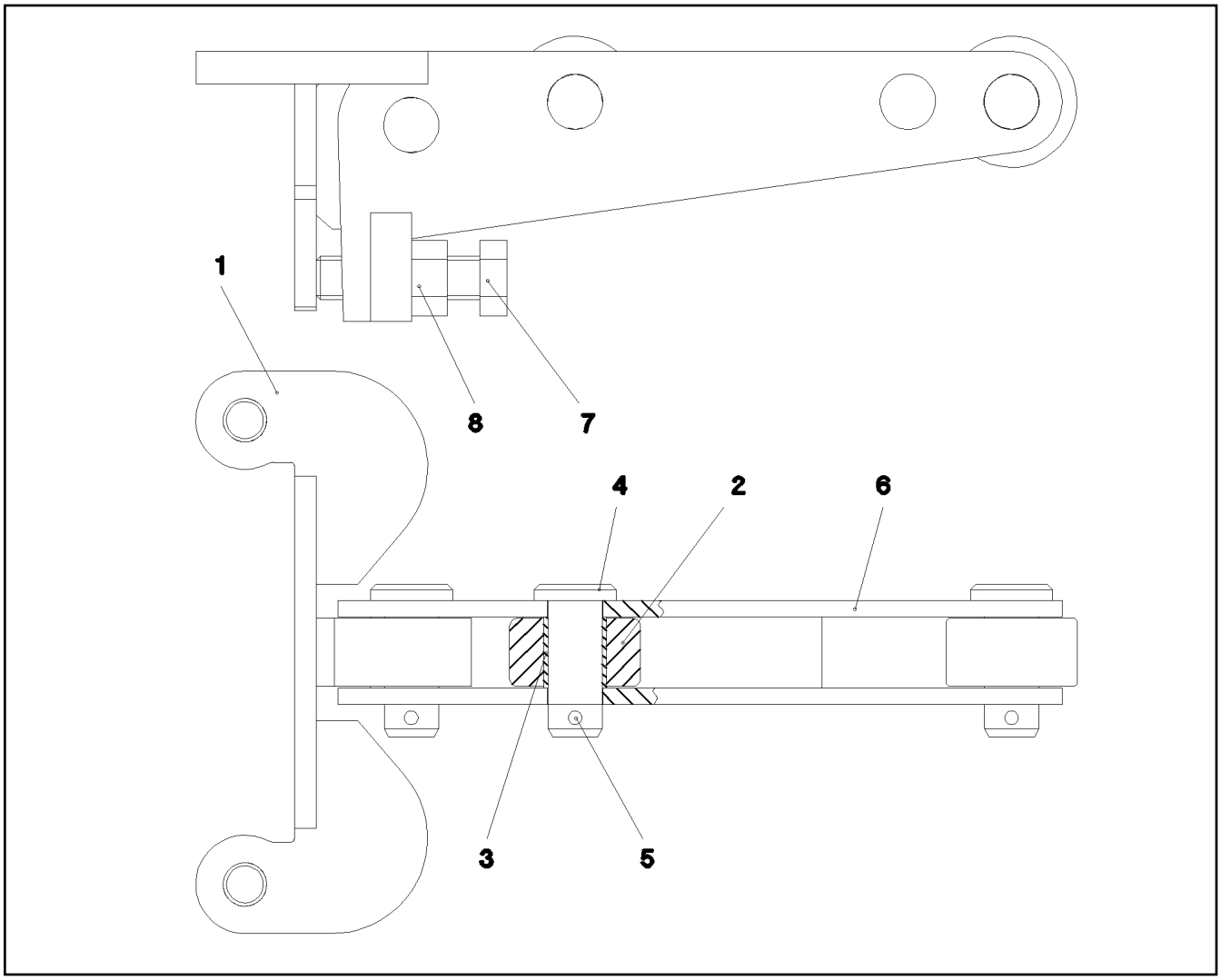


| Pos. | Item | Quantity | Description | Bezeichnung |
|---|---|---|---|---|
| 1 | 92 95 822 08 | 1 | MOUNTING WELDED | HALTERUNG SCHWK. |
| 2 | 94 78 682 08 | 2 | ROLLER 50.0X25 S355J2G3 FE//ZNNI8//CN//T | ROLLE |
| 3 | 70 80 100 08 | 2 | DU BUSHING | DU-BUCHSE |
| 4 | 45 12 227 08 | 3 | PIN DIN 1435 20X50X43 42CRMO4 GASN. SP | BOLZEN |
| 5 | 43 30 065 08 | 3 | SPLIT PIN ISO 1234 5X40 ST A3C | SPLINT |
| 6 | 92 95 916 08 | 1 | ROLLER CARRIER WELDED | ROLLENTRAEGER SCHWK. |
| 7 | 40 66 034 08 | 1 | HEX SCREW ISO 4017 M16X60 10.9 FLZN SP | SECHSKANTSCHRAUBE |
| 8 | 41 15 146 08 | 1 | HEX NUT ISO 4032 M16 8 BLANK | SECHSKANTMUTTER |

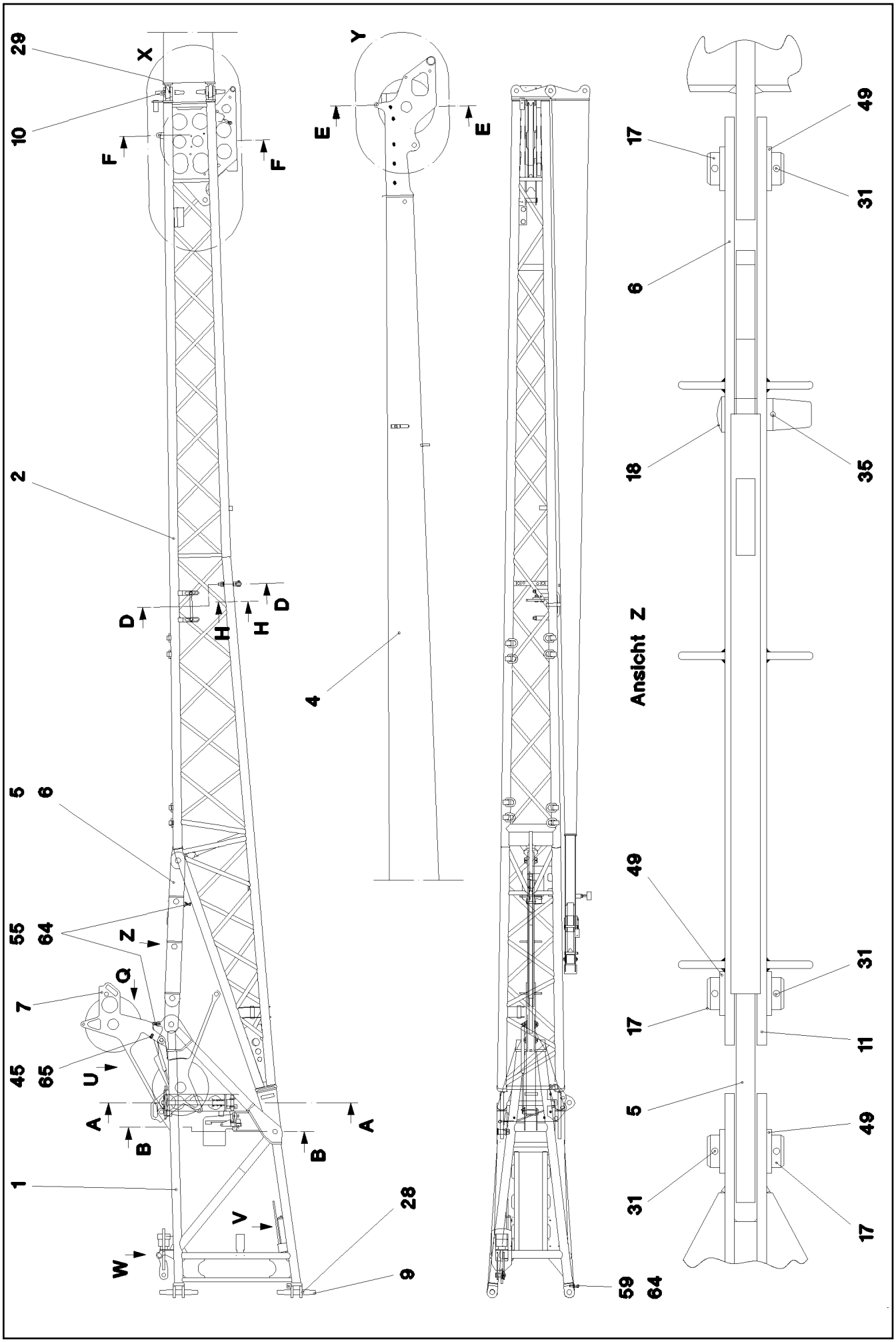


| | | |
|---|---|---|
| 16.2.2017<br>031072<br>LIEBHERR | etk_en_de_048005 LTR 1100<br><br>MECH. DOUBLE FOLD JIB PREMOUNT<br>DOPPELKLAPPSPITZE MECH.VORM. | 303 (1/5)<br><br>3 501<br>91 05 788 08 |

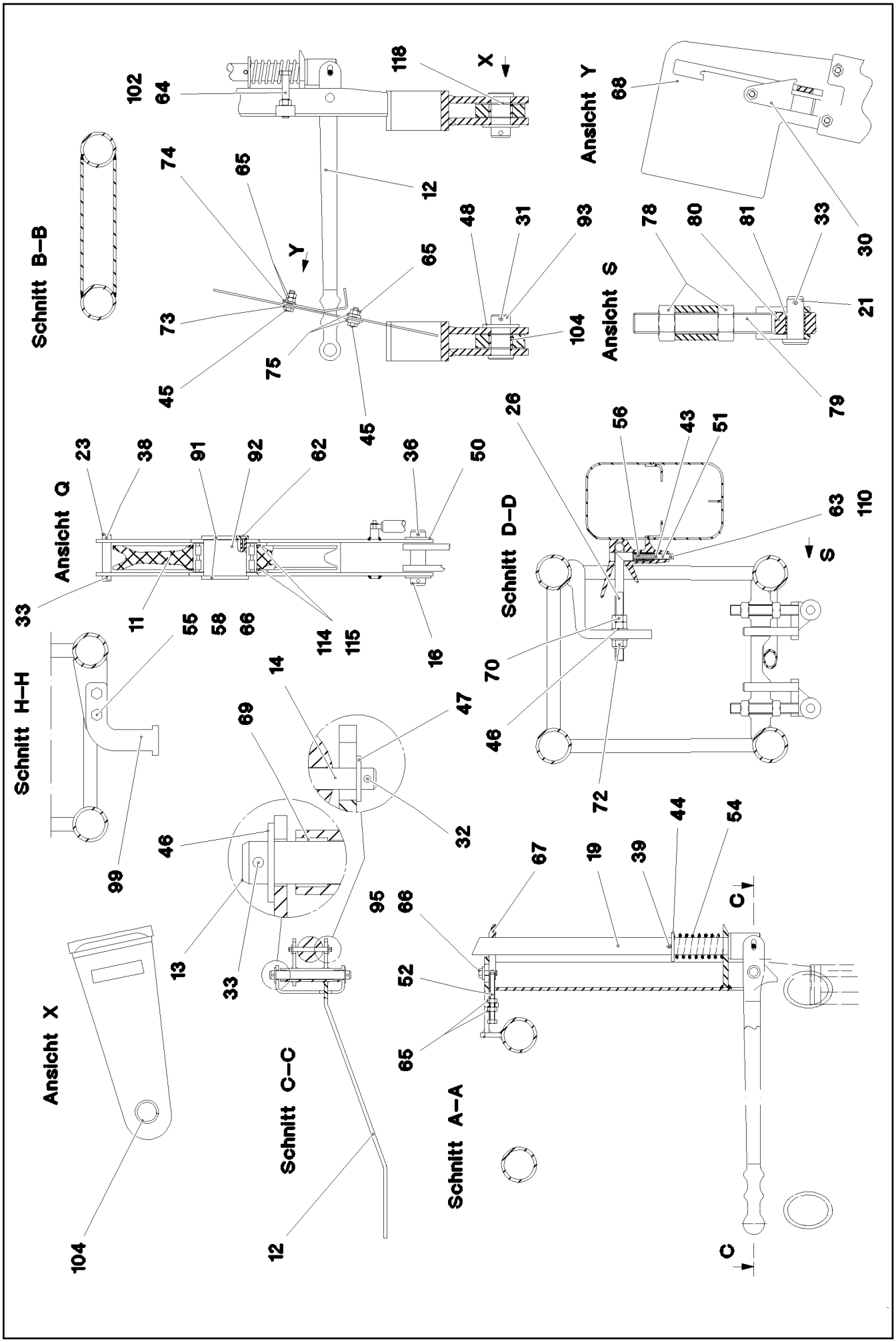


| | | |
|---|---|---|
| 16.2.2017<br>031073<br>LIEBHERR | etk_en_de_048005 LTR 1100<br><br>MECH. DOUBLE FOLD JIB PREMOUNT<br>DOPPELKLAPPSPITZE MECH.VORM. | 304 (2/5)<br><br>3 501<br>91 05 788 08 |

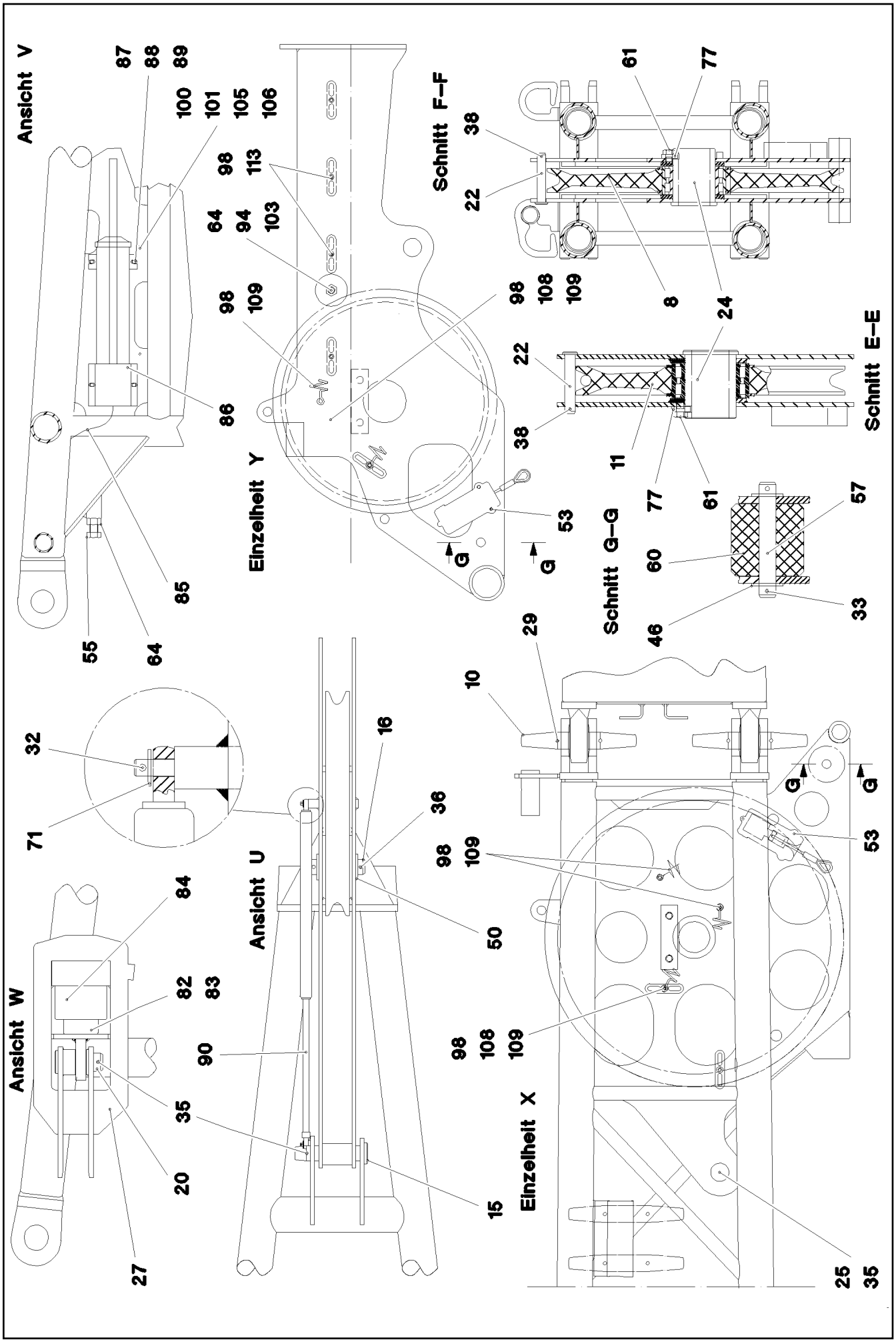


| | | |
|---|---|---|
| 16.2.2017<br>031074<br>LIEBHERR | etk_en_de_048005 LTR 1100<br><br>MECH. DOUBLE FOLD JIB PREMOUNT<br>DOPPELKLAPPSPITZE MECH.VORM. | 305 (3/5)<br><br>3 501<br>91 05 788 08 |

| Pos. | Item | Quantity | Description | Bezeichnung |
|---|---|---|---|---|
| 1 | 92 17 805 08 | 1 | ADAPTER WELDED CONSTRUCTION | ADAPTER SCHWK. |
| 2 | 96 18 681 08 | 1 | PIVOT PIECE ST. CONST. | ANLENKSTUECK SCHWK. |
| 4 | 96 20 494 08 | 1 | HEAD SECTION, WELDED CONSTR. | KOPFSTUECK SCHWK. |
| 5 | 92 71 591 08 | 1 | DRAW CONNECTING LINK | ZUGLASCHE SCHWK. |
| 6 | 92 71 592 08 | 1 | DRAW CONNECTING LINK | ZUGLASCHE SCHWK. |
| 7 | 92 50 730 08 | 1 | ROLLER CLAMP WELDED | ROLLENHALTER SCHWK. |
| 8 | 92 73 117 08 | 1 | ROPE PULLEY CPL. RD640 SPF<br>➪ 3 501 008 92 73 117 08 | SEILROLLE KPL. |
| 9 | 95 04 775 08 | 4 | PIN RD45X360 35NICRMOV125 GASN. SPF | BOLZEN |
| 10 | 95 04 774 08 | 4 | PIN RD40X270 35NICRMOV125 GASN. SPF | BOLZEN |
| 11 | 92 73 100 08 | 2 | ROPE PULLEY CPL. SPF<br>➪ 3 105 002 92 73 100 08 | SEILROLLE KPL. |
| 12 | 92 50 739 08 | 1 | LEVER FE//ZN20//C | HEBEL |
| 13 | 45 00 235 08 | 1 | PIN ISO 2340 B20X190X175 42CRMO4+QT | BOLZEN |
| 14 | 94 18 472 08 | 1 | PIN 10X100 S355J2C+C FE//ZN20//C | BOLZEN |
| 15 | 95 36 200 08 | 1 | PIN RD35X179 S355J2G3 FE//ZN20//C | BOLZEN |
| 16 | 45 00 342 08 | 1 | PIN ISO 2340 B35X130X110 ST.50K FE//ZN20 | BOLZEN |
| 17 | 45 25 505 08 | 3 | PIN ISO 2340 B50X120X96 35NICRMOV125 | BOLZEN |
| 18 | 95 36 201 08 | 1 | PIN RD50X135 35NICRMOV125 GASN. SPF | BOLZEN |
| 19 | 95 22 281 08 | 1 | PIN 60.0X675 S355J2C+C FE//ZNNI8//CN//T0 | BOLZEN |
| 20 | 94 24 398 08 | 1 | PIN RD35X88 35NICRMOV125 GASN. SPF | BOLZEN |
| 21 | 45 12 227 08 | 2 | PIN DIN 1435 20X50X43 42CRMO4 GASN. SP | BOLZEN |
| 22 | 45 30 203 08 | 3 | PIN ISO 2341 B20X123X115 ST.50-2K VERZ | BOLZEN |
| 23 | 45 25 409 08 | 1 | PIN ISO 2340 B20X110X94 ST.50-2K FE//ZN | BOLZEN |
| 24 | 94 93 475 08 | 2 | AXLE RD100X125 S355J2H FE//ZN20//C | ACHSE |
| 25 | 93 90 487 08 | 1 | PIN RD40X160 42CRMO4+QT | BOLZEN |
| 26 | 95 16 657 08 | 1 | BRACKET 20.0X72 8 S355J2C+C FE//ZN20// | BUEGEL |
| 27 | 92 50 746 08 | 1 | CROSS CONNECTING LINK WELDED | KREUZLASCHE SCHWK. |
| 28 | 92 98 193 08 | 8 | CIRCLIP 45-50 | SICHERUNGSCLIP |
| 29 | 92 98 180 08 | 8 | CIRCLIP 35-40 | SICHERUNGSCLIP |
| 30 | 95 37 495 08 | 1 | PLATE 4X76X2O8 S315MC FE//ZN20//C | BLECH |
| 31 | 43 30 103 08 | 8 | SPLIT PIN ISO 1234 10X80 ST A3C | SPLINT |
| 32 | 43 30 034 08 | 4 | SPLIT PIN ISO 1234 3,2X20 ST A2K | SPLINT |
| 33 | 43 30 065 08 | 9 | SPLIT PIN ISO 1234 5X40 ST A3C | SPLINT |
| 35 | 43 31 050 08 | 3 | RETAINING SPRING DIN 2194 6 A3C | SICHERUNGSFEDER |
| 36 | 43 30 090 08 | 2 | SPLIT PIN ISO 1234 8X63 ST A2K | SPLINT |
| 38 | 43 32 013 08 | 4 | SAFETY PLUG W HINGE-LID 5X32 VERZ | SICHERHEITSKLAPPSTECKER |
| 39 | 10 87 587 4 | 1 | DOWEL PIN ISO 8752 10X80 480H SPF | SPANNSTIFT |
| 43 | 10 87 587 8 | 1 | DOWEL PIN ISO 8752 4X28 480H SPF | SPANNSTIFT |
| 44 | 10 28 984 7 | 1 | WASHER ISO 7089 42 300HV FLZN SPF | SCHEIBE |
| 45 | 11 64 234 9 | 3 | HEX SCREW ISO 4017 M12X35 8.8 FLZN SP | SECHSKANTSCHRAUBE |
| 46 | 46 00 222 | 10 | WASHER EN 14399-6 20 300-370HV FLZN SP | SCHEIBE |
| 47 | 10 28 979 5 | 2 | WASHER ISO 7089 10 300HV FLZN SPF | SCHEIBE |
| 48 | 10 28 985 0 | 2 | WASHER ISO 7089 45 300HV FLZN SPF | SCHEIBE |
| 49 | 10 28 985 2 | 6 | WASHER ISO 7089 48 300HV FLZN SPF | SCHEIBE |
| 50 | 10 28 981 2 | 2 | WASHER ISO 7089 36 300HV FLZN SPF | SCHEIBE |
| 51 | 95 51 123 08 | 1 | PIN 20.0X13 5 S355J2C+C FE//ZNNI8//CN//T0 | BOLZEN |
| 52 | 40 65 144 01 | 1 | HEX SCREW ISO 4017 M12X120 8.8 A3C | SECHSKANTSCHRAUBE |
| 53 | 49 00 614 | 4 | HEX SCREW ISO 4017 M8X40 8.8 A2C | SECHSKANTSCHRAUBE |
| 54 | 72 00 011 08 | 1 | PRESSURE SPRING DIN 2098 6,3X50X175 | DRUCKFEDER |
| 55 | 10 87 552 1 | 5 | HEX SCREW ISO 4017 M16X60 8.8 FLZN SP | SECHSKANTSCHRAUBE |
| 56 | 72 00 115 08 | 1 | PRESSURE SPRING | DRUCKFEDER |
| 57 | 45 00 231 08 | 2 | PIN ISO 2340 B20X135X120 ST.50-2K FE//ZN | BOLZEN |
| 58 | 41 19 009 08 | 2 | HEX NUT DIN 985 M16 8 A3C | SECHSKANTMUTTER |
| 59 | 46 00 628 | 1 | HEX SCREW ISO 4017 M16X70 8.8 A3C | SECHSKANTSCHRAUBE |
| 60 | 74 90 010 08 | 2 | TRACK ROLLER RD85X84 PA6G | LAUFROLLE |
| 61 | 10 00 636 2 | 4 | HEX SCREW ISO 4017 M16X25 8.8 FLZN SP | SECHSKANTSCHRAUBE |
| 62 | 46 00 049 | 6 | SOCKET HEAD SCREW ISO 4762 M6X12 8.8 | ZYLINDERSCHRAUBE |
| 63 | 77 34 045 08 | 1.2 | ROPE 6 0,59KN PERLON | SEIL |
| 64 | 10 87 561 7 | 7 | HEX NUT ISO 4032 M16 8 FLZN SPF | SECHSKANTMUTTER |

| Pos. | Item | Quantity | Description | Bezeichnung |
|---|---|---|---|---|
| 65 | 41 15 143 08 | 7 | HEX NUT ISO 4032 M12 8 A3C | SECHSKANTMUTTER |
| 66 | 46 00 021 | 4 | WASHER DIN 7349 17 200HV FLZN SPF | SCHEIBE |
| 67 | 95 38 563 08 | 1 | PLATE 15X135X128 S690QL | BLECH |
| 68 | 97 24 915 08 | 1 | PLATE 5X280X360 S355MC FE//ZN20//C | BLECH |
| 69 | 70 80 051 08 | 2 | DU BUSHING | DU-BUCHSE |
| 70 | 10 87 561 8 | 4 | HEX NUT ISO 4032 M20 8 FLZN SPF | SECHSKANTMUTTER |
| 71 | 10 28 980 3 | 2 | WASHER ISO 7089 8 300HV 480H SPF | SCHEIBE |
| 72 | 41 19 024 08 | 2 | HEX NUT DIN 985 M20 10 A3C | SECHSKANTMUTTER |
| 73 | 10 28 980 4 | 1 | WASHER ISO 7089 12 300HV FLZN SPF | SCHEIBE |
| 74 | 42 53 012 08 | 1 | CONICAL SPRING WASHER DIN 6796 12 F | SPANNSCHEIBE |
| 75 | 10 00 637 0 | 4 | WASHER DIN 7349 13 200HV FLZN SPF | SCHEIBE |
| 77 | 99 70 404 01 | 2 | AXLE HOLDER LN 4/4 S235JR+AR ZNNI | ACHSHALTER |
| 78 | 10 42 568 8 | 4 | HEX NUT ISO 4032 M24 10 FLZN SPF | SECHSKANTMUTTER |
| 79 | 92 74 939 08 | 2 | ROLLER MOUNTING FE//ZNNI8//CN//T0 | ROLLENHALTERUNG |
| 80 | 94 78 682 08 | 2 | ROLLER 50.0X25 S355J2G3 FE//ZNNI8//CN//T | ROLLE |
| 81 | 70 80 100 08 | 2 | DU BUSHING | DU-BUCHSE |
| 82 | 40 65 025 08 | 2 | HEX SCREW ISO 4017 M5X20 8.8 A2C | SECHSKANTSCHRAUBE |
| 83 | 46 00 305 | 2 | WASHER ISO 7089 5 200HV A3C | SCHEIBE |
| 84 | 79 00 388 08 | 1 | HOIST CYLINDERS 73,15/66,55-61,7 | HUBZYLINDER |
| (999) | 10 87 327 0 | 1 | REPAIR KIT | REPARATURSATZ |
| 85 | 92 93 155 08 | 1 | HOSE CPL. 2SN 6X1650 | SCHLAUCH KPL. |
| 86 | 79 00 391 08 | 1 | HAND PUMP | HANDPUMPE |
| | | | ⇨ 7 900 391 08 79 00 391 08 | |
| 87 | 10 87 552 9 | 4 | HEX SCREW ISO 4017 M6X25 8.8 480H SPF | SECHSKANTSCHRAUBE |
| 88 | 41 19 004 08 | 4 | HEX NUT DIN 985 M6 8 A2C | SECHSKANTMUTTER |
| 89 | 10 87 564 7 | 4 | WASHER ISO 7089 6 200HV 480H SPF | SCHEIBE |
| 90 | 59 15 144 08 | 1 | GAS SPRING 28X350-900N | GASFEDER |
| 91 | 94 93 480 08 | 2 | WASHER RD110X8 S355MC FE//ZN20//C | SCHEIBE |
| 92 | 94 93 476 08 | 1 | AXLE RD100X86 S355J2H FE//ZN20//C | ACHSE |
| 93 | 45 30 411 08 | 2 | PIN ISO 2341 B45X102X85 35NICRMOV125 | BOLZEN |
| 94 | 11 49 220 2 | 1 | GRUB SCREW ISO 4026 M16X95 8.8 A3C | GEWINDESTIFT |
| 95 | 49 00 123 | 2 | HEX SCREW ISO 4017 M16X35 8.8 A3C | SECHSKANTSCHRAUBE |
| 98 | 10 41 285 4 | 23 | BUTTON HEAD SCREW AEHNL.ISO 7380-2 | HALBRUNDKOPFSCHRAUBE |
| 99 | 95 41 437 08 | 1 | PLATE 15X170X190 S690QL | BLECH |
| 100 | 60 21 159 08 | 2 | LATCH CLAMP | RIEGELKLEMME |
| 101 | 46 35 268 | 2 | COUNTERSUNK SCREW ISO 7047 M4X20 4. | SENKSCHRAUBE |
| 102 | 10 87 551 8 | 2 | HEX SCREW ISO 4017 M16X100 8.8 FLZN SP | SECHSKANTSCHRAUBE |
| 103 | 72 66 179 08 | 1 | MEGI BUFFER E75-40-5M16 | MEGIPUFFER |
| 104 | 70 43 396 08 | 2 | CLAMPING SLEEVE DIN 1498 45X55X30 55 S | EINSPANNBUCHSE |
| 105 | 41 15 142 08 | 2 | HEX NUT ISO 4032 M4 8 A2C | SECHSKANTMUTTER |
| 106 | 42 18 005 08 | 2 | WASHER DIN 9021 4 A2C | SCHEIBE |
| 108 | 95 36 500 08 | 21 | CABLE CLAMP 2X22X90 DC01 FE//ZN20//C | KABELHALTER |
| 109 | 72 00 144 08 | 5 | CABLE CLAMP | KABELHALTER |
| 110 | 43 31 012 08 | 2 | RETAINING SPRING 4X68 VERZ | SICHERUNGSFEDER |
| 111 | 11 16 043 1 | 1 | ROPE 2 2,3KN EDELSTAHL | SEIL |
| 112 | 11 17 056 5 | 2 | FERRULE 2 CU | PRESSKLEMME |
| 113 | 97 04 551 5 | 2 | PLATE 2X73X380 DC01 | BLECH |
| 114 | 97 04 551 6 | 6 | PLATE 1X128X128 DC01 FE//ZNNI8//CN//T0 | BLECH |
| 115 | 97 04 551 7 | 3 | PLATE 2X128X128 DC01 FE//ZNNI8//CN//T0 | BLECH |
| 118 | 97 00 837 1 | 4 | PLATE 1X70X70 DC01 FE//ZN20//C | BLECH |

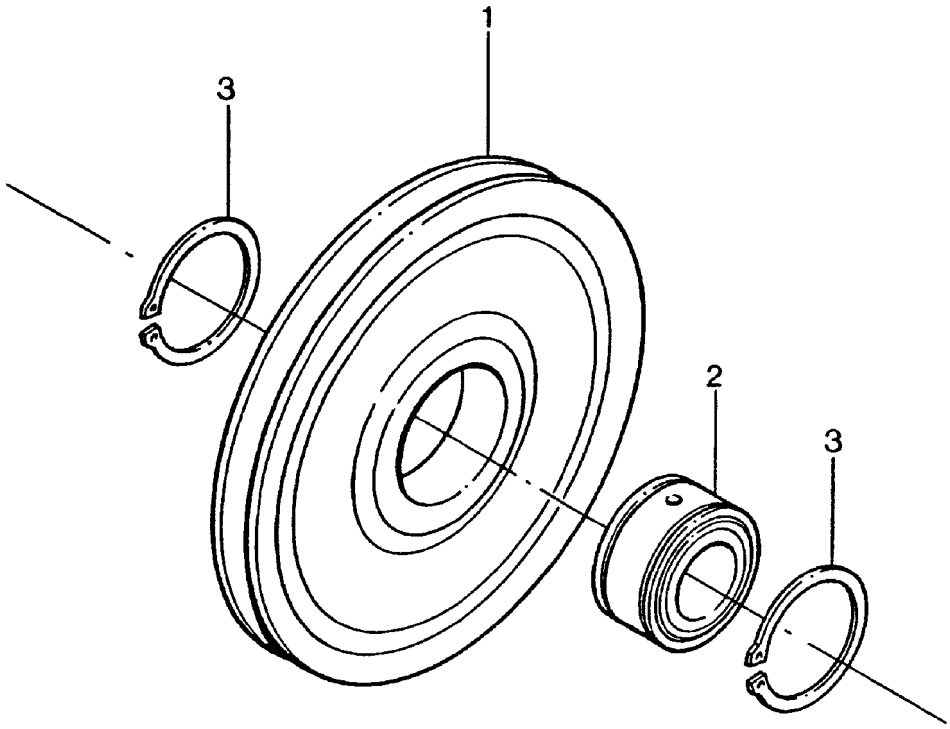


| Pos. | Item | Quantity | Description | Bezeichnung |
|---|---|---|---|---|
| 1 | 28 81 584 08 | 1 | ROPE PULLEY RD700X56 PA6G SPF | SEILROLLE |
| 2 | 74 59 025 08 | 1 | ROLLER BEARING 100X150X67 | WAELZLAGER |
| 3 | 10 87 453 7 | 2 | LOCKING RING DIN 471 150X4 FLZN | SICHERUNGSRING |

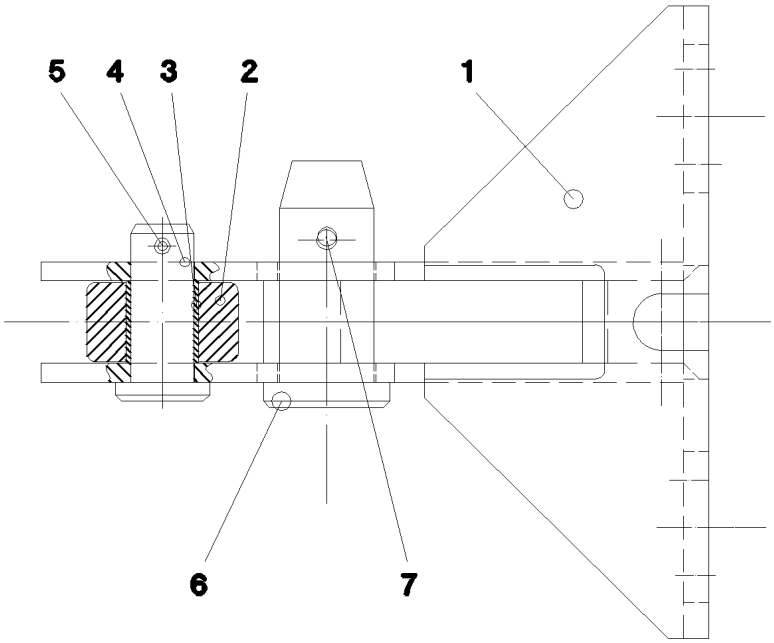


| Pos. | Item | Quantity | Description | Bezeichnung |
|---|---|---|---|---|
| 1 | 92 52 756 08 | 1 | BRACKET WELDED CONST. | KONSOLE SCHWK. |
| 2 | 94 78 682 08 | 1 | ROLLER 50.0X25 S355J2G3 FE//ZNNI8//CN//T | ROLLE |
| 3 | 70 80 100 08 | 1 | DU BUSHING | DU-BUCHSE |
| 4 | 45 12 227 08 | 1 | PIN DIN 1435 20X50X43 42CRMO4 GASN. SP | BOLZEN |
| 5 | 43 30 065 08 | 1 | SPLIT PIN ISO 1234 5X40 ST A3C | SPLINT |
| 6 | 93 19 133 08 | 1 | PIN 35x81 42CRMO4+QT GASN. | BOLZEN |
| 7 | 43 31 009 08 | 1 | RETAINING SPRING 4,5X98 VERZ | SICHERUNGSFEDER |

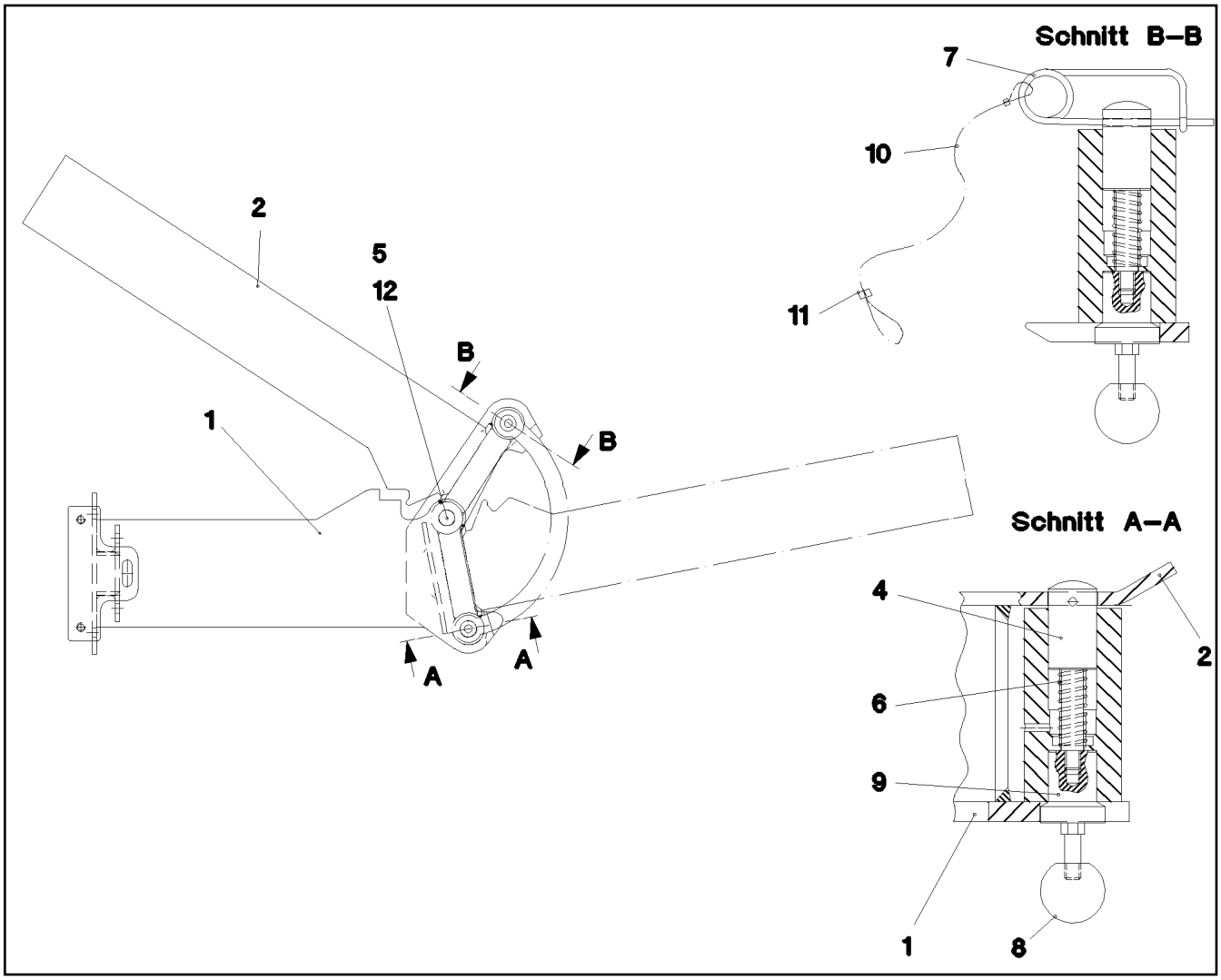


| Pos. | Item | Quantity | Description | Bezeichnung |
|---|---|---|---|---|
| 1 | 96 20 929 08 | 1 | BOARD WELDED | HALTETEIL SCHWK. |
| 2 | 92 50 396 08 | 1 | FOLDING PART WELDED | KLAPPTEIL SCHWK. |
| 4 | 95 31 434 08 | 1 | PIN RD30X117 42CRMO4+QT | BOLZEN |
| 5 | 10 18 036 4 | 1 | SPLIT PIN ISO 1234 6,3X50 St 480H SPF | SPLINT |
| 6 | 72 00 085 08 | 1 | PRESSURE SPRING DIN 2098 2X16X68 X1 | DRUCKFEDER |
| 7 | 43 31 012 08 | 1 | RETAINING SPRING 4X68 VERZ | SICHERUNGSFEDER |
| 8 | 70 40 042 08 | 1 | SPHERICAL KNOB DIN 319 C40XM10 FS | KUGELKNOPF |
| 9 | 95 37 466 08 | 1 | PIN RD49,5X83 42CRMO4+QT | BOLZEN |
| 10 | 11 16 043 1 | 1 | ROPE 2 2,3KN EDELSTAHL | SEIL |
| 11 | 11 17 056 5 | 2 | FERRULE 2 CU | PRESSKLEMME |
| 12 | 45 14 309 08 | 1 | PIN DIN 1436 30X165X155 ST.50-2K VERZ | BOLZEN |

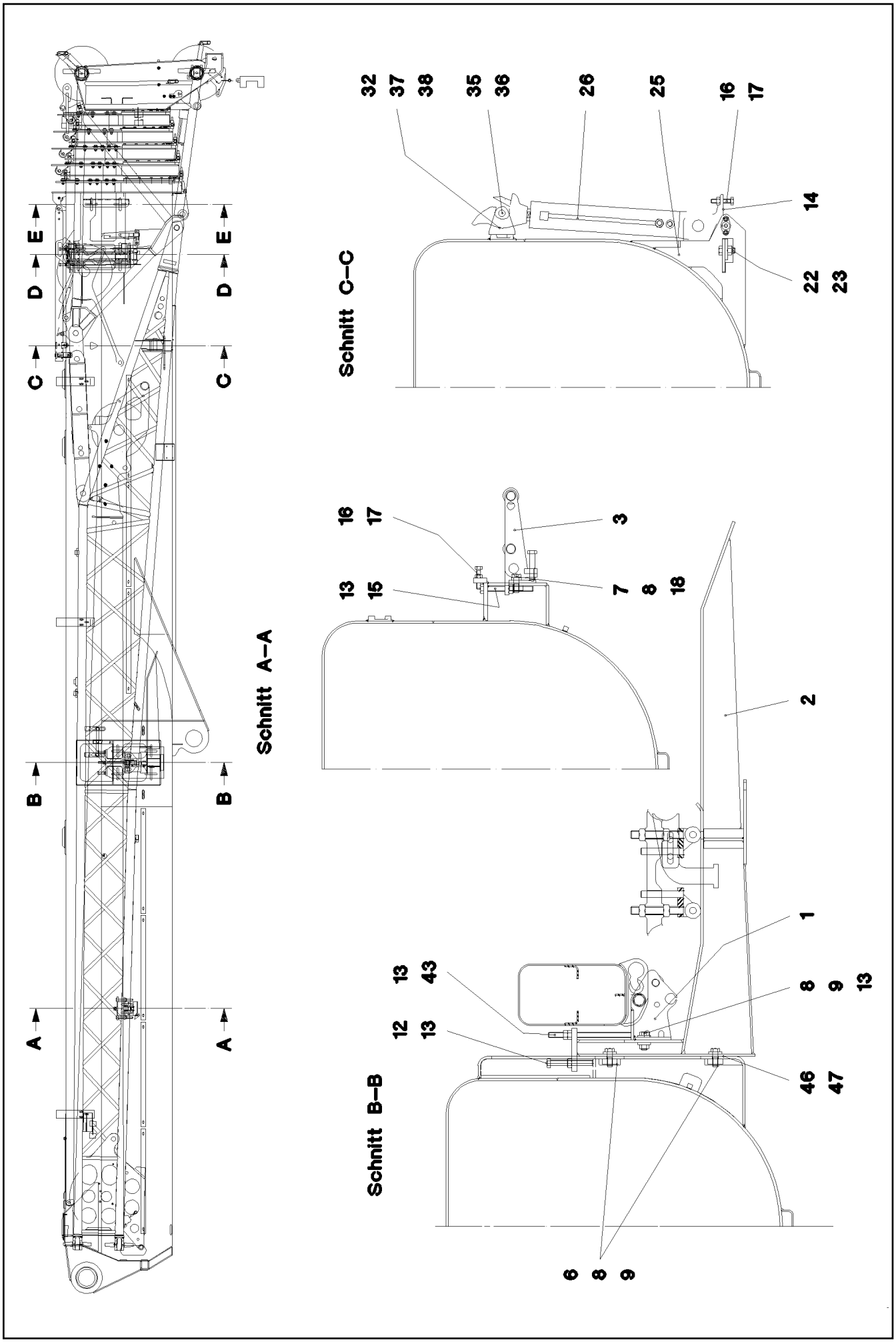


| | | |
|---|---|---|
| 16.2.2017<br>042915<br>LIEBHERR | etk_en_de_048005 LTR 1100<br><br>TRANSPORT MOUNTING<br>TRANSPORTHALTERUNG DKS | 311 (1/3)<br><br>3 510 100<br>91 49 246 08 |

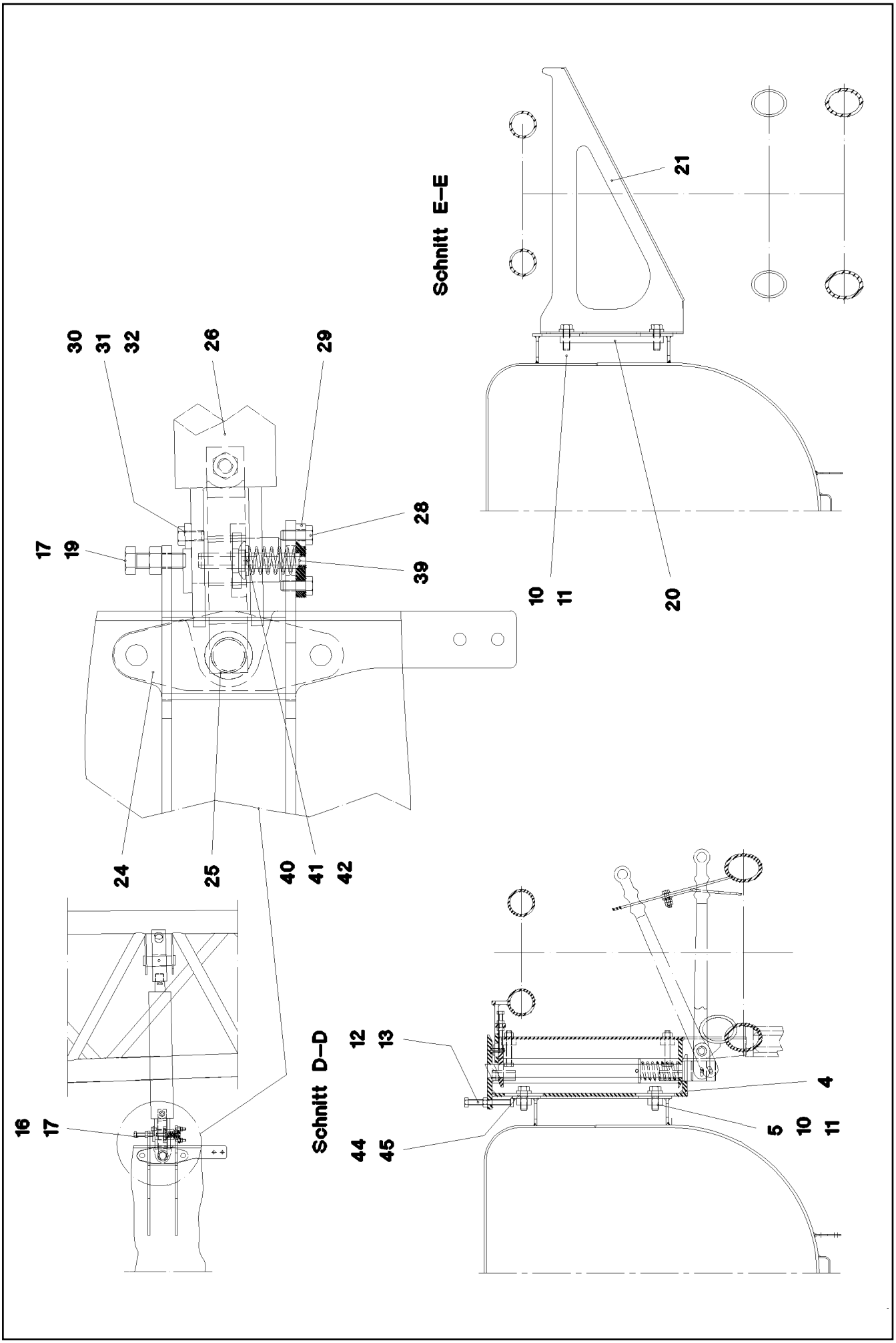


| | | |
|---|---|---|
| 16.2.2017<br>042916<br>LIEBHERR | **etk_en_de_048005 LTR 1100**<br><br>**TRANSPORT MOUNTING**<br>**TRANSPORTHALTERUNG DKS** | ❑ 312 (2/3)<br><br>⇨ **3 510 100**<br>**91 49 246 08** |

| Pos. | Item | Quantity | Description | Bezeichnung |
|---|---|---|---|---|
| 1 | 92 52 800 08 | 1 | CONSOLE PRE-ASS.<br>➪ 3 510 001 92 52 800 08 | KONSOLE VORM. |
| 2 | 96 20 924 08 | 1 | FOLDING BRACKET<br>➪ 3 510 006 96 20 924 08 | KLAPPKONSOLE |
| 3 | 92 95 821 08 | 1 | MOUNTING PRE-ASS.<br>➪ 3 500 104 92 95 821 08 | HALTERUNG VORM. |
| 4 | 92 50 421 08 | 1 | BRACKET WELDED CONST. | KONSOLE SCHWK. |
| 5 | 95 36 085 08 | 2 | PLATE 20X45X230 S690QL | BLECH |
| 6 | 94 93 808 08 | 2 | THREADED PLATE 15X45X300 S690QL | GEWINDEPLATTE |
| 7 | 95 31 477 08 | 1 | THREADED PLATE 15X40X130 S690QL | GEWINDEPLATTE |
| 8 | 10 87 580 3 | 8 | HEX SCREW ISO 4017 M16X45 8.8 FLZN SP | SECHSKANTSCHRAUBE |
| 9 | 46 00 021 | 8 | WASHER DIN 7349 17 200HV FLZN SPF | SCHEIBE |
| 10 | 10 87 580 6 | 6 | HEX SCREW ISO 4017 M20X60 8.8 FLZN SP | SECHSKANTSCHRAUBE |
| 11 | 46 00 604 | 6 | WASHER DIN 7349 21 100HV FLZN SPF | SCHEIBE |
| 12 | 46 35 061 | 6 | HEX SCREW ISO 4017 M16X130 8.8 A3C | SECHSKANTSCHRAUBE |
| 13 | 10 87 561 7 | 10 | HEX NUT ISO 4032 M16 8 FLZN SPF | SECHSKANTMUTTER |
| 14 | 95 55 525 08 | 1 | TRAVERSE 30X161X190 S690QL | TRAVERSE |
| 15 | 10 87 580 1 | 2 | HEX SCREW ISO 4017 M16X150 8.8 FLZN SP | SECHSKANTSCHRAUBE |
| 16 | 49 00 643 | 2 | HEX SCREW ISO 4017 M12X60 8.8 A3C | SECHSKANTSCHRAUBE |
| 17 | 41 15 143 08 | 3 | HEX NUT ISO 4032 M12 8 A3C | SECHSKANTMUTTER |
| 18 | 42 17 008 08 | 2 | WASHER DIN 7989-2 16 ST VERZ | SCHEIBE |
| 19 | 11 64 538 4 | 1 | HEX SCREW ISO 4017 M12X40 8.8 FLZN SP | SECHSKANTSCHRAUBE |
| 20 | 97 49 111 08 | 1 | THREADED PLATE 20X40X315 S690QL | GEWINDEPLATTE |
| 21 | 97 49 112 08 | 1 | PLATE 8X970X515 S700MC | BLECH |
| 22 | 10 87 551 9 | 2 | HEX SCREW ISO 4017 M16X40 8.8 FLZN SP | SECHSKANTSCHRAUBE |
| 23 | 41 19 009 08 | 2 | HEX NUT DIN 985 M16 8 A3C | SECHSKANTMUTTER |
| 24 | 95 55 526 08 | 1 | PLATE 8X70X182 S960QL | BLECH |
| 25 | 70 80 116 08 | 2 | DU BUSHING | DU-BUCHSE |
| 26 | 51 23 537 08 | 1 | HYDRO CYLINDER 65/36-367 SPF<br>➪ 5 123 537 08 51 23 537 08 | HYDROZYLINDER |
| 28 | 11 65 176 7 | 2 | HEX SCREW ISO 4017 M8X20 8.8 480H SPF | SECHSKANTSCHRAUBE |
| 29 | 95 59 743 08 | 1 | PLATE 8X30X58 S355MC FE//ZNNI8//CN//T0 | BLECH |
| 30 | 94 40 299 08 | 1 | PIN RD35X71 35NICRMOV125 GASN. SPF | BOLZEN |
| 31 | 99 70 401 01 | 1 | AXLE HOLDER LN 4/1 S235JR+AR ZNNI | ACHSHALTER |
| 32 | 11 65 161 2 | 5 | HEX SCREW ISO 4017 M8X16 8.8 480H SPF | SECHSKANTSCHRAUBE |
| 35 | 45 30 209 08 | 1 | PIN ISO 2341 B20X115X107 ST.50-2K VERZ | BOLZEN |
| 36 | 43 31 012 08 | 1 | RETAINING SPRING 4X68 VERZ | SICHERUNGSFEDER |
| 37 | 42 18 009 08 | 3 | WASHER ISO 7093-1 8 200HV A2C | SCHEIBE |
| 38 | 95 71 028 08 | 1 | PLATE 4X80X254 S315MC FE//ZN20//C | BLECH |
| 39 | 43 20 119 08 | 1 | DOWEL PIN ISO 8752 12X85 | SPANNSTIFT |
| 40 | 10 87 586 3 | 1 | SPHERICAL WASHER DIN 6319 17 480H SP | KUGELSCHEIBE |
| 41 | 10 87 586 2 | 1 | TAPERED SOCKET DIN 6319 19 480H SPF | KEGELPFANNE |
| 42 | 72 00 126 08 | 1 | PRESSURE SPRING EN10270-3 | DRUCKFEDER |
| 43 | 10 02 323 7 | 1 | HEX SCREW ISO 4017 M16X260 8.8 A3C | SECHSKANTSCHRAUBE |
| 44 | 94 93 614 08 | 1 | SUPPORT BED 1X200X70 DC01 FE//ZNNI8//C | UNTERLAGE |
| 45 | 94 93 622 08 | 1 | SUPPORT BED 2X200X70 DC01 FE//ZNNI8//C | UNTERLAGE |
| 46 | 94 93 809 08 | 1 | SUPPORT BED 1X280X70 DC01 FE//ZNNI8//C | UNTERLAGE |
| 47 | 94 93 810 08 | 1 | SUPPORT BED 2X280X70 DC01 FE//ZNNI8//C | UNTERLAGE |

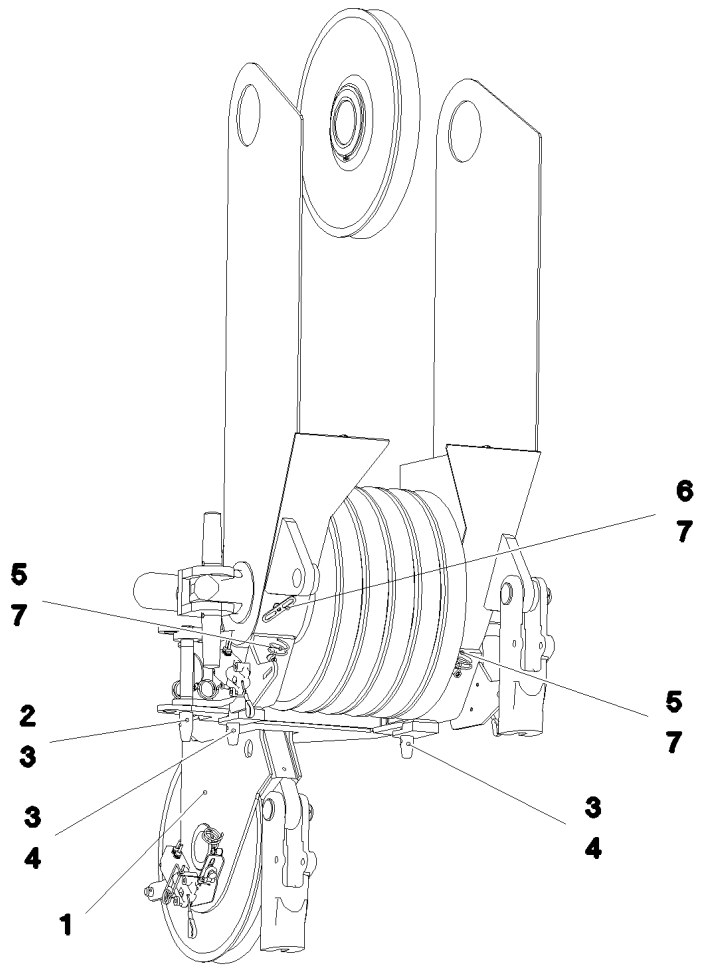


| Pos. | Item | Quantity | Description | Bezeichnung |
|---|---|---|---|---|
| 1 | 96 45 029 08 | 1 | BOOM NOSE PRE-ASS.<br>⇨ 3 511 006 96 45 029 08 | MASTNASE VORM. |
| 2 | 43 30 090 08 | 1 | SPLIT PIN ISO 1234 8X63 ST A2K | SPLINT |
| 3 | 97 36 353 08 | 3 | PIN 35.0X264 35NICRMOV125 GASN. SPF | BOLZEN |
| 4 | 43 31 009 08 | 2 | RETAINING SPRING 4,5X98 VERZ | SICHERUNGSFEDER |
| 5 | 72 00 144 08 | 4 | CABLE CLAMP | KABELHALTER |
| 6 | 95 36 500 08 | 1 | CABLE CLAMP 2X22X90 DC01 FE//ZN20//C | KABELHALTER |
| 7 | 10 41 285 4 | 5 | BUTTON HEAD SCREW AEHNL.ISO 7380-2 | HALBRUNDKOPFSCHRAUBE |
| 8 | 96 76 955 08 | 1 | SIGNS MASTNASE<br>⇨ 3 511 102 96 76 955 08 | BESCHILDERUNG |

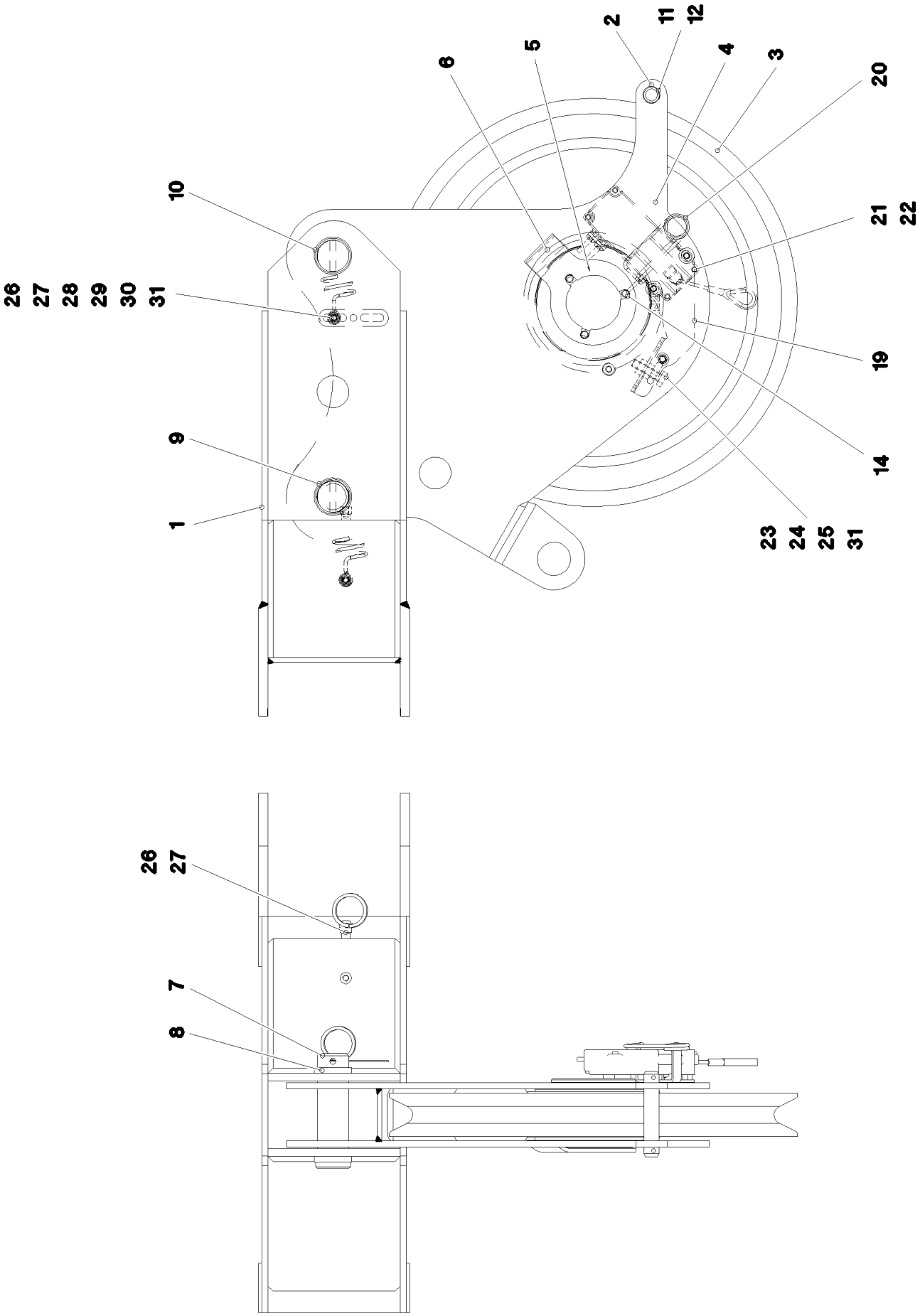


| | | |
|---|---|---|
| 16.2.2017<br>047322<br>LIEBHERR | **etk_en_de_048005 LTR 1100**<br><br>**BOOM NOSE PRE-ASS.**<br>**MASTNASE VORM.** | ❑ 315 (1/2)<br><br>⇨ **3 511 006**<br>**96 45 029 08** |

| Pos. | Item | Quantity | Description | Bezeichnung |
|---|---|---|---|---|
| 1 | 92 86 596 08 | 1 | BOOM NOSE WELDED CONSTRUCTION | MASTNASE SCHWK. |
| 2 | 45 25 409 08 | 1 | PIN ISO 2340 B20X110X94 ST.50-2K FE//ZN | BOLZEN |
| 3 | 96 42 835 08 | 1 | ROPE PULLEY CPL. SPF<br>➪ 3 106 001 96 42 835 08 | SEILROLLE KPL. |
| 4 | 96 77 088 08 | 1 | ROLLER CLAMP WELDED | ROLLENHALTER SCHWK. |
| 5 | 95 55 602 08 | 1 | AXLE 108.0X92 S355J2H FE//ZNNI8//CN//T0 | ACHSE |
| 6 | 95 55 603 08 | 1 | PLATE 5X110X154 S355MC FE//ZNNI8//CN//T | BLECH |
| 7 | 94 03 151 08 | 2 | PIN RD40X140 35NICRMOV125 GASN. SPF | BOLZEN |
| 8 | 97 05 011 08 | 4 | DISTANCE RING 48.3X8 S235JRH FE//ZNNI8/ | DISTANZRING |
| 9 | 43 30 090 08 | 1 | SPLIT PIN ISO 1234 8X63 ST A2K | SPLINT |
| 10 | 43 31 025 08 | 1 | RETAINING SPRING 5X122 A3C | SICHERUNGSFEDER |
| 11 | 43 30 055 08 | 1 | SPLIT PIN ISO 1234 4X40 ST A3C | SPLINT |
| 12 | 43 31 012 08 | 1 | RETAINING SPRING 4X68 VERZ | SICHERUNGSFEDER |
| 14 | 11 65 247 0 | 3 | HEX SCREW ISO 4017 M10X16 8.8 FLZN SP | SECHSKANTSCHRAUBE |
| 19 | 97 11 358 08 | 1 | PLATE 3X111X222 DC01 FE//ZN20//C | BLECH |
| 20 | 43 31 012 08 | 1 | RETAINING SPRING 4X68 VERZ | SICHERUNGSFEDER |
| 21 | 10 01 773 2 | 2 | GRUB SCREW DIN EN ISO 4026 M8X50 8.8 | GEWINDESTIFT |
| 22 | 11 69 387 5 | 2 | HEX NUT ISO 4032 M8 8 480H SPF | SECHSKANTMUTTER |
| 23 | 77 39 335 08 | 1 | SHACKLE DIN 82101 0,25T NG0,25 ST VERZ | SCHAEKEL |
| 24 | 11 62 670 6 | 1 | HEX SCREW ISO 4017 M10X40 8.8 FLZN SP | SECHSKANTSCHRAUBE |
| 25 | 41 15 144 08 | 2 | HEX NUT ISO 4032 M10 8 A3C | SECHSKANTMUTTER |
| 26 | 72 00 144 08 | 2 | CABLE CLAMP | KABELHALTER |
| 27 | 10 41 285 4 | 3 | BUTTON HEAD SCREW AEHNL.ISO 7380-2 | HALBRUNDKOPFSCHRAUBE |
| 28 | 95 36 500 08 | 1 | CABLE CLAMP 2X22X90 DC01 FE//ZN20//C | KABELHALTER |
| 29 | 41 01 203 08 | 1 | HEX NUT ISO 4035 M8 04 A2C | SECHSKANTMUTTER |
| 30 | 40 09 018 08 | 1 | WING SCREW DIN 316 M8X16 4.6 VERZ | FLUEGELSCHRAUBE |
| 31 | 42 18 009 08 | 3 | WASHER ISO 7093-1 8 200HV A2C | SCHEIBE |

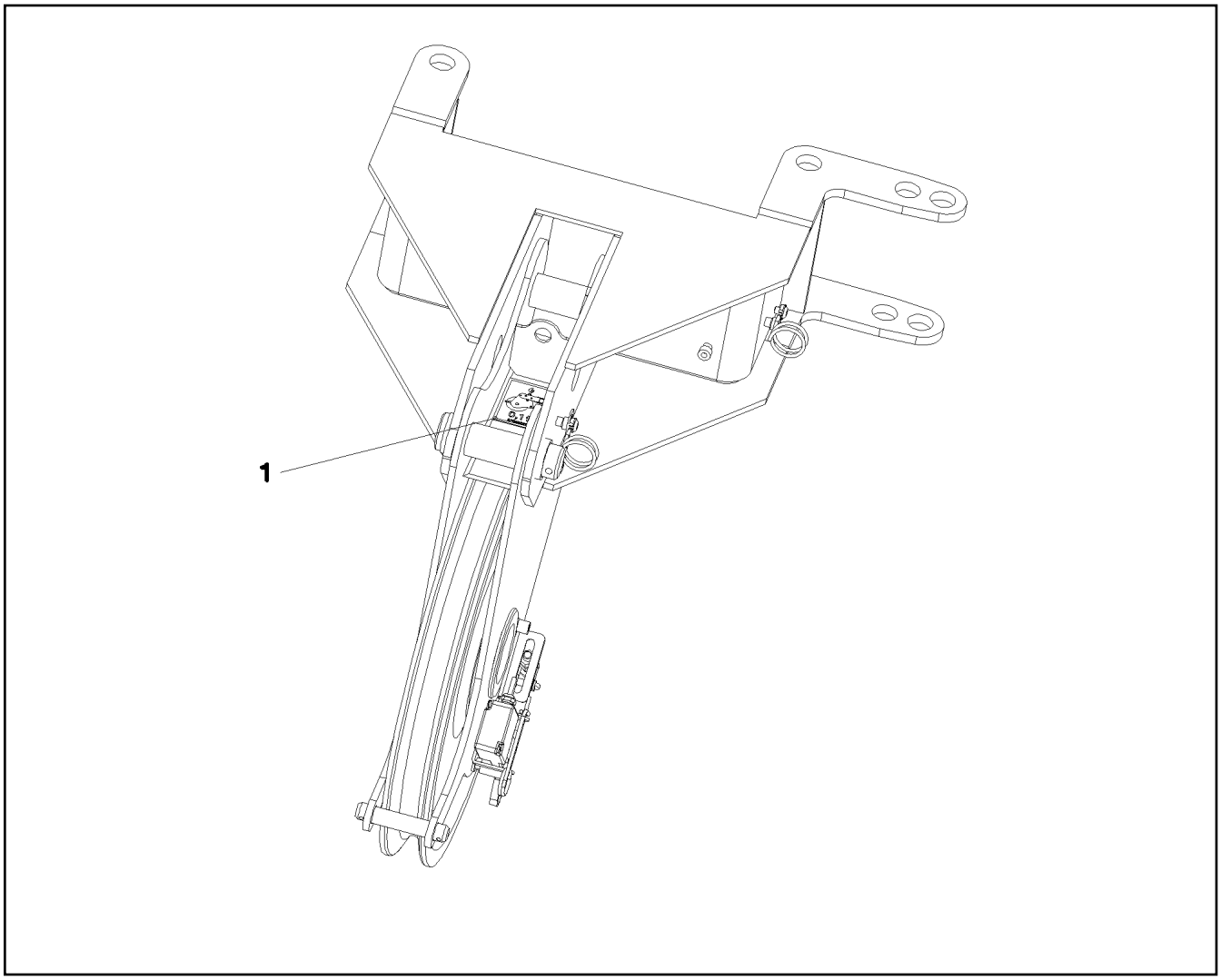


| Pos. | Item | Quantity | Description | Bezeichnung |
|---|---|---|---|---|
| 1 | 97 02 552 0 | 1 | SIGN 85X55 SPF | SCHILD |

| Pos. | Item | Quantity | Description | Bezeichnung |
|---|---|---|---|---|
| 1 | 91 75 085 08 | 1 | LADDER ATTACHMENT<br>➪ 3 750 008 91 75 085 08 | LEITER ANBAU |
| 2 | 96 89 527 08 | 1 | MOUNTING HOOK ROD<br>➪ 3 750 027 96 89 527 08 | HAKENSTANGE ANBAU |
| 3 | 77 33 265 08 | 1 | ROPE SLING 5M PP SPF | ANSCHLAGSEIL |

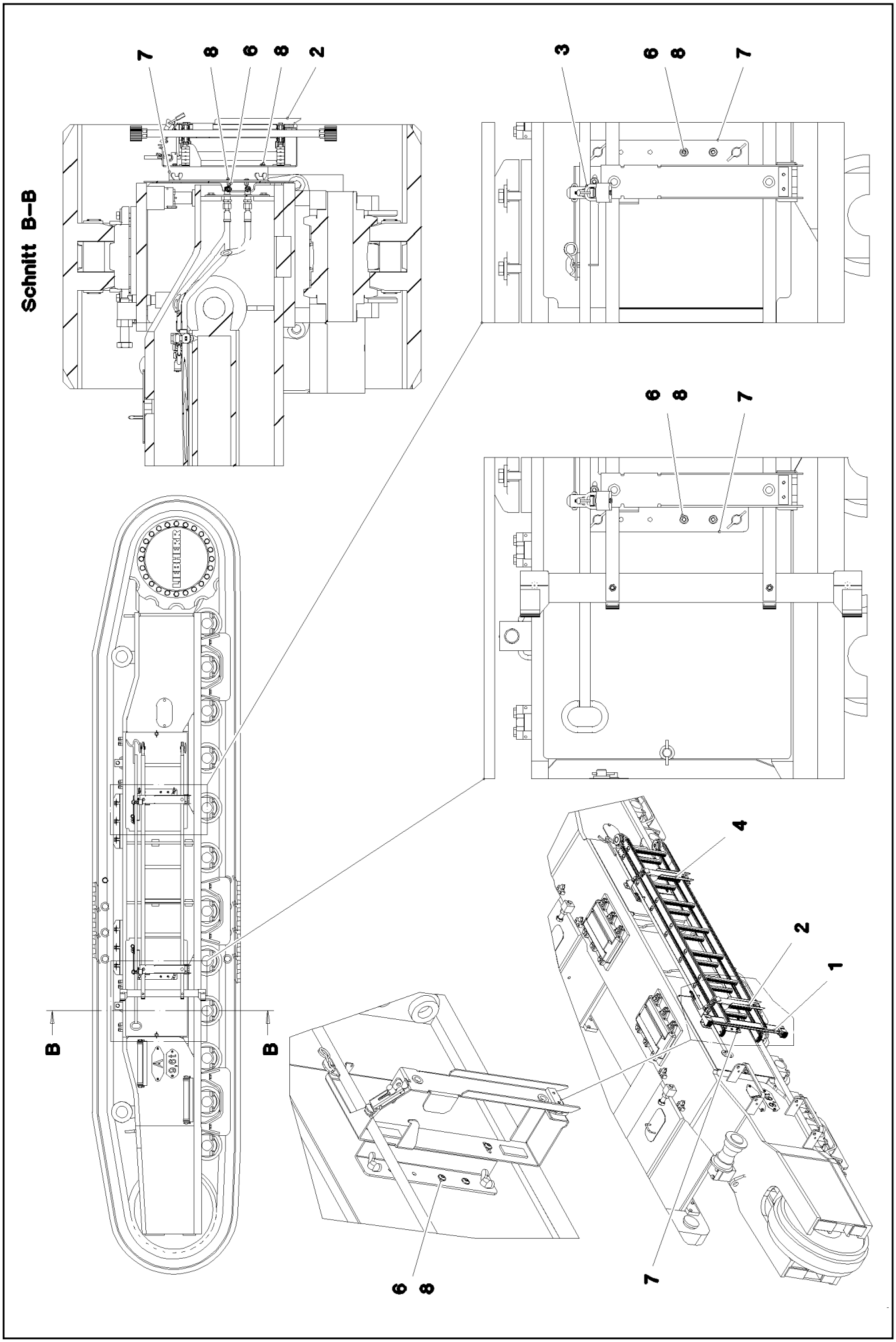


| | | |
|---|---|---|
| 16.2.2017<br>078416<br>LIEBHERR | **etk_en_de_048005 LTR 1100**<br><br>**LADDER ATTACHMENT**<br>**LEITER ANBAU** | ❑ 319 (1/2)<br><br>⇨ **3 750 008**<br>**91 75 085 08** |

| Pos. | Item | Quantity | Description | Bezeichnung |
|---|---|---|---|---|
| 1 | 10 87 020 9 | 1 | DOUBLE LADDER 2X7-350X2,132M AL SPF | STEHLEITER |
| 2 | 96 89 407 08 | 1 | HOLDER LEFT<br>⇨ 3 750 026 96 89 407 08 | HALTER LINKS |
| 3 | 88 52 515 08 | 2 | PADLOCK ABUS-64TI/40 TITALIUM | VORHAENGESCHLOSS |
| 4 | 96 89 408 08 | 1 | HOLDER RIGHT<br>⇨ 3 750 028 96 89 408 08 | HALTER RECHTS |
| 6 | 41 19 005 08 | 8 | HEX NUT DIN 985 M8 8 A2C | SECHSKANTMUTTER |
| 7 | 97 52 305 08 | 2 | PLATE 4X336X157 S315MC FE//ZN20//C | BLECH |
| 8 | 40 97 041 08 | 8 | BUTTON HEAD SCREW ISO 7380-2 M8X20 | HALBRUNDKOPFSCHRAUBE |

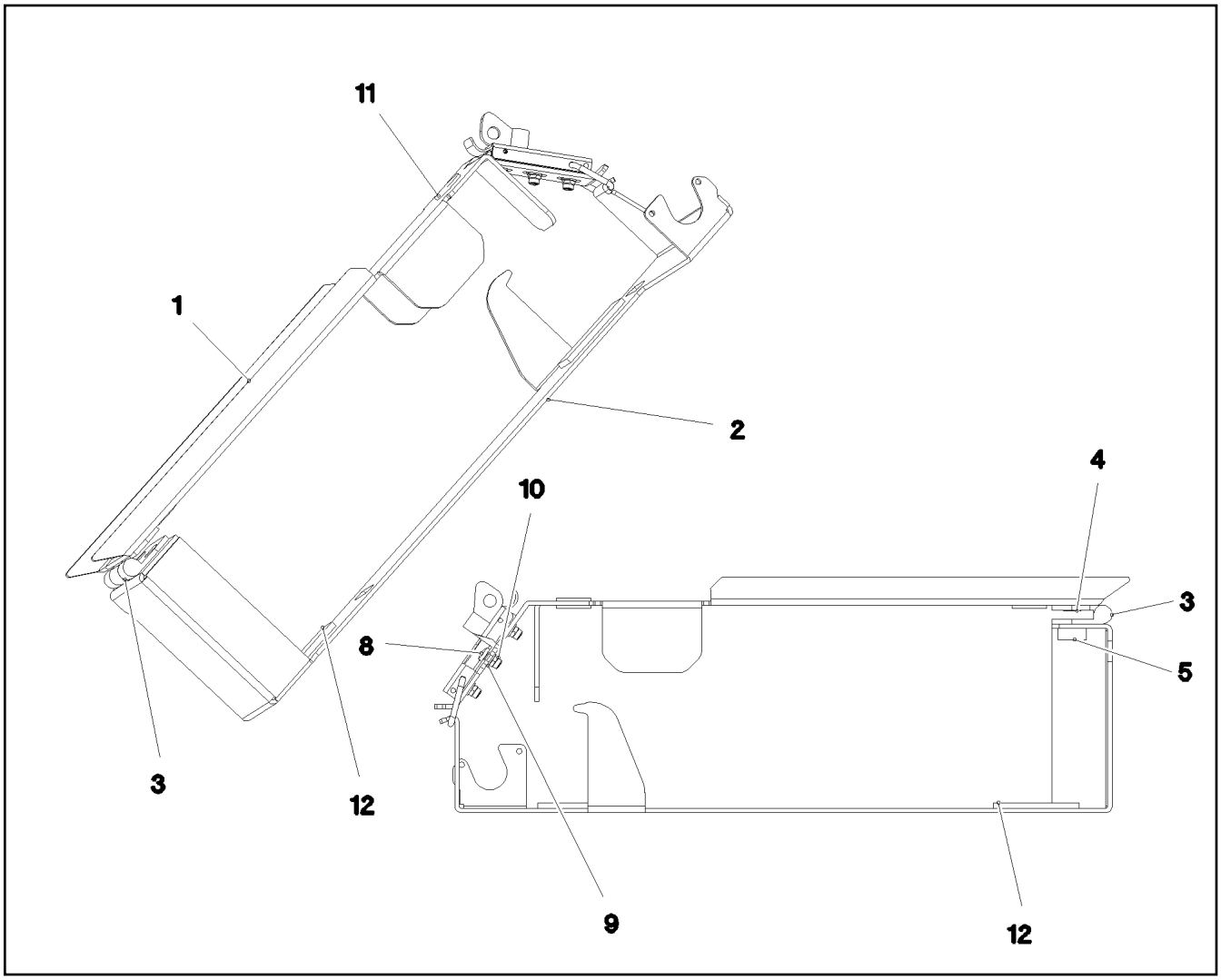


| Pos. | Item | Quantity | Description | Bezeichnung |
|---|---|---|---|---|
| 1 | 97 05 004 0 | 1 | PLATE 3X160X522 X5CRNI18-10 | BLECH |
| 2 | 97 05 004 1 | 1 | PLATE 3X318X697 X5CRNI18-10 | BLECH |
| 3 | 70 42 281 08 | 1 | HINGE 35X35X50/180° ST FE//ZN12//B | SCHARNIER |
| 4 | 40 86 002 08 | 4 | COUNTERSUNK SCREW DIN 7991 M6X16 8. | SENKSCHRAUBE |
| 5 | 95 36 953 08 | 2 | THREADED PLATE 8X20X60 S235JR FE//ZN | GEWINDEPLATTE |
| 7 | 70 42 276 08 | 1 | LOCK PIECE FEDERBUEGEL SCHWARZ P | VERSCHLUSS |
| 8 | 40 84 021 01 | 3 | PAN-HEAD SCREW ISO 7045 M5X12 4.8 A2 | FLACHKOPFSCHRAUBE |
| 9 | 46 00 305 | 3 | WASHER ISO 7089 5 200HV A3C | SCHEIBE |
| 10 | 41 19 003 08 | 3 | HEX NUT DIN 985 M5 8 A2C | SECHSKANTMUTTER |
| 11 | 60 27 018 08 | 2 | GROMMET 7/18/24 PVC | DURCHFUEHRUNGSTUELLE |
| 12 | 26 21 078 14 | 0.12 | CELL RUBBER 25X4 NEOPRENE | ZELLGUMMI |

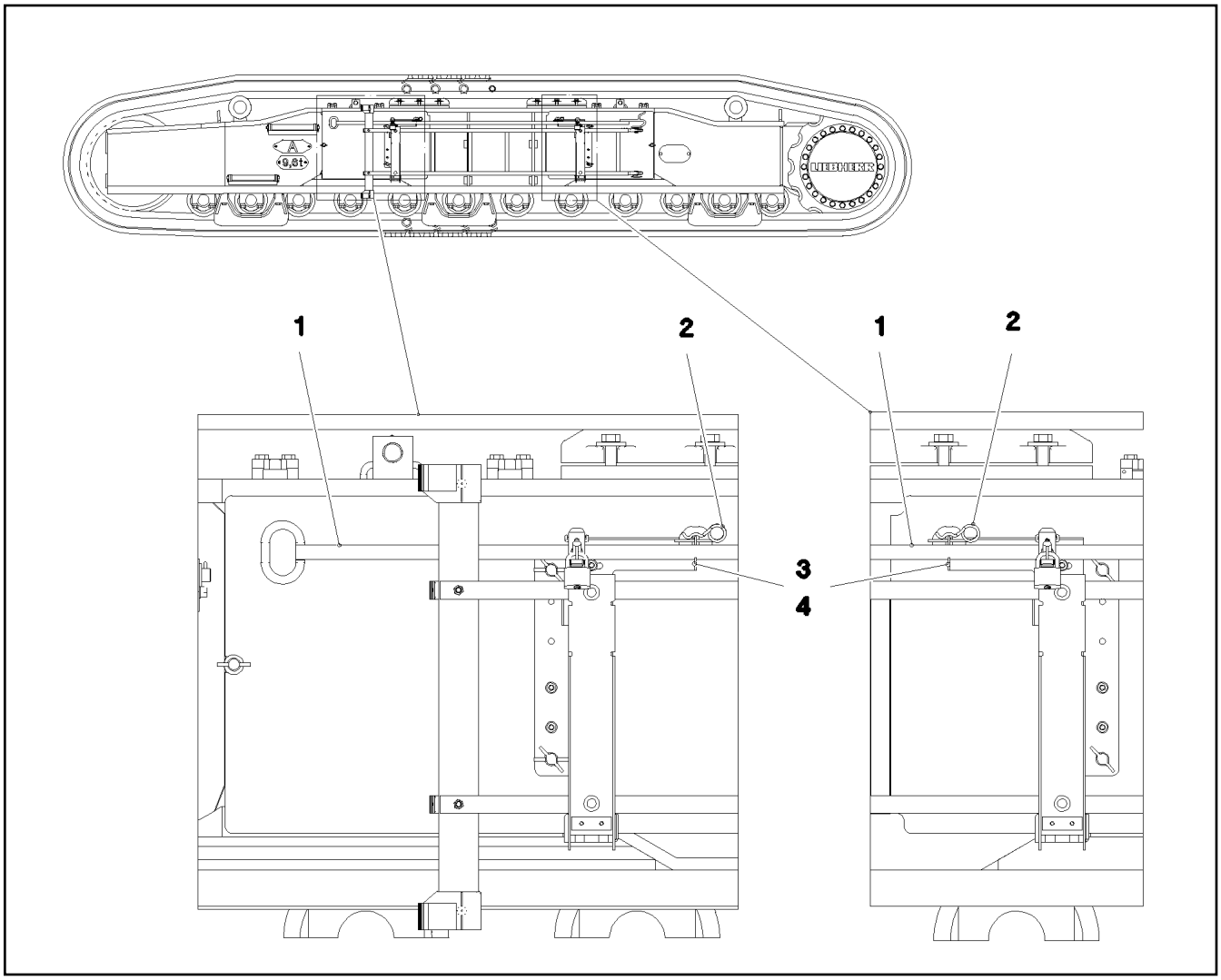


| Pos. | Item | Quantity | Description | Bezeichnung |
|---|---|---|---|---|
| 1 | 92 95 299 08 | 1 | HOOK ROD | HAKENSTANGE |
| 2 | 43 32 062 08 | 2 | SPRING PLUG 4,5X4X78 A3C | FEDERSTECKER |
| 3 | 11 16 043 1 | 0.4 | ROPE 2 2,3KN EDELSTAHL | SEIL |
| 4 | 11 17 056 5 | 4 | FERRULE 2 CU | PRESSKLEMME |

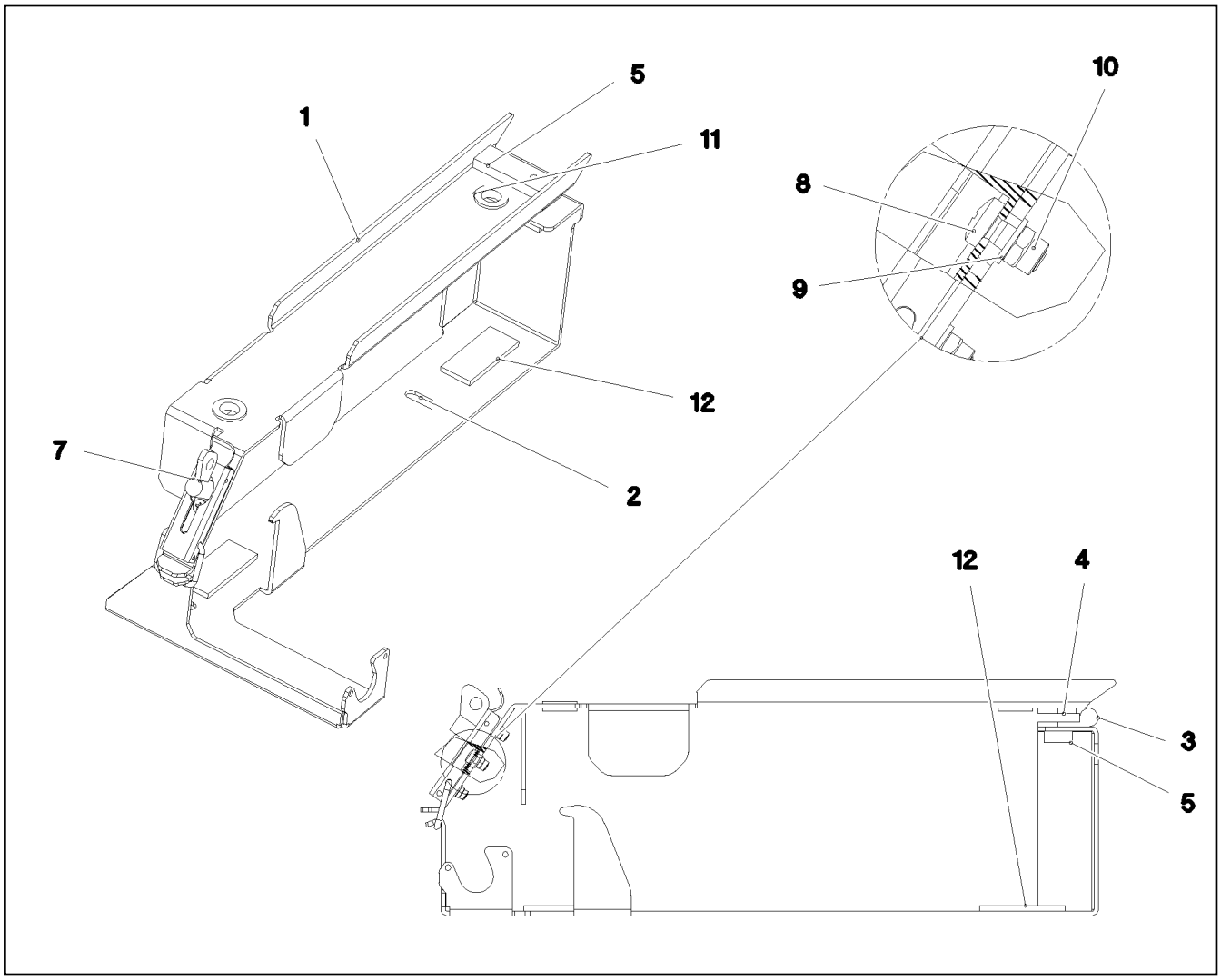


| Pos. | Item | Quantity | Description | Bezeichnung |
|---|---|---|---|---|
| 1 | 97 05 004 0 | 1 | PLATE 3X160X522 X5CRNI18-10 | BLECH |
| 2 | 97 05 004 3 | 1 | PLATE 3X292X697 X5CRNI18-10 | BLECH |
| 3 | 70 42 281 08 | 1 | HINGE 35X35X50/180° ST FE//ZN12//B | SCHARNIER |
| 4 | 40 86 002 08 | 4 | COUNTERSUNK SCREW DIN 7991 M6X16 8. | SENKSCHRAUBE |
| 5 | 95 36 953 08 | 2 | THREADED PLATE 8X20X60 S235JR FE//ZN | GEWINDEPLATTE |
| 7 | 70 42 276 08 | 1 | LOCK PIECE FEDERBUEGEL SCHWARZ P | VERSCHLUSS |
| 8 | 40 84 021 01 | 3 | PAN-HEAD SCREW ISO 7045 M5X12 4.8 A2 | FLACHKOPFSCHRAUBE |
| 9 | 46 00 305 | 3 | WASHER ISO 7089 5 200HV A3C | SCHEIBE |
| 10 | 41 19 003 08 | 3 | HEX NUT DIN 985 M5 8 A2C | SECHSKANTMUTTER |
| 11 | 60 27 018 08 | 2 | GROMMET 7/18/24 PVC | DURCHFUEHRUNGSTUELLE |
| 12 | 26 21 078 14 | 0.12 | CELL RUBBER 25X4 NEOPRENE | ZELLGUMMI |

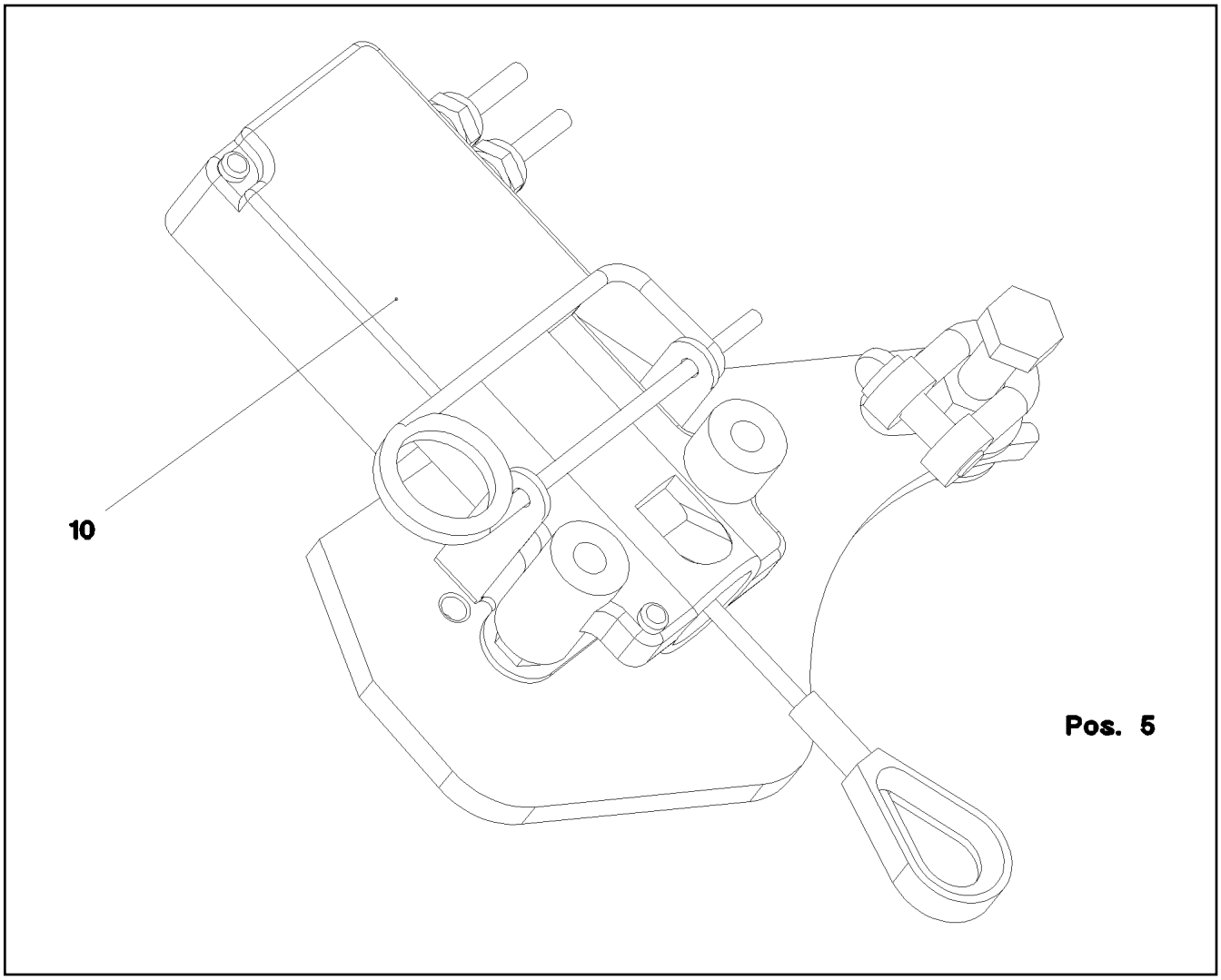


| Pos. | Item | Quantity | Description | Bezeichnung |
|---|---|---|---|---|
| 1 | 96 64 599 08 | 1 | FIXING DEVICE 2.LIFT TOP | HALTERUNG 2.HUB OBEN |
| 5 | 96 21 102 08 | 1 | LEAD WL503 | LEITUNG |
| 10 | 96 21 359 08 | 1 | SENSOR LIFT TOP LIMIT SWITCH MIT M12 | GEBER HUB OBEN ENDSCHAL |
| (7) | 10 67 839 5 | 1 | LIMIT SWITCH TQ200-RFID SPF | ENDSCHALTER |

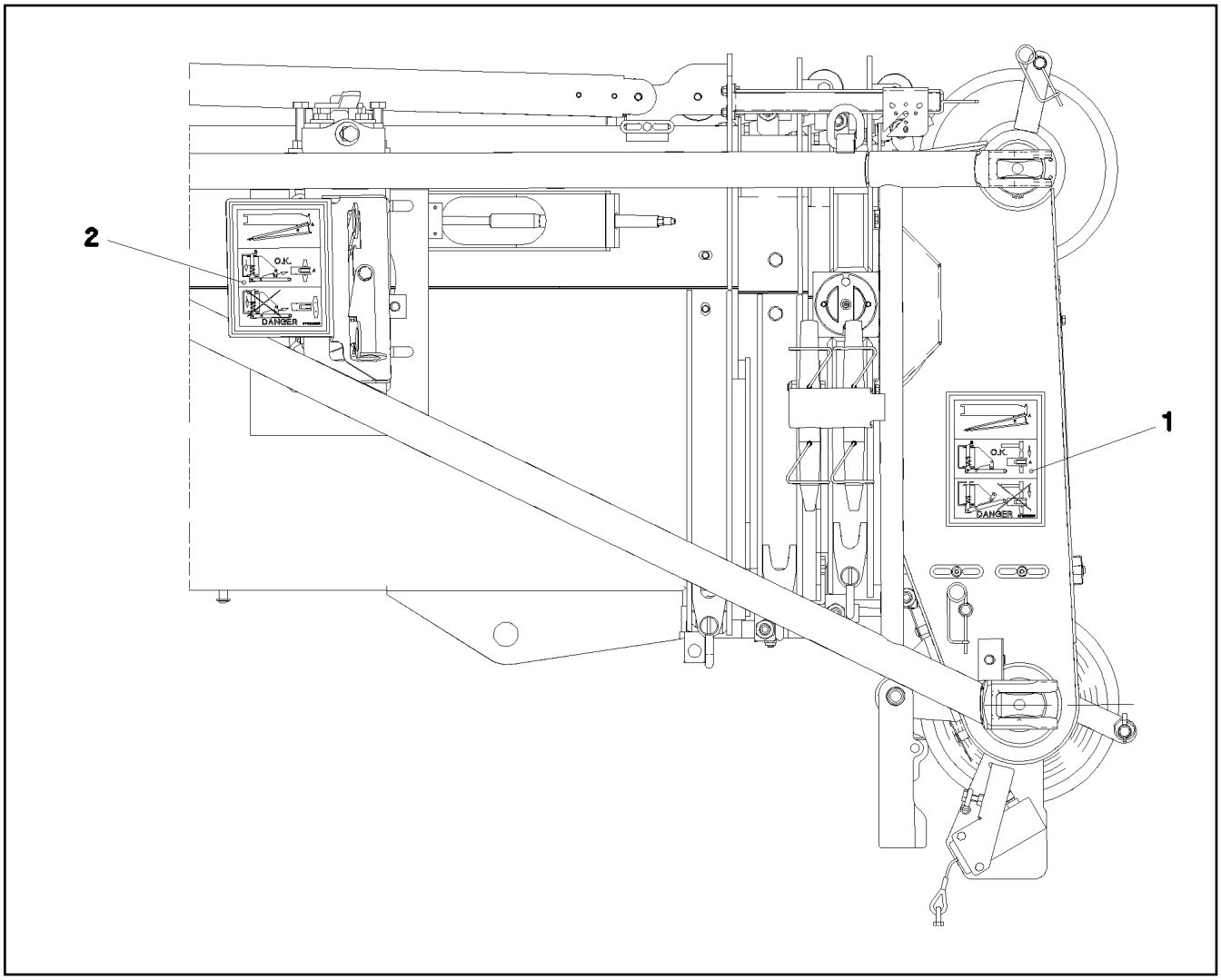


| Pos. | Item | Quantity | Description | Bezeichnung |
|---|---|---|---|---|
| 1 | 97 15 398 08 | 1 | SIGN 225X165 KLEBEFOLIE SPF | SCHILD |
| 2 | 97 15 399 08 | 1 | SIGN 225X165 KLEBEFOLIE SPF | SCHILD |

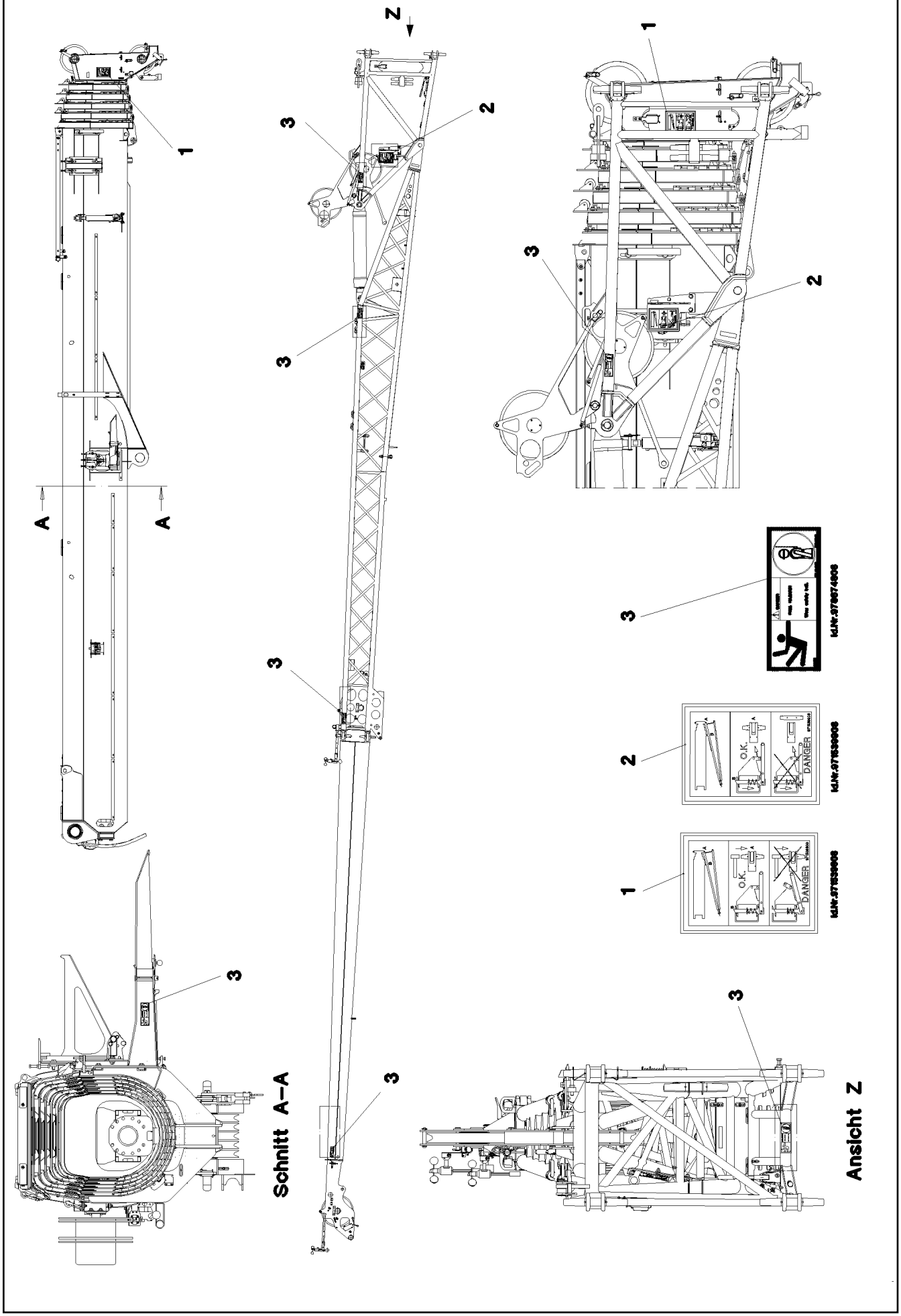


| | | |
|---|---|---|
| 16.2.2017<br>058596<br>LIEBHERR | **etk_en_de_048005 LTR 1100**<br><br>**SIGNS**<br>**BESCHILDERUNG** | ❑ 326 (1/2)<br><br>➪ **3 880 005**<br>**96 61 397 08** |

| Pos. | Item | Quantity | Description | Bezeichnung |
|---|---|---|---|---|
| 1 | 97 15 398 08 | 1 | SIGN 225X165 KLEBEFOLIE SPF | SCHILD |
| 2 | 97 15 399 08 | 1 | SIGN 225X165 KLEBEFOLIE SPF | SCHILD |
| 3 | 97 86 748 08 | 10 | SIGN 168X62 KLEBEFOLIE SPF | SCHILD |

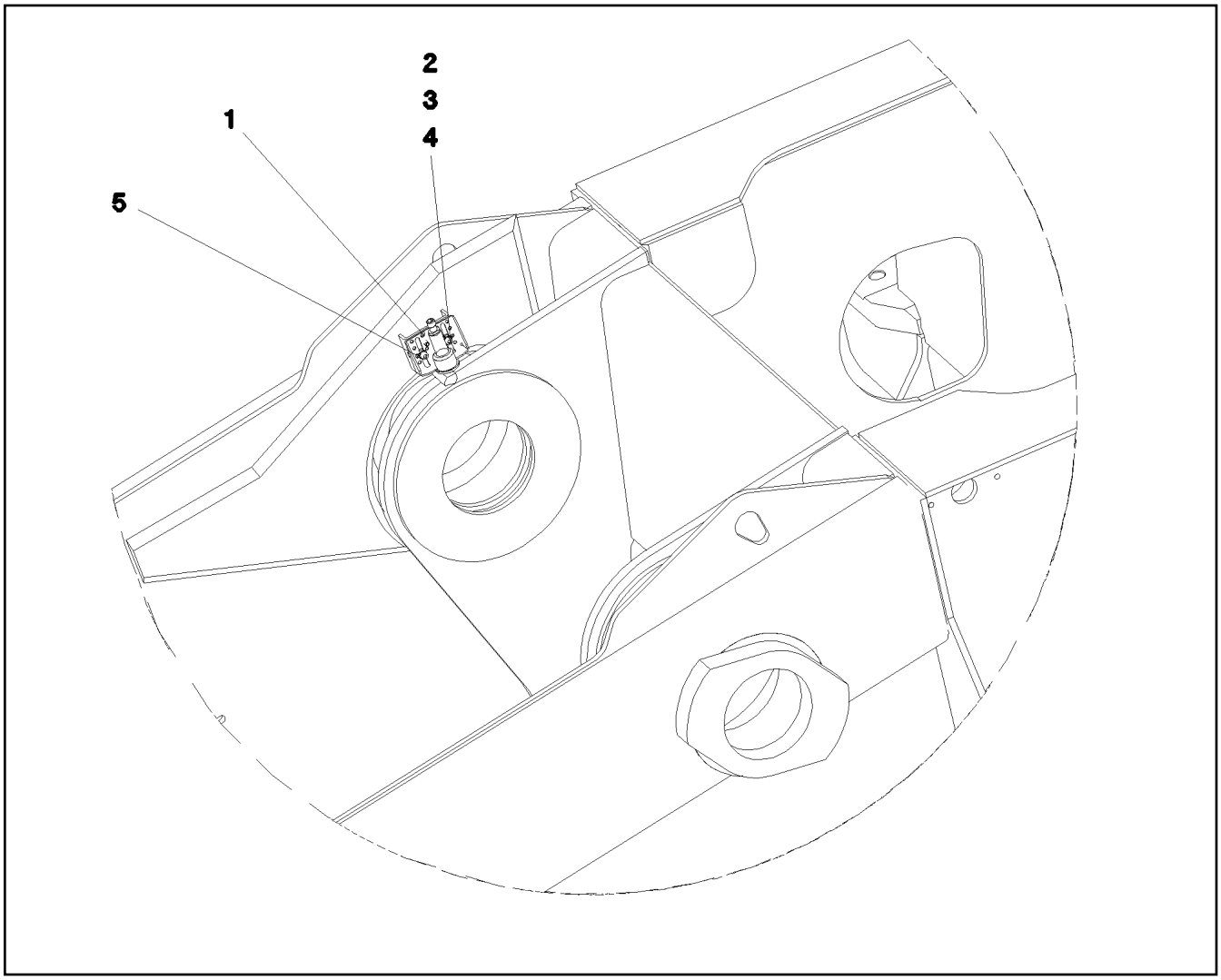


| Pos. | Item | Quantity | Description | Bezeichnung |
|---|---|---|---|---|
| 1 | 96 53 717 08 | 1 | HOLDER X12CRNIS188 | HALTER |
| 2 | 41 30 029 08 | 2 | CAGE NUT M6 | KAEFIGMUTTER |
| 3 | 10 87 564 7 | 2 | WASHER ISO 7089 6 200HV 480H SPF | SCHEIBE |
| 4 | 10 87 558 6 | 2 | SOCKET HEAD SCREW ISO 4762 M6X16 8.8 | ZYLINDERSCHRAUBE |
| 6 | 96 57 484 08 | 1 | LIMIT SWITCH AUSLEGERSTEIL | ENDSCHALTER |
| (5) | 11 34 720 6 | 1 | INDUCTIVE SENSOR CONTACTLESS SPF | INDUKTIVSENSOR |

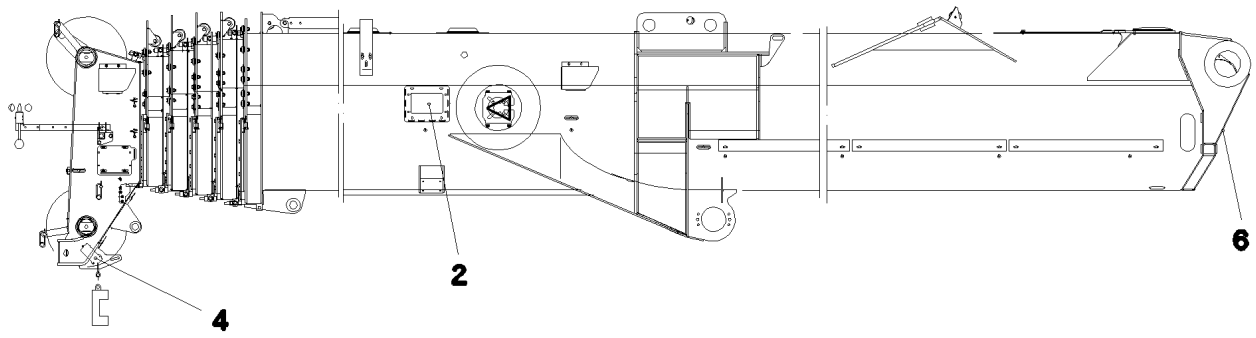


| Pos. | Item | Quantity | Description | Bezeichnung |
|---|---|---|---|---|
| 2 | 96 56 247 08 | 1 | ELECTRIC F.BASE SECTION<br>⇨ 3 930 342 96 56 247 08 | ELEKTRIK ANLENKSTUECK |
| 4 | 96 20 965 08 | 1 | ELECTR. FOR HEAD SECTION<br>⇨ 3 930 341 96 20 965 08 | ELEKTRIK KOPFSTUECK |
| 6 | 92 07 663 08 | 1 | ELECTR. F.EXTENDING MECHANISM<br>⇨ 3 930 470 92 07 663 08 | ELEKTRIK AUSSCHUBMECHANI |

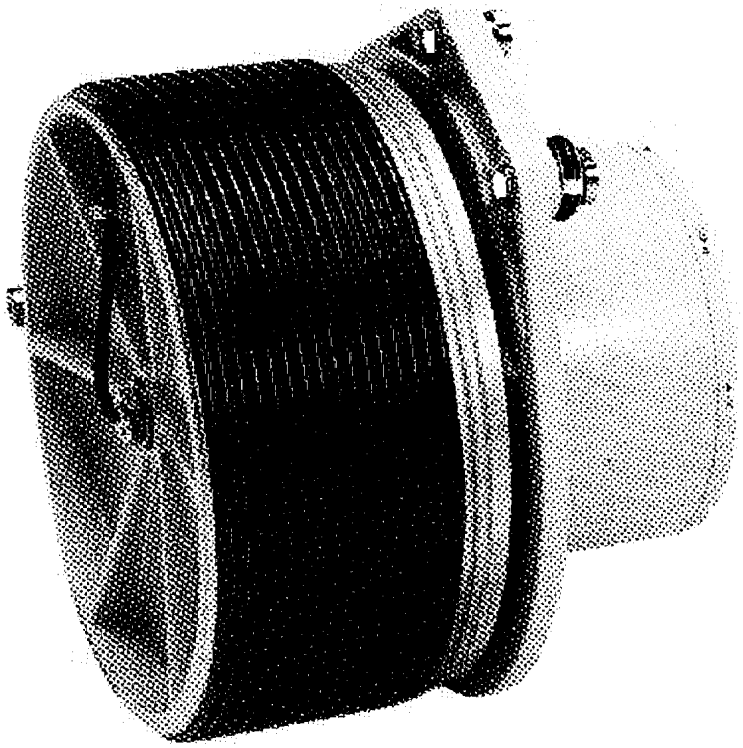

| Pos. | Item | Quantity | Description | Bezeichnung |
|---|---|---|---|---|
| 420 | 92 07 808 08 | 1 | LEAD W456B | LEITUNG |

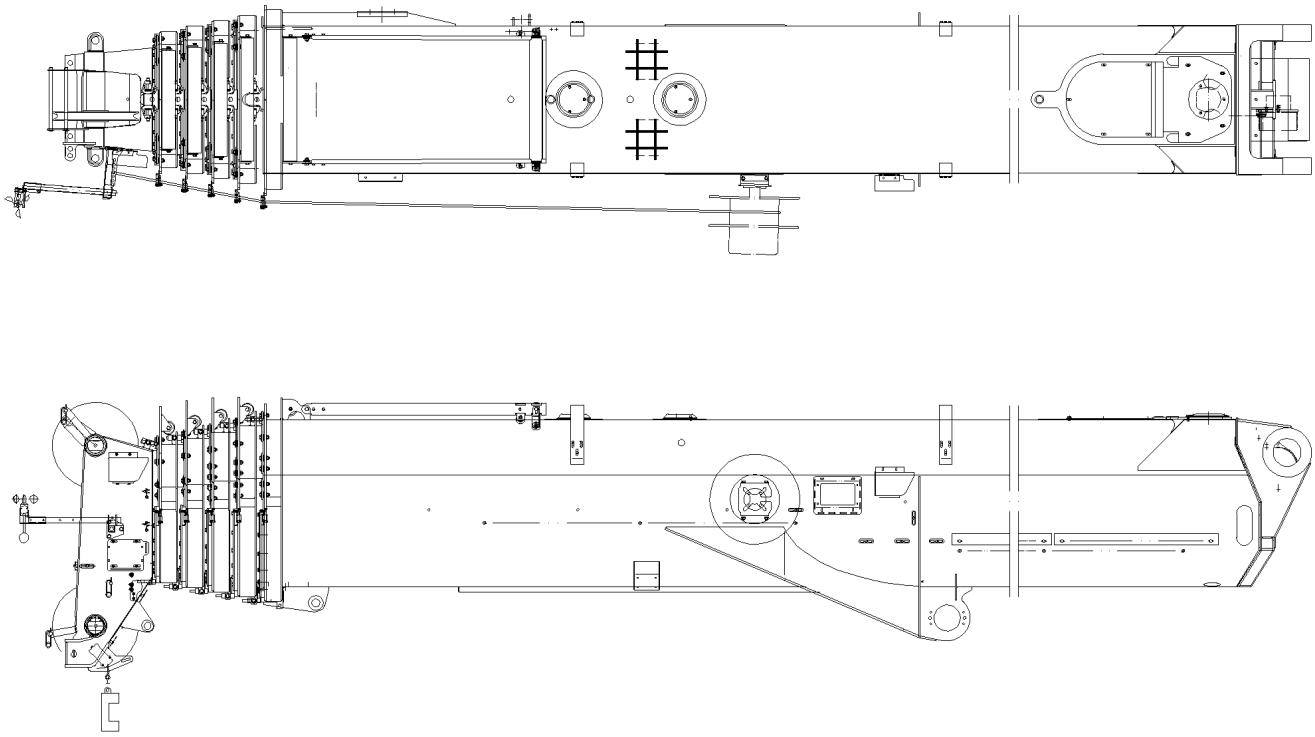

**Pos. 5**

| Pos. | Item | Quantity | Description | Bezeichnung |
|---|---|---|---|---|
| 5 | 96 20 966 08 | 1 | TERMINAL BOX CPL. S417<br>⇨ 3 930 492 96 20 966 08 | KLEMMKASTEN KPL. |

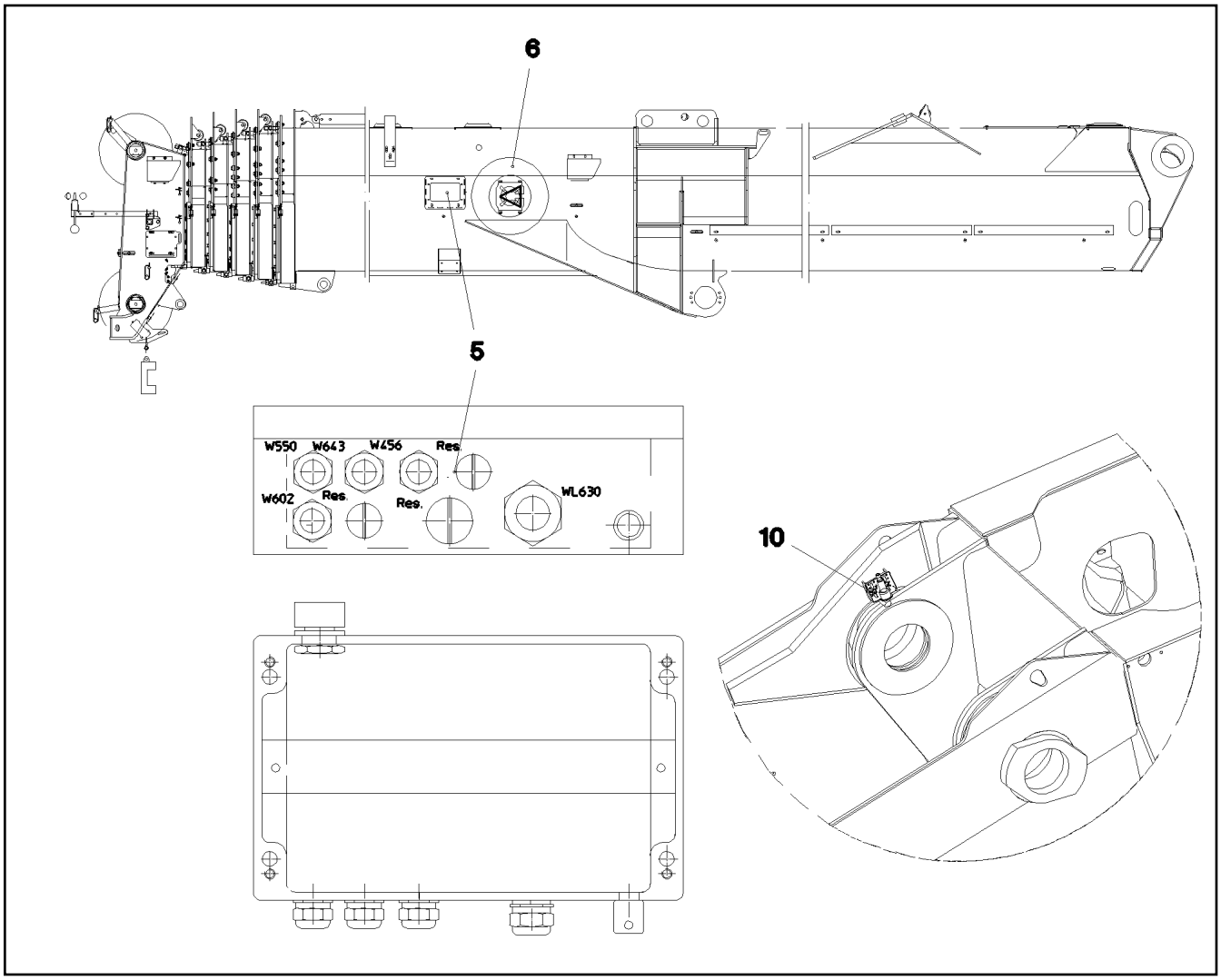


| Pos. | Item | Quantity | Description | Bezeichnung |
|---|---|---|---|---|
| 5 | 96 56 248 08 | 1 | TERMINAL BOX CPL. S413<br>➪ 3 930 718 96 56 248 08 | KLEMMKASTEN KPL. |
| 6 | 96 43 943 08 | 1 | CABLE REEL<br>➪ 3 930 523 96 43 943 08 | LEITUNGSTROMMEL |
| 10 | 96 57 224 08 | 1 | LIMIT SWITCH ADD-ON AUSLEGERSTEIL<br>➪ 3 920 012 96 57 224 08 | ENDSCHALTER ANBAU |

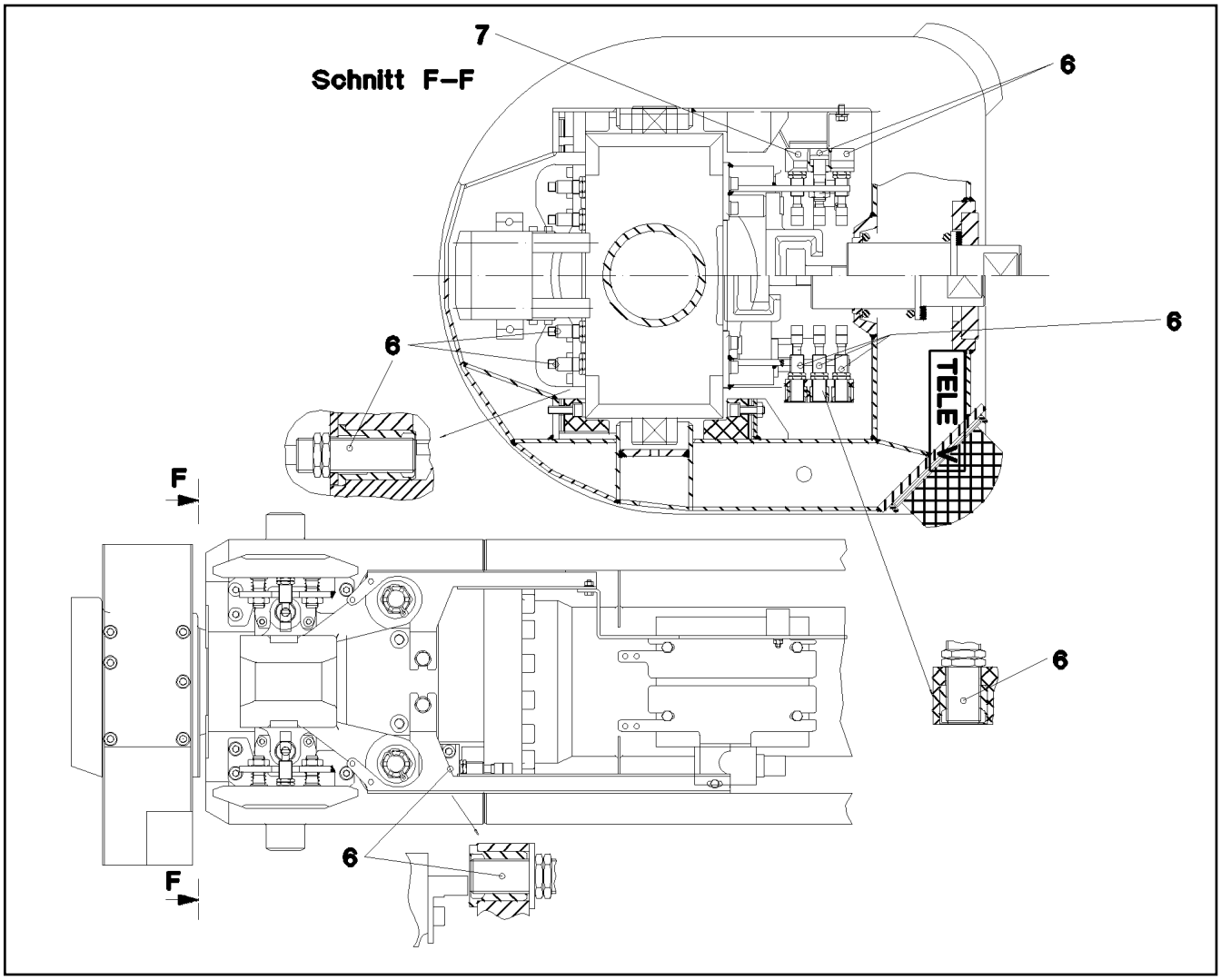


| Pos. | Item | Quantity | Description | Bezeichnung |
|---|---|---|---|---|
| 6 | 11 34 720 6 | 11 | INDUCTIVE SENSOR CONTACTLESS SPF | INDUKTIVSENSOR |
| 7 | 57 13 188 08 | 1 | PROXIMITY SWITCH BERUEHRUNGSLOS | NAEHERUNGSSCHALTER |

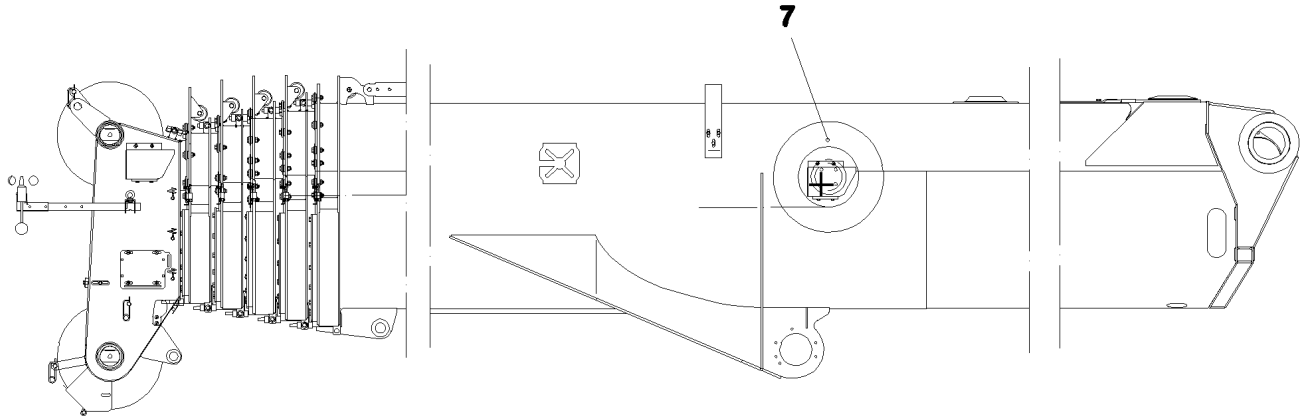


| Pos. | Item | Quantity | Description | Bezeichnung |
|---|---|---|---|---|
| 7 | 92 07 741 08 | 1 | CABLE DRUM COMPL. N1/B7<br>⇨ 3 930 204 92 07 741 08 | LEITUNGSTROMMEL KPL. |

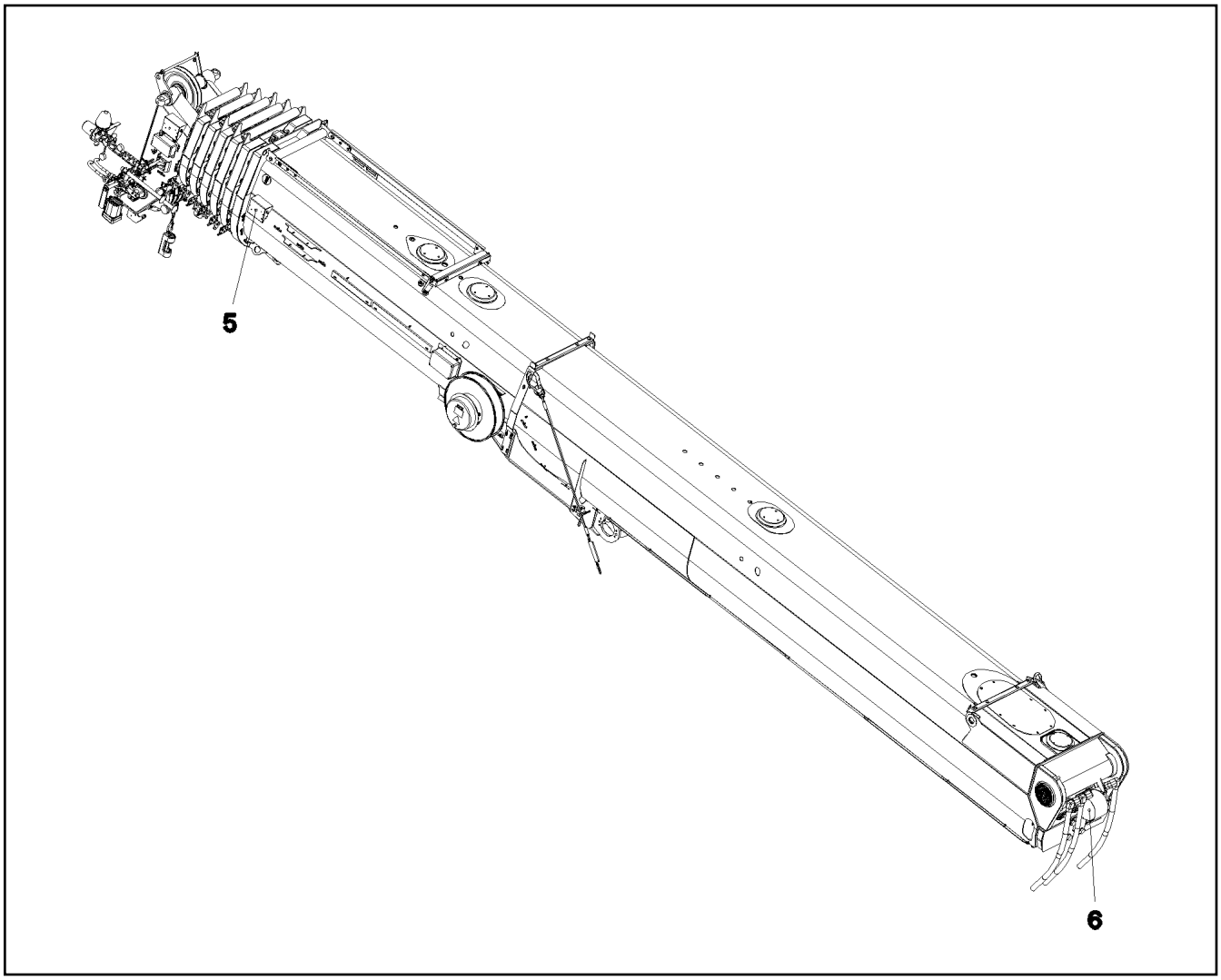


| Pos. | Item | Quantity | Description | Bezeichnung |
|---|---|---|---|---|
| 5 | 69 23 100 08 | 1 | ANGLE TRANSMITTER 360° SPF | WINKELGEBER |
| 6 | 69 23 101 08 | 1 | ROPE LENGTH INDICATOR 10M SPF<br>⇨ 6 923 101 08 69 23 101 08 | SEILLAENGENGEBER |

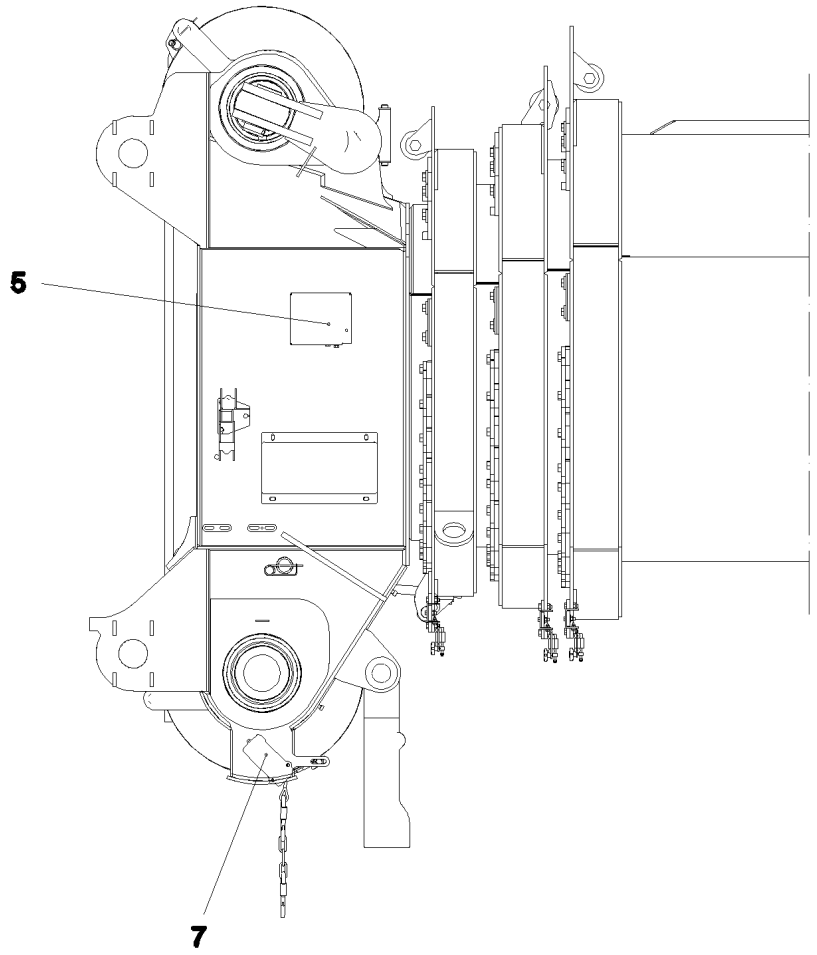


| Pos. | Item | Quantity | Description | Bezeichnung |
|---|---|---|---|---|
| 5 | 69 23 100 08 | 1 | ANGLE TRANSMITTER 360° SPF | WINKELGEBER |
| 7 | 10 67 839 5 | 1 | LIMIT SWITCH TQ200-RFID SPF | ENDSCHALTER |

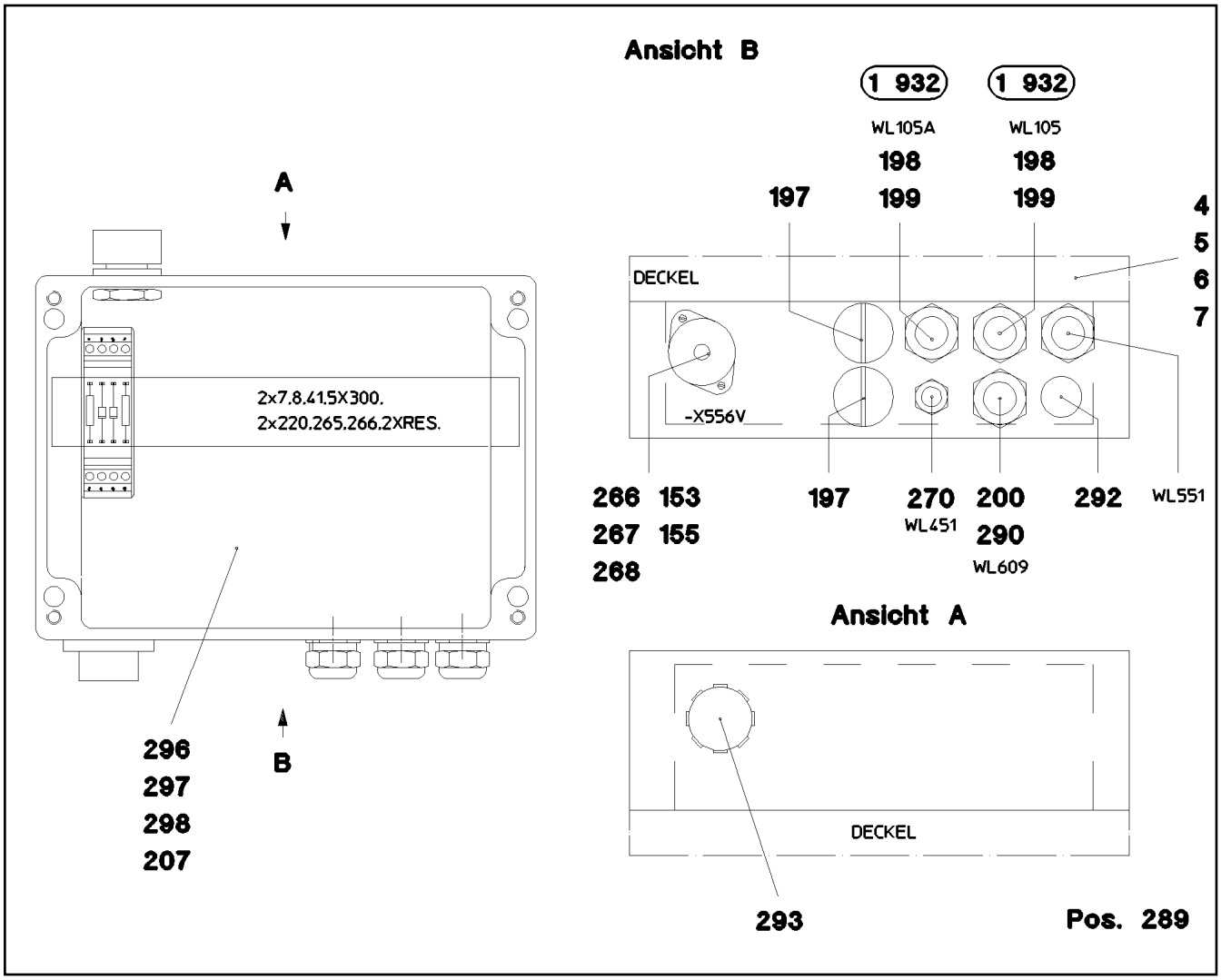


| Pos. | Item | Quantity | Description | Bezeichnung |
|---|---|---|---|---|
| 4 | 97 31 787 08 | 1 | SIGN | SCHILD |
| 5 | 97 18 849 08 | 1 | EMPTY CASING 120X220X80 AL | LEERGEHAEUSE |
| 6 | 92 01 753 08 | 1 | WIRES PRE-ASS. S417 | DRAEHTE VORM. |
| 7 | 92 17 218 08 | 1 | CABLE HARNESS S417 | KABELBAUM |
| (151) | 60 45 189 08 | 3 | STOPPER PLUG BAUREIHE_M1 | BLINDSTOPFEN |
| (152) | 60 45 265 08 | 1 | BUSHING SUPPORT 6-POL 16A | BUCHSENTRAEGER |
| (153) | 92 71 584 08 | 1 | CUSTOM CIRCUIT MODULE 1 | BESTUECKUNGSMODUL 1 |
| 153 | 60 45 121 08 | 1 | SEALING PLUG M1-D | VERSCHLUSSKAPPE |
| 155 | 60 45 081 08 | 1 | TIN M1 | DOSE |
| 197 | 60 24 250 08 | 2 | SCREW PLUG M20X1,5 MS | VERSCHLUSSSCHRAUBE |
| 198 | 60 26 062 08 | 2 | REDUCTION M20X1,5/M16X1,5 MS | REDUKTION |
| 199 | 60 24 241 08 | 2 | CABLE GLAND M16X1,5 MS | KABELVERSCHRAUBUNG |
| 200 | 60 24 257 08 | 1 | CABLE GLAND M20X1,5X6-10 MS | KABELVERSCHRAUBUNG |
| 207 | 60 27 426 08 | 0.16 | IDENTIFICATION STRIP | KENNZEICHNUNGSKARTEN |
| 266 | 40 01 701 08 | 2 | SOCKET HEAD SCREW DIN 84 M3X15 MS | ZYLINDERSCHRAUBE |
| 267 | 41 15 157 08 | 2 | HEX NUT ISO 4032 M3 8 A2C | SECHSKANTMUTTER |
| 268 | 42 00 501 08 | 2 | WASHER ISO 7089 3 MS | SCHEIBE |
| 270 | 96 20 967 08 | 1 | LEAD WL451 | LEITUNG |
| 289 | 87 00 028 08 | 0.1 | SEALANT A80MR HYLOMAR | DICHTMITTEL |
| 290 | 92 07 849 08 | 1 | LEAD WL609 | LEITUNG |
| 292 | 60 25 012 08 | 1 | WATER DRAIN PLUG M12 PA6G SPF | ENTWAESSERUNGSSTOPFEN |
| 293 | 60 25 013 08 | 1 | VENTILATION SCREW G1/2"X30 POLYAMID | ENTLUEFTUNGSSCHRAUBE |
| 296 | 60 27 417 08 | 6 | CRAMP | KRAMPE |
| 297 | 10 28 635 4 | 15 | TERMINAL/CLAMP 6,3/2,8X0,8MM² | KLEMME |
| 298 | 60 21 067 08 | 0.21 | TOP HAT RAIL 35X27X7,3X1 | HUTSCHIENE |

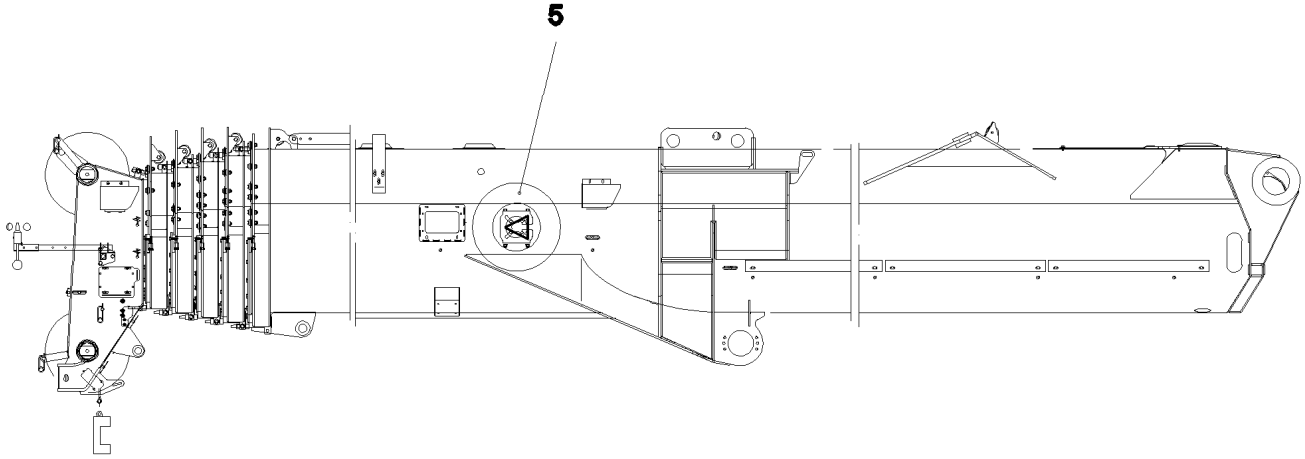


**Pos. 4**
**Pos. 6**
**Pos. 7**
**Pos. 8**

| Pos. | Item | Quantity | Description | Bezeichnung |
|---|---|---|---|---|
| 4 | 92 72 494 08 | 1 | LEAD WL550 | LEITUNG |
| 5 | 10 34 357 4 | 1 | CABLE REEL 50M 9-POL+PE SPF<br>⇨ X10343574 10 34 357 4 | LEITUNGSTROMMEL |
| 6 | 96 21 938 08 | 1 | LEAD WL551 | LEITUNG |
| 7 | 60 24 226 08 | 1 | CABLE GLAND PG11 | KABELVERSCHRAUBUNG |
| 8 | 60 26 040 08 | 1 | REDUCING PIECE PG13,5/11 MS VERNICK | REDUZIERSTUECK |
| 9 | 60 25 013 08 | 1 | VENTILATION SCREW G1/2"X30 POLYAMID | ENTLUEFTUNGSSCHRAUBE |
| 154 | 60 32 004 08 | 5 | CABLE TIE 3,6X200-SCHWARZ PA 6.6 | KABELBINDER |
| 289 | 87 00 028 08 | 0.1 | SEALANT A80MR HYLOMAR | DICHTMITTEL |

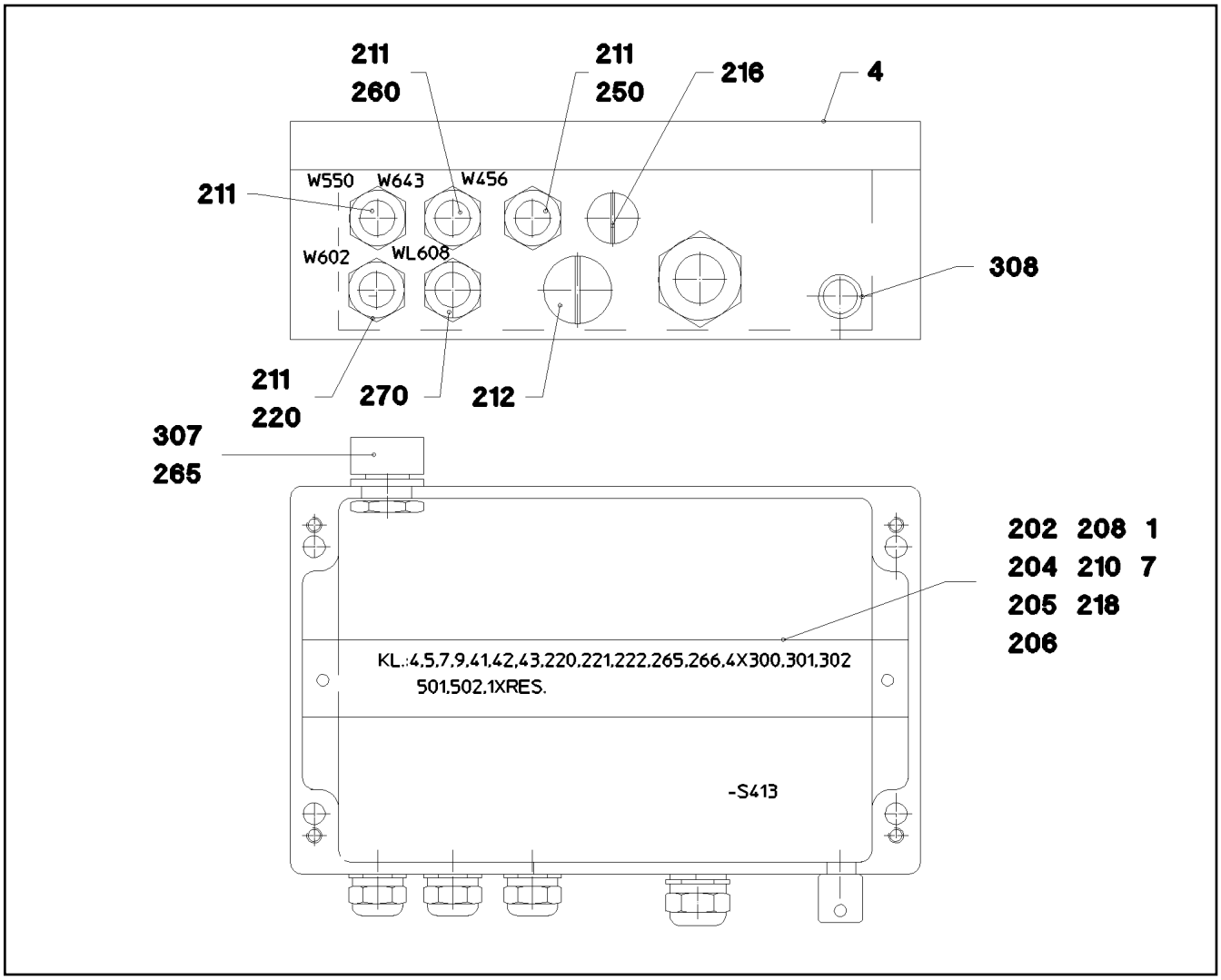


| Pos. | Item | Quantity | Description | Bezeichnung |
|---|---|---|---|---|
| 1 | 92 01 751 08 | 1 | WIRES PRE-ASS. -S413 | DRAEHTE VORM. |
| 4 | 77 26 487 08 | 1 | SIGN | SCHILD |
| 7 | 97 18 863 08 | 1 | EMPTY CASING 160X260X90X0 AL | LEERGEHAEUSE |
| 202 | 60 21 067 08 | 0.25 | TOP HAT RAIL 35X27X7,3X1 | HUTSCHIENE |
| 204 | 10 28 635 4 | 21 | TERMINAL/CLAMP 6,3/2,8X0,8MM² | KLEMME |
| 205 | 60 27 360 08 | 2 | SUPPORT TRESTLE | AUFLAGEBOCK |
| 206 | 10 28 635 3 | 1 | COVER | DECKEL |
| 208 | 60 27 946 08 | 2 | END ANGLE | ENDWINKEL |
| 210 | 40 82 010 14 | 2 | SHEET-METAL SCREW ISO 7049 ST4,8X19 | BLECHSCHRAUBE |
| 211 | 60 24 257 08 | 4 | CABLE GLAND M20X1,5X6-10 MS | KABELVERSCHRAUBUNG |
| 212 | 60 24 251 08 | 1 | SCREW PLUG M25X1,5 MS | VERSCHLUSSSCHRAUBE |
| 216 | 60 24 250 08 | 2 | SCREW PLUG M20X1,5 MS | VERSCHLUSSSCHRAUBE |
| 218 | 42 18 006 08 | 2 | WASHER DIN 9021 5,3 140HV A2C | SCHEIBE |
| 220 | 96 37 697 08 | 1 | LEAD WL602 | LEITUNG |
| 250 | 96 37 698 08 | 1 | LEAD WL456 | LEITUNG |
| 260 | 96 37 699 08 | 1 | LEAD WL643 | LEITUNG |
| 265 | 87 00 028 08 | 0.1 | SEALANT A80MR HYLOMAR | DICHTMITTEL |
| 270 | 96 56 249 08 | 1 | LEAD W608 | LEITUNG |
| 307 | 10 48 866 2 | 1 | VENTILATION SCREW M20X1,5 POLYAMID | ENTLUEFTUNGSSCHRAUBE |
| 308 | 60 25 012 08 | 1 | WATER DRAIN PLUG M12 PA6G SPF | ENTWAESSERUNGSSTOPFEN |

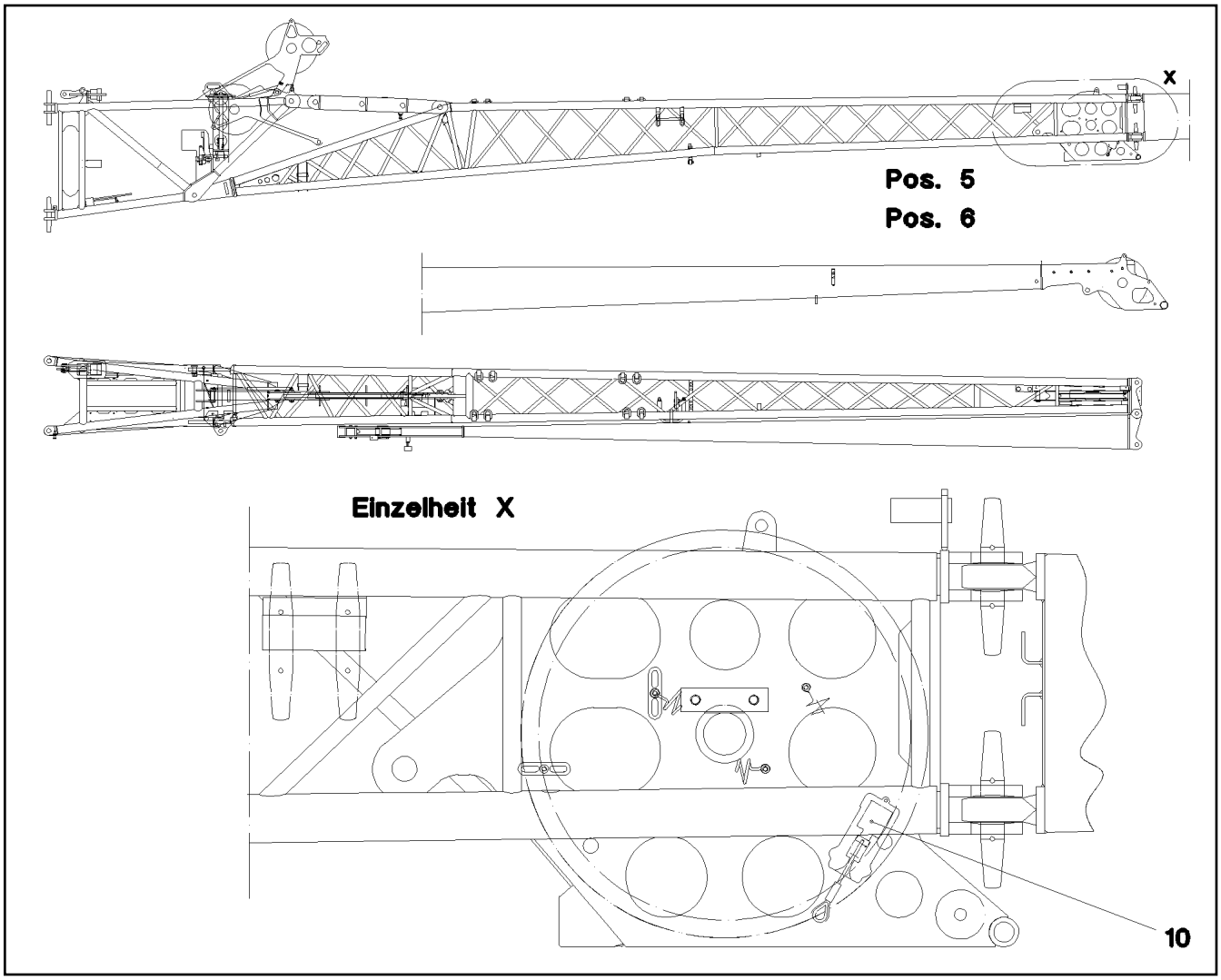


| Pos. | Item | Quantity | Description | Bezeichnung |
|---|---|---|---|---|
| 5 | 96 22 209 08 | 1 | LEAD WL500 | LEITUNG |
| 6 | 96 20 963 08 | 1 | LEAD WL504 | LEITUNG |
| 10 | 96 20 219 08 | 1 | SENSOR LIFT TOP LIMIT SWITCH MIT M12 | GEBER HUB OBEN ENDSCHAL |

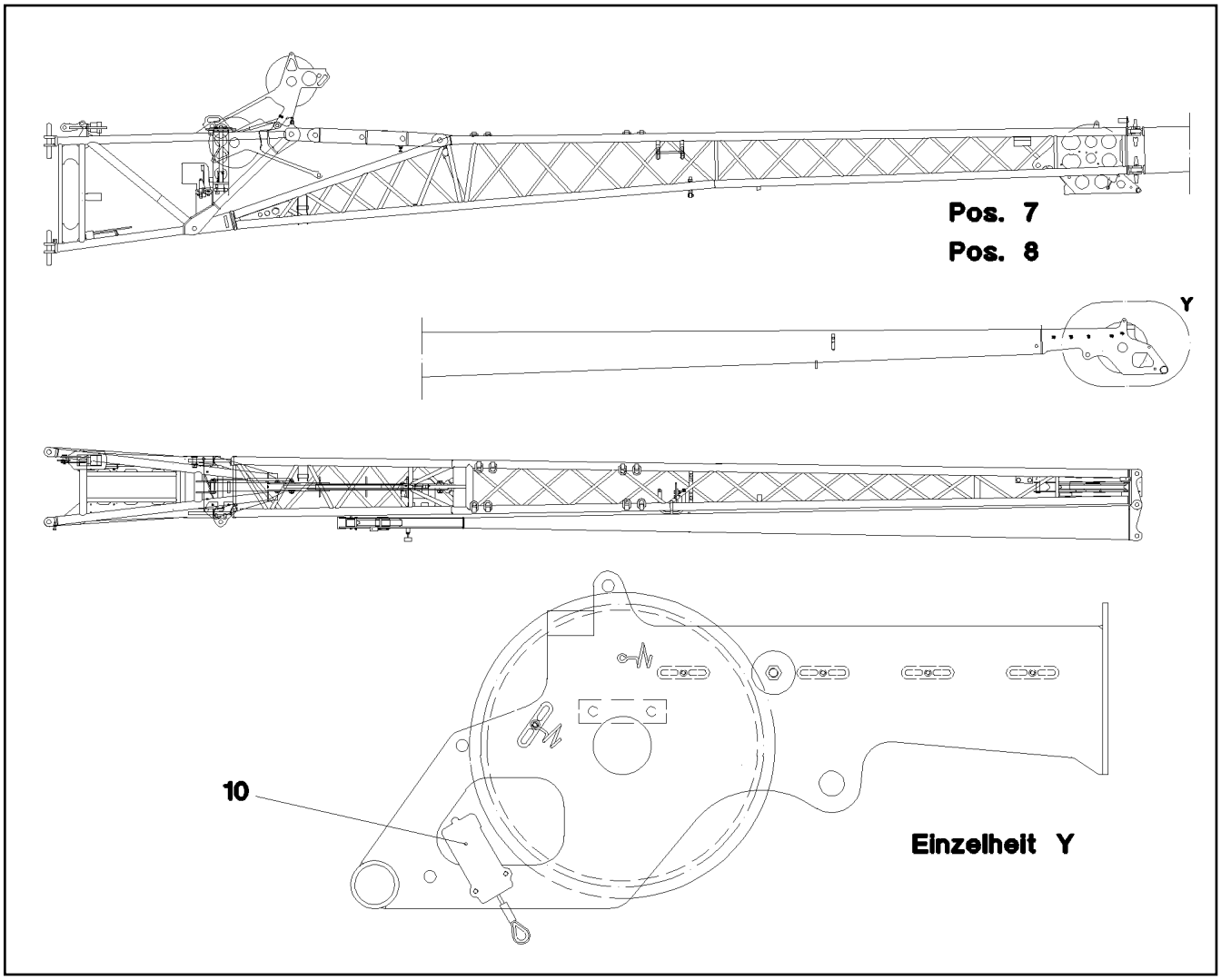


| Pos. | Item | Quantity | Description | Bezeichnung |
|---|---|---|---|---|
| 7 | 96 20 961 08 | 1 | LEAD WL502 | LEITUNG |
| 8 | 96 20 962 08 | 1 | LEAD WL505 | LEITUNG |
| 10 | 96 20 219 08 | 1 | SENSOR LIFT TOP LIMIT SWITCH MIT M12 | GEBER HUB OBEN ENDSCHAL |

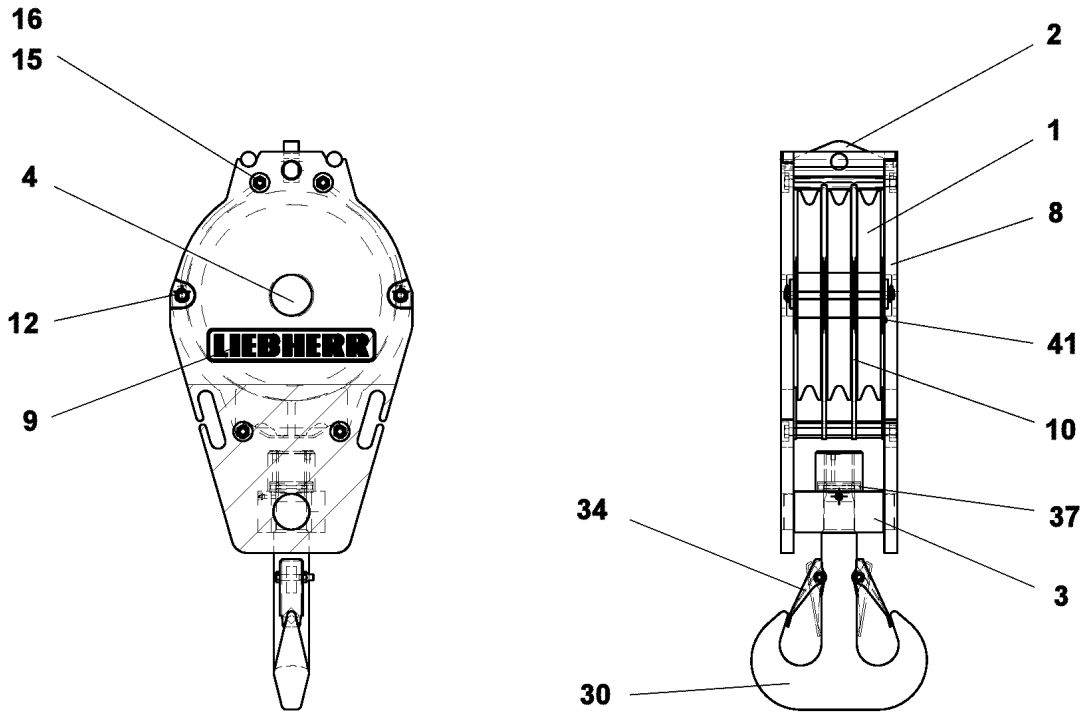


| Pos. | Item | Quantity | Description | Bezeichnung |
|---|---|---|---|---|
| 1 | 92 40 739 08 | 3 | ROPE PULLEY SPF<br>⇨ 4 099 001 92 40 739 08 | SEILROLLE |
| 2 | 11 49 429 7 | 1 | ROPE FIXING POINT | SEILFESTPUNKT |
| 3 | 11 49 429 8 | 1 | TRAVERSE | TRAVERSE |
| 4 | 11 49 429 9 | 1 | DISK PIN | SCHEIBENBOLZEN |
| 8 | 11 62 196 4 | 2 | SIDE PLATE | SEITENBLECH |
| 9 | 10 66 371 8 | 2 | SIGN 88X450X0,1 FOLIE | SCHILD |
| 10 | 57 19 260 08 | 1 | ROPE GUARD CPL | SEILSCHUTZ KPL. |
| 12 | 57 19 261 08 | 2 | ROPE PROTECTION ROD | SEILSCHUTZSTANGE |
| 15 | 10 87 561 8 | 4 | HEX NUT ISO 4032 M20 8 FLZN SPF | SECHSKANTMUTTER |
| 16 | 40 62 147 08 | 4 | HEX SCREW ISO 4014 M20X290 10.9 FLZN | SECHSKANTSCHRAUBE |
| 30 | 11 34 137 5 | 1 | TWIN HOOK NR. 016-T 63t GS-34CRMO4 V | DOPPELHAKEN |
| 34 | 57 17 143 08 | 2 | SAFETY TRAP | SICHERUNGSFALLE |
| 37 | 74 66 071 08 | 1 | CYLINDRICAL ROLLER BEARING DIN 722 81 | AXIALZYLINDERROLLENLAGER |
| 41 | 11 49 411 6 | 2 | COVER PLATE | ABDECKBLECH |

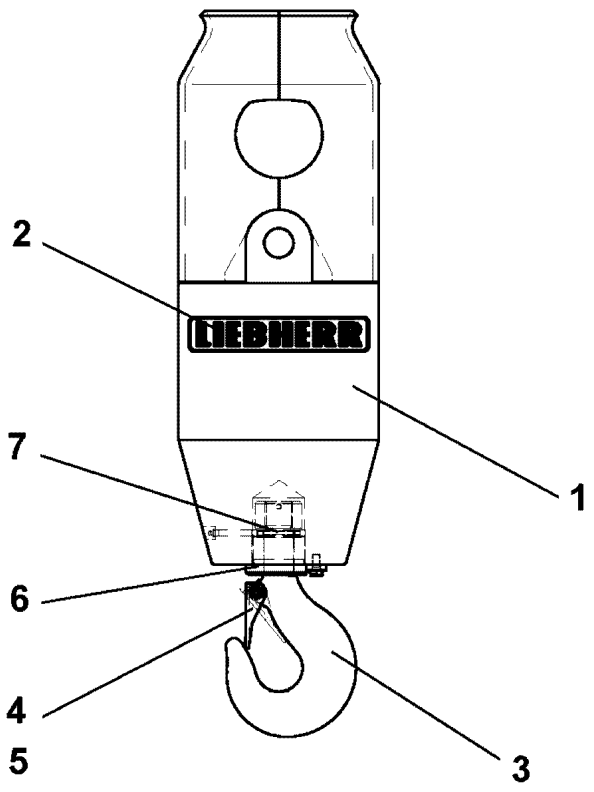


| Pos. | Item | Quantity | Description | Bezeichnung |
|---|---|---|---|---|
| 1 | 11 49 201 7 | 1 | WEIGHT | GEWICHT |
| 2 | 10 68 415 6 | 1 | SIGN 70X360X0,1 FOLIE | SCHILD |
| 3 | 11 21 222 9 | 1 | SINGLE HOOK | EINFACHHAKEN |
| 4 | 57 17 020 08 | 1 | SAFETY TRAP | SICHERUNGSFALLE |
| 5 | 10 33 187 4 | 1 | PL LATCH | PL FALLE |
| 6 | 11 49 201 8 | 1 | FLANGED BOLT | BUNDSCHRAUBE |
| 7 | 74 66 049 08 | 1 | CYLINDRICAL ROLLER BEARING DIN 722 81 | AXIALZYLINDERROLLENLAGER |

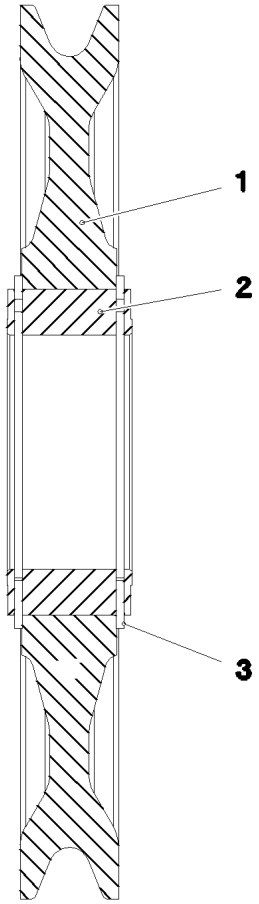


| Pos. | Item | Quantity | Description | Bezeichnung |
|---|---|---|---|---|
| 1 | 77 39 522 08 | 1 | ROPE PULLEY RD485X63 PA6G SPF | SEILROLLE |
| 2 | 74 59 027 08 | 1 | ROLLER BEARING 120X180X80 | WAELZLAGER |
| 3 | 42 80 094 08 | 2 | LOCKING RING DIN 471 180X4 | SICHERUNGSRING |

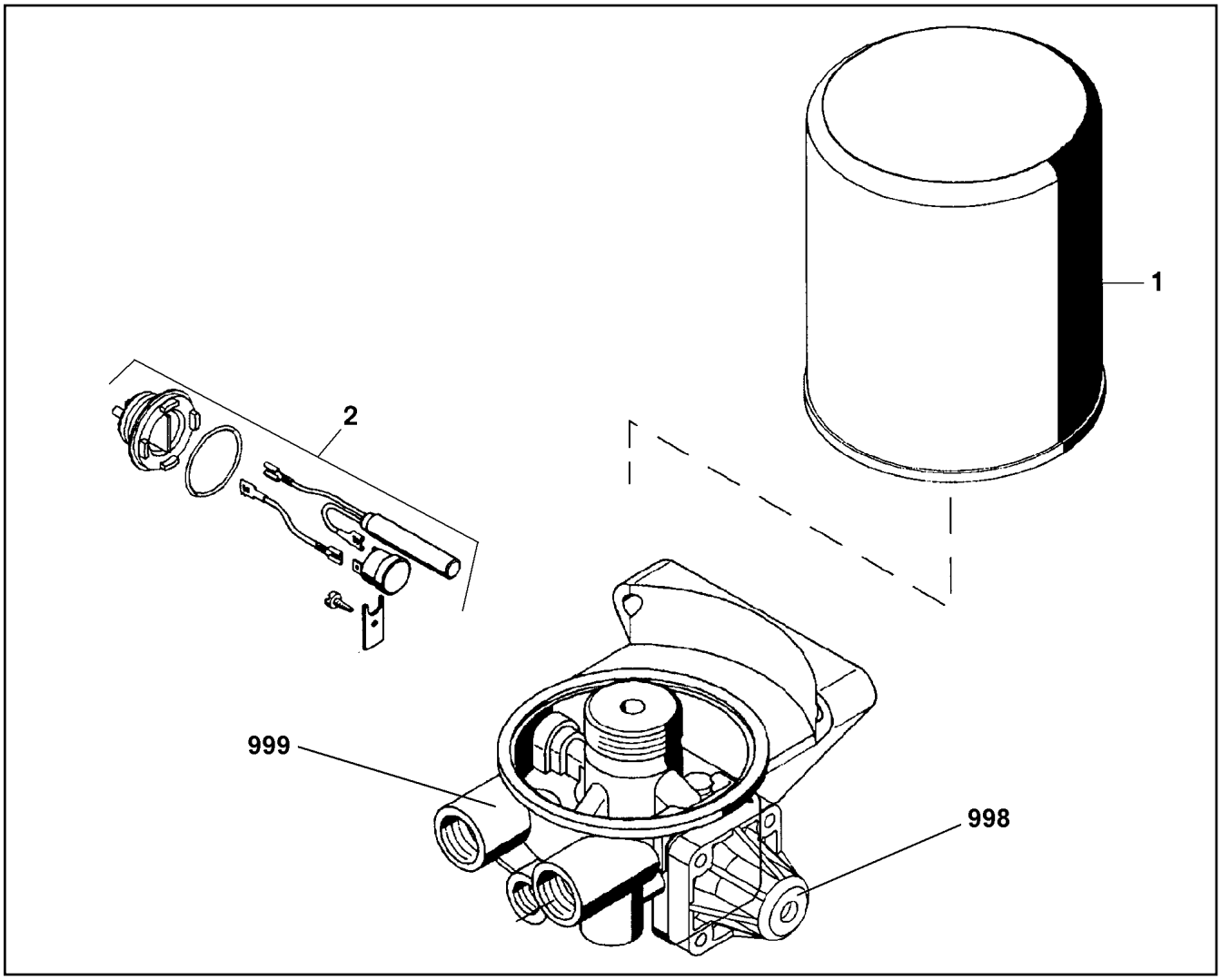


| Pos. | Item | Quantity | Description | Bezeichnung |
|---|---|---|---|---|
| 1 | 57 13 523 08 | 1 | CARTOUCHE | KARTUSCHE |
| 2 | 50 26 514 08 | 1 | HEATING | HEIZUNG |
| 998 | 11 00 308 9 | 1 | REPAIR SET PRESSURE GOVERNOR | RS DRUCKREGLER |
| 999 | 11 00 309 4 | 1 | REPAIR KIT | REPARATURSATZ |

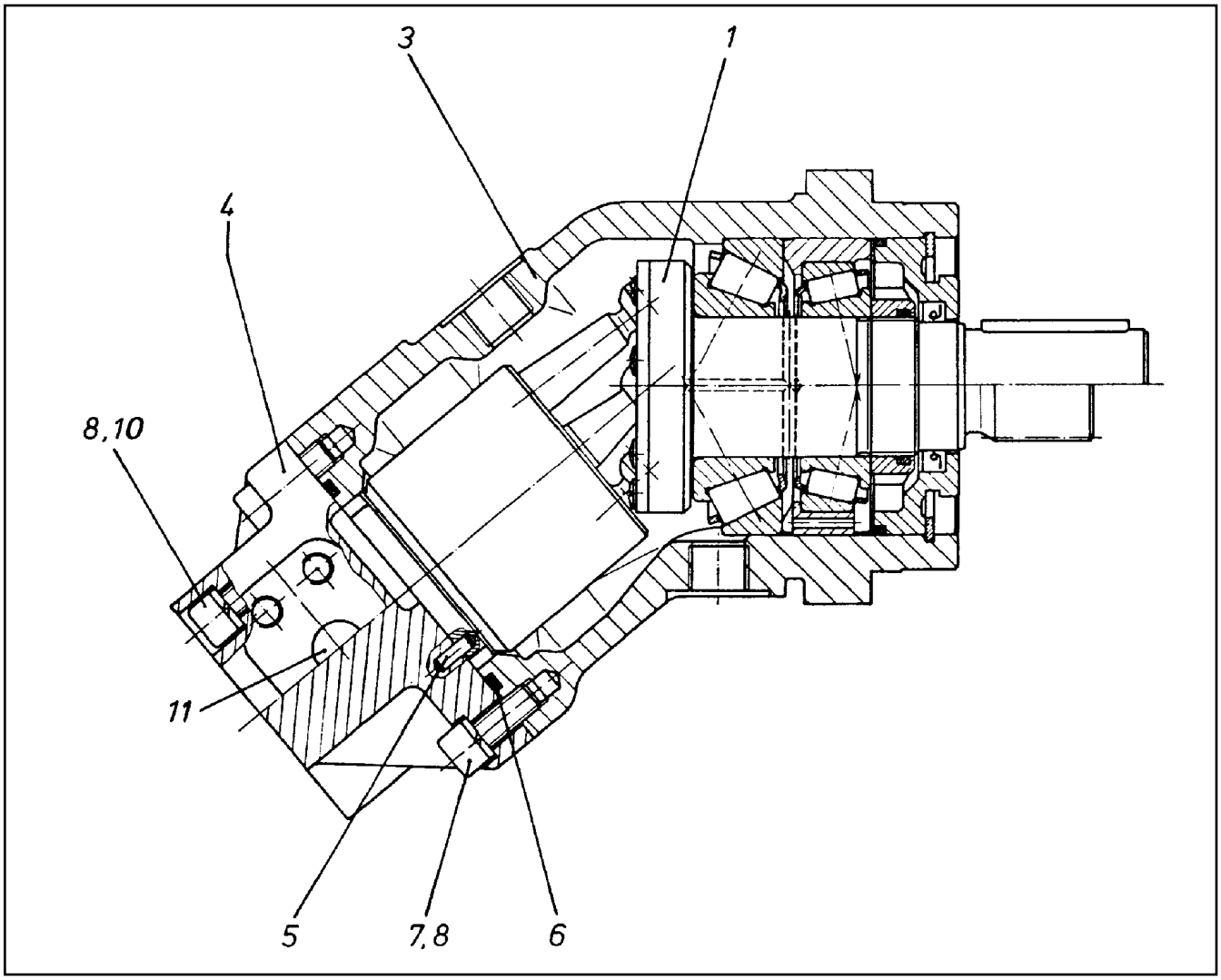


| Pos. | Item | Quantity | Description | Bezeichnung |
|---|---|---|---|---|
| 1 | 57 01 090 08 | 1 | DRIVING GEAR<br>⇨ 5 701 090 08 57 01 090 08 | TRIEBWERK |
| 3 | 57 01 091 08 | 1 | HOUSING | GEHAEUSE |
| 4 | 57 01 092 08 | 1 | CONNECTING PLATE | ANSCHLUSSPLATTE |
| 5 | 57 01 093 08 | 1 | PARALLEL PIN ISO 2338 4M6X10 ST | ZYLINDERSTIFT |
| 6 | 51 86 485 08 | 1 | O-RING ARP 568 66,27X3,53 NBR70 | O-RING |
| 7 | 10 87 559 8 | 2 | SOCKET HEAD SCREW ISO 4762 M8X20 8.8 | ZYLINDERSCHRAUBE |
| 8 | 42 41 007 08 | 6 | WASHER SPRING DIN 7980 8 FST VERZ | FEDERRING |
| 10 | 10 87 560 1 | 4 | SOCKET HEAD SCREW ISO 4762 M8X50 8.8 | ZYLINDERSCHRAUBE |
| 11 | 57 01 094 08 | 2 | SCREW PLUG M27X2 | VERSCHLUSSSCHRAUBE |
| 14 | 70 22 315 | 1 | SHAFT SEAL 35X52X6/5 FKM | WELLENDICHTRING |

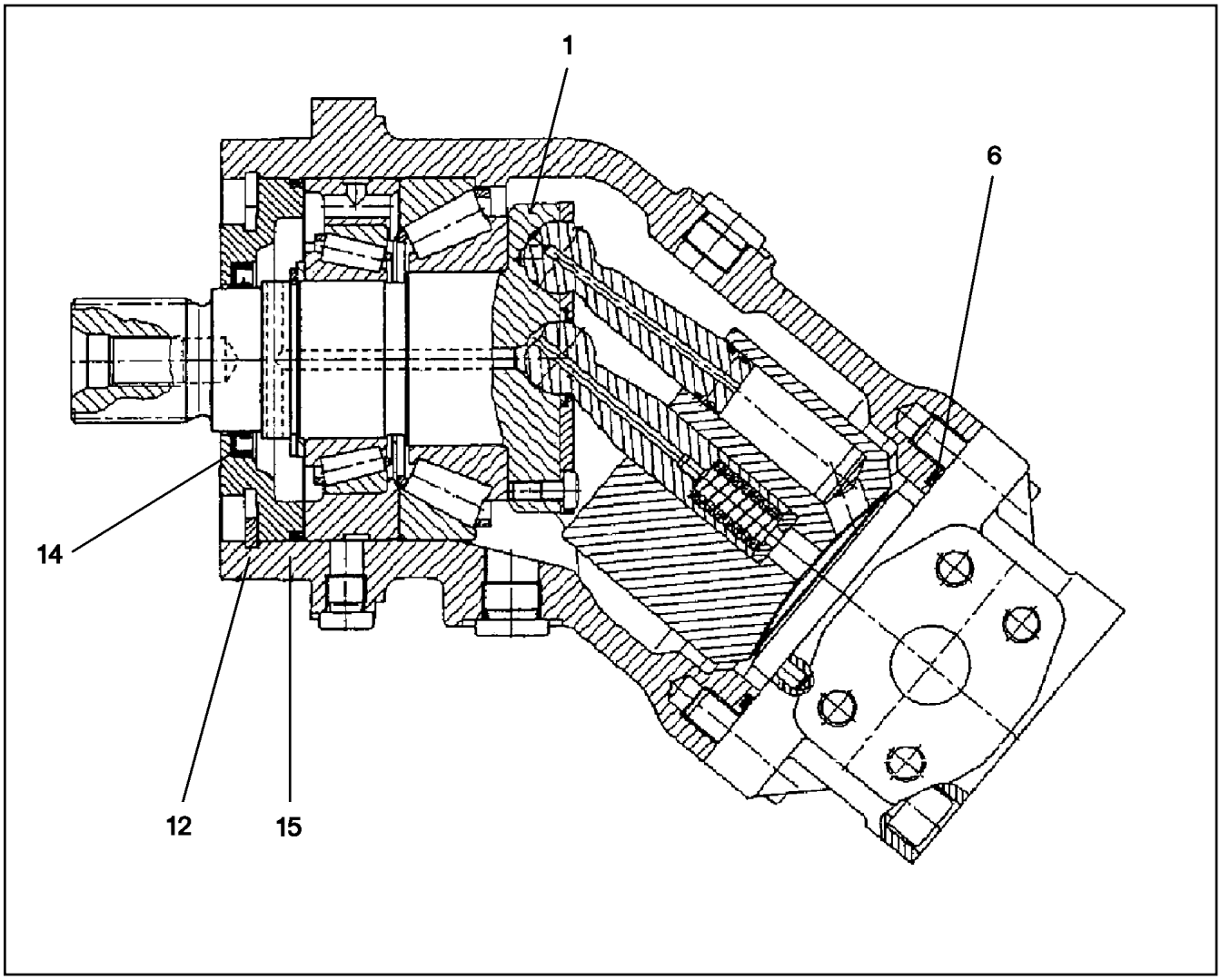


| Pos. | Item | Quantity | Description | Bezeichnung |
|---|---|---|---|---|
| 1 | 10 28 954 9 | 1 | DRIVING GEAR | TRIEBWERK |
| 6 | 51 46 132 08 | 1 | O-RING ARP 568 98,02X3,53 NBR70 | O-RING |
| 12 | 42 81 038 08 | 1 | LOCKING RING DIN 472 125X4 | SICHERUNGSRING |
| 14 | 70 03 478 | 1 | SHAFT SEAL 50X72X7 | WELLENDICHTRING |
| 15 | 51 46 141 08 | 1 | O-RING ARP 568 117,07X3,53 NBR70 | O-RING |

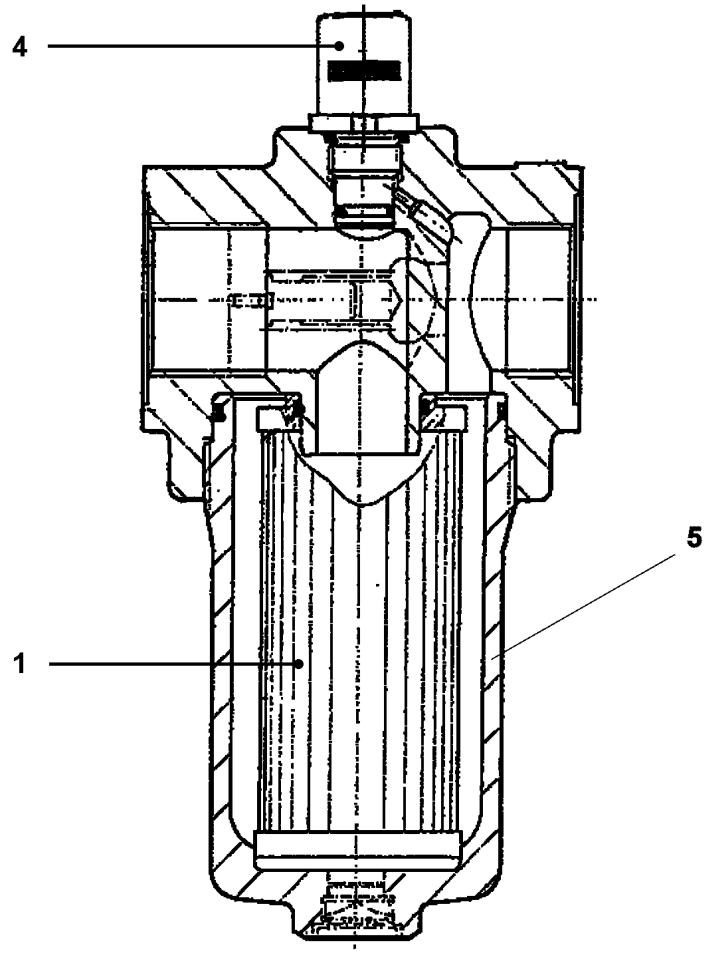


Pos. 99

| Pos. | Item | Quantity | Description | Bezeichnung |
|---|---|---|---|---|
| 1 | 57 05 848 08 | 1 | FILTER INSERT OEL 10µm | FILTEREINSATZ |
| 4 | 57 13 561 08 | 1 | CLOGGING INDICATOR | VERSCHMUTZUNGSANZEIGE |
| 5 | 11 64 705 9 | 1 | OIL FILTER HOUSING | OELFILTERTOPF |
| 99 | 10 04 181 5 | 1 | SEAL KIT | DICHTUNGSSATZ |

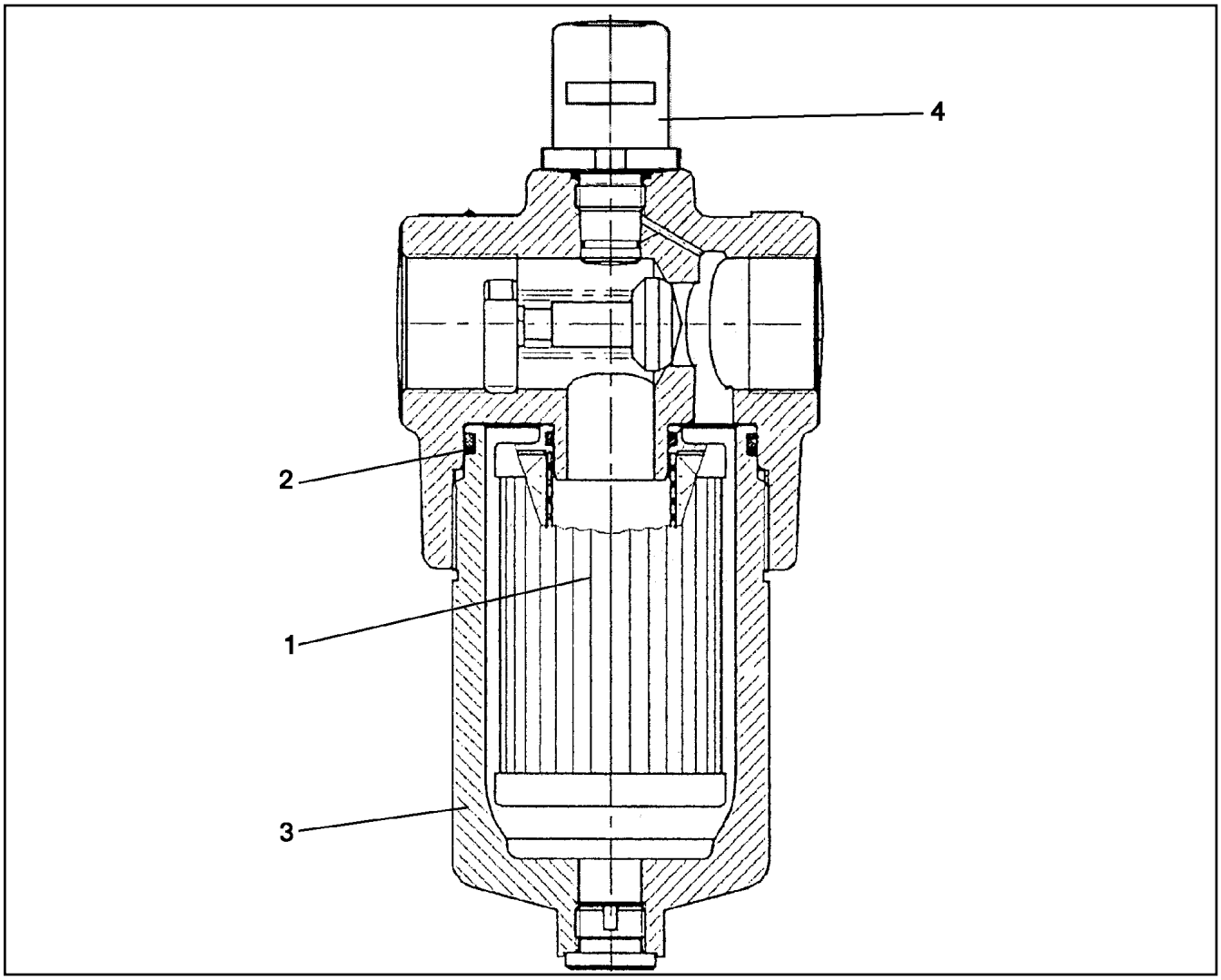


| Pos. | Item | Quantity | Description | Bezeichnung |
|---|---|---|---|---|
| 1 | 10 03 761 6 | 1 | FILTER INSERT OEL 10µm | FILTEREINSATZ |
| 2 | 72 64 076 08 | 1 | O-RING 59X3 NBR70 | O-RING |
| 3 | 57 10 213 08 | 1 | FILTER BOWL | FILTERTOPF |
| 4 | 57 13 561 08 | 1 | CLOGGING INDICATOR | VERSCHMUTZUNGSANZEIGE |

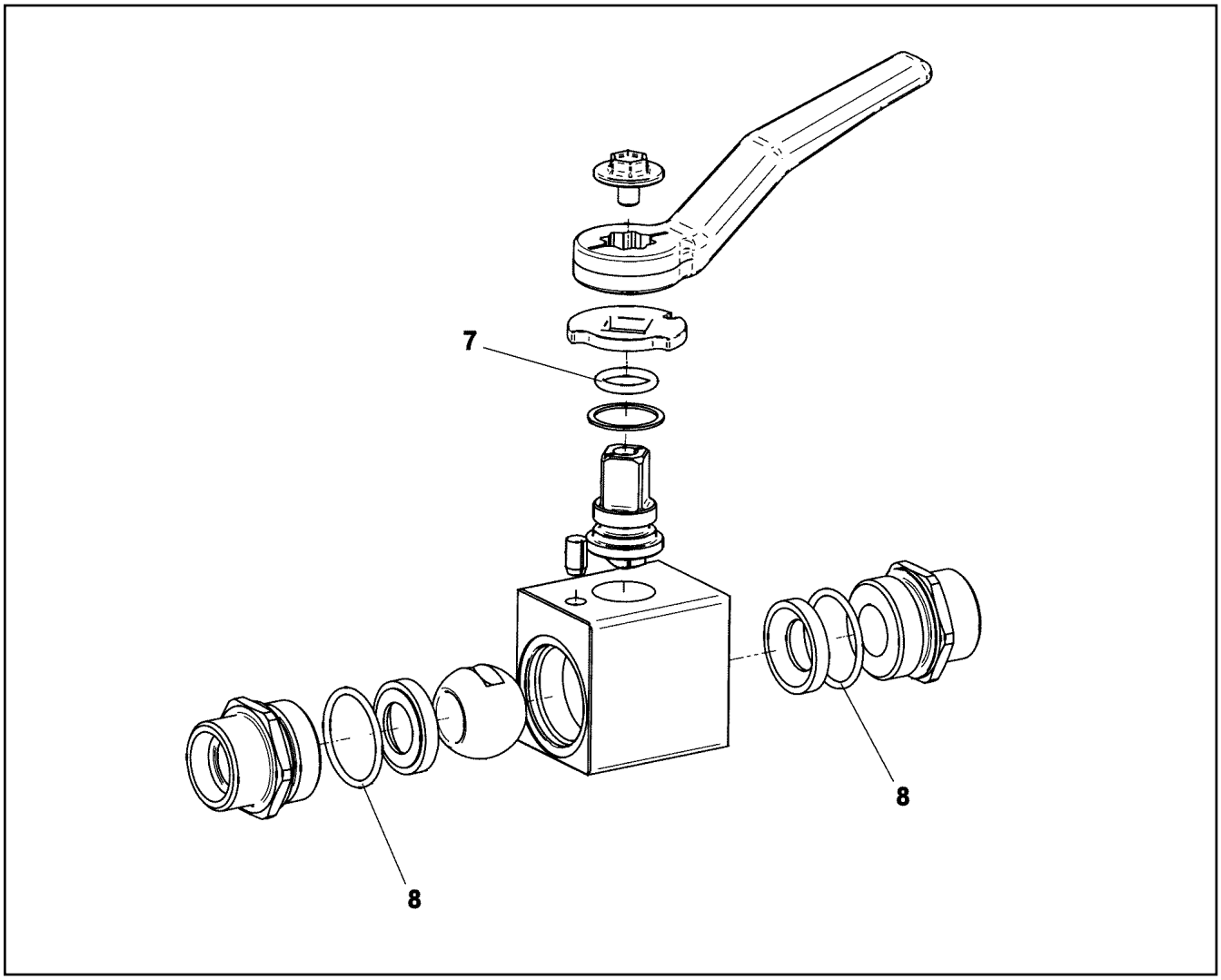


| Pos. | Item | Quantity | Description | Bezeichnung |
|---|---|---|---|---|
| 7 | 10 33 738 1 | 1 | O-RING 10,00X2,5 NBR90 | O-RING |
| 8 | 51 07 927 08 | 2 | O-RING 20X2 NBR90 | O-RING |

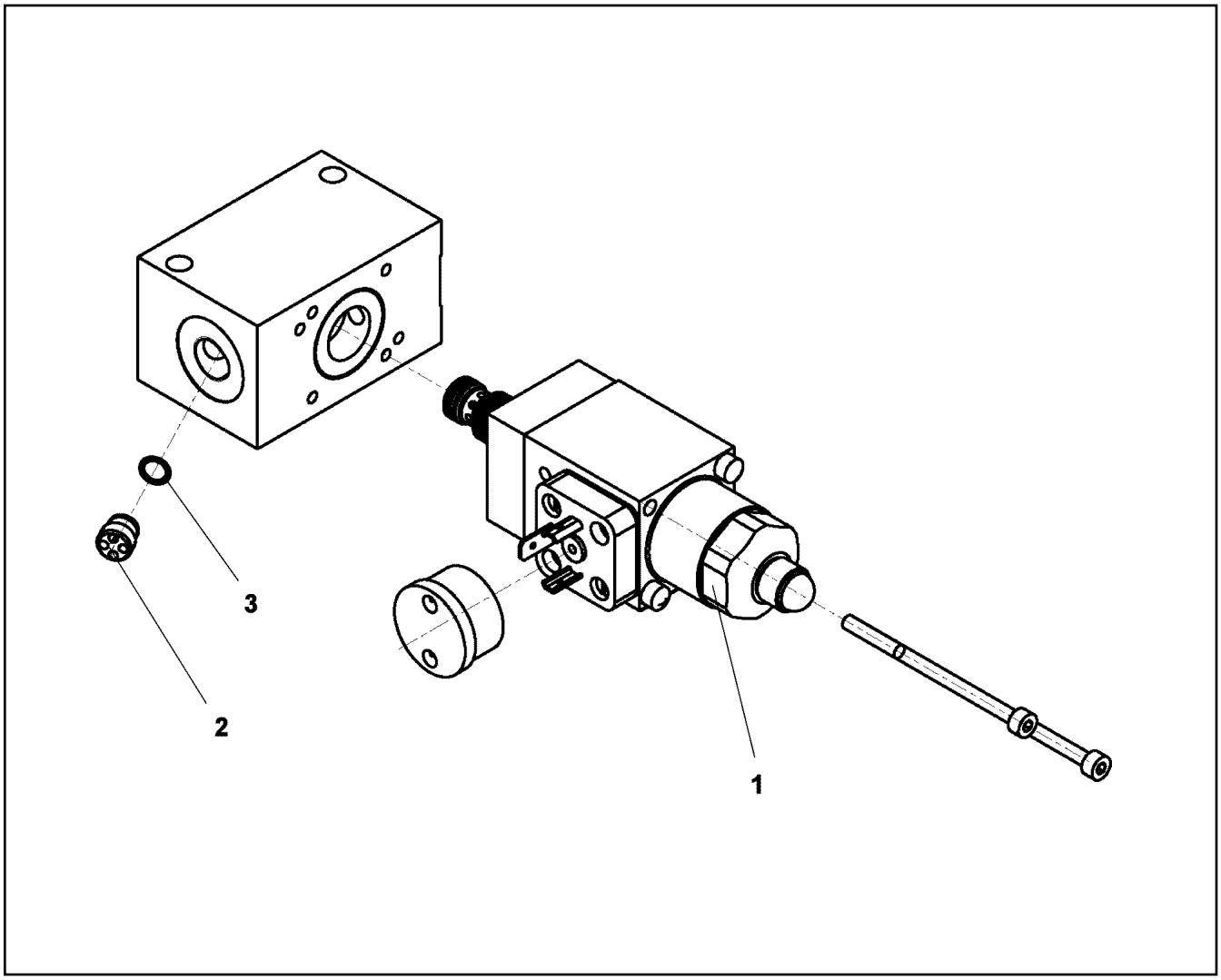


| Pos. | Item | Quantity | Description | Bezeichnung |
|---|---|---|---|---|
| 1 | 11 17 027 6 | 1 | PRESSURE REDUCTION VALVE<br>⇨ X11170276 11 17 027 6 | DRUCKREDUZIERVENTIL |
| 2 | 11 17 027 7 | 1 | NON-RETURN VALVE | RUECKSCHLAGVENTIL |
| 3 | 57 06 906 08 | 1 | O-RING 6X1 NBR90 | O-RING |

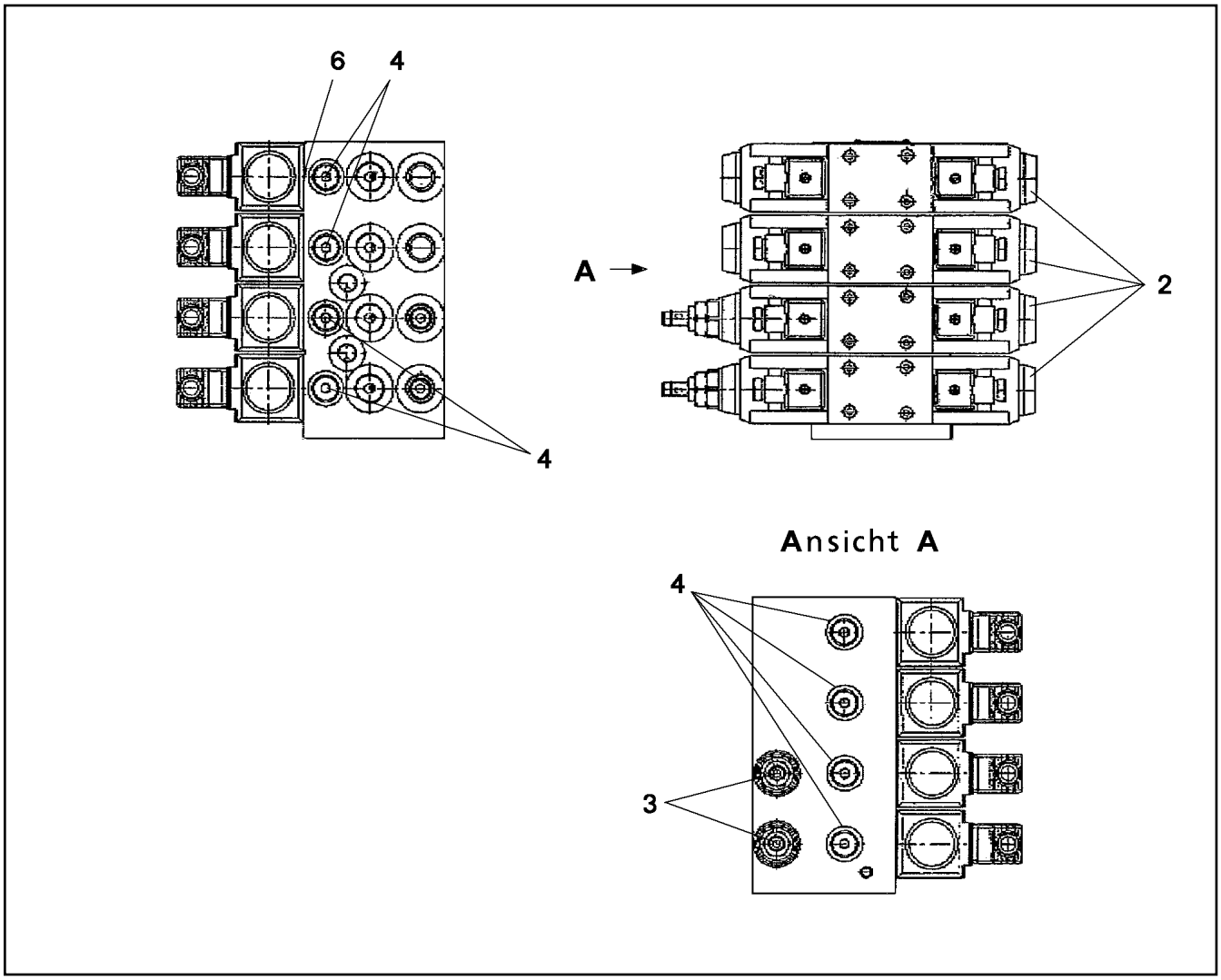


| Pos. | Item | Quantity | Description | Bezeichnung |
|---|---|---|---|---|
| 2 | 57 18 176 08 | 4 | DIRECTIONAL CONTROL VALVE<br>⇨ 5 718 176 08 57 18 176 08 | WEGEVENTIL |
| 3 | 57 18 770 08 | 2 | PRESSURE LIMITING VALVE | DRUCKBEGRENZUNGSVENTIL |
| 4 | 51 07 413 08 | 8 | NON-RETURN VALVE | RUECKSCHLAGVENTIL |
| 6 | 57 18 771 08 | 1 | NOZZLE 1,5 | DUESE |
| 70 | 40 43 612 08 | 16 | SOCKET HEAD SCREW DIN 912 M5X45 12.9 | ZYLINDERSCHRAUBE |

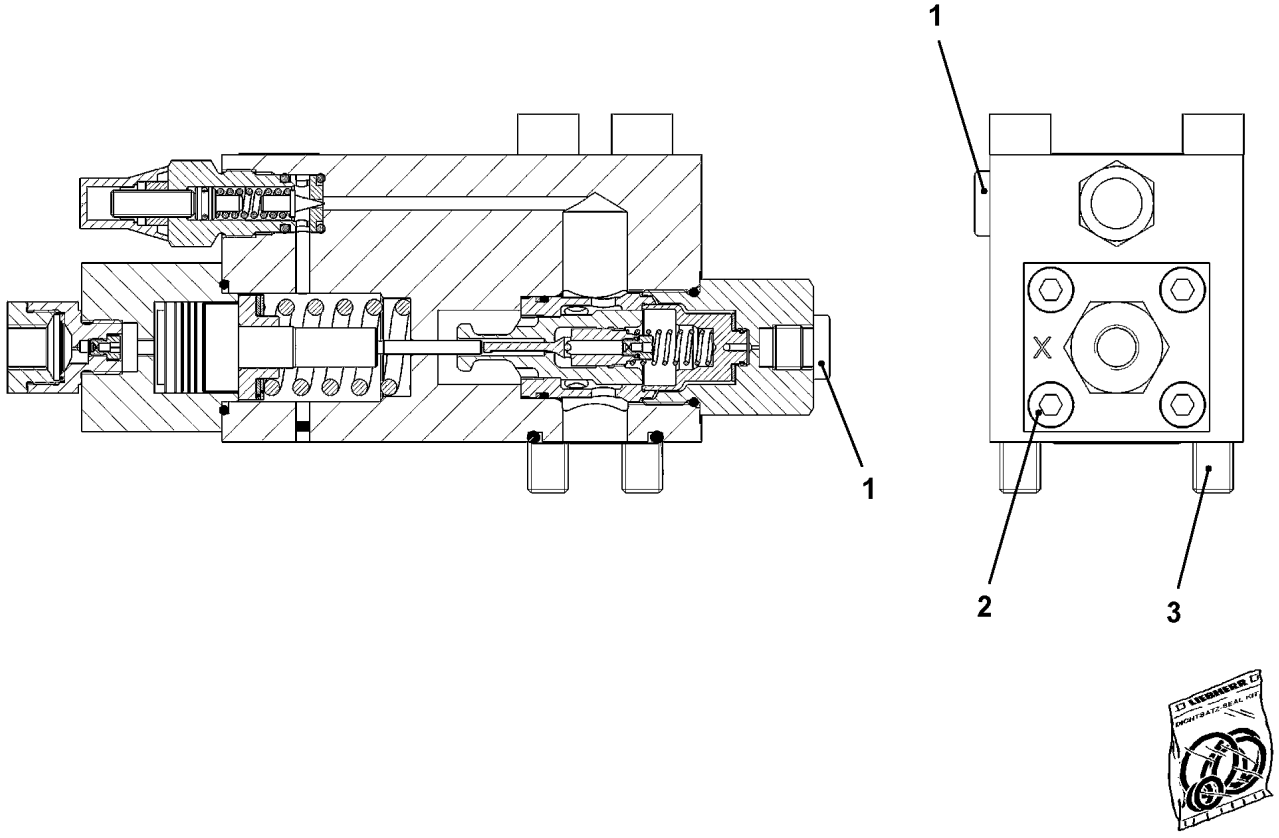


| Pos. | Item | Quantity | Description | Bezeichnung |
|---|---|---|---|---|
| 1 | 47 77 040 08 | 2 | STOPPER PLUG VSTI1/4"ED A3P | BLINDSTOPFEN |
| 2 | 49 80 840 | 4 | SOCKET HEAD SCREW ISO 4762 M8X45 12. | ZYLINDERSCHRAUBE |
| 3 | 51 48 023 08 | 4 | SOCKET HEAD SCREW DIN 912 M12X100 1 | ZYLINDERSCHRAUBE |
| 999 | 10 66 364 4 | 1 | SEALING SET VALVE | DS VENTIL |

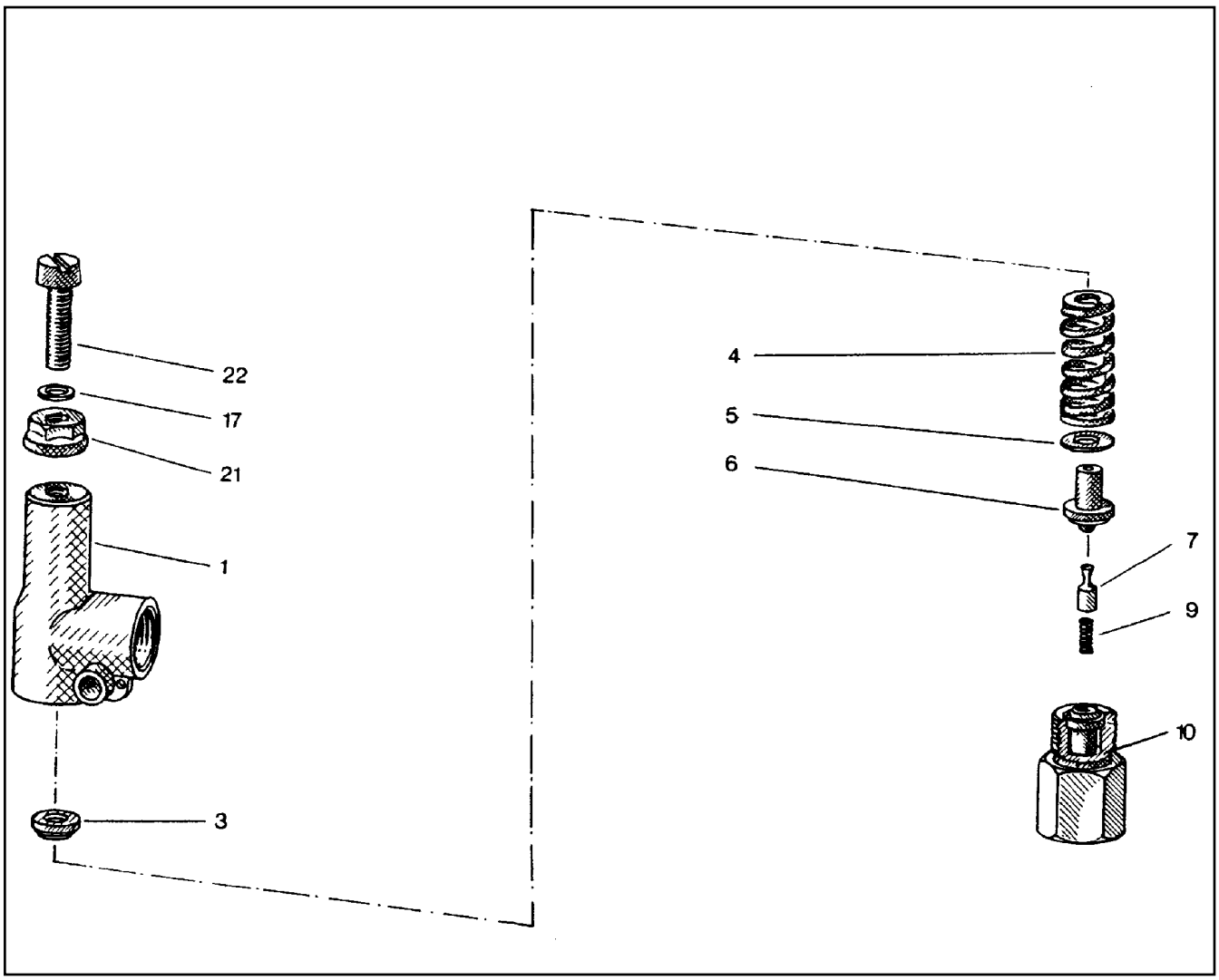


| Pos. | Item | Quantity | Description | Bezeichnung |
|---|---|---|---|---|
| 1 | 51 07 969 08 | 1 | HOUSING | GEHAEUSE |
| 3 | 51 07 970 08 | 1 | SPRING SUPPORT | FEDERTELLER |
| 4 | 51 10 151 08 | 1 | PRESSURE SPRING | DRUCKFEDER |
| 5 | 51 07 972 08 | 1 | WASHER | SCHEIBE |
| 6 | 51 07 973 08 | 1 | SPRING-LOADED PIN | FEDERBOLZEN |
| 7 | 51 07 974 08 | 1 | DAMPING PISTON | DAEMPFUNGSKOLBEN |
| 9 | 51 07 975 08 | 1 | PRESSURE SPRING | DRUCKFEDER |
| 10 | 51 07 976 08 | 1 | VALVE SEAT | VENTILSITZ |
| 17 | 51 07 832 08 | 1 | SHIM | AUSGLEICHSCHEIBE |
| 21 | 51 07 417 08 | 1 | SEALING NUT M8 | DICHTMUTTER |
| 22 | 51 07 977 08 | 1 | SOCKET HEAD SCREW DIN 84 M8X35 5.8 | ZYLINDERSCHRAUBE |

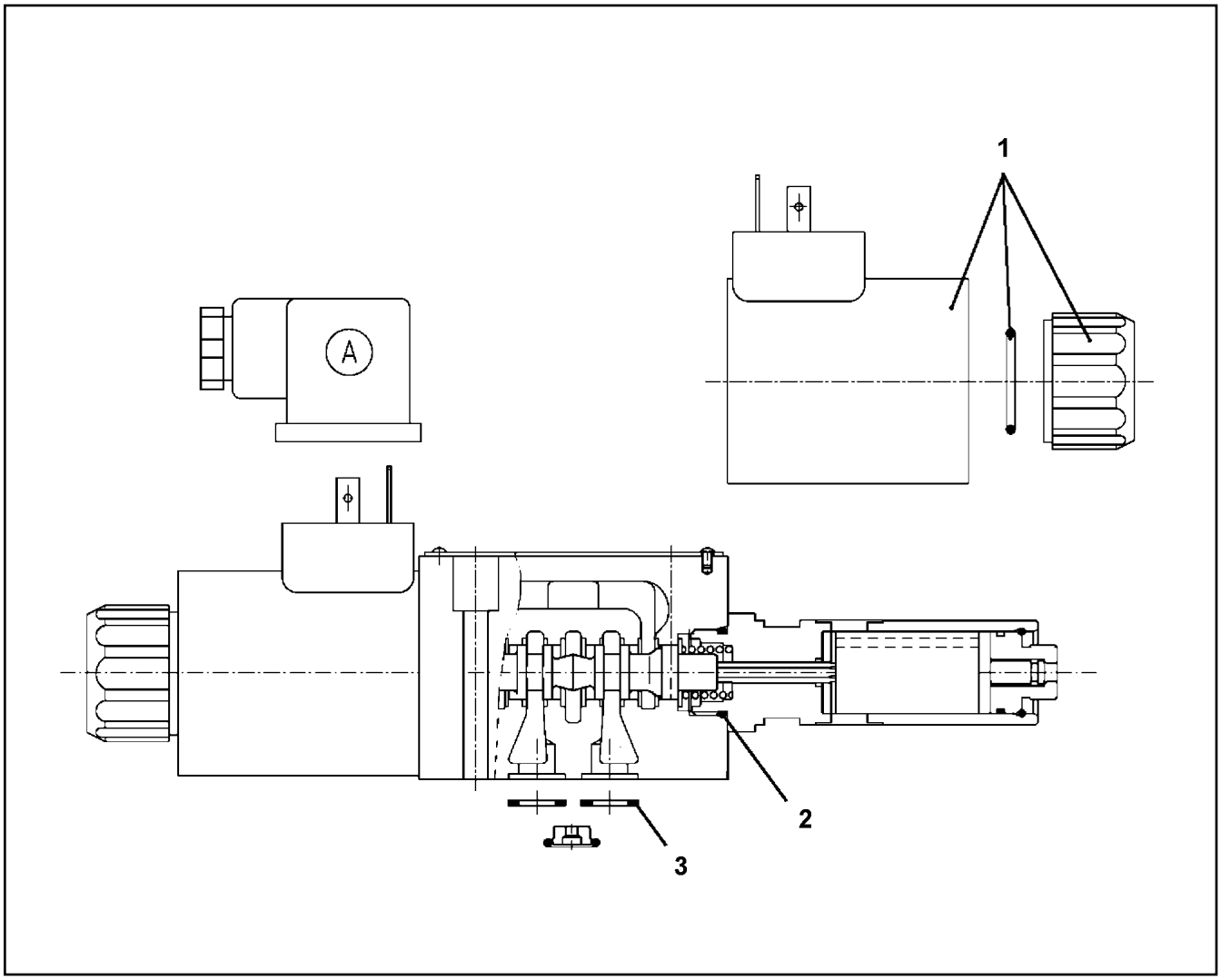


| Pos. | Item | Quantity | Description | Bezeichnung |
|---|---|---|---|---|
| 1 | 69 32 086 14 | 2 | MAGNET COIL | MAGNETSPULE |
| 2 | 10 03 010 9 | 2 | O-RING 17X1, 8 | O-RING |
| 3 | 51 07 190 08 | 4 | O-RING ARP 568 9,25X1,78 NBR75 | O-RING |

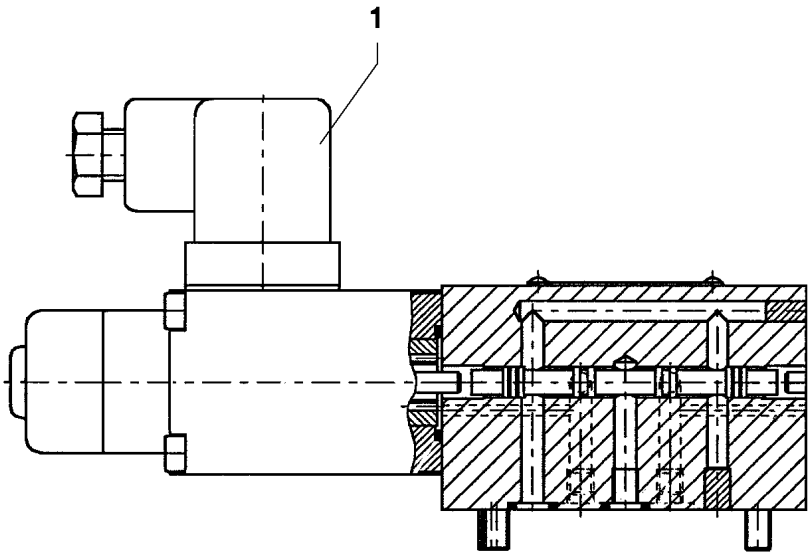


| Pos. | Item | Quantity | Description | Bezeichnung |
|---|---|---|---|---|
| 1 | 57 08 278 08 | 1 | MAGNET 24V | MAGNET |

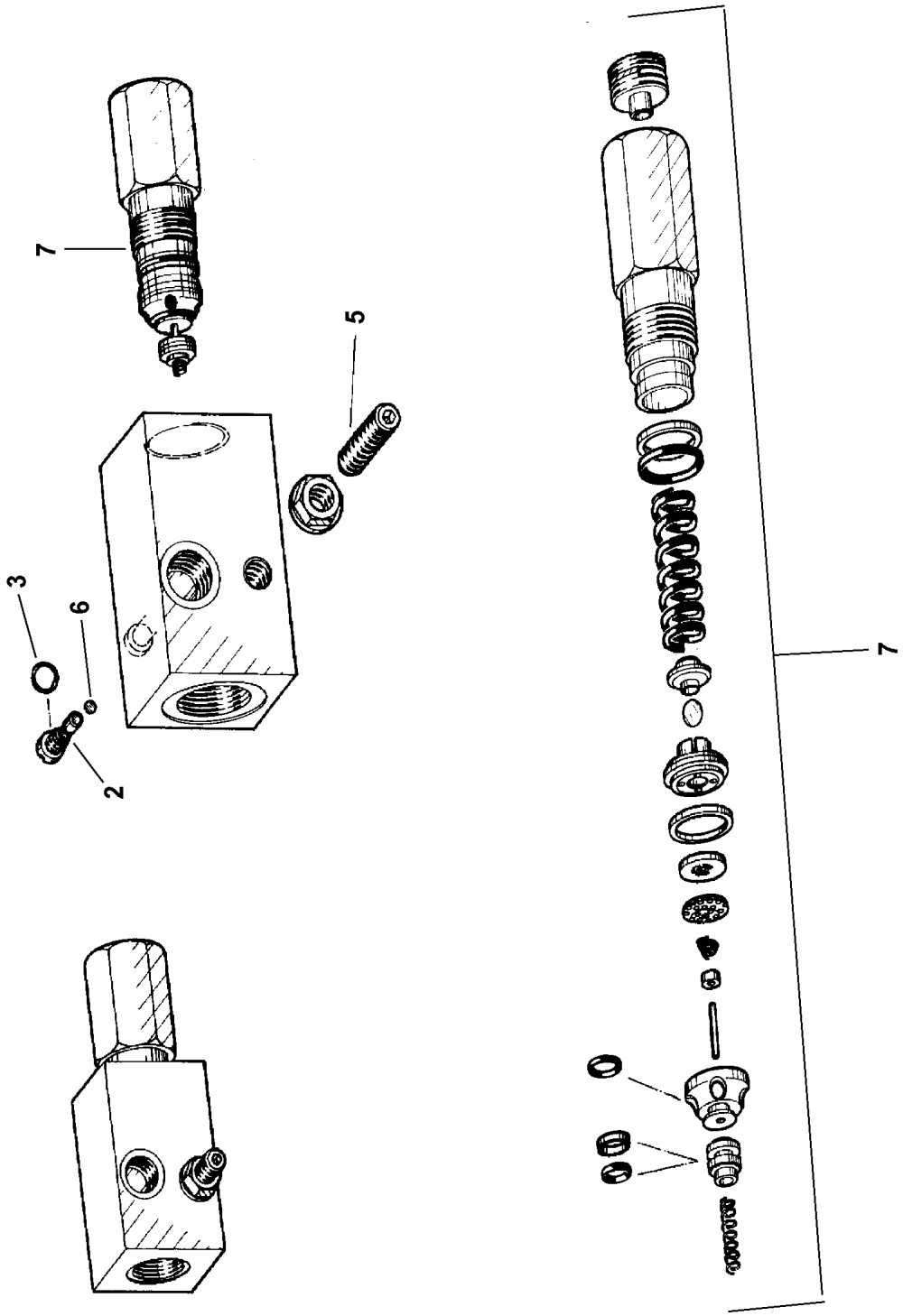
7
5
3
6
2
7

| Pos. | Item | Quantity | Description | Bezeichnung |
|---|---|---|---|---|
| 2 | 57 09 414 08 | 1 | SCREW | SCHRAUBE |
| 3 | 51 07 123 08 | 1 | O-RING 4X1 NBR90 | O-RING |
| 5 | 40 44 005 08 | 1 | GRUB SCREW DIN 913 M6X25 45H VERZ | GEWINDESTIFT |
| 6 | 61 07 063 08 | 1 | BALL DIN 5401 3 | KUGEL |
| 7 | 11 00 267 8 | 1 | LOAD RETAINING VLV ELEMENT,CPL | LASTHALTEVENTILEINSATZ |

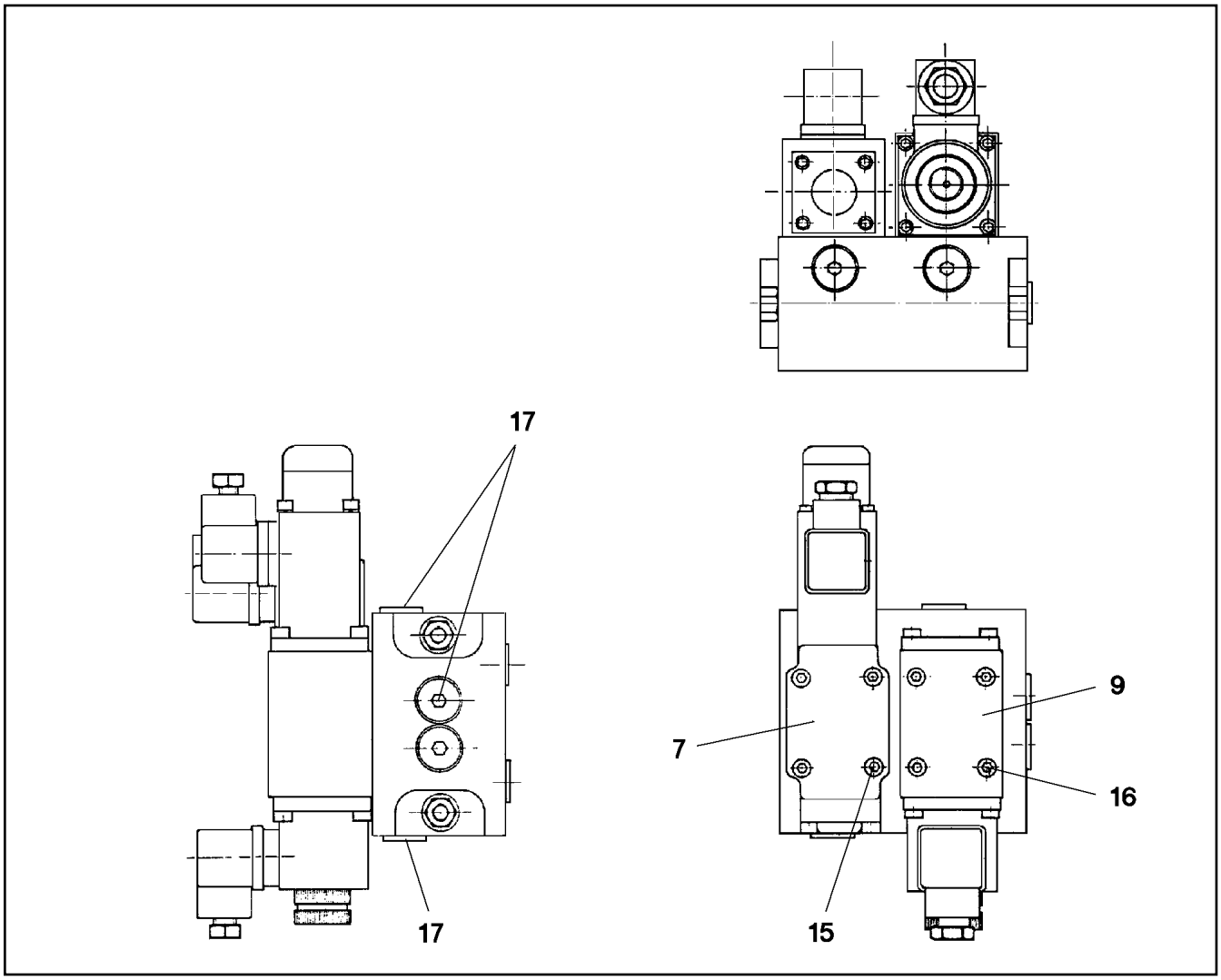


| Pos. | Item | Quantity | Description | Bezeichnung |
|---|---|---|---|---|
| 7 | 57 14 537 08 | 1 | PRESSURE VALVE<br>⇨ 5 714 537 08 57 14 537 08 | DRUCKVENTIL |
| 9 | 57 05 279 08 | 1 | DIRECTIONAL CONTROL VALVE 4/2 NG6-3<br>⇨ 5 705 279 08 57 05 279 08 | WEGEVENTIL |
| 15 | 40 43 637 08 | 4 | SOCKET HEAD SCREW DIN 912 M5X35 12.9 | ZYLINDERSCHRAUBE |
| 16 | 40 43 612 08 | 4 | SOCKET HEAD SCREW DIN 912 M5X45 12.9 | ZYLINDERSCHRAUBE |
| 17 | 47 77 040 08 | 6 | STOPPER PLUG VSTI1/4"ED A3P | BLINDSTOPFEN |

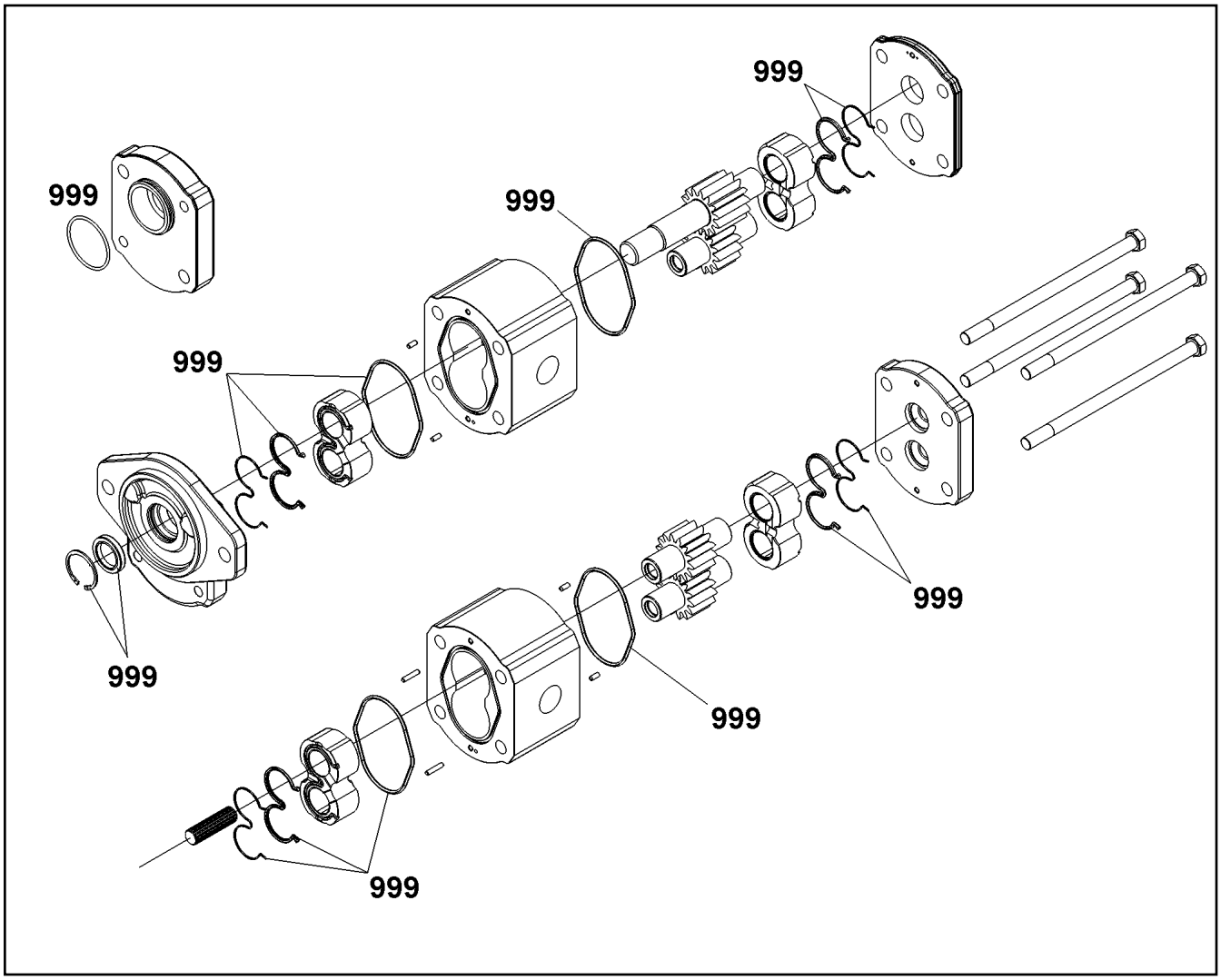


| Pos. | Item | Quantity | Description | Bezeichnung |
|---|---|---|---|---|
| 1 | 11 60 019 3 | 1 | SEAL KIT GEAR PUMP | DS ZAHNRADPUMPE |

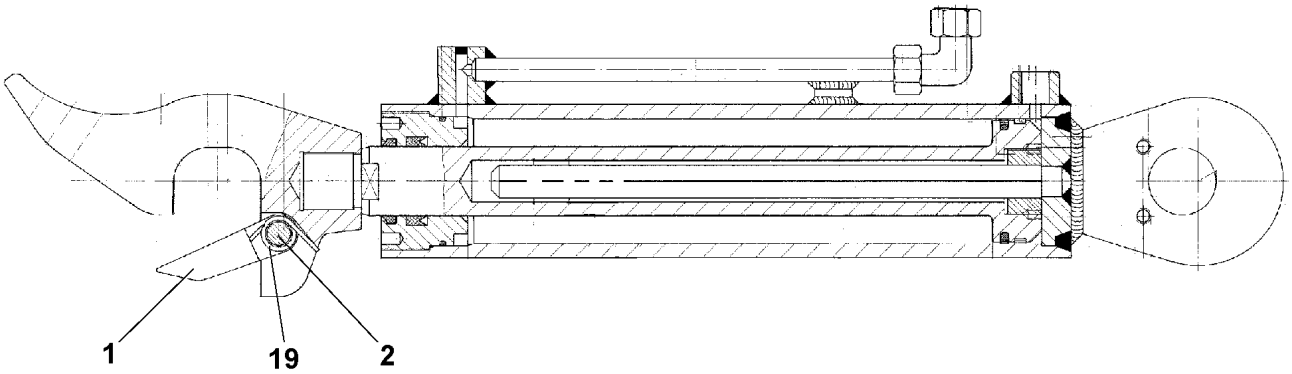

Pos. 999

| Pos. | Item | Quantity | Description | Bezeichnung |
|---|---|---|---|---|
| 1 | 11 49 001 0 | 1 | LATCH | KLINKE |
| 2 | 43 07 096 08 | 1 | PARALLEL PIN DIN 6325 12M6X50 | ZYLINDERSTIFT |
| 19 | 57 17 419 08 | 1 | LEG SPRING 2,5XDI 13,5 | SCHENKELFEDER |
| 999 | 57 14 912 08 | 1 | SEAL KIT | DICHTSATZ |

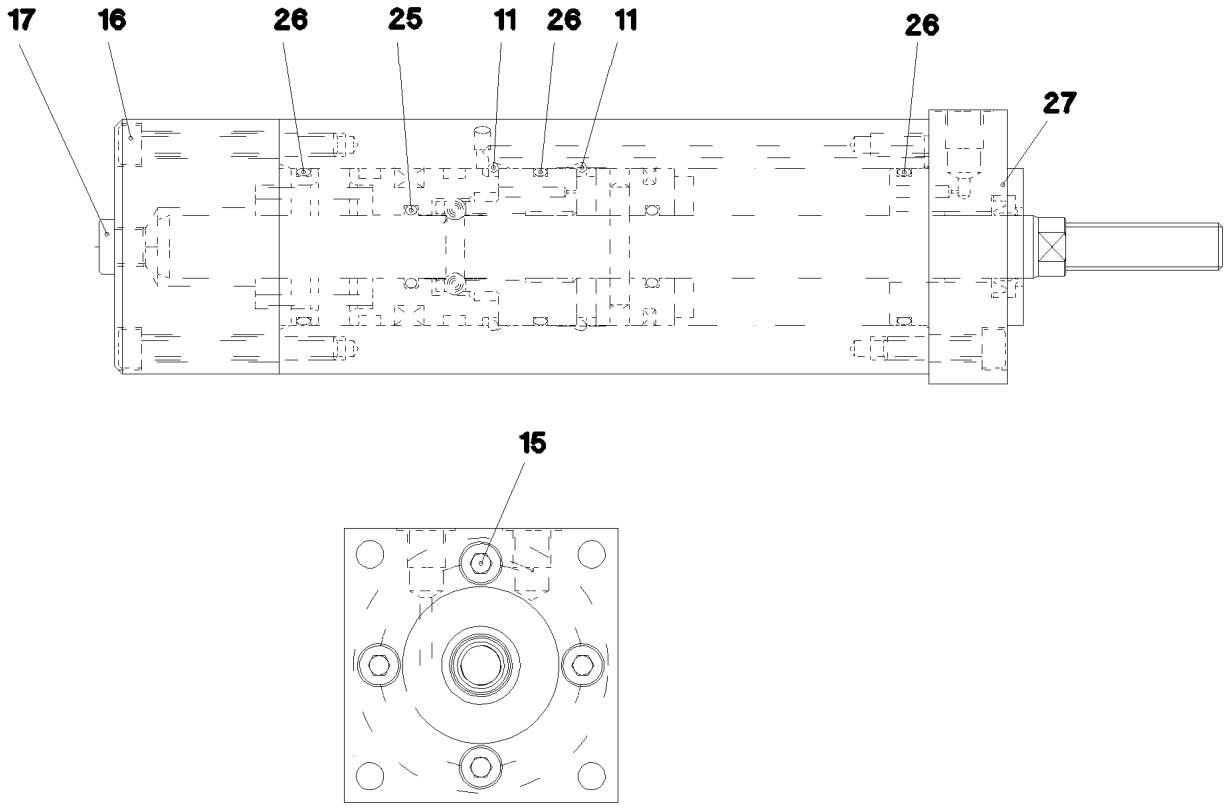


| Pos. | Item | Quantity | Description | Bezeichnung |
|---|---|---|---|---|
| 11 | 42 85 217 08 | 2 | SNAP RING DIN 7993 B 40 | SPRENGRING |
| 15 | 24 01 962 02 | 4 | SOCKET HEAD SCREW ISO 4762 M6X25 12. | ZYLINDERSCHRAUBE |
| 16 | 40 43 050 | 4 | SOCKET HEAD SCREW ISO 4762 M6X50 10. | ZYLINDERSCHRAUBE |
| 17 | 51 07 415 08 | 1 | STOP PLUG VSTI1/8"ED ST A3C | STOPFEN |
| 25 | 51 07 101 08 | 1 | O-RING ARP 568 17,12X2,62 NBR90 | O-RING |
| 26 | 57 06 852 08 | 3 | O-RING ARP 568 34,59X2,62 NBR90 | O-RING |
| 27 | 72 64 266 08 | 1 | O-RING ARP 568 5,28X1,78 NBR90 | O-RING |

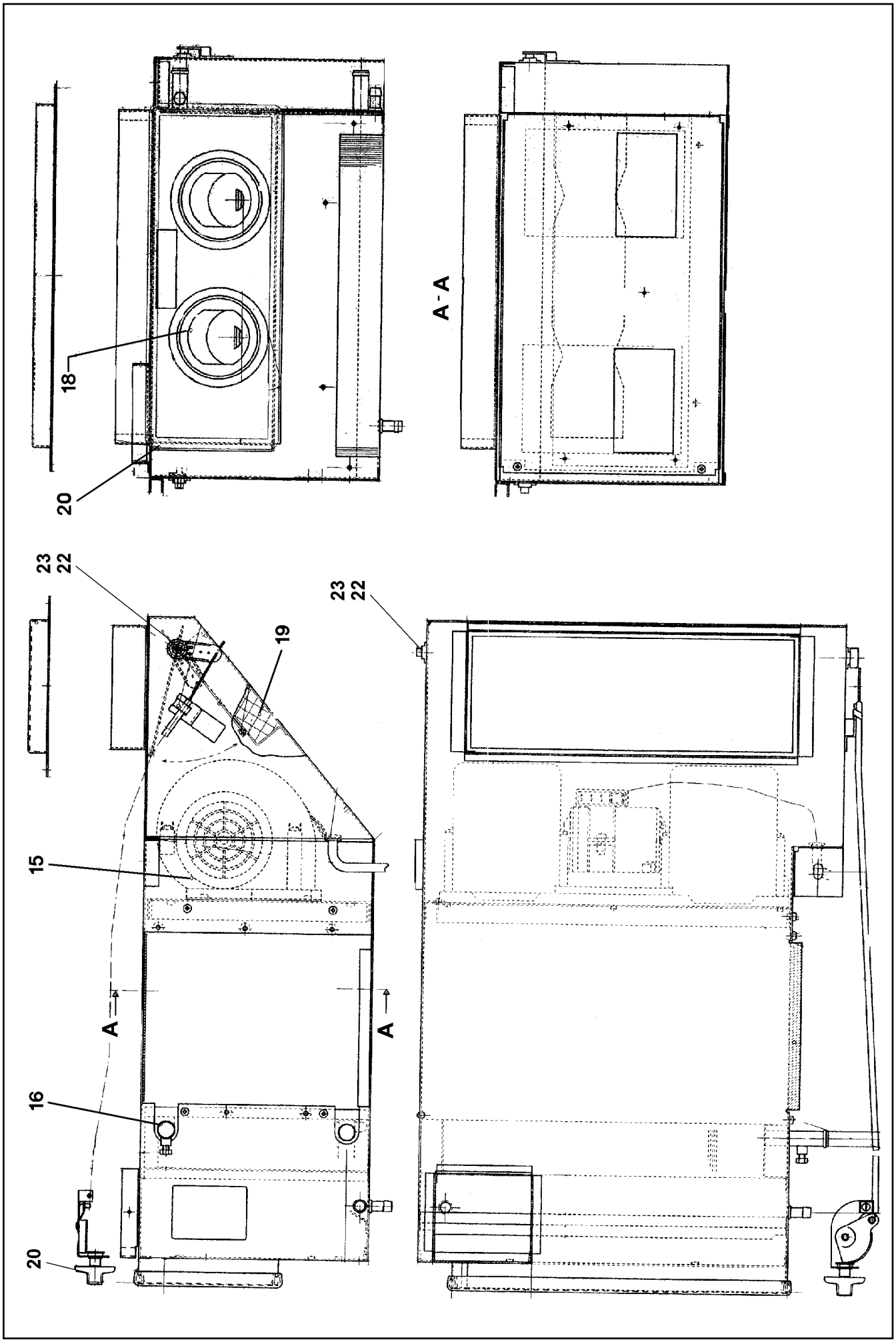
18
20
A - A
23
22
19
15
A
A
16
20
23
22

| Pos. | Item | Quantity | Description | Bezeichnung |
|---|---|---|---|---|
| 15 | 57 18 304 08 | 1 | BLOWER | GEBLAESE |
| 16 | 57 18 498 08 | 1 | HEAT EXCHANGER | WAERMETAUSCHER |
| 17 | 57 18 499 08 | 1 | OPERATING ELEMENT | BEDIENTEIL |
| 18 | 57 05 205 08 | 2 | AIR DISCHARGER D=98MM T=3MM PA | LUFTAUSSTROEMER |
| 19 | 57 18 500 08 | 1 | FILTER | FILTER |
| 20 | 70 22 049 | 1 | CONTROL KNOB | BEDIENKNOPF |
| 23 | 10 00 971 5 | 2 | BEARING | LAGER |
| 24 | 10 87 579 5 | 1 | TALLOW-DROP SCREW 4X10 10.9 P3E | LINSENKOPFSCHRAUBE |

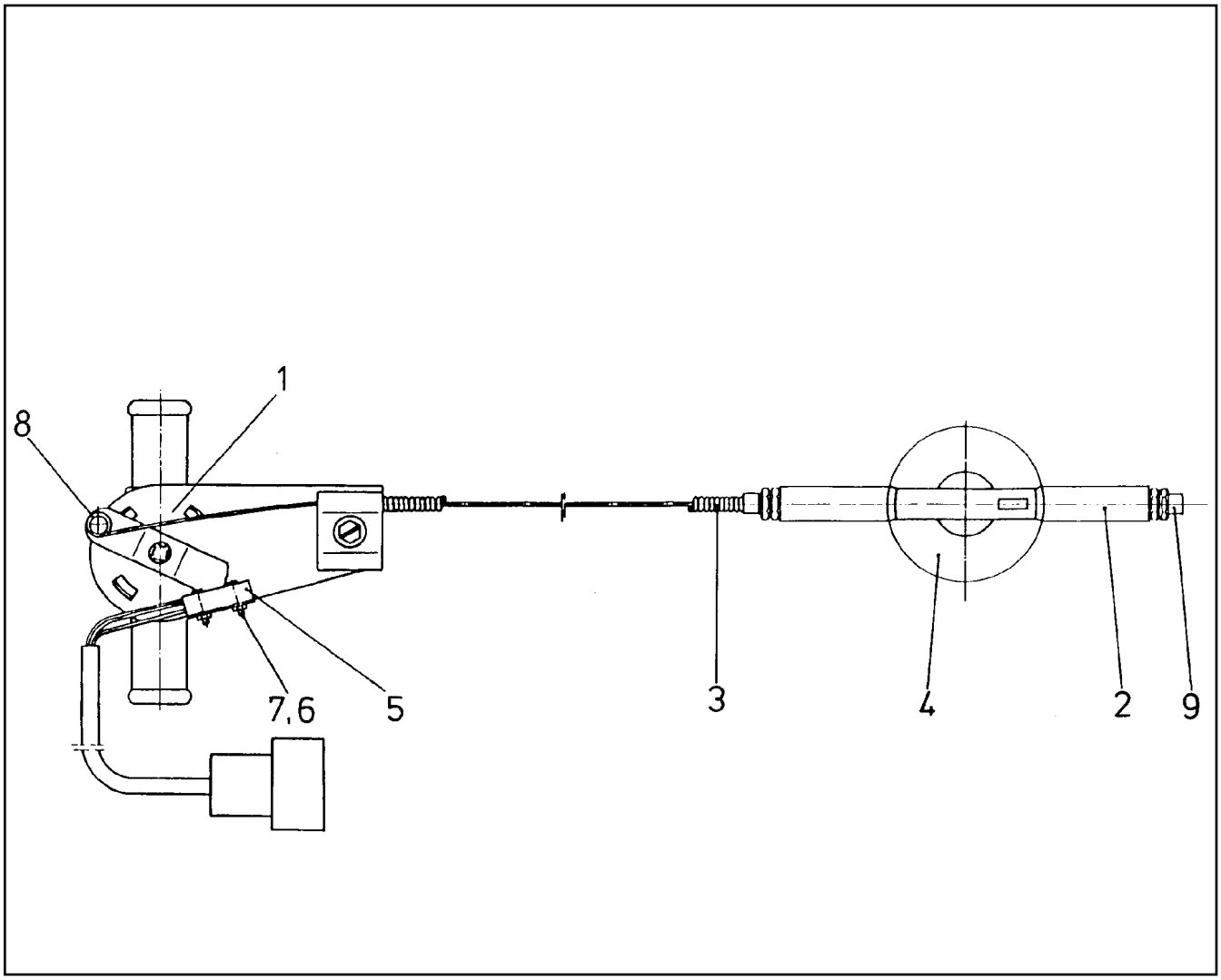


| Pos. | Item | Quantity | Description | Bezeichnung |
|---|---|---|---|---|
| 1 | 57 05 449 08 | 1 | WATER VALVE | WASSERVENTIL |
| 2 | 57 07 565 08 | 1 | ADJUSTMENT | VERSTELLUNG |
| 3 | 57 07 566 08 | 1 | BOWDEN PULL SYSTEM | BOWDENZUG |
| 4 | 57 07 567 08 | 1 | BUTTON | KNOPF |
| 5 | 57 05 132 08 | 1 | CABLE LOOM | KABELSATZ |
| 6 | 40 02 002 08 | 2 | PAN-HEAD SCREW DIN 85 M2X10 5.8 VERZ | FLACHKOPFSCHRAUBE |
| 7 | 41 15 122 08 | 2 | HEX NUT ISO 4032 M2 8 A2C | SECHSKANTMUTTER |
| 8 | 57 05 452 08 | 1 | RAPID FIXING | SCHNELLBEFESTIGER |
| 9 | 57 07 568 08 | 2 | PAN-HEAD SCREW ISO 7045 M2X12 4.8 A3B | FLACHKOPFSCHRAUBE |

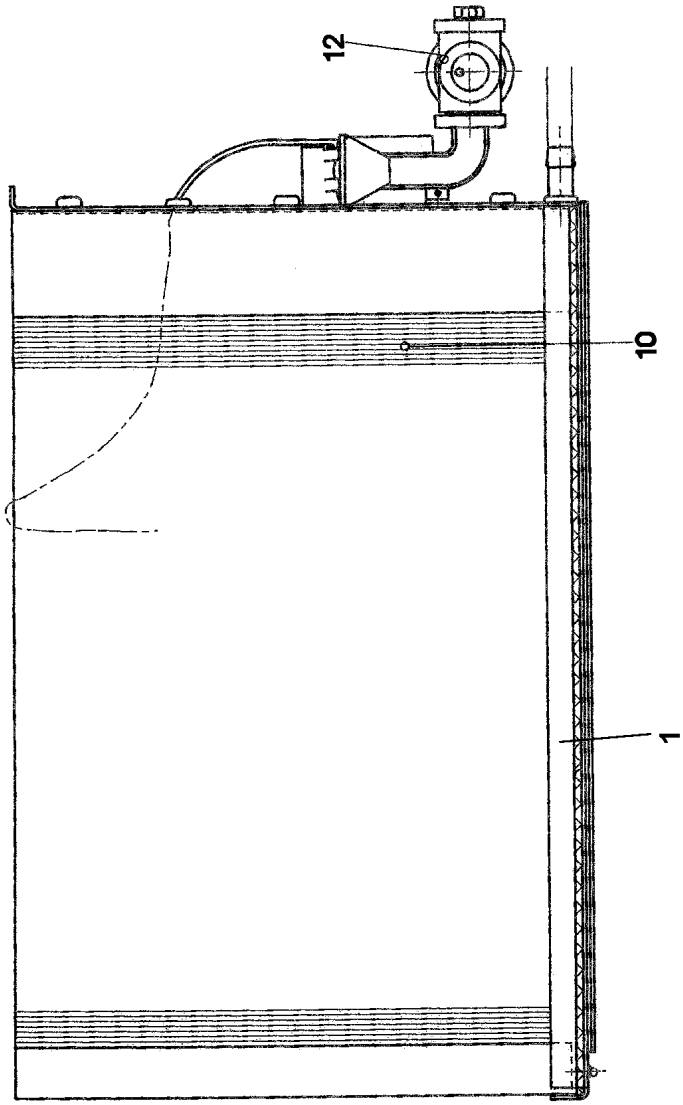
12
10
1

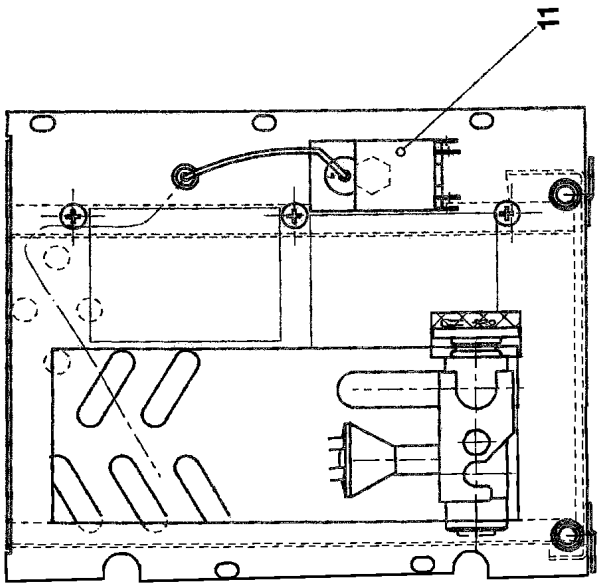
11

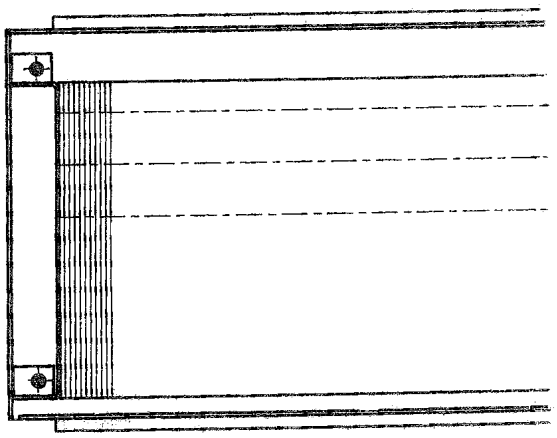

| Pos. | Item | Quantity | Description | Bezeichnung |
|---|---|---|---|---|
| 1 | 11 21 435 2 | 1 | COVER | DECKEL |
| 10 | 57 18 690 08 | 1 | EVAPORATOR | VERDAMPFER |
| 11 | 57 18 677 08 | 1 | THERMOSTAT | THERMOSTAT |
| 12 | 76 22 478 | 1 | VALVE | VENTIL |

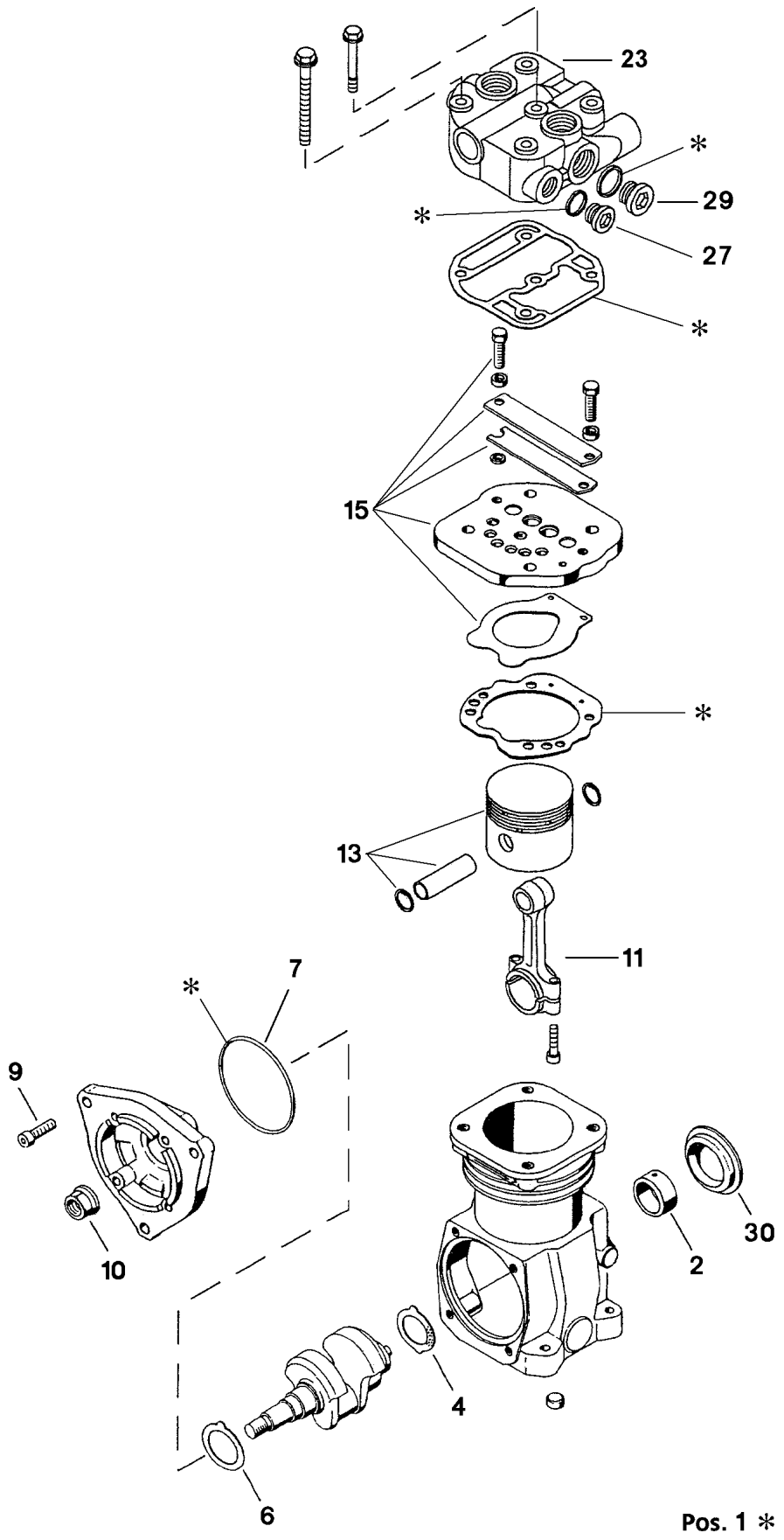


| | | |
|---|---|---|
| 16.2.2017<br>021265<br>LIEBHERR | etk_en_de_048005 LTR 1100<br><br>AIR COMPRESSOR<br>LUFTPRESSER | 368 (1/2)<br><br>5 700 161<br>57 00 161 |

| Pos. | Item | Quantity | Description | Bezeichnung |
|---|---|---|---|---|
| 1 | 57 15 821 08 | 1 | REPAIR KIT | REPARATURSATZ |
| 2 | 57 15 822 08 | 1 | BUSHING | BUCHSE |
| 4 | 57 15 823 08 | 1 | THRUST WASHER | ANLAUFSCHEIBE |
| 6 | 57 15 824 08 | 1 | THRUST WASHER | ANLAUFSCHEIBE |
| 7 | 57 09 797 08 | 1 | O-RING 88X3 ACM70 | O-RING |
| 9 | 57 06 138 77 | 4 | SCREW DIN 912 M8X25 12.9 | SCHRAUBE |
| 10 | 52 03 033 08 | 1 | WHEEL NUT DIN 74361 M20X1,5 8 A2K | RADMUTTER |
| 11 | 57 15 825 08 | 1 | CONROD | PLEUELSTANGE |
| 13 | 57 15 826 08 | 1 | PISTON | KOLBEN |
| 15 | 57 15 827 08 | 1 | REPAIR KIT | REPARATURSATZ |
| 23 | 70 25 732 | 1 | CYLINDER HEAD | ZYLINDERKOPF |
| 27 | 40 41 016 08 | 1 | SCREW PLUG DIN 908 M22X1,5 ST A2C | VERSCHLUSSSCHRAUBE |
| 29 | 46 00 232 | 3 | SCREW PLUG DIN 908 M26X1,5 ST A3C | VERSCHLUSSSCHRAUBE |
| 30 | 57 15 828 08 | 1 | CAP | KAPPE |

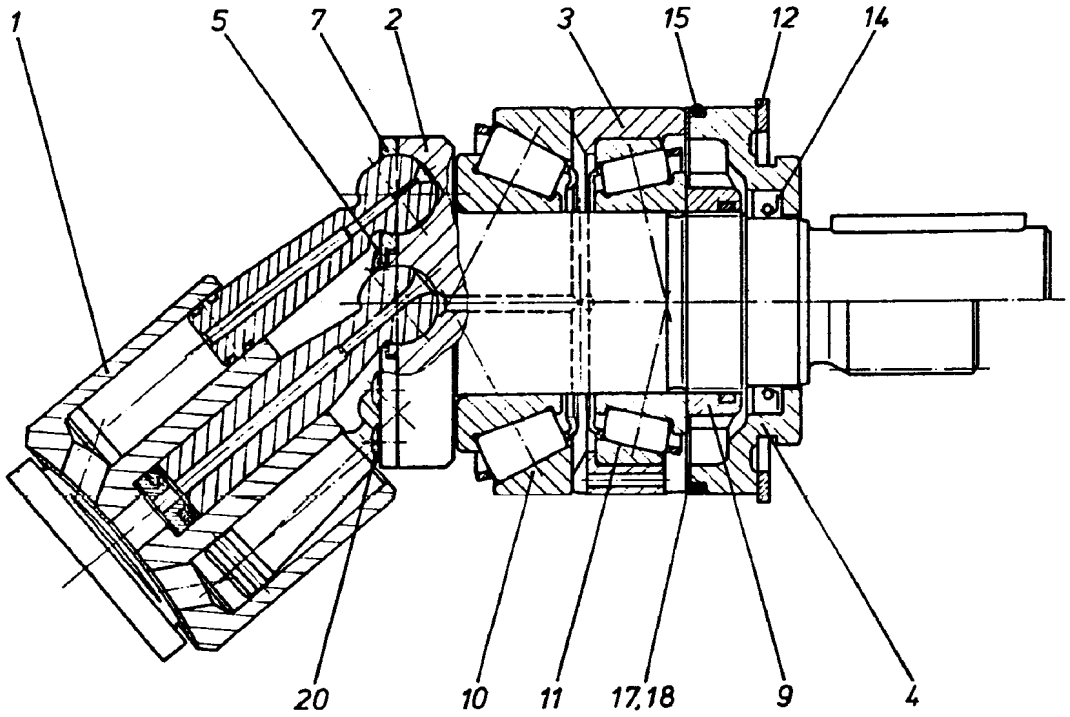


| Pos. | Item | Quantity | Description | Bezeichnung |
|---|---|---|---|---|
| 1 | 57 01 095 08 | 1 | DRIVING GEAR<br>⇨ 5 701 095 08 57 01 095 08 | TRIEBWERK |
| 2 | 57 01 096 08 | 1 | DRIVING SHAFT | TRIEBWELLE |
| 3 | 57 01 097 08 | 1 | BEARING RING | LAGERRING |
| 4 | 57 01 098 08 | 1 | CLOSING RING | VERSCHLUSSRING |
| 5 | 57 01 099 08 | 1 | WASHER | SCHEIBE |
| 7 | 57 01 100 08 | 1 | PULL-BACK PLATE | RUECKZUGPLATTE |
| 9 | 57 01 101 08 | 1 | SLOTTED NUT M38X1,5 | NUTMUTTER |
| 10 | 10 29 377 5 | 1 | TAPERED ROLLER BEARING | KEGELROLLENLAGER |
| 11 | 74 62 219 08 | 1 | TAPERED ROLLER BEARING DIN 720 32008 | KEGELROLLENLAGER |
| 12 | 42 81 025 08 | 1 | LOCKING RING DIN 472 80X2,5 | SICHERUNGSRING |
| 14 | 70 22 315 | 1 | SHAFT SEAL 35X52X6/5 FKM | WELLENDICHTRING |
| 15 | 51 45 304 08 | 1 | O-RING ARP 568 75,87X2,62 NBR90 | O-RING |
| 17 | 42 10 004 08 | 2 | SHIM RING DIN 988 63X80X0,1 | PASSSCHEIBE |
| 18 | 42 10 005 08 | 1 | SHIM RING DIN 988 63X80X0,3 | PASSSCHEIBE |
| 20 | 51 45 252 08 | 7 | OVAL SCREW M4X12 10.9 | LINSENSCHRAUBE |

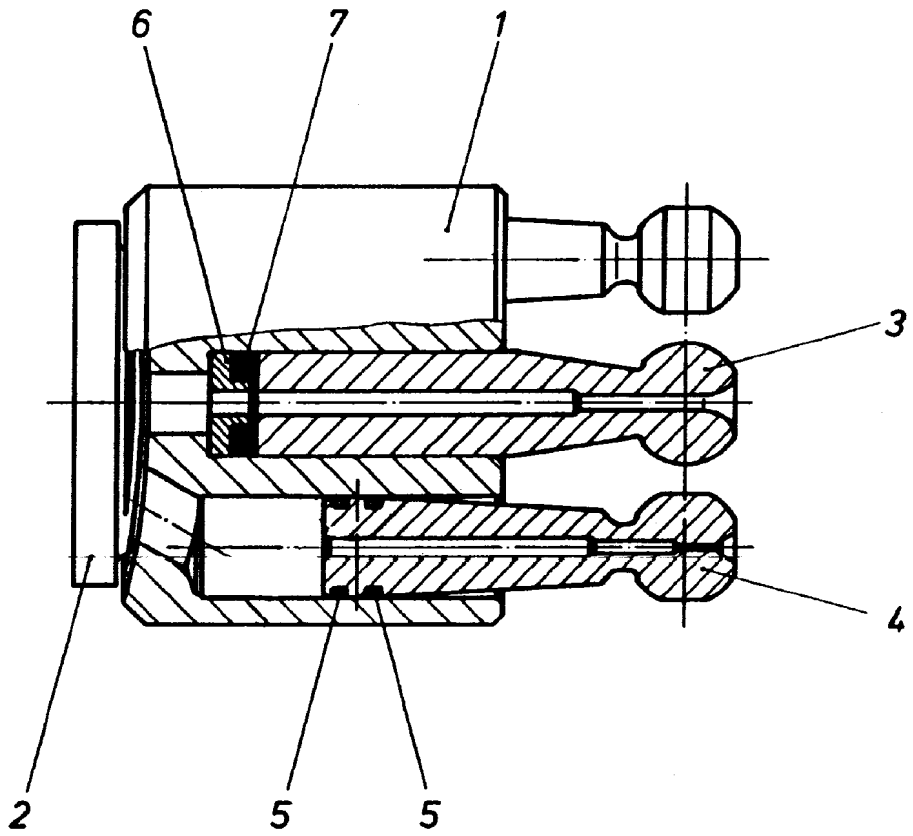


| Pos. | Item | Quantity | Description | Bezeichnung |
|---|---|---|---|---|
| 1 | 57 01 103 08 | 1 | CYLINDER | ZYLINDER |
| 2 | 57 01 104 08 | 1 | GUIDE PLATE | STEUERPLATTE |
| 3 | 57 01 105 08 | 1 | CENTER STUD | MITTELZAPFEN |
| 4 | 57 01 106 08 | 7 | PISTON | KOLBEN |
| 5 | 57 01 107 08 | 14 | RING | RING |
| 6 | 57 01 108 08 | 1 | SPRING SUPPORT | FEDERTELLER |
| 7 | 57 01 109 08 | 4 | DISC SPRING | TELLERFEDER |

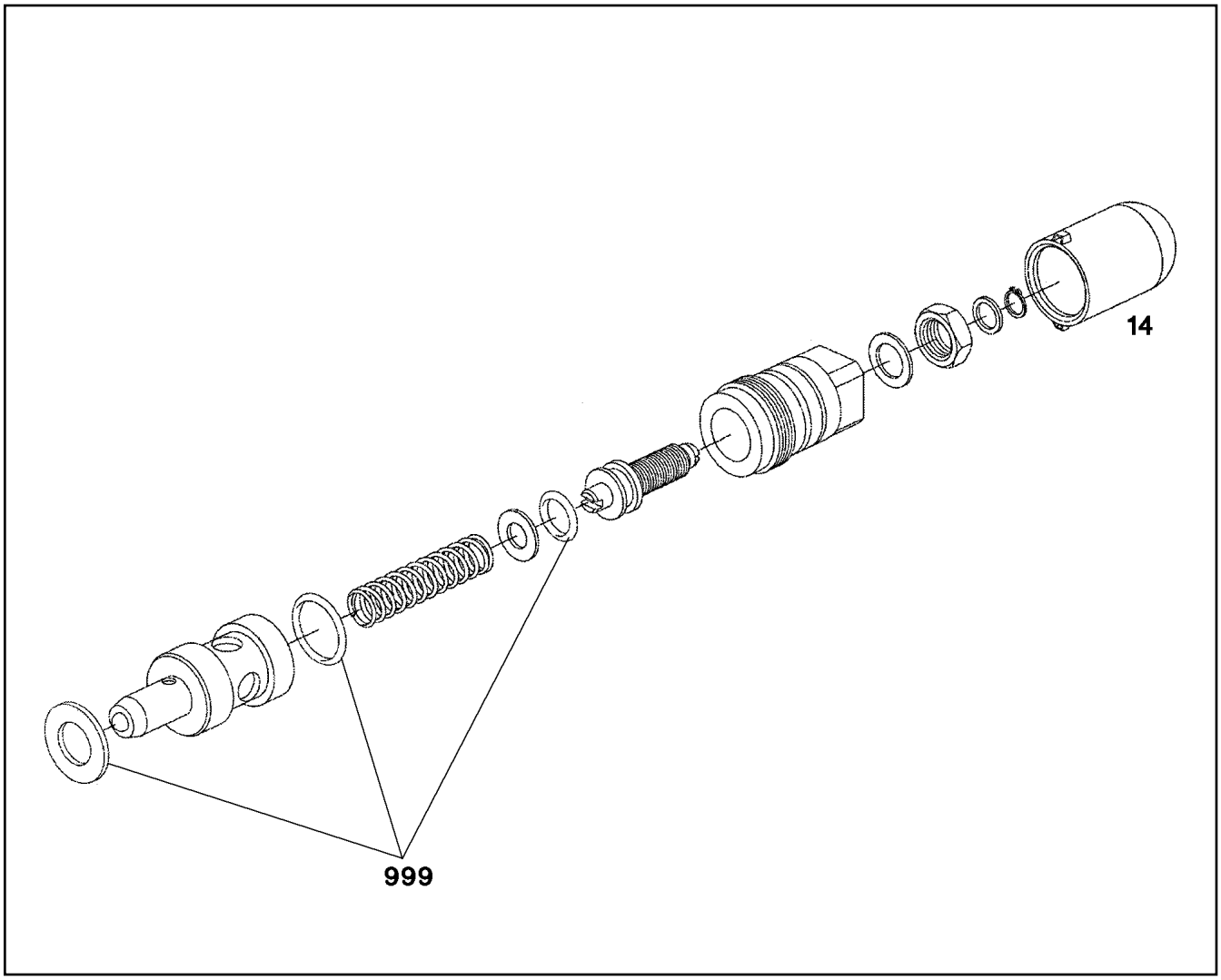


| Pos. | Item | Quantity | Description | Bezeichnung |
|---|---|---|---|---|
| 14 | 57 15 118 08 | 1 | SEALING PLUG | VERSCHLUSSKAPPE |
| 999 | 51 10 433 08 | 1 | SEAL KIT | DICHTSATZ |

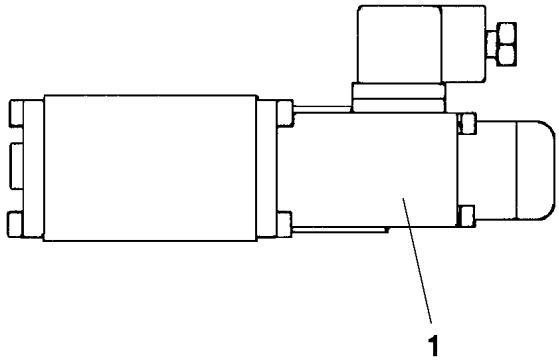


| Pos. | Item | Quantity | Description | Bezeichnung |
|---|---|---|---|---|
| 1 | 57 08 179 08 | 1 | MAGNET COIL 28V | MAGNETSPULE |
| (1) | 57 14 553 08 | 1 | NUT | RAENDELMUTTER |
| 999 | 11 45 069 1 | 1 | SEALING SET VALVE | DS VENTIL |

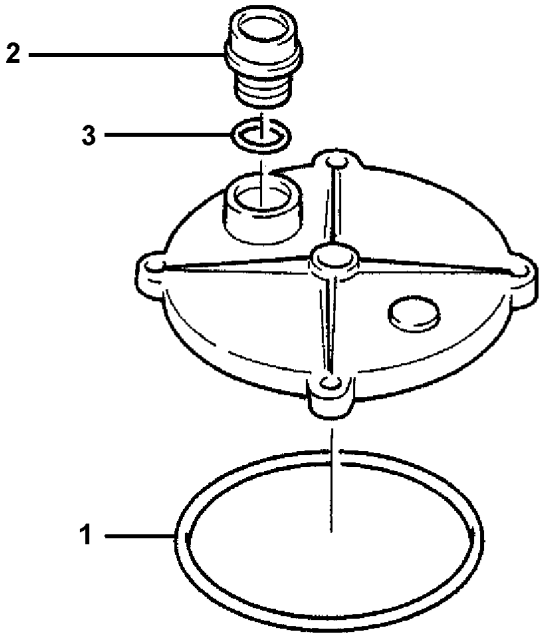


| Pos. | Item | Quantity | Description | Bezeichnung |
|---|---|---|---|---|
| 1 | 57 05 883 08 | 1 | O-RING ARP 568 170,82X7 NBR70 | O-RING |
| 2 | 51 06 623 08 | 1 | SCREW CAP | SCHRAUBKAPPE |
| 3 | 57 05 889 08 | 1 | O-RING 39,7X3,5 NBR70 | O-RING |

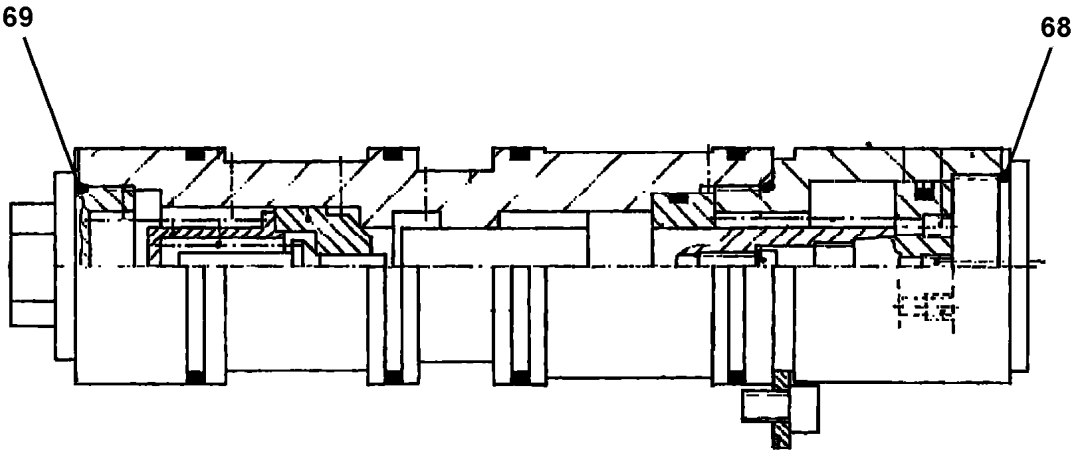


| Pos. | Item | Quantity | Description | Bezeichnung |
|---|---|---|---|---|
| 68 | 51 46 183 08 | 1 | O-RING ARP 568 44,12X2,62 NBR90 | O-RING |
| 69 | 57 02 428 08 | 1 | O-RING ARP 568 36,17X2,62 NBR80 | O-RING |
| 999 | 57 15 619 08 | 1 | SEALING SET VALVE | DS VENTIL |

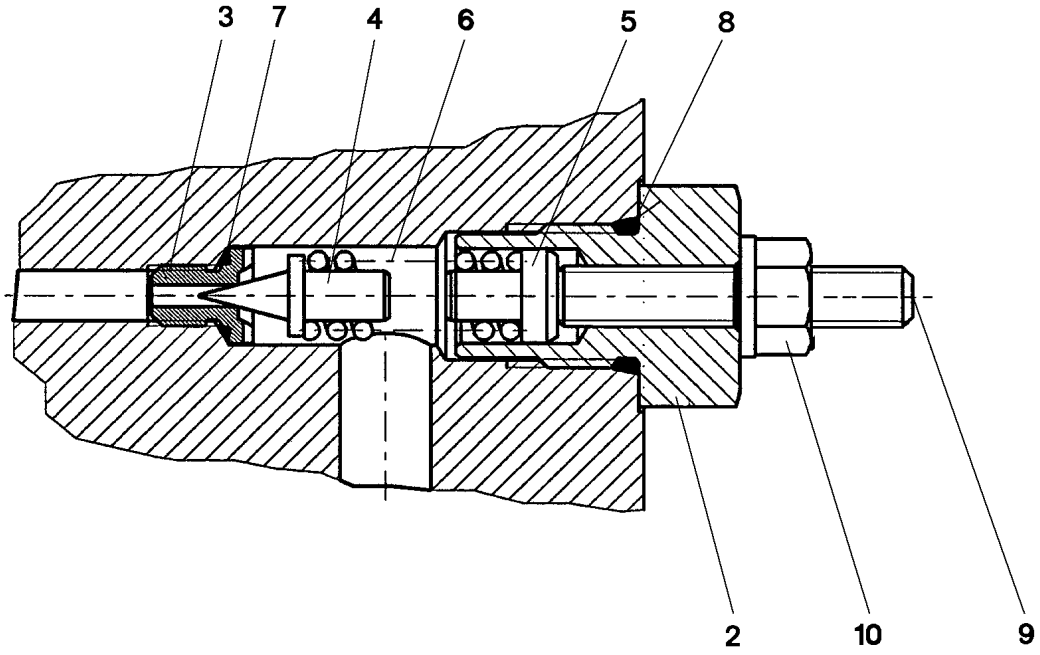


| Pos. | Item | Quantity | Description | Bezeichnung |
|---|---|---|---|---|
| 2 | 57 11 303 08 | 1 | SLEEVE | HUELSE |
| 3 | 57 06 475 08 | 1 | VALVE SEAT | VENTILSITZ |
| 4 | 51 07 921 08 | 1 | TAPER | KEGEL |
| 5 | 57 11 304 08 | 1 | SPACER PIECE | DISTANZSTUECK |
| 6 | 51 07 359 08 | 1 | PRESSURE SPRING 1,9X6,9X21,5 | DRUCKFEDER |
| 7 | 57 06 906 08 | 1 | O-RING 6X1 NBR90 | O-RING |
| 8 | 57 11 305 08 | 1 | O-RING ARP 568 11,89X1,98 N903890SHOR | O-RING |
| 9 | 51 07 533 08 | 1 | GRUB SCREW ISO 4026 M6X35 45H | GEWINDESTIFT |
| 10 | 51 07 534 08 | 1 | SEALING NUT M6 | DICHTMUTTER |

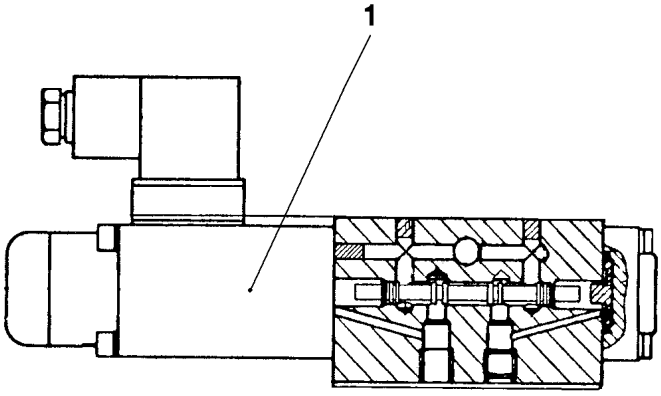


| Pos. | Item | Quantity | Description | Bezeichnung |
|---|---|---|---|---|
| 1 | 57 19 101 08 | 1 | MAGNET COIL 24V | MAGNETSPULE |

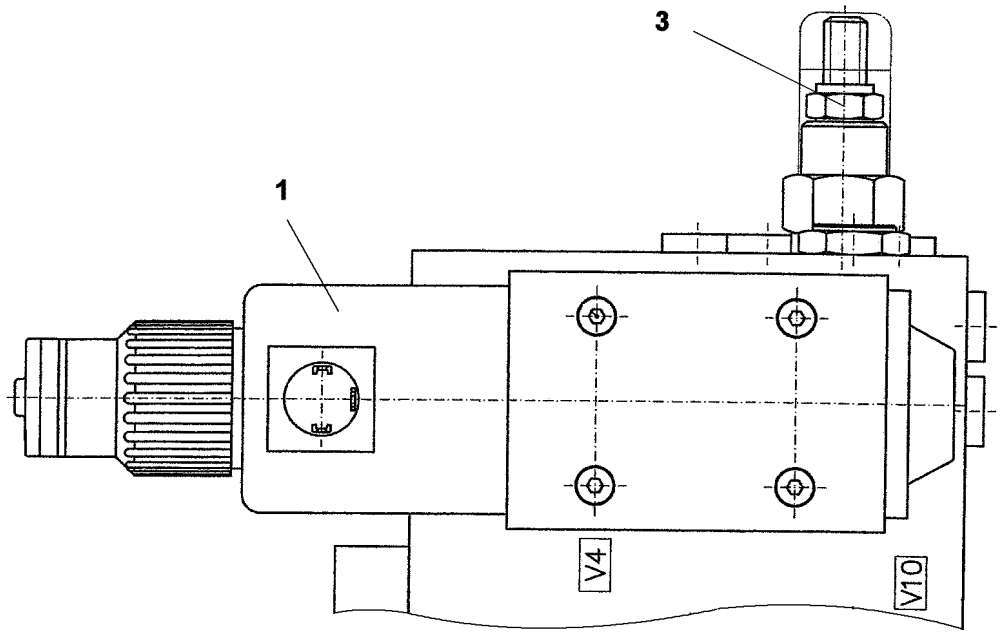

Pos. 999

| Pos. | Item | Quantity | Description | Bezeichnung |
|---|---|---|---|---|
| 1 | 57 18 188 08 | 1 | MAGNET COIL 24V | MAGNETSPULE |
| 3 | 11 00 781 7 | 1 | EMERGENCY HAND OPERATION | NOTHANDBETAETIGUNG |
| 999 | 11 00 627 5 | 1 | SEAL KIT DIRECTIONAL VALVE | DS WEGEVENTIL |

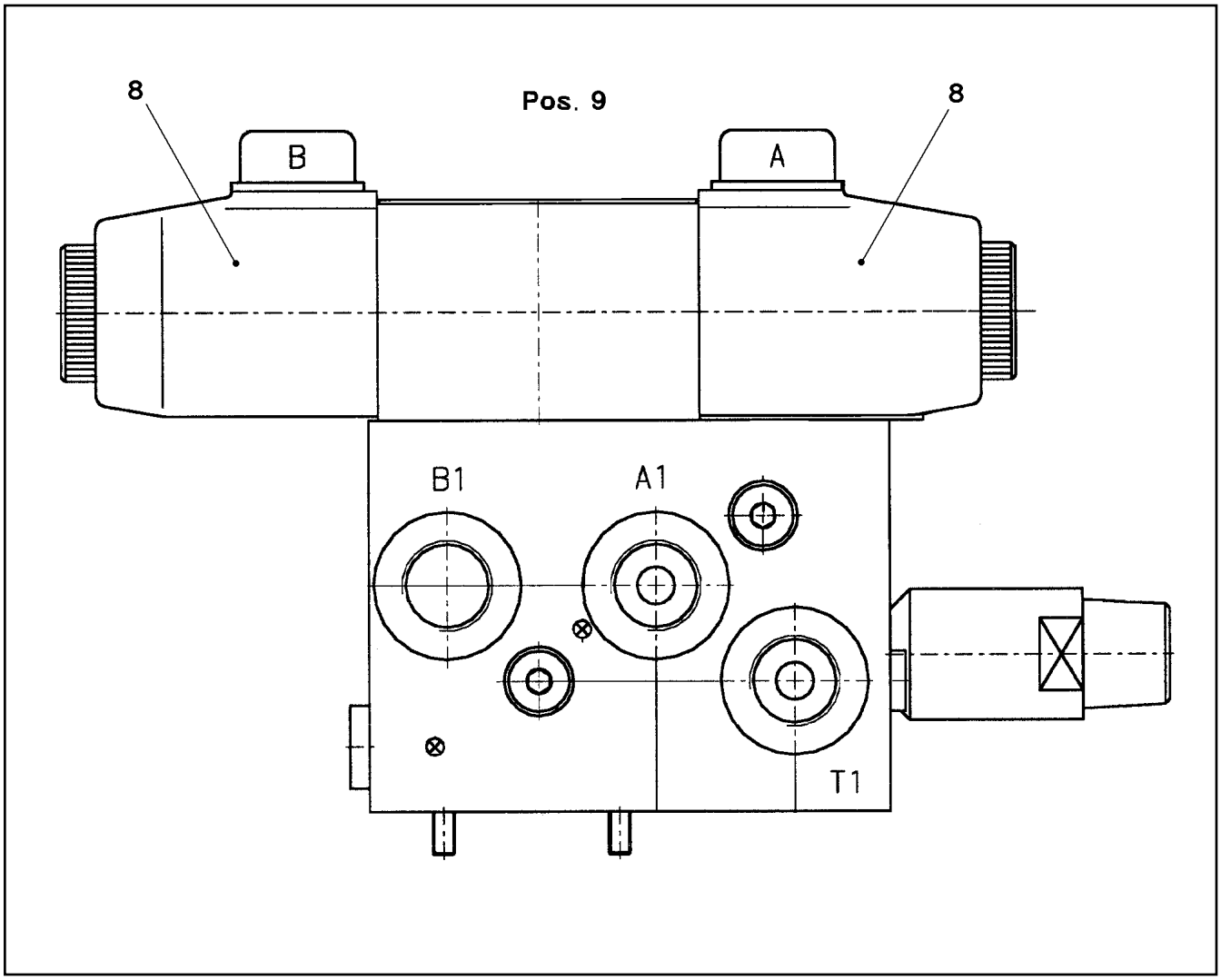


| Pos. | Item | Quantity | Description | Bezeichnung |
|---|---|---|---|---|
| 8 | 57 18 177 08 | 2 | MAGNET COIL | MAGNETSPULE |
| 9 | 10 21 738 3 | 2 | NUT | RAENDELMUTTER |

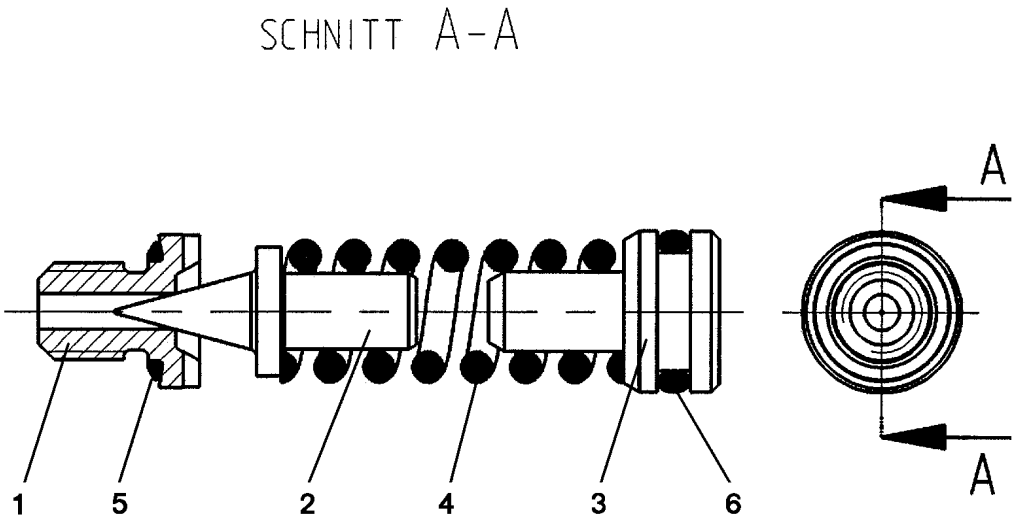


| Pos. | Item | Quantity | Description | Bezeichnung |
|---|---|---|---|---|
| 1 | 57 06 475 08 | 1 | VALVE SEAT | VENTILSITZ |
| 2 | 51 07 921 08 | 1 | TAPER | KEGEL |
| 3 | 51 07 357 08 | 1 | PISTON | KOLBEN |
| 4 | 51 07 359 08 | 1 | PRESSURE SPRING 1,9X6,9X21,5 | DRUCKFEDER |
| 5 | 57 06 906 08 | 1 | O-RING 6X1 NBR90 | O-RING |
| 6 | 72 64 196 08 | 1 | O-RING ARP 568-NBR70 6,07X1,78 NBR70 | O-RING |

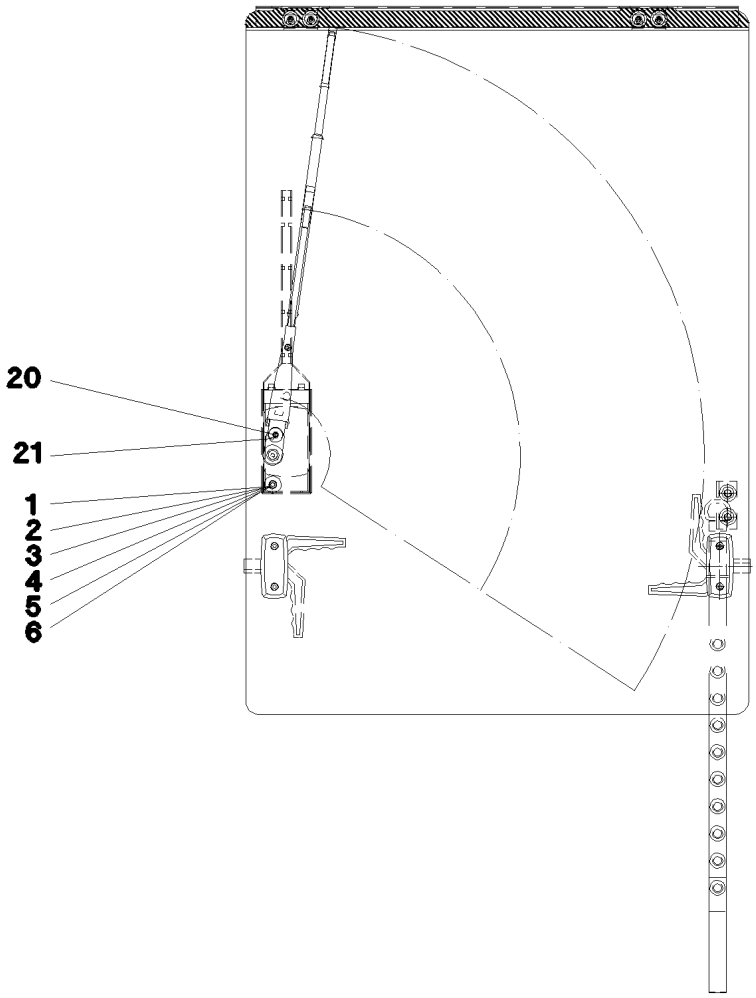


| Pos. | Item | Quantity | Description | Bezeichnung |
|---|---|---|---|---|
| 1 | 59 15 631 08 | 1 | WASHER GUMMI | SCHEIBE |
| 2 | 59 15 630 08 | 1 | KNURLED WASHER | BOERDELSCHEIBE |
| 3 | 59 15 592 08 | 1 | HEX NUT ISO 8675 M12X1 04 A2K | SECHSKANTMUTTER |
| 4 | 59 15 591 08 | 1 | CAP | KAPPE |
| 5 | 10 87 564 8 | 1 | WASHER ISO 7093-1 6 200HV 480H SPF | SCHEIBE |
| 6 | 41 21 001 08 | 1 | CAP NUT DIN 1587 M6 6 A2C | HUTMUTTER |
| 20 | 41 19 004 08 | 1 | HEX NUT DIN 985 M6 8 A2C | SECHSKANTMUTTER |
| 21 | 10 87 564 7 | 1 | WASHER ISO 7089 6 200HV 480H SPF | SCHEIBE |

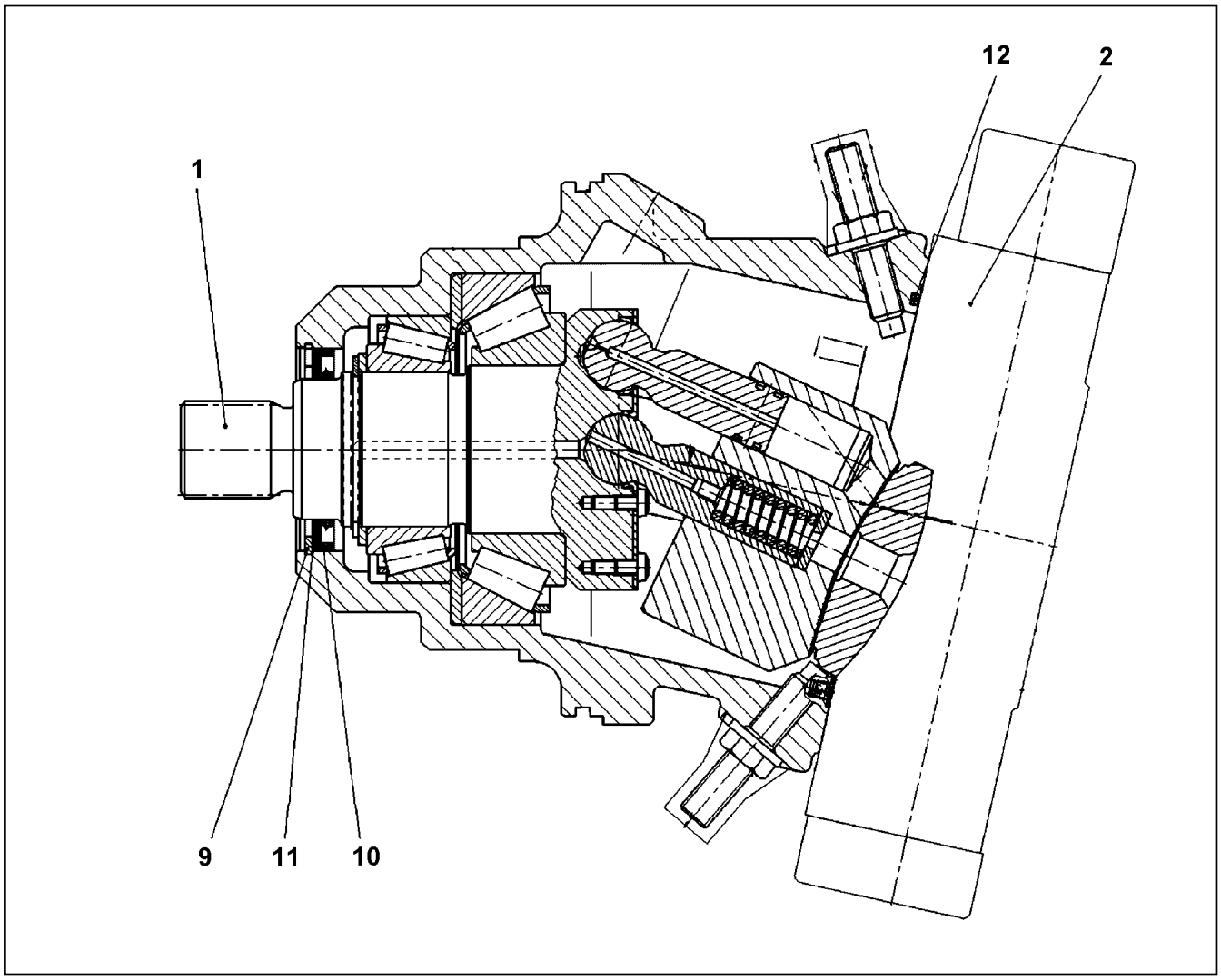


| Pos. | Item | Quantity | Description | Bezeichnung |
|---|---|---|---|---|
| 1 | 57 15 412 08 | 1 | DRIVING GEAR | TRIEBWERK |
| 2 | 10 80 175 1 | 1 | ADJUSTMENT<br>⇨ X10801751 10 80 175 1 | VERSTELLUNG |
| 9 | 10 17 163 2 | 1 | LOCKING RING DIN 472 90X3 FLZNNC-120H | SICHERUNGSRING |
| 10 | 70 08 986 | 1 | RADIAL SEAL 70X90X7 | RADIALDICHTRING |
| 11 | 50 09 001 | 1 | SUPPORTING WASHER DIN 988 S 75X90X3 | STUETZSCHEIBE |
| 12 | 51 46 042 08 | 1 | O-RING ARP 568 190,09X3,53 NBR70 | O-RING |

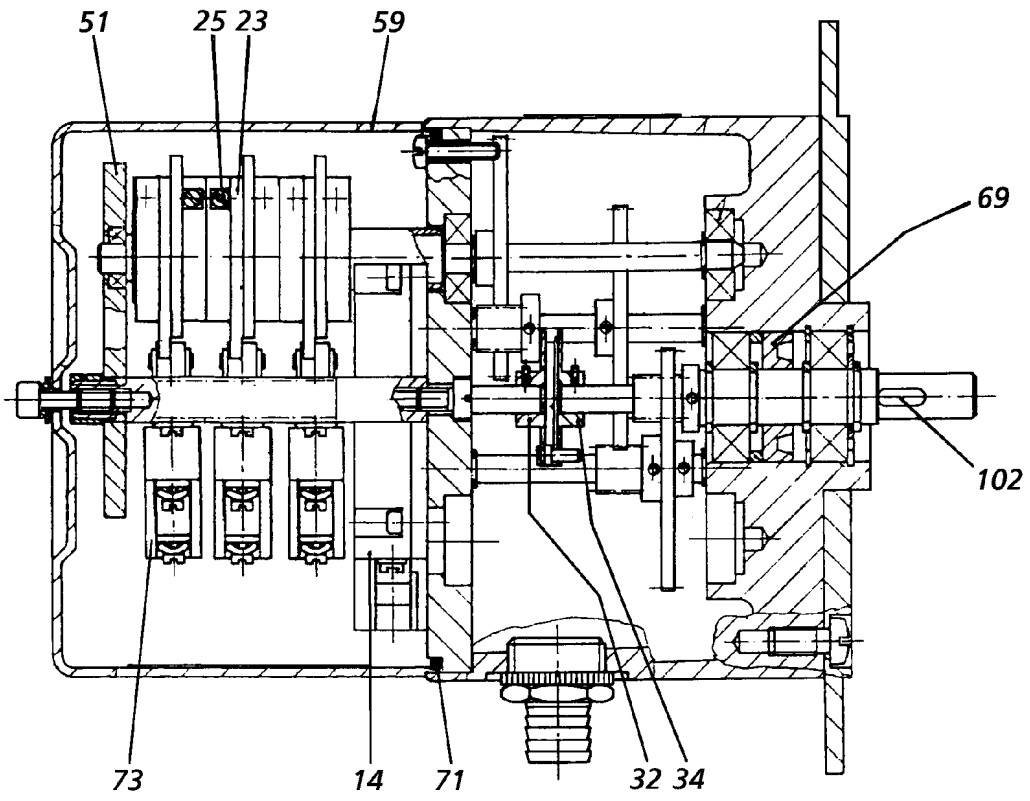


| Pos. | Item | Quantity | Description | Bezeichnung |
|---|---|---|---|---|
| 14 | 57 09 907 08 | 1 | IMPULS TRANSMITTER | IMPULSGEBER |
| 23 | 57 09 908 08 | 6 | TRIP CAM | SCHALTNOCKE |
| 25 | 57 09 909 08 | 6 | GUIDE TUBE | SCHNECKE |
| 32 | 57 09 910 08 | 1 | COUPLING LEVIER | KUPPLUNGSHEBEL |
| 34 | 57 09 911 08 | 1 | CLUTCH FORK | KUPPLUNGSGABEL |
| 51 | 57 09 912 08 | 1 | BOARD | PLATINE |
| 59 | 57 15 690 08 | 1 | CAP | KAPPE |
| 59 | 10 49 148 3 | 1 | CAP MIT NUT | KAPPE |
| 69 | 57 09 914 08 | 1 | ROTARY SHAFT LIP SEAL DIN 3760 A 12X2 | RADIALWELLENDICHTRING |
| 71 | 72 64 040 08 | 1 | O-RING 110X3 NBR70 | O-RING |
| 73 | 57 09 915 08 | 3 | PROTECTIVE MOTOR SWITCH | NOCKENSCHALTER |
| 102 | 43 40 002 08 | 1 | FITTING KEY DIN 6885 A 4X4X10 | PASSFEDER |

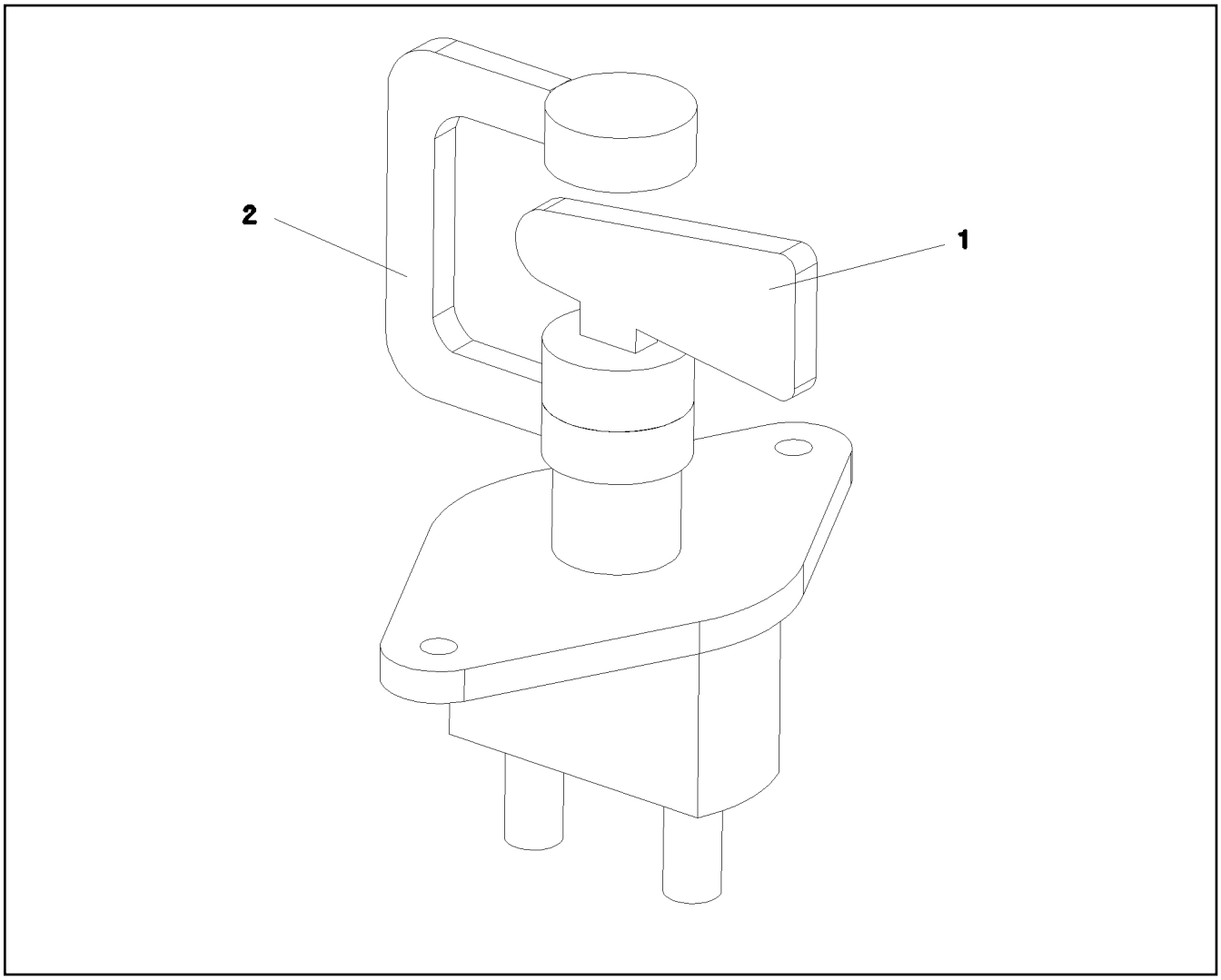


| Pos. | Item | Quantity | Description | Bezeichnung |
|---|---|---|---|---|
| 1 | 60 60 934 08 | 1 | ACTUATING HANDLE | BETAETIGUNGSGRIFF |
| 2 | 10 87 221 6 | 1 | DUST PROTECTION CAP | STAUBSCHUTZKAPPE |

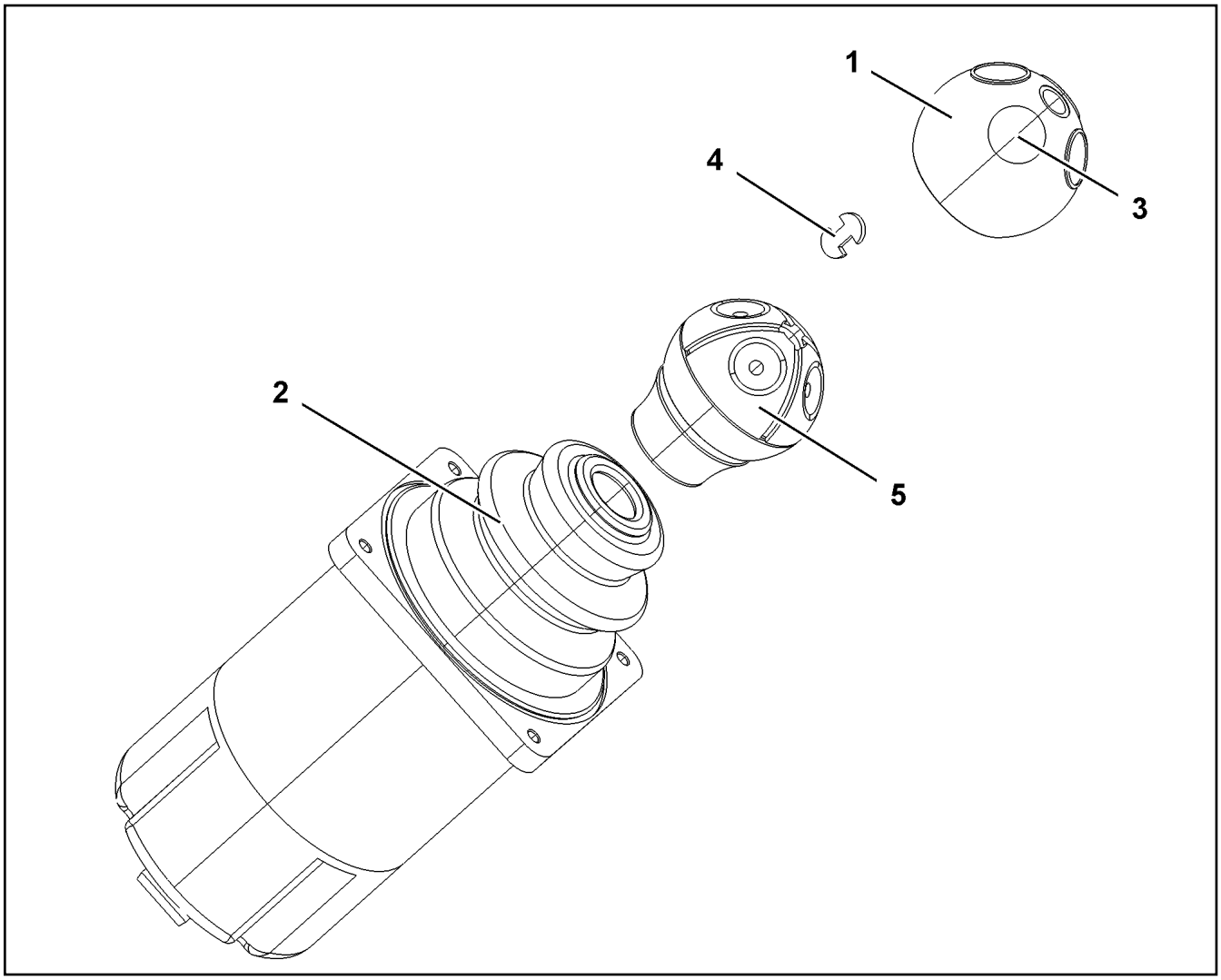


| Pos. | Item | Quantity | Description | Bezeichnung |
|---|---|---|---|---|
| 1 | 57 18 247 08 | 1 | HANDLE CAP | GRIFFKAPPE |
| 2 | 57 19 123 08 | 1 | RUBBER BELLOWS | FALTENBALG |
| 3 | 10 33 559 6 | 4 | MICRO SWITCH | MIKROSCHALTER |
| 4 | 10 67 884 8 | 2 | CIRCLIP FUER GRIFFKAPPE | SICHERUNGSCLIP |
| 5 | 10 87 351 7 | 1 | REPLACEMENT PARTS SET GRIFF | ERSATZTEILSATZ |

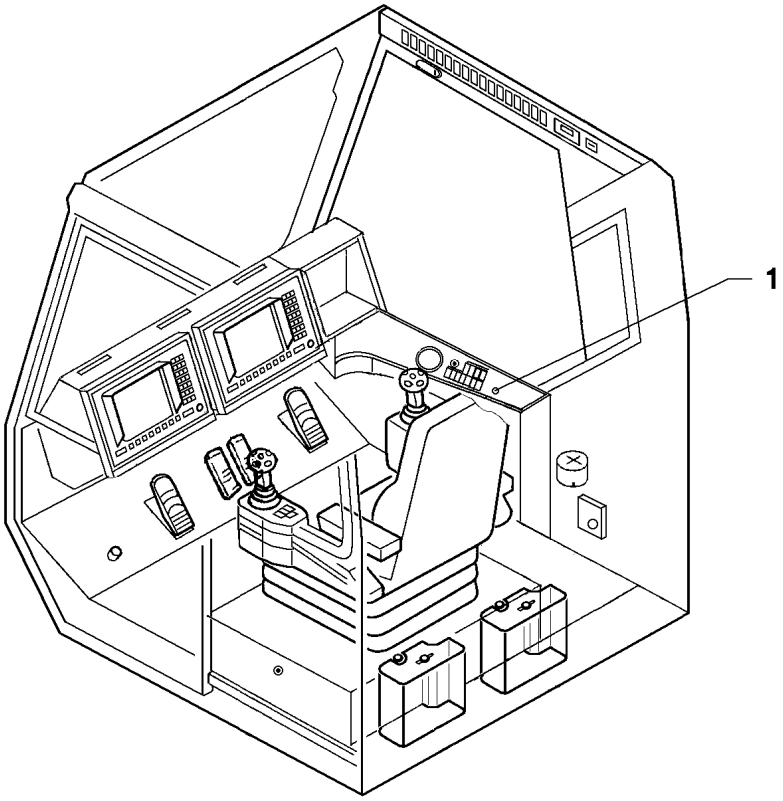


| Pos. | Item | Quantity | Description | Bezeichnung |
|---|---|---|---|---|
| 1 | 57 09 954 08 | 1 | KEY | SCHLUESSEL |

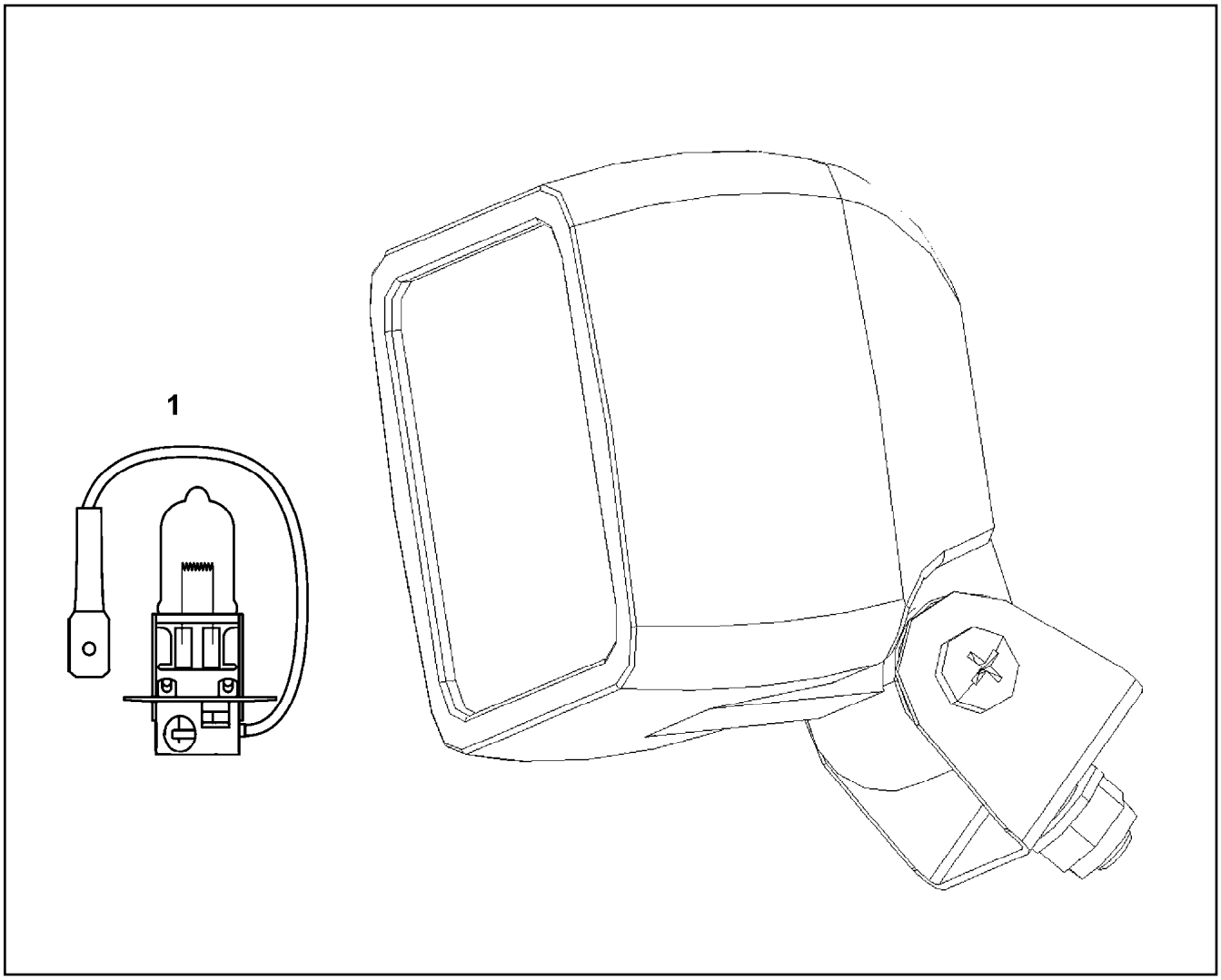


| Pos. | Item | Quantity | Description | Bezeichnung |
|---|---|---|---|---|
| 1 | 60 70 211 08 | 1 | LIGHT BULB DIN 72601 70W 24V | GLUEHLAMPE |

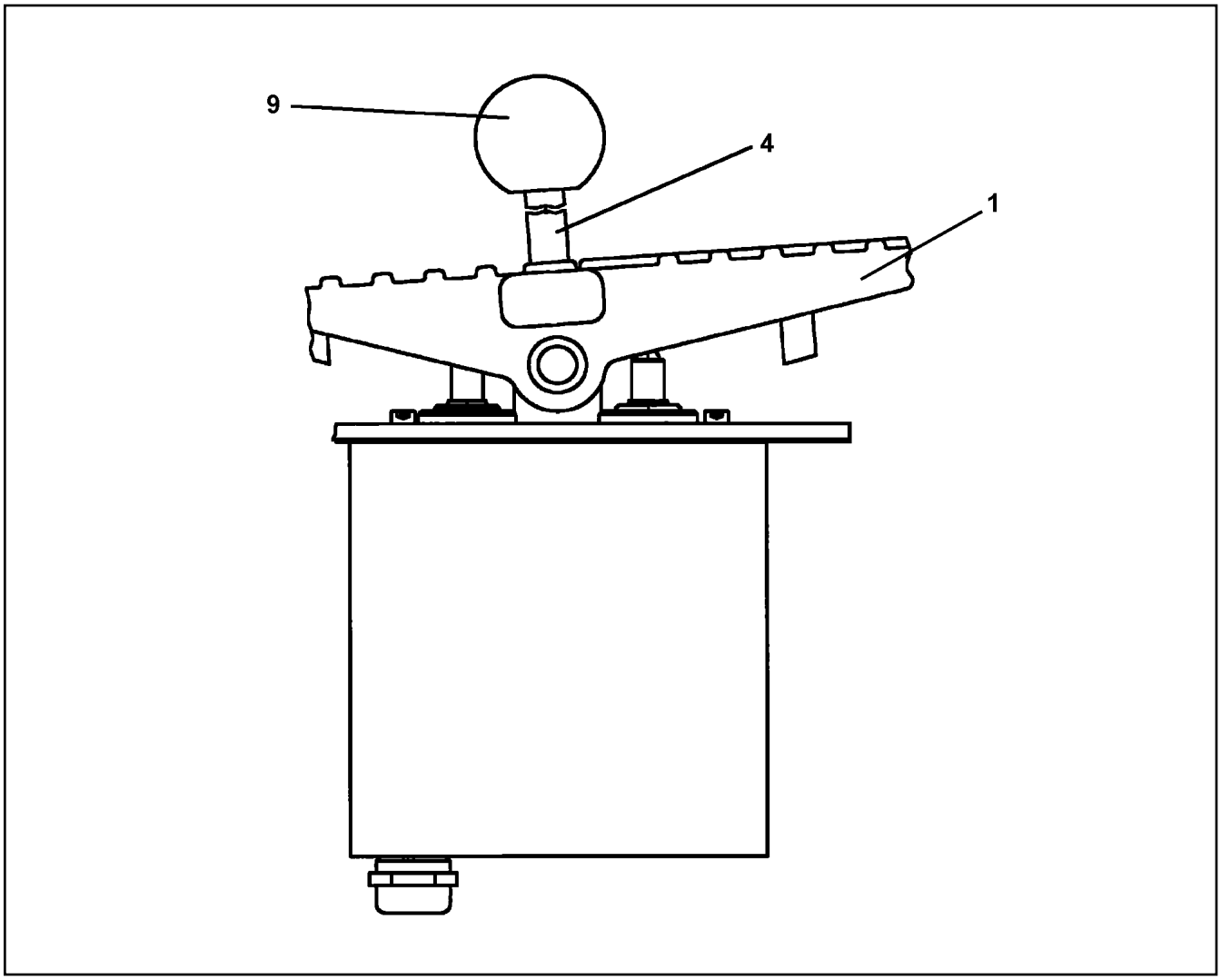


| Pos. | Item | Quantity | Description | Bezeichnung |
|---|---|---|---|---|
| 1 | 57 18 908 08 | 1 | FOOT PEDAL | FUSSPEDAL |
| (1) | 10 87 495 9 | 1 | AXLE | ACHSE |
| 4 | 11 00 722 1 | 1 | LEVER | HEBEL |
| 9 | 11 00 722 3 | 1 | SPHERICAL KNOB DIN 319 E 40 KU | KUGELKNOPF |

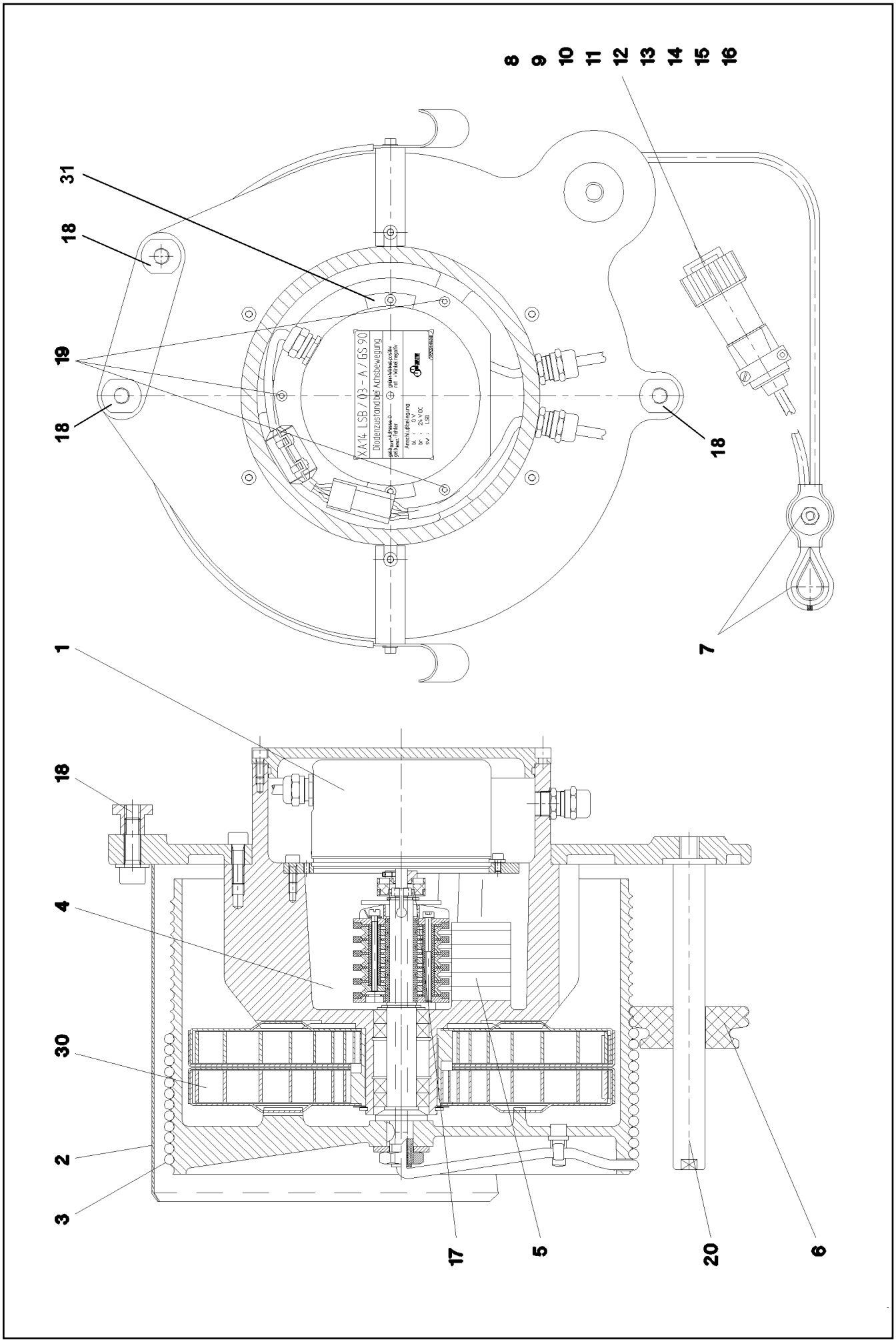


| | | |
|---|---|---|
| 16.2.2017<br>023624<br>LIEBHERR | **etk_en_de_048005 LTR 1100**<br><br>**ROPE LENGTH INDICATOR**<br>**SEILLAENGENGEBER** | 389 (1/2)<br><br>⇨ **6 923 101 08**<br>**69 23 101 08** |

| Pos. | Item | Quantity | Description | Bezeichnung |
|---|---|---|---|---|
| 1 | 57 17 939 08 | 1 | LENGTH INDICATOR | LAENGENGEBER |
| 2 | 69 26 006 08 | 1 | COVERING SL 010 | ABDECKUNG KPL. |
| 3 | 57 18 518 08 | 1 | LENGTH MEASURING CABLE 5 X 0,382 | LAENGENMESSKABEL |
| 4 | 57 18 510 08 | 1 | SLIP RING SET | SCHLEIFRINGSATZ |
| (1) | 11 06 860 7 | 10 | SOLDERING LUGS | LOETOESE |
| 5 | 57 18 511 08 | 1 | CONTACT SET | KONTAKTSATZ |
| (999) | 10 04 511 8 | 1 | SPRAY BOTTLE | SPRITZE |
| 6 | 57 18 512 08 | 1 | DEFLECTION PULLEY | UMLENKROLLE |
| 7 | 57 18 513 08 | 1 | THIMBLE AND CLAMP | KAUSCHE UND KLEMME |
| 8 | 60 45 086 08 | 1 | PLUG 6-POL | STECKER |
| 9 | 60 27 048 08 | 2 | CABLE SLEEVE 4-6 | KABELTUELLE |
| 10 | 60 45 085 08 | 1 | SEALING PLUG M 1-K | VERSCHLUSSKAPPE |
| 11 | 60 45 265 08 | 1 | BUSHING SUPPORT 6-POL 16A | BUCHSENTRAEGER |
| 12 | 60 45 193 08 | 8 | SLEEVE CONTACT 0,75-1,0MM2 | BUCHSENKONTAKT |
| 13 | 60 45 189 08 | 2 | STOPPER PLUG BAUREIHE_M1 | BLINDSTOPFEN |
| 14 | 60 45 055 08 | 1 | CABLE SOCKET M11-Z | KABELDOSE |
| 15 | 92 87 019 08 | 1 | PIN INSERT | STIFTEINSATZ KPL. |
| 16 | 60 45 121 08 | 1 | SEALING PLUG M1-D | VERSCHLUSSKAPPE |
| 17 | 10 03 757 5 | 1 | COUPLING | KUPPLUNG |
| 18 | 10 67 520 5 | 1 | MOUNTING BOLT | MONTAGEBOLZEN |
| 19 | 40 00 996 | 3 | SOCKET HEAD SCREW ISO 4762 M4X10 8.8 | ZYLINDERSCHRAUBE |
| 20 | 11 00 649 1 | 1 | SHAFT | WELLE |
| 30 | 10 49 007 2 | 1 | SPRING SET | FEDERSATZ |
| 31 | 10 80 064 2 | 1 | SET OF FASTENINGS/FASTENER | BEFESTIGUNGSSATZ |

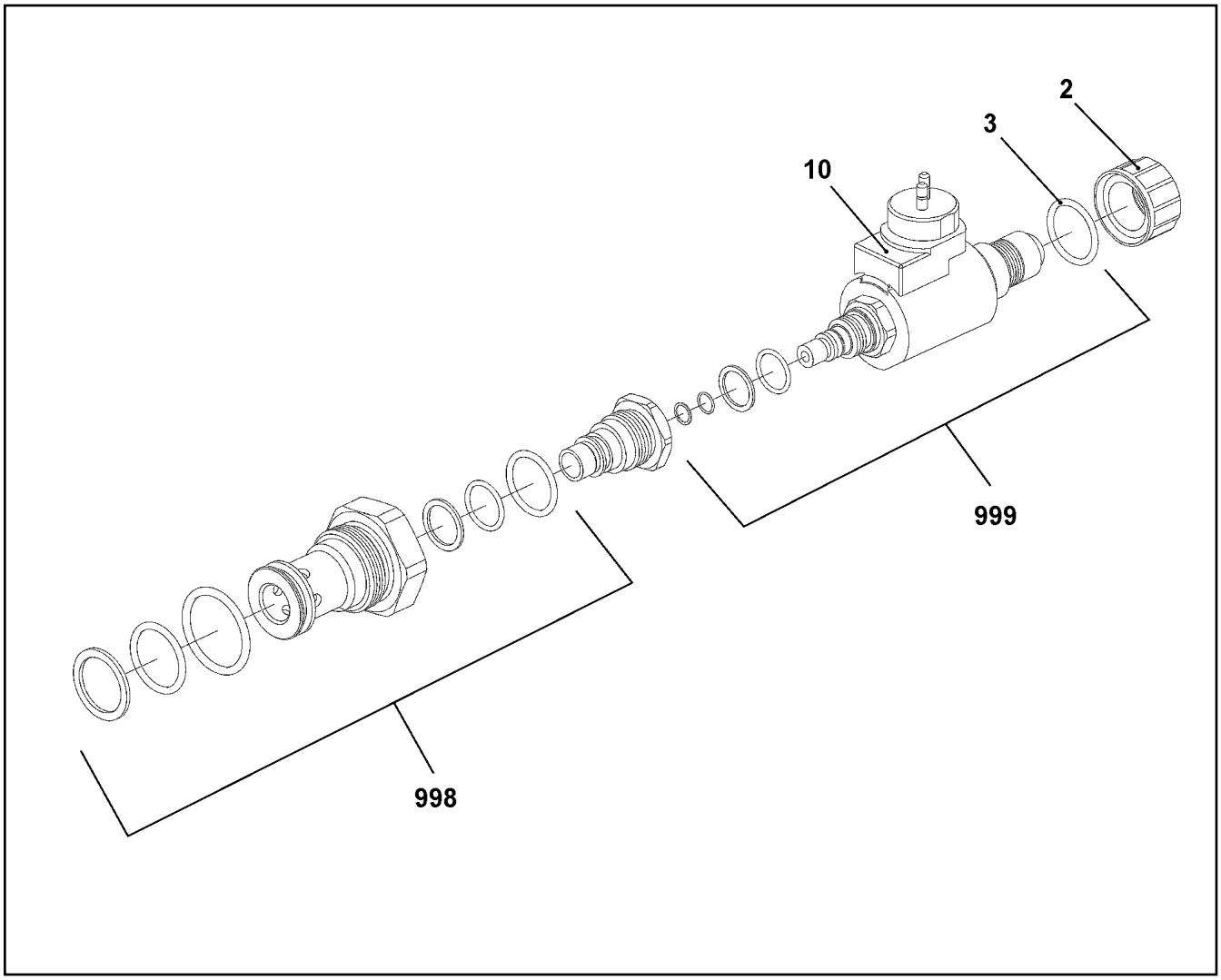


| Pos. | Item | Quantity | Description | Bezeichnung |
|---|---|---|---|---|
| 2 | 10 21 961 8 | 1 | NUT | MUTTER |
| 3 | 10 21 961 9 | 1 | O-RING 19X2,5 FKM80 | O-RING |
| 10 | 57 02 797 08 | 1 | MAGNET COIL 1V | MAGNETSPULE |
| 998 | 10 33 194 6 | 1 | SEAL KIT | DICHTSATZ |
| 999 | 10 21 962 0 | 1 | SEAL KIT | DICHTSATZ |

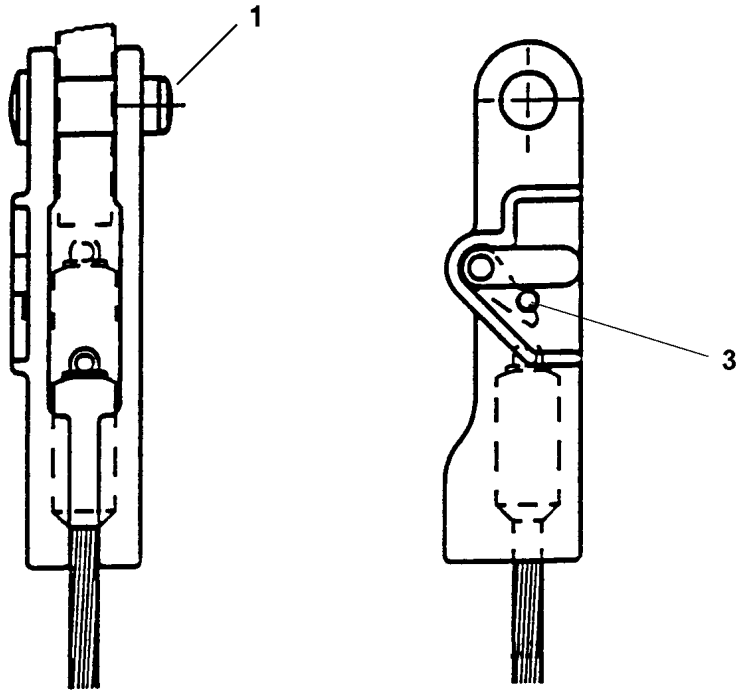


Pos. 2

| Pos. | Item | Quantity | Description | Bezeichnung |
|---|---|---|---|---|
| 1 | 57 17 123 08 | 1 | COLLER BOLT 20-22MM | BUNDBOLZEN |
| 2 | 57 15 306 08 | 1 | SAFETY PLUG W HINGE-LID 9,5X45 | SICHERHEITSKLAPPSTECKER |
| 3 | 96 73 615 08 | 1 | REPAIR KIT SICHERUNGSKNOPF | REPARATURSATZ |
| (1) | 10 42 460 1 | 1 | SAFETY BUTTON | SICHERUNGSKNOPF |
| (2) | 10 47 066 7 | 1 | SAFETY BUTTON | SICHERUNGSKNOPF |

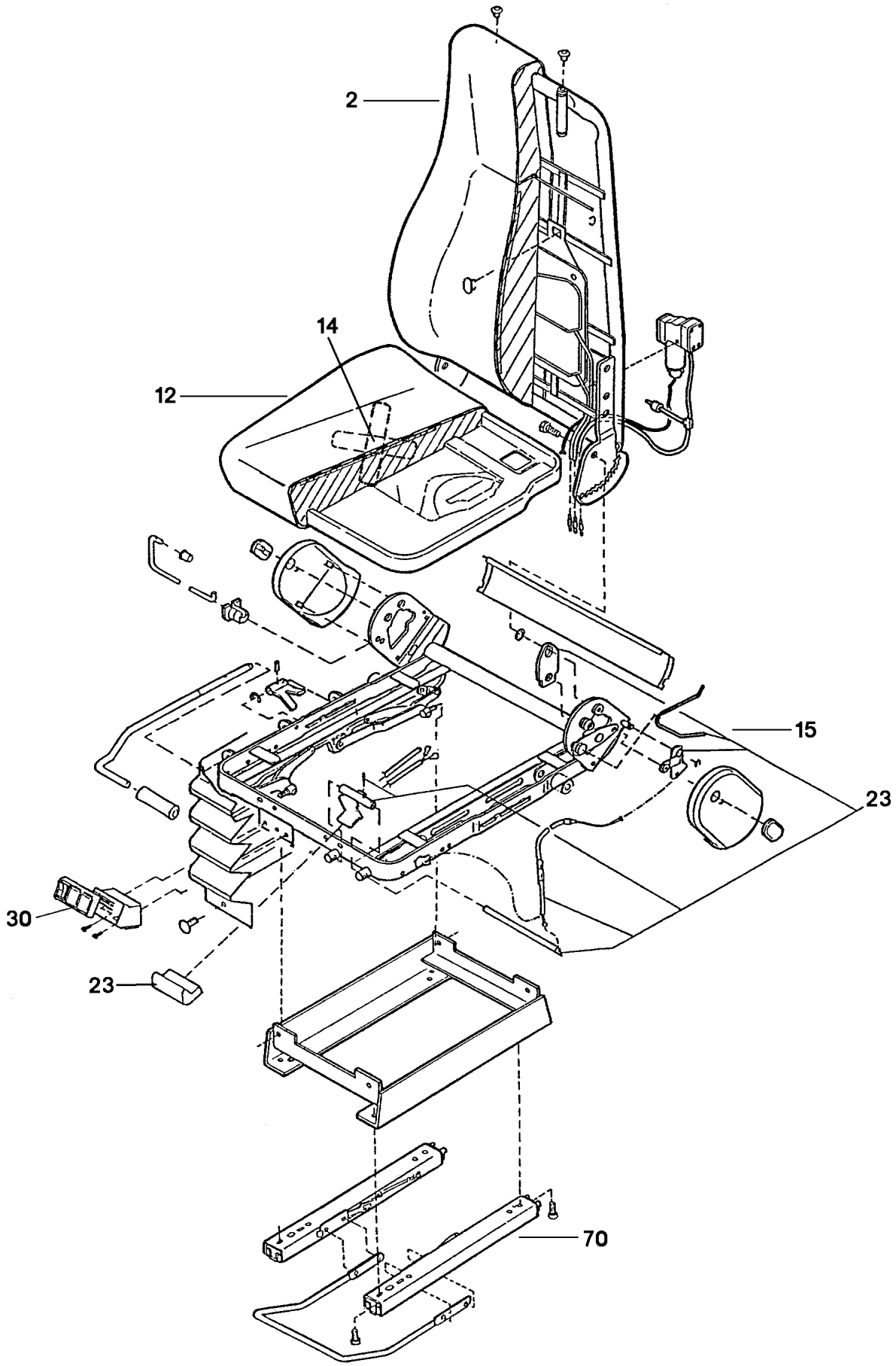
2
14
12
15
23
30
23
70

| Pos. | Item | Quantity | Description | Bezeichnung |
|---|---|---|---|---|
| 2 | 57 18 353 08 | 1 | BACK PART | RUECKENTEIL |
| 12 | 57 18 354 08 | 1 | SEAT PART | SITZTEIL |
| 14 | 57 10 357 08 | 1 | SEAT SWITCH | SITZKONTAKTSCHALTER |
| 15 | 57 14 948 08 | 1 | SEAT FRAME | SITZRAHMEN |
| 23 | 57 18 300 08 | 1 | REGULATION DEVICE SEAT BACK | RUECKENLEHNENRASTUNG |
| 30 | 57 14 949 08 | 1 | VALVE | LORDOSENVENTIL |
| 70 | 57 18 302 08 | 1 | RAIL PAIR | SCHIENENPAAR |

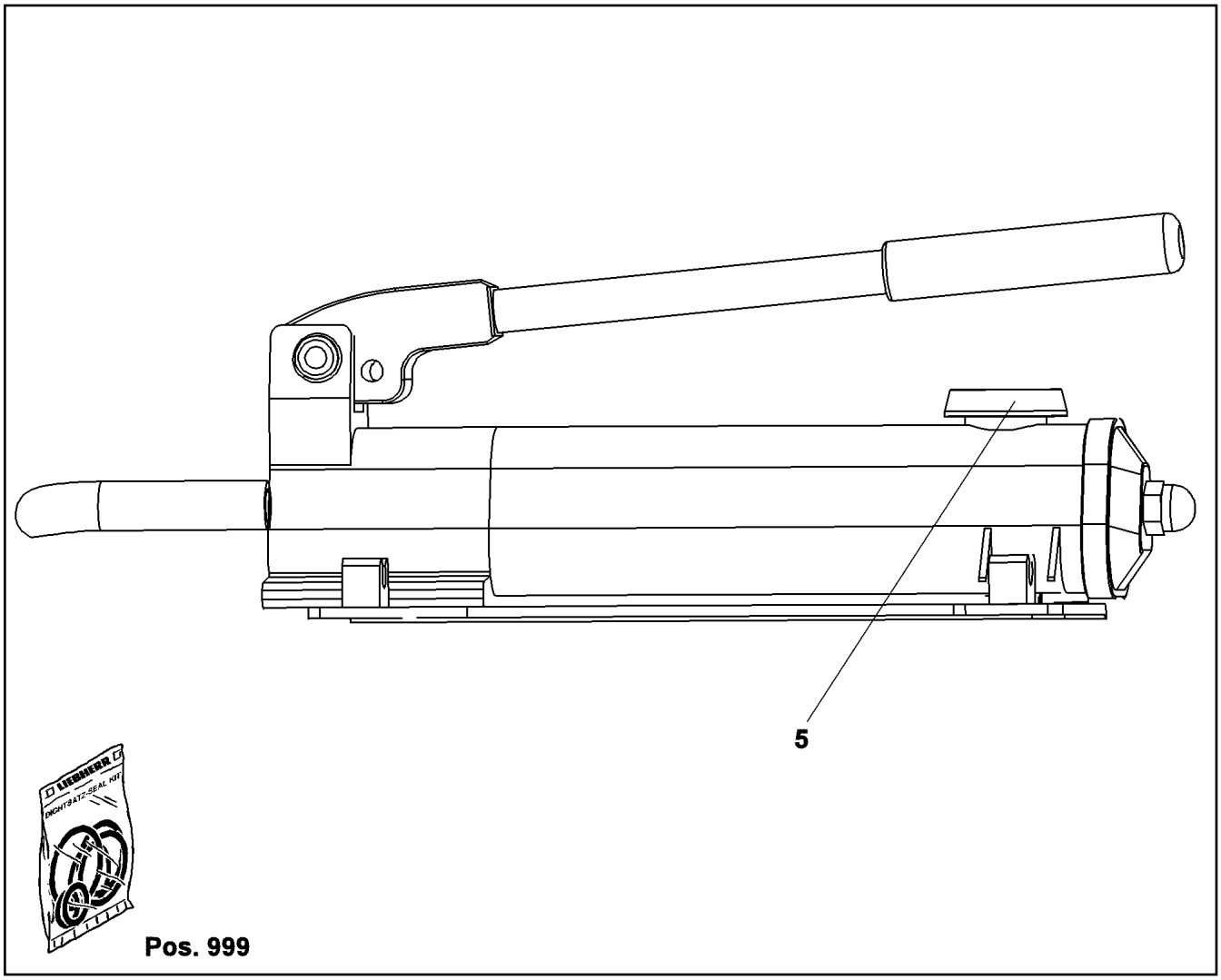


| Pos. | Item | Quantity | Description | Bezeichnung |
|---|---|---|---|---|
| 7 | 10 87 323 9 | 1 | COVER | DECKEL |
| 999 | 57 18 380 08 | 1 | REPAIR KIT | REPARATURSATZ |

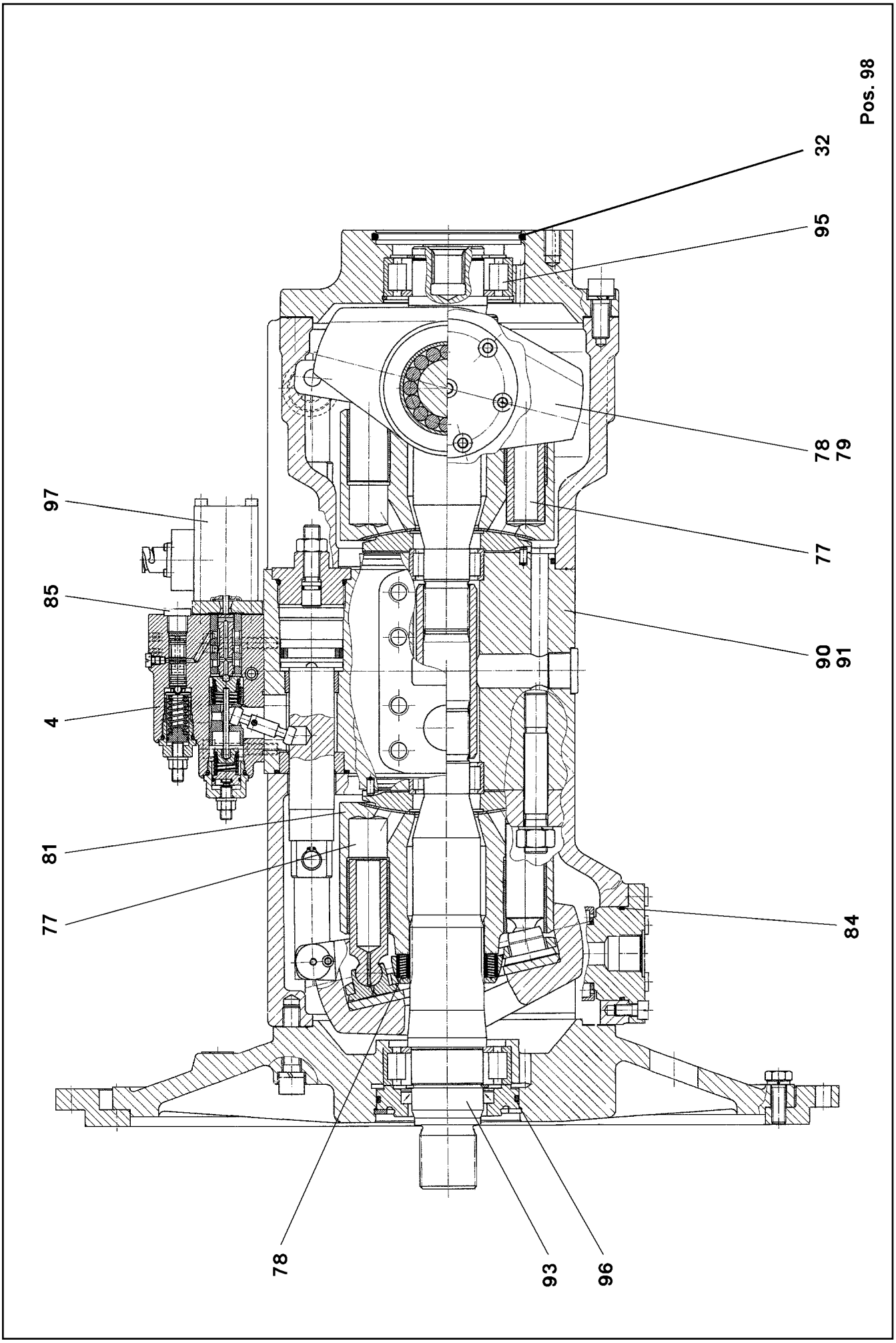


| | | |
|---|---|---|
| 16.2.2017<br>027109<br>LIEBHERR | **etk_en_de_048005 LTR 1100**<br><br>**HYDR.DOUBLE PUMP**<br>**HYDRAULIKDOPPELPUMPE** | ❑ 396 (1/2)<br><br>⇨ **9 072 112**<br>**90 72 112** |

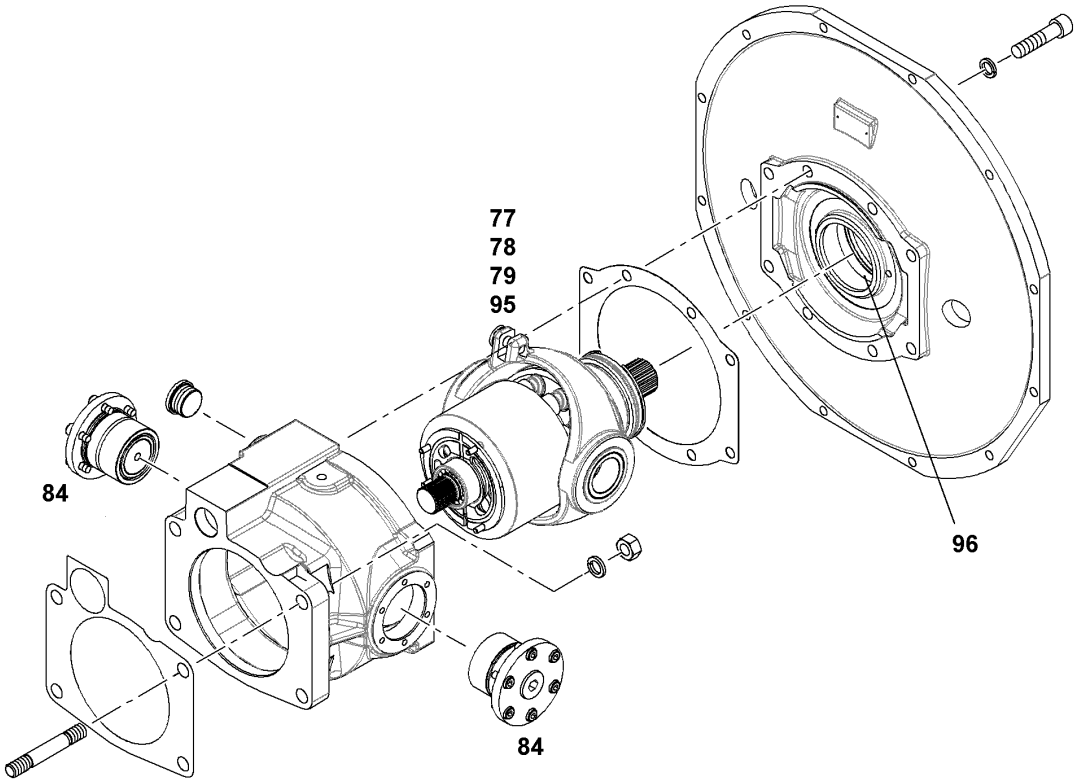


| Pos. | Item | Quantity | Description | Bezeichnung |
|---|---|---|---|---|
| 4 | 90 74 716 | 2 | REGULATING VALVE EL-DA | REGELVENTIL |
| (998) | 90 74 997 | 1 | REPAIR KIT CONTROL VALVE NG 125-140 | RS REGELVENTIL |
| (999) | 92 70 147 | 1 | SEAL KIT REGULATING VALVE | DS REGELVENTIL |
| 32 | 50 12 326 08 | 1 | O-RING ARP 568 101,20X3,53 NBR70 | O-RING |
| 77 | 90 73 393 | 2 | RK PISTON WITH GUIDE SHOE NG 125 | RS KOLBEN MIT GLEITSCHUH |
| 78 | 90 73 389 | 2 | RK PULL-BACK BALL+PULL-B.PLATE NG 12 | RS RUECKZUGKUGEL+RUECKZ. |
| 79 | 90 73 484 | 1 | RK CYLINDER+CONTROL PLATE NG 125-13 | RS ZYLINDER+STEUERPLATTE |
| 81 | 90 73 918 | 1 | RK CYLINDER+CONTROL PLATE NG 125 | RS ZYLINDER+STEUERPLATTE |
| 84 | 90 73 917 | 2 | REPAIR SET SWIVEL YOKE NG 125 | RS SCHWENKJOCH |
| 85 | 92 75 443 | 1 | REPAIR SET LID NG 100 | RS DECKEL |
| 90 | 98 89 837 | 1 | REPAIR KIT CONNECTION HOUSING NG 14 | RS ANSCHLUSSGEHAEUSE |
| 91 | 92 69 750 | 1 | SEAL KIT CONNECTING HOUSING | DS ANSCHLUSSGEHAEUSE |
| 93 | 90 73 528 | 1 | REPAIR KIT SHAFT NG 125 | RS WELLE |
| 95 | 90 73 915 | 1 | REPAIR KIT SHAFT NG 125 | RS WELLE |
| 96 | 92 68 016 | 1 | REPAIR KIT LOCK RING NG 125 | RS VERSCHLUSSRING |
| 97 | 92 73 187 | 2 | REPAIR KIT MAGNET | RS MAGNET |
| (70) | 51 46 118 08 | 1 | O-RING 23,52X1,78 NBR90 | O-RING |
| (74) | 40 43 641 08 | 4 | SOCKET HEAD SCREW DIN 912 M5X85 12.9 | ZYLINDERSCHRAUBE |
| 98 | 92 76 426 | 1 | SEAL KIT DOUBLE PUMP | DS DOPPELPUMPE |

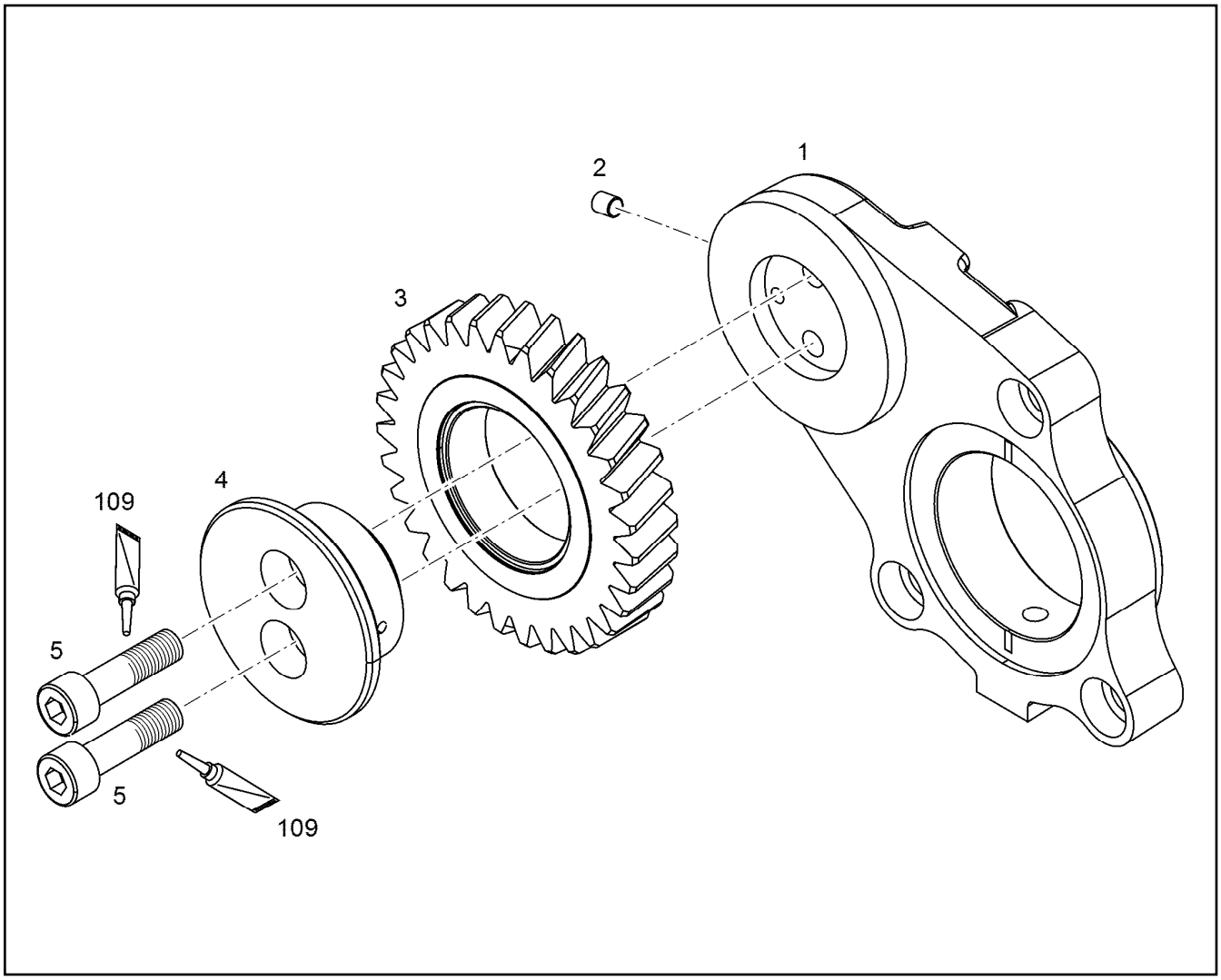


| Pos. | Item | Quantity | Description | Bezeichnung |
|---|---|---|---|---|
| 2 | 73 80 123 | 1 | SEALING PLUG CR6-FREI | DICHTSTOPFEN |
| 3 | 90 72 633 | 1 | INTERMEDIATE GEAR PRE-ASSY. | ZWISCHENRAD VORM. |
| 4 | 92 67 273 | 1 | HUB 42CrMo4+N+QT | NABE |
| 5 | 24 00 498 02 | 2 | SOCKET HEAD SCREW ISO 4762 M8X30 8.8 | ZYLINDERSCHRAUBE |
| 109 | 81 12 057 08 | 1 | SCREW LOCKING 50ML FLASCHE 150 °C | SCHRAUBENSICHERUNG |

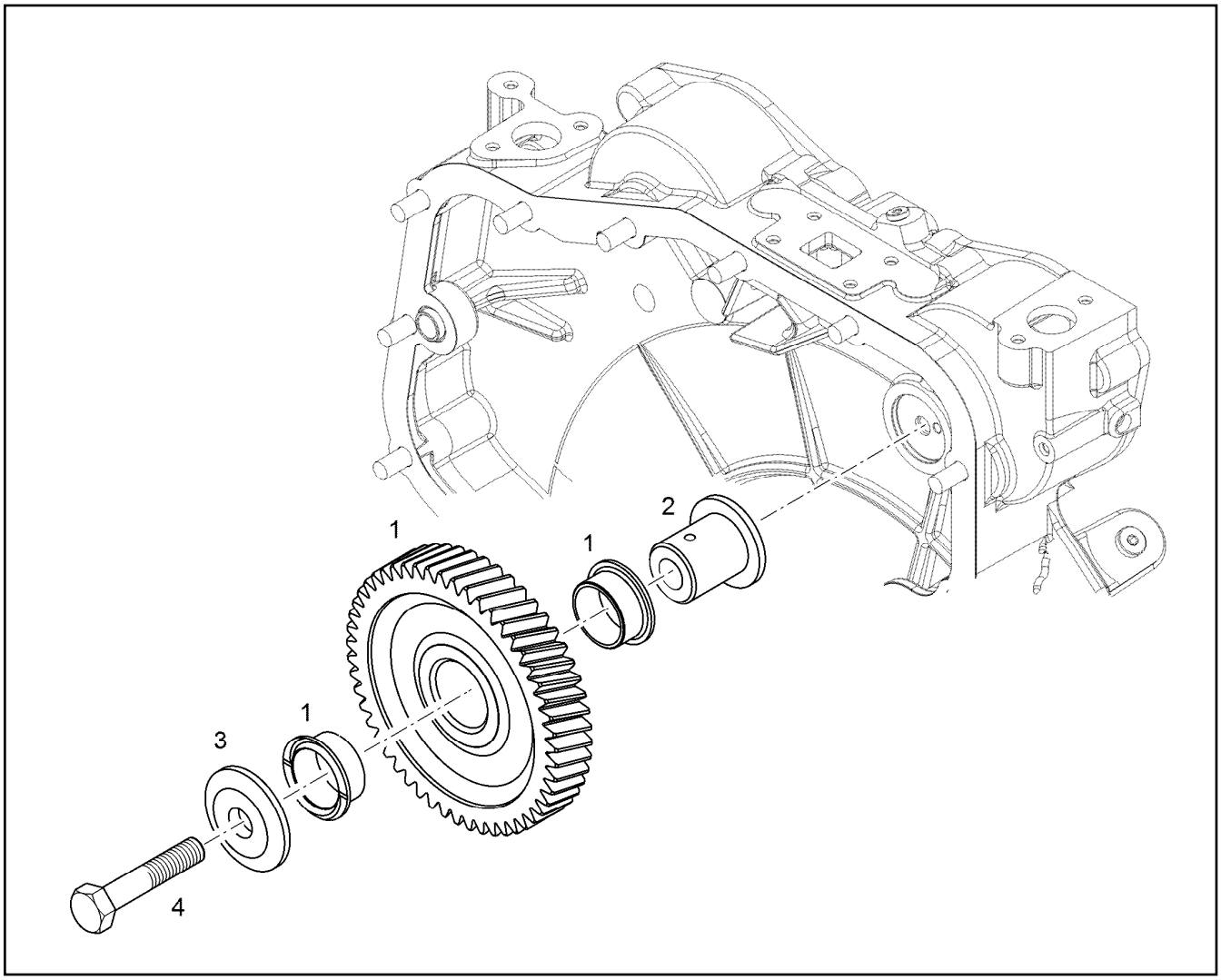


| Pos. | Item | Quantity | Description | Bezeichnung |
|---|---|---|---|---|
| 1 | 90 72 904 | 1 | INTERMEDIATE GEAR PRE-ASSY. | ZWISCHENRAD VORM. |
| (2) | 98 89 290 | 2 | PLAIN BEARING BUSHING 30X34X16 G-CuS | GLEITLAGERBUCHSE |
| 2 | 90 72 907 | 1 | INTERMEDIATE WHEEL AXLE 42CrMo4+QT | ZWISCHENRADACHSE |
| 3 | 90 72 908 | 1 | BEARING COVER 31CrMoV9 | LAGERDECKEL |
| 4 | 11 65 889 0 | 1 | HEX SCREW ISO 4014 M12X65 8.8 FLZN SP | SECHSKANTSCHRAUBE |

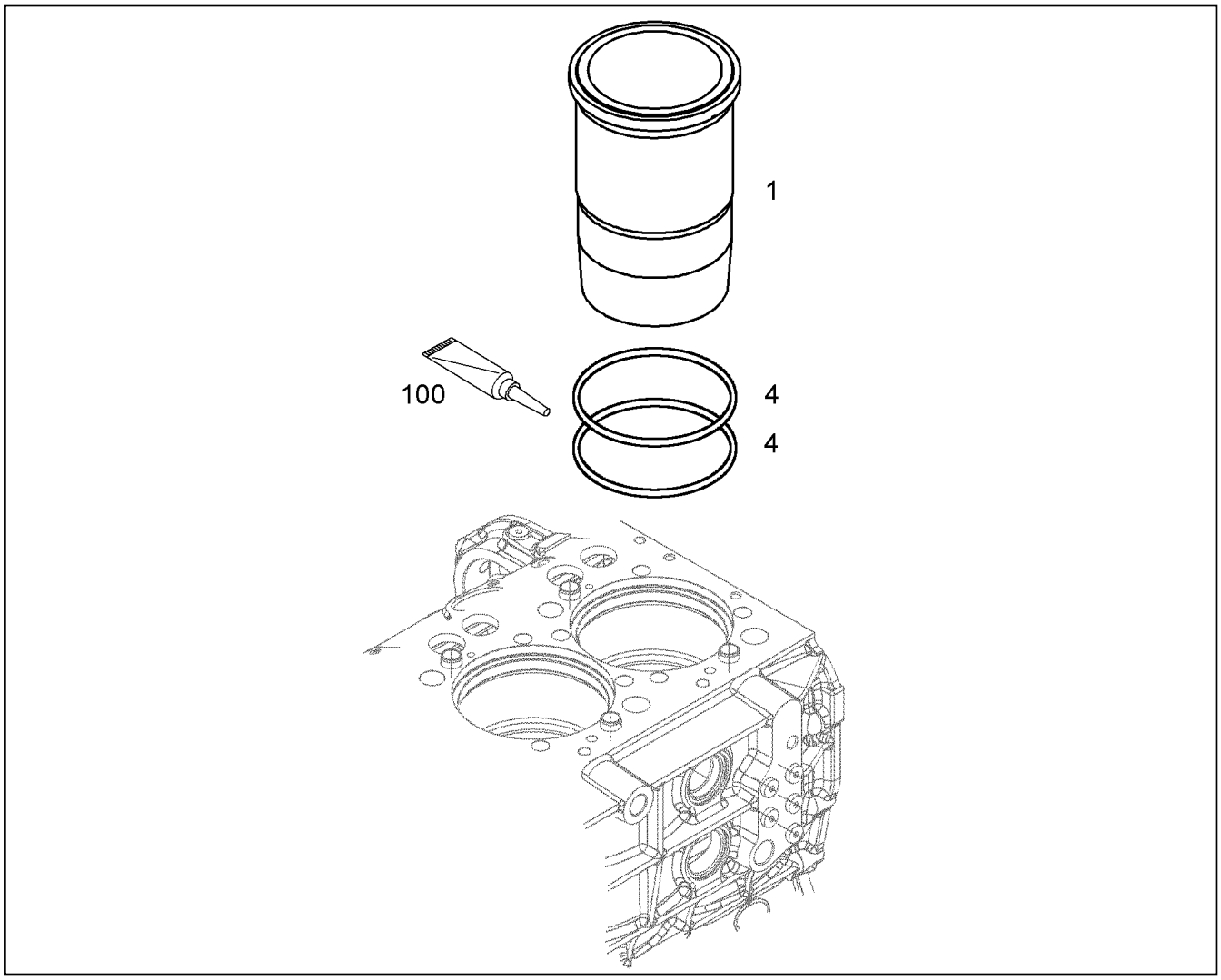


| Pos. | Item | Quantity | Description | Bezeichnung |
|---|---|---|---|---|
| 1 | 90 80 084 | 1 | CYLINDER BUSHING | ZYLINDERBUCHSE |
| 4 | 10 00 649 9 | 2 | O-RING 140 75 FKM 17939 | O-RING |
| 100 | 10 02 473 3 | 1 | GREASE GBU Y 131 0.010KG | FETT |

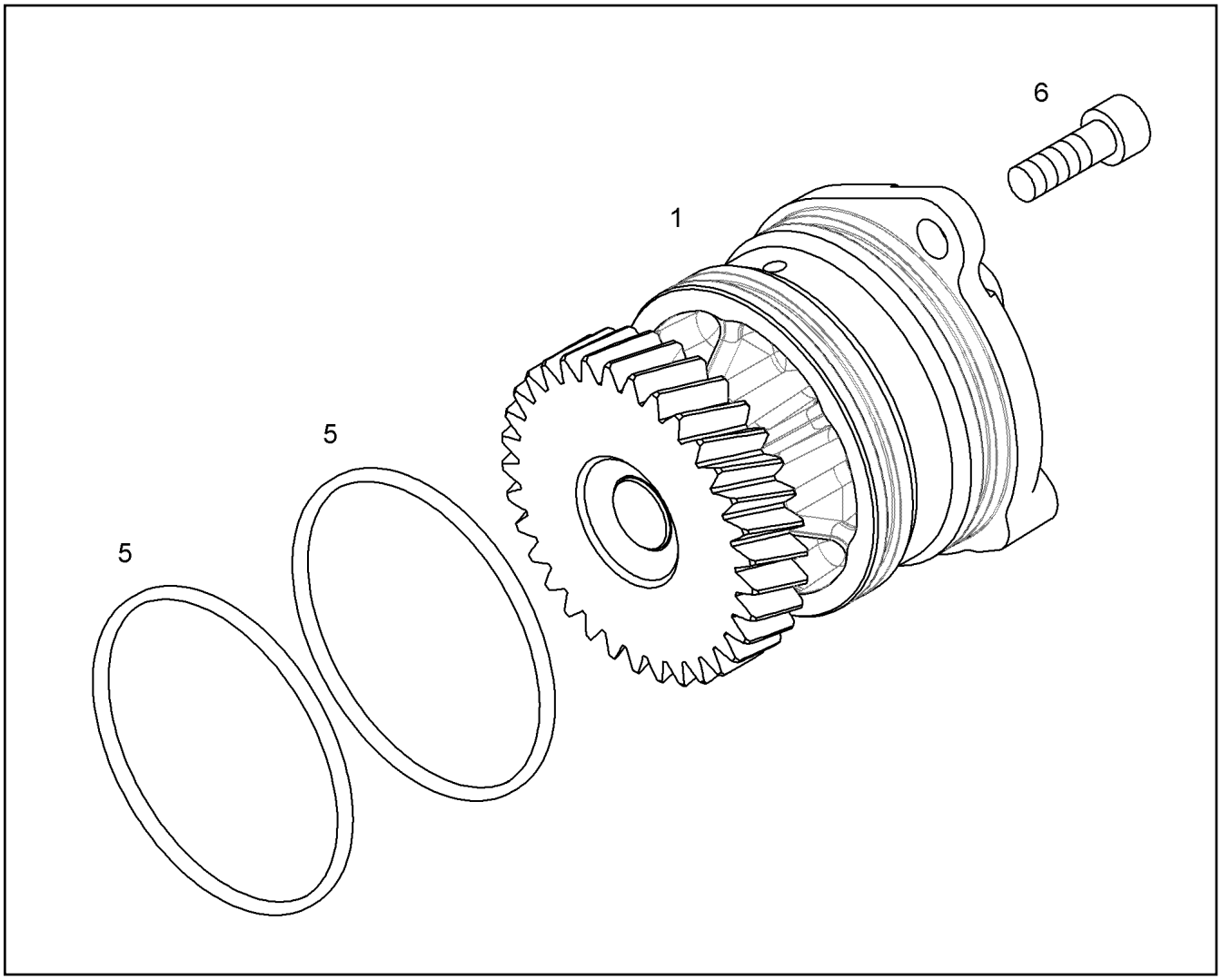


| Pos. | Item | Quantity | Description | Bezeichnung |
|---|---|---|---|---|
| 1 | 10 11 783 6 | 1 | AUXILIARY DRIVE PRE-ASS. | NEBENABTRIEB VORM. |
| 5 | 73 81 361 | 2 | O-RING ISO 3601-1 85,32X3,53 FKM 70 A,GN | O-RING |
| 6 | 40 43 000 | 2 | SOCKET HEAD SCREW ISO 4762 M10X30 1 | ZYLINDERSCHRAUBE |

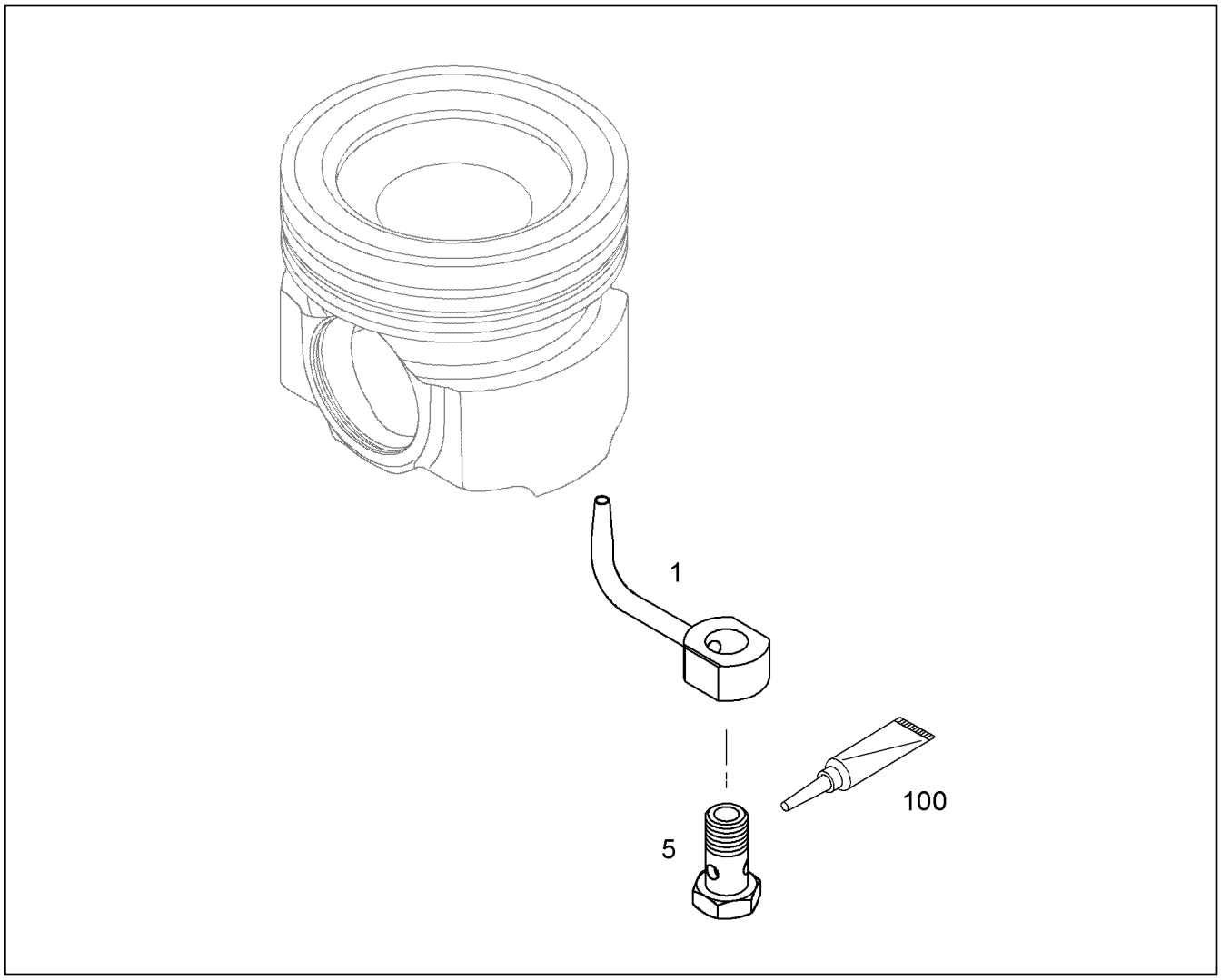


| Pos. | Item | Quantity | Description | Bezeichnung |
|---|---|---|---|---|
| 1 | 90 73 796 | 1 | PISTON COOLING NOZZLE ST-KOLBEN | KOLBENKUEHLDUESE |
| 5 | 90 73 678 | 1 | HOLLOW SCREW 11SMnPb30+C | HOHLSCHRAUBE |
| 100 | 81 12 017 08 | 1 | SCREW LOCKING 50G | SCHRAUBENSICHERUNG |

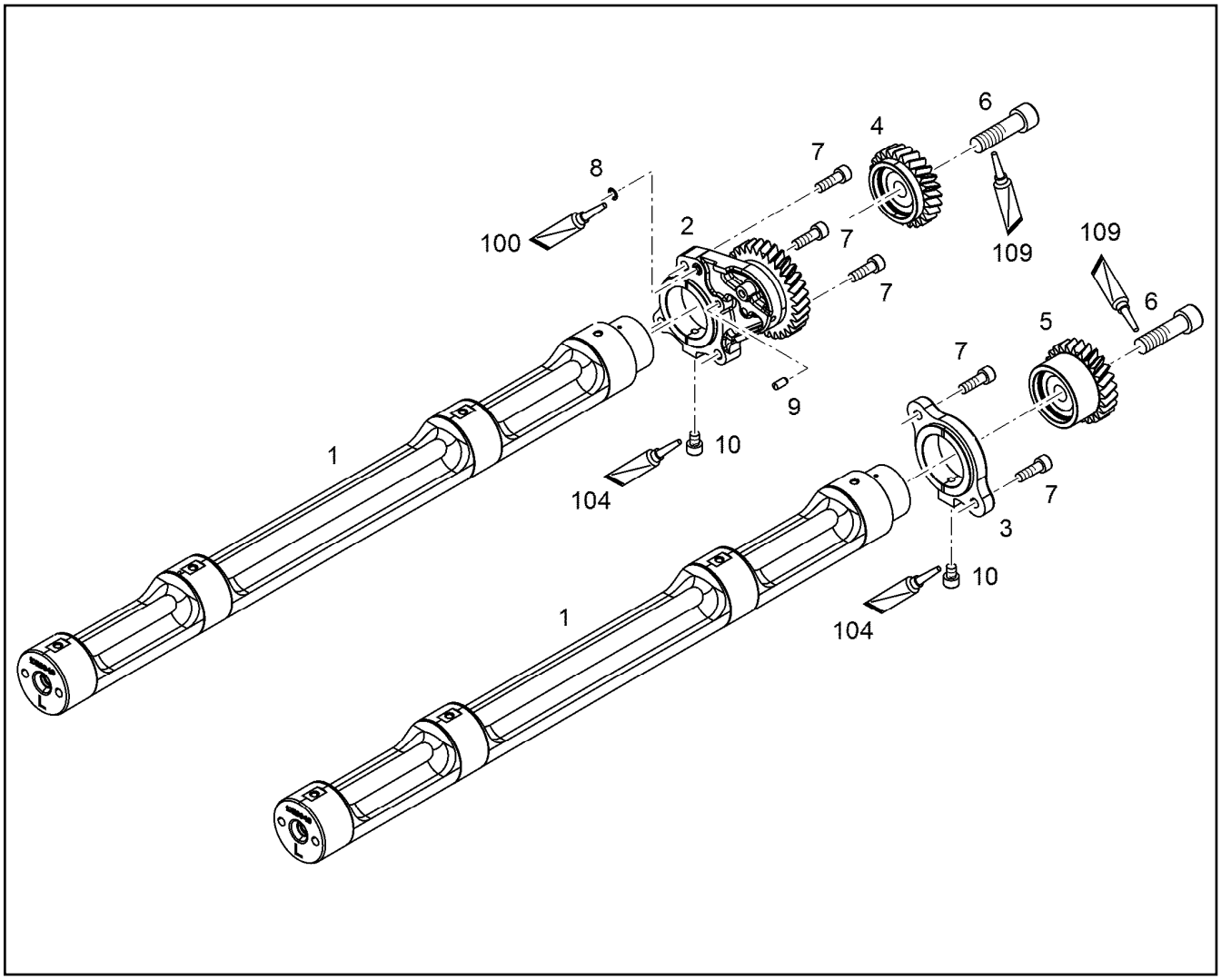


| Pos. | Item | Quantity | Description | Bezeichnung |
|---|---|---|---|---|
| 1 | 90 77 131 | 2 | BALANCER SHAFT PRE-ASS. | AUSGLEICHWELLE VORM. |
| 2 | 90 72 593 | 1 | FLANGE PRE-ASS. D934<br>⇨ 9 072 593 90 72 593 | FLANSCH VORM. |
| 3 | 90 72 832 | 1 | FLANGE D934 | FLANSCH |
| 4 | 90 72 727 | 1 | GEAR WHEEL Z=25 M=2,5 | ZAHNRAD |
| 5 | 90 72 833 | 1 | GEAR WHEEL Z=25 M=2,5 20MnCr5 | ZAHNRAD |
| 6 | 40 43 009 | 2 | SOCKET HEAD SCREW ISO 4762 M14X50 1 | ZYLINDERSCHRAUBE |
| 7 | 24 00 497 02 | 5 | SOCKET HEAD SCREW ISO 4762 M8X25 8.8 | ZYLINDERSCHRAUBE |
| 8 | 73 81 685 | 1 | O-RING DIN 3771 7,00X1,5 FKM 90 A,BK | O-RING |
| 9 | 49 80 000 | 1 | PARALLEL PIN ISO 8734 6m6X14 St | ZYLINDERSTIFT |
| 10 | 24 00 493 02 | 2 | SOCKET HEAD SCREW ISO 4762 M8X10 8.8 | ZYLINDERSCHRAUBE |
| 100 | 10 28 570 8 | 1 | GREASE NBU 30 1KG DOSE | FETT |
| 104 | 81 12 082 01 | 1 | GLUE 50ml -55/180 °C | KLEBSTOFF |
| 109 | 81 12 080 01 | 1 | THREAD LOCK 50ML FLASCHE | GEWINDESICHERUNG |

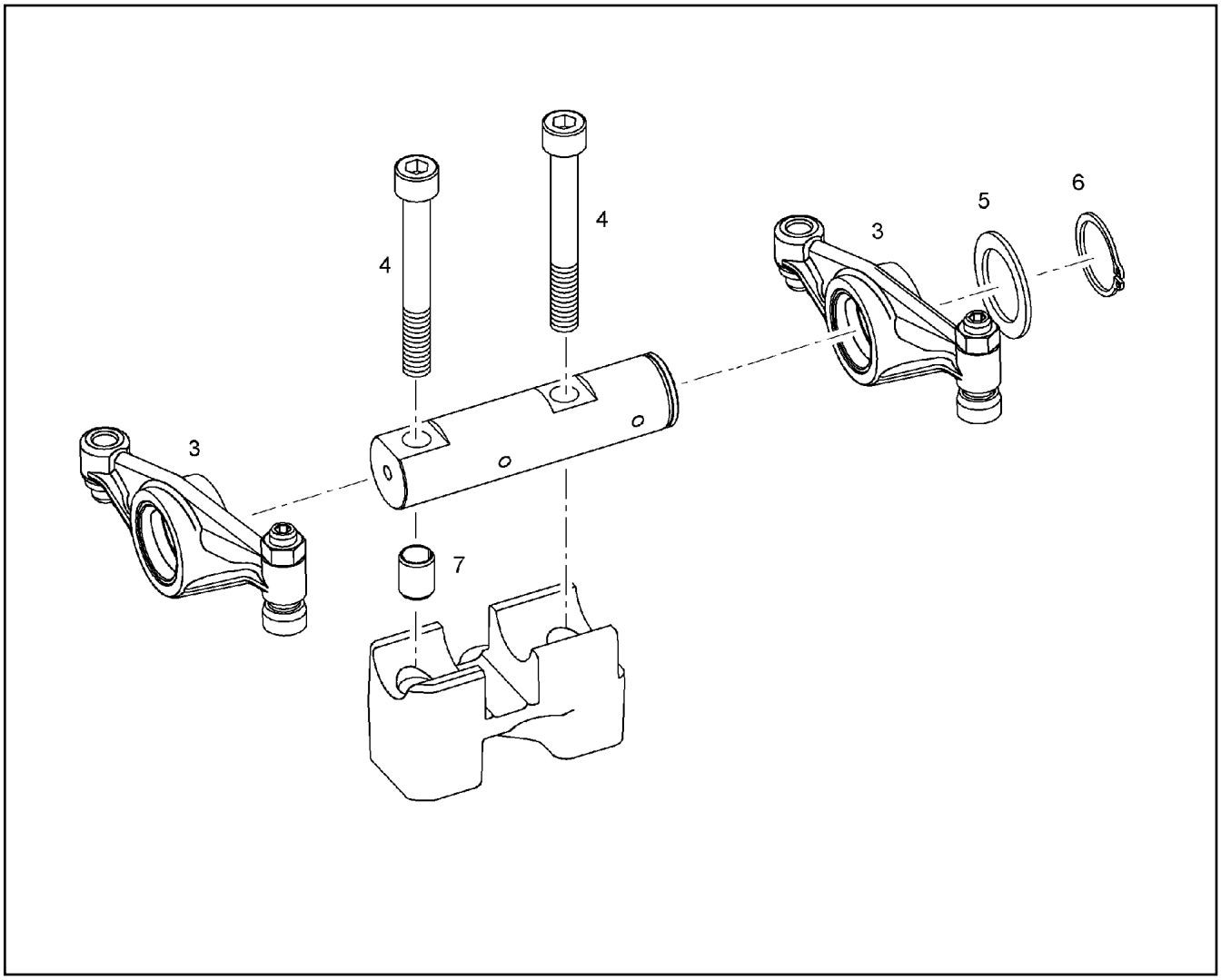


| Pos. | Item | Quantity | Description | Bezeichnung |
|---|---|---|---|---|
| 3 | 90 74 507 | 2 | ROCKER ARM PRE-ASSY.<br>⇨ 9 074 507 90 74 507 | KIPPHEBEL VORM. |
| 4 | 40 01 595 | 2 | SOCKET HEAD SCREW ISO 4762 M10X80 1 | ZYLINDERSCHRAUBE |
| 5 | 42 20 010 01 | 1 | SUPPORTING WASHER DIN 988 S 28X40X2 | STUETZSCHEIBE |
| 6 | 42 80 024 08 | 1 | LOCKING RING DIN 471 28X1,5 | SICHERUNGSRING |
| 7 | 10 00 444 2 | 1 | DOWEL PIN ISO 13337 13X16 FSt | SPANNSTIFT |

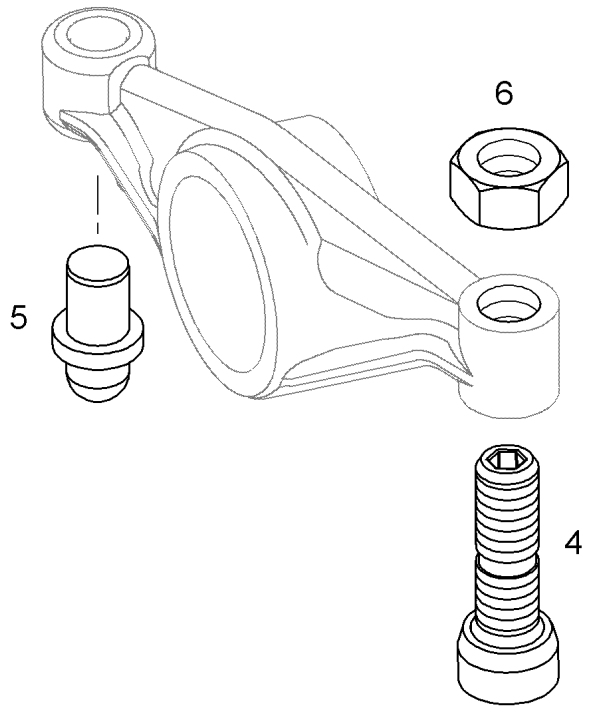


| Pos. | Item | Quantity | Description | Bezeichnung |
|---|---|---|---|---|
| 4 | 10 01 222 5 | 1 | ADJUSTING SCREW M10X1 | EINSTELLSCHRAUBE |
| 5 | 10 00 442 6 | 1 | BALL PIN 10X25,59X2 | KUGELBOLZEN |
| 6 | 73 81 781 23 | 1 | NUT M10 | MUTTER |

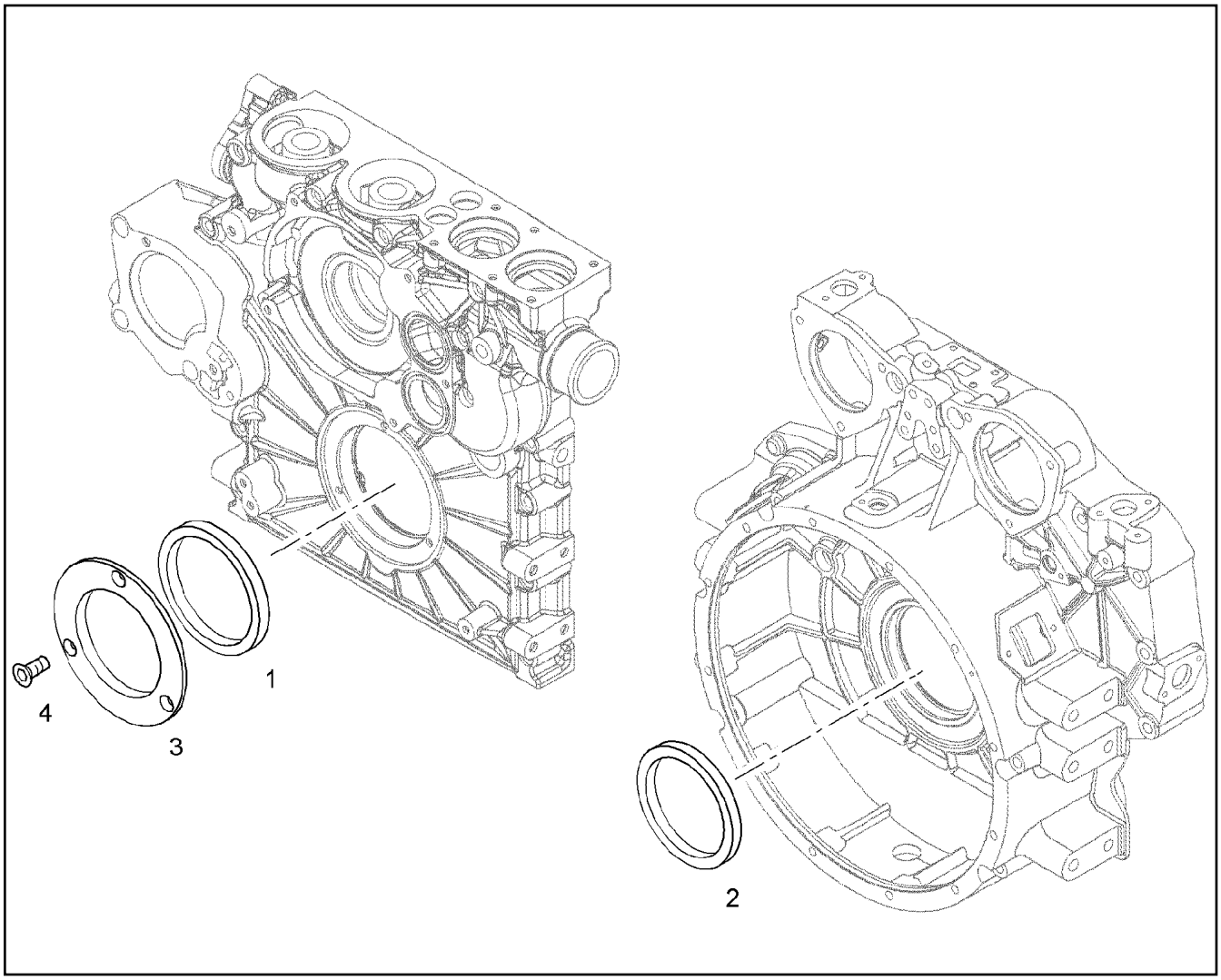


| Pos. | Item | Quantity | Description | Bezeichnung |
|---|---|---|---|---|
| 1 | 10 12 195 2 | 1 | RK CRANKSHAFT SEAL 110 VORNE | RS KURBELWELLENDICHTUNG |
| 2 | 10 12 133 5 | 1 | RK CRANKSHAFT SEAL 115 HINTEN | RS KURBELWELLENDICHTUNG |
| 3 | 10 12 044 3 | 1 | GUARD RING | SCHUTZRING |
| 4 | 10 34 219 1 | 3 | COUNTERSUNK SCREW ISO 14581 M8X20 | SENKSCHRAUBE |

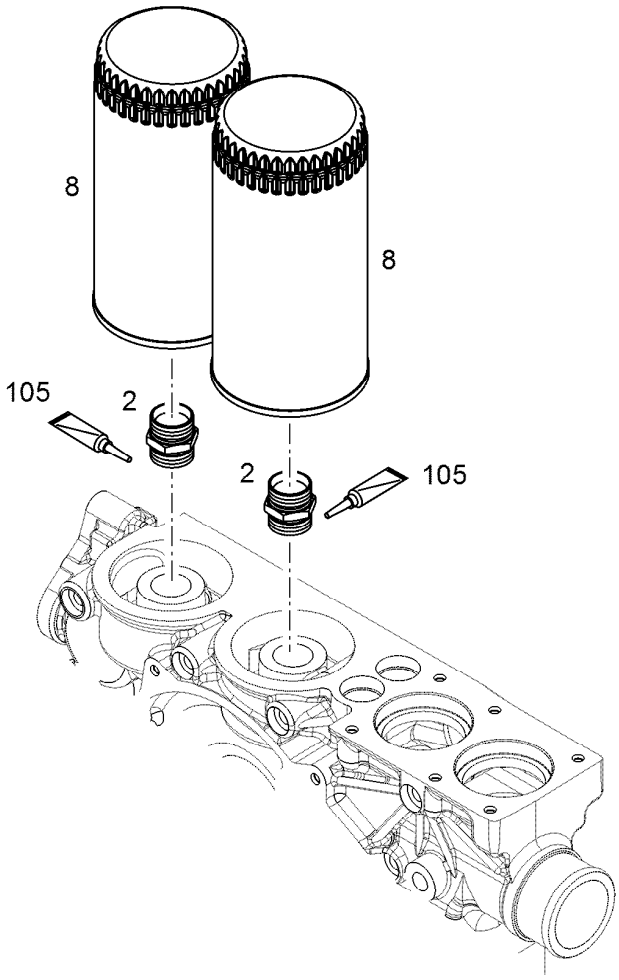


| Pos. | Item | Quantity | Description | Bezeichnung |
|---|---|---|---|---|
| 2 | 92 73 271 | 2 | FITTINGS | STUTZEN |
| 8 | 10 29 729 5 | 2 | EASY-CHANGE FILTER OEL 9µm | WECHSELFILTER |
| 105 | 86 55 016 | 1 | SCREW LOCKING 10ML -50/+150 °C | SCHRAUBENSICHERUNG |

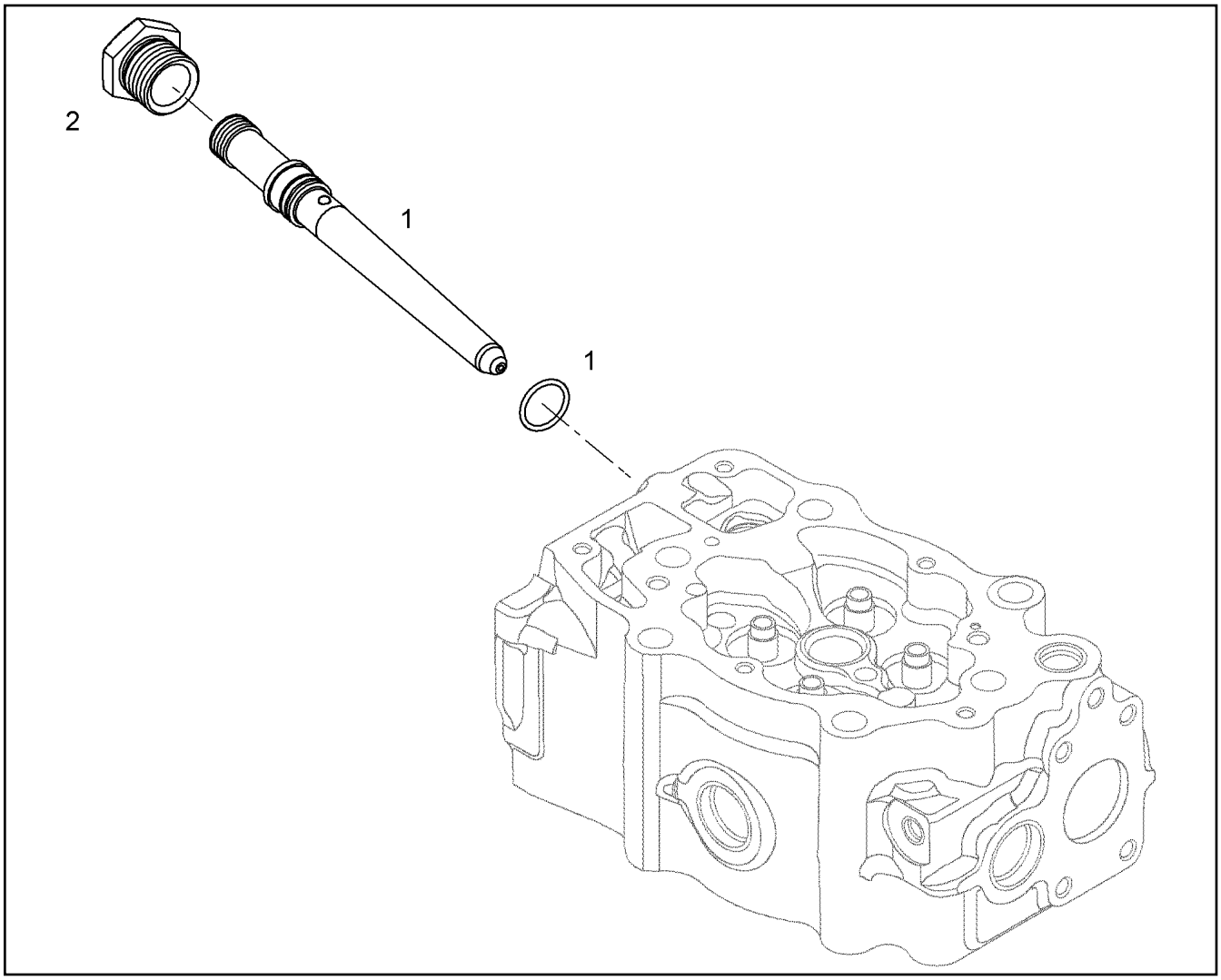


| Pos. | Item | Quantity | Description | Bezeichnung |
|---|---|---|---|---|
| 1 | 90 74 677 | 1 | HIGH PRESSURE CONNECTOR F 00Z R20 | DRUCKROHRSTUTZEN |
| 2 | 90 75 763 | 1 | BOX NUT XM 22X1,5 A2E/A2C | UEBERWURFMUTTER |

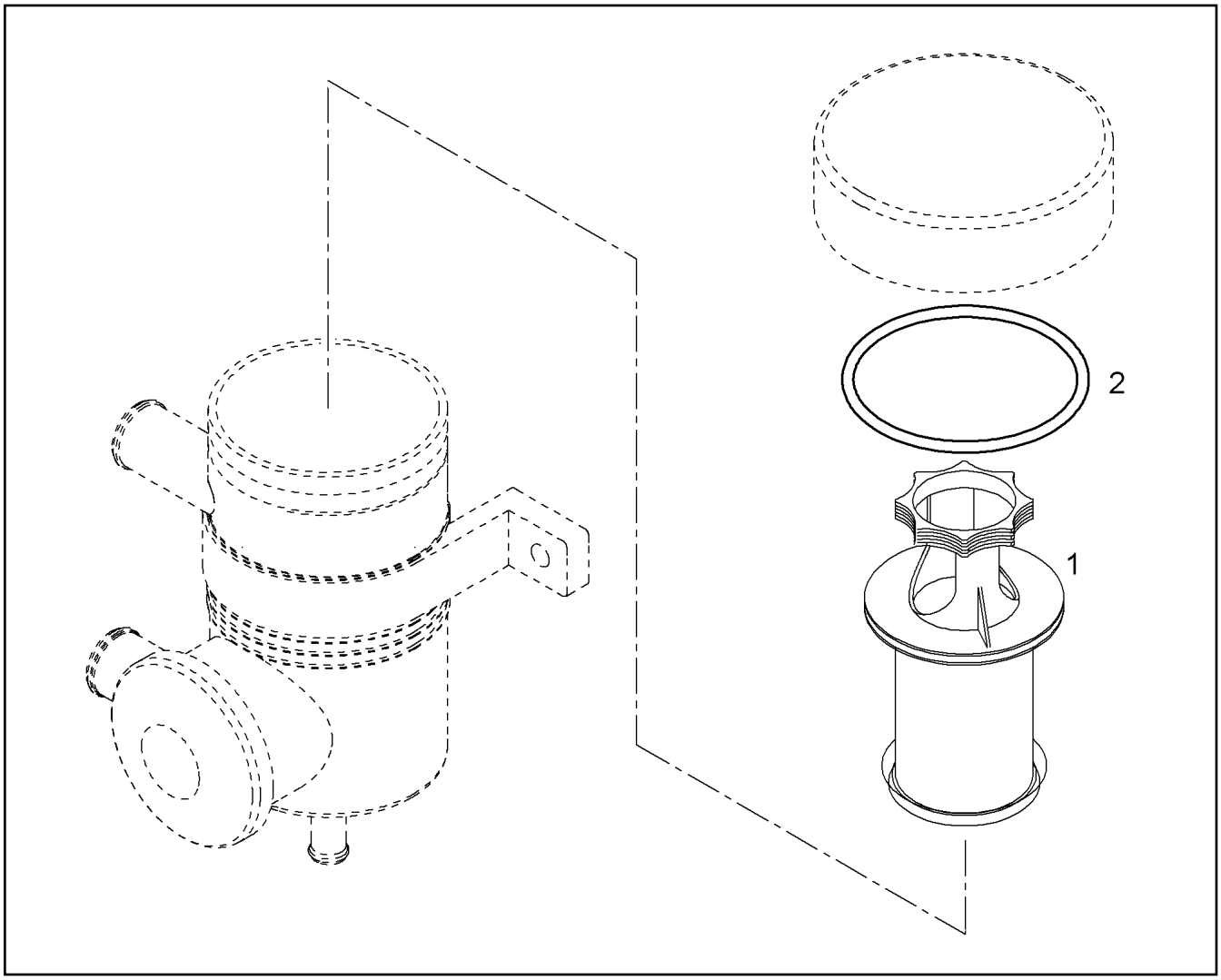


| Pos. | Item | Quantity | Description | Bezeichnung |
|---|---|---|---|---|
| 1 | 10 03 283 5 | 1 | SPARE ELEMENT OEL | ERSATZELEMENT |
| 2 | 10 29 511 6 | 1 | O-RING DIN 3771 79X4 NBR 70 | O-RING |

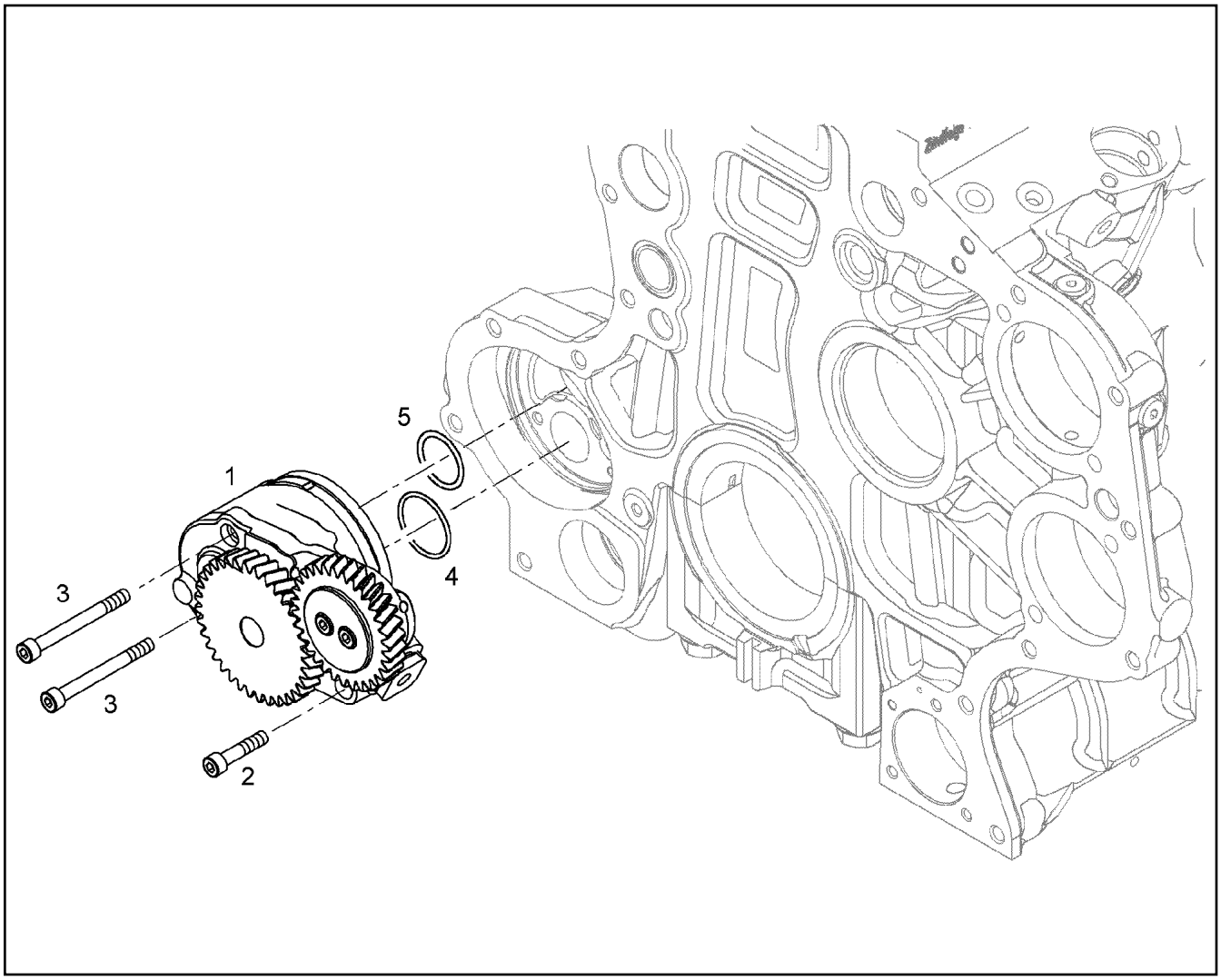


| Pos. | Item | Quantity | Description | Bezeichnung |
|---|---|---|---|---|
| 1 | 90 75 541 | 1 | LUBE OIL PUMP PRE-ASSY. B=30<br>⇨ 9 075 541 90 75 541 | SCHMIEROELPUMPE VORM. |
| 2 | 40 42 070 | 1 | SOCKET HEAD SCREW ISO 4762 M8X45 8.8 | ZYLINDERSCHRAUBE |
| 3 | 24 00 508 02 | 2 | SOCKET HEAD SCREW ISO 4762 M8X80 8.8 | ZYLINDERSCHRAUBE |
| 4 | 73 81 812 | 1 | O-RING ISO 3601-1 39,34X2,62 V70GA | O-RING |
| 5 | 73 82 059 | 1 | O-RING ISO 3601-1 34,59X2,62 FKM 70 A,GN | O-RING |

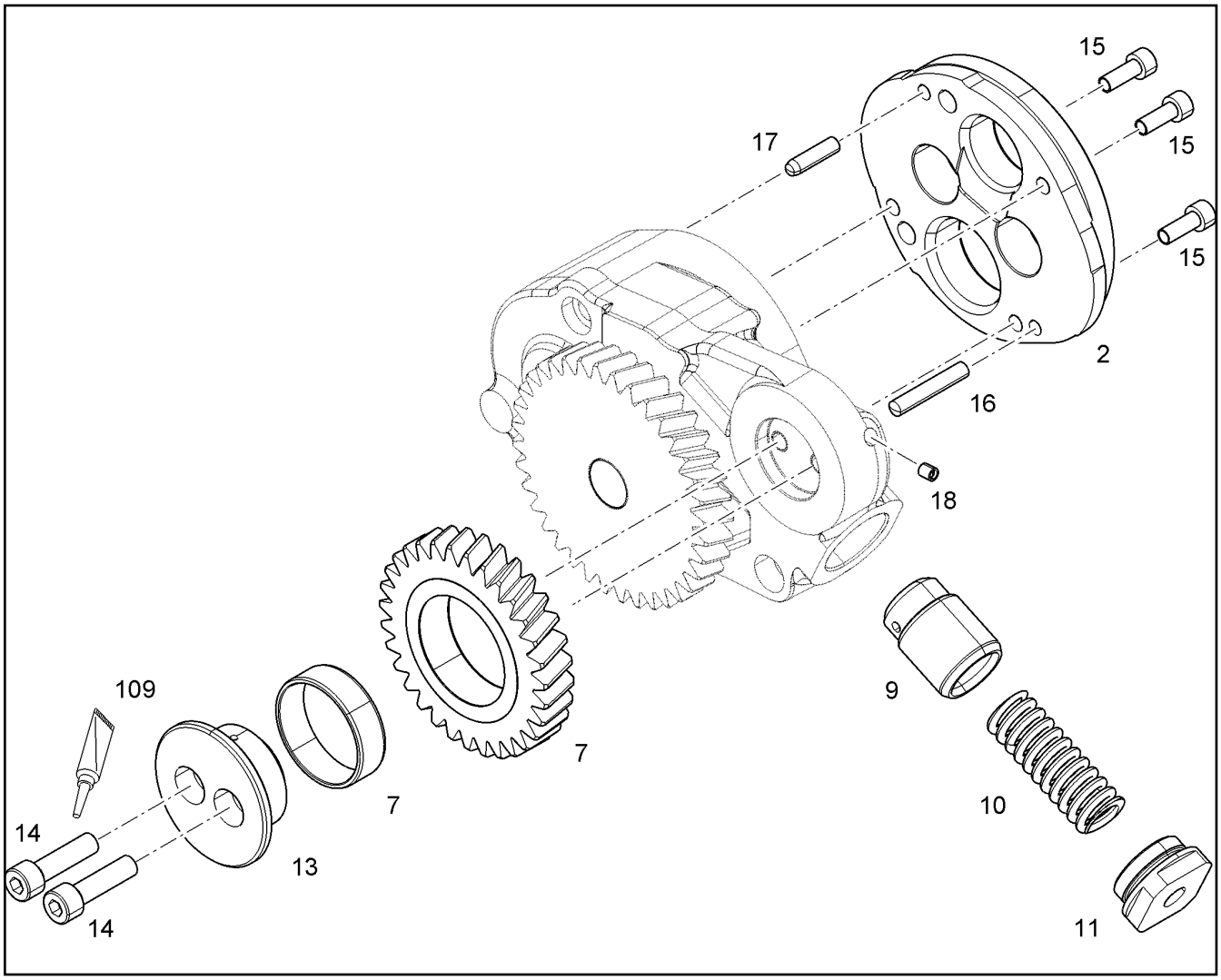


| Pos. | Item | Quantity | Description | Bezeichnung |
|---|---|---|---|---|
| 7 | 90 72 633 | 1 | INTERMEDIATE GEAR PRE-ASSY. | ZWISCHENRAD VORM. |
| 9 | 98 86 591 | 1 | PISTON | KOLBEN |
| 10 | 73 81 302 | 1 | PRESSURE SPRING 3,40X16,60X71,31 OTE | DRUCKFEDER |
| 11 | 92 75 590 | 1 | SCREW PLUG M30X1,5 St Rm>450N/m FE/Z | VERSCHLUSSSCHRAUBE |
| 13 | 92 67 273 | 1 | HUB 42CrMo4+N+QT | NABE |
| 14 | 24 00 498 02 | 2 | SOCKET HEAD SCREW ISO 4762 M8X30 8.8 | ZYLINDERSCHRAUBE |
| 15 | 10 87 558 6 | 3 | SOCKET HEAD SCREW ISO 4762 M6X16 8.8 | ZYLINDERSCHRAUBE |
| 16 | 49 81 267 | 1 | PARALLEL PIN ISO 2338 6M6X35 ST | ZYLINDERSTIFT |
| 17 | 49 80 931 | 1 | PARALLEL PIN ISO 2338 6M6X22 ST | ZYLINDERSTIFT |
| 18 | 73 80 023 | 1 | SEALING PLUG CR6-FREI | DICHTSTOPFEN |
| 109 | 81 12 057 08 | 1 | SCREW LOCKING 50ML FLASCHE 150 °C | SCHRAUBENSICHERUNG |

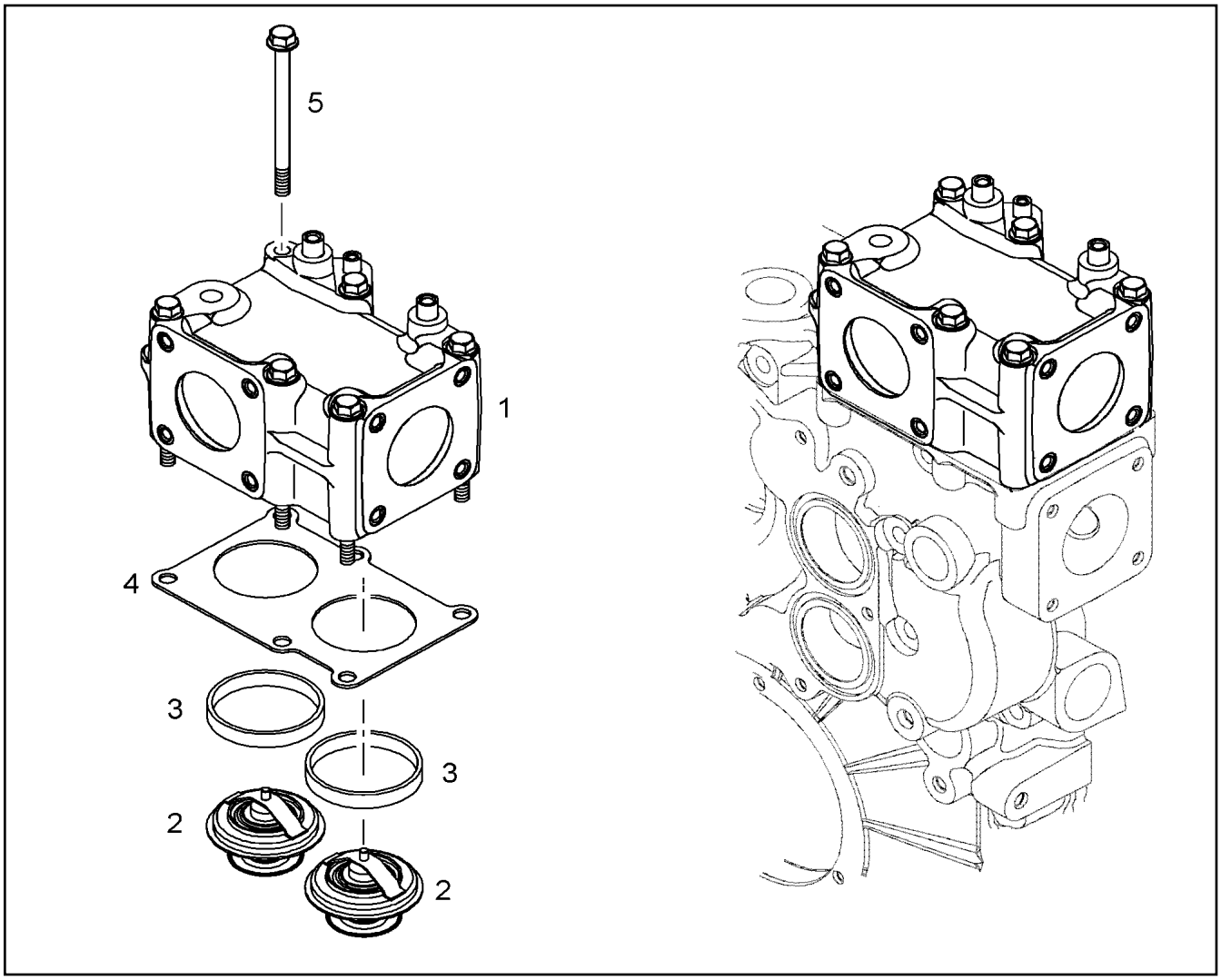


| Pos. | Item | Quantity | Description | Bezeichnung |
|---|---|---|---|---|
| 1 | 10 11 998 4 | 1 | THERMOSTAT HOUSING PRE-ASS. | THERMOSTATGEHAEUSE VORM |
| 2 | 73 80 833 | 2 | THERMOSTAT | THERMOSTAT |
| 3 | 92 75 735 | 2 | SUPPORTING RING AlMgSi0,5 | STUETZRING |
| 4 | 90 80 279 | 1 | SEAL 2MM UNI-BLAU | DICHTUNG |
| 5 | 10 11 292 9 | 6 | HEX SCREW DIN 6921 M8X110 8.8 A2C | SECHSKANTSCHRAUBE |
| 108 | 81 12 013 14 | 1 | SEALING COMPOUND 50ML TUBE -55/+150 ° | DICHTUNGSMASSE |
| 112 | 86 27 609 23 | 1 | SEALANT 50ML TUBE | DICHTUNGSMITTEL |

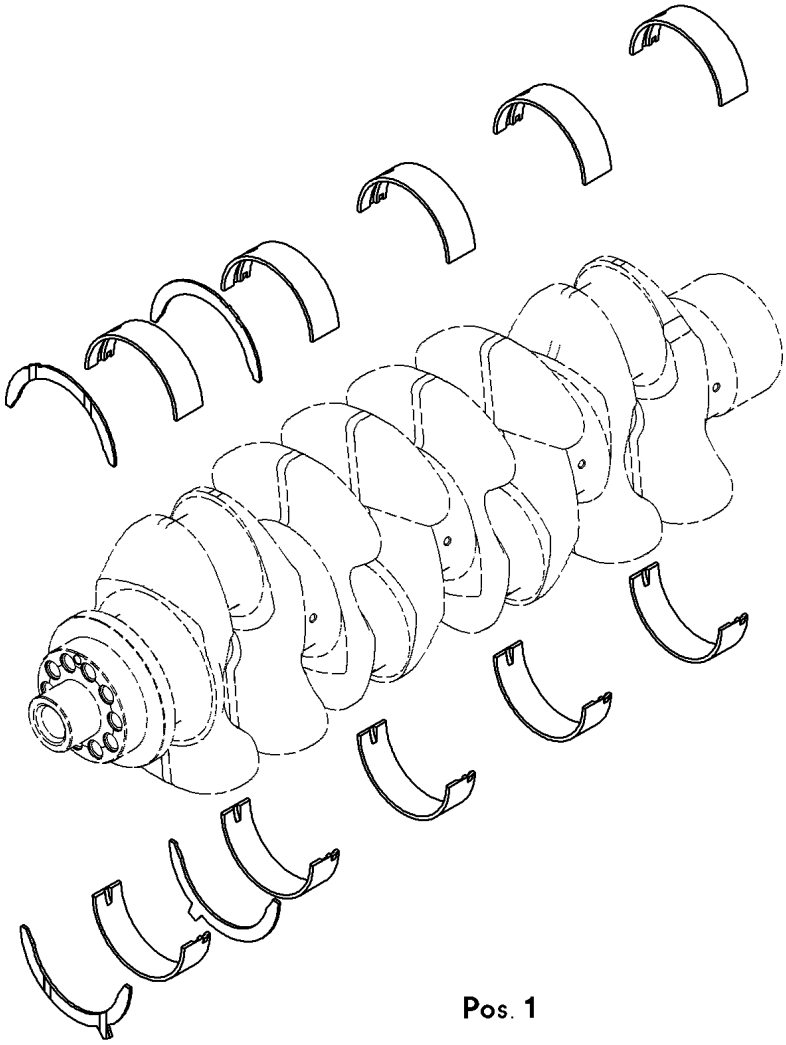

Pos. 1

| Pos. | Item | Quantity | Description | Bezeichnung |
|---|---|---|---|---|
| 1 | 10 11 693 9 | 1 | RS CRANKSHAFT BEARING KPL. D934 SP<br>⇨ X10116939 10 11 693 9 | RS KURBELWELLENLAGERUNG |

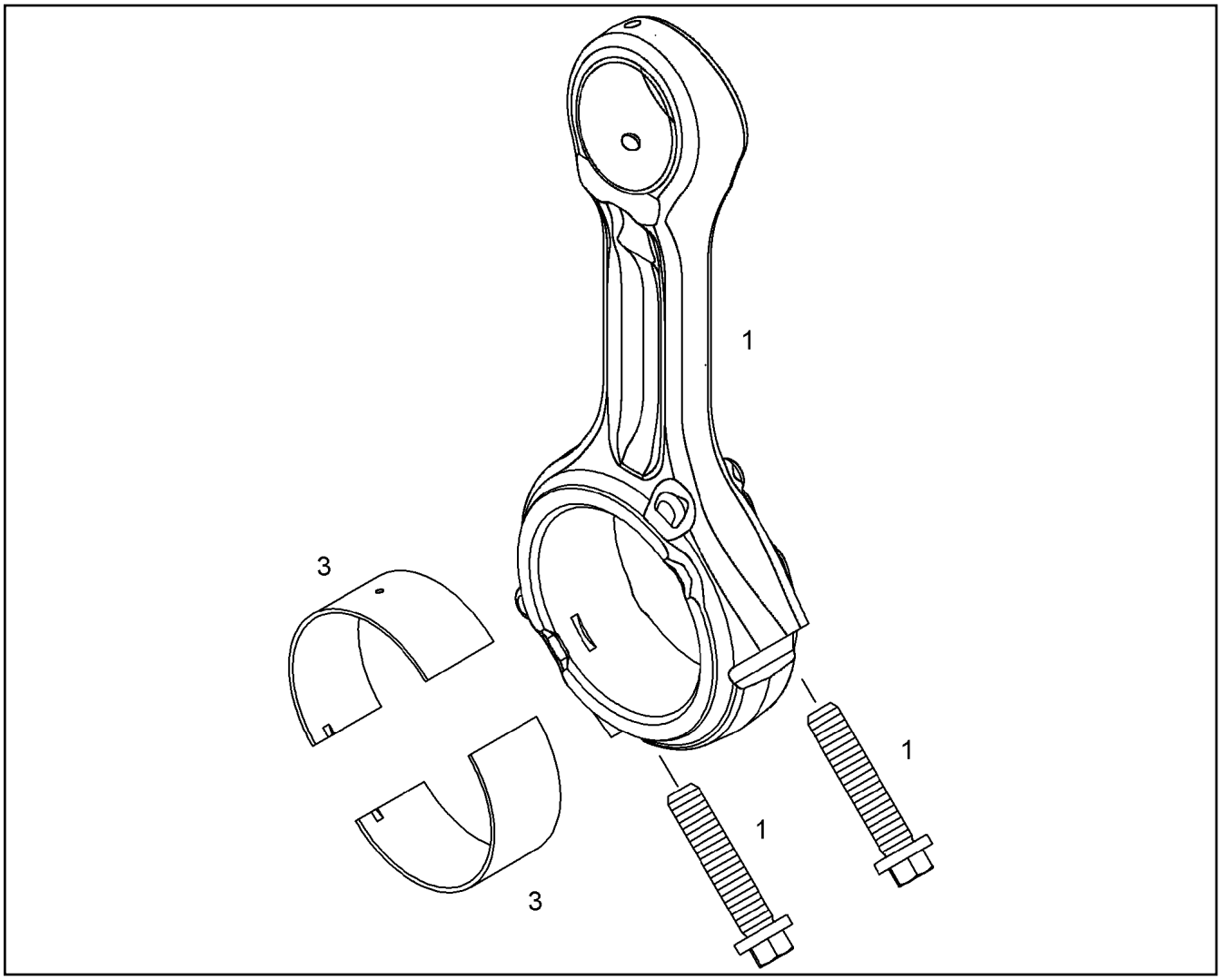


| Pos. | Item | Quantity | Description | Bezeichnung |
|---|---|---|---|---|
| 1 | 11 34 805 4 | 1 | CONROD R-MOTORX88 | PLEUELSTANGE |
| 50 | 10 11 693 4 | 1 | RK BIG-END BEARING D930 SPUTTER | RS PLEUELLAGER |
| 51 | 10 14 048 7 | 1 | RK1 BIG-END BEARING D930 SPALTNOCKE | RS1 PLEUELLAGER |
| 52 | 10 14 048 8 | 1 | RK2 BIG-END BEARING D930 SPALTNOCKE | RS2 PLEUELLAGER |

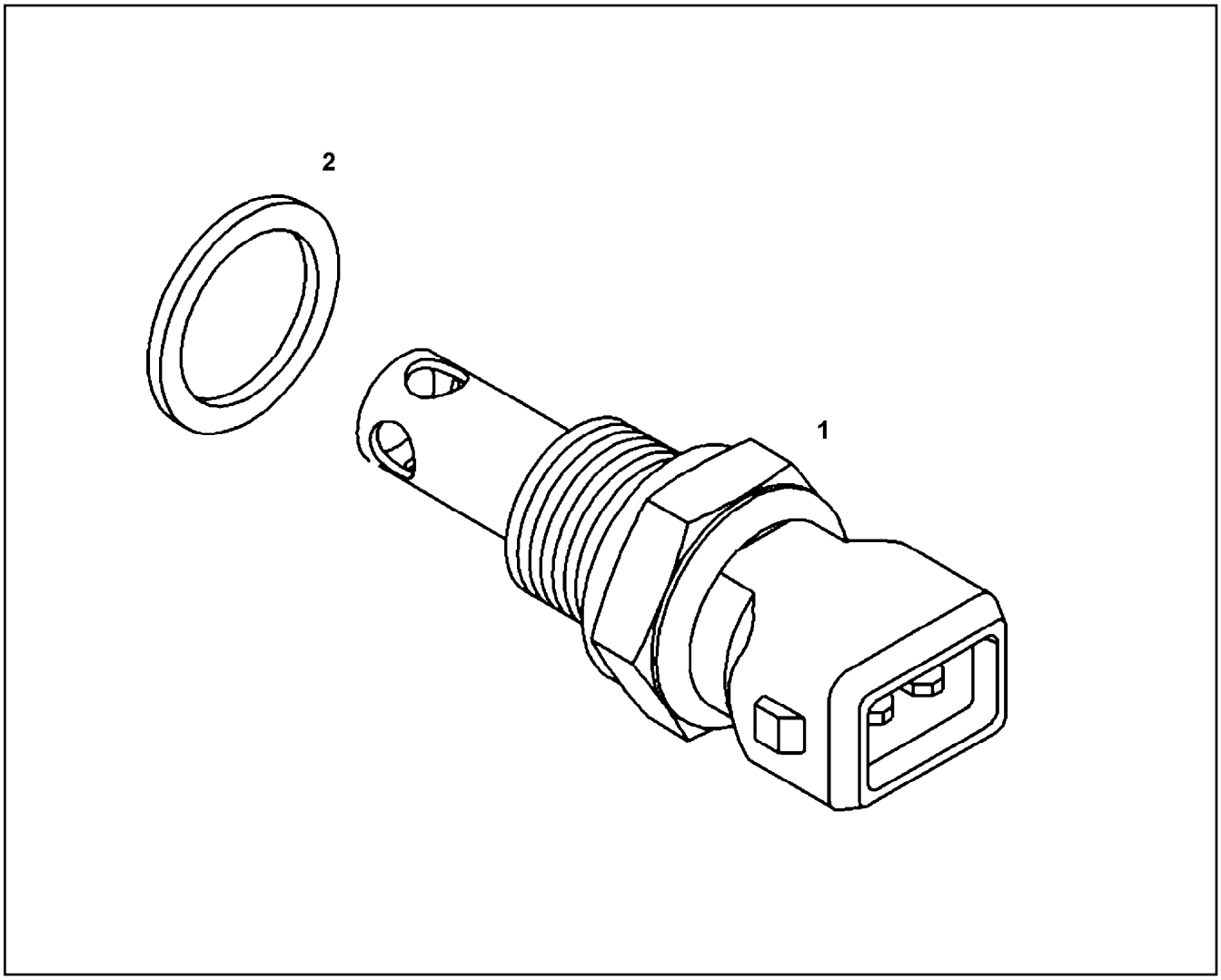


| Pos. | Item | Quantity | Description | Bezeichnung |
|---|---|---|---|---|
| 1 | 69 11 806 08 | 1 | TEMPERATURE SENSOR SPF | TEMPERATURFUEHLER |
| 2 | 10 04 098 4 | 1 | PROFILE PACKING DIN 3869 14X11,6 FKM 8 | PROFILDICHTRING |

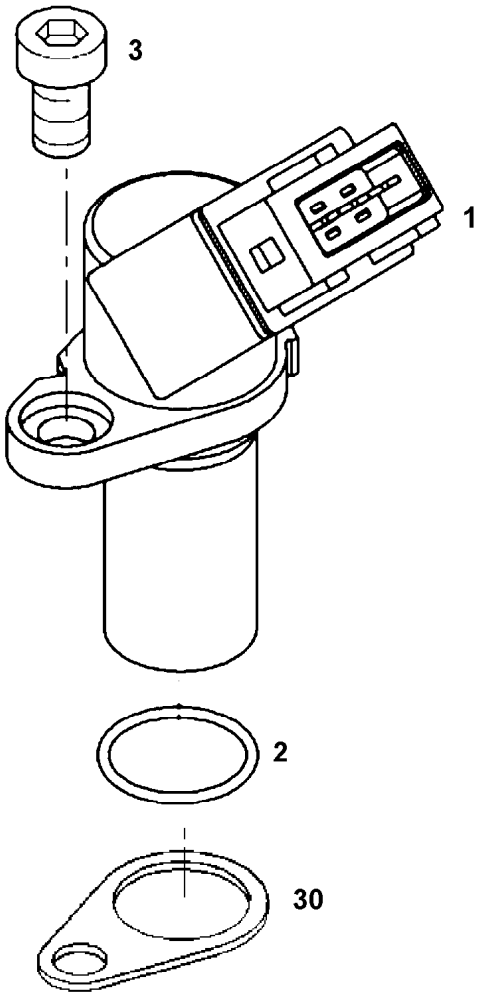


| Pos. | Item | Quantity | Description | Bezeichnung |
|---|---|---|---|---|
| 1 | 10 15 494 4 | 1 | ROTATIONAL SPEED SENSOR | DREHZAHLGEBER |
| 2 | 73 81 103 | 1 | O-RING ISO 3601-1 17,17X1,78 FKM 70 A,GN | O-RING |
| 3 | 10 87 558 6 | 1 | SOCKET HEAD SCREW ISO 4762 M6X16 8.8 | ZYLINDERSCHRAUBE |
| 30 | 90 79 064 | 1 | SPACER PIECE S355J0 | DISTANZSTUECK |

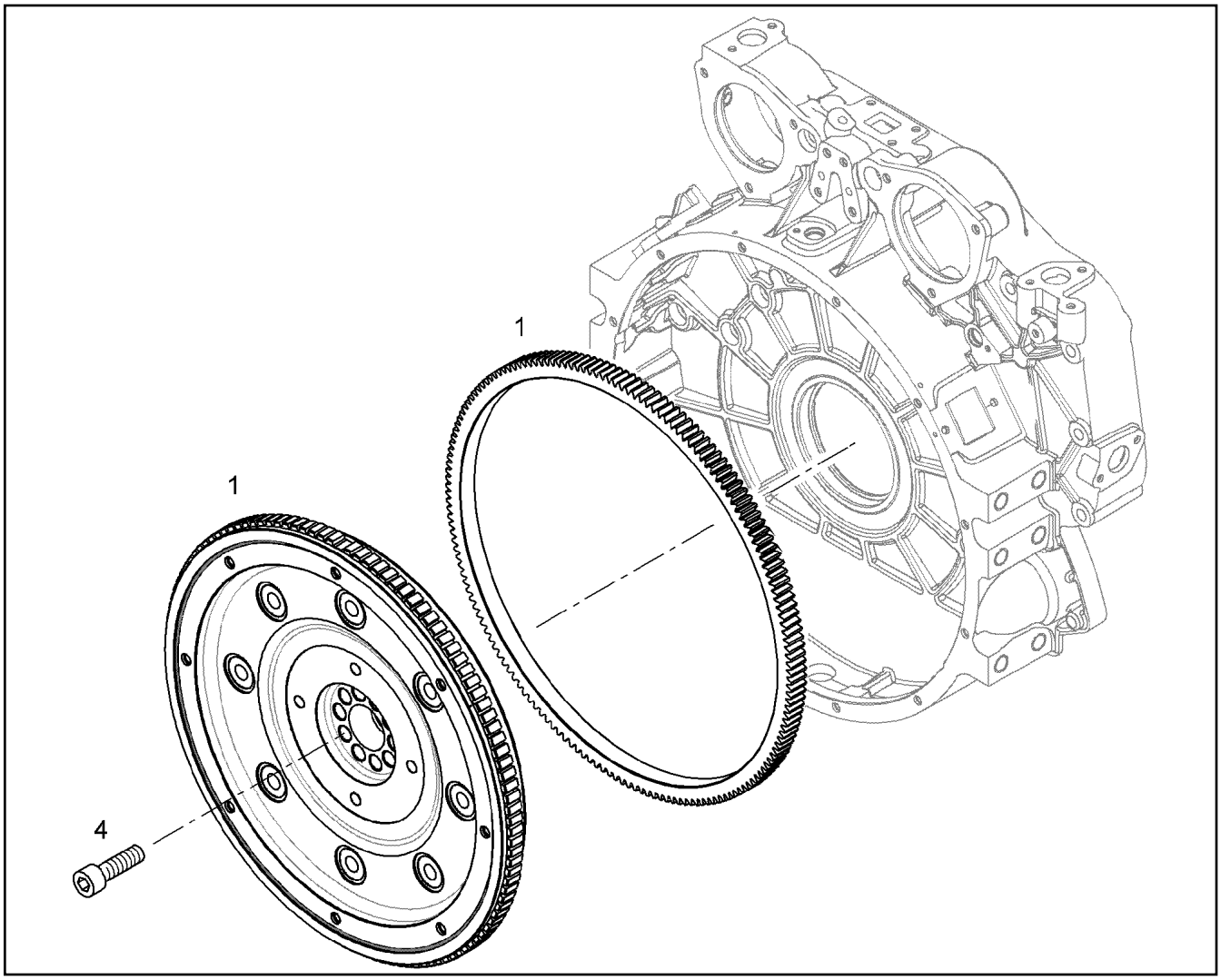


| Pos. | Item | Quantity | Description | Bezeichnung |
|---|---|---|---|---|
| 1 | 90 77 237 | 1 | FLYWHEEL PRE-ASS. SAE 1X1,68 | SCHWUNGRAD VORM. |
| 4 | 10 11 891 0 | 10 | HEXALOBULAR HEAD SCREW M16X1,5X72 | SECHSRUNDSCHRAUBE |

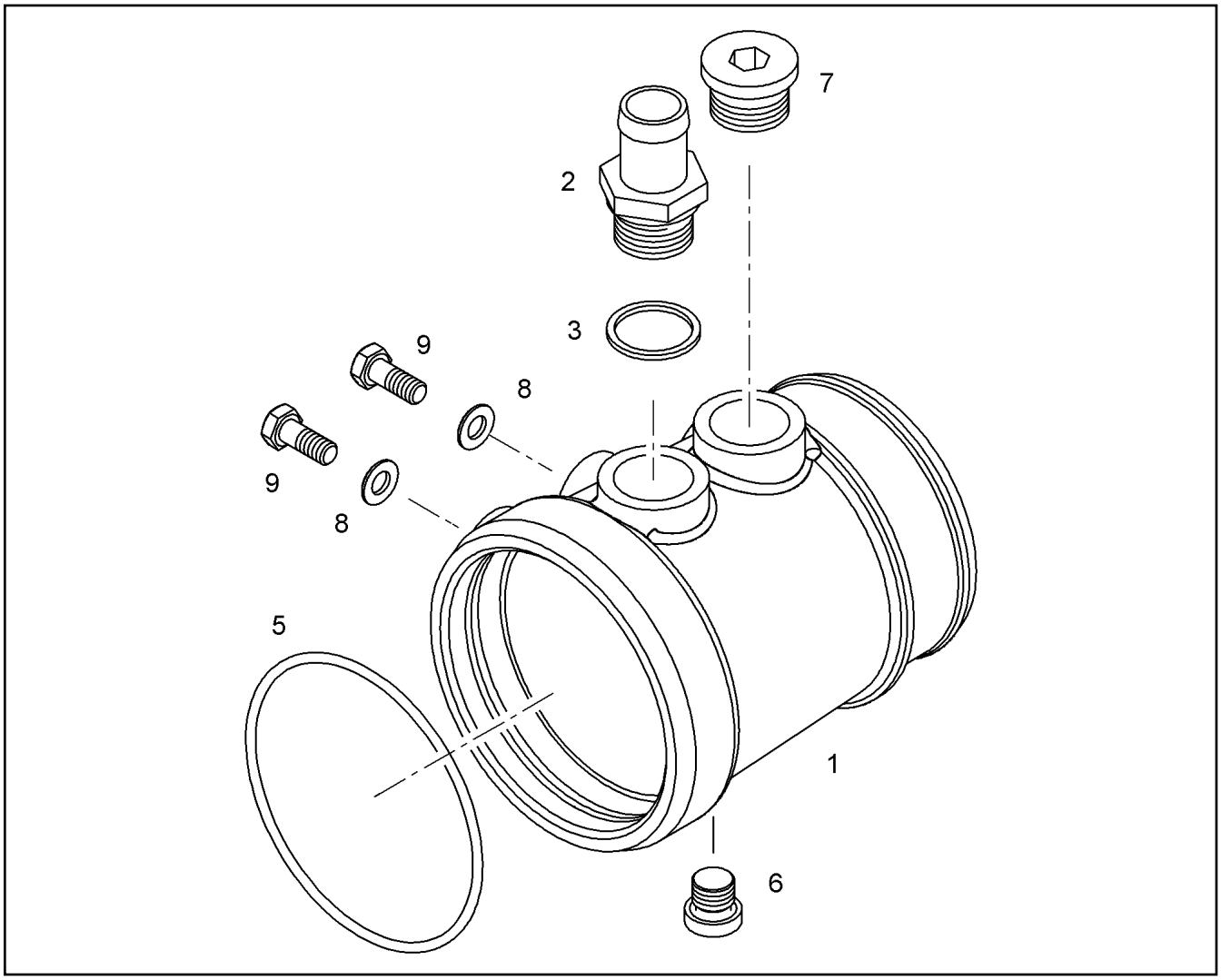


| Pos. | Item | Quantity | Description | Bezeichnung |
|---|---|---|---|---|
| 1 | 10 12 000 9 | 1 | CONNECTION STUB | ANSCHLUSSSTUTZEN |
| 5 | 10 02 210 1 | 1 | O-RING 100X5 80 FKM 610 | O-RING |
| 6 | 73 80 566 | 1 | SCREW PLUG VSTI M14X1,5 | VERSCHLUSSSCHRAUBE |
| 8 | 10 28 980 3 | 2 | WASHER ISO 7089 8 300HV 480H SPF | SCHEIBE |
| 9 | 11 65 176 7 | 2 | HEX SCREW ISO 4017 M8X20 8.8 480H SPF | SECHSKANTSCHRAUBE |

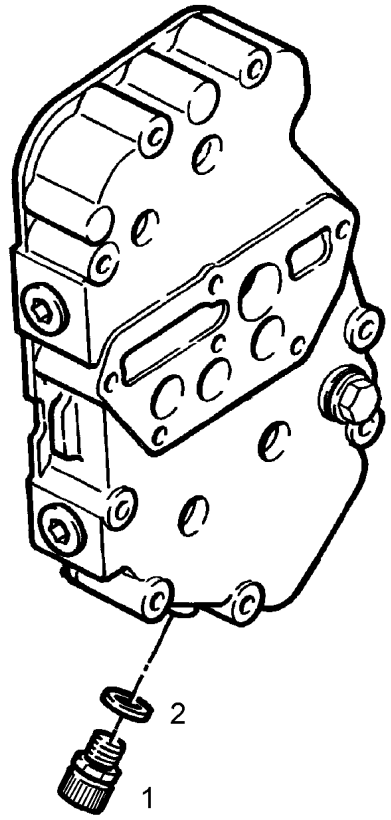


| Pos. | Item | Quantity | Description | Bezeichnung |
|---|---|---|---|---|
| 1 | 10 01 183 2 | 1 | VALVE | VENTIL |
| 2 | 73 81 225 23 | 1 | SEALING RING DIN 7603 A14X20X2 CU | DICHTRING |

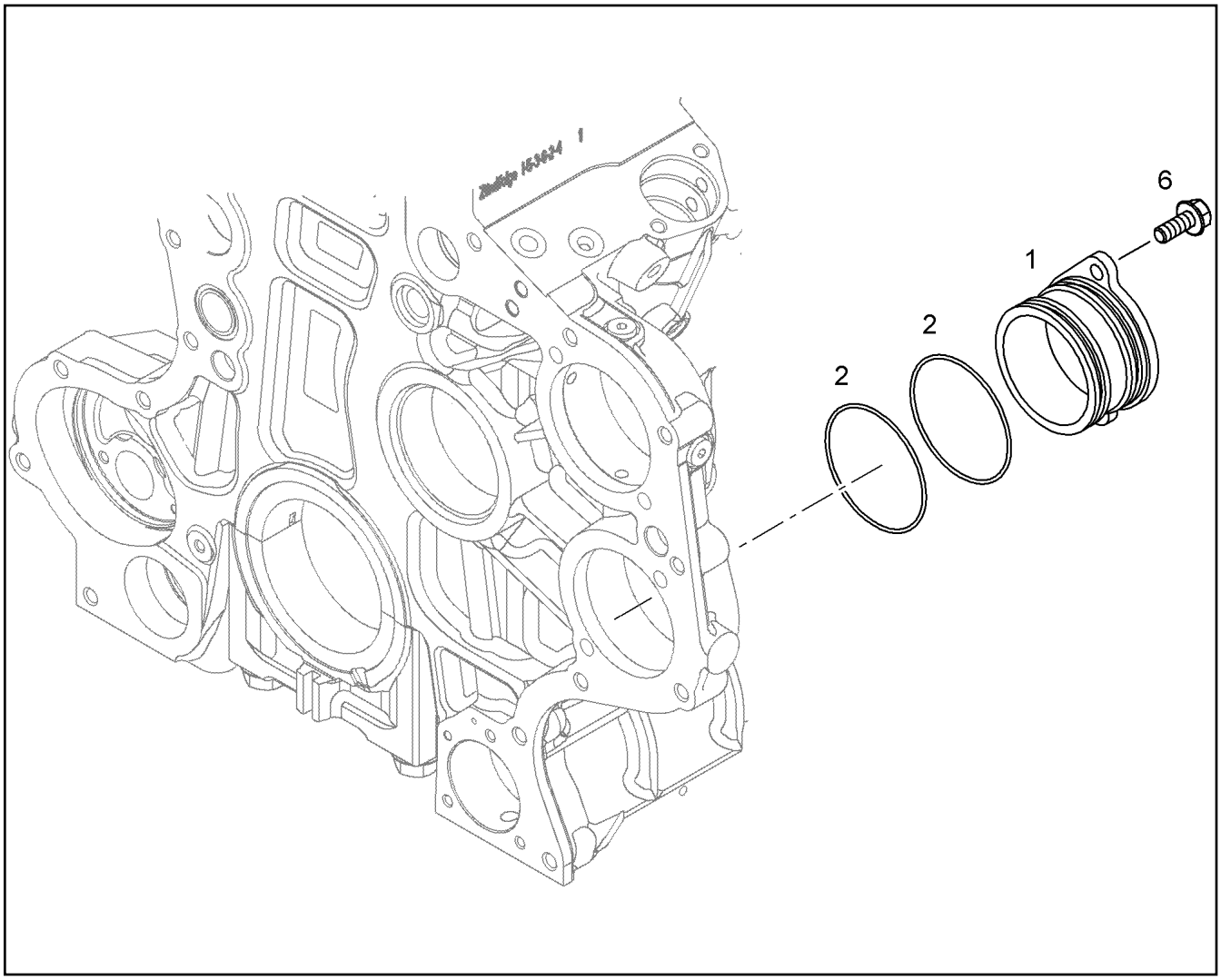


| Pos. | Item | Quantity | Description | Bezeichnung |
|---|---|---|---|---|
| 1 | 10 14 740 9 | 1 | COVER | DECKEL |
| 2 | 73 81 361 | 2 | O-RING ISO 3601-1 85,32X3,53 FKM 70 A,GN | O-RING |
| 6 | 10 03 051 8 | 2 | HEX SCREW DIN 6921 M10X20 8.8 A3C | SECHSKANTSCHRAUBE |
| 100 | 10 28 570 8 | 1 | GREASE NBU 30 1KG DOSE | FETT |

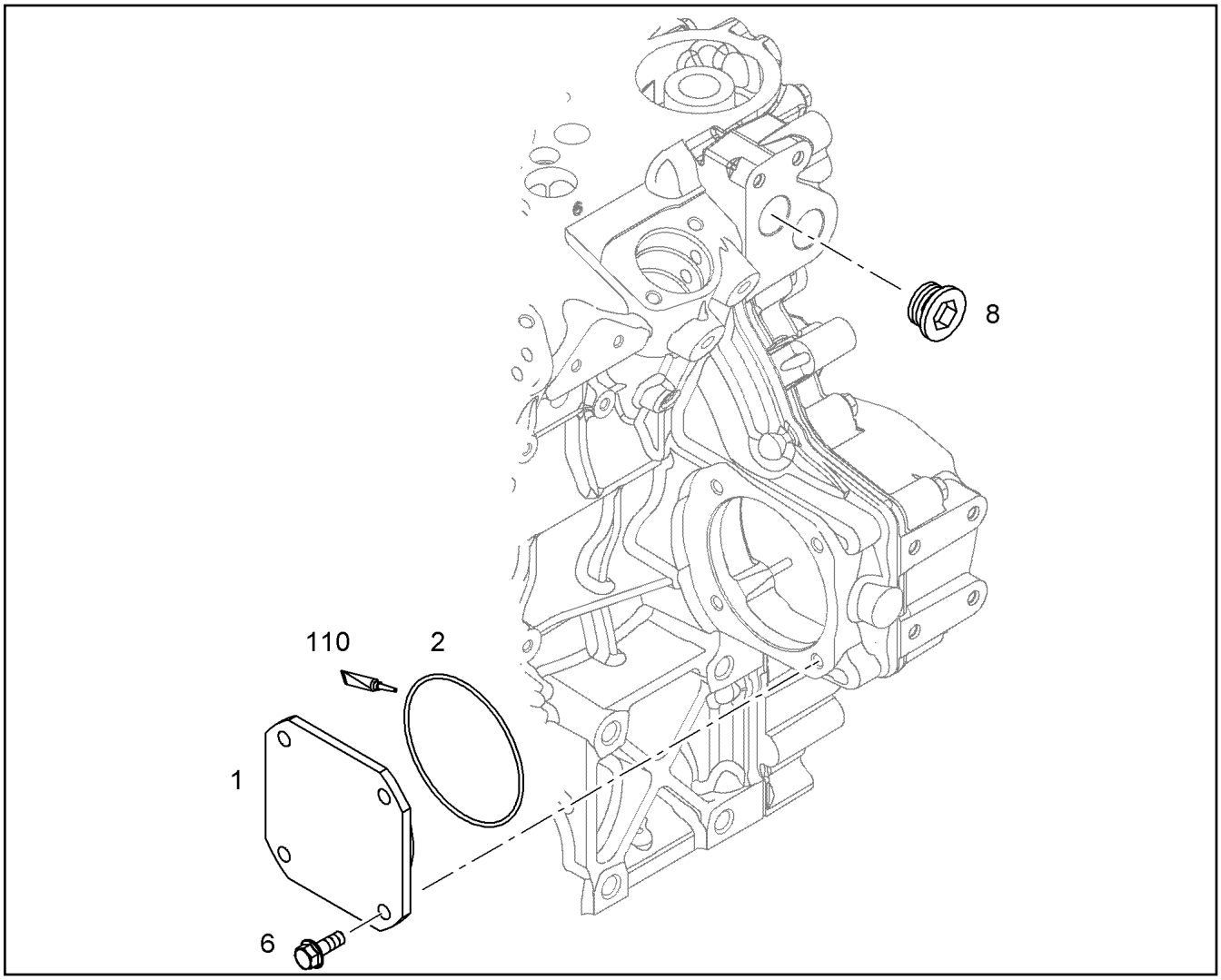


| Pos. | Item | Quantity | Description | Bezeichnung |
|---|---|---|---|---|
| 1 | 90 78 881 | 1 | COVER PA 66 | DECKEL |
| 2 | 73 82 158 | 1 | O-RING DIN 3771 101,20X3,53 FKM 70 A,GN | O-RING |
| 6 | 10 03 051 8 | 4 | HEX SCREW DIN 6921 M10X20 8.8 A3C | SECHSKANTSCHRAUBE |
| 8 | 73 82 204 | 1 | SCREW PLUG VSTI M30X1,5 St Rm>500N/m | VERSCHLUSSSCHRAUBE |
| 110 | 86 55 018 | 1 | GREASE NBU 12 0.05KG TUBE | FETT |

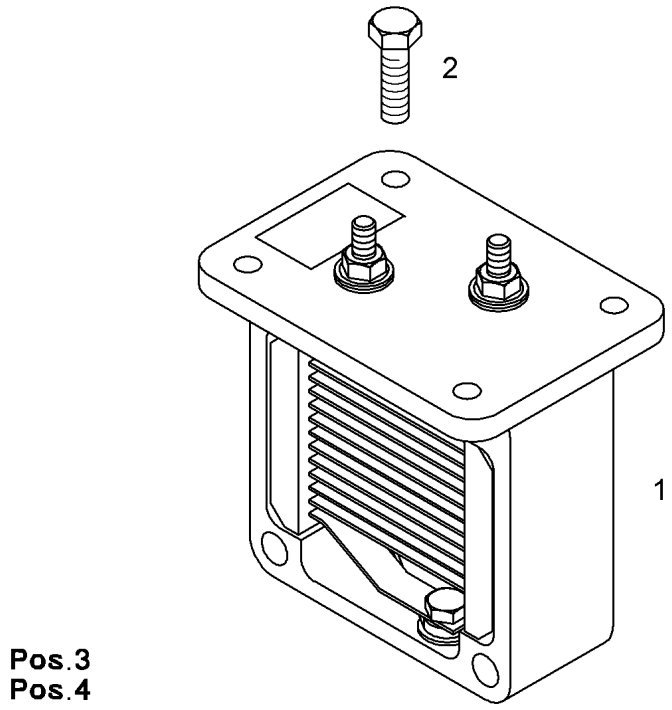


| Pos. | Item | Quantity | Description | Bezeichnung |
|---|---|---|---|---|
| 1 | 10 29 998 8 | 1 | HEATING FLANGE PRE.ASS. 24V 1,9KW | HEIZFLANSCH VORM. |
| (1) | 10 11 625 5 | 1 | O-RING DIN 3771 94,50X3,00 FKM 80 | O-RING |
| 2 | 10 01 871 1 | 4 | HEX SCREW DIN 6921 M6X20 8.8 A2C | SECHSKANTSCHRAUBE |
| 3 | 10 00 336 6 | 1 | RIBBED HEX NUT M6 10 | SECHSKANTRIPPENMUTTER |
| 4 | 90 80 911 | 1 | EARTH CONNECTION PLATE | MASSEVERBINDUNGSBLECH |

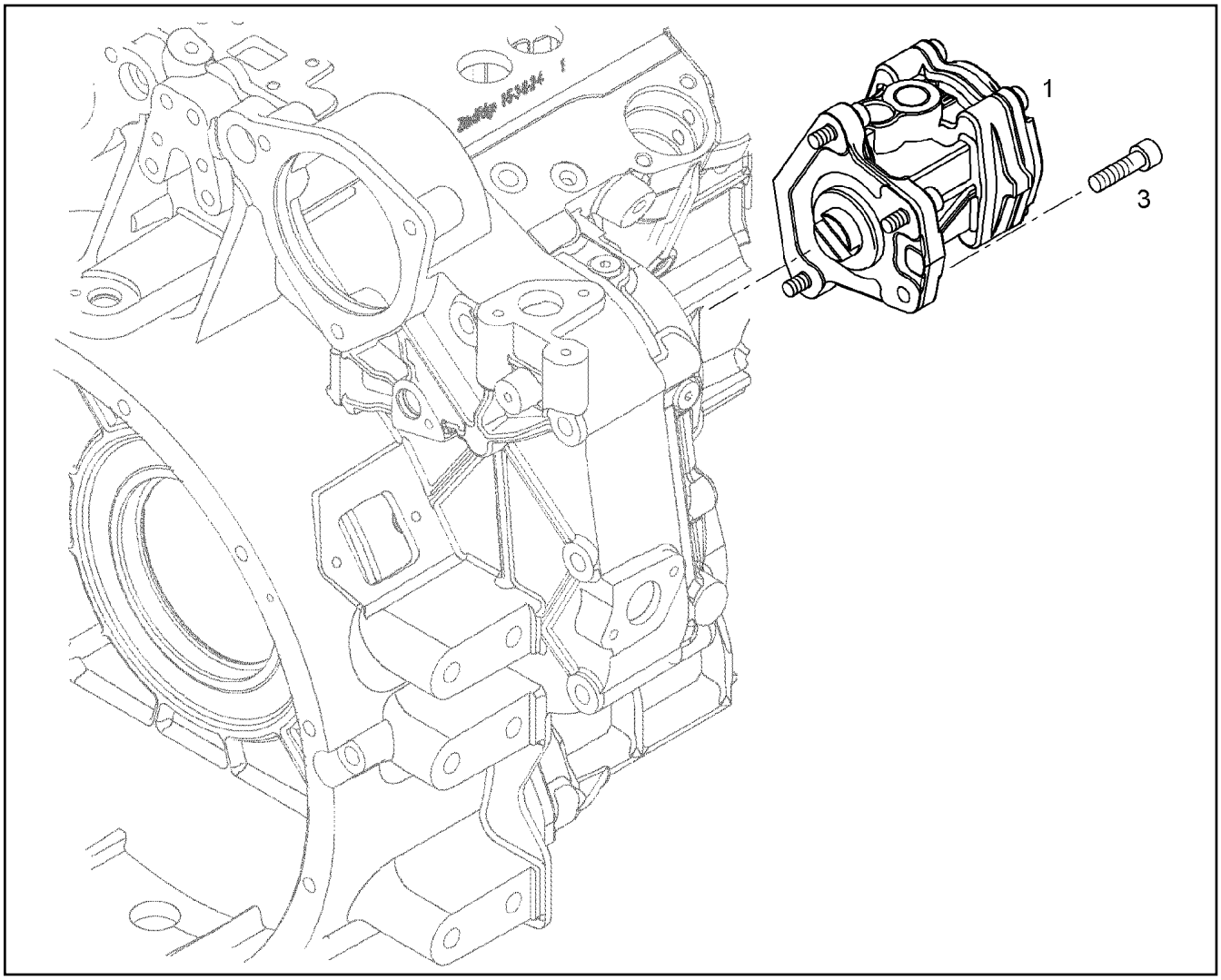


| Pos. | Item | Quantity | Description | Bezeichnung |
|---|---|---|---|---|
| 1 | 90 78 681 | 1 | DELIVERY PUMP | KRAFTSTOFFFOERDERPUMPE |
| (2) | 10 04 040 7 | 1 | COUPLING | KUPPLUNG |
| (3) | 10 04 040 0 | 1 | O-RING | O-RING |
| 3 | 40 42 002 | 4 | SOCKET HEAD SCREW ISO 4762 M6X20 8.8 | ZYLINDERSCHRAUBE |

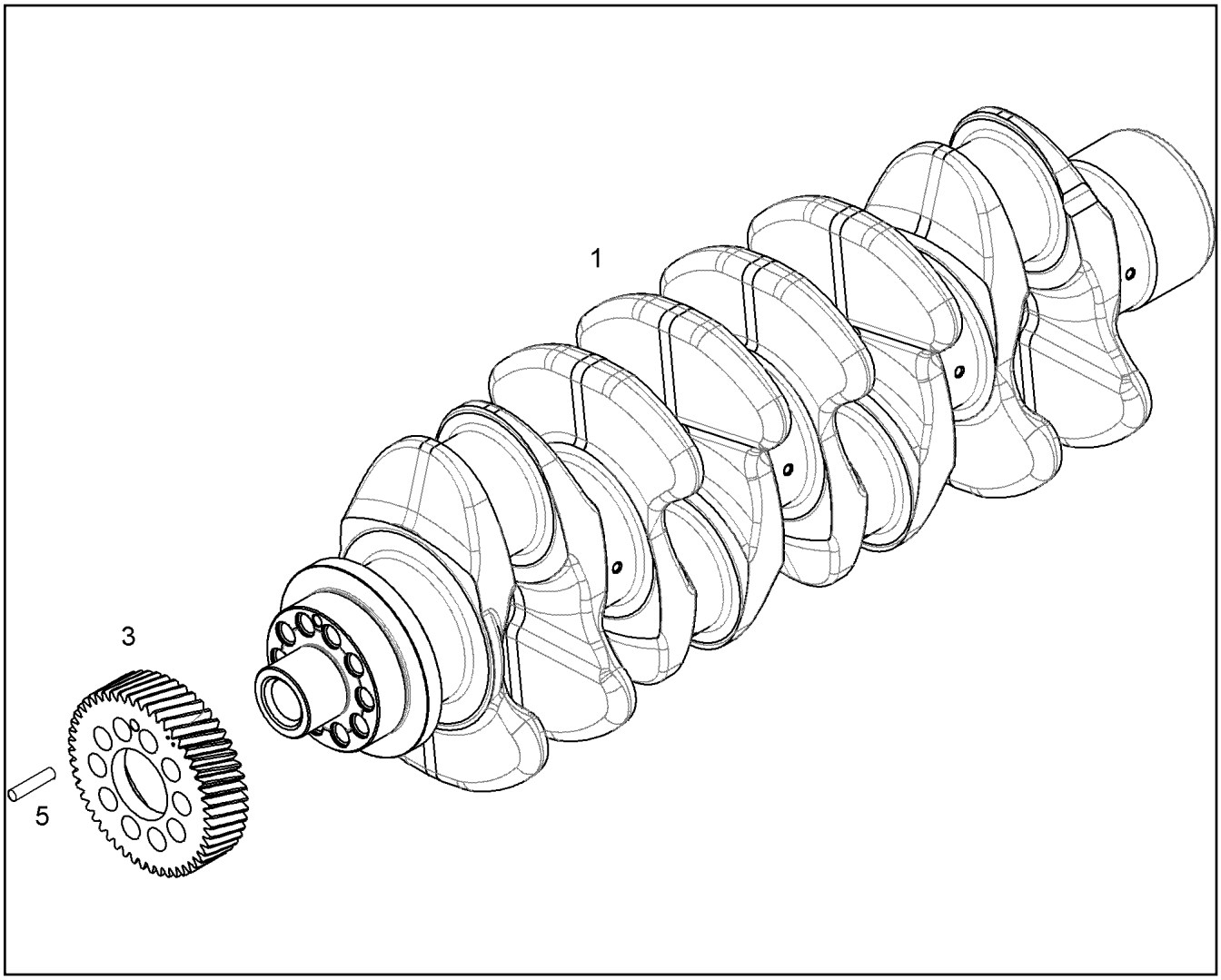


| Pos. | Item | Quantity | Description | Bezeichnung |
|---|---|---|---|---|
| 1 | 10 13 117 7 | 1 | CRANKSHAFT R-MOTORXD934 | KURBELWELLE |
| 3 | 90 72 834 | 1 | GEAR WHEEL Z=50 M=2,5 | ZAHNRAD |
| 5 | 43 20 085 08 | 1 | DOWEL PIN ISO 8752 8X40 | SPANNSTIFT |

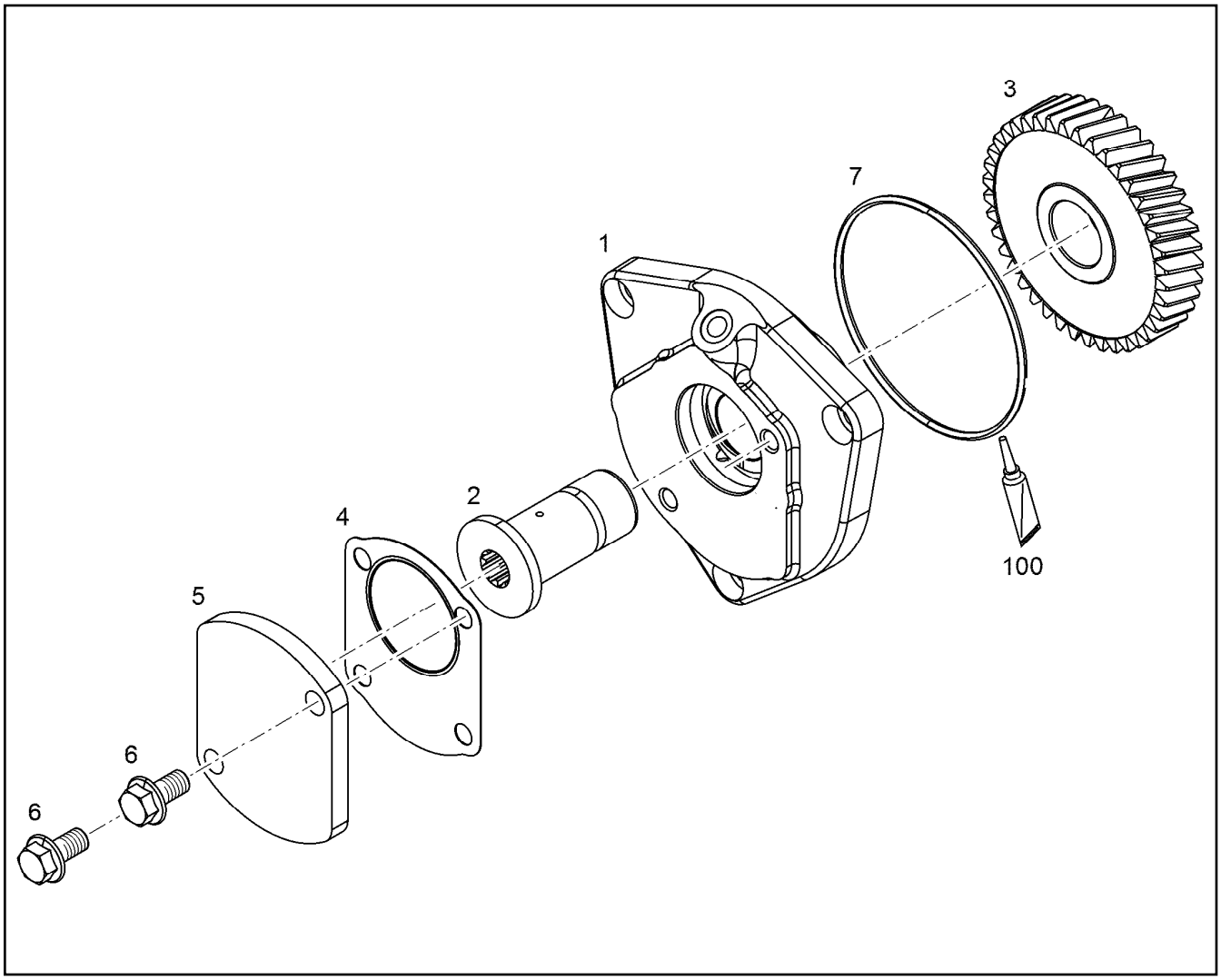


| Pos. | Item | Quantity | Description | Bezeichnung |
|---|---|---|---|---|
| 1 | 90 78 963 | 1 | BEARING HOUSING, PRE-ASSEMBLED | LAGERGEHAEUSE VORM. |
| 3 | 90 79 001 | 1 | GEAR WHEEL Z=40 M=2,5 20MnCr5 | ZAHNRAD |
| 4 | 98 85 529 | 1 | SEAL | DICHTUNG |
| 5 | 91 78 294 | 1 | COVER | DECKEL |
| 6 | 10 03 051 8 | 2 | HEX SCREW DIN 6921 M10X20 8.8 A3C | SECHSKANTSCHRAUBE |
| 7 | 73 82 158 | 1 | O-RING DIN 3771 101,20X3,53 FKM 70 A,GN | O-RING |
| 100 | 10 28 570 8 | 1 | GREASE NBU 30 1KG DOSE | FETT |

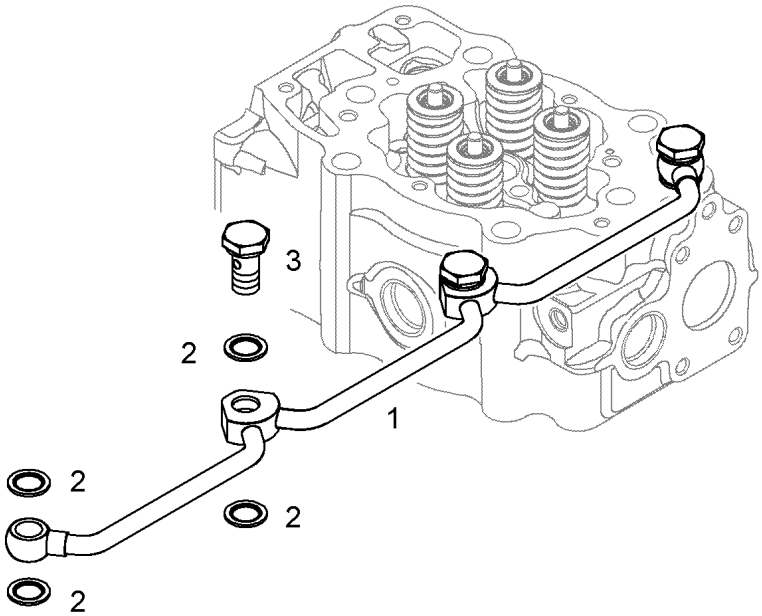


| Pos. | Item | Quantity | Description | Bezeichnung |
|---|---|---|---|---|
| 1 | 90 79 091 | 1 | PIPELINE | ROHRLEITUNG |
| 2 | 10 01 186 6 | 8 | SEALING RING 14,7X22X1,5 St/FPM1-80 | DICHTRING |
| 3 | 90 80 466 | 3 | HOLLOW SCREW 10X1X27 11SMn30+C FE/ | HOHLSCHRAUBE |

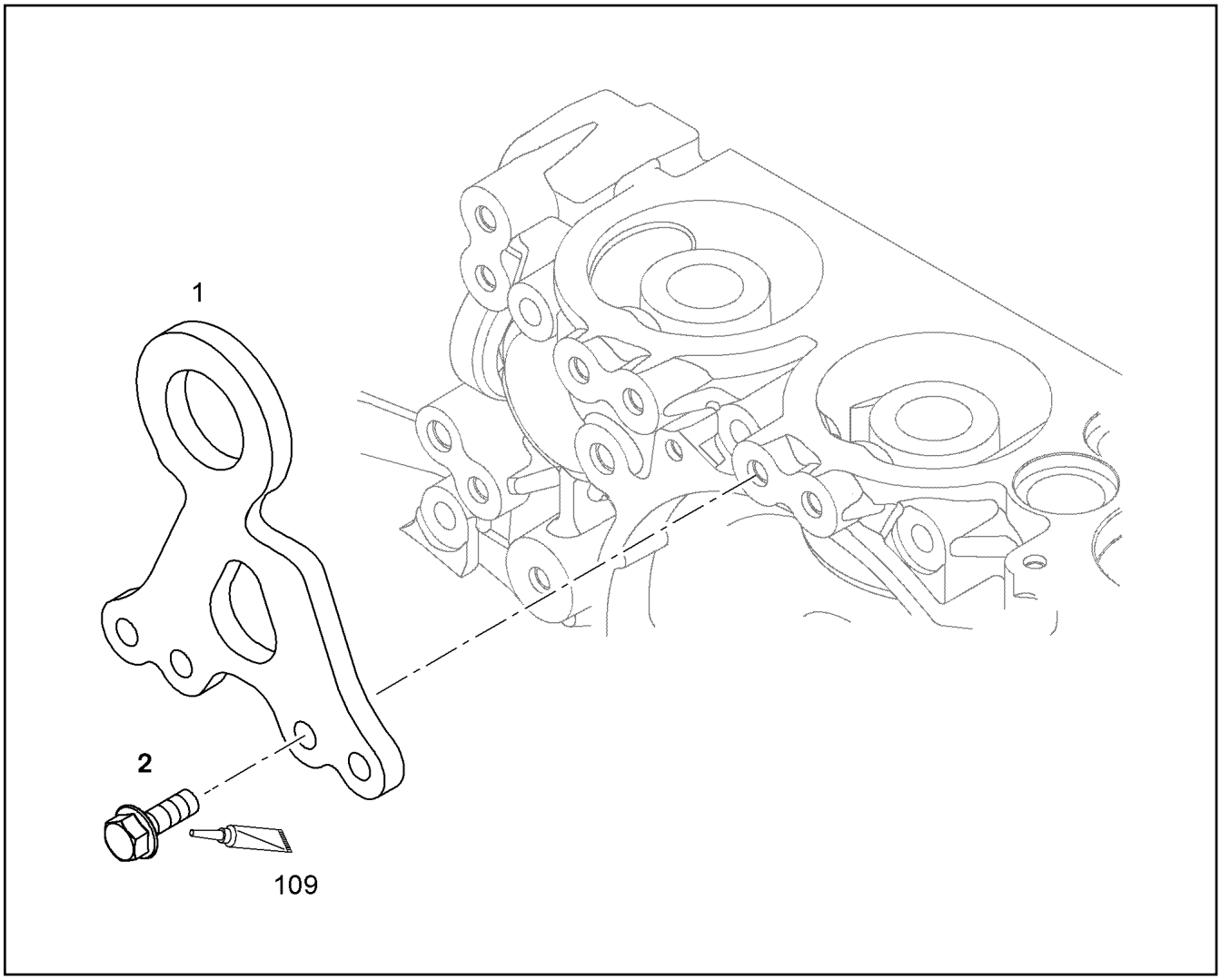


| Pos. | Item | Quantity | Description | Bezeichnung |
|---|---|---|---|---|
| 1 | 10 14 194 9 | 1 | TRANSPORTER CONSOLE S355J0 | TRANSPORTKONSOLE |
| 2 | 11 65 615 5 | 5 | HEX SCREW EN 1665 M10X30 8.8 FLZN SPF | SECHSKANTSCHRAUBE |

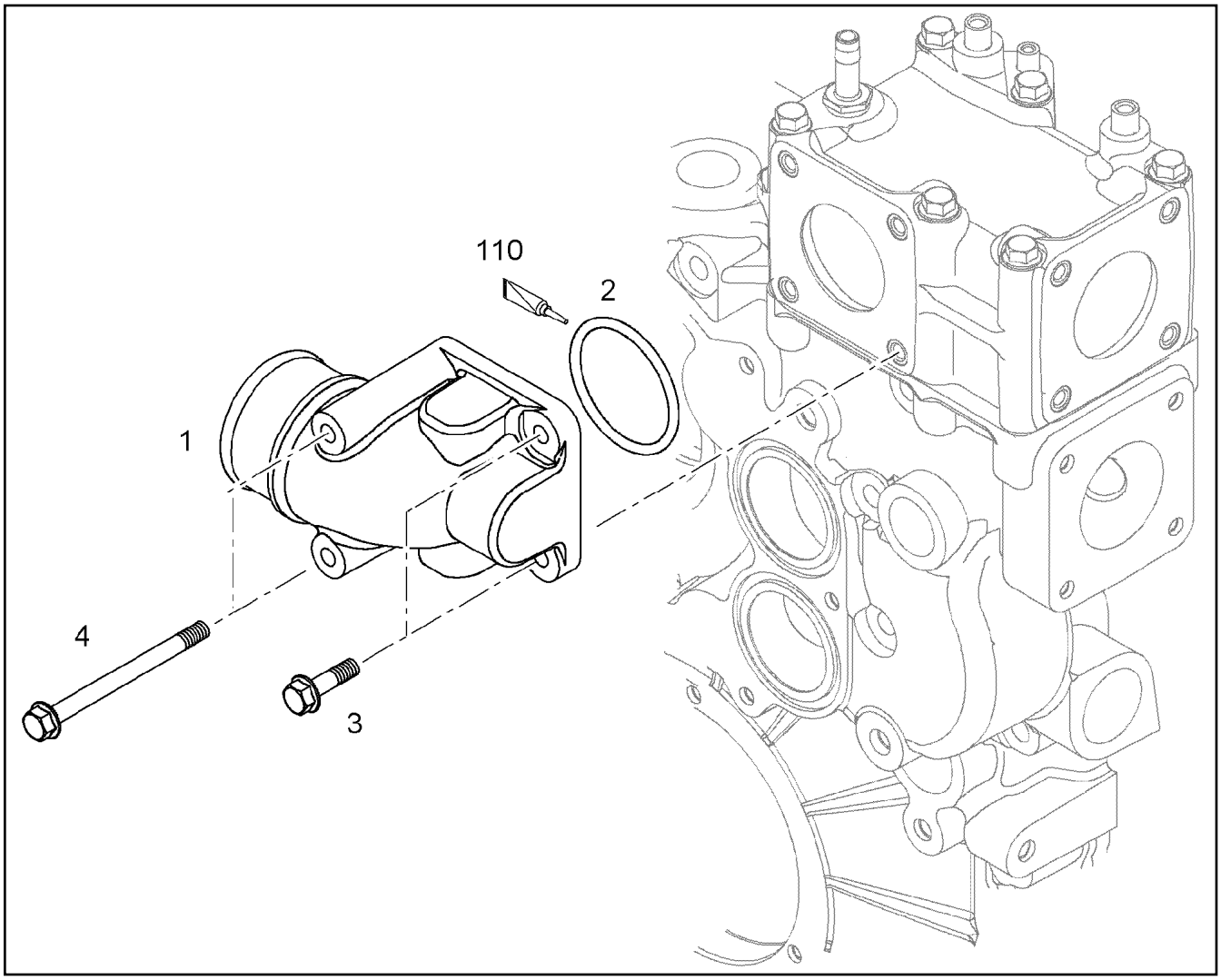


| Pos. | Item | Quantity | Description | Bezeichnung |
|---|---|---|---|---|
| 1 | 90 79 471 | 1 | COOLANT PIPE BEND AC-ALSI10MG | KUEHLMITTELKRUEMMER |
| 2 | 73 81 779 | 1 | O-RING DIN 3771 59,92X3,53 HNBR 70 A | O-RING |
| 3 | 10 00 778 2 | 2 | HEX SCREW DIN 6921 M8X30 8.8 A2C | SECHSKANTSCHRAUBE |
| 4 | 10 01 404 2 | 2 | HEX SCREW DIN 6921 M8X100 8.8 A2C | SECHSKANTSCHRAUBE |
| 110 | 86 55 018 | 1 | GREASE NBU 12 0.05KG TUBE | FETT |

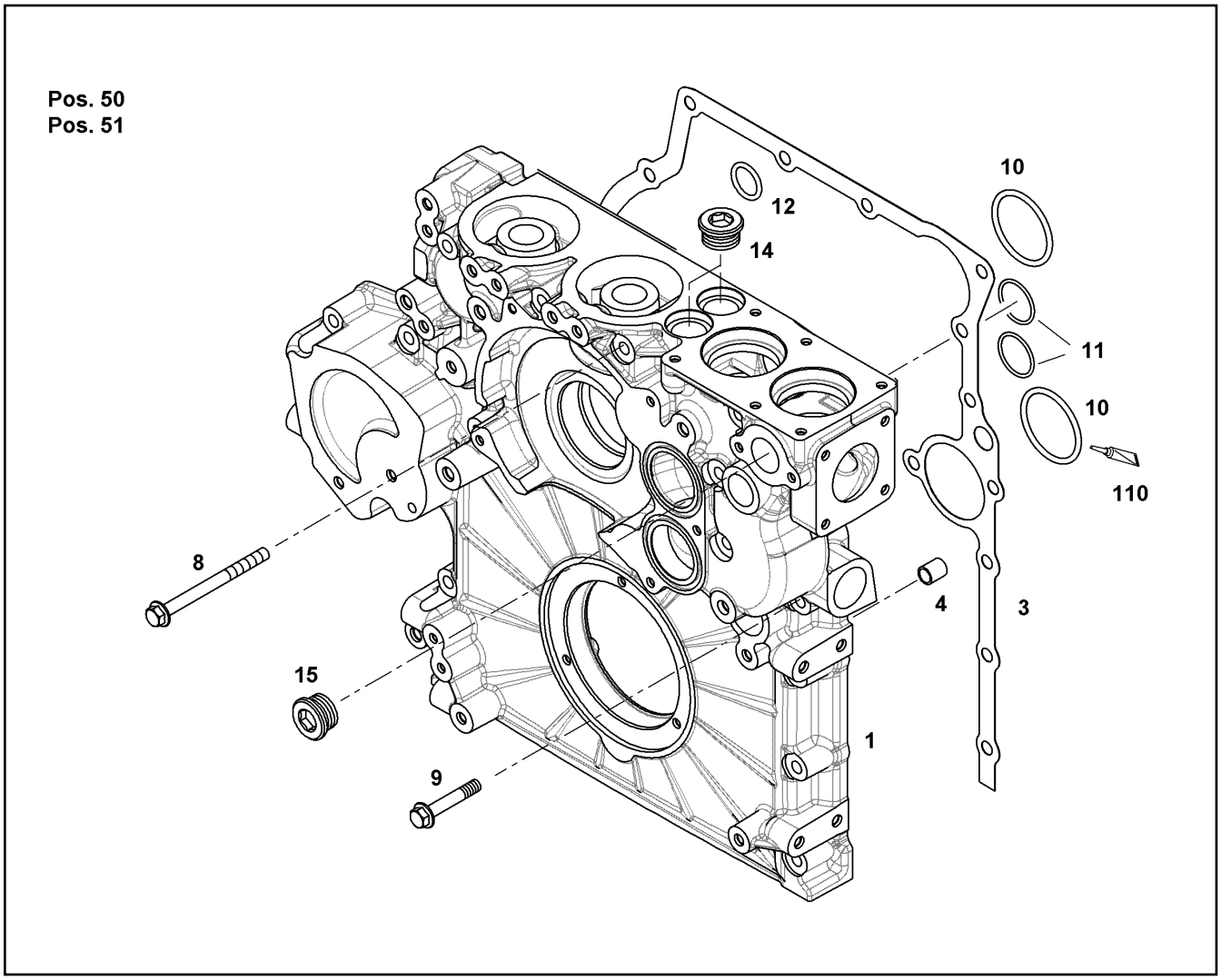


| Pos. | Item | Quantity | Description | Bezeichnung |
|---|---|---|---|---|
| 1 | 10 13 621 2 | 1 | POWER UNIT SUPPORT | AGGREGATETRAEGER |
| 3 | 10 12 673 8 | 1 | SEAL 0,33MM METALOSEAL 1 | DICHTUNG |
| 4 | 90 74 798 | 2 | TIGHT FIT SLEEVE 16X20X20 S235JR | PASSHUELSE |
| 8 | 10 03 966 0 | 12 | HEX SCREW DIN 6921 M10X60 10.9 A3C SP | SECHSKANTSCHRAUBE |
| 9 | 10 03 731 2 | 6 | HEX SCREW DIN 6921 M10X120 10.9 A3C | SECHSKANTSCHRAUBE |
| 10 | 73 81 779 | 2 | O-RING DIN 3771 59,92X3,53 HNBR 70 A | O-RING |
| 11 | 73 80 653 | 2 | O-RING ISO 3601-1 34,59X2,62 FKM 90 A,BK | O-RING |
| 12 | 10 00 426 1 | 1 | O-RING 26X3 HNBR 70 | O-RING |
| 14 | 73 82 204 | 2 | SCREW PLUG VSTI M30X1,5 St Rm>500N/m | VERSCHLUSSSCHRAUBE |
| 15 | 10 04 313 6 | 1 | SCREW PLUG VSTI M33X2 | VERSCHLUSSSCHRAUBE |
| 50 | 10 11 801 3 | 1 | SEAL KIT AGGREGATE CARRIER<br>⇨ X10118013 10 11 801 3 | DS AGGREGATETRAEGER |
| 51 | 10 11 801 4 | 1 | SEAL KIT AGGREGATE CARRIER<br>⇨ X10118014 10 11 801 4 | DS AGGREGATETRAEGER |
| 110 | 86 55 018 | 1 | GREASE NBU 12 0.05KG TUBE | FETT |

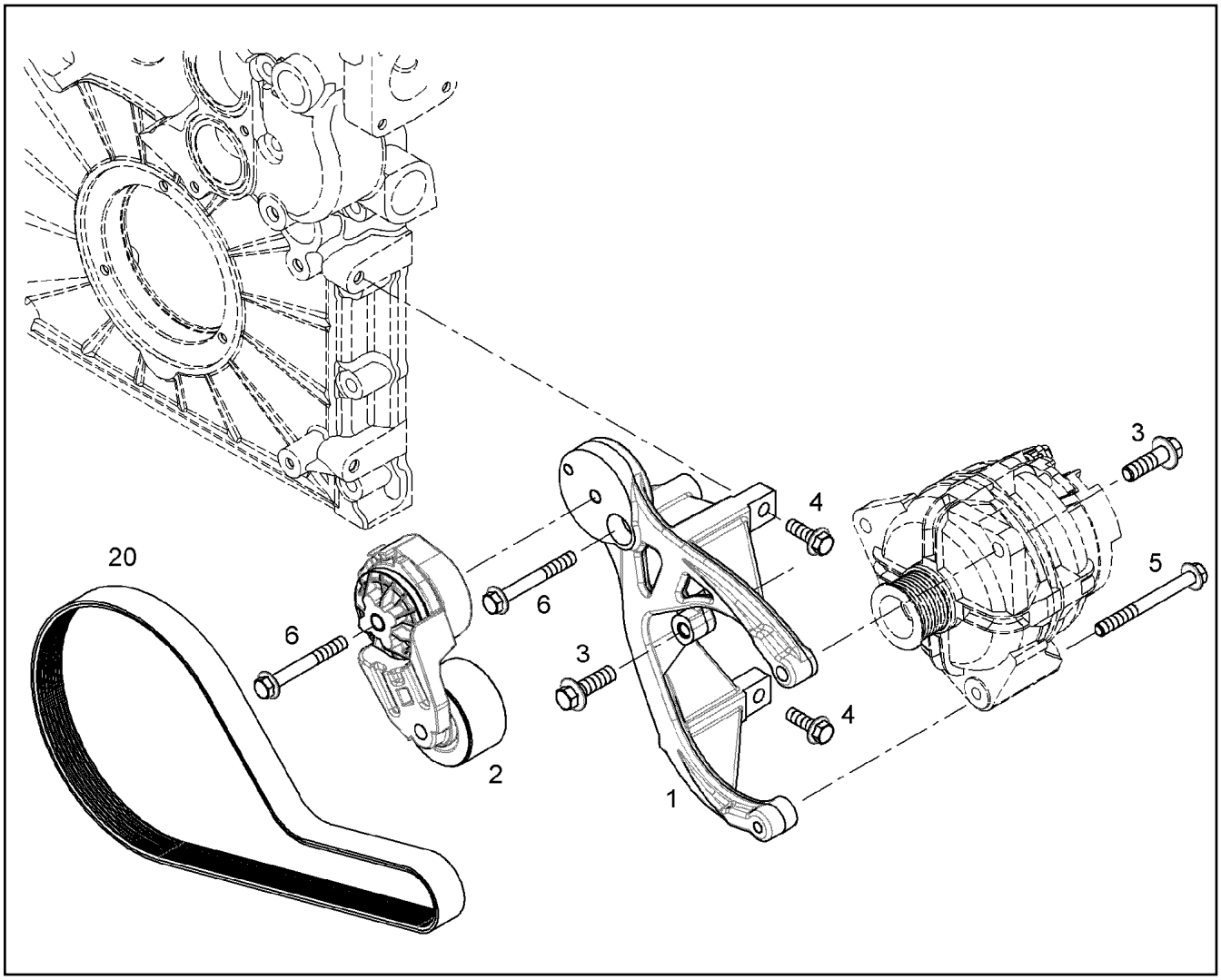


| Pos. | Item | Quantity | Description | Bezeichnung |
|---|---|---|---|---|
| 1 | 90 79 561 | 1 | CONSOLE | KONSOLE |
| 2 | 98 87 461 | 1 | CLAMP FITTING EQUIPM. PRE-ASS. | SPANNVORRICHTUNG VORM. |
| 3 | 46 01 426 | 2 | HEX SCREW EN 1665 M12X40 8.8 A3C | SECHSKANTSCHRAUBE |
| 4 | 11 65 615 5 | 2 | HEX SCREW EN 1665 M10X30 8.8 FLZN SPF | SECHSKANTSCHRAUBE |
| 5 | 10 00 546 2 | 1 | HEX SCREW DIN 6921 M10X100 8.8 A3C | SECHSKANTSCHRAUBE |
| 6 | 10 10 165 7 | 2 | HEX SCREW EN 1665 M10X80 8.8 A3C | SECHSKANTSCHRAUBE |
| 20 | 49 81 176 | 1 | V-RIPPED BELT DIN 7867 8XPKX1075 CR | KEILRIPPENRIEMEN |

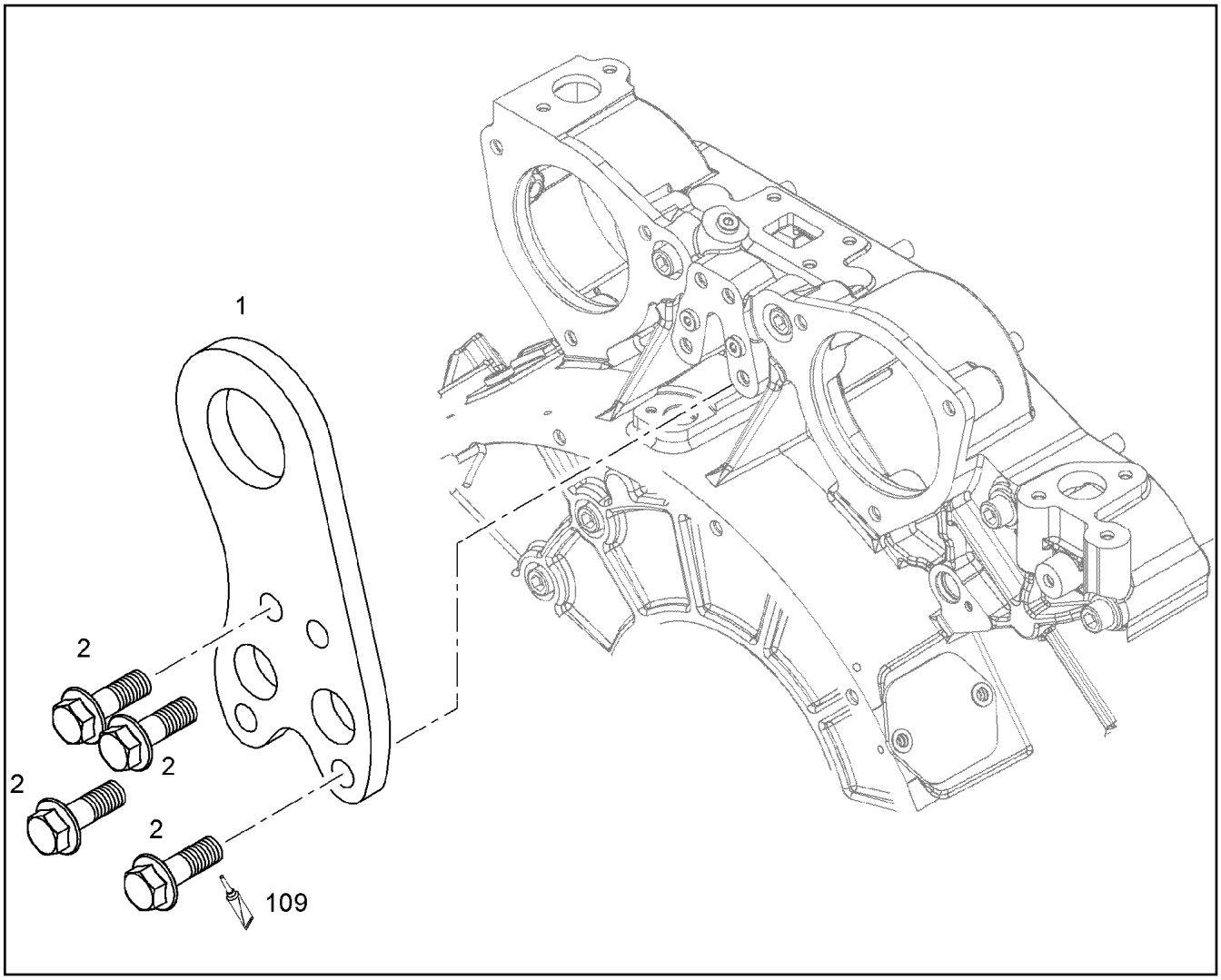


| Pos. | Item | Quantity | Description | Bezeichnung |
|---|---|---|---|---|
| 1 | 90 78 849 | 1 | TRANSPORTER CONSOLE SCHWUNGRADS | TRANSPORTKONSOLE |
| 2 | 11 65 615 5 | 4 | HEX SCREW EN 1665 M10X30 8.8 FLZN SPF | SECHSKANTSCHRAUBE |
| 109 | 81 12 057 08 | 1 | SCREW LOCKING 50ML FLASCHE 150 °C | SCHRAUBENSICHERUNG |

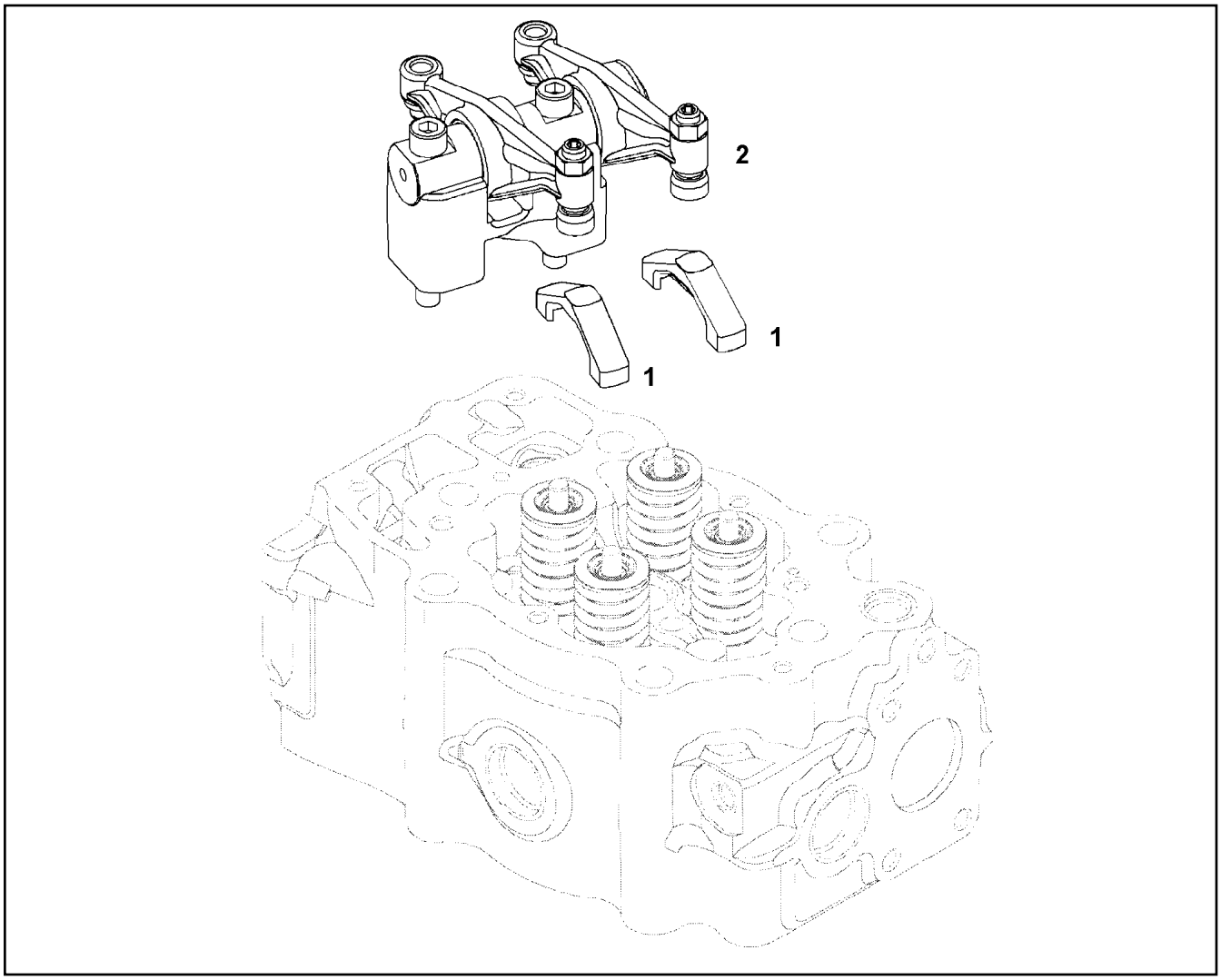


| Pos. | Item | Quantity | Description | Bezeichnung |
|---|---|---|---|---|
| 1 | 10 11 969 5 | 2 | VALVE BRIDGE | VENTILBRUECKE |
| 2 | 90 74 505 | 1 | ROCKER ARM BRACKET PRE-ASS. D 930<br>⇨ 9 074 505 90 74 505 | KIPPHEBELBOCK VORM. |

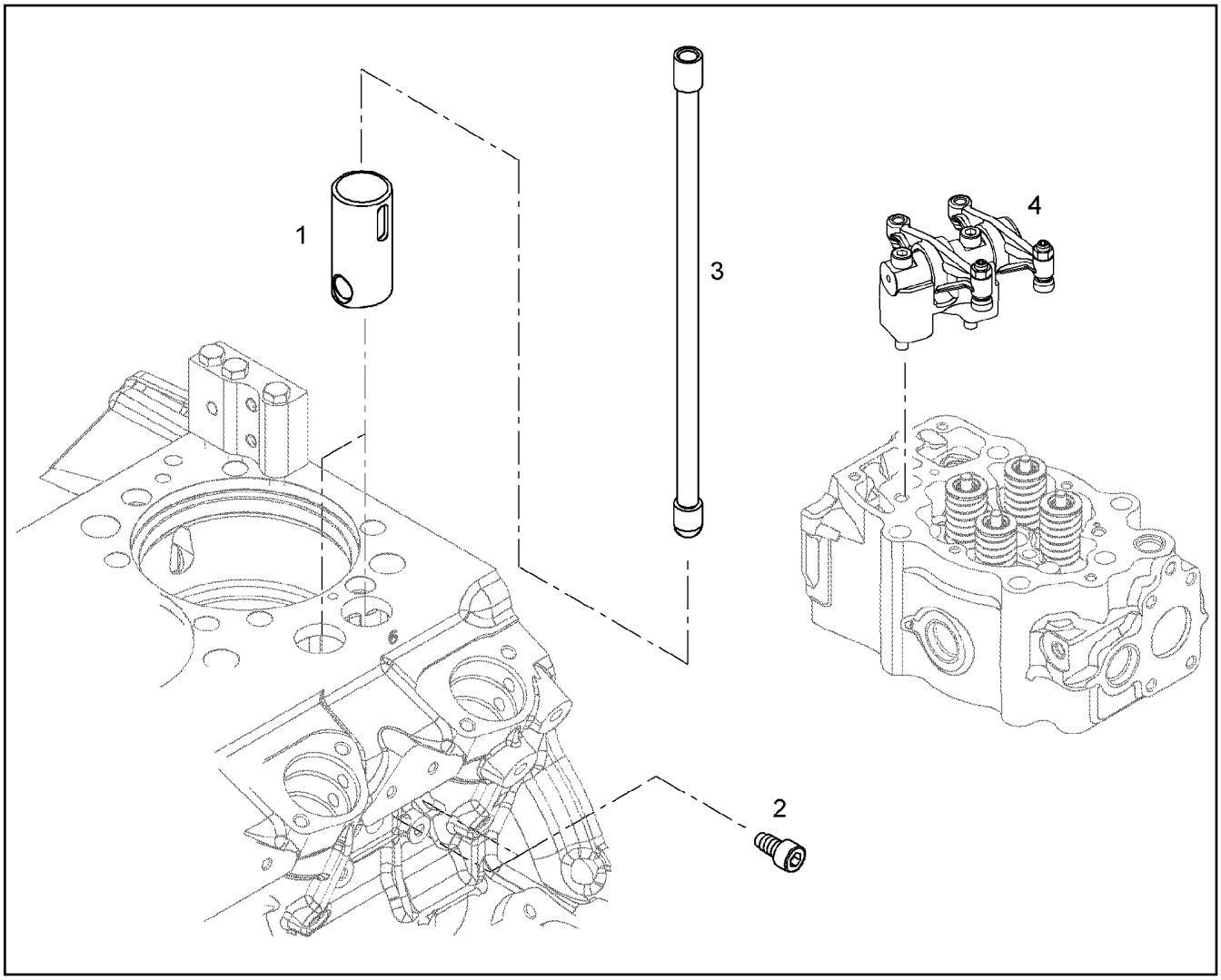


| Pos. | Item | Quantity | Description | Bezeichnung |
|---|---|---|---|---|
| 1 | 10 15 353 6 | 2 | ROLLER TAPPET | ROLLENSTOESSEL |
| 2 | 10 15 353 8 | 2 | LOCKING SCREW M10X19 10.9 | SICHERUNGSSCHRAUBE |
| 3 | 90 79 131 | 2 | TAPPET PUSH ROD | STOESSELSTANGE |

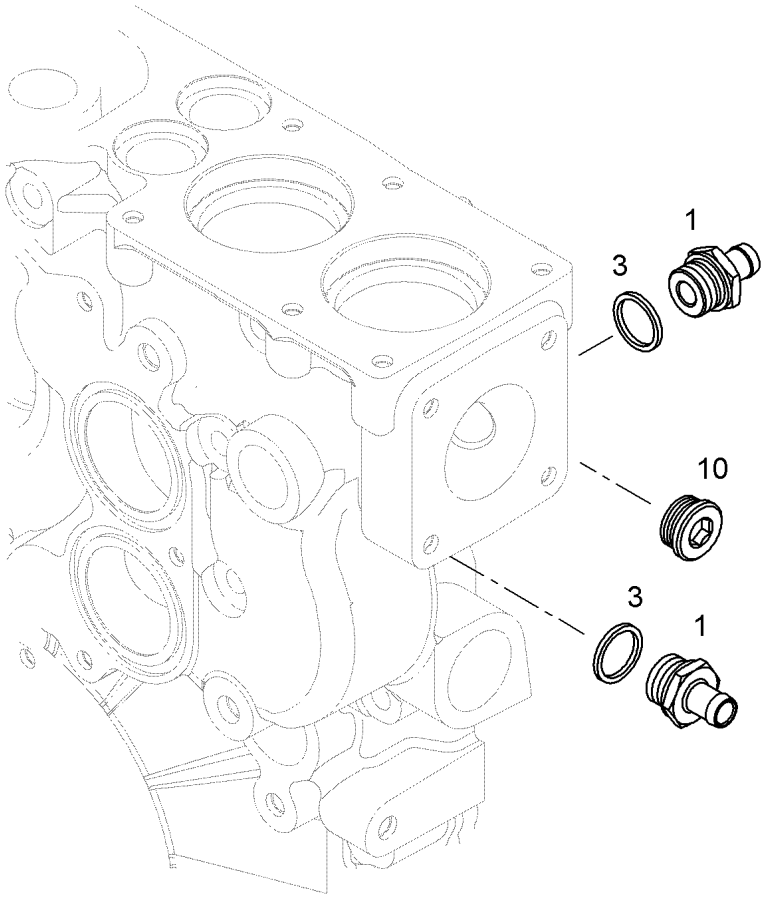


| Pos. | Item | Quantity | Description | Bezeichnung |
|---|---|---|---|---|
| 1 | 92 76 393 | 2 | HOSE NIPPLE GERADE 11SMn30+C | SCHLAUCHNIPPEL |
| 3 | 10 11 373 1 | 2 | SEALING RING 30,7X39X2 St/FPM1-80 | DICHTRING |
| 10 | 73 81 457 | 1 | SCREW PLUG VSTI M26X1,5 CR6-FREI | VERSCHLUSSSCHRAUBE |

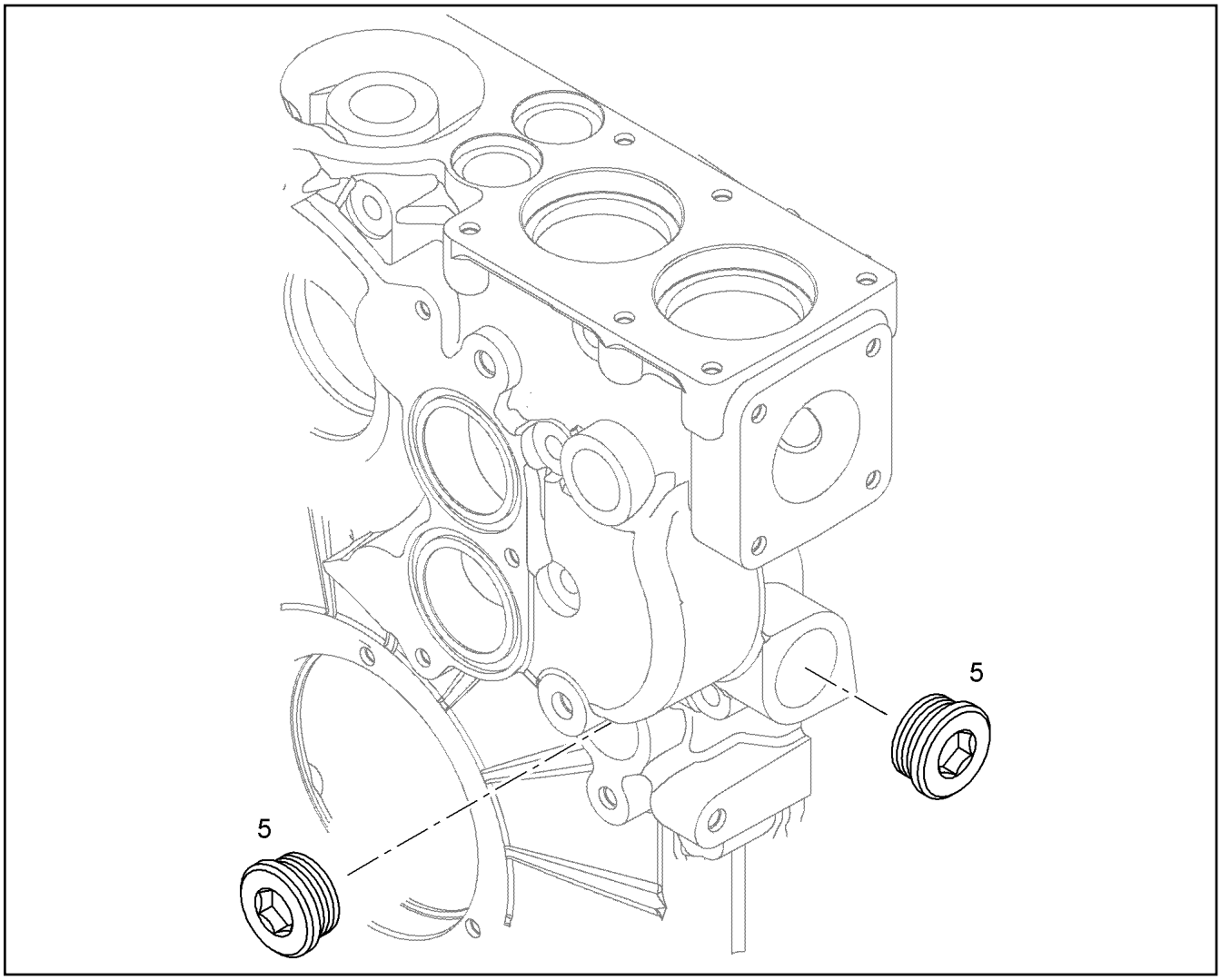


| Pos. | Item | Quantity | Description | Bezeichnung |
|---|---|---|---|---|
| 5 | 73 82 202 | 2 | SCREW PLUG VSTI M38X1,5 | VERSCHLUSSSCHRAUBE |

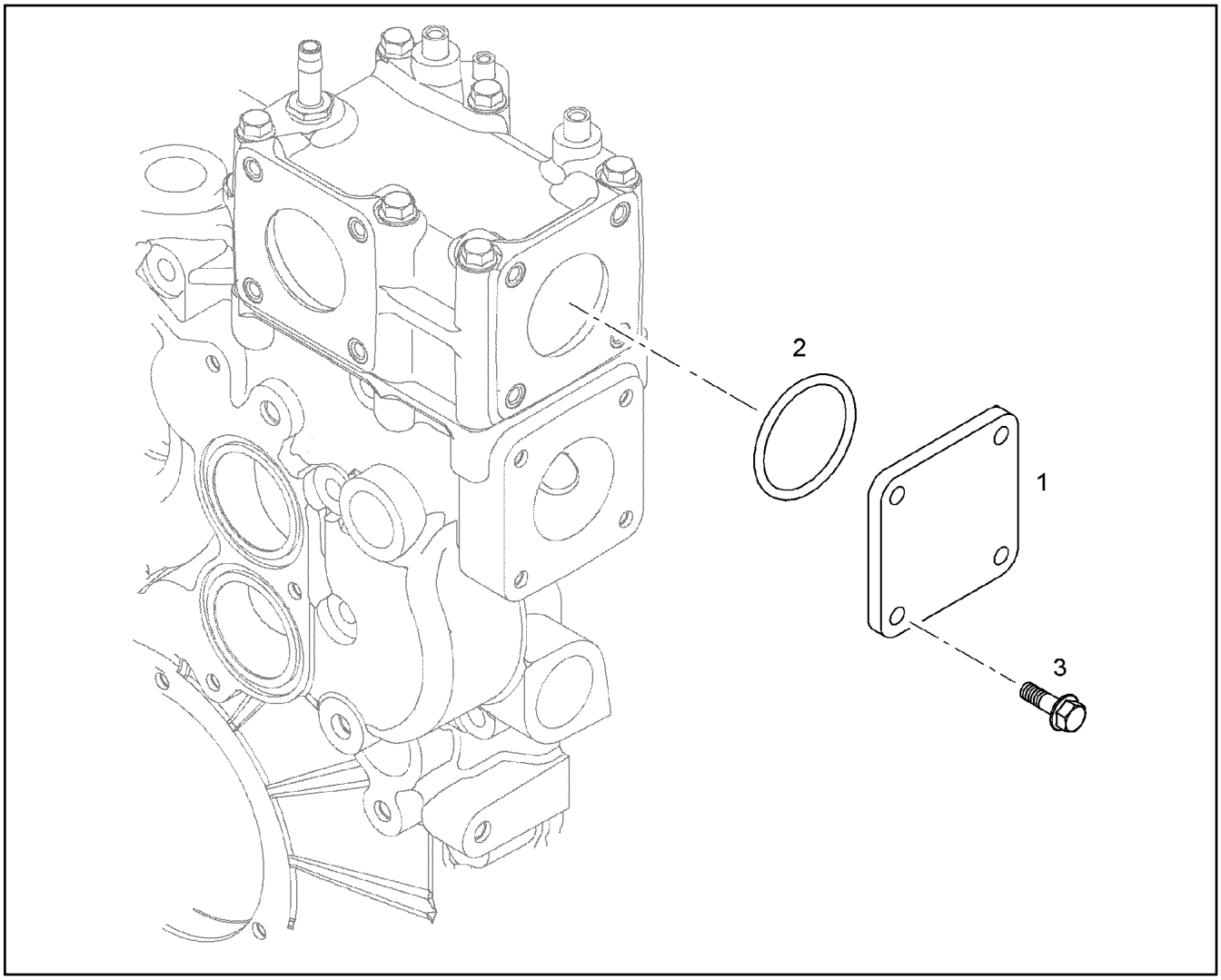


| Pos. | Item | Quantity | Description | Bezeichnung |
|---|---|---|---|---|
| 1 | 10 11 835 6 | 1 | COVER S235JR | DECKEL |
| 2 | 73 81 779 | 1 | O-RING DIN 3771 59,92X3,53 HNBR 70 A | O-RING |
| 3 | 10 00 778 2 | 4 | HEX SCREW DIN 6921 M8X30 8.8 A2C | SECHSKANTSCHRAUBE |

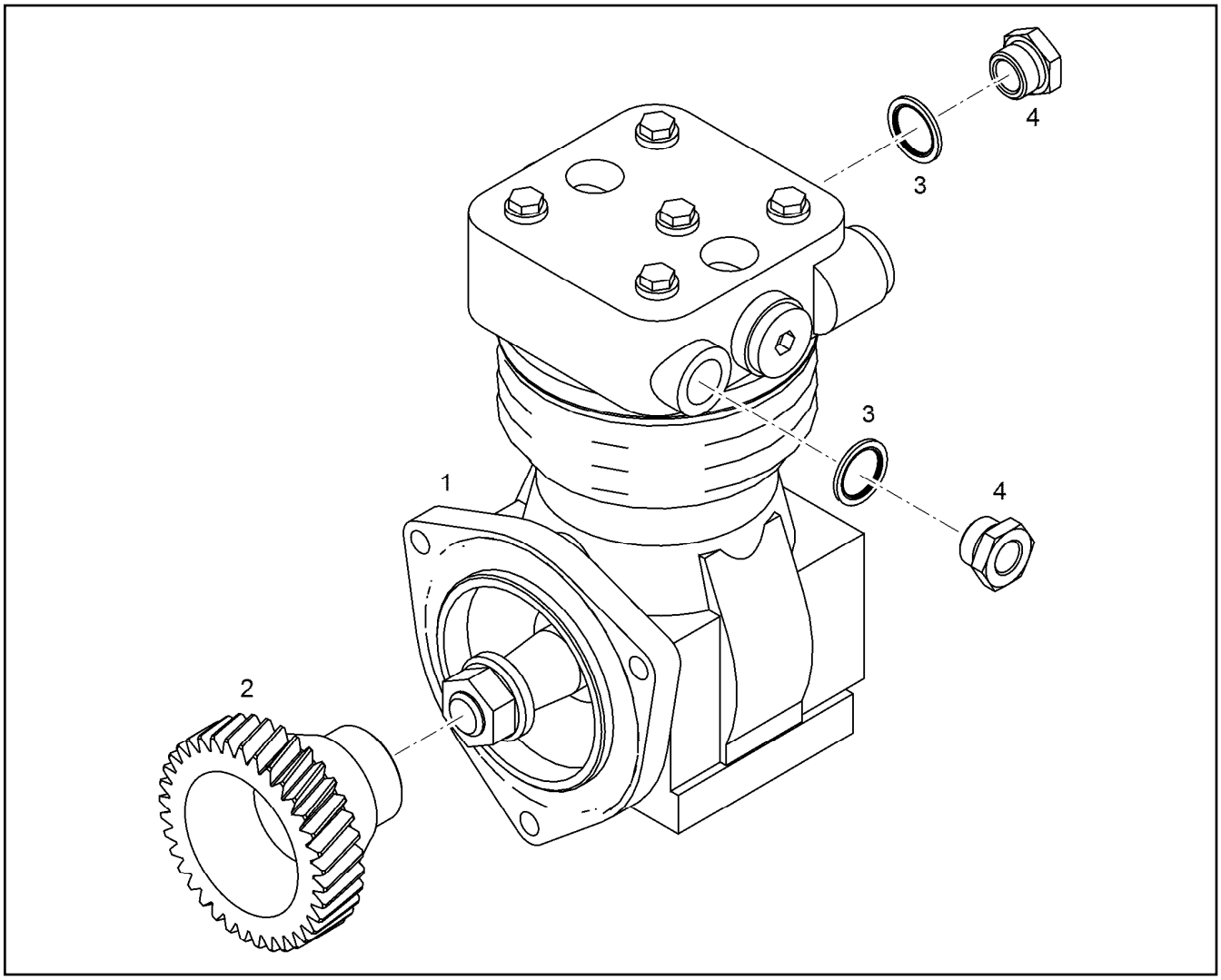


| Pos. | Item | Quantity | Description | Bezeichnung |
|---|---|---|---|---|
| 1 | 57 00 161 | 1 | AIR COMPRESSOR 293CM3<br>⇨ 5 700 161 57 00 161 | LUFTPRESSER |
| 2 | 90 73 343 | 1 | GEAR WHEEL Z=36 M=2,5 | ZAHNRAD |
| 3 | 10 01 186 9 | 2 | SEALING RING 22,7X30X2 St/FPM1-80 | DICHTRING |
| 4 | 73 81 363 | 2 | FLANGE JOINT RI M22X1,5/M16X CR6-FREI | VERSCHRAUBUNG |

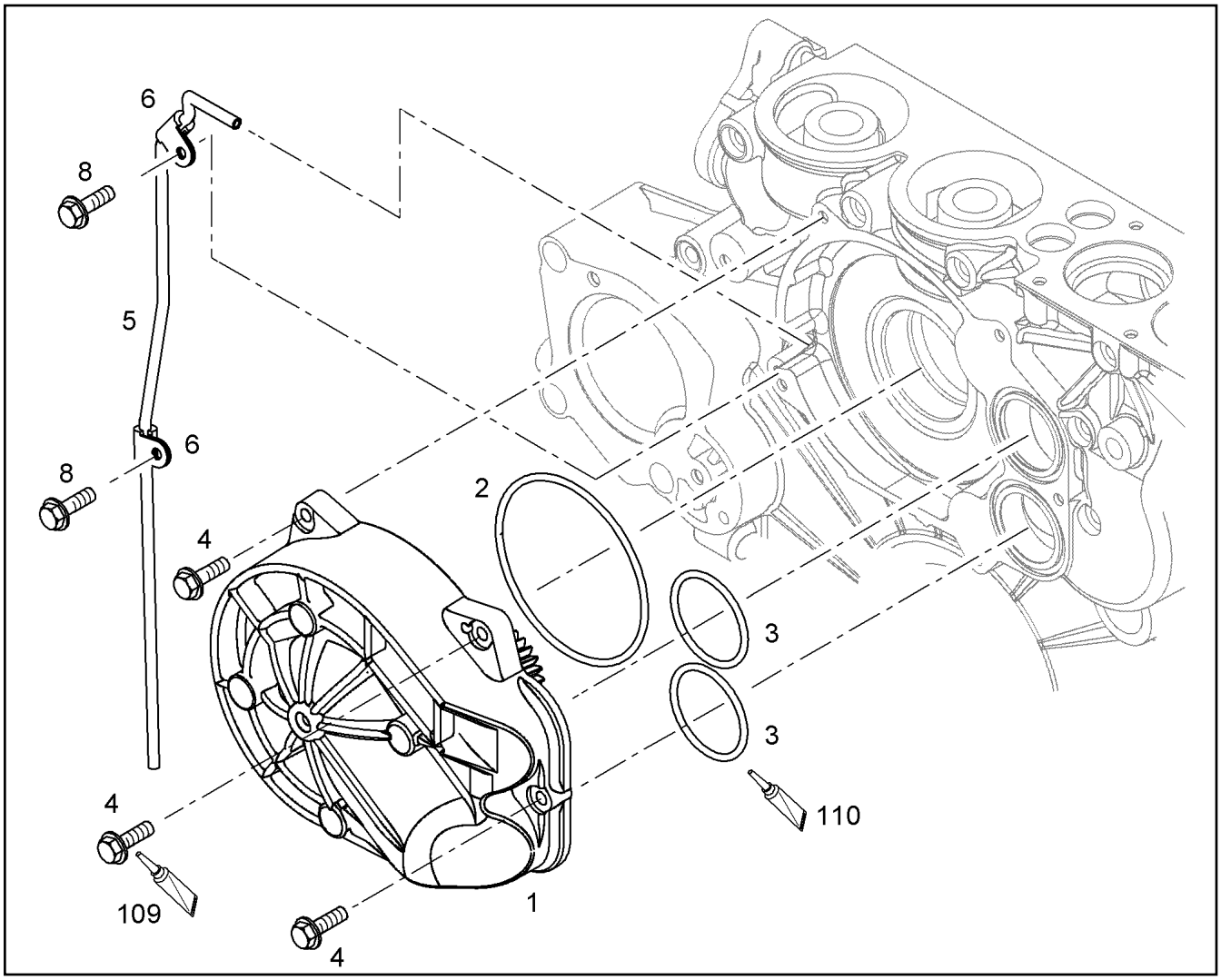


| Pos. | Item | Quantity | Description | Bezeichnung |
|---|---|---|---|---|
| 1 | 90 80 344 | 1 | WATER PUMP, PRE-ASSEMBLED R-MOTOR | WASSERPUMPE VORM. |
| 2 | 50 12 444 08 | 1 | O-RING ARP 568 113,89X3,53 NBR70 | O-RING |
| 3 | 73 81 779 | 2 | O-RING DIN 3771 59,92X3,53 HNBR 70 A | O-RING |
| 4 | 10 11 371 1 | 5 | HEX SCREW DIN 6921 M8X35 8.8 A2C | SECHSKANTSCHRAUBE |
| 5 | 10 00 994 3 | 0.6 | HOSE DN6-FLEXILON D PA 12 WEICH | SCHLAUCH |
| 6 | 73 82 090 | 2 | CLAMP DIN 3016-1 8X20XD1 W1-2-MVQ | SCHELLE |
| 8 | 10 01 690 6 | 2 | HEX SCREW DIN 6921 M8X20 8.8 A2C | SECHSKANTSCHRAUBE |
| 110 | 10 01 302 5 | 1 | GREASE STABURAGS NBU 12 0.008KG TUB | FETT |

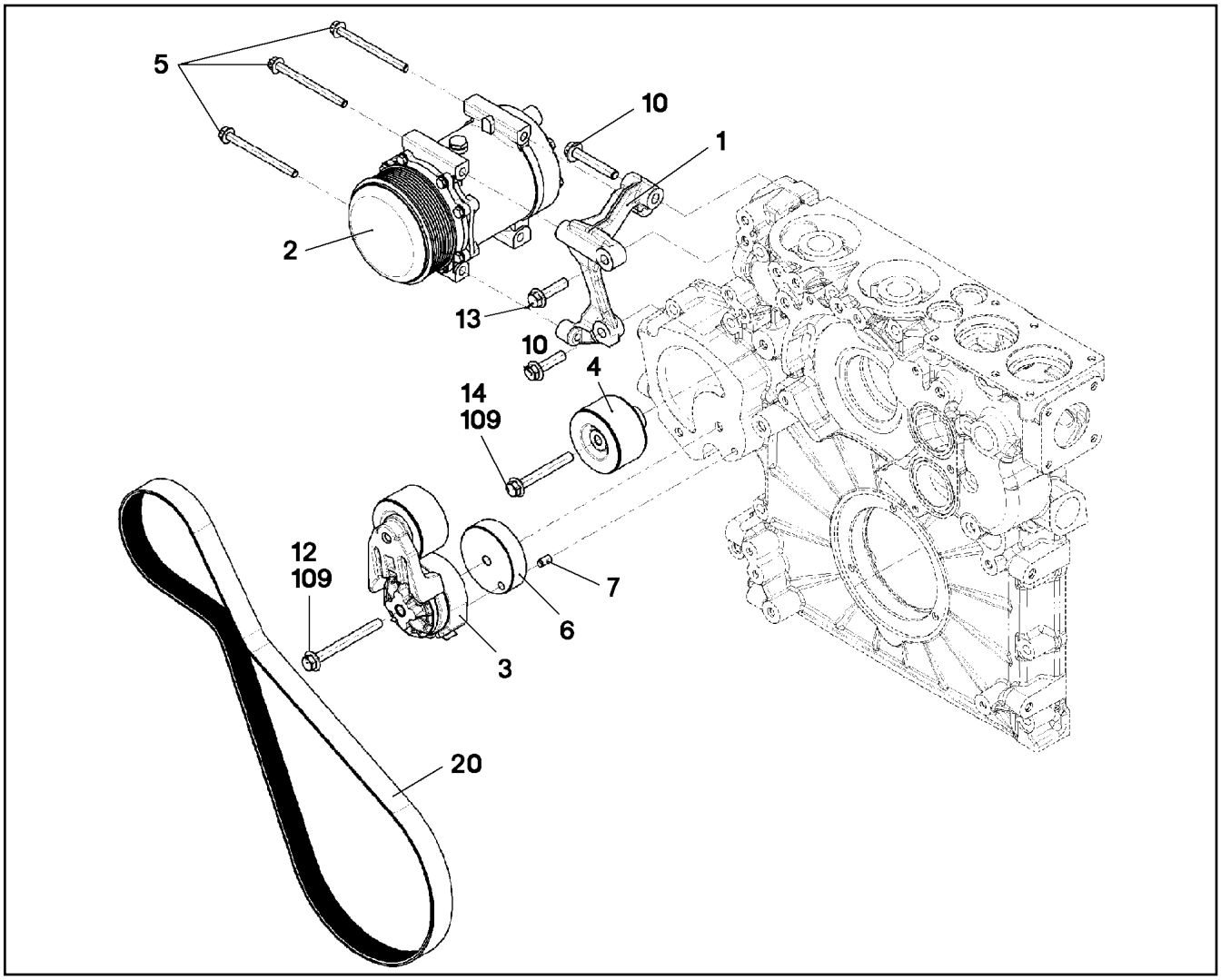


| Pos. | Item | Quantity | Description | Bezeichnung |
|---|---|---|---|---|
| 1 | 10 11 547 7 | 1 | CONSOLE PRE-ASS. | KONSOLE VORM. |
| 2 | 10 11 676 8 | 1 | AIR CONDITIONING COMPRESSOR SD7H1<br>⇨ X10116768 10 11 676 8 | KLIMAKOMPRESSOR |
| 3 | 98 87 461 | 1 | CLAMP FITTING EQUIPM. PRE-ASS. | SPANNVORRICHTUNG VORM. |
| 4 | 90 80 526 | 1 | GUIDE PULLEY COMPL. | UMLENKROLLE VORM. |
| (1) | 73 82 028 | 1 | DEFLECTION PULLEY | UMLENKROLLE |
| (2) | 90 76 986 | 2 | COVER DISC 17,2X72X8,3 | ABDECKSCHEIBE |
| (3) | 90 77 709 | 1 | TIGHT FIT SLEEVE 10,2X17X36 9SMnPb28K | PASSHUELSE |
| (4) | 90 80 508 | 1 | DISTANCE SLEEVE 17X27X30 11SMnPb37 | DISTANZHUELSE |
| 5 | 10 01 404 2 | 3 | HEX SCREW DIN 6921 M8X100 8.8 A2C | SECHSKANTSCHRAUBE |
| 6 | 90 80 519 | 1 | INTERMEDIATE PLATE 11SMnPb37 | ZWISCHENPLATTE |
| 7 | 49 01 106 | 1 | PARALLEL PIN ISO 8734 8m6X16 | ZYLINDERSTIFT |
| 10 | 10 01 463 8 | 2 | HEX SCREW EN 1665 M10X60 8.8 A3C | SECHSKANTSCHRAUBE |
| 12 | 10 00 546 2 | 1 | HEX SCREW DIN 6921 M10X100 8.8 A3C | SECHSKANTSCHRAUBE |
| 13 | 10 11 249 7 | 1 | HEX SCREW EN 1665 M10X40 8.8 A3C | SECHSKANTSCHRAUBE |
| 14 | 10 10 165 7 | 1 | HEX SCREW EN 1665 M10X80 8.8 A3C | SECHSKANTSCHRAUBE |
| 20 | 49 81 203 | 1 | V-RIPPED BELT DIN 7867 8XPKX1397 EPDM | KEILRIPPENRIEMEN |
| 109 | 81 12 057 08 | 1 | SCREW LOCKING 50ML FLASCHE 150 °C | SCHRAUBENSICHERUNG |

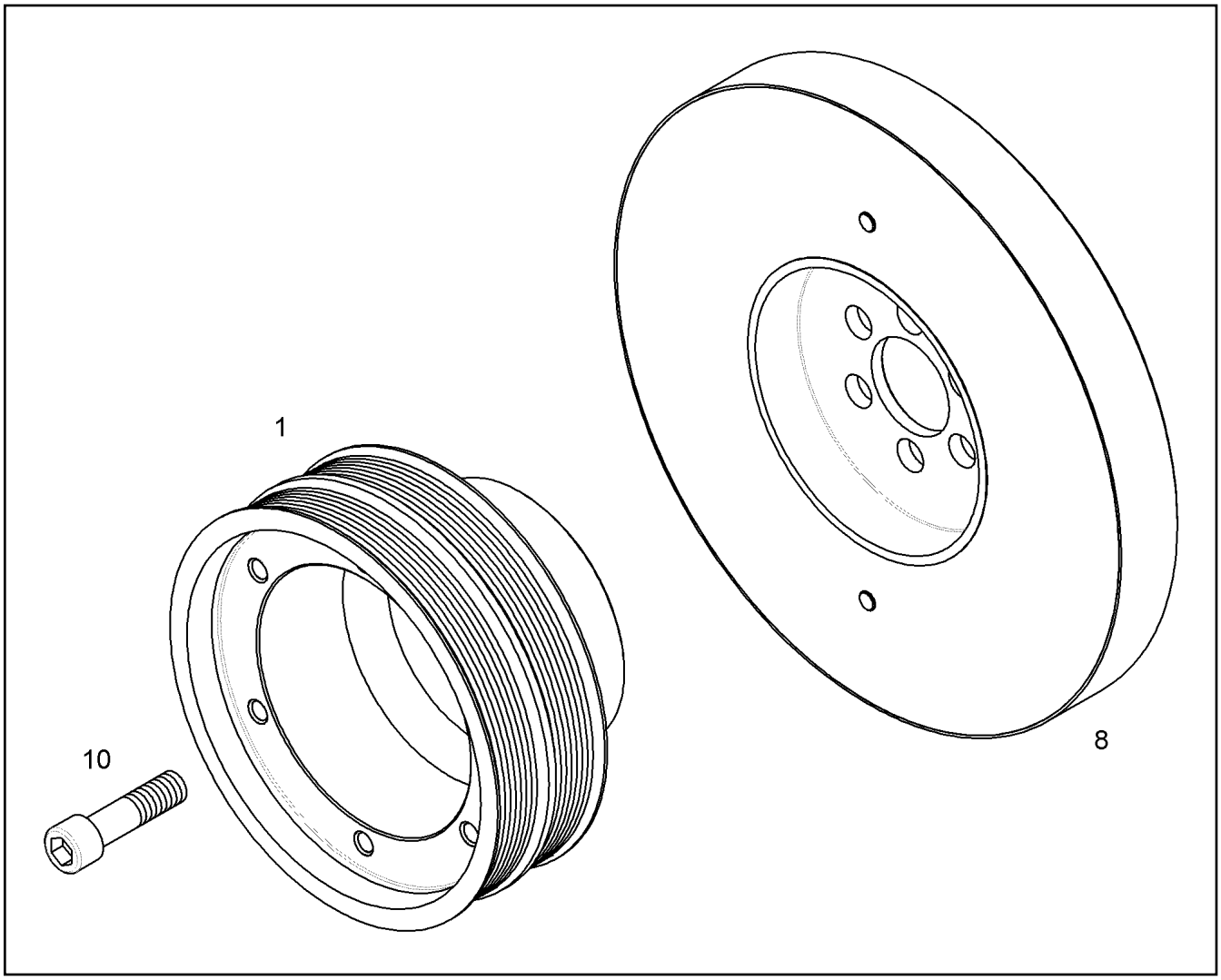


| Pos. | Item | Quantity | Description | Bezeichnung |
|---|---|---|---|---|
| 1 | 90 80 505 | 1 | BELT PULLEY | RIEMENSCHEIBE |
| 8 | 10 11 852 6 | 1 | VISCOSE DAMPER D934 L | VISKOSEDAEMPFER |
| 10 | 10 11 878 6 | 6 | HEXALOBULAR HEAD SCREW M16X1,5X60 | SECHSRUNDSCHRAUBE |

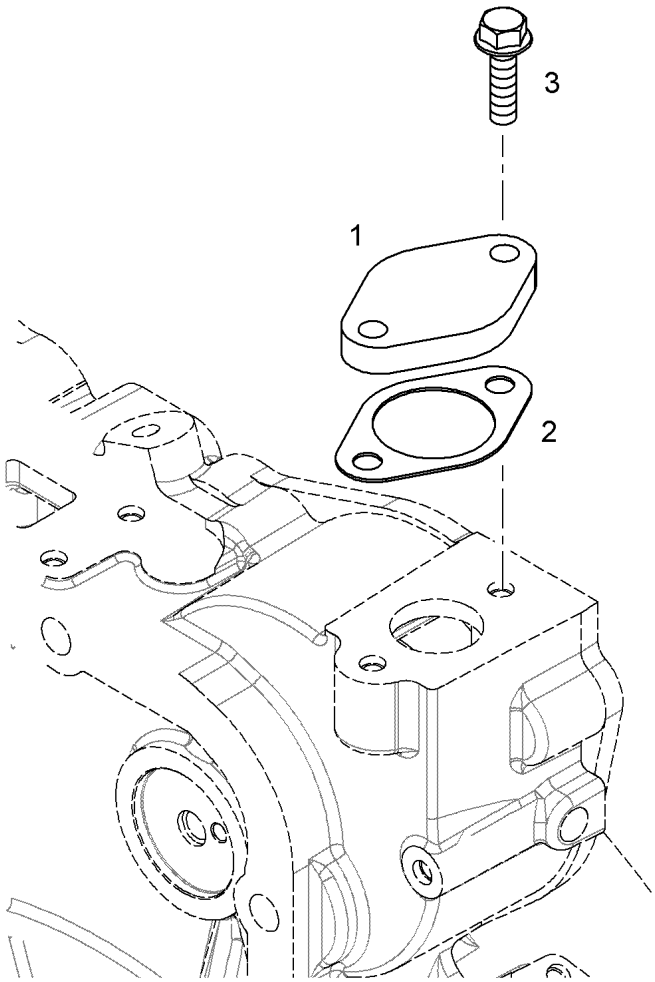


| Pos. | Item | Quantity | Description | Bezeichnung |
|---|---|---|---|---|
| 1 | 90 77 777 | 1 | COVER | DECKEL |
| 2 | 92 75 766 | 1 | SEAL AFM 31 TD 2 | DICHTUNG |
| 3 | 10 00 900 7 | 2 | HEX SCREW EN 1665 M8X25 8.8 A3C | SECHSKANTSCHRAUBE |

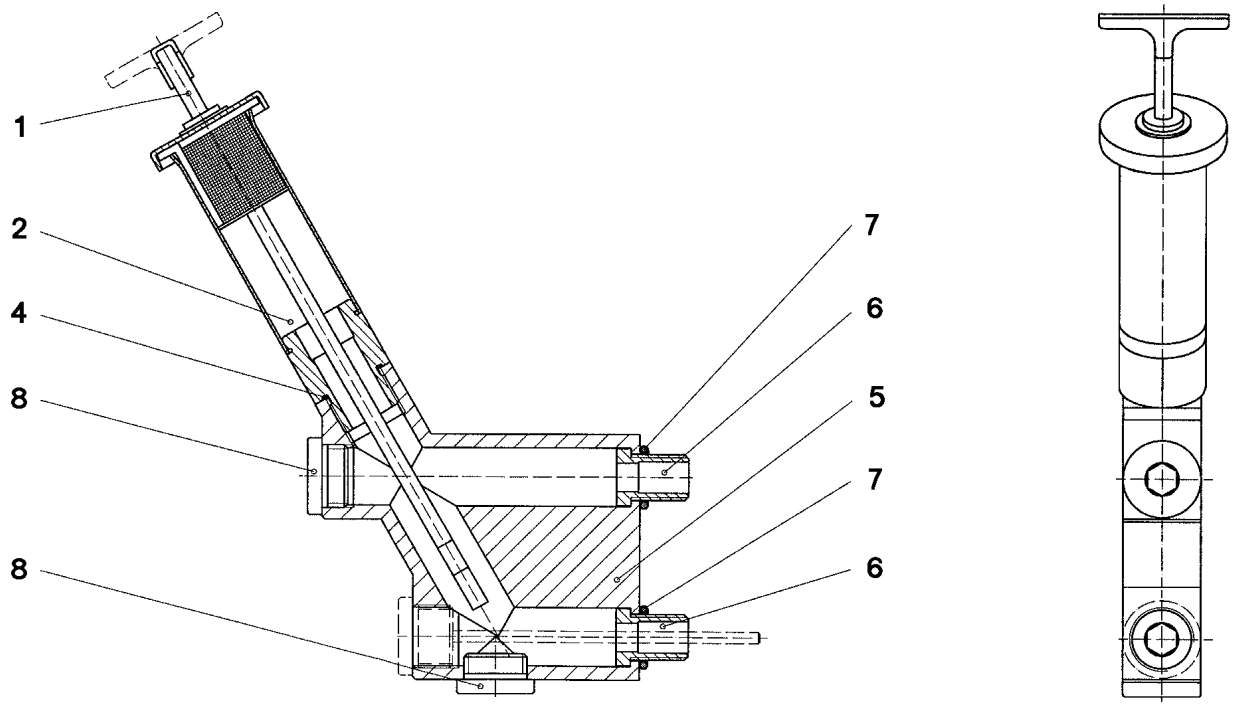


| Pos. | Item | Quantity | Description | Bezeichnung |
|---|---|---|---|---|
| 1 | 50 01 315 01 | 1 | OIL DIPSTICK 1 1/8" | OELMESSSTAB |
| 2 | 92 75 019 01 | 1 | VENTILATION CONNECTING PIECE | ENTLUEFTUNGSSTUTZEN |
| 4 | 76 10 225 03 | 1 | SEALING RING 19,6X24,3X1,5 | DICHTRING |
| 5 | 92 75 213 01 | 1 | STAND PIPE 27X111X113,5 | STEIGROHR |
| 6 | 92 75 152 01 | 2 | FLANGED BOLT | BUNDSCHRAUBE |
| 7 | 47 32 142 08 | 2 | EDGE SEALING RING DKAZ16 A3P | DICHTKANTENRING |
| 8 | 47 75 003 01 | 2 | SCREW PLUG M22X1,5 VERZ | VERSCHLUSSSCHRAUBE |

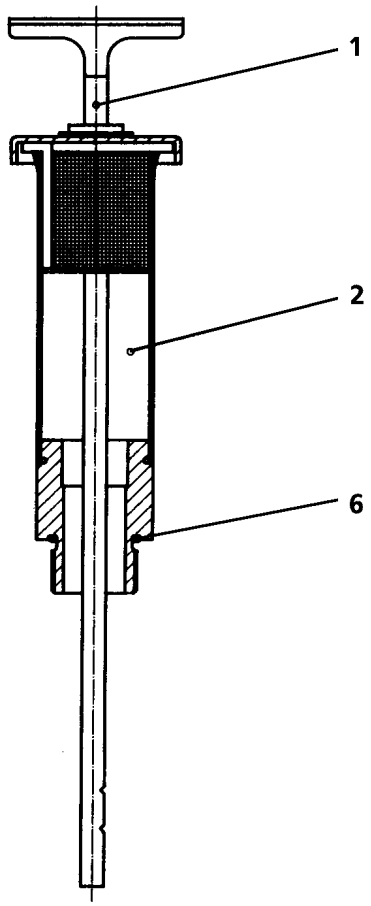


| Pos. | Item | Quantity | Description | Bezeichnung |
|---|---|---|---|---|
| 1 | 92 75 544 01 | 1 | OIL DIPSTICK 1 1/8" | OELMESSSTAB |
| 2 | 92 75 019 01 | 1 | VENTILATION CONNECTING PIECE | ENTLUEFTUNGSSTUTZEN |
| 6 | 76 10 225 03 | 1 | SEALING RING 19,6X24,3X1,5 | DICHTRING |

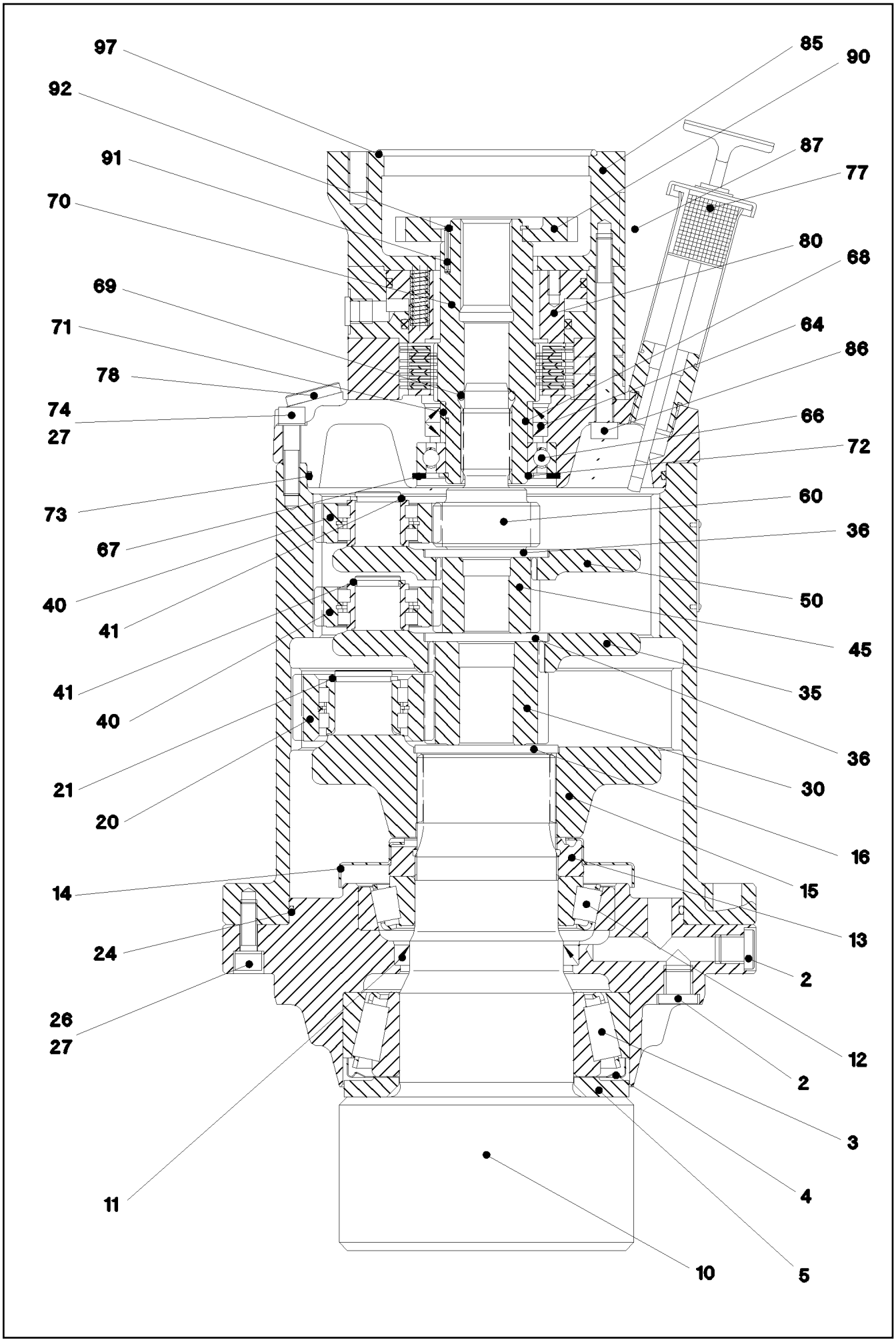


| | | |
|---|---|---|
| 16.2.2017<br>038613<br>LIEBHERR | etk_en_de_048005 LTR 1100<br><br>SLEWING GEAR DRIVE<br>DREHWERKANTRIEB | 444 (1/2)<br><br>⇨ 9 330 748 01<br>93 30 748 01 |

| Pos. | Item | Quantity | Description | Bezeichnung |
|---|---|---|---|---|
| 2 | 47 77 049 08 | 4 | STOP PLUG VSTIM14X1,5ED A3P | STOPFEN |
| 3 | 57 14 654 08 | 1 | TAPERED ROLLER BEARING DIN 720 33117 | KEGELROLLENLAGER |
| 4 | 74 72 584 01 | 1 | BEARING COVER RING | LAGERABDECKRING |
| 5 | 93 18 075 01 | 1 | WASHER 85,2X139X9,5 | SCHEIBE |
| 10 | 93 30 749 01 | 1 | OUTPUT SHAFT M=9 Z=13 | ABTRIEBSWELLE |
| 11 | 71 00 593 01 | 1 | ROTARY SHAFT LIP SEAL DIN 3760 A 75X9 | RADIALWELLENDICHTRING |
| 12 | 74 62 014 08 | 1 | TAPERED ROLLER BEARING DIN 720 30214 | KEGELROLLENLAGER |
| 13 | 92 75 302 01 | 1 | SLOTTED NUT M70X2 C45 | NUTMUTTER |
| 14 | 92 75 303 01 | 1 | PLATE | BLECH |
| 15 | 93 92 503 01 | 1 | PLANETARY CARRIER | PLANETENTRAEGER |
| 16 | 92 75 319 01 | 1 | RETAINING DISK 70 | HALTESCHEIBE |
| 20 | 93 92 511 01 | 5 | PLANET WHEEL M=2,25 Z=28 | PLANETENRAD |
| 21 | 46 30 001 03 | 5 | LOCKING RING DIN 471 28X2 | SICHERUNGSRING |
| 24 | 72 64 536 01 | 1 | O-RING 175X3 NBR 70 | O-RING |
| 26 | 10 87 559 9 | 8 | SOCKET HEAD SCREW ISO 4762 M8X25 8.8 | ZYLINDERSCHRAUBE |
| 27 | 42 39 014 08 | 16 | LOCK WASHER VS 8 ST | SICHERUNGSSCHEIBE |
| 30 | 93 92 514 01 | 1 | SUN WHEEL M=2,25 Z=24 | SONNENRAD |
| 35 | 93 92 515 01 | 1 | PLANETARY CARRIER | PLANETENTRAEGER |
| 36 | 94 41 341 03 | 2 | RETAINING DISK 4X60X4 | HALTESCHEIBE |
| 40 | 92 75 308 01 | 6 | PLANET WHEEL M=2 Z=28 | PLANETENRAD |
| 41 | 46 30 000 03 | 6 | LOCKING RING DIN 471 22X1,75 | SICHERUNGSRING |
| 45 | 93 92 516 01 | 1 | SUN WHEEL M=2 Z=24 | SONNENRAD |
| 50 | 93 92 573 01 | 1 | PLANETARY CARRIER | PLANETENTRAEGER |
| 60 | 93 92 517 01 | 1 | SUN WHEEL M=2 Z=24 | SONNENRAD |
| 64 | 10 16 746 2 | 2 | ROTARY SHAFT LIP SEAL DIN 3760 A 45X60 | RADIALWELLENDICHTRING |
| 66 | 74 51 391 01 | 1 | DEEP GROOVE BALL BEARING DIN 625 60 | RILLENKUGELLAGER |
| 67 | 42 81 021 08 | 1 | LOCKING RING DIN 472 68X2,5 | SICHERUNGSRING |
| 68 | 53 01 515 08 | 1 | O-RING DIN 3771 35,00X2,00 NBR70 | O-RING |
| 69 | 72 64 149 01 | 1 | O-RING 20X4 NBR 70 | O-RING |
| 70 | 92 77 167 01 | 1 | MULTI-DISC CARRIER | LAMELLENTRAEGER |
| 71 | 74 74 040 01 | 1 | INNER RING 40X45X20 | INNENRING |
| 72 | 10 87 565 7 | 1 | LOCKING RING DIN 471 40X1,75 480H SPF | SICHERUNGSRING |
| 73 | 72 64 400 01 | 1 | O-RING 165X3 FKM 70 | O-RING |
| 74 | 40 01 620 | 8 | SOCKET HEAD SCREW ISO 4762 M8X35 8.8 | ZYLINDERSCHRAUBE |
| 77 | 92 75 543 01 | 1 | VENTILATION CONNECTING PIECE<br>⇨ 9 275 543 01 92 75 543 01 | ENTLUEFTUNGSSTUTZEN |
| 78 | 47 77 045 08 | 1 | STOP PLUG VSTIM22X1,5ED A3P | STOPFEN |
| 80 | 50 20 363 01 | 1 | SPRING LOADED MULTI-DISC BRAKE | FEDERDRUCKLAMELLENBREMS |
| (1) | 57 19 355 08 | 1 | ACTUATING UNIT | BETAETIGUNGSEINHEIT |
| (999) | 90 01 665 2 | 1 | BRAKE PACKING SET | BREMSE-DICHTUNGSSATZ |
| 85 | 93 89 964 01 | 1 | MOTOR FLANGE | MOTORFLANSCH |
| 86 | 49 00 323 | 10 | SOCKET HEAD SCREW ISO 4762 M8X90 8.8 | ZYLINDERSCHRAUBE |
| 87 | 47 77 056 08 | 2 | STOP PLUG VSTIM27X2ED A3P | STOPFEN |
| 90 | 93 89 965 01 | 1 | TOOTH LOCK WASHER 12X99/25RD | ZAHNSCHEIBE |
| 91 | 43 12 005 01 | 3 | CORE PIN ISO 8740 3X20 | KERBSTIFT |
| 92 | 42 80 029 08 | 1 | LOCKING RING DIN 471 35X1,5 | SICHERUNGSRING |
| 97 | 72 64 057 08 | 1 | O-RING 95X3 NBR70 | O-RING |

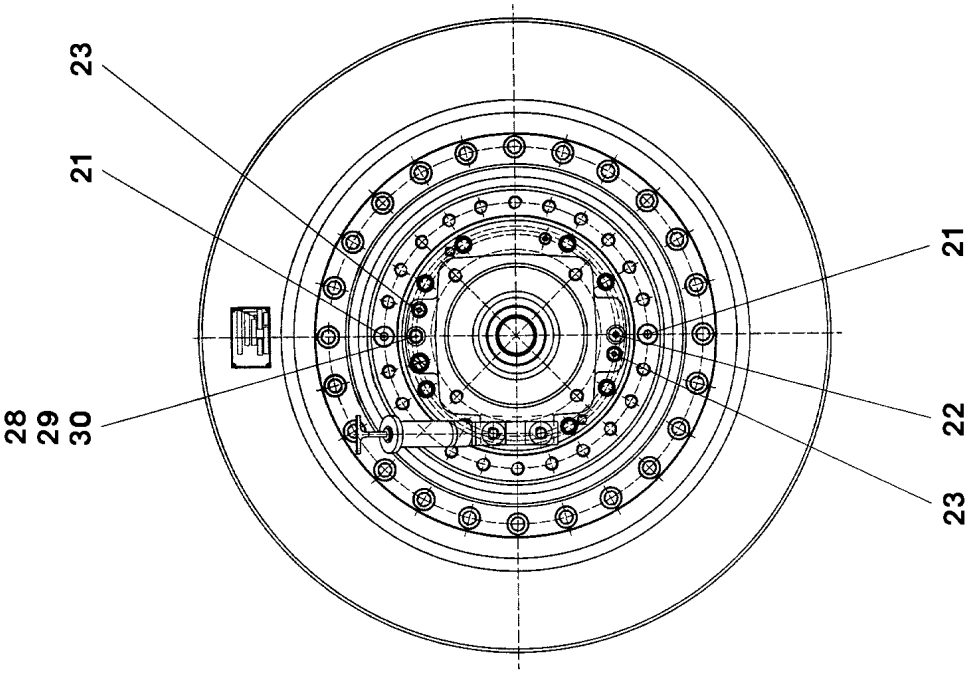
23
21
28
29
30
21
22
23

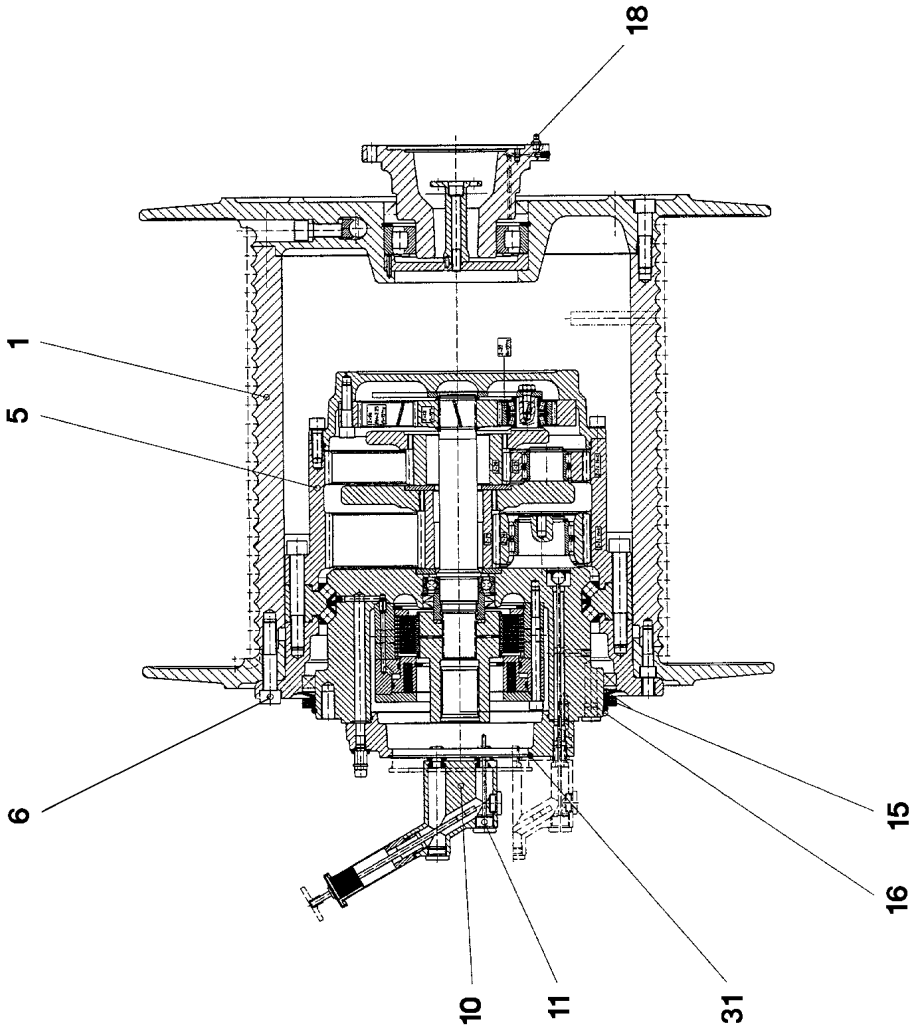
18
1
5
6
10
11
31
15
16

| Pos. | Item | Quantity | Description | Bezeichnung |
|---|---|---|---|---|
| 1 | 93 87 596 01 | 1 | ROPE DRUM<br>➪ 9 387 596 01 93 87 596 01 | SEILTROMMEL |
| 5 | 93 87 598 01 | 1 | PLANETARY GEARBOX 3-STUFIG<br>➪ 9 387 598 01 93 87 598 01 | PLANETENGETRIEBE |
| 6 | 40 43 177 01 | 16 | SOCKET HEAD SCREW ISO 4762 M16X80 1 | ZYLINDERSCHRAUBE |
| 10 | 92 75 212 01 | 1 | OIL-LEVEL GAUGE INSTALLATION<br>➪ 9 275 212 01 92 75 212 01 | OELMESSSTABEINRICHTUNG |
| 11 | 92 77 587 01 | 1 | VALVE OPERATION | VENTILBETAETIGUNG |
| 15 | 71 09 087 01 | 1 | V-RING 350 NBR,60 SHORE | V-RING |
| 16 | 72 64 284 08 | 1 | O-RING 290X6 NBR70 | O-RING |
| 18 | 77 43 011 01 | 1 | HYDRAULIC-TYPE LUBRICAT.NIPPLE DIN 7 | KEGELSCHMIERNIPPEL |
| 21 | 47 77 044 08 | 2 | STOP PLUG VSTIM16X1,5ED A3P | STOPFEN |
| 22 | 47 77 043 08 | 1 | STOP PLUG VSTI M12X1,5 A3P | STOPFEN |
| 23 | 47 77 055 08 | 2 | STOPPER PLUG VSTIM10X1ED A3P | BLINDSTOPFEN |
| 28 | 47 07 300 08 | 1 | FLANGE JOINT XGAI6-LM A3P | VERSCHRAUBUNG |
| 29 | 71 01 017 08 | 1 | SEALING RING DIN 7603 A 12X16X1,5 CU | DICHTRING |
| 30 | 72 11 147 01 | 1 | VENTILATION VALVE | ENTLUEFTUNGSVENTIL |
| 31 | 72 64 266 01 | 1 | O-RING 155X3 NBR 70 SPF | O-RING |

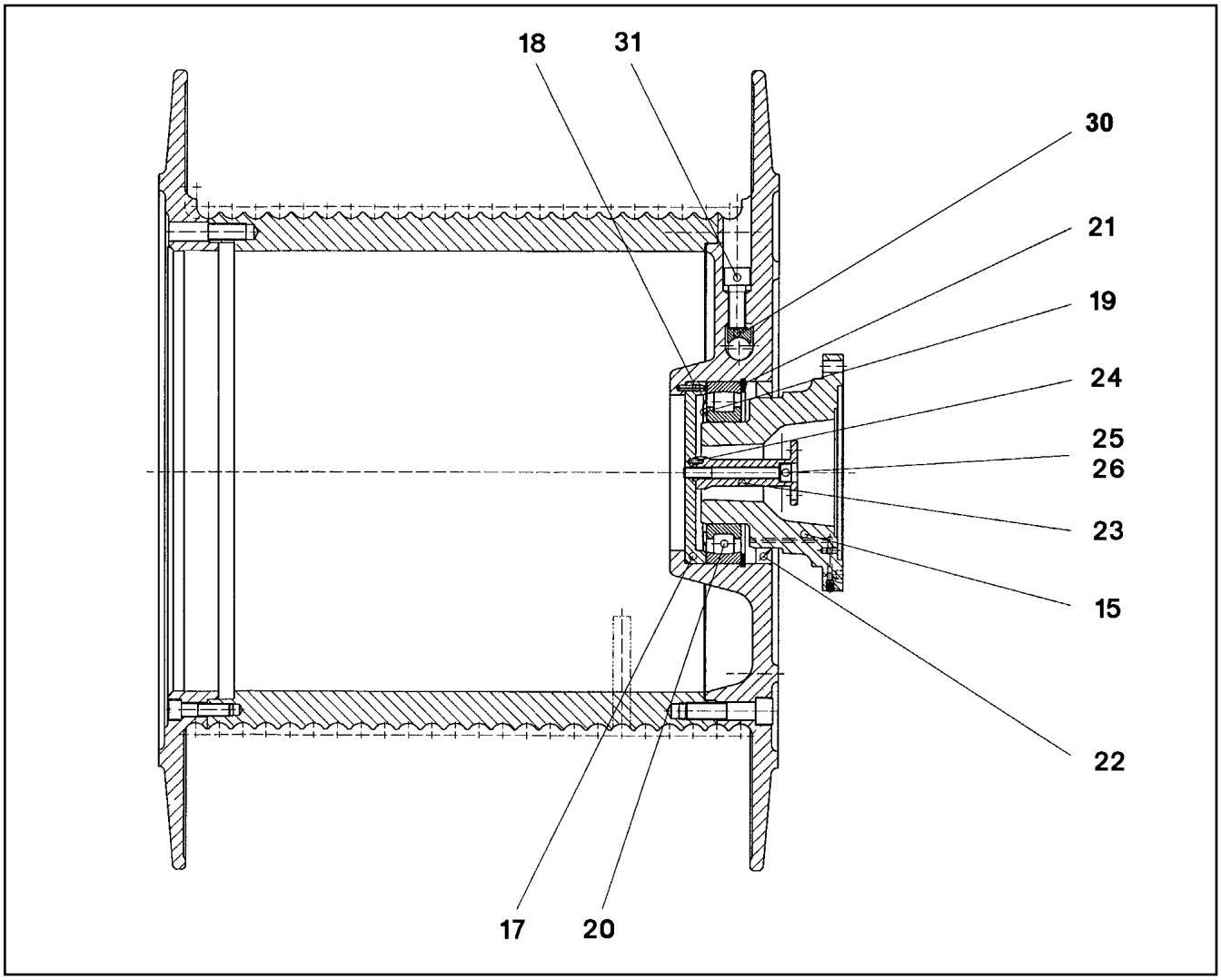


| Pos. | Item | Quantity | Description | Bezeichnung |
|---|---|---|---|---|
| 15 | 92 75 048 01 | 1 | FLANGE | FLANSCH |
| 17 | 92 75 046 01 | 1 | COVER 170X19,5 | DECKEL |
| 18 | 43 12 024 01 | 1 | CORE PIN ISO 8740 4H11X24 ST | KERBSTIFT |
| 19 | 74 72 725 01 | 1 | BEARING COVER RING | LAGERABDECKRING |
| 20 | 54 05 090 08 | 1 | SWIVEL-JOINT ROLLER BEARING DIN 635 2 | TONNENLAGER |
| 21 | 42 81 059 08 | 1 | LOCKING RING DIN 472 170X4 | SICHERUNGSRING |
| 22 | 71 00 325 08 | 1 | ROTARY SHAFT LIP SEAL DIN 3760 A 140X1 | RADIALWELLENDICHTRING |
| 23 | 92 75 047 01 | 1 | FLANGE | FLANSCH |
| 24 | 43 11 002 01 | 1 | CORE PIN DIN 1472 4X12 | KERBSTIFT |
| 25 | 46 00 239 | 1 | SOCKET HEAD SCREW ISO 4762 M10X90 8. | ZYLINDERSCHRAUBE |
| 26 | 42 39 015 08 | 1 | LOCK WASHER VS 10 | SICHERUNGSSCHEIBE |
| 30 | 92 76 388 01 | 1 | CLAMPING PIECE 22 | KLEMMSTUECK |
| 31 | 40 43 169 01 | 4 | SOCKET HEAD SCREW ISO 4762 M16X40 1 | ZYLINDERSCHRAUBE |

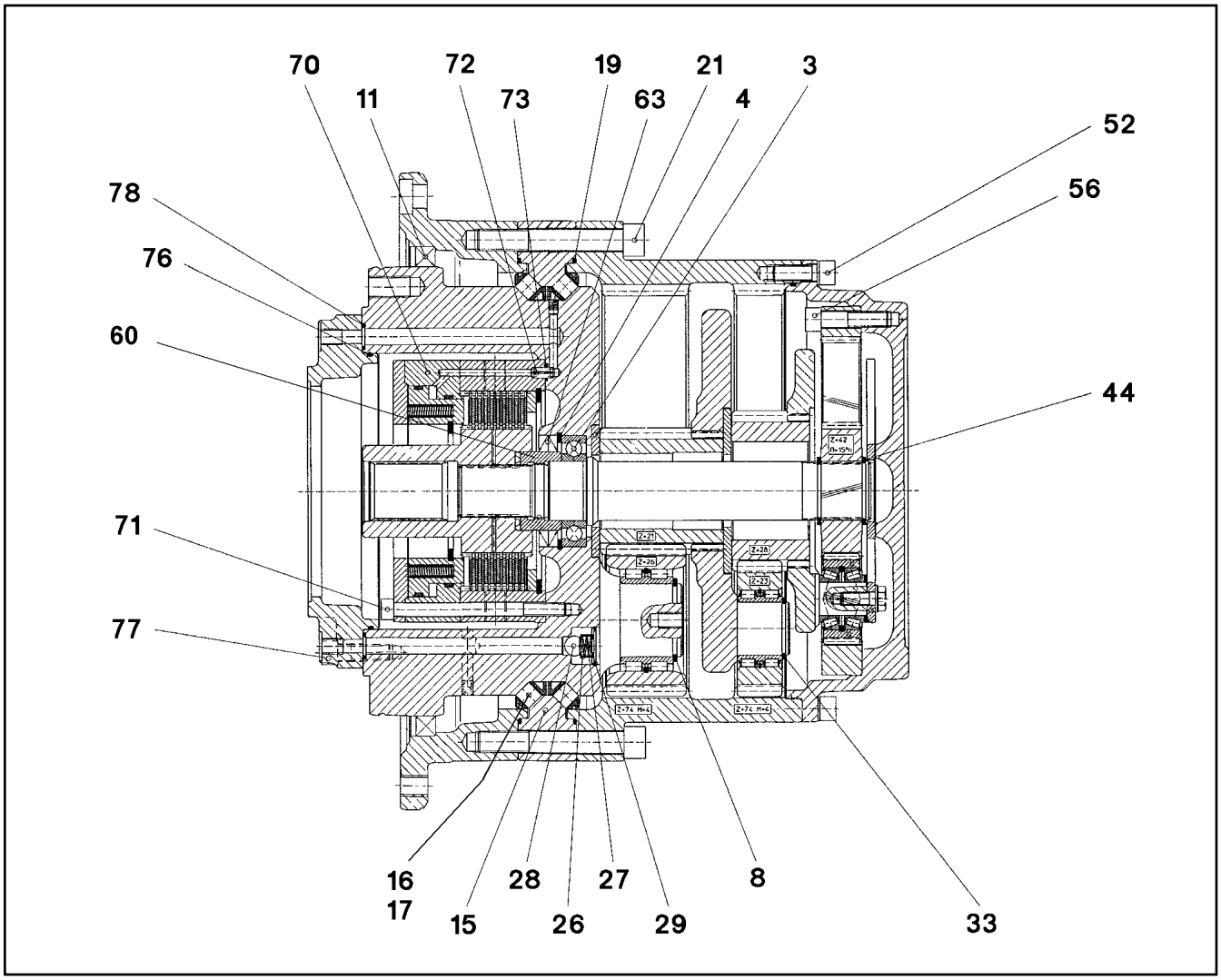


| Pos. | Item | Quantity | Description | Bezeichnung |
|---|---|---|---|---|
| 3 | 10 01 360 1 | 1 | STEEP-ANGLE BEARING DIN 628 QJ-209-N2 | SCHRAEGKUGELLAGER |
| 4 | 42 81 027 08 | 1 | LOCKING RING DIN 472 85X3 | SICHERUNGSRING |
| 8 | 53 01 333 08 | 5 | LOCKING RING DIN 471 55X3 | SICHERUNGSRING |
| 11 | 71 00 546 01 | 1 | ROTARY SHAFT LIP SEAL DIN 3760 AS 340X | RADIALWELLENDICHTRING |
| 15 | 92 76 017 01 | 1 | BEARING RING | LAGERRING |
| 16 | 92 75 143 01 | 38 | ROLLER CAGE | ROLLENKAEFIG |
| 17 | 74 70 061 01 | 114 | CYL.ROLLER 14X14 | ZYLINDERROLLE |
| 19 | 72 64 299 01 | 2 | O-RING 330X3 NBR 70 | O-RING |
| 21 | 40 43 181 01 | 24 | SOCKET HEAD SCREW ISO 4762 M16X110 1 | ZYLINDERSCHRAUBE |
| 26 | 92 75 207 01 | 1 | BUSHING 15,1X27,8X10 | BUCHSE |
| 27 | 92 75 208 01 | 1 | PRESSURE SPRING | DRUCKFEDER |
| 28 | 74 70 038 01 | 1 | STEEL BALL DIN 5401 15 | STAHLKUGEL |
| 29 | 42 81 100 01 | 1 | LOCKING RING DIN 472 28X1,5 | SICHERUNGSRING |
| 33 | 42 80 033 08 | 3 | LOCKING RING DIN 471 40X2,5 | SICHERUNGSRING |
| 44 | 42 80 040 08 | 2 | LOCKING RING DIN 471 45X2,5 | SICHERUNGSRING |
| 52 | 10 87 557 8 | 8 | SOCKET HEAD SCREW ISO 4762 M12X35 8 | ZYLINDERSCHRAUBE |
| 56 | 10 01 265 9 | 8 | SOCKET HEAD SCREW ISO 4762 M12X50 10 | ZYLINDERSCHRAUBE |
| 60 | 93 87 608 01 | 1 | SLOTTED NUT M42X1,5 42CRMO4+QT+S | NUTMUTTER |
| 63 | 71 00 626 01 | 2 | ROTARY SHAFT LIP SEAL BAB 60X85X7 N | RADIALWELLENDICHTRING |
| 70 | 50 20 372 01 | 1 | SPRING LOADED MULTI-DISC BRAKE | FEDERDRUCKLAMELLENBREMS |
| 71 | 40 02 442 | 12 | SOCKET HEAD SCREW ISO 4762 M10X130 1 | ZYLINDERSCHRAUBE |
| 72 | 43 20 079 08 | 1 | DOWEL PIN ISO 8752 A 8X16 | SPANNSTIFT |
| 73 | 50 26 529 08 | 1 | O-RING 8X2 NBR70 | O-RING |
| 76 | 76 10 217 03 | 1 | O-RING 195X3 NBR 70 | O-RING |
| 77 | 40 43 120 08 | 8 | SOCKET HEAD SCREW ISO 4762 M12X40 10 | ZYLINDERSCHRAUBE |
| 78 | 72 64 056 08 | 8 | O-RING 14X3 NBR70 | O-RING |

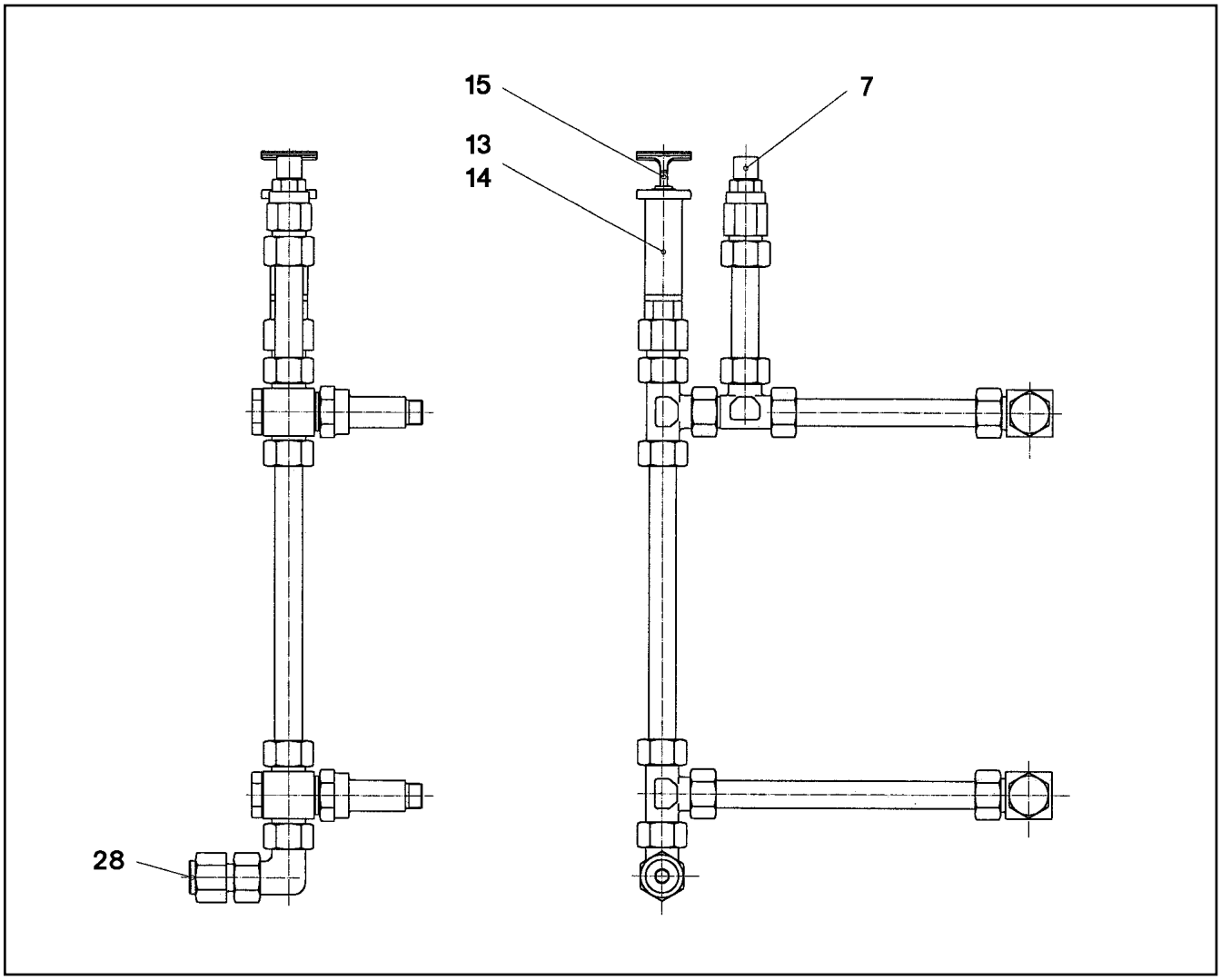


| Pos. | Item | Quantity | Description | Bezeichnung |
|---|---|---|---|---|
| 7 | 72 11 088 01 | 1 | VENTILATION UNIT ST VERZ | BE- UND ENTLUEFTUNGSFILTE |
| 13 | 92 75 019 01 | 1 | VENTILATION CONNECTING PIECE | ENTLUEFTUNGSSTUTZEN |
| 14 | 76 10 225 03 | 1 | SEALING RING 19,6X24,3X1,5 | DICHTRING |
| 15 | 92 76 102 01 | 1 | OIL DIPSTICK 1 1/8" | OELMESSSTAB |
| 28 | 47 77 045 08 | 1 | STOP PLUG VSTIM22X1,5ED A3P | STOPFEN |

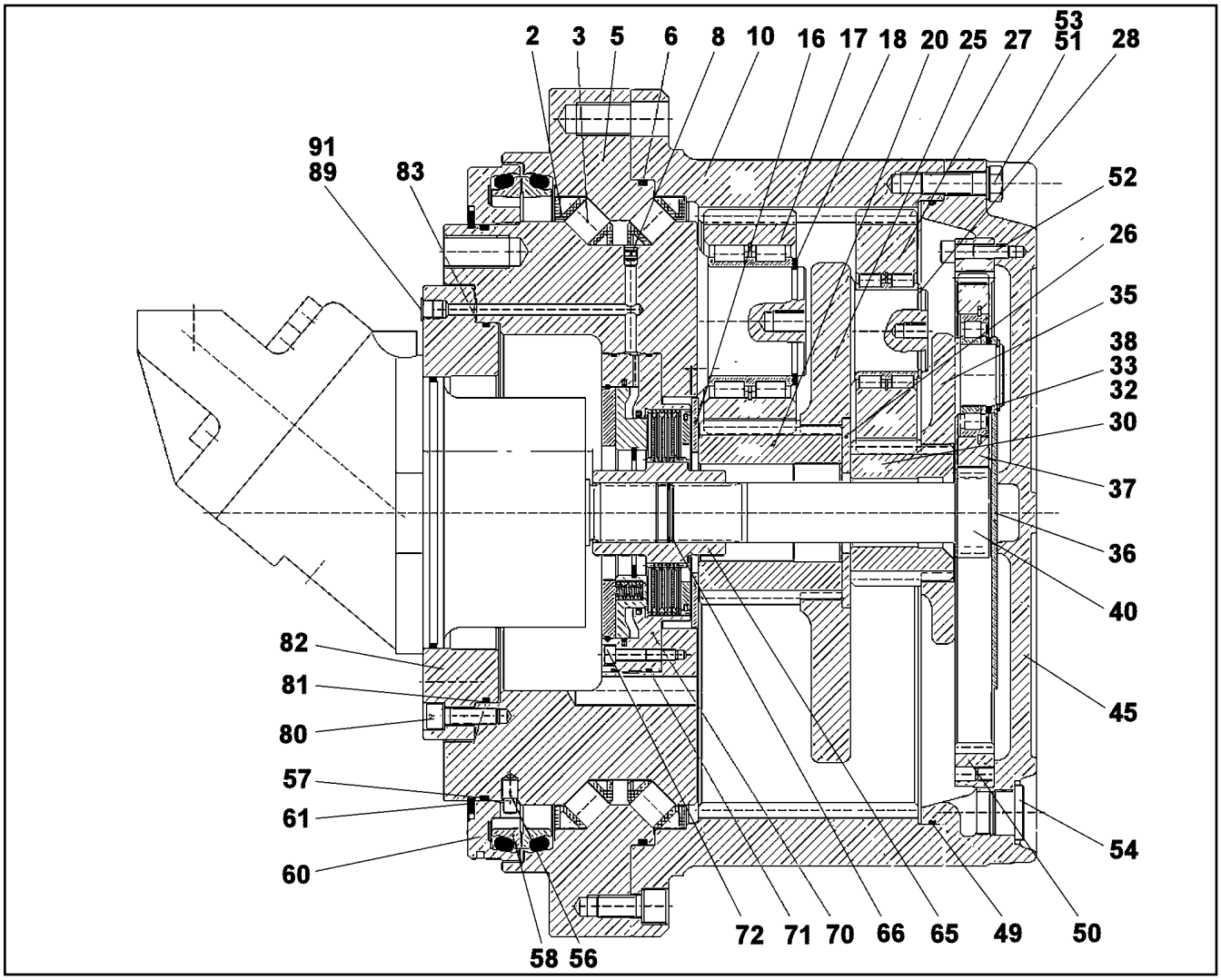


| Pos. | Item | Quantity | Description | Bezeichnung |
|---|---|---|---|---|
| 2 | 94 42 231 03 | 32 | ROLLER CAGE | ROLLENKAEFIG |
| 3 | 74 70 059 01 | 96 | CYL.ROLLER 24X24 | ZYLINDERROLLE |
| 5 | 94 42 439 03 | 1 | BEARING RING | LAGERRING |
| 6 | 76 10 617 03 | 1 | O-RING 470X5 NBR 70 | O-RING |
| 8 | 76 10 819 03 | 2 | SEALING PLUG 9 | DICHTSTOPFEN |
| 10 | 94 44 413 03 | 1 | INNER WHEEL M=5 Z=86 | INNENRAD |
| 11 | 40 00 342 03 | 8 | SOCKET HEAD SCREW ISO 4762 M16X35 1 | ZYLINDERSCHRAUBE |
| 16 | 94 44 408 03 | 1 | HOLDING RING 170X90X5 S235J2G3 | HALTERING |
| 17 | 94 44 414 03 | 5 | PLANET WHEEL M=5 Z=30 | PLANETENRAD |
| 18 | 46 30 003 03 | 5 | LOCKING RING DIN 471 80X4 | SICHERUNGSRING |
| 20 | 94 44 416 03 | 1 | SUN WHEEL M=5 Z=24 | SONNENRAD |
| 25 | 94 44 417 03 | 1 | PLANETARY CARRIER | PLANETENTRAEGER |
| 26 | 92 77 007 01 | 1 | RETAINING DISK 140X60X6 | HALTESCHEIBE |
| 27 | 94 44 418 03 | 3 | PLANET WHEEL M=5 Z=23 | PLANETENRAD |
| 28 | 10 87 566 1 | 3 | LOCKING RING DIN 471 60X3 480H SPF | SICHERUNGSRING |
| 30 | 90 20 199 1 | 1 | SUN WHEEL M=5 Z=19 | SONNENRAD |
| 32 | 42 20 119 01 | 3 | SUPPORTING WASHER AEHNL.DIN 988 45 | STUETZSCHEIBE |
| 33 | 42 20 032 01 | 3 | SHIM RING DIN 988 45X56X1 St BLANK | PASSSCHEIBE |
| 35 | 94 44 423 03 | 1 | PLANETARY CARRIER | PLANETENTRAEGER |
| 36 | 94 44 424 03 | 1 | THRUST WASHER 260X4 | ANLAUFSCHEIBE |
| 37 | 94 44 425 03 | 3 | PLANET WHEEL M=3,75 Z=37 | PLANETENRAD |
| 38 | 42 80 032 03 | 3 | LOCKING RING DIN 471 45X1,75 | SICHERUNGSRING |
| 40 | 94 44 427 03 | 1 | DRIVE SHAFT M=3,75 Z=15 17CrNiMo6 | ANTRIEBSWELLE |
| 45 | 94 44 428 03 | 1 | END COVER | VERSCHLUSSDECKEL |
| 49 | 72 64 203 08 | 1 | O-RING 440X4 NBR70 | O-RING |
| 50 | 94 44 429 03 | 1 | INNER WHEEL M=3,75 Z=90 | INNENRAD |

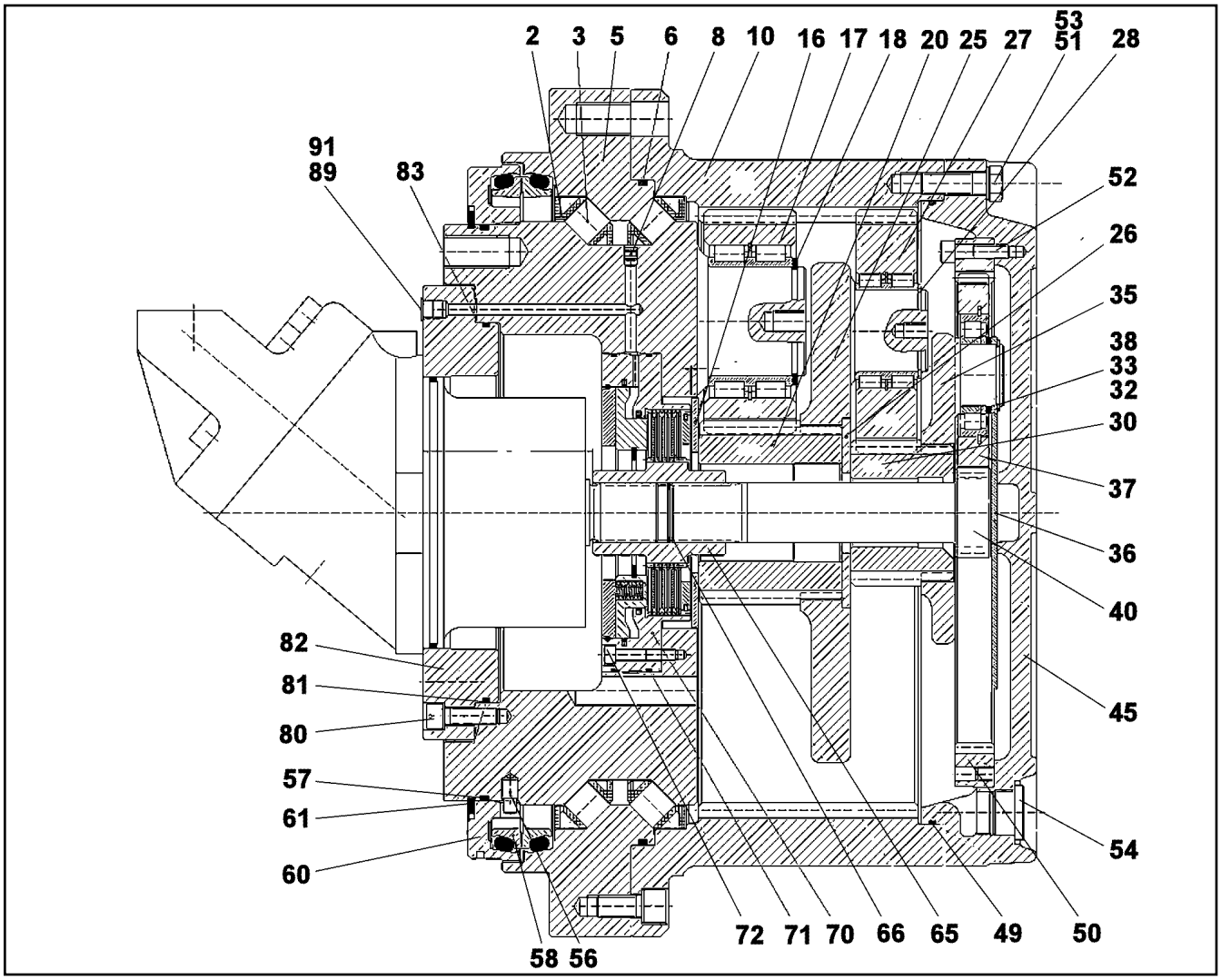


| Pos. | Item | Quantity | Description | Bezeichnung |
|---|---|---|---|---|
| 51 | 46 00 237 | 12 | SOCKET HEAD SCREW ISO 4762 M16X50 8. | ZYLINDERSCHRAUBE |
| 52 | 40 43 127 | 24 | SOCKET HEAD SCREW ISO 4762 M10X40 1 | ZYLINDERSCHRAUBE |
| 53 | 42 39 020 01 | 12 | LOCK WASHER VS 16 | SICHERUNGSSCHEIBE |
| 54 | 40 41 242 | 3 | SCREW PLUG DIN 908 M33X2 ST | VERSCHLUSSSCHRAUBE |
| 56 | 94 42 284 03 | 1 | PIN | STIFT |
| 57 | 76 10 378 03 | 1 | O-RING 400X5 NBR 70 | O-RING |
| 58 | 76 10 244 03 | 1 | AXIAL FACE SEAL | GLEITRINGDICHTUNG |
| 60 | 94 42 287 03 | 1 | TERMINAL RING | ABSCHLUSSRING |
| 61 | 76 10 186 03 | 1 | SNAP RING 420X4.5 | SPRENGRING |
| 65 | 94 44 432 03 | 1 | MULTI-DISC CARRIER | LAMELLENTRAEGER |
| 66 | 42 81 102 01 | 1 | LOCKING RING DIN 472 41X1,75 | SICHERUNGSRING |
| 70 | 50 20 370 01 | 1 | SPRING LOADED MULTI-DISC BRAKE | FEDERDRUCKLAMELLENBREMS |
| (4) | 73 73 506 03 | 9 | OUTER MULTI-DISC | AUSSENLAMELLE |
| (5) | 73 73 505 03 | 8 | INTERNAL MULTI-DISC | INNENLAMELLE |
| (999) | 96 99 977 08 | 1 | SEAL KIT F.BRAKE | DS BREMSE |
| 71 | 72 64 696 14 | 2 | O-RING 225X3 NBR 70 | O-RING |
| 72 | 49 80 840 | 12 | SOCKET HEAD SCREW ISO 4762 M8X45 12. | ZYLINDERSCHRAUBE |
| 80 | 94 44 433 03 | 1 | MOTOR FLANGE 60X345/190RD | MOTORFLANSCH |
| 81 | 72 64 282 01 | 1 | O-RING 265X4 NBR 70 | O-RING |
| 82 | 40 43 164 | 8 | SOCKET HEAD SCREW ISO 4762 M12X35 1 | ZYLINDERSCHRAUBE |
| 83 | 72 64 032 08 | 2 | O-RING 12X2 NBR80 | O-RING |
| 89 | 47 77 049 14 | 1 | FLANGE JOINT AEHNL.ISO 8434 VSTI M14X1 | VERSCHRAUBUNG |
| 91 | 77 90 183 01 | 1 | BLANKING PLUG 13 | VERSCHLUSSSTOPFEN |
| 92 | 70 02 332 | 1 | CONICAL PLUG PE-LLD | KEGELSTOPFEN |
| 901 | 96 99 977 08 | 1 | SEAL KIT F.BRAKE | DS BREMSE |
| (1) | 71 09 500 01 | 1 | ROD PACKING 186 | STANGENDICHTUNG |

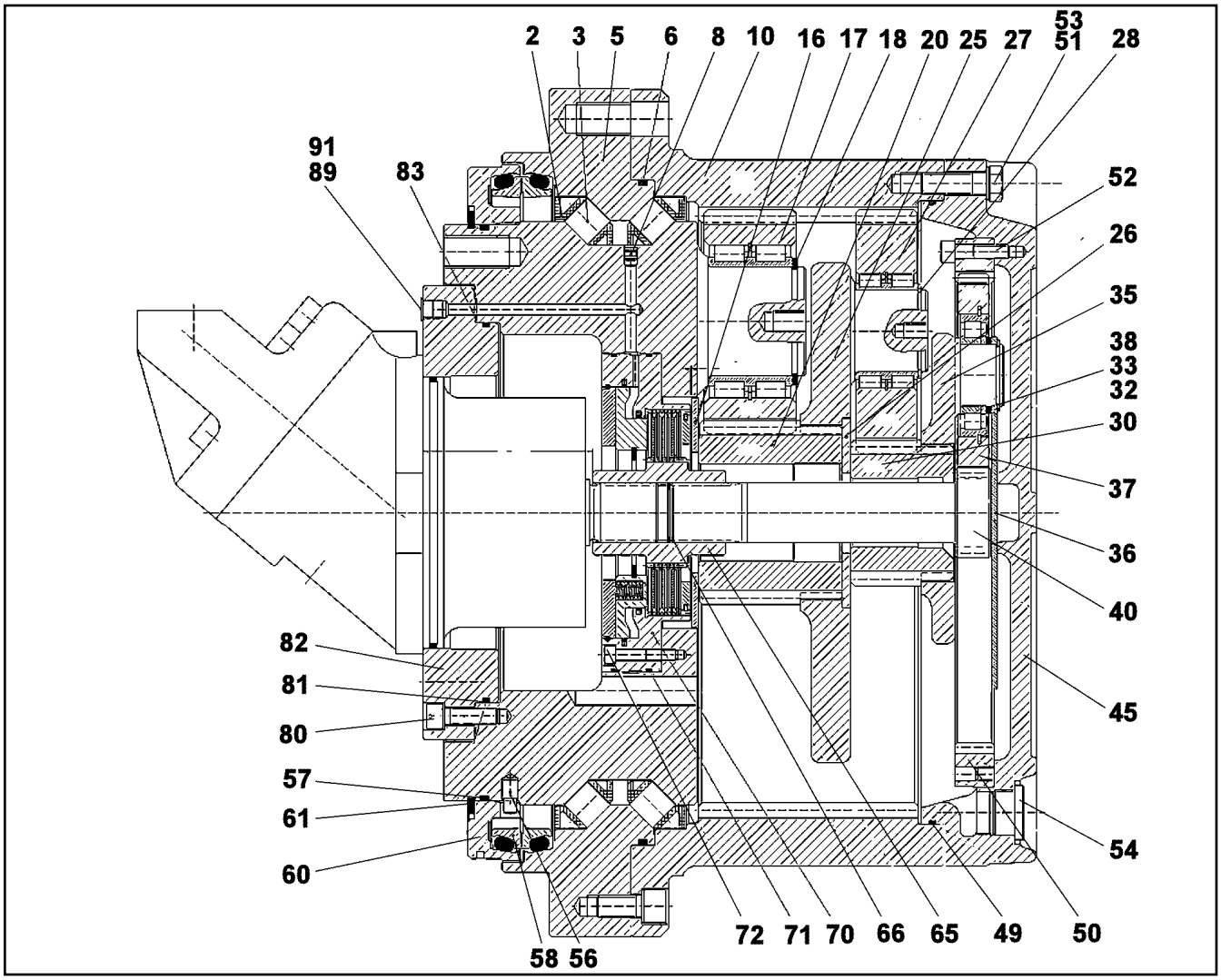


| Pos. | Item | Quantity | Description | Bezeichnung |
|---|---|---|---|---|
| (2) | 71 09 515 01 | 1 | ROD PACKING 140 | STANGENDICHTUNG |

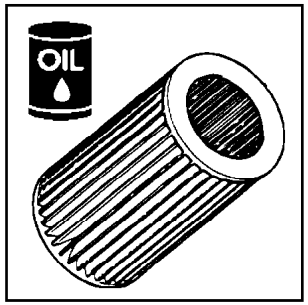


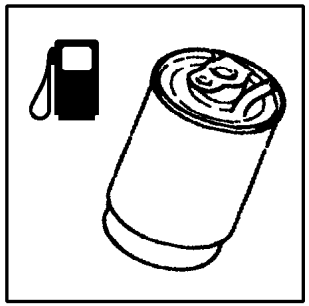

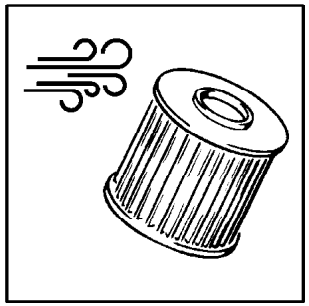

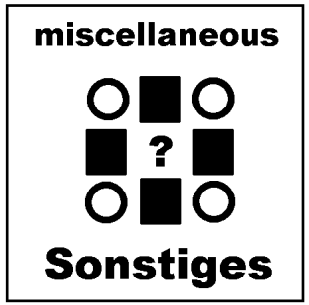


| | |
|---|---|
| **Ölfilter**<br>oil filter | **001 - 099** |
| **Kraftstofffilter**<br>fuel filter | **100 - 199** |
| **Luftfilter**<br>air filter | **200 - 299** |
| **Sonstiges**<br>miscellaneous | **300 - 399** |

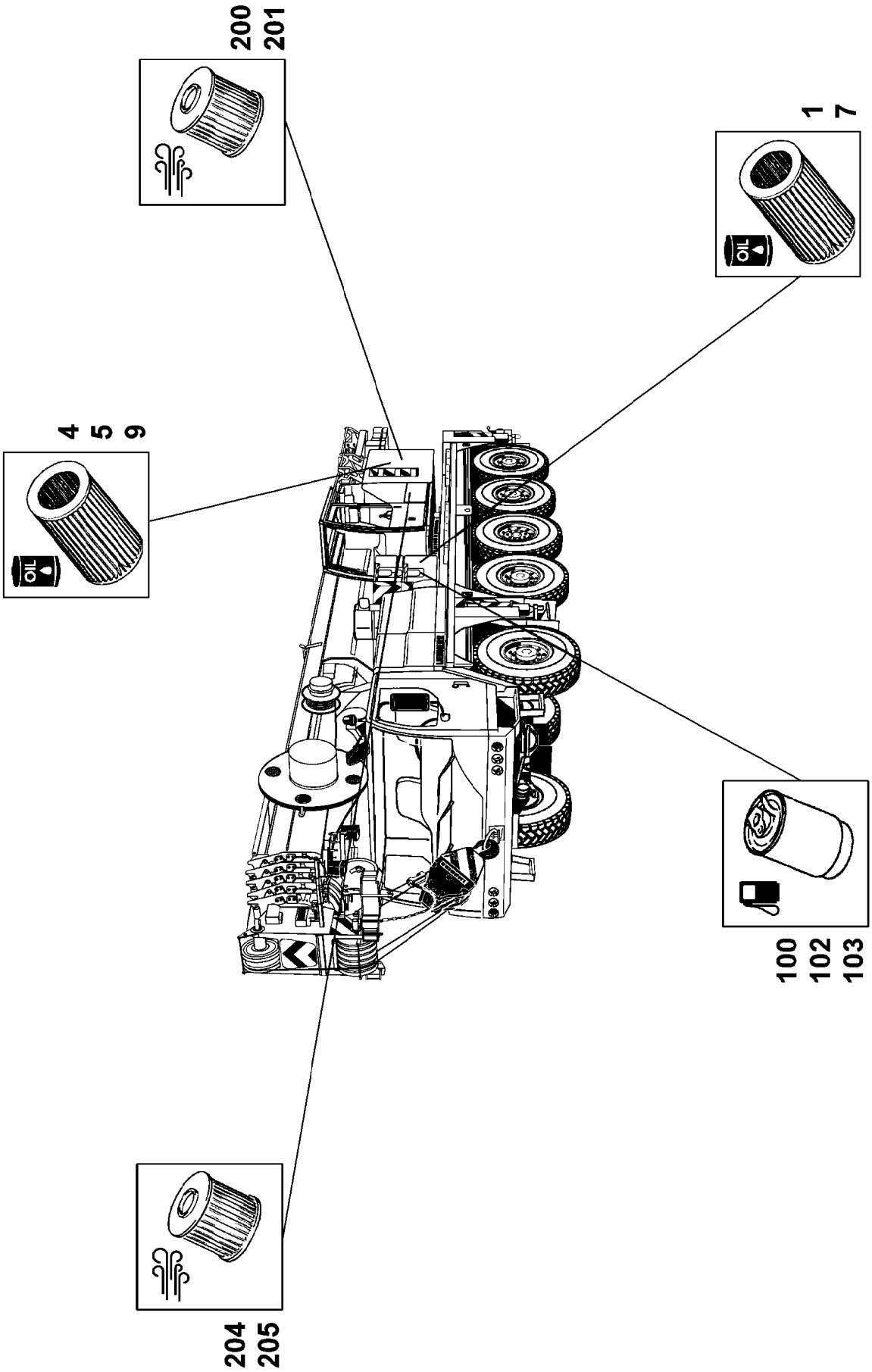
200
201
1
7
4
5
9
OIL
OIL
100
102
103
204
205

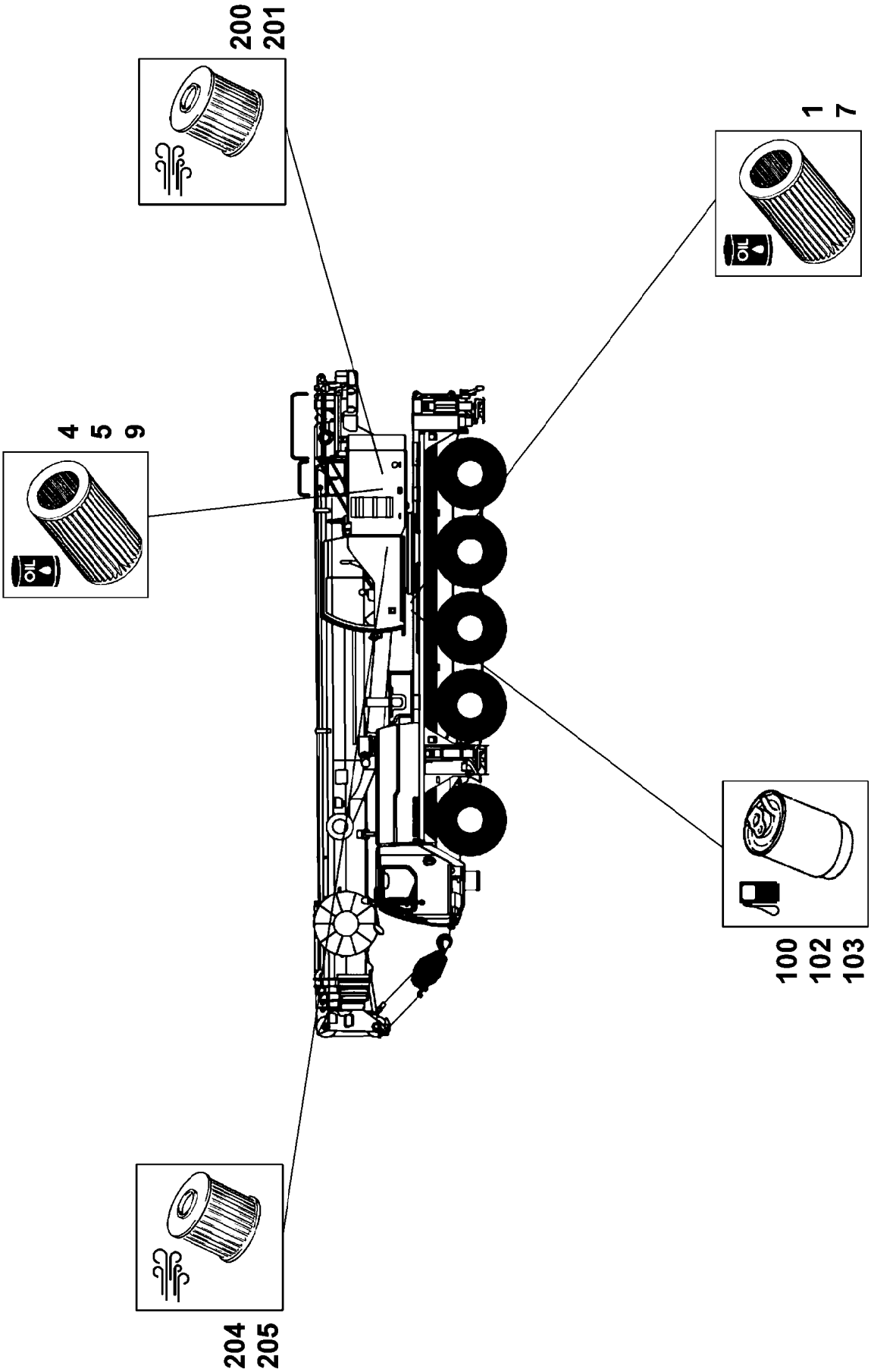


| | | |
|---|---|---|
| 16.2.2017<br>089562<br>LIEBHERR | **etk_en_de_048005 LTR 1100**<br><br>**FILTER PACKAGE**<br>**FILTERPAKET** | 456 (3/5)<br><br>⇨ **9 629 047 08**<br>**96 29 047 08** |

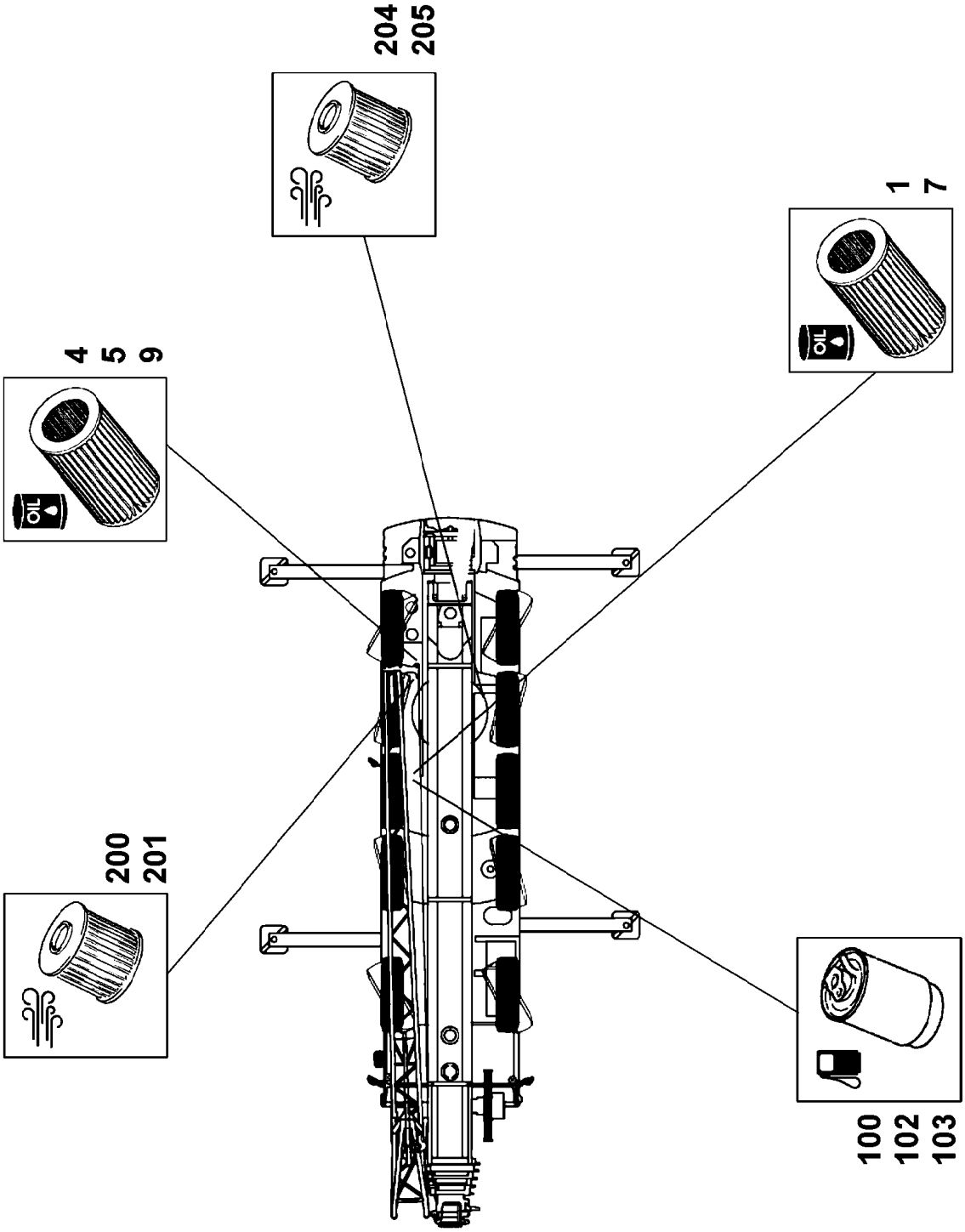
204
205
4
5
9
OIL
1
7
OIL
200
201
100
102
103

| Pos. | Item | Quantity | Description | Bezeichnung |
|---|---|---|---|---|
| 1 | 10 29 729 5 | 2 | EASY-CHANGE FILTER OEL 9µm | WECHSELFILTER |
| 4 | 51 06 692 08 | 2 | FILTER INSERT OEL 10µm | FILTEREINSATZ |
| 5 | 10 03 761 6 | 1 | FILTER INSERT OEL 10µm | FILTEREINSATZ |
| 7 | 10 03 283 5 | 1 | SPARE ELEMENT OEL | ERSATZELEMENT |
| 9 | 57 05 848 08 | 1 | FILTER INSERT OEL 10µm | FILTEREINSATZ |
| 100 | 10 42 994 6 | 1 | FUEL FINE FILTER KRAFTSTOFF 3µm | KRAFTSTOFFFEINFILTER |
| 102 | 55 31 740 08 | 1 | FUEL FILTER | KRAFTSTOFFFILTER |
| 103 | 10 04 430 2 | 1 | FUEL PREFILTER | KRAFTSTOFFVORFILTER |
| 200 | 51 06 718 08 | 2 | FILTER INSERT 1m³/min 10µm | FILTEREINSATZ |
| 201 | 57 13 523 08 | 1 | CARTOUCHE | KARTUSCHE |
| 204 | 57 18 500 08 | 1 | FILTER | FILTER |
| 205 | 10 27 855 3 | 1 | FILTER ELEMENT | FILTERELEMENT |

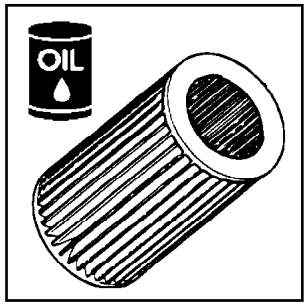


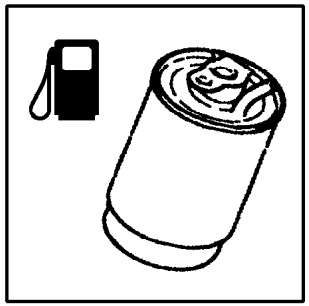

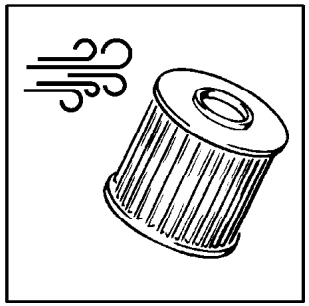

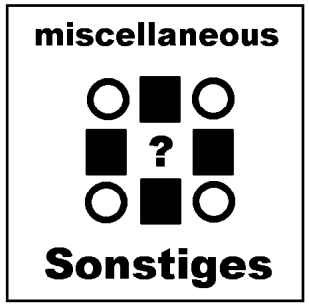


| | |
|---|---|
| **Ölfilter**<br>oil filter | **001 - 099** |
| **Kraftstofffilter**<br>fuel filter | **100 - 199** |
| **Luftfilter**<br>air filter | **200 - 299** |
| **Sonstiges**<br>miscellaneous | **300 - 399** |

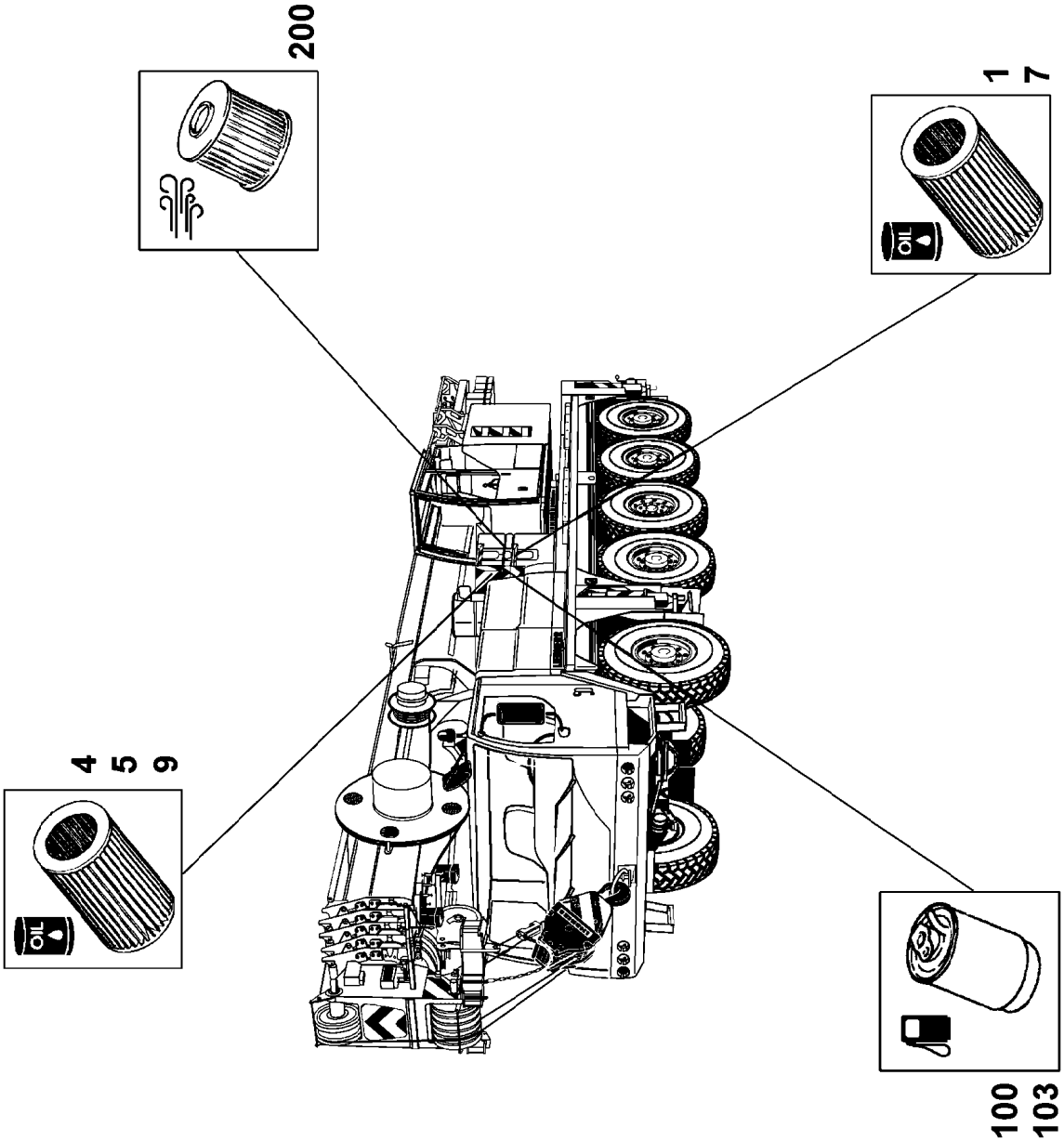
200
1
7
4
5
9
OIL
OIL
100
103

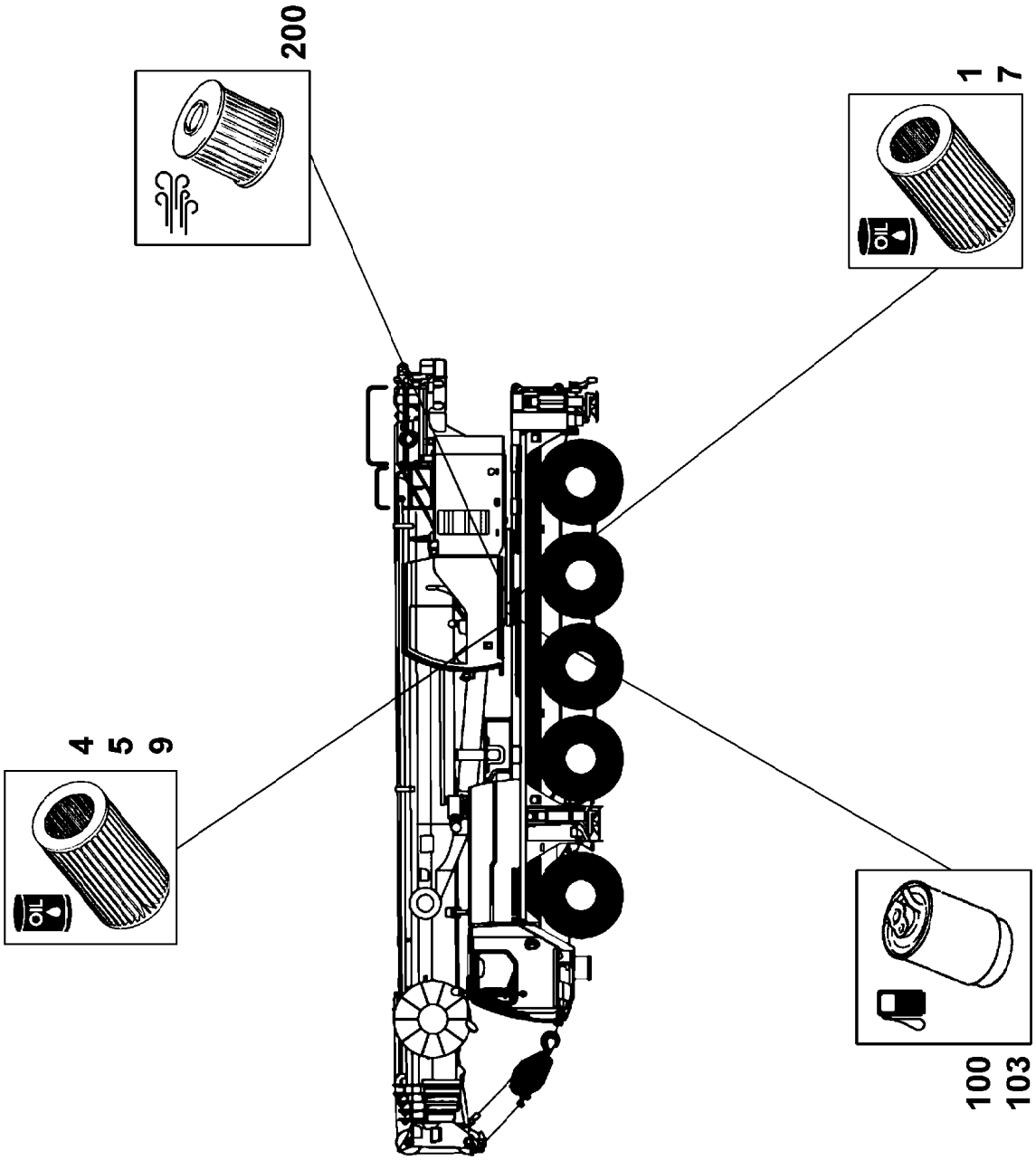
200
1
7
4
5
9
OIL
OIL
100
103

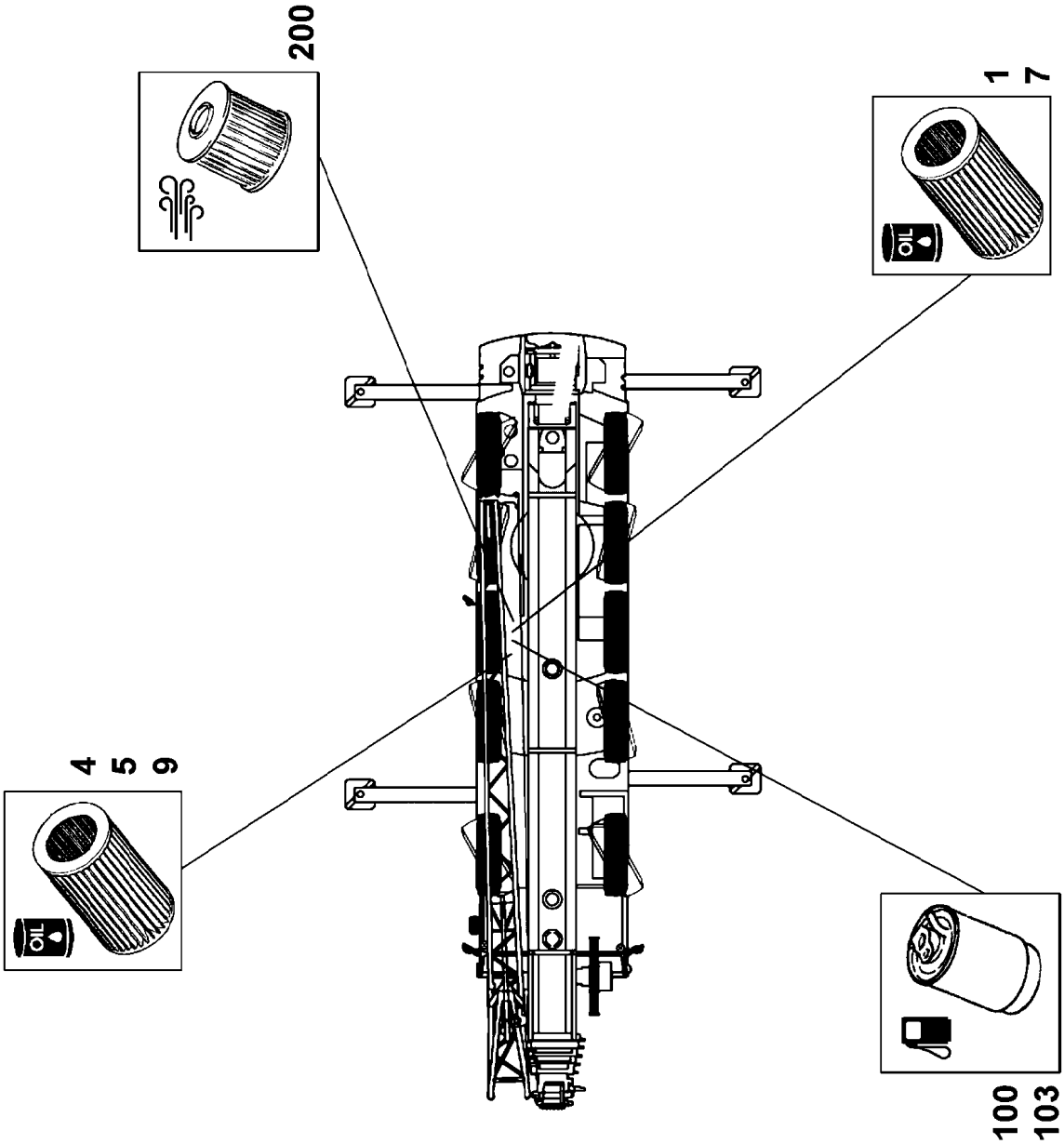
200
1
7
4
5
9
100
103

| Pos. | Item | Quantity | Description | Bezeichnung |
|---|---|---|---|---|
| 1 | 10 29 729 5 | 2 | EASY-CHANGE FILTER OEL 9µm | WECHSELFILTER |
| 4 | 51 06 692 08 | 2 | FILTER INSERT OEL 10µm | FILTEREINSATZ |
| 5 | 10 03 761 6 | 1 | FILTER INSERT OEL 10µm | FILTEREINSATZ |
| 7 | 10 03 283 5 | 1 | SPARE ELEMENT OEL | ERSATZELEMENT |
| 9 | 57 05 848 08 | 1 | FILTER INSERT OEL 10µm | FILTEREINSATZ |
| 100 | 10 42 994 6 | 1 | FUEL FINE FILTER KRAFTSTOFF 3µm | KRAFTSTOFFFEINFILTER |
| 103 | 10 04 430 2 | 1 | FUEL PREFILTER | KRAFTSTOFFVORFILTER |
| 200 | 51 06 718 08 | 2 | FILTER INSERT 1m³/min 10µm | FILTEREINSATZ |

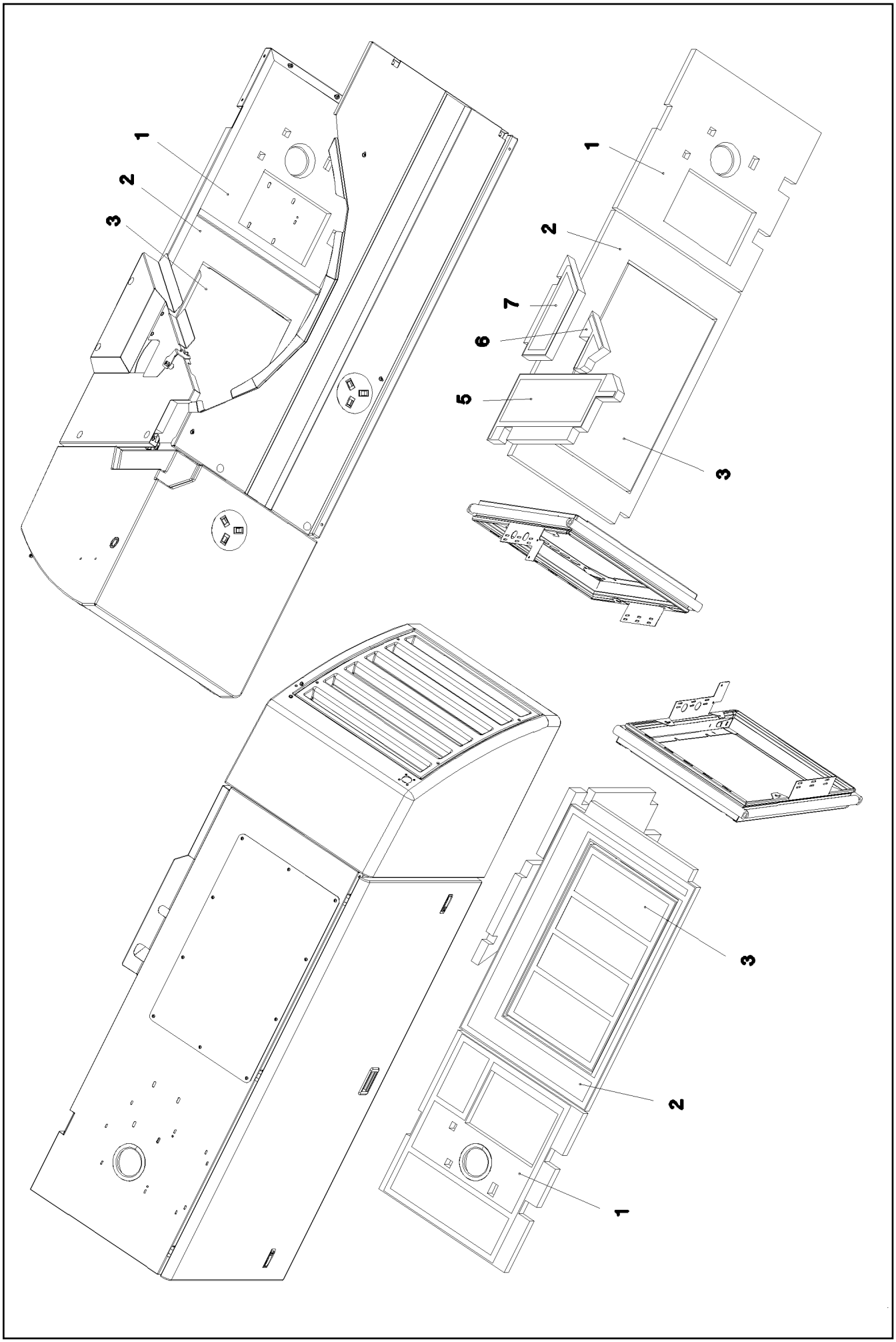


| | | |
|---|---|---|
| 16.2.2017<br>050825<br>LIEBHERR | **etk_en_de_048005 LTR 1100**<br><br>**SOUND PROOFING/SOUND INSULAT.**<br>**SCHALLDAEMMUNG** | ❑ 464 (1/2)<br><br>⇨ **9 640 266 08**<br>**96 40 266 08** |

| Pos. | Item | Quantity | Description | Bezeichnung |
|---|---|---|---|---|
| 1 | 97 38 622 08 | 1 | INSULATING MAT | DAEMMMATTE |
| 2 | 97 40 366 08 | 1 | INSULATING MAT | DAEMMMATTE |
| 3 | 97 50 499 08 | 1 | INSULATING MAT 40X850X500 ME-SCHAUM | DAEMMMATTE |
| 5 | 97 65 844 08 | 1 | INSULATING MAT 40X920X330 ME-SCHAUM | DAEMMMATTE |
| 6 | 97 65 846 08 | 1 | INSULATING MAT 40X290X260 ME-SCHAUM | DAEMMMATTE |
| 7 | 97 65 845 08 | 1 | INSULATING MAT 40X504X245 ME-SCHAUM | DAEMMMATTE |

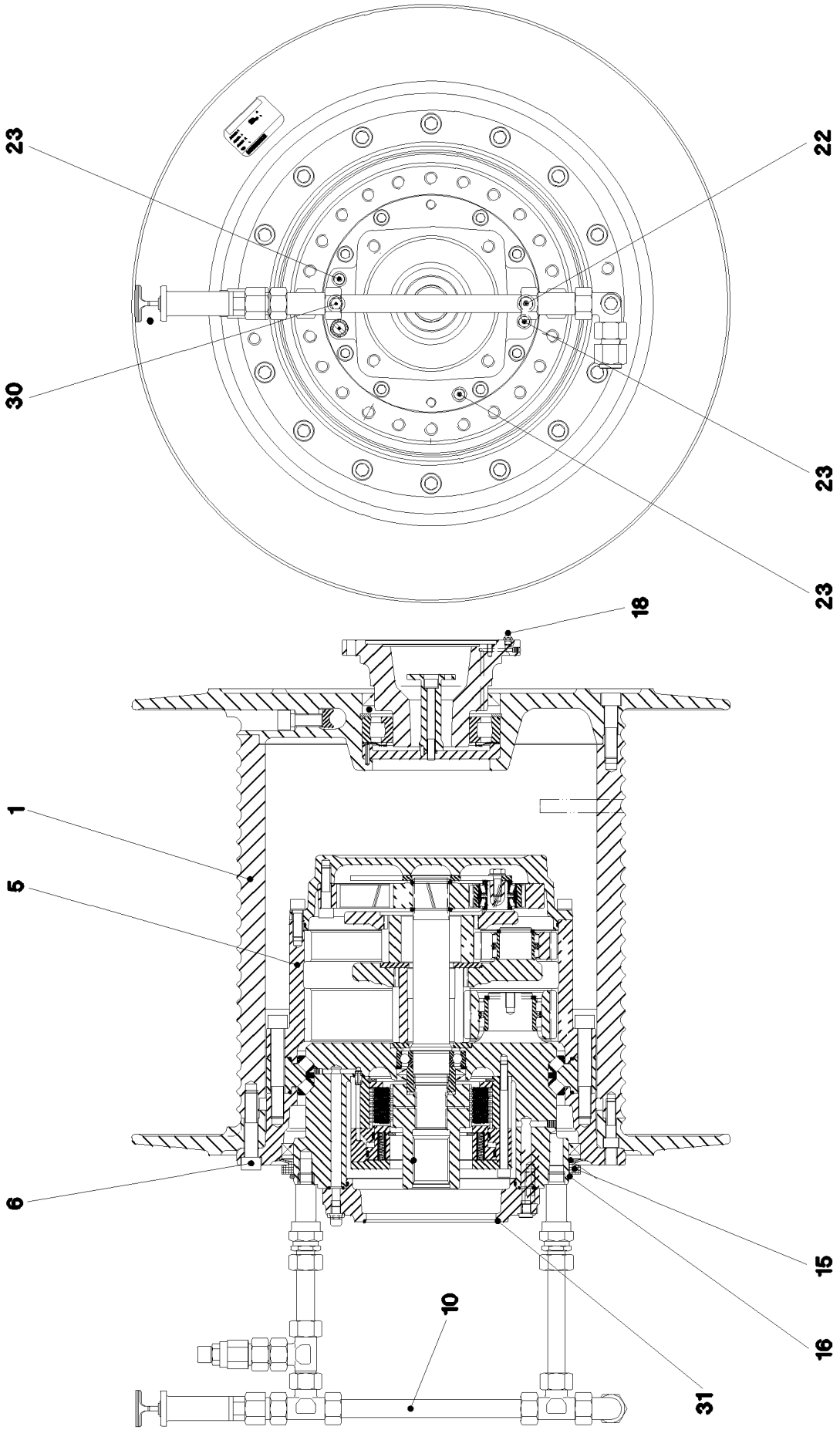


| | | |
|---|---|---|
| 16.2.2017<br>041360<br>LIEBHERR | **etk_en_de_048005 LTR 1100**<br><br>**COMPACT ROPE WINCH**<br>**KOMPAKTSEILWINDE** | ❑ 466 (1/2)<br><br>⇨ **9 685 586 01**<br>**96 85 586 01** |

| Pos. | Item | Quantity | Description | Bezeichnung |
|---|---|---|---|---|
| 1 | 93 87 596 01 | 1 | ROPE DRUM<br>➪ 9 387 596 01 93 87 596 01 | SEILTROMMEL |
| 5 | 96 86 071 01 | 1 | PLANETARY GEARBOX 3-STUFIG<br>➪ 9 686 071 01 96 86 071 01 | PLANETENGETRIEBE |
| 6 | 40 43 177 01 | 16 | SOCKET HEAD SCREW ISO 4762 M16X80 1 | ZYLINDERSCHRAUBE |
| 10 | 93 93 684 01 | 1 | OIL-GAUGING INSTRUMENT<br>➪ 9 393 684 01 93 93 684 01 | OELMESSEINRICHTUNG |
| 15 | 71 09 087 01 | 1 | V-RING 350 NBR,60 SHORE | V-RING |
| 16 | 72 64 215 08 | 1 | O-RING 300X6 NBR70 | O-RING |
| 18 | 77 43 011 01 | 1 | HYDRAULIC-TYPE LUBRICAT.NIPPLE DIN 7 | KEGELSCHMIERNIPPEL |
| 22 | 47 77 043 08 | 1 | STOP PLUG VSTI M12X1,5 A3P | STOPFEN |
| 23 | 47 77 055 08 | 3 | STOPPER PLUG VSTIM10X1ED A3P | BLINDSTOPFEN |
| 30 | 72 11 147 01 | 1 | VENTILATION VALVE | ENTLUEFTUNGSVENTIL |
| 31 | 72 64 266 01 | 1 | O-RING 155X3 NBR 70 SPF | O-RING |

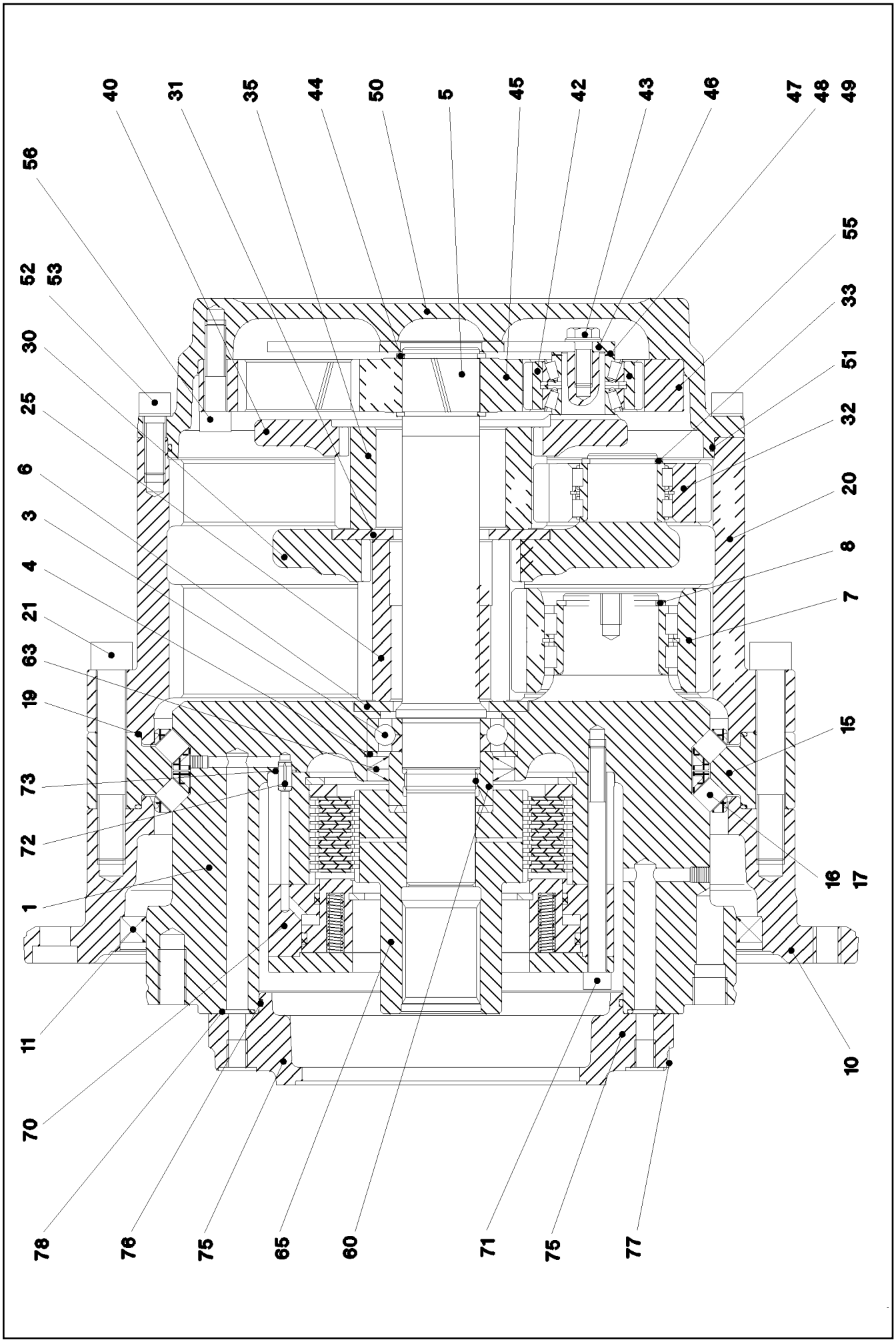


| | | |
|---|---|---|
| 16.2.2017<br>041361<br>LIEBHERR | etk_en_de_048005 LTR 1100<br><br>PLANETARY GEARBOX<br>PLANETENGETRIEBE | 468 (1/2)<br><br>⇨ 9 686 071 01<br>96 86 071 01 |

| Pos. | Item | Quantity | Description | Bezeichnung |
|---|---|---|---|---|
| 1 | 96 86 072 01 | 1 | CONNECTION CARRIER | ANSCHLUSSTRAEGER |
| 3 | 10 01 360 1 | 1 | STEEP-ANGLE BEARING DIN 628 QJ-209-N2 | SCHRAEGKUGELLAGER |
| 4 | 42 81 027 08 | 1 | LOCKING RING DIN 472 85X3 | SICHERUNGSRING |
| 5 | 93 87 600 01 | 1 | DRIVE SHAFT | ANTRIEBSWELLE |
| 6 | 92 76 013 01 | 1 | RETAINING DISK 100X55X6 | HALTESCHEIBE |
| 7 | 92 76 014 01 | 5 | PLANET WHEEL M=4 Z=26 | PLANETENRAD |
| 8 | 53 01 333 08 | 5 | LOCKING RING DIN 471 55X3 | SICHERUNGSRING |
| 10 | 92 76 398 01 | 1 | POWER TAKE-OFF FLANGE | ABTRIEBSFLANSCH |
| 11 | 96 53 356 08 | 1 | SEAL KIT ABTRIEBSFLANSCH | DICHTSATZ |
| (1) | 71 00 546 01 | 1 | ROTARY SHAFT LIP SEAL DIN 3760 AS 340X | RADIALWELLENDICHTRING |
| (2) | 71 09 087 01 | 1 | V-RING 350 NBR,60 SHORE | V-RING |
| (3) | 72 64 584 01 | 1 | O-RING 300X6 EPDM 70 | O-RING |
| 15 | 92 76 017 01 | 1 | BEARING RING | LAGERRING |
| 16 | 92 75 143 01 | 38 | ROLLER CAGE | ROLLENKAEFIG |
| 17 | 74 70 061 01 | 114 | CYL.ROLLER 14X14 | ZYLINDERROLLE |
| 19 | 72 64 299 01 | 2 | O-RING 330X3 NBR 70 | O-RING |
| 20 | 92 76 018 01 | 1 | INNER WHEEL M=4 Z=74 | INNENRAD |
| 21 | 40 43 181 01 | 24 | SOCKET HEAD SCREW ISO 4762 M16X110 1 | ZYLINDERSCHRAUBE |
| 25 | 92 76 019 01 | 1 | SUN WHEEL M=4 Z=21 | SONNENRAD |
| 30 | 92 76 020 01 | 1 | PLANETARY CARRIER | PLANETENTRAEGER |
| 31 | 92 76 028 01 | 1 | RETAINING DISK 125X55X6 | HALTESCHEIBE |
| 32 | 92 76 021 01 | 3 | PLANET WHEEL M=4 Z=23 | PLANETENRAD |
| 33 | 42 80 033 08 | 3 | LOCKING RING DIN 471 40X2,5 | SICHERUNGSRING |
| 35 | 92 76 029 01 | 1 | SUN WHEEL M=4 Z=28 | SONNENRAD |
| 40 | 93 87 601 01 | 1 | PLANETARY CARRIER | PLANETENTRAEGER |
| 42 | 93 87 602 01 | 3 | PLANET WHEEL M=2,25 Z=27 | PLANETENRAD |
| 43 | 40 97 070 01 | 3 | SCREW M 10X25 VERZ | SCHRAUBE |
| 44 | 42 80 040 08 | 2 | LOCKING RING DIN 471 45X2,5 | SICHERUNGSRING |
| 45 | 93 87 604 01 | 1 | SUN WHEEL M=2,25 Z=42 | SONNENRAD |
| 46 | 93 87 605 01 | 1 | THRUST WASHER | ANLAUFSCHEIBE |
| 47 | 42 20 621 01 | 3 | SHIM RING DIN 988 25X36X1,5 ST BLANK | PASSSCHEIBE |
| 48 | 42 20 614 01 | 9 | SHIM RING DIN 988 25X36X0,15 ST BLANK | PASSSCHEIBE |
| 49 | 42 20 615 01 | 6 | SHIM RING DIN 988 25X36X0,1 ST BLANK | PASSSCHEIBE |
| 50 | 93 87 606 01 | 1 | SUPPORT FLANGE | STUETZFLANSCH |
| 51 | 53 00 325 08 | 1 | O-RING 300X3 NBR70 | O-RING |
| 52 | 10 87 557 8 | 8 | SOCKET HEAD SCREW ISO 4762 M12X35 8 | ZYLINDERSCHRAUBE |
| 53 | 42 39 017 08 | 8 | LOCK WASHER VS 12 | SICHERUNGSSCHEIBE |
| 55 | 93 87 607 01 | 1 | INNER WHEEL M=2,25 Z=96 | INNENRAD |
| 56 | 10 01 265 9 | 8 | SOCKET HEAD SCREW ISO 4762 M12X50 10 | ZYLINDERSCHRAUBE |
| 60 | 93 87 608 01 | 1 | SLOTTED NUT M42X1,5 42CRMO4+QT+S | NUTMUTTER |
| 63 | 71 00 626 01 | 2 | ROTARY SHAFT LIP SEAL BAB 60X85X7 N | RADIALWELLENDICHTRING |
| 65 | 93 87 609 01 | 1 | MULTI-DISC CARRIER | LAMELLENTRAEGER |
| 70 | 50 20 372 01 | 1 | SPRING LOADED MULTI-DISC BRAKE | FEDERDRUCKLAMELLENBREMS |
| (1) | 50 28 075 01 | 1 | BRAKE ACTUATING UNIT | BREMSBETAETIGUNGSEINHEIT |
| (997) | 93 95 895 01 | 1 | BRAKE MULTI-DISC SET | BREMSLAMELLENSATZ |
| (998) | 93 95 896 01 | 1 | BRAKE PACKING SET | BREMSE-DICHTUNGSSATZ |
| (999) | 93 95 897 01 | 1 | BRAKE SPRING SET | BREMSFEDERSATZ |
| 71 | 40 02 442 | 12 | SOCKET HEAD SCREW ISO 4762 M10X130 1 | ZYLINDERSCHRAUBE |
| 72 | 43 20 079 08 | 1 | DOWEL PIN ISO 8752 A 8X16 | SPANNSTIFT |
| 73 | 10 16 615 7 | 1 | O-RING 8X2 NBR90 | O-RING |
| 75 | 96 86 073 01 | 1 | MOTOR FLANGE A2FM 125 | MOTORFLANSCH |
| 76 | 76 10 217 03 | 1 | O-RING 195X3 NBR 70 | O-RING |
| 77 | 40 43 120 08 | 8 | SOCKET HEAD SCREW ISO 4762 M12X40 10 | ZYLINDERSCHRAUBE |
| 78 | 72 64 034 01 | 6 | O-RING 15X3 NBR 70 | O-RING |

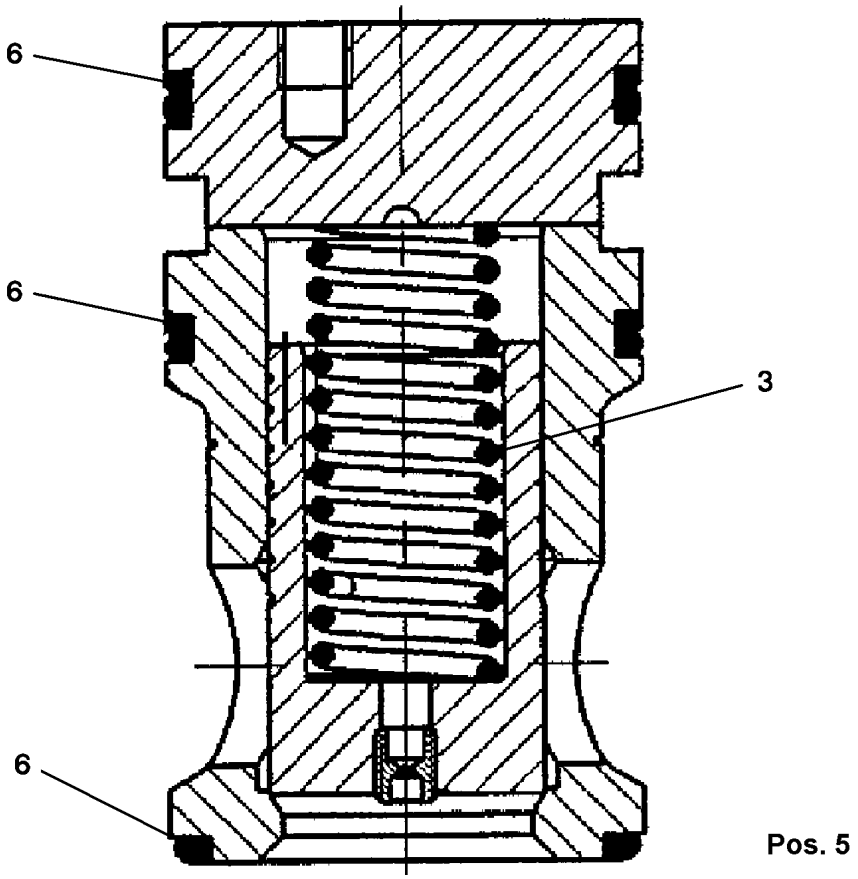


| Pos. | Item | Quantity | Description | Bezeichnung |
|---|---|---|---|---|
| 3 | 57 06 310 08 | 1 | PRESSURE SPRING | DRUCKFEDER |
| 5 | 51 07 617 08 | 3 | O-RING ARP 568 32,99X2,62 NBR90 | O-RING |
| 6 | 10 28 018 4 | 1 | SEAL KIT | DICHTSATZ |

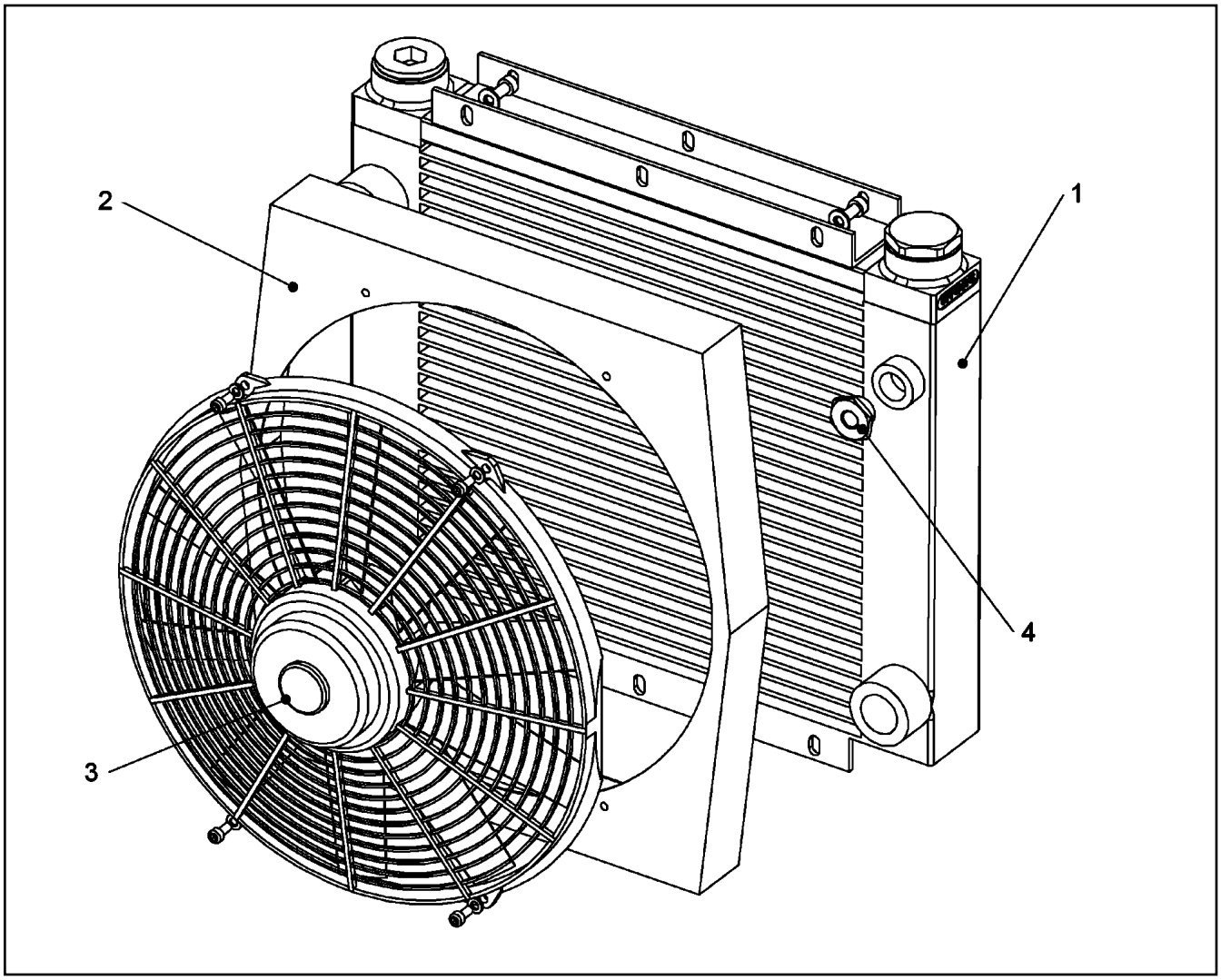


| Pos. | Item | Quantity | Description | Bezeichnung |
|---|---|---|---|---|
| 1 | 10 35 483 5 | 1 | OIL COOLER | OELKUEHLER |
| 2 | 10 35 483 6 | 1 | FAN HOUSING | LUEFTERGEHAEUSE |
| 3 | 10 35 483 7 | 1 | FAN 24V | LUEFTER |
| 4 | 10 35 483 9 | 1 | REDUCER M22/M14X1,5 | REDUZIERUNG |

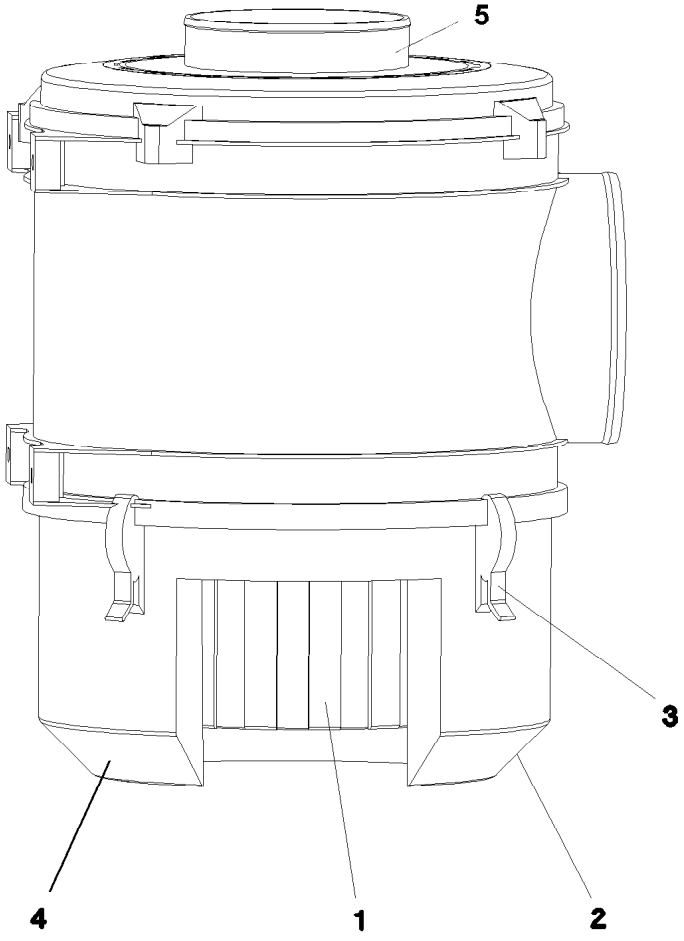


| Pos. | Item | Quantity | Description | Bezeichnung |
|---|---|---|---|---|
| 1 | 10 27 855 3 | 1 | FILTER ELEMENT | FILTERELEMENT |
| 2 | 10 42 941 5 | 1 | HOUSING LOWER PART | GEHAEUSEUNTERTEIL |
| 3 | 55 07 965 08 | 1 | LOCK PIECE | VERSCHLUSS |
| 4 | 10 80 131 5 | 1 | VALVE | VENTIL |

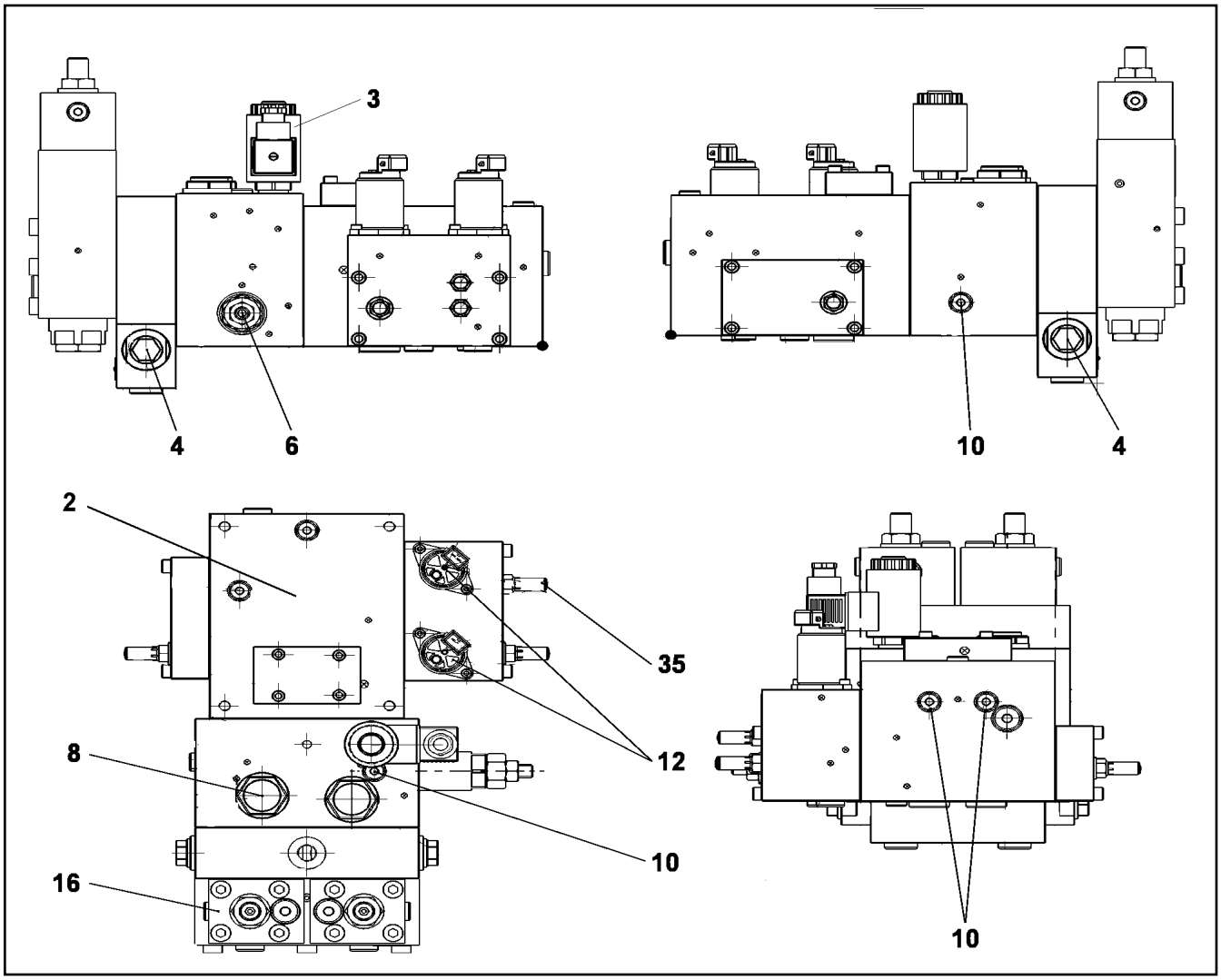


| Pos. | Item | Quantity | Description | Bezeichnung |
|---|---|---|---|---|
| 2 | 10 80 297 1 | 1 | VALVE BLOCK<br>⇨ X10802971 10 80 297 1 | VENTILBLOCK |
| 3 | 57 18 889 08 | 1 | DIRECTIONAL CONTROL VALVE | WEGEVENTIL |
| (1) | 10 33 430 5 | 1 | MAGNET 24V | MAGNET |
| 4 | 57 18 890 08 | 2 | NON-RETURN VALVE | RUECKSCHLAGVENTIL |
| 6 | 57 18 891 08 | 1 | PRESSURE VALVE | DRUCKVENTIL |
| 8 | 57 18 892 08 | 2 | VALVE | VENTIL |
| (999) | 57 19 147 08 | 1 | SEALING SET VALVE | DS VENTIL |
| 10 | 57 06 514 08 | 4 | NON-RETURN VALVE | RUECKSCHLAGVENTIL |
| 12 | 57 18 893 08 | 2 | DIRECTIONAL CONTROL VALVE | WEGEVENTIL |
| 16 | 10 34 723 6 | 1 | BRAKE VALVE | BREMSVENTIL |
| (1) | 11 32 042 1 | 2 | SEAL LOCK NUT M1414X1,5 | SEAL-LOCK-MUTTER |
| (999) | 11 11 420 2 | 1 | DS LOWERING BRAKE VALVE | DS SENKBREMSVENTIL |
| 35 | 57 18 895 08 | 1 | PRESSURE VALVE<br>⇨ 5 718 895 08 57 18 895 08 | DRUCKVENTIL |
| 999 | 11 12 420 1 | 1 | SEAL KIT | DICHTSATZ |

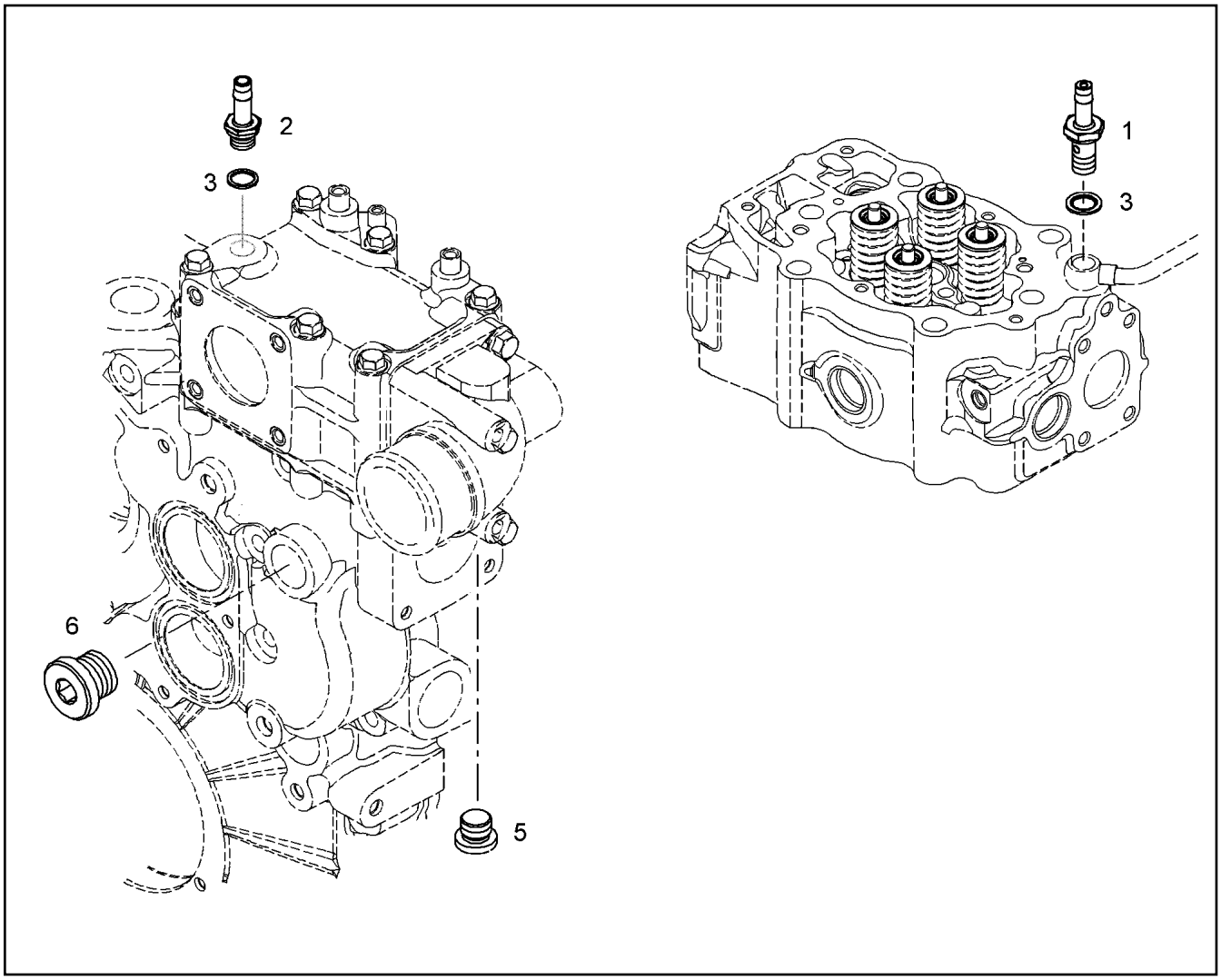


| Pos. | Item | Quantity | Description | Bezeichnung |
|---|---|---|---|---|
| 1 | 90 79 080 | 1 | HOSE NIPPLE GERADE 11SMn30+C | SCHLAUCHNIPPEL |
| 2 | 49 81 033 | 1 | HOSE UNION DIN 74304 M14X1,5 XSSTB | SCHLAUCHSTUTZEN |
| 3 | 10 01 186 6 | 2 | SEALING RING 14,7X22X1,5 St/FPM1-80 | DICHTRING |
| 5 | 73 80 566 | 1 | SCREW PLUG VSTI M14X1,5 | VERSCHLUSSSCHRAUBE |
| 6 | 73 82 204 | 1 | SCREW PLUG VSTI M30X1,5 St Rm>500N/m | VERSCHLUSSSCHRAUBE |

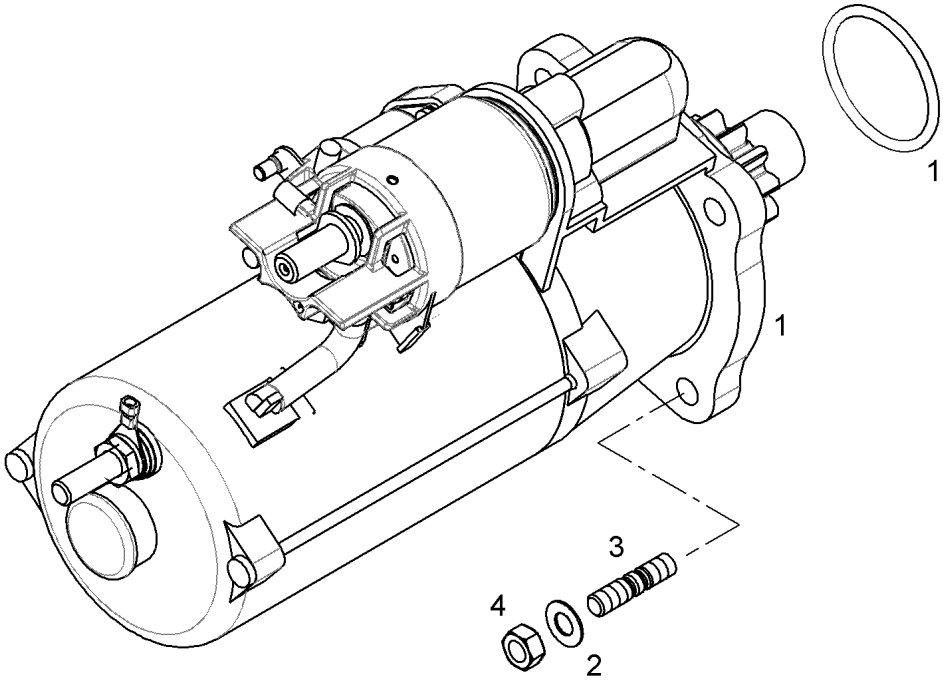


| Pos. | Item | Quantity | Description | Bezeichnung |
|---|---|---|---|---|
| 1 | 10 21 997 8 | 1 | STARTER 7.8KW 24V<br>⇨ X10219978 10 21 997 8 | STARTER |
| 1 | 11 38 664 4 | 1 | STARTER PRE-ASSY. 7.8KW 24V<br>⇨ X11386644 11 38 664 4 | STARTER VORM. |
| 3 | 49 01 450 | 3 | DOUBLE-ENDED STUD DIN 835 M10X30 8.8 | STIFTSCHRAUBE |
| 4 | 49 80 805 | 3 | HEX NUT EN 1661 M10 8 A3C | SECHSKANTMUTTER |

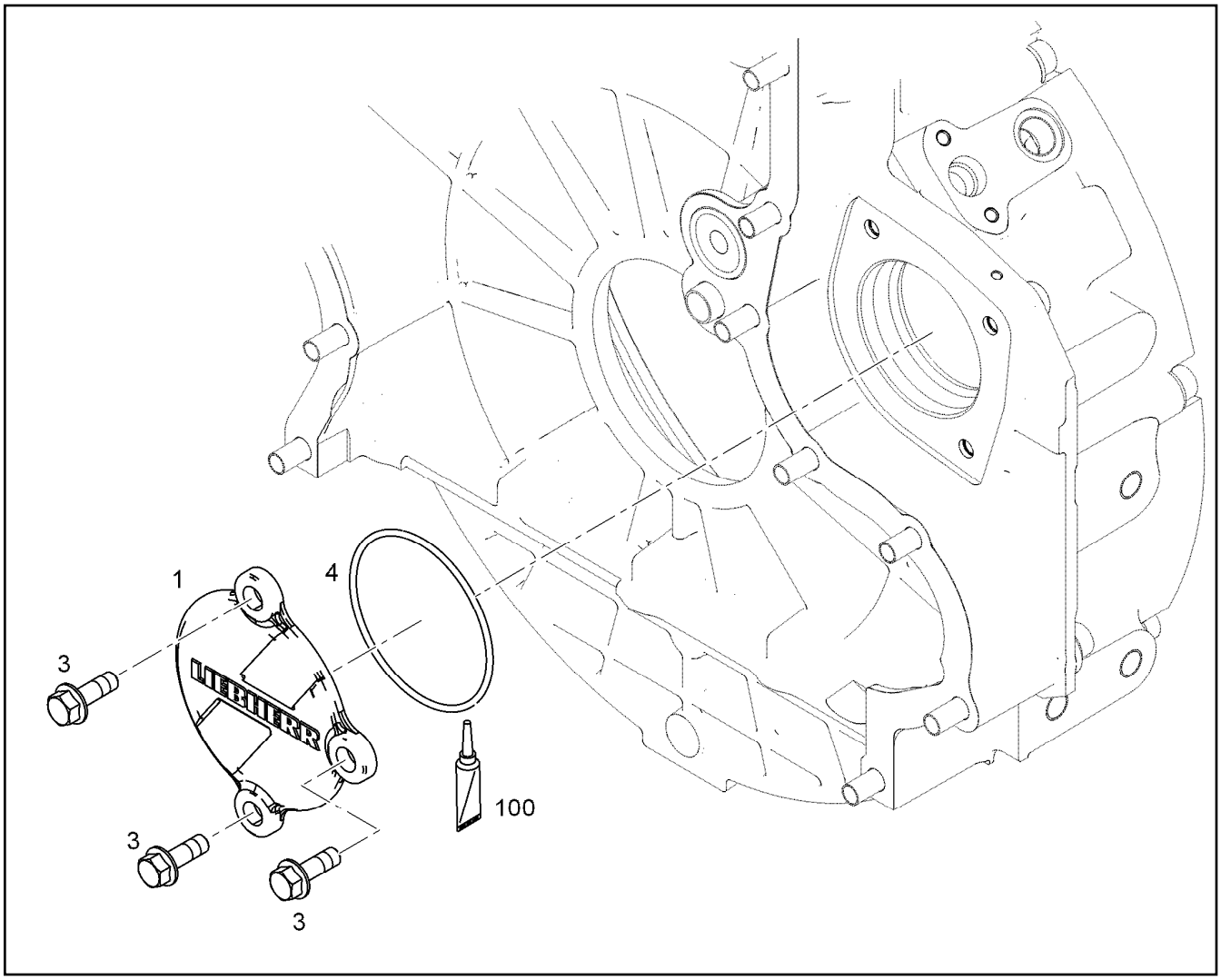


| Pos. | Item | Quantity | Description | Bezeichnung |
|---|---|---|---|---|
| 1 | 10 12 411 6 | 1 | COVER EN AC-Al Si8 | DECKEL |
| 3 | 11 65 615 5 | 3 | HEX SCREW EN 1665 M10X30 8.8 FLZN SPF | SECHSKANTSCHRAUBE |
| 4 | 73 81 995 | 1 | O-RING DIN 3771 98,02X3,53 HNBR 70 A,BK | O-RING |
| 100 | 10 28 570 8 | 1 | GREASE NBU 30 1KG DOSE | FETT |

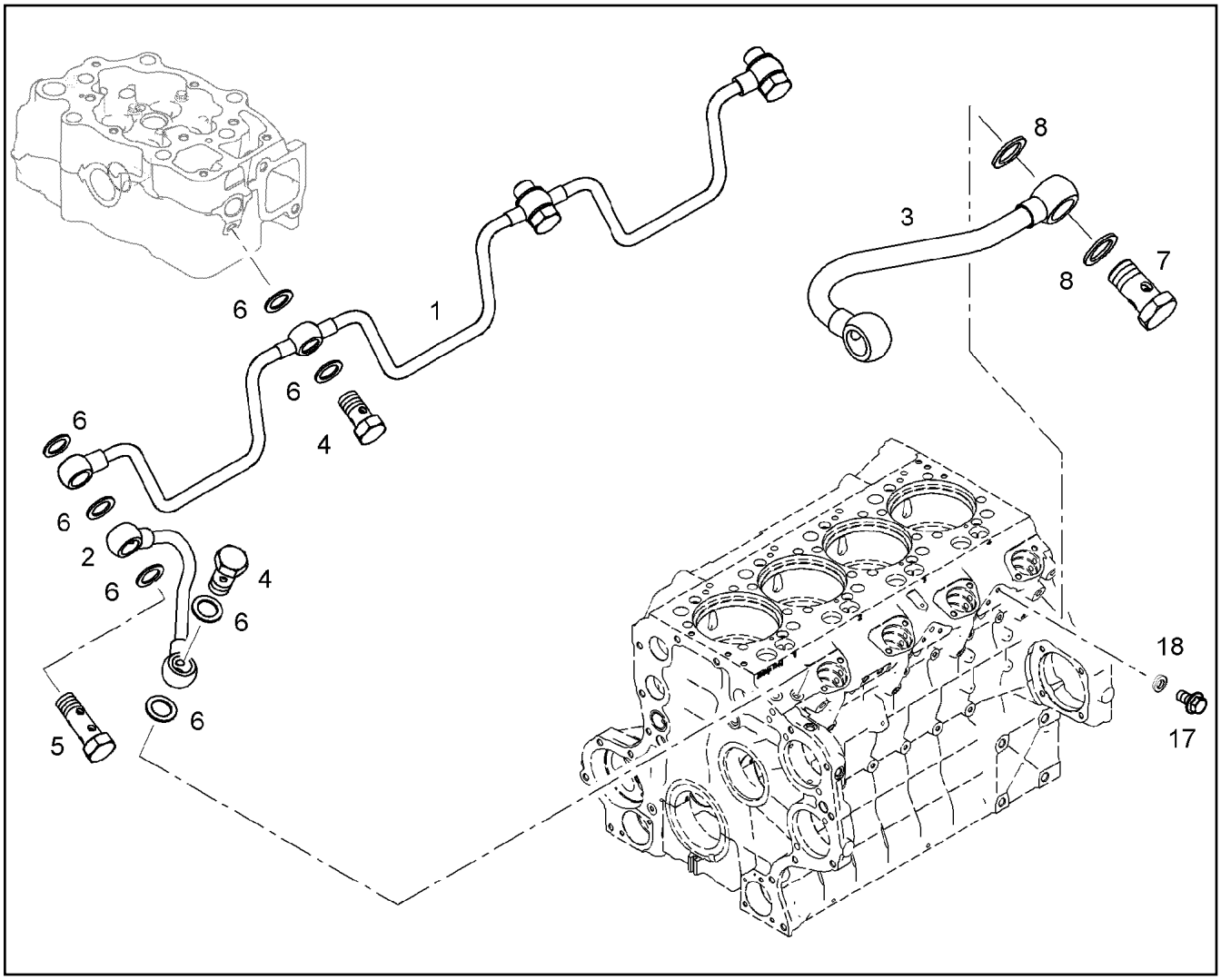


| Pos. | Item | Quantity | Description | Bezeichnung |
|---|---|---|---|---|
| 1 | 90 78 935 | 1 | FUEL LINE | KRAFTSTOFFLEITUNG |
| 2 | 10 11 549 1 | 1 | PIPELINE | ROHRLEITUNG |
| 3 | 10 11 564 4 | 1 | PIPELINE | ROHRLEITUNG |
| 4 | 55 31 068 08 | 3 | HOLLOW SCREW DIN 7643 6-3-M10X1 | HOHLSCHRAUBE |
| 5 | 10 01 486 4 | 1 | DOUBLE BANJO BOLT 6X6XM10X1,0X42,5 | DOPPELHOHLSCHRAUBE |
| 6 | 71 01 015 08 | 9 | SEALING RING DIN 7603 A 10X14X1,5 CU | DICHTRING |
| 7 | 40 79 240 | 1 | HOLLOW SCREW DIN 7643 10X3XM14X1,5 | HOHLSCHRAUBE |
| 8 | 71 01 030 08 | 2 | SEALING RING DIN 7603 A 14X20X1,5 CU | DICHTRING |
| 17 | 70 09 590 | 1 | VENTILATION SCREW | ENTLUEFTUNGSSCHRAUBE |
| 18 | 71 01 007 08 | 1 | SEALING RING DIN 7603 A 8X12X1 CU | DICHTRING |

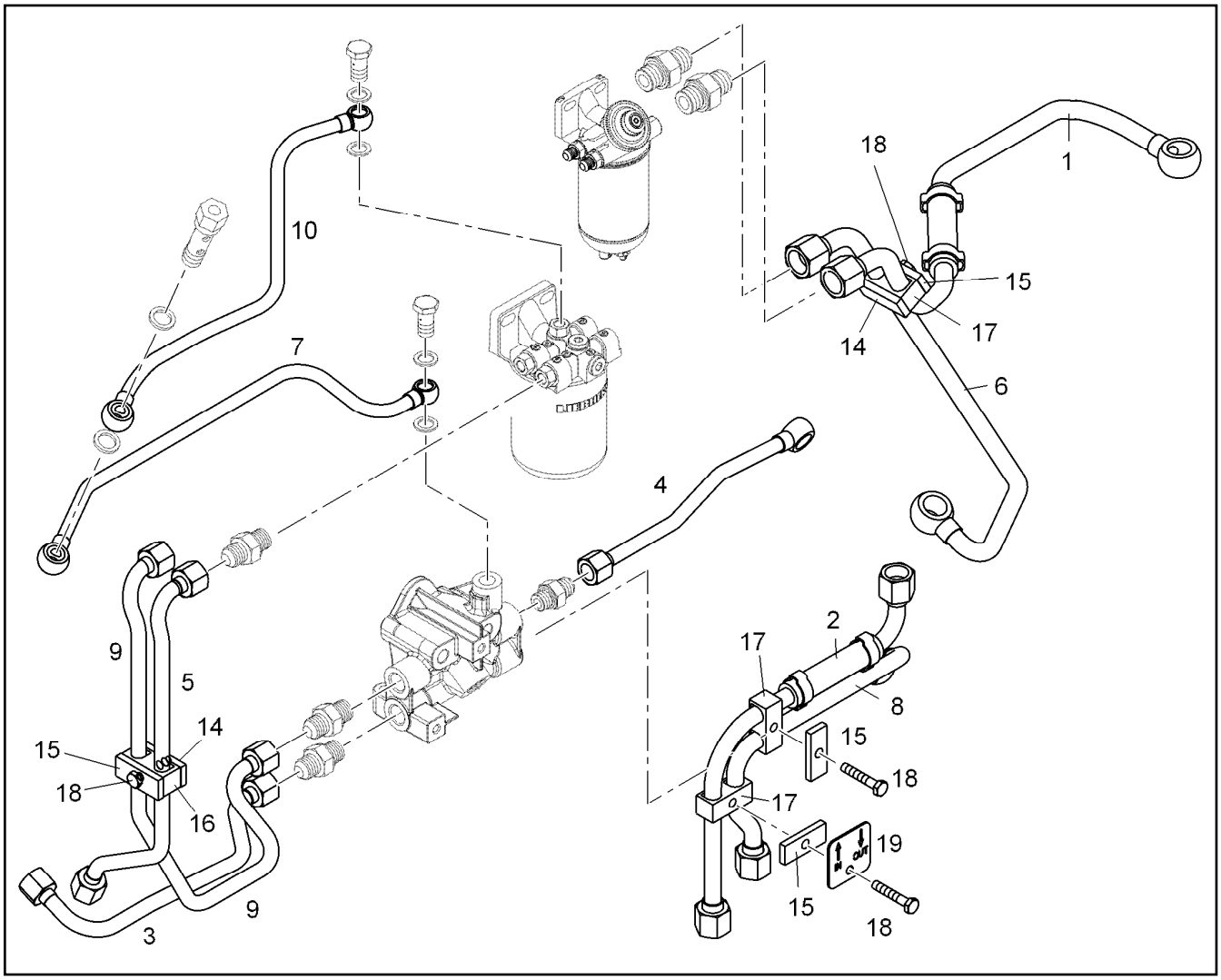


| Pos. | Item | Quantity | Description | Bezeichnung |
|---|---|---|---|---|
| 1 | 10 11 573 9 | 1 | PIPELINE 444 | ROHRLEITUNG |
| 2 | 10 11 599 1 | 1 | PIPELINE | ROHRLEITUNG |
| 3 | 10 11 600 9 | 1 | PIPELINE | ROHRLEITUNG |
| 4 | 10 11 564 2 | 1 | PIPELINE | ROHRLEITUNG |
| 5 | 10 11 578 2 | 1 | PIPELINE 10X1 | ROHRLEITUNG |
| 6 | 10 11 573 8 | 1 | PIPELINE | ROHRLEITUNG |
| 7 | 10 11 564 1 | 1 | PIPELINE 10X1 | ROHRLEITUNG |
| 8 | 10 11 599 0 | 1 | PIPELINE | ROHRLEITUNG |
| 9 | 10 11 578 1 | 1 | PIPELINE 10X1 | ROHRLEITUNG |
| 10 | 10 11 574 1 | 1 | PIPELINE | ROHRLEITUNG |
| 14 | 90 73 189 | 2 | SUPPORT PLATE S235JR | STUETZBLECH |
| 15 | 90 73 190 | 4 | SUPPORT PLATE S235JR | STUETZBLECH |
| 16 | 73 82 215 | 1 | PIPE CLAMP PP | ROHRSCHELLE |
| 17 | 73 82 216 | 3 | PIPE CLAMP 12 PP | ROHRSCHELLE |
| 18 | 10 29 053 7 | 4 | HEX SCREW DIN 6921 M6X30 8.8 A2C | SECHSKANTSCHRAUBE |
| 19 | 90 78 684 | 1 | PLATE X5CrNi18-10 | BLECH |
| 25 | 10 01 186 6 | 7 | SEALING RING 14,7X22X1,5 St/FPM1-80 | DICHTRING |
| 26 | 40 79 240 | 1 | HOLLOW SCREW DIN 7643 10X3XM14X1,5 | HOHLSCHRAUBE |
| 27 | 10 01 186 5 | 4 | SEALING RING 12,7X18X1,5 St/FPM1-80 | DICHTRING |
| 28 | 73 81 925 | 2 | HOLLOW SCREW WITH THROTTLE | HOHLSCHRAUBE M.DROSSEL |
| 29 | 10 01 186 7 | 6 | SEALING RING 16,7X24X1,5 St/FPM1-80 | DICHTRING |
| 30 | 49 80 741 | 3 | HOLLOW SCREW DIN 7643 12X3XM16X1,5 | HOHLSCHRAUBE |
| 33 | 73 81 415 | 1 | O-RING ISO 3601-1 21,95X1,78 FKM 70 A,GN | O-RING |
| 34 | 10 11 755 1 | 1 | DISTRIBUTOR BLOCK | VERTEILERBLOCK |
| 35 | 10 02 742 0 | 2 | HEX SCREW DIN 6921 M8X60 8.8 A2C | SECHSKANTSCHRAUBE |
| 37 | 10 81 394 0 | 3 | FLANGE JOINT GE 12 M16X1,5/3/ CR6-FREI | VERSCHRAUBUNG |

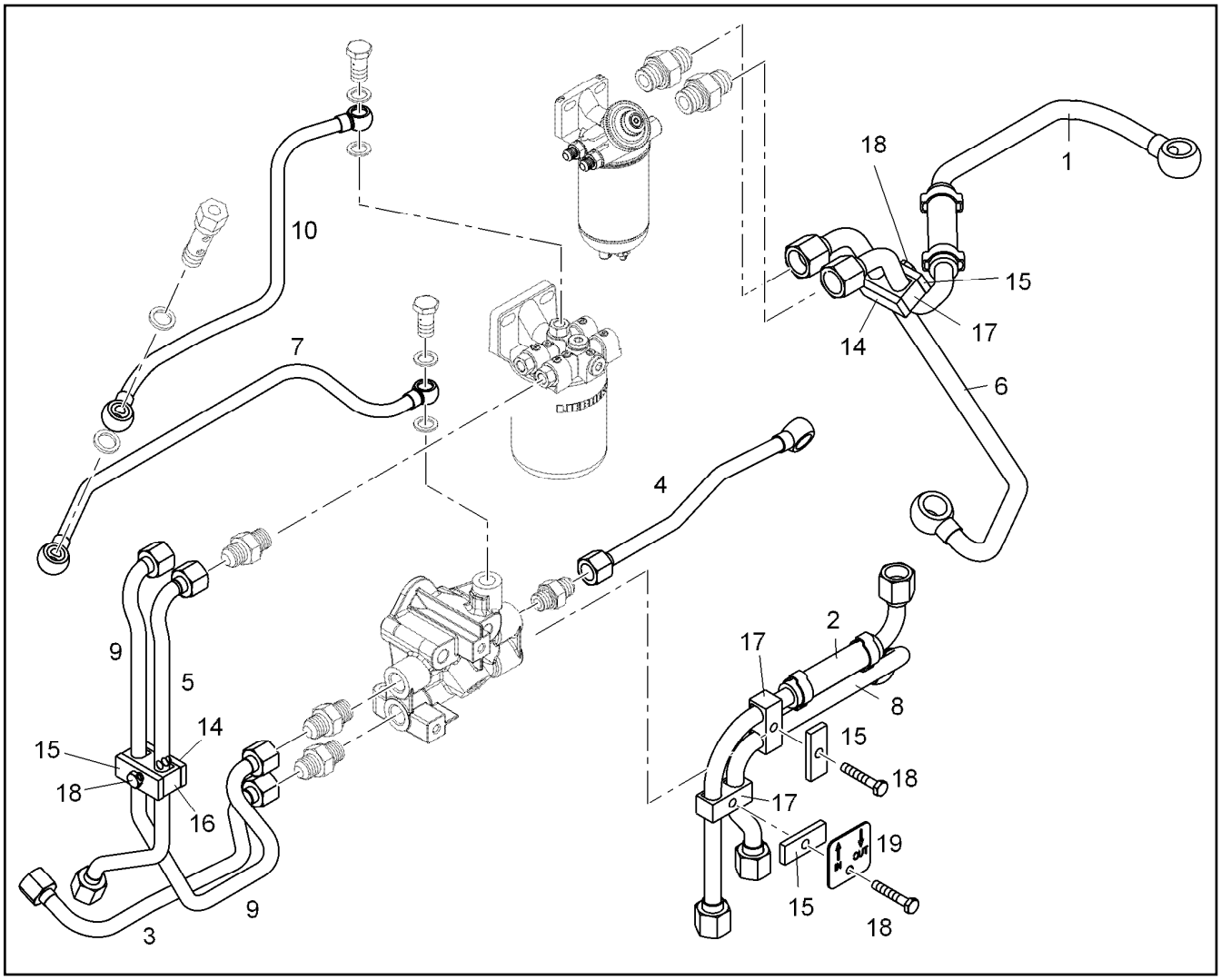


| Pos. | Item | Quantity | Description | Bezeichnung |
|---|---|---|---|---|
| 38 | 10 11 549 9 | 1 | DOUBLE BANJO BOLT 10X1XM 14X1,5X42 St | DOPPELHOHLSCHRAUBE |
| 39 | 73 81 225 23 | 1 | SEALING RING DIN 7603 A14X20X2 CU | DICHTRING |
| 40 | 10 81 393 6 | 5 | FLANGE JOINT GE 10 M14X1,5/9/ CR6-FREI | VERSCHRAUBUNG |
| 41 | 10 03 857 2 | 1 | OVERFLOW VALVE | UEBERSTROEMVENTIL |
| 42 | 90 78 685 | 1 | HOLLOW SCREW 10X3 St Rm>500N/m FE/ | HOHLSCHRAUBE |
| 43 | 10 81 393 7 | 2 | FLANGE JOINT GE 10 M16X1,5/9/ CR6-FREI | VERSCHRAUBUNG |
| 46 | 73 80 566 | 1 | SCREW PLUG VSTI M14X1,5 | VERSCHLUSSSCHRAUBE |
| 100 | 10 28 570 8 | 1 | GREASE NBU 30 1KG DOSE | FETT |
| 109 | 81 12 057 08 | 1 | SCREW LOCKING 50ML FLASCHE 150 °C | SCHRAUBENSICHERUNG |

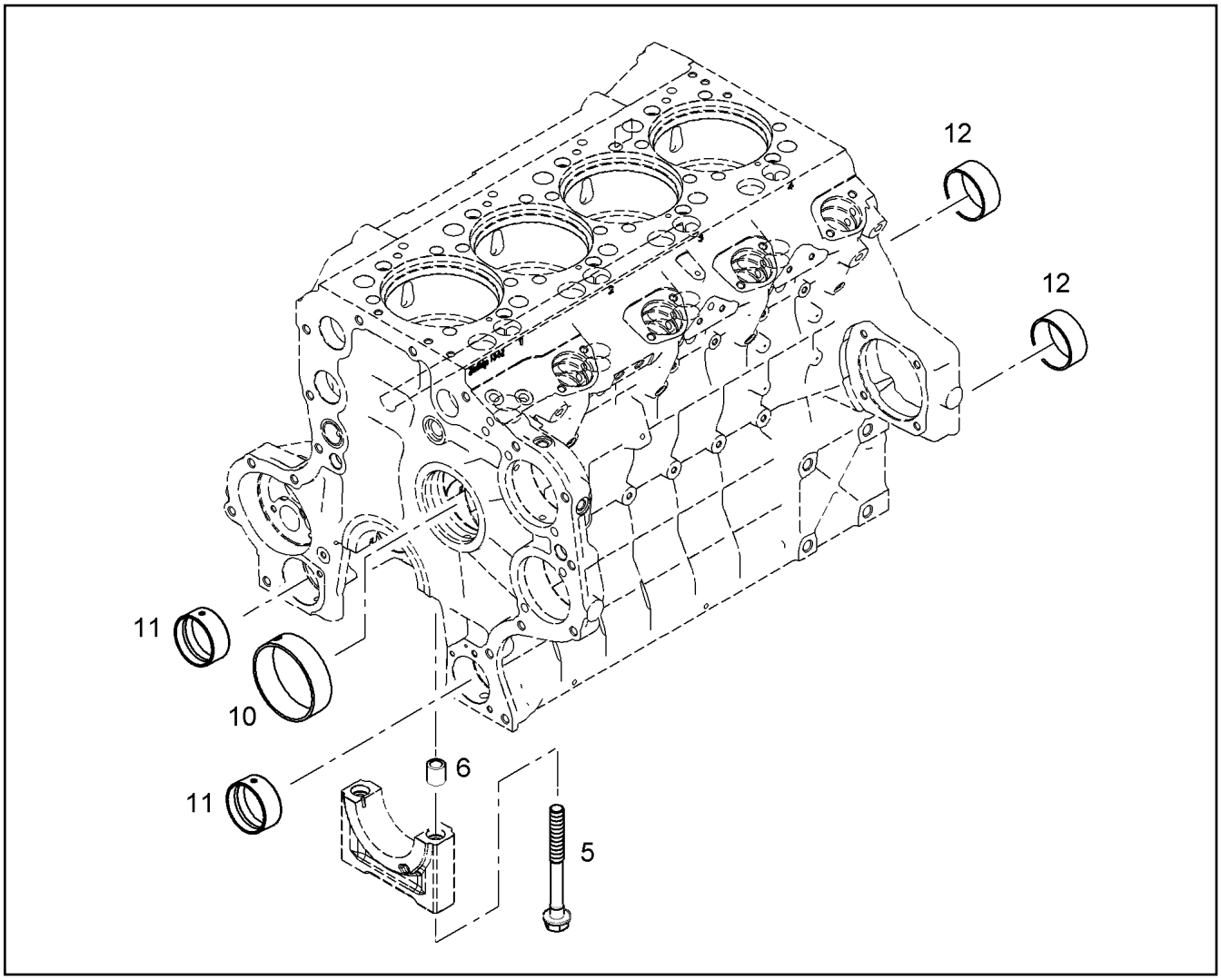


| Pos. | Item | Quantity | Description | Bezeichnung |
|---|---|---|---|---|
| 5 | 91 75 902 | 10 | HEX SCREW M18X1,9X170 | SECHSKANTSCHRAUBE |
| 6 | 91 77 636 | 10 | TIGHT FIT SLEEVE 15,5X19,5X24 | PASSHUELSE |
| 10 | 90 73 745 | 5 | CAMS SHAFT BUSHING KS S42 | NOCKENWELLENBUCHSE |
| 11 | 91 32 281 | 2 | CAMS SHAFT BUSHING | NOCKENWELLENBUCHSE |
| 12 | 98 88 259 | 6 | BEARING BUSHING 60X65X28 GLYCO 48 | LAGERBUCHSE |

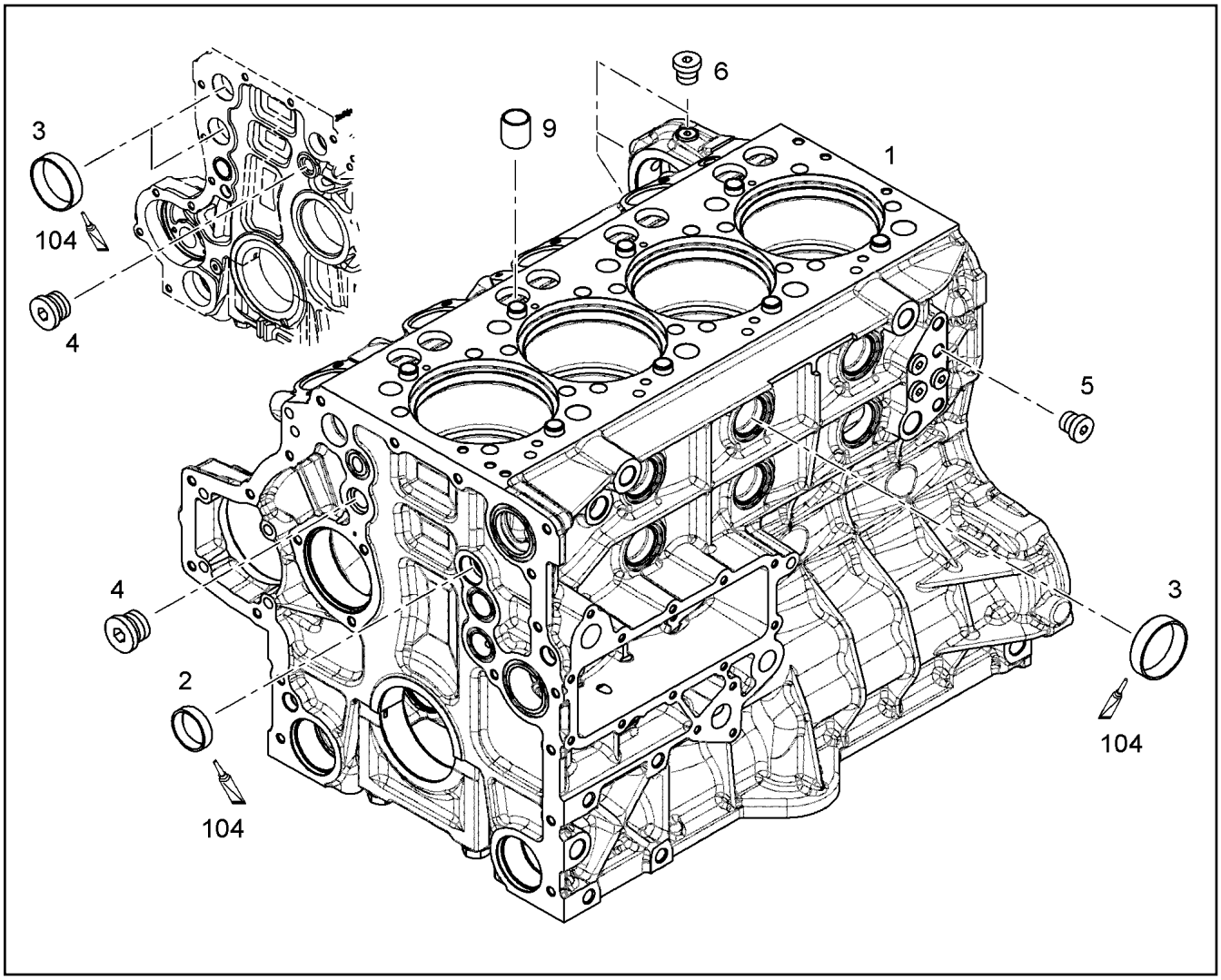


| Pos. | Item | Quantity | Description | Bezeichnung |
|---|---|---|---|---|
| 1 | 10 11 577 6 | 1 | CRANKCASE R-MOTORXD934<br>⇨ X10115776 10 11 577 6 | KURBELGEHAEUSE |
| 2 | 49 80 362 | 4 | END COVER DIN 443 St A3C | VERSCHLUSSDECKEL |
| 3 | 54 02 024 08 | 8 | END COVER DIN 443 B 45 | VERSCHLUSSDECKEL |
| 4 | 73 80 177 | 2 | SCREW PLUG VSTI M22X1,5 CR6-FREI | VERSCHLUSSSCHRAUBE |
| 5 | 73 82 203 | 2 | SCREW PLUG VSTI M16X1,5 | VERSCHLUSSSCHRAUBE |
| 6 | 73 80 566 | 3 | SCREW PLUG VSTI M14X1,5 | VERSCHLUSSSCHRAUBE |
| 9 | 90 74 798 | 8 | TIGHT FIT SLEEVE 16X20X20 S235JR | PASSHUELSE |
| 104 | 81 12 073 01 | 1 | GLUE 10 ml | KLEBSTOFF |

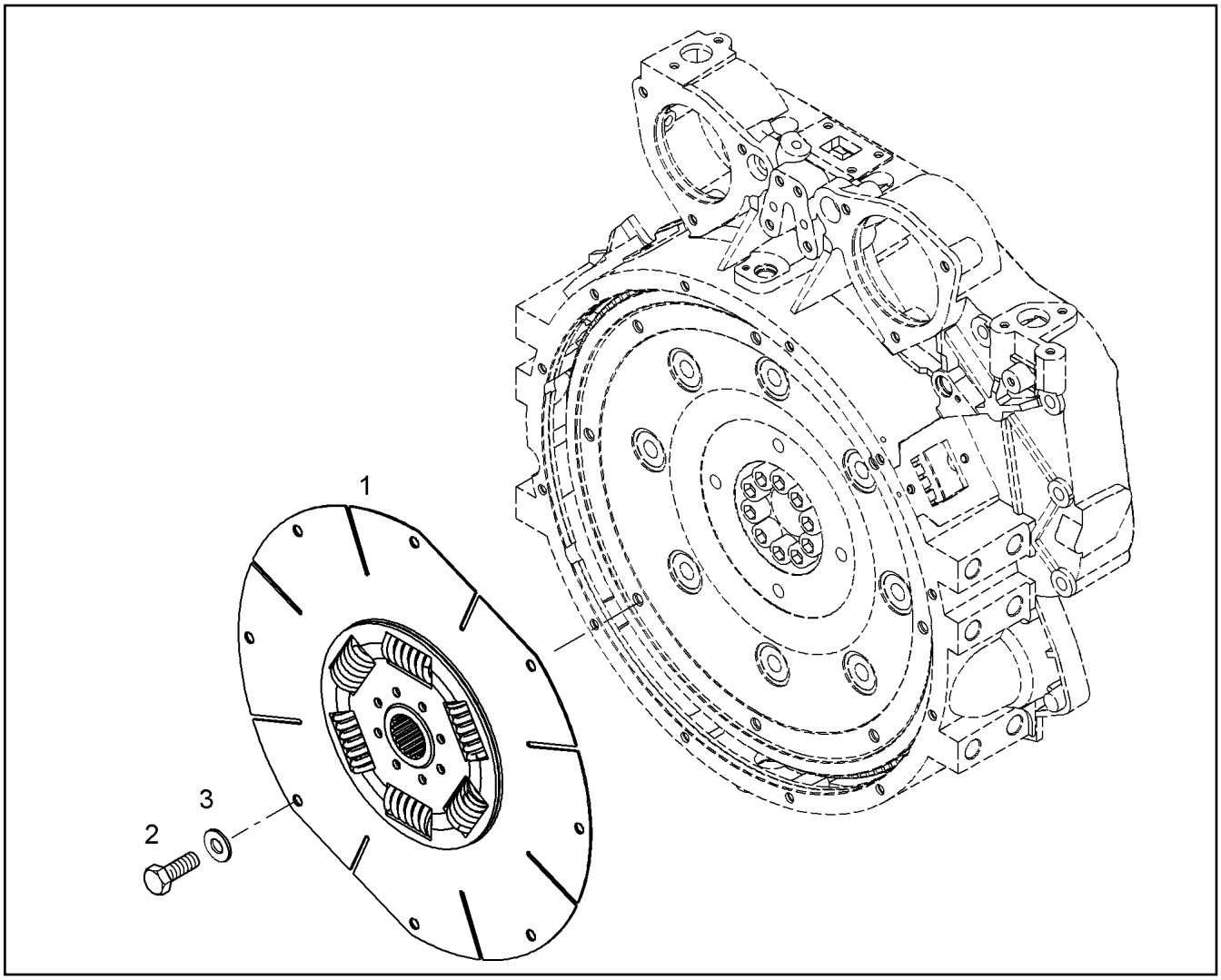


| Pos. | Item | Quantity | Description | Bezeichnung |
|---|---|---|---|---|
| 1 | 10 22 810 0 | 1 | TORSIONAL VIBRATION DAMPER | TORSIONSDAEMPFER |
| 2 | 40 66 090 08 | 8 | HEX SCREW ISO 4017 M12X25 10.9 A3C SP | SECHSKANTSCHRAUBE |
| 3 | 10 28 980 4 | 8 | WASHER ISO 7089 12 300HV FLZN SPF | SCHEIBE |

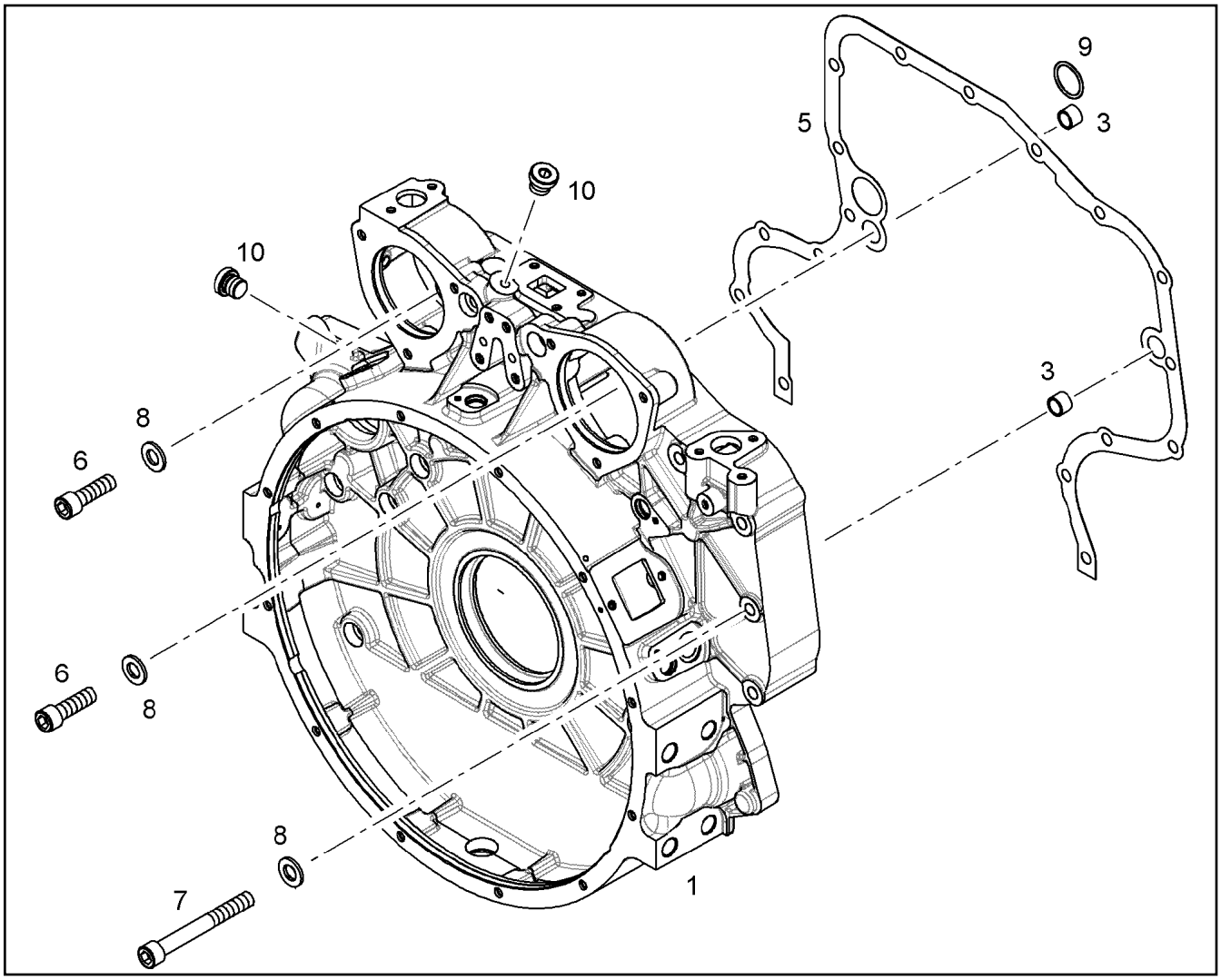


| Pos. | Item | Quantity | Description | Bezeichnung |
|---|---|---|---|---|
| 1 | 10 11 814 8 | 1 | FLYWHEEL HOUSING PRE-ASS. SAE 1 | SCHWUNGRADGEHAEUSE VO |
| 3 | 10 13 434 8 | 2 | TIGHT FIT SLEEVE 16X20X20 100Cr6 | PASSHUELSE |
| 5 | 10 13 772 1 | 1 | SEAL 0,33MM METALOSEAL 1 | DICHTUNG |
| 6 | 49 80 012 | 2 | SOCKET HEAD SCREW ISO 4762 M12X40 1 | ZYLINDERSCHRAUBE |
| 7 | 46 00 385 | 15 | SOCKET HEAD SCREW ISO 4762 M12X100 1 | ZYLINDERSCHRAUBE |
| 8 | 10 28 980 4 | 17 | WASHER ISO 7089 12 300HV FLZN SPF | SCHEIBE |
| 9 | 73 80 653 | 1 | O-RING ISO 3601-1 34,59X2,62 FKM 90 A,BK | O-RING |
| 10 | 73 81 638 | 2 | SCREW PLUG VSTI M10X1 | VERSCHLUSSSCHRAUBE |
| 100 | 10 28 570 8 | 1 | GREASE NBU 30 1KG DOSE | FETT |

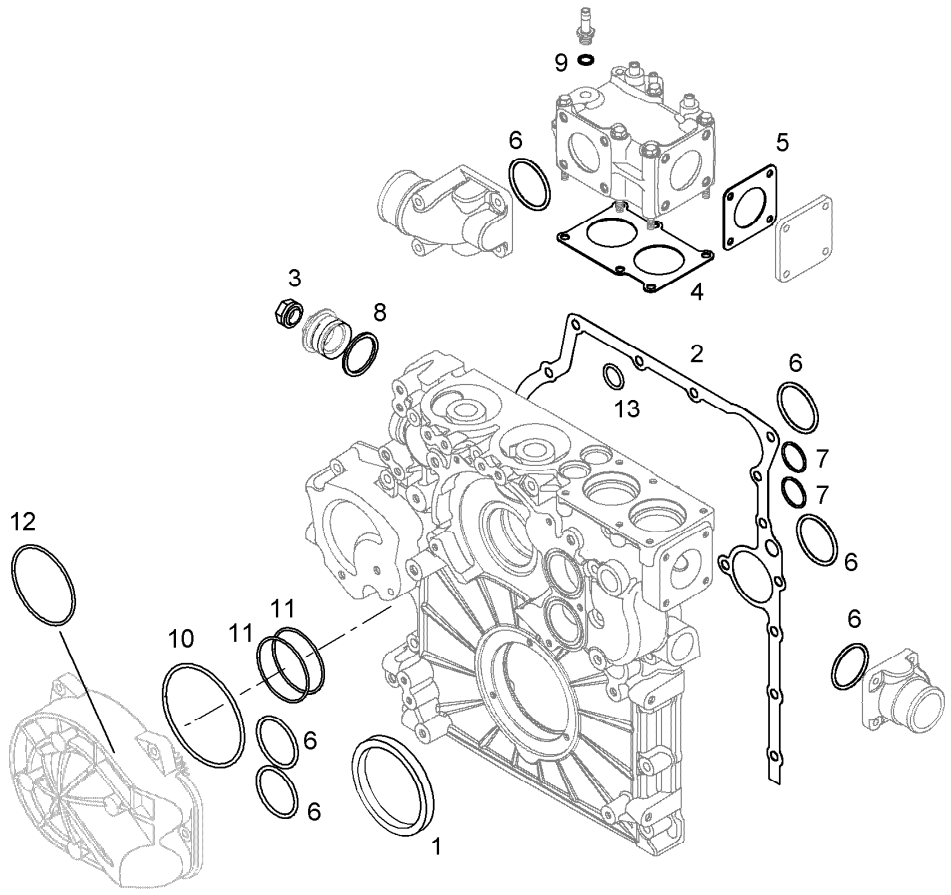


| Pos. | Item | Quantity | Description | Bezeichnung |
|---|---|---|---|---|
| 1 | 10 00 649 9 | 8 | O-RING 140 75 FKM 17939 | O-RING |
| 2 | 73 81 685 | 2 | O-RING DIN 3771 7,00X1,5 FKM 90 A,BK | O-RING |
| 3 | 10 11 584 9 | 1 | SEALING SET OIL COOLER<br>⇨ X10115849 10 11 584 9 | DS OELKUEHLER |
| 4 | 10 12 195 2 | 1 | RK CRANKSHAFT SEAL 110 VORNE | RS KURBELWELLENDICHTUNG |
| 5 | 10 12 133 5 | 1 | RK CRANKSHAFT SEAL 115 HINTEN | RS KURBELWELLENDICHTUNG |
| 6 | 10 13 772 1 | 1 | SEAL 0,33MM METALOSEAL 1 | DICHTUNG |
| 7 | 10 12 673 8 | 1 | SEAL 0,33MM METALOSEAL 1 | DICHTUNG |
| 8 | 73 81 226 | 1 | SEALING NUT M12 | DICHTMUTTER |
| 9 | 10 11 585 2 | 1 | SEAL KIT ZYLINDER HEAD CPL.<br>⇨ X10115852 10 11 585 2 | DS ZYLINDERKOPF KPL. |
| 10 | 10 12 851 6 | 1 | SEAL AFM 30 | DICHTUNG |
| 11 | 90 80 279 | 1 | SEAL 2MM UNI-BLAU | DICHTUNG |
| 12 | 90 80 280 | 1 | LOCKING PIECES<br>⇨ 9 080 280 90 80 280 | VERSCHLUSSTEILE |
| 13 | 10 11 585 5 | 4 | SEAL KIT INJECTION PUMP | DS EINSPRITZPUMPE |
| 15 | 90 79 130 | 1 | SEAL 1MM | DICHTUNG |
| 16 | 98 85 529 | 3 | SEAL | DICHTUNG |
| 17 | 90 77 329 | 3 | SEAL | DICHTUNG |
| 18 | 92 75 766 | 3 | SEAL AFM 31 TD 2 | DICHTUNG |
| 19 | 92 68 131 | 1 | SEAL 1,5MM ASBESTFREI AFM 32/2 | DICHTUNG |
| 20 | 92 73 691 | 1 | SEAL | DICHTUNG |
| 21 | 92 74 974 | 1 | SEAL | DICHTUNG |
| 40 | 73 81 812 | 1 | O-RING ISO 3601-1 39,34X2,62 V70GA | O-RING |
| 41 | 73 82 059 | 1 | O-RING ISO 3601-1 34,59X2,62 FKM 70 A,GN | O-RING |
| 43 | 73 81 779 | 6 | O-RING DIN 3771 59,92X3,53 HNBR 70 A | O-RING |

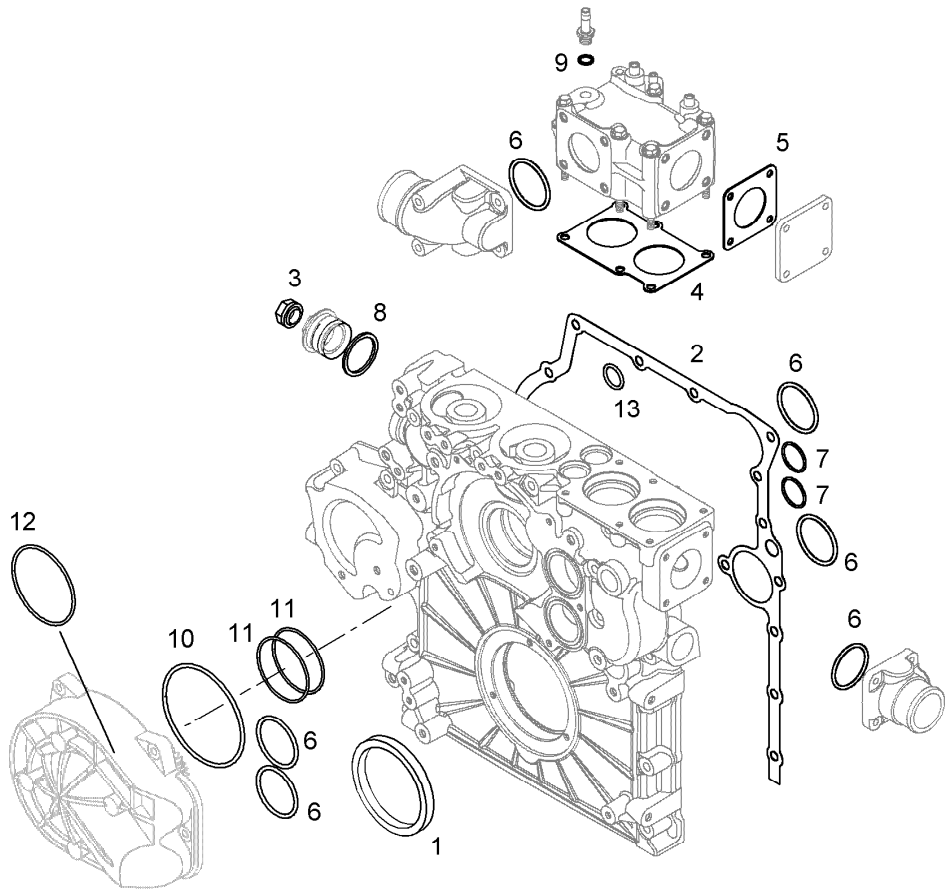


| Pos. | Item | Quantity | Description | Bezeichnung |
|---|---|---|---|---|
| 44 | 73 80 653 | 4 | O-RING ISO 3601-1 34,59X2,62 FKM 90 A,BK | O-RING |
| 45 | 10 00 426 1 | 1 | O-RING 26X3 HNBR 70 | O-RING |
| 46 | 10 04 040 0 | 1 | O-RING | O-RING |
| 47 | 73 81 361 | 6 | O-RING ISO 3601-1 85,32X3,53 FKM 70 A,GN | O-RING |
| 48 | 73 80 520 | 2 | O-RING DIN 3771 104,37X3,53 VMQ 70 A,RD | O-RING |
| 49 | 73 82 158 | 3 | O-RING DIN 3771 101,20X3,53 FKM 70 A,GN | O-RING |
| 50 | 91 77 948 | 1 | O-RING DIN 3771 120X3 VMQ 70 A,RD | O-RING |
| 51 | 10 00 231 0 | 1 | O-RING 125X2 VMQ 70 | O-RING |
| 52 | 73 80 598 | 1 | O-RING ISO 3601-1 82,22X2,62 FKM 70 A,BK | O-RING |
| 54 | 73 81 566 | 1 | O-RING DIN 3771 40,64X5,33 FKM 70 A,GN | O-RING |
| 55 | 57 00 484 08 | 1 | O-RING ARP 568 40,87X3,53 NBR90 | O-RING |
| 56 | 72 64 365 | 1 | O-RING DIN 3771 113,89X3,53 NBR 70 | O-RING |
| 57 | 73 81 593 | 2 | O-RING 68,26X3,53 FKM 70 | O-RING |
| 58 | 10 11 397 5 | 1 | O-RING 15,50X2,00 FKM 80 | O-RING |
| 59 | 73 81 415 | 1 | O-RING ISO 3601-1 21,95X1,78 FKM 70 A,GN | O-RING |
| 60 | 73 81 912 | 1 | O-RING 120,50X3,53 75 FKM 17939 | O-RING |
| 61 | 73 80 657 | 1 | O-RING DIN 3771 91,67X3,53 FKM 70 A,BK | O-RING |
| 62 | 73 80 401 | 1 | O-RING DIN 3771 101,20X3,53 NBR 70 A,BK | O-RING |
| 70 | 73 81 225 | 1 | SEALING RING DIN 7603 A14X20X2,5 Cu | DICHTRING |
| 71 | 71 01 065 08 | 6 | SEALING RING DIN 7603 A 30X36X2 CU | DICHTRING |
| 72 | 70 07 952 | 4 | SEALING RING DIN 7603 A10X15X1 | DICHTRING |
| 73 | 71 01 025 08 | 4 | SEALING RING DIN 7603 A14X18X1,5 CU | DICHTRING |
| 74 | 10 01 186 6 | 26 | SEALING RING 14,7X22X1,5 St/FPM1-80 | DICHTRING |
| 75 | 10 01 187 0 | 5 | SEALING RING 26,7X34,93X2 St/FPM1-80 | DICHTRING |
| 77 | 10 11 373 1 | 2 | SEALING RING 30,7X39X2 St/FPM1-80 | DICHTRING |
| 78 | 10 01 186 5 | 4 | SEALING RING 12,7X18X1,5 St/FPM1-80 | DICHTRING |

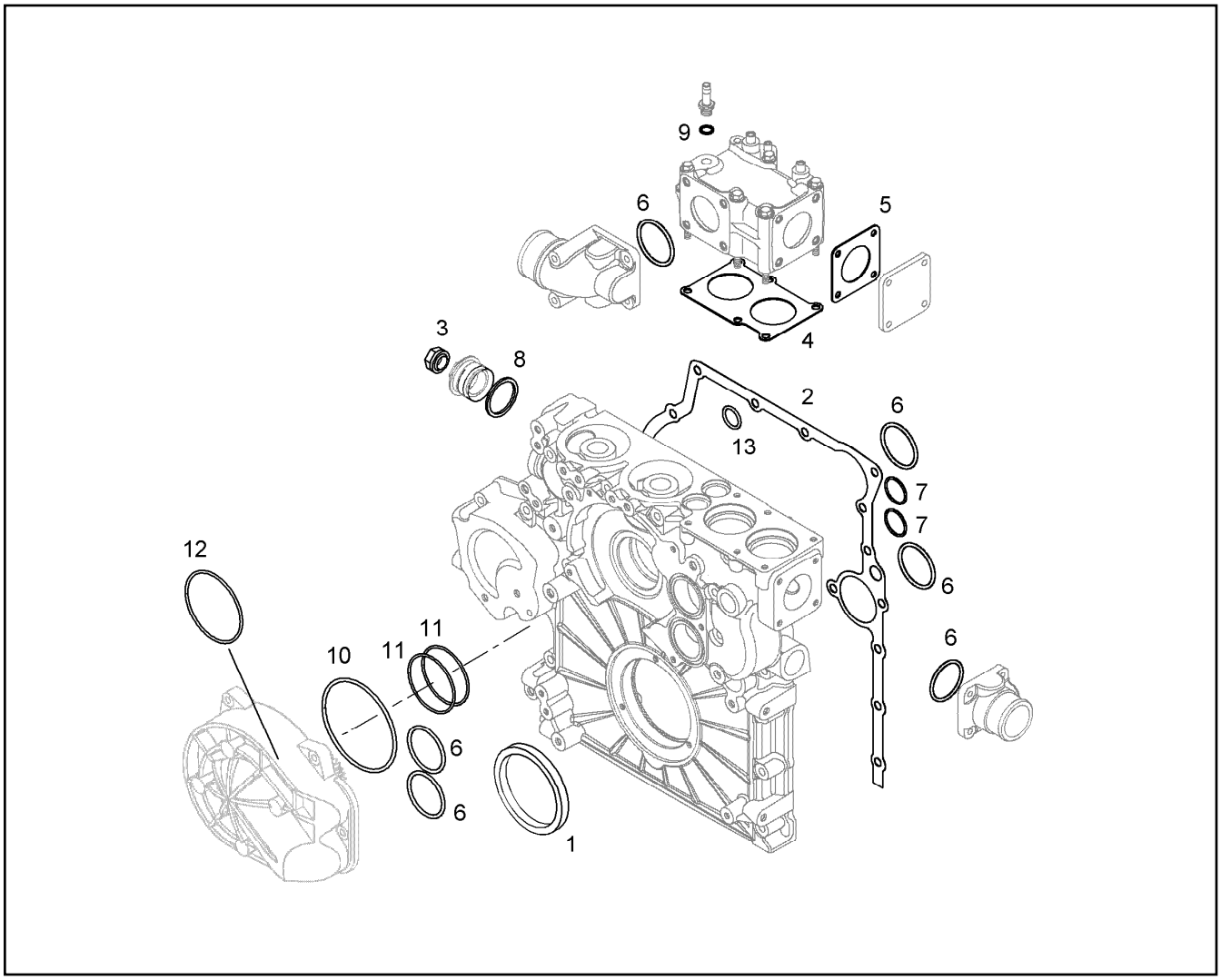


| Pos. | Item | Quantity | Description | Bezeichnung |
|---|---|---|---|---|
| 80 | 10 01 186 7 | 12 | SEALING RING 16,7X24X1,5 St/FPM1-80 | DICHTRING |
| 140 | 90 79 603 | 1 | RUBBER CONNECTION 12 X 18 X 45 GUMMI | GUMMIMUFFE |
| 141 | 92 71 340 | 2 | RUBBER CONNECTION 25 X35/33X56 L. | GUMMIMUFFE |
| 2211 | 73 81 192 | 1 | O-RING DIN 3771 100X3 FKM 80 A,BK | O-RING |
| 4301 | 92 73 423 | 1 | SEAL | DICHTUNG |
| 4302 | 10 11 631 0 | 1 | RUBBER CONNECTION 90GRAD | GUMMIMUFFE |

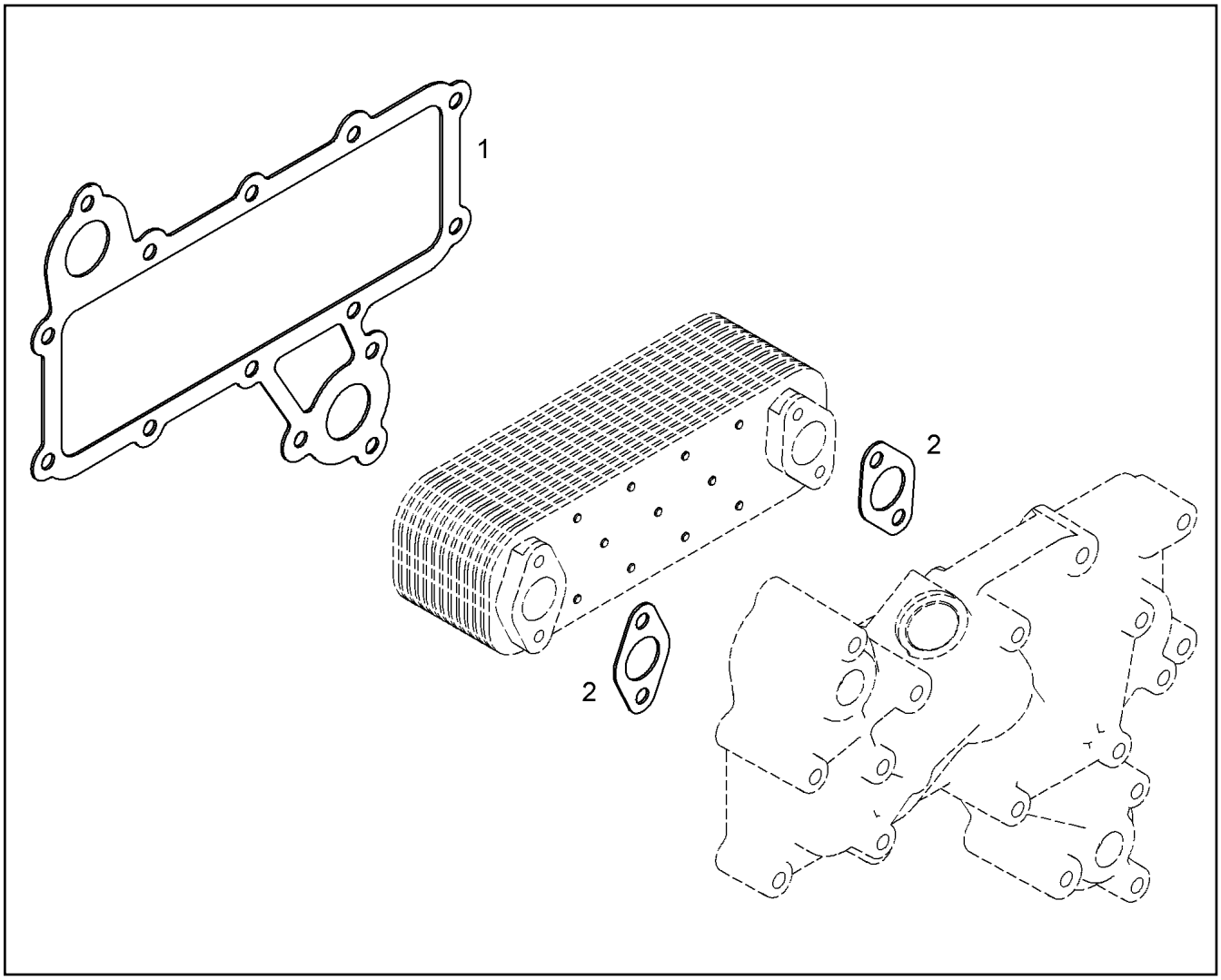


| Pos. | Item | Quantity | Description | Bezeichnung |
|---|---|---|---|---|
| 1 | 10 11 770 9 | 1 | SEAL 1MM AFM 30 | DICHTUNG |
| 2 | 49 80 359 | 2 | SEAL DIN 71511 25X48X1,5 AFM 30 | DICHTUNG |

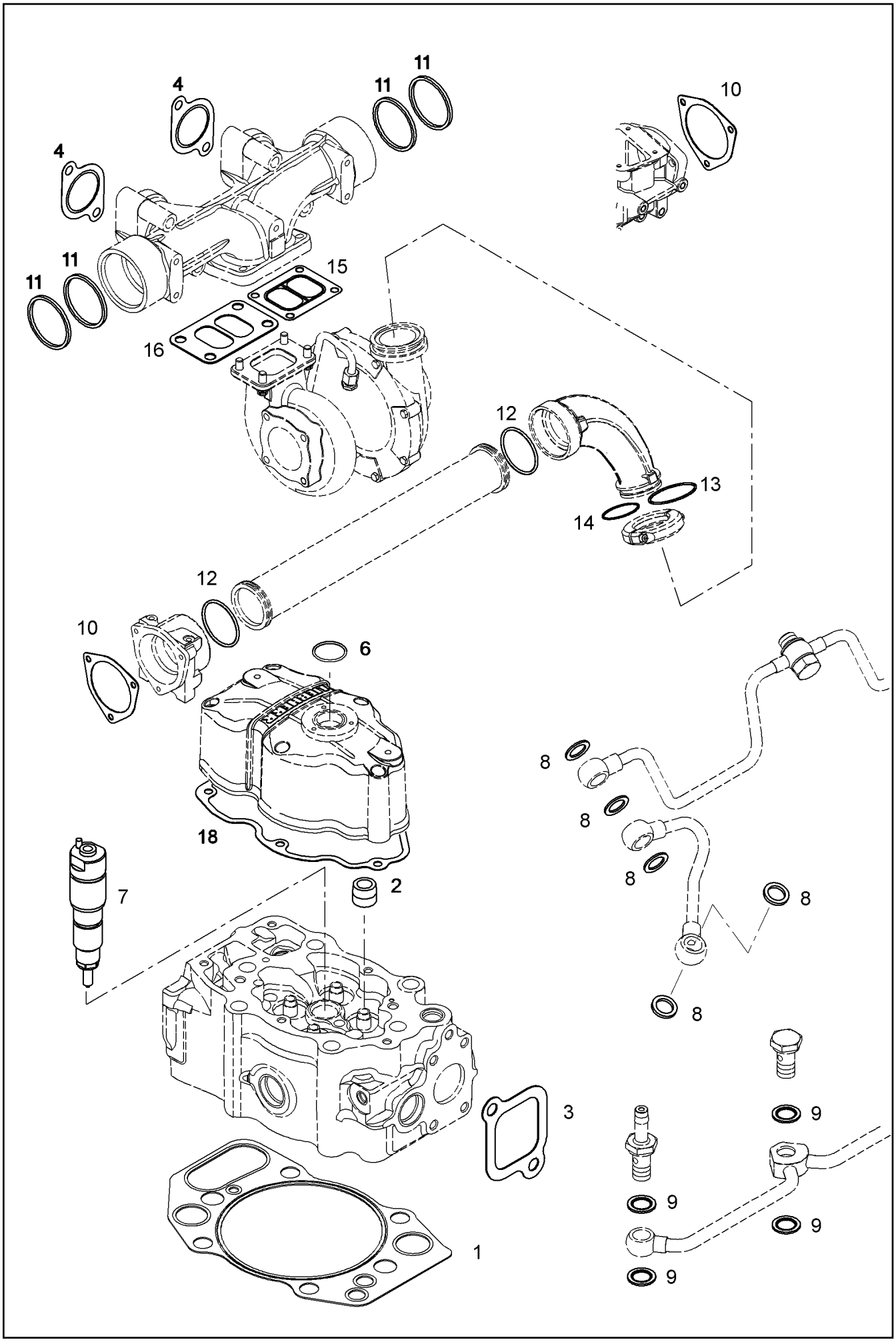


| | | |
|---|---|---|
| 16.2.2017<br>037217<br>LIEBHERR | etk_en_de_048005 LTR 1100<br><br>SEAL KIT CYLINDER HEAD<br>DS ZYLINDERKOPF | 488 (1/2)<br><br>X10115851<br>10 11 585 1 |

| Pos. | Item | Quantity | Description | Bezeichnung |
|---|---|---|---|---|
| 1 | 10 12 084 4 | 1 | CYLINDER HEAD GASKET Metal-Elasto | ZYLINDERKOPFDICHTUNG |
| 2 | 10 11 930 5 | 4 | VALVE STEM SEAL RING VIVA6 9-6 75 FKM | VENTILSCHAFTDICHTRING |
| 3 | 10 11 855 6 | 6 | SEAL | DICHTUNG |
| 4 | 10 14 155 7 | 6 | SEAL METALOSEAL 4 | DICHTUNG |
| 5 | 10 12 033 4 | 4 | VALVE STEM SEAL RING | VENTILSCHAFTDICHTRING |
| 6 | 73 81 270 | 1 | O-RING DIN 3771 34,65X1,78 VMQ 70 A,RD | O-RING |
| 7 | 10 11 585 4 | 1 | SEAL KIT INJECTION NOZZLE<br>⇨ X10115854 10 11 585 4 | DS EINSPRITZDUESE |
| 8 | 70 07 952 | 15 | SEALING RING DIN 7603 A10X15X1 | DICHTRING |
| 9 | 10 01 186 6 | 12 | SEALING RING 14,7X22X1,5 St/FPM1-80 | DICHTRING |
| 10 | 92 71 963 | 2 | SEAL AFM 31 | DICHTUNG |
| 11 | 10 00 844 8 | 4 | LAMELLAR DISK KIT 62,0/56,4X3,3 X5NiCrTi2 | LAMELLENRINGSATZ |
| 12 | 10 02 232 0 | 2 | O-RING 80X5,0 80 FKM 610 | O-RING |
| 13 | 73 80 970 | 1 | O-RING 63,17X2,62 FKM 70 A,GN | O-RING |
| 14 | 73 80 919 | 1 | O-RING ISO 3601-1 52,07X2,62 FKM 70 A,GN | O-RING |
| 15 | 92 70 109 | 1 | SEAL ASBESTFREI | DICHTUNG |
| 16 | 92 68 129 | 1 | SEAL ASBESTFREI | DICHTUNG |
| 18 | 10 11 855 4 | 1 | SEAL | DICHTUNG |

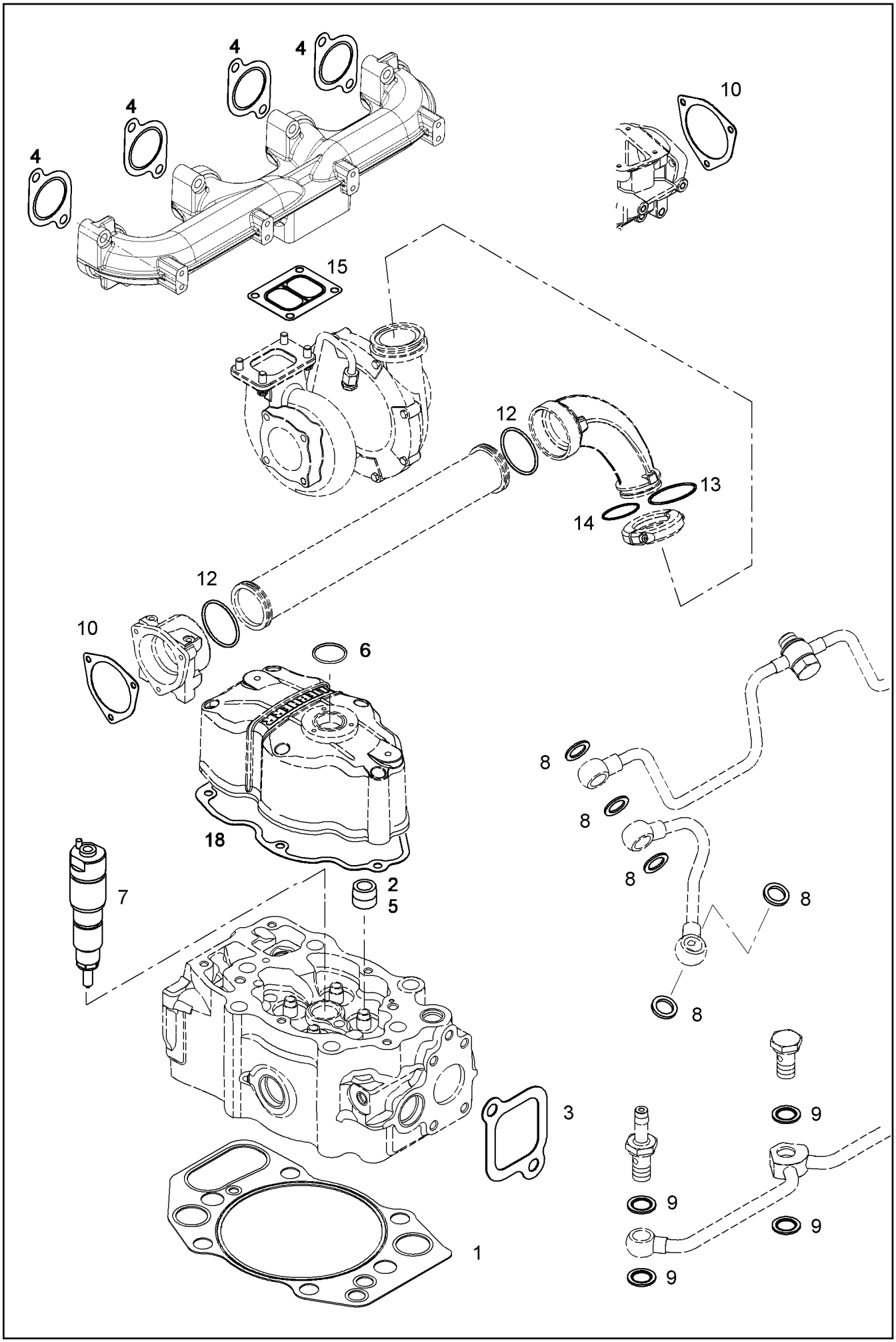


| | | |
|---|---|---|
| 16.2.2017<br>038628<br>LIEBHERR | **etk_en_de_048005 LTR 1100**<br><br>**SEAL KIT ZYLINDER HEAD CPL.**<br>**DS ZYLINDERKOPF KPL.** | ❑ 490 (1/2)<br><br>⇨ **X10115852**<br>**10 11 585 2** |

| Pos. | Item | Quantity | Description | Bezeichnung |
|---|---|---|---|---|
| 1 | 10 12 084 4 | 4 | CYLINDER HEAD GASKET Metal-Elasto | ZYLINDERKOPFDICHTUNG |
| 2 | 10 11 930 5 | 16 | VALVE STEM SEAL RING VIVA6 9-6 75 FKM | VENTILSCHAFTDICHTRING |
| 3 | 10 11 855 6 | 4 | SEAL | DICHTUNG |
| 4 | 10 14 155 7 | 4 | SEAL METALOSEAL 4 | DICHTUNG |
| 5 | 10 12 033 4 | 16 | VALVE STEM SEAL RING | VENTILSCHAFTDICHTRING |
| 6 | 73 81 270 | 1 | O-RING DIN 3771 34,65X1,78 VMQ 70 A,RD | O-RING |
| 7 | 10 11 585 4 | 4 | SEAL KIT INJECTION NOZZLE<br>➪ X10115854 10 11 585 4 | DS EINSPRITZDUESE |
| 8 | 70 07 952 | 11 | SEALING RING DIN 7603 A10X15X1 | DICHTRING |
| 9 | 10 01 186 6 | 8 | SEALING RING 14,7X22X1,5 St/FPM1-80 | DICHTRING |
| 10 | 92 71 963 | 2 | SEAL AFM 31 | DICHTUNG |
| 12 | 10 02 232 0 | 2 | O-RING 80X5,0 80 FKM 610 | O-RING |
| 13 | 73 80 970 | 1 | O-RING 63,17X2,62 FKM 70 A,GN | O-RING |
| 14 | 73 80 919 | 1 | O-RING ISO 3601-1 52,07X2,62 FKM 70 A,GN | O-RING |
| 15 | 92 73 423 | 1 | SEAL | DICHTUNG |
| 18 | 10 11 855 4 | 4 | SEAL | DICHTUNG |

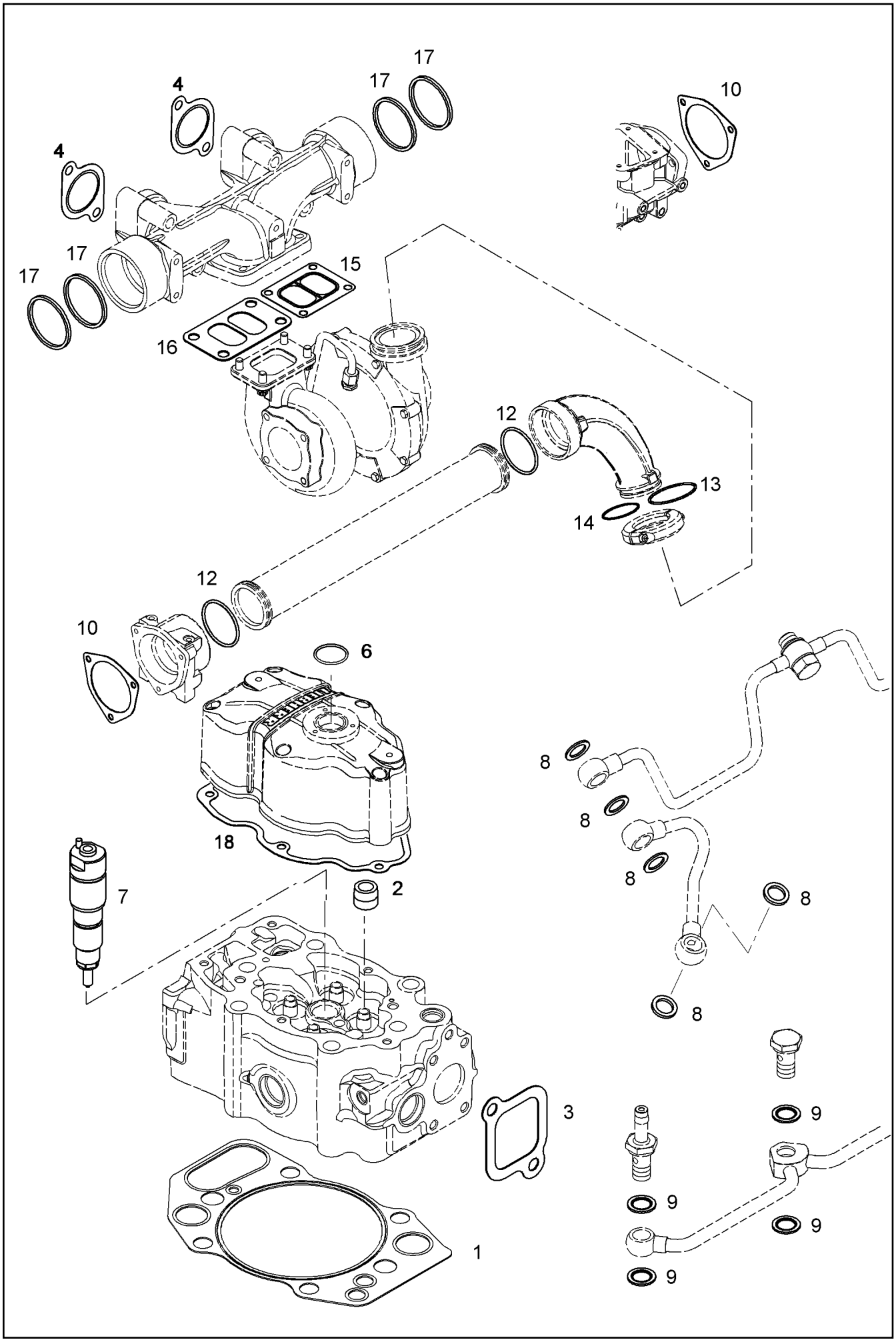


| | | |
|---|---|---|
| 16.2.2017<br>037283<br>LIEBHERR | **etk_en_de_048005 LTR 1100**<br><br>**SEAL KIT ZYLINDER HEAD CPL.**<br>**DS ZYLINDERKOPF KPL.** | 492 (1/2)<br><br>⇨ **X10115853**<br>**10 11 585 3** |

| Pos. | Item | Quantity | Description | Bezeichnung |
|---|---|---|---|---|
| 1 | 10 12 084 4 | 6 | CYLINDER HEAD GASKET Metal-Elasto | ZYLINDERKOPFDICHTUNG |
| 2 | 10 11 930 5 | 24 | VALVE STEM SEAL RING VIVA6 9-6 75 FKM | VENTILSCHAFTDICHTRING |
| 3 | 10 11 855 6 | 6 | SEAL | DICHTUNG |
| 4 | 10 14 155 7 | 6 | SEAL METALOSEAL 4 | DICHTUNG |
| 5 | 10 12 033 4 | 24 | VALVE STEM SEAL RING | VENTILSCHAFTDICHTRING |
| 6 | 73 81 270 | 1 | O-RING DIN 3771 34,65X1,78 VMQ 70 A,RD | O-RING |
| 7 | 10 11 585 4 | 6 | SEAL KIT INJECTION NOZZLE<br>⇨ X10115854 10 11 585 4 | DS EINSPRITZDUESE |
| 8 | 70 07 952 | 15 | SEALING RING DIN 7603 A10X15X1 | DICHTRING |
| 9 | 10 01 186 6 | 12 | SEALING RING 14,7X22X1,5 St/FPM1-80 | DICHTRING |
| 10 | 92 71 963 | 2 | SEAL AFM 31 | DICHTUNG |
| 11 | 10 00 844 8 | 4 | LAMELLAR DISK KIT 62,0/56,4X3,3 X5NiCrTi2 | LAMELLENRINGSATZ |
| 12 | 10 02 232 0 | 2 | O-RING 80X5,0 80 FKM 610 | O-RING |
| 13 | 73 80 970 | 1 | O-RING 63,17X2,62 FKM 70 A,GN | O-RING |
| 14 | 73 80 919 | 1 | O-RING ISO 3601-1 52,07X2,62 FKM 70 A,GN | O-RING |
| 15 | 92 70 109 | 1 | SEAL ASBESTFREI | DICHTUNG |
| 16 | 92 68 129 | 1 | SEAL ASBESTFREI | DICHTUNG |
| 18 | 10 11 855 4 | 6 | SEAL | DICHTUNG |

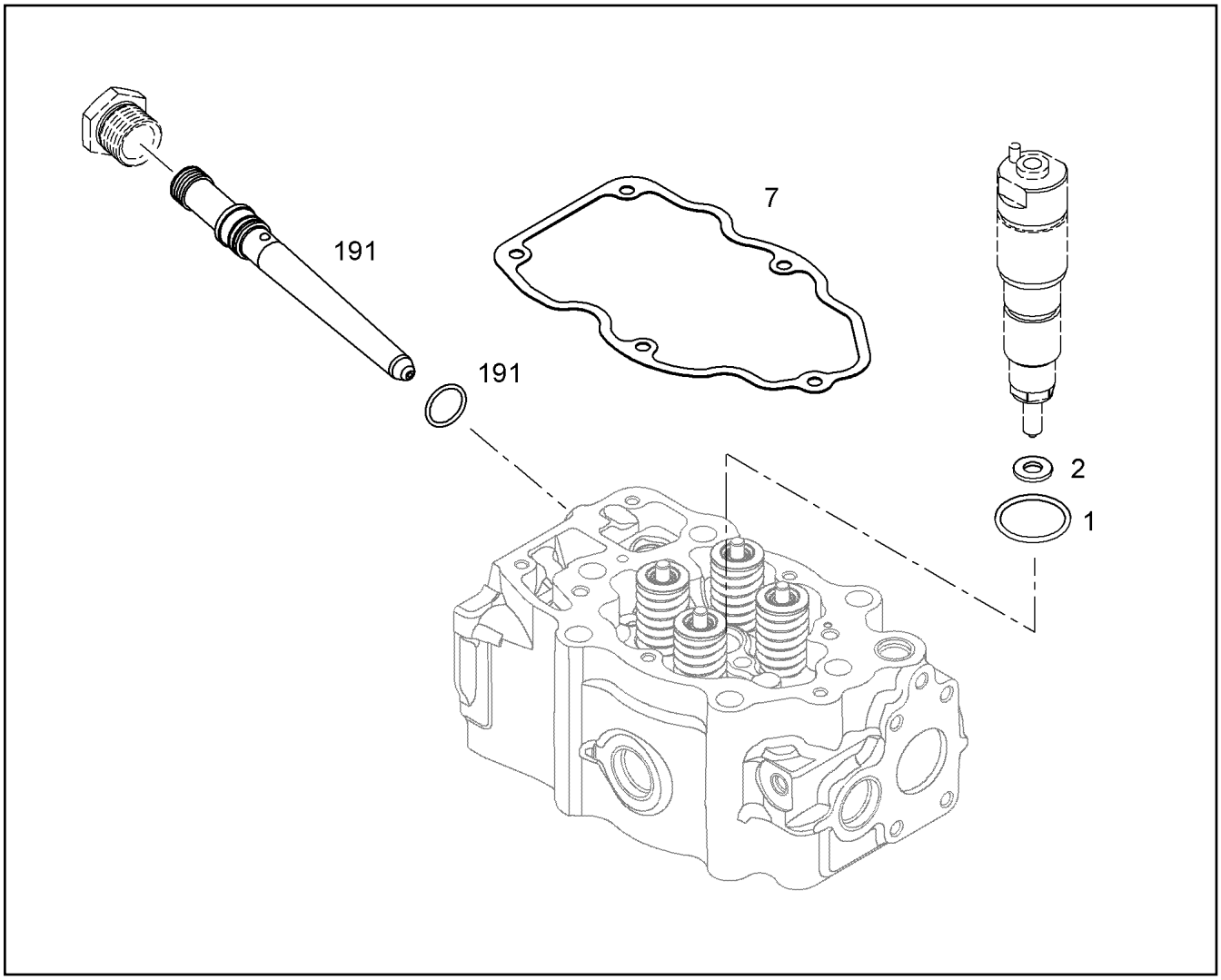


| Pos. | Item | Quantity | Description | Bezeichnung |
|---|---|---|---|---|
| 1 | 10 04 039 9 | 1 | O-RING 20,90X3 | O-RING |
| 2 | 10 04 040 6 | 1 | SHEET GASKET 7,03X15,1X1,5 Cu | DICHTSCHEIBE |
| 7 | 10 11 855 4 | 1 | SEAL | DICHTUNG |
| 191 | 90 75 395 | 1 | HIGH PRESSURE CONNECTOR ASS.<br>⇨ 9 075 395 90 75 395 | DRUCKROHRSTUTZEN ANBAU |

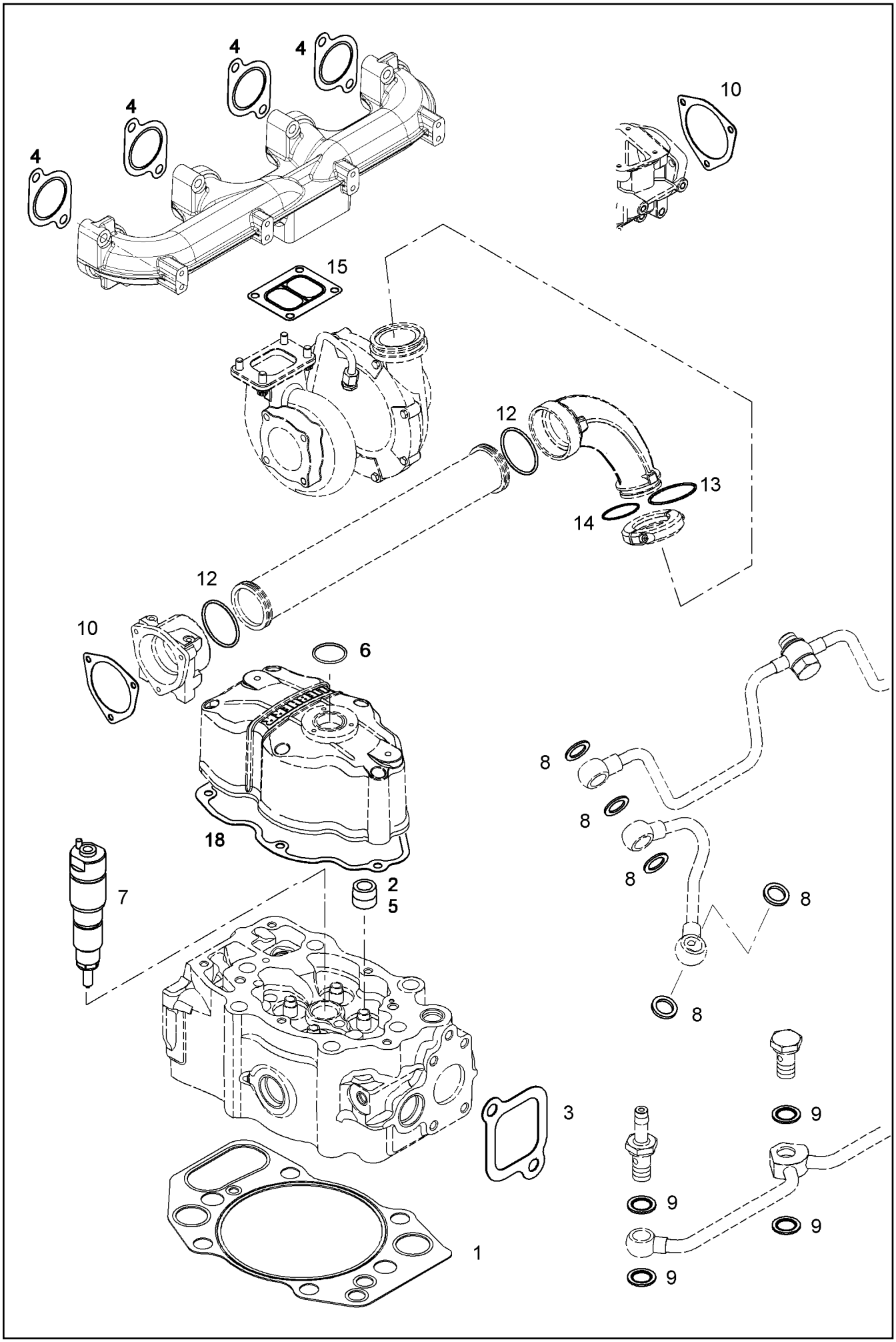


| | | |
|---|---|---|
| 16.2.2017<br>038627<br>LIEBHERR | **etk_en_de_048005 LTR 1100**<br><br>**SEAL KIT CYLINDER HEAD**<br>**DS ZYLINDERKOPF** | 495 (1/2)<br><br>**X10115859**<br>**10 11 585 9** |

| Pos. | Item | Quantity | Description | Bezeichnung |
|---|---|---|---|---|
| 1 | 10 12 084 4 | 1 | CYLINDER HEAD GASKET Metal-Elasto | ZYLINDERKOPFDICHTUNG |
| 2 | 10 11 930 5 | 4 | VALVE STEM SEAL RING VIVA6 9-6 75 FKM | VENTILSCHAFTDICHTRING |
| 3 | 10 11 855 6 | 4 | SEAL | DICHTUNG |
| 4 | 10 14 155 7 | 4 | SEAL METALOSEAL 4 | DICHTUNG |
| 5 | 10 12 033 4 | 4 | VALVE STEM SEAL RING | VENTILSCHAFTDICHTRING |
| 6 | 73 81 270 | 1 | O-RING DIN 3771 34,65X1,78 VMQ 70 A,RD | O-RING |
| 7 | 10 11 585 4 | 1 | SEAL KIT INJECTION NOZZLE<br>➪ X10115854 10 11 585 4 | DS EINSPRITZDUESE |
| 8 | 70 07 952 | 11 | SEALING RING DIN 7603 A10X15X1 | DICHTRING |
| 9 | 10 01 186 6 | 8 | SEALING RING 14,7X22X1,5 St/FPM1-80 | DICHTRING |
| 10 | 92 71 963 | 2 | SEAL AFM 31 | DICHTUNG |
| 12 | 10 02 232 0 | 2 | O-RING 80X5,0 80 FKM 610 | O-RING |
| 13 | 73 80 970 | 1 | O-RING 63,17X2,62 FKM 70 A,GN | O-RING |
| 14 | 73 80 919 | 1 | O-RING ISO 3601-1 52,07X2,62 FKM 70 A,GN | O-RING |
| 15 | 92 73 423 | 1 | SEAL | DICHTUNG |
| 18 | 10 11 855 4 | 1 | SEAL | DICHTUNG |

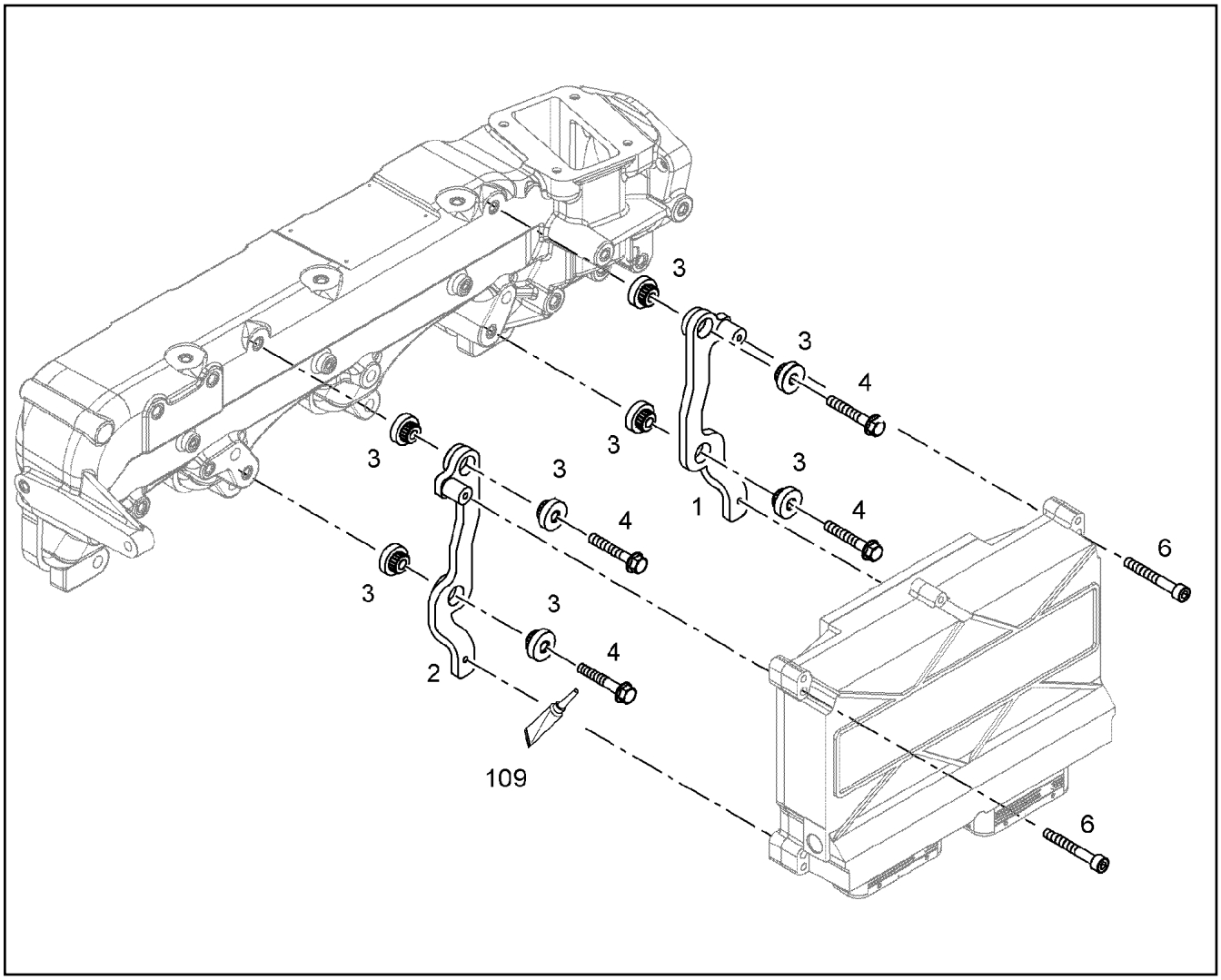


| Pos. | Item | Quantity | Description | Bezeichnung |
|---|---|---|---|---|
| 1 | 10 11 599 6 | 1 | RETAINER CPL. | HALTER KPL. |
| 2 | 10 11 599 4 | 1 | RETAINER CPL. | HALTER KPL. |
| 3 | 10 11 627 4 | 8 | RUBBER BUFFER 8,3/26X7,2 30 VMQ 21577 | GUMMIPUFFER |
| 4 | 10 03 557 5 | 4 | HEX SCREW DIN 6921 M8X40 10.9 A2C | SECHSKANTSCHRAUBE |
| 6 | 10 87 559 2 | 4 | SOCKET HEAD SCREW ISO 4762 M6X45 8.8 | ZYLINDERSCHRAUBE |
| 109 | 81 12 057 08 | 1 | SCREW LOCKING 50ML FLASCHE 150 °C | SCHRAUBENSICHERUNG |

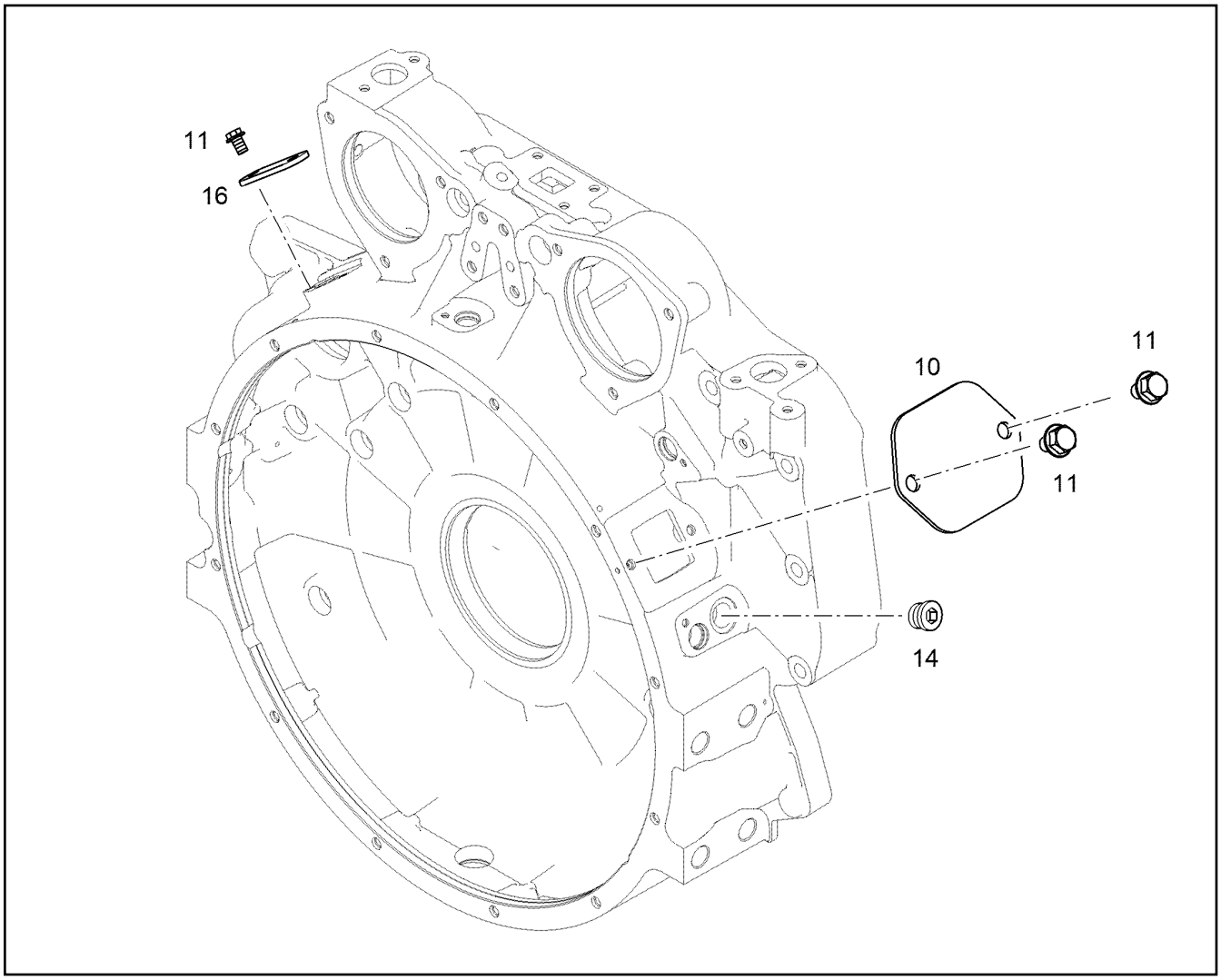


| Pos. | Item | Quantity | Description | Bezeichnung |
|---|---|---|---|---|
| 10 | 10 11 709 4 | 1 | COVER | DECKEL |
| 11 | 10 00 507 8 | 4 | HEX SCREW DIN 6921 M8X16 8.8 A2C | SECHSKANTSCHRAUBE |
| 14 | 73 80 177 | 1 | SCREW PLUG VSTI M22X1,5 CR6-FREI | VERSCHLUSSSCHRAUBE |
| 16 | 92 75 826 | 1 | SHEET | PLATTE |

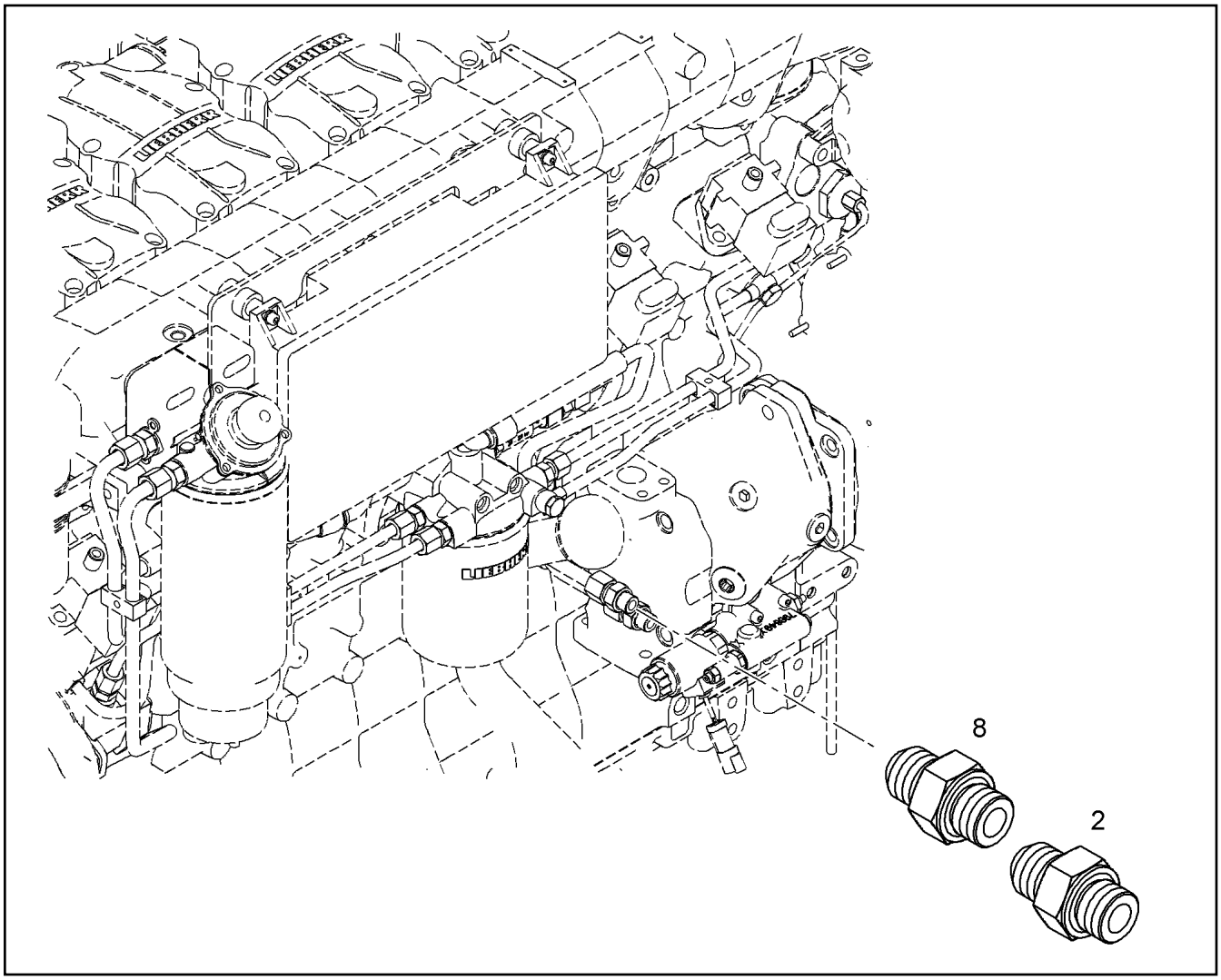


| Pos. | Item | Quantity | Description | Bezeichnung |
|---|---|---|---|---|
| 2 | 10 11 614 7 | 1 | FITTINGS 3/4-16/M26X1,5 11SMnPb30+C | STUTZEN |
| 8 | 90 80 360 | 1 | FITTINGS 3/4-16/M22X1,5 11SMnPb30+C | STUTZEN |

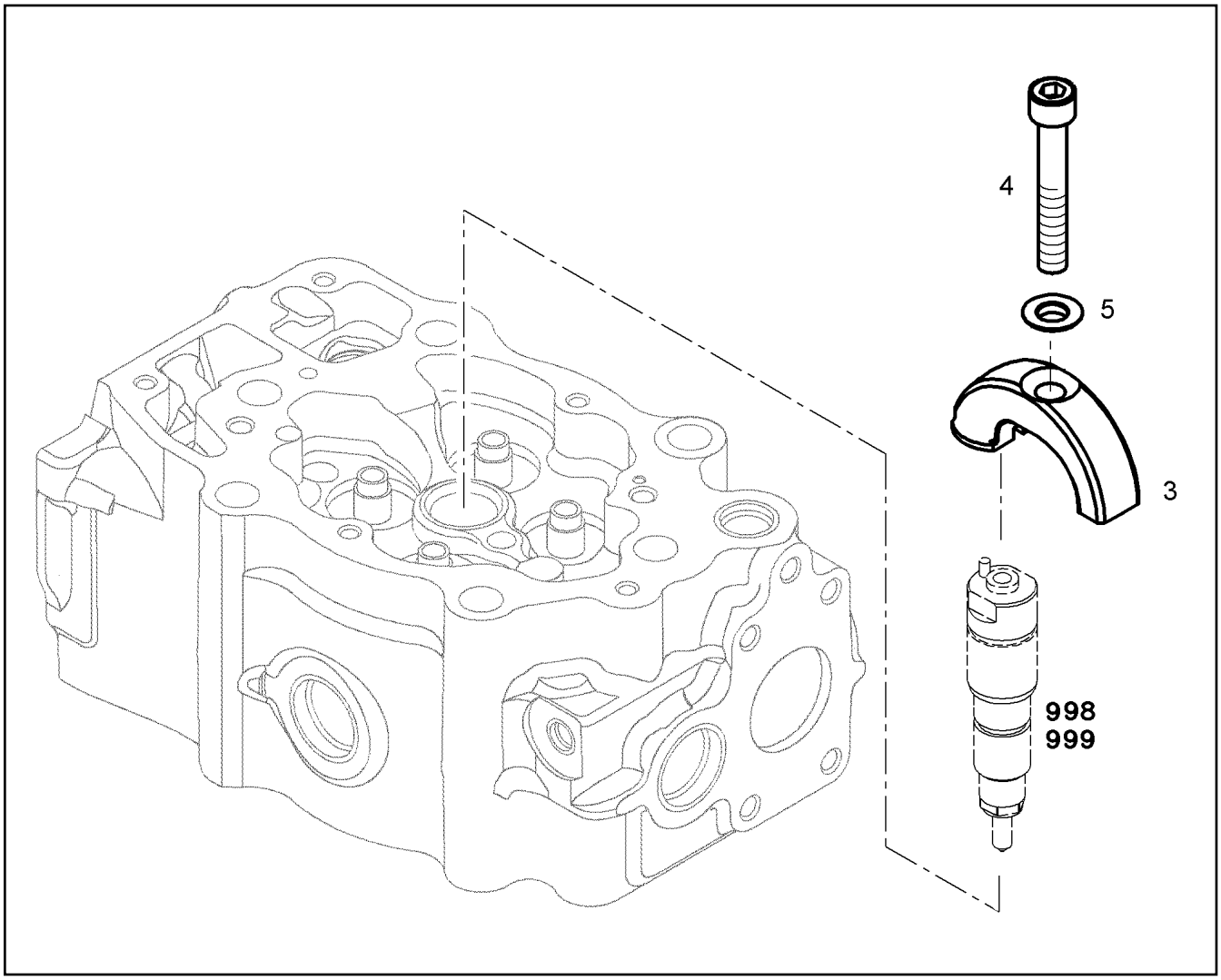


| Pos. | Item | Quantity | Description | Bezeichnung |
|---|---|---|---|---|
| 3 | 90 75 372 | 1 | JAW | PRATZE |
| 4 | 40 42 098 08 | 1 | SOCKET HEAD SCREW DIN 912 M10X65 8.8 | ZYLINDERSCHRAUBE |
| 5 | 42 19 002 08 | 1 | SPHERICAL WASHER DIN 6319 C 10,5 VER | KUGELSCHEIBE |
| 998 | 10 11 709 3 | 1 | RK INJECTION NOZZLE<br>⇨ X10117093 10 11 709 3 | RS EINSPRITZDUESE |
| 999 | 10 11 585 4 | 1 | SEAL KIT INJECTION NOZZLE<br>⇨ X10115854 10 11 585 4 | DS EINSPRITZDUESE |

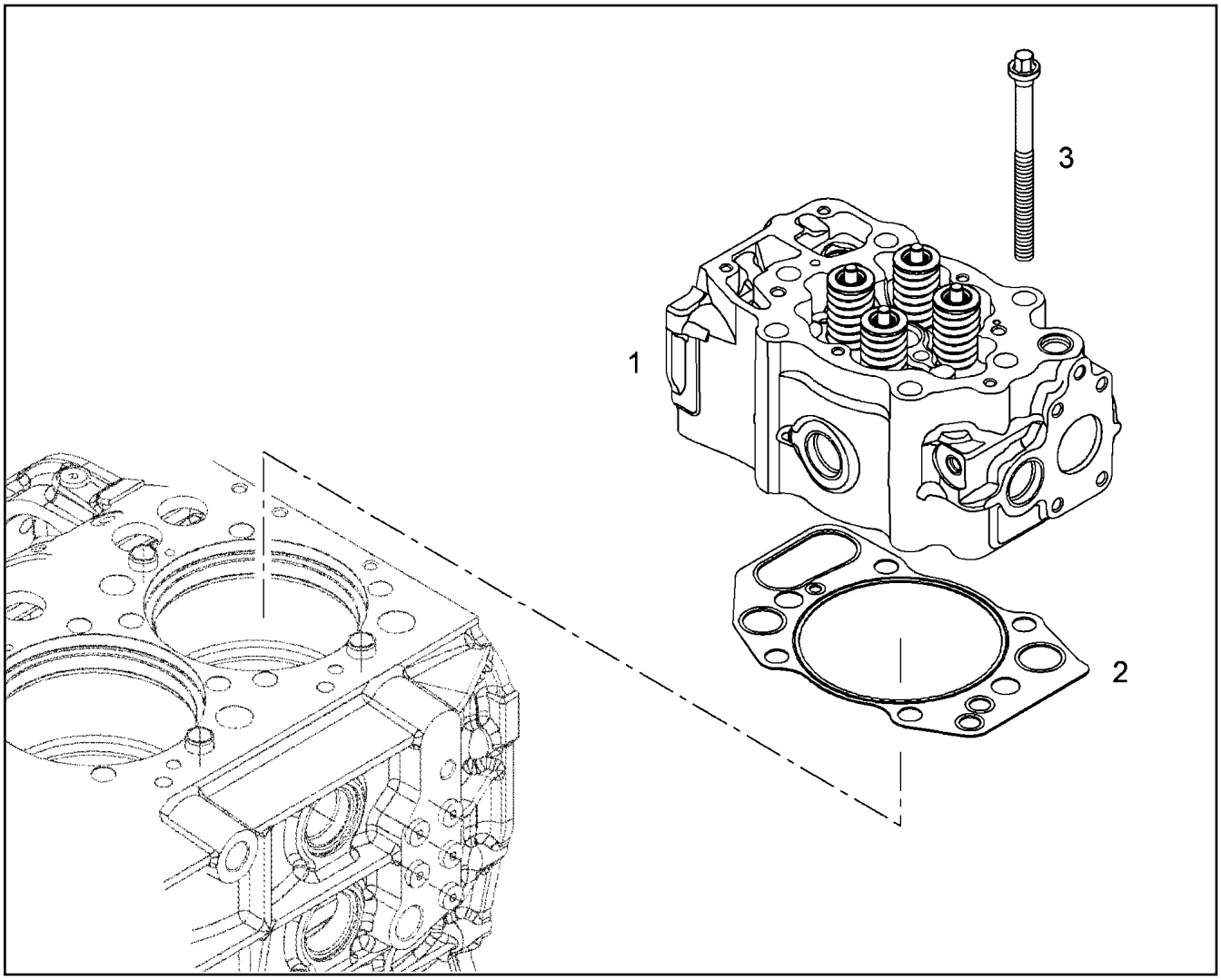


| Pos. | Item | Quantity | Description | Bezeichnung |
|---|---|---|---|---|
| 1 | 10 12 036 5 | 1 | CYLINDER HEAD PRE-ASSY. R-MOTOR<br>⇨ X10120365 10 12 036 5 | ZYLINDERKOPF VORM. |
| 1 | 10 14 155 5 | 1 | CYLINDER HEAD PRE-ASSY. R-MOTOR<br>⇨ X10141555 10 14 155 5 | ZYLINDERKOPF VORM. |
| 2 | 10 12 084 4 | 1 | CYLINDER HEAD GASKET Metal-Elasto | ZYLINDERKOPFDICHTUNG |
| 3 | 90 74 501 | 6 | CYLINDER SCREW M16X195 10.9 | ZYLINDERKOPFSCHRAUBE |
| 996 | 10 11 585 9 | 1 | SEAL KIT CYLINDER HEAD<br>⇨ X10115859 10 11 585 9 | DS ZYLINDERKOPF |
| 997 | 10 11 585 1 | 1 | SEAL KIT CYLINDER HEAD<br>⇨ X10115851 10 11 585 1 | DS ZYLINDERKOPF |
| 998 | 10 11 585 2 | 1 | SEAL KIT ZYLINDER HEAD CPL.<br>⇨ X10115852 10 11 585 2 | DS ZYLINDERKOPF KPL. |
| 999 | 10 11 585 3 | 1 | SEAL KIT ZYLINDER HEAD CPL.<br>⇨ X10115853 10 11 585 3 | DS ZYLINDERKOPF KPL. |

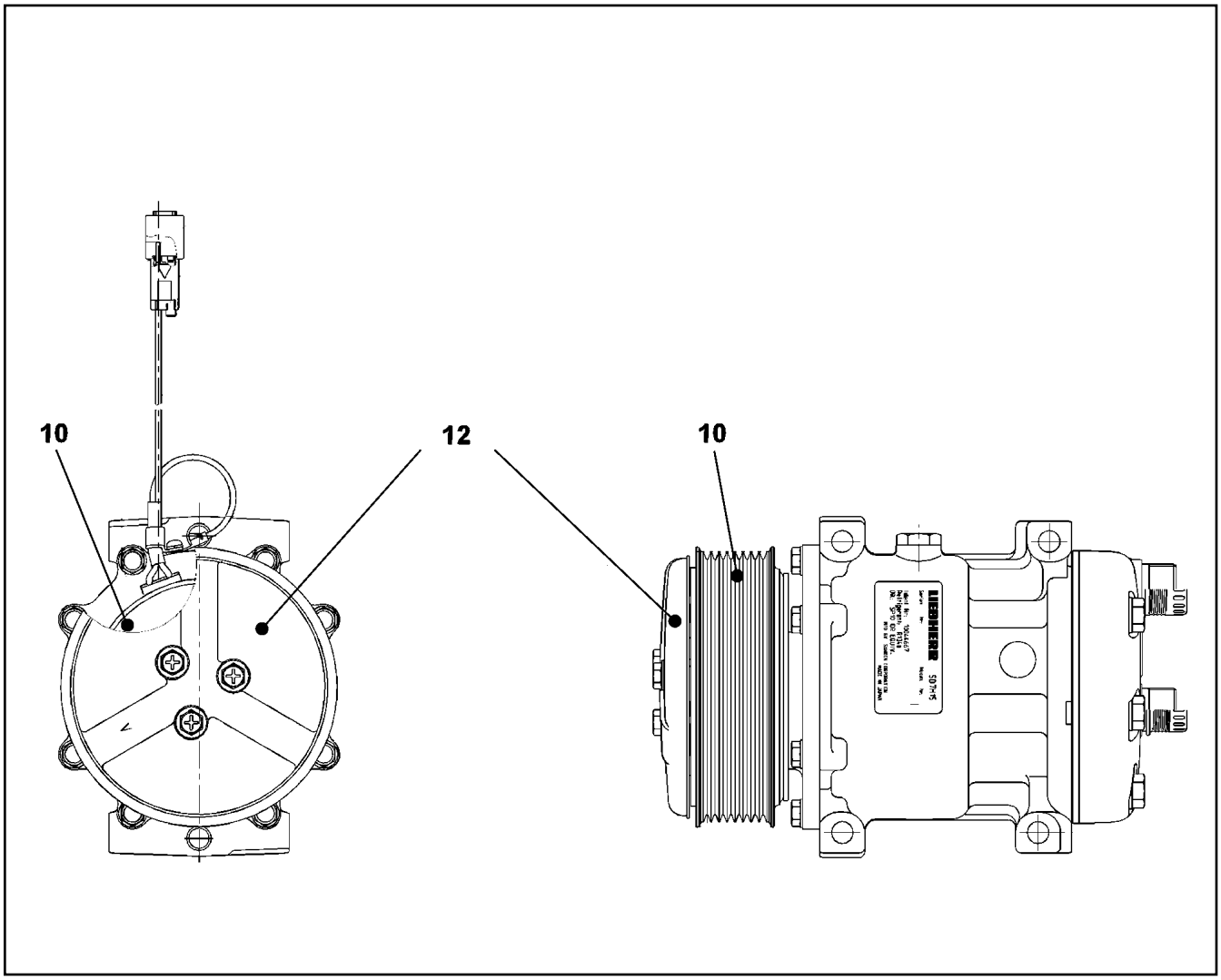


| Pos. | Item | Quantity | Description | Bezeichnung |
|---|---|---|---|---|
| 10 | 10 11 577 1 | 1 | COUPLING CPL. 34,3NM/4000U/MIN | KUPPLUNG KPL. |
| 12 | 10 04 006 4 | 1 | DUST-PROF COVER | STAUBSCHUTZ |

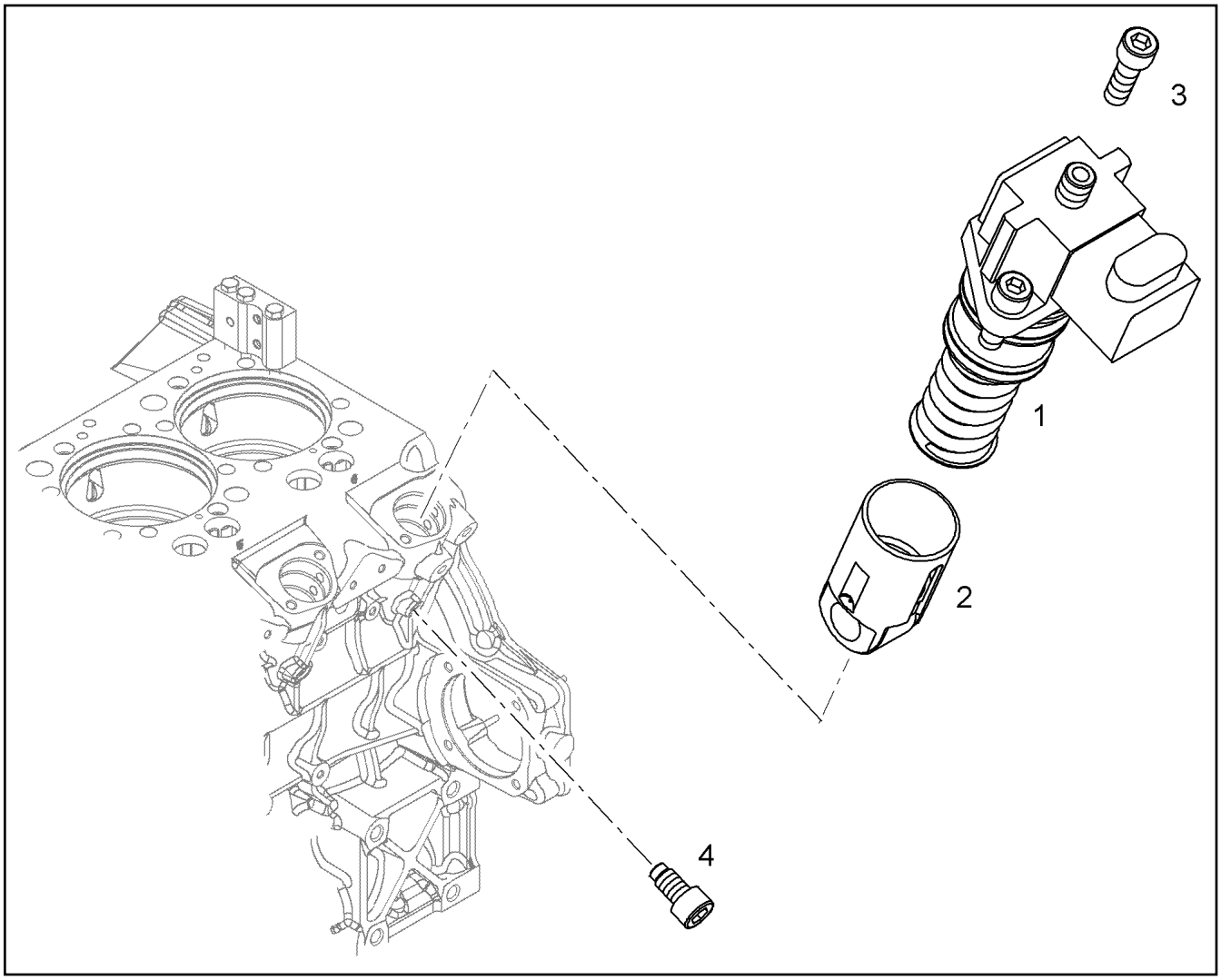


| Pos. | Item | Quantity | Description | Bezeichnung |
|---|---|---|---|---|
| 1 | 10 11 625 7 | 1 | INJECTION PUMP R-MOTORXD930 | EINSPRITZPUMPE |
| (8) | 10 04 040 5 | 2 | HEX SCREW M3X0,5X9,1 | SECHSKANTSCHRAUBE |
| (999) | 10 11 585 5 | 1 | SEAL KIT INJECTION PUMP | DS EINSPRITZPUMPE |
| 2 | 90 74 628 | 1 | ROLLER TAPPET D=44 | ROLLENSTOESSEL |
| 3 | 40 43 000 | 2 | SOCKET HEAD SCREW ISO 4762 M10X30 1 | ZYLINDERSCHRAUBE |
| 4 | 10 15 353 8 | 1 | LOCKING SCREW M10X19 10.9 | SICHERUNGSSCHRAUBE |
| 100 | 10 28 570 8 | 1 | GREASE NBU 30 1KG DOSE | FETT |

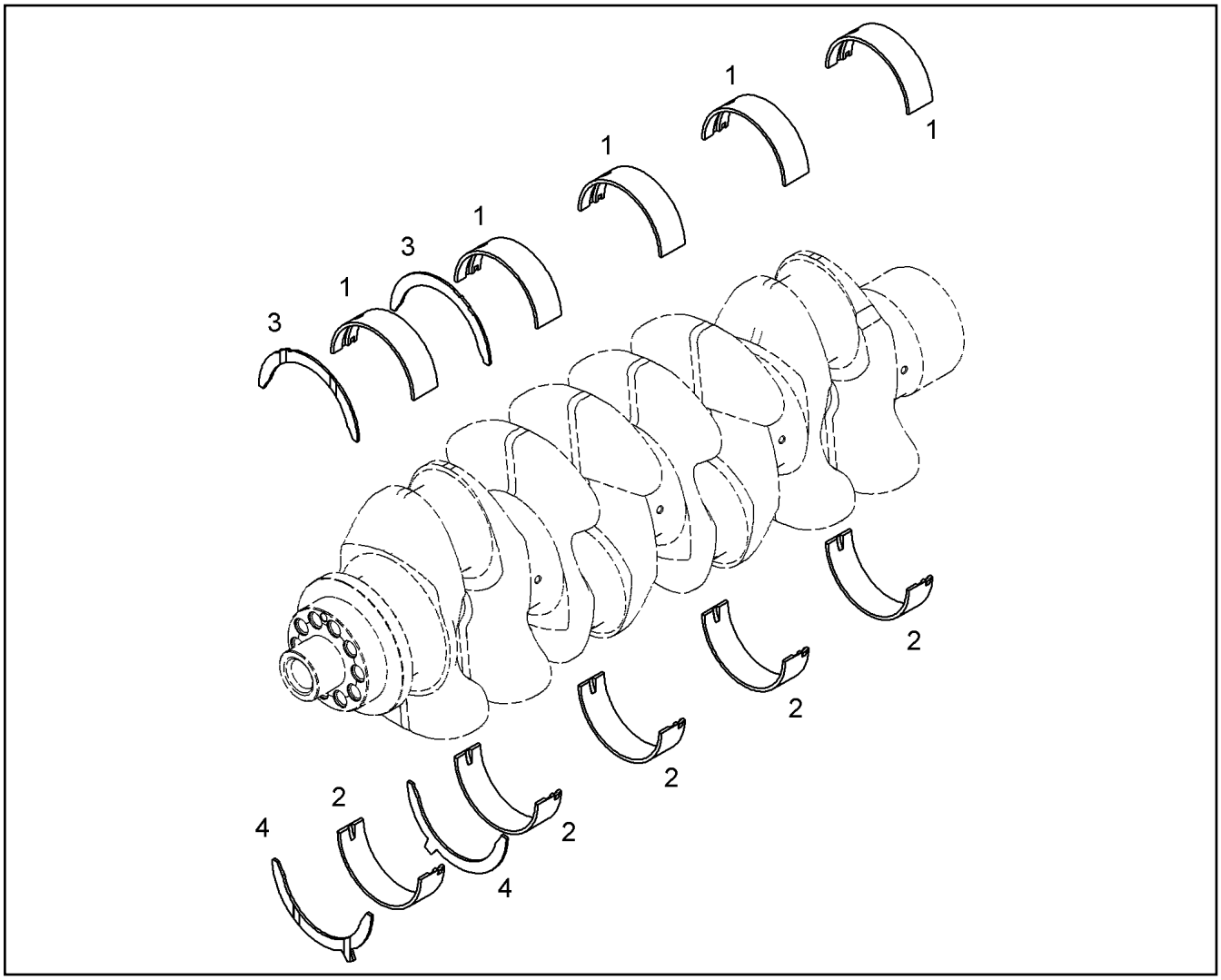


| Pos. | Item | Quantity | Description | Bezeichnung |
|---|---|---|---|---|
| 1 | 90 73 734 | 5 | MAIN BEARING 104/111/32 | HAUPTLAGER |
| 2 | 90 75 606 | 5 | MAIN BEARING 104/111/32 MIBA | HAUPTLAGER |
| 3 | 10 11 992 7 | 2 | THRUST WASHER 112X138X3 | ANLAUFSCHEIBE |
| 4 | 10 11 992 8 | 2 | THRUST WASHER 112X138X3 | ANLAUFSCHEIBE |

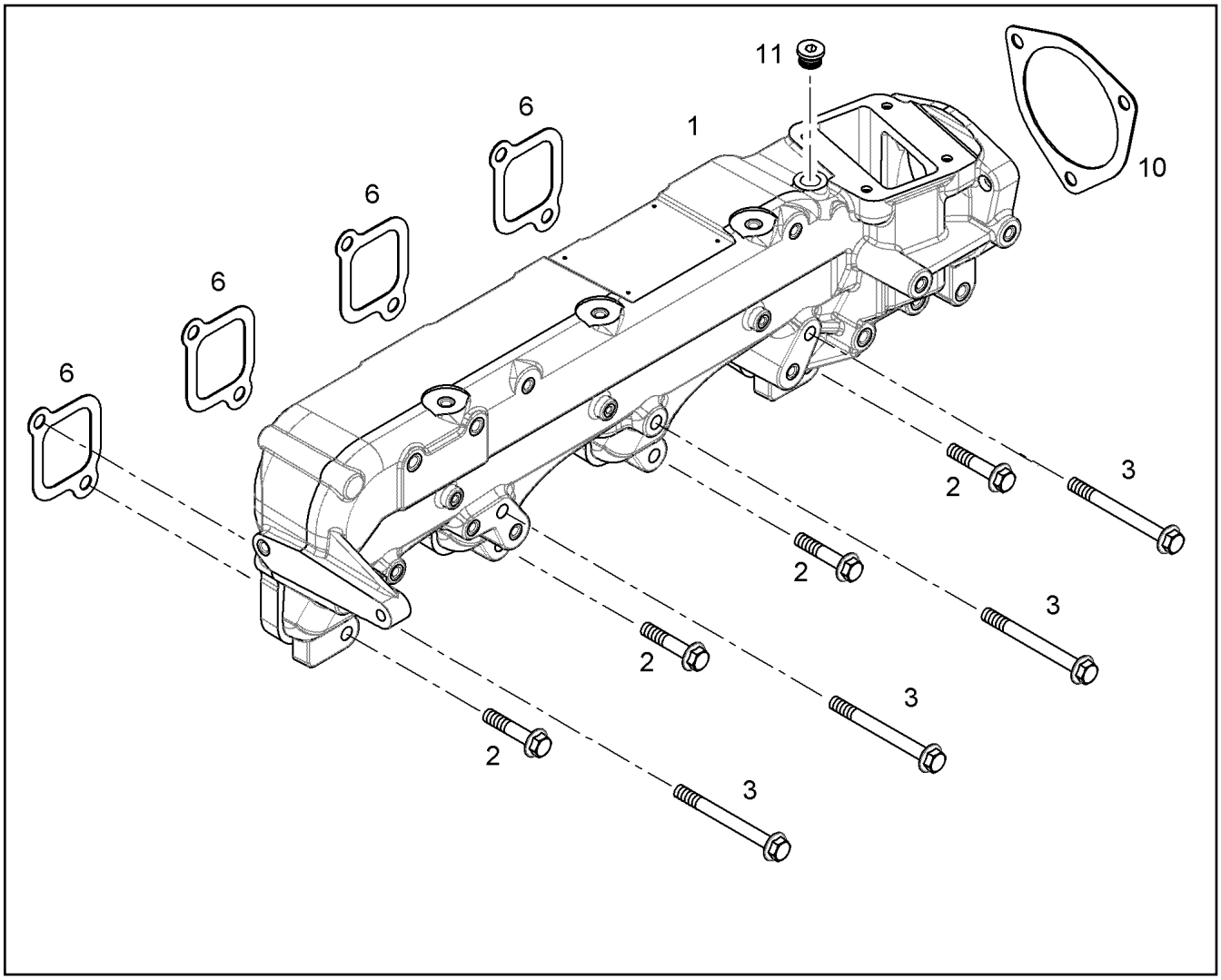


| Pos. | Item | Quantity | Description | Bezeichnung |
|---|---|---|---|---|
| 1 | 10 11 707 0 | 1 | AIR SUCTION PIPE R-MOTORXD934 | LUFTANSAUGROHR |
| 2 | 10 00 546 1 | 4 | HEX SCREW DIN 6921 M10X50 8.8 A3C | SECHSKANTSCHRAUBE |
| 3 | 10 00 546 2 | 4 | HEX SCREW DIN 6921 M10X100 8.8 A3C | SECHSKANTSCHRAUBE |
| 6 | 10 11 855 6 | 4 | SEAL | DICHTUNG |
| 10 | 92 71 963 | 1 | SEAL AFM 31 | DICHTUNG |
| 11 | 73 80 566 | 1 | SCREW PLUG VSTI M14X1,5 | VERSCHLUSSSCHRAUBE |

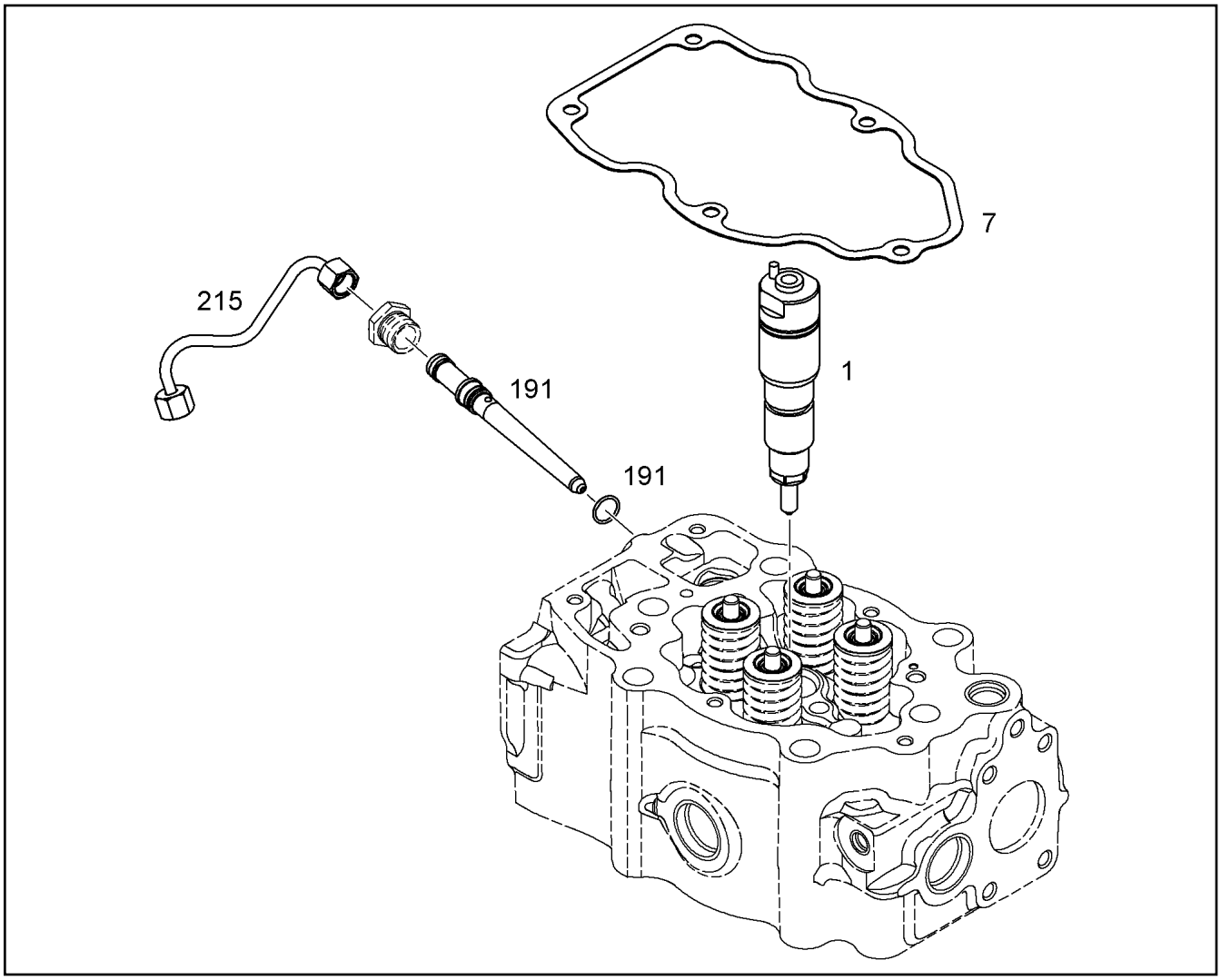


| Pos. | Item | Quantity | Description | Bezeichnung |
|---|---|---|---|---|
| 1 | 10 11 658 7 | 1 | INJECTOR | EINSPRITZDUESE |
| 7 | 10 11 855 4 | 1 | SEAL | DICHTUNG |
| 191 | 90 75 395 | 1 | HIGH PRESSURE CONNECTOR ASS.<br>⇨ 9 075 395 90 75 395 | DRUCKROHRSTUTZEN ANBAU |
| 215 | 90 80 410 | 1 | INJECTION LINE R-MOTORXD934/D93 | EINSPRITZLEITUNG |

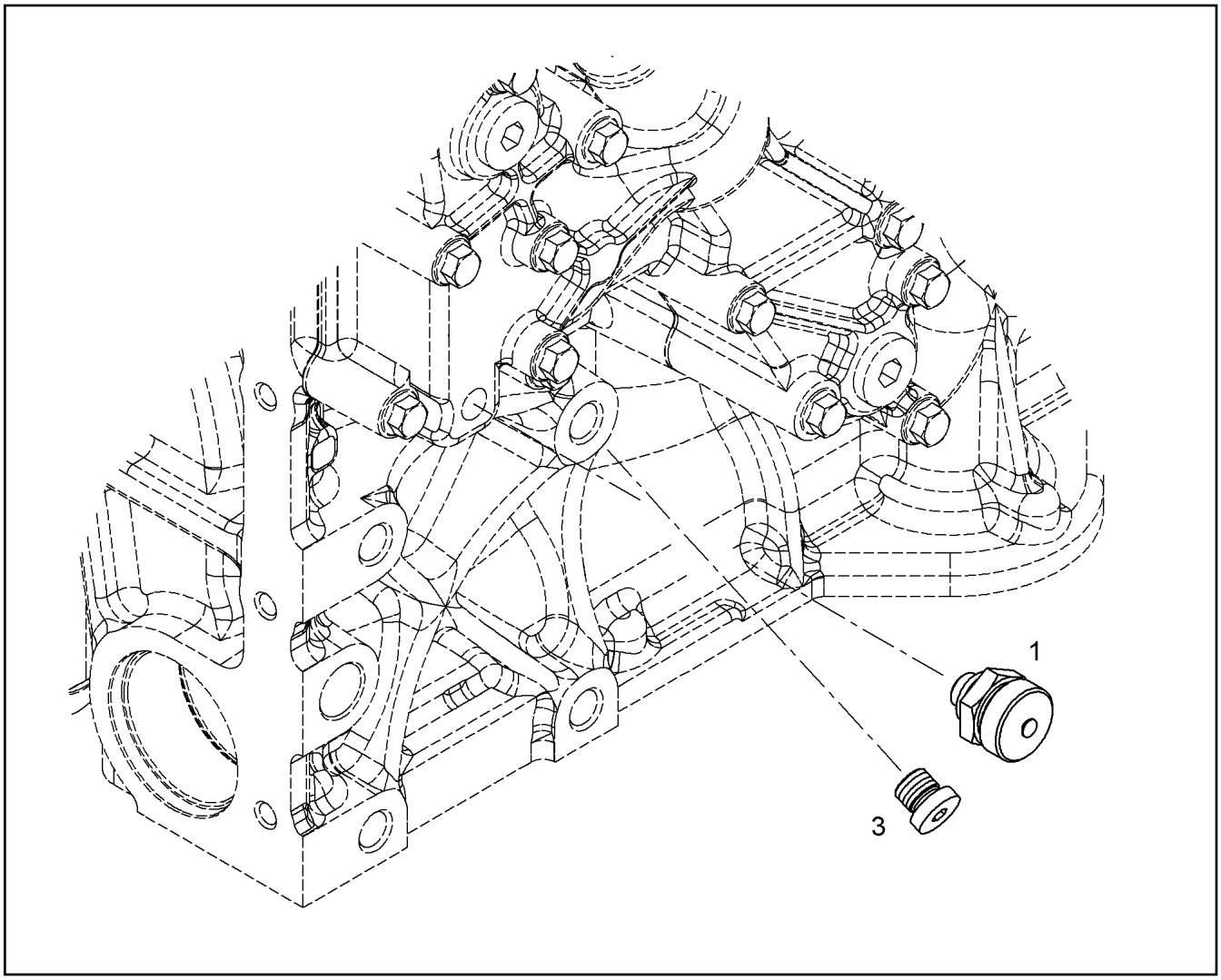


| Pos. | Item | Quantity | Description | Bezeichnung |
|---|---|---|---|---|
| 1 | 90 78 233 | 1 | VALVE M14X1,5<br>⇨ 9 078 233 90 78 233 | VENTIL |
| 3 | 73 80 566 | 1 | SCREW PLUG VSTI M14X1,5 | VERSCHLUSSSCHRAUBE |

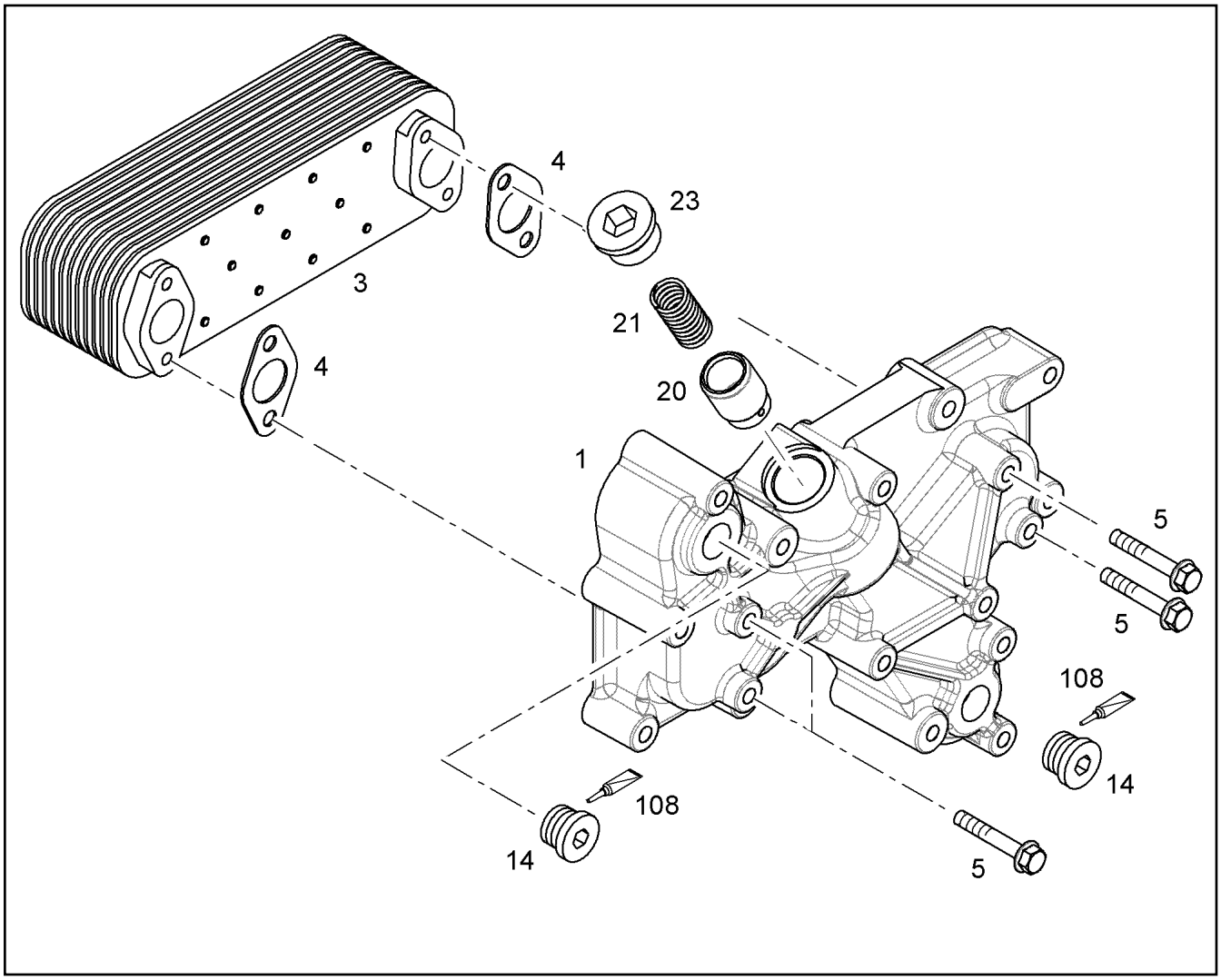


| Pos. | Item | Quantity | Description | Bezeichnung |
|---|---|---|---|---|
| 1 | 10 11 739 6 | 1 | OIL COOLER HOUSING D934 | OELKUEHLERGEHAEUSE |
| 3 | 10 32 500 1 | 1 | OIL COOLER | OELKUEHLER |
| 4 | 49 80 359 | 2 | SEAL DIN 71511 25X48X1,5 AFM 30 | DICHTUNG |
| 5 | 10 00 507 3 | 4 | HEX SCREW DIN 6921 M8X50 8.8 A2C | SECHSKANTSCHRAUBE |
| 14 | 73 80 177 | 2 | SCREW PLUG VSTI M22X1,5 CR6-FREI | VERSCHLUSSSCHRAUBE |
| 20 | 98 86 591 | 1 | PISTON | KOLBEN |
| 21 | 98 86 756 | 1 | PRESSURE SPRING 2,10X17,80X75,00 | DRUCKFEDER |
| 23 | 73 82 204 | 1 | SCREW PLUG VSTI M30X1,5 St Rm>500N/m | VERSCHLUSSSCHRAUBE |
| 108 | 81 12 013 14 | 1 | SEALING COMPOUND 50ML TUBE -55/+150 ° | DICHTUNGSMASSE |

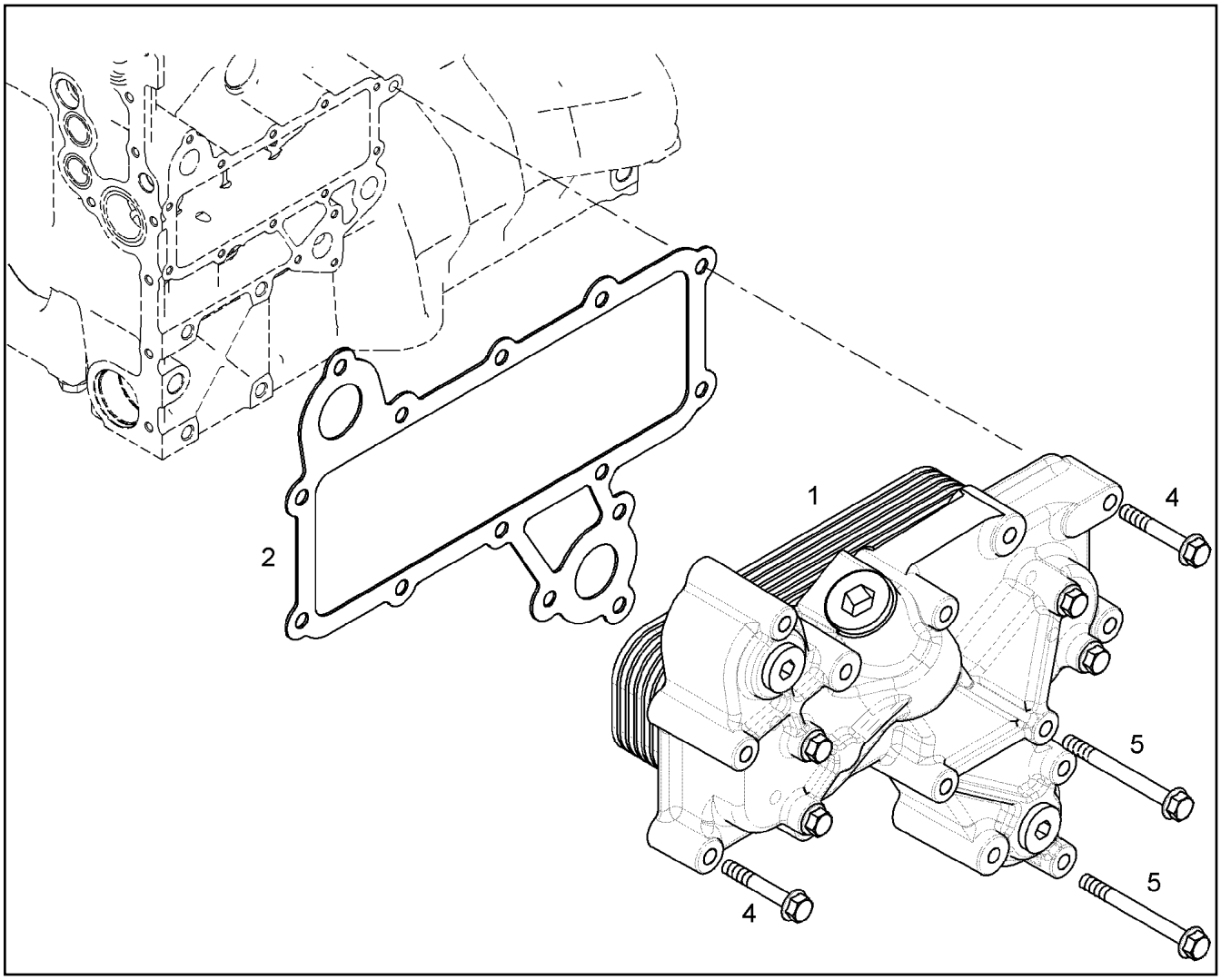


| Pos. | Item | Quantity | Description | Bezeichnung |
|---|---|---|---|---|
| 1 | 10 11 739 7 | 1 | OIL COOLER, PRE-ASSEMBLED<br>⇨ X10117397 10 11 739 7 | OELKUEHLER VORM. |
| 2 | 10 11 770 9 | 1 | SEAL 1MM AFM 30 | DICHTUNG |
| 4 | 10 00 507 3 | 5 | HEX SCREW DIN 6921 M8X50 8.8 A2C | SECHSKANTSCHRAUBE |
| 5 | 10 00 507 4 | 9 | HEX SCREW EN 1665 M8X80 8.8 A3C | SECHSKANTSCHRAUBE |
| 999 | 10 11 584 9 | 1 | SEALING SET OIL COOLER<br>⇨ X10115849 10 11 584 9 | DS OELKUEHLER |

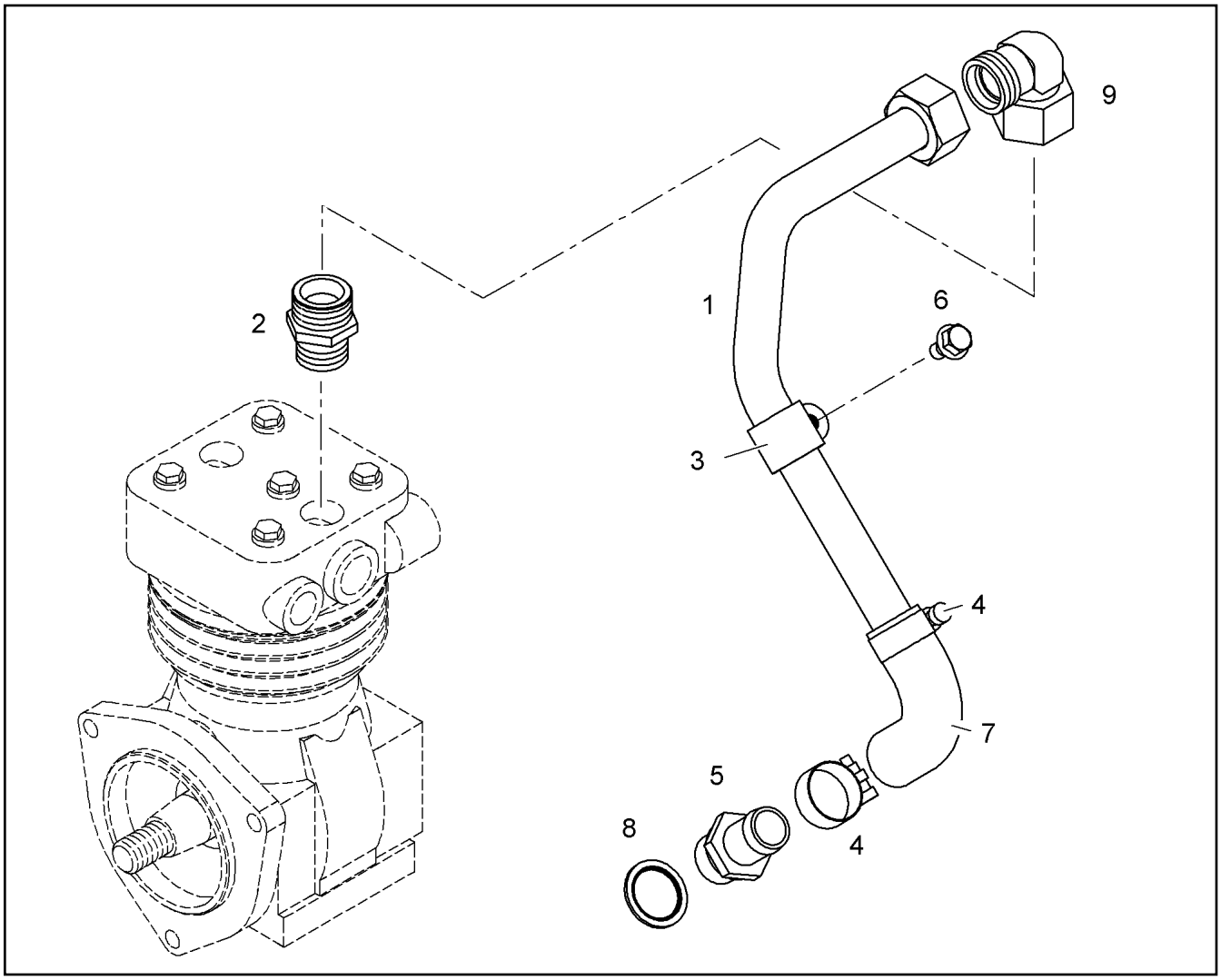


| Pos. | Item | Quantity | Description | Bezeichnung |
|---|---|---|---|---|
| 1 | 10 11 766 6 | 1 | PIPELINE 22X1,5 | ROHRLEITUNG |
| 2 | 47 10 313 08 | 1 | FLANGE JOINT XGE22-LM-ED M26X1,5 A3P | VERSCHRAUBUNG |
| 3 | 73 81 630 | 1 | CLAMP DIN 3016-1 22X20XD1 W1-2-MVQ | SCHELLE |
| 4 | 77 42 150 08 | 2 | HOSE CLAMP 26/20-32/12 W3 | SCHLAUCHSCHELLE |
| 5 | 91 40 351 | 1 | HOSE NIPPLE GERADE | SCHLAUCHNIPPEL |
| 6 | 10 00 507 8 | 1 | HEX SCREW DIN 6921 M8X16 8.8 A2C | SECHSKANTSCHRAUBE |
| 7 | 10 11 631 0 | 1 | RUBBER CONNECTION 90GRAD | GUMMIMUFFE |
| 8 | 10 01 187 0 | 1 | SEALING RING 26,7X34,93X2 St/FPM1-80 | DICHTRING |
| 9 | 47 25 306 08 | 1 | FLANGE JOINT EWSD22-L A3P | VERSCHRAUBUNG |

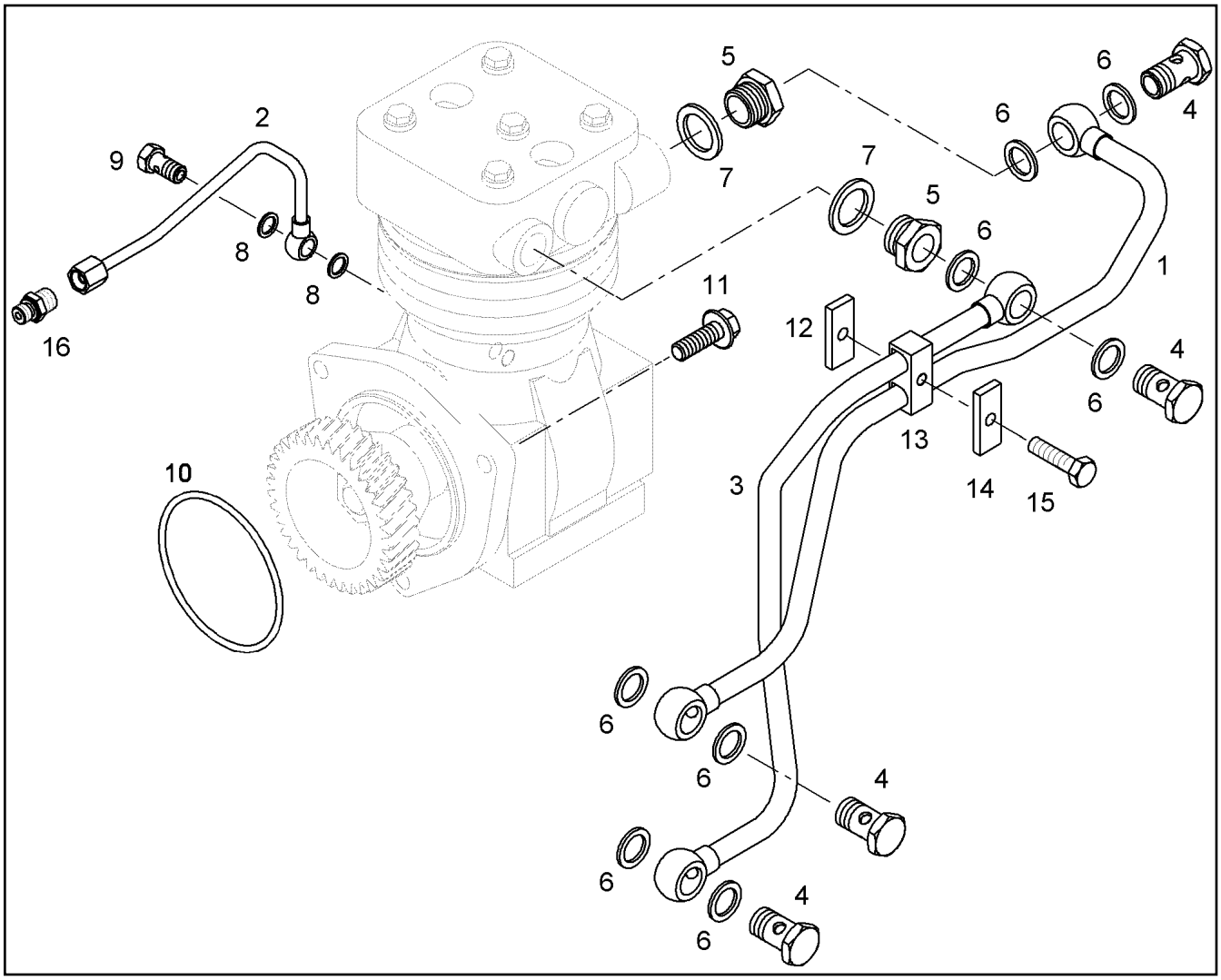


| Pos. | Item | Quantity | Description | Bezeichnung |
|---|---|---|---|---|
| 1 | 10 11 792 9 | 1 | COOLING WATER LINE 12X1 | KUEHLWASSERLEITUNG |
| 2 | 90 80 310 | 1 | LUBRICATING OIL LINE 6X1 | SCHMIEROELLEITUNG |
| 3 | 10 11 792 8 | 1 | COOLING WATER LINE 12X1 | KUEHLWASSERLEITUNG |
| 4 | 49 80 741 | 4 | HOLLOW SCREW DIN 7643 12X3XM16X1,5 | HOHLSCHRAUBE |
| 5 | 73 81 363 | 2 | FLANGE JOINT RI M22X1,5/M16X CR6-FREI | VERSCHRAUBUNG |
| 6 | 10 01 186 7 | 8 | SEALING RING 16,7X24X1,5 St/FPM1-80 | DICHTRING |
| 7 | 10 01 186 9 | 2 | SEALING RING 22,7X30X2 St/FPM1-80 | DICHTRING |
| 8 | 10 01 186 4 | 2 | SEALING RING 10,7X16X1,5 St/FPM1-80 | DICHTRING |
| 9 | 55 31 068 08 | 1 | HOLLOW SCREW DIN 7643 6-3-M10X1 | HOHLSCHRAUBE |
| 10 | 10 00 231 0 | 1 | O-RING 125X2 VMQ 70 | O-RING |
| 11 | 10 03 557 8 | 3 | HEX SCREW DIN 6921 M10X35 10.9 A3C | SECHSKANTSCHRAUBE |
| 12 | 90 73 189 | 1 | SUPPORT PLATE S235JR | STUETZBLECH |
| 13 | 73 82 216 | 1 | PIPE CLAMP 12 PP | ROHRSCHELLE |
| 14 | 90 73 190 | 1 | SUPPORT PLATE S235JR | STUETZBLECH |
| 15 | 46 00 102 | 1 | HEX SCREW ISO 4017 M6X30 8.8 A2C | SECHSKANTSCHRAUBE |
| 16 | 49 81 233 | 1 | FLANGE JOINT ISO 8434-1 GE 6L M10X1 C | VERSCHRAUBUNG |

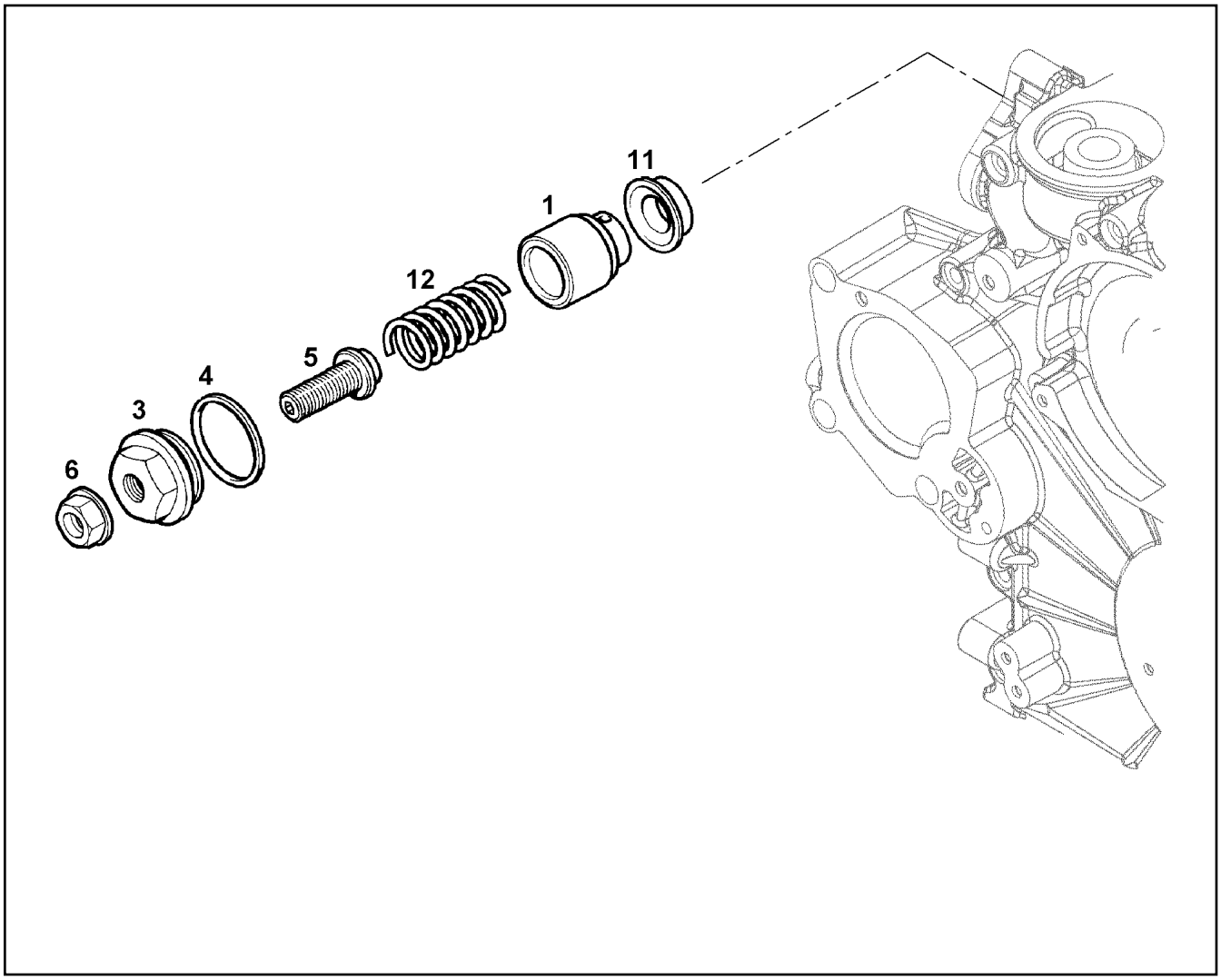


| Pos. | Item | Quantity | Description | Bezeichnung |
|---|---|---|---|---|
| 1 | 90 75 361 | 1 | PISTON 20MnCr5 | KOLBEN |
| 3 | 90 77 172 | 1 | SCREW PLUG M30X1,5 9SMnPb28K FE/ZN 5 | VERSCHLUSSSCHRAUBE |
| 4 | 71 01 065 08 | 1 | SEALING RING DIN 7603 A 30X36X2 CU | DICHTRING |
| 5 | 10 11 794 9 | 1 | ADJUSTING SCREW M12X36 8.8 FE/ZN 5A | EINSTELLSCHRAUBE |
| 6 | 70 05 072 | 1 | SEAL-LOCK-SHOULDER NUT M12X1,75 | SEAL-LOCK-BUNDMUTTER |
| 11 | 91 33 637 | 1 | VALVE SEAT | VENTILSITZ |
| 12 | 10 12 092 9 | 1 | PRESSURE SPRING 2,5X16X61 OTEVA 70 | DRUCKFEDER |

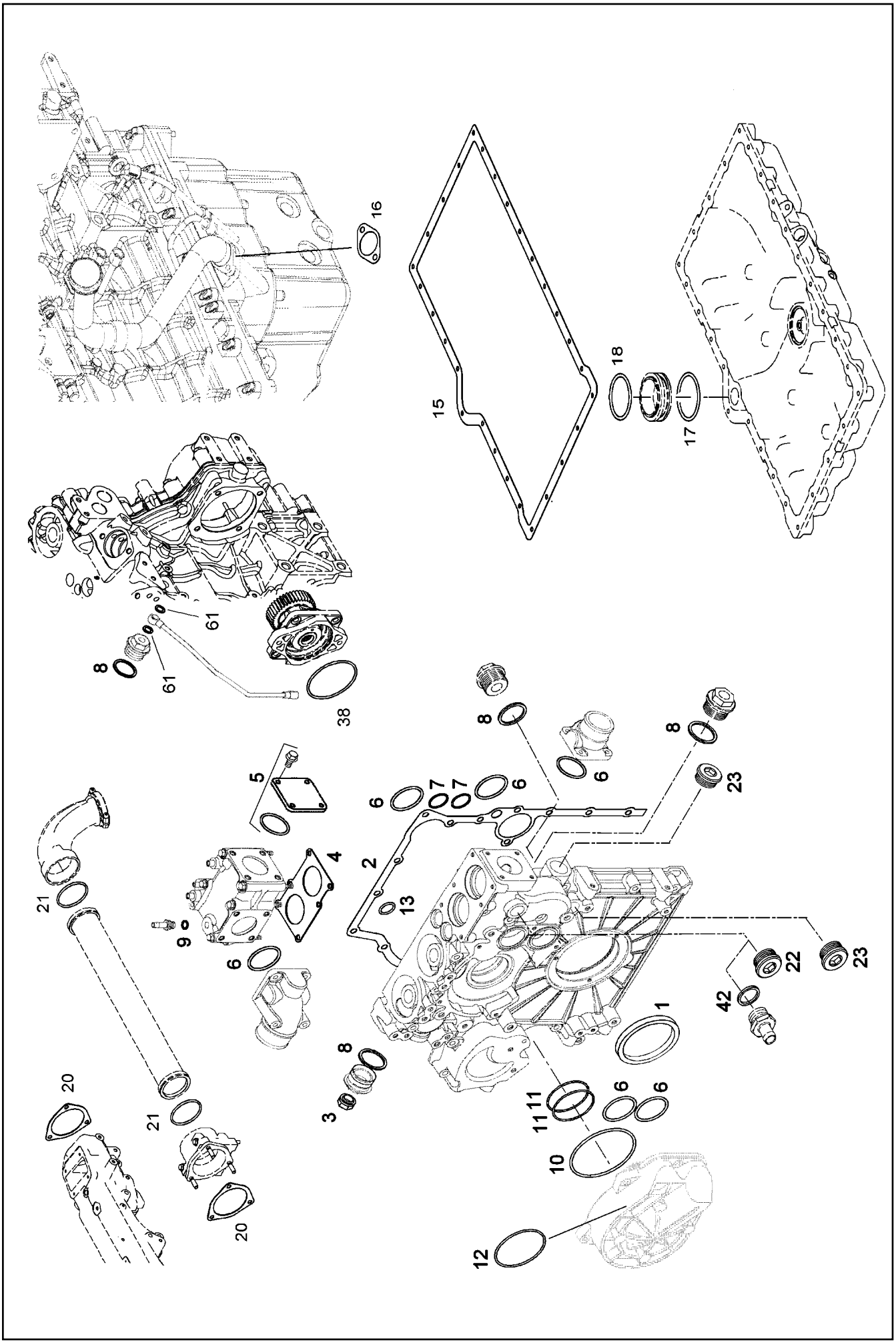


| | | |
|---|---|---|
| 16.2.2017<br>049109<br>LIEBHERR | etk_en_de_048005 LTR 1100<br><br>SEAL KIT AGGREGATE CARRIER<br>DS AGGREGATETRAEGER | 513 (1/2)<br><br>⇨ X10118013<br>10 11 801 3 |

| Pos. | Item | Quantity | Description | Bezeichnung |
|---|---|---|---|---|
| 1 | 10 12 195 2 | 1 | RK CRANKSHAFT SEAL 110 VORNE | RS KURBELWELLENDICHTUNG |
| 2 | 10 12 673 8 | 1 | SEAL 0,33MM METALOSEAL 1 | DICHTUNG |
| 3 | 73 81 226 | 1 | SEALING NUT M12 | DICHTMUTTER |
| 4 | 90 80 279 | 1 | SEAL 2MM UNI-BLAU | DICHTUNG |
| 5 | 90 80 280 | 1 | LOCKING PIECES<br>⇨ 9 080 280 90 80 280 | VERSCHLUSSTEILE |
| 6 | 73 81 779 | 7 | O-RING DIN 3771 59,92X3,53 HNBR 70 A | O-RING |
| 7 | 73 80 653 | 2 | O-RING ISO 3601-1 34,59X2,62 FKM 90 A,BK | O-RING |
| 8 | 71 01 065 08 | 4 | SEALING RING DIN 7603 A 30X36X2 CU | DICHTRING |
| 9 | 10 01 186 6 | 2 | SEALING RING 14,7X22X1,5 St/FPM1-80 | DICHTRING |
| 10 | 50 12 444 08 | 1 | O-RING ARP 568 113,89X3,53 NBR70 | O-RING |
| 11 | 73 81 593 | 2 | O-RING 68,26X3,53 FKM 70 | O-RING |
| 12 | 73 81 912 | 1 | O-RING 120,50X3,53 75 FKM 17939 | O-RING |
| 13 | 10 00 426 1 | 1 | O-RING 26X3 HNBR 70 | O-RING |
| 15 | 10 11 854 7 | 1 | SEAL 1MM AFM 30 | DICHTUNG |
| 16 | 92 75 766 | 1 | SEAL AFM 31 TD 2 | DICHTUNG |
| 17 | 73 81 566 | 1 | O-RING DIN 3771 40,64X5,33 FKM 70 A,GN | O-RING |
| 18 | 57 00 484 08 | 1 | O-RING ARP 568 40,87X3,53 NBR90 | O-RING |
| 20 | 92 71 963 | 2 | SEAL AFM 31 | DICHTUNG |
| 21 | 10 02 232 0 | 2 | O-RING 80X5,0 80 FKM 610 | O-RING |
| 22 | 73 82 204 | 2 | SCREW PLUG VSTI M30X1,5 St Rm>500N/m | VERSCHLUSSSCHRAUBE |
| 23 | 73 82 202 | 2 | SCREW PLUG VSTI M38X1,5 | VERSCHLUSSSCHRAUBE |
| 38 | 73 80 520 | 1 | O-RING DIN 3771 104,37X3,53 VMQ 70 A,RD | O-RING |
| 42 | 10 11 373 1 | 2 | SEALING RING 30,7X39X2 St/FPM1-80 | DICHTRING |
| 61 | 71 01 015 08 | 2 | SEALING RING DIN 7603 A 10X14X1,5 CU | DICHTRING |

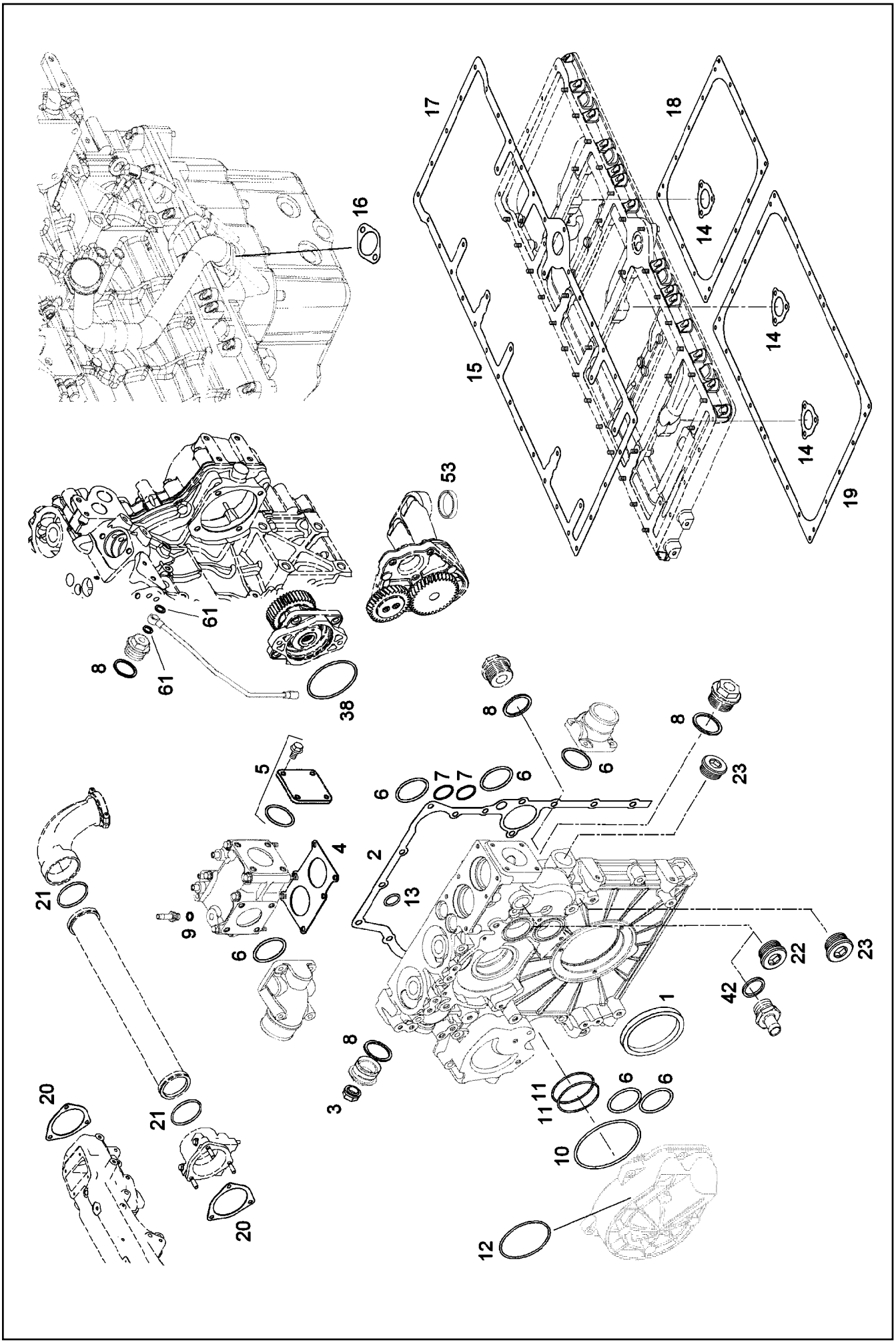


| | | |
|---|---|---|
| 16.2.2017<br>049162<br>LIEBHERR | etk_en_de_048005 LTR 1100<br><br>SEAL KIT AGGREGATE CARRIER<br>DS AGGREGATETRAEGER | 515 (1/2)<br><br>⇨ X10118014<br>10 11 801 4 |

| Pos. | Item | Quantity | Description | Bezeichnung |
|---|---|---|---|---|
| 1 | 10 12 195 2 | 1 | RK CRANKSHAFT SEAL 110 VORNE | RS KURBELWELLENDICHTUNG |
| 2 | 10 12 673 8 | 1 | SEAL 0,33MM METALOSEAL 1 | DICHTUNG |
| 3 | 73 81 226 | 1 | SEALING NUT M12 | DICHTMUTTER |
| 4 | 90 80 279 | 1 | SEAL 2MM UNI-BLAU | DICHTUNG |
| 5 | 90 80 280 | 1 | LOCKING PIECES<br>⇨ 9 080 280 90 80 280 | VERSCHLUSSTEILE |
| 6 | 73 81 779 | 7 | O-RING DIN 3771 59,92X3,53 HNBR 70 A | O-RING |
| 7 | 73 80 653 | 2 | O-RING ISO 3601-1 34,59X2,62 FKM 90 A,BK | O-RING |
| 8 | 71 01 065 08 | 4 | SEALING RING DIN 7603 A 30X36X2 CU | DICHTRING |
| 9 | 10 01 186 6 | 2 | SEALING RING 14,7X22X1,5 St/FPM1-80 | DICHTRING |
| 10 | 50 12 444 08 | 1 | O-RING ARP 568 113,89X3,53 NBR70 | O-RING |
| 11 | 73 81 593 | 2 | O-RING 68,26X3,53 FKM 70 | O-RING |
| 12 | 73 81 912 | 1 | O-RING 120,50X3,53 75 FKM 17939 | O-RING |
| 13 | 10 00 426 1 | 1 | O-RING 26X3 HNBR 70 | O-RING |
| 14 | 90 79 124 | 3 | SEAL | DICHTUNG |
| 15 | 10 11 854 9 | 1 | SEAL | DICHTUNG |
| 16 | 92 75 766 | 1 | SEAL AFM 31 TD 2 | DICHTUNG |
| 17 | 10 12 064 0 | 1 | SEAL AFM 30 | DICHTUNG |
| 18 | 10 11 855 1 | 3 | SEAL | DICHTUNG |
| 19 | 10 11 855 0 | 1 | SEAL | DICHTUNG |
| 20 | 92 71 963 | 2 | SEAL AFM 31 | DICHTUNG |
| 21 | 10 02 232 0 | 2 | O-RING 80X5,0 80 FKM 610 | O-RING |
| 22 | 73 82 204 | 2 | SCREW PLUG VSTI M30X1,5 St Rm>500N/m | VERSCHLUSSSCHRAUBE |
| 23 | 73 82 202 | 2 | SCREW PLUG VSTI M38X1,5 | VERSCHLUSSSCHRAUBE |
| 38 | 73 80 520 | 1 | O-RING DIN 3771 104,37X3,53 VMQ 70 A,RD | O-RING |
| 42 | 10 11 373 1 | 2 | SEALING RING 30,7X39X2 St/FPM1-80 | DICHTRING |
| 53 | 90 79 608 | 2 | SEAL | DICHTUNG |
| 61 | 71 01 015 08 | 2 | SEALING RING DIN 7603 A 10X14X1,5 CU | DICHTRING |

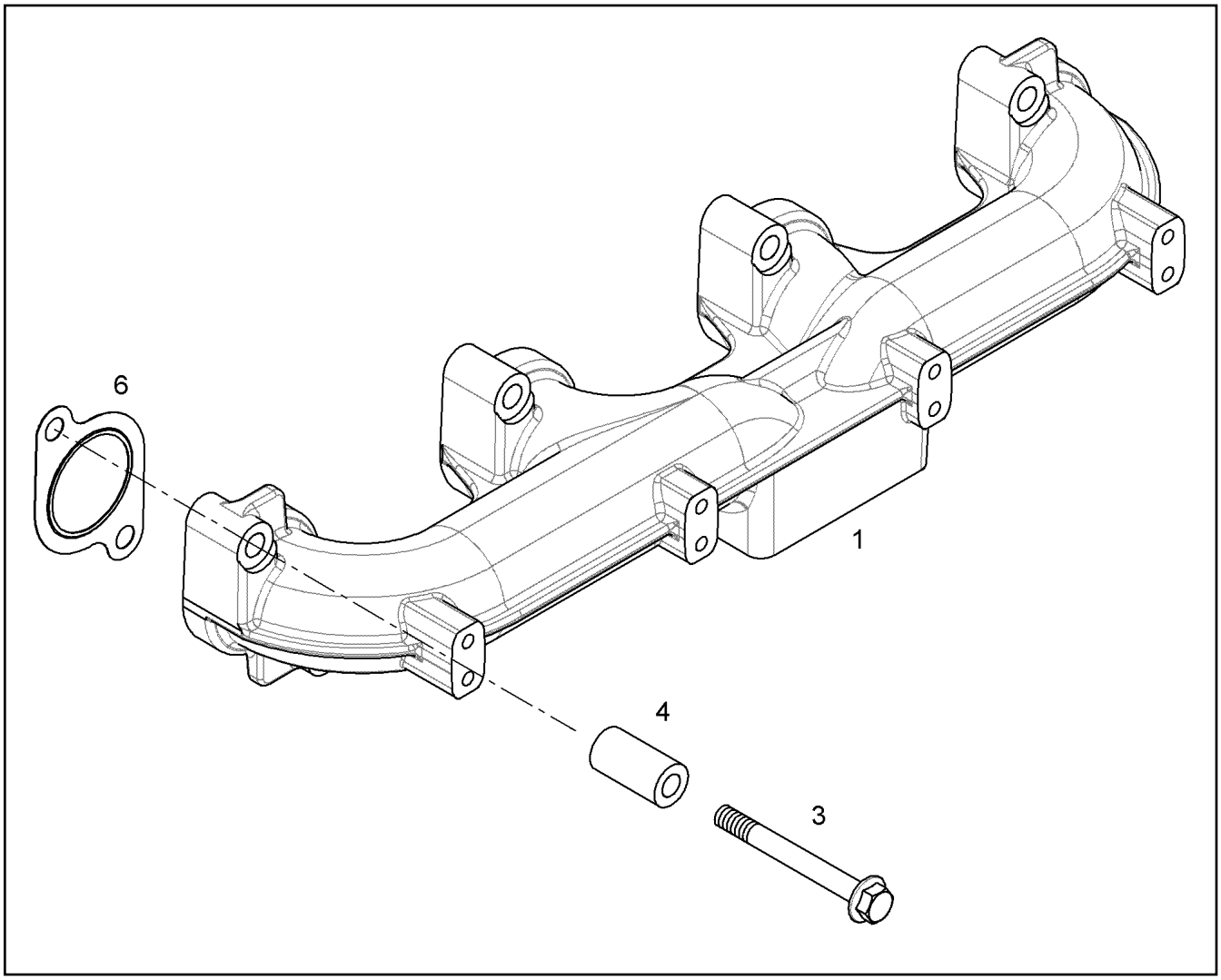


| Pos. | Item | Quantity | Description | Bezeichnung |
|---|---|---|---|---|
| 1 | 10 11 791 4 | 1 | EXHAUST PIPE | ABGASROHR |
| 3 | 10 00 613 1 | 8 | HEX SCREW DIN 6921 M10X90 10.9 | SECHSKANTSCHRAUBE |
| 4 | 90 74 977 | 8 | DISTANCE SLEEVE 11X21X40 42CrMo4 | DISTANZHUELSE |
| 6 | 10 14 155 7 | 4 | SEAL METALOSEAL 4 | DICHTUNG |

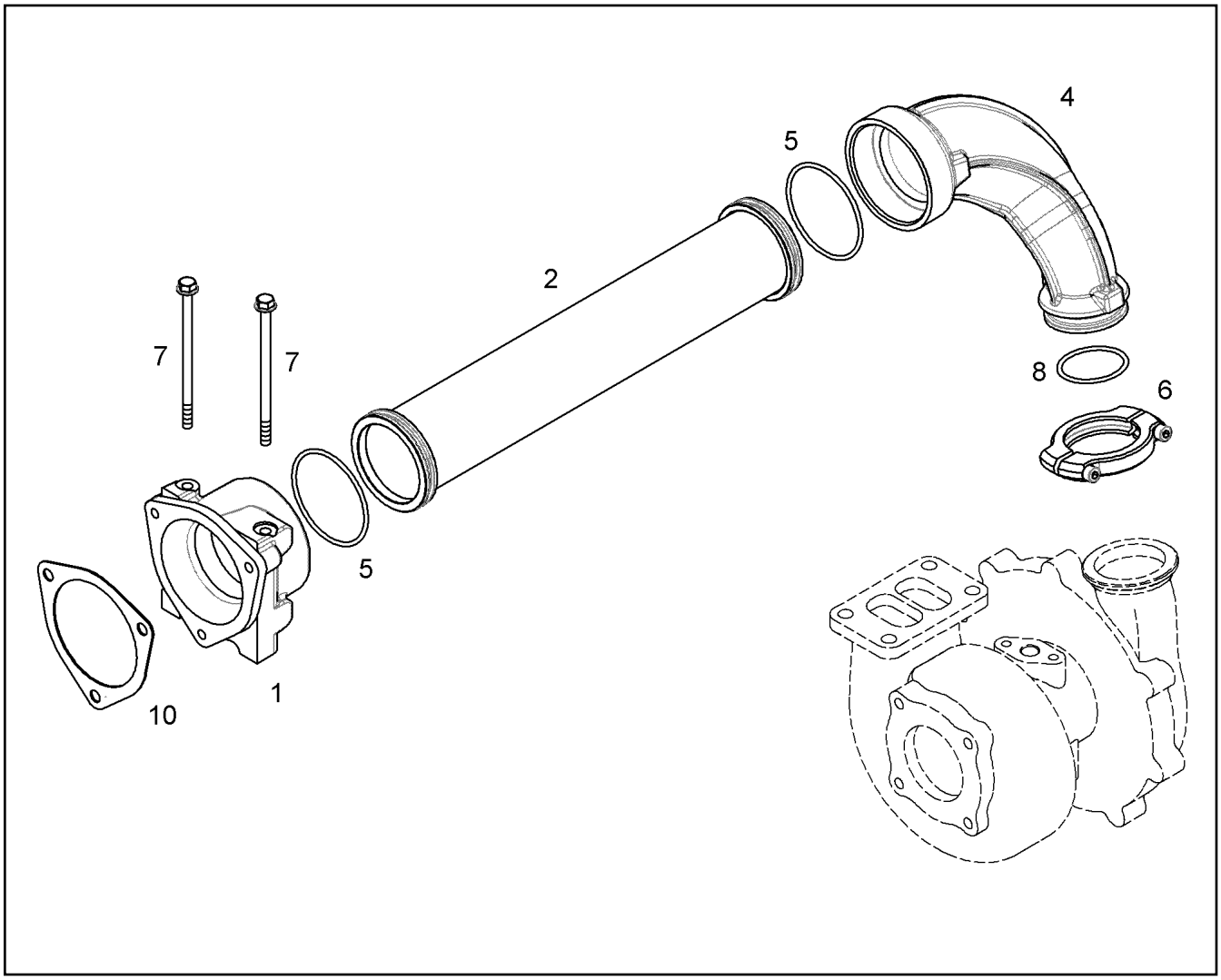


| Pos. | Item | Quantity | Description | Bezeichnung |
|---|---|---|---|---|
| 1 | 90 79 582 | 1 | CONNECTION FLANGE | ANSCHLUSSFLANSCH |
| 2 | 10 11 816 2 | 1 | CONNECTING LINE R-MOTORXD934 L A | VERBINDUNGSLEITUNG |
| 4 | 90 79 581 | 1 | CHARGE AIR ELBOW | LADELUFTKRUEMMER |
| 5 | 10 02 232 0 | 2 | O-RING 80X5,0 80 FKM 610 | O-RING |
| 6 | 90 80 051 | 1 | PIPE CLAMP 64 | ROHRSCHELLE |
| 7 | 10 03 731 0 | 2 | HEX SCREW DIN 6921 M8X140 10.9 A2C SP | SECHSKANTSCHRAUBE |
| 8 | 73 80 919 | 1 | O-RING ISO 3601-1 52,07X2,62 FKM 70 A,GN | O-RING |
| 10 | 92 71 963 | 1 | SEAL AFM 31 | DICHTUNG |
| 100 | 10 28 570 8 | 1 | GREASE NBU 30 1KG DOSE | FETT |

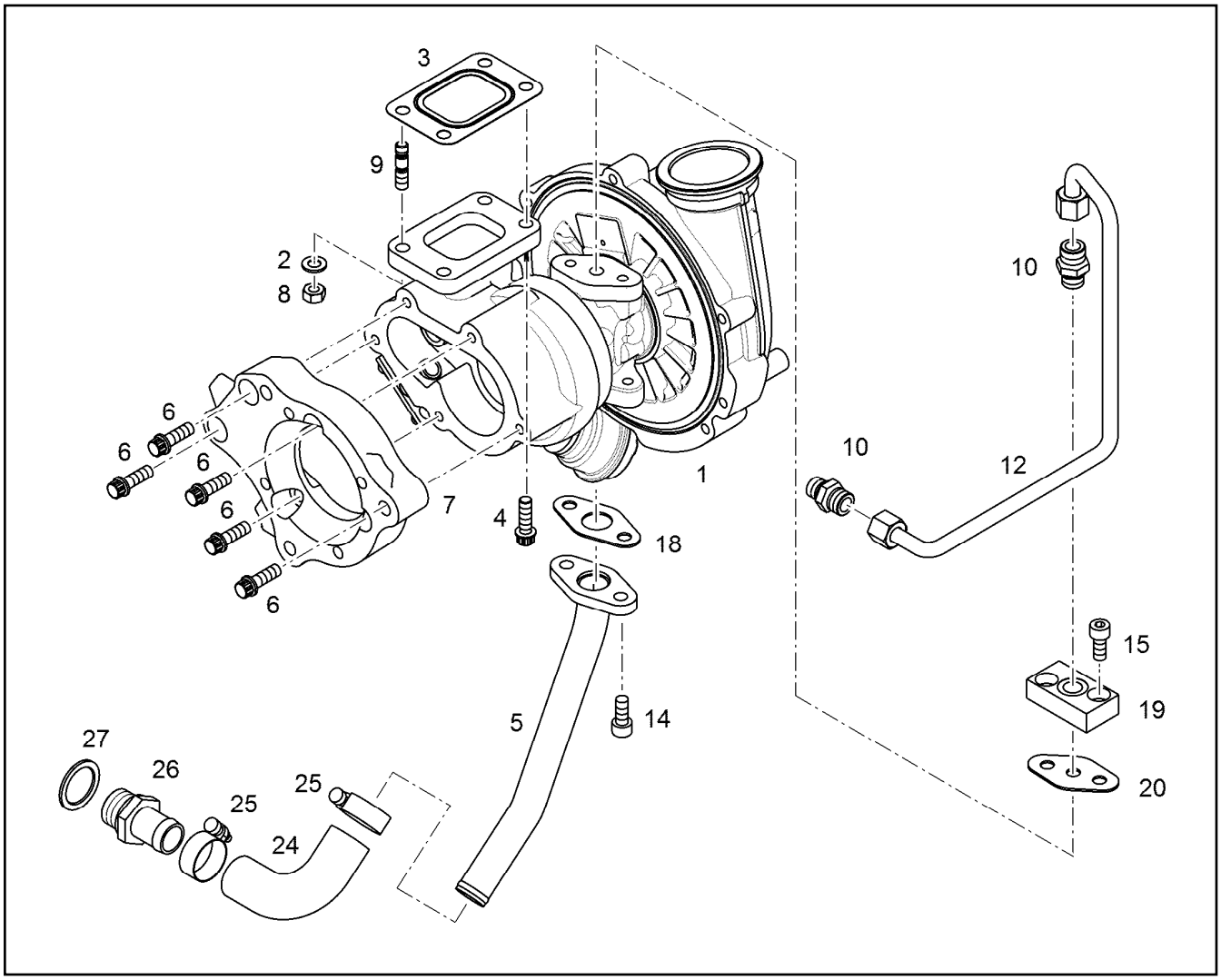


| Pos. | Item | Quantity | Description | Bezeichnung |
|---|---|---|---|---|
| 1 | 10 32 686 8 | 1 | TURBOCHARGER K26 | TURBOLADER |
| 2 | 10 11 814 9 | 2 | WASHER 8,4X16X1,6 -42CrMo4 | SCHEIBE |
| 3 | 10 11 827 2 | 1 | SEAL K26 X5CrNi18-10 | DICHTUNG |
| 4 | 10 11 814 6 | 2 | 12-SIDED SCREW M8X25 X5NiCrTi26-1 | ZWOELFKANTSCHRAUBE |
| 6 | 10 11 813 4 | 5 | 12-SIDED SCREW M8X25 X5NiCrTi26-1 | ZWOELFKANTSCHRAUBE |
| 7 | 10 11 787 8 | 1 | INTERMEDIATE PLATE | ZWISCHENPLATTE |
| 8 | 10 33 095 3 | 2 | HEX NUT ISO 4032 M8 X5NiCrTi26-1 | SECHSKANTMUTTER |
| 9 | 10 33 095 4 | 2 | DOUBLE-ENDED STUD DIN 939 M8X25 X5N | STIFTSCHRAUBE |
| 10 | 49 81 235 | 2 | FLANGE JOINT ISO 8434-1 GE 10L M14X1,5 | VERSCHRAUBUNG |
| 12 | 10 11 834 3 | 1 | LUBRICATING OIL LINE 10X1 | SCHMIEROELLEITUNG |
| 14 | 10 66 352 3 | 2 | SOCKET HEAD SCREW ISO 4762 M8X20 10 | ZYLINDERSCHRAUBE |
| 19 | 91 79 540 | 1 | FLANGE | FLANSCH |
| 20 | 92 68 130 | 1 | SEAL ASBESTFREI | DICHTUNG |
| 50 | 10 11 989 7 | 1 | RK OIL RETURN PIPE DN 19/232 | RS OELRUECKLAUFLEITUNG |
| | | | ⇨ X10119897 10 11 989 7 | |

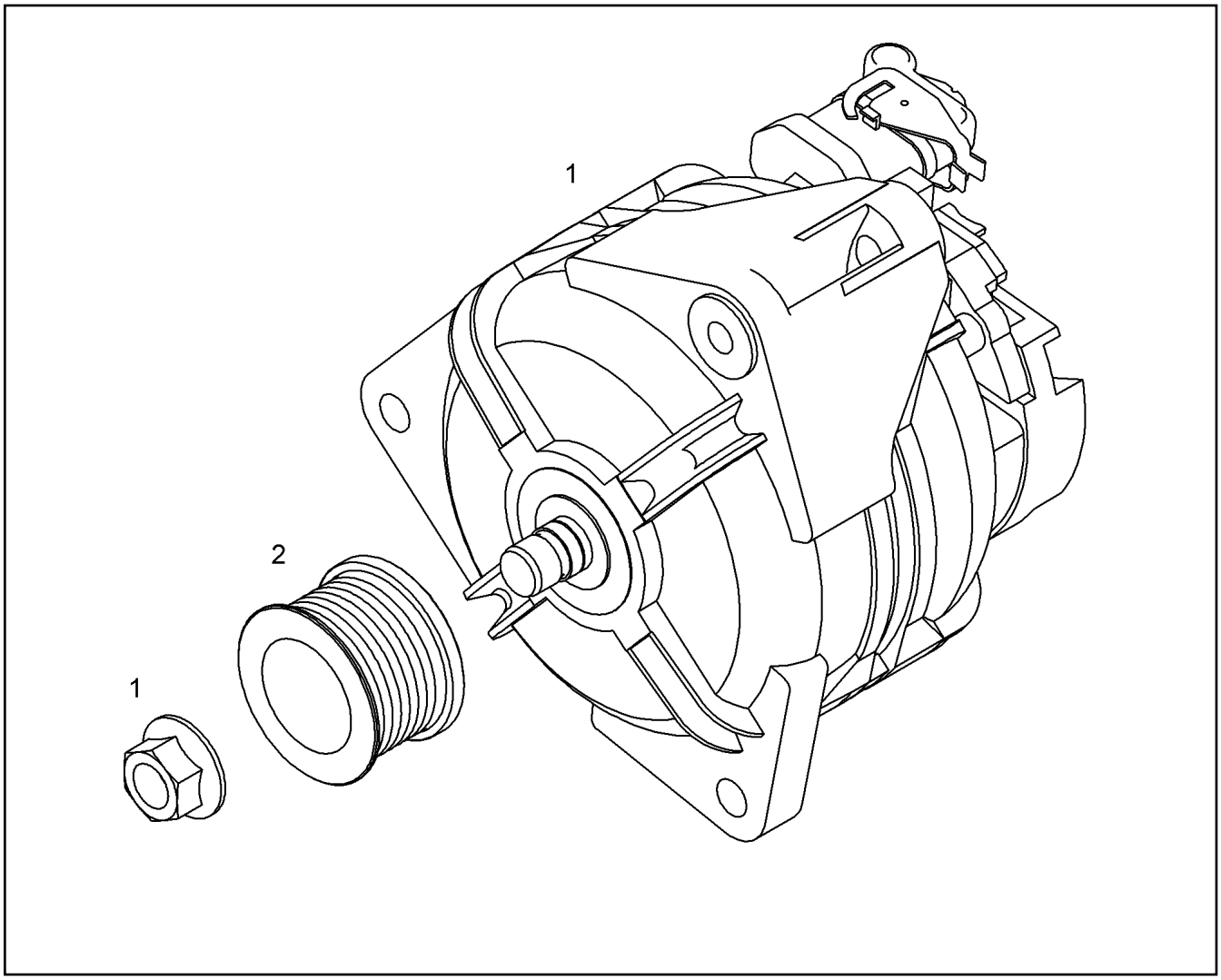


| Pos. | Item | Quantity | Description | Bezeichnung |
|---|---|---|---|---|
| 1 | 10 32 624 3 | 1 | THREE PHASE CURRENT GENERATOR 30 | DREHSTROMGENERATOR |
| (1) | 10 47 599 4 | 1 | REGULATOR | REGLER |
| 2 | 90 79 587 | 1 | BELT PULLEY 0.5X8PKX51,7 C45 | RIEMENSCHEIBE |
| 2 | 11 35 561 8 | 1 | BELT PULLEY 8PKX51,7 C45 | RIEMENSCHEIBE |

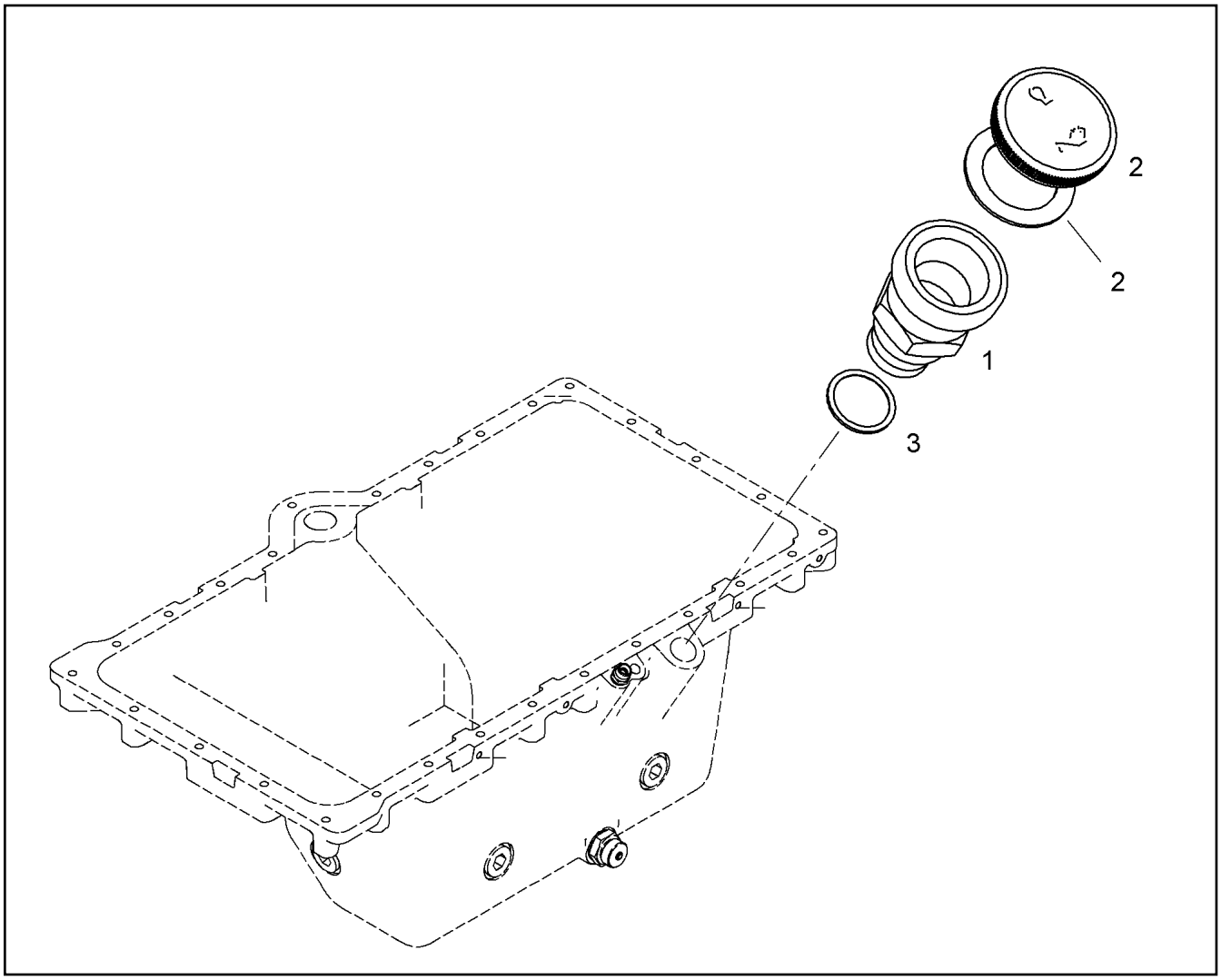


| Pos. | Item | Quantity | Description | Bezeichnung |
|---|---|---|---|---|
| 1 | 10 11 883 8 | 1 | FILLER NECK CPL. | EINFUELLSTUTZEN KPL. |
| 2 | 91 44 757 | 1 | END COVER | VERSCHLUSSDECKEL |
| (1) | 91 44 762 | 1 | SEAL | DICHTUNG |
| 3 | 10 33 562 9 | 1 | PROFILE PACKING DIN 3869 33X29,7 FPM | PROFILDICHTRING |

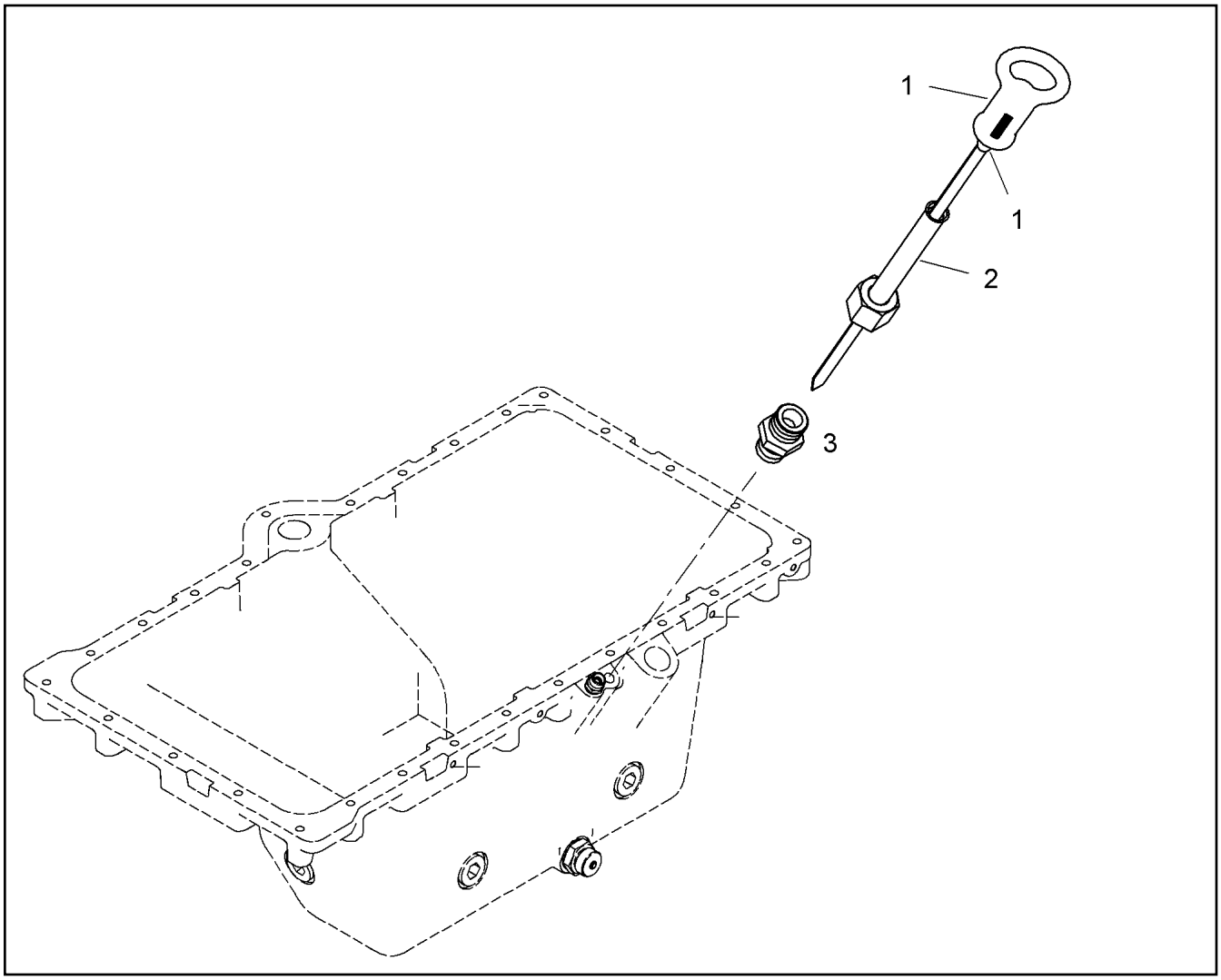


| Pos. | Item | Quantity | Description | Bezeichnung |
|---|---|---|---|---|
| 1 | 10 11 888 5 | 1 | OIL DIPSTICK | OELMESSSTAB MIT RING |
| 2 | 90 79 532 | 1 | GUIDING PIPE | FUEHRUNGSROHR |
| 3 | 49 81 235 | 1 | FLANGE JOINT ISO 8434-1 GE 10L M14X1,5 | VERSCHRAUBUNG |

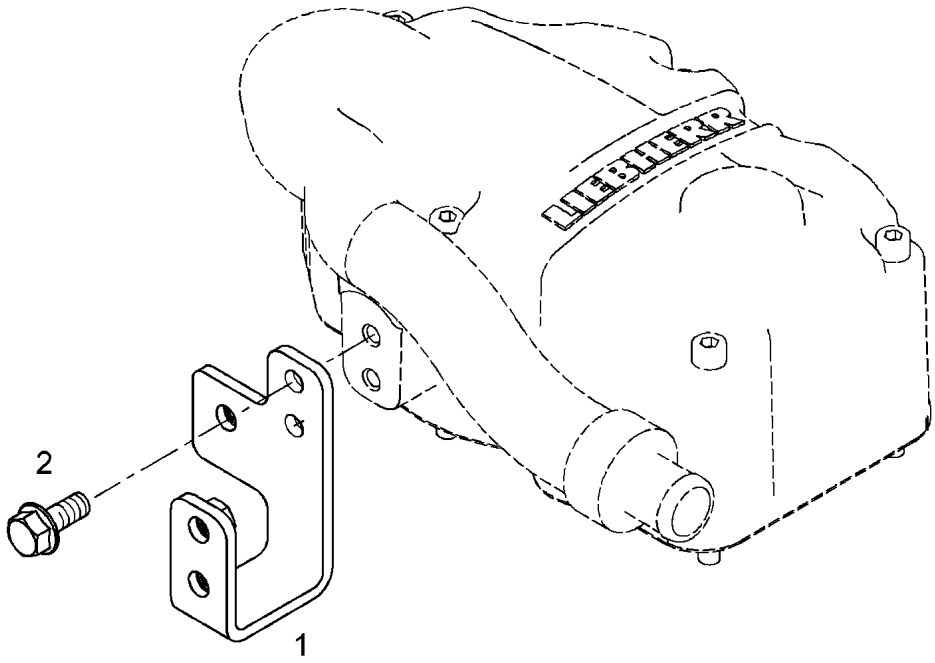


| Pos. | Item | Quantity | Description | Bezeichnung |
|---|---|---|---|---|
| 1 | 10 11 911 9 | 1 | RETAINER CPL. S355J0 | HALTER KPL. |
| 2 | 10 01 690 6 | 2 | HEX SCREW DIN 6921 M8X20 8.8 A2C | SECHSKANTSCHRAUBE |

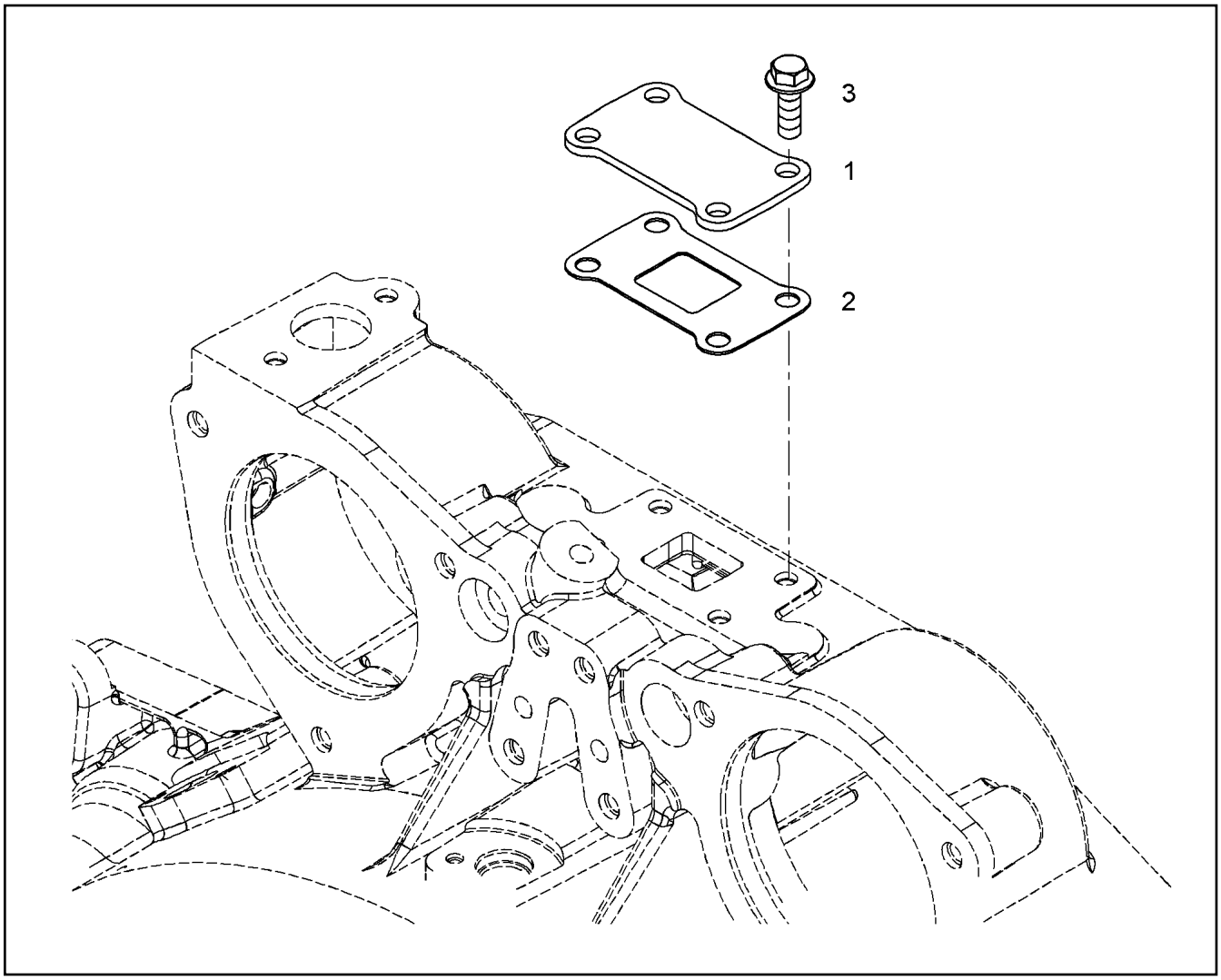


| Pos. | Item | Quantity | Description | Bezeichnung |
|---|---|---|---|---|
| 1 | 10 11 912 9 | 1 | SHEET S355J0 | PLATTE |
| 2 | 90 79 130 | 1 | SEAL 1MM | DICHTUNG |
| 3 | 10 01 690 6 | 4 | HEX SCREW DIN 6921 M8X20 8.8 A2C | SECHSKANTSCHRAUBE |

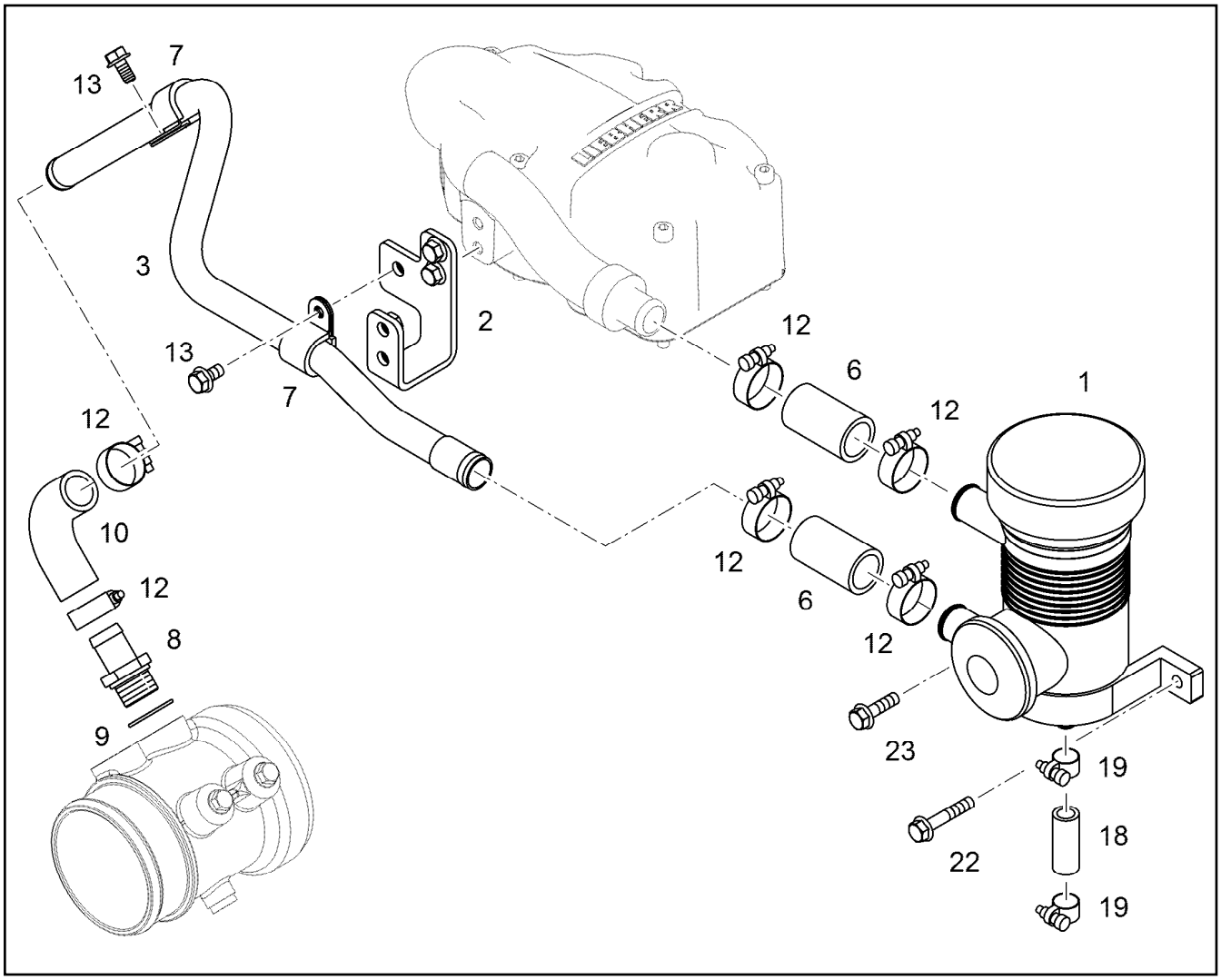


| Pos. | Item | Quantity | Description | Bezeichnung |
|---|---|---|---|---|
| 1 | 90 75 483 | 1 | CRANKCASE BREATHER<br>⇨ 9 075 483 90 75 483 | KURBELGEHAEUSEENTLUEFT |
| 2 | 10 11 912 7 | 1 | CLAMP - ADD-ON UNIT<br>⇨ X10119127 10 11 912 7 | HALTER ANBAU |
| 3 | 10 11 914 2 | 1 | PIPELINE 22X1,5 | ROHRLEITUNG |
| 6 | 92 71 340 | 2 | RUBBER CONNECTION 25 X35/33X56 L. | GUMMIMUFFE |
| 7 | 73 81 630 | 2 | CLAMP DIN 3016-1 22X20XD1 W1-2-MVQ | SCHELLE |
| 8 | 91 40 351 | 1 | HOSE NIPPLE GERADE | SCHLAUCHNIPPEL |
| 9 | 10 01 187 0 | 1 | SEALING RING 26,7X34,93X2 St/FPM1-80 | DICHTRING |
| 10 | 10 11 631 0 | 1 | RUBBER CONNECTION 90GRAD | GUMMIMUFFE |
| 12 | 77 42 150 08 | 6 | HOSE CLAMP 26/20-32/12 W3 | SCHLAUCHSCHELLE |
| 13 | 10 00 507 8 | 2 | HEX SCREW DIN 6921 M8X16 8.8 A2C | SECHSKANTSCHRAUBE |
| 18 | 90 79 603 | 1 | RUBBER CONNECTION 12 X 18 X 45 GUMMI | GUMMIMUFFE |
| 19 | 49 81 029 | 2 | HOSE CLAMP DIN 3017-2 17/16 - 18/12 W1-2 | SCHLAUCHSCHELLE |
| 19 | 46 01 105 | 1 | CLAMP DIN 3017-1 16/12-20/9 W2-2 | SCHELLE |
| 22 | 10 01 690 7 | 1 | HEX SCREW EN 1665 M8X45 8.8 A3C | SECHSKANTSCHRAUBE |
| 23 | 10 00 778 2 | 1 | HEX SCREW DIN 6921 M8X30 8.8 A2C | SECHSKANTSCHRAUBE |

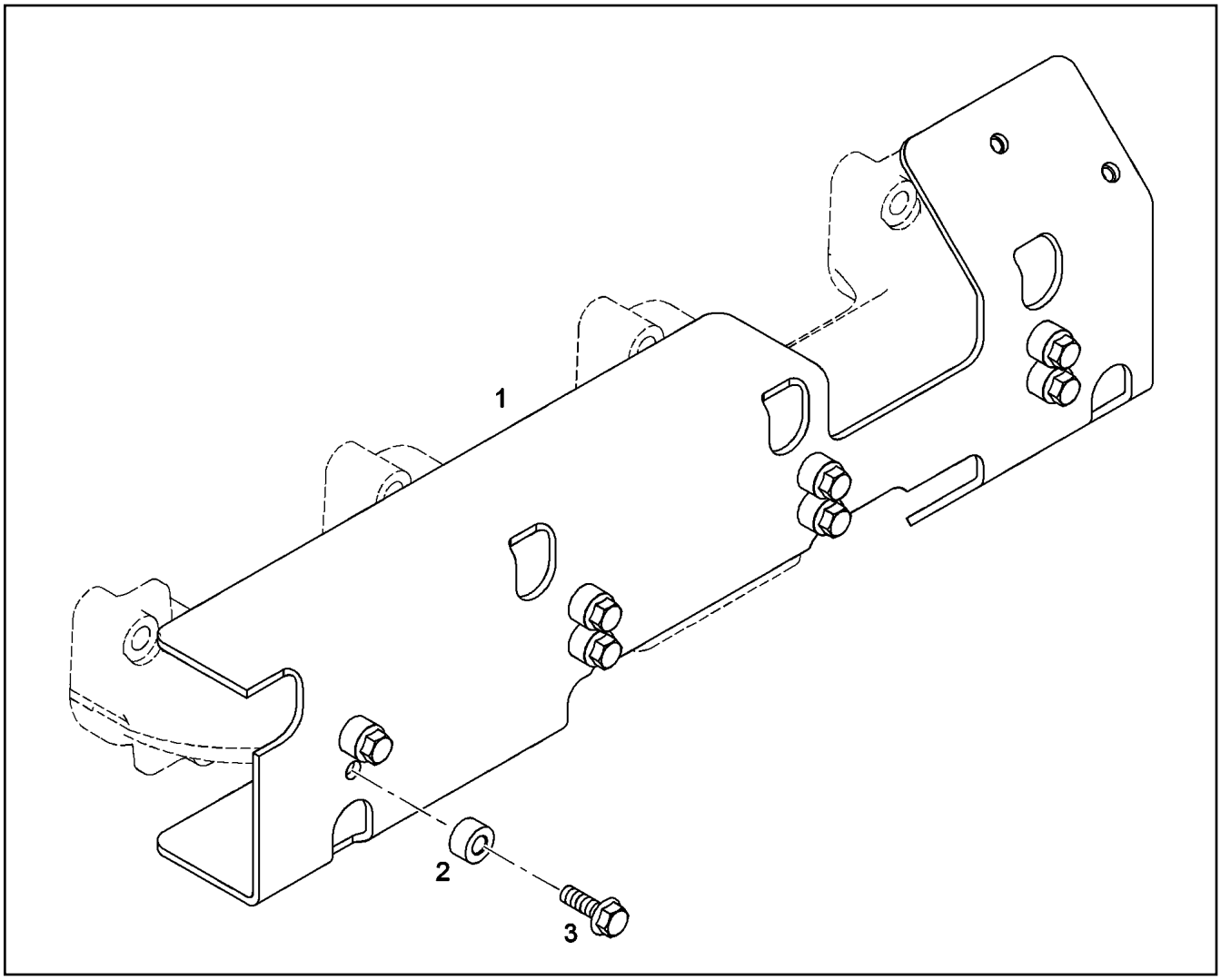


| Pos. | Item | Quantity | Description | Bezeichnung |
|---|---|---|---|---|
| 1 | 10 11 792 6 | 1 | HEAT PROTECTION SHEET PRE-ASS. | HITZESCHUTZBLECH VORM. |
| 2 | 91 32 577 | 8 | DISTANCE SLEEVE 8,5X18X10 St Rm>500N/ | DISTANZHUELSE |
| 3 | 10 33 620 0 | 8 | HEX SCREW DIN 6921 M8X25 X5NiCrTi26-1 | SECHSKANTSCHRAUBE |

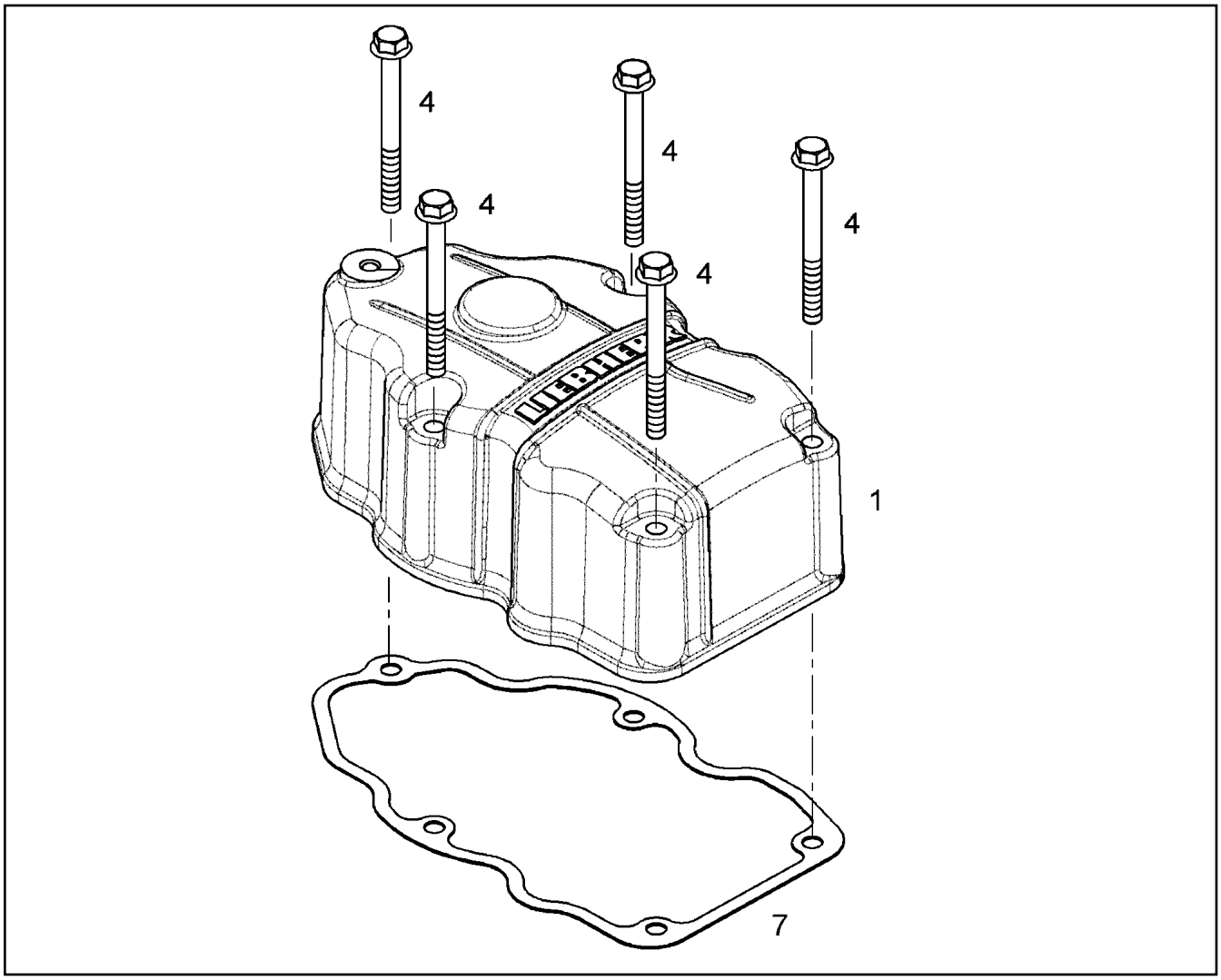


| Pos. | Item | Quantity | Description | Bezeichnung |
|---|---|---|---|---|
| 1 | 10 11 960 2 | 1 | CYLINDER HEAD COVER | ZYLINDERKOPFDECKEL |
| 4 | 10 10 030 3 | 5 | HEX SCREW EN 1665 M8X90 8.8 A3C | SECHSKANTSCHRAUBE |
| 7 | 10 11 855 4 | 1 | SEAL | DICHTUNG |

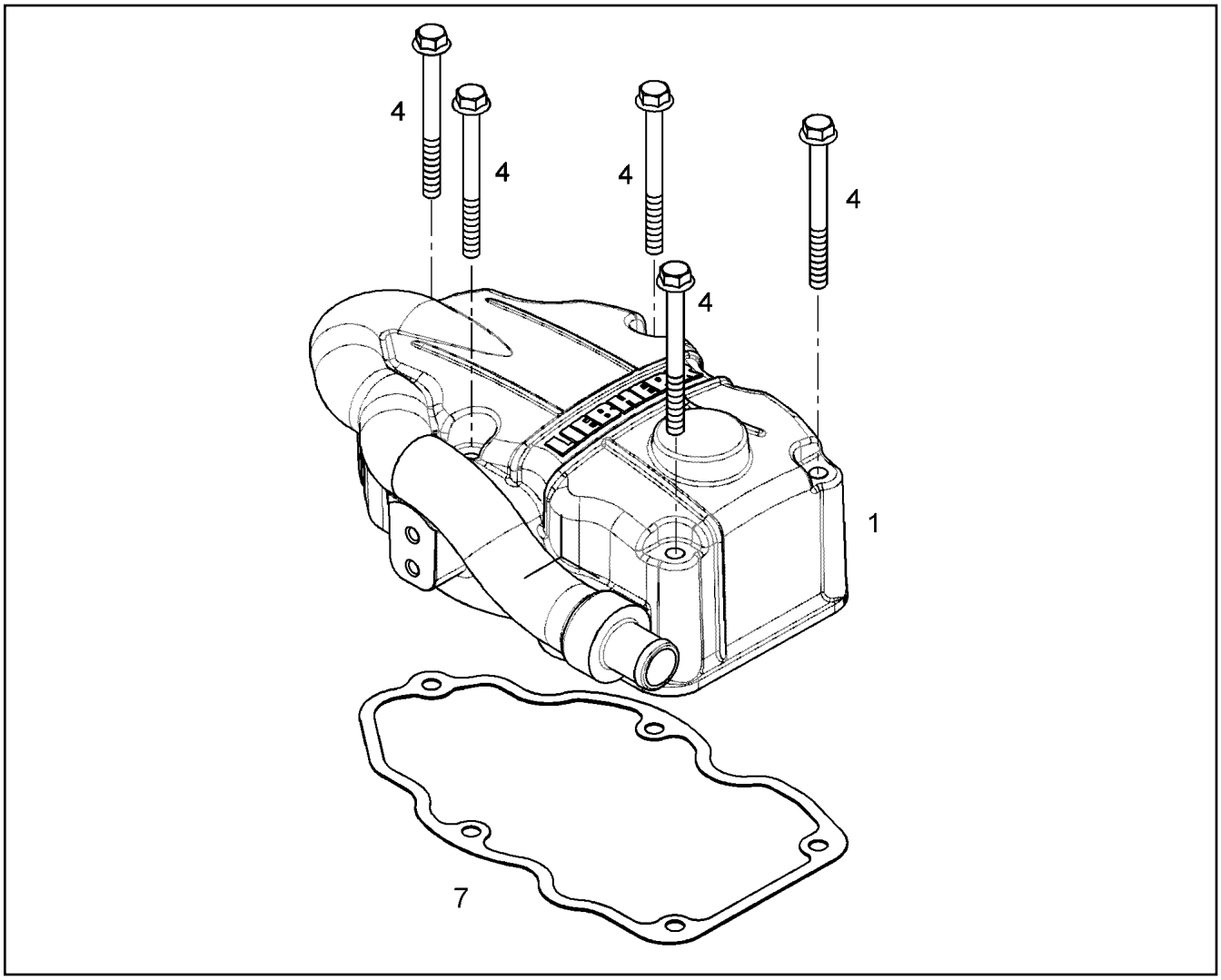


| Pos. | Item | Quantity | Description | Bezeichnung |
|---|---|---|---|---|
| 1 | 10 11 901 1 | 1 | CYLINDER HEAD COVER | ZYLINDERKOPFDECKEL |
| 4 | 10 10 030 3 | 5 | HEX SCREW EN 1665 M8X90 8.8 A3C | SECHSKANTSCHRAUBE |
| 7 | 10 11 855 4 | 1 | SEAL | DICHTUNG |

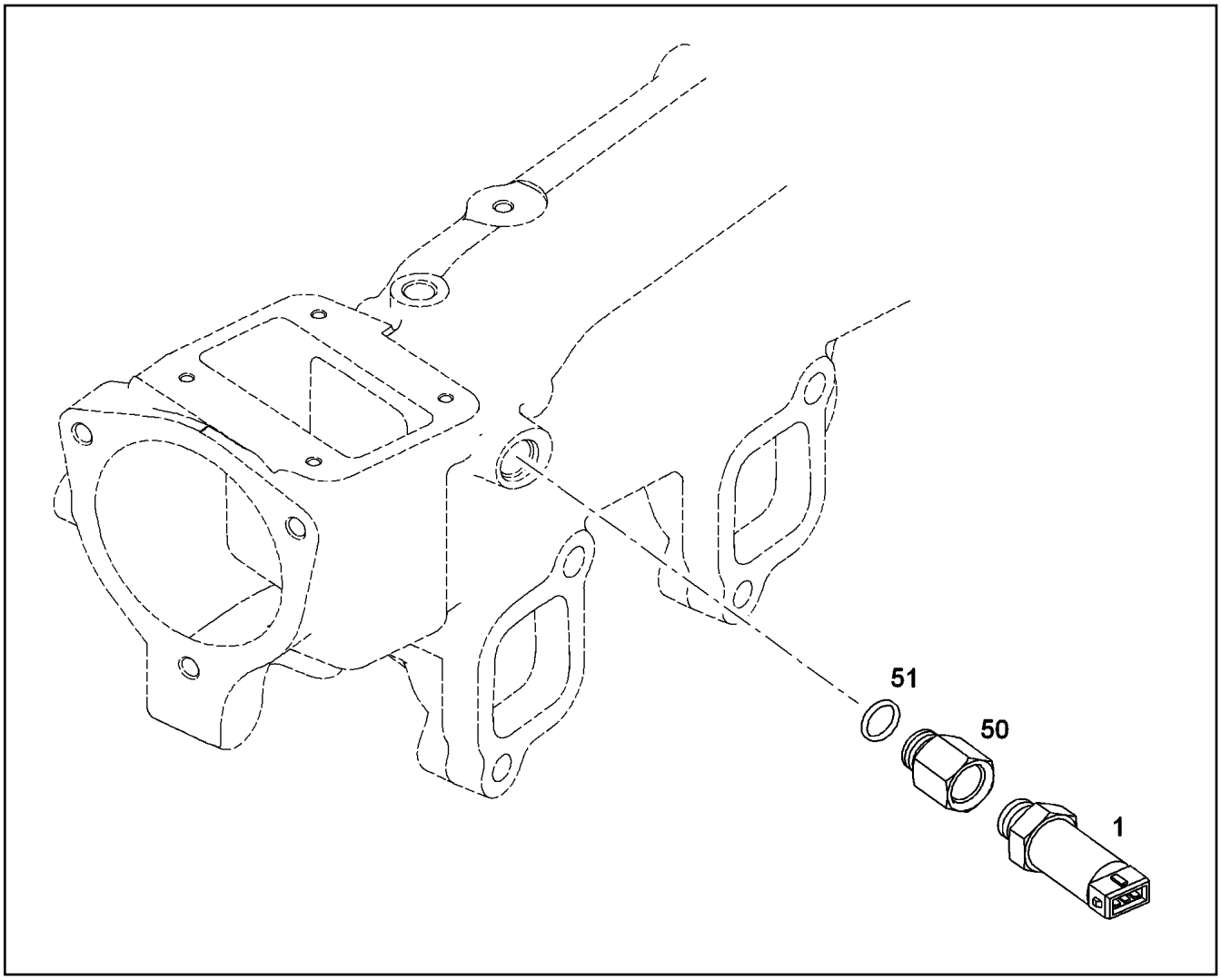


| Pos. | Item | Quantity | Description | Bezeichnung |
|---|---|---|---|---|
| 1 | 90 76 550 | 1 | PRESSURE TRANSMITTER CPL. 0,5-4,5 BA | DRUCKGEBER KPL. |
| (1) | 10 10 078 1 | 1 | PRESSURE TRANSMITTER 0,5-4,5 BAR | DRUCKGEBER |
| (2) | 10 11 397 5 | 1 | O-RING 15,50X2,00 FKM 80 | O-RING |
| 50 | 10 11 818 1 | 1 | FITTINGS S235JR | STUTZEN |
| 51 | 10 11 397 5 | 1 | O-RING 15,50X2,00 FKM 80 | O-RING |

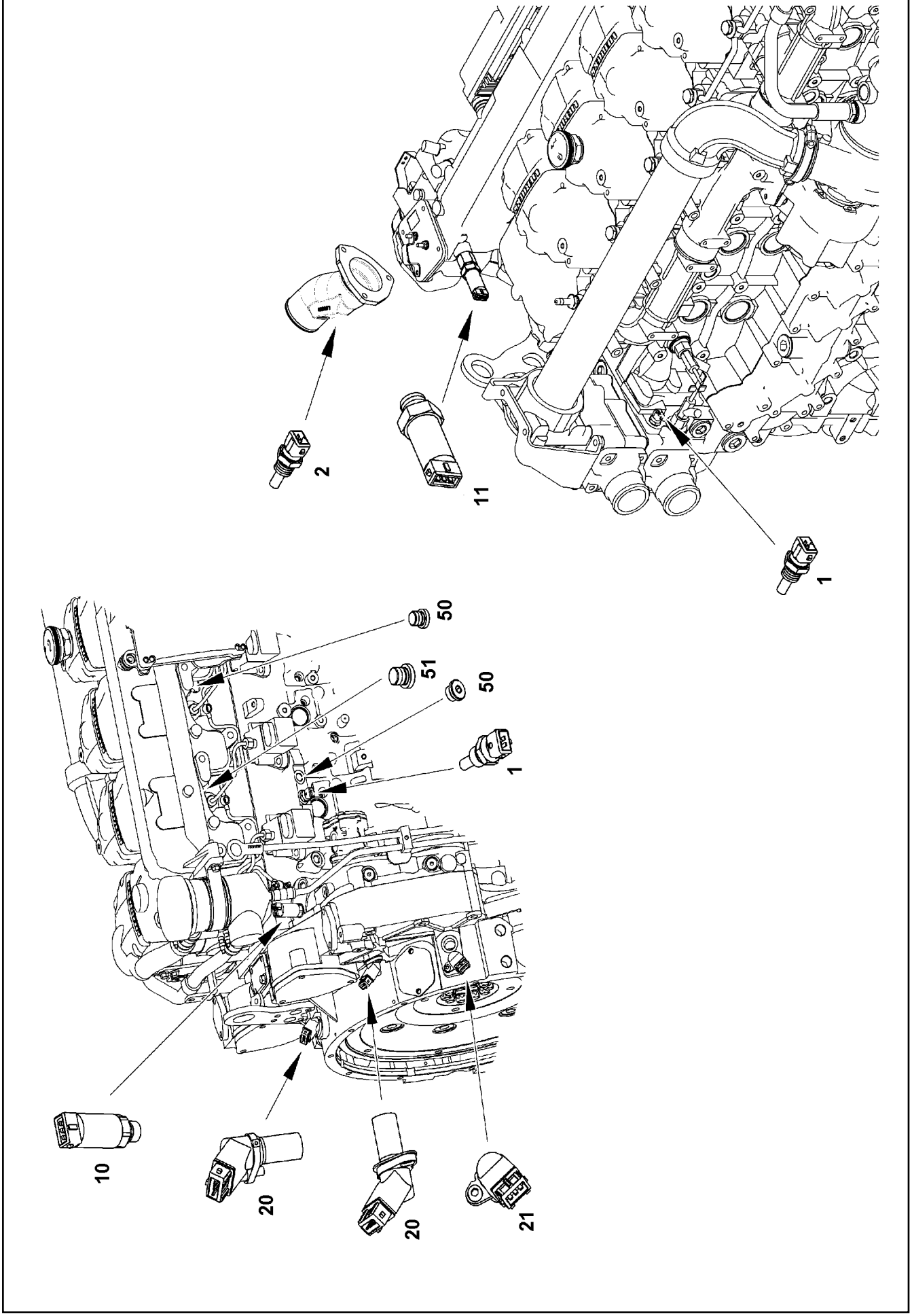
2
11
1
50
51
50
1
10
20
20
21

| Pos. | Item | Quantity | Description | Bezeichnung |
|---|---|---|---|---|
| 1 | 62 90 130 | 2 | TEMPERATURE SENSOR | TEMPERATURSENSOR |
| 2 | 90 76 530 | 1 | TEMPERATURE PROBE CPL.<br>➪ 9 076 530 90 76 530 | TEMPERATURFUEHLER KPL. |
| 10 | 90 76 531 | 1 | PRESSURE TRANSMITTER CPL. 0-10 BAR | DRUCKGEBER KPL. |
| (1) | 10 02 512 4 | 1 | PRESSURE TRANSMITTER 0-10 BAR | DRUCKGEBER |
| (2) | 10 04 098 4 | 1 | PROFILE PACKING DIN 3869 14X11,6 FKM 8 | PROFILDICHTRING |
| 11 | 10 11 969 7 | 1 | PRESSURE TRANSMITTER ATTACH. M18X1<br>➪ X10119697 10 11 969 7 | DRUCKGEBER ANBAU |
| 20 | 10 13 307 7 | 2 | ROTATIONAL SPEED SENSOR CPL. 10-1000<br>➪ X10133077 10 13 307 7 | DREHZAHLGEBER KPL. |
| 21 | 90 76 534 | 1 | ROTATIONAL SPEED SENSOR CPL. 10-1000<br>➪ 9 076 534 90 76 534 | DREHZAHLGEBER KPL. |
| 50 | 73 80 566 | 2 | SCREW PLUG VSTI M14X1,5 | VERSCHLUSSSCHRAUBE |
| 51 | 73 80 019 | 1 | SCREW PLUG VSTI M18X1,5 CR6-FREI | VERSCHLUSSSCHRAUBE |

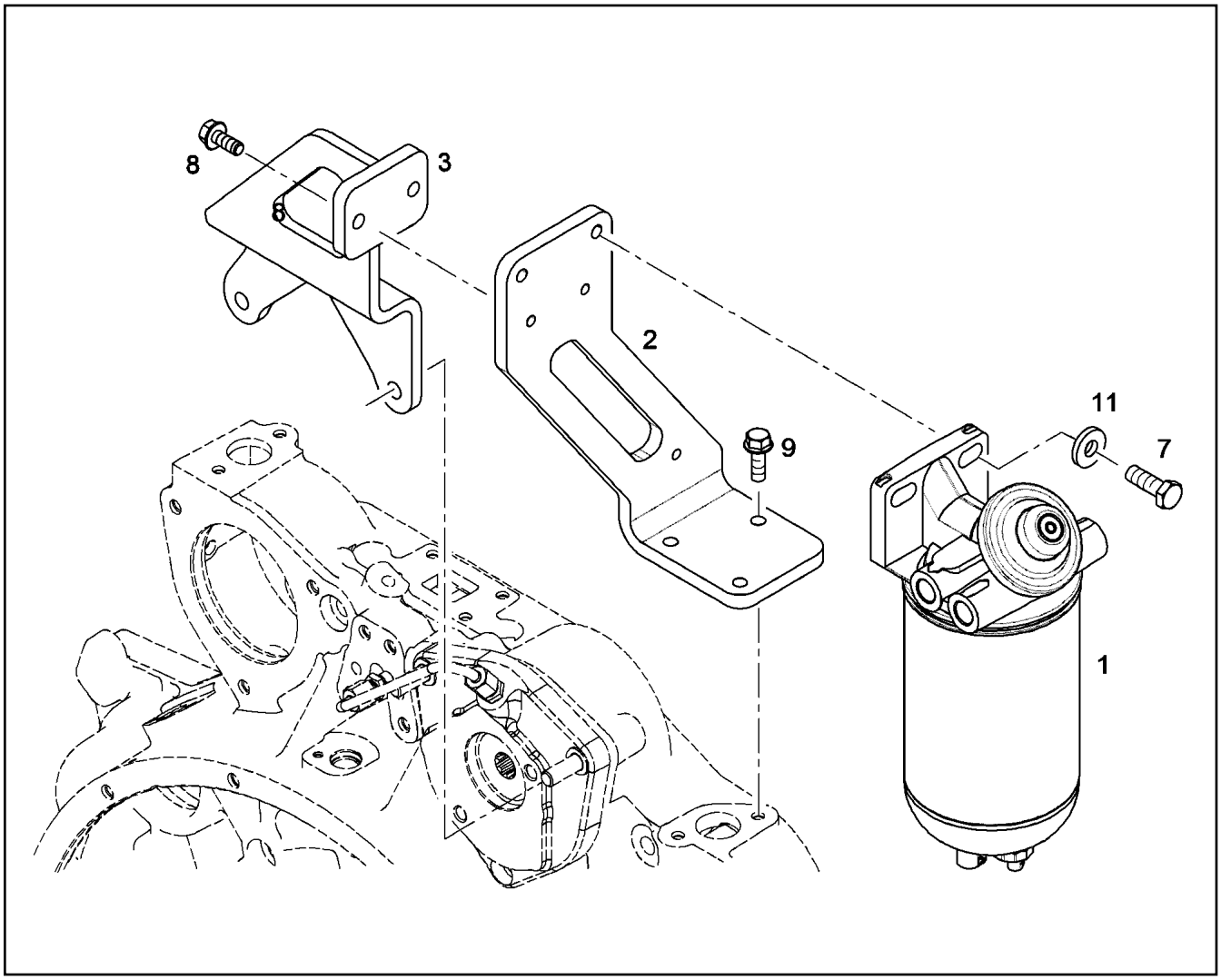


| Pos. | Item | Quantity | Description | Bezeichnung |
|---|---|---|---|---|
| 1 | 10 22 282 0 | 1 | FUEL PREFILTER<br>⇨ X10222820 10 22 282 0 | KRAFTSTOFFVORFILTER |
| 2 | 10 11 572 9 | 1 | HOLDER D934 S355J0 | HALTER |
| 3 | 10 11 988 5 | 1 | HOLDER D934 | HALTER |
| 7 | 40 00 828 | 2 | HEX SCREW ISO 4017 M10X30 8.8 A3C | SECHSKANTSCHRAUBE |
| 8 | 10 01 690 6 | 2 | HEX SCREW DIN 6921 M8X20 8.8 A2C | SECHSKANTSCHRAUBE |
| 9 | 10 00 900 7 | 3 | HEX SCREW EN 1665 M8X25 8.8 A3C | SECHSKANTSCHRAUBE |
| 11 | 11 65 858 0 | 2 | WASHER DIN 7349 10,5 200HV-St FLZN SPF | SCHEIBE |

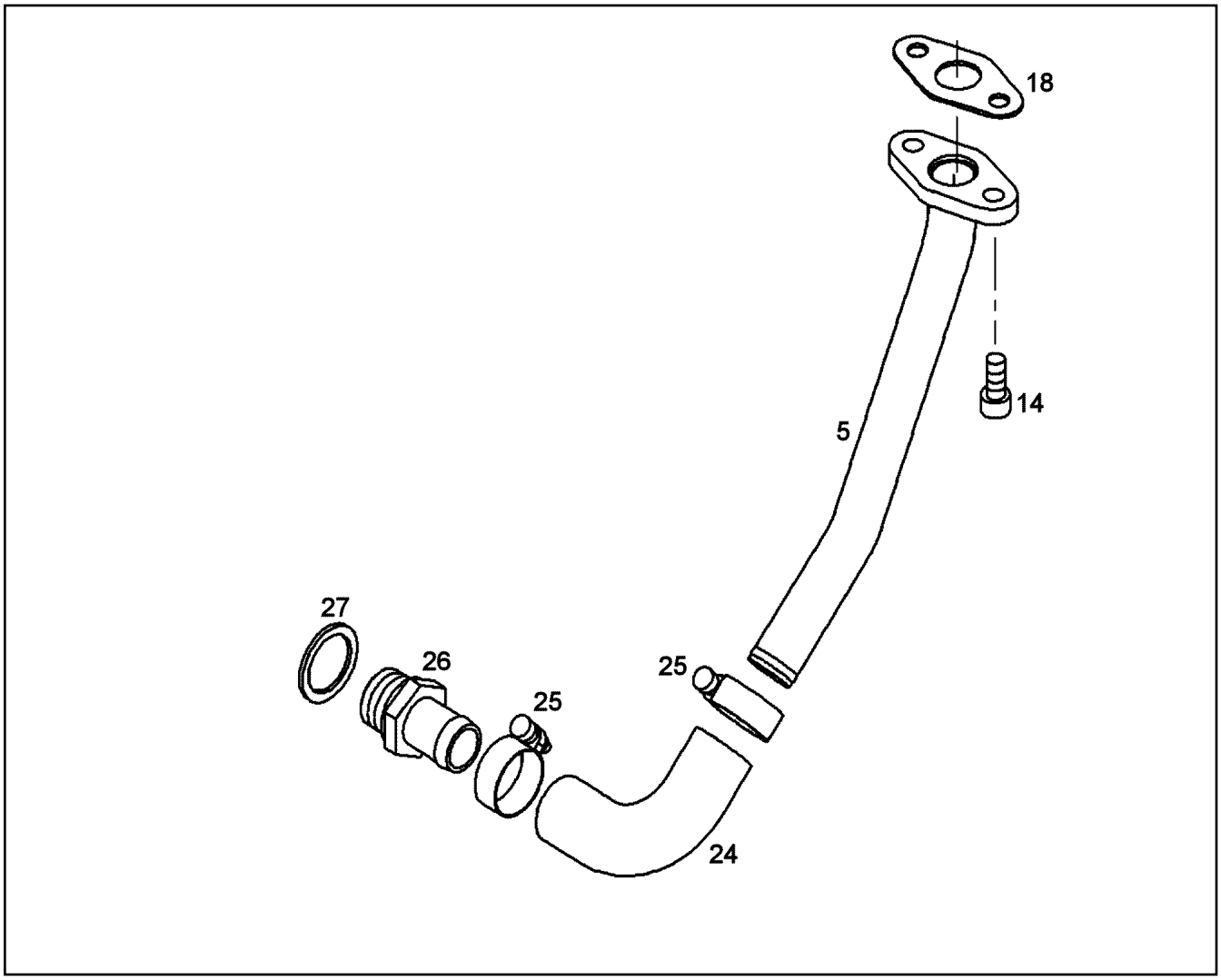


| Pos. | Item | Quantity | Description | Bezeichnung |
|---|---|---|---|---|
| 5 | 10 11 901 9 | 1 | OIL RETURN PIPE DN19/232 | OELRUECKLAUFLEITUNG |
| 14 | 10 87 559 9 | 2 | SOCKET HEAD SCREW ISO 4762 M8X25 8.8 | ZYLINDERSCHRAUBE |
| 18 | 92 68 131 | 1 | SEAL 1,5MM ASBESTFREI AFM 32/2 | DICHTUNG |
| 24 | 10 11 631 0 | 1 | RUBBER CONNECTION 90GRAD | GUMMIMUFFE |
| 25 | 77 42 150 08 | 2 | HOSE CLAMP 26/20-32/12 W3 | SCHLAUCHSCHELLE |
| 26 | 91 40 351 | 1 | HOSE NIPPLE GERADE | SCHLAUCHNIPPEL |
| 27 | 10 01 187 0 | 1 | SEALING RING 26,7X34,93X2 St/FPM1-80 | DICHTRING |

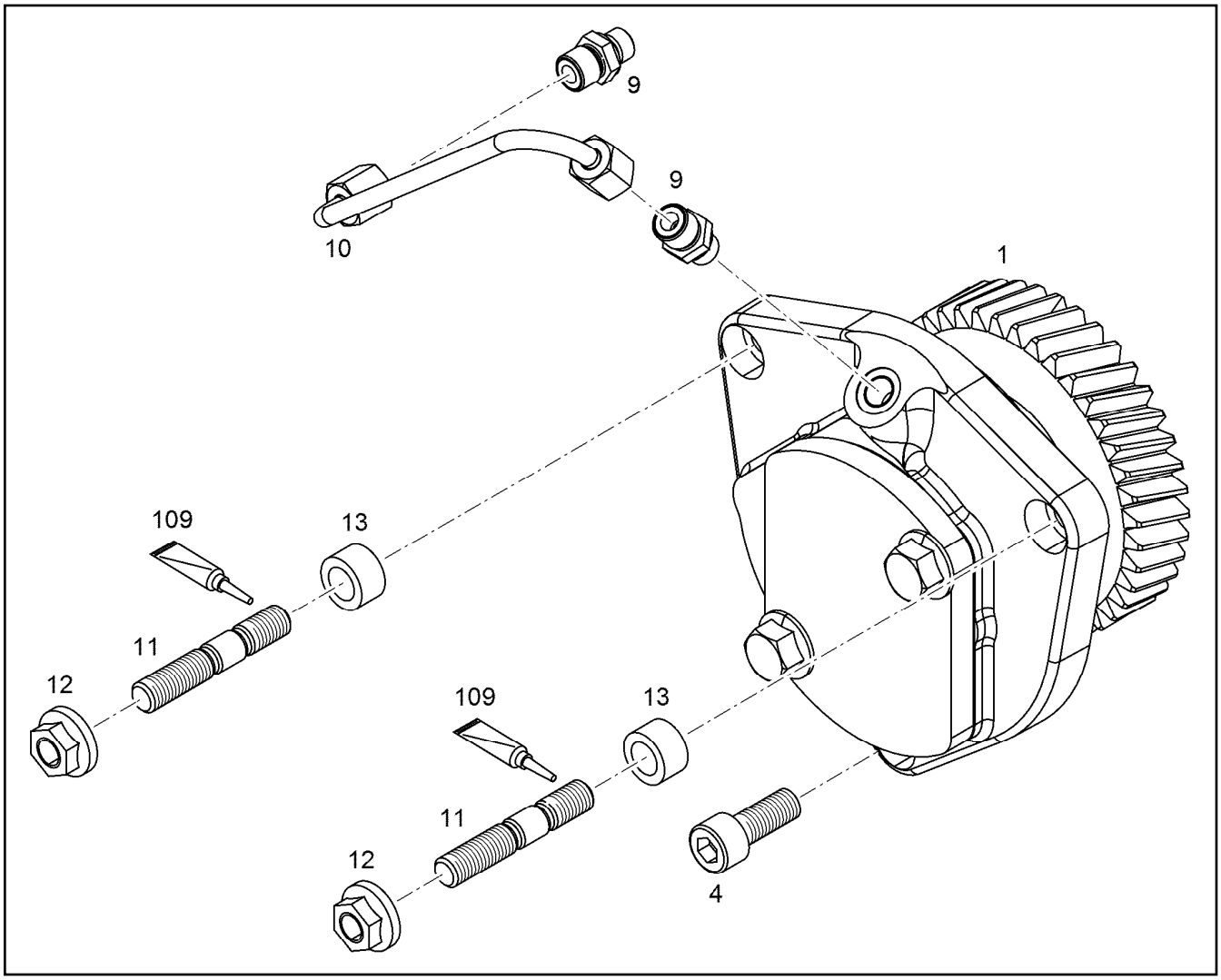


| Pos. | Item | Quantity | Description | Bezeichnung |
|---|---|---|---|---|
| 1 | 90 78 962 | 1 | AUXILIARY DRIVE PRE-ASS.<br>⇨ 9 078 962 90 78 962 | NEBENABTRIEB VORM. |
| 4 | 10 41 516 2 | 1 | SOCKET HEAD SCREW ISO 4762 M10X25 8 | ZYLINDERSCHRAUBE |
| 9 | 49 81 233 | 2 | FLANGE JOINT ISO 8434-1 GE 6L M10X1 C | VERSCHRAUBUNG |
| 10 | 90 78 984 | 1 | PIPELINE 6X1 | ROHRLEITUNG |
| 11 | 10 33 299 6 | 2 | DOUBLE-ENDED STUD DIN 835 M10X40 8.8 | STIFTSCHRAUBE |
| 12 | 49 80 805 | 2 | HEX NUT EN 1661 M10 8 A3C | SECHSKANTMUTTER |
| 13 | 10 11 999 4 | 2 | DISTANCE SLEEVE 11X17,5X10 S235JR | DISTANZHUELSE |
| 109 | 86 55 016 | 1 | SCREW LOCKING 10ML -50/+150 °C | SCHRAUBENSICHERUNG |

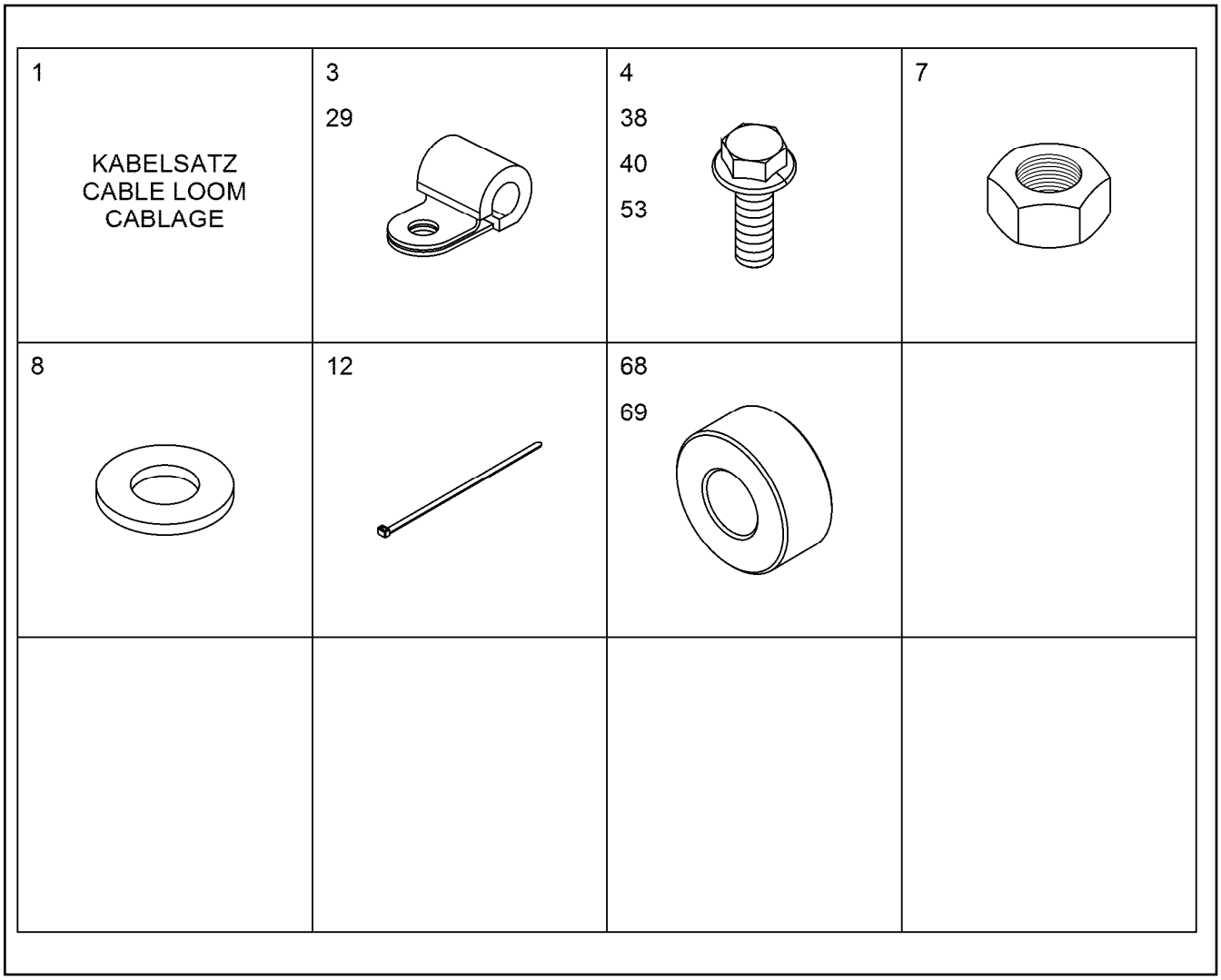


| Pos. | Item | Quantity | Description | Bezeichnung |
|---|---|---|---|---|
| 1 | 10 33 284 3 | 1 | CABLE LOOM D934 A6 | KABELSATZ |
| 3 | 73 81 629 | 4 | CLAMP DIN 3016-1 12X20XD1 W1-2-MVQ | SCHELLE |
| 4 | 10 01 690 6 | 2 | HEX SCREW DIN 6921 M8X20 8.8 A2C | SECHSKANTSCHRAUBE |
| 7 | 40 00 381 | 1 | HEX NUT ISO 4032 M8 10 A2C SPF | SECHSKANTMUTTER |
| 8 | 10 28 980 3 | 1 | WASHER ISO 7089 8 300HV 480H SPF | SCHEIBE |
| 12 | 10 87 458 8 | 2 | CABLE TIE 4,8X292-SCHWARZ PA 6.6 SPF | KABELBINDER |
| 29 | 73 82 091 | 1 | CLAMP DIN 3016-1 12X25XD1 W1-2-VMQ | SCHELLE |
| 38 | 10 00 778 2 | 1 | HEX SCREW DIN 6921 M8X30 8.8 A2C | SECHSKANTSCHRAUBE |
| 40 | 10 44 078 8 | 1 | HEX SCREW DIN 6921 M8X40 8.8 A2C | SECHSKANTSCHRAUBE |
| 53 | 11 65 615 5 | 1 | HEX SCREW EN 1665 M10X30 8.8 FLZN SPF | SECHSKANTSCHRAUBE |
| 68 | 91 32 577 | 3 | DISTANCE SLEEVE 8,5X18X10 St Rm>500N/ | DISTANZHUELSE |
| 69 | 10 13 573 0 | 1 | DISTANCE SLEEVE 11X21X12 42CrMo4 | DISTANZHUELSE |

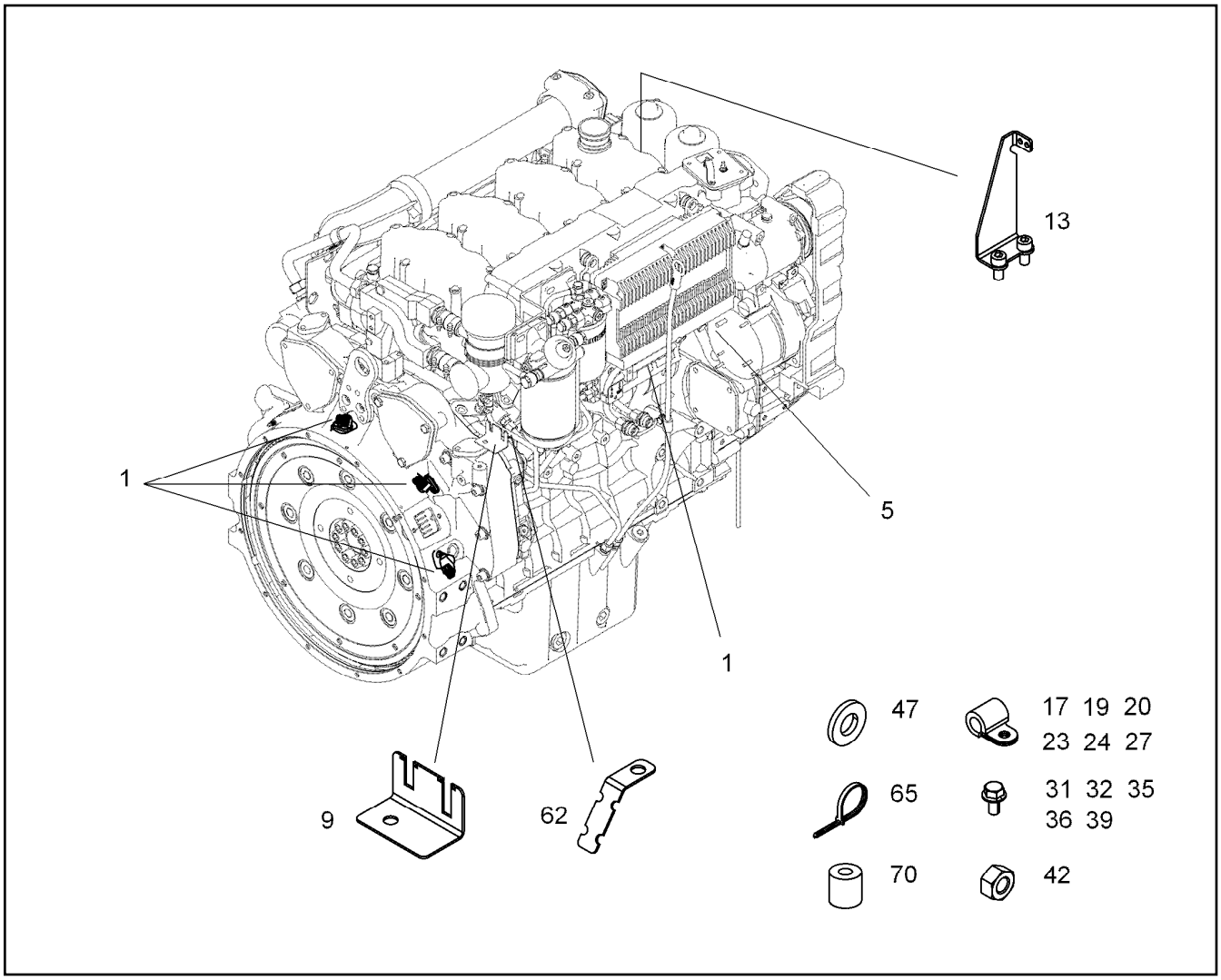


| Pos. | Item | Quantity | Description | Bezeichnung |
|---|---|---|---|---|
| 1 | 10 12 618 8 | 1 | WIRING HARNESS PRE-ASS. D934 A6 | KABELBAUM VORM. |
| 5 | 10 11 997 9 | 1 | WIRING HARNESS ASSEMBLY D934 A6<br>⇨ X10119979 10 11 997 9 | KABELSATZ ANBAU |
| 9 | 90 80 038 | 1 | HOLDER X5CrNi18-10 | HALTER |
| 13 | 10 12 028 4 | 1 | HOLDER | HALTER |
| (2) | 40 43 122 | 2 | SOCKET HEAD SCREW ISO 4762 M10X20 1 | ZYLINDERSCHRAUBE |
| 17 | 73 81 771 | 3 | CLAMP DIN 3016-1 8X15XD1 W1-2-VMQ | SCHELLE |
| 19 | 73 82 087 | 1 | CLAMP DIN 3016-1 12X15XD1 W1-2-VMQ | SCHELLE |
| 20 | 73 81 294 | 1 | CLAMP DIN 3016-1 16X15XD1 W1-2-VMQ | SCHELLE |
| 23 | 73 82 090 | 3 | CLAMP DIN 3016-1 8X20XD1 W1-2-MVQ | SCHELLE |
| 24 | 73 81 628 | 1 | CLAMP DIN 3016-1 10X20XD1 W1-2-MVQ | SCHELLE |
| 27 | 73 81 635 | 2 | CLAMP DIN 3016-1 18X20XD1 W1-2-MVQ | SCHELLE |
| 31 | 40 73 502 08 | 5 | HEX SCREW DIN 6921 M6X16 8.8 A2C | SECHSKANTSCHRAUBE |
| 32 | 10 01 871 1 | 3 | HEX SCREW DIN 6921 M6X20 8.8 A2C | SECHSKANTSCHRAUBE |
| 35 | 10 00 507 8 | 4 | HEX SCREW DIN 6921 M8X16 8.8 A2C | SECHSKANTSCHRAUBE |
| 36 | 10 01 690 6 | 1 | HEX SCREW DIN 6921 M8X20 8.8 A2C | SECHSKANTSCHRAUBE |
| 39 | 10 11 371 1 | 1 | HEX SCREW DIN 6921 M8X35 8.8 A2C | SECHSKANTSCHRAUBE |
| 42 | 40 00 379 | 1 | HEX NUT ISO 4032 M6 10 A2C SPF | SECHSKANTMUTTER |
| 47 | 10 87 564 7 | 1 | WASHER ISO 7089 6 200HV 480H SPF | SCHEIBE |
| 62 | 10 11 836 3 | 1 | HOLDER S235JR | HALTER |
| 65 | 10 87 458 8 | 3 | CABLE TIE 4,8X292-SCHWARZ PA 6.6 SPF | KABELBINDER |
| 70 | 93 58 590 | 1 | SLEEVE 20X20 | HUELSE |

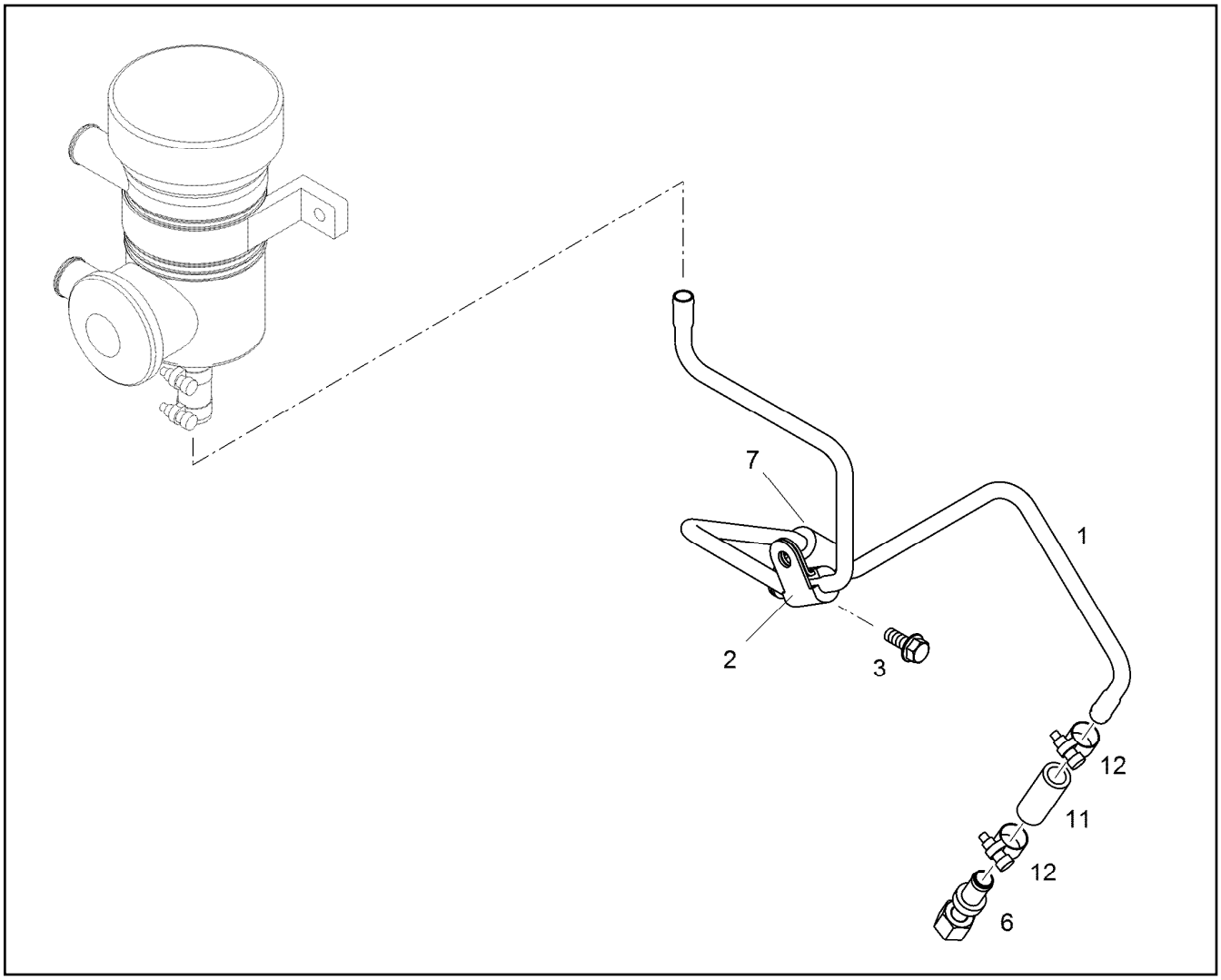


| Pos. | Item | Quantity | Description | Bezeichnung |
|---|---|---|---|---|
| 1 | 10 12 024 1 | 1 | PIPELINE 10X1 | ROHRLEITUNG |
| 2 | 73 82 092 | 2 | CLAMP DIN 3016-1 10X25XD1 W1-2-VMQ | SCHELLE |
| 3 | 10 01 690 6 | 1 | HEX SCREW DIN 6921 M8X20 8.8 A2C | SECHSKANTSCHRAUBE |
| 6 | 10 11 997 1 | 1 | NON-RETURN VALVE | RUECKSCHLAGVENTIL |
| 7 | 73 81 628 | 1 | CLAMP DIN 3016-1 10X20XD1 W1-2-MVQ | SCHELLE |
| 11 | 90 79 603 | 1 | RUBBER CONNECTION 12 X 18 X 45 GUMMI | GUMMIMUFFE |
| 12 | 46 01 105 | 1 | CLAMP DIN 3017-1 16/12-20/9 W2-2 | SCHELLE |

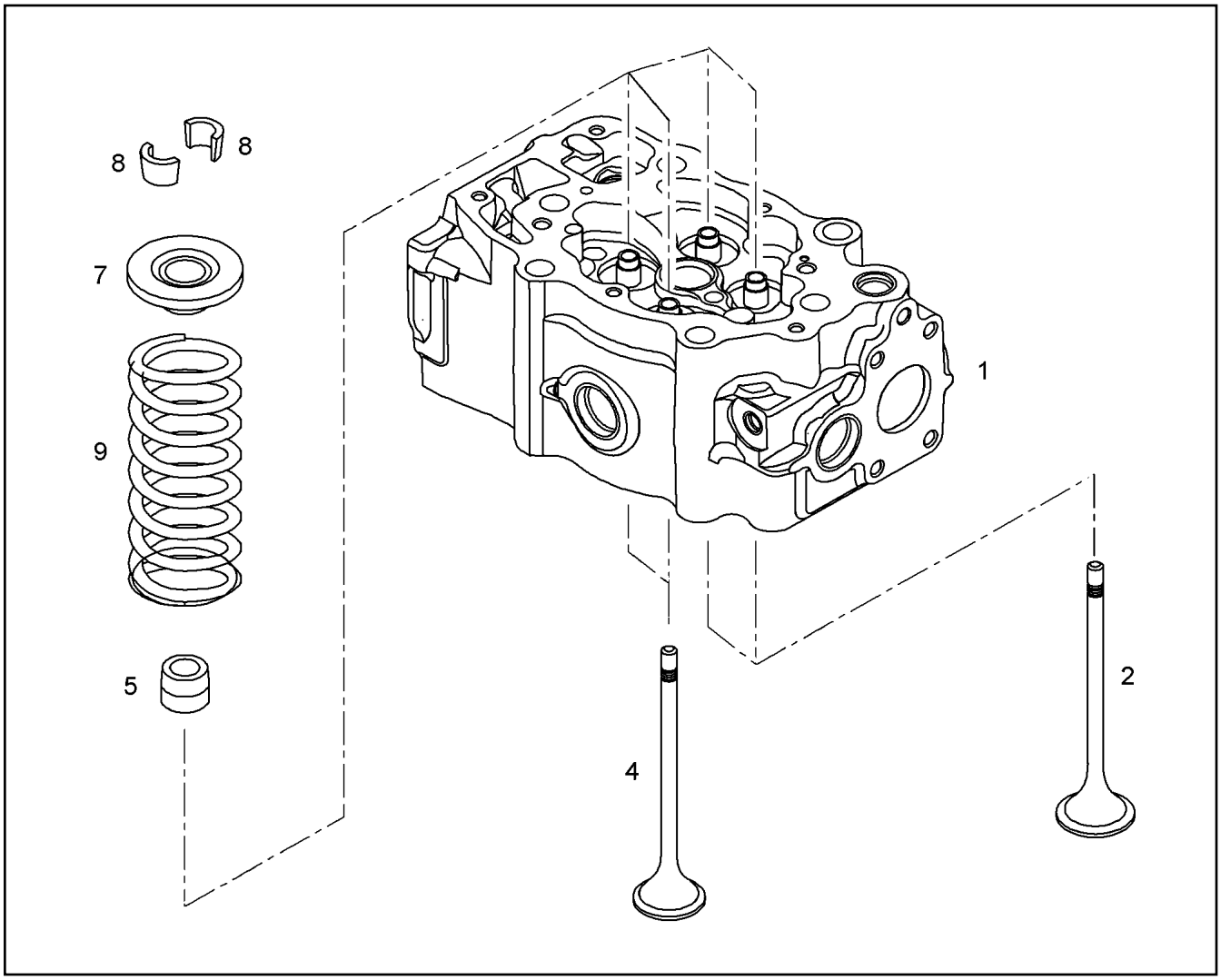


| Pos. | Item | Quantity | Description | Bezeichnung |
|---|---|---|---|---|
| 1 | 10 12 038 3 | 1 | CYLINDER HEAD R-MOTOR<br>⇨ X10120383 10 12 038 3 | ZYLINDERKOPF |
| 2 | 90 74 450 | 2 | INLET VALVE | EINLASSVENTIL |
| 4 | 90 74 451 | 2 | OUTLET VALVE | AUSLASSVENTIL |
| 5 | 10 12 033 4 | 4 | VALVE STEM SEAL RING | VENTILSCHAFTDICHTRING |
| 7 | 90 74 480 | 4 | SPRING CUP ABOVE 41Cr4 | FEDERTELLER OBEN |
| 8 | 11 35 751 4 | 8 | VALVE COLLET MK9 | VENTILKEGELSTUECK |
| 9 | 90 74 481 | 4 | PRESSURE SPRING 4,60X28,40X62,70 Otev | DRUCKFEDER |

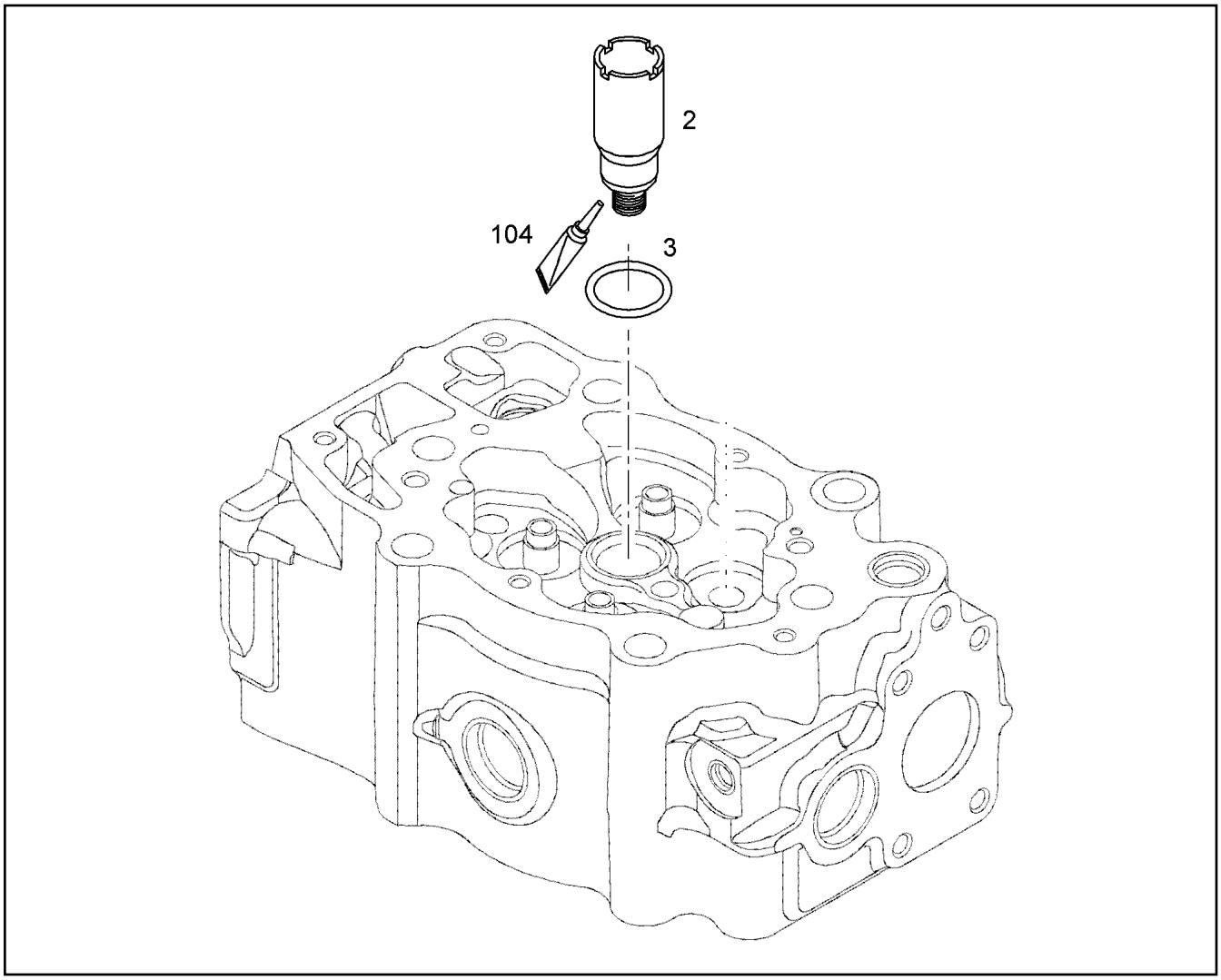


| Pos. | Item | Quantity | Description | Bezeichnung |
|---|---|---|---|---|
| 2 | 10 15 216 8 | 1 | SLEEVE X46Cr13 | HUELSE |
| 3 | 50 07 415 08 | 1 | O-RING 25X3 FPM70 | O-RING |
| 4 | 10 13 906 4 | 4 | VALVE STEM GUIDE | VENTILFUEHRUNG |
| 6 | 90 73 725 | 2 | INLET VALVE SEAT INSERT PL 33 MV 400 | VENTILSITZRING EINLASS |
| 7 | 90 73 726 | 2 | EXHAUST VALVE SEAT INSERT PL 12 MV 42 | VENTILSITZRING AUSLASS |
| 9 | 90 79 078 | 1 | THREADED BUSHING | GEWINDEBUCHSE |
| 10 | 49 80 363 | 3 | END COVER DIN 443 St A3C | VERSCHLUSSDECKEL |
| 12 | 49 81 042 | 1 | END COVER DIN 443 St A3C | VERSCHLUSSDECKEL |
| 104 | 81 12 073 01 | 1 | GLUE 10 ml | KLEBSTOFF |

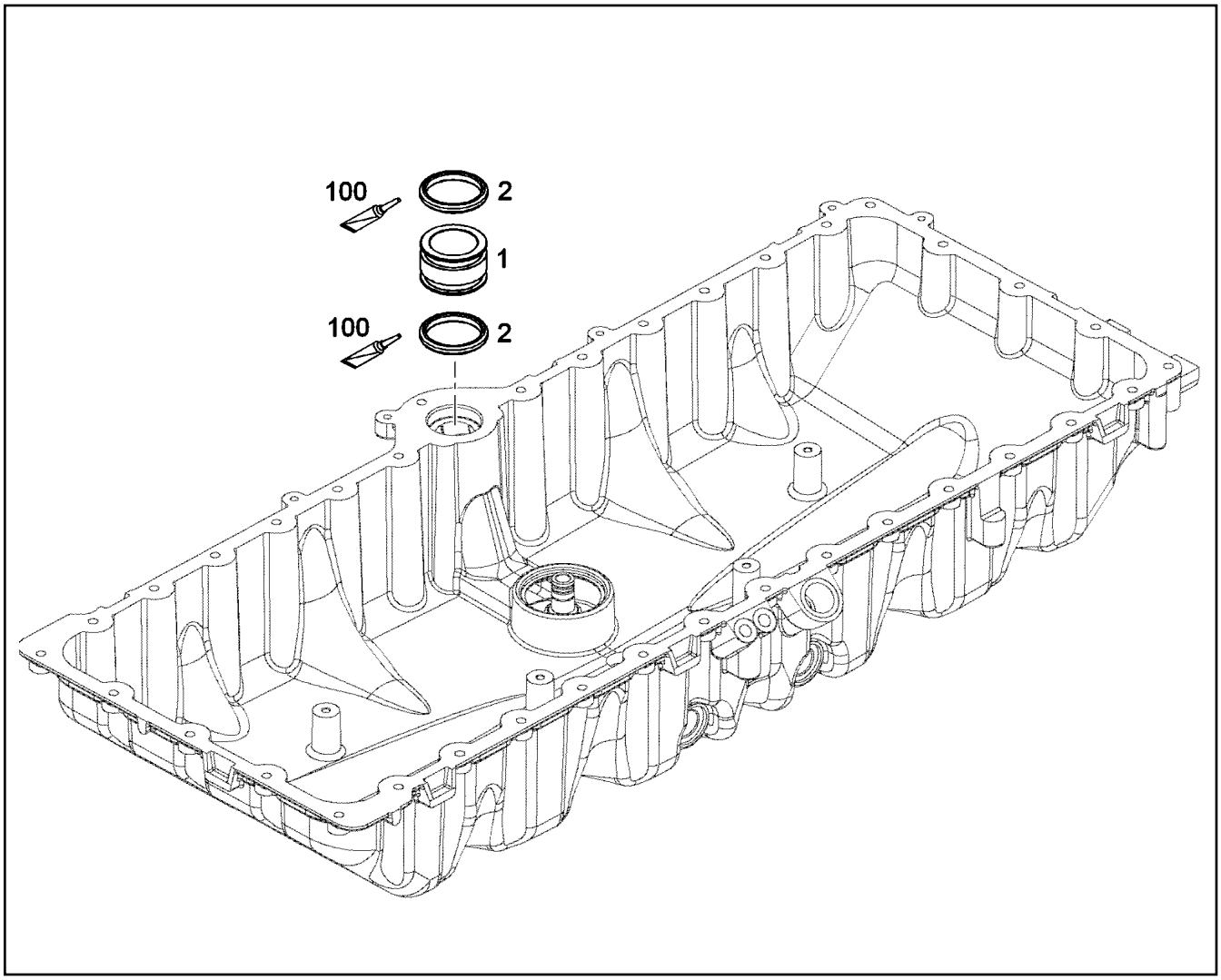


| Pos. | Item | Quantity | Description | Bezeichnung |
|---|---|---|---|---|
| 1 | 10 12 166 6 | 1 | CONNECTING PIECE Al Rm>200N/m | VERBINDUNGSSTUECK |
| 2 | 73 81 566 | 2 | O-RING DIN 3771 40,64X5,33 FKM 70 A,GN | O-RING |
| 100 | 10 28 262 2 | 1 | GREASE STABURAGS NBU 30 0.010KG | FETT |

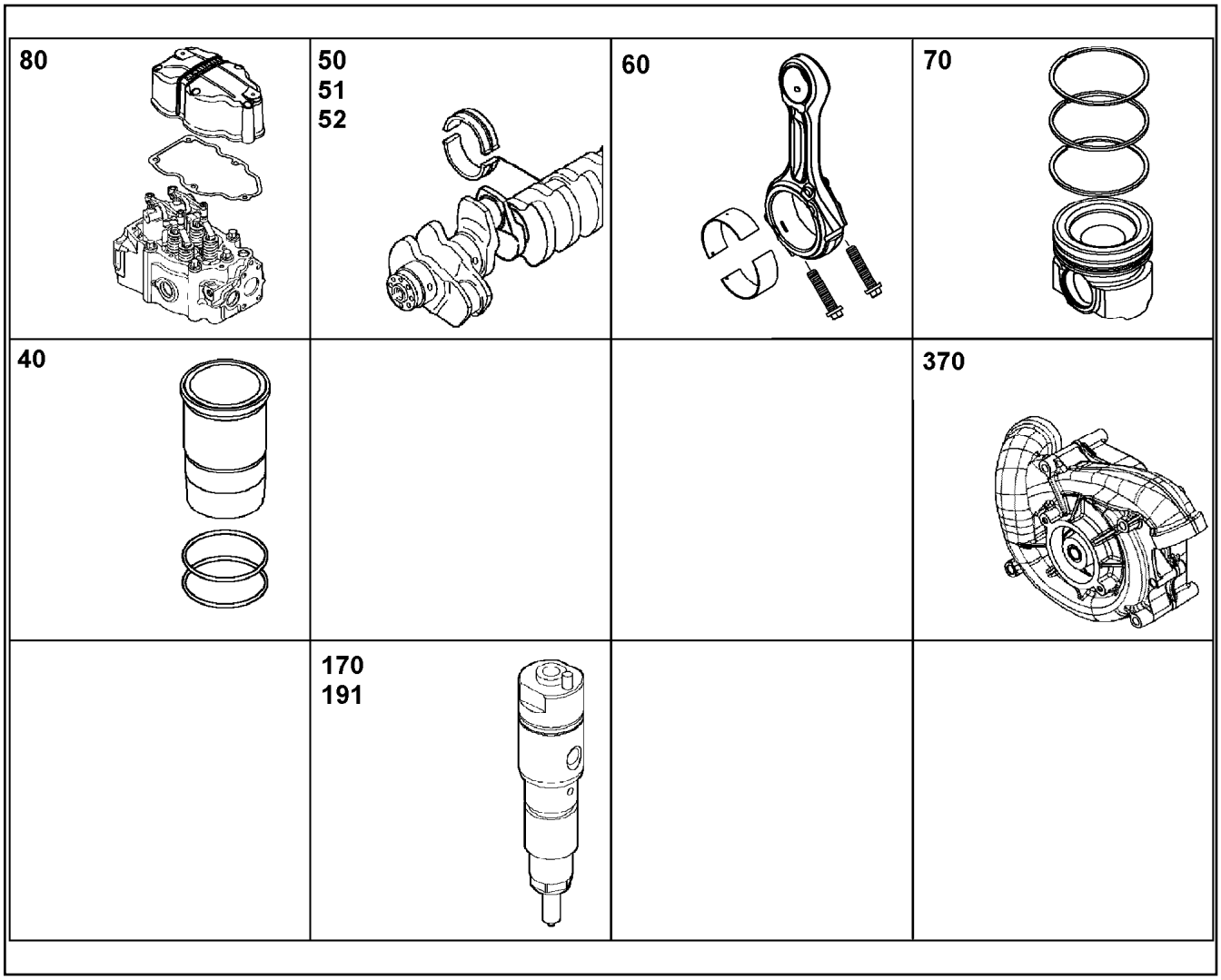


| Pos. | Item | Quantity | Description | Bezeichnung |
|---|---|---|---|---|
| 10 | 10 11 577 7 | 1 | CRANKCASE CPL. R-MOTORXD934<br>⇨ X10115777 10 11 577 7 | KURBELGEHAEUSE KPL. |
| 12 | 90 79 480 | 1 | POWER UNIT SUPPORT ATTACHMENT<br>⇨ 9 079 480 90 79 480 | AGGREGATETRAEGER ANBAU |
| 14 | 10 11 795 1 | 1 | FINAL CONTROL VALVE<br>⇨ X10117951 10 11 795 1 | ENDREGELVENTIL |
| 15 | 90 73 795 | 4 | PISTON COOLING<br>⇨ 9 073 795 90 73 795 | KOLBENKUEHLUNG |
| 40 | 90 73 083 | 4 | CYLINDER R-MOTORXD930<br>⇨ 9 073 083 90 73 083 | ZYLINDER |
| 50 | 90 78 832 | 1 | CRANKSHAFT WITH GEAR R-MOTORXD934<br>⇨ 9 078 832 90 78 832 | KURBELWELLE MIT ZAHNRAD |
| 51 | 90 76 457 | 1 | SET MAIN BEARINGS D934-SPUTTER<br>⇨ 9 076 457 90 76 457 | KURBELWELLENLAGERSATZ |
| 52 | 90 75 133 | 1 | CRANKSHAFT SEALING<br>⇨ 9 075 133 90 75 133 | KURBELWELLENDICHTUNG |
| 60 | 90 76 459 | 4 | CONROD R-MOTORX92<br>⇨ 9 076 459 90 76 459 | PLEUELSTANGE |
| 70 | 10 46 728 5 | 4 | PISTON CPL. R-MOTORX122<br>⇨ X10467285 10 46 728 5 | KOLBEN KPL. |
| 80 | 10 11 675 9 | 4 | CYLINDER HEAD ASSEMBLY R-MOTOR<br>⇨ X10116759 10 11 675 9 | ZYLINDERKOPF ANBAU |
| 100 | 10 12 223 3 | 1 | CAMSHAFT CPL. R-MOTORXD934<br>⇨ X10122233 10 12 223 3 | NOCKENWELLE KPL. |
| 110 | 90 79 870 | 4 | CONTROL PARTS<br>⇨ 9 079 870 90 79 870 | STEUERUNGSTEILE |

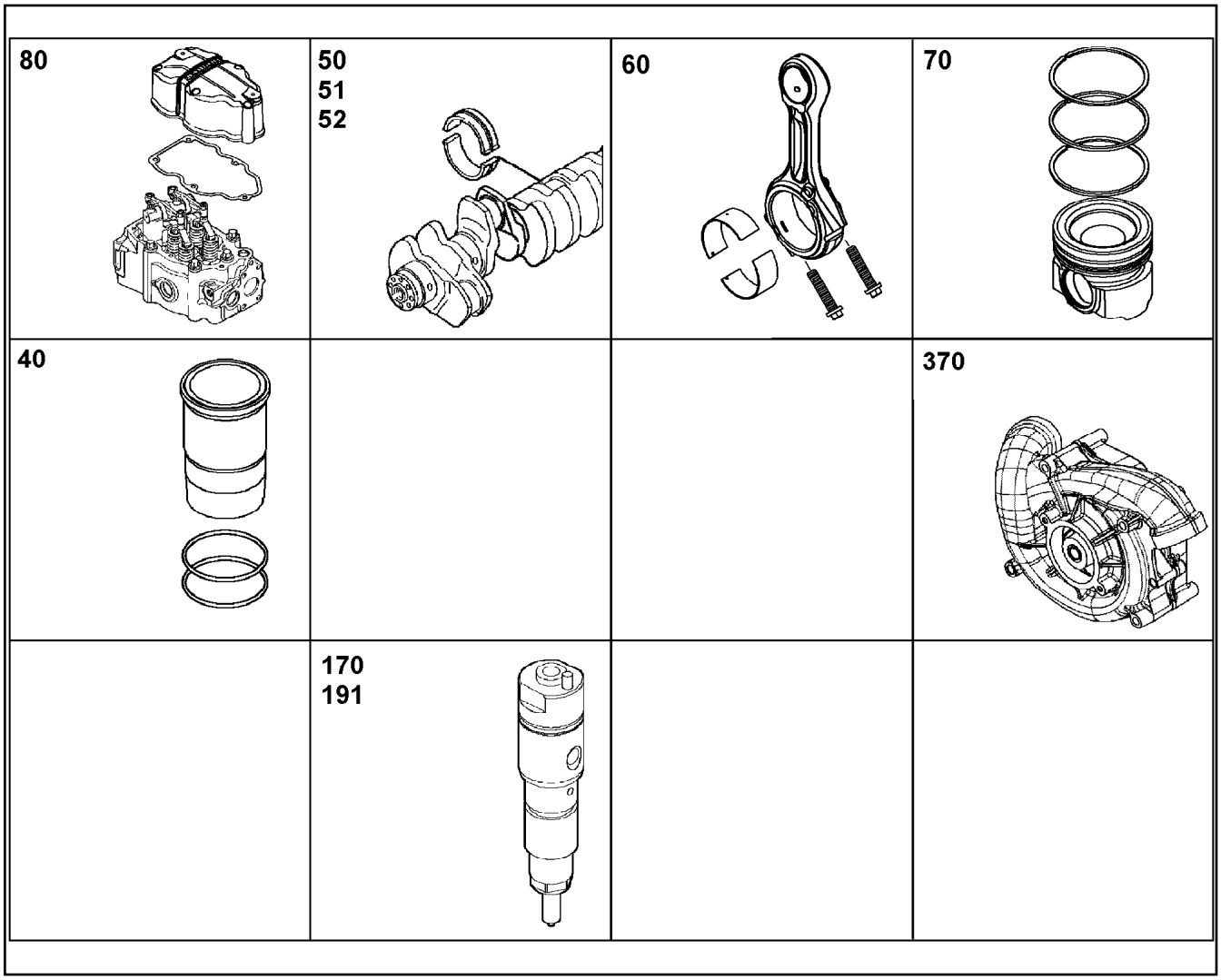


| Pos. | Item | Quantity | Description | Bezeichnung |
|---|---|---|---|---|
| 130 | 10 11 739 8 | 1 | OIL COOLER ADD-ON D934<br>⇨ X10117398 10 11 739 8 | OELKUEHLER ANBAU |
| 140 | 90 75 540 | 1 | LUBE OIL PUMP WITH FASTENING B=30<br>⇨ 9 075 540 90 75 540 | SCHMIEROELPUMPE MIT BEFE |
| 150 | 90 75 368 | 1 | LUBE OIL FILTER ASSEMBLY<br>⇨ 9 075 368 90 75 368 | SCHMIEROELFILTER ANBAU |
| 170 | 10 11 683 9 | 4 | INJECTION PUMP ASSEMBLY R-MOTORXD<br>⇨ X10116839 10 11 683 9 | EINSPRITZPUMPE ANBAU |
| 191 | 90 75 395 | 4 | HIGH PRESSURE CONNECTOR ASS.<br>⇨ 9 075 395 90 75 395 | DRUCKROHRSTUTZEN ANBAU |
| 210 | 90 73 767 | 1 | POWER TAKE-OFF ADD-ON<br>⇨ 9 073 767 90 73 767 | NEBENABTRIEB ANBAU |
| 211 | 90 78 680 | 1 | FUEL PUMP ASSEMBLY<br>⇨ 9 078 680 90 78 680 | KRAFTSTOFFFOERDERPUMPE |
| 215 | 90 80 410 | 4 | INJECTION LINE R-MOTORXD934/D93 | EINSPRITZLEITUNG |
| 370 | 90 80 345 | 1 | WATER PUMP WITH FASTENING R-MOTOR<br>⇨ 9 080 345 90 80 345 | WASSERPUMPE MIT BEFEST. |
| 381 | 90 79 092 | 1 | PIPELINE INSTALLATION<br>⇨ 9 079 092 90 79 092 | ROHRLEITUNG ANBAU |

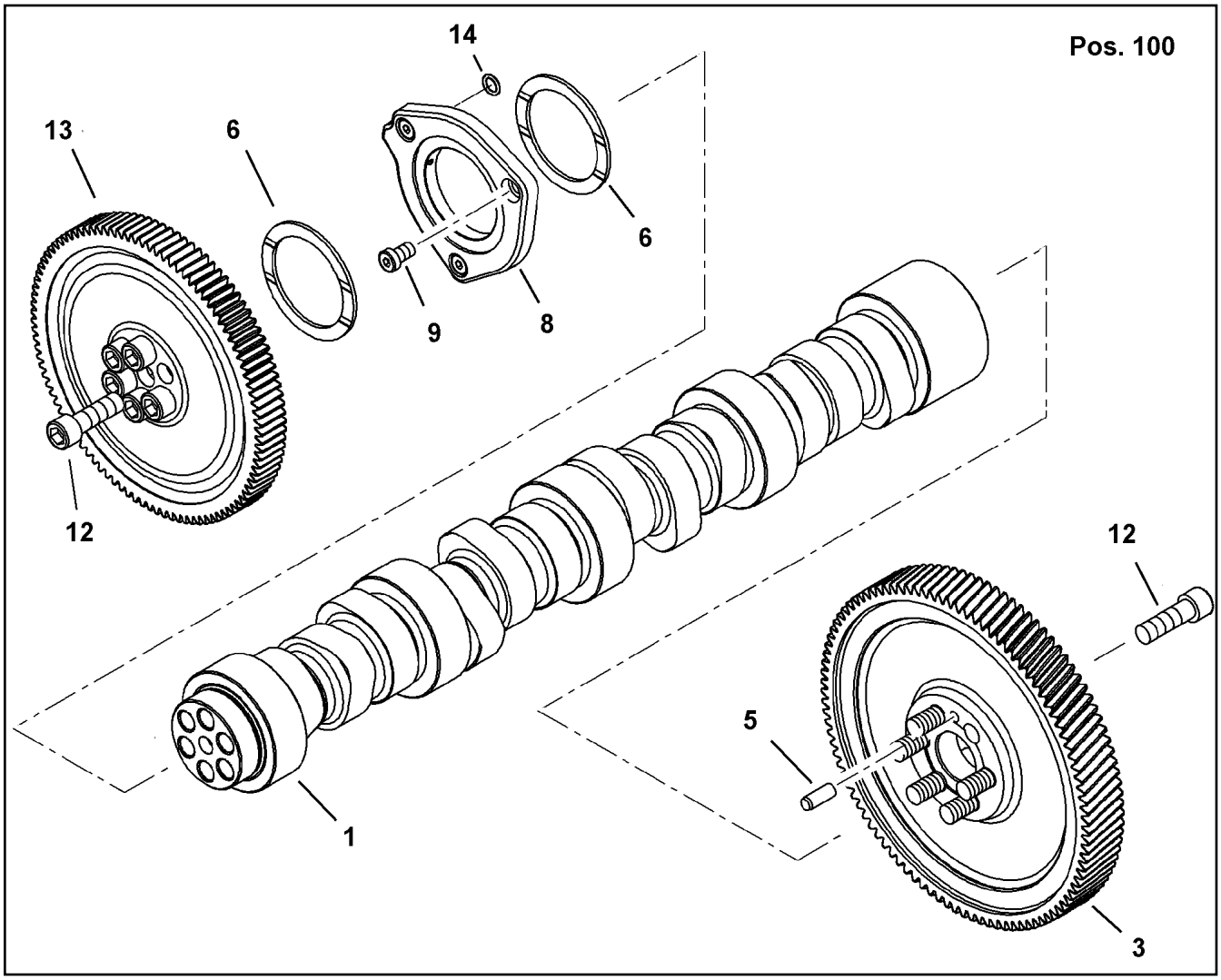


| Pos. | Item | Quantity | Description | Bezeichnung |
|---|---|---|---|---|
| 1 | 10 12 256 0 | 1 | CAMSHAFT R-MOTORXD934 | NOCKENWELLE |
| 3 | 90 73 098 | 1 | GEAR WHEEL Z=100 M=2,5 | ZAHNRAD |
| 5 | 49 80 853 | 1 | PARALLEL PIN ISO 8734 8m6X22 St | ZYLINDERSTIFT |
| 6 | 90 73 188 | 2 | WEARING RING C60/CuSn8 P | ANLAUFRING |
| 8 | 90 73 163 | 1 | FLANGE PRE-ASS. | FLANSCH VORM. |
| 9 | 49 80 927 | 3 | SOCKET HEAD SCREW DIN 7984 M10X18 0 | ZYLINDERSCHRAUBE |
| 12 | 40 00 414 | 12 | SOCKET HEAD SCREW ISO 4762 M14X45 1 | ZYLINDERSCHRAUBE |
| 13 | 90 73 100 | 1 | GEAR WHEEL Z=99 M=2,25 16MnCr5 | ZAHNRAD |
| 14 | 73 81 685 | 1 | O-RING DIN 3771 7,00X1,5 FKM 90 A,BK | O-RING |
| 100 | 10 28 262 2 | 1 | GREASE STABURAGS NBU 30 0.010KG | FETT |

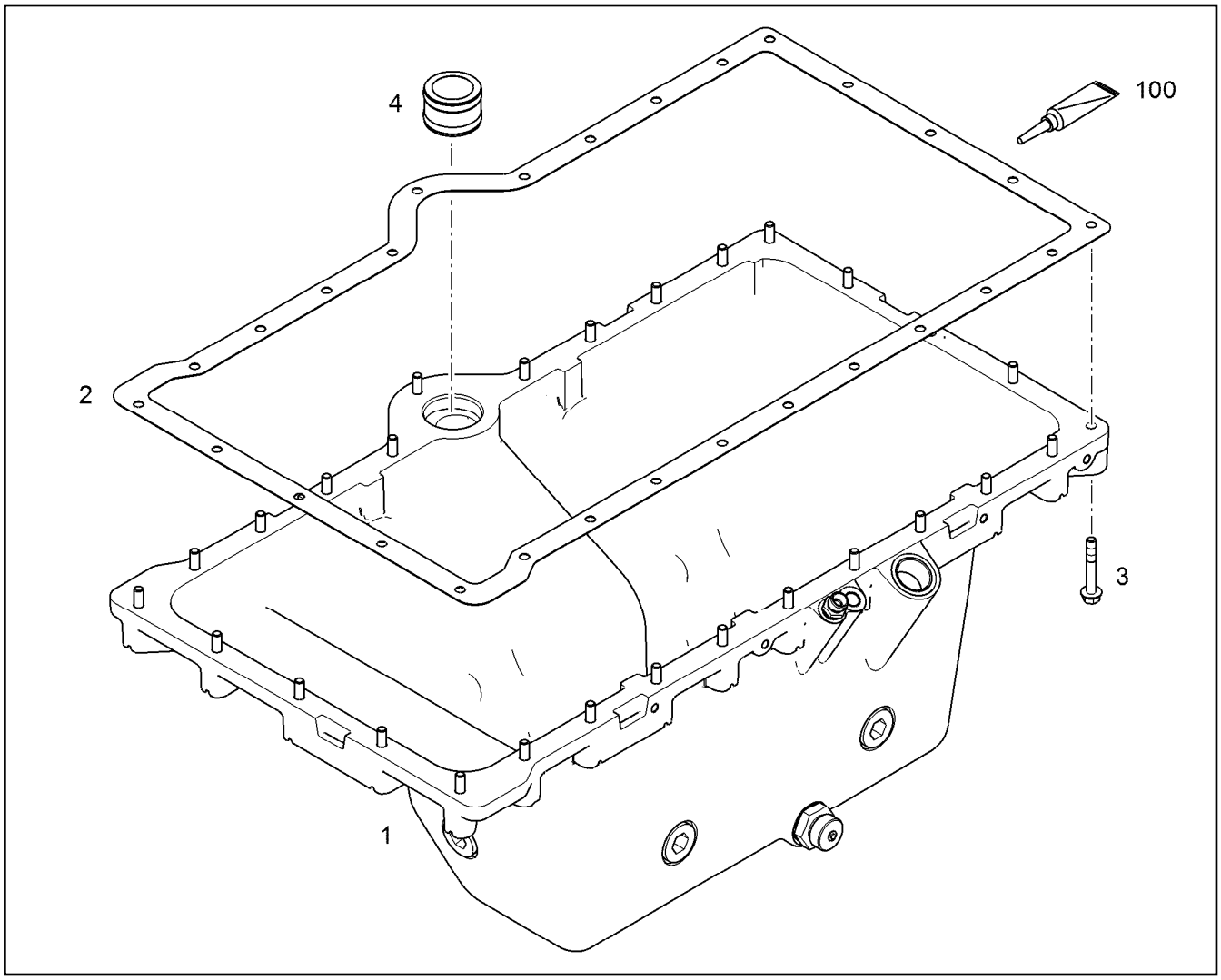


| Pos. | Item | Quantity | Description | Bezeichnung |
|---|---|---|---|---|
| 1 | 10 15 522 1 | 1 | OIL SUMP PRE-ASS. R-MOTOR | OELWANNE VORM. |
| 2 | 10 11 854 7 | 1 | SEAL 1MM AFM 30 | DICHTUNG |
| 3 | 10 21 801 3 | 28 | HEX SCREW EN 1665 M8X55 8.8 A3C | SECHSKANTSCHRAUBE |
| 4 | 10 12 166 7 | 1 | CONNECTING PIECE W.O-RING<br>⇨ X10121667 10 12 166 7 | VERBINDUNGSSTUECK M.O-RIN |
| 100 | 10 35 459 5 | 1 | SURFACE SEALING 300ML KARTUSCHE BI | FLAECHENDICHTUNG |

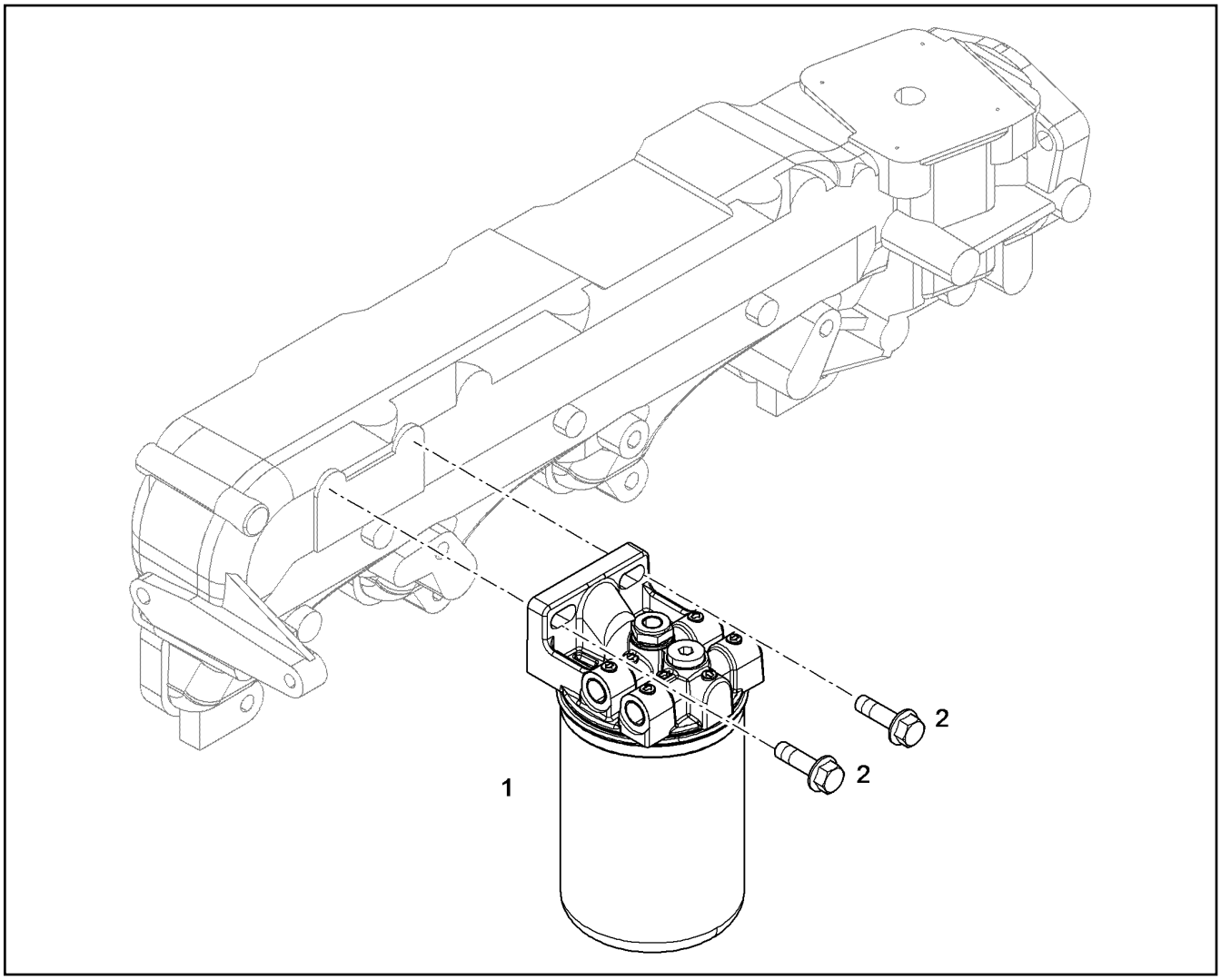


| Pos. | Item | Quantity | Description | Bezeichnung |
|---|---|---|---|---|
| 1 | 10 12 580 1 | 1 | FUEL FINE FILTER<br>⇨ X10125801 10 12 580 1 | KRAFTSTOFFFEINFILTER |
| 2 | 10 33 346 4 | 2 | HEX SCREW DIN 6921 M10X35 8.8 A3C | SECHSKANTSCHRAUBE |

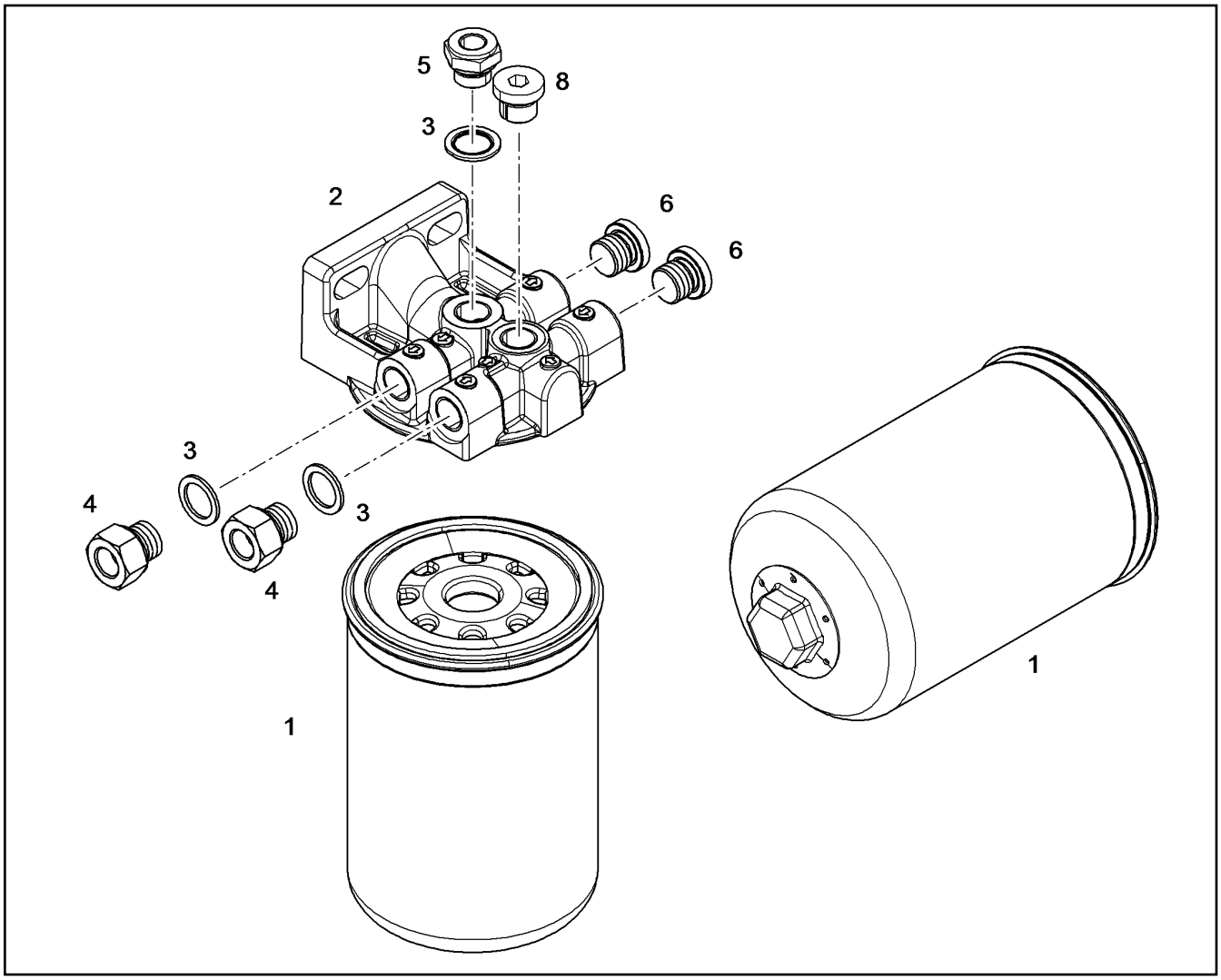


| Pos. | Item | Quantity | Description | Bezeichnung |
|---|---|---|---|---|
| 1 | 10 42 994 6 | 1 | FUEL FINE FILTER KRAFTSTOFF 3µm | KRAFTSTOFFFEINFILTER |
| 2 | 10 15 278 1 | 1 | FUEL FILTER HEAD | KRAFTSTOFFFILTERKOPF |
| 3 | 10 01 186 7 | 1 | SEALING RING 16,7X24X1,5 St/FPM1-80 | DICHTRING |
| 5 | 10 12 006 6 | 1 | REDUCING PIECE M16X1,5/M12X1,5 9SMn | REDUZIERSTUECK |
| 8 | 10 11 607 8 | 1 | SCREW PLUG VSTI M16X1,5 | VERSCHLUSSSCHRAUBE |

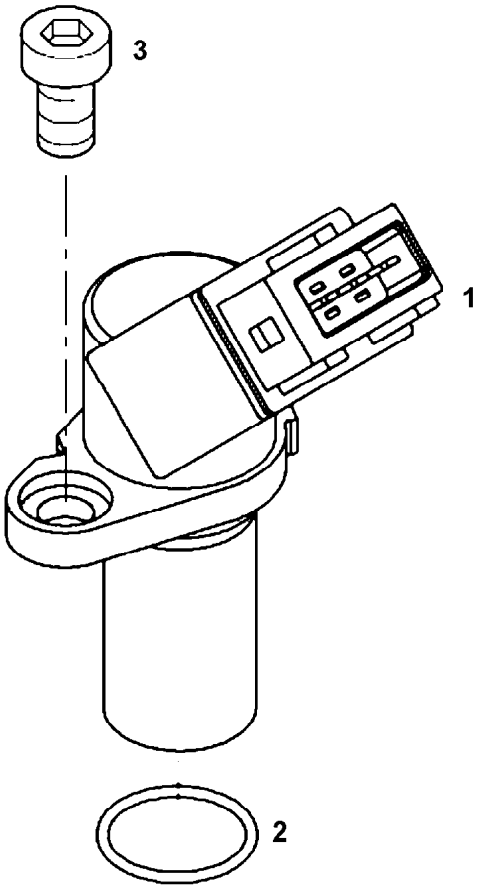


| Pos. | Item | Quantity | Description | Bezeichnung |
|---|---|---|---|---|
| 1 | 10 15 494 4 | 1 | ROTATIONAL SPEED SENSOR | DREHZAHLGEBER |
| 2 | 73 81 103 | 1 | O-RING ISO 3601-1 17,17X1,78 FKM 70 A,GN | O-RING |
| 3 | 10 87 558 6 | 1 | SOCKET HEAD SCREW ISO 4762 M6X16 8.8 | ZYLINDERSCHRAUBE |

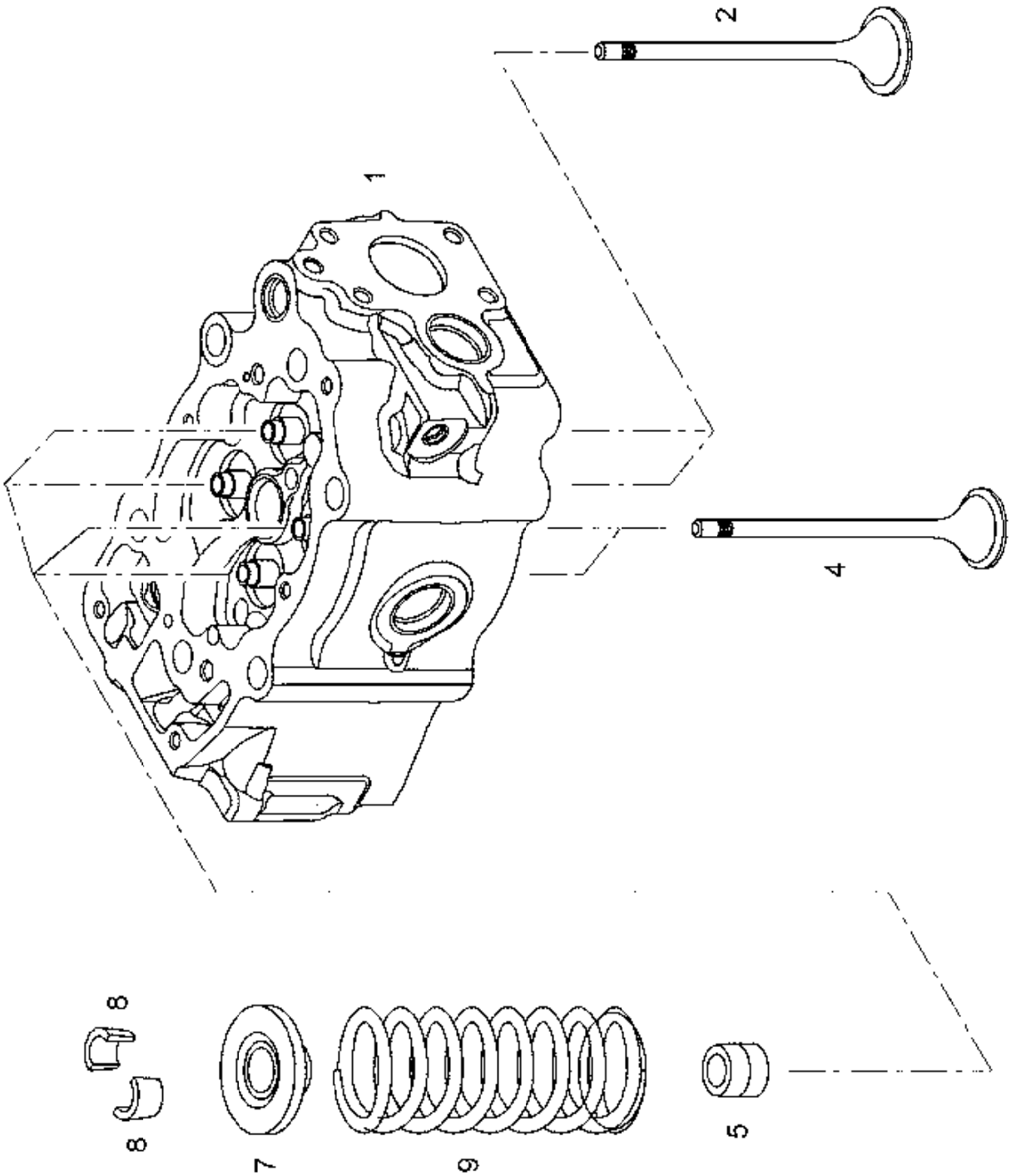
1
2
4
5
7
8
8
9

| Pos. | Item | Quantity | Description | Bezeichnung |
|---|---|---|---|---|
| 1 | 10 12 038 3 | 1 | CYLINDER HEAD R-MOTOR<br>⇨ X10120383 10 12 038 3 | ZYLINDERKOPF |
| 2 | 10 13 675 2 | 2 | INLET VALVE | EINLASSVENTIL |
| 4 | 10 13 675 3 | 2 | OUTLET VALVE | AUSLASSVENTIL |
| 5 | 10 12 033 4 | 4 | VALVE STEM SEAL RING | VENTILSCHAFTDICHTRING |
| 7 | 90 74 480 | 4 | SPRING CUP ABOVE 41Cr4 | FEDERTELLER OBEN |
| 8 | 11 35 751 4 | 8 | VALVE COLLET MK9 | VENTILKEGELSTUECK |
| 9 | 90 74 481 | 4 | PRESSURE SPRING 4,60X28,40X62,70 Otev | DRUCKFEDER |

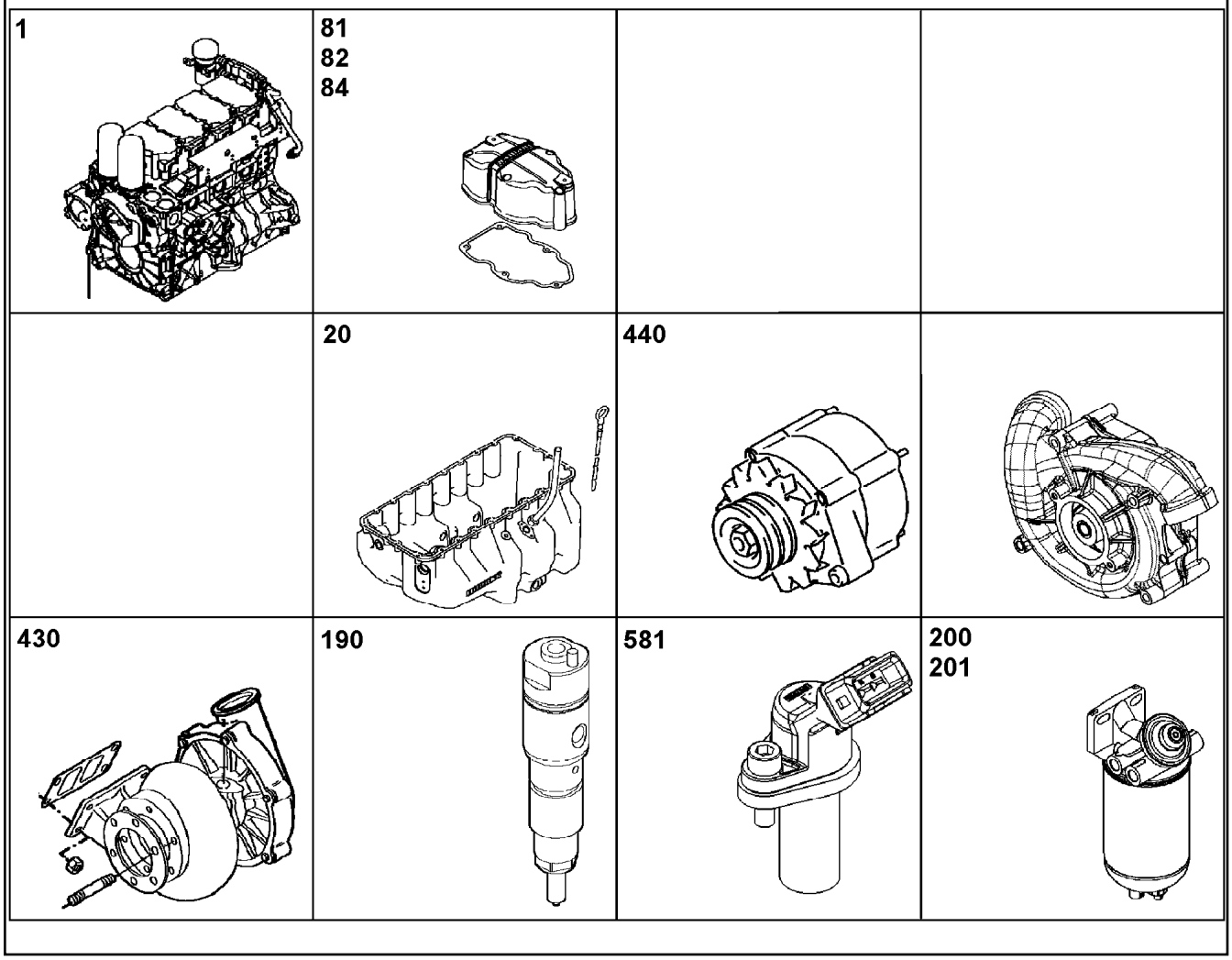


| Pos. | Item | Quantity | Description | Bezeichnung |
|---|---|---|---|---|
| 1 | 10 12 193 2 | 1 | BASIC ENGINE D934 L<br>⇨ X10121932 10 12 193 2 | GRUNDMOTOR |
| 16 | 10 11 914 1 | 1 | CRANKCASE BREATHER ASSEMBLY D934<br>⇨ X10119141 10 11 914 1 | KURBELGEHAEUSEENTLUEFT. |
| 20 | 10 12 414 0 | 1 | OIL SUMP WITH FASTENING R-MOTOR/D93<br>⇨ X10124140 10 12 414 0 | OELWANNE MIT BEFEST. |
| 21 | 10 11 888 4 | 1 | OIL DIPSTICK WITH PIPE<br>⇨ X10118884 10 11 888 4 | OELMESSSTAB MIT ROHR |
| 22 | 10 12 962 5 | 1 | SCREW PLUG VSTI M18X1,5 | VERSCHLUSSSCHRAUBE |
| 23 | 10 11 883 9 | 1 | OIL FILLER INLET<br>⇨ X10118839 10 11 883 9 | OELEINFUELLUNG |
| 24 | 91 47 512 | 1 | LOCKING PIECES<br>⇨ 9 147 512 91 47 512 | VERSCHLUSSTEILE |
| 25 | 10 12 024 2 | 1 | OIL LINE PRE-ASSEMBLY 12X1<br>⇨ X10120242 10 12 024 2 | OELLEITUNG VORM. |
| 53 | 90 80 591 | 1 | CRANKSHAFT ADD-ON PARTS LUEFTERSE<br>⇨ 9 080 591 90 80 591 | KURBELWELLENANBAUTEILE |
| 81 | 90 79 861 | 4 | ROCKER ARM BRACKET CPL.<br>⇨ 9 079 861 90 79 861 | KIPPHEBELBOCK KPL. |
| 82 | 10 11 961 0 | 3 | CYLINDER HEAD COVER ASSEMBLY<br>⇨ X10119610 10 11 961 0 | ZYLINDERKOPFDECKEL ANBAU |
| 84 | 10 11 963 6 | 1 | CYLINDER HEAD COVER ASSEMBLY<br>⇨ X10119636 10 11 963 6 | ZYLINDERKOPFDECKEL ANBAU |
| 90 | 90 74 165 | 1 | BALANCER ASSEMBLY D934L<br>⇨ 9 074 165 90 74 165 | MASSENAUSGLEICH ANBAU |

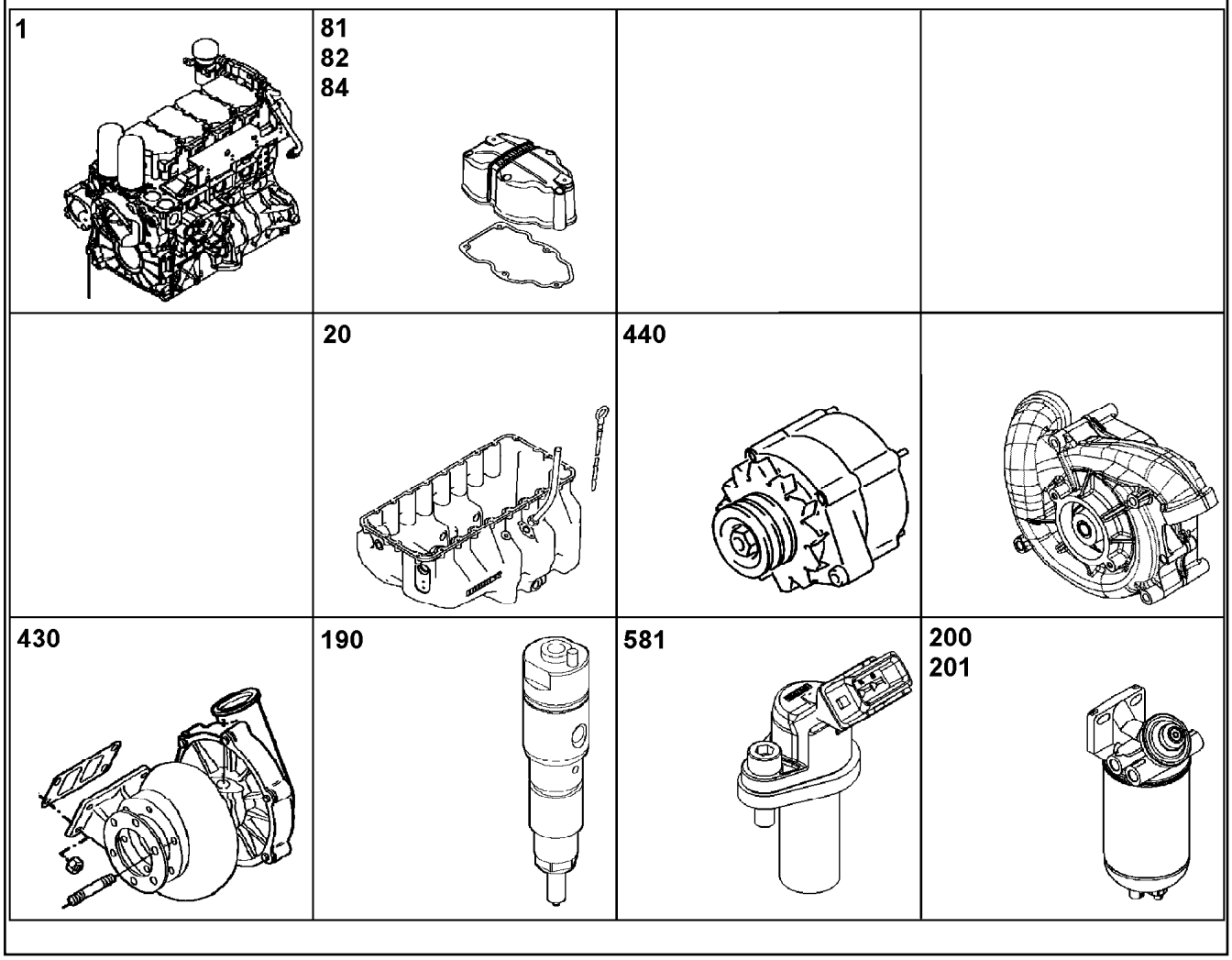


| Pos. | Item | Quantity | Description | Bezeichnung |
|---|---|---|---|---|
| 132 | 10 11 722 8 | 1 | WATER CONNECTION D934<br>⇨ X10117228 10 11 722 8 | WASSERANSCHLUSS |
| 190 | 10 11 659 1 | 4 | INJECTION NOZZLE W.FASTENING<br>⇨ X10116591 10 11 659 1 | EINSPRITZDUESE MIT BEFEST. |
| 200 | 10 11 989 1 | 1 | FUEL-PREFILTER ASS.<br>⇨ X10119891 10 11 989 1 | KRAFTSTOFFVORFILTERANBA |
| 201 | 10 12 500 7 | 1 | FUEL FINE-FILTER ASSEMBLY<br>⇨ X10125007 10 12 500 7 | KRAFTSTOFF-FEINFILTERANBA |
| 212 | 10 11 573 7 | 1 | FUEL LINES<br>⇨ X10115737 10 11 573 7 | KRAFTSTOFFLEITUNGEN |
| 214 | 10 11 569 6 | 1 | LEAK OIL RETURN LINE<br>⇨ X10115696 10 11 569 6 | LECKOELRUECKLAUF |
| 217 | 10 11 614 6 | 1 | CONNECTING PIECE PRE-ASS.<br>⇨ X10116146 10 11 614 6 | ANSCHLUSSSTUECK VORM. |
| 220 | 10 11 707 2 | 1 | AIR INTAKE PIPE ASS. R-MOTORXD934<br>⇨ X10117072 10 11 707 2 | LUFTANSAUGROHR ANBAU |
| 221 | 90 77 279 | 1 | CONNECTING BRANCH ADD-ON<br>⇨ 9 077 279 90 77 279 | ANSCHLUSSSTUTZEN ANBAU |
| 230 | 10 11 816 1 | 1 | CONNECTING LINE ADD-ON R-MOTORXD93<br>⇨ X10118161 10 11 816 1 | VERBINDUNGSLEITUNG ANBAU |
| 260 | 90 78 314 | 1 | HEATING FLANGE ADD-ON<br>⇨ 9 078 314 90 78 314 | HEIZFLANSCH ANBAU |
| 330 | 90 80 294 | 1 | AIR COMPRESSOR PRE-ASSY. 300CM3<br>⇨ 9 080 294 90 80 294 | LUFTPRESSER VORM. |
| 331 | 90 72 906 | 1 | INTERMEDIATE GEAR CPL.<br>⇨ 9 072 906 90 72 906 | ZWISCHENRAD KPL. |

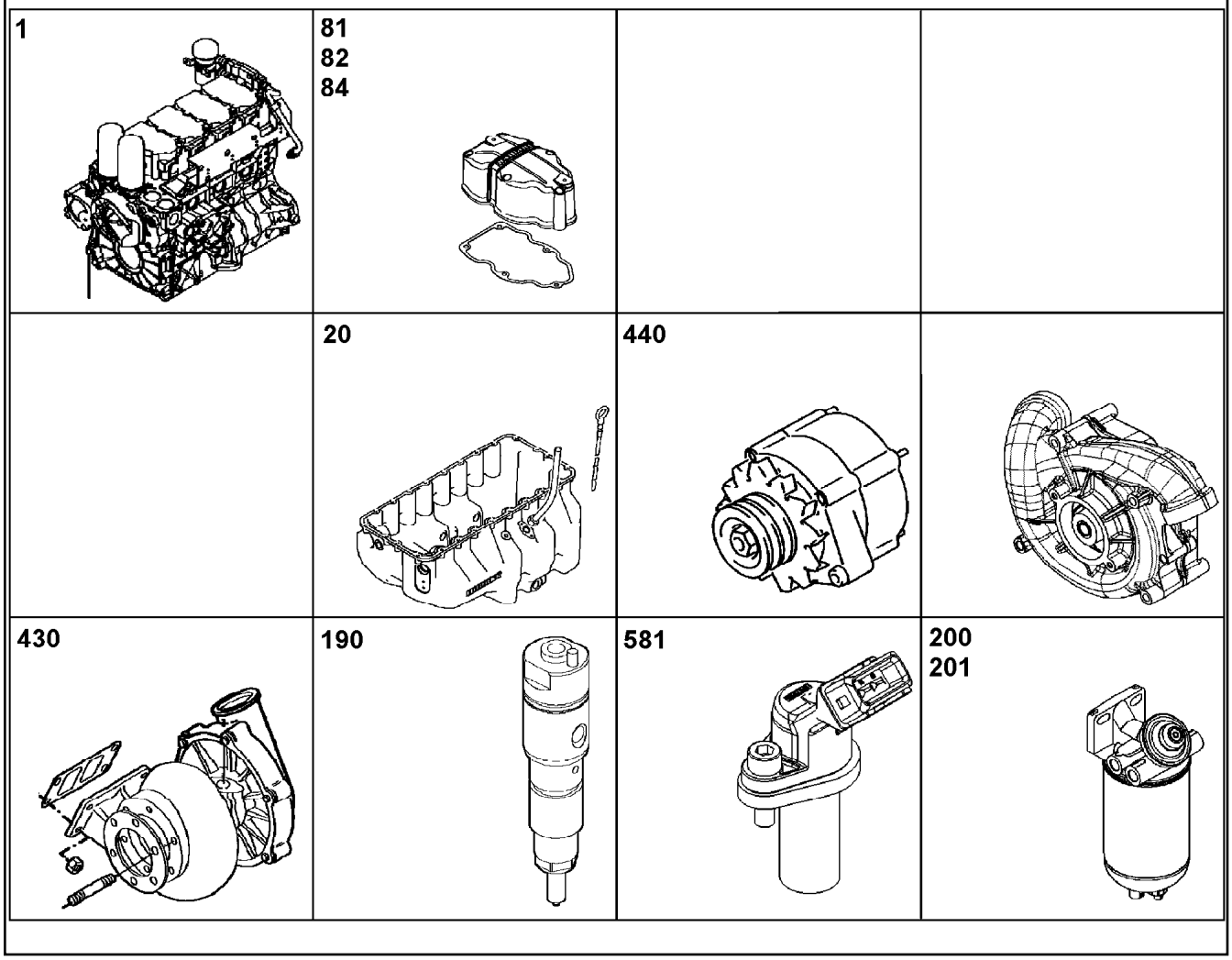


| Pos. | Item | Quantity | Description | Bezeichnung |
|---|---|---|---|---|
| 333 | 10 11 766 5 | 1 | PIPELINE 22X1,5<br>⇨ X10117665 10 11 766 5 | ROHRLEITUNG |
| 334 | 10 11 793 0 | 1 | ACCESSORIES AIR COMPRESSOR<br>⇨ X10117930 10 11 793 0 | ANBAUTEILE LUFTPRESSER |
| 380 | 90 75 678 | 1 | THERMOSTAT HOUSING ASSEMBLY 79°C<br>⇨ 9 075 678 90 75 678 | THERMOSTATGEHAEUSE ANBA |
| 382 | 90 79 472 | 1 | COOLANT PIPE BEND ADD-ON<br>⇨ 9 079 472 90 79 472 | KUEHLMITTELKRUEMMER ANBA |
| 384 | 90 80 280 | 1 | LOCKING PIECES<br>⇨ 9 080 280 90 80 280 | VERSCHLUSSTEILE |
| 386 | 90 79 890 | 1 | HEATER CONNECTION SCHLAUCHANSCHL.<br>⇨ 9 079 890 90 79 890 | HEIZUNGSANSCHLUSS |
| 387 | 10 11 550 2 | 1 | COOLING WATER AIR BLEEDING D 10<br>⇨ X10115502 10 11 550 2 | KUEHLWASSERENTLUEFTUNG |
| 410 | 10 11 810 1 | 1 | EXHAUST PIPE ASSEMBLY D934 / K26<br>⇨ X10118101 10 11 810 1 | ABGASROHR ANBAU |
| 415 | 10 11 919 7 | 1 | HEAT PROTECTION W.FASTENING D934<br>⇨ X10119197 10 11 919 7 | HITZESCHUTZ MIT BEFESTIGUN |
| 430 | 10 11 832 6 | 1 | EXHAUST TC MOUNTING K26<br>⇨ X10118326 10 11 832 6 | ATL-ANBAU |
| 440 | 10 11 864 6 | 1 | GENERATOR, PRE-ASSEMBLED 3080W 28V<br>⇨ X10118646 10 11 864 6 | GENERATOR VORM. |
| 441 | 90 79 560 | 1 | GENERATOR ADD-ON<br>⇨ 9 079 560 90 79 560 | GENERATOR ANBAU |
| 450 | 10 11 553 9 | 1 | STARTER INSTALLATION 7.8KW 24V<br>⇨ X10115539 10 11 553 9 | STARTER ANBAU |

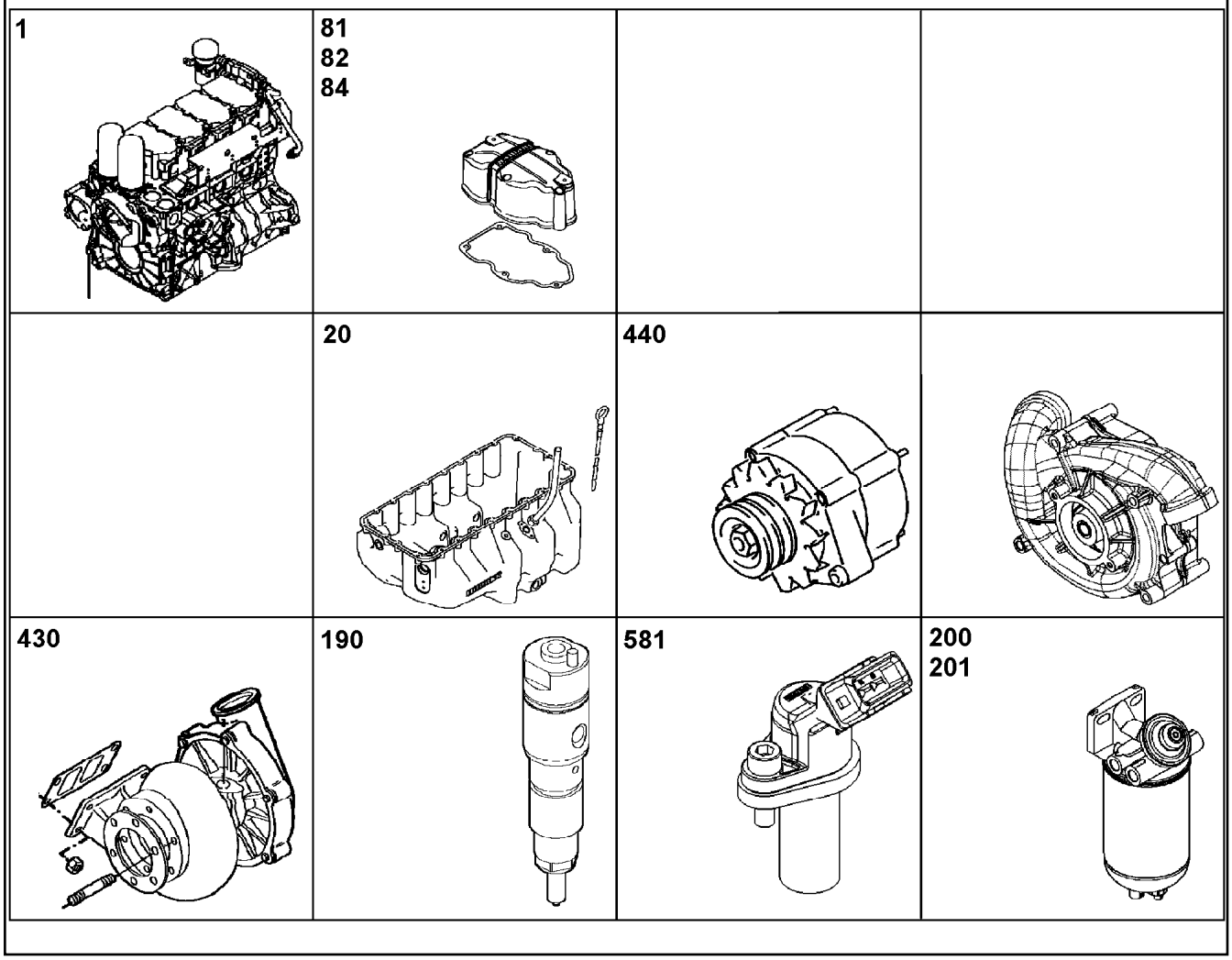


| Pos. | Item | Quantity | Description | Bezeichnung |
|---|---|---|---|---|
| 452 | 10 11 566 4 | 1 | LOCKING PIECES<br>⇨ X10115664 10 11 566 4 | VERSCHLUSSTEILE |
| 480 | 90 79 823 | 1 | TRANSPORT DEVICE ATTACHEMENT SC<br>⇨ 9 079 823 90 79 823 | TRANSPORTVORRICHTUNG AN |
| 481 | 90 79 468 | 1 | TRANSPORT DEVICE ATTACHEMENT AGG<br>⇨ 9 079 468 90 79 468 | TRANSPORTVORRICHTUNG AN |
| 520 | 10 11 582 9 | 1 | FLYWHEEL HOUSING MOUNTING SAE 1<br>⇨ X10115829 10 11 582 9 | SCHWUNGRADGEHAEUSE AN |
| 521 | 10 11 611 0 | 1 | LOCKING PIECES<br>⇨ X10116110 10 11 611 0 | VERSCHLUSSTEILE |
| 522 | 10 11 912 8 | 1 | LOCKING PIECES<br>⇨ X10119128 10 11 912 8 | VERSCHLUSSTEILE |
| 530 | 90 77 238 | 1 | FLYWHEEL ASSEMBLY SAE 1X1,68<br>⇨ 9 077 238 90 77 238 | SCHWUNGRAD ANBAU |
| 570 | 10 12 389 0 | 1 | MOTOR CONTROL DEVICE LH-ECU-UP/CR | MOTORSTEUERGERAET |
| 571 | 10 11 599 3 | 1 | CONTROL BOX ANNEXE<br>⇨ X10115993 10 11 599 3 | STEUERGERAET ANBAU |
| 580 | 10 11 998 0 | 1 | CABLE HARNESS MOUNTING D934 A6<br>⇨ X10119980 10 11 998 0 | KABELBAUM ANBAU |
| 581 | 10 11 969 8 | 1 | ENGINE CONTROL SENSORS<br>⇨ X10119698 10 11 969 8 | MOTORREGELUNGSENSORIK |
| 630 | 90 79 893 | 1 | LOCKING PIECES<br>⇨ 9 079 893 90 79 893 | VERSCHLUSSTEILE |
| 650 | 90 78 249 | 1 | LOCKING PIECES<br>⇨ 9 078 249 90 78 249 | VERSCHLUSSTEILE |

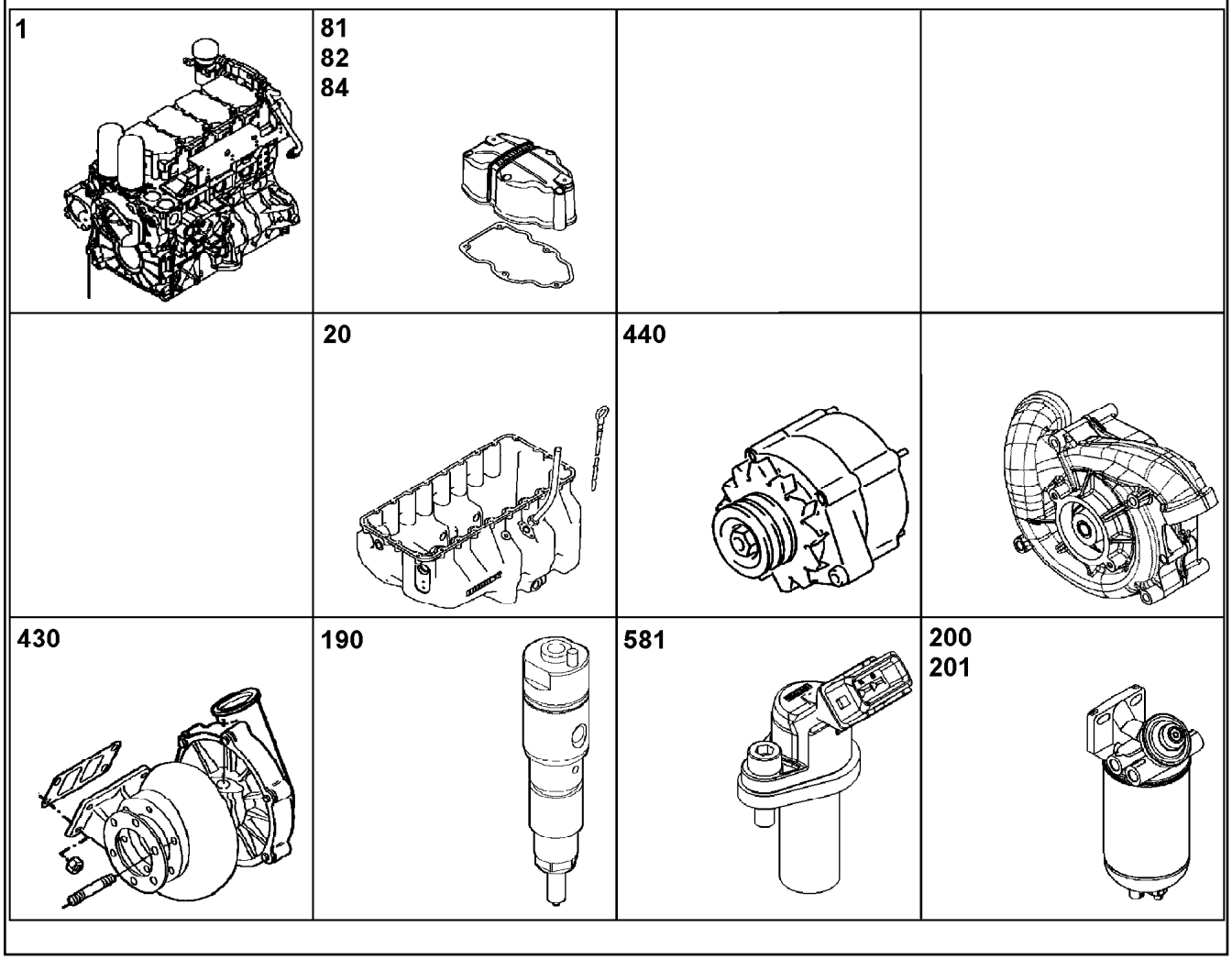


| Pos. | Item | Quantity | Description | Bezeichnung |
|---|---|---|---|---|
| 652 | 90 78 250 | 1 | LOCKING PIECES<br>⇨ 9 078 250 90 78 250 | VERSCHLUSSTEILE |
| 654 | 10 11 997 6 | 1 | POWER TAKE-OFF ADD-ON<br>⇨ X10119976 10 11 997 6 | NEBENABTRIEB ANBAU |
| 939 | 10 11 583 7 | 1 | SEAL KIT DIESEL ENGINE<br>⇨ X10115837 10 11 583 7 | DS DIESELMOTOR |

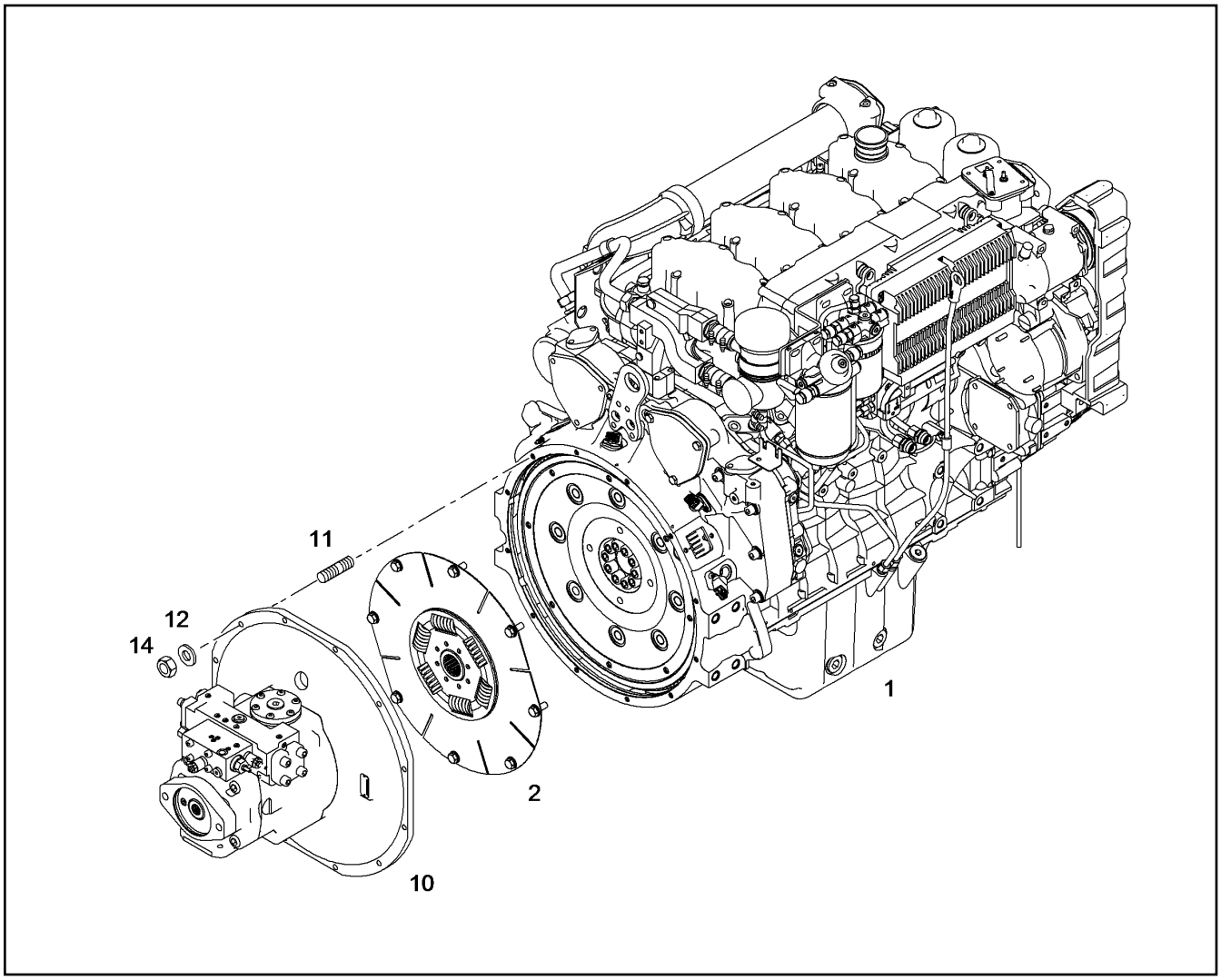


| Pos. | Item | Quantity | Description | Bezeichnung |
|---|---|---|---|---|
| 1 | 10 15 207 7 | 1 | DIESEL ENGINE D934 L A6<br>⇨ X10152077 10 15 207 7 | DIESELMOTOR |
| 2 | 10 11 578 0 | 1 | CLUTCH ASSEMBLY<br>⇨ X10115780 10 11 578 0 | KUPPLUNGSANBAU |
| 10 | 90 72 112 | 1 | HYDR.DOUBLE PUMP LPVD<br>⇨ 9 072 112 90 72 112 | HYDRAULIKDOPPELPUMPE |
| 11 | 11 11 820 8 | 12 | DOUBLE-ENDED STUD DIN 835 M10X35 10. | STIFTSCHRAUBE |
| 12 | 42 29 913 | 12 | LOCK WASHER VS 10 ZN5/CN/T2 | SICHERUNGSSCHEIBE |
| 14 | 40 00 383 | 12 | HEX NUT ISO 4032 M10 10 A3C | SECHSKANTMUTTER |

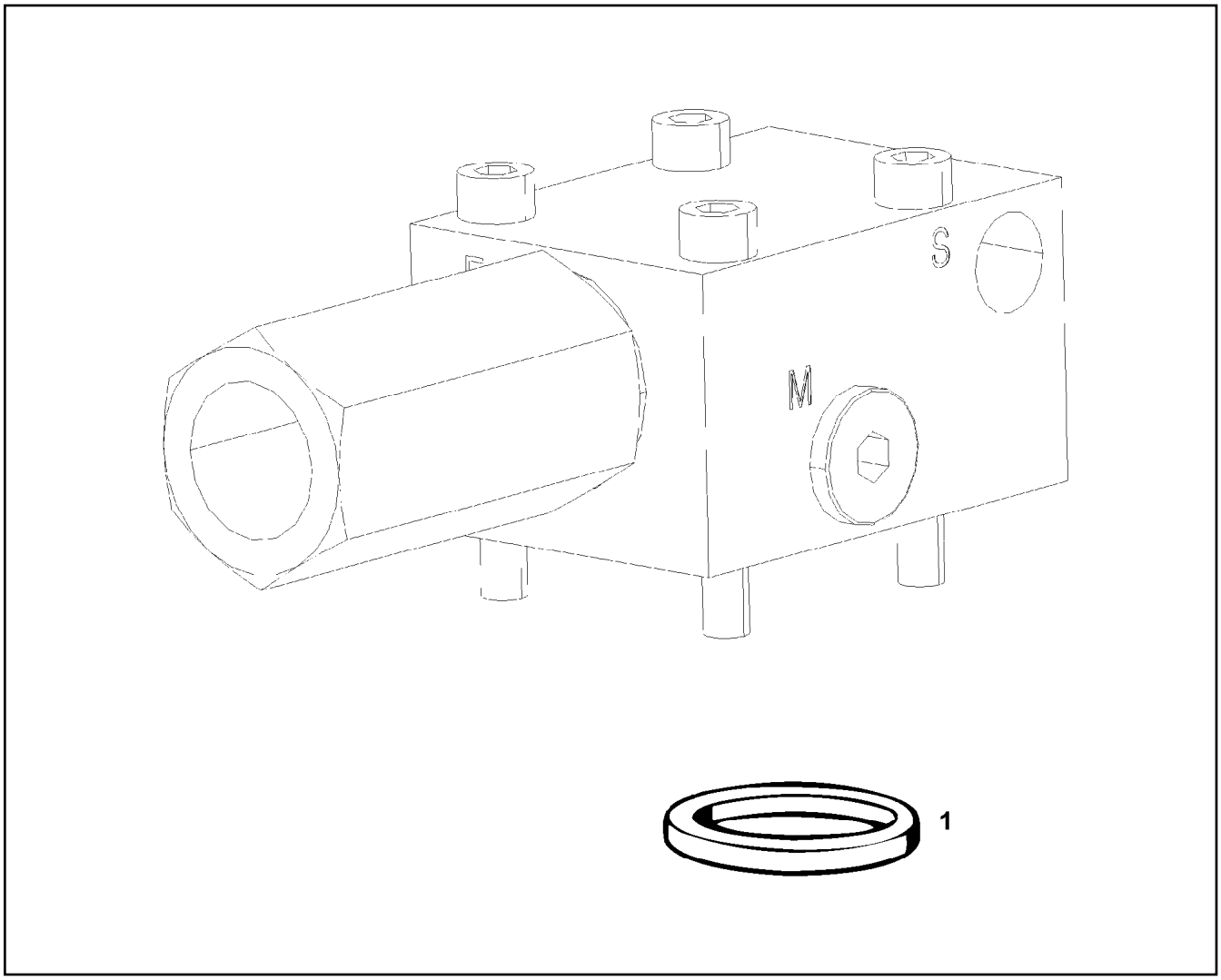


| Pos. | Item | Quantity | Description | Bezeichnung |
|---|---|---|---|---|
| 1 | 51 07 461 08 | 1 | O-RING ARP 568 12,37X2,62 NBR90 | O-RING |

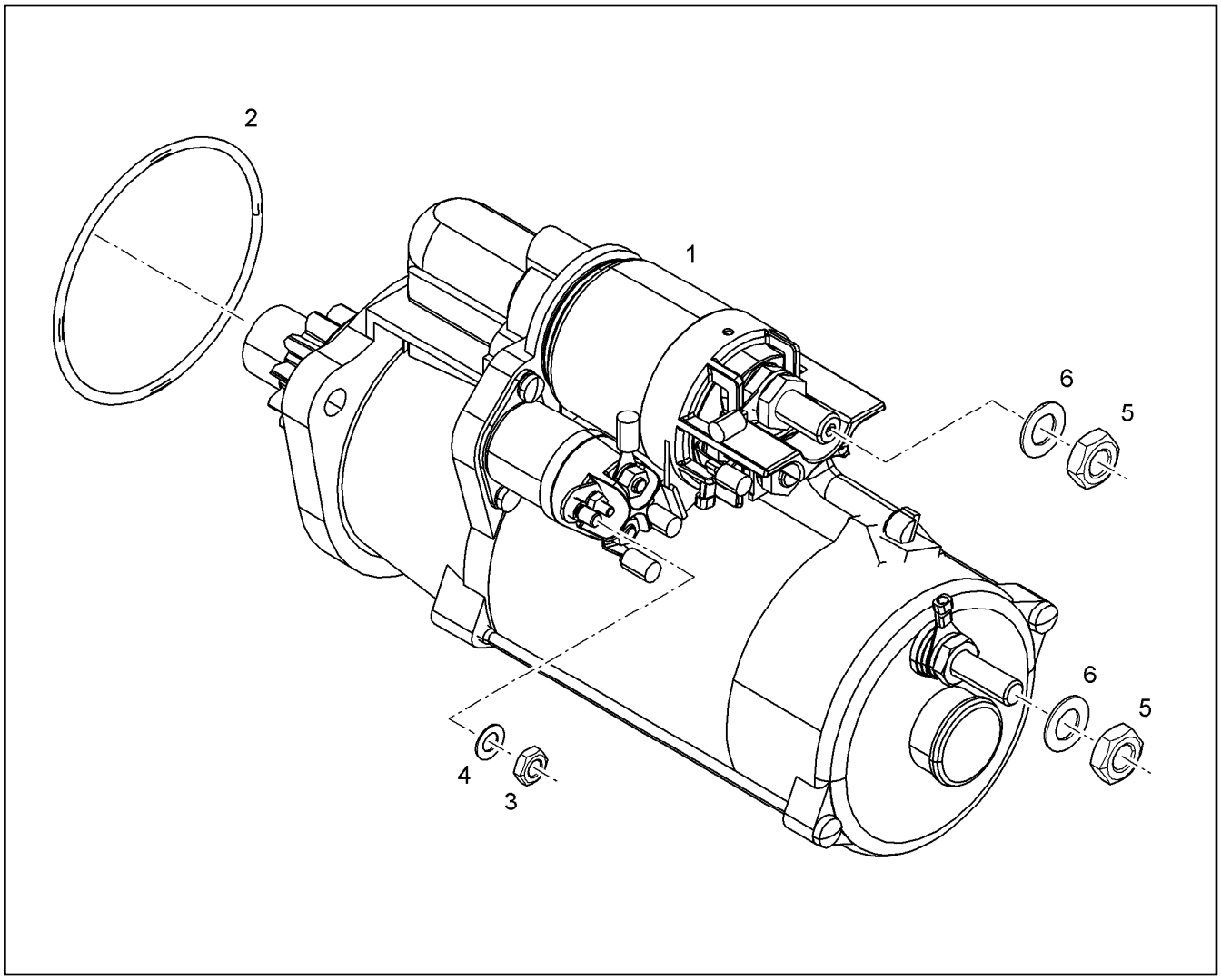


| Pos. | Item | Quantity | Description | Bezeichnung |
|---|---|---|---|---|
| 2 | 10 21 837 0 | 1 | O-RING 85X2 HNBR 70 | O-RING |
| 3 | 10 41 109 4 | 1 | HEX NUT M6 8 | SECHSKANTMUTTER |
| 4 | 10 41 109 2 | 1 | SPRING WASHER DIN 137 6 X10CrNi18-8 | FEDERSCHEIBE |
| 5 | 10 41 109 5 | 2 | HEX NUT M10 8 | SECHSKANTMUTTER |
| 6 | 10 41 109 3 | 2 | SPRING WASHER DIN 137 10 X10CrNi18-8 | FEDERSCHEIBE |

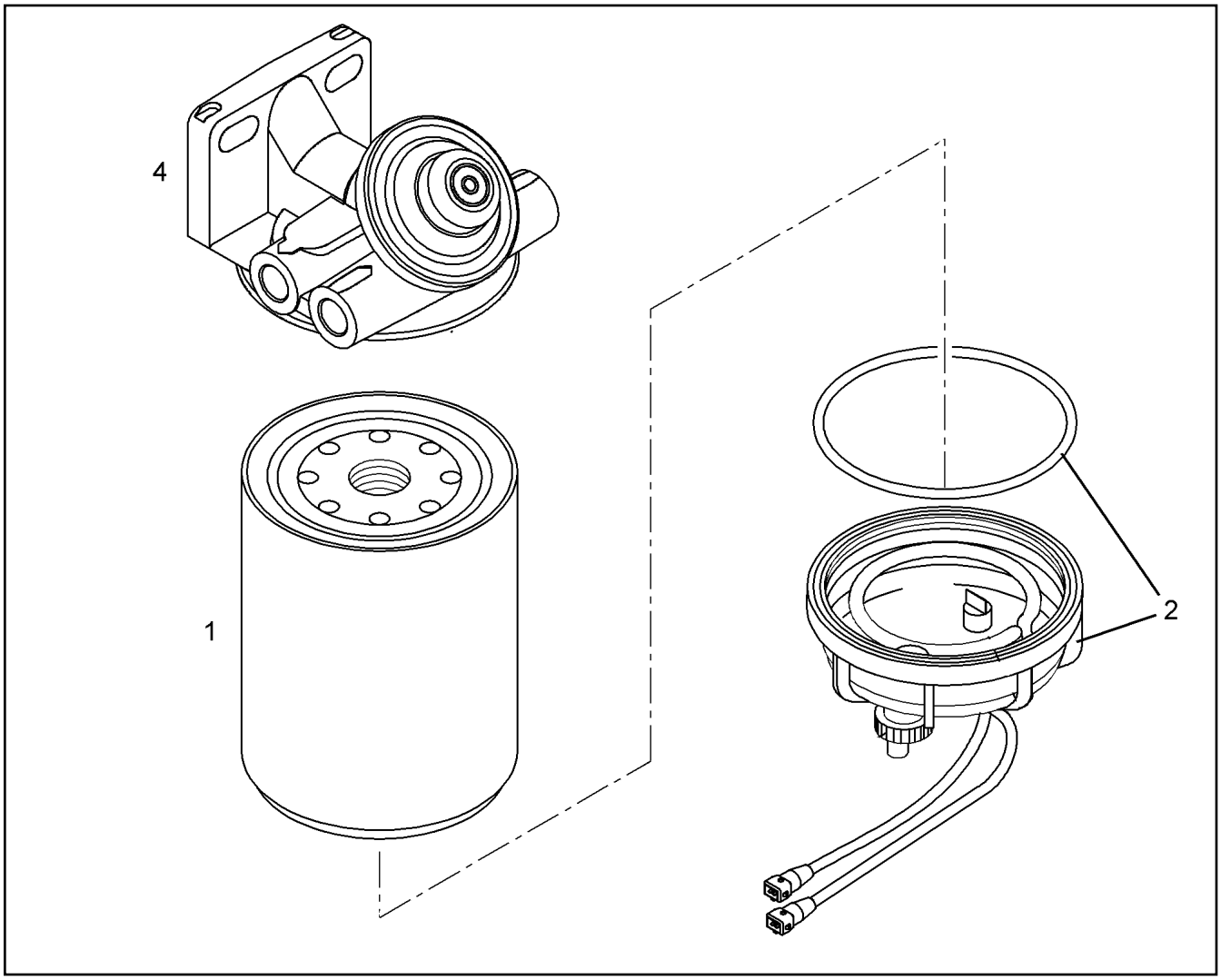


| Pos. | Item | Quantity | Description | Bezeichnung |
|---|---|---|---|---|
| 1 | 10 04 430 2 | 1 | FUEL PREFILTER | KRAFTSTOFFVORFILTER |
| 2 | 10 28 018 1 | 1 | TRANSPARENT CONTAINER WASSER<br>⇨ X10280181 10 28 018 1 | KLARSICHTBEHAELTER |
| 4 | 10 04 695 8 | 1 | FUEL FILTER HEAD | KRAFTSTOFFFILTERKOPF |
| (1) | 10 66 491 2 | 1 | VENTILATION SCREW | ENTLUEFTUNGSSCHRAUBE |

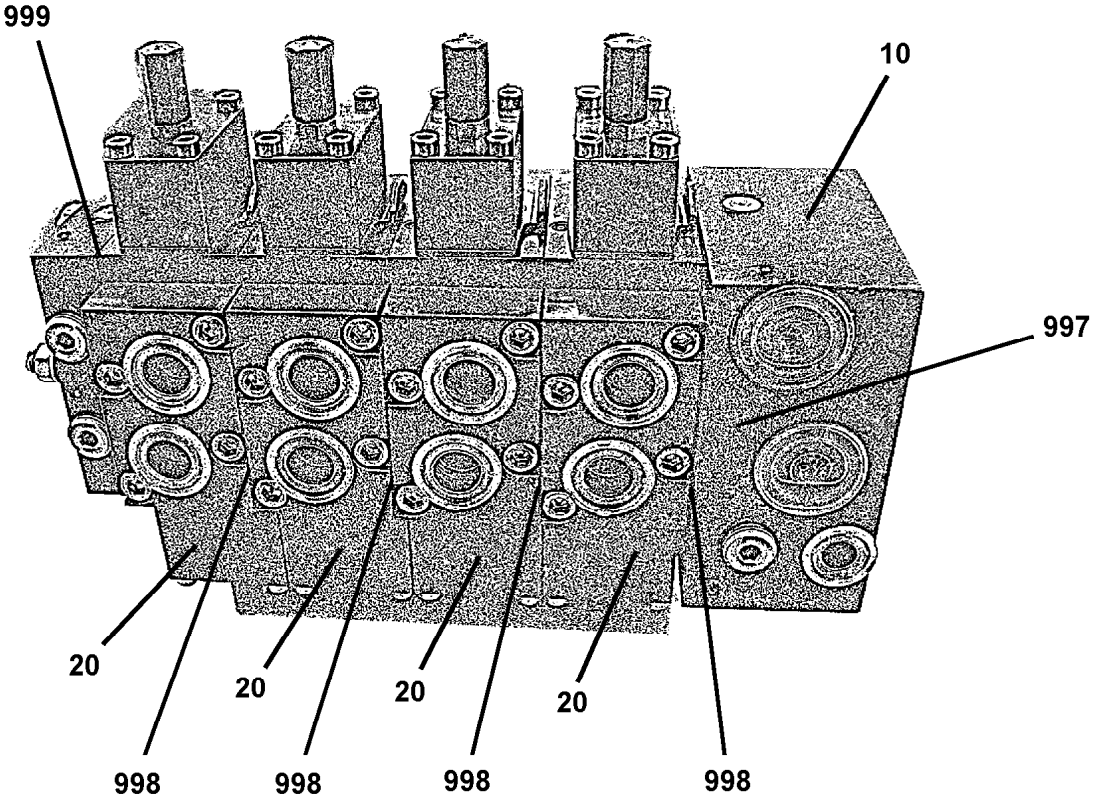


| Pos. | Item | Quantity | Description | Bezeichnung |
|---|---|---|---|---|
| 10 | 11 32 003 4 | 1 | VALVE SEGMENT | VENTILSEGMENT |
| 997 | 11 22 041 8 | 1 | SEAL KIT CONNECTING BLOCK | DS ANSCHLUSSBLOCK |
| 998 | 10 11 442 6 | 4 | SEAL KIT | DICHTSATZ |
| 999 | 11 69 195 6 | 1 | SEAL KIT | DICHTSATZ |

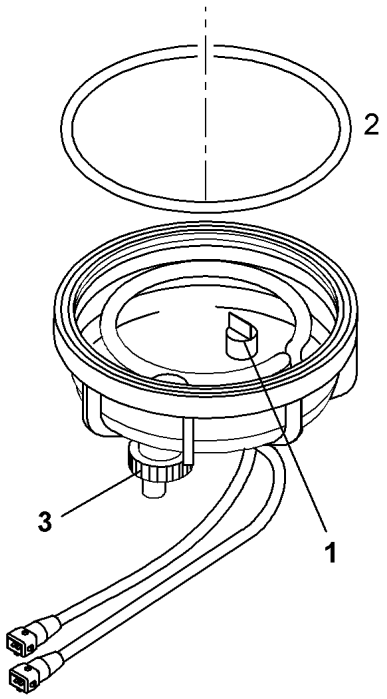


| Pos. | Item | Quantity | Description | Bezeichnung |
|---|---|---|---|---|
| 1 | 10 28 018 5 | 1 | WATER SENSOR | WASSERSONDE |
| 2 | 10 28 921 0 | 1 | O-RING ISO 3601-1 101,19X3,53 NBR 50 | O-RING |
| 3 | 10 28 920 8 | 1 | RK OIL DRAIN SCREW D 930 | RS OELABLASSSCHRAUBE |

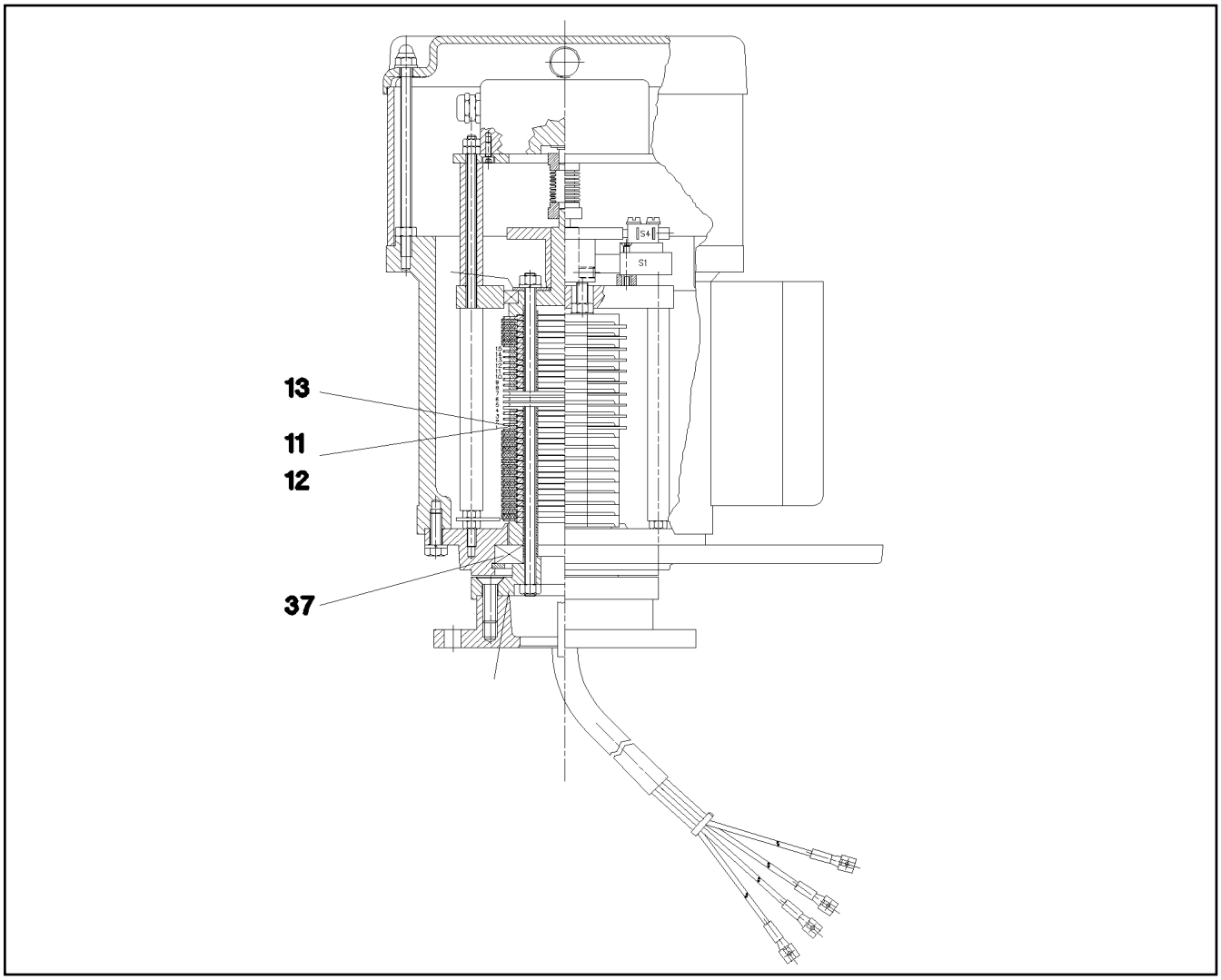


| Pos. | Item | Quantity | Description | Bezeichnung |
|---|---|---|---|---|
| 11 | 69 31 044 14 | 15 | SLIP RING 60X2 1,5qm | SCHLEIFRING |
| 12 | 69 10 416 08 | 15 | CONTACT BOW | SCHLEIFBUEGEL |
| 13 | 69 10 417 08 | 37 | INSULATING RING | ISOLIERRING |
| 37 | 74 51 949 08 | 1 | DEEP GROOVE BALL BEARING DIN 625 160 | RILLENKUGELLAGER |

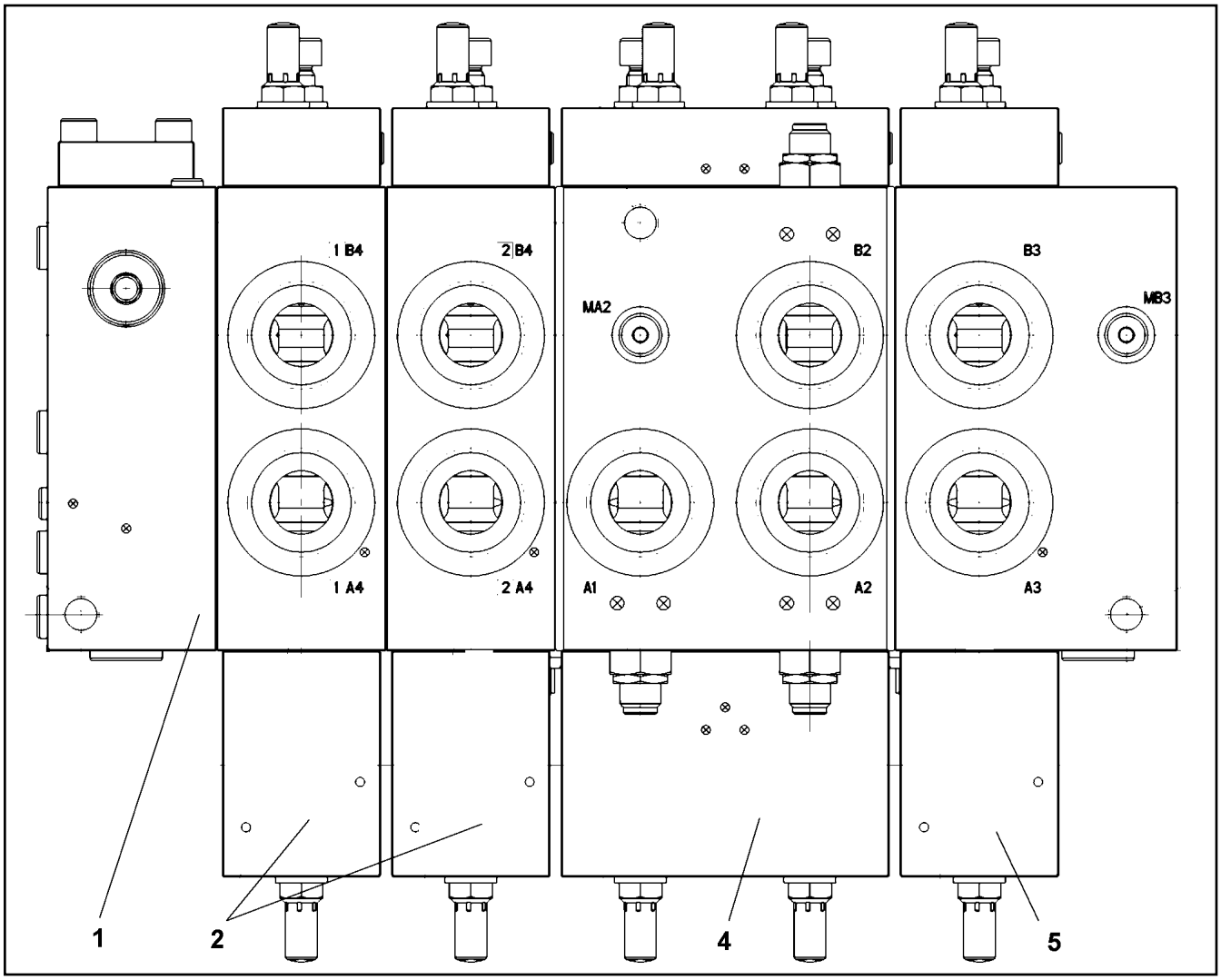


| Pos. | Item | Quantity | Description | Bezeichnung |
|---|---|---|---|---|
| 1 | 10 41 191 3 | 1 | SHEET<br>⇨ X10411913 10 41 191 3 | PLATTE |
| 2 | 10 47 529 1 | 1 | VALVE BLOCK<br>⇨ X10475291 10 47 529 1 | VENTILBLOCK |
| 4 | 10 41 191 5 | 1 | VALVE BLOCK<br>⇨ X10411915 10 41 191 5 | VENTILBLOCK |
| 5 | 10 47 529 2 | 1 | VALVE BLOCK<br>⇨ X10475292 10 47 529 2 | VENTILBLOCK |

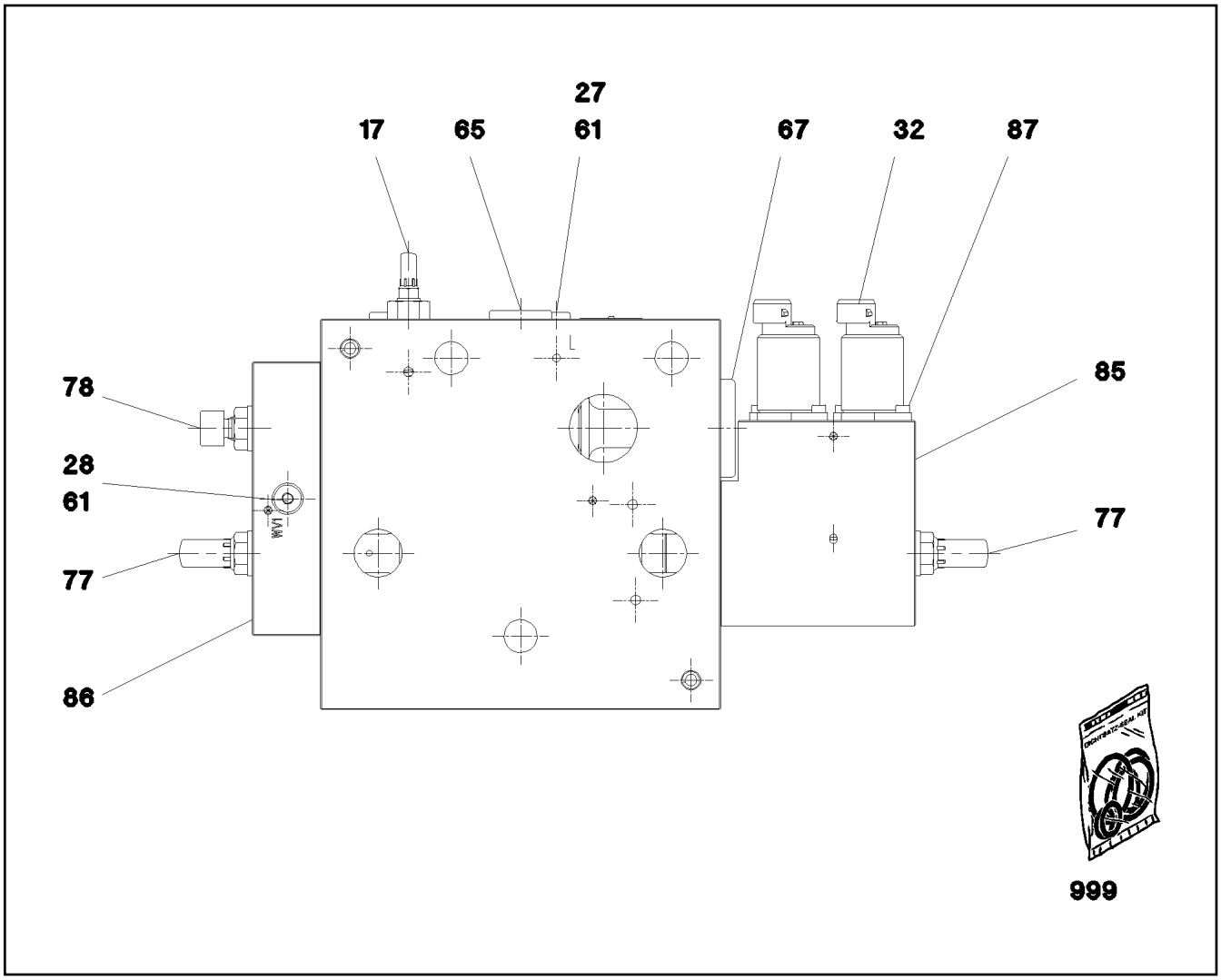


| Pos. | Item | Quantity | Description | Bezeichnung |
|---|---|---|---|---|
| 17 | 57 11 301 08 | 2 | PRESSURE LIMITING VALVE<br>⇨ 5 711 301 08 57 11 301 08 | DRUCKBEGRENZUNGSVENTIL |
| 27 | 57 06 514 08 | 1 | NON-RETURN VALVE | RUECKSCHLAGVENTIL |
| 28 | 57 15 295 08 | 1 | SHUTTLE VALVE | WECHSELVENTIL |
| 32 | 57 18 893 08 | 2 | DIRECTIONAL CONTROL VALVE | WEGEVENTIL |
| 61 | 51 07 415 08 | 3 | STOP PLUG VSTI1/8"ED ST A3C | STOPFEN |
| 65 | 47 77 047 08 | 1 | STOP PLUG VSTI3/4"ED A3P | STOPFEN |
| 67 | 47 77 054 08 | 1 | STOP PLUG VSTI11/4"ED A3P | STOPFEN |
| 77 | 57 15 297 08 | 2 | CHECK SCREW | STELLSCHRAUBE |
| 78 | 10 42 381 7 | 1 | CHECK SCREW | STELLSCHRAUBE |
| 85 | 40 43 080 08 | 4 | SOCKET HEAD SCREW ISO 4762 M8X100 10 | ZYLINDERSCHRAUBE |
| 86 | 40 43 003 | 4 | SOCKET HEAD SCREW ISO 4762 M12X40 1 | ZYLINDERSCHRAUBE |
| 87 | 40 00 996 | 4 | SOCKET HEAD SCREW ISO 4762 M4X10 8.8 | ZYLINDERSCHRAUBE |
| 999 | 10 41 263 2 | 1 | SEAL KIT VALVE BLOCK | DS VENTILBLOCK |

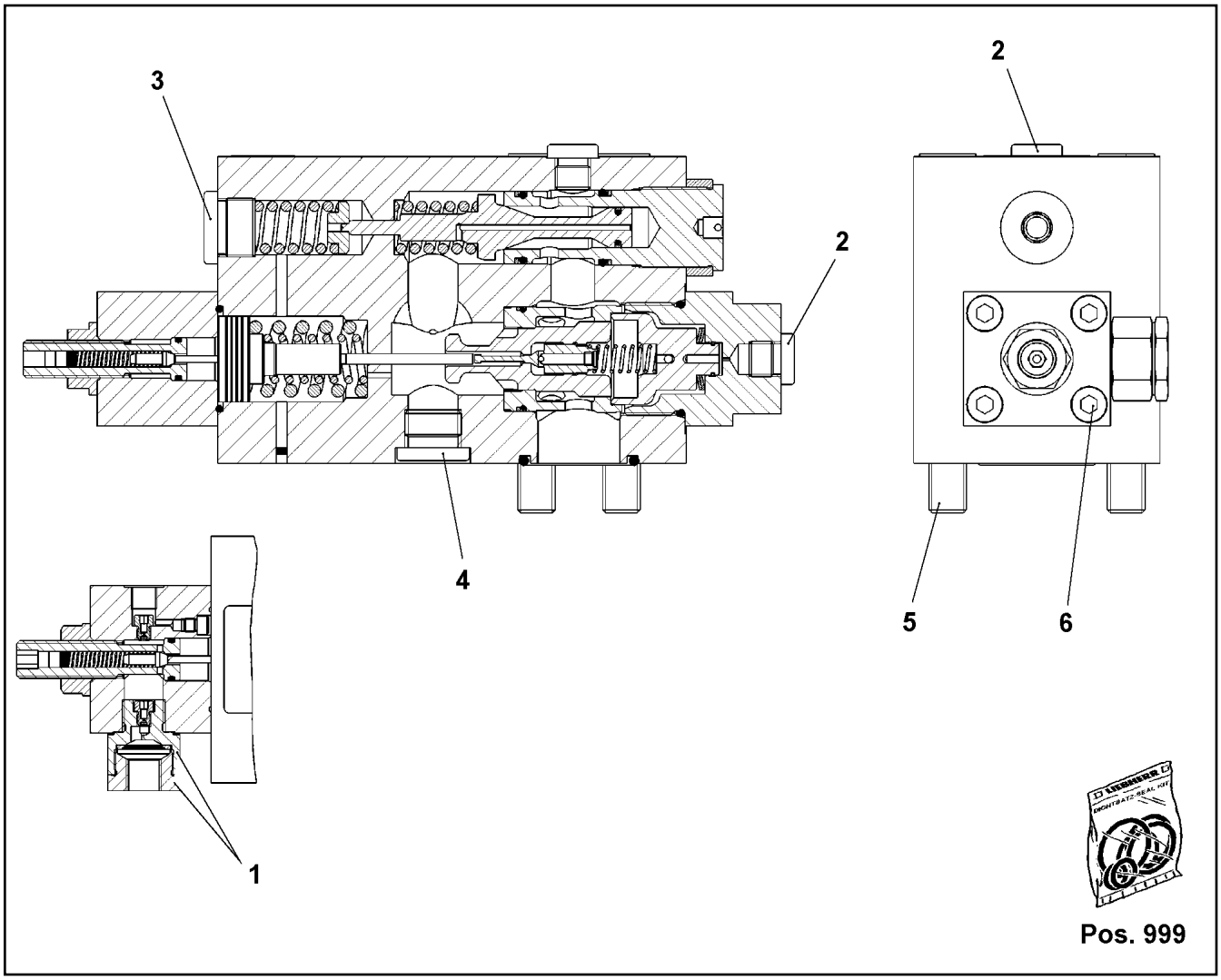


| Pos. | Item | Quantity | Description | Bezeichnung |
|---|---|---|---|---|
| 1 | 10 34 659 9 | 1 | STRAINER FILTER | SIEBFILTER |
| 2 | 47 77 040 08 | 2 | STOPPER PLUG VSTI1/4"ED A3P | BLINDSTOPFEN |
| 3 | 47 77 045 08 | 1 | STOP PLUG VSTIM22X1,5ED A3P | STOPFEN |
| 4 | 47 77 042 08 | 1 | STOP PLUG VSTI1/2"ED A3P | STOPFEN |
| 5 | 40 43 163 08 | 4 | SOCKET HEAD SCREW DIN 912 M14X120 8. | ZYLINDERSCHRAUBE |
| 6 | 10 87 560 1 | 4 | SOCKET HEAD SCREW ISO 4762 M8X50 8.8 | ZYLINDERSCHRAUBE |
| 999 | 10 80 076 8 | 1 | DS LOWERING BRAKE VALVE | DS SENKBREMSVENTIL |

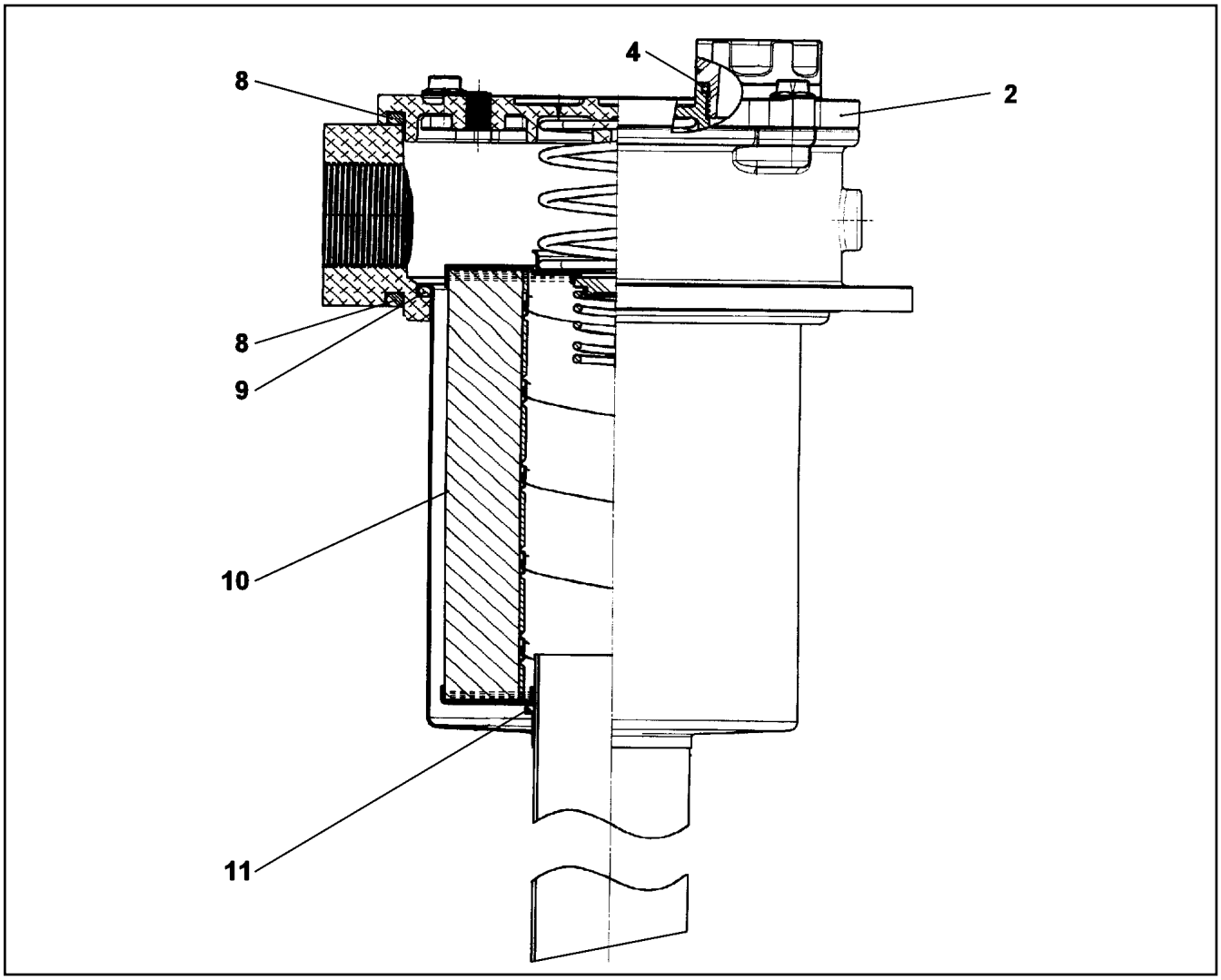


| Pos. | Item | Quantity | Description | Bezeichnung |
|---|---|---|---|---|
| 2 | 57 08 320 08 | 1 | FILTER COVER<br>⇨ 5 708 320 08 57 08 320 08 | FILTERDECKEL |
| 4 | 57 05 889 08 | 1 | O-RING 39,7X3,5 NBR70 | O-RING |
| 8 | 57 05 883 08 | 2 | O-RING ARP 568 170,82X7 NBR70 | O-RING |
| 9 | 51 45 275 08 | 1 | O-RING ARP 568 148,49X5,33 NBR70 | O-RING |
| 10 | 51 06 692 08 | 1 | FILTER INSERT OEL 10µm | FILTEREINSATZ |
| 11 | 57 05 888 08 | 1 | O-RING ARP 568 63,09X3,53 NBR70 | O-RING |

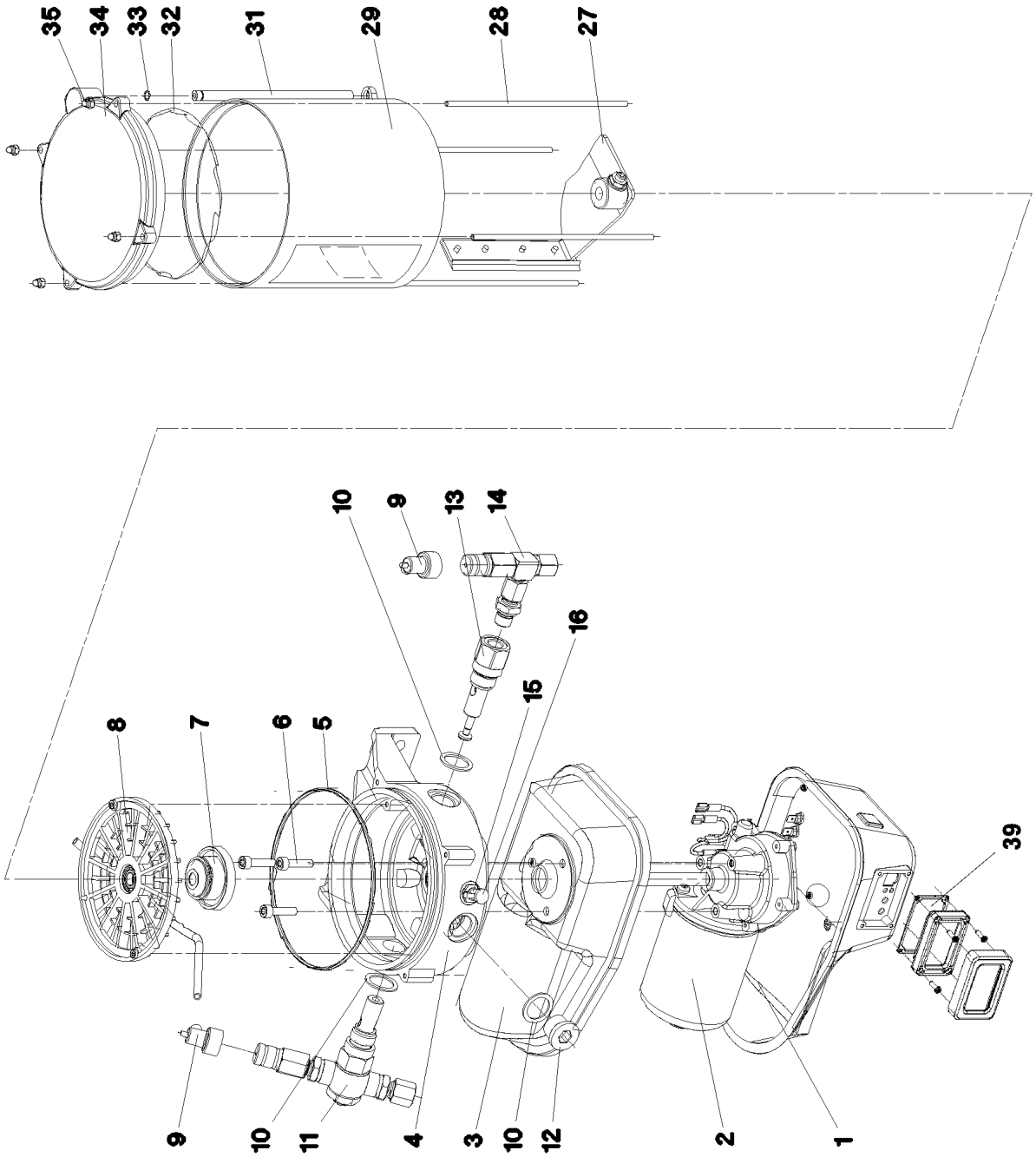
35
34
33
32
31
29
28
27
10
9
13
14
16
15
8
7
6
5
39
9
10
11
4
3
10
12
2
1

| Pos. | Item | Quantity | Description | Bezeichnung |
|---|---|---|---|---|
| 1 | 10 49 392 0 | 1 | MOTOR HOUSING | MOTORGEHAEUSE |
| 2 | 10 35 514 0 | 1 | TRANSMISSION MOTOR 24V | GLEICHSTROMGETRIEBEMOTO |
| 3 | 10 01 469 2 | 1 | MOTOR HOUSING | MOTORGEHAEUSE |
| 4 | 10 01 469 3 | 1 | PUMP HOUSING | PUMPENGEHAEUSE |
| 5 | 57 01 637 08 | 1 | O-RING 140X3 NBR70 | O-RING |
| 6 | 10 87 558 8 | 3 | SOCKET HEAD SCREW ISO 4762 M6X25 8.8 | ZYLINDERSCHRAUBE |
| 7 | 10 01 472 9 | 1 | DRIVER | MITNEHMER |
| 8 | 10 01 473 0 | 1 | INTERMEDIATE RING | ZWISCHENRING |
| 9 | 10 42 995 2 | 1 | FAULT INDICATOR | STOERANZEIGE |
| 10 | 10 01 469 7 | 3 | SEALING RING 27X20X1,5 CU | DICHTRING |
| 11 | 77 43 875 08 | 1 | PUMP ELEMENT | PUMPENELEMENT |
| 12 | 40 41 003 08 | 1 | SCREW PLUG DIN 908 M20X1,5 ST A3C | VERSCHLUSSSCHRAUBE |
| 13 | 10 03 827 2 | 1 | PUMP ELEMENT | PUMPENELEMENT |
| 14 | 57 13 284 08 | 1 | OVERPRESSURE VALVE | UEBERDRUCKVENTIL |
| 15 | 11 08 039 2 | 1 | HYDRAULIC-TYPE LUBRICAT.NIPPLE | KEGELSCHMIERNIPPEL |
| 16 | 10 01 470 1 | 1 | GREASE NIPPLE CAP | SCHMIERNIPPELKAPPE |
| 25 | 40 02 886 | 4 | CAP NUT DIN 986 M4 A2-70 | HUTMUTTER |
| 27 | 10 01 471 2 | 1 | AGITATOR PADDLE | RUEHRFLUEGEL |
| 28 | 10 09 920 9 | 4 | PULL ROD | ZUGSTANGE |
| 29 | 10 03 827 1 | 1 | CONTAINER 2,5 KG | BEHAELTER |
| 30 | 96 74 218 08 | 1 | STICKER BEHAELTER 2,5KG | AUFKLEBER |
| (1) | 10 66 390 9 | 1 | STICKER | AUFKLEBER |
| (2) | 11 49 443 2 | 1 | SIGN | SCHILD |
| (3) | 11 49 458 1 | 1 | SIGN | SCHILD |
| 32 | 10 09 920 8 | 1 | O-RING 133,07X1,78 NBR 70 | O-RING |
| 33 | 57 06 906 08 | 1 | O-RING 6X1 NBR90 | O-RING |
| 34 | 10 40 981 7 | 1 | CONTAINER COVER | BEHAELTERABDECKKAPPE |
| 39 | 11 11 006 0 | 1 | WINDOW | SICHTFENSTER |

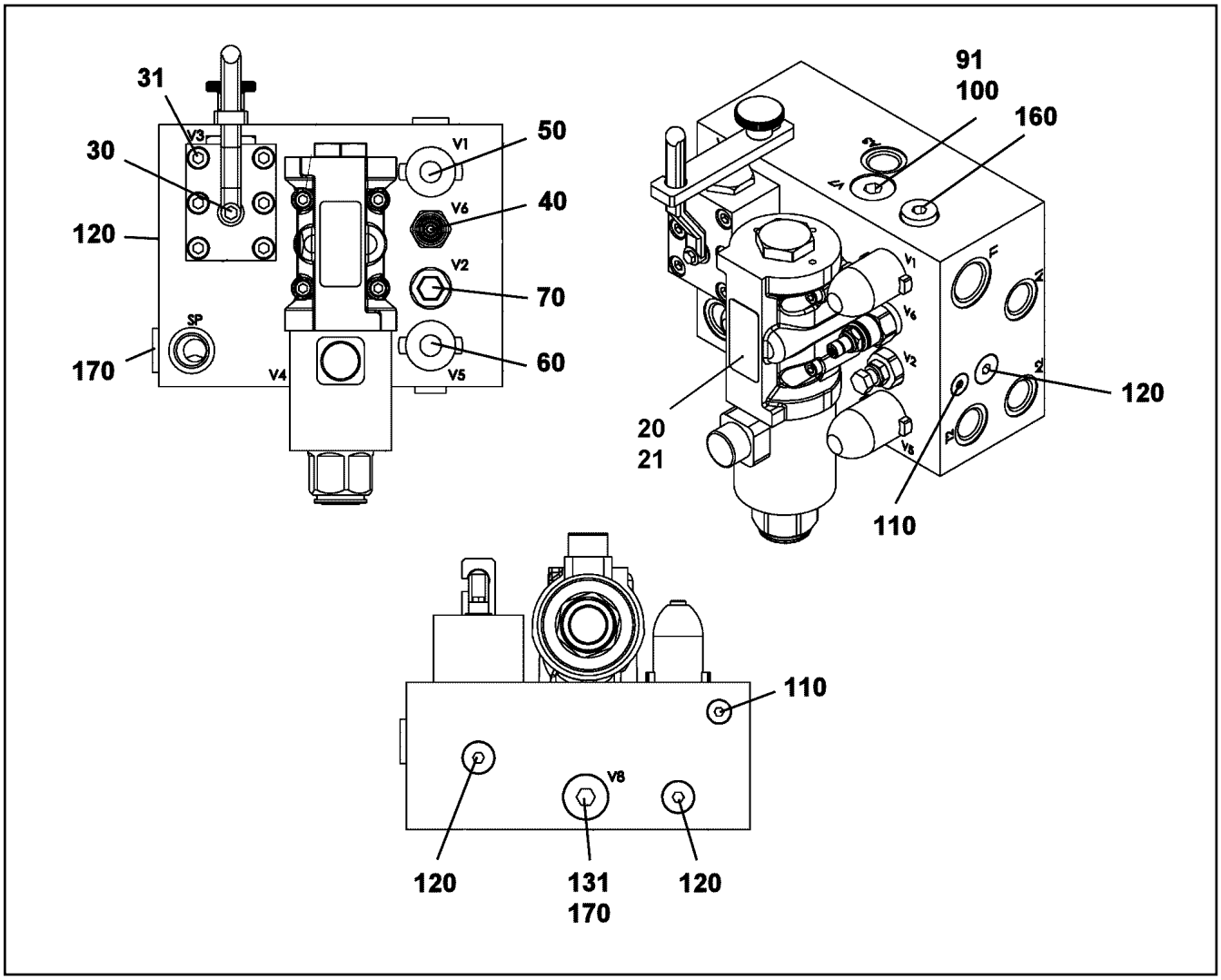


| Pos. | Item | Quantity | Description | Bezeichnung |
|---|---|---|---|---|
| 10 | 57 19 151 08 | 1 | PLAIN COMPRESSION RING 12,42X1,68 | RECHTECKRING |
| 20 | 57 17 378 08 | 1 | DIRECTIONAL CONTROL VALVE 4/2 NG10-3<br>⇨ 5 717 378 08 57 17 378 08 | WEGEVENTIL |
| 21 | 10 87 559 1 | 4 | SOCKET HEAD SCREW ISO 4762 M6X40 8.8 | ZYLINDERSCHRAUBE |
| 30 | 57 17 236 08 | 1 | BALL VALVE BKHU DN 10 | KUGELHAHN |
| (1) | 10 33 738 1 | 2 | O-RING 10,00X2,5 NBR90 | O-RING |
| 31 | 40 42 044 05 | 6 | SOCKET HEAD SCREW ISO 4762 M8X45 8.8 | ZYLINDERSCHRAUBE |
| 40 | 57 15 398 08 | 1 | PRESSURE LIMITING VALVE | DRUCKBEGRENZUNGSVENTIL |
| (999) | 10 87 210 1 | 1 | SEAL KIT LIMIT VALVE | DS DRUCKBEGRENZUNGSVEN |
| 50 | 57 04 271 08 | 1 | PRESSURE LIMITING VALVE pmax=380BAR<br>⇨ 5 704 271 08 57 04 271 08 | DRUCKBEGRENZUNGSVENTIL |
| 60 | 57 14 001 08 | 1 | PRESSURE LIMITING VALVE pmax=350BAR | DRUCKBEGRENZUNGSVENTIL |
| (999) | 51 10 433 08 | 1 | SEAL KIT | DICHTSATZ |
| 70 | 57 15 349 08 | 1 | PRESSURE LIMITING VALVE | DRUCKBEGRENZUNGSVENTIL |
| (999) | 10 87 210 0 | 1 | SEAL KIT LIMIT VALVE | DS DRUCKBEGRENZUNGSVEN |
| 91 | 10 43 004 2 | 1 | NON-RETURN VALVE | RUECKSCHLAGVENTIL |
| 100 | 47 77 042 08 | 1 | STOP PLUG VSTI1/2"ED A3P | STOPFEN |
| 110 | 51 07 415 08 | 2 | STOP PLUG VSTI1/8"ED ST A3C | STOPFEN |
| 120 | 47 77 040 08 | 4 | STOPPER PLUG VSTI1/4"ED A3P | BLINDSTOPFEN |
| 131 | 10 43 004 2 | 1 | NON-RETURN VALVE | RUECKSCHLAGVENTIL |
| 160 | 47 77 041 08 | 1 | STOP PLUG VSTI3/8"ED A3P | STOPFEN |
| 170 | 47 77 042 08 | 2 | STOP PLUG VSTI1/2"ED A3P | STOPFEN |

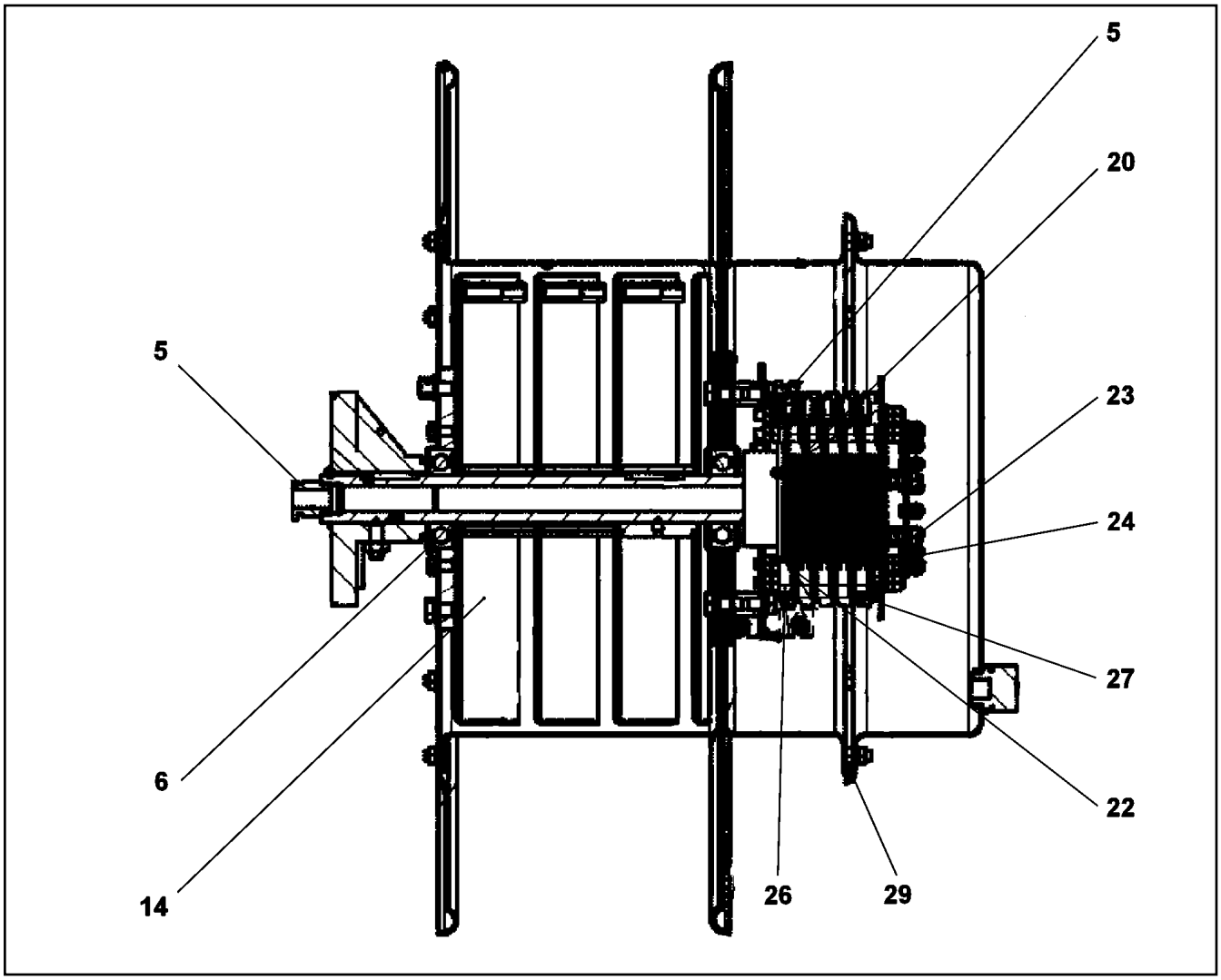


| Pos. | Item | Quantity | Description | Bezeichnung |
|---|---|---|---|---|
| 5 | 60 24 227 08 | 2 | CABLE GLAND PG13 | KABELVERSCHRAUBUNG |
| 6 | 74 51 446 08 | 2 | DEEP GROOVE BALL BEARING DIN 625 62 | RILLENKUGELLAGER |
| 14 | 10 41 177 8 | 3 | FLAT SPIRAL SPRING | SPIRALBLATTFEDER |
| 20 | 10 41 177 9 | 1 | SLIP RING BRACKET 9SMN28K | SCHLEIFRINGTRAEGER |
| 22 | 10 41 178 0 | 1 | SLIP RING | SCHLEIFRING |
| 23 | 10 41 178 1 | 9 | SLIP RING | SCHLEIFRING |
| 24 | 10 41 178 3 | 1 | CONNECTING PLATE | ANSCHLUSSPLATTE |
| 26 | 10 41 178 5 | 1 | BRUSH SUPPORT | BUERSTENHALTER |
| (1) | 11 00 314 1 | 1 | BRUSH SUPPORT 10A ERDE | BUERSTENHALTER |
| 27 | 10 41 178 6 | 9 | BRUSH SUPPORT | BUERSTENHALTER |
| (1) | 11 00 314 2 | 1 | BRUSH SUPPORT 10A GOLDPHASE | BUERSTENHALTER |
| 29 | 10 41 178 7 | 1 | SEAL | DICHTUNG |

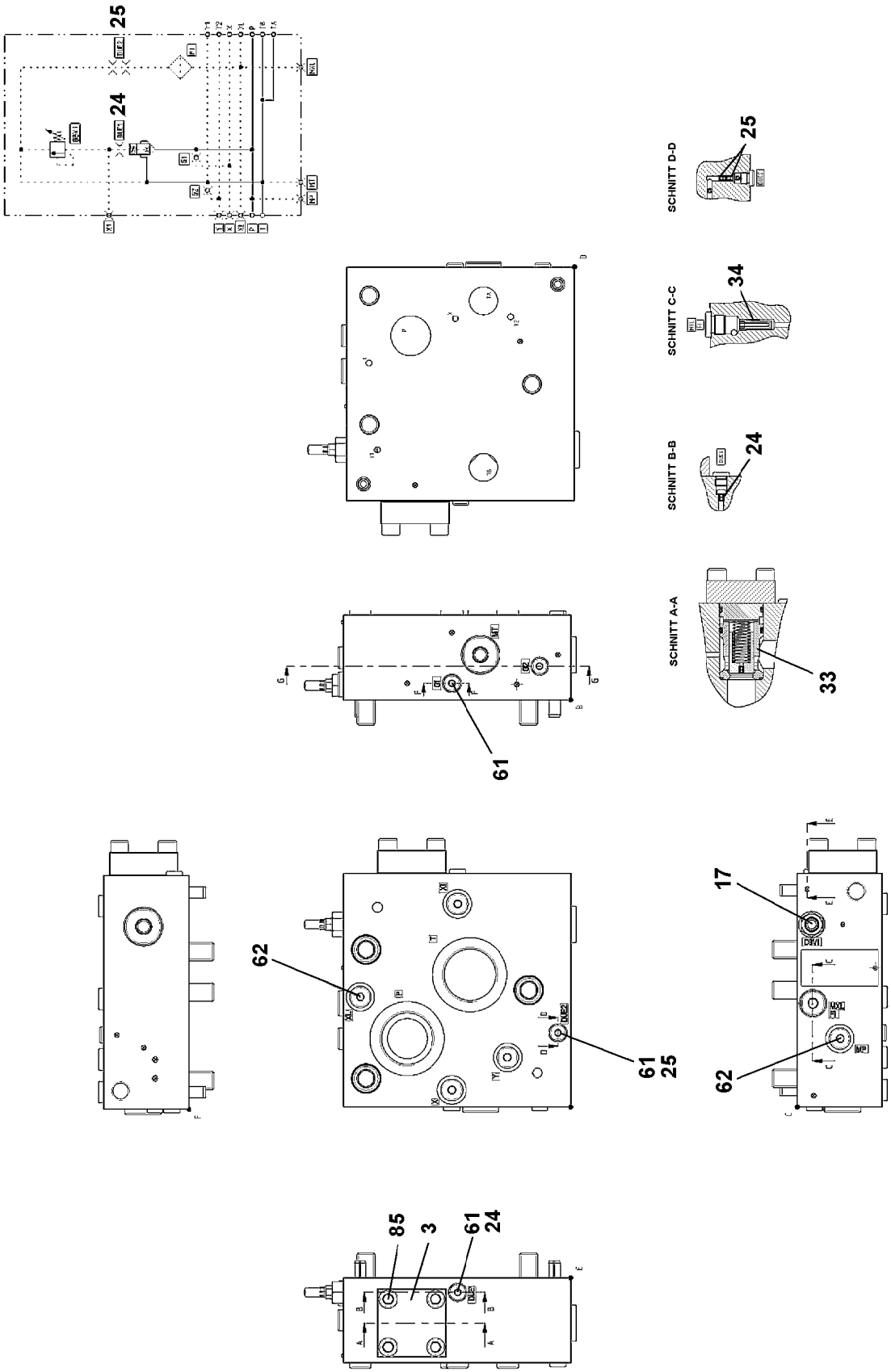


| | | |
|---|---|---|
| 16.2.2017<br>049041<br>LIEBHERR | **etk_en_de_048005 LTR 1100**<br><br>**SHEET**<br>**PLATTE** | 570 (1/2)<br><br>**X10411913**<br>**10 41 191 3** |

| Pos. | Item | Quantity | Description | Bezeichnung |
|---|---|---|---|---|
| 3 | 11 17 016 7 | 1 | COVER | DECKEL |
| 17 | 57 11 301 08 | 1 | PRESSURE LIMITING VALVE<br>⇨ 5 711 301 08 57 11 301 08 | DRUCKBEGRENZUNGSVENTIL |
| 24 | 57 13 622 08 | 1 | NOZZLE DIN 913 D 1,2 M5X5 MS | DUESE |
| 25 | 51 07 543 08 | 2 | NOZZLE 0,4 | DUESE |
| 33 | 10 03 269 6 | 1 | CARTRIDGE<br>⇨ X10032696 10 03 269 6 | PATRONE |
| 34 | 57 15 280 08 | 1 | FILTER | FILTER |
| 61 | 51 07 415 08 | 4 | STOP PLUG VSTI1/8"ED ST A3C | STOPFEN |
| 62 | 10 87 318 0 | 5 | STOP PLUG | STOPFEN |
| 85 | 40 43 624 08 | 4 | SOCKET HEAD SCREW DIN 912 M10X35 12 | ZYLINDERSCHRAUBE |

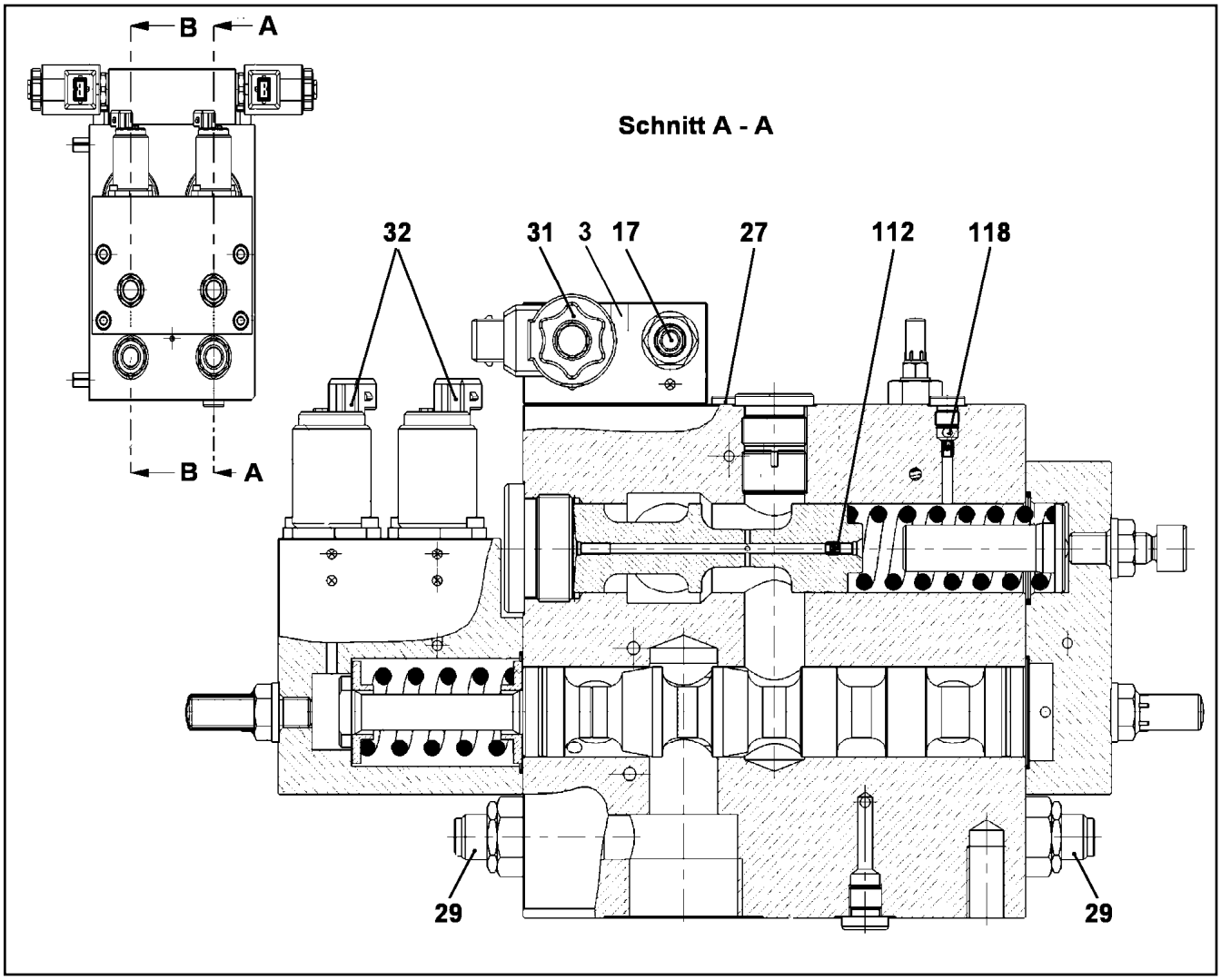


| Pos. | Item | Quantity | Description | Bezeichnung |
|---|---|---|---|---|
| 3 | 10 87 483 1 | 1 | SHEET | PLATTE |
| 4 | 10 66 324 1 | 1 | COVER | DECKEL |
| 5 | 10 66 324 2 | 1 | COVER | DECKEL |
| 17 | 57 11 301 08 | 5 | PRESSURE LIMITING VALVE<br>⇨ 5 711 301 08 57 11 301 08 | DRUCKBEGRENZUNGSVENTIL |
| 27 | 57 06 514 08 | 2 | NON-RETURN VALVE | RUECKSCHLAGVENTIL |
| 28 | 57 15 295 08 | 1 | SHUTTLE VALVE | WECHSELVENTIL |
| 29 | 10 41 260 4 | 3 | PRESSURE LIMITING VALVE | DRUCKBEGRENZUNGSVENTIL |
| (999) | 10 87 360 7 | 1 | SEAL KIT LIMIT VALVE | DS DRUCKBEGRENZUNGSVEN |
| 31 | 10 41 260 5 | 2 | DIRECTIONAL CONTROL VALVE 350BAR | WEGEVENTIL |
| 32 | 57 18 893 08 | 4 | DIRECTIONAL CONTROL VALVE | WEGEVENTIL |
| 112 | 51 07 543 08 | 2 | NOZZLE 0,4 | DUESE |
| 118 | 57 15 273 08 | 1 | NOZZLE 0,8 | DUESE |
| 119 | 57 13 622 08 | 6 | NOZZLE DIN 913 D 1,2 M5X5 MS | DUESE |
| 121 | 57 06 307 08 | 2 | NOZZLE D=1,4 | DUESE |
| 999 | 10 41 260 9 | 1 | SEAL KIT VALVE BLOCK | DS VENTILBLOCK |

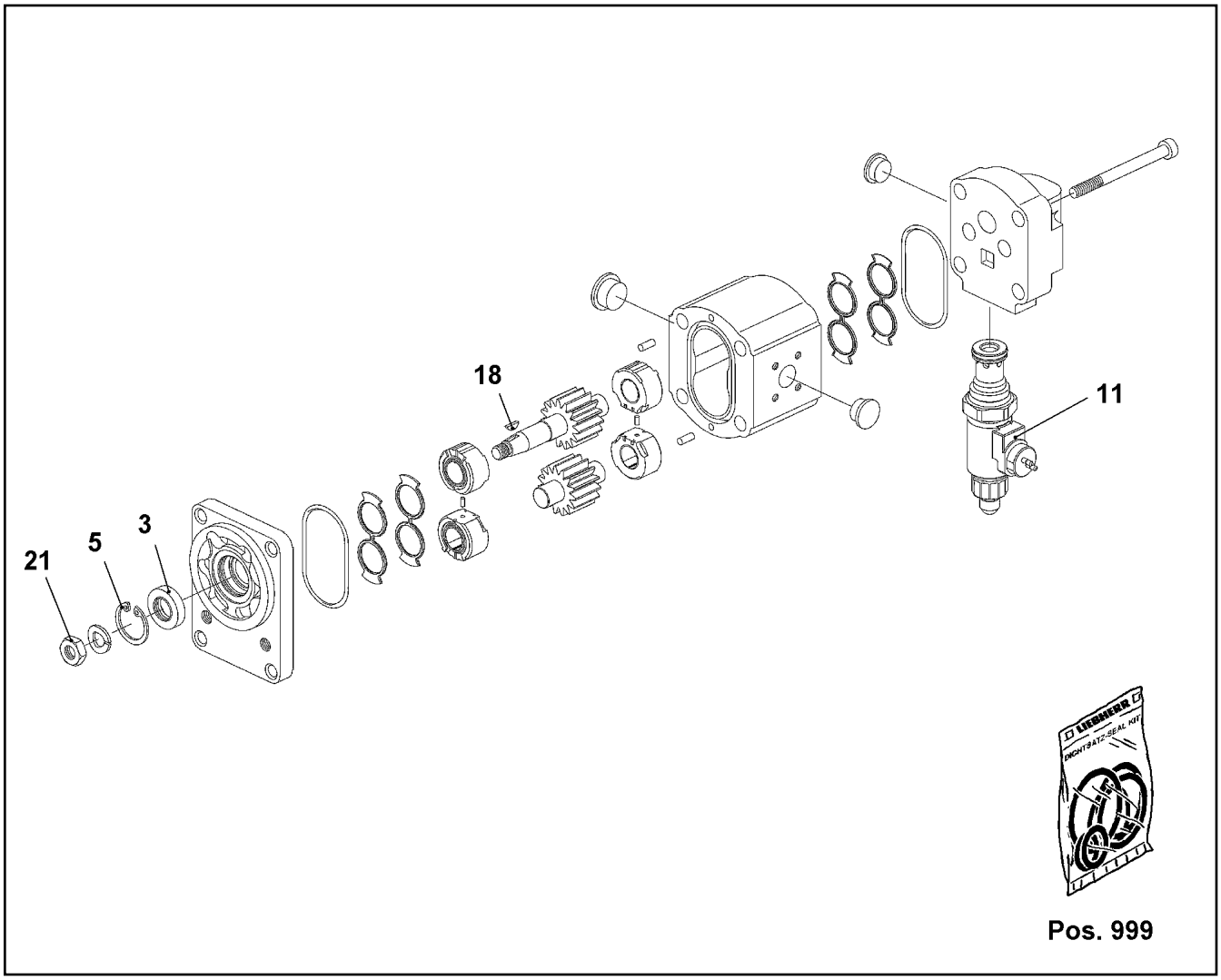


| Pos. | Item | Quantity | Description | Bezeichnung |
|---|---|---|---|---|
| 3 | 10 33 585 5 | 1 | SHAFT SEAL | WELLENDICHTRING |
| 5 | 42 81 007 08 | 1 | LOCKING RING DIN 472 30X1,2 | SICHERUNGSRING |
| 11 | 70 29 305 | 1 | PRESSURE LIMITING VALVE<br>⇨ 7 029 305 70 29 305 | DRUCKBEGRENZUNGSVENTIL |
| 18 | 57 04 355 08 | 1 | WOODRUFF KEY DIN 6888 3X5 ST.60-2K | SCHEIBENFEDER |
| 21 | 57 03 377 08 | 1 | HEX NUT ISO 8675 M12X1,5 04 | SECHSKANTMUTTER |
| 999 | 10 33 194 7 | 1 | SEAL KIT | DICHTUNGSSATZ |

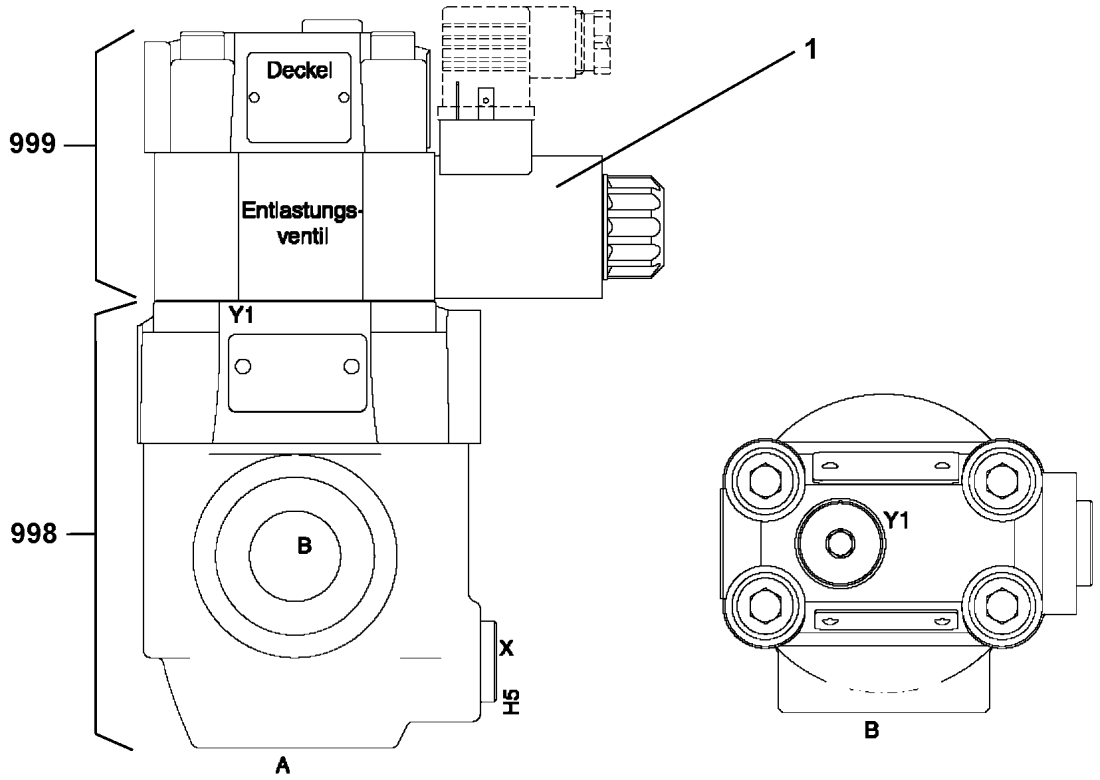


| Pos. | Item | Quantity | Description | Bezeichnung |
|---|---|---|---|---|
| 1 | 10 66 309 4 | 1 | MAGNET 24V | MAGNET |
| 998 | 11 00 522 7 | 1 | SEAL KIT | DICHTSATZ |
| 999 | 11 00 353 6 | 1 | SEALING SET VALVE | DS VENTIL |

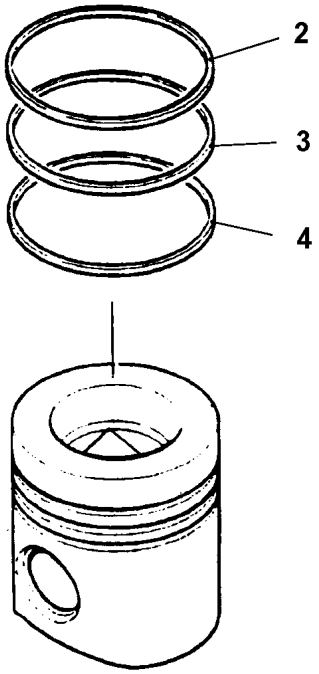


| Pos. | Item | Quantity | Description | Bezeichnung |
|---|---|---|---|---|
| 2 | 10 47 234 5 | 1 | KB-RING 122X113,1X3,5 MC66/MA88 | KB-RING |
| 3 | 10 47 234 6 | 1 | PISTON RING MG 122X112,1X2,5 MC32/MF | M-RING |
| 4 | 10 47 234 7 | 1 | DSF RING 122X113,36X4 MC66/MA99 | DSF-RING |
| 8 | 49 80 482 | 1 | SNAP RING 52X2 FSt | SPRENGRING |

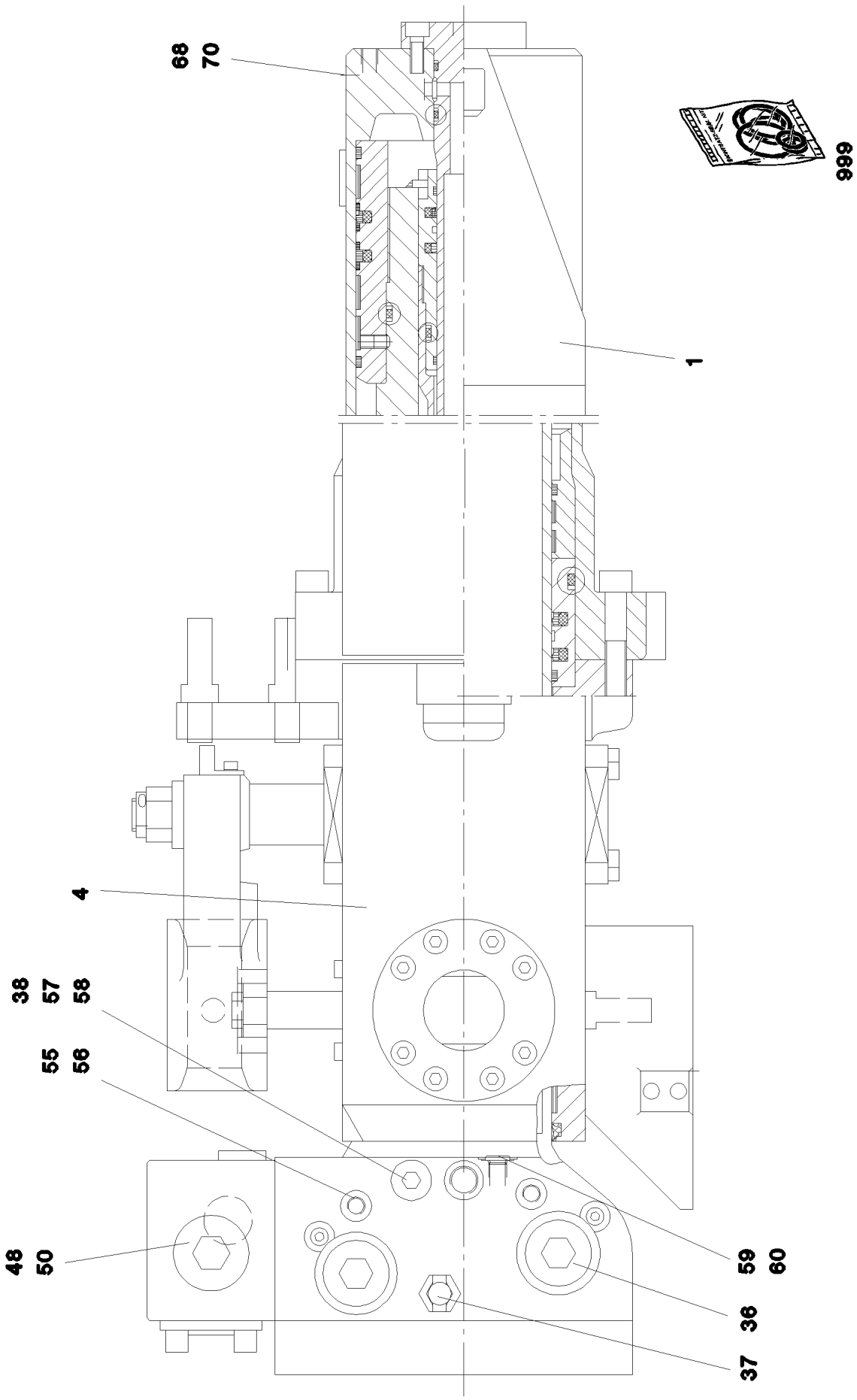


| | | |
|---|---|---|
| 16.2.2017<br>059534<br>LIEBHERR | **etk_en_de_048005 LTR 1100**<br><br>**TELESCOPIC CYLINDER**<br>**TELESKOPZYLINDER** | 576 (1/2)<br><br>⇨ **X10473001**<br>**10 47 300 1** |

| Pos. | Item | Quantity | Description | Bezeichnung |
|---|---|---|---|---|
| 4 | 10 81 388 6 | 1 | CYLINDER HEAD<br>➪ X10813886 10 81 388 6 | ZYLINDERKOPF |
| 36 | 57 09 606 08 | 2 | LOWERING BRAKE VALVE<br>➪ 5 709 606 08 57 09 606 08 | SENKBREMSVENTIL |
| 37 | 57 19 283 08 | 1 | PRESSURE LIMITING VALVE | DRUCKBEGRENZUNGSVENTIL |
| 38 | 57 16 895 08 | 1 | OVERPRESSURE VALVE 187BAR | UEBERDRUCKVENTIL |
| 48 | 10 65 001 4 | 1 | SCREW PLUG | VERSCHLUSSSCHRAUBE |
| 50 | 51 46 183 08 | 1 | O-RING ARP 568 44,12X2,62 NBR90 | O-RING |
| 55 | 51 85 717 08 | 1 | SCREW PLUG DIN 908 R1" ST | VERSCHLUSSSCHRAUBE |
| 56 | 71 01 025 08 | 1 | SEALING RING DIN 7603 A14X18X1,5 CU | DICHTRING |
| 57 | 10 49 347 9 | 1 | FLANGE JOINT GEF.A M24X1,5 | VERSCHRAUBUNG |
| 58 | 51 07 383 08 | 1 | O-RING ARP 568 18,72X2,62 NBR90 | O-RING |
| 59 | 10 47 037 7 | 1 | SCREW PLUG G1/4 | VERSCHLUSSSCHRAUBE |
| 60 | 51 07 386 08 | 1 | O-RING ARP 568 9,25X1,78 NBR90 | O-RING |
| 68 | 51 86 205 08 | 1 | VENTILATION SCREW R1/4" | ENTLUEFTUNGSSCHRAUBE |
| 70 | 51 86 206 08 | 1 | DUST CAP | STAUBKAPPE |
| 999 | 10 81 388 7 | 1 | DS TELESCOPIC CYLINDER | DS TELESKOPZYLINDER |

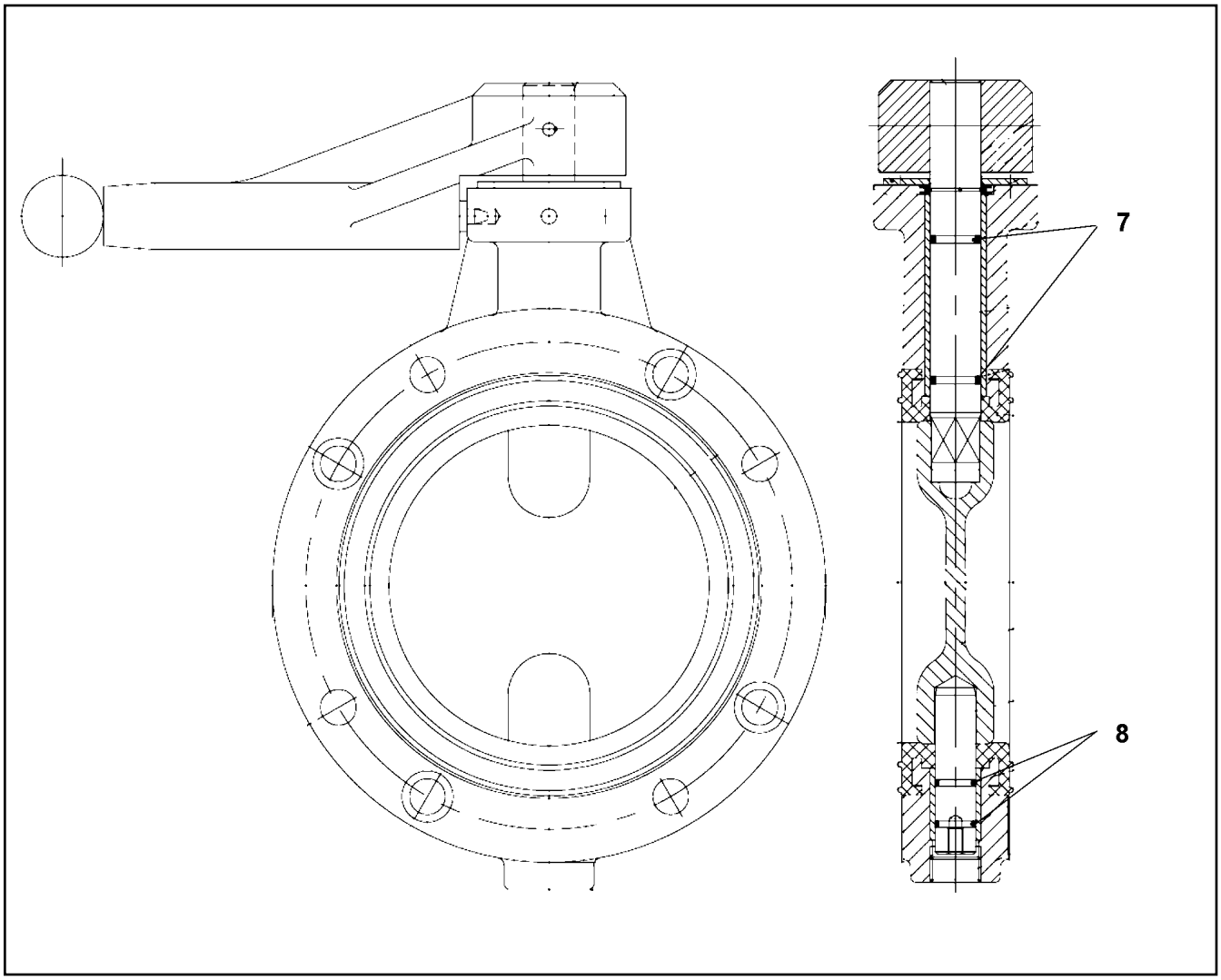


| Pos. | Item | Quantity | Description | Bezeichnung |
|---|---|---|---|---|
| 7 | 72 64 079 08 | 2 | O-RING 16X2 NBR70 | O-RING |
| 8 | 70 42 748 08 | 2 | O-RING 12X2 NBR70 | O-RING |

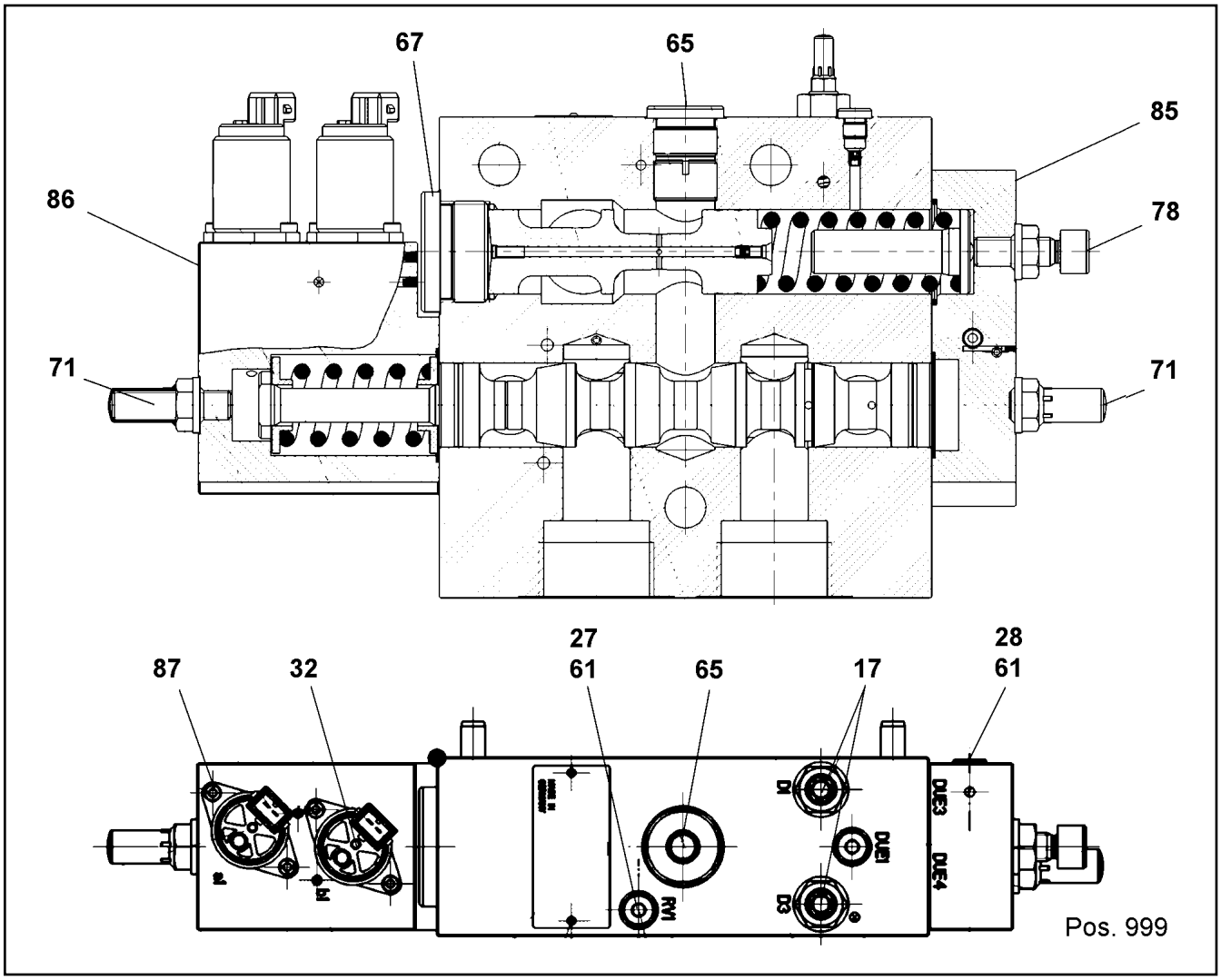


| Pos. | Item | Quantity | Description | Bezeichnung |
|---|---|---|---|---|
| 17 | 57 11 301 08 | 2 | PRESSURE LIMITING VALVE<br>⇨ 5 711 301 08 57 11 301 08 | DRUCKBEGRENZUNGSVENTIL |
| 27 | 10 47 530 0 | 1 | DIRECTIONAL CONTROL VALVE | WEGEVENTIL |
| (1) | 73 81 448 | 1 | O-RING DIN 3771 6,20X1,5 FKM 80 A,GN | O-RING |
| 28 | 57 15 295 08 | 1 | SHUTTLE VALVE | WECHSELVENTIL |
| 32 | 57 18 893 08 | 2 | DIRECTIONAL CONTROL VALVE | WEGEVENTIL |
| (1) | 10 27 991 4 | 1 | O-RING 15,5X2.5 NBR70 | O-RING |
| 61 | 51 07 415 08 | 3 | STOP PLUG VSTI1/8"ED ST A3C | STOPFEN |
| 65 | 47 77 047 08 | 1 | STOP PLUG VSTI3/4"ED A3P | STOPFEN |
| 67 | 11 00 269 6 | 1 | STOP PLUG VSTI 1 1/4" | STOPFEN |
| 71 | 57 15 297 08 | 2 | CHECK SCREW | STELLSCHRAUBE |
| 78 | 10 42 381 7 | 1 | CHECK SCREW | STELLSCHRAUBE |
| 85 | 40 43 080 08 | 4 | SOCKET HEAD SCREW ISO 4762 M8X100 10 | ZYLINDERSCHRAUBE |
| 86 | 49 80 012 | 4 | SOCKET HEAD SCREW ISO 4762 M12X40 1 | ZYLINDERSCHRAUBE |
| 87 | 40 00 996 | 4 | SOCKET HEAD SCREW ISO 4762 M4X10 8.8 | ZYLINDERSCHRAUBE |
| 999 | 10 41 263 2 | 1 | SEAL KIT VALVE BLOCK | DS VENTILBLOCK |

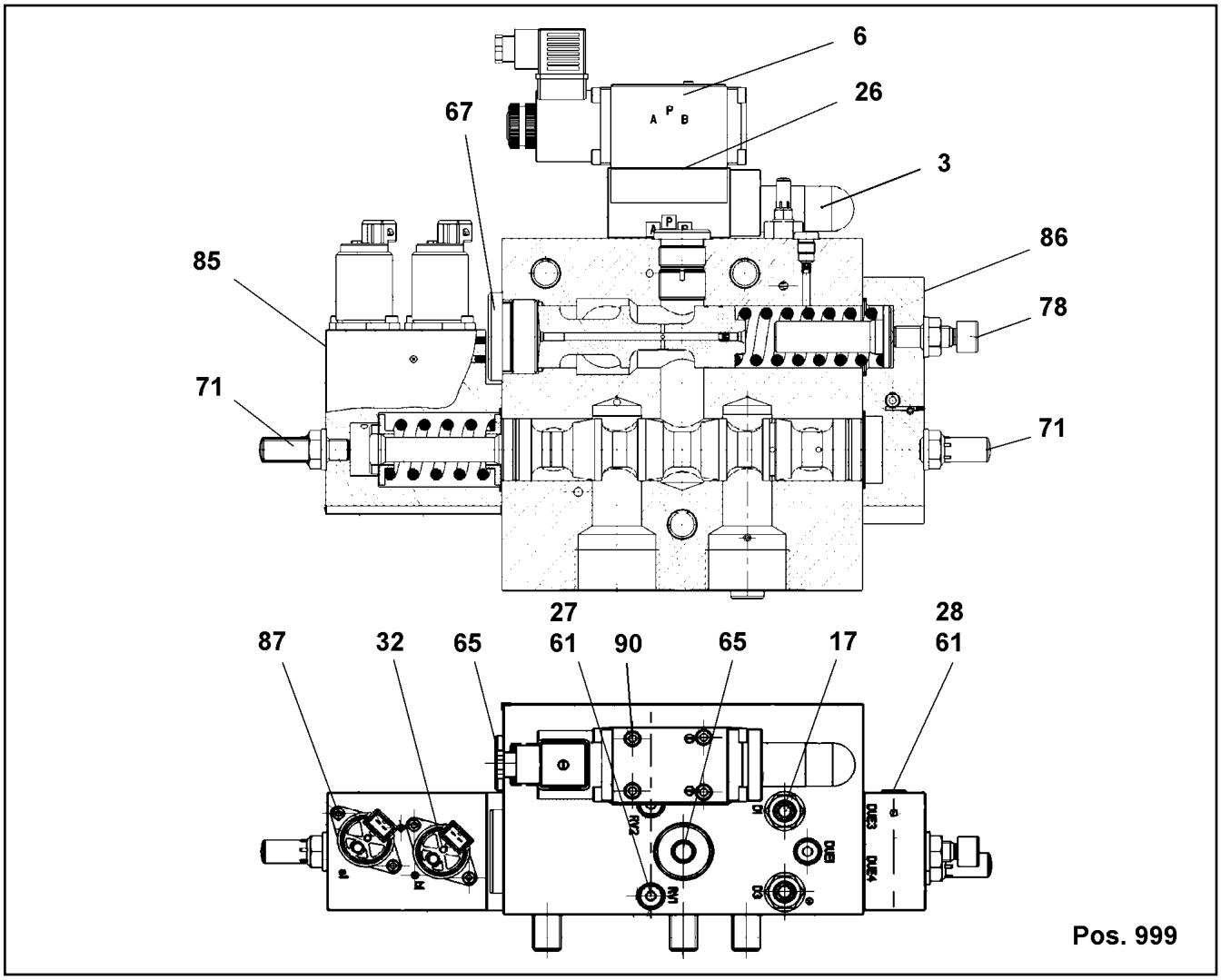


| Pos. | Item | Quantity | Description | Bezeichnung |
|---|---|---|---|---|
| 3 | 10 49 389 3 | 1 | PRESSURE VALVE 350BAR | DRUCKVENTIL |
| 6 | 10 47 530 2 | 1 | VALVE | VENTIL |
| (1) | 10 65 012 4 | 1 | MAGNET 28V | MAGNET |
| 17 | 57 11 301 08 | 2 | PRESSURE LIMITING VALVE<br>⇨ 5 711 301 08 57 11 301 08 | DRUCKBEGRENZUNGSVENTIL |
| 26 | 57 17 412 08 | 1 | NOZZLE D=2.5 | DUESE |
| 27 | 10 47 530 0 | 1 | DIRECTIONAL CONTROL VALVE | WEGEVENTIL |
| 28 | 57 15 295 08 | 1 | SHUTTLE VALVE | WECHSELVENTIL |
| 32 | 57 18 893 08 | 2 | DIRECTIONAL CONTROL VALVE | WEGEVENTIL |
| 61 | 51 07 415 08 | 4 | STOP PLUG VSTI1/8"ED ST A3C | STOPFEN |
| 62 | 47 77 040 08 | 1 | STOPPER PLUG VSTI1/4"ED A3P | BLINDSTOPFEN |
| 65 | 47 77 047 08 | 2 | STOP PLUG VSTI3/4"ED A3P | STOPFEN |
| 67 | 11 00 269 6 | 1 | STOP PLUG VSTI 1 1/4" | STOPFEN |
| 71 | 57 15 297 08 | 2 | CHECK SCREW | STELLSCHRAUBE |
| 78 | 10 42 381 7 | 1 | CHECK SCREW | STELLSCHRAUBE |
| 85 | 40 43 080 08 | 4 | SOCKET HEAD SCREW ISO 4762 M8X100 10 | ZYLINDERSCHRAUBE |
| 86 | 49 80 012 | 4 | SOCKET HEAD SCREW ISO 4762 M12X40 1 | ZYLINDERSCHRAUBE |
| 87 | 40 00 996 | 4 | SOCKET HEAD SCREW ISO 4762 M4X10 8.8 | ZYLINDERSCHRAUBE |
| 90 | 40 43 029 08 | 4 | SOCKET HEAD SCREW DIN 912 M5X55 10.9 | ZYLINDERSCHRAUBE |
| 999 | 10 41 263 2 | 1 | SEAL KIT VALVE BLOCK | DS VENTILBLOCK |

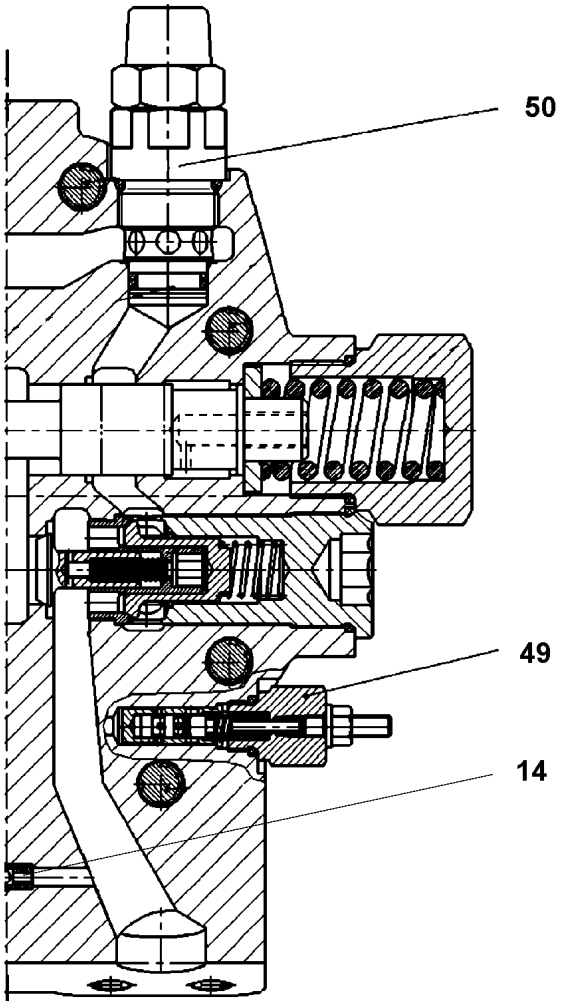


| Pos. | Item | Quantity | Description | Bezeichnung |
|---|---|---|---|---|
| 14 | 10 11 523 3 | 1 | SHUTTLE VALVE | WECHSELVENTIL |
| 49 | 10 45 005 1 | 1 | PRESSURE CONTROL VALVE | DRUCKREGELVENTIL |
| 50 | 51 16 551 14 | 2 | PRESSURE LIMITING VALVE | DRUCKBEGRENZUNGSVENTIL |

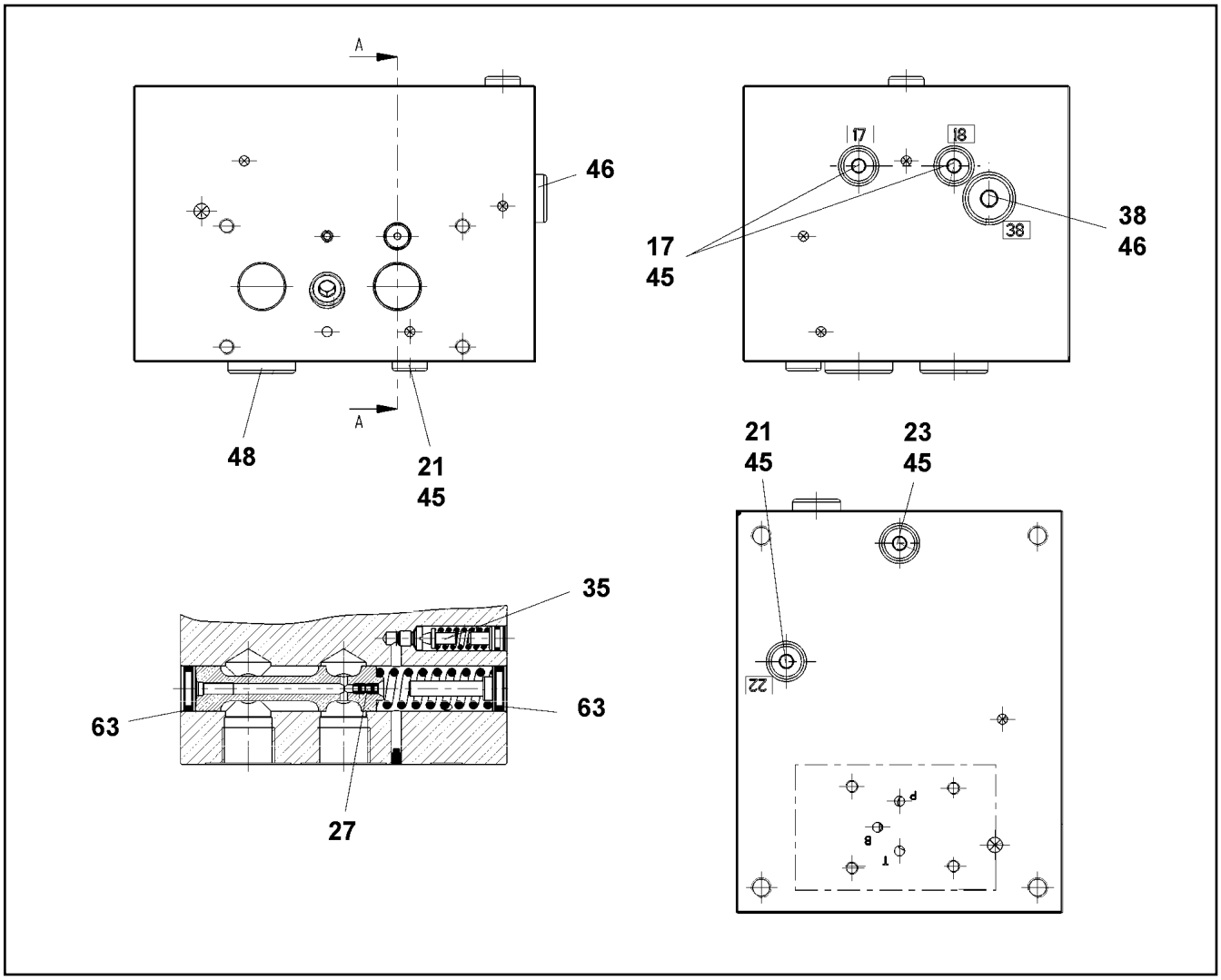


| Pos. | Item | Quantity | Description | Bezeichnung |
|---|---|---|---|---|
| 17 | 57 06 514 08 | 2 | NON-RETURN VALVE | RUECKSCHLAGVENTIL |
| 21 | 57 06 905 08 | 2 | NOZZLE D=0,6 | DUESE |
| 23 | 57 17 046 08 | 1 | NOZZLE D=1,6 | DUESE |
| 27 | 57 06 904 08 | 2 | NOZZLE D=0,6 | DUESE |
| 35 | 57 18 895 08 | 1 | PRESSURE VALVE<br>⇨ 5 718 895 08 57 18 895 08 | DRUCKVENTIL |
| 38 | 57 15 280 08 | 1 | FILTER | FILTER |
| 45 | 51 07 415 08 | 5 | STOP PLUG VSTI1/8"ED ST A3C | STOPFEN |
| 46 | 47 77 040 08 | 4 | STOPPER PLUG VSTI1/4"ED A3P | BLINDSTOPFEN |
| 48 | 47 77 042 08 | 2 | STOP PLUG VSTI1/2"ED A3P | STOPFEN |
| 63 | 51 07 461 08 | 2 | O-RING ARP 568 12,37X2,62 NBR90 | O-RING |

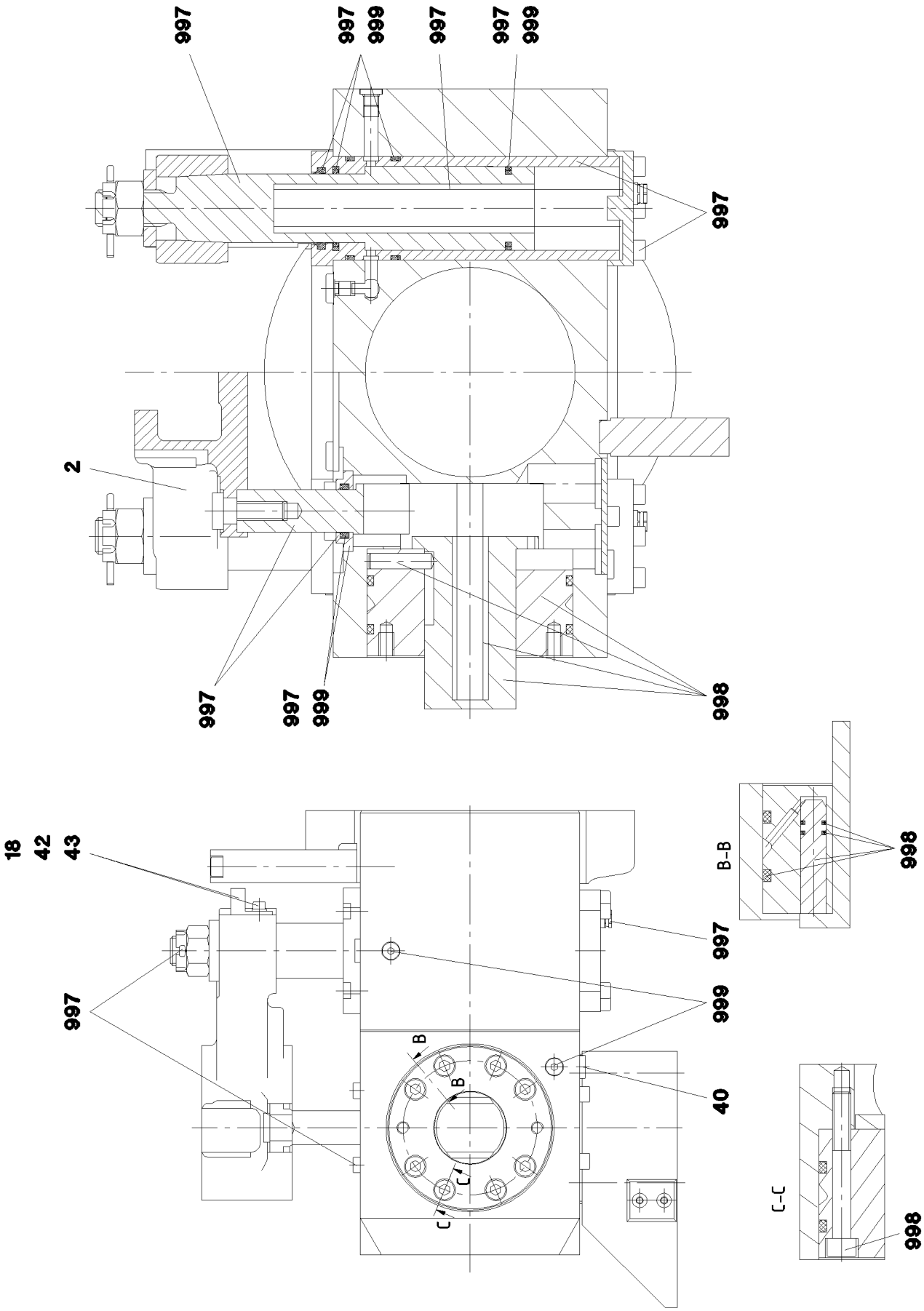


| | | |
|---|---|---|
| 16.2.2017<br>089258<br>LIEBHERR | **etk_en_de_048005 LTR 1100**<br><br>**CYLINDER HEAD**<br>**ZYLINDERKOPF** | 583 (1/2)<br><br>**X10813886**<br>**10 81 388 6** |

| Pos. | Item | Quantity | Description | Bezeichnung |
|---|---|---|---|---|
| 2 | 10 21 921 9 | 1 | TRAVERSE | TRAVERSE |
| 18 | 57 16 878 08 | 1 | ANGLE | WINKEL |
| 40 | 47 75 110 01 | 4 | SCREW PLUG VSTI G1/4 CF | VERSCHLUSSSCHRAUBE |
| 42 | 49 80 648 | 2 | SOCKET HEAD SCREW DIN 7984 M6X10 08. | ZYLINDERSCHRAUBE |
| 43 | 42 00 009 77 | 2 | WASHER DIN 125 A 6,4 ST VERZ | SCHEIBE |
| 997 | 57 18 926 08 | 1 | RS TELESCOPIC LOCK | RS TELESKOPVERRIEGELUNG |
| 998 | 57 18 927 08 | 1 | RS CYLINDER LOCK | RS ZYLINDERVERRIEGELUNG |
| 999 | 10 81 388 9 | 1 | SEAL KIT CYLINDER HEAD | DS ZYLINDERKOPF |

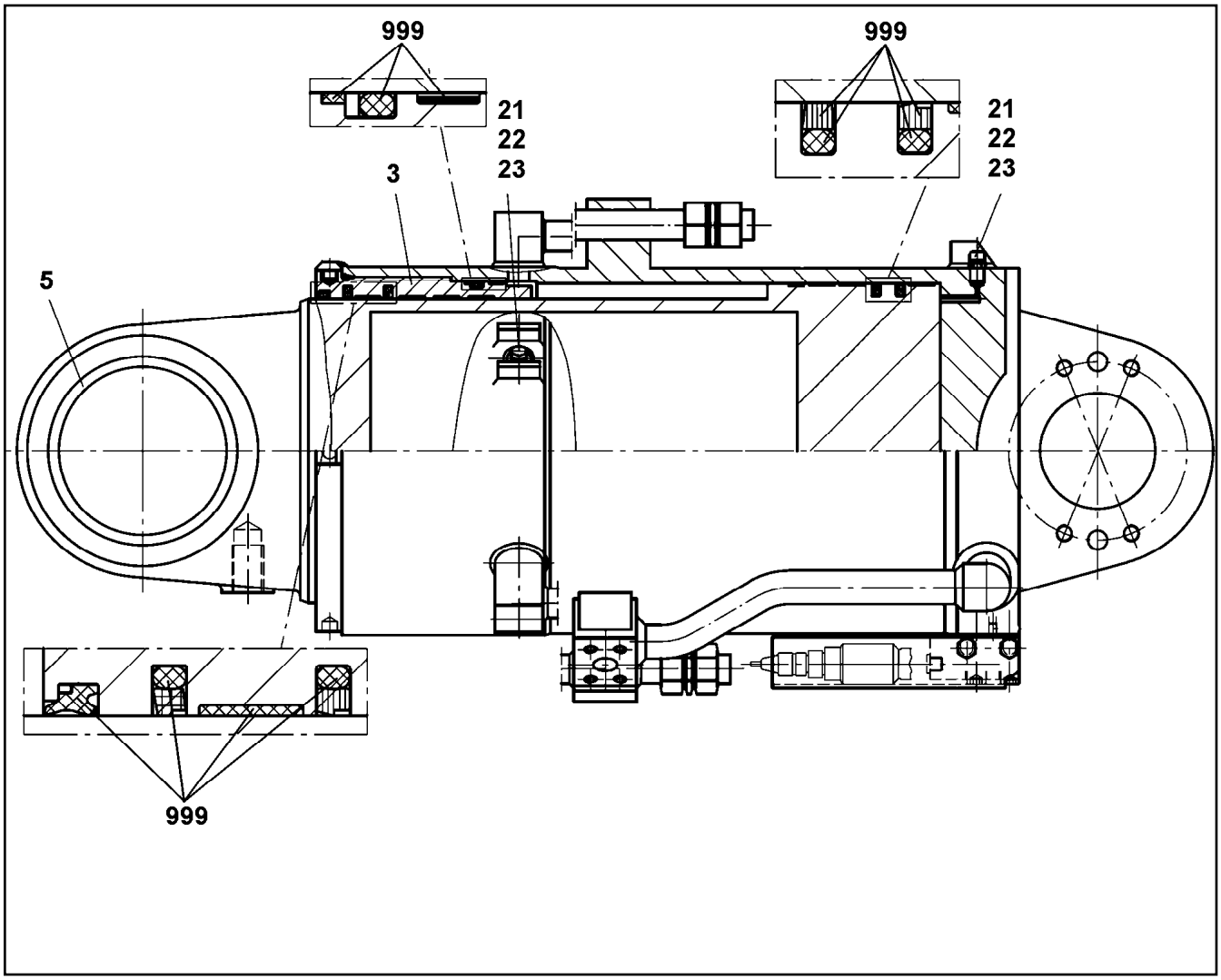


| Pos. | Item | Quantity | Description | Bezeichnung |
|---|---|---|---|---|
| 3 | 11 34 182 9 | 1 | GUIDE BUSHING 290,7X345X205 | FUEHRUNGSBUCHSE |
| 5 | 11 00 499 6 | 1 | BUSHING 160X180X100 | BUCHSE |
| 21 | 10 42 498 3 | 2 | VENTILATION VALVE | ENTLUEFTUNGSVENTIL |
| 22 | 74 70 002 08 | 2 | BALL DIN 5401 6 G20 | KUGEL |
| 23 | 51 86 206 08 | 2 | DUST CAP | STAUBKAPPE |
| 999 | 11 69 050 2 | 1 | SEAL KIT CYLINDER | DS ZYLINDER |

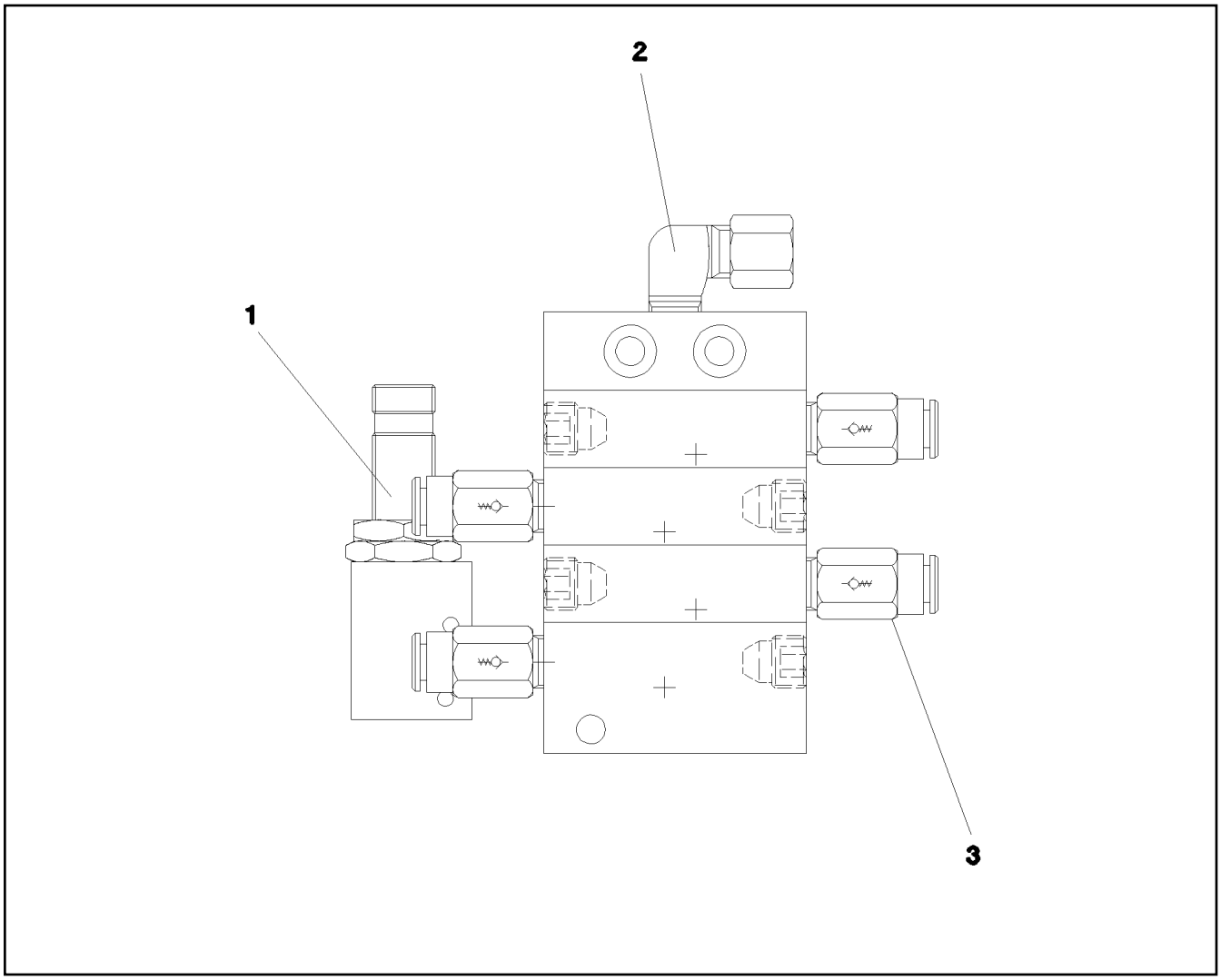


| Pos. | Item | Quantity | Description | Bezeichnung |
|---|---|---|---|---|
| 1 | 10 09 761 3 | 1 | PROXIMITY SWITCH BERUEHRUNGSLOS | NAEHERUNGSSCHALTER |
| 2 | 77 43 738 08 | 1 | FLANGE JOINT WE 6LL M10x1 | VERSCHRAUBUNG |
| 3 | 11 00 721 9 | 4 | NON-RETURN VALVE | RUECKSCHLAGVENTIL |

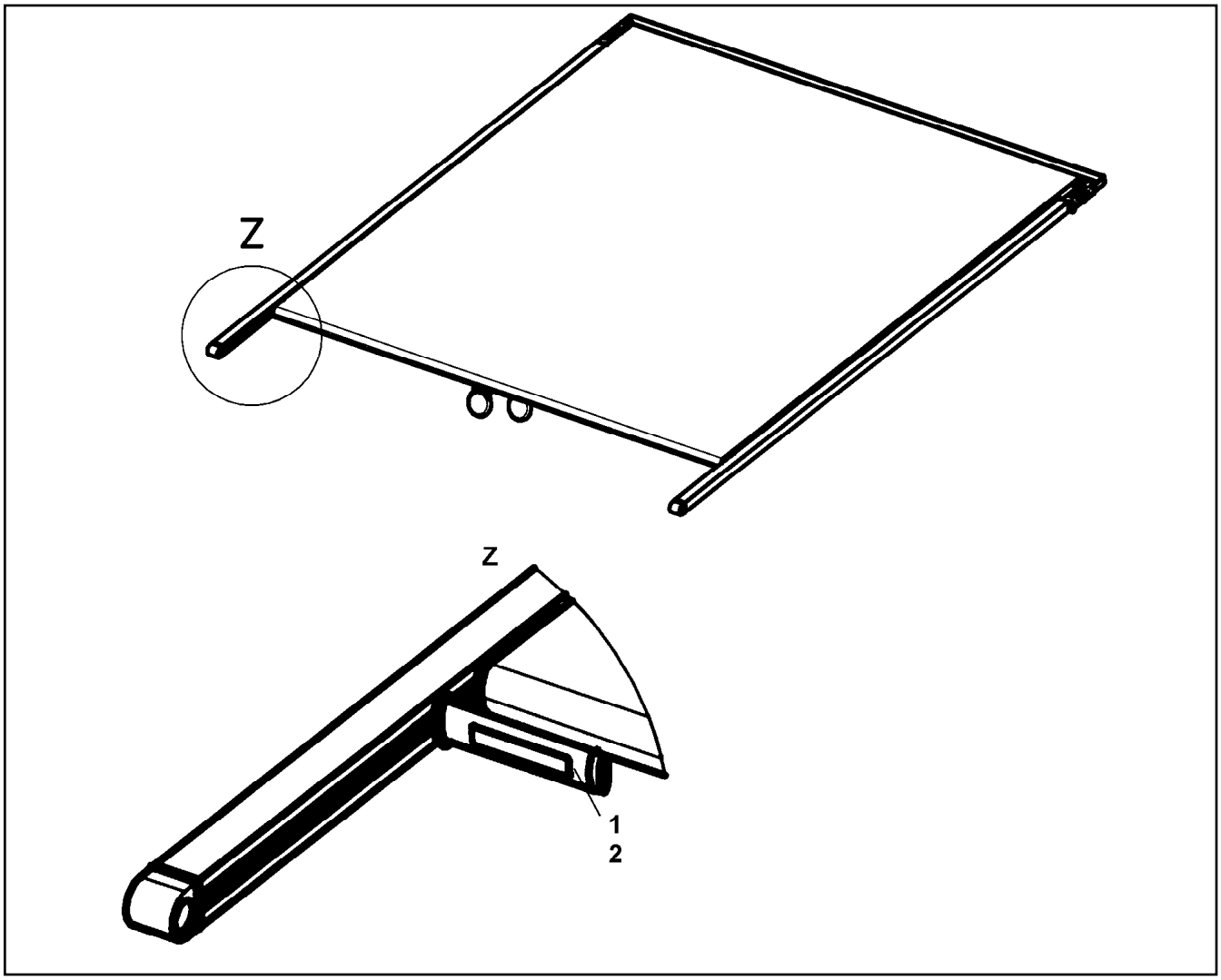


| Pos. | Item | Quantity | Description | Bezeichnung |
|---|---|---|---|---|
| 1 | 11 65 727 1 | 2 | SLIDING BLOCK RIGHT | GLEITSTUECK RECHTS |
| 2 | 11 65 727 2 | 2 | SLIDING BLOCK LEFT | GLEITSTUECK LINKS |
| 10 | 10 87 307 1 | 1 | GUIDING ROD LINKS | FUEHRUNGSSTANGE |
| 20 | 10 87 307 3 | 1 | GUIDING ROD RECHTS | FUEHRUNGSSTANGE |

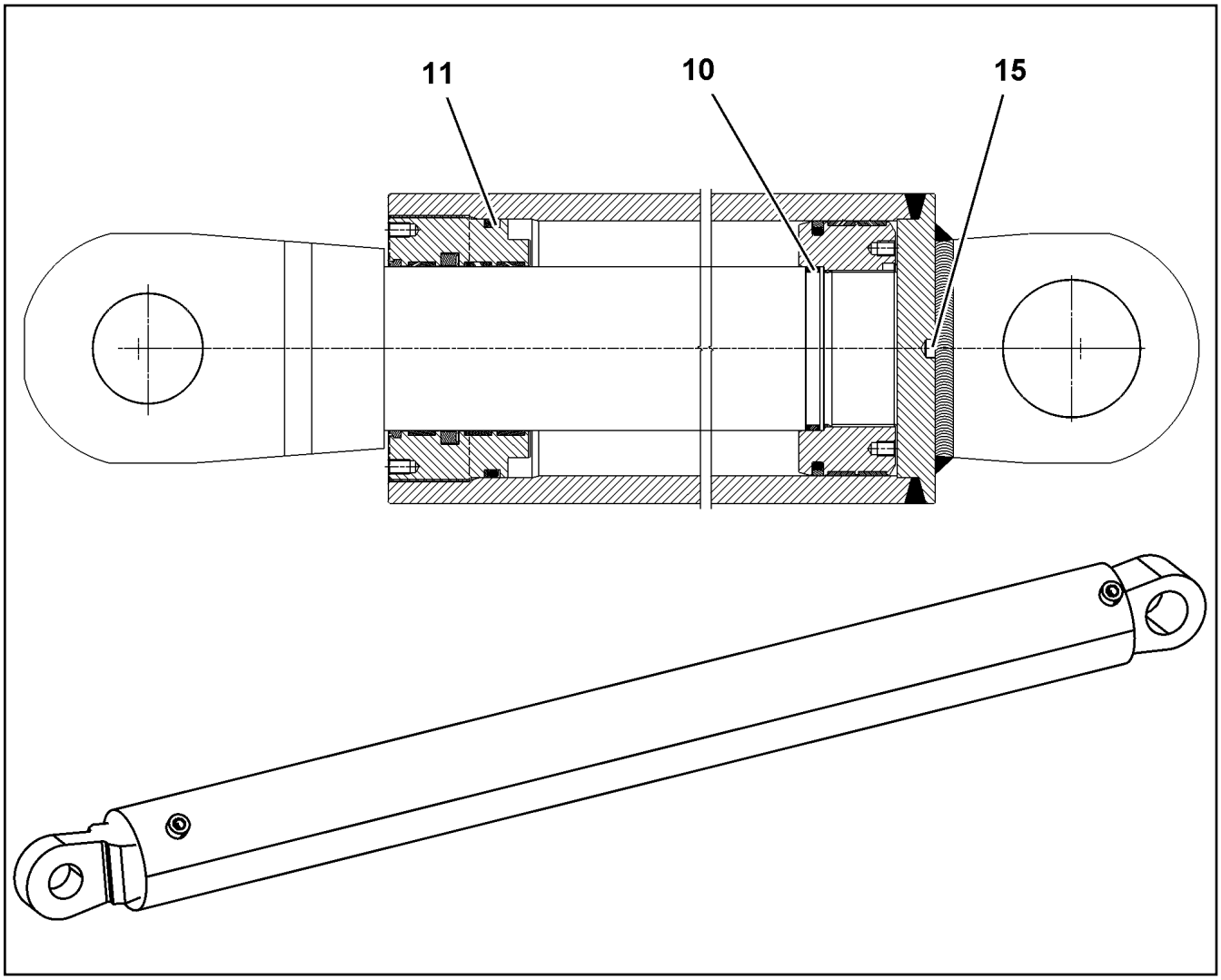


| Pos. | Item | Quantity | Description | Bezeichnung |
|---|---|---|---|---|
| 10 | 51 86 236 08 | 1 | O-RING ARP 568 82,14X3,53 NBR70 | O-RING |
| 11 | 72 64 346 08 | 1 | O-RING ARP 568 129,54X5,33 NBR70 | O-RING |
| 15 | 40 46 013 08 | 1 | GRUB SCREW DIN 914 M8X10 45H VERZ | GEWINDESTIFT |

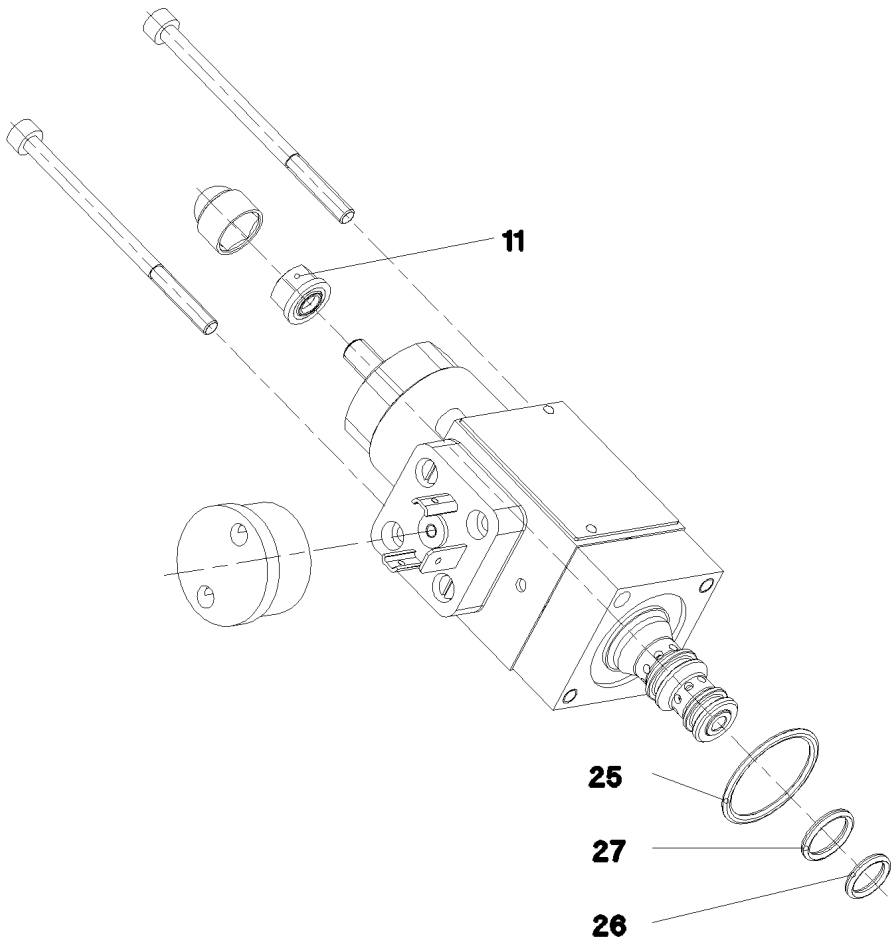


| Pos. | Item | Quantity | Description | Bezeichnung |
|---|---|---|---|---|
| 11 | 51 07 534 08 | 1 | SEALING NUT M6 | DICHTMUTTER |
| 25 | 57 06 523 08 | 1 | O-RING ARP 568 23,52X1,78 N903890SHOR | O-RING |
| 26 | 51 07 190 08 | 1 | O-RING ARP 568 9,25X1,78 NBR75 | O-RING |
| 27 | 51 07 181 08 | 1 | O-RING ARP 568 10,82X1,78 NBR75 | O-RING |

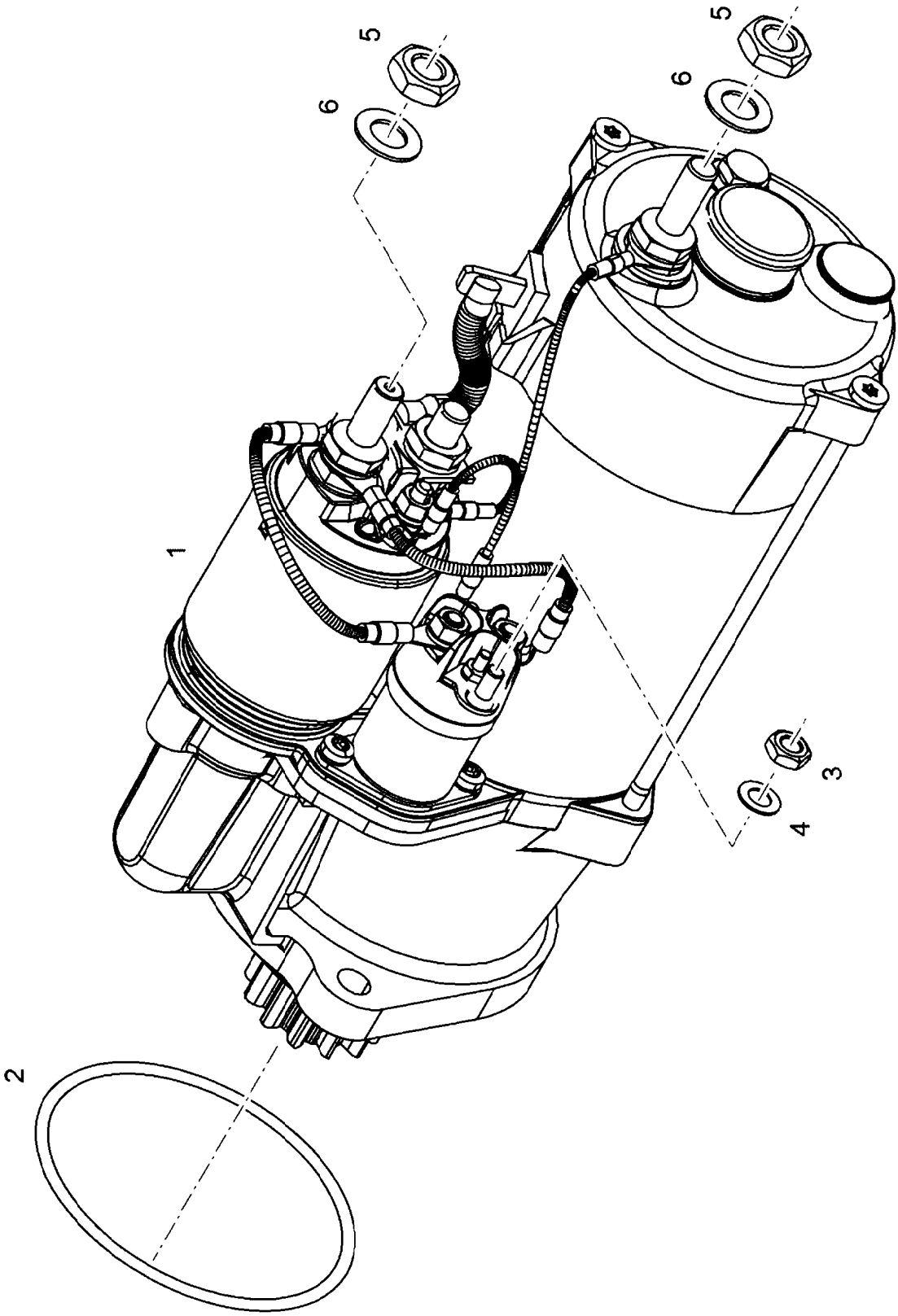


| | | |
|---|---|---|
| 16.2.2017<br>089599<br>LIEBHERR | **etk_en_de_048005 LTR 1100**<br><br>**STARTER PRE-ASSY.**<br>**STARTER VORM.** | ❑ 590 (1/2)<br><br>⇨ **X11386644**<br>**11 38 664 4** |

| Pos. | Item | Quantity | Description | Bezeichnung |
|---|---|---|---|---|
| 2 | 10 21 837 0 | 1 | O-RING 85X2 HNBR 70 | O-RING |
| 3 | 10 41 109 4 | 1 | HEX NUT M6 8 | SECHSKANTMUTTER |
| 4 | 10 41 109 2 | 1 | SPRING WASHER DIN 137 6 X10CrNi18-8 | FEDERSCHEIBE |
| 5 | 10 41 109 5 | 2 | HEX NUT M10 8 | SECHSKANTMUTTER |
| 6 | 10 41 109 3 | 2 | SPRING WASHER DIN 137 10 X10CrNi18-8 | FEDERSCHEIBE |

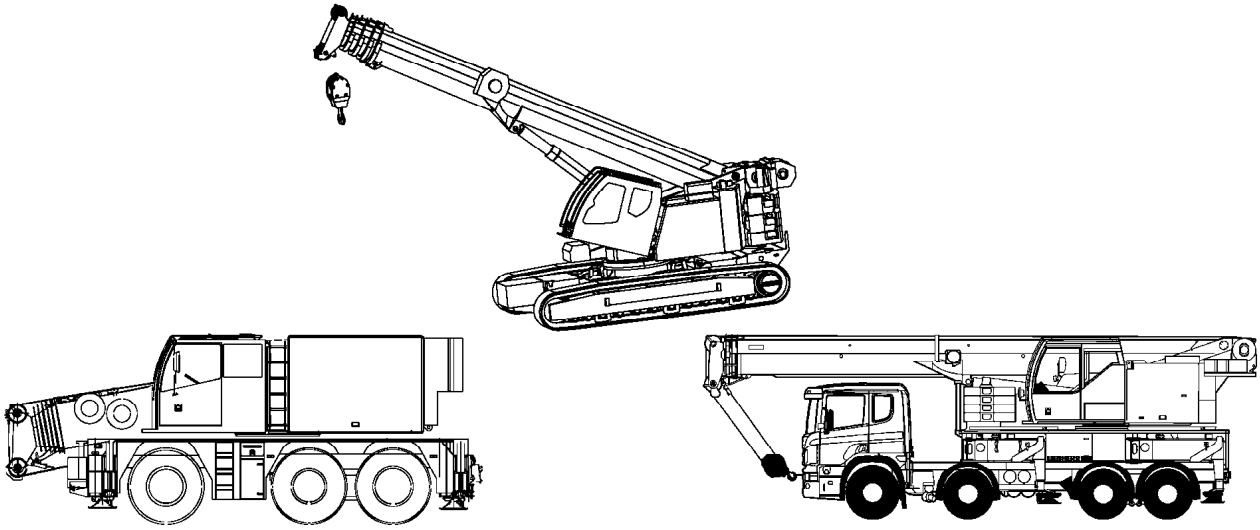

# LIEBHERR

## Service

| Filterpakete | Servicepakete |
|---|---|
| Pos. 110 OW 400 / 500 h<br>Pos. 120 OW 800 / 1000 h | Pos. 400 OW 500h<br>Pos. 410 OW 800 / 1000 h<br>Pos. 420 OW 2400 / 3000 h |

| Pos. | Item | Quantity | Description | Bezeichnung |
|---|---|---|---|---|
| 110 | 96 29 049 08 | 1 | FILTER PACKAGE 500 STD.OW LTM 1095-5.<br>⇨ 9 629 049 08 96 29 049 08 | FILTERPAKET |
| 120 | 96 29 047 08 | 1 | FILTER PACKAGE 1000 STD.OW LTM 1095-<br>⇨ 9 629 047 08 96 29 047 08 | FILTERPAKET |
| 410 | 96 73 763 08 | 1 | SERVICE PACKAGE 1000STD OW LTM 1090- | SERVICEPAKET |
| (1) | 10 29 729 5 | 2 | EASY-CHANGE FILTER OEL 9µm | WECHSELFILTER |
| (2) | 10 03 283 5 | 1 | SPARE ELEMENT OEL | ERSATZELEMENT |
| (3) | 10 03 553 4 | 1 | REPAIR KIT -E DF/LF | REPARATURSATZ |
| (4) | 10 03 761 6 | 1 | FILTER INSERT OEL 10µm | FILTEREINSATZ |
| (5) | 10 04 181 5 | 1 | SEAL KIT | DICHTUNGSSATZ |
| (6) | 10 04 430 2 | 1 | FUEL PREFILTER | KRAFTSTOFFVORFILTER |
| (7) | 10 42 994 6 | 1 | FUEL FINE FILTER KRAFTSTOFF 3µm | KRAFTSTOFFFEINFILTER |
| (8) | 10 11 855 4 | 4 | SEAL | DICHTUNG |
| (9) | 10 27 855 3 | 1 | FILTER ELEMENT | FILTERELEMENT |
| (10) | 51 06 692 08 | 2 | FILTER INSERT OEL 10µm | FILTEREINSATZ |
| (11) | 51 06 718 08 | 2 | FILTER INSERT 1m³/min 10µm | FILTEREINSATZ |
| (12) | 55 31 740 08 | 1 | FUEL FILTER | KRAFTSTOFFFILTER |
| (13) | 57 05 848 08 | 1 | FILTER INSERT OEL 10µm | FILTEREINSATZ |
| (14) | 57 05 883 08 | 2 | O-RING ARP 568 170,82X7 NBR70 | O-RING |
| (15) | 57 13 523 08 | 1 | CARTOUCHE | KARTUSCHE |
| (17) | 57 18 500 08 | 1 | FILTER | FILTER |

| Item | Page | Assembly | Pos. | Quantity |
|---|---|---|---|---|
| 10 00 231 0 | X1011583 | 10 11 583 7 | 51 | 1 |
| 10 00 231 0 | X1011793 | 10 11 793 0 | 10 | 1 |
| 10 00 336 6 | 9 078 314 | 90 78 314 | 3 | 1 |
| 10 00 426 1 | 9 079 480 | 90 79 480 | 12 | 1 |
| 10 00 426 1 | X1011583 | 10 11 583 7 | 45 | 1 |
| 10 00 426 1 | X1011801 | 10 11 801 3 | 13 | 1 |
| 10 00 426 1 | X1011801 | 10 11 801 4 | 13 | 1 |
| 10 00 442 6 | 9 074 507 | 90 74 507 | 5 | 1 |
| 10 00 444 2 | 9 074 505 | 90 74 505 | 7 | 1 |
| 10 00 507 3 | X1011739 | 10 11 739 7 | 5 | 4 |
| 10 00 507 3 | X1011739 | 10 11 739 8 | 4 | 5 |
| 10 00 507 4 | X1011739 | 10 11 739 8 | 5 | 9 |
| 10 00 507 8 | X1011611 | 10 11 611 0 | 11 | 4 |
| 10 00 507 8 | X1011766 | 10 11 766 5 | 6 | 1 |
| 10 00 507 8 | X1011914 | 10 11 914 1 | 13 | 2 |
| 10 00 507 8 | X1011998 | 10 11 998 0 | 35 | 4 |
| 10 00 546 1 | X1011707 | 10 11 707 2 | 2 | 4 |
| 10 00 546 2 | 9 079 560 | 90 79 560 | 5 | 1 |
| 10 00 546 2 | 9 080 525 | 90 80 525 | 12 | 1 |
| 10 00 546 2 | X1011707 | 10 11 707 2 | 3 | 4 |
| 10 00 613 1 | X1011810 | 10 11 810 1 | 3 | 8 |
| 10 00 636 2 | 3 501 | 91 05 788 08 | 61 | 4 |
| 10 00 637 0 | 2 510 200 | 96 41 258 08 | 31 | 2 |
| 10 00 637 0 | 3 501 | 91 05 788 08 | 75 | 4 |
| 10 00 649 9 | 9 073 083 | 90 73 083 | 4 | 2 |
| 10 00 649 9 | X1011583 | 10 11 583 7 | 1 | 8 |
| 10 00 778 2 | 9 079 472 | 90 79 472 | 3 | 2 |
| 10 00 778 2 | 9 080 280 | 90 80 280 | 3 | 4 |
| 10 00 778 2 | X1011914 | 10 11 914 1 | 23 | 1 |
| 10 00 778 2 | X1011997 | 10 11 997 9 | 38 | 1 |
| 10 00 812 5 | 2 913 005 | 96 28 696 08 | 13 | 1 |
| 10 00 844 8 | X1011585 | 10 11 585 1 | 11 | 4 |
| 10 00 844 8 | X1011585 | 10 11 585 3 | 11 | 4 |
| 10 00 900 7 | 9 147 512 | 91 47 512 | 3 | 2 |
| 10 00 900 7 | X1011989 | 10 11 989 1 | 9 | 3 |
| 10 00 924 4 | 2 913 005 | 96 28 696 08 | 11 | 2 |
| 10 00 924 4 | 2 913 006 | 96 20 732 08 | 5 | 2 |
| 10 00 971 5 | 5 530 022 | 55 30 022 08 | 23 | 2 |
| 10 00 994 3 | 9 080 345 | 90 80 345 | 5 | 0.6 |
| 10 01 183 2 | 9 078 233 | 90 78 233 | 1 | 1 |
| 10 01 186 4 | X1011793 | 10 11 793 0 | 8 | 2 |
| 10 01 186 5 | X1011573 | 10 11 573 7 | 27 | 4 |
| 10 01 186 5 | X1011583 | 10 11 583 7 | 78 | 4 |
| 10 01 186 6 | 9 079 092 | 90 79 092 | 2 | 8 |
| 10 01 186 6 | X1011550 | 10 11 550 2 | 3 | 2 |
| 10 01 186 6 | X1011573 | 10 11 573 7 | 25 | 7 |
| 10 01 186 6 | X1011583 | 10 11 583 7 | 74 | 26 |
| 10 01 186 6 | X1011585 | 10 11 585 1 | 9 | 12 |
| 10 01 186 6 | X1011585 | 10 11 585 2 | 9 | 8 |
| 10 01 186 6 | X1011585 | 10 11 585 3 | 9 | 12 |
| 10 01 186 6 | X1011585 | 10 11 585 9 | 9 | 8 |
| 10 01 186 6 | X1011801 | 10 11 801 3 | 9 | 2 |
| 10 01 186 6 | X1011801 | 10 11 801 4 | 9 | 2 |
| 10 01 186 7 | X1011573 | 10 11 573 7 | 29 | 6 |
| 10 01 186 7 | X1011583 | 10 11 583 7 | 80 | 12 |
| 10 01 186 7 | X1011793 | 10 11 793 0 | 6 | 8 |
| 10 01 186 7 | X1012580 | 10 12 580 1 | 3 | 1 |
| 10 01 186 9 | 9 080 294 | 90 80 294 | 3 | 2 |
| 10 01 186 9 | X1011793 | 10 11 793 0 | 7 | 2 |
| 10 01 187 0 | X1011583 | 10 11 583 7 | 75 | 5 |
| 10 01 187 0 | X1011766 | 10 11 766 5 | 8 | 1 |
| 10 01 187 0 | X1011914 | 10 11 914 1 | 9 | 1 |
| 10 01 187 0 | X1011989 | 10 11 989 7 | 27 | 1 |
| 10 01 222 5 | 9 074 507 | 90 74 507 | 4 | 1 |
| 10 01 265 9 | 9 387 598 | 93 87 598 01 | 56 | 8 |
| 10 01 265 9 | 9 686 071 | 96 86 071 01 | 56 | 8 |
| 10 01 302 5 | 9 080 345 | 90 80 345 | 110 | 1 |
| 10 01 360 1 | 9 387 598 | 93 87 598 01 | 3 | 1 |
| 10 01 360 1 | 9 686 071 | 96 86 071 01 | 3 | 1 |
| 10 01 404 2 | 9 079 472 | 90 79 472 | 4 | 2 |
| 10 01 404 2 | 9 080 525 | 90 80 525 | 5 | 3 |
| 10 01 463 8 | 9 080 525 | 90 80 525 | 10 | 2 |
| 10 01 469 2 | X1032706 | 10 32 706 5 | 3 | 1 |
| 10 01 469 3 | X1032706 | 10 32 706 5 | 4 | 1 |
| 10 01 469 7 | X1032706 | 10 32 706 5 | 10 | 3 |
| 10 01 470 1 | X1032706 | 10 32 706 5 | 16 | 1 |
| 10 01 471 2 | X1032706 | 10 32 706 5 | 27 | 1 |
| 10 01 472 9 | X1032706 | 10 32 706 5 | 7 | 1 |
| 10 01 473 0 | X1032706 | 10 32 706 5 | 8 | 1 |
| 10 01 486 4 | X1011569 | 10 11 569 6 | 5 | 1 |
| 10 01 690 6 | 9 080 345 | 90 80 345 | 8 | 2 |
| 10 01 690 6 | X1011912 | 10 11 912 7 | 2 | 2 |
| 10 01 690 6 | X1011912 | 10 11 912 8 | 3 | 4 |
| 10 01 690 6 | X1011989 | 10 11 989 1 | 8 | 2 |
| 10 01 690 6 | X1011997 | 10 11 997 9 | 4 | 2 |
| 10 01 690 6 | X1011998 | 10 11 998 0 | 36 | 1 |
| 10 01 690 6 | X1012024 | 10 12 024 2 | 3 | 1 |
| 10 01 690 7 | X1011914 | 10 11 914 1 | 22 | 1 |
| 10 01 773 2 | 3 511 006 | 96 45 029 08 | 21 | 2 |
| 10 01 871 1 | 9 078 314 | 90 78 314 | 2 | 4 |
| 10 01 871 1 | X1011998 | 10 11 998 0 | 32 | 3 |
| 10 02 210 1 | 9 077 279 | 90 77 279 | 5 | 1 |
| 10 02 232 0 | X1011585 | 10 11 585 1 | 12 | 2 |
| 10 02 232 0 | X1011585 | 10 11 585 2 | 12 | 2 |
| 10 02 232 0 | X1011585 | 10 11 585 3 | 12 | 2 |
| 10 02 232 0 | X1011585 | 10 11 585 9 | 12 | 2 |
| 10 02 232 0 | X1011801 | 10 11 801 3 | 21 | 2 |
| 10 02 232 0 | X1011801 | 10 11 801 4 | 21 | 2 |
| 10 02 232 0 | X1011816 | 10 11 816 1 | 5 | 2 |
| 10 02 323 7 | 3 510 100 | 91 49 246 08 | 43 | 1 |
| 10 02 473 3 | 9 073 083 | 90 73 083 | 100 | 1 |
| 10 02 485 7 | 2 932 042 | 96 68 587 08 | 32 | 1 |
| 10 02 512 4 | X1011969 | 10 11 969 8 | (1) | 1 |
| 10 02 742 0 | X1011573 | 10 11 573 7 | 35 | 2 |
| 10 02 810 7 | 2 520 000 | 91 49 872 08 | 103 | 3.1 |
| 10 02 810 7 | 2 913 004 | 96 20 460 08 | 9 | 0.16 |
| 10 02 823 5 | 2 711 | 91 53 002 08 | 3 | 1 |
| 10 02 893 2 | 2 920 574 | 96 36 055 08 | 10 | 2 |
| 10 03 010 9 | 5 114 327 | 51 14 327 14 | 2 | 2 |
| 10 03 021 0 | 2 913 005 | 96 28 696 08 | 12 | 2 |
| 10 03 051 8 | 9 078 249 | 90 78 249 | 6 | 2 |
| 10 03 051 8 | 9 078 250 | 90 78 250 | 6 | 4 |
| 10 03 051 8 | 9 078 962 | 90 78 962 | 6 | 2 |
| 10 03 229 7 | 1 750 001 | 92 85 698 08 | 68 | 1 |
| 10 03 269 6 | X1041191 | 10 41 191 3 | 33 | 1 |
| 10 03 283 5 | 9 075 483 | 90 75 483 | 1 | 1 |
| 10 03 283 5 | 9 629 047 | 96 29 047 08 | 7 | 1 |
| 10 03 283 5 | 9 629 049 | 96 29 049 08 | 7 | 1 |
| 10 03 283 5 | XSK_Z480 | SK_Z48005 | (2) | 1 |
| 10 03 310 9 | 2 970 | 91 55 482 08 | 49 | 1 |

| Item | Page | Assembly | Pos. | Quantity |
|---|---|---|---|---|
| 10 03 553 4 | XSK_Z480 | SK_Z48005 | (3) | 1 |
| 10 03 557 5 | X1011599 | 10 11 599 3 | 4 | 4 |
| 10 03 557 8 | X1011793 | 10 11 793 0 | 11 | 3 |
| 10 03 569 4 | 2 520 000 | 91 49 872 08 | 157 | 3 |
| 10 03 689 6 | 2 210 | 91 81 614 08 | 401 | 1 |
| 10 03 731 0 | X1011816 | 10 11 816 1 | 7 | 2 |
| 10 03 731 2 | 9 079 480 | 90 79 480 | 9 | 6 |
| 10 03 757 5 | 6 923 101 | 69 23 101 08 | 17 | 1 |
| 10 03 761 6 | 5 106 708 | 51 06 708 08 | 1 | 1 |
| 10 03 761 6 | 9 629 047 | 96 29 047 08 | 5 | 1 |
| 10 03 761 6 | 9 629 049 | 96 29 049 08 | 5 | 1 |
| 10 03 761 6 | XSK_Z480 | SK_Z48005 | (4) | 1 |
| 10 03 827 1 | X1032706 | 10 32 706 5 | 29 | 1 |
| 10 03 827 2 | X1032706 | 10 32 706 5 | 13 | 1 |
| 10 03 857 2 | X1011573 | 10 11 573 7 | 41 | 1 |
| 10 03 908 5 | 2 500 | 91 48 594 08 | 11 | 1 |
| 10 03 966 0 | 9 079 480 | 90 79 480 | 8 | 12 |
| 10 04 006 4 | X1011676 | 10 11 676 8 | 12 | 1 |
| 10 04 039 9 | X1011585 | 10 11 585 4 | 1 | 1 |
| 10 04 040 0 | 9 078 680 | 90 78 680 | (3) | 1 |
| 10 04 040 0 | X1011583 | 10 11 583 7 | 46 | 1 |
| 10 04 040 5 | X1011683 | 10 11 683 9 | (8) | 2 |
| 10 04 040 6 | X1011585 | 10 11 585 4 | 2 | 1 |
| 10 04 040 7 | 9 078 680 | 90 78 680 | (2) | 1 |
| 10 04 098 4 | 9 076 530 | 90 76 530 | 2 | 1 |
| 10 04 098 4 | X1011969 | 10 11 969 8 | (2) | 1 |
| 10 04 159 0 | 2 501 000 | 91 48 769 08 | 36 | 2 |
| 10 04 181 5 | 5 106 681 | 51 06 681 08 | 99 | 1 |
| 10 04 181 5 | XSK_Z480 | SK_Z48005 | (5) | 1 |
| 10 04 259 2 | 2 932 042 | 96 68 587 08 | 69 | 29 |
| 10 04 259 3 | 2 520 000 | 91 49 872 08 | 108 | 13 |
| 10 04 300 2 | 1 750 001 | 92 85 698 08 | 41 | 1 |
| 10 04 313 6 | 9 079 480 | 90 79 480 | 15 | 1 |
| 10 04 375 9 | 2 913 005 | 96 28 696 08 | 20 | 1 |
| 10 04 430 2 | 9 629 047 | 96 29 047 08 | 103 | 1 |
| 10 04 430 2 | 9 629 049 | 96 29 049 08 | 103 | 1 |
| 10 04 430 2 | X1022282 | 10 22 282 0 | 1 | 1 |
| 10 04 430 2 | XSK_Z480 | SK_Z48005 | (6) | 1 |
| 10 04 476 2 | 1 750 002 | 92 86 201 08 | 1 | 1 |
| 10 04 511 8 | 6 923 101 | 69 23 101 08 | (999) | 1 |
| 10 04 695 8 | X1022282 | 10 22 282 0 | 4 | 1 |
| 10 04 699 9 | 2 932 042 | 96 68 587 08 | (161) | 8 |
| 10 04 700 0 | 2 932 042 | 96 68 587 08 | (162) | 8 |
| 10 04 700 1 | 2 932 042 | 96 68 587 08 | (163) | 8 |
| 10 09 734 5 | 2 984 | 91 52 906 08 | 10 | 2 |
| 10 09 761 3 | X1100291 | 11 00 291 4 | 1 | 1 |
| 10 09 916 1 | 1 300 010 | 99 14 563 14 | 1 | 1 |
| 10 09 920 8 | X1032706 | 10 32 706 5 | 32 | 1 |
| 10 09 920 9 | X1032706 | 10 32 706 5 | 28 | 4 |
| 10 09 996 9 | 2 681 | 91 28 102 08 | 251 | 1 |
| 10 09 998 1 | 2 681 | 91 28 102 08 | 100 | 1 |
| 10 09 999 3 | 2 210 | 91 81 614 08 | 103 | 1 |
| 10 10 030 3 | X1011961 | 10 11 961 0 | 4 | 5 |
| 10 10 030 3 | X1011963 | 10 11 963 6 | 4 | 5 |
| 10 10 078 1 | X1011969 | 10 11 969 7 | (1) | 1 |
| 10 10 109 2 | 2 970 | 91 55 482 08 | 37 | 1 |
| 10 10 109 2 | 2 971 | 91 50 610 08 | 34 | 1 |
| 10 10 109 3 | 2 970 | 91 55 482 08 | 4 | 1 |
| 10 10 165 7 | 9 079 560 | 90 79 560 | 6 | 2 |
| 10 10 165 7 | 9 080 525 | 90 80 525 | 14 | 1 |

| Item | Page | Assembly | Pos. | Quantity |
|---|---|---|---|---|
| 10 11 249 7 | 9 080 525 | 90 80 525 | 13 | 1 |
| 10 11 292 9 | 9 075 678 | 90 75 678 | 5 | 6 |
| 10 11 371 1 | 9 080 345 | 90 80 345 | 4 | 5 |
| 10 11 371 1 | X1011998 | 10 11 998 0 | 39 | 1 |
| 10 11 373 1 | 9 079 890 | 90 79 890 | 3 | 2 |
| 10 11 373 1 | X1011583 | 10 11 583 7 | 77 | 2 |
| 10 11 373 1 | X1011801 | 10 11 801 3 | 42 | 2 |
| 10 11 373 1 | X1011801 | 10 11 801 4 | 42 | 2 |
| 10 11 397 3 | 2 200 048 | 96 32 140 08 | 14 | 2 |
| 10 11 397 5 | X1011583 | 10 11 583 7 | 58 | 1 |
| 10 11 397 5 | X1011969 | 10 11 969 7 | (2) | 1 |
| 10 11 397 5 | X1011969 | 10 11 969 7 | 51 | 1 |
| 10 11 442 6 | X1022699 | 10 22 699 3 | 998 | 4 |
| 10 11 523 3 | X1080175 | 10 80 175 1 | 14 | 1 |
| 10 11 547 7 | 9 080 525 | 90 80 525 | 1 | 1 |
| 10 11 549 1 | X1011569 | 10 11 569 6 | 2 | 1 |
| 10 11 549 9 | X1011573 | 10 11 573 7 | 38 | 1 |
| 10 11 550 2 | X1015207 | 10 15 207 7 | 387 | 1 |
| 10 11 553 9 | X1015207 | 10 15 207 7 | 450 | 1 |
| 10 11 564 1 | X1011573 | 10 11 573 7 | 7 | 1 |
| 10 11 564 2 | X1011573 | 10 11 573 7 | 4 | 1 |
| 10 11 564 4 | X1011569 | 10 11 569 6 | 3 | 1 |
| 10 11 566 4 | X1015207 | 10 15 207 7 | 452 | 1 |
| 10 11 569 6 | X1015207 | 10 15 207 7 | 214 | 1 |
| 10 11 572 9 | X1011989 | 10 11 989 1 | 2 | 1 |
| 10 11 573 7 | X1015207 | 10 15 207 7 | 212 | 1 |
| 10 11 573 8 | X1011573 | 10 11 573 7 | 6 | 1 |
| 10 11 573 9 | X1011573 | 10 11 573 7 | 1 | 1 |
| 10 11 574 1 | X1011573 | 10 11 573 7 | 10 | 1 |
| 10 11 577 1 | X1011676 | 10 11 676 8 | 10 | 1 |
| 10 11 577 6 | X1011577 | 10 11 577 7 | 1 | 1 |
| 10 11 577 7 | X1012193 | 10 12 193 2 | 10 | 1 |
| 10 11 578 0 | X1015211 | 10 15 211 6 | 2 | 1 |
| 10 11 578 1 | X1011573 | 10 11 573 7 | 9 | 1 |
| 10 11 578 2 | X1011573 | 10 11 573 7 | 5 | 1 |
| 10 11 582 9 | X1015207 | 10 15 207 7 | 520 | 1 |
| 10 11 583 7 | X1015207 | 10 15 207 7 | 939 | 1 |
| 10 11 584 9 | X1011583 | 10 11 583 7 | 3 | 1 |
| 10 11 584 9 | X1011739 | 10 11 739 8 | 999 | 1 |
| 10 11 585 1 | X1011675 | 10 11 675 9 | 997 | 1 |
| 10 11 585 2 | X1011583 | 10 11 583 7 | 9 | 1 |
| 10 11 585 2 | X1011675 | 10 11 675 9 | 998 | 1 |
| 10 11 585 3 | X1011675 | 10 11 675 9 | 999 | 1 |
| 10 11 585 4 | X1011585 | 10 11 585 1 | 7 | 1 |
| 10 11 585 4 | X1011585 | 10 11 585 2 | 7 | 4 |
| 10 11 585 4 | X1011585 | 10 11 585 3 | 7 | 6 |
| 10 11 585 4 | X1011585 | 10 11 585 9 | 7 | 1 |
| 10 11 585 4 | X1011659 | 10 11 659 1 | 999 | 1 |
| 10 11 585 5 | X1011583 | 10 11 583 7 | 13 | 4 |
| 10 11 585 5 | X1011683 | 10 11 683 9 | (999) | 1 |
| 10 11 585 9 | X1011675 | 10 11 675 9 | 996 | 1 |
| 10 11 599 0 | X1011573 | 10 11 573 7 | 8 | 1 |
| 10 11 599 1 | X1011573 | 10 11 573 7 | 2 | 1 |
| 10 11 599 3 | X1015207 | 10 15 207 7 | 571 | 1 |
| 10 11 599 4 | X1011599 | 10 11 599 3 | 2 | 1 |
| 10 11 599 6 | X1011599 | 10 11 599 3 | 1 | 1 |
| 10 11 600 9 | X1011573 | 10 11 573 7 | 3 | 1 |
| 10 11 607 8 | X1012580 | 10 12 580 1 | 8 | 1 |
| 10 11 611 0 | X1015207 | 10 15 207 7 | 521 | 1 |
| 10 11 614 6 | X1015207 | 10 15 207 7 | 217 | 1 |

| Item | Page | Assembly | Pos. | Quantity |
|---|---|---|---|---|
| 10 11 614 7 | X1011614 | 10 11 614 6 | 2 | 1 |
| 10 11 625 5 | 9 078 314 | 90 78 314 | (1) | 1 |
| 10 11 625 7 | X1011683 | 10 11 683 9 | 1 | 1 |
| 10 11 627 4 | X1011599 | 10 11 599 3 | 3 | 8 |
| 10 11 631 0 | X1011583 | 10 11 583 7 | 4302 | 1 |
| 10 11 631 0 | X1011766 | 10 11 766 5 | 7 | 1 |
| 10 11 631 0 | X1011914 | 10 11 914 1 | 10 | 1 |
| 10 11 631 0 | X1011989 | 10 11 989 7 | 24 | 1 |
| 10 11 658 7 | X1011709 | 10 11 709 3 | 1 | 1 |
| 10 11 659 1 | X1015207 | 10 15 207 7 | 190 | 4 |
| 10 11 675 9 | X1012193 | 10 12 193 2 | 80 | 4 |
| 10 11 676 8 | 9 080 525 | 90 80 525 | 2 | 1 |
| 10 11 683 9 | X1012193 | 10 12 193 2 | 170 | 4 |
| 10 11 693 4 | 9 076 459 | 90 76 459 | 50 | 1 |
| 10 11 693 9 | 9 076 457 | 90 76 457 | 1 | 1 |
| 10 11 707 0 | X1011707 | 10 11 707 2 | 1 | 1 |
| 10 11 707 2 | X1015207 | 10 15 207 7 | 220 | 1 |
| 10 11 709 3 | X1011659 | 10 11 659 1 | 998 | 1 |
| 10 11 709 4 | X1011611 | 10 11 611 0 | 10 | 1 |
| 10 11 722 8 | X1015207 | 10 15 207 7 | 132 | 1 |
| 10 11 739 6 | X1011739 | 10 11 739 7 | 1 | 1 |
| 10 11 739 7 | X1011739 | 10 11 739 8 | 1 | 1 |
| 10 11 739 8 | X1012193 | 10 12 193 2 | 130 | 1 |
| 10 11 755 1 | X1011573 | 10 11 573 7 | 34 | 1 |
| 10 11 766 5 | X1015207 | 10 15 207 7 | 333 | 1 |
| 10 11 766 6 | X1011766 | 10 11 766 5 | 1 | 1 |
| 10 11 770 9 | X1011584 | 10 11 584 9 | 1 | 1 |
| 10 11 770 9 | X1011739 | 10 11 739 8 | 2 | 1 |
| 10 11 783 6 | 9 073 767 | 90 73 767 | 1 | 1 |
| 10 11 787 8 | X1011832 | 10 11 832 6 | 7 | 1 |
| 10 11 791 4 | X1011810 | 10 11 810 1 | 1 | 1 |
| 10 11 792 6 | X1011919 | 10 11 919 7 | 1 | 1 |
| 10 11 792 8 | X1011793 | 10 11 793 0 | 3 | 1 |
| 10 11 792 9 | X1011793 | 10 11 793 0 | 1 | 1 |
| 10 11 793 0 | X1015207 | 10 15 207 7 | 334 | 1 |
| 10 11 794 9 | X1011795 | 10 11 795 1 | 5 | 1 |
| 10 11 795 1 | X1012193 | 10 12 193 2 | 14 | 1 |
| 10 11 801 3 | 9 079 480 | 90 79 480 | 50 | 1 |
| 10 11 801 4 | 9 079 480 | 90 79 480 | 51 | 1 |
| 10 11 810 1 | X1015207 | 10 15 207 7 | 410 | 1 |
| 10 11 813 4 | X1011832 | 10 11 832 6 | 6 | 5 |
| 10 11 814 6 | X1011832 | 10 11 832 6 | 4 | 2 |
| 10 11 814 8 | X1011582 | 10 11 582 9 | 1 | 1 |
| 10 11 814 9 | X1011832 | 10 11 832 6 | 2 | 2 |
| 10 11 816 1 | X1015207 | 10 15 207 7 | 230 | 1 |
| 10 11 816 2 | X1011816 | 10 11 816 1 | 2 | 1 |
| 10 11 818 1 | X1011969 | 10 11 969 7 | 50 | 1 |
| 10 11 827 2 | X1011832 | 10 11 832 6 | 3 | 1 |
| 10 11 832 6 | X1015207 | 10 15 207 7 | 430 | 1 |
| 10 11 834 3 | X1011832 | 10 11 832 6 | 12 | 1 |
| 10 11 835 6 | 9 080 280 | 90 80 280 | 1 | 1 |
| 10 11 836 3 | X1011998 | 10 11 998 0 | 62 | 1 |
| 10 11 852 6 | 9 080 591 | 90 80 591 | 8 | 1 |
| 10 11 854 7 | X1011801 | 10 11 801 3 | 15 | 1 |
| 10 11 854 7 | X1012414 | 10 12 414 0 | 2 | 1 |
| 10 11 854 9 | X1011801 | 10 11 801 4 | 15 | 1 |
| 10 11 855 0 | X1011801 | 10 11 801 4 | 19 | 1 |
| 10 11 855 1 | X1011801 | 10 11 801 4 | 18 | 3 |
| 10 11 855 4 | X1011585 | 10 11 585 1 | 18 | 1 |
| 10 11 855 4 | X1011585 | 10 11 585 2 | 18 | 4 |

| Item | Page | Assembly | Pos. | Quantity |
|---|---|---|---|---|
| 10 11 855 4 | X1011585 | 10 11 585 3 | 18 | 6 |
| 10 11 855 4 | X1011585 | 10 11 585 4 | 7 | 1 |
| 10 11 855 4 | X1011585 | 10 11 585 9 | 18 | 1 |
| 10 11 855 4 | X1011709 | 10 11 709 3 | 7 | 1 |
| 10 11 855 4 | X1011961 | 10 11 961 0 | 7 | 1 |
| 10 11 855 4 | X1011963 | 10 11 963 6 | 7 | 1 |
| 10 11 855 4 | XSK_Z480 | SK_Z48005 | (8) | 4 |
| 10 11 855 6 | X1011585 | 10 11 585 1 | 3 | 6 |
| 10 11 855 6 | X1011585 | 10 11 585 2 | 3 | 4 |
| 10 11 855 6 | X1011585 | 10 11 585 3 | 3 | 6 |
| 10 11 855 6 | X1011585 | 10 11 585 9 | 3 | 4 |
| 10 11 855 6 | X1011707 | 10 11 707 2 | 6 | 4 |
| 10 11 864 6 | X1015207 | 10 15 207 7 | 440 | 1 |
| 10 11 878 6 | 9 080 591 | 90 80 591 | 10 | 6 |
| 10 11 883 8 | X1011883 | 10 11 883 9 | 1 | 1 |
| 10 11 883 9 | X1015207 | 10 15 207 7 | 23 | 1 |
| 10 11 888 4 | X1015207 | 10 15 207 7 | 21 | 1 |
| 10 11 888 5 | X1011888 | 10 11 888 4 | 1 | 1 |
| 10 11 891 0 | 9 077 238 | 90 77 238 | 4 | 10 |
| 10 11 901 1 | X1011963 | 10 11 963 6 | 1 | 1 |
| 10 11 901 9 | X1011989 | 10 11 989 7 | 5 | 1 |
| 10 11 911 9 | X1011912 | 10 11 912 7 | 1 | 1 |
| 10 11 912 7 | X1011914 | 10 11 914 1 | 2 | 1 |
| 10 11 912 8 | X1015207 | 10 15 207 7 | 522 | 1 |
| 10 11 912 9 | X1011912 | 10 11 912 8 | 1 | 1 |
| 10 11 914 1 | X1015207 | 10 15 207 7 | 16 | 1 |
| 10 11 914 2 | X1011914 | 10 11 914 1 | 3 | 1 |
| 10 11 919 7 | X1015207 | 10 15 207 7 | 415 | 1 |
| 10 11 930 5 | X1011585 | 10 11 585 1 | 2 | 4 |
| 10 11 930 5 | X1011585 | 10 11 585 2 | 2 | 16 |
| 10 11 930 5 | X1011585 | 10 11 585 3 | 2 | 24 |
| 10 11 930 5 | X1011585 | 10 11 585 9 | 2 | 4 |
| 10 11 960 2 | X1011961 | 10 11 961 0 | 1 | 1 |
| 10 11 961 0 | X1015207 | 10 15 207 7 | 82 | 3 |
| 10 11 963 6 | X1015207 | 10 15 207 7 | 84 | 1 |
| 10 11 969 5 | 9 079 861 | 90 79 861 | 1 | 2 |
| 10 11 969 7 | X1011969 | 10 11 969 8 | 11 | 1 |
| 10 11 969 8 | X1015207 | 10 15 207 7 | 581 | 1 |
| 10 11 988 5 | X1011989 | 10 11 989 1 | 3 | 1 |
| 10 11 989 1 | X1015207 | 10 15 207 7 | 200 | 1 |
| 10 11 989 7 | X1011832 | 10 11 832 6 | 50 | 1 |
| 10 11 992 7 | X1011693 | 10 11 693 9 | 3 | 2 |
| 10 11 992 8 | X1011693 | 10 11 693 9 | 4 | 2 |
| 10 11 997 1 | X1012024 | 10 12 024 2 | 6 | 1 |
| 10 11 997 6 | X1015207 | 10 15 207 7 | 654 | 1 |
| 10 11 997 9 | X1011998 | 10 11 998 0 | 5 | 1 |
| 10 11 998 0 | X1015207 | 10 15 207 7 | 580 | 1 |
| 10 11 998 4 | 9 075 678 | 90 75 678 | 1 | 1 |
| 10 11 999 4 | X1011997 | 10 11 997 6 | 13 | 2 |
| 10 12 000 9 | 9 077 279 | 90 77 279 | 1 | 1 |
| 10 12 006 6 | X1012580 | 10 12 580 1 | 5 | 1 |
| 10 12 024 1 | X1012024 | 10 12 024 2 | 1 | 1 |
| 10 12 024 2 | X1015207 | 10 15 207 7 | 25 | 1 |
| 10 12 028 4 | X1011998 | 10 11 998 0 | 13 | 1 |
| 10 12 033 4 | X1011585 | 10 11 585 1 | 5 | 4 |
| 10 12 033 4 | X1011585 | 10 11 585 2 | 5 | 16 |
| 10 12 033 4 | X1011585 | 10 11 585 3 | 5 | 24 |
| 10 12 033 4 | X1011585 | 10 11 585 9 | 5 | 4 |
| 10 12 033 4 | X1012036 | 10 12 036 5 | 5 | 4 |
| 10 12 033 4 | X1014155 | 10 14 155 5 | 5 | 4 |

| Item | Page | Assembly | Pos. | Quantity |
|---|---|---|---|---|
| 10 12 036 5 | X1011675 | 10 11 675 9 | 1 | 1 |
| 10 12 038 3 | X1012036 | 10 12 036 5 | 1 | 1 |
| 10 12 038 3 | X1014155 | 10 14 155 5 | 1 | 1 |
| 10 12 044 3 | 9 075 133 | 90 75 133 | 3 | 1 |
| 10 12 064 0 | X1011801 | 10 11 801 4 | 17 | 1 |
| 10 12 084 4 | X1011585 | 10 11 585 1 | 1 | 1 |
| 10 12 084 4 | X1011585 | 10 11 585 2 | 1 | 4 |
| 10 12 084 4 | X1011585 | 10 11 585 3 | 1 | 6 |
| 10 12 084 4 | X1011585 | 10 11 585 9 | 1 | 1 |
| 10 12 084 4 | X1011675 | 10 11 675 9 | 2 | 1 |
| 10 12 092 9 | X1011795 | 10 11 795 1 | 12 | 1 |
| 10 12 133 5 | 9 075 133 | 90 75 133 | 2 | 1 |
| 10 12 133 5 | X1011583 | 10 11 583 7 | 5 | 1 |
| 10 12 166 6 | X1012166 | 10 12 166 7 | 1 | 1 |
| 10 12 166 7 | X1012414 | 10 12 414 0 | 4 | 1 |
| 10 12 193 2 | X1015207 | 10 15 207 7 | 1 | 1 |
| 10 12 195 2 | 9 075 133 | 90 75 133 | 1 | 1 |
| 10 12 195 2 | X1011583 | 10 11 583 7 | 4 | 1 |
| 10 12 195 2 | X1011801 | 10 11 801 3 | 1 | 1 |
| 10 12 195 2 | X1011801 | 10 11 801 4 | 1 | 1 |
| 10 12 223 3 | X1012193 | 10 12 193 2 | 100 | 1 |
| 10 12 256 0 | X1012223 | 10 12 223 3 | 1 | 1 |
| 10 12 389 0 | X1015207 | 10 15 207 7 | 570 | 1 |
| 10 12 411 6 | X1011566 | 10 11 566 4 | 1 | 1 |
| 10 12 414 0 | X1015207 | 10 15 207 7 | 20 | 1 |
| 10 12 500 7 | X1015207 | 10 15 207 7 | 201 | 1 |
| 10 12 580 1 | X1012500 | 10 12 500 7 | 1 | 1 |
| 10 12 618 8 | X1011998 | 10 11 998 0 | 1 | 1 |
| 10 12 673 8 | 9 079 480 | 90 79 480 | 3 | 1 |
| 10 12 673 8 | X1011583 | 10 11 583 7 | 7 | 1 |
| 10 12 673 8 | X1011801 | 10 11 801 3 | 2 | 1 |
| 10 12 673 8 | X1011801 | 10 11 801 4 | 2 | 1 |
| 10 12 851 6 | X1011583 | 10 11 583 7 | 10 | 1 |
| 10 12 962 5 | X1015207 | 10 15 207 7 | 22 | 1 |
| 10 13 117 7 | 9 078 832 | 90 78 832 | 1 | 1 |
| 10 13 307 7 | X1011969 | 10 11 969 8 | 20 | 2 |
| 10 13 434 8 | X1011582 | 10 11 582 9 | 3 | 2 |
| 10 13 573 0 | X1011997 | 10 11 997 9 | 69 | 1 |
| 10 13 621 2 | 9 079 480 | 90 79 480 | 1 | 1 |
| 10 13 675 2 | X1014155 | 10 14 155 5 | 2 | 2 |
| 10 13 675 3 | X1014155 | 10 14 155 5 | 4 | 2 |
| 10 13 772 1 | X1011582 | 10 11 582 9 | 5 | 1 |
| 10 13 772 1 | X1011583 | 10 11 583 7 | 6 | 1 |
| 10 13 906 4 | X1012038 | 10 12 038 3 | 4 | 4 |
| 10 14 048 7 | 9 076 459 | 90 76 459 | 51 | 1 |
| 10 14 048 8 | 9 076 459 | 90 76 459 | 52 | 1 |
| 10 14 155 5 | X1011675 | 10 11 675 9 | 1 | 1 |
| 10 14 155 7 | X1011585 | 10 11 585 1 | 4 | 6 |
| 10 14 155 7 | X1011585 | 10 11 585 2 | 4 | 4 |
| 10 14 155 7 | X1011585 | 10 11 585 3 | 4 | 6 |
| 10 14 155 7 | X1011585 | 10 11 585 9 | 4 | 4 |
| 10 14 155 7 | X1011810 | 10 11 810 1 | 6 | 4 |
| 10 14 194 9 | 9 079 468 | 90 79 468 | 1 | 1 |
| 10 14 740 9 | 9 078 249 | 90 78 249 | 1 | 1 |
| 10 15 207 7 | X1015211 | 10 15 211 6 | 1 | 1 |
| 10 15 211 6 | 2 210 | 91 81 614 08 | 100 | 1 |
| 10 15 216 8 | X1012038 | 10 12 038 3 | 2 | 1 |
| 10 15 278 1 | X1012580 | 10 12 580 1 | 2 | 1 |
| 10 15 353 6 | 9 079 870 | 90 79 870 | 1 | 2 |
| 10 15 353 8 | 9 079 870 | 90 79 870 | 2 | 2 |
| 10 15 353 8 | X1011683 | 10 11 683 9 | 4 | 1 |
| 10 15 494 4 | 9 076 534 | 90 76 534 | 1 | 1 |
| 10 15 494 4 | X1013307 | 10 13 307 7 | 1 | 1 |
| 10 15 522 1 | X1012414 | 10 12 414 0 | 1 | 1 |
| 10 16 615 7 | 9 686 071 | 96 86 071 01 | 73 | 1 |
| 10 16 746 2 | 9 330 748 | 93 30 748 01 | 64 | 2 |
| 10 17 163 2 | 5 923 269 | 59 23 269 14 | 9 | 1 |
| 10 17 935 6 | 3 101 | 91 60 312 08 | 42 | 36 |
| 10 17 935 6 | 3 102 000 | 91 62 543 08 | 42 | 36 |
| 10 17 935 6 | 3 103 000 | 91 62 544 08 | 42 | 36 |
| 10 17 935 6 | 3 104 000 | 91 62 545 08 | 42 | 24 |
| 10 17 935 6 | 3 105 000 | 91 62 546 08 | 42 | 24 |
| 10 18 036 4 | 2 500 | 91 48 594 08 | 21 | 2 |
| 10 18 036 4 | 3 510 006 | 96 20 924 08 | 5 | 1 |
| 10 21 589 2 | 2 790 024 | 96 67 077 08 | 9 | 1 |
| 10 21 589 3 | 2 790 024 | 96 67 077 08 | 4 | 1 |
| 10 21 652 9 | 2 831 | 91 47 871 08 | 60 | 1 |
| 10 21 653 4 | 2 831 | 91 47 871 08 | 61 | 2 |
| 10 21 738 3 | 5 718 176 | 57 18 176 08 | 9 | 2 |
| 10 21 801 3 | X1012414 | 10 12 414 0 | 3 | 28 |
| 10 21 831 0 | 2 970 | 91 55 482 08 | 26 | 1 |
| 10 21 837 0 | X1021997 | 10 21 997 8 | 2 | 1 |
| 10 21 837 0 | X1138664 | 11 38 664 4 | 2 | 1 |
| 10 21 921 9 | X1081388 | 10 81 388 6 | 2 | 1 |
| 10 21 936 1 | 2 520 001 | 92 48 796 08 | 9 | 3 |
| 10 21 961 8 | 7 029 305 | 70 29 305 | 2 | 1 |
| 10 21 961 9 | 7 029 305 | 70 29 305 | 3 | 1 |
| 10 21 962 0 | 7 029 305 | 70 29 305 | 999 | 1 |
| 10 21 997 8 | X1011553 | 10 11 553 9 | 1 | 1 |
| 10 22 282 0 | X1011989 | 10 11 989 1 | 1 | 1 |
| 10 22 299 9 | 1 100 215 | 99 20 783 14 | 1 | 1 |
| 10 22 427 8 | 1 100 215 | 99 20 783 14 | 2 | 2 |
| 10 22 427 9 | 1 100 215 | 99 20 783 14 | 3 | 2 |
| 10 22 581 0 | 1 100 205 | 96 51 633 08 | 8 | 12 |
| 10 22 581 0 | 1 100 210 | 96 51 634 08 | 8 | 12 |
| 10 22 596 7 | 1 100 210 | 96 51 634 08 | 1 | 1 |
| 10 22 596 9 | 1 100 205 | 96 51 633 08 | 1 | 1 |
| 10 22 699 3 | 1 423 101 | 99 26 462 14 | 1 | 1 |
| 10 22 810 0 | X1011578 | 10 11 578 0 | 1 | 1 |
| 10 22 814 3 | 2 200 048 | 96 32 140 08 | 2 | 1 |
| 10 27 855 3 | 9 629 047 | 96 29 047 08 | 205 | 1 |
| 10 27 855 3 | X1009998 | 10 09 998 1 | 1 | 1 |
| 10 27 855 3 | XSK_Z480 | SK_Z48005 | (9) | 1 |
| 10 27 921 0 | 2 913 003 | 96 20 599 08 | 2 | 1 |
| 10 27 991 4 | X1047529 | 10 47 529 1 | (1) | 1 |
| 10 28 018 1 | X1022282 | 10 22 282 0 | 2 | 1 |
| 10 28 018 4 | X1003269 | 10 03 269 6 | 6 | 1 |
| 10 28 018 5 | X1028018 | 10 28 018 1 | 1 | 1 |
| 10 28 030 2 | 2 920 083 | 96 31 039 08 | (1) | 2 |
| 10 28 262 2 | X1012166 | 10 12 166 7 | 100 | 1 |
| 10 28 262 2 | X1012223 | 10 12 223 3 | 100 | 1 |
| 10 28 292 8 | 1 100 301 | 96 72 945 08 | 3 | 1 |
| 10 28 444 4 | 2 780 850 | 91 60 938 08 | 20 | 1 |
| 10 28 517 1 | 1 920 307 | 96 46 916 08 | 5 | 1 |
| 10 28 524 3 | 2 970 | 91 55 482 08 | 3 | 1 |
| 10 28 570 8 | 9 074 165 | 90 74 165 | 100 | 1 |
| 10 28 570 8 | 9 078 249 | 90 78 249 | 100 | 1 |
| 10 28 570 8 | 9 078 962 | 90 78 962 | 100 | 1 |
| 10 28 570 8 | X1011566 | 10 11 566 4 | 100 | 1 |
| 10 28 570 8 | X1011573 | 10 11 573 7 | 100 | 1 |

| Item | Page | Assembly | Pos. | Quantity |
|---|---|---|---|---|
| 10 28 570 8 | X1011582 | 10 11 582 9 | 100 | 1 |
| 10 28 570 8 | X1011683 | 10 11 683 9 | 100 | 1 |
| 10 28 570 8 | X1011816 | 10 11 816 1 | 100 | 1 |
| 10 28 584 5 | 2 970 | 91 55 482 08 | 6 | 1 |
| 10 28 635 3 | 2 932 167 | 96 32 480 08 | 3 | 1 |
| 10 28 635 3 | 3 930 718 | 96 56 248 08 | 206 | 1 |
| 10 28 635 4 | 1 920 314 | 96 46 921 08 | 11 | 23 |
| 10 28 635 4 | 2 932 167 | 96 32 480 08 | 5 | 2 |
| 10 28 635 4 | 3 930 492 | 96 20 966 08 | 297 | 15 |
| 10 28 635 4 | 3 930 718 | 96 56 248 08 | 204 | 21 |
| 10 28 684 0 | 2 790 040 | 91 60 499 08 | (1) | 1 |
| 10 28 920 8 | X1028018 | 10 28 018 1 | 3 | 1 |
| 10 28 921 0 | X1028018 | 10 28 018 1 | 2 | 1 |
| 10 28 954 9 | 5 102 407 | 51 02 407 08 | 1 | 1 |
| 10 28 963 1 | 2 780 851 | 96 24 498 08 | 2 | 1 |
| 10 28 979 5 | 1 100 215 | 99 20 783 14 | 44 | 8 |
| 10 28 979 5 | 1 300 010 | 99 14 563 14 | 7 | 2 |
| 10 28 979 5 | 2 210 | 91 81 614 08 | 377 | 11 |
| 10 28 979 5 | 2 210 | 91 81 614 08 | 388 | 1 |
| 10 28 979 5 | 2 210 008 | 96 48 137 08 | 378 | 2 |
| 10 28 979 5 | 2 260 006 | 96 31 147 08 | 5 | 6 |
| 10 28 979 5 | 2 340 004 | 96 43 780 08 | 11 | 8 |
| 10 28 979 5 | 2 440 | 91 52 288 08 | 40 | 4 |
| 10 28 979 5 | 2 501 000 | 91 48 769 08 | 28 | 6 |
| 10 28 979 5 | 2 510 100 | 96 44 750 08 | 377 | 4 |
| 10 28 979 5 | 2 520 000 | 91 49 872 08 | 142 | 1 |
| 10 28 979 5 | 2 680 | 91 53 225 08 | 375 | 10 |
| 10 28 979 5 | 2 790 901 | 91 54 183 08 | 11 | 2 |
| 10 28 979 5 | 3 330 | 91 57 885 08 | 11 | 8 |
| 10 28 979 5 | 3 501 | 91 05 788 08 | 47 | 2 |
| 10 28 980 3 | 1 100 216 | 96 46 363 08 | 3 | 24 |
| 10 28 980 3 | 1 970 | 96 71 367 08 | 34 | 2 |
| 10 28 980 3 | 2 102 | 91 51 080 08 | 30 | 9 |
| 10 28 980 3 | 2 210 | 91 81 614 08 | 375 | 21 |
| 10 28 980 3 | 2 210 008 | 96 48 137 08 | 376 | 16 |
| 10 28 980 3 | 2 260 | 91 46 555 08 | 3 | 12 |
| 10 28 980 3 | 2 430 | 91 54 389 08 | 7 | 4 |
| 10 28 980 3 | 2 500 | 91 48 594 08 | 14 | 4 |
| 10 28 980 3 | 2 502 | 91 01 533 08 | 20 | 10 |
| 10 28 980 3 | 2 510 072 | 96 44 614 08 | 11 | 2 |
| 10 28 980 3 | 2 510 100 | 96 44 750 08 | 380 | 5 |
| 10 28 980 3 | 2 510 200 | 96 41 258 08 | 23 | 4 |
| 10 28 980 3 | 2 515 007 | 96 42 014 08 | 9 | 8 |
| 10 28 980 3 | 2 520 000 | 91 49 872 08 | 80 | 50 |
| 10 28 980 3 | 2 520 041 | 96 84 504 08 | 4 | 4 |
| 10 28 980 3 | 2 522 | 91 10 037 08 | 29 | 20 |
| 10 28 980 3 | 2 540 | 91 45 984 08 | 13 | 1 |
| 10 28 980 3 | 2 831 | 91 47 871 08 | 26 | 10 |
| 10 28 980 3 | 2 920 585 | 91 01 520 08 | 13 | 2 |
| 10 28 980 3 | 2 932 042 | 96 68 587 08 | 77 | 2 |
| 10 28 980 3 | 2 932 166 | 92 68 911 08 | 13 | 4 |
| 10 28 980 3 | 2 970 | 91 55 482 08 | 81 | 6 |
| 10 28 980 3 | 2 984 | 91 52 906 08 | 375 | 20 |
| 10 28 980 3 | 3 100 | 91 59 279 08 | 15 | 7 |
| 10 28 980 3 | 3 101 | 91 60 312 08 | 31 | 9 |
| 10 28 980 3 | 3 102 000 | 91 62 543 08 | 17 | 6 |
| 10 28 980 3 | 3 103 000 | 91 62 544 08 | 17 | 6 |
| 10 28 980 3 | 3 104 000 | 91 62 545 08 | 17 | 6 |
| 10 28 980 3 | 3 105 000 | 91 62 546 08 | 17 | 4 |
| 10 28 980 3 | 3 106 000 | 91 60 313 08 | 17 | 6 |
| 10 28 980 3 | 3 330 | 91 57 885 08 | 29 | 10 |
| 10 28 980 3 | 3 501 | 91 05 788 08 | 71 | 2 |
| 10 28 980 3 | 9 077 279 | 90 77 279 | 8 | 2 |
| 10 28 980 3 | X1011997 | 10 11 997 9 | 8 | 1 |
| 10 28 980 4 | 1 100 205 | 96 51 633 08 | 27 | 3 |
| 10 28 980 4 | 1 100 210 | 96 51 634 08 | 27 | 3 |
| 10 28 980 4 | 1 100 215 | 99 20 783 14 | 42 | 24 |
| 10 28 980 4 | 1 400 200 | 91 53 791 08 | 28 | 8 |
| 10 28 980 4 | 2 210 | 91 81 614 08 | 379 | 3 |
| 10 28 980 4 | 2 340 004 | 96 43 780 08 | 18 | 8 |
| 10 28 980 4 | 2 420 | 91 32 936 08 | 7 | 2 |
| 10 28 980 4 | 2 440 022 | 96 42 336 08 | 22 | 8 |
| 10 28 980 4 | 2 500 | 91 48 594 08 | 18 | 8 |
| 10 28 980 4 | 3 100 | 91 59 279 08 | 20 | 4 |
| 10 28 980 4 | 3 101 | 91 60 312 08 | 37 | 32 |
| 10 28 980 4 | 3 102 000 | 91 62 543 08 | 37 | 14 |
| 10 28 980 4 | 3 103 000 | 91 62 544 08 | 37 | 14 |
| 10 28 980 4 | 3 104 000 | 91 62 545 08 | 37 | 10 |
| 10 28 980 4 | 3 105 000 | 91 62 546 08 | 37 | 10 |
| 10 28 980 4 | 3 106 000 | 91 60 313 08 | 64 | 3 |
| 10 28 980 4 | 3 501 | 91 05 788 08 | 73 | 1 |
| 10 28 980 4 | X1011578 | 10 11 578 0 | 3 | 8 |
| 10 28 980 4 | X1011582 | 10 11 582 9 | 8 | 17 |
| 10 28 980 6 | 1 100 215 | 99 20 783 14 | 41 | 3 |
| 10 28 980 6 | 2 210 | 91 81 614 08 | 380 | 8 |
| 10 28 980 6 | 2 440 022 | 96 42 336 08 | 15 | 2 |
| 10 28 980 7 | 3 330 | 91 57 885 08 | 42 | 2 |
| 10 28 981 1 | 2 500 | 91 48 594 08 | 10 | 5 |
| 10 28 981 2 | 3 501 | 91 05 788 08 | 50 | 2 |
| 10 28 984 7 | 3 501 | 91 05 788 08 | 44 | 1 |
| 10 28 985 0 | 3 501 | 91 05 788 08 | 48 | 2 |
| 10 28 985 2 | 3 501 | 91 05 788 08 | 49 | 6 |
| 10 29 006 8 | 2 920 | 91 55 477 08 | (1) | 1 |
| 10 29 053 7 | X1011573 | 10 11 573 7 | 18 | 4 |
| 10 29 147 4 | 2 971 | 91 50 610 08 | 2 | 1 |
| 10 29 225 3 | 2 520 000 | 91 49 872 08 | 149 | 2 |
| 10 29 358 6 | 2 971 | 91 50 610 08 | 3 | 1 |
| 10 29 377 5 | 5 701 090 | 57 01 090 08 | 10 | 1 |
| 10 29 468 4 | 2 515 007 | 96 42 014 08 | 4 | 2 |
| 10 29 511 6 | 9 075 483 | 90 75 483 | 2 | 1 |
| 10 29 615 7 | 2 510 100 | 96 44 750 08 | (2) | 3 |
| 10 29 729 5 | 9 075 368 | 90 75 368 | 8 | 2 |
| 10 29 729 5 | 9 629 047 | 96 29 047 08 | 1 | 2 |
| 10 29 729 5 | 9 629 049 | 96 29 049 08 | 1 | 2 |
| 10 29 729 5 | XSK_Z480 | SK_Z48005 | (1) | 2 |
| 10 29 878 9 | 2 502 | 91 01 533 08 | 35 | 4 |
| 10 29 957 4 | 2 500 | 91 48 594 08 | 17 | 8 |
| 10 29 966 9 | 2 210 008 | 96 48 137 08 | 350 | 16 |
| 10 29 966 9 | 2 510 072 | 96 44 614 08 | 16 | 2 |
| 10 29 966 9 | 2 932 166 | 92 68 911 08 | 10 | 4 |
| 10 29 998 8 | 9 078 314 | 90 78 314 | 1 | 1 |
| 10 30 062 1 | 2 920 585 | 91 01 520 08 | (4) | 1 |
| 10 32 500 1 | X1011739 | 10 11 739 7 | 3 | 1 |
| 10 32 624 3 | X1011864 | 10 11 864 6 | 1 | 1 |
| 10 32 633 4 | 2 571 | 91 50 902 08 | 1 | 2 |
| 10 32 665 4 | 2 340 004 | 96 43 780 08 | 3 | 2 |
| 10 32 680 3 | 2 560 | 91 50 900 08 | 5 | 2 |
| 10 32 681 6 | 2 571 | 91 50 902 08 | 17 | 4 |
| 10 32 686 8 | X1011832 | 10 11 832 6 | 1 | 1 |
| 10 32 706 5 | 2 711 | 91 53 002 08 | 1 | 1 |

| Item | Page | Assembly | Pos. | Quantity |
|---|---|---|---|---|
| 10 33 095 3 | X1011832 | 10 11 832 6 | 8 | 2 |
| 10 33 095 4 | X1011832 | 10 11 832 6 | 9 | 2 |
| 10 33 152 6 | 2 520 041 | 96 84 504 08 | 1 | 1 |
| 10 33 187 4 | 4 027 | 91 42 310 08 | 5 | 1 |
| 10 33 194 6 | 7 029 305 | 70 29 305 | 998 | 1 |
| 10 33 194 7 | X1042993 | 10 42 993 3 | 999 | 1 |
| 10 33 284 3 | X1011997 | 10 11 997 9 | 1 | 1 |
| 10 33 299 6 | X1011997 | 10 11 997 6 | 11 | 2 |
| 10 33 346 4 | X1012500 | 10 12 500 7 | 2 | 2 |
| 10 33 367 2 | 2 970 | 91 55 482 08 | 16 | 1 |
| 10 33 368 6 | 2 970 | 91 55 482 08 | 20 | 1 |
| 10 33 430 5 | X1010109 | 10 10 109 3 | (1) | 1 |
| 10 33 448 8 | 2 510 100 | 96 44 750 08 | 107 | 1 |
| 10 33 559 6 | 6 060 950 | 60 60 950 08 | 3 | 4 |
| 10 33 562 9 | X1011883 | 10 11 883 9 | 3 | 1 |
| 10 33 585 5 | X1042993 | 10 42 993 3 | 3 | 1 |
| 10 33 620 0 | X1011919 | 10 11 919 7 | 3 | 8 |
| 10 33 738 1 | 5 106 976 | 51 06 976 08 | 7 | 1 |
| 10 33 738 1 | X1033367 | 10 33 367 2 | (1) | 2 |
| 10 34 043 8 | 2 932 042 | 96 68 587 08 | 21 | 1 |
| 10 34 219 1 | 9 075 133 | 90 75 133 | 4 | 3 |
| 10 34 357 4 | 3 930 523 | 96 43 943 08 | 5 | 1 |
| 10 34 659 9 | 2 970 | 91 55 482 08 | (1) | 1 |
| 10 34 659 9 | X1029358 | 10 29 358 6 | 1 | 1 |
| 10 34 693 8 | 2 270 001 | 96 37 923 08 | (5) | 1 |
| 10 34 723 6 | X1010109 | 10 10 109 3 | 16 | 1 |
| 10 35 459 5 | X1012414 | 10 12 414 0 | 100 | 1 |
| 10 35 483 5 | X1009734 | 10 09 734 5 | 1 | 1 |
| 10 35 483 6 | X1009734 | 10 09 734 5 | 2 | 1 |
| 10 35 483 7 | X1009734 | 10 09 734 5 | 3 | 1 |
| 10 35 483 9 | X1009734 | 10 09 734 5 | 4 | 1 |
| 10 35 514 0 | X1032706 | 10 32 706 5 | 2 | 1 |
| 10 35 540 9 | 2 932 042 | 96 68 587 08 | 35 | 1 |
| 10 35 601 8 | 2 430 | 91 54 389 08 | 15 | 1 |
| 10 40 981 7 | X1032706 | 10 32 706 5 | 34 | 1 |
| 10 41 109 2 | X1021997 | 10 21 997 8 | 4 | 1 |
| 10 41 109 2 | X1138664 | 11 38 664 4 | 4 | 1 |
| 10 41 109 3 | X1021997 | 10 21 997 8 | 6 | 2 |
| 10 41 109 3 | X1138664 | 11 38 664 4 | 6 | 2 |
| 10 41 109 4 | X1021997 | 10 21 997 8 | 3 | 1 |
| 10 41 109 4 | X1138664 | 11 38 664 4 | 3 | 1 |
| 10 41 109 5 | X1021997 | 10 21 997 8 | 5 | 2 |
| 10 41 109 5 | X1138664 | 11 38 664 4 | 5 | 2 |
| 10 41 177 8 | X1034357 | 10 34 357 4 | 14 | 3 |
| 10 41 177 9 | X1034357 | 10 34 357 4 | 20 | 1 |
| 10 41 178 0 | X1034357 | 10 34 357 4 | 22 | 1 |
| 10 41 178 1 | X1034357 | 10 34 357 4 | 23 | 9 |
| 10 41 178 3 | X1034357 | 10 34 357 4 | 24 | 1 |
| 10 41 178 5 | X1034357 | 10 34 357 4 | 26 | 1 |
| 10 41 178 6 | X1034357 | 10 34 357 4 | 27 | 9 |
| 10 41 178 7 | X1034357 | 10 34 357 4 | 29 | 1 |
| 10 41 191 3 | X1028524 | 10 28 524 3 | 1 | 1 |
| 10 41 191 5 | X1028524 | 10 28 524 3 | 4 | 1 |
| 10 41 260 4 | X1041191 | 10 41 191 5 | 29 | 3 |
| 10 41 260 5 | X1041191 | 10 41 191 5 | 31 | 2 |
| 10 41 260 9 | X1041191 | 10 41 191 5 | 999 | 1 |
| 10 41 263 2 | X1029147 | 10 29 147 4 | 999 | 1 |
| 10 41 263 2 | X1047529 | 10 47 529 1 | 999 | 1 |
| 10 41 263 2 | X1047529 | 10 47 529 2 | 999 | 1 |
| 10 41 285 1 | 2 510 100 | 96 44 750 08 | 301 | 10 |
| 10 41 285 1 | 2 681 | 91 28 102 08 | 301 | 8 |
| 10 41 285 2 | 2 510 200 | 96 41 258 08 | 34 | 4 |
| 10 41 285 4 | 2 102 | 91 51 080 08 | 7 | 4 |
| 10 41 285 4 | 2 210 | 91 81 614 08 | 300 | 6 |
| 10 41 285 4 | 2 430 | 91 54 389 08 | 22 | 2 |
| 10 41 285 4 | 2 440 022 | 96 42 336 08 | 40 | 10 |
| 10 41 285 4 | 2 510 100 | 96 44 750 08 | 300 | 3 |
| 10 41 285 4 | 2 510 200 | 96 41 258 08 | 43 | 1 |
| 10 41 285 4 | 2 970 | 91 55 482 08 | 82 | 4 |
| 10 41 285 4 | 2 971 | 91 50 610 08 | 43 | 6 |
| 10 41 285 4 | 2 984 | 91 52 906 08 | 303 | 10 |
| 10 41 285 4 | 3 100 | 91 59 279 08 | 16 | 4 |
| 10 41 285 4 | 3 101 | 91 60 312 08 | 69 | 48 |
| 10 41 285 4 | 3 106 000 | 91 60 313 08 | 43 | 31 |
| 10 41 285 4 | 3 501 | 91 05 788 08 | 98 | 23 |
| 10 41 285 4 | 3 511 | 91 54 159 08 | 7 | 5 |
| 10 41 285 4 | 3 511 006 | 96 45 029 08 | 27 | 3 |
| 10 41 285 7 | 2 450 | 91 53 926 08 | 26 | 5 |
| 10 41 285 7 | 2 510 100 | 96 44 750 08 | 305 | 6 |
| 10 41 285 7 | 2 510 201 | 96 42 011 08 | 14 | 6 |
| 10 41 286 1 | 2 510 100 | 96 44 750 08 | 302 | 2 |
| 10 41 516 2 | 1 300 010 | 99 14 563 14 | 5 | 2 |
| 10 41 516 2 | 2 210 | 91 81 614 08 | 341 | 1 |
| 10 41 516 2 | 2 440 | 91 52 288 08 | 39 | 4 |
| 10 41 516 2 | 3 101 | 91 60 312 08 | 58 | 2 |
| 10 41 516 2 | 3 102 000 | 91 62 543 08 | 58 | 2 |
| 10 41 516 2 | 3 103 000 | 91 62 544 08 | 58 | 2 |
| 10 41 516 2 | 3 330 | 91 57 885 08 | 24 | 6 |
| 10 41 516 2 | X1011997 | 10 11 997 6 | 4 | 1 |
| 10 42 381 7 | X1029147 | 10 29 147 4 | 78 | 1 |
| 10 42 381 7 | X1047529 | 10 47 529 1 | 78 | 1 |
| 10 42 381 7 | X1047529 | 10 47 529 2 | 78 | 1 |
| 10 42 460 1 | 7 739 413 | 77 39 413 08 | (1) | 1 |
| 10 42 498 3 | X1087223 | 10 87 223 8 | 21 | 2 |
| 10 42 499 4 | 2 500 | 91 48 594 08 | (999) | 1 |
| 10 42 568 8 | 3 501 | 91 05 788 08 | 78 | 4 |
| 10 42 941 5 | X1009998 | 10 09 998 1 | 2 | 1 |
| 10 42 993 3 | 2 210 008 | 96 48 137 08 | 102 | 1 |
| 10 42 994 6 | 9 629 047 | 96 29 047 08 | 100 | 1 |
| 10 42 994 6 | 9 629 049 | 96 29 049 08 | 100 | 1 |
| 10 42 994 6 | X1012580 | 10 12 580 1 | 1 | 1 |
| 10 42 994 6 | XSK_Z480 | SK_Z48005 | (7) | 1 |
| 10 42 995 2 | X1032706 | 10 32 706 5 | 9 | 1 |
| 10 43 004 2 | X1033367 | 10 33 367 2 | 91 | 1 |
| 10 43 004 2 | X1033367 | 10 33 367 2 | 131 | 1 |
| 10 43 033 1 | 2 970 | 91 55 482 08 | 18 | 1 |
| 10 44 078 8 | X1011997 | 10 11 997 9 | 40 | 1 |
| 10 44 993 4 | 2 920 083 | 96 31 039 08 | 5 | 2 |
| 10 45 005 1 | X1080175 | 10 80 175 1 | 49 | 1 |
| 10 45 098 1 | 2 200 048 | 96 84 070 08 | 15 | 2 |
| 10 46 691 0 | 2 971 | 91 50 610 08 | 17 | 1 |
| 10 46 691 1 | 2 971 | 91 50 610 08 | 21 | 1 |
| 10 46 691 3 | 2 971 | 91 50 610 08 | 13 | 2 |
| 10 46 691 4 | 2 970 | 91 55 482 08 | 22 | 2 |
| 10 46 691 4 | 2 971 | 91 50 610 08 | 15 | 1 |
| 10 46 691 5 | 2 971 | 91 50 610 08 | 19 | 1 |
| 10 46 691 7 | 2 971 | 91 50 610 08 | 11 | 2 |
| 10 46 728 5 | X1012193 | 10 12 193 2 | 70 | 4 |
| 10 47 037 7 | X1047300 | 10 47 300 1 | 59 | 1 |
| 10 47 066 7 | 7 739 413 | 77 39 413 08 | (2) | 1 |

| Item | Page | Assembly | Pos. | Quantity |
|---|---|---|---|---|
| 10 47 136 3 | 1 750 001 | 92 85 698 08 | 40 | 1 |
| 10 47 234 5 | X1046728 | 10 46 728 5 | 2 | 1 |
| 10 47 234 6 | X1046728 | 10 46 728 5 | 3 | 1 |
| 10 47 234 7 | X1046728 | 10 46 728 5 | 4 | 1 |
| 10 47 300 1 | 3 330 | 91 57 885 08 | 1 | 1 |
| 10 47 304 0 | 3 105 014 | 96 57 037 08 | 3 | 2 |
| 10 47 526 2 | 2 340 004 | 96 43 780 08 | 2 | 1 |
| 10 47 529 1 | X1028524 | 10 28 524 3 | 2 | 1 |
| 10 47 529 2 | X1028524 | 10 28 524 3 | 5 | 1 |
| 10 47 530 0 | X1047529 | 10 47 529 1 | 27 | 1 |
| 10 47 530 0 | X1047529 | 10 47 529 2 | 27 | 1 |
| 10 47 530 2 | X1047529 | 10 47 529 2 | 6 | 1 |
| 10 47 599 4 | X1011864 | 10 11 864 6 | (1) | 1 |
| 10 48 866 2 | 3 930 718 | 96 56 248 08 | 307 | 1 |
| 10 49 007 2 | 6 923 101 | 69 23 101 08 | 30 | 1 |
| 10 49 148 3 | 6 060 516 | 60 60 516 08 | 59 | 1 |
| 10 49 256 6 | 1 100 301 | 96 72 945 08 | (31) | 8 |
| 10 49 271 0 | 2 210 | 91 81 614 08 | (999) | 1 |
| 10 49 347 9 | X1047300 | 10 47 300 1 | 57 | 1 |
| 10 49 389 3 | X1047529 | 10 47 529 2 | 3 | 1 |
| 10 49 392 0 | X1032706 | 10 32 706 5 | 1 | 1 |
| 10 51 504 8 | 1 300 006 | 91 89 127 14 | 5 | 248 |
| 10 54 416 3 | 1 100 215 | 99 20 783 14 | 36 | 4 |
| 10 65 001 4 | X1047300 | 10 47 300 1 | 48 | 1 |
| 10 65 012 4 | X1047529 | 10 47 529 2 | (1) | 1 |
| 10 65 050 7 | 2 790 040 | 91 60 499 08 | (2) | 1 |
| 10 65 269 9 | 2 780 852 | 96 24 845 08 | (10) | 1 |
| 10 65 277 2 | 1 750 001 | 92 85 698 08 | 14 | 1 |
| 10 66 309 4 | X1043033 | 10 43 033 1 | 1 | 1 |
| 10 66 324 1 | X1041191 | 10 41 191 5 | 4 | 1 |
| 10 66 324 2 | X1041191 | 10 41 191 5 | 5 | 1 |
| 10 66 352 3 | X1011832 | 10 11 832 6 | 14 | 2 |
| 10 66 364 4 | 5 113 199 | 51 13 199 08 | 999 | 1 |
| 10 66 371 8 | 4 003 006 | 91 04 457 08 | 9 | 2 |
| 10 66 390 9 | X1032706 | 10 32 706 5 | (1) | 1 |
| 10 66 397 0 | 3 105 014 | 96 57 037 08 | 4 | 2 |
| 10 66 491 2 | X1022282 | 10 22 282 0 | (1) | 1 |
| 10 67 511 6 | 2 790 | 91 68 708 08 | (1) | 1 |
| 10 67 520 5 | 6 923 101 | 69 23 101 08 | 18 | 1 |
| 10 67 839 5 | 3 780 400 | 91 59 294 08 | (7) | 1 |
| 10 67 839 5 | 3 930 483 | 96 20 935 08 | 7 | 1 |
| 10 67 884 8 | 6 060 950 | 60 60 950 08 | 4 | 2 |
| 10 68 415 6 | 4 027 | 91 42 310 08 | 2 | 1 |
| 10 80 026 6 | 2 780 870 | 91 70 947 08 | 4 | 1 |
| 10 80 064 2 | 6 923 101 | 69 23 101 08 | 31 | 1 |
| 10 80 076 6 | 2 970 | 91 55 482 08 | (999) | 1 |
| 10 80 076 8 | X1029358 | 10 29 358 6 | 999 | 1 |
| 10 80 091 6 | 2 520 040 | 72 40 148 08 | 5 | 1 |
| 10 80 091 6 | 2 522 | 91 10 037 08 | (5) | 1 |
| 10 80 131 5 | X1009998 | 10 09 998 1 | 4 | 1 |
| 10 80 171 3 | 2 571 | 91 50 902 08 | (999) | 1 |
| 10 80 175 1 | 5 923 269 | 59 23 269 14 | 2 | 1 |
| 10 80 297 1 | X1010109 | 10 10 109 3 | 2 | 1 |
| 10 81 373 8 | 2 970 | 91 55 482 08 | (1) | 2 |
| 10 81 388 6 | X1047300 | 10 47 300 1 | 4 | 1 |
| 10 81 388 7 | X1047300 | 10 47 300 1 | 999 | 1 |
| 10 81 388 9 | X1081388 | 10 81 388 6 | 999 | 1 |
| 10 81 393 6 | X1011573 | 10 11 573 7 | 40 | 5 |
| 10 81 393 7 | X1011573 | 10 11 573 7 | 43 | 2 |
| 10 81 394 0 | X1011573 | 10 11 573 7 | 37 | 3 |
| 10 81 612 5 | 2 442 | 91 62 290 08 | 1 | 1 |
| 10 81 612 5 | 2 451 | 91 62 289 08 | 1 | 1 |
| 10 81 618 5 | 2 970 | 91 55 482 08 | (1) | 1 |
| 10 81 691 3 | 1 681 021 | 96 65 122 08 | 1 | 1 |
| 10 87 020 9 | 3 750 008 | 91 75 085 08 | 1 | 1 |
| 10 87 117 7 | 2 932 042 | 96 68 587 08 | 57 | 3 |
| 10 87 202 2 | 2 200 | 91 81 095 08 | 182 | 4 |
| 10 87 202 2 | 2 540 | 91 45 984 08 | 42 | 2 |
| 10 87 202 2 | 2 920 574 | 96 36 055 08 | 15 | 1 |
| 10 87 202 2 | 2 920 904 | 96 41 093 08 | 15 | 1 |
| 10 87 202 2 | 2 971 | 91 50 610 08 | 44 | 1 |
| 10 87 202 4 | 2 200 | 91 81 095 08 | 183 | 2 |
| 10 87 210 0 | X1033367 | 10 33 367 2 | (999) | 1 |
| 10 87 210 1 | X1033367 | 10 33 367 2 | (999) | 1 |
| 10 87 221 6 | 6 060 709 | 60 60 709 08 | 2 | 1 |
| 10 87 223 8 | 2 350 | 91 81 361 08 | 1 | 1 |
| 10 87 267 2 | 2 520 000 | 91 49 872 08 | (1) | 1 |
| 10 87 307 1 | X1100696 | 11 00 696 4 | 10 | 1 |
| 10 87 307 3 | X1100696 | 11 00 696 4 | 20 | 1 |
| 10 87 308 5 | 2 200 | 91 81 095 08 | 250 | 2.5 |
| 10 87 308 9 | 2 540 | 91 45 984 08 | 9 | 0.05 |
| 10 87 314 9 | 2 440 012 | 92 14 441 08 | 5 | 5 |
| 10 87 314 9 | 2 711 | 91 53 002 08 | 14 | 40 |
| 10 87 318 0 | X1041191 | 10 41 191 3 | 62 | 5 |
| 10 87 323 9 | 7 900 391 | 79 00 391 08 | 7 | 1 |
| 10 87 327 0 | 3 501 | 91 05 788 08 | (999) | 1 |
| 10 87 343 4 | 2 932 095 | 96 46 064 08 | (1) | 1 |
| 10 87 351 7 | 6 060 950 | 60 60 950 08 | 5 | 1 |
| 10 87 360 7 | X1041191 | 10 41 191 5 | (999) | 1 |
| 10 87 453 7 | 3 501 008 | 92 73 117 08 | 3 | 2 |
| 10 87 458 8 | 1 920 314 | 96 46 921 08 | 22 | 2 |
| 10 87 458 8 | 2 920 | 91 55 477 08 | 30 | 100 |
| 10 87 458 8 | X1011997 | 10 11 997 9 | 12 | 2 |
| 10 87 458 8 | X1011998 | 10 11 998 0 | 65 | 3 |
| 10 87 460 8 | 1 750 002 | 92 86 201 08 | 4 | 1 |
| 10 87 483 1 | X1041191 | 10 41 191 5 | 3 | 1 |
| 10 87 495 9 | 6 923 097 | 69 23 097 08 | (1) | 1 |
| 10 87 544 8 | 2 440 022 | 96 42 336 08 | 31 | 4 |
| 10 87 544 8 | 2 450 | 91 53 926 08 | 11 | 8 |
| 10 87 544 8 | 2 450 025 | 96 35 649 08 | 5 | 4 |
| 10 87 546 8 | 2 510 100 | 96 44 750 08 | 303 | 1 |
| 10 87 546 8 | 2 520 000 | 91 49 872 08 | 144 | 10 |
| 10 87 546 8 | 2 522 | 91 10 037 08 | 27 | 2 |
| 10 87 547 2 | 2 913 100 | 91 23 538 08 | 12 | 4 |
| 10 87 547 4 | 2 502 | 91 01 533 08 | 44 | 10 |
| 10 87 550 3 | 2 533 003 | 96 28 388 08 | 20 | 2 |
| 10 87 550 3 | 2 932 042 | 96 68 587 08 | 62 | 32 |
| 10 87 550 7 | 2 340 004 | 96 43 780 08 | 17 | 4 |
| 10 87 551 4 | 2 560 045 | 96 40 606 08 | 4 | 1 |
| 10 87 551 6 | 1 970 | 96 71 367 08 | 536 | 12 |
| 10 87 551 6 | 2 440 022 | 96 42 336 08 | 11 | 2 |
| 10 87 551 6 | 2 520 000 | 91 49 872 08 | 140 | 1 |
| 10 87 551 8 | 2 560 045 | 96 40 606 08 | 2 | 3 |
| 10 87 551 8 | 3 501 | 91 05 788 08 | 102 | 2 |
| 10 87 551 9 | 2 210 | 91 81 614 08 | 315 | 4 |
| 10 87 551 9 | 3 510 100 | 91 49 246 08 | 22 | 2 |
| 10 87 552 0 | 1 100 205 | 96 51 633 08 | 15 | 12 |
| 10 87 552 0 | 1 100 210 | 96 51 634 08 | 15 | 12 |
| 10 87 552 0 | 2 210 | 91 81 614 08 | 316 | 14 |
| 10 87 552 1 | 2 102 | 91 51 080 08 | 58 | 8 |

| Item | Page | Assembly | Pos. | Quantity |
|---|---|---|---|---|
| 10 87 552 1 | 3 501 | 91 05 788 08 | 55 | 5 |
| 10 87 552 9 | 2 501 000 | 91 48 769 08 | 31 | 2 |
| 10 87 552 9 | 2 520 001 | 92 48 796 08 | 16 | 3 |
| 10 87 552 9 | 2 522 | 91 10 037 08 | 25 | 3 |
| 10 87 552 9 | 2 932 166 | 92 68 911 08 | 11 | 2 |
| 10 87 552 9 | 3 102 000 | 91 62 543 08 | 68 | 2 |
| 10 87 552 9 | 3 103 000 | 91 62 544 08 | 68 | 2 |
| 10 87 552 9 | 3 104 000 | 91 62 545 08 | 68 | 2 |
| 10 87 552 9 | 3 105 000 | 91 62 546 08 | 68 | 2 |
| 10 87 552 9 | 3 501 | 91 05 788 08 | 87 | 4 |
| 10 87 556 1 | 3 102 000 | 91 62 543 08 | 32 | 8 |
| 10 87 556 1 | 3 103 000 | 91 62 544 08 | 32 | 8 |
| 10 87 556 1 | 3 104 000 | 91 62 545 08 | 32 | 8 |
| 10 87 556 1 | 3 105 000 | 91 62 546 08 | 32 | 8 |
| 10 87 556 1 | 3 106 000 | 91 60 313 08 | 53 | 8 |
| 10 87 556 5 | 2 340 004 | 96 43 780 08 | 16 | 4 |
| 10 87 556 5 | 2 970 | 91 55 482 08 | 505 | 4 |
| 10 87 557 0 | 2 520 041 | 96 84 504 08 | 3 | 2 |
| 10 87 557 2 | 2 420 | 91 32 936 08 | 5 | 4 |
| 10 87 557 3 | 1 100 205 | 96 51 633 08 | 30 | 6 |
| 10 87 557 3 | 1 100 210 | 96 51 634 08 | 30 | 6 |
| 10 87 557 7 | 2 420 | 91 32 936 08 | 6 | 2 |
| 10 87 557 8 | 9 387 598 | 93 87 598 01 | 52 | 8 |
| 10 87 557 8 | 9 686 071 | 96 86 071 01 | 52 | 8 |
| 10 87 558 6 | 1 792 004 | 92 51 415 08 | 4 | 1 |
| 10 87 558 6 | 2 540 | 91 45 984 08 | 41 | 4 |
| 10 87 558 6 | 3 920 012 | 96 57 224 08 | 4 | 2 |
| 10 87 558 6 | 9 075 541 | 90 75 541 | 15 | 3 |
| 10 87 558 6 | 9 076 534 | 90 76 534 | 3 | 1 |
| 10 87 558 6 | X1013307 | 10 13 307 7 | 3 | 1 |
| 10 87 558 8 | 2 950 | 91 49 515 08 | 20 | 18 |
| 10 87 558 8 | X1032706 | 10 32 706 5 | 6 | 3 |
| 10 87 559 0 | 2 430 | 91 54 389 08 | 14 | 4 |
| 10 87 559 1 | 2 210 | 91 81 614 08 | 306 | 10 |
| 10 87 559 1 | 2 920 | 91 55 477 08 | 31 | 2 |
| 10 87 559 1 | 3 330 | 91 57 885 08 | 35 | 2 |
| 10 87 559 1 | X1033367 | 10 33 367 2 | 21 | 4 |
| 10 87 559 2 | 3 330 | 91 57 885 08 | 38 | 4 |
| 10 87 559 2 | X1011599 | 10 11 599 3 | 6 | 4 |
| 10 87 559 8 | 2 502 | 91 01 533 08 | 26 | 2 |
| 10 87 559 8 | 3 101 | 91 60 312 08 | 30 | 9 |
| 10 87 559 8 | 5 102 294 | 51 02 294 08 | 7 | 2 |
| 10 87 559 9 | 2 102 | 91 51 080 08 | 39 | 8 |
| 10 87 559 9 | 2 430 | 91 54 389 08 | 6 | 4 |
| 10 87 559 9 | 2 790 | 91 68 708 08 | 3 | 4 |
| 10 87 559 9 | 3 330 | 91 57 885 08 | 46 | 4 |
| 10 87 559 9 | 9 330 748 | 93 30 748 01 | 26 | 8 |
| 10 87 559 9 | X1011989 | 10 11 989 7 | 14 | 2 |
| 10 87 560 1 | 2 790 040 | 91 60 499 08 | 4 | 1 |
| 10 87 560 1 | 5 102 294 | 51 02 294 08 | 10 | 4 |
| 10 87 560 1 | X1029358 | 10 29 358 6 | 6 | 4 |
| 10 87 560 6 | 2 501 000 | 91 48 769 08 | 27 | 6 |
| 10 87 560 6 | 2 522 | 91 10 037 08 | 32 | 2 |
| 10 87 560 6 | 2 790 901 | 91 54 183 08 | 12 | 6 |
| 10 87 560 6 | 3 102 000 | 91 62 543 08 | 31 | 4 |
| 10 87 560 6 | 3 103 000 | 91 62 544 08 | 31 | 4 |
| 10 87 560 6 | 3 104 000 | 91 62 545 08 | 31 | 4 |
| 10 87 560 6 | 3 105 000 | 91 62 546 08 | 31 | 4 |
| 10 87 560 6 | 3 106 000 | 91 60 313 08 | 55 | 4 |
| 10 87 560 6 | 3 106 000 | 91 60 313 08 | 70 | 1 |
| 10 87 560 7 | 3 100 | 91 59 279 08 | 19 | 4 |
| 10 87 560 7 | 3 102 000 | 91 62 543 08 | 43 | 12 |
| 10 87 560 7 | 3 103 000 | 91 62 544 08 | 43 | 12 |
| 10 87 560 7 | 3 104 000 | 91 62 545 08 | 43 | 8 |
| 10 87 560 7 | 3 105 000 | 91 62 546 08 | 43 | 8 |
| 10 87 560 7 | 3 330 | 91 57 885 08 | 47 | 4 |
| 10 87 561 4 | 2 790 040 | 91 60 499 08 | 5 | 1 |
| 10 87 561 7 | 2 560 045 | 96 40 606 08 | 3 | 3 |
| 10 87 561 7 | 3 501 | 91 05 788 08 | 64 | 7 |
| 10 87 561 7 | 3 510 100 | 91 49 246 08 | 13 | 10 |
| 10 87 561 8 | 3 501 | 91 05 788 08 | 70 | 4 |
| 10 87 561 8 | 4 003 006 | 91 04 457 08 | 15 | 4 |
| 10 87 562 1 | 1 830 102 | 92 26 483 08 | 5 | 12 |
| 10 87 562 1 | 2 102 | 91 51 080 08 | 54 | 2 |
| 10 87 562 1 | 2 210 | 91 81 614 08 | 353 | 10 |
| 10 87 562 1 | 2 430 | 91 54 389 08 | 13 | 4 |
| 10 87 562 1 | 2 501 022 | 96 34 184 08 | 6 | 4 |
| 10 87 562 1 | 2 510 100 | 96 44 750 08 | 352 | 2 |
| 10 87 562 1 | 2 510 200 | 96 41 258 08 | 25 | 12 |
| 10 87 562 1 | 2 522 | 91 10 037 08 | 26 | 2 |
| 10 87 562 1 | 2 533 001 | 96 41 568 08 | 63 | 3 |
| 10 87 562 1 | 2 913 004 | 96 20 460 08 | 6 | 2 |
| 10 87 562 1 | 2 920 | 91 55 477 08 | 32 | 2 |
| 10 87 562 1 | 2 920 585 | 91 01 520 08 | 18 | 3 |
| 10 87 562 1 | 2 932 042 | 96 68 587 08 | 96 | 1 |
| 10 87 562 1 | 2 932 166 | 92 68 911 08 | 6 | 4 |
| 10 87 562 1 | 3 330 | 91 57 885 08 | 31 | 4 |
| 10 87 564 7 | 1 830 102 | 92 26 483 08 | 3 | 6 |
| 10 87 564 7 | 1 970 | 96 71 367 08 | 32 | 2 |
| 10 87 564 7 | 2 102 | 91 51 080 08 | 55 | 4 |
| 10 87 564 7 | 2 210 | 91 81 614 08 | 382 | 4 |
| 10 87 564 7 | 2 210 008 | 96 48 137 08 | 375 | 4 |
| 10 87 564 7 | 2 430 | 91 54 389 08 | 12 | 8 |
| 10 87 564 7 | 2 501 000 | 91 48 769 08 | 18 | 14 |
| 10 87 564 7 | 2 510 200 | 96 41 258 08 | 21 | 20 |
| 10 87 564 7 | 2 515 007 | 96 42 014 08 | 16 | 2 |
| 10 87 564 7 | 2 520 000 | 91 49 872 08 | 73 | 16 |
| 10 87 564 7 | 2 520 001 | 92 48 796 08 | 26 | 1 |
| 10 87 564 7 | 2 522 | 91 10 037 08 | 37 | 1 |
| 10 87 564 7 | 2 533 001 | 96 41 568 08 | 61 | 6 |
| 10 87 564 7 | 2 540 | 91 45 984 08 | 10 | 2 |
| 10 87 564 7 | 2 920 585 | 91 01 520 08 | 16 | 3 |
| 10 87 564 7 | 2 932 166 | 92 68 911 08 | 4 | 4 |
| 10 87 564 7 | 3 101 | 91 60 312 08 | 7 | 4 |
| 10 87 564 7 | 3 330 | 91 57 885 08 | 32 | 4 |
| 10 87 564 7 | 3 501 | 91 05 788 08 | 89 | 4 |
| 10 87 564 7 | 3 920 012 | 96 57 224 08 | 3 | 2 |
| 10 87 564 7 | 5 910 672 | 59 10 672 08 | 21 | 1 |
| 10 87 564 7 | X1011998 | 10 11 998 0 | 47 | 1 |
| 10 87 564 8 | 2 210 | 91 81 614 08 | 378 | 10 |
| 10 87 564 8 | 2 510 072 | 96 44 614 08 | 9 | 2 |
| 10 87 564 8 | 2 510 201 | 96 42 011 08 | 9 | 2 |
| 10 87 564 8 | 2 520 001 | 92 48 796 08 | 15 | 4 |
| 10 87 564 8 | 2 522 | 91 10 037 08 | 54 | 2 |
| 10 87 564 8 | 2 932 042 | 96 68 587 08 | 76 | 2 |
| 10 87 564 8 | 2 970 | 91 55 482 08 | 73 | 10 |
| 10 87 564 8 | 2 971 | 91 50 610 08 | 41 | 4 |
| 10 87 564 8 | 5 910 672 | 59 10 672 08 | 5 | 1 |
| 10 87 565 2 | 3 106 000 | 91 60 313 08 | 32 | 2 |
| 10 87 565 7 | 9 330 748 | 93 30 748 01 | 72 | 1 |

| Item | Page | Assembly | Pos. | Quantity |
|---|---|---|---|---|
| 10 87 566 1 | 9 444 410 | 94 44 410 03 | 28 | 3 |
| 10 87 579 3 | 2 520 000 | 91 49 872 08 | 93 | 9 |
| 10 87 579 3 | 2 520 001 | 92 48 796 08 | 23 | 2 |
| 10 87 579 3 | 2 520 018 | 92 13 430 08 | 6 | 2 |
| 10 87 579 3 | 2 522 | 91 10 037 08 | 33 | 10 |
| 10 87 579 5 | 5 530 022 | 55 30 022 08 | 24 | 1 |
| 10 87 580 1 | 3 510 100 | 91 49 246 08 | 15 | 2 |
| 10 87 580 3 | 2 270 | 91 50 456 08 | 2 | 3 |
| 10 87 580 3 | 2 440 022 | 96 42 336 08 | 34 | 4 |
| 10 87 580 3 | 2 450 | 91 53 926 08 | 13 | 4 |
| 10 87 580 3 | 3 510 100 | 91 49 246 08 | 8 | 8 |
| 10 87 580 6 | 3 510 100 | 91 49 246 08 | 10 | 6 |
| 10 87 586 2 | 3 510 100 | 91 49 246 08 | 41 | 1 |
| 10 87 586 3 | 3 510 100 | 91 49 246 08 | 40 | 1 |
| 10 87 587 4 | 3 501 | 91 05 788 08 | 39 | 1 |
| 10 87 587 8 | 3 501 | 91 05 788 08 | 43 | 1 |
| 10 87 637 3 | 1 970 | 96 71 367 08 | 575 | 28 |
| 10 87 638 0 | 2 520 000 | 91 49 872 08 | 136 | 4 |
| 10 87 638 8 | 2 913 102 | 92 32 870 08 | 4 | 8 |
| 10 87 639 9 | 2 780 852 | 96 24 845 08 | 12 | 2 |
| 10 87 639 9 | 2 913 | 91 32 850 08 | 12 | 10 |
| 10 87 639 9 | 2 913 005 | 96 28 696 08 | 6 | 2 |
| 10 87 639 9 | 2 913 006 | 96 20 732 08 | 4 | 6 |
| 10 87 707 3 | 2 955 | 91 49 516 08 | (998) | 1 |
| 11 00 056 2 | 1 681 021 | 96 65 122 08 | 2 | 1 |
| 11 00 086 8 | 2 200 048 | 96 84 070 08 | (9) | 1 |
| 11 00 267 8 | 5 114 794 | 51 14 794 08 | 7 | 1 |
| 11 00 269 6 | X1047529 | 10 47 529 1 | 67 | 1 |
| 11 00 269 6 | X1047529 | 10 47 529 2 | 67 | 1 |
| 11 00 272 4 | 2 515 | 91 51 084 08 | 2 | 6 |
| 11 00 280 7 | 2 440 022 | 96 42 336 08 | 18 | 2 |
| 11 00 280 7 | 2 680 | 91 53 225 08 | 350 | 7 |
| 11 00 291 4 | 2 711 | 91 53 002 08 | 2 | 1 |
| 11 00 308 9 | 5 026 573 | 50 26 573 08 | 998 | 1 |
| 11 00 309 4 | 5 026 573 | 50 26 573 08 | 999 | 1 |
| 11 00 314 1 | X1034357 | 10 34 357 4 | (1) | 1 |
| 11 00 314 2 | X1034357 | 10 34 357 4 | (1) | 1 |
| 11 00 342 6 | 2 790 024 | 96 67 077 08 | 5 | 1 |
| 11 00 353 6 | X1043033 | 10 43 033 1 | 999 | 1 |
| 11 00 499 6 | X1087223 | 10 87 223 8 | 5 | 1 |
| 11 00 522 7 | X1043033 | 10 43 033 1 | 998 | 1 |
| 11 00 627 5 | 5 717 378 | 57 17 378 08 | 999 | 1 |
| 11 00 649 1 | 6 923 101 | 69 23 101 08 | 20 | 1 |
| 11 00 658 4 | 2 510 108 | 96 44 555 08 | 60 | 3.4 |
| 11 00 696 3 | 2 520 000 | 91 49 872 08 | 44 | 1 |
| 11 00 696 4 | 2 520 000 | 91 49 872 08 | 45 | 1 |
| 11 00 721 9 | X1100291 | 11 00 291 4 | 3 | 4 |
| 11 00 722 1 | 6 923 097 | 69 23 097 08 | 4 | 1 |
| 11 00 722 3 | 6 923 097 | 69 23 097 08 | 9 | 1 |
| 11 00 730 5 | 1 793 010 | 91 69 598 08 | 1 | 1 |
| 11 00 730 9 | 1 793 010 | 91 69 598 08 | 2 | 1 |
| 11 00 781 7 | 5 717 378 | 57 17 378 08 | 3 | 1 |
| 11 06 838 7 | 1 100 301 | 96 72 945 08 | 4 | 2 |
| 11 06 853 5 | 2 780 870 | 91 70 947 08 | 3 | 1 |
| 11 06 860 7 | 6 923 101 | 69 23 101 08 | (1) | 10 |
| 11 08 039 2 | X1032706 | 10 32 706 5 | 15 | 1 |
| 11 08 184 1 | 2 780 870 | 91 70 947 08 | 6 | 1 |
| 11 08 260 5 | 2 932 042 | 96 68 587 08 | (204) | 5 |
| 11 10 158 6 | 2 560 | 91 50 900 08 | 10 | 4 |
| 11 11 006 0 | X1032706 | 10 32 706 5 | 39 | 1 |

| Item | Page | Assembly | Pos. | Quantity |
|---|---|---|---|---|
| 11 11 111 08 | 3 106 001 | 96 42 835 08 | 1050 | -99.75 |
| 11 11 420 2 | X1010109 | 10 10 109 3 | (999) | 1 |
| 11 11 807 7 | 2 540 | 91 45 984 08 | 17 | 16 |
| 11 11 820 8 | X1015211 | 10 15 211 6 | 11 | 12 |
| 11 12 420 1 | X1010109 | 10 10 109 3 | 999 | 1 |
| 11 16 043 1 | 1 100 216 | 96 46 363 08 | 6 | 2 |
| 11 16 043 1 | 2 102 022 | 96 32 604 08 | 6 | 0.75 |
| 11 16 043 1 | 2 971 | 91 50 610 08 | 45 | 1.5 |
| 11 16 043 1 | 3 501 | 91 05 788 08 | 111 | 1 |
| 11 16 043 1 | 3 510 006 | 96 20 924 08 | 10 | 1 |
| 11 16 043 1 | 3 750 027 | 96 89 527 08 | 3 | 0.4 |
| 11 16 108 4 | 2 200 048 | 96 84 070 08 | 375 | 4 |
| 11 17 016 7 | X1041191 | 10 41 191 3 | 3 | 1 |
| 11 17 027 6 | 5 113 066 | 51 13 066 08 | 1 | 1 |
| 11 17 027 7 | 5 113 066 | 51 13 066 08 | 2 | 1 |
| 11 17 056 5 | 1 100 216 | 96 46 363 08 | 7 | 16 |
| 11 17 056 5 | 2 102 022 | 96 32 604 08 | 7 | 2 |
| 11 17 056 5 | 2 971 | 91 50 610 08 | 46 | 8 |
| 11 17 056 5 | 3 501 | 91 05 788 08 | 112 | 2 |
| 11 17 056 5 | 3 510 006 | 96 20 924 08 | 11 | 2 |
| 11 17 056 5 | 3 750 027 | 96 89 527 08 | 4 | 4 |
| 11 18 271 7 | 2 520 000 | 91 49 872 08 | 71 | 1 |
| 11 18 271 7 | 3 101 | 91 60 312 08 | 83 | 12 |
| 11 21 222 9 | 4 027 | 91 42 310 08 | 3 | 1 |
| 11 21 435 2 | 5 531 882 | 55 31 882 08 | 1 | 1 |
| 11 22 041 8 | X1022699 | 10 22 699 3 | 997 | 1 |
| 11 32 003 4 | X1022699 | 10 22 699 3 | 10 | 1 |
| 11 32 042 1 | X1010109 | 10 10 109 3 | (1) | 2 |
| 11 32 072 0 | 1 793 010 | 91 69 598 08 | (1) | 1 |
| 11 34 137 5 | 4 003 006 | 91 04 457 08 | 30 | 1 |
| 11 34 182 9 | X1087223 | 10 87 223 8 | 3 | 1 |
| 11 34 720 6 | 3 920 012 | 96 57 224 08 | (5) | 1 |
| 11 34 720 6 | 3 930 464 | 92 95 081 08 | 6 | 11 |
| 11 34 805 4 | 9 076 459 | 90 76 459 | 1 | 1 |
| 11 35 561 8 | X1011864 | 10 11 864 6 | 2 | 1 |
| 11 35 751 4 | X1012036 | 10 12 036 5 | 8 | 8 |
| 11 35 751 4 | X1014155 | 10 14 155 5 | 8 | 8 |
| 11 38 664 4 | X1011553 | 10 11 553 9 | 1 | 1 |
| 11 45 042 0 | 2 510 072 | 96 44 614 08 | 5 | 2 |
| 11 45 042 0 | 2 510 201 | 96 42 011 08 | 5 | 2 |
| 11 45 069 1 | 5 705 279 | 57 05 279 08 | 999 | 1 |
| 11 49 001 0 | 5 123 537 | 51 23 537 08 | 1 | 1 |
| 11 49 040 6 | 2 200 048 | 96 84 070 08 | 16 | 2 |
| 11 49 188 9 | 1 100 215 | 99 20 783 14 | 43 | 8 |
| 11 49 188 9 | 1 100 220 | 99 08 404 14 | 6 | 20 |
| 11 49 188 9 | 2 102 | 91 51 080 08 | 16 | 16 |
| 11 49 188 9 | 2 200 | 91 81 095 08 | 376 | 2 |
| 11 49 188 9 | 2 510 200 | 96 41 258 08 | 13 | 6 |
| 11 49 188 9 | 2 522 | 91 10 037 08 | 36 | 2 |
| 11 49 188 9 | 2 790 901 | 91 54 183 08 | 10 | 12 |
| 11 49 188 9 | 2 950 | 91 49 515 08 | 27 | 3 |
| 11 49 188 9 | 2 970 | 91 55 482 08 | 86 | 7 |
| 11 49 188 9 | 3 106 000 | 91 60 313 08 | 72 | 2 |
| 11 49 191 0 | 1 793 010 | 91 69 598 08 | 3 | 1 |
| 11 49 201 7 | 4 027 | 91 42 310 08 | 1 | 1 |
| 11 49 201 8 | 4 027 | 91 42 310 08 | 6 | 1 |
| 11 49 220 2 | 3 501 | 91 05 788 08 | 94 | 1 |
| 11 49 379 3 | 2 751 | 91 50 372 08 | 1 | 1 |
| 11 49 411 6 | 4 003 006 | 91 04 457 08 | 41 | 2 |
| 11 49 429 7 | 4 003 006 | 91 04 457 08 | 2 | 1 |

| Item | Page | Assembly | Pos. | Quantity |
|---|---|---|---|---|
| 11 49 429 8 | 4 003 006 | 91 04 457 08 | 3 | 1 |
| 11 49 429 9 | 4 003 006 | 91 04 457 08 | 4 | 1 |
| 11 49 443 2 | X1032706 | 10 32 706 5 | (2) | 1 |
| 11 49 458 1 | X1032706 | 10 32 706 5 | (3) | 1 |
| 11 60 019 3 | 5 121 425 | 51 21 425 08 | 1 | 1 |
| 11 62 176 9 | 2 200 | 91 81 095 08 | 251 | 4 |
| 11 62 177 2 | 2 200 | 91 81 095 08 | 252 | 2 |
| 11 62 196 4 | 4 003 006 | 91 04 457 08 | 8 | 2 |
| 11 62 670 6 | 1 100 205 | 96 51 633 08 | 38 | 16 |
| 11 62 670 6 | 1 100 210 | 96 51 634 08 | 38 | 16 |
| 11 62 670 6 | 2 200 | 91 81 095 08 | 300 | 2 |
| 11 62 670 6 | 3 511 006 | 96 45 029 08 | 24 | 1 |
| 11 63 174 2 | 1 100 211 | 74 90 653 14 | 50 | 5 |
| 11 63 174 2 | 2 102 | 91 51 080 08 | 56 | 1 |
| 11 63 174 2 | 2 680 | 91 53 225 08 | 301 | 3 |
| 11 63 174 2 | 3 101 | 91 60 312 08 | 36 | 2 |
| 11 63 174 2 | 3 102 000 | 91 62 543 08 | 36 | 2 |
| 11 63 174 2 | 3 103 000 | 91 62 544 08 | 36 | 2 |
| 11 63 174 2 | 3 104 000 | 91 62 545 08 | 36 | 2 |
| 11 63 174 2 | 3 105 000 | 91 62 546 08 | 36 | 2 |
| 11 63 181 6 | 2 102 | 91 51 080 08 | 21 | 6 |
| 11 63 181 6 | 2 200 | 91 81 095 08 | 310 | 2 |
| 11 63 181 6 | 2 210 | 91 81 614 08 | 309 | 4 |
| 11 63 181 6 | 2 510 100 | 96 44 750 08 | 307 | 6 |
| 11 63 181 6 | 2 680 | 91 53 225 08 | 300 | 7 |
| 11 63 184 2 | 2 520 000 | 91 49 872 08 | (1) | 1 |
| 11 63 212 5 | 2 971 | 91 50 610 08 | (1) | 1 |
| 11 64 226 1 | 2 102 | 91 51 080 08 | 33 | 4 |
| 11 64 226 1 | 2 210 | 91 81 614 08 | 320 | 8 |
| 11 64 226 1 | 2 501 000 | 91 48 769 08 | 24 | 16 |
| 11 64 226 1 | 2 510 100 | 96 44 750 08 | 311 | 8 |
| 11 64 226 1 | 2 510 200 | 96 41 258 08 | 14 | 4 |
| 11 64 226 1 | 2 932 166 | 92 68 911 08 | 8 | 2 |
| 11 64 234 9 | 2 210 | 91 81 614 08 | 310 | 2 |
| 11 64 234 9 | 3 101 | 91 60 312 08 | 11 | 4 |
| 11 64 234 9 | 3 501 | 91 05 788 08 | 45 | 3 |
| 11 64 237 7 | 1 100 205 | 96 51 633 08 | 12 | 4 |
| 11 64 237 7 | 1 100 210 | 96 51 634 08 | 12 | 4 |
| 11 64 249 7 | 2 510 072 | 96 44 614 08 | 13 | 2 |
| 11 64 249 7 | 2 510 200 | 96 41 258 08 | 20 | 2 |
| 11 64 249 7 | 2 520 000 | 91 49 872 08 | 77 | 1 |
| 11 64 489 9 | 2 510 100 | 96 44 750 08 | 309 | 3 |
| 11 64 489 9 | 2 510 200 | 96 41 258 08 | 24 | 4 |
| 11 64 489 9 | 2 520 000 | 91 49 872 08 | 78 | 15 |
| 11 64 489 9 | 2 522 | 91 10 037 08 | 35 | 1 |
| 11 64 489 9 | 2 571 | 91 50 902 08 | 7 | 11 |
| 11 64 489 9 | 2 932 042 | 96 68 587 08 | 66 | 1 |
| 11 64 489 9 | 2 932 095 | 96 46 064 08 | 66 | 1 |
| 11 64 489 9 | 2 971 | 91 50 610 08 | 40 | 4 |
| 11 64 538 4 | 1 970 | 96 71 367 08 | 555 | 8 |
| 11 64 538 4 | 2 440 022 | 96 42 336 08 | 21 | 4 |
| 11 64 538 4 | 2 510 200 | 96 41 258 08 | 30 | 2 |
| 11 64 538 4 | 3 100 | 91 59 279 08 | 21 | 4 |
| 11 64 538 4 | 3 510 100 | 91 49 246 08 | 19 | 1 |
| 11 64 705 9 | 5 106 681 | 51 06 681 08 | 5 | 1 |
| 11 65 100 6 | 1 100 205 | 96 51 633 08 | 26 | 3 |
| 11 65 100 6 | 1 100 210 | 96 51 634 08 | 26 | 3 |
| 11 65 100 6 | 3 106 000 | 91 60 313 08 | 63 | 3 |
| 11 65 157 8 | 1 100 215 | 99 20 783 14 | 28 | 16 |
| 11 65 158 3 | 2 520 000 | 91 49 872 08 | 112 | 3 |
| 11 65 161 2 | 2 210 | 91 81 614 08 | 307 | 2 |
| 11 65 161 2 | 2 210 008 | 96 48 137 08 | 300 | 6 |
| 11 65 161 2 | 2 440 022 | 96 42 336 08 | 45 | 4 |
| 11 65 161 2 | 2 500 | 91 48 594 08 | 13 | 4 |
| 11 65 161 2 | 2 520 000 | 91 49 872 08 | 132 | 18 |
| 11 65 161 2 | 2 522 | 91 10 037 08 | 31 | 12 |
| 11 65 161 2 | 2 831 | 91 47 871 08 | 30 | 4 |
| 11 65 161 2 | 2 932 042 | 96 68 587 08 | 68 | 9 |
| 11 65 161 2 | 3 100 | 91 59 279 08 | 17 | 4 |
| 11 65 161 2 | 3 100 | 91 59 279 08 | 25 | 3 |
| 11 65 161 2 | 3 101 | 91 60 312 08 | 27 | 15 |
| 11 65 161 2 | 3 102 000 | 91 62 543 08 | 4 | 6 |
| 11 65 161 2 | 3 103 000 | 91 62 544 08 | 4 | 6 |
| 11 65 161 2 | 3 104 000 | 91 62 545 08 | 4 | 6 |
| 11 65 161 2 | 3 105 000 | 91 62 546 08 | 4 | 4 |
| 11 65 161 2 | 3 106 000 | 91 60 313 08 | 4 | 4 |
| 11 65 161 2 | 3 330 | 91 57 885 08 | 28 | 6 |
| 11 65 161 2 | 3 510 100 | 91 49 246 08 | 32 | 5 |
| 11 65 163 2 | 1 100 215 | 99 20 783 14 | 30 | 8 |
| 11 65 163 2 | 2 510 200 | 96 41 258 08 | 8 | 3 |
| 11 65 163 2 | 2 790 901 | 91 54 183 08 | 7 | 4 |
| 11 65 163 2 | 2 970 | 91 55 482 08 | 85 | 7 |
| 11 65 163 2 | 3 101 | 91 60 312 08 | 33 | 5 |
| 11 65 163 2 | 3 330 | 91 57 885 08 | 10 | 2 |
| 11 65 176 7 | 1 400 200 | 91 53 791 08 | 20 | 4 |
| 11 65 176 7 | 2 102 | 91 51 080 08 | 29 | 2 |
| 11 65 176 7 | 2 102 022 | 96 32 604 08 | 5 | 2 |
| 11 65 176 7 | 2 210 | 91 81 614 08 | 304 | 8 |
| 11 65 176 7 | 2 210 008 | 96 48 137 08 | 301 | 13 |
| 11 65 176 7 | 2 260 | 91 46 555 08 | 2 | 6 |
| 11 65 176 7 | 2 502 | 91 01 533 08 | 27 | 6 |
| 11 65 176 7 | 2 510 100 | 96 44 750 08 | 310 | 8 |
| 11 65 176 7 | 2 510 200 | 96 41 258 08 | 10 | 2 |
| 11 65 176 7 | 2 515 007 | 96 42 014 08 | 8 | 8 |
| 11 65 176 7 | 2 520 000 | 91 49 872 08 | 79 | 8 |
| 11 65 176 7 | 2 522 | 91 10 037 08 | 28 | 4 |
| 11 65 176 7 | 2 831 | 91 47 871 08 | 27 | 2 |
| 11 65 176 7 | 2 950 | 91 49 515 08 | 21 | 8 |
| 11 65 176 7 | 2 970 | 91 55 482 08 | 80 | 6 |
| 11 65 176 7 | 2 984 | 91 52 906 08 | 301 | 4 |
| 11 65 176 7 | 3 510 100 | 91 49 246 08 | 28 | 2 |
| 11 65 176 7 | 9 077 279 | 90 77 279 | 9 | 2 |
| 11 65 247 0 | 1 100 205 | 96 51 633 08 | 23 | 8 |
| 11 65 247 0 | 1 100 210 | 96 51 634 08 | 23 | 6 |
| 11 65 247 0 | 1 100 215 | 99 20 783 14 | 31 | 8 |
| 11 65 247 0 | 2 210 | 91 81 614 08 | 339 | 1 |
| 11 65 247 0 | 3 511 006 | 96 45 029 08 | 14 | 3 |
| 11 65 615 5 | 9 079 468 | 90 79 468 | 2 | 5 |
| 11 65 615 5 | 9 079 560 | 90 79 560 | 4 | 2 |
| 11 65 615 5 | 9 079 823 | 90 79 823 | 2 | 4 |
| 11 65 615 5 | X1011566 | 10 11 566 4 | 3 | 3 |
| 11 65 615 5 | X1011997 | 10 11 997 9 | 53 | 1 |
| 11 65 727 1 | X1100696 | 11 00 696 4 | 1 | 2 |
| 11 65 727 2 | X1100696 | 11 00 696 4 | 2 | 2 |
| 11 65 858 0 | 2 510 100 | 96 44 750 08 | 378 | 16 |
| 11 65 858 0 | 2 681 | 91 28 102 08 | 375 | 4 |
| 11 65 858 0 | 3 101 | 91 60 312 08 | 32 | 9 |
| 11 65 858 0 | X1011989 | 10 11 989 1 | 11 | 2 |
| 11 65 889 0 | 9 072 906 | 90 72 906 | 4 | 1 |
| 11 65 889 1 | 3 101 | 91 60 312 08 | 82 | 12 |

| Item | Page | Assembly | Pos. | Quantity |
|---|---|---|---|---|
| 11 65 889 2 | 1 100 215 | 99 20 783 14 | 29 | 18 |
| 11 65 889 2 | 1 400 200 | 91 53 791 08 | 27 | 8 |
| 11 69 004 2 | 2 520 000 | 91 49 872 08 | 137 | 2 |
| 11 69 004 8 | 2 540 | 91 45 984 08 | 12 | 3 |
| 11 69 004 8 | 2 984 | 91 52 906 08 | 300 | 8 |
| 11 69 050 2 | X1087223 | 10 87 223 8 | 999 | 1 |
| 11 69 062 8 | 2 790 901 | 91 54 183 08 | 9 | 2 |
| 11 69 062 8 | 3 102 000 | 91 62 543 08 | 30 | 8 |
| 11 69 062 8 | 3 103 000 | 91 62 544 08 | 30 | 8 |
| 11 69 062 8 | 3 104 000 | 91 62 545 08 | 30 | 8 |
| 11 69 062 8 | 3 105 000 | 91 62 546 08 | 30 | 8 |
| 11 69 062 8 | 3 106 000 | 91 60 313 08 | 18 | 4 |
| 11 69 132 7 | 3 102 000 | 91 62 543 08 | 61 | 12 |
| 11 69 132 7 | 3 103 000 | 91 62 544 08 | 61 | 12 |
| 11 69 132 7 | 3 104 000 | 91 62 545 08 | 61 | 12 |
| 11 69 132 7 | 3 105 000 | 91 62 546 08 | 34 | 12 |
| 11 69 132 7 | 3 106 000 | 91 60 313 08 | 42 | 16 |
| 11 69 195 6 | X1022699 | 10 22 699 3 | 999 | 1 |
| 11 69 282 4 | 2 501 000 | 91 48 769 08 | 5 | 6 |
| 11 69 282 4 | 2 510 200 | 96 41 258 08 | 47 | 2 |
| 11 69 282 4 | 2 510 201 | 96 42 011 08 | 8 | 2 |
| 11 69 387 5 | 2 102 | 91 51 080 08 | 31 | 5 |
| 11 69 387 5 | 2 210 | 91 81 614 08 | 351 | 8 |
| 11 69 387 5 | 2 260 | 91 46 555 08 | 4 | 6 |
| 11 69 387 5 | 2 440 022 | 96 42 336 08 | 10 | 2 |
| 11 69 387 5 | 2 510 100 | 96 44 750 08 | 350 | 12 |
| 11 69 387 5 | 2 510 200 | 96 41 258 08 | 15 | 9 |
| 11 69 387 5 | 2 520 000 | 91 49 872 08 | 131 | 3 |
| 11 69 387 5 | 2 560 045 | 96 40 606 08 | 5 | 1 |
| 11 69 387 5 | 2 831 | 91 47 871 08 | 28 | 4 |
| 11 69 387 5 | 2 920 585 | 91 01 520 08 | 11 | 2 |
| 11 69 387 5 | 2 950 | 91 49 515 08 | 12 | 10 |
| 11 69 387 5 | 2 955 | 91 49 516 08 | 15 | 4 |
| 11 69 387 5 | 2 984 | 91 52 906 08 | 350 | 16 |
| 11 69 387 5 | 3 511 006 | 96 45 029 08 | 22 | 2 |
| 11 69 578 6 | 2 520 000 | 91 49 872 08 | 163 | 5 |
| 11 82 028 4 | 2 571 | 91 50 902 08 | 6 | 1 |
| 11 82 028 4 | 3 101 | 91 60 312 08 | 73 | 2 |
| 11 82 652 7 | 1 100 216 | 96 46 363 08 | 2 | 8 |
| 11 82 652 7 | 2 440 022 | 96 42 336 08 | 7 | 2 |
| 11 82 652 7 | 3 100 | 91 59 279 08 | 14 | 4 |
| 11 82 652 7 | 3 101 | 91 60 312 08 | 80 | 3 |
| 11 83 330 8 | 1 830 102 | 92 26 483 08 | 4 | 12 |
| 11 83 504 3 | 2 200 048 | 96 84 070 08 | 300 | 2 |
| 11 84 013 6 | 3 101 | 91 60 312 08 | 41 | 12 |
| 11 84 013 6 | 3 102 000 | 91 62 543 08 | 41 | 24 |
| 11 84 013 6 | 3 103 000 | 91 62 544 08 | 41 | 24 |
| 11 84 013 6 | 3 104 000 | 91 62 545 08 | 41 | 20 |
| 11 84 013 6 | 3 105 000 | 91 62 546 08 | 41 | 20 |
| 11 84 014 0 | 3 101 | 91 60 312 08 | 40 | 4 |
| 11 84 014 0 | 3 102 000 | 91 62 543 08 | 40 | 4 |
| 11 84 014 0 | 3 103 000 | 91 62 544 08 | 40 | 4 |
| 11 84 014 0 | 3 104 000 | 91 62 545 08 | 40 | 4 |
| 11 84 014 0 | 3 105 000 | 91 62 546 08 | 40 | 4 |
| 11 84 050 1 | 2 440 022 | 96 42 336 08 | 47 | 4 |
| 11 84 050 1 | 2 510 100 | 96 44 750 08 | 376 | 14 |
| 11 84 050 1 | 2 790 | 91 68 708 08 | 5 | 4 |
| 12 20 126 3 | 2 210 | 91 81 614 08 | 340 | 1 |
| 12 20 126 3 | 3 330 | 91 57 885 08 | 23 | 4 |
| 12 20 278 4 | 3 101 | 91 60 312 08 | 77 | 4 |

| Item | Page | Assembly | Pos. | Quantity |
|---|---|---|---|---|
| 12 20 461 4 | 2 711 | 91 53 002 08 | 4 | 4 |
| 22 81 103 08 | 2 200 048 | 96 32 140 08 | 4 | 1 |
| 22 81 104 08 | 2 200 048 | 96 32 140 08 | 5 | 1 |
| 24 00 493 02 | 9 074 165 | 90 74 165 | 10 | 2 |
| 24 00 497 02 | 9 074 165 | 90 74 165 | 7 | 5 |
| 24 00 498 02 | 9 072 593 | 90 72 593 | 5 | 2 |
| 24 00 498 02 | 9 075 541 | 90 75 541 | 14 | 2 |
| 24 00 508 02 | 9 075 540 | 90 75 540 | 3 | 2 |
| 24 01 962 02 | 5 123 931 | 51 23 931 08 | 15 | 4 |
| 24 70 217 02 | 2 955 | 91 49 516 08 | 613 | 1 |
| 24 70 217 02 | 2 970 | 91 55 482 08 | 677 | 3 |
| 24 70 217 02 | 2 975 038 | 91 26 492 08 | 611 | 1 |
| 24 71 056 02 | 2 970 | 91 55 482 08 | 642 | 2 |
| 24 71 083 02 | 2 950 | 91 49 515 08 | 602 | 3 |
| 24 71 083 02 | 2 970 | 91 55 482 08 | 623 | 4 |
| 24 71 084 02 | 2 970 | 91 55 482 08 | 683 | 2 |
| 24 71 173 02 | 1 423 101 | 99 26 462 14 | 706 | 1 |
| 24 71 177 02 | 2 970 | 91 55 482 08 | 631 | 5 |
| 24 71 177 02 | 2 971 | 91 50 610 08 | 610 | 2 |
| 24 71 177 02 | 2 975 152 | 91 05 737 08 | 611 | 1 |
| 24 71 285 02 | 1 970 | 96 71 367 08 | 759 | 1 |
| 24 71 285 02 | 2 970 | 91 55 482 08 | 612 | 5 |
| 24 71 285 02 | 2 971 | 91 50 610 08 | 630 | 1 |
| 24 71 286 02 | 2 970 | 91 55 482 08 | 630 | 6 |
| 24 71 286 02 | 2 971 | 91 50 610 08 | 608 | 3 |
| 24 71 286 02 | 2 975 152 | 91 05 737 08 | 604 | 3 |
| 24 71 386 02 | 2 970 | 91 55 482 08 | 702 | 1 |
| 26 21 039 08 | 2 260 006 | 96 31 147 08 | 6 | 2.3 |
| 26 21 039 08 | 2 510 100 | 96 44 750 08 | (3) | 0.6 |
| 26 21 039 08 | 2 932 095 | 96 46 064 08 | 60 | 0.295 |
| 26 21 039 08 | 2 932 166 | 92 68 911 08 | 7 | 0.16 |
| 26 21 039 08 | 2 984 | 91 52 906 08 | 12 | 0.25 |
| 26 21 055 08 | 2 510 108 | 96 44 555 08 | 30 | 0.55 |
| 26 21 055 08 | 2 681 | 91 28 102 08 | 175 | 0.35 |
| 26 21 078 14 | 3 750 026 | 96 89 407 08 | 12 | 0.12 |
| 26 21 078 14 | 3 750 028 | 96 89 408 08 | 12 | 0.12 |
| 26 21 089 08 | 2 510 108 | 96 44 555 08 | 40 | 2.5 |
| 26 21 089 08 | 2 520 000 | 91 49 872 08 | 86 | 1.2 |
| 26 21 089 08 | 2 540 | 91 45 984 08 | 22 | 0.36 |
| 26 21 089 08 | 2 540 | 91 45 984 08 | 23 | 0.43 |
| 26 21 089 08 | 2 540 | 91 45 984 08 | 24 | 0.39 |
| 26 21 089 08 | 2 913 006 | 96 20 732 08 | 7 | 0.18 |
| 26 21 091 08 | 2 540 | 91 45 984 08 | 21 | 0.45 |
| 26 21 095 08 | 2 520 000 | 91 49 872 08 | 83 | 4 |
| 28 30 672 08 | 3 103 000 | 91 62 544 08 | 12 | 2 |
| 28 30 672 08 | 3 104 000 | 91 62 545 08 | 12 | 2 |
| 28 30 824 08 | 3 101 | 91 60 312 08 | 39 | 2 |
| 28 30 825 08 | 3 101 | 91 60 312 08 | 47 | 26 |
| 28 30 826 08 | 3 101 | 91 60 312 08 | 56 | 1 |
| 28 30 826 08 | 3 102 000 | 91 62 543 08 | 56 | 1 |
| 28 30 826 08 | 3 103 000 | 91 62 544 08 | 56 | 1 |
| 28 30 839 08 | 3 330 | 91 57 885 08 | 15 | 1 |
| 28 30 863 08 | 3 101 | 91 60 312 08 | 48 | 2 |
| 28 30 907 08 | 3 330 | 91 57 885 08 | 4 | 2 |
| 28 30 913 08 | 2 520 001 | 92 48 796 08 | 24 | 1 |
| 28 30 914 08 | 2 520 001 | 92 48 796 08 | 25 | 1 |
| 28 30 915 08 | 2 520 001 | 92 48 796 08 | 20 | 1 |
| 28 30 916 08 | 2 520 001 | 92 48 796 08 | 21 | 1 |
| 28 30 924 08 | 3 330 | 91 57 885 08 | 13 | 1 |
| 28 30 925 08 | 3 330 | 91 57 885 08 | 14 | 1 |

| Item | Page | Assembly | Pos. | Quantity |
|---|---|---|---|---|
| 28 30 926 08 | 3 330 | 91 57 885 08 | 25 | 1 |
| 28 30 935 08 | 3 102 000 | 91 62 543 08 | 12 | 2 |
| 28 30 936 08 | 3 102 000 | 91 62 543 08 | 22 | 2 |
| 28 30 936 08 | 3 103 000 | 91 62 544 08 | 22 | 2 |
| 28 30 936 08 | 3 104 000 | 91 62 545 08 | 22 | 2 |
| 28 30 936 08 | 3 105 000 | 91 62 546 08 | 22 | 2 |
| 28 30 936 08 | 3 106 000 | 91 60 313 08 | 22 | 2 |
| 28 30 937 08 | 3 102 000 | 91 62 543 08 | 23 | 2 |
| 28 30 937 08 | 3 103 000 | 91 62 544 08 | 23 | 2 |
| 28 30 937 08 | 3 104 000 | 91 62 545 08 | 23 | 2 |
| 28 30 937 08 | 3 105 000 | 91 62 546 08 | 23 | 2 |
| 28 30 937 08 | 3 106 000 | 91 60 313 08 | 23 | 2 |
| 28 30 938 08 | 3 102 000 | 91 62 543 08 | 24 | 2 |
| 28 30 938 08 | 3 103 000 | 91 62 544 08 | 24 | 2 |
| 28 30 938 08 | 3 104 000 | 91 62 545 08 | 24 | 2 |
| 28 30 939 08 | 3 102 000 | 91 62 543 08 | 25 | 2 |
| 28 30 939 08 | 3 103 000 | 91 62 544 08 | 25 | 2 |
| 28 30 939 08 | 3 104 000 | 91 62 545 08 | 25 | 2 |
| 28 30 940 08 | 3 105 000 | 91 62 546 08 | 12 | 2 |
| 28 30 940 08 | 3 106 000 | 91 60 313 08 | 12 | 2 |
| 28 30 941 08 | 3 105 000 | 91 62 546 08 | 24 | 2 |
| 28 30 941 08 | 3 106 000 | 91 60 313 08 | 24 | 2 |
| 28 30 942 08 | 3 105 000 | 91 62 546 08 | 25 | 2 |
| 28 30 942 08 | 3 106 000 | 91 60 313 08 | 25 | 2 |
| 28 30 943 08 | 3 101 | 91 60 312 08 | 45 | 2 |
| 28 30 943 08 | 3 102 000 | 91 62 543 08 | 45 | 2 |
| 28 30 943 08 | 3 103 000 | 91 62 544 08 | 45 | 4 |
| 28 30 944 08 | 3 101 | 91 60 312 08 | 46 | 2 |
| 28 30 944 08 | 3 102 000 | 91 62 543 08 | 46 | 2 |
| 28 30 945 08 | 3 102 000 | 91 62 543 08 | 59 | 3 |
| 28 30 945 08 | 3 103 000 | 91 62 544 08 | 59 | 3 |
| 28 30 945 08 | 3 104 000 | 91 62 545 08 | 59 | 3 |
| 28 30 945 08 | 3 105 000 | 91 62 546 08 | 59 | 3 |
| 28 30 947 08 | 3 104 000 | 91 62 545 08 | 45 | 2 |
| 28 30 947 08 | 3 105 000 | 91 62 546 08 | 45 | 2 |
| 28 30 948 08 | 3 102 000 | 91 62 543 08 | 48 | 2 |
| 28 30 949 08 | 3 103 000 | 91 62 544 08 | 48 | 2 |
| 28 30 950 08 | 3 104 000 | 91 62 545 08 | 48 | 2 |
| 28 30 951 08 | 3 105 000 | 91 62 546 08 | 48 | 2 |
| 28 30 954 08 | 3 101 | 91 60 312 08 | 59 | 3 |
| 28 39 069 08 | 2 520 000 | 91 49 872 08 | 148 | 0.8 |
| 28 81 303 08 | 2 520 001 | 92 48 796 08 | 11 | 2 |
| 28 81 577 08 | 3 105 002 | 92 73 100 08 | 1 | 1 |
| 28 81 584 08 | 3 501 008 | 92 73 117 08 | 1 | 1 |
| 28 81 762 08 | 2 102 | 91 51 080 08 | 52 | 1 |
| 28 81 799 08 | 2 913 100 | 91 23 538 08 | 15 | 1 |
| 28 81 840 08 | 3 101 | 91 60 312 08 | 19 | 1 |
| 28 81 990 08 | 2 520 001 | 92 48 796 08 | 10 | 1 |
| 28 81 998 08 | 2 520 001 | 92 48 796 08 | 14 | 1 |
| 28 85 002 08 | 2 520 000 | 91 49 872 08 | 57 | 2 |
| 30 81 151 14 | 1 100 205 | 96 51 633 08 | 14 | 2 |
| 30 81 151 14 | 1 100 210 | 96 51 634 08 | 14 | 2 |
| 38 00 199 08 | 2 520 000 | 91 49 872 08 | 8 | 1 |
| 38 00 201 08 | 2 520 000 | 91 49 872 08 | 10 | 1 |
| 38 00 346 08 | 2 500 022 | 92 10 661 08 | 1 | 1 |
| 38 00 347 08 | 2 500 023 | 92 10 663 08 | 1 | 1 |
| 38 00 571 08 | 2 210 | 91 81 614 08 | 205 | 10 |
| 38 00 617 08 | 2 560 | 91 50 900 08 | 2 | 1 |
| 38 00 619 08 | 2 560 | 91 50 900 08 | 3 | 2 |
| 38 00 619 08 | 2 570 | 91 50 901 08 | 30 | 2 |

| Item | Page | Assembly | Pos. | Quantity |
|---|---|---|---|---|
| 38 82 612 08 | 3 105 014 | 96 57 037 08 | 1 | 1 |
| 38 82 613 08 | 3 105 014 | 96 57 037 08 | 2 | 1 |
| 40 00 342 03 | 9 444 410 | 94 44 410 03 | 11 | 8 |
| 40 00 379 | X1011998 | 10 11 998 0 | 42 | 1 |
| 40 00 381 | X1011997 | 10 11 997 9 | 7 | 1 |
| 40 00 383 | X1015211 | 10 15 211 6 | 14 | 12 |
| 40 00 414 | X1012223 | 10 12 223 3 | 12 | 12 |
| 40 00 417 | 1 400 200 | 91 53 791 08 | 25 | 4 |
| 40 00 417 | 1 681 021 | 96 65 122 08 | 3 | 2 |
| 40 00 417 | 2 970 | 91 55 482 08 | 70 | 4 |
| 40 00 648 | 2 510 100 | 96 44 750 08 | 379 | 4 |
| 40 00 648 | 2 515 007 | 96 42 014 08 | 12 | 2 |
| 40 00 648 | 2 571 | 91 50 902 08 | 9 | 23 |
| 40 00 828 | 2 102 | 91 51 080 08 | 25 | 2 |
| 40 00 828 | 2 510 100 | 96 44 750 08 | 308 | 4 |
| 40 00 828 | 2 681 | 91 28 102 08 | 300 | 4 |
| 40 00 828 | 3 101 | 91 60 312 08 | 64 | 4 |
| 40 00 828 | X1011989 | 10 11 989 1 | 7 | 2 |
| 40 00 899 | 2 522 | 91 10 037 08 | 48 | 1 |
| 40 00 996 | 6 923 101 | 69 23 101 08 | 19 | 3 |
| 40 00 996 | X1029147 | 10 29 147 4 | 87 | 4 |
| 40 00 996 | X1047529 | 10 47 529 1 | 87 | 4 |
| 40 00 996 | X1047529 | 10 47 529 2 | 87 | 4 |
| 40 01 007 03 | 1 400 200 | 91 53 791 08 | 23 | 18 |
| 40 01 016 08 | 2 932 042 | 96 68 587 08 | 61 | 28 |
| 40 01 016 08 | 2 932 215 | 92 26 129 08 | 5 | 4 |
| 40 01 016 08 | 3 100 | 91 59 279 08 | 31 | 2 |
| 40 01 063 08 | 3 100 | 91 59 279 08 | 22 | 8 |
| 40 01 463 | 2 520 000 | 91 49 872 08 | 133 | 6 |
| 40 01 466 | 3 106 000 | 91 60 313 08 | 47 | 2 |
| 40 01 521 | 2 520 000 | 91 49 872 08 | 138 | 4 |
| 40 01 595 | 9 074 505 | 90 74 505 | 4 | 2 |
| 40 01 620 | 9 330 748 | 93 30 748 01 | 74 | 8 |
| 40 01 645 | 2 913 004 | 96 20 460 08 | 4 | 4 |
| 40 01 645 | 2 913 100 | 91 23 538 08 | 13 | 4 |
| 40 01 645 | 2 913 102 | 92 32 870 08 | 5 | 8 |
| 40 01 645 | 2 932 042 | 96 68 587 08 | 75 | 1 |
| 40 01 645 | 2 932 095 | 96 46 064 08 | 72 | 16 |
| 40 01 645 | 2 932 119 | 96 46 061 08 | 29 | 8 |
| 40 01 645 | 2 932 215 | 92 26 129 08 | 3 | 1 |
| 40 01 654 | 3 330 | 91 57 885 08 | 27 | 6 |
| 40 01 667 | 2 210 | 91 81 614 08 | 305 | 3 |
| 40 01 701 08 | 3 930 492 | 96 20 966 08 | 266 | 2 |
| 40 01 928 | 2 210 | 91 81 614 08 | 332 | 2 |
| 40 01 998 | 2 510 200 | 96 41 258 08 | 32 | 2 |
| 40 02 002 08 | 5 530 854 | 55 30 854 08 | 6 | 2 |
| 40 02 017 | 2 501 000 | 91 48 769 08 | 11 | 4 |
| 40 02 307 | 2 932 042 | 96 68 587 08 | 64 | 2 |
| 40 02 308 | 2 533 001 | 96 41 568 08 | 60 | 3 |
| 40 02 312 | 2 340 004 | 96 43 780 08 | 6 | 12 |
| 40 02 418 | 2 970 | 91 55 482 08 | 77 | 14 |
| 40 02 442 | 9 387 598 | 93 87 598 01 | 71 | 12 |
| 40 02 442 | 9 686 071 | 96 86 071 01 | 71 | 12 |
| 40 02 485 | 2 501 000 | 91 48 769 08 | 8 | 4 |
| 40 02 564 | 3 101 | 91 60 312 08 | 43 | 18 |
| 40 02 612 | 2 920 585 | 91 01 520 08 | 15 | 3 |
| 40 02 886 | X1032706 | 10 32 706 5 | 25 | 4 |
| 40 06 035 08 | 2 920 574 | 96 36 055 08 | 268 | 2 |
| 40 06 035 08 | 2 920 904 | 96 41 093 08 | 251 | 2 |
| 40 09 018 08 | 3 511 006 | 96 45 029 08 | 30 | 1 |

| Item | Page | Assembly | Pos. | Quantity |
|---|---|---|---|---|
| 40 09 029 14 | 1 100 220 | 99 08 404 14 | 7 | 10 |
| 40 26 003 08 | 2 270 001 | 96 37 923 08 | 10 | 1 |
| 40 26 003 08 | 2 340 004 | 96 43 780 08 | 7 | 1 |
| 40 28 018 08 | 2 210 008 | 96 48 137 08 | 310 | 4 |
| 40 28 026 14 | 2 210 008 | 96 48 137 08 | 321 | 2 |
| 40 28 059 08 | 2 502 | 91 01 533 08 | 28 | 2 |
| 40 41 003 08 | X1032706 | 10 32 706 5 | 12 | 1 |
| 40 41 016 08 | 5 700 161 | 57 00 161 | 27 | 1 |
| 40 41 242 | 9 444 410 | 94 44 410 03 | 54 | 3 |
| 40 42 002 | 1 100 215 | 99 20 783 14 | 33 | 7 |
| 40 42 002 | 2 780 800 | 91 15 191 08 | 10 | 3 |
| 40 42 002 | 9 078 680 | 90 78 680 | 3 | 4 |
| 40 42 002 08 | 2 780 852 | 96 24 845 08 | 11 | 2 |
| 40 42 012 | 2 210 | 91 81 614 08 | 325 | 2 |
| 40 42 012 | 2 210 008 | 96 48 137 08 | 320 | 2 |
| 40 42 031 | 3 330 | 91 57 885 08 | 26 | 4 |
| 40 42 044 05 | X1033367 | 10 33 367 2 | 31 | 6 |
| 40 42 052 08 | 1 970 | 96 71 367 08 | 31 | 2 |
| 40 42 056 08 | 2 970 | 91 55 482 08 | 76 | 4 |
| 40 42 059 08 | 2 970 | 91 55 482 08 | 75 | 2 |
| 40 42 070 | 9 075 540 | 90 75 540 | 2 | 1 |
| 40 42 096 01 | 2 210 | 91 81 614 08 | 342 | 1 |
| 40 42 098 08 | X1011659 | 10 11 659 1 | 4 | 1 |
| 40 42 104 01 | 1 100 216 | 96 46 363 08 | 23 | 8 |
| 40 42 111 | 2 920 | 91 55 477 08 | 29 | 2 |
| 40 42 130 01 | 2 210 | 91 81 614 08 | 338 | 2 |
| 40 42 143 05 | 2 571 | 91 50 902 08 | 3 | 16 |
| 40 42 151 01 | 2 975 152 | 91 05 737 08 | 13 | 12 |
| 40 42 305 08 | 2 971 | 91 50 610 08 | 50 | 4 |
| 40 42 314 08 | 2 970 | 91 55 482 08 | 502 | 4 |
| 40 42 314 08 | 2 971 | 91 50 610 08 | 502 | 8 |
| 40 43 000 | 9 073 767 | 90 73 767 | 6 | 2 |
| 40 43 000 | X1011683 | 10 11 683 9 | 3 | 2 |
| 40 43 003 | X1029147 | 10 29 147 4 | 86 | 4 |
| 40 43 009 | 9 074 165 | 90 74 165 | 6 | 2 |
| 40 43 028 08 | 1 970 | 96 71 367 08 | 14 | 4 |
| 40 43 028 08 | 1 970 | 96 71 367 08 | 19 | 4 |
| 40 43 029 08 | X1047529 | 10 47 529 2 | 90 | 4 |
| 40 43 029 14 | 1 970 | 96 71 367 08 | 20 | 4 |
| 40 43 050 | 5 123 931 | 51 23 931 08 | 16 | 4 |
| 40 43 080 08 | X1029147 | 10 29 147 4 | 85 | 4 |
| 40 43 080 08 | X1047529 | 10 47 529 1 | 85 | 4 |
| 40 43 080 08 | X1047529 | 10 47 529 2 | 85 | 4 |
| 40 43 120 08 | 9 387 598 | 93 87 598 01 | 77 | 8 |
| 40 43 120 08 | 9 686 071 | 96 86 071 01 | 77 | 8 |
| 40 43 122 | X1011998 | 10 11 998 0 | (2) | 2 |
| 40 43 126 08 | 2 420 | 91 32 936 08 | 4 | 24 |
| 40 43 127 | 9 444 410 | 94 44 410 03 | 52 | 24 |
| 40 43 163 08 | X1029358 | 10 29 358 6 | 5 | 4 |
| 40 43 164 | 9 444 410 | 94 44 410 03 | 82 | 8 |
| 40 43 169 01 | 9 387 596 | 93 87 596 01 | 31 | 4 |
| 40 43 177 01 | 9 387 070 | 93 87 070 01 | 6 | 16 |
| 40 43 177 01 | 9 685 586 | 96 85 586 01 | 6 | 16 |
| 40 43 181 01 | 9 387 598 | 93 87 598 01 | 21 | 24 |
| 40 43 181 01 | 9 686 071 | 96 86 071 01 | 21 | 24 |
| 40 43 245 01 | 1 100 210 | 96 51 634 08 | 4 | 24 |
| 40 43 245 08 | 1 100 205 | 96 51 633 08 | 4 | 24 |
| 40 43 612 08 | 5 113 078 | 51 13 078 08 | 70 | 16 |
| 40 43 612 08 | 5 114 869 | 51 14 869 08 | 16 | 4 |
| 40 43 624 08 | X1041191 | 10 41 191 3 | 85 | 4 |

| Item | Page | Assembly | Pos. | Quantity |
|---|---|---|---|---|
| 40 43 637 08 | 5 114 869 | 51 14 869 08 | 15 | 4 |
| 40 43 641 08 | 9 072 112 | 90 72 112 | (74) | 4 |
| 40 44 005 08 | 5 114 794 | 51 14 794 08 | 5 | 1 |
| 40 44 076 08 | 3 102 000 | 91 62 543 08 | 63 | 4 |
| 40 44 076 08 | 3 103 000 | 91 62 544 08 | 63 | 4 |
| 40 44 076 08 | 3 104 000 | 91 62 545 08 | 63 | 4 |
| 40 44 076 08 | 3 105 000 | 91 62 546 08 | 63 | 4 |
| 40 44 076 08 | 3 106 000 | 91 60 313 08 | 61 | 4 |
| 40 46 013 08 | X1106838 | 11 06 838 7 | 15 | 1 |
| 40 61 032 08 | 2 520 000 | 91 49 872 08 | 155 | 2 |
| 40 61 098 08 | 2 210 | 91 81 614 08 | 328 | 2 |
| 40 61 108 | 2 970 | 91 55 482 08 | 503 | 4 |
| 40 61 109 08 | 2 260 006 | 96 31 147 08 | 4 | 6 |
| 40 61 228 01 | 2 340 | 91 53 116 08 | 2 | 1 |
| 40 61 509 14 | 1 100 205 | 96 51 633 08 | 7 | 24 |
| 40 61 509 14 | 1 100 210 | 96 51 634 08 | 7 | 24 |
| 40 62 072 08 | 1 100 205 | 96 51 633 08 | 18 | 12 |
| 40 62 072 08 | 1 100 210 | 96 51 634 08 | 18 | 12 |
| 40 62 129 01 | 1 100 214 | 74 90 137 14 | 7 | 4 |
| 40 62 147 08 | 4 003 006 | 91 04 457 08 | 16 | 4 |
| 40 62 227 08 | 3 330 | 91 57 885 08 | 6 | 4 |
| 40 65 000 08 | 2 913 | 91 32 850 08 | 11 | 4 |
| 40 65 023 08 | 2 971 | 91 50 610 08 | 36 | 2 |
| 40 65 025 08 | 3 501 | 91 05 788 08 | 82 | 2 |
| 40 65 028 08 | 2 270 001 | 96 37 923 08 | 3 | 5 |
| 40 65 033 01 | 1 400 200 | 91 53 791 08 | 22 | 6 |
| 40 65 060 | 1 630 003 | 96 47 650 08 | 3 | 2 |
| 40 65 068 08 | 2 510 100 | 96 44 750 08 | 315 | 1 |
| 40 65 076 08 | 2 510 100 | 96 44 750 08 | 313 | 6 |
| 40 65 098 08 | 2 340 004 | 96 43 780 08 | 10 | 8 |
| 40 65 098 08 | 2 510 100 | 96 44 750 08 | 316 | 1 |
| 40 65 099 | 2 210 008 | 96 48 137 08 | 302 | 4 |
| 40 65 099 | 2 430 | 91 54 389 08 | 4 | 4 |
| 40 65 099 | 2 501 022 | 96 34 184 08 | 9 | 4 |
| 40 65 099 | 2 540 | 91 45 984 08 | 30 | 2 |
| 40 65 099 | 2 913 004 | 96 20 460 08 | 5 | 1 |
| 40 65 099 | 2 920 200 | 91 27 889 08 | 10 | 3 |
| 40 65 099 | 2 932 095 | 96 46 064 08 | 65 | 1 |
| 40 65 099 | 2 970 | 91 55 482 08 | 72 | 8 |
| 40 65 099 | 3 330 | 91 57 885 08 | 30 | 2 |
| 40 65 144 01 | 3 501 | 91 05 788 08 | 52 | 1 |
| 40 65 145 01 | 1 970 | 96 71 367 08 | 574 | 20 |
| 40 65 145 01 | 2 970 | 91 55 482 08 | 504 | 8 |
| 40 65 191 | 3 102 000 | 91 62 543 08 | 5 | 4 |
| 40 65 191 | 3 103 000 | 91 62 544 08 | 5 | 4 |
| 40 65 191 | 3 104 000 | 91 62 545 08 | 5 | 4 |
| 40 65 191 | 3 105 000 | 91 62 546 08 | 5 | 4 |
| 40 65 191 | 3 106 000 | 91 60 313 08 | 5 | 4 |
| 40 65 207 01 | 1 100 215 | 99 20 783 14 | 25 | 12 |
| 40 65 269 14 | 1 100 205 | 96 51 633 08 | 32 | 2 |
| 40 65 269 14 | 1 100 210 | 96 51 634 08 | 32 | 2 |
| 40 65 281 | 2 270 | 91 50 456 08 | 4 | 1 |
| 40 65 281 | 2 340 | 91 53 116 08 | 3 | 2 |
| 40 65 306 14 | 1 100 215 | 99 20 783 14 | 50 | 8 |
| 40 65 326 14 | 2 520 000 | 91 49 872 08 | 150 | 1 |
| 40 65 901 05 | 2 520 000 | 91 49 872 08 | 158 | 2 |
| 40 66 010 08 | 2 440 022 | 96 42 336 08 | 12 | 6 |
| 40 66 010 08 | 2 450 025 | 96 35 649 08 | 4 | 6 |
| 40 66 010 08 | 2 790 901 | 91 54 183 08 | 6 | 2 |
| 40 66 030 08 | 2 350 | 91 81 361 08 | 5 | 8 |

| Item | Page | Assembly | Pos. | Quantity |
|---|---|---|---|---|
| 40 66 030 08 | 2 501 000 | 91 48 769 08 | 29 | 4 |
| 40 66 031 08 | 2 102 | 91 51 080 08 | 4 | 8 |
| 40 66 031 08 | 2 440 022 | 96 42 336 08 | 13 | 22 |
| 40 66 031 08 | 2 450 025 | 96 35 649 08 | 3 | 22 |
| 40 66 034 08 | 3 500 104 | 92 95 821 08 | 7 | 1 |
| 40 66 087 08 | 3 101 | 91 60 312 08 | 53 | 2 |
| 40 66 087 08 | 3 102 000 | 91 62 543 08 | 53 | 2 |
| 40 66 087 08 | 3 103 000 | 91 62 544 08 | 53 | 2 |
| 40 66 087 08 | 3 104 000 | 91 62 545 08 | 53 | 2 |
| 40 66 087 08 | 3 105 000 | 91 62 546 08 | 53 | 2 |
| 40 66 090 08 | X1011578 | 10 11 578 0 | 2 | 8 |
| 40 70 038 08 | 2 950 | 91 49 515 08 | 26 | 3 |
| 40 70 312 08 | 2 520 000 | 91 49 872 08 | 76 | 4 |
| 40 73 502 08 | 2 510 200 | 96 41 258 08 | 28 | 8 |
| 40 73 502 08 | 2 540 | 91 45 984 08 | 40 | 2 |
| 40 73 502 08 | 2 932 042 | 96 68 587 08 | 65 | 8 |
| 40 73 502 08 | X1011998 | 10 11 998 0 | 31 | 5 |
| 40 79 240 | X1011569 | 10 11 569 6 | 7 | 1 |
| 40 79 240 | X1011573 | 10 11 573 7 | 26 | 1 |
| 40 82 000 08 | 2 932 042 | 96 68 587 08 | 60 | 2 |
| 40 82 010 14 | 3 930 718 | 96 56 248 08 | 210 | 2 |
| 40 82 505 08 | 2 520 000 | 91 49 872 08 | 164 | 4 |
| 40 82 808 08 | 2 520 000 | 91 49 872 08 | 119 | 10 |
| 40 82 809 08 | 2 520 000 | 91 49 872 08 | 117 | 6 |
| 40 83 000 08 | 2 522 | 91 10 037 08 | 46 | 3 |
| 40 83 112 08 | 2 913 003 | 96 20 599 08 | 4 | 4 |
| 40 83 114 08 | 2 913 006 | 96 20 732 08 | 3 | 4 |
| 40 84 005 01 | 2 913 005 | 96 28 696 08 | 3 | 8 |
| 40 84 006 01 | 2 932 119 | 96 46 061 08 | 25 | 17 |
| 40 84 007 01 | 2 913 005 | 96 28 696 08 | 4 | 2 |
| 40 84 021 01 | 2 260 006 | 96 31 147 08 | 8 | 2 |
| 40 84 021 01 | 3 750 026 | 96 89 407 08 | 8 | 3 |
| 40 84 021 01 | 3 750 028 | 96 89 408 08 | 8 | 3 |
| 40 86 002 08 | 2 510 100 | 96 44 750 08 | 306 | 6 |
| 40 86 002 08 | 2 510 200 | 96 41 258 08 | 41 | 6 |
| 40 86 002 08 | 2 515 007 | 96 42 014 08 | 6 | 8 |
| 40 86 002 08 | 2 522 | 91 10 037 08 | 40 | 4 |
| 40 86 002 08 | 3 750 026 | 96 89 407 08 | 4 | 4 |
| 40 86 002 08 | 3 750 028 | 96 89 408 08 | 4 | 4 |
| 40 86 003 08 | 3 101 | 91 60 312 08 | 55 | 3 |
| 40 86 003 08 | 3 102 000 | 91 62 543 08 | 55 | 3 |
| 40 86 003 08 | 3 103 000 | 91 62 544 08 | 55 | 3 |
| 40 86 018 08 | 2 500 | 91 48 594 08 | 6 | 3 |
| 40 86 040 08 | 2 502 | 91 01 533 08 | 25 | 16 |
| 40 86 040 08 | 2 780 851 | 96 24 498 08 | 4 | 1 |
| 40 86 040 08 | 2 780 852 | 96 24 845 08 | 8 | 1 |
| 40 86 040 08 | 2 932 042 | 96 68 587 08 | 67 | 6 |
| 40 86 041 08 | 2 510 072 | 96 44 614 08 | 3 | 6 |
| 40 86 041 08 | 2 510 201 | 96 42 011 08 | 3 | 6 |
| 40 86 058 14 | 2 520 021 | 92 17 203 08 | 6 | 8 |
| 40 93 405 08 | 2 520 000 | 91 49 872 08 | 105 | 8 |
| 40 93 609 08 | 2 520 001 | 92 48 796 08 | 13 | 4 |
| 40 97 040 08 | 2 502 | 91 01 533 08 | 41 | 8 |
| 40 97 041 08 | 2 510 100 | 96 44 750 08 | 304 | 8 |
| 40 97 041 08 | 2 510 200 | 96 41 258 08 | 42 | 5 |
| 40 97 041 08 | 2 950 | 91 49 515 08 | 24 | 2 |
| 40 97 041 08 | 2 984 | 91 52 906 08 | 302 | 22 |
| 40 97 041 08 | 3 750 008 | 91 75 085 08 | 8 | 8 |
| 40 97 044 08 | 2 450 | 91 53 926 08 | 14 | 4 |
| 40 97 053 08 | 2 520 000 | 91 49 872 08 | 162 | 3 |
| 40 97 053 08 | 2 520 021 | 92 17 203 08 | 7 | 2 |
| 40 97 063 08 | 2 502 | 91 01 533 08 | 45 | 12 |
| 40 97 070 01 | 9 686 071 | 96 86 071 01 | 43 | 3 |
| 40 97 070 08 | 2 520 000 | 91 49 872 08 | 135 | 4 |
| 40 97 105 08 | 2 502 | 91 01 533 08 | 30 | 2 |
| 40 97 109 08 | 2 510 200 | 96 41 258 08 | 22 | 2 |
| 40 98 177 08 | 1 620 | 91 48 605 08 | 1 | 56 |
| 40 98 177 08 | 2 410 | 91 48 668 08 | 2 | 33 |
| 41 01 203 08 | 3 511 006 | 96 45 029 08 | 29 | 1 |
| 41 15 031 03 | 1 300 010 | 99 14 563 14 | 6 | 2 |
| 41 15 044 08 | 2 210 008 | 96 48 137 08 | 351 | 4 |
| 41 15 048 08 | 2 102 | 91 51 080 08 | 15 | 3 |
| 41 15 050 08 | 2 102 | 91 51 080 08 | 57 | 8 |
| 41 15 122 08 | 5 530 854 | 55 30 854 08 | 7 | 2 |
| 41 15 142 08 | 2 522 | 91 10 037 08 | 50 | 1 |
| 41 15 142 08 | 2 932 215 | 92 26 129 08 | 6 | 2 |
| 41 15 142 08 | 3 501 | 91 05 788 08 | 105 | 2 |
| 41 15 143 08 | 2 210 | 91 81 614 08 | 356 | 1 |
| 41 15 143 08 | 2 440 022 | 96 42 336 08 | 23 | 4 |
| 41 15 143 08 | 3 501 | 91 05 788 08 | 65 | 7 |
| 41 15 143 08 | 3 510 100 | 91 49 246 08 | 17 | 3 |
| 41 15 144 08 | 2 102 | 91 51 080 08 | 22 | 8 |
| 41 15 144 08 | 2 210 | 91 81 614 08 | 352 | 3 |
| 41 15 144 08 | 2 440 022 | 96 42 336 08 | 30 | 4 |
| 41 15 144 08 | 2 502 | 91 01 533 08 | 40 | 2 |
| 41 15 144 08 | 2 510 100 | 96 44 750 08 | 351 | 11 |
| 41 15 144 08 | 2 510 200 | 96 41 258 08 | 12 | 3 |
| 41 15 144 08 | 2 520 000 | 91 49 872 08 | 141 | 1 |
| 41 15 144 08 | 3 106 000 | 91 60 313 08 | 73 | 1 |
| 41 15 144 08 | 3 511 006 | 96 45 029 08 | 25 | 2 |
| 41 15 146 08 | 3 500 104 | 92 95 821 08 | 8 | 1 |
| 41 15 148 08 | 2 260 006 | 96 31 147 08 | 10 | 2 |
| 41 15 148 08 | 2 711 | 91 53 002 08 | 5 | 4 |
| 41 15 148 08 | 2 913 100 | 91 23 538 08 | 10 | 2 |
| 41 15 148 08 | 2 920 574 | 96 36 055 08 | 270 | 2 |
| 41 15 148 08 | 2 920 904 | 96 41 093 08 | 253 | 2 |
| 41 15 148 08 | 2 922 001 | 92 84 311 08 | 18 | 1 |
| 41 15 152 08 | 1 100 205 | 96 51 633 08 | 33 | 2 |
| 41 15 152 08 | 1 100 210 | 96 51 634 08 | 33 | 2 |
| 41 15 157 08 | 2 922 001 | 92 84 311 08 | 15 | 10 |
| 41 15 157 08 | 2 932 119 | 96 46 061 08 | 26 | 22 |
| 41 15 157 08 | 3 930 492 | 96 20 966 08 | 267 | 2 |
| 41 17 006 08 | 1 100 215 | 99 20 783 14 | 51 | 40 |
| 41 17 006 08 | 3 330 | 91 57 885 08 | 18 | 4 |
| 41 17 010 08 | 2 500 | 91 48 594 08 | 15 | 1 |
| 41 19 002 08 | 2 913 102 | 92 32 870 08 | 7 | 8 |
| 41 19 002 08 | 3 100 | 91 59 279 08 | 32 | 2 |
| 41 19 003 05 | 3 101 | 91 60 312 08 | 6 | 2 |
| 41 19 003 08 | 2 502 | 91 01 533 08 | 22 | 6 |
| 41 19 003 08 | 2 780 851 | 96 24 498 08 | 5 | 1 |
| 41 19 003 08 | 2 780 852 | 96 24 845 08 | 9 | 1 |
| 41 19 003 08 | 2 932 042 | 96 68 587 08 | 92 | 6 |
| 41 19 003 08 | 3 750 026 | 96 89 407 08 | 10 | 3 |
| 41 19 003 08 | 3 750 028 | 96 89 408 08 | 10 | 3 |
| 41 19 004 08 | 1 792 004 | 92 51 415 08 | 5 | 1 |
| 41 19 004 08 | 2 501 000 | 91 48 769 08 | 17 | 2 |
| 41 19 004 08 | 2 501 022 | 96 34 184 08 | 10 | 4 |
| 41 19 004 08 | 2 515 007 | 96 42 014 08 | 13 | 2 |
| 41 19 004 08 | 2 520 000 | 91 49 872 08 | 75 | 4 |
| 41 19 004 08 | 2 522 | 91 10 037 08 | 30 | 4 |

| Item | Page | Assembly | Pos. | Quantity |
|---|---|---|---|---|
| 41 19 004 08 | 2 571 | 91 50 902 08 | 8 | 12 |
| 41 19 004 08 | 2 932 095 | 96 46 064 08 | 97 | 3 |
| 41 19 004 08 | 2 932 166 | 92 68 911 08 | 14 | 6 |
| 41 19 004 08 | 2 970 | 91 55 482 08 | 74 | 2 |
| 41 19 004 08 | 2 971 | 91 50 610 08 | 42 | 6 |
| 41 19 004 08 | 3 102 000 | 91 62 543 08 | 69 | 2 |
| 41 19 004 08 | 3 103 000 | 91 62 544 08 | 69 | 2 |
| 41 19 004 08 | 3 104 000 | 91 62 545 08 | 69 | 2 |
| 41 19 004 08 | 3 105 000 | 91 62 546 08 | 69 | 2 |
| 41 19 004 08 | 3 501 | 91 05 788 08 | 88 | 4 |
| 41 19 004 08 | 5 910 672 | 59 10 672 08 | 20 | 1 |
| 41 19 005 08 | 1 100 216 | 96 46 363 08 | 4 | 8 |
| 41 19 005 08 | 2 515 007 | 96 42 014 08 | 11 | 8 |
| 41 19 005 08 | 2 520 000 | 91 49 872 08 | 98 | 26 |
| 41 19 005 08 | 2 522 | 91 10 037 08 | 34 | 8 |
| 41 19 005 08 | 2 790 | 91 68 708 08 | 4 | 4 |
| 41 19 005 08 | 2 831 | 91 47 871 08 | 25 | 2 |
| 41 19 005 08 | 2 932 042 | 96 68 587 08 | 100 | 2 |
| 41 19 005 08 | 3 750 008 | 91 75 085 08 | 6 | 8 |
| 41 19 009 08 | 3 501 | 91 05 788 08 | 58 | 2 |
| 41 19 009 08 | 3 510 100 | 91 49 246 08 | 23 | 2 |
| 41 19 020 08 | 2 501 000 | 91 48 769 08 | 37 | 2 |
| 41 19 024 08 | 2 340 | 91 53 116 08 | 4 | 1 |
| 41 19 024 08 | 3 102 000 | 91 62 543 08 | 34 | 4 |
| 41 19 024 08 | 3 103 000 | 91 62 544 08 | 34 | 4 |
| 41 19 024 08 | 3 104 000 | 91 62 545 08 | 34 | 4 |
| 41 19 024 08 | 3 105 000 | 91 62 546 08 | 46 | 4 |
| 41 19 024 08 | 3 106 000 | 91 60 313 08 | 59 | 4 |
| 41 19 024 08 | 3 501 | 91 05 788 08 | 72 | 2 |
| 41 19 030 08 | 2 520 000 | 91 49 872 08 | 156 | 3 |
| 41 21 001 08 | 5 910 672 | 59 10 672 08 | 6 | 1 |
| 41 30 026 08 | 2 520 000 | 91 49 872 08 | 110 | 2 |
| 41 30 026 08 | 2 932 042 | 96 68 587 08 | 94 | 3 |
| 41 30 028 08 | 2 501 000 | 91 48 769 08 | 32 | 2 |
| 41 30 028 08 | 2 520 000 | 91 49 872 08 | 81 | 23 |
| 41 30 028 08 | 2 520 000 | 91 49 872 08 | 104 | 2 |
| 41 30 028 08 | 2 540 | 91 45 984 08 | 11 | 6 |
| 41 30 028 08 | 2 681 | 91 28 102 08 | 351 | 8 |
| 41 30 028 08 | 2 932 042 | 96 68 587 08 | 95 | 8 |
| 41 30 029 08 | 2 522 | 91 10 037 08 | 51 | 2 |
| 41 30 029 08 | 3 101 | 91 60 312 08 | 71 | 4 |
| 41 30 029 08 | 3 920 012 | 96 57 224 08 | 2 | 2 |
| 41 30 031 08 | 2 501 000 | 91 48 769 08 | 25 | 8 |
| 41 30 031 08 | 2 540 | 91 45 984 08 | 14 | 1 |
| 41 30 031 08 | 2 932 042 | 96 68 587 08 | 98 | 9 |
| 41 30 032 08 | 2 510 200 | 96 41 258 08 | 46 | 2 |
| 41 30 032 08 | 3 100 | 91 59 279 08 | 26 | 3 |
| 41 30 034 08 | 2 502 | 91 01 533 08 | 37 | 4 |
| 41 30 034 08 | 2 510 100 | 96 44 750 08 | 360 | 6 |
| 41 30 034 08 | 2 932 042 | 96 68 587 08 | 99 | 2 |
| 41 30 034 08 | 2 984 | 91 52 906 08 | 351 | 5 |
| 41 30 046 08 | 2 502 | 91 01 533 08 | 39 | 4 |
| 41 30 054 08 | 2 501 000 | 91 48 769 08 | 39 | 8 |
| 41 30 062 08 | 2 932 042 | 96 68 587 08 | 70 | 28 |
| 41 30 070 08 | 2 510 201 | 96 42 011 08 | 13 | 6 |
| 41 34 126 01 | 2 210 008 | 96 48 137 08 | 352 | 2 |
| 42 00 009 77 | X1081388 | 10 81 388 6 | 43 | 2 |
| 42 00 010 14 | 1 400 200 | 91 53 791 08 | 21 | 4 |
| 42 00 054 14 | 2 200 | 91 81 095 08 | 375 | 2 |
| 42 00 501 08 | 3 930 492 | 96 20 966 08 | 268 | 2 |
| 42 00 522 14 | 2 913 100 | 91 23 538 08 | 8 | 1 |
| 42 00 607 05 | 2 520 000 | 91 49 872 08 | 159 | 2 |
| 42 02 008 08 | 3 330 | 91 57 885 08 | 12 | 18 |
| 42 10 004 08 | 5 701 090 | 57 01 090 08 | 17 | 2 |
| 42 10 005 08 | 5 701 090 | 57 01 090 08 | 18 | 1 |
| 42 11 008 08 | 2 440 022 | 96 42 336 08 | 14 | 4 |
| 42 11 016 08 | 2 501 000 | 91 48 769 08 | 38 | 2 |
| 42 11 017 14 | 1 740 010 | 96 50 675 08 | 10 | 8 |
| 42 11 018 08 | 1 300 010 | 99 14 563 14 | 3 | 2 |
| 42 11 018 08 | 2 210 008 | 96 48 137 08 | 381 | 1 |
| 42 11 026 08 | 1 630 002 | 99 06 183 14 | 6 | 3 |
| 42 11 034 08 | 2 571 | 91 50 902 08 | 23 | 8 |
| 42 11 039 08 | 2 571 | 91 50 902 08 | 21 | 4 |
| 42 11 042 08 | 1 100 216 | 96 46 363 08 | 12 | 4 |
| 42 12 016 08 | 2 210 008 | 96 48 137 08 | 382 | 1 |
| 42 13 004 14 | 1 100 205 | 96 51 633 08 | 16 | 12 |
| 42 13 004 14 | 1 100 210 | 96 51 634 08 | 16 | 12 |
| 42 15 000 08 | 2 500 | 91 48 594 08 | 22 | 5 |
| 42 15 000 08 | 2 515 | 91 51 084 08 | 3 | 6 |
| 42 15 000 08 | 2 680 | 91 53 225 08 | 376 | 3 |
| 42 15 002 08 | 1 100 215 | 99 20 783 14 | 52 | 24 |
| 42 15 002 08 | 2 102 | 91 51 080 08 | 3 | 8 |
| 42 15 002 08 | 2 210 008 | 96 48 137 08 | 380 | 1 |
| 42 15 002 08 | 2 501 000 | 91 48 769 08 | 30 | 4 |
| 42 17 008 08 | 2 210 | 91 81 614 08 | 381 | 4 |
| 42 17 008 08 | 3 510 100 | 91 49 246 08 | 18 | 2 |
| 42 18 005 08 | 3 100 | 91 59 279 08 | 33 | 2 |
| 42 18 005 08 | 3 501 | 91 05 788 08 | 106 | 2 |
| 42 18 006 08 | 2 970 | 91 55 482 08 | 71 | 4 |
| 42 18 006 08 | 3 930 718 | 96 56 248 08 | 218 | 2 |
| 42 18 009 08 | 2 102 | 91 51 080 08 | 28 | 2 |
| 42 18 009 08 | 2 440 022 | 96 42 336 08 | 9 | 4 |
| 42 18 009 08 | 2 502 | 91 01 533 08 | 19 | 2 |
| 42 18 009 08 | 2 510 100 | 96 44 750 08 | 375 | 4 |
| 42 18 009 08 | 2 510 200 | 96 41 258 08 | 16 | 13 |
| 42 18 009 08 | 2 515 007 | 96 42 014 08 | 10 | 8 |
| 42 18 009 08 | 2 522 | 91 10 037 08 | 39 | 2 |
| 42 18 009 08 | 2 831 | 91 47 871 08 | 29 | 2 |
| 42 18 009 08 | 2 932 042 | 96 68 587 08 | 78 | 9 |
| 42 18 009 08 | 2 950 | 91 49 515 08 | 22 | 16 |
| 42 18 009 08 | 3 100 | 91 59 279 08 | 18 | 4 |
| 42 18 009 08 | 3 101 | 91 60 312 08 | 28 | 18 |
| 42 18 009 08 | 3 510 100 | 91 49 246 08 | 37 | 3 |
| 42 18 009 08 | 3 511 006 | 96 45 029 08 | 31 | 3 |
| 42 19 002 08 | X1011659 | 10 11 659 1 | 5 | 1 |
| 42 20 010 01 | 9 074 505 | 90 74 505 | 5 | 1 |
| 42 20 032 01 | 9 444 410 | 94 44 410 03 | 33 | 3 |
| 42 20 119 01 | 9 444 410 | 94 44 410 03 | 32 | 3 |
| 42 20 614 01 | 9 686 071 | 96 86 071 01 | 48 | 9 |
| 42 20 615 01 | 9 686 071 | 96 86 071 01 | 49 | 6 |
| 42 20 621 01 | 9 686 071 | 96 86 071 01 | 47 | 3 |
| 42 29 913 | X1015211 | 10 15 211 6 | 12 | 12 |
| 42 39 014 08 | 9 330 748 | 93 30 748 01 | 27 | 16 |
| 42 39 015 08 | 9 387 596 | 93 87 596 01 | 26 | 1 |
| 42 39 017 08 | 9 686 071 | 96 86 071 01 | 53 | 8 |
| 42 39 020 01 | 9 444 410 | 94 44 410 03 | 53 | 12 |
| 42 40 003 08 | 2 501 000 | 91 48 769 08 | 9 | 4 |
| 42 40 004 08 | 2 920 574 | 96 36 055 08 | 269 | 2 |
| 42 40 004 08 | 2 920 904 | 96 41 093 08 | 252 | 2 |
| 42 40 005 08 | 2 520 000 | 91 49 872 08 | 74 | 3 |

| Item | Page | Assembly | Pos. | Quantity |
|---|---|---|---|---|
| 42 40 005 08 | 2 780 800 | 91 15 191 08 | 12 | 3 |
| 42 40 005 08 | 2 920 | 91 55 477 08 | 33 | 2 |
| 42 40 005 08 | 2 920 200 | 91 27 889 08 | 12 | 3 |
| 42 40 005 08 | 2 920 585 | 91 01 520 08 | 17 | 3 |
| 42 40 007 08 | 2 501 000 | 91 48 769 08 | 26 | 8 |
| 42 40 007 08 | 2 502 | 91 01 533 08 | 21 | 2 |
| 42 40 007 08 | 2 920 585 | 91 01 520 08 | 12 | 2 |
| 42 41 007 08 | 5 102 294 | 51 02 294 08 | 8 | 6 |
| 42 50 514 08 | 3 102 000 | 91 62 543 08 | 62 | 8 |
| 42 50 514 08 | 3 103 000 | 91 62 544 08 | 62 | 8 |
| 42 50 514 08 | 3 104 000 | 91 62 545 08 | 62 | 8 |
| 42 50 514 08 | 3 105 000 | 91 62 546 08 | 62 | 8 |
| 42 50 514 08 | 3 106 000 | 91 60 313 08 | 41 | 4 |
| 42 51 004 08 | 2 913 003 | 96 20 599 08 | 3 | 4 |
| 42 51 005 08 | 2 913 100 | 91 23 538 08 | 6 | 12 |
| 42 51 005 08 | 2 922 001 | 92 84 311 08 | 17 | 10 |
| 42 51 007 08 | 2 913 100 | 91 23 538 08 | 14 | 4 |
| 42 51 009 08 | 2 533 001 | 96 41 568 08 | 62 | 3 |
| 42 52 205 08 | 2 913 | 91 32 850 08 | 13 | 4 |
| 42 52 205 08 | 2 913 005 | 96 28 696 08 | 7 | 12 |
| 42 52 205 08 | 2 932 119 | 96 46 061 08 | 27 | 17 |
| 42 52 205 08 | 2 932 214 | 96 28 366 08 | 9 | 4 |
| 42 52 207 08 | 2 932 042 | 96 68 587 08 | 82 | 28 |
| 42 52 207 08 | 2 932 215 | 92 26 129 08 | 4 | 4 |
| 42 52 210 08 | 1 100 215 | 99 20 783 14 | 46 | 7 |
| 42 52 210 08 | 2 913 004 | 96 20 460 08 | 7 | 2 |
| 42 52 210 08 | 2 932 042 | 96 68 587 08 | 86 | 1 |
| 42 52 211 08 | 2 932 042 | 96 68 587 08 | 88 | 9 |
| 42 52 212 08 | 1 100 205 | 96 51 633 08 | 24 | 8 |
| 42 52 212 08 | 1 100 210 | 96 51 634 08 | 24 | 6 |
| 42 52 216 08 | 1 100 200 | 96 72 944 08 | 14 | 6 |
| 42 52 216 08 | 1 100 205 | 96 51 633 08 | 13 | 20 |
| 42 52 216 08 | 1 100 210 | 96 51 634 08 | 13 | 20 |
| 42 52 219 08 | 1 100 215 | 99 20 783 14 | 40 | 12 |
| 42 53 012 08 | 3 501 | 91 05 788 08 | 74 | 1 |
| 42 80 024 08 | 9 074 505 | 90 74 505 | 6 | 1 |
| 42 80 029 08 | 9 330 748 | 93 30 748 01 | 92 | 1 |
| 42 80 032 03 | 9 444 410 | 94 44 410 03 | 38 | 3 |
| 42 80 033 08 | 9 387 598 | 93 87 598 01 | 33 | 3 |
| 42 80 033 08 | 9 686 071 | 96 86 071 01 | 33 | 3 |
| 42 80 040 08 | 9 387 598 | 93 87 598 01 | 44 | 2 |
| 42 80 040 08 | 9 686 071 | 96 86 071 01 | 44 | 2 |
| 42 80 083 08 | 3 105 002 | 92 73 100 08 | 3 | 2 |
| 42 80 083 08 | 3 106 001 | 96 42 835 08 | 3 | 2 |
| 42 80 094 08 | 4 099 001 | 92 40 739 08 | 3 | 2 |
| 42 81 007 08 | X1042993 | 10 42 993 3 | 5 | 1 |
| 42 81 021 08 | 9 330 748 | 93 30 748 01 | 67 | 1 |
| 42 81 025 08 | 5 701 090 | 57 01 090 08 | 12 | 1 |
| 42 81 027 08 | 9 387 598 | 93 87 598 01 | 4 | 1 |
| 42 81 027 08 | 9 686 071 | 96 86 071 01 | 4 | 1 |
| 42 81 038 08 | 5 102 407 | 51 02 407 08 | 12 | 1 |
| 42 81 059 08 | 9 387 596 | 93 87 596 01 | 21 | 1 |
| 42 81 100 01 | 9 387 598 | 93 87 598 01 | 29 | 1 |
| 42 81 102 01 | 9 444 410 | 94 44 410 03 | 66 | 1 |
| 42 85 217 08 | 5 123 931 | 51 23 931 08 | 11 | 2 |
| 43 06 708 08 | 3 102 000 | 91 62 543 08 | 3 | 1 |
| 43 06 708 08 | 3 103 000 | 91 62 544 08 | 3 | 1 |
| 43 06 708 08 | 3 104 000 | 91 62 545 08 | 3 | 1 |
| 43 06 708 08 | 3 105 000 | 91 62 546 08 | 3 | 1 |
| 43 06 708 08 | 3 106 000 | 91 60 313 08 | 3 | 1 |

| Item | Page | Assembly | Pos. | Quantity |
|---|---|---|---|---|
| 43 07 096 08 | 5 123 537 | 51 23 537 08 | 2 | 1 |
| 43 11 002 01 | 9 387 596 | 93 87 596 01 | 24 | 1 |
| 43 12 005 01 | 9 330 748 | 93 30 748 01 | 91 | 3 |
| 43 12 024 01 | 9 387 596 | 93 87 596 01 | 18 | 1 |
| 43 20 043 08 | 2 790 024 | 96 67 077 08 | 6 | 1 |
| 43 20 065 08 | 2 920 551 | 96 53 715 08 | 5 | 2 |
| 43 20 079 08 | 9 387 598 | 93 87 598 01 | 72 | 1 |
| 43 20 079 08 | 9 686 071 | 96 86 071 01 | 72 | 1 |
| 43 20 085 08 | 9 078 832 | 90 78 832 | 5 | 1 |
| 43 20 119 08 | 3 510 100 | 91 49 246 08 | 39 | 1 |
| 43 20 129 08 | 2 102 | 91 51 080 08 | 5 | 4 |
| 43 20 129 08 | 2 350 | 91 81 361 08 | 7 | 4 |
| 43 20 131 08 | 1 100 214 | 74 90 137 14 | 5 | 2 |
| 43 30 018 08 | 2 515 007 | 96 42 014 08 | 17 | 1 |
| 43 30 034 08 | 3 501 | 91 05 788 08 | 32 | 4 |
| 43 30 038 08 | 3 106 000 | 91 60 313 08 | 58 | 1 |
| 43 30 055 08 | 3 106 000 | 91 60 313 08 | 39 | 2 |
| 43 30 055 08 | 3 511 006 | 96 45 029 08 | 11 | 1 |
| 43 30 063 14 | 1 300 010 | 99 14 563 14 | 4 | 2 |
| 43 30 063 14 | 1 740 010 | 96 50 675 08 | 11 | 8 |
| 43 30 065 08 | 3 500 104 | 92 95 821 08 | 5 | 3 |
| 43 30 065 08 | 3 501 | 91 05 788 08 | 33 | 9 |
| 43 30 065 08 | 3 510 001 | 92 52 800 08 | 5 | 1 |
| 43 30 066 08 | 1 630 002 | 99 06 183 14 | 8 | 3 |
| 43 30 090 08 | 3 501 | 91 05 788 08 | 36 | 2 |
| 43 30 090 08 | 3 511 | 91 54 159 08 | 2 | 1 |
| 43 30 090 08 | 3 511 006 | 96 45 029 08 | 9 | 1 |
| 43 30 103 08 | 2 571 | 91 50 902 08 | 24 | 8 |
| 43 30 103 08 | 3 501 | 91 05 788 08 | 31 | 8 |
| 43 30 109 08 | 2 571 | 91 50 902 08 | 20 | 4 |
| 43 30 112 08 | 1 100 216 | 96 46 363 08 | 13 | 4 |
| 43 31 009 08 | 3 510 001 | 92 52 800 08 | 7 | 1 |
| 43 31 009 08 | 3 511 | 91 54 159 08 | 4 | 2 |
| 43 31 012 08 | 1 100 205 | 96 51 633 08 | 39 | 4 |
| 43 31 012 08 | 1 100 210 | 96 51 634 08 | 39 | 4 |
| 43 31 012 08 | 1 630 002 | 99 06 183 14 | 7 | 2 |
| 43 31 012 08 | 2 102 022 | 96 32 604 08 | 4 | 1 |
| 43 31 012 08 | 2 440 022 | 96 42 336 08 | 46 | 2 |
| 43 31 012 08 | 3 106 000 | 91 60 313 08 | 38 | 2 |
| 43 31 012 08 | 3 501 | 91 05 788 08 | 110 | 2 |
| 43 31 012 08 | 3 510 006 | 96 20 924 08 | 7 | 1 |
| 43 31 012 08 | 3 510 100 | 91 49 246 08 | 36 | 1 |
| 43 31 012 08 | 3 511 006 | 96 45 029 08 | 12 | 1 |
| 43 31 012 08 | 3 511 006 | 96 45 029 08 | 20 | 1 |
| 43 31 025 08 | 3 106 000 | 91 60 313 08 | 67 | 1 |
| 43 31 025 08 | 3 511 006 | 96 45 029 08 | 10 | 1 |
| 43 31 028 08 | 2 510 100 | 96 44 750 08 | 140 | 1 |
| 43 31 028 08 | 3 106 000 | 91 60 313 08 | 57 | 1 |
| 43 31 050 08 | 3 501 | 91 05 788 08 | 35 | 3 |
| 43 32 009 08 | 1 100 216 | 96 46 363 08 | 5 | 8 |
| 43 32 013 08 | 3 106 000 | 91 60 313 08 | 81 | 1 |
| 43 32 013 08 | 3 501 | 91 05 788 08 | 38 | 4 |
| 43 32 061 14 | 1 740 010 | 96 50 675 08 | 13 | 4 |
| 43 32 062 08 | 3 750 027 | 96 89 527 08 | 2 | 2 |
| 43 32 066 08 | 1 300 005 | 99 17 196 14 | 4 | 8 |
| 43 40 002 08 | 6 060 516 | 60 60 516 08 | 102 | 1 |
| 44 33 003 08 | 2 922 001 | 92 84 311 08 | 19 | 14 |
| 45 00 220 14 | 1 740 010 | 96 50 675 08 | 9 | 4 |
| 45 00 231 08 | 3 501 | 91 05 788 08 | 57 | 2 |
| 45 00 235 08 | 3 501 | 91 05 788 08 | 13 | 1 |

| Item | Page | Assembly | Pos. | Quantity |
|---|---|---|---|---|
| 45 00 342 08 | 3 501 | 91 05 788 08 | 16 | 1 |
| 45 00 448 14 | 2 571 | 91 50 902 08 | 22 | 4 |
| 45 01 188 08 | 3 106 000 | 91 60 313 08 | 37 | 1 |
| 45 12 227 08 | 3 500 104 | 92 95 821 08 | 4 | 3 |
| 45 12 227 08 | 3 501 | 91 05 788 08 | 21 | 2 |
| 45 12 227 08 | 3 510 001 | 92 52 800 08 | 4 | 1 |
| 45 14 308 08 | 1 630 002 | 99 06 183 14 | 4 | 1 |
| 45 14 309 08 | 3 510 006 | 96 20 924 08 | 12 | 1 |
| 45 25 409 08 | 3 501 | 91 05 788 08 | 23 | 1 |
| 45 25 409 08 | 3 511 006 | 96 45 029 08 | 2 | 1 |
| 45 25 491 08 | 3 106 000 | 91 60 313 08 | 36 | 2 |
| 45 25 505 08 | 3 501 | 91 05 788 08 | 17 | 3 |
| 45 25 509 08 | 1 300 010 | 99 14 563 14 | 2 | 1 |
| 45 30 203 08 | 3 501 | 91 05 788 08 | 22 | 3 |
| 45 30 209 08 | 3 510 100 | 91 49 246 08 | 35 | 1 |
| 45 30 411 08 | 3 501 | 91 05 788 08 | 93 | 2 |
| 46 00 013 03 | 1 100 214 | 74 90 137 14 | 8 | 4 |
| 46 00 021 | 2 102 | 91 51 080 08 | 59 | 12 |
| 46 00 021 | 2 270 | 91 50 456 08 | 3 | 5 |
| 46 00 021 | 3 501 | 91 05 788 08 | 66 | 4 |
| 46 00 021 | 3 510 100 | 91 49 246 08 | 9 | 8 |
| 46 00 049 | 3 501 | 91 05 788 08 | 62 | 6 |
| 46 00 054 | 3 330 | 91 57 885 08 | 20 | 4 |
| 46 00 097 | 1 100 205 | 96 51 633 08 | 36 | 2 |
| 46 00 097 | 1 100 210 | 96 51 634 08 | 36 | 2 |
| 46 00 102 | 2 540 | 91 45 984 08 | 38 | 2 |
| 46 00 102 | 3 101 | 91 60 312 08 | 5 | 2 |
| 46 00 102 | X1011793 | 10 11 793 0 | 15 | 1 |
| 46 00 146 | 2 571 | 91 50 902 08 | 4 | 16 |
| 46 00 146 | 3 330 | 91 57 885 08 | 7 | 4 |
| 46 00 146 03 | 1 100 205 | 96 51 633 08 | 5 | 48 |
| 46 00 146 03 | 1 100 210 | 96 51 634 08 | 5 | 48 |
| 46 00 157 | 2 520 000 | 91 49 872 08 | 134 | 6 |
| 46 00 157 | 3 101 | 91 60 312 08 | 34 | 3 |
| 46 00 157 | 3 102 000 | 91 62 543 08 | 60 | 9 |
| 46 00 157 | 3 103 000 | 91 62 544 08 | 60 | 9 |
| 46 00 157 | 3 104 000 | 91 62 545 08 | 60 | 9 |
| 46 00 157 | 3 105 000 | 91 62 546 08 | 60 | 9 |
| 46 00 167 | 1 970 | 96 71 367 08 | 16 | 4 |
| 46 00 182 | 1 100 200 | 96 72 944 08 | 12 | 6 |
| 46 00 183 | 2 955 | 91 49 516 08 | 14 | 4 |
| 46 00 222 | 3 501 | 91 05 788 08 | 46 | 10 |
| 46 00 222 03 | 1 100 205 | 96 51 633 08 | 10 | 14 |
| 46 00 222 03 | 1 100 210 | 96 51 634 08 | 10 | 14 |
| 46 00 232 | 5 700 161 | 57 00 161 | 29 | 3 |
| 46 00 237 | 9 444 410 | 94 44 410 03 | 51 | 12 |
| 46 00 239 | 9 387 596 | 93 87 596 01 | 25 | 1 |
| 46 00 253 | 2 922 001 | 92 84 311 08 | 16 | 10 |
| 46 00 256 | 1 100 216 | 96 46 363 08 | 10 | 4 |
| 46 00 262 | 2 200 | 91 81 095 08 | 340 | 8 |
| 46 00 305 | 1 400 200 | 91 53 791 08 | 24 | 18 |
| 46 00 305 | 1 630 003 | 96 47 650 08 | 4 | 2 |
| 46 00 305 | 2 260 006 | 96 31 147 08 | 9 | 2 |
| 46 00 305 | 2 270 001 | 96 37 923 08 | 4 | 5 |
| 46 00 305 | 2 502 | 91 01 533 08 | 18 | 4 |
| 46 00 305 | 2 520 000 | 91 49 872 08 | 139 | 4 |
| 46 00 305 | 2 711 | 91 53 002 08 | 6 | 4 |
| 46 00 305 | 2 913 100 | 91 23 538 08 | 9 | 3 |
| 46 00 305 | 2 971 | 91 50 610 08 | 37 | 2 |
| 46 00 305 | 3 501 | 91 05 788 08 | 83 | 2 |

| Item | Page | Assembly | Pos. | Quantity |
|---|---|---|---|---|
| 46 00 305 | 3 750 026 | 96 89 407 08 | 9 | 3 |
| 46 00 305 | 3 750 028 | 96 89 408 08 | 9 | 3 |
| 46 00 337 | 1 880 | 91 62 974 08 | 200 | 4 |
| 46 00 355 | 2 502 | 91 01 533 08 | 23 | 2 |
| 46 00 355 | 3 106 000 | 91 60 313 08 | 69 | 1 |
| 46 00 356 | 2 210 | 91 81 614 08 | 331 | 2 |
| 46 00 366 | 2 500 | 91 48 594 08 | 19 | 5 |
| 46 00 370 | 1 100 211 | 74 90 653 14 | 80 | 1 |
| 46 00 385 | X1011582 | 10 11 582 9 | 7 | 15 |
| 46 00 386 | 2 502 | 91 01 533 08 | 29 | 4 |
| 46 00 532 | 2 102 | 91 51 080 08 | 53 | 2 |
| 46 00 553 | 1 970 | 96 71 367 08 | 33 | 2 |
| 46 00 604 | 2 270 | 91 50 456 08 | 5 | 1 |
| 46 00 604 | 2 340 | 91 53 116 08 | 5 | 4 |
| 46 00 604 | 3 510 100 | 91 49 246 08 | 11 | 6 |
| 46 00 628 | 3 501 | 91 05 788 08 | 59 | 1 |
| 46 00 629 | 1 100 205 | 96 51 633 08 | 9 | 48 |
| 46 00 629 | 1 100 210 | 96 51 634 08 | 9 | 48 |
| 46 00 723 | 2 540 | 91 45 984 08 | 39 | 4 |
| 46 00 814 | 2 913 100 | 91 23 538 08 | 5 | 12 |
| 46 01 105 | X1011914 | 10 11 914 1 | 19 | 1 |
| 46 01 105 | X1012024 | 10 12 024 2 | 12 | 1 |
| 46 01 426 | 9 079 560 | 90 79 560 | 3 | 2 |
| 46 01 465 | 2 790 901 | 91 54 183 08 | 8 | 2 |
| 46 30 000 03 | 9 330 748 | 93 30 748 01 | 41 | 6 |
| 46 30 001 03 | 9 330 748 | 93 30 748 01 | 21 | 5 |
| 46 30 003 03 | 9 444 410 | 94 44 410 03 | 18 | 5 |
| 46 35 059 | 2 522 | 91 10 037 08 | 38 | 2 |
| 46 35 061 | 3 510 100 | 91 49 246 08 | 12 | 6 |
| 46 35 125 | 2 510 018 | 96 44 046 08 | 30 | 4 |
| 46 35 128 | 2 520 000 | 91 49 872 08 | 107 | 2 |
| 46 35 268 | 3 501 | 91 05 788 08 | 101 | 2 |
| 47 00 101 08 | 2 955 | 91 49 516 08 | 615 | 1 |
| 47 00 101 08 | 2 970 | 91 55 482 08 | 691 | 2 |
| 47 00 102 08 | 1 970 | 96 71 367 08 | 721 | 3 |
| 47 00 103 08 | 1 970 | 96 71 367 08 | 722 | 10 |
| 47 00 104 08 | 2 970 | 91 55 482 08 | 725 | 2 |
| 47 00 107 08 | 2 970 | 91 55 482 08 | 669 | 1 |
| 47 00 107 08 | 2 971 | 91 50 610 08 | 620 | 4 |
| 47 00 111 08 | 1 970 | 96 71 367 08 | 720 | 4 |
| 47 00 111 08 | 2 970 | 91 55 482 08 | 662 | 2 |
| 47 00 112 08 | 2 970 | 91 55 482 08 | 608 | 1 |
| 47 00 113 08 | 2 970 | 91 55 482 08 | 627 | 2 |
| 47 00 113 08 | 2 971 | 91 50 610 08 | 609 | 1 |
| 47 00 308 08 | 1 970 | 96 71 367 08 | 700 | 1 |
| 47 00 309 08 | 2 970 | 91 55 482 08 | 698 | 1 |
| 47 00 324 08 | 2 970 | 91 55 482 08 | 649 | 3 |
| 47 00 327 08 | 2 970 | 91 55 482 08 | 626 | 1 |
| 47 00 328 08 | 1 970 | 96 71 367 08 | 707 | 1 |
| 47 00 330 08 | 1 970 | 96 71 367 08 | 708 | 4 |
| 47 00 331 08 | 2 970 | 91 55 482 08 | 647 | 3 |
| 47 00 331 08 | 2 971 | 91 50 610 08 | 640 | 1 |
| 47 02 303 08 | 2 975 152 | 91 05 737 08 | 612 | 1 |
| 47 02 308 08 | 2 970 | 91 55 482 08 | 728 | 1 |
| 47 02 311 08 | 2 970 | 91 55 482 08 | 696 | 1 |
| 47 02 314 08 | 2 970 | 91 55 482 08 | 695 | 1 |
| 47 02 327 08 | 2 970 | 91 55 482 08 | 727 | 1 |
| 47 02 330 08 | 2 970 | 91 55 482 08 | 663 | 6 |
| 47 02 334 08 | 2 970 | 91 55 482 08 | 654 | 3 |
| 47 02 334 08 | 2 971 | 91 50 610 08 | 642 | 1 |

| Item | Page | Assembly | Pos. | Quantity |
|---|---|---|---|---|
| 47 04 303 08 | 2 975 152 | 91 05 737 08 | 610 | 1 |
| 47 04 314 08 | 2 970 | 91 55 482 08 | 621 | 2 |
| 47 04 330 08 | 2 970 | 91 55 482 08 | 650 | 1 |
| 47 07 002 08 | 2 970 | 91 55 482 08 | 659 | 2 |
| 47 07 013 08 | 2 970 | 91 55 482 08 | 690 | 1 |
| 47 07 300 08 | 9 387 070 | 93 87 070 01 | 28 | 1 |
| 47 09 003 08 | 2 955 | 91 49 516 08 | 610 | 1 |
| 47 09 004 08 | 2 520 000 | 91 49 872 08 | 49 | 1 |
| 47 09 017 08 | 2 970 | 91 55 482 08 | 59 | 1 |
| 47 09 018 08 | 2 970 | 91 55 482 08 | 57 | 2 |
| 47 10 045 14 | 2 970 | 91 55 482 08 | 716 | 2 |
| 47 10 082 14 | 1 970 | 96 71 367 08 | 758 | 6 |
| 47 10 300 08 | 2 955 | 91 49 516 08 | 611 | 2 |
| 47 10 300 08 | 2 970 | 91 55 482 08 | 688 | 1 |
| 47 10 300 08 | 2 971 | 91 50 610 08 | 616 | 1 |
| 47 10 300 08 | 2 975 038 | 91 26 492 08 | 610 | 1 |
| 47 10 301 08 | 2 970 | 91 55 482 08 | 678 | 2 |
| 47 10 302 08 | 2 955 | 91 49 516 08 | 603 | 4 |
| 47 10 305 08 | 2 970 | 91 55 482 08 | 617 | 1 |
| 47 10 307 08 | 2 970 | 91 55 482 08 | 675 | 1 |
| 47 10 308 08 | 2 970 | 91 55 482 08 | 645 | 4 |
| 47 10 308 08 | 2 971 | 91 50 610 08 | 600 | 1 |
| 47 10 309 08 | 2 270 001 | 96 37 923 08 | 5 | 2 |
| 47 10 310 08 | 2 970 | 91 55 482 08 | 601 | 3 |
| 47 10 311 08 | 1 970 | 96 71 367 08 | 712 | 1 |
| 47 10 311 08 | 2 950 | 91 49 515 08 | 600 | 5 |
| 47 10 311 08 | 2 970 | 91 55 482 08 | 685 | 1 |
| 47 10 312 08 | 2 970 | 91 55 482 08 | 633 | 2 |
| 47 10 313 08 | X1011766 | 10 11 766 5 | 2 | 1 |
| 47 10 315 08 | 2 970 | 91 55 482 08 | 614 | 2 |
| 47 10 321 08 | 2 440 012 | 92 14 441 08 | 3 | 3 |
| 47 10 321 08 | 2 970 | 91 55 482 08 | 652 | 5 |
| 47 10 321 08 | 2 971 | 91 50 610 08 | 604 | 2 |
| 47 10 321 08 | 2 975 152 | 91 05 737 08 | 600 | 1 |
| 47 10 326 08 | 1 423 101 | 99 26 462 14 | 700 | 1 |
| 47 10 326 08 | 1 970 | 96 71 367 08 | 713 | 3 |
| 47 10 326 08 | 2 970 | 91 55 482 08 | 707 | 8 |
| 47 10 327 08 | 1 423 101 | 99 26 462 14 | 701 | 8 |
| 47 10 328 08 | 1 970 | 96 71 367 08 | 714 | 5 |
| 47 10 328 08 | 2 970 | 91 55 482 08 | 714 | 2 |
| 47 10 328 08 | 2 975 038 | 91 26 492 08 | 609 | 1 |
| 47 10 330 08 | 1 970 | 96 71 367 08 | 715 | 3 |
| 47 10 331 08 | 1 970 | 96 71 367 08 | 716 | 2 |
| 47 10 331 08 | 2 970 | 91 55 482 08 | 624 | 1 |
| 47 10 332 08 | 1 970 | 96 71 367 08 | 717 | 3 |
| 47 10 332 08 | 2 970 | 91 55 482 08 | 629 | 7 |
| 47 10 332 08 | 2 975 152 | 91 05 737 08 | 602 | 1 |
| 47 10 333 08 | 1 970 | 96 71 367 08 | 718 | 1 |
| 47 10 335 08 | 1 970 | 96 71 367 08 | 719 | 1 |
| 47 10 344 08 | 2 970 | 91 55 482 08 | 638 | 11 |
| 47 10 344 08 | 2 971 | 91 50 610 08 | 602 | 1 |
| 47 10 347 08 | 2 970 | 91 55 482 08 | 640 | 2 |
| 47 10 348 08 | 2 970 | 91 55 482 08 | 708 | 3 |
| 47 10 348 08 | 2 975 152 | 91 05 737 08 | 603 | 4 |
| 47 10 353 08 | 2 970 | 91 55 482 08 | 658 | 4 |
| 47 10 375 08 | 2 970 | 91 55 482 08 | 635 | 1 |
| 47 10 396 08 | 1 970 | 96 71 367 08 | 709 | 1 |
| 47 10 396 08 | 2 970 | 91 55 482 08 | 673 | 1 |
| 47 10 396 08 | 2 971 | 91 50 610 08 | 622 | 1 |
| 47 10 397 08 | 2 950 | 91 49 515 08 | 603 | 1 |
| 47 10 397 08 | 2 955 | 91 49 516 08 | 605 | 2 |
| 47 10 397 08 | 2 970 | 91 55 482 08 | 610 | 4 |
| 47 10 397 08 | 2 971 | 91 50 610 08 | 614 | 1 |
| 47 10 398 08 | 2 950 | 91 49 515 08 | 605 | 2 |
| 47 10 398 08 | 2 955 | 91 49 516 08 | 601 | 1 |
| 47 19 005 08 | 1 970 | 96 71 367 08 | 736 | 1 |
| 47 19 005 08 | 2 975 038 | 91 26 492 08 | 608 | 1 |
| 47 19 006 08 | 1 970 | 96 71 367 08 | 737 | 2 |
| 47 19 006 08 | 2 970 | 91 55 482 08 | 679 | 1 |
| 47 19 011 08 | 2 970 | 91 55 482 08 | 672 | 4 |
| 47 19 011 08 | 2 971 | 91 50 610 08 | 615 | 4 |
| 47 19 011 08 | 2 975 152 | 91 05 737 08 | 607 | 1 |
| 47 19 012 08 | 2 970 | 91 55 482 08 | 641 | 2 |
| 47 19 013 08 | 2 970 | 91 55 482 08 | 682 | 1 |
| 47 19 015 08 | 2 970 | 91 55 482 08 | 693 | 4 |
| 47 19 018 08 | 2 970 | 91 55 482 08 | 710 | 3 |
| 47 19 019 08 | 2 970 | 91 55 482 08 | 625 | 1 |
| 47 19 036 08 | 2 340 004 | 96 43 780 08 | 21 | 1 |
| 47 19 036 08 | 2 970 | 91 55 482 08 | 600 | 1 |
| 47 19 038 08 | 2 970 | 91 55 482 08 | 628 | 2 |
| 47 19 040 08 | 2 970 | 91 55 482 08 | 656 | 2 |
| 47 19 040 08 | 2 971 | 91 50 610 08 | 625 | 1 |
| 47 19 042 08 | 2 971 | 91 50 610 08 | 638 | 1 |
| 47 23 004 14 | 2 970 | 91 55 482 08 | 602 | 1 |
| 47 23 004 14 | 2 971 | 91 50 610 08 | 606 | 1 |
| 47 23 302 08 | 1 970 | 96 71 367 08 | 706 | 1 |
| 47 23 302 08 | 2 970 | 91 55 482 08 | 618 | 9 |
| 47 23 302 08 | 2 971 | 91 50 610 08 | 611 | 3 |
| 47 23 302 08 | 2 975 152 | 91 05 737 08 | 609 | 2 |
| 47 23 312 08 | 2 970 | 91 55 482 08 | 660 | 3 |
| 47 23 312 08 | 2 971 | 91 50 610 08 | 627 | 1 |
| 47 23 312 08 | 2 975 038 | 91 26 492 08 | 605 | 1 |
| 47 23 319 08 | 2 970 | 91 55 482 08 | 648 | 1 |
| 47 24 304 08 | 2 970 | 91 55 482 08 | 606 | 2 |
| 47 24 312 08 | 2 970 | 91 55 482 08 | 730 | 1 |
| 47 25 306 08 | 2 970 | 91 55 482 08 | 701 | 2 |
| 47 25 306 08 | X1011766 | 10 11 766 5 | 9 | 1 |
| 47 25 315 08 | 2 955 | 91 49 516 08 | 606 | 4 |
| 47 25 315 08 | 2 970 | 91 55 482 08 | 657 | 8 |
| 47 25 315 08 | 2 971 | 91 50 610 08 | 643 | 1 |
| 47 25 315 08 | 2 975 038 | 91 26 492 08 | 606 | 1 |
| 47 25 318 08 | 2 970 | 91 55 482 08 | 639 | 10 |
| 47 25 318 08 | 2 971 | 91 50 610 08 | 621 | 4 |
| 47 32 102 14 | 1 423 101 | 99 26 462 14 | 702 | 1 |
| 47 32 105 08 | 2 975 038 | 91 26 492 08 | 602 | 1 |
| 47 32 142 08 | 9 275 212 | 92 75 212 01 | 7 | 2 |
| 47 32 305 08 | 2 970 | 91 55 482 08 | 723 | 1 |
| 47 32 306 08 | 2 970 | 91 55 482 08 | 671 | 4 |
| 47 32 312 08 | 1 970 | 96 71 367 08 | 756 | 4 |
| 47 32 312 08 | 2 970 | 91 55 482 08 | 665 | 2 |
| 47 40 024 14 | 1 423 101 | 99 26 462 14 | 703 | 8 |
| 47 40 303 08 | 2 970 | 91 55 482 08 | 609 | 1 |
| 47 40 305 08 | 2 970 | 91 55 482 08 | 605 | 1 |
| 47 40 307 08 | 2 970 | 91 55 482 08 | 611 | 1 |
| 47 40 324 08 | 1 970 | 96 71 367 08 | 724 | 6 |
| 47 40 326 08 | 1 970 | 96 71 367 08 | 725 | 2 |
| 47 40 329 08 | 1 970 | 96 71 367 08 | 726 | 4 |
| 47 42 324 08 | 1 970 | 96 71 367 08 | 727 | 4 |
| 47 42 340 08 | 2 975 152 | 91 05 737 08 | 2 | 3 |
| 47 49 066 08 | 1 970 | 96 71 367 08 | 571 | 4 |

| Item | Page | Assembly | Pos. | Quantity |
|---|---|---|---|---|
| 47 49 067 08 | 2 970 | 91 55 482 08 | 51 | 1 |
| 47 49 067 08 | 2 971 | 91 50 610 08 | 28 | 1 |
| 47 49 069 08 | 2 970 | 91 55 482 08 | 52 | 1 |
| 47 50 307 08 | 2 970 | 91 55 482 08 | 724 | 1 |
| 47 50 317 08 | 2 970 | 91 55 482 08 | 718 | 1 |
| 47 50 336 08 | 2 970 | 91 55 482 08 | 680 | 1 |
| 47 54 081 08 | 2 970 | 91 55 482 08 | 651 | 1 |
| 47 54 301 08 | 2 970 | 91 55 482 08 | 603 | 2 |
| 47 54 302 08 | 2 970 | 91 55 482 08 | 676 | 2 |
| 47 54 303 08 | 1 970 | 96 71 367 08 | 753 | 1 |
| 47 54 304 08 | 2 970 | 91 55 482 08 | 667 | 3 |
| 47 54 307 08 | 2 970 | 91 55 482 08 | 684 | 1 |
| 47 54 313 08 | 2 970 | 91 55 482 08 | 694 | 2 |
| 47 54 314 08 | 2 970 | 91 55 482 08 | 681 | 2 |
| 47 54 314 08 | 2 971 | 91 50 610 08 | 612 | 1 |
| 47 54 314 08 | 2 975 152 | 91 05 737 08 | 605 | 4 |
| 47 54 317 08 | 2 970 | 91 55 482 08 | 622 | 1 |
| 47 54 318 08 | 2 971 | 91 50 610 08 | 607 | 1 |
| 47 54 320 08 | 1 970 | 96 71 367 08 | 751 | 2 |
| 47 54 320 08 | 2 975 038 | 91 26 492 08 | 604 | 2 |
| 47 54 321 08 | 2 970 | 91 55 482 08 | 615 | 3 |
| 47 54 323 08 | 1 970 | 96 71 367 08 | 748 | 1 |
| 47 54 329 08 | 2 970 | 91 55 482 08 | 713 | 3 |
| 47 54 331 08 | 2 970 | 91 55 482 08 | 634 | 1 |
| 47 54 333 08 | 1 970 | 96 71 367 08 | 749 | 4 |
| 47 54 333 08 | 2 970 | 91 55 482 08 | 620 | 2 |
| 47 54 339 08 | 1 970 | 96 71 367 08 | 750 | 4 |
| 47 54 348 08 | 1 970 | 96 71 367 08 | 752 | 1 |
| 47 54 353 08 | 2 970 | 91 55 482 08 | 653 | 5 |
| 47 54 356 08 | 2 970 | 91 55 482 08 | 613 | 1 |
| 47 54 356 08 | 2 971 | 91 50 610 08 | 639 | 1 |
| 47 54 360 08 | 2 970 | 91 55 482 08 | 720 | 1 |
| 47 54 363 08 | 2 970 | 91 55 482 08 | 689 | 1 |
| 47 54 367 08 | 2 970 | 91 55 482 08 | 726 | 1 |
| 47 55 007 08 | 1 970 | 96 71 367 08 | 702 | 4 |
| 47 55 033 08 | 2 970 | 91 55 482 08 | 655 | 2 |
| 47 56 009 08 | 2 950 | 91 49 515 08 | 604 | 2 |
| 47 56 015 08 | 2 970 | 91 55 482 08 | 632 | 9 |
| 47 56 015 08 | 2 971 | 91 50 610 08 | 626 | 1 |
| 47 56 026 08 | 2 970 | 91 55 482 08 | 644 | 3 |
| 47 56 033 08 | 2 970 | 91 55 482 08 | 54 | 9 |
| 47 56 033 08 | 2 971 | 91 50 610 08 | 23 | 1 |
| 47 66 078 08 | 2 950 | 91 49 515 08 | 601 | 1 |
| 47 66 102 08 | 2 970 | 91 55 482 08 | 719 | 1 |
| 47 66 106 08 | 2 970 | 91 55 482 08 | 706 | 1 |
| 47 66 110 08 | 2 970 | 91 55 482 08 | 674 | 2 |
| 47 74 003 08 | 2 970 | 91 55 482 08 | 721 | 2 |
| 47 74 004 14 | 1 423 101 | 99 26 462 14 | 704 | 8 |
| 47 74 006 08 | 1 970 | 96 71 367 08 | 729 | 1 |
| 47 74 007 08 | 1 970 | 96 71 367 08 | 730 | 1 |
| 47 74 009 08 | 1 970 | 96 71 367 08 | 731 | 4 |
| 47 74 015 08 | 2 970 | 91 55 482 08 | 733 | 1 |
| 47 74 016 08 | 2 970 | 91 55 482 08 | 732 | 2 |
| 47 74 017 08 | 1 970 | 96 71 367 08 | 703 | 1 |
| 47 74 024 08 | 2 970 | 91 55 482 08 | 700 | 3 |
| 47 75 003 01 | 9 275 212 | 92 75 212 01 | 8 | 2 |
| 47 75 110 01 | X1081388 | 10 81 388 6 | 40 | 4 |
| 47 77 001 08 | 2 970 | 91 55 482 08 | 699 | 3 |
| 47 77 004 08 | 2 970 | 91 55 482 08 | 722 | 3 |
| 47 77 005 08 | 2 970 | 91 55 482 08 | 731 | 2 |

| Item | Page | Assembly | Pos. | Quantity |
|---|---|---|---|---|
| 47 77 005 14 | 1 423 101 | 99 26 462 14 | 705 | 8 |
| 47 77 008 08 | 1 970 | 96 71 367 08 | 757 | 1 |
| 47 77 011 08 | 1 970 | 96 71 367 08 | 733 | 1 |
| 47 77 014 08 | 1 970 | 96 71 367 08 | 734 | 1 |
| 47 77 016 08 | 1 970 | 96 71 367 08 | 735 | 4 |
| 47 77 040 08 | 5 113 199 | 51 13 199 08 | 1 | 2 |
| 47 77 040 08 | 5 114 869 | 51 14 869 08 | 17 | 6 |
| 47 77 040 08 | X1029358 | 10 29 358 6 | 2 | 2 |
| 47 77 040 08 | X1033367 | 10 33 367 2 | 120 | 4 |
| 47 77 040 08 | X1047529 | 10 47 529 2 | 62 | 1 |
| 47 77 040 08 | X1080297 | 10 80 297 1 | 46 | 4 |
| 47 77 041 08 | 1 970 | 96 71 367 08 | 705 | 1 |
| 47 77 041 08 | X1033367 | 10 33 367 2 | 160 | 1 |
| 47 77 042 08 | 1 970 | 96 71 367 08 | 704 | 2 |
| 47 77 042 08 | X1029358 | 10 29 358 6 | 4 | 1 |
| 47 77 042 08 | X1033367 | 10 33 367 2 | 100 | 1 |
| 47 77 042 08 | X1033367 | 10 33 367 2 | 170 | 2 |
| 47 77 042 08 | X1080297 | 10 80 297 1 | 48 | 2 |
| 47 77 043 08 | 2 950 | 91 49 515 08 | 607 | 1 |
| 47 77 043 08 | 2 955 | 91 49 516 08 | 604 | 2 |
| 47 77 043 08 | 9 387 070 | 93 87 070 01 | 22 | 1 |
| 47 77 043 08 | 9 685 586 | 96 85 586 01 | 22 | 1 |
| 47 77 044 08 | 9 387 070 | 93 87 070 01 | 21 | 2 |
| 47 77 045 08 | 9 330 748 | 93 30 748 01 | 78 | 1 |
| 47 77 045 08 | 9 393 684 | 93 93 684 01 | 28 | 1 |
| 47 77 045 08 | X1029358 | 10 29 358 6 | 3 | 1 |
| 47 77 047 08 | X1029147 | 10 29 147 4 | 65 | 1 |
| 47 77 047 08 | X1047529 | 10 47 529 1 | 65 | 1 |
| 47 77 047 08 | X1047529 | 10 47 529 2 | 65 | 2 |
| 47 77 049 08 | 9 330 748 | 93 30 748 01 | 2 | 4 |
| 47 77 049 14 | 9 444 410 | 94 44 410 03 | 89 | 1 |
| 47 77 051 08 | 2 270 001 | 96 37 923 08 | 6 | 2 |
| 47 77 052 08 | 2 340 004 | 96 43 780 08 | 23 | 1 |
| 47 77 054 08 | X1029147 | 10 29 147 4 | 67 | 1 |
| 47 77 055 08 | 9 387 070 | 93 87 070 01 | 23 | 2 |
| 47 77 055 08 | 9 685 586 | 96 85 586 01 | 23 | 3 |
| 47 77 056 08 | 9 330 748 | 93 30 748 01 | 87 | 2 |
| 48 23 308 14 | 2 970 | 91 55 482 08 | 697 | 1 |
| 48 23 308 14 | 2 971 | 91 50 610 08 | 603 | 1 |
| 48 23 318 14 | 1 970 | 96 71 367 08 | 741 | 4 |
| 48 24 303 14 | 2 955 | 91 49 516 08 | 612 | 2 |
| 48 24 303 14 | 2 970 | 91 55 482 08 | 692 | 1 |
| 48 24 303 14 | 2 971 | 91 50 610 08 | 623 | 1 |
| 48 24 313 14 | 1 970 | 96 71 367 08 | 742 | 2 |
| 48 24 313 14 | 2 970 | 91 55 482 08 | 717 | 2 |
| 48 24 314 14 | 2 970 | 91 55 482 08 | 712 | 3 |
| 48 24 315 14 | 2 970 | 91 55 482 08 | 729 | 1 |
| 48 24 318 14 | 2 970 | 91 55 482 08 | 670 | 1 |
| 48 24 318 14 | 2 971 | 91 50 610 08 | 629 | 1 |
| 48 25 308 14 | 2 970 | 91 55 482 08 | 666 | 4 |
| 48 25 309 14 | 2 970 | 91 55 482 08 | 668 | 3 |
| 48 25 316 14 | 2 970 | 91 55 482 08 | 661 | 2 |
| 48 55 010 14 | 2 571 | 91 50 902 08 | 19 | 2 |
| 48 55 098 14 | 1 100 215 | 99 20 783 14 | 26 | 4 |
| 49 00 123 | 1 100 200 | 96 72 944 08 | 13 | 6 |
| 49 00 123 | 1 100 215 | 99 20 783 14 | 27 | 3 |
| 49 00 123 | 3 501 | 91 05 788 08 | 95 | 2 |
| 49 00 124 03 | 1 100 205 | 96 51 633 08 | 21 | 4 |
| 49 00 124 03 | 1 100 210 | 96 51 634 08 | 21 | 4 |
| 49 00 323 | 9 330 748 | 93 30 748 01 | 86 | 10 |

| Item | Page | Assembly | Pos. | Quantity |
|---|---|---|---|---|
| 49 00 546 03 | 1 100 216 | 96 46 363 08 | 11 | 4 |
| 49 00 595 | 2 501 022 | 96 34 184 08 | 7 | 2 |
| 49 00 614 | 3 501 | 91 05 788 08 | 53 | 4 |
| 49 00 643 | 3 510 100 | 91 49 246 08 | 16 | 2 |
| 49 01 106 | 9 080 525 | 90 80 525 | 7 | 1 |
| 49 01 162 | 3 102 000 | 91 62 543 08 | 18 | 4 |
| 49 01 162 | 3 103 000 | 91 62 544 08 | 18 | 4 |
| 49 01 162 | 3 104 000 | 91 62 545 08 | 18 | 4 |
| 49 01 162 | 3 105 000 | 91 62 546 08 | 18 | 4 |
| 49 01 162 | 3 106 000 | 91 60 313 08 | 56 | 4 |
| 49 01 287 | 2 790 901 | 91 54 183 08 | 5 | 2 |
| 49 01 450 | X1011553 | 10 11 553 9 | 3 | 3 |
| 49 02 007 | 2 522 | 91 10 037 08 | 53 | 2 |
| 49 80 000 | 9 074 165 | 90 74 165 | 9 | 1 |
| 49 80 012 | X1011582 | 10 11 582 9 | 6 | 2 |
| 49 80 012 | X1047529 | 10 47 529 1 | 86 | 4 |
| 49 80 012 | X1047529 | 10 47 529 2 | 86 | 4 |
| 49 80 359 | X1011584 | 10 11 584 9 | 2 | 2 |
| 49 80 359 | X1011739 | 10 11 739 7 | 4 | 2 |
| 49 80 362 | X1011577 | 10 11 577 7 | 2 | 4 |
| 49 80 363 | X1012038 | 10 12 038 3 | 10 | 3 |
| 49 80 482 | X1046728 | 10 46 728 5 | 8 | 1 |
| 49 80 648 | X1081388 | 10 81 388 6 | 42 | 2 |
| 49 80 741 | X1011573 | 10 11 573 7 | 30 | 3 |
| 49 80 741 | X1011793 | 10 11 793 0 | 4 | 4 |
| 49 80 805 | X1011553 | 10 11 553 9 | 4 | 3 |
| 49 80 805 | X1011997 | 10 11 997 6 | 12 | 2 |
| 49 80 840 | 5 113 199 | 51 13 199 08 | 2 | 4 |
| 49 80 840 | 9 444 410 | 94 44 410 03 | 72 | 12 |
| 49 80 853 | X1012223 | 10 12 223 3 | 5 | 1 |
| 49 80 927 | X1012223 | 10 12 223 3 | 9 | 3 |
| 49 80 931 | 9 075 541 | 90 75 541 | 17 | 1 |
| 49 81 029 | X1011914 | 10 11 914 1 | 19 | 2 |
| 49 81 033 | X1011550 | 10 11 550 2 | 2 | 1 |
| 49 81 042 | X1012038 | 10 12 038 3 | 12 | 1 |
| 49 81 176 | 9 079 560 | 90 79 560 | 20 | 1 |
| 49 81 203 | 9 080 525 | 90 80 525 | 20 | 1 |
| 49 81 233 | X1011793 | 10 11 793 0 | 16 | 1 |
| 49 81 233 | X1011997 | 10 11 997 6 | 9 | 2 |
| 49 81 235 | X1011832 | 10 11 832 6 | 10 | 2 |
| 49 81 235 | X1011888 | 10 11 888 4 | 3 | 1 |
| 49 81 267 | 9 075 541 | 90 75 541 | 16 | 1 |
| 50 00 569 | 1 100 212 | 79 02 561 14 | 8 | 1 |
| 50 01 315 01 | 9 275 212 | 92 75 212 01 | 1 | 1 |
| 50 05 219 | 2 970 | 91 55 482 08 | 78 | 10 |
| 50 07 415 08 | X1012038 | 10 12 038 3 | 3 | 1 |
| 50 09 001 | 5 923 269 | 59 23 269 14 | 11 | 1 |
| 50 12 326 08 | 9 072 112 | 90 72 112 | 32 | 1 |
| 50 12 437 08 | 2 970 | 91 55 482 08 | (1) | 1 |
| 50 12 444 08 | 9 080 345 | 90 80 345 | 2 | 1 |
| 50 12 444 08 | X1011801 | 10 11 801 3 | 10 | 1 |
| 50 12 444 08 | X1011801 | 10 11 801 4 | 10 | 1 |
| 50 20 363 01 | 9 330 748 | 93 30 748 01 | 80 | 1 |
| 50 20 370 01 | 9 444 410 | 94 44 410 03 | 70 | 1 |
| 50 20 372 01 | 9 387 598 | 93 87 598 01 | 70 | 1 |
| 50 20 372 01 | 9 686 071 | 96 86 071 01 | 70 | 1 |
| 50 26 088 08 | 2 522 | 91 10 037 08 | 52 | 4 |
| 50 26 088 08 | 2 955 | 91 49 516 08 | 16 | 2 |
| 50 26 435 08 | 2 210 | 91 81 614 08 | 414 | 1 |
| 50 26 448 08 | 2 501 000 | 91 48 769 08 | 22 | 2 |

| Item | Page | Assembly | Pos. | Quantity |
|---|---|---|---|---|
| 50 26 514 08 | 5 026 573 | 50 26 573 08 | 2 | 1 |
| 50 26 529 08 | 9 387 598 | 93 87 598 01 | 73 | 1 |
| 50 26 573 08 | 2 950 | 91 49 515 08 | 2 | 1 |
| 50 26 577 08 | 2 950 | 91 49 515 08 | 9 | 1 |
| 50 26 596 08 | 2 955 | 91 49 516 08 | 13 | 4 |
| 50 26 616 08 | 2 950 | 91 49 515 08 | 3 | 1 |
| 50 26 628 08 | 2 955 | 91 49 516 08 | 5 | 1 |
| 50 26 664 08 | 2 950 | 91 49 515 08 | 35 | 1 |
| 50 28 073 08 | 2 971 | 91 50 610 08 | 7 | 1 |
| 50 28 075 01 | 9 686 071 | 96 86 071 01 | (1) | 1 |
| 50 28 104 08 | 2 540 | 91 45 984 08 | 27 | 0.85 |
| 50 28 104 08 | 2 540 | 91 45 984 08 | 28 | 0.4 |
| 50 28 104 08 | 2 997 | 91 51 089 08 | 150 | 1 |
| 50 28 104 08 | 2 997 | 91 51 089 08 | 151 | 0.7 |
| 50 29 237 08 | 2 200 048 | 96 32 140 08 | 13 | 2 |
| 50 29 325 08 | 2 270 001 | 96 37 923 08 | 9 | 1 |
| 50 29 325 08 | 2 950 | 91 49 515 08 | 31 | 3 |
| 50 29 325 08 | 2 955 | 91 49 516 08 | 11 | 2 |
| 50 29 328 08 | 2 200 048 | 96 32 140 08 | 15 | 1 |
| 50 29 329 08 | 2 270 001 | 96 37 923 08 | 8 | 1 |
| 50 29 329 08 | 2 950 | 91 49 515 08 | 32 | 3 |
| 50 29 329 08 | 2 955 | 91 49 516 08 | 10 | 2 |
| 50 29 332 08 | 2 970 | 91 55 482 08 | (7) | 2 |
| 50 29 401 08 | 2 270 001 | 96 37 923 08 | 7 | 1 |
| 50 29 401 08 | 2 950 | 91 49 515 08 | 30 | 3 |
| 50 29 461 08 | 2 955 | 91 49 516 08 | 614 | 1 |
| 50 29 871 08 | 2 950 | 91 49 515 08 | 6 | 1 |
| 51 00 334 08 | 2 210 | 91 81 614 08 | 400 | 2 |
| 51 01 417 08 | 2 210 | 91 81 614 08 | 405 | 1 |
| 51 01 462 08 | 2 210 008 | 96 48 137 08 | 451 | 1 |
| 51 01 840 01 | 2 571 | 91 50 902 08 | (999) | 1 |
| 51 02 294 08 | 2 420 | 91 32 936 08 | 2 | 1 |
| 51 02 407 08 | 2 440 022 | 96 42 336 08 | 3 | 1 |
| 51 02 407 08 | 2 450 | 91 53 926 08 | 2 | 1 |
| 51 04 120 08 | 2 970 | 91 55 482 08 | 29 | 1 |
| 51 04 124 08 | 2 970 | 91 55 482 08 | 27 | 1 |
| 51 04 135 08 | 2 970 | 91 55 482 08 | 34 | 1 |
| 51 04 385 14 | 1 970 | 96 71 367 08 | 7 | 1 |
| 51 05 005 08 | 2 950 | 91 49 515 08 | 4 | 1 |
| 51 05 010 08 | 2 950 | 91 49 515 08 | 17 | 1 |
| 51 05 013 08 | 2 970 | 91 55 482 08 | 58 | 2 |
| 51 05 013 08 | 2 971 | 91 50 610 08 | 22 | 1 |
| 51 05 692 08 | 2 970 | 91 55 482 08 | 55 | 4 |
| 51 05 866 08 | 1 970 | 96 71 367 08 | 572 | 16 |
| 51 05 866 08 | 2 970 | 91 55 482 08 | 500 | 6 |
| 51 05 867 08 | 2 970 | 91 55 482 08 | 501 | 3 |
| 51 05 867 08 | 2 971 | 91 50 610 08 | (1) | 1 |
| 51 05 867 08 | 2 975 152 | 91 05 737 08 | 14 | 3 |
| 51 05 869 08 | 1 970 | 96 71 367 08 | 553 | 4 |
| 51 05 870 08 | 2 210 | 91 81 614 08 | 412 | 2 |
| 51 05 870 08 | 2 970 | 91 55 482 08 | (1) | 1 |
| 51 05 875 08 | 1 970 | 96 71 367 08 | 534 | 6 |
| 51 05 989 08 | 2 210 | 91 81 614 08 | 413 | 1 |
| 51 06 290 08 | 2 970 | 91 55 482 08 | 604 | 7 |
| 51 06 290 08 | 2 971 | 91 50 610 08 | 624 | 2 |
| 51 06 446 08 | 2 970 | 91 55 482 08 | 17 | 1 |
| 51 06 451 08 | 2 970 | 91 55 482 08 | 39 | 1 |
| 51 06 623 08 | 5 708 320 | 57 08 320 08 | 2 | 1 |
| 51 06 626 14 | 1 970 | 96 71 367 08 | 3 | 1 |
| 51 06 629 14 | 1 970 | 96 71 367 08 | 13 | 1 |

| Item | Page | Assembly | Pos. | Quantity |
|---|---|---|---|---|
| 51 06 673 08 | 2 340 004 | 96 43 780 08 | 5 | 2 |
| 51 06 681 08 | 2 970 | 91 55 482 08 | 32 | 1 |
| 51 06 692 08 | 9 629 047 | 96 29 047 08 | 4 | 2 |
| 51 06 692 08 | 9 629 049 | 96 29 049 08 | 4 | 2 |
| 51 06 692 08 | X1032665 | 10 32 665 4 | 10 | 1 |
| 51 06 692 08 | XSK_Z480 | SK_Z48005 | (10) | 2 |
| 51 06 693 08 | 2 340 004 | 96 43 780 08 | 22 | 1 |
| 51 06 708 08 | 2 970 | 91 55 482 08 | 23 | 1 |
| 51 06 711 08 | 2 970 | 91 55 482 08 | 41 | 3 |
| 51 06 711 08 | 2 971 | 91 50 610 08 | 26 | 2 |
| 51 06 711 08 | 2 975 152 | 91 05 737 08 | 9 | 1 |
| 51 06 718 08 | 2 340 004 | 96 43 780 08 | (1) | 1 |
| 51 06 718 08 | 9 629 047 | 96 29 047 08 | 200 | 2 |
| 51 06 718 08 | 9 629 049 | 96 29 049 08 | 200 | 2 |
| 51 06 718 08 | XSK_Z480 | SK_Z48005 | (11) | 2 |
| 51 06 769 08 | 2 970 | 91 55 482 08 | 11 | 1 |
| 51 06 769 08 | 2 971 | 91 50 610 08 | 9 | 1 |
| 51 06 976 08 | 2 970 | 91 55 482 08 | 19 | 1 |
| 51 07 024 08 | 2 971 | 91 50 610 08 | 30 | 1 |
| 51 07 101 08 | 5 123 931 | 51 23 931 08 | 25 | 1 |
| 51 07 123 08 | 5 114 794 | 51 14 794 08 | 3 | 1 |
| 51 07 181 08 | X1117027 | 11 17 027 6 | 27 | 1 |
| 51 07 190 08 | 5 114 327 | 51 14 327 14 | 3 | 4 |
| 51 07 190 08 | X1117027 | 11 17 027 6 | 26 | 1 |
| 51 07 357 08 | 5 718 895 | 57 18 895 08 | 3 | 1 |
| 51 07 359 08 | 5 711 301 | 57 11 301 08 | 6 | 1 |
| 51 07 359 08 | 5 718 895 | 57 18 895 08 | 4 | 1 |
| 51 07 383 08 | X1047300 | 10 47 300 1 | 58 | 1 |
| 51 07 386 08 | X1047300 | 10 47 300 1 | 60 | 1 |
| 51 07 413 08 | 5 113 078 | 51 13 078 08 | 4 | 8 |
| 51 07 415 08 | 5 123 931 | 51 23 931 08 | 17 | 1 |
| 51 07 415 08 | X1029147 | 10 29 147 4 | 61 | 3 |
| 51 07 415 08 | X1033367 | 10 33 367 2 | 110 | 2 |
| 51 07 415 08 | X1041191 | 10 41 191 3 | 61 | 4 |
| 51 07 415 08 | X1047529 | 10 47 529 1 | 61 | 3 |
| 51 07 415 08 | X1047529 | 10 47 529 2 | 61 | 4 |
| 51 07 415 08 | X1080297 | 10 80 297 1 | 45 | 5 |
| 51 07 417 08 | 5 114 177 | 51 14 177 08 | 21 | 1 |
| 51 07 461 08 | X1021831 | 10 21 831 0 | 1 | 1 |
| 51 07 461 08 | X1080297 | 10 80 297 1 | 63 | 2 |
| 51 07 533 08 | 5 711 301 | 57 11 301 08 | 9 | 1 |
| 51 07 534 08 | 5 711 301 | 57 11 301 08 | 10 | 1 |
| 51 07 534 08 | X1117027 | 11 17 027 6 | 11 | 1 |
| 51 07 543 08 | 2 520 000 | 91 49 872 08 | 47 | 1 |
| 51 07 543 08 | 2 950 | 91 49 515 08 | 8 | 2 |
| 51 07 543 08 | 2 955 | 91 49 516 08 | 4 | 1 |
| 51 07 543 08 | X1041191 | 10 41 191 3 | 25 | 2 |
| 51 07 543 08 | X1041191 | 10 41 191 5 | 112 | 2 |
| 51 07 544 08 | 2 955 | 91 49 516 08 | 18 | 2 |
| 51 07 544 08 | 2 970 | 91 55 482 08 | 68 | 1 |
| 51 07 617 08 | X1003269 | 10 03 269 6 | 5 | 3 |
| 51 07 832 08 | 5 114 177 | 51 14 177 08 | 17 | 1 |
| 51 07 921 08 | 5 711 301 | 57 11 301 08 | 4 | 1 |
| 51 07 921 08 | 5 718 895 | 57 18 895 08 | 2 | 1 |
| 51 07 927 08 | 5 106 976 | 51 06 976 08 | 8 | 2 |
| 51 07 969 08 | 5 114 177 | 51 14 177 08 | 1 | 1 |
| 51 07 970 08 | 5 114 177 | 51 14 177 08 | 3 | 1 |
| 51 07 972 08 | 5 114 177 | 51 14 177 08 | 5 | 1 |
| 51 07 973 08 | 5 114 177 | 51 14 177 08 | 6 | 1 |
| 51 07 974 08 | 5 114 177 | 51 14 177 08 | 7 | 1 |

| Item | Page | Assembly | Pos. | Quantity |
|---|---|---|---|---|
| 51 07 975 08 | 5 114 177 | 51 14 177 08 | 9 | 1 |
| 51 07 976 08 | 5 114 177 | 51 14 177 08 | 10 | 1 |
| 51 07 977 08 | 5 114 177 | 51 14 177 08 | 22 | 1 |
| 51 10 151 08 | 5 114 177 | 51 14 177 08 | 4 | 1 |
| 51 10 433 08 | 5 704 271 | 57 04 271 08 | 999 | 1 |
| 51 10 433 08 | X1033367 | 10 33 367 2 | (999) | 1 |
| 51 10 622 08 | 2 970 | 91 55 482 08 | 53 | 1 |
| 51 10 626 08 | 2 970 | 91 55 482 08 | 31 | 2 |
| 51 10 627 08 | 2 970 | 91 55 482 08 | 42 | 2 |
| 51 10 627 08 | 2 971 | 91 50 610 08 | 27 | 1 |
| 51 10 627 08 | 2 975 152 | 91 05 737 08 | 10 | 1 |
| 51 10 629 08 | 2 970 | 91 55 482 08 | 46 | 1 |
| 51 13 066 08 | 2 970 | 91 55 482 08 | 25 | 1 |
| 51 13 078 08 | 2 970 | 91 55 482 08 | 5 | 1 |
| 51 13 118 08 | 2 970 | 91 55 482 08 | 44 | 1 |
| 51 13 118 08 | 2 971 | 91 50 610 08 | 25 | 1 |
| 51 13 199 08 | 2 970 | 91 55 482 08 | 7 | 1 |
| 51 14 091 08 | 1 970 | 96 71 367 08 | 8 | 2 |
| 51 14 177 08 | 2 970 | 91 55 482 08 | 12 | 1 |
| 51 14 315 14 | 1 423 101 | 99 26 462 14 | 2 | 1 |
| 51 14 324 08 | 2 970 | 91 55 482 08 | 43 | 1 |
| 51 14 324 08 | 2 971 | 91 50 610 08 | 32 | 1 |
| 51 14 327 14 | 1 970 | 96 71 367 08 | 12 | 1 |
| 51 14 439 08 | 2 970 | 91 55 482 08 | 10 | 1 |
| 51 14 444 08 | 2 970 | 91 55 482 08 | 8 | 2 |
| 51 14 444 08 | 2 971 | 91 50 610 08 | 4 | 1 |
| 51 14 469 08 | 2 970 | 91 55 482 08 | 15 | 1 |
| 51 14 501 08 | 2 340 004 | 96 43 780 08 | 19 | 2 |
| 51 14 502 08 | 2 970 | 91 55 482 08 | 13 | 1 |
| 51 14 586 08 | 2 970 | 91 55 482 08 | 35 | 1 |
| 51 14 606 08 | 2 970 | 91 55 482 08 | 9 | 1 |
| 51 14 606 08 | 2 971 | 91 50 610 08 | 5 | 1 |
| 51 14 647 14 | 1 970 | 96 71 367 08 | 6 | 1 |
| 51 14 753 14 | 1 970 | 96 71 367 08 | 15 | 1 |
| 51 14 794 08 | 2 975 038 | 91 26 492 08 | 3 | 1 |
| 51 14 815 08 | 2 971 | 91 50 610 08 | 6 | 1 |
| 51 14 869 08 | 2 970 | 91 55 482 08 | 14 | 1 |
| 51 14 917 08 | 2 970 | 91 55 482 08 | 24 | 2 |
| 51 14 917 08 | 2 971 | 91 50 610 08 | 8 | 1 |
| 51 14 919 14 | 1 970 | 96 71 367 08 | 11 | 3 |
| 51 14 936 08 | 2 975 152 | 91 05 737 08 | 7 | 1 |
| 51 14 937 08 | 2 975 152 | 91 05 737 08 | 8 | 1 |
| 51 14 972 08 | 2 970 | 91 55 482 08 | 30 | 1 |
| 51 14 972 08 | 2 971 | 91 50 610 08 | 29 | 1 |
| 51 15 004 08 | 2 971 | 91 50 610 08 | 20 | 1 |
| 51 15 005 08 | 2 971 | 91 50 610 08 | 18 | 1 |
| 51 15 058 08 | 2 970 | 91 55 482 08 | 21 | 2 |
| 51 15 083 08 | 2 971 | 91 50 610 08 | 16 | 1 |
| 51 15 084 08 | 2 971 | 91 50 610 08 | 14 | 1 |
| 51 15 112 14 | 1 970 | 96 71 367 08 | 23 | 4 |
| 51 15 113 14 | 1 970 | 96 71 367 08 | 24 | 4 |
| 51 15 122 08 | 2 971 | 91 50 610 08 | 10 | 2 |
| 51 15 123 08 | 2 971 | 91 50 610 08 | 12 | 2 |
| 51 15 150 08 | 2 975 152 | 91 05 737 08 | 11 | 2 |
| 51 15 178 08 | 2 975 152 | 91 05 737 08 | 12 | 3 |
| 51 15 188 08 | 2 210 008 | 96 48 137 08 | 450 | 1 |
| 51 15 192 08 | 2 970 | 91 55 482 08 | 50 | 2 |
| 51 15 192 08 | 2 971 | 91 50 610 08 | 35 | 2 |
| 51 16 363 14 | 2 571 | 91 50 902 08 | 16 | 2 |
| 51 16 551 14 | X1080175 | 10 80 175 1 | 50 | 2 |

| Item | Page | Assembly | Pos. | Quantity |
|---|---|---|---|---|
| 51 17 042 14 | 1 970 | 96 71 367 08 | 21 | 10 |
| 51 17 043 14 | 1 970 | 96 71 367 08 | 22 | 10 |
| 51 17 083 14 | 1 970 | 96 71 367 08 | 26 | 2 |
| 51 17 084 14 | 1 970 | 96 71 367 08 | 25 | 2 |
| 51 17 101 14 | 1 970 | 96 71 367 08 | (1) | 1 |
| 51 17 101 14 | 1 970 | 96 71 367 08 | (1) | 1 |
| 51 17 102 14 | 1 970 | 96 71 367 08 | (1) | 1 |
| 51 17 102 14 | 1 970 | 96 71 367 08 | (1) | 1 |
| 51 21 425 08 | 2 210 | 91 81 614 08 | 102 | 1 |
| 51 23 537 08 | 3 510 100 | 91 49 246 08 | 26 | 1 |
| 51 23 931 08 | 2 430 | 91 54 389 08 | 2 | 1 |
| 51 45 252 08 | 5 701 090 | 57 01 090 08 | 20 | 7 |
| 51 45 275 08 | X1032665 | 10 32 665 4 | 9 | 1 |
| 51 45 304 08 | 5 701 090 | 57 01 090 08 | 15 | 1 |
| 51 45 684 08 | 2 792 | 91 52 291 08 | 12 | 5 |
| 51 45 994 08 | 2 913 100 | 91 23 538 08 | 4 | 12 |
| 51 45 994 08 | 2 932 214 | 96 28 366 08 | 8 | 4 |
| 51 46 042 08 | 5 923 269 | 59 23 269 14 | 12 | 1 |
| 51 46 118 08 | 9 072 112 | 90 72 112 | (70) | 1 |
| 51 46 132 08 | 2 210 | 91 81 614 08 | 411 | 1 |
| 51 46 132 08 | 5 102 407 | 51 02 407 08 | 6 | 1 |
| 51 46 141 08 | 5 102 407 | 51 02 407 08 | 15 | 1 |
| 51 46 183 08 | 5 709 606 | 57 09 606 08 | 68 | 1 |
| 51 46 183 08 | X1047300 | 10 47 300 1 | 50 | 1 |
| 51 48 023 08 | 5 113 199 | 51 13 199 08 | 3 | 4 |
| 51 57 060 08 | 2 210 | 91 81 614 08 | (1) | 1 |
| 51 85 717 08 | X1047300 | 10 47 300 1 | 55 | 1 |
| 51 86 205 08 | X1047300 | 10 47 300 1 | 68 | 1 |
| 51 86 206 08 | X1047300 | 10 47 300 1 | 70 | 1 |
| 51 86 206 08 | X1087223 | 10 87 223 8 | 23 | 2 |
| 51 86 236 08 | X1106838 | 11 06 838 7 | 10 | 1 |
| 51 86 485 08 | 5 102 294 | 51 02 294 08 | 6 | 1 |
| 52 01 904 08 | 1 750 001 | 92 85 698 08 | 67 | 1 |
| 52 03 033 08 | 5 700 161 | 57 00 161 | 10 | 1 |
| 52 04 028 08 | 1 750 | 91 48 606 08 | 3 | 1 |
| 53 00 325 08 | 9 686 071 | 96 86 071 01 | 51 | 1 |
| 53 01 333 08 | 9 387 598 | 93 87 598 01 | 8 | 5 |
| 53 01 333 08 | 9 686 071 | 96 86 071 01 | 8 | 5 |
| 53 01 463 08 | 2 500 | 91 48 594 08 | 20 | 1 |
| 53 01 515 08 | 9 330 748 | 93 30 748 01 | 68 | 1 |
| 54 02 024 08 | X1011577 | 10 11 577 7 | 3 | 8 |
| 54 05 090 08 | 9 387 596 | 93 87 596 01 | 20 | 1 |
| 54 07 092 08 | 2 790 024 | 96 67 077 08 | 7 | 1 |
| 55 04 580 08 | 2 210 | 91 81 614 08 | (2) | 1 |
| 55 04 580 08 | 2 210 | 91 81 614 08 | (2) | 1 |
| 55 04 580 08 | 2 210 | 91 81 614 08 | (2) | 1 |
| 55 06 283 08 | 2 210 008 | 96 48 137 08 | 103 | 1 |
| 55 06 395 08 | 2 210 008 | 96 48 137 08 | 101 | 1 |
| 55 06 406 08 | 2 102 | 91 51 080 08 | 11 | 3 |
| 55 07 965 08 | X1009998 | 10 09 998 1 | 3 | 1 |
| 55 08 380 08 | 2 200 | 91 81 095 08 | 184 | 2 |
| 55 08 380 08 | 2 210 | 91 81 614 08 | 184 | 2 |
| 55 08 495 08 | 2 210 | 91 81 614 08 | 183 | 2 |
| 55 17 197 08 | 2 210 | 91 81 614 08 | 253 | 2 |
| 55 20 237 08 | 2 520 000 | 91 49 872 08 | 68 | 1 |
| 55 20 237 08 | 2 955 | 91 49 516 08 | 3 | 1 |
| 55 20 751 08 | 2 680 | 91 53 225 08 | 110 | 1 |
| 55 20 752 08 | 2 680 | 91 53 225 08 | 111 | 1 |
| 55 20 975 08 | 2 680 | 91 53 225 08 | 113 | 3 |
| 55 30 022 08 | 2 540 | 91 45 984 08 | 1 | 1 |

| Item | Page | Assembly | Pos. | Quantity |
|---|---|---|---|---|
| 55 30 107 08 | 2 502 | 91 01 533 08 | 31 | 1 |
| 55 30 186 08 | 2 520 000 | 91 49 872 08 | 60 | 3 |
| 55 30 278 08 | 2 210 008 | 96 48 137 08 | 110 | 1 |
| 55 30 310 08 | 2 831 | 91 47 871 08 | 20 | 1 |
| 55 30 545 08 | 2 540 | 91 45 984 08 | 29 | 1 |
| 55 30 849 08 | 2 520 000 | 91 49 872 08 | 109 | 10 |
| 55 30 854 08 | 2 540 | 91 45 984 08 | 2 | 1 |
| 55 31 068 08 | X1011569 | 10 11 569 6 | 4 | 3 |
| 55 31 068 08 | X1011793 | 10 11 793 0 | 9 | 1 |
| 55 31 281 08 | 2 540 | 91 45 984 08 | 44 | 1 |
| 55 31 730 08 | 2 540 | 91 45 984 08 | 37 | 2 |
| 55 31 734 08 | 2 540 | 91 45 984 08 | 16 | 3 |
| 55 31 740 08 | 9 629 047 | 96 29 047 08 | 102 | 1 |
| 55 31 740 08 | XSK_Z480 | SK_Z48005 | (12) | 1 |
| 55 31 795 08 | 2 540 | 91 45 984 08 | 20 | 1 |
| 55 31 860 08 | 2 520 018 | 92 13 430 08 | 7 | 3 |
| 55 31 869 08 | 2 920 013 | 96 41 599 08 | 29 | 1 |
| 55 31 882 08 | 2 831 | 91 47 871 08 | 2 | 1 |
| 55 31 899 08 | 2 831 | 91 47 871 08 | 3 | 1 |
| 56 07 616 | 1 423 101 | 99 26 462 14 | 707 | 1 |
| 56 07 617 | 1 970 | 96 71 367 08 | 755 | 2 |
| 57 00 161 | 9 080 294 | 90 80 294 | 1 | 1 |
| 57 00 484 08 | X1011583 | 10 11 583 7 | 55 | 1 |
| 57 00 484 08 | X1011801 | 10 11 801 3 | 18 | 1 |
| 57 01 090 08 | 5 102 294 | 51 02 294 08 | 1 | 1 |
| 57 01 091 08 | 5 102 294 | 51 02 294 08 | 3 | 1 |
| 57 01 092 08 | 5 102 294 | 51 02 294 08 | 4 | 1 |
| 57 01 093 08 | 5 102 294 | 51 02 294 08 | 5 | 1 |
| 57 01 094 08 | 5 102 294 | 51 02 294 08 | 11 | 2 |
| 57 01 095 08 | 5 701 090 | 57 01 090 08 | 1 | 1 |
| 57 01 096 08 | 5 701 090 | 57 01 090 08 | 2 | 1 |
| 57 01 097 08 | 5 701 090 | 57 01 090 08 | 3 | 1 |
| 57 01 098 08 | 5 701 090 | 57 01 090 08 | 4 | 1 |
| 57 01 099 08 | 5 701 090 | 57 01 090 08 | 5 | 1 |
| 57 01 100 08 | 5 701 090 | 57 01 090 08 | 7 | 1 |
| 57 01 101 08 | 5 701 090 | 57 01 090 08 | 9 | 1 |
| 57 01 103 08 | 5 701 095 | 57 01 095 08 | 1 | 1 |
| 57 01 104 08 | 5 701 095 | 57 01 095 08 | 2 | 1 |
| 57 01 105 08 | 5 701 095 | 57 01 095 08 | 3 | 1 |
| 57 01 106 08 | 5 701 095 | 57 01 095 08 | 4 | 7 |
| 57 01 107 08 | 5 701 095 | 57 01 095 08 | 5 | 14 |
| 57 01 108 08 | 5 701 095 | 57 01 095 08 | 6 | 1 |
| 57 01 109 08 | 5 701 095 | 57 01 095 08 | 7 | 4 |
| 57 01 637 08 | X1032706 | 10 32 706 5 | 5 | 1 |
| 57 02 428 08 | 5 709 606 | 57 09 606 08 | 69 | 1 |
| 57 02 797 08 | 7 029 305 | 70 29 305 | 10 | 1 |
| 57 03 377 08 | X1042993 | 10 42 993 3 | 21 | 1 |
| 57 04 271 08 | X1033367 | 10 33 367 2 | 50 | 1 |
| 57 04 355 08 | X1042993 | 10 42 993 3 | 18 | 1 |
| 57 05 132 08 | 5 530 854 | 55 30 854 08 | 5 | 1 |
| 57 05 205 08 | 2 520 000 | 91 49 872 08 | 59 | 2 |
| 57 05 205 08 | 5 530 022 | 55 30 022 08 | 18 | 2 |
| 57 05 279 08 | 5 114 869 | 51 14 869 08 | 9 | 1 |
| 57 05 449 08 | 5 530 854 | 55 30 854 08 | 1 | 1 |
| 57 05 452 08 | 5 530 854 | 55 30 854 08 | 8 | 1 |
| 57 05 848 08 | 5 106 681 | 51 06 681 08 | 1 | 1 |
| 57 05 848 08 | 9 629 047 | 96 29 047 08 | 9 | 1 |
| 57 05 848 08 | 9 629 049 | 96 29 049 08 | 9 | 1 |
| 57 05 848 08 | XSK_Z480 | SK_Z48005 | (13) | 1 |
| 57 05 883 08 | 5 708 320 | 57 08 320 08 | 1 | 1 |

| Item | Page | Assembly | Pos. | Quantity |
|---|---|---|---|---|
| 57 05 883 08 | X1032665 | 10 32 665 4 | 8 | 2 |
| 57 05 883 08 | XSK_Z480 | SK_Z48005 | (14) | 2 |
| 57 05 888 08 | X1032665 | 10 32 665 4 | 11 | 1 |
| 57 05 889 08 | 5 708 320 | 57 08 320 08 | 3 | 1 |
| 57 05 889 08 | X1032665 | 10 32 665 4 | 4 | 1 |
| 57 06 138 77 | 5 700 161 | 57 00 161 | 9 | 4 |
| 57 06 307 08 | X1041191 | 10 41 191 5 | 121 | 2 |
| 57 06 310 08 | X1003269 | 10 03 269 6 | 3 | 1 |
| 57 06 475 08 | 5 711 301 | 57 11 301 08 | 3 | 1 |
| 57 06 475 08 | 5 718 895 | 57 18 895 08 | 1 | 1 |
| 57 06 514 08 | X1010109 | 10 10 109 3 | 10 | 4 |
| 57 06 514 08 | X1029147 | 10 29 147 4 | 27 | 1 |
| 57 06 514 08 | X1041191 | 10 41 191 5 | 27 | 2 |
| 57 06 514 08 | X1080297 | 10 80 297 1 | 17 | 2 |
| 57 06 523 08 | X1117027 | 11 17 027 6 | 25 | 1 |
| 57 06 852 08 | 5 123 931 | 51 23 931 08 | 26 | 3 |
| 57 06 904 08 | X1080297 | 10 80 297 1 | 27 | 2 |
| 57 06 905 08 | X1080297 | 10 80 297 1 | 21 | 2 |
| 57 06 906 08 | 5 113 066 | 51 13 066 08 | 3 | 1 |
| 57 06 906 08 | 5 711 301 | 57 11 301 08 | 7 | 1 |
| 57 06 906 08 | 5 718 895 | 57 18 895 08 | 5 | 1 |
| 57 06 906 08 | X1032706 | 10 32 706 5 | 33 | 1 |
| 57 07 565 08 | 5 530 854 | 55 30 854 08 | 2 | 1 |
| 57 07 566 08 | 5 530 854 | 55 30 854 08 | 3 | 1 |
| 57 07 567 08 | 5 530 854 | 55 30 854 08 | 4 | 1 |
| 57 07 568 08 | 5 530 854 | 55 30 854 08 | 9 | 2 |
| 57 08 179 08 | 5 705 279 | 57 05 279 08 | 1 | 1 |
| 57 08 278 08 | 5 114 444 | 51 14 444 08 | 1 | 1 |
| 57 08 320 08 | X1032665 | 10 32 665 4 | 2 | 1 |
| 57 09 414 08 | 5 114 794 | 51 14 794 08 | 2 | 1 |
| 57 09 606 08 | X1047300 | 10 47 300 1 | 36 | 2 |
| 57 09 797 08 | 5 700 161 | 57 00 161 | 7 | 1 |
| 57 09 907 08 | 6 060 516 | 60 60 516 08 | 14 | 1 |
| 57 09 908 08 | 6 060 516 | 60 60 516 08 | 23 | 6 |
| 57 09 909 08 | 6 060 516 | 60 60 516 08 | 25 | 6 |
| 57 09 910 08 | 6 060 516 | 60 60 516 08 | 32 | 1 |
| 57 09 911 08 | 6 060 516 | 60 60 516 08 | 34 | 1 |
| 57 09 912 08 | 6 060 516 | 60 60 516 08 | 51 | 1 |
| 57 09 914 08 | 6 060 516 | 60 60 516 08 | 69 | 1 |
| 57 09 915 08 | 6 060 516 | 60 60 516 08 | 73 | 3 |
| 57 09 954 08 | 6 061 943 | 60 61 943 08 | 1 | 1 |
| 57 10 213 08 | 5 106 708 | 51 06 708 08 | 3 | 1 |
| 57 10 357 08 | 7 741 079 | 77 41 079 08 | 14 | 1 |
| 57 10 825 08 | 2 970 | 91 55 482 08 | (1) | 1 |
| 57 10 826 08 | 2 970 | 91 55 482 08 | (2) | 1 |
| 57 10 827 08 | 2 970 | 91 55 482 08 | (3) | 1 |
| 57 10 828 08 | 2 970 | 91 55 482 08 | (4) | 1 |
| 57 11 301 08 | X1029147 | 10 29 147 4 | 17 | 2 |
| 57 11 301 08 | X1041191 | 10 41 191 3 | 17 | 1 |
| 57 11 301 08 | X1041191 | 10 41 191 5 | 17 | 5 |
| 57 11 301 08 | X1047529 | 10 47 529 1 | 17 | 2 |
| 57 11 301 08 | X1047529 | 10 47 529 2 | 17 | 2 |
| 57 11 303 08 | 5 711 301 | 57 11 301 08 | 2 | 1 |
| 57 11 304 08 | 5 711 301 | 57 11 301 08 | 5 | 1 |
| 57 11 305 08 | 5 711 301 | 57 11 301 08 | 8 | 1 |
| 57 11 355 08 | 2 975 152 | 91 05 737 08 | (21) | 1 |
| 57 13 188 08 | 3 930 464 | 92 95 081 08 | 7 | 1 |
| 57 13 284 08 | X1032706 | 10 32 706 5 | 14 | 1 |
| 57 13 523 08 | 5 026 573 | 50 26 573 08 | 1 | 1 |
| 57 13 523 08 | 9 629 047 | 96 29 047 08 | 201 | 1 |
| 57 13 523 08 | XSK_Z480 | SK_Z48005 | (15) | 1 |
| 57 13 561 08 | 5 106 681 | 51 06 681 08 | 4 | 1 |
| 57 13 561 08 | 5 106 708 | 51 06 708 08 | 4 | 1 |
| 57 13 622 08 | X1041191 | 10 41 191 3 | 24 | 1 |
| 57 13 622 08 | X1041191 | 10 41 191 5 | 119 | 6 |
| 57 14 001 08 | X1033367 | 10 33 367 2 | 60 | 1 |
| 57 14 537 08 | 5 114 869 | 51 14 869 08 | 7 | 1 |
| 57 14 553 08 | 5 705 279 | 57 05 279 08 | (1) | 1 |
| 57 14 654 08 | 9 330 748 | 93 30 748 01 | 3 | 1 |
| 57 14 890 08 | 2 831 | 91 47 871 08 | 4 | 1 |
| 57 14 891 08 | 2 831 | 91 47 871 08 | 6 | 1 |
| 57 14 912 08 | 5 123 537 | 51 23 537 08 | 999 | 1 |
| 57 14 948 08 | 7 741 079 | 77 41 079 08 | 15 | 1 |
| 57 14 949 08 | 7 741 079 | 77 41 079 08 | 30 | 1 |
| 57 15 118 08 | 5 704 271 | 57 04 271 08 | 14 | 1 |
| 57 15 119 08 | 2 920 585 | 91 01 520 08 | (1) | 1 |
| 57 15 273 08 | X1041191 | 10 41 191 5 | 118 | 1 |
| 57 15 280 08 | X1041191 | 10 41 191 3 | 34 | 1 |
| 57 15 280 08 | X1080297 | 10 80 297 1 | 38 | 1 |
| 57 15 295 08 | X1029147 | 10 29 147 4 | 28 | 1 |
| 57 15 295 08 | X1041191 | 10 41 191 5 | 28 | 1 |
| 57 15 295 08 | X1047529 | 10 47 529 1 | 28 | 1 |
| 57 15 295 08 | X1047529 | 10 47 529 2 | 28 | 1 |
| 57 15 297 08 | X1029147 | 10 29 147 4 | 77 | 2 |
| 57 15 297 08 | X1047529 | 10 47 529 1 | 71 | 2 |
| 57 15 297 08 | X1047529 | 10 47 529 2 | 71 | 2 |
| 57 15 306 08 | 7 739 413 | 77 39 413 08 | 2 | 1 |
| 57 15 349 08 | X1033367 | 10 33 367 2 | 70 | 1 |
| 57 15 398 08 | X1033367 | 10 33 367 2 | 40 | 1 |
| 57 15 412 08 | 5 923 269 | 59 23 269 14 | 1 | 1 |
| 57 15 561 08 | 2 920 585 | 91 01 520 08 | (2) | 1 |
| 57 15 562 08 | 2 920 585 | 91 01 520 08 | (3) | 1 |
| 57 15 619 08 | 5 709 606 | 57 09 606 08 | 999 | 1 |
| 57 15 690 08 | 6 060 516 | 60 60 516 08 | 59 | 1 |
| 57 15 786 08 | 2 711 | 91 53 002 08 | (1) | 1 |
| 57 15 821 08 | 5 700 161 | 57 00 161 | 1 | 1 |
| 57 15 822 08 | 5 700 161 | 57 00 161 | 2 | 1 |
| 57 15 823 08 | 5 700 161 | 57 00 161 | 4 | 1 |
| 57 15 824 08 | 5 700 161 | 57 00 161 | 6 | 1 |
| 57 15 825 08 | 5 700 161 | 57 00 161 | 11 | 1 |
| 57 15 826 08 | 5 700 161 | 57 00 161 | 13 | 1 |
| 57 15 827 08 | 5 700 161 | 57 00 161 | 15 | 1 |
| 57 15 828 08 | 5 700 161 | 57 00 161 | 30 | 1 |
| 57 16 878 08 | X1081388 | 10 81 388 6 | 18 | 1 |
| 57 16 895 08 | X1047300 | 10 47 300 1 | 38 | 1 |
| 57 17 020 08 | 4 027 | 91 42 310 08 | 4 | 1 |
| 57 17 046 08 | X1080297 | 10 80 297 1 | 23 | 1 |
| 57 17 123 08 | 7 739 413 | 77 39 413 08 | 1 | 1 |
| 57 17 127 08 | 1 970 | 96 71 367 08 | (1) | 2 |
| 57 17 143 08 | 4 003 006 | 91 04 457 08 | 34 | 2 |
| 57 17 236 08 | X1033367 | 10 33 367 2 | 30 | 1 |
| 57 17 378 08 | X1033367 | 10 33 367 2 | 20 | 1 |
| 57 17 412 08 | X1047529 | 10 47 529 2 | 26 | 1 |
| 57 17 419 08 | 5 123 537 | 51 23 537 08 | 19 | 1 |
| 57 17 939 08 | 6 923 101 | 69 23 101 08 | 1 | 1 |
| 57 18 176 08 | 5 113 078 | 51 13 078 08 | 2 | 4 |
| 57 18 177 08 | 5 718 176 | 57 18 176 08 | 8 | 2 |
| 57 18 188 08 | 5 717 378 | 57 17 378 08 | 1 | 1 |
| 57 18 247 08 | 6 060 950 | 60 60 950 08 | 1 | 1 |
| 57 18 300 08 | 7 741 079 | 77 41 079 08 | 23 | 1 |

| Item | Page | Assembly | Pos. | Quantity |
|---|---|---|---|---|
| 57 18 302 08 | 7 741 079 | 77 41 079 08 | 70 | 1 |
| 57 18 304 08 | 5 530 022 | 55 30 022 08 | 15 | 1 |
| 57 18 353 08 | 7 741 079 | 77 41 079 08 | 2 | 1 |
| 57 18 354 08 | 7 741 079 | 77 41 079 08 | 12 | 1 |
| 57 18 380 08 | 7 900 391 | 79 00 391 08 | 999 | 1 |
| 57 18 400 08 | 1 970 | 96 71 367 08 | (999) | 1 |
| 57 18 498 08 | 5 530 022 | 55 30 022 08 | 16 | 1 |
| 57 18 499 08 | 5 530 022 | 55 30 022 08 | 17 | 1 |
| 57 18 500 08 | 5 530 022 | 55 30 022 08 | 19 | 1 |
| 57 18 500 08 | 9 629 047 | 96 29 047 08 | 204 | 1 |
| 57 18 500 08 | XSK_Z480 | SK_Z48005 | (17) | 1 |
| 57 18 510 08 | 6 923 101 | 69 23 101 08 | 4 | 1 |
| 57 18 511 08 | 6 923 101 | 69 23 101 08 | 5 | 1 |
| 57 18 512 08 | 6 923 101 | 69 23 101 08 | 6 | 1 |
| 57 18 513 08 | 6 923 101 | 69 23 101 08 | 7 | 1 |
| 57 18 518 08 | 6 923 101 | 69 23 101 08 | 3 | 1 |
| 57 18 677 08 | 5 531 882 | 55 31 882 08 | 11 | 1 |
| 57 18 690 08 | 5 531 882 | 55 31 882 08 | 10 | 1 |
| 57 18 770 08 | 5 113 078 | 51 13 078 08 | 3 | 2 |
| 57 18 771 08 | 5 113 078 | 51 13 078 08 | 6 | 1 |
| 57 18 889 08 | X1010109 | 10 10 109 3 | 3 | 1 |
| 57 18 890 08 | X1010109 | 10 10 109 3 | 4 | 2 |
| 57 18 891 08 | X1010109 | 10 10 109 3 | 6 | 1 |
| 57 18 892 08 | X1010109 | 10 10 109 3 | 8 | 2 |
| 57 18 893 08 | X1010109 | 10 10 109 3 | 12 | 2 |
| 57 18 893 08 | X1029147 | 10 29 147 4 | 32 | 2 |
| 57 18 893 08 | X1041191 | 10 41 191 5 | 32 | 4 |
| 57 18 893 08 | X1047529 | 10 47 529 1 | 32 | 2 |
| 57 18 893 08 | X1047529 | 10 47 529 2 | 32 | 2 |
| 57 18 895 08 | X1010109 | 10 10 109 3 | 35 | 1 |
| 57 18 895 08 | X1080297 | 10 80 297 1 | 35 | 1 |
| 57 18 908 08 | 6 923 097 | 69 23 097 08 | 1 | 1 |
| 57 18 926 08 | X1081388 | 10 81 388 6 | 997 | 1 |
| 57 18 927 08 | X1081388 | 10 81 388 6 | 998 | 1 |
| 57 19 101 08 | 5 714 537 | 57 14 537 08 | 1 | 1 |
| 57 19 123 08 | 6 060 950 | 60 60 950 08 | 2 | 1 |
| 57 19 147 08 | X1010109 | 10 10 109 3 | (999) | 1 |
| 57 19 151 08 | X1033367 | 10 33 367 2 | 10 | 1 |
| 57 19 260 08 | 4 003 006 | 91 04 457 08 | 10 | 1 |
| 57 19 261 08 | 4 003 006 | 91 04 457 08 | 12 | 2 |
| 57 19 283 08 | X1047300 | 10 47 300 1 | 37 | 1 |
| 57 19 355 08 | 9 330 748 | 93 30 748 01 | (1) | 1 |
| 59 10 053 08 | 2 520 000 | 91 49 872 08 | 28 | 6 |
| 59 10 059 08 | 2 520 018 | 92 13 430 08 | 5 | 6 |
| 59 10 070 08 | 2 540 | 91 45 984 08 | 43 | 4 |
| 59 10 428 08 | 2 520 000 | 91 49 872 08 | 41 | 1 |
| 59 10 509 08 | 2 520 000 | 91 49 872 08 | 30 | 3 |
| 59 10 510 08 | 2 520 000 | 91 49 872 08 | 29 | 1 |
| 59 10 513 08 | 2 520 000 | 91 49 872 08 | 43 | 1 |
| 59 10 534 08 | 2 520 000 | 91 49 872 08 | 32 | 1 |
| 59 10 547 08 | 2 520 101 | 96 49 682 08 | 2 | 1 |
| 59 10 553 08 | 2 520 000 | 91 49 872 08 | 24 | 1 |
| 59 10 554 08 | 2 520 000 | 91 49 872 08 | 26 | 2 |
| 59 10 555 08 | 2 520 000 | 91 49 872 08 | 27 | 2 |
| 59 10 562 08 | 2 520 018 | 92 13 430 08 | 8 | 1 |
| 59 10 574 08 | 2 520 000 | 91 49 872 08 | 31 | 1 |
| 59 10 619 08 | 2 510 072 | 96 44 614 08 | 10 | 2 |
| 59 10 619 08 | 2 510 201 | 96 42 011 08 | 10 | 2 |
| 59 10 630 08 | 2 520 000 | 91 49 872 08 | 42 | 1 |
| 59 10 631 08 | 2 520 000 | 91 49 872 08 | 33 | 1 |

| Item | Page | Assembly | Pos. | Quantity |
|---|---|---|---|---|
| 59 10 632 08 | 2 520 000 | 91 49 872 08 | 35 | 1 |
| 59 10 633 08 | 2 520 000 | 91 49 872 08 | 36 | 1 |
| 59 10 634 08 | 2 520 000 | 91 49 872 08 | 34 | 1 |
| 59 10 635 08 | 2 520 000 | 91 49 872 08 | 39 | 2 |
| 59 10 636 08 | 2 520 000 | 91 49 872 08 | 37 | 1 |
| 59 10 638 08 | 2 520 001 | 92 48 796 08 | 18 | 1 |
| 59 10 640 08 | 2 520 000 | 91 49 872 08 | 40 | 2 |
| 59 10 644 08 | 2 790 024 | 96 67 077 08 | 8 | 1 |
| 59 10 666 08 | 2 520 001 | 92 48 796 08 | 6 | 1 |
| 59 10 668 08 | 2 520 001 | 92 48 796 08 | 12 | 1 |
| 59 10 670 08 | 2 502 | 91 01 533 08 | 16 | 1 |
| 59 10 672 08 | 2 520 001 | 92 48 796 08 | 3 | 1 |
| 59 10 695 08 | 2 790 040 | 91 60 499 08 | 2 | 1 |
| 59 10 706 08 | 2 520 021 | 92 17 203 08 | 1 | 1 |
| 59 10 707 08 | 2 520 021 | 92 17 203 08 | 2 | 1 |
| 59 10 709 08 | 2 790 | 91 68 708 08 | 1 | 1 |
| 59 10 775 08 | 2 520 001 | 92 48 796 08 | 5 | 1 |
| 59 15 099 08 | 2 520 000 | 91 49 872 08 | 64 | 1 |
| 59 15 144 08 | 3 501 | 91 05 788 08 | 90 | 1 |
| 59 15 591 08 | 5 910 672 | 59 10 672 08 | 4 | 1 |
| 59 15 592 08 | 2 520 101 | 96 49 682 08 | 4 | 1 |
| 59 15 592 08 | 5 910 672 | 59 10 672 08 | 3 | 1 |
| 59 15 630 08 | 2 520 101 | 96 49 682 08 | 5 | 2 |
| 59 15 630 08 | 5 910 672 | 59 10 672 08 | 2 | 1 |
| 59 15 631 08 | 2 520 101 | 96 49 682 08 | 3 | 2 |
| 59 15 631 08 | 5 910 672 | 59 10 672 08 | 1 | 1 |
| 59 15 709 08 | 2 510 100 | 96 44 750 08 | 103 | 6 |
| 59 15 709 08 | 2 510 201 | 96 42 011 08 | 15 | 6 |
| 59 15 709 08 | 2 533 003 | 96 28 388 08 | 17 | 1 |
| 59 15 722 08 | 2 520 000 | 91 49 872 08 | 52 | 5 |
| 59 15 722 08 | 3 106 000 | 91 60 313 08 | 62 | 2 |
| 59 16 694 08 | 2 540 | 91 45 984 08 | 5 | 1 |
| 59 23 269 14 | 1 100 301 | 96 72 945 08 | 1 | 2 |
| 60 02 233 | 2 533 001 | 96 41 568 08 | (1) | 2 |
| 60 04 409 08 | 2 932 119 | 96 46 061 08 | 22 | 20 |
| 60 14 001 08 | 2 932 042 | 96 68 587 08 | (8) | 1.5 |
| 60 14 046 08 | 2 932 042 | 96 68 587 08 | 101 | 0.62 |
| 60 14 046 08 | 2 932 095 | 96 46 064 08 | 106 | 0.35 |
| 60 14 046 08 | 2 932 095 | 96 46 064 08 | 107 | 0.295 |
| 60 14 073 08 | 2 932 042 | 96 68 587 08 | 102 | 0.45 |
| 60 14 073 08 | 2 932 042 | 96 68 587 08 | 103 | 0.08 |
| 60 20 022 08 | 2 950 | 91 49 515 08 | 18 | 36 |
| 60 20 032 08 | 2 932 215 | 92 26 129 08 | 8 | 1 |
| 60 20 033 08 | 2 932 215 | 92 26 129 08 | 9 | 2 |
| 60 20 078 08 | 3 330 | 91 57 885 08 | 37 | 8 |
| 60 20 085 08 | 2 210 | 91 81 614 08 | 404 | 6 |
| 60 20 095 08 | 2 971 | 91 50 610 08 | 48 | 16 |
| 60 20 124 08 | 2 571 | 91 50 902 08 | 5 | 1 |
| 60 20 180 08 | 2 950 | 91 49 515 08 | 19 | 18 |
| 60 20 180 08 | 3 101 | 91 60 312 08 | 78 | 4 |
| 60 21 018 08 | 2 932 215 | 92 26 129 08 | 1 | 0.095 |
| 60 21 067 08 | 1 920 314 | 96 46 921 08 | 10 | 0.205 |
| 60 21 067 08 | 2 932 042 | 96 68 587 08 | 38 | 0.2 |
| 60 21 067 08 | 2 932 167 | 96 32 480 08 | 1 | 0.15 |
| 60 21 067 08 | 3 930 492 | 96 20 966 08 | 298 | 0.21 |
| 60 21 067 08 | 3 930 718 | 96 56 248 08 | 202 | 0.25 |
| 60 21 101 08 | 2 932 167 | 96 32 480 08 | 4 | 2 |
| 60 21 159 08 | 3 501 | 91 05 788 08 | 100 | 2 |
| 60 21 710 08 | 2 932 119 | 96 46 061 08 | 21 | 26 |
| 60 22 097 08 | 2 932 042 | 96 68 587 08 | (158) | 3 |

| Item | Page | Assembly | Pos. | Quantity |
|---|---|---|---|---|
| 60 23 002 08 | 2 932 042 | 96 68 587 08 | (152) | 23 |
| 60 23 014 08 | 2 932 042 | 96 68 587 08 | (155) | 1 |
| 60 23 048 08 | 2 913 102 | 92 32 870 08 | 9 | 2 |
| 60 23 059 08 | 2 913 102 | 92 32 870 08 | 8 | 1 |
| 60 23 059 08 | 2 932 042 | 96 68 587 08 | (159) | 1 |
| 60 23 154 08 | 2 932 119 | 96 46 061 08 | 23 | 370 |
| 60 23 212 08 | 2 922 001 | 92 84 311 08 | 5 | 7 |
| 60 23 219 08 | 2 922 001 | 92 84 311 08 | 6 | 2 |
| 60 23 223 08 | 2 932 042 | 96 68 587 08 | (150) | 5 |
| 60 23 233 08 | 2 932 042 | 96 68 587 08 | (151) | 30 |
| 60 23 250 08 | 2 932 119 | 96 46 061 08 | 16 | 11 |
| 60 23 255 08 | 2 932 042 | 96 68 587 08 | (156) | 2 |
| 60 23 313 08 | 2 932 042 | 96 68 587 08 | (157) | 9 |
| 60 23 360 08 | 2 932 042 | 96 68 587 08 | (154) | 5 |
| 60 23 364 08 | 2 932 166 | 92 68 911 08 | 2 | 1 |
| 60 23 365 08 | 2 932 166 | 92 68 911 08 | 3 | 6 |
| 60 23 370 08 | 2 932 042 | 96 68 587 08 | (164) | 2 |
| 60 24 113 08 | 2 533 003 | 96 28 388 08 | 24 | 1 |
| 60 24 225 08 | 2 920 362 | 96 31 865 08 | 2 | 1 |
| 60 24 226 08 | 2 920 585 | 91 01 520 08 | 266 | 1 |
| 60 24 226 08 | 3 930 523 | 96 43 943 08 | 7 | 1 |
| 60 24 227 08 | X1034357 | 10 34 357 4 | 5 | 2 |
| 60 24 241 08 | 3 930 492 | 96 20 966 08 | 199 | 2 |
| 60 24 243 08 | 1 920 314 | 96 46 921 08 | 16 | 1 |
| 60 24 244 08 | 1 920 314 | 96 46 921 08 | 18 | 1 |
| 60 24 250 08 | 3 930 492 | 96 20 966 08 | 197 | 2 |
| 60 24 250 08 | 3 930 718 | 96 56 248 08 | 216 | 2 |
| 60 24 251 08 | 3 930 718 | 96 56 248 08 | 212 | 1 |
| 60 24 252 08 | 1 920 314 | 96 46 921 08 | 19 | 1 |
| 60 24 257 08 | 3 930 492 | 96 20 966 08 | 200 | 1 |
| 60 24 257 08 | 3 930 718 | 96 56 248 08 | 211 | 4 |
| 60 24 408 08 | 2 920 | 91 55 477 08 | (7) | 1 |
| 60 24 415 08 | 1 920 314 | 96 46 921 08 | 17 | 1 |
| 60 25 012 08 | 1 920 314 | 96 46 921 08 | 292 | 1 |
| 60 25 012 08 | 3 930 492 | 96 20 966 08 | 292 | 1 |
| 60 25 012 08 | 3 930 718 | 96 56 248 08 | 308 | 1 |
| 60 25 013 08 | 1 920 314 | 96 46 921 08 | 293 | 1 |
| 60 25 013 08 | 3 930 492 | 96 20 966 08 | 293 | 1 |
| 60 25 013 08 | 3 930 523 | 96 43 943 08 | 9 | 1 |
| 60 25 016 08 | 2 932 042 | 96 68 587 08 | 111 | 1 |
| 60 25 019 08 | 2 920 362 | 96 31 865 08 | 3 | 1 |
| 60 25 020 08 | 2 533 003 | 96 28 388 08 | 25 | 1 |
| 60 25 020 08 | 2 920 585 | 91 01 520 08 | 267 | 1 |
| 60 25 024 08 | 2 932 042 | 96 68 587 08 | 110 | 1 |
| 60 26 040 08 | 3 930 523 | 96 43 943 08 | 8 | 1 |
| 60 26 062 08 | 2 920 | 91 55 477 08 | (6) | 1 |
| 60 26 062 08 | 3 930 492 | 96 20 966 08 | 198 | 2 |
| 60 26 066 08 | 1 920 314 | 96 46 921 08 | 15 | 1 |
| 60 27 018 08 | 3 750 026 | 96 89 407 08 | 11 | 2 |
| 60 27 018 08 | 3 750 028 | 96 89 408 08 | 11 | 2 |
| 60 27 021 08 | 2 510 100 | 96 44 750 08 | 105 | 1 |
| 60 27 021 08 | 2 920 362 | 96 31 865 08 | 6 | 1 |
| 60 27 024 08 | 2 913 102 | 92 32 870 08 | 10 | 1 |
| 60 27 048 08 | 6 923 101 | 69 23 101 08 | 9 | 2 |
| 60 27 172 08 | 2 515 007 | 96 42 014 08 | 15 | 1 |
| 60 27 173 08 | 2 210 008 | 96 48 137 08 | 111 | 5 |
| 60 27 173 08 | 2 510 100 | 96 44 750 08 | 106 | 1 |
| 60 27 355 08 | 2 932 095 | 96 46 064 08 | 11 | 35 |
| 60 27 360 08 | 3 930 718 | 96 56 248 08 | 205 | 2 |
| 60 27 417 08 | 1 920 314 | 96 46 921 08 | 12 | 6 |
| 60 27 417 08 | 2 932 167 | 96 32 480 08 | 7 | 2 |
| 60 27 417 08 | 3 930 492 | 96 20 966 08 | 296 | 6 |
| 60 27 426 08 | 3 930 492 | 96 20 966 08 | 207 | 0.16 |
| 60 27 437 08 | 1 920 314 | 96 46 921 08 | 8 | 1 |
| 60 27 601 08 | 1 400 201 | 96 43 983 08 | 1 | 9 |
| 60 27 601 08 | 1 997 | 91 53 489 08 | 1 | 25 |
| 60 27 601 08 | 2 831 021 | 96 38 140 08 | 1 | 5 |
| 60 27 601 08 | 2 970 061 | 96 43 131 08 | 1 | 3 |
| 60 27 601 08 | 2 970 103 | 96 43 157 08 | 1 | 1 |
| 60 27 601 08 | 2 971 012 | 96 43 144 08 | 1 | 10 |
| 60 27 601 08 | 2 975 038 | 91 26 492 08 | (1) | 4 |
| 60 27 601 08 | 2 997 | 91 51 089 08 | 1 | 69 |
| 60 27 602 08 | 2 970 061 | 96 43 131 08 | 2 | 2 |
| 60 27 602 08 | 2 997 | 91 51 089 08 | 2 | 16 |
| 60 27 603 08 | 1 400 201 | 96 43 983 08 | 2 | 1 |
| 60 27 603 08 | 1 997 | 91 53 489 08 | 2 | 18 |
| 60 27 603 08 | 2 970 061 | 96 43 131 08 | 3 | 3 |
| 60 27 603 08 | 2 970 103 | 96 43 157 08 | 2 | 6 |
| 60 27 603 08 | 2 971 012 | 96 43 144 08 | 2 | 3 |
| 60 27 603 08 | 2 997 | 91 51 089 08 | 3 | 26 |
| 60 27 614 08 | 2 932 042 | 96 68 587 08 | 56 | 70 |
| 60 27 614 08 | 2 932 095 | 96 46 064 08 | 56 | 50 |
| 60 27 614 08 | 2 932 166 | 92 68 911 08 | 12 | 10 |
| 60 27 616 08 | 2 932 167 | 96 32 480 08 | 2 | 2 |
| 60 27 629 08 | 2 932 167 | 96 32 480 08 | 8 | 1 |
| 60 27 946 08 | 3 930 718 | 96 56 248 08 | 208 | 2 |
| 60 30 169 08 | 2 522 | 91 10 037 08 | 55 | 0.35 |
| 60 30 322 14 | 1 970 | 96 71 367 08 | 28 | 0.3 |
| 60 30 323 14 | 1 970 | 96 71 367 08 | 30 | 0.6 |
| 60 30 326 14 | 1 970 | 96 71 367 08 | 29 | 0.3 |
| 60 32 003 08 | 2 932 042 | 96 68 587 08 | (211) | 100 |
| 60 32 004 08 | 2 932 042 | 96 68 587 08 | (212) | 100 |
| 60 32 004 08 | 3 930 523 | 96 43 943 08 | 154 | 5 |
| 60 32 019 08 | 2 932 042 | 96 68 587 08 | (205) | 0.01 |
| 60 32 022 08 | 2 780 852 | 96 24 845 08 | 13 | 2 |
| 60 32 022 08 | 2 913 004 | 96 20 460 08 | 8 | 2 |
| 60 32 022 08 | 2 913 006 | 96 20 732 08 | 11 | 1 |
| 60 32 022 08 | 2 932 042 | 96 68 587 08 | (213) | 100 |
| 60 32 022 08 | 2 932 119 | 96 46 061 08 | 24 | 10 |
| 60 40 069 08 | 2 932 095 | 96 46 064 08 | 13 | 8 |
| 60 40 070 08 | 2 932 095 | 96 46 064 08 | 14 | 9 |
| 60 40 071 08 | 2 920 083 | 96 31 039 08 | 9 | 1 |
| 60 40 071 08 | 2 932 095 | 96 46 064 08 | 15 | 12 |
| 60 40 072 08 | 2 932 095 | 96 46 064 08 | 16 | 5 |
| 60 40 073 08 | 1 780 182 | 92 01 827 08 | 266 | 1 |
| 60 40 073 08 | 2 932 095 | 96 46 064 08 | 17 | 4 |
| 60 40 074 08 | 2 932 095 | 96 46 064 08 | 18 | 1 |
| 60 40 077 08 | 2 780 870 | 91 70 947 08 | 5 | 1 |
| 60 41 040 08 | 2 932 095 | 96 46 064 08 | 12 | 2 |
| 60 44 124 08 | 1 830 102 | 92 26 483 08 | 1 | 1 |
| 60 45 016 08 | 2 920 083 | 96 31 039 08 | 8 | 1 |
| 60 45 016 08 | 2 932 095 | 96 46 064 08 | 10 | 8 |
| 60 45 055 08 | 6 923 101 | 69 23 101 08 | 14 | 1 |
| 60 45 081 08 | 3 930 492 | 96 20 966 08 | 155 | 1 |
| 60 45 085 08 | 6 923 101 | 69 23 101 08 | 10 | 1 |
| 60 45 086 08 | 6 923 101 | 69 23 101 08 | 8 | 1 |
| 60 45 121 08 | 3 930 492 | 96 20 966 08 | 153 | 1 |
| 60 45 121 08 | 6 923 101 | 69 23 101 08 | 16 | 1 |
| 60 45 189 08 | 3 930 492 | 96 20 966 08 | (151) | 3 |
| 60 45 189 08 | 6 923 101 | 69 23 101 08 | 13 | 2 |

| Item | Page | Assembly | Pos. | Quantity |
|---|---|---|---|---|
| 60 45 193 08 | 6 923 101 | 69 23 101 08 | 12 | 8 |
| 60 45 265 08 | 3 930 492 | 96 20 966 08 | (152) | 1 |
| 60 45 265 08 | 6 923 101 | 69 23 101 08 | 11 | 1 |
| 60 45 327 08 | 2 920 | 91 55 477 08 | 37 | 1 |
| 60 52 039 08 | 2 932 095 | 96 46 064 08 | 27 | 1 |
| 60 60 126 08 | 2 780 800 | 91 15 191 08 | 6 | 1 |
| 60 60 126 08 | 2 920 200 | 91 27 889 08 | 6 | 1 |
| 60 60 168 08 | 2 920 563 | 92 08 459 08 | 6 | 1 |
| 60 60 242 08 | 1 780 182 | 92 01 827 08 | 151 | 1 |
| 60 60 242 08 | 2 533 001 | 96 41 568 08 | 8 | 3 |
| 60 60 248 08 | 2 533 001 | 96 41 568 08 | 10 | 3 |
| 60 60 258 08 | 2 533 001 | 96 41 568 08 | 11 | 3 |
| 60 60 262 08 | 2 920 284 | 91 27 894 08 | 5 | 1 |
| 60 60 279 08 | 2 533 001 | 96 41 568 08 | 9 | 2 |
| 60 60 288 08 | 2 533 001 | 96 41 568 08 | 12 | 1 |
| 60 60 516 08 | 2 780 800 | 91 15 191 08 | 5 | 1 |
| 60 60 516 08 | 2 920 200 | 91 27 889 08 | 5 | 1 |
| 60 60 709 08 | 2 920 083 | 96 31 039 08 | 6 | 1 |
| 60 60 934 08 | 6 060 709 | 60 60 709 08 | 1 | 1 |
| 60 60 950 08 | 2 531 001 | 96 36 738 08 | 4 | 1 |
| 60 60 950 08 | 2 531 002 | 96 36 739 08 | 4 | 1 |
| 60 61 430 08 | 2 530 002 | 96 19 448 08 | 11 | 1 |
| 60 61 430 08 | 2 531 001 | 96 36 738 08 | 10 | 6 |
| 60 61 430 08 | 2 531 002 | 96 36 739 08 | 10 | 3 |
| 60 61 431 08 | 2 530 002 | 96 19 448 08 | 10 | 1 |
| 60 61 431 08 | 2 531 001 | 96 36 738 08 | 8 | 1 |
| 60 61 433 08 | 2 932 095 | 96 46 064 08 | 30 | 2 |
| 60 61 435 08 | 2 530 002 | 96 19 448 08 | 6 | 2 |
| 60 61 435 08 | 2 531 001 | 96 36 738 08 | 24 | 3 |
| 60 61 435 08 | 2 531 002 | 96 36 739 08 | 24 | 5 |
| 60 61 437 08 | 2 530 002 | 96 19 448 08 | 12 | 1 |
| 60 61 437 08 | 2 531 001 | 96 36 738 08 | 12 | 5 |
| 60 61 437 08 | 2 531 002 | 96 36 739 08 | 12 | 1 |
| 60 61 438 08 | 2 533 001 | 96 41 568 08 | 48 | 1 |
| 60 61 439 08 | 2 531 001 | 96 36 738 08 | 7 | 1 |
| 60 61 439 08 | 2 531 002 | 96 36 739 08 | 7 | 3 |
| 60 61 440 08 | 2 531 001 | 96 36 738 08 | 28 | 1 |
| 60 61 440 08 | 2 531 002 | 96 36 739 08 | 28 | 3 |
| 60 61 441 08 | 2 533 001 | 96 41 568 08 | 47 | 1 |
| 60 61 442 08 | 2 530 002 | 96 19 448 08 | 13 | 1 |
| 60 61 442 08 | 2 531 001 | 96 36 738 08 | 29 | 1 |
| 60 61 442 08 | 2 531 002 | 96 36 739 08 | 30 | 2 |
| 60 61 443 08 | 2 530 002 | 96 19 448 08 | 9 | 1 |
| 60 61 443 08 | 2 531 001 | 96 36 738 08 | 30 | 1 |
| 60 61 445 08 | 2 530 002 | 96 19 448 08 | 8 | 2 |
| 60 61 445 08 | 2 531 001 | 96 36 738 08 | 26 | 2 |
| 60 61 445 08 | 2 531 002 | 96 36 739 08 | 26 | 2 |
| 60 61 446 08 | 2 932 095 | 96 46 064 08 | 31 | 2 |
| 60 61 447 08 | 2 531 001 | 96 36 738 08 | 14 | 1 |
| 60 61 447 08 | 2 531 002 | 96 36 739 08 | 14 | 2 |
| 60 61 451 08 | 2 531 001 | 96 36 738 08 | 6 | 4 |
| 60 61 452 08 | 2 531 002 | 96 36 739 08 | 20 | 1 |
| 60 61 666 08 | 2 531 002 | 96 36 739 08 | 18 | 1 |
| 60 61 943 08 | 2 530 002 | 96 19 448 08 | 5 | 1 |
| 60 61 962 08 | 2 533 001 | 96 41 568 08 | 3 | 2 |
| 60 66 523 08 | 2 920 574 | 96 36 055 08 | 7 | 1 |
| 60 66 524 08 | 2 920 904 | 96 41 093 08 | 9 | 2 |
| 60 66 525 08 | 2 920 574 | 96 36 055 08 | 8 | 4 |
| 60 66 525 08 | 2 920 904 | 96 41 093 08 | 8 | 6 |
| 60 66 532 08 | 2 920 904 | 96 41 093 08 | 10 | 14 |

| Item | Page | Assembly | Pos. | Quantity |
|---|---|---|---|---|
| 60 66 533 08 | 2 920 574 | 96 36 055 08 | 12 | 4 |
| 60 66 533 08 | 2 920 904 | 96 41 093 08 | 11 | 2 |
| 60 66 537 08 | 2 920 904 | 96 41 093 08 | 7 | 1 |
| 60 67 606 08 | 1 780 182 | 92 01 827 08 | 152 | 2 |
| 60 67 617 08 | 2 533 001 | 96 41 568 08 | 43 | 1 |
| 60 67 620 08 | 2 533 001 | 96 41 568 08 | 18 | 13 |
| 60 67 633 08 | 1 780 182 | 92 01 827 08 | 267 | 1 |
| 60 67 633 08 | 2 533 001 | 96 41 568 08 | 17 | 1 |
| 60 67 643 08 | 2 533 001 | 96 41 568 08 | 37 | 1 |
| 60 67 669 08 | 2 533 001 | 96 41 568 08 | 30 | 2 |
| 60 67 671 08 | 2 533 001 | 96 41 568 08 | 28 | 1 |
| 60 67 701 08 | 2 533 001 | 96 41 568 08 | 25 | 1 |
| 60 67 702 08 | 2 533 001 | 96 41 568 08 | 23 | 1 |
| 60 67 718 08 | 2 533 001 | 96 41 568 08 | 26 | 1 |
| 60 67 725 08 | 2 533 001 | 96 41 568 08 | 31 | 1 |
| 60 67 757 08 | 2 533 001 | 96 41 568 08 | 29 | 1 |
| 60 67 770 08 | 2 533 001 | 96 41 568 08 | 46 | 1 |
| 60 67 784 08 | 2 533 001 | 96 41 568 08 | 24 | 1 |
| 60 67 817 08 | 2 533 001 | 96 41 568 08 | 38 | 1 |
| 60 67 827 08 | 2 533 001 | 96 41 568 08 | 32 | 1 |
| 60 67 914 08 | 2 533 001 | 96 41 568 08 | 44 | 1 |
| 60 70 028 08 | 2 533 003 | 96 28 388 08 | 11 | 1 |
| 60 70 087 08 | 2 530 002 | 96 19 448 08 | 7 | 2 |
| 60 70 087 08 | 2 531 001 | 96 36 738 08 | 18 | 2 |
| 60 70 087 08 | 2 531 002 | 96 36 739 08 | 15 | 2 |
| 60 70 097 08 | 2 533 001 | 96 41 568 08 | (1) | 2 |
| 60 70 111 08 | 1 750 002 | 92 86 201 08 | (1) | 2 |
| 60 70 117 08 | 2 530 002 | 96 19 448 08 | 14 | 1 |
| 60 70 117 08 | 2 531 001 | 96 36 738 08 | 16 | 5 |
| 60 70 117 08 | 2 531 002 | 96 36 739 08 | 16 | 4 |
| 60 70 211 08 | 2 533 003 | 96 28 388 08 | 13 | 1 |
| 60 70 211 08 | 2 920 362 | 96 31 865 08 | 5 | 1 |
| 60 70 211 08 | 6 071 509 | 60 71 509 08 | 1 | 1 |
| 60 71 062 08 | 1 750 002 | 92 86 201 08 | 2 | 2 |
| 60 71 354 08 | 1 780 182 | 92 01 827 08 | 153 | 1 |
| 60 71 354 08 | 2 533 001 | 96 41 568 08 | 15 | 2 |
| 60 71 361 08 | 2 533 003 | 96 28 388 08 | 10 | 1 |
| 60 71 386 08 | 2 920 585 | 91 01 520 08 | 151 | 1 |
| 60 71 445 08 | 2 533 003 | 96 28 388 08 | 12 | 1 |
| 60 71 509 08 | 2 920 362 | 96 31 865 08 | 4 | 1 |
| 60 72 246 08 | 2 520 000 | 91 49 872 08 | 25 | 1 |
| 60 72 250 08 | 2 533 001 | 96 41 568 08 | 16 | 4 |
| 61 03 886 14 | 2 913 102 | 92 32 870 08 | 3 | 2 |
| 61 04 133 08 | 2 913 102 | 92 32 870 08 | 11 | 2 |
| 61 07 063 08 | 5 114 794 | 51 14 794 08 | 6 | 1 |
| 61 07 145 08 | 2 913 004 | 96 20 460 08 | 2 | 1 |
| 61 07 146 08 | 2 913 006 | 96 20 732 08 | 2 | 2 |
| 61 10 011 08 | 2 913 100 | 91 23 538 08 | 2 | 1 |
| 61 10 012 08 | 2 913 102 | 92 32 870 08 | 2 | 1 |
| 61 10 016 08 | 2 932 042 | 96 68 587 08 | 44 | 2 |
| 61 10 017 08 | 2 932 042 | 96 68 587 08 | 45 | 3 |
| 61 10 022 08 | 2 913 003 | 96 20 599 08 | 5 | 1 |
| 61 10 461 08 | 2 932 119 | 96 46 061 08 | 20 | 12 |
| 61 32 006 08 | 1 750 002 | 92 86 201 08 | 3 | 10 |
| 61 32 065 08 | 2 920 083 | 96 31 039 08 | 22 | 1 |
| 61 32 066 08 | 2 920 083 | 96 31 039 08 | 21 | 1 |
| 61 40 031 08 | 2 533 003 | 96 28 388 08 | 16 | 1 |
| 61 40 047 08 | 2 920 | 91 55 477 08 | (5) | 1 |
| 61 40 307 08 | 2 533 003 | 96 28 388 08 | 19 | 1 |
| 61 70 001 08 | 2 780 851 | 96 24 498 08 | 3 | 1 |

| Item | Page | Assembly | Pos. | Quantity |
|---|---|---|---|---|
| 61 70 001 08 | 2 780 852 | 96 24 845 08 | 7 | 1 |
| 61 70 001 08 | 2 920 574 | 96 36 055 08 | 267 | 2 |
| 61 70 001 08 | 2 920 904 | 96 41 093 08 | 250 | 2 |
| 62 90 130 | X1011969 | 10 11 969 8 | 1 | 2 |
| 63 01 021 08 | 2 932 119 | 96 46 061 08 | 6 | 13 |
| 63 01 023 08 | 2 932 119 | 96 46 061 08 | 9 | 13 |
| 63 01 051 08 | 2 932 095 | 96 46 064 08 | 20 | 1 |
| 63 01 053 08 | 2 920 083 | 96 31 039 08 | 7 | 1 |
| 63 01 201 08 | 2 932 042 | 96 68 587 08 | 30 | 1 |
| 63 01 215 08 | 2 932 095 | 96 46 064 08 | 22 | 32 |
| 63 01 229 08 | 2 932 042 | 96 68 587 08 | 31 | 1 |
| 63 01 229 08 | 2 932 095 | 96 46 064 08 | 21 | 33 |
| 63 50 169 08 | 2 932 095 | 96 46 064 08 | 35 | 5 |
| 63 50 170 08 | 2 932 095 | 96 46 064 08 | 36 | 1 |
| 63 50 452 08 | 2 932 095 | 96 46 064 08 | 40 | 1 |
| 63 50 576 08 | 2 913 005 | 96 28 696 08 | 15 | 1 |
| 63 50 842 08 | 2 922 001 | 92 84 311 08 | 7 | 10 |
| 63 50 855 08 | 2 922 001 | 92 84 311 08 | 20 | 2 |
| 63 51 137 08 | 2 932 095 | 96 46 064 08 | 39 | 1 |
| 66 00 245 08 | 2 932 042 | 96 68 587 08 | 14 | 1 |
| 66 00 416 08 | 2 922 001 | 92 84 311 08 | 14 | 1 |
| 66 00 419 08 | 2 922 001 | 92 84 311 08 | 12 | 1 |
| 66 00 420 08 | 2 922 001 | 92 84 311 08 | 13 | 6 |
| 66 00 422 08 | 2 922 001 | 92 84 311 08 | 10 | 4 |
| 66 00 428 08 | 2 922 001 | 92 84 311 08 | 9 | 4 |
| 66 00 429 08 | 2 922 001 | 92 84 311 08 | 11 | 1 |
| 66 00 430 08 | 2 913 100 | 91 23 538 08 | 7 | 1 |
| 66 00 460 08 | 2 922 001 | 92 84 311 08 | 8 | 12 |
| 66 01 015 08 | 2 932 119 | 96 46 061 08 | 14 | 2 |
| 66 01 020 08 | 2 932 042 | 96 68 587 08 | 33 | 1 |
| 66 03 006 08 | 2 922 001 | 92 84 311 08 | 21 | 8 |
| 66 10 179 08 | 2 922 001 | 92 84 311 08 | 4 | 1 |
| 69 10 416 08 | X1028517 | 10 28 517 1 | 12 | 15 |
| 69 10 417 08 | X1028517 | 10 28 517 1 | 13 | 37 |
| 69 11 806 08 | 9 076 530 | 90 76 530 | 1 | 1 |
| 69 11 831 08 | 2 970 | 91 55 482 08 | (1) | 1 |
| 69 11 832 08 | 2 984 | 91 52 906 08 | (2) | 1 |
| 69 17 985 08 | 2 533 001 | 96 41 568 08 | 4 | 1 |
| 69 18 022 08 | 2 932 042 | 96 68 587 08 | 36 | 1 |
| 69 18 849 08 | 2 913 003 | 96 20 599 08 | 1 | 1 |
| 69 23 081 08 | 1 920 307 | 96 46 916 08 | 10 | 1 |
| 69 23 091 08 | 1 780 650 | 91 43 393 08 | 1 | 1 |
| 69 23 097 08 | 2 830 041 | 92 88 195 08 | 1 | 2 |
| 69 23 100 08 | 3 930 482 | 96 20 157 08 | 5 | 1 |
| 69 23 100 08 | 3 930 483 | 96 20 935 08 | 5 | 1 |
| 69 23 101 08 | 3 930 482 | 96 20 157 08 | 6 | 1 |
| 69 26 004 08 | 2 913 003 | 96 20 599 08 | 8 | 1 |
| 69 26 006 08 | 6 923 101 | 69 23 101 08 | 2 | 1 |
| 69 27 013 08 | 2 913 003 | 96 20 599 08 | 6 | 1 |
| 69 27 014 08 | 2 913 003 | 96 20 599 08 | 7 | 1 |
| 69 27 015 08 | 2 920 407 | 92 11 635 08 | 10 | 2 |
| 69 27 015 08 | 2 920 554 | 96 19 338 08 | 10 | 2 |
| 69 31 044 14 | X1028517 | 10 28 517 1 | 11 | 15 |
| 69 32 086 14 | 5 114 327 | 51 14 327 14 | 1 | 2 |
| 70 02 332 | 9 444 410 | 94 44 410 03 | 92 | 1 |
| 70 03 478 | 5 102 407 | 51 02 407 08 | 14 | 1 |
| 70 05 052 | 2 210 | 91 81 614 08 | 406 | 4 |
| 70 05 052 | 2 920 | 91 55 477 08 | 28 | 10 |
| 70 05 052 | 3 101 | 91 60 312 08 | 72 | 2 |
| 70 05 052 | 3 330 | 91 57 885 08 | 33 | 4 |

| Item | Page | Assembly | Pos. | Quantity |
|---|---|---|---|---|
| 70 05 072 | X1011795 | 10 11 795 1 | 6 | 1 |
| 70 07 952 | X1011583 | 10 11 583 7 | 72 | 4 |
| 70 07 952 | X1011585 | 10 11 585 1 | 8 | 15 |
| 70 07 952 | X1011585 | 10 11 585 2 | 8 | 11 |
| 70 07 952 | X1011585 | 10 11 585 3 | 8 | 15 |
| 70 07 952 | X1011585 | 10 11 585 9 | 8 | 11 |
| 70 08 986 | 5 923 269 | 59 23 269 14 | 10 | 1 |
| 70 09 590 | X1011569 | 10 11 569 6 | 17 | 1 |
| 70 20 440 | 2 831 | 91 47 871 08 | 8 | 1.6 |
| 70 22 049 | 5 530 022 | 55 30 022 08 | 20 | 1 |
| 70 22 315 | 5 102 294 | 51 02 294 08 | 14 | 1 |
| 70 22 315 | 5 701 090 | 57 01 090 08 | 14 | 1 |
| 70 25 732 | 5 700 161 | 57 00 161 | 23 | 1 |
| 70 27 459 | 1 970 | 96 71 367 08 | (2) | 2 |
| 70 29 305 | X1042993 | 10 42 993 3 | 11 | 1 |
| 70 40 042 08 | 3 510 006 | 96 20 924 08 | 8 | 1 |
| 70 40 048 08 | 2 502 | 91 01 533 08 | 15 | 2 |
| 70 40 085 08 | 2 440 | 91 52 288 08 | 4 | 2 |
| 70 42 076 08 | 2 520 000 | 91 49 872 08 | 58 | 8 |
| 70 42 076 08 | 2 913 004 | 96 20 460 08 | 3 | 4 |
| 70 42 076 08 | 2 932 095 | 96 46 064 08 | 69 | 32 |
| 70 42 076 08 | 2 932 119 | 96 46 061 08 | 28 | 8 |
| 70 42 111 08 | 2 520 000 | 91 49 872 08 | 99 | 1 |
| 70 42 121 08 | 2 913 005 | 96 28 696 08 | 10 | 2 |
| 70 42 126 08 | 2 501 000 | 91 48 769 08 | 13 | 4 |
| 70 42 127 08 | 2 520 000 | 91 49 872 08 | 22 | 2 |
| 70 42 127 08 | 2 932 095 | 96 46 064 08 | 70 | 12 |
| 70 42 268 08 | 2 501 000 | 91 48 769 08 | 14 | 2 |
| 70 42 276 08 | 3 750 026 | 96 89 407 08 | 7 | 1 |
| 70 42 276 08 | 3 750 028 | 96 89 408 08 | 7 | 1 |
| 70 42 281 08 | 2 510 072 | 96 44 614 08 | 2 | 3 |
| 70 42 281 08 | 2 510 201 | 96 42 011 08 | 2 | 3 |
| 70 42 281 08 | 3 750 026 | 96 89 407 08 | 3 | 1 |
| 70 42 281 08 | 3 750 028 | 96 89 408 08 | 3 | 1 |
| 70 42 287 08 | 2 522 | 91 10 037 08 | 21 | 1 |
| 70 42 290 08 | 2 501 000 | 91 48 769 08 | 20 | 2 |
| 70 42 291 08 | 2 501 000 | 91 48 769 08 | 21 | 2 |
| 70 42 297 08 | 2 510 201 | 96 42 011 08 | 7 | 1 |
| 70 42 298 08 | 2 533 001 | 96 41 568 08 | 64 | 10 |
| 70 42 315 08 | 2 520 021 | 92 17 203 08 | 3 | 1 |
| 70 42 317 08 | 2 260 006 | 96 31 147 08 | 7 | 1 |
| 70 42 322 08 | 2 520 001 | 92 48 796 08 | 27 | 1 |
| 70 42 323 08 | 2 932 042 | 96 68 587 08 | 71 | 25 |
| 70 42 323 08 | 2 932 095 | 96 46 064 08 | 71 | 6 |
| 70 42 324 08 | 2 270 | 91 50 456 08 | 9 | 0.6 |
| 70 42 533 08 | 2 510 200 | 96 41 258 08 | 35 | 2 |
| 70 42 534 08 | 2 501 022 | 96 34 184 08 | 3 | 4 |
| 70 42 534 08 | 2 510 200 | 96 41 258 08 | 36 | 2 |
| 70 42 545 08 | 2 501 022 | 96 34 184 08 | 8 | 2 |
| 70 42 545 08 | 2 510 200 | 96 41 258 08 | 29 | 2 |
| 70 42 551 08 | 2 510 200 | 96 41 258 08 | 38 | 2 |
| 70 42 566 08 | 2 501 022 | 96 34 184 08 | 2 | 4 |
| 70 42 571 08 | 2 932 095 | 96 46 064 08 | 59 | 1 |
| 70 42 572 08 | 2 932 095 | 96 46 064 08 | 58 | 1 |
| 70 42 573 08 | 2 932 095 | 96 46 064 08 | 57 | 1 |
| 70 42 582 08 | 2 520 021 | 92 17 203 08 | 4 | 2 |
| 70 42 590 08 | 2 501 022 | 96 34 184 08 | 4 | 4 |
| 70 42 711 08 | 1 750 002 | 92 86 201 08 | 7 | 2 |
| 70 42 711 08 | 2 510 200 | 96 41 258 08 | 39 | 1 |
| 70 42 712 08 | 2 520 000 | 91 49 872 08 | 66 | 1 |

| Item | Page | Assembly | Pos. | Quantity |
|---|---|---|---|---|
| 70 42 736 08 | 2 520 000 | 91 49 872 08 | 69 | 1 |
| 70 42 737 08 | 2 520 000 | 91 49 872 08 | 70 | 1 |
| 70 42 748 08 | 2 501 022 | 96 34 184 08 | 5 | 4 |
| 70 42 748 08 | 2 510 200 | 96 41 258 08 | 37 | 2 |
| 70 42 748 08 | X1047526 | 10 47 526 2 | 8 | 2 |
| 70 42 764 08 | 2 522 | 91 10 037 08 | 6 | 1 |
| 70 42 780 08 | 2 520 000 | 91 49 872 08 | 111 | 2 |
| 70 42 781 08 | 2 501 000 | 91 48 769 08 | 51 | 2 |
| 70 42 801 08 | 2 501 000 | 91 48 769 08 | 50 | 1 |
| 70 42 805 08 | 2 515 007 | 96 42 014 08 | 18 | 1 |
| 70 43 388 08 | 3 101 | 91 60 312 08 | 2 | 2 |
| 70 43 396 08 | 3 501 | 91 05 788 08 | 104 | 2 |
| 70 45 008 08 | 3 102 000 | 91 62 543 08 | 15 | 2 |
| 70 45 008 08 | 3 103 000 | 91 62 544 08 | 15 | 2 |
| 70 45 008 08 | 3 104 000 | 91 62 545 08 | 15 | 2 |
| 70 45 008 08 | 3 105 000 | 91 62 546 08 | 15 | 2 |
| 70 45 008 08 | 3 106 000 | 91 60 313 08 | 15 | 2 |
| 70 80 051 08 | 3 501 | 91 05 788 08 | 69 | 2 |
| 70 80 100 08 | 3 500 104 | 92 95 821 08 | 3 | 2 |
| 70 80 100 08 | 3 501 | 91 05 788 08 | 81 | 2 |
| 70 80 100 08 | 3 510 001 | 92 52 800 08 | 3 | 1 |
| 70 80 116 08 | 3 510 100 | 91 49 246 08 | 25 | 2 |
| 70 80 130 08 | 2 500 021 | 92 10 666 08 | 3 | 1 |
| 70 80 130 08 | 2 500 022 | 92 10 661 08 | 3 | 1 |
| 70 80 130 08 | 2 500 023 | 92 10 663 08 | 3 | 1 |
| 71 00 325 08 | 9 387 596 | 93 87 596 01 | 22 | 1 |
| 71 00 546 01 | 9 387 598 | 93 87 598 01 | 11 | 1 |
| 71 00 546 01 | 9 686 071 | 96 86 071 01 | (1) | 1 |
| 71 00 593 01 | 9 330 748 | 93 30 748 01 | 11 | 1 |
| 71 00 626 01 | 9 387 598 | 93 87 598 01 | 63 | 2 |
| 71 00 626 01 | 9 686 071 | 96 86 071 01 | 63 | 2 |
| 71 01 007 08 | X1011569 | 10 11 569 6 | 18 | 1 |
| 71 01 015 08 | X1011569 | 10 11 569 6 | 6 | 9 |
| 71 01 015 08 | X1011801 | 10 11 801 3 | 61 | 2 |
| 71 01 015 08 | X1011801 | 10 11 801 4 | 61 | 2 |
| 71 01 017 08 | 9 387 070 | 93 87 070 01 | 29 | 1 |
| 71 01 023 08 | 2 984 | 91 52 906 08 | (3) | 1 |
| 71 01 025 08 | X1011583 | 10 11 583 7 | 73 | 4 |
| 71 01 025 08 | X1047300 | 10 47 300 1 | 56 | 1 |
| 71 01 030 08 | 2 970 | 91 55 482 08 | 48 | 1 |
| 71 01 030 08 | X1011569 | 10 11 569 6 | 8 | 2 |
| 71 01 040 08 | 2 970 | 91 55 482 08 | (23) | 2 |
| 71 01 065 08 | X1011583 | 10 11 583 7 | 71 | 6 |
| 71 01 065 08 | X1011795 | 10 11 795 1 | 4 | 1 |
| 71 01 065 08 | X1011801 | 10 11 801 3 | 8 | 4 |
| 71 01 065 08 | X1011801 | 10 11 801 4 | 8 | 4 |
| 71 01 211 14 | 1 100 212 | 79 02 561 14 | 7 | 1 |
| 71 02 074 08 | 2 520 000 | 91 49 872 08 | 38 | 2 |
| 71 09 087 01 | 9 387 070 | 93 87 070 01 | 15 | 1 |
| 71 09 087 01 | 9 685 586 | 96 85 586 01 | 15 | 1 |
| 71 09 087 01 | 9 686 071 | 96 86 071 01 | (2) | 1 |
| 71 09 500 01 | 9 444 410 | 94 44 410 03 | (1) | 1 |
| 71 09 515 01 | 9 444 410 | 94 44 410 03 | (2) | 1 |
| 71 40 008 08 | 1 400 200 | 91 53 791 08 | 10 | 2 |
| 72 00 011 08 | 3 501 | 91 05 788 08 | 54 | 1 |
| 72 00 085 08 | 3 510 006 | 96 20 924 08 | 6 | 1 |
| 72 00 093 08 | 3 105 000 | 91 62 546 08 | 2 | 1 |
| 72 00 093 08 | 3 106 000 | 91 60 313 08 | 2 | 1 |
| 72 00 094 08 | 3 330 | 91 57 885 08 | 19 | 4 |
| 72 00 096 08 | 3 102 000 | 91 62 543 08 | 2 | 1 |
| 72 00 096 08 | 3 103 000 | 91 62 544 08 | 2 | 1 |
| 72 00 096 08 | 3 104 000 | 91 62 545 08 | 2 | 1 |
| 72 00 115 08 | 3 501 | 91 05 788 08 | 56 | 1 |
| 72 00 126 08 | 3 510 100 | 91 49 246 08 | 42 | 1 |
| 72 00 144 08 | 3 106 000 | 91 60 313 08 | 40 | 2 |
| 72 00 144 08 | 3 501 | 91 05 788 08 | 109 | 5 |
| 72 00 144 08 | 3 511 | 91 54 159 08 | 5 | 4 |
| 72 00 144 08 | 3 511 006 | 96 45 029 08 | 26 | 2 |
| 72 01 085 08 | 2 522 | 91 10 037 08 | 24 | 1 |
| 72 08 019 08 | 2 502 | 91 01 533 08 | 33 | 8 |
| 72 11 088 01 | 9 393 684 | 93 93 684 01 | 7 | 1 |
| 72 11 147 01 | 9 387 070 | 93 87 070 01 | 30 | 1 |
| 72 11 147 01 | 9 685 586 | 96 85 586 01 | 30 | 1 |
| 72 40 148 08 | 2 520 000 | 91 49 872 08 | 90 | 1 |
| 72 40 160 08 | 2 522 | 91 10 037 08 | 41 | 1 |
| 72 50 004 08 | 2 520 000 | 91 49 872 08 | 125 | 1 |
| 72 51 002 08 | 2 522 | 91 10 037 08 | 49 | 1 |
| 72 51 101 08 | 2 520 000 | 91 49 872 08 | 126 | 1 |
| 72 51 118 08 | 2 510 072 | 96 44 614 08 | 12 | 2 |
| 72 51 118 08 | 2 510 201 | 96 42 011 08 | 11 | 2 |
| 72 51 118 08 | 2 520 000 | 91 49 872 08 | 67 | 1 |
| 72 57 406 08 | 2 520 000 | 91 49 872 08 | 4 | 1 |
| 72 57 407 08 | 2 520 000 | 91 49 872 08 | 5 | 1 |
| 72 57 408 08 | 2 520 000 | 91 49 872 08 | 6 | 1 |
| 72 57 409 08 | 2 520 000 | 91 49 872 08 | 7 | 1 |
| 72 57 410 08 | 2 522 | 91 10 037 08 | 3 | 1 |
| 72 58 641 08 | 2 520 000 | 91 49 872 08 | 23 | 1 |
| 72 64 018 08 | 1 100 301 | 96 72 945 08 | 2 | 2 |
| 72 64 032 08 | 9 444 410 | 94 44 410 03 | 83 | 2 |
| 72 64 034 01 | 9 686 071 | 96 86 071 01 | 78 | 6 |
| 72 64 040 08 | 6 060 516 | 60 60 516 08 | 71 | 1 |
| 72 64 045 08 | 2 340 004 | 96 43 780 08 | 15 | 1 |
| 72 64 055 08 | 1 970 | 96 71 367 08 | (2) | 1 |
| 72 64 055 08 | 1 970 | 96 71 367 08 | (2) | 1 |
| 72 64 056 08 | 9 387 598 | 93 87 598 01 | 78 | 8 |
| 72 64 057 08 | 9 330 748 | 93 30 748 01 | 97 | 1 |
| 72 64 075 08 | 2 210 | 91 81 614 08 | (1) | 1 |
| 72 64 076 08 | 5 106 708 | 51 06 708 08 | 2 | 1 |
| 72 64 079 08 | 2 970 | 91 55 482 08 | (1) | 1 |
| 72 64 079 08 | X1047526 | 10 47 526 2 | 7 | 2 |
| 72 64 108 08 | 2 520 000 | 91 49 872 08 | 127 | 4 |
| 72 64 116 08 | 1 970 | 96 71 367 08 | (2) | 1 |
| 72 64 116 08 | 1 970 | 96 71 367 08 | (2) | 1 |
| 72 64 148 08 | 1 970 | 96 71 367 08 | (3) | 1 |
| 72 64 148 08 | 1 970 | 96 71 367 08 | (3) | 1 |
| 72 64 149 01 | 9 330 748 | 93 30 748 01 | 69 | 1 |
| 72 64 184 08 | 2 970 | 91 55 482 08 | (8) | 4 |
| 72 64 196 08 | 5 718 895 | 57 18 895 08 | 6 | 1 |
| 72 64 203 08 | 9 444 410 | 94 44 410 03 | 49 | 1 |
| 72 64 215 08 | 9 685 586 | 96 85 586 01 | 16 | 1 |
| 72 64 223 08 | 2 200 048 | 96 32 140 08 | 16 | 1 |
| 72 64 266 01 | 9 387 070 | 93 87 070 01 | 31 | 1 |
| 72 64 266 01 | 9 685 586 | 96 85 586 01 | 31 | 1 |
| 72 64 266 08 | 5 123 931 | 51 23 931 08 | 27 | 1 |
| 72 64 282 01 | 9 444 410 | 94 44 410 03 | 81 | 1 |
| 72 64 284 08 | 9 387 070 | 93 87 070 01 | 16 | 1 |
| 72 64 299 01 | 9 387 598 | 93 87 598 01 | 19 | 2 |
| 72 64 299 01 | 9 686 071 | 96 86 071 01 | 19 | 2 |
| 72 64 311 14 | 1 100 214 | 74 90 137 14 | 6 | 2 |
| 72 64 346 08 | X1106838 | 11 06 838 7 | 11 | 1 |

| Item | Page | Assembly | Pos. | Quantity |
|---|---|---|---|---|
| 72 64 365 | X1011583 | 10 11 583 7 | 56 | 1 |
| 72 64 400 01 | 9 330 748 | 93 30 748 01 | 73 | 1 |
| 72 64 536 01 | 9 330 748 | 93 30 748 01 | 24 | 1 |
| 72 64 584 01 | 9 686 071 | 96 86 071 01 | (3) | 1 |
| 72 64 642 14 | 1 970 | 96 71 367 08 | (3) | 1 |
| 72 64 642 14 | 1 970 | 96 71 367 08 | (3) | 1 |
| 72 64 696 14 | 9 444 410 | 94 44 410 03 | 71 | 2 |
| 72 66 108 08 | 2 522 | 91 10 037 08 | 17 | 2 |
| 72 66 122 08 | 2 510 200 | 96 41 258 08 | 26 | 2 |
| 72 66 122 08 | 2 515 007 | 96 42 014 08 | 7 | 2 |
| 72 66 158 08 | 2 520 000 | 91 49 872 08 | 146 | 1 |
| 72 66 179 08 | 3 501 | 91 05 788 08 | 103 | 1 |
| 72 69 050 08 | 2 210 008 | 96 48 137 08 | 121 | 2 |
| 72 69 065 08 | 2 510 100 | 96 44 750 08 | 101 | 3 |
| 72 69 065 08 | 2 984 | 91 52 906 08 | 11 | 8 |
| 72 69 073 08 | 2 510 100 | 96 44 750 08 | 104 | 2 |
| 72 69 073 08 | 2 510 200 | 96 41 258 08 | 19 | 4 |
| 72 69 114 08 | 2 500 021 | 92 10 666 08 | 2 | 1 |
| 72 69 114 08 | 2 500 022 | 92 10 661 08 | 2 | 1 |
| 72 69 114 08 | 2 500 023 | 92 10 663 08 | 2 | 1 |
| 73 61 649 | 1 750 | 91 48 606 08 | 10 | 1 |
| 73 62 091 | 1 970 | 96 71 367 08 | 711 | 1 |
| 73 62 091 | 2 970 | 91 55 482 08 | 643 | 12 |
| 73 62 091 | 2 971 | 91 50 610 08 | 601 | 3 |
| 73 62 091 | 2 975 152 | 91 05 737 08 | 608 | 4 |
| 73 63 030 | 1 970 | 96 71 367 08 | (4) | 1 |
| 73 63 032 | 1 970 | 96 71 367 08 | (4) | 1 |
| 73 63 427 | 1 100 211 | 74 90 653 14 | 60 | 1 |
| 73 64 488 | 1 970 | 96 71 367 08 | (4) | 1 |
| 73 64 491 | 1 970 | 96 71 367 08 | (4) | 1 |
| 73 66 731 | 2 520 000 | 91 49 872 08 | 51 | 1 |
| 73 67 238 | 1 100 216 | 96 46 363 08 | 22 | 8 |
| 73 67 610 | 1 970 | 96 71 367 08 | 535 | 3 |
| 73 67 611 | 1 970 | 96 71 367 08 | 554 | 2 |
| 73 67 612 | 1 970 | 96 71 367 08 | 573 | 8 |
| 73 71 064 | 1 100 212 | 79 02 561 14 | 9 | 1 |
| 73 71 745 | 1 100 213 | 74 90 654 14 | 5 | 1 |
| 73 73 505 03 | 9 444 410 | 94 44 410 03 | (5) | 8 |
| 73 73 506 03 | 9 444 410 | 94 44 410 03 | (4) | 9 |
| 73 80 019 | X1011969 | 10 11 969 8 | 51 | 1 |
| 73 80 023 | 9 075 541 | 90 75 541 | 18 | 1 |
| 73 80 123 | 9 072 593 | 90 72 593 | 2 | 1 |
| 73 80 177 | X1011577 | 10 11 577 7 | 4 | 2 |
| 73 80 177 | X1011611 | 10 11 611 0 | 14 | 1 |
| 73 80 177 | X1011739 | 10 11 739 7 | 14 | 2 |
| 73 80 401 | X1011583 | 10 11 583 7 | 62 | 1 |
| 73 80 520 | X1011583 | 10 11 583 7 | 48 | 2 |
| 73 80 520 | X1011801 | 10 11 801 3 | 38 | 1 |
| 73 80 520 | X1011801 | 10 11 801 4 | 38 | 1 |
| 73 80 566 | 9 077 279 | 90 77 279 | 6 | 1 |
| 73 80 566 | X1011550 | 10 11 550 2 | 5 | 1 |
| 73 80 566 | X1011573 | 10 11 573 7 | 46 | 1 |
| 73 80 566 | X1011577 | 10 11 577 7 | 6 | 3 |
| 73 80 566 | X1011707 | 10 11 707 2 | 11 | 1 |
| 73 80 566 | X1011722 | 10 11 722 8 | 3 | 1 |
| 73 80 566 | X1011969 | 10 11 969 8 | 50 | 2 |
| 73 80 598 | X1011583 | 10 11 583 7 | 52 | 1 |
| 73 80 653 | 9 079 480 | 90 79 480 | 11 | 2 |
| 73 80 653 | X1011582 | 10 11 582 9 | 9 | 1 |
| 73 80 653 | X1011583 | 10 11 583 7 | 44 | 4 |

| Item | Page | Assembly | Pos. | Quantity |
|---|---|---|---|---|
| 73 80 653 | X1011801 | 10 11 801 3 | 7 | 2 |
| 73 80 653 | X1011801 | 10 11 801 4 | 7 | 2 |
| 73 80 657 | X1011583 | 10 11 583 7 | 61 | 1 |
| 73 80 833 | 9 075 678 | 90 75 678 | 2 | 2 |
| 73 80 919 | X1011585 | 10 11 585 1 | 14 | 1 |
| 73 80 919 | X1011585 | 10 11 585 2 | 14 | 1 |
| 73 80 919 | X1011585 | 10 11 585 3 | 14 | 1 |
| 73 80 919 | X1011585 | 10 11 585 9 | 14 | 1 |
| 73 80 919 | X1011816 | 10 11 816 1 | 8 | 1 |
| 73 80 970 | X1011585 | 10 11 585 1 | 13 | 1 |
| 73 80 970 | X1011585 | 10 11 585 2 | 13 | 1 |
| 73 80 970 | X1011585 | 10 11 585 3 | 13 | 1 |
| 73 80 970 | X1011585 | 10 11 585 9 | 13 | 1 |
| 73 81 103 | 9 076 534 | 90 76 534 | 2 | 1 |
| 73 81 103 | X1013307 | 10 13 307 7 | 2 | 1 |
| 73 81 192 | X1011583 | 10 11 583 7 | 2211 | 1 |
| 73 81 225 | X1011583 | 10 11 583 7 | 70 | 1 |
| 73 81 225 23 | 9 078 233 | 90 78 233 | 2 | 1 |
| 73 81 225 23 | X1011573 | 10 11 573 7 | 39 | 1 |
| 73 81 226 | X1011583 | 10 11 583 7 | 8 | 1 |
| 73 81 226 | X1011801 | 10 11 801 3 | 3 | 1 |
| 73 81 226 | X1011801 | 10 11 801 4 | 3 | 1 |
| 73 81 270 | X1011585 | 10 11 585 1 | 6 | 1 |
| 73 81 270 | X1011585 | 10 11 585 2 | 6 | 1 |
| 73 81 270 | X1011585 | 10 11 585 3 | 6 | 1 |
| 73 81 270 | X1011585 | 10 11 585 9 | 6 | 1 |
| 73 81 294 | X1011998 | 10 11 998 0 | 20 | 1 |
| 73 81 302 | 9 075 541 | 90 75 541 | 10 | 1 |
| 73 81 361 | 9 073 767 | 90 73 767 | 5 | 2 |
| 73 81 361 | 9 078 249 | 90 78 249 | 2 | 2 |
| 73 81 361 | X1011583 | 10 11 583 7 | 47 | 6 |
| 73 81 363 | 9 080 294 | 90 80 294 | 4 | 2 |
| 73 81 363 | X1011793 | 10 11 793 0 | 5 | 2 |
| 73 81 415 | X1011573 | 10 11 573 7 | 33 | 1 |
| 73 81 415 | X1011583 | 10 11 583 7 | 59 | 1 |
| 73 81 448 | X1047529 | 10 47 529 1 | (1) | 1 |
| 73 81 457 | 9 079 890 | 90 79 890 | 10 | 1 |
| 73 81 566 | X1011583 | 10 11 583 7 | 54 | 1 |
| 73 81 566 | X1011801 | 10 11 801 3 | 17 | 1 |
| 73 81 566 | X1012166 | 10 12 166 7 | 2 | 2 |
| 73 81 593 | X1011583 | 10 11 583 7 | 57 | 2 |
| 73 81 593 | X1011801 | 10 11 801 3 | 11 | 2 |
| 73 81 593 | X1011801 | 10 11 801 4 | 11 | 2 |
| 73 81 628 | X1011998 | 10 11 998 0 | 24 | 1 |
| 73 81 628 | X1012024 | 10 12 024 2 | 7 | 1 |
| 73 81 629 | X1011997 | 10 11 997 9 | 3 | 4 |
| 73 81 630 | X1011766 | 10 11 766 5 | 3 | 1 |
| 73 81 630 | X1011914 | 10 11 914 1 | 7 | 2 |
| 73 81 635 | X1011998 | 10 11 998 0 | 27 | 2 |
| 73 81 638 | X1011582 | 10 11 582 9 | 10 | 2 |
| 73 81 685 | 9 074 165 | 90 74 165 | 8 | 1 |
| 73 81 685 | X1011583 | 10 11 583 7 | 2 | 2 |
| 73 81 685 | X1012223 | 10 12 223 3 | 14 | 1 |
| 73 81 771 | X1011998 | 10 11 998 0 | 17 | 3 |
| 73 81 779 | 9 079 472 | 90 79 472 | 2 | 1 |
| 73 81 779 | 9 079 480 | 90 79 480 | 10 | 2 |
| 73 81 779 | 9 080 280 | 90 80 280 | 2 | 1 |
| 73 81 779 | 9 080 345 | 90 80 345 | 3 | 2 |
| 73 81 779 | X1011583 | 10 11 583 7 | 43 | 6 |
| 73 81 779 | X1011801 | 10 11 801 3 | 6 | 7 |

| Item | Page | Assembly | Pos. | Quantity |
|---|---|---|---|---|
| 73 81 779 | X1011801 | 10 11 801 4 | 6 | 7 |
| 73 81 781 23 | 9 074 507 | 90 74 507 | 6 | 1 |
| 73 81 812 | 9 075 540 | 90 75 540 | 4 | 1 |
| 73 81 812 | X1011583 | 10 11 583 7 | 40 | 1 |
| 73 81 912 | X1011583 | 10 11 583 7 | 60 | 1 |
| 73 81 912 | X1011801 | 10 11 801 3 | 12 | 1 |
| 73 81 912 | X1011801 | 10 11 801 4 | 12 | 1 |
| 73 81 925 | X1011573 | 10 11 573 7 | 28 | 2 |
| 73 81 995 | X1011566 | 10 11 566 4 | 4 | 1 |
| 73 82 028 | 9 080 525 | 90 80 525 | (1) | 1 |
| 73 82 059 | 9 075 540 | 90 75 540 | 5 | 1 |
| 73 82 059 | X1011583 | 10 11 583 7 | 41 | 1 |
| 73 82 087 | X1011998 | 10 11 998 0 | 19 | 1 |
| 73 82 090 | 9 080 345 | 90 80 345 | 6 | 2 |
| 73 82 090 | X1011998 | 10 11 998 0 | 23 | 3 |
| 73 82 091 | X1011997 | 10 11 997 9 | 29 | 1 |
| 73 82 092 | X1012024 | 10 12 024 2 | 2 | 2 |
| 73 82 158 | 9 078 250 | 90 78 250 | 2 | 1 |
| 73 82 158 | 9 078 962 | 90 78 962 | 7 | 1 |
| 73 82 158 | X1011583 | 10 11 583 7 | 49 | 3 |
| 73 82 202 | 9 079 893 | 90 79 893 | 5 | 2 |
| 73 82 202 | X1011801 | 10 11 801 3 | 23 | 2 |
| 73 82 202 | X1011801 | 10 11 801 4 | 23 | 2 |
| 73 82 203 | X1011577 | 10 11 577 7 | 5 | 2 |
| 73 82 204 | 9 078 250 | 90 78 250 | 8 | 1 |
| 73 82 204 | 9 079 480 | 90 79 480 | 14 | 2 |
| 73 82 204 | X1011550 | 10 11 550 2 | 6 | 1 |
| 73 82 204 | X1011739 | 10 11 739 7 | 23 | 1 |
| 73 82 204 | X1011801 | 10 11 801 3 | 22 | 2 |
| 73 82 204 | X1011801 | 10 11 801 4 | 22 | 2 |
| 73 82 215 | X1011573 | 10 11 573 7 | 16 | 1 |
| 73 82 216 | X1011573 | 10 11 573 7 | 17 | 3 |
| 73 82 216 | X1011793 | 10 11 793 0 | 13 | 1 |
| 74 03 054 08 | 2 540 | 91 45 984 08 | 3 | 1 |
| 74 03 569 | 1 970 | 96 71 367 08 | 701 | 1 |
| 74 03 569 | 2 950 | 91 49 515 08 | 606 | 1 |
| 74 03 569 | 2 955 | 91 49 516 08 | 607 | 2 |
| 74 03 569 | 2 970 | 91 55 482 08 | 636 | 8 |
| 74 03 569 | 2 971 | 91 50 610 08 | 613 | 2 |
| 74 03 569 | 2 975 152 | 91 05 737 08 | 606 | 8 |
| 74 05 494 | 1 970 | 96 71 367 08 | (1) | 1 |
| 74 05 495 | 1 970 | 96 71 367 08 | (1) | 1 |
| 74 07 098 | 1 970 | 96 71 367 08 | 760 | 1 |
| 74 07 098 | 2 970 | 91 55 482 08 | 619 | 4 |
| 74 07 108 | 1 970 | 96 71 367 08 | 746 | 1 |
| 74 07 108 | 2 970 | 91 55 482 08 | 734 | 1 |
| 74 07 119 | 1 970 | 96 71 367 08 | 747 | 1 |
| 74 07 120 | 2 970 | 91 55 482 08 | 637 | 1 |
| 74 09 922 | 1 970 | 96 71 367 08 | 754 | 1 |
| 74 13 103 | 3 101 | 91 60 312 08 | 75 | 4 |
| 74 40 102 08 | 3 330 | 91 57 885 08 | 16 | 1 |
| 74 51 391 01 | 9 330 748 | 93 30 748 01 | 66 | 1 |
| 74 51 446 08 | X1034357 | 10 34 357 4 | 6 | 2 |
| 74 51 949 08 | X1028517 | 10 28 517 1 | 37 | 1 |
| 74 59 025 08 | 3 105 002 | 92 73 100 08 | 2 | 1 |
| 74 59 025 08 | 3 106 001 | 96 42 835 08 | 2 | 1 |
| 74 59 025 08 | 3 501 008 | 92 73 117 08 | 2 | 1 |
| 74 59 027 08 | 4 099 001 | 92 40 739 08 | 2 | 1 |
| 74 62 014 08 | 9 330 748 | 93 30 748 01 | 12 | 1 |
| 74 62 219 08 | 5 701 090 | 57 01 090 08 | 11 | 1 |

| Item | Page | Assembly | Pos. | Quantity |
|---|---|---|---|---|
| 74 66 049 08 | 4 027 | 91 42 310 08 | 7 | 1 |
| 74 66 071 08 | 4 003 006 | 91 04 457 08 | 37 | 1 |
| 74 66 919 08 | 2 522 | 91 10 037 08 | 15 | 4 |
| 74 70 002 08 | X1087223 | 10 87 223 8 | 22 | 2 |
| 74 70 038 01 | 9 387 598 | 93 87 598 01 | 28 | 1 |
| 74 70 059 01 | 9 444 410 | 94 44 410 03 | 3 | 96 |
| 74 70 061 01 | 9 387 598 | 93 87 598 01 | 17 | 114 |
| 74 70 061 01 | 9 686 071 | 96 86 071 01 | 17 | 114 |
| 74 71 224 08 | 2 210 | 91 81 614 08 | 110 | 8 |
| 74 72 584 01 | 9 330 748 | 93 30 748 01 | 4 | 1 |
| 74 72 725 01 | 9 387 596 | 93 87 596 01 | 19 | 1 |
| 74 74 040 01 | 9 330 748 | 93 30 748 01 | 71 | 1 |
| 74 90 010 08 | 3 501 | 91 05 788 08 | 60 | 2 |
| 74 90 039 08 | 2 522 | 91 10 037 08 | 20 | 2 |
| 74 90 092 08 | 3 104 000 | 91 62 545 08 | 35 | 1 |
| 74 90 093 08 | 3 101 | 91 60 312 08 | 35 | 1 |
| 74 90 093 08 | 3 102 000 | 91 62 543 08 | 35 | 1 |
| 74 90 107 08 | 3 105 000 | 91 62 546 08 | 35 | 1 |
| 74 90 114 08 | 3 103 000 | 91 62 544 08 | 35 | 1 |
| 74 90 137 14 | 1 100 212 | 79 02 561 14 | 1 | 1 |
| 74 90 145 08 | 2 440 022 | 96 42 336 08 | 4 | 1 |
| 74 90 145 08 | 2 450 | 91 53 926 08 | 3 | 1 |
| 74 90 153 14 | 1 100 214 | 74 90 137 14 | 3 | 1 |
| 74 90 156 14 | 1 100 211 | 74 90 653 14 | 40 | 1 |
| 74 90 573 14 | 1 100 211 | 74 90 653 14 | 20 | 1 |
| 74 90 636 14 | 1 100 214 | 74 90 137 14 | 1 | 1 |
| 74 90 637 14 | 1 100 214 | 74 90 137 14 | 2 | 2 |
| 74 90 652 14 | 1 100 205 | 96 51 633 08 | 6 | 1 |
| 74 90 652 14 | 1 100 210 | 96 51 634 08 | 6 | 1 |
| 74 90 653 14 | 1 100 205 | 96 51 633 08 | 11 | 2 |
| 74 90 653 14 | 1 100 210 | 96 51 634 08 | 11 | 2 |
| 74 90 654 14 | 1 100 212 | 79 02 561 14 | 3 | 1 |
| 74 90 685 14 | 1 100 214 | 74 90 137 14 | 4 | 2 |
| 76 10 186 03 | 9 444 410 | 94 44 410 03 | 61 | 1 |
| 76 10 217 03 | 9 387 598 | 93 87 598 01 | 76 | 1 |
| 76 10 217 03 | 9 686 071 | 96 86 071 01 | 76 | 1 |
| 76 10 225 03 | 9 275 212 | 92 75 212 01 | 4 | 1 |
| 76 10 225 03 | 9 275 543 | 92 75 543 01 | 6 | 1 |
| 76 10 225 03 | 9 393 684 | 93 93 684 01 | 14 | 1 |
| 76 10 244 03 | 9 444 410 | 94 44 410 03 | 58 | 1 |
| 76 10 378 03 | 9 444 410 | 94 44 410 03 | 57 | 1 |
| 76 10 617 03 | 9 444 410 | 94 44 410 03 | 6 | 1 |
| 76 10 819 03 | 9 444 410 | 94 44 410 03 | 8 | 2 |
| 76 15 379 | 2 970 | 91 55 482 08 | 607 | 2 |
| 76 17 268 | 1 970 | 96 71 367 08 | 743 | 4 |
| 76 17 268 | 2 970 | 91 55 482 08 | 715 | 3 |
| 76 17 268 | 2 975 038 | 91 26 492 08 | 603 | 3 |
| 76 17 354 | 1 970 | 96 71 367 08 | 744 | 2 |
| 76 17 354 | 2 970 | 91 55 482 08 | 709 | 4 |
| 76 17 354 | 2 975 038 | 91 26 492 08 | 607 | 1 |
| 76 17 460 | 1 970 | 96 71 367 08 | 745 | 3 |
| 76 17 460 | 2 970 | 91 55 482 08 | 616 | 6 |
| 76 17 461 | 1 970 | 96 71 367 08 | 740 | 3 |
| 76 17 461 | 2 970 | 91 55 482 08 | 711 | 1 |
| 76 22 478 | 5 531 882 | 55 31 882 08 | 12 | 1 |
| 76 24 428 | 2 533 003 | 96 28 388 08 | 18 | 1 |
| 77 26 177 08 | 2 533 001 | 96 41 568 08 | 19 | 1 |
| 77 26 246 08 | 1 881 000 | 91 62 835 08 | 1 | 1 |
| 77 26 373 08 | 1 880 | 91 62 974 08 | 17 | 1 |
| 77 26 442 08 | 2 533 001 | 96 41 568 08 | 20 | 1 |

| Item | Page | Assembly | Pos. | Quantity |
|---|---|---|---|---|
| 77 26 448 08 | 2 932 042 | 96 68 587 08 | 46 | 1 |
| 77 26 487 08 | 3 930 718 | 96 56 248 08 | 4 | 1 |
| 77 32 071 08 | 2 520 000 | 91 49 872 08 | 21 | 1 |
| 77 33 151 08 | 1 790 | 91 78 930 08 | 1 | 3 |
| 77 33 265 08 | 3 750 | 91 75 084 08 | 3 | 1 |
| 77 34 045 08 | 1 792 004 | 92 51 415 08 | 6 | 1.6 |
| 77 34 045 08 | 3 501 | 91 05 788 08 | 63 | 1.2 |
| 77 39 088 08 | 2 792 | 91 52 291 08 | 5 | 1 |
| 77 39 133 08 | 2 792 | 91 52 291 08 | 6 | 1 |
| 77 39 247 08 | 2 792 | 91 52 291 08 | 13 | 1 |
| 77 39 303 08 | 1 790 | 91 78 930 08 | 3 | 4 |
| 77 39 335 08 | 1 792 004 | 92 51 415 08 | 3 | 1 |
| 77 39 335 08 | 3 106 000 | 91 60 313 08 | 68 | 1 |
| 77 39 335 08 | 3 511 006 | 96 45 029 08 | 23 | 1 |
| 77 39 413 08 | | LTR 1100 -0 | 123 | 2 |
| 77 39 522 08 | 4 099 001 | 92 40 739 08 | 1 | 1 |
| 77 41 079 08 | 2 502 | 91 01 533 08 | 1 | 1 |
| 77 41 193 08 | 2 502 | 91 01 533 08 | 17 | 1 |
| 77 42 064 08 | 2 210 | 91 81 614 08 | 182 | 4 |
| 77 42 064 08 | 2 540 | 91 45 984 08 | 19 | 1 |
| 77 42 080 08 | 2 210 | 91 81 614 08 | 180 | 2 |
| 77 42 080 08 | 2 502 | 91 01 533 08 | 32 | 4 |
| 77 42 085 08 | 2 200 | 91 81 095 08 | 181 | 2 |
| 77 42 097 08 | 2 831 | 91 47 871 08 | 5 | 1 |
| 77 42 105 08 | 2 950 | 91 49 515 08 | 10 | 2 |
| 77 42 113 08 | 2 950 | 91 49 515 08 | 7 | 1 |
| 77 42 143 08 | 2 210 | 91 81 614 08 | 181 | 2 |
| 77 42 150 08 | X1011766 | 10 11 766 5 | 4 | 2 |
| 77 42 150 08 | X1011914 | 10 11 914 1 | 12 | 6 |
| 77 42 150 08 | X1011989 | 10 11 989 7 | 25 | 2 |
| 77 42 176 08 | 2 681 | 91 28 102 08 | 110 | 4 |
| 77 42 238 08 | 2 200 | 91 81 095 08 | 180 | 1 |
| 77 42 238 08 | 2 210 | 91 81 614 08 | 185 | 1 |
| 77 42 252 08 | 2 680 | 91 53 225 08 | 112 | 4 |
| 77 42 365 08 | 2 997 | 91 51 089 08 | 345 | 0.76 |
| 77 42 367 08 | 2 997 | 91 51 089 08 | 304 | 0.37 |
| 77 42 367 08 | 2 997 | 91 51 089 08 | 346 | 0.76 |
| 77 42 842 08 | 2 681 | 91 28 102 08 | 111 | 2 |
| 77 43 011 01 | 9 387 070 | 93 87 070 01 | 18 | 1 |
| 77 43 011 01 | 9 685 586 | 96 85 586 01 | 18 | 1 |
| 77 43 201 08 | 2 340 004 | 96 43 780 08 | 14 | 1 |
| 77 43 242 | 3 102 000 | 91 62 543 08 | 16 | 2 |
| 77 43 242 | 3 103 000 | 91 62 544 08 | 16 | 2 |
| 77 43 242 | 3 104 000 | 91 62 545 08 | 16 | 2 |
| 77 43 242 | 3 105 000 | 91 62 546 08 | 16 | 2 |
| 77 43 242 | 3 106 000 | 91 60 313 08 | 16 | 2 |
| 77 43 517 14 | 1 100 212 | 79 02 561 14 | 6 | 1 |
| 77 43 726 08 | 2 440 012 | 92 14 441 08 | 1 | 1 |
| 77 43 727 08 | 2 440 012 | 92 14 441 08 | 2 | 2 |
| 77 43 728 08 | 2 711 | 91 53 002 08 | 13 | 1 |
| 77 43 734 08 | 2 711 | 91 53 002 08 | 10 | 4 |
| 77 43 738 08 | X1100291 | 11 00 291 4 | 2 | 1 |
| 77 43 742 08 | 2 711 | 91 53 002 08 | 11 | 1 |
| 77 43 751 08 | 2 711 | 91 53 002 08 | 12 | 2 |
| 77 43 781 08 | 2 711 | 91 53 002 08 | (1) | 1 |
| 77 43 866 08 | 2 440 012 | 92 14 441 08 | 4 | 1 |
| 77 43 866 08 | 2 711 | 91 53 002 08 | 9 | 1 |
| 77 43 867 08 | 2 711 | 91 53 002 08 | 7 | 7 |
| 77 43 874 08 | 2 711 | 91 53 002 08 | 8 | 1 |
| 77 43 875 08 | X1032706 | 10 32 706 5 | 11 | 1 |

| Item | Page | Assembly | Pos. | Quantity |
|---|---|---|---|---|
| 77 90 183 01 | 9 444 410 | 94 44 410 03 | 91 | 1 |
| 77 90 201 08 | 1 830 102 | 92 26 483 08 | 2 | 6 |
| 77 90 205 08 | 2 510 200 | 96 41 258 08 | 11 | 2 |
| 77 90 332 08 | 2 520 001 | 92 48 796 08 | 17 | 1 |
| 78 65 114 14 | 1 300 006 | 91 89 127 14 | 4 | 248 |
| 78 65 203 14 | 1 300 007 | 79 02 584 14 | 4 | 1 |
| 78 65 204 14 | 1 300 007 | 79 02 584 14 | 5 | 60 |
| 78 65 205 14 | 1 300 007 | 79 02 584 14 | 3 | 60 |
| 78 65 206 14 | 1 300 007 | 79 02 584 14 | 7 | 2 |
| 78 65 252 14 | 1 300 007 | 79 02 584 14 | 6 | 1 |
| 78 65 266 14 | 1 300 007 | 79 02 584 14 | 1 | 62 |
| 78 65 267 14 | 1 300 007 | 79 02 584 14 | 2 | 62 |
| 78 65 275 14 | 1 300 006 | 91 89 127 14 | 3 | 62 |
| 78 65 281 14 | 1 300 007 | 79 02 584 14 | 99 | 1 |
| 78 90 003 08 | 1 750 002 | 92 86 201 08 | 5 | 1 |
| 78 90 119 08 | 2 340 004 | 96 43 780 08 | 9 | 2 |
| 78 90 156 08 | 2 270 001 | 96 37 923 08 | 2 | 1 |
| 79 00 017 08 | 1 750 001 | 92 85 698 08 | 10 | 1 |
| 79 00 022 08 | 1 750 001 | 92 85 698 08 | 12 | 1 |
| 79 00 024 08 | 1 750 001 | 92 85 698 08 | 13 | 1 |
| 79 00 025 08 | 1 750 001 | 92 85 698 08 | 16 | 1 |
| 79 00 026 08 | 1 750 001 | 92 85 698 08 | 17 | 1 |
| 79 00 028 08 | 1 750 001 | 92 85 698 08 | 18 | 1 |
| 79 00 029 08 | 1 750 001 | 92 85 698 08 | 19 | 1 |
| 79 00 033 08 | 1 750 001 | 92 85 698 08 | 11 | 1 |
| 79 00 036 08 | 1 750 001 | 92 85 698 08 | 15 | 1 |
| 79 00 039 08 | 1 750 001 | 92 85 698 08 | 20 | 1 |
| 79 00 046 08 | 1 750 001 | 92 85 698 08 | 22 | 1 |
| 79 00 200 08 | 1 750 001 | 92 85 698 08 | 31 | 1 |
| 79 00 201 08 | 1 750 001 | 92 85 698 08 | 32 | 1 |
| 79 00 210 08 | 1 750 001 | 92 85 698 08 | 33 | 1 |
| 79 00 212 08 | 1 750 001 | 92 85 698 08 | 34 | 1 |
| 79 00 213 08 | 1 750 001 | 92 85 698 08 | 35 | 1 |
| 79 00 216 08 | 1 750 001 | 92 85 698 08 | 30 | 1 |
| 79 00 262 08 | 1 750 001 | 92 85 698 08 | 63 | 1 |
| 79 00 263 08 | 1 750 001 | 92 85 698 08 | 64 | 1 |
| 79 00 264 08 | 1 750 001 | 92 85 698 08 | 65 | 1 |
| 79 00 285 08 | 1 750 001 | 92 85 698 08 | 66 | 1 |
| 79 00 300 08 | 1 750 001 | 92 85 698 08 | 60 | 1 |
| 79 00 311 08 | 1 750 001 | 92 85 698 08 | 61 | 1 |
| 79 00 315 08 | 1 750 001 | 92 85 698 08 | 62 | 1 |
| 79 00 320 08 | 1 750 001 | 92 85 698 08 | 50 | 1 |
| 79 00 323 08 | 1 750 001 | 92 85 698 08 | 51 | 1 |
| 79 00 325 08 | 1 750 001 | 92 85 698 08 | 52 | 1 |
| 79 00 332 08 | 1 750 001 | 92 85 698 08 | 53 | 1 |
| 79 00 388 08 | 3 501 | 91 05 788 08 | 84 | 1 |
| 79 00 391 08 | 3 501 | 91 05 788 08 | 86 | 1 |
| 79 00 420 08 | 1 750 001 | 92 85 698 08 | 70 | 1 |
| 79 00 422 14 | 1 750 | 91 48 606 08 | 7 | 1 |
| 79 00 427 08 | 1 750 | 91 48 606 08 | 9 | 1 |
| 79 00 429 08 | 1 750 001 | 92 85 698 08 | 71 | 1 |
| 79 00 429 14 | 1 750 | 91 48 606 08 | 8 | 1 |
| 79 00 454 08 | 1 750 001 | 92 85 698 08 | 1 | 1 |
| 79 00 656 08 | 1 750 | 91 48 606 08 | 4 | 1 |
| 79 02 561 14 | 1 100 205 | 96 51 633 08 | 2 | 1 |
| 79 02 561 14 | 1 100 210 | 96 51 634 08 | 2 | 1 |
| 79 02 584 14 | 1 300 006 | 91 89 127 14 | 2 | 1 |
| 79 02 722 14 | 1 100 213 | 74 90 654 14 | 1 | 1 |
| 79 02 723 14 | 1 100 213 | 74 90 654 14 | 2 | 1 |
| 79 02 724 14 | 1 100 213 | 74 90 654 14 | 3 | 1 |

| Item | Page | Assembly | Pos. | Quantity |
|---|---|---|---|---|
| 79 02 725 14 | 1 100 213 | 74 90 654 14 | 4 | 1 |
| 79 03 360 14 | 1 100 212 | 79 02 561 14 | 2 | 1 |
| 79 05 339 08 | 1 750 | 91 48 606 08 | 5 | 2 |
| 80 21 020 08 | 2 510 018 | 96 44 046 08 | 150 | 13.5 |
| 80 21 020 08 | 2 510 072 | 96 44 614 08 | 30 | 11.13 |
| 80 21 020 08 | 2 510 108 | 96 44 555 08 | 50 | 12 |
| 81 12 013 14 | 9 075 678 | 90 75 678 | 108 | 1 |
| 81 12 013 14 | X1011739 | 10 11 739 7 | 108 | 1 |
| 81 12 017 08 | 9 073 795 | 90 73 795 | 100 | 1 |
| 81 12 029 08 | 2 520 000 | 91 49 872 08 | 95 | 1 |
| 81 12 031 08 | 2 520 000 | 91 49 872 08 | 97 | 1 |
| 81 12 033 08 | 2 520 000 | 91 49 872 08 | 94 | 1 |
| 81 12 035 08 | 2 520 000 | 91 49 872 08 | 96 | 1 |
| 81 12 051 08 | 2 520 000 | 91 49 872 08 | 85 | 1 |
| 81 12 057 08 | 9 072 593 | 90 72 593 | 109 | 1 |
| 81 12 057 08 | 9 075 541 | 90 75 541 | 109 | 1 |
| 81 12 057 08 | 9 079 823 | 90 79 823 | 109 | 1 |
| 81 12 057 08 | 9 080 525 | 90 80 525 | 109 | 1 |
| 81 12 057 08 | X1011573 | 10 11 573 7 | 109 | 1 |
| 81 12 057 08 | X1011599 | 10 11 599 3 | 109 | 1 |
| 81 12 073 01 | X1011577 | 10 11 577 7 | 104 | 1 |
| 81 12 073 01 | X1012038 | 10 12 038 3 | 104 | 1 |
| 81 12 080 01 | 9 074 165 | 90 74 165 | 109 | 1 |
| 81 12 082 01 | 9 074 165 | 90 74 165 | 104 | 1 |
| 86 27 609 23 | 9 075 678 | 90 75 678 | 112 | 1 |
| 86 55 016 | 9 075 368 | 90 75 368 | 105 | 1 |
| 86 55 016 | X1011997 | 10 11 997 6 | 109 | 1 |
| 86 55 018 | 9 078 250 | 90 78 250 | 110 | 1 |
| 86 55 018 | 9 079 472 | 90 79 472 | 110 | 1 |
| 86 55 018 | 9 079 480 | 90 79 480 | 110 | 1 |
| 87 00 028 08 | 3 930 492 | 96 20 966 08 | 289 | 0.1 |
| 87 00 028 08 | 3 930 523 | 96 43 943 08 | 289 | 0.1 |
| 87 00 028 08 | 3 930 718 | 96 56 248 08 | 265 | 0.1 |
| 87 00 030 08 | 2 520 000 | 91 49 872 08 | 84 | 2.5 |
| 87 00 034 08 | 2 520 000 | 91 49 872 08 | 160 | 1 |
| 87 21 019 08 | 1 750 002 | 92 86 201 08 | 6 | 1 |
| 88 51 322 08 | 1 750 001 | 92 85 698 08 | 21 | 1 |
| 88 51 661 08 | 1 750 001 | 92 85 698 08 | 29 | 1 |
| 88 51 822 08 | 1 750 | 91 48 606 08 | 12 | 1 |
| 88 51 828 08 | 1 750 | 91 48 606 08 | 11 | 1 |
| 88 52 515 08 | 1 750 001 | 92 85 698 08 | 2 | 1 |
| 88 52 515 08 | 3 750 008 | 91 75 085 08 | 3 | 2 |
| 88 56 021 14 | 1 750 | 91 48 606 08 | 6 | 1 |
| 90 01 665 2 | 9 330 748 | 93 30 748 01 | (999) | 1 |
| 90 20 199 1 | 9 444 410 | 94 44 410 03 | 30 | 1 |
| 90 72 112 | X1015211 | 10 15 211 6 | 10 | 1 |
| 90 72 593 | 9 074 165 | 90 74 165 | 2 | 1 |
| 90 72 633 | 9 072 593 | 90 72 593 | 3 | 1 |
| 90 72 633 | 9 075 541 | 90 75 541 | 7 | 1 |
| 90 72 727 | 9 074 165 | 90 74 165 | 4 | 1 |
| 90 72 832 | 9 074 165 | 90 74 165 | 3 | 1 |
| 90 72 833 | 9 074 165 | 90 74 165 | 5 | 1 |
| 90 72 834 | 9 078 832 | 90 78 832 | 3 | 1 |
| 90 72 904 | 9 072 906 | 90 72 906 | 1 | 1 |
| 90 72 906 | X1015207 | 10 15 207 7 | 331 | 1 |
| 90 72 907 | 9 072 906 | 90 72 906 | 2 | 1 |
| 90 72 908 | 9 072 906 | 90 72 906 | 3 | 1 |
| 90 73 083 | X1012193 | 10 12 193 2 | 40 | 4 |
| 90 73 098 | X1012223 | 10 12 223 3 | 3 | 1 |
| 90 73 100 | X1012223 | 10 12 223 3 | 13 | 1 |

| Item | Page | Assembly | Pos. | Quantity |
|---|---|---|---|---|
| 90 73 163 | X1012223 | 10 12 223 3 | 8 | 1 |
| 90 73 188 | X1012223 | 10 12 223 3 | 6 | 2 |
| 90 73 189 | X1011573 | 10 11 573 7 | 14 | 2 |
| 90 73 189 | X1011793 | 10 11 793 0 | 12 | 1 |
| 90 73 190 | X1011573 | 10 11 573 7 | 15 | 4 |
| 90 73 190 | X1011793 | 10 11 793 0 | 14 | 1 |
| 90 73 343 | 9 080 294 | 90 80 294 | 2 | 1 |
| 90 73 389 | 9 072 112 | 90 72 112 | 78 | 2 |
| 90 73 393 | 9 072 112 | 90 72 112 | 77 | 2 |
| 90 73 484 | 9 072 112 | 90 72 112 | 79 | 1 |
| 90 73 528 | 9 072 112 | 90 72 112 | 93 | 1 |
| 90 73 678 | 9 073 795 | 90 73 795 | 5 | 1 |
| 90 73 725 | X1012038 | 10 12 038 3 | 6 | 2 |
| 90 73 726 | X1012038 | 10 12 038 3 | 7 | 2 |
| 90 73 734 | X1011693 | 10 11 693 9 | 1 | 5 |
| 90 73 745 | X1011577 | 10 11 577 6 | 10 | 5 |
| 90 73 767 | X1012193 | 10 12 193 2 | 210 | 1 |
| 90 73 795 | X1012193 | 10 12 193 2 | 15 | 4 |
| 90 73 796 | 9 073 795 | 90 73 795 | 1 | 1 |
| 90 73 915 | 9 072 112 | 90 72 112 | 95 | 1 |
| 90 73 917 | 9 072 112 | 90 72 112 | 84 | 2 |
| 90 73 918 | 9 072 112 | 90 72 112 | 81 | 1 |
| 90 74 165 | X1015207 | 10 15 207 7 | 90 | 1 |
| 90 74 450 | X1012036 | 10 12 036 5 | 2 | 2 |
| 90 74 451 | X1012036 | 10 12 036 5 | 4 | 2 |
| 90 74 480 | X1012036 | 10 12 036 5 | 7 | 4 |
| 90 74 480 | X1014155 | 10 14 155 5 | 7 | 4 |
| 90 74 481 | X1012036 | 10 12 036 5 | 9 | 4 |
| 90 74 481 | X1014155 | 10 14 155 5 | 9 | 4 |
| 90 74 501 | X1011675 | 10 11 675 9 | 3 | 6 |
| 90 74 505 | 9 079 861 | 90 79 861 | 2 | 1 |
| 90 74 507 | 9 074 505 | 90 74 505 | 3 | 2 |
| 90 74 628 | X1011683 | 10 11 683 9 | 2 | 1 |
| 90 74 677 | 9 075 395 | 90 75 395 | 1 | 1 |
| 90 74 716 | 9 072 112 | 90 72 112 | 4 | 2 |
| 90 74 798 | 9 079 480 | 90 79 480 | 4 | 2 |
| 90 74 798 | X1011577 | 10 11 577 7 | 9 | 8 |
| 90 74 977 | X1011810 | 10 11 810 1 | 4 | 8 |
| 90 74 997 | 9 072 112 | 90 72 112 | (998) | 1 |
| 90 75 133 | X1012193 | 10 12 193 2 | 52 | 1 |
| 90 75 361 | X1011795 | 10 11 795 1 | 1 | 1 |
| 90 75 368 | X1012193 | 10 12 193 2 | 150 | 1 |
| 90 75 372 | X1011659 | 10 11 659 1 | 3 | 1 |
| 90 75 395 | X1011585 | 10 11 585 4 | 191 | 1 |
| 90 75 395 | X1011709 | 10 11 709 3 | 191 | 1 |
| 90 75 395 | X1012193 | 10 12 193 2 | 191 | 4 |
| 90 75 483 | X1011914 | 10 11 914 1 | 1 | 1 |
| 90 75 540 | X1012193 | 10 12 193 2 | 140 | 1 |
| 90 75 541 | 9 075 540 | 90 75 540 | 1 | 1 |
| 90 75 606 | X1011693 | 10 11 693 9 | 2 | 5 |
| 90 75 678 | X1015207 | 10 15 207 7 | 380 | 1 |
| 90 75 763 | 9 075 395 | 90 75 395 | 2 | 1 |
| 90 76 457 | X1012193 | 10 12 193 2 | 51 | 1 |
| 90 76 459 | X1012193 | 10 12 193 2 | 60 | 4 |
| 90 76 530 | 2 210 | 91 81 614 08 | 451 | 1 |
| 90 76 530 | X1011969 | 10 11 969 8 | 2 | 1 |
| 90 76 531 | X1011969 | 10 11 969 8 | 10 | 1 |
| 90 76 534 | X1011969 | 10 11 969 8 | 21 | 1 |
| 90 76 550 | X1011969 | 10 11 969 7 | 1 | 1 |
| 90 76 986 | 9 080 525 | 90 80 525 | (2) | 2 |

| Item | Page | Assembly | Pos. | Quantity |
|---|---|---|---|---|
| 90 77 131 | 9 074 165 | 90 74 165 | 1 | 2 |
| 90 77 172 | X1011795 | 10 11 795 1 | 3 | 1 |
| 90 77 237 | 9 077 238 | 90 77 238 | 1 | 1 |
| 90 77 238 | X1015207 | 10 15 207 7 | 530 | 1 |
| 90 77 279 | X1015207 | 10 15 207 7 | 221 | 1 |
| 90 77 329 | X1011583 | 10 11 583 7 | 17 | 3 |
| 90 77 709 | 9 080 525 | 90 80 525 | (3) | 1 |
| 90 77 777 | 9 147 512 | 91 47 512 | 1 | 1 |
| 90 78 233 | X1011722 | 10 11 722 8 | 1 | 1 |
| 90 78 249 | X1015207 | 10 15 207 7 | 650 | 1 |
| 90 78 250 | X1015207 | 10 15 207 7 | 652 | 1 |
| 90 78 314 | X1015207 | 10 15 207 7 | 260 | 1 |
| 90 78 680 | X1012193 | 10 12 193 2 | 211 | 1 |
| 90 78 681 | 9 078 680 | 90 78 680 | 1 | 1 |
| 90 78 684 | X1011573 | 10 11 573 7 | 19 | 1 |
| 90 78 685 | X1011573 | 10 11 573 7 | 42 | 1 |
| 90 78 832 | X1012193 | 10 12 193 2 | 50 | 1 |
| 90 78 849 | 9 079 823 | 90 79 823 | 1 | 1 |
| 90 78 881 | 9 078 250 | 90 78 250 | 1 | 1 |
| 90 78 935 | X1011569 | 10 11 569 6 | 1 | 1 |
| 90 78 962 | X1011997 | 10 11 997 6 | 1 | 1 |
| 90 78 963 | 9 078 962 | 90 78 962 | 1 | 1 |
| 90 78 984 | X1011997 | 10 11 997 6 | 10 | 1 |
| 90 79 001 | 9 078 962 | 90 78 962 | 3 | 1 |
| 90 79 064 | 9 076 534 | 90 76 534 | 30 | 1 |
| 90 79 078 | X1012038 | 10 12 038 3 | 9 | 1 |
| 90 79 080 | X1011550 | 10 11 550 2 | 1 | 1 |
| 90 79 091 | 9 079 092 | 90 79 092 | 1 | 1 |
| 90 79 092 | X1012193 | 10 12 193 2 | 381 | 1 |
| 90 79 124 | X1011801 | 10 11 801 4 | 14 | 3 |
| 90 79 130 | X1011583 | 10 11 583 7 | 15 | 1 |
| 90 79 130 | X1011912 | 10 11 912 8 | 2 | 1 |
| 90 79 131 | 9 079 870 | 90 79 870 | 3 | 2 |
| 90 79 468 | X1015207 | 10 15 207 7 | 481 | 1 |
| 90 79 471 | 9 079 472 | 90 79 472 | 1 | 1 |
| 90 79 472 | X1015207 | 10 15 207 7 | 382 | 1 |
| 90 79 480 | X1012193 | 10 12 193 2 | 12 | 1 |
| 90 79 532 | X1011888 | 10 11 888 4 | 2 | 1 |
| 90 79 560 | X1015207 | 10 15 207 7 | 441 | 1 |
| 90 79 561 | 9 079 560 | 90 79 560 | 1 | 1 |
| 90 79 581 | X1011816 | 10 11 816 1 | 4 | 1 |
| 90 79 582 | X1011816 | 10 11 816 1 | 1 | 1 |
| 90 79 587 | X1011864 | 10 11 864 6 | 2 | 1 |
| 90 79 603 | X1011583 | 10 11 583 7 | 140 | 1 |
| 90 79 603 | X1011914 | 10 11 914 1 | 18 | 1 |
| 90 79 603 | X1012024 | 10 12 024 2 | 11 | 1 |
| 90 79 608 | X1011801 | 10 11 801 4 | 53 | 2 |
| 90 79 823 | X1015207 | 10 15 207 7 | 480 | 1 |
| 90 79 861 | X1015207 | 10 15 207 7 | 81 | 4 |
| 90 79 870 | X1012193 | 10 12 193 2 | 110 | 4 |
| 90 79 890 | X1015207 | 10 15 207 7 | 386 | 1 |
| 90 79 893 | X1015207 | 10 15 207 7 | 630 | 1 |
| 90 80 038 | X1011998 | 10 11 998 0 | 9 | 1 |
| 90 80 051 | X1011816 | 10 11 816 1 | 6 | 1 |
| 90 80 084 | 9 073 083 | 90 73 083 | 1 | 1 |
| 90 80 279 | 9 075 678 | 90 75 678 | 4 | 1 |
| 90 80 279 | X1011583 | 10 11 583 7 | 11 | 1 |
| 90 80 279 | X1011801 | 10 11 801 3 | 4 | 1 |
| 90 80 279 | X1011801 | 10 11 801 4 | 4 | 1 |
| 90 80 280 | X1011583 | 10 11 583 7 | 12 | 1 |
| 90 80 280 | X1011801 | 10 11 801 3 | 5 | 1 |
| 90 80 280 | X1011801 | 10 11 801 4 | 5 | 1 |
| 90 80 280 | X1015207 | 10 15 207 7 | 384 | 1 |
| 90 80 294 | X1015207 | 10 15 207 7 | 330 | 1 |
| 90 80 310 | X1011793 | 10 11 793 0 | 2 | 1 |
| 90 80 344 | 9 080 345 | 90 80 345 | 1 | 1 |
| 90 80 345 | X1012193 | 10 12 193 2 | 370 | 1 |
| 90 80 360 | X1011614 | 10 11 614 6 | 8 | 1 |
| 90 80 410 | X1011709 | 10 11 709 3 | 215 | 1 |
| 90 80 410 | X1012193 | 10 12 193 2 | 215 | 4 |
| 90 80 466 | 9 079 092 | 90 79 092 | 3 | 3 |
| 90 80 505 | 9 080 591 | 90 80 591 | 1 | 1 |
| 90 80 508 | 9 080 525 | 90 80 525 | (4) | 1 |
| 90 80 519 | 9 080 525 | 90 80 525 | 6 | 1 |
| 90 80 525 | 2 831 | 91 47 871 08 | 1 | 1 |
| 90 80 526 | 9 080 525 | 90 80 525 | 4 | 1 |
| 90 80 591 | X1015207 | 10 15 207 7 | 53 | 1 |
| 90 80 911 | 9 078 314 | 90 78 314 | 4 | 1 |
| 91 00 655 08 | 2 932 042 | 96 68 587 08 | 51 | 1 |
| 91 00 656 08 | 2 932 042 | 96 68 587 08 | 52 | 1 |
| 91 00 659 08 | 2 932 042 | 96 68 587 08 | 53 | 1 |
| 91 01 520 08 | 2 533 003 | 96 28 388 08 | 5 | 1 |
| 91 01 533 08 | | LTR 1100 -0 | 131 | 1 |
| 91 03 958 08 | 2 932 042 | 96 68 587 08 | 50 | 1 |
| 91 04 457 08 | | LTR 1100 -0 | 312 | 1 |
| 91 05 737 08 | | LTR 1100 -0 | 217 | 1 |
| 91 05 776 08 | | LTR 1100 -0 | 351 | 1 |
| 91 05 788 08 | 3 500 020 | 91 55 133 08 | 1 | 1 |
| 91 10 037 08 | 2 520 000 | 91 49 872 08 | 2 | 1 |
| 91 11 097 08 | 2 984 | 91 52 906 08 | 20 | 2 |
| 91 13 525 08 | | LTR 1100 -0 | 355 | 1 |
| 91 15 191 08 | 2 440 022 | 96 42 336 08 | 100 | 1 |
| 91 23 538 08 | 2 932 042 | 96 68 587 08 | 43 | 1 |
| 91 26 492 08 | | LTR 1100 -0 | 229 | 1 |
| 91 27 889 08 | 2 450 | 91 53 926 08 | 10 | 1 |
| 91 27 894 08 | 2 540 | 91 45 984 08 | 4 | 1 |
| 91 28 102 08 | | LTR 1100 -0 | 165 | 1 |
| 91 32 281 | X1011577 | 10 11 577 6 | 11 | 2 |
| 91 32 577 | X1011919 | 10 11 919 7 | 2 | 8 |
| 91 32 577 | X1011997 | 10 11 997 9 | 68 | 3 |
| 91 32 850 08 | 2 530 | 91 34 053 08 | 4 | 1 |
| 91 32 936 08 | | LTR 1100 -0 | 119 | 1 |
| 91 33 637 | X1011795 | 10 11 795 1 | 11 | 1 |
| 91 34 053 08 | | LTR 1100 -0 | 139 | 1 |
| 91 40 351 | X1011766 | 10 11 766 5 | 5 | 1 |
| 91 40 351 | X1011914 | 10 11 914 1 | 8 | 1 |
| 91 40 351 | X1011989 | 10 11 989 7 | 26 | 1 |
| 91 42 310 08 | | LTR 1100 -0 | 310 | 1 |
| 91 43 393 08 | 2 920 593 | 96 53 714 08 | 20 | 1 |
| 91 43 948 08 | 2 932 042 | 96 68 587 08 | 41 | 2 |
| 91 44 006 08 | 2 932 042 | 96 68 587 08 | 49 | 4 |
| 91 44 757 | X1011883 | 10 11 883 9 | 2 | 1 |
| 91 44 762 | X1011883 | 10 11 883 9 | (1) | 1 |
| 91 45 069 08 | 3 102 000 | 91 62 543 08 | 1 | 1 |
| 91 45 070 08 | 3 103 000 | 91 62 544 08 | 1 | 1 |
| 91 45 071 08 | 3 104 000 | 91 62 545 08 | 1 | 1 |
| 91 45 072 08 | 3 105 000 | 91 62 546 08 | 1 | 1 |
| 91 45 571 08 | | LTR 1100 -0 | 363 | 1 |
| 91 45 984 08 | 2 501 000 | 91 48 769 08 | 19 | 1 |
| 91 46 555 08 | | LTR 1100 -0 | 107 | 1 |

| Item | Page | Assembly | Pos. | Quantity |
|---|---|---|---|---|
| 91 47 512 | X1015207 | 10 15 207 7 | 24 | 1 |
| 91 47 871 08 | | LTR 1100 -0 | 301 | 1 |
| 91 48 594 08 | | LTR 1100 -0 | 129 | 1 |
| 91 48 605 08 | | LTR 1100 -0 | 29 | 1 |
| 91 48 606 08 | | LTR 1100 -0 | 55 | 1 |
| 91 48 668 08 | | LTR 1100 -0 | 117 | 1 |
| 91 48 669 08 | | LTR 1100 -0 | 141 | 1 |
| 91 48 769 08 | 2 500 | 91 48 594 08 | 1 | 1 |
| 91 49 246 08 | | LTR 1100 -0 | 350 | 1 |
| 91 49 493 08 | | LTR 1100 -0 | 30 | 1 |
| 91 49 503 08 | | LTR 1100 -0 | 62 | 1 |
| 91 49 515 08 | | LTR 1100 -0 | 189 | 1 |
| 91 49 516 08 | | LTR 1100 -0 | 183 | 1 |
| 91 49 864 08 | 2 520 000 | 91 49 872 08 | 9 | 1 |
| 91 49 865 08 | 2 520 000 | 91 49 872 08 | (1) | 1 |
| 91 49 872 08 | 2 501 000 | 91 48 769 08 | 1 | 1 |
| 91 50 372 08 | | LTR 1100 -0 | 440 | 1 |
| 91 50 456 08 | | LTR 1100 -0 | 108 | 1 |
| 91 50 610 08 | | LTR 1100 -0 | 333 | 1 |
| 91 50 900 08 | | LTR 1100 -0 | 147 | 1 |
| 91 50 901 08 | | LTR 1100 -0 | 149 | 1 |
| 91 50 902 08 | | LTR 1100 -0 | 153 | 1 |
| 91 51 080 08 | | LTR 1100 -0 | 103 | 1 |
| 91 51 084 08 | | LTR 1100 -0 | 136 | 1 |
| 91 51 089 08 | | LTR 1100 -0 | 191 | 1 |
| 91 51 090 08 | | LTR 1100 -0 | 193 | 1 |
| 91 52 288 08 | | LTR 1100 -0 | 330 | 1 |
| 91 52 291 08 | | LTR 1100 -0 | 175 | 1 |
| 91 52 906 08 | | LTR 1100 -0 | 187 | 1 |
| 91 53 002 08 | | LTR 1100 -0 | 169 | 1 |
| 91 53 116 08 | | LTR 1100 -0 | 109 | 1 |
| 91 53 225 08 | | LTR 1100 -0 | 163 | 1 |
| 91 53 489 08 | 1 100 200 | 96 72 944 08 | 7 | 1 |
| 91 53 791 08 | | LTR 1100 -0 | 40 | 1 |
| 91 53 926 08 | | LTR 1100 -0 | 125 | 1 |
| 91 53 981 08 | | LTR 1100 -0 | 135 | 1 |
| 91 54 159 08 | | LTR 1100 -0 | 356 | 1 |
| 91 54 183 08 | | LTR 1100 -0 | 130 | 1 |
| 91 54 254 08 | | LTR 1100 -0 | 143 | 1 |
| 91 54 389 08 | | LTR 1100 -0 | 121 | 1 |
| 91 54 759 08 | | LTR 1100 -0 | 66 | 1 |
| 91 55 133 08 | 3 500 | 91 05 776 08 | 1 | 1 |
| 91 55 477 08 | | LTR 1100 -0 | 179 | 1 |
| 91 55 482 08 | | LTR 1100 -0 | 185 | 1 |
| 91 56 353 08 | | LTR 1100 -0 | 80 | 1 |
| 91 57 885 08 | 3 100 | 91 59 279 08 | 7 | 1 |
| 91 59 068 08 | | LTR 1100 -0 | 213 | 1 |
| 91 59 279 08 | | LTR 1100 -0 | 201 | 1 |
| 91 59 294 08 | | LTR 1100 -0 | 362 | 1 |
| 91 60 312 08 | 3 100 | 91 59 279 08 | 1 | 1 |
| 91 60 313 08 | 3 100 | 91 59 279 08 | 6 | 1 |
| 91 60 328 08 | 3 101 | 91 60 312 08 | 1 | 1 |
| 91 60 499 08 | | LTR 1100 -0 | 132 | 1 |
| 91 60 938 08 | | LTR 1100 -0 | 410 | 1 |
| 91 62 289 08 | | LTR 1100 -0 | 127 | 1 |
| 91 62 290 08 | | LTR 1100 -0 | 332 | 1 |
| 91 62 543 08 | 3 100 | 91 59 279 08 | 2 | 1 |
| 91 62 544 08 | 3 100 | 91 59 279 08 | 3 | 1 |
| 91 62 545 08 | 3 100 | 91 59 279 08 | 4 | 1 |
| 91 62 546 08 | 3 100 | 91 59 279 08 | 5 | 1 |

| Item | Page | Assembly | Pos. | Quantity |
|---|---|---|---|---|
| 91 62 607 08 | 3 106 000 | 91 60 313 08 | 1 | 1 |
| 91 62 835 08 | | LTR 1100 -0 | 72 | 1 |
| 91 62 974 08 | | LTR 1100 -0 | 74 | 1 |
| 91 68 708 08 | | LTR 1100 -0 | 144 | 1 |
| 91 68 736 08 | | LTR 1100 -0 | 412 | 1 |
| 91 68 959 08 | | LTR 1100 -0 | 181 | 1 |
| 91 69 598 08 | | LTR 1100 -0 | 98 | 1 |
| 91 70 947 08 | | LTR 1100 -0 | 456 | 1 |
| 91 71 033 08 | | LTR 1100 -0 | 2 | 1 |
| 91 75 084 08 | | LTR 1100 -0 | 352 | 1 |
| 91 75 085 08 | 3 750 | 91 75 084 08 | 1 | 1 |
| 91 75 902 | X1011577 | 10 11 577 6 | 5 | 10 |
| 91 77 636 | X1011577 | 10 11 577 6 | 6 | 10 |
| 91 77 948 | X1011583 | 10 11 583 7 | 50 | 1 |
| 91 78 294 | 9 078 962 | 90 78 962 | 5 | 1 |
| 91 78 930 08 | | LTR 1100 -0 | 299 | 1 |
| 91 79 540 | X1011832 | 10 11 832 6 | 19 | 1 |
| 91 80 907 08 | | LTR 1100 -0 | 170 | 1 |
| 91 81 095 08 | | LTR 1100 -0 | 105 | 1 |
| 91 81 361 08 | | LTR 1100 -0 | 111 | 1 |
| 91 81 614 08 | 2 200 | 91 81 095 08 | 1 | 1 |
| 91 85 786 14 | 2 571 | 91 50 902 08 | 18 | 2 |
| 91 89 127 14 | 1 300 005 | 99 17 196 14 | 2 | 2 |
| 91 89 986 14 | 1 100 200 | 96 72 944 08 | 10 | 2 |
| 91 90 328 14 | 1 630 002 | 99 06 183 14 | 2 | 1 |
| 91 94 187 14 | 1 740 | 91 56 353 08 | 1 | 2 |
| 92 01 751 08 | 3 930 718 | 96 56 248 08 | 1 | 1 |
| 92 01 753 08 | 3 930 492 | 96 20 966 08 | 6 | 1 |
| 92 01 827 08 | 2 831 | 91 47 871 08 | 7 | 1 |
| 92 02 118 08 | 2 510 072 | 96 44 614 08 | 1 | 1 |
| 92 02 441 08 | 2 997 | 91 51 089 08 | 200 | 1 |
| 92 06 102 08 | 2 970 061 | 96 43 131 08 | 376 | 1 |
| 92 06 423 08 | 2 780 800 | 91 15 191 08 | 14 | 1 |
| 92 07 273 08 | 2 997 | 91 51 089 08 | 330 | 1 |
| 92 07 663 08 | 3 930 | 91 59 068 08 | 6 | 1 |
| 92 07 741 08 | 3 930 470 | 92 07 663 08 | 7 | 1 |
| 92 07 808 08 | 3 930 204 | 92 07 741 08 | 420 | 1 |
| 92 07 849 08 | 3 930 492 | 96 20 966 08 | 290 | 1 |
| 92 07 890 08 | 2 920 013 | 96 41 599 08 | 61 | 1 |
| 92 08 065 08 | 2 932 214 | 96 28 366 08 | 5 | 1 |
| 92 08 459 08 | 2 920 | 91 55 477 08 | 24 | 1 |
| 92 08 669 08 | 2 932 214 | 96 28 366 08 | 6 | 1 |
| 92 09 752 08 | 2 997 | 91 51 089 08 | 337 | 1 |
| 92 09 786 08 | 2 971 012 | 96 43 144 08 | 384 | 1 |
| 92 09 842 08 | 2 997 | 91 51 089 08 | 396 | 1 |
| 92 09 917 08 | 2 997 | 91 51 089 08 | 314 | 1 |
| 92 10 661 08 | 2 501 000 | 91 48 769 08 | 7 | 1 |
| 92 10 663 08 | 2 501 000 | 91 48 769 08 | 10 | 1 |
| 92 10 666 08 | 2 500 | 91 48 594 08 | 7 | 1 |
| 92 11 635 08 | 2 920 593 | 96 53 714 08 | 15 | 1 |
| 92 11 781 08 | 2 520 000 | 91 49 872 08 | (2) | 1 |
| 92 11 802 08 | 2 260 006 | 96 31 147 08 | 2 | 1 |
| 92 12 112 08 | 2 932 042 | 96 68 587 08 | 10 | 4 |
| 92 12 258 08 | 2 920 013 | 96 41 599 08 | 22 | 1 |
| 92 12 641 08 | 2 520 000 | 91 49 872 08 | 92 | 1 |
| 92 12 641 08 | 2 955 | 91 49 516 08 | 6 | 1 |
| 92 12 968 08 | 2 998 | 91 51 090 08 | 474 | 3 |
| 92 12 969 08 | 2 998 | 91 51 090 08 | 475 | 1 |
| 92 12 971 08 | 2 998 | 91 51 090 08 | 477 | 1 |
| 92 12 972 08 | 2 998 | 91 51 090 08 | 478 | 1 |

| Item | Page | Assembly | Pos. | Quantity |
|---|---|---|---|---|
| 92 12 973 08 | 2 998 | 91 51 090 08 | 479 | 1 |
| 92 12 974 08 | 2 998 | 91 51 090 08 | 497 | 1 |
| 92 12 975 08 | 2 998 | 91 51 090 08 | 498 | 1 |
| 92 12 976 08 | 2 998 | 91 51 090 08 | 499 | 1 |
| 92 12 998 08 | 2 920 | 91 55 477 08 | 15 | 1 |
| 92 13 430 08 | 2 520 000 | 91 49 872 08 | 12 | 1 |
| 92 13 686 08 | 3 101 | 91 60 312 08 | 17 | 1 |
| 92 14 394 08 | 2 997 | 91 51 089 08 | 201 | 1 |
| 92 14 441 08 | 2 440 022 | 96 42 336 08 | 27 | 1 |
| 92 15 126 08 | 2 998 | 91 51 090 08 | 490 | 1 |
| 92 15 127 08 | 2 998 | 91 51 090 08 | 491 | 1 |
| 92 15 128 08 | 2 998 | 91 51 090 08 | 492 | 1 |
| 92 15 129 08 | 2 998 | 91 51 090 08 | 493 | 1 |
| 92 15 130 08 | 2 998 | 91 51 090 08 | 494 | 1 |
| 92 15 131 08 | 2 998 | 91 51 090 08 | 495 | 1 |
| 92 15 132 08 | 2 998 | 91 51 090 08 | 496 | 1 |
| 92 15 367 08 | 2 997 | 91 51 089 08 | 484 | 1 |
| 92 15 879 08 | 2 502 | 91 01 533 08 | 11 | 1 |
| 92 15 880 08 | 2 502 | 91 01 533 08 | 10 | 1 |
| 92 16 203 08 | 2 932 042 | 96 68 587 08 | 48 | 1 |
| 92 17 203 08 | 2 520 018 | 92 13 430 08 | 1 | 1 |
| 92 17 218 08 | 3 930 492 | 96 20 966 08 | 7 | 1 |
| 92 17 805 08 | 3 501 | 91 05 788 08 | 1 | 1 |
| 92 19 740 08 | 2 997 | 91 51 089 08 | 395 | 1 |
| 92 20 994 08 | 1 997 | 91 53 489 08 | 115 | 1 |
| 92 22 980 08 | 1 997 | 91 53 489 08 | 114 | 1 |
| 92 24 172 08 | 1 997 | 91 53 489 08 | 140 | 1 |
| 92 24 554 08 | 2 997 | 91 51 089 08 | 305 | 1 |
| 92 26 129 08 | 2 932 042 | 96 68 587 08 | 18 | 1 |
| 92 26 459 08 | 2 997 | 91 51 089 08 | 331 | 1 |
| 92 26 464 08 | 1 997 | 91 53 489 08 | 122 | 1 |
| 92 26 483 08 | 2 932 042 | 96 68 587 08 | 15 | 1 |
| 92 26 706 08 | 2 932 042 | 96 68 587 08 | 11 | 1 |
| 92 28 852 08 | 2 970 061 | 96 43 131 08 | 373 | 1 |
| 92 32 291 08 | 2 997 | 91 51 089 08 | 369 | 1 |
| 92 32 870 08 | 2 913 100 | 91 23 538 08 | 11 | 1 |
| 92 37 099 08 | 2 970 061 | 96 43 131 08 | 374 | 1 |
| 92 39 303 08 | 2 920 083 | 96 31 039 08 | 10 | 1 |
| 92 40 739 08 | 4 003 006 | 91 04 457 08 | 1 | 3 |
| 92 45 055 08 | 2 997 | 91 51 089 08 | 486 | 1 |
| 92 46 186 08 | 1 997 | 91 53 489 08 | 117 | 1 |
| 92 48 796 08 | 2 520 000 | 91 49 872 08 | 3 | 1 |
| 92 50 027 08 | 2 502 | 91 01 533 08 | 5 | 1 |
| 92 50 028 08 | 2 502 | 91 01 533 08 | 6 | 1 |
| 92 50 029 08 | 2 502 | 91 01 533 08 | 7 | 1 |
| 92 50 132 08 | 2 520 001 | 92 48 796 08 | 4 | 1 |
| 92 50 296 08 | 2 502 | 91 01 533 08 | 12 | 1 |
| 92 50 297 08 | 2 502 | 91 01 533 08 | 13 | 1 |
| 92 50 396 08 | 3 510 006 | 96 20 924 08 | 2 | 1 |
| 92 50 421 08 | 3 510 100 | 91 49 246 08 | 4 | 1 |
| 92 50 730 08 | 3 501 | 91 05 788 08 | 7 | 1 |
| 92 50 739 08 | 3 501 | 91 05 788 08 | 12 | 1 |
| 92 50 746 08 | 3 501 | 91 05 788 08 | 27 | 1 |
| 92 50 859 08 | 2 520 000 | 91 49 872 08 | 18 | 1 |
| 92 51 415 08 | 2 792 | 91 52 291 08 | 9 | 1 |
| 92 51 437 08 | 1 792 004 | 92 51 415 08 | 1 | 1 |
| 92 51 852 08 | 2 792 | 91 52 291 08 | 10 | 1 |
| 92 51 853 08 | 2 792 | 91 52 291 08 | 11 | 1 |
| 92 52 756 08 | 3 510 001 | 92 52 800 08 | 1 | 1 |
| 92 52 800 08 | 3 510 100 | 91 49 246 08 | 1 | 1 |

| Item | Page | Assembly | Pos. | Quantity |
|---|---|---|---|---|
| 92 53 428 08 | 2 997 | 91 51 089 08 | 309 | 1 |
| 92 55 190 08 | 2 997 | 91 51 089 08 | 481 | 1 |
| 92 55 190 08 | 2 997 | 91 51 089 08 | 482 | 1 |
| 92 57 213 08 | 3 330 | 91 57 885 08 | 2 | 1 |
| 92 57 214 08 | 3 330 | 91 57 885 08 | 3 | 1 |
| 92 59 332 08 | 2 340 004 | 96 43 780 08 | 20 | 1 |
| 92 60 418 08 | 2 997 | 91 51 089 08 | 210 | 1 |
| 92 60 465 08 | 2 997 | 91 51 089 08 | 343 | 1 |
| 92 60 476 08 | 2 997 | 91 51 089 08 | 324 | 1 |
| 92 60 492 08 | 2 997 | 91 51 089 08 | 319 | 1 |
| 92 60 719 08 | 2 997 | 91 51 089 08 | 209 | 1 |
| 92 60 969 08 | 2 997 | 91 51 089 08 | 321 | 1 |
| 92 60 975 08 | 2 997 | 91 51 089 08 | 367 | 1 |
| 92 61 116 08 | 2 997 | 91 51 089 08 | 327 | 1 |
| 92 61 197 08 | 2 970 061 | 96 43 131 08 | 377 | 1 |
| 92 61 198 08 | 2 997 | 91 51 089 08 | 325 | 1 |
| 92 61 200 08 | 2 997 | 91 51 089 08 | 303 | 1 |
| 92 61 290 08 | 2 997 | 91 51 089 08 | 317 | 1 |
| 92 61 374 08 | 2 997 | 91 51 089 08 | 322 | 1 |
| 92 62 690 08 | 2 997 | 91 51 089 08 | 308 | 1 |
| 92 62 890 08 | 2 997 | 91 51 089 08 | 203 | 1 |
| 92 62 891 08 | 2 971 012 | 96 43 144 08 | 380 | 1 |
| 92 63 748 08 | 2 997 | 91 51 089 08 | 328 | 1 |
| 92 63 787 08 | 2 971 012 | 96 43 144 08 | 254 | 1 |
| 92 66 073 08 | 2 997 | 91 51 089 08 | 353 | 1 |
| 92 66 576 08 | 2 971 012 | 96 43 144 08 | 256 | 1 |
| 92 67 273 | 9 072 593 | 90 72 593 | 4 | 1 |
| 92 67 273 | 9 075 541 | 90 75 541 | 13 | 1 |
| 92 68 016 | 9 072 112 | 90 72 112 | 96 | 1 |
| 92 68 082 08 | 2 932 042 | 96 68 587 08 | 40 | 1 |
| 92 68 129 | X1011585 | 10 11 585 1 | 16 | 1 |
| 92 68 129 | X1011585 | 10 11 585 3 | 16 | 1 |
| 92 68 130 | X1011832 | 10 11 832 6 | 20 | 1 |
| 92 68 131 | X1011583 | 10 11 583 7 | 19 | 1 |
| 92 68 131 | X1011989 | 10 11 989 7 | 18 | 1 |
| 92 68 310 08 | 2 500 | 91 48 594 08 | 2 | 1 |
| 92 68 722 08 | 1 997 | 91 53 489 08 | 121 | 1 |
| 92 68 890 08 | 2 520 001 | 92 48 796 08 | 22 | 1 |
| 92 68 891 08 | 2 520 001 | 92 48 796 08 | 1 | 1 |
| 92 68 899 08 | 2 520 000 | 91 49 872 08 | 48 | 2 |
| 92 68 911 08 | 2 932 042 | 96 68 587 08 | 17 | 1 |
| 92 68 945 08 | 2 998 | 91 51 090 08 | 476 | 1 |
| 92 69 750 | 9 072 112 | 90 72 112 | 91 | 1 |
| 92 70 109 | X1011585 | 10 11 585 1 | 15 | 1 |
| 92 70 109 | X1011585 | 10 11 585 3 | 15 | 1 |
| 92 70 147 | 9 072 112 | 90 72 112 | (999) | 1 |
| 92 70 439 08 | 2 997 | 91 51 089 08 | 300 | 1 |
| 92 71 304 08 | 2 520 000 | 91 49 872 08 | 115 | 1 |
| 92 71 305 08 | 2 520 000 | 91 49 872 08 | 116 | 1 |
| 92 71 340 | X1011583 | 10 11 583 7 | 141 | 2 |
| 92 71 340 | X1011914 | 10 11 914 1 | 6 | 2 |
| 92 71 525 08 | 2 500 | 91 48 594 08 | 4 | 1 |
| 92 71 528 08 | 2 500 | 91 48 594 08 | 3 | 1 |
| 92 71 584 08 | 3 930 492 | 96 20 966 08 | (153) | 1 |
| 92 71 591 08 | 3 501 | 91 05 788 08 | 5 | 1 |
| 92 71 592 08 | 3 501 | 91 05 788 08 | 6 | 1 |
| 92 71 963 | X1011585 | 10 11 585 1 | 10 | 2 |
| 92 71 963 | X1011585 | 10 11 585 2 | 10 | 2 |
| 92 71 963 | X1011585 | 10 11 585 3 | 10 | 2 |
| 92 71 963 | X1011585 | 10 11 585 9 | 10 | 2 |

| Item | Page | Assembly | Pos. | Quantity |
|---|---|---|---|---|
| 92 71 963 | X1011707 | 10 11 707 2 | 10 | 1 |
| 92 71 963 | X1011801 | 10 11 801 3 | 20 | 2 |
| 92 71 963 | X1011801 | 10 11 801 4 | 20 | 2 |
| 92 71 963 | X1011816 | 10 11 816 1 | 10 | 1 |
| 92 72 494 08 | 3 930 523 | 96 43 943 08 | 4 | 1 |
| 92 73 100 08 | 3 106 000 | 91 60 313 08 | 71 | 1 |
| 92 73 100 08 | 3 280 | 91 45 571 08 | 1 | 1 |
| 92 73 100 08 | 3 501 | 91 05 788 08 | 11 | 2 |
| 92 73 117 08 | 3 501 | 91 05 788 08 | 8 | 1 |
| 92 73 180 08 | 2 780 800 | 91 15 191 08 | 15 | 1 |
| 92 73 187 | 9 072 112 | 90 72 112 | 97 | 2 |
| 92 73 271 | 9 075 368 | 90 75 368 | 2 | 2 |
| 92 73 423 | X1011583 | 10 11 583 7 | 4301 | 1 |
| 92 73 423 | X1011585 | 10 11 585 2 | 15 | 1 |
| 92 73 423 | X1011585 | 10 11 585 9 | 15 | 1 |
| 92 73 691 | X1011583 | 10 11 583 7 | 20 | 1 |
| 92 74 939 08 | 3 501 | 91 05 788 08 | 79 | 2 |
| 92 74 974 | X1011583 | 10 11 583 7 | 21 | 1 |
| 92 75 019 01 | 9 275 212 | 92 75 212 01 | 2 | 1 |
| 92 75 019 01 | 9 275 543 | 92 75 543 01 | 2 | 1 |
| 92 75 019 01 | 9 393 684 | 93 93 684 01 | 13 | 1 |
| 92 75 046 01 | 9 387 596 | 93 87 596 01 | 17 | 1 |
| 92 75 047 01 | 9 387 596 | 93 87 596 01 | 23 | 1 |
| 92 75 048 01 | 9 387 596 | 93 87 596 01 | 15 | 1 |
| 92 75 143 01 | 9 387 598 | 93 87 598 01 | 16 | 38 |
| 92 75 143 01 | 9 686 071 | 96 86 071 01 | 16 | 38 |
| 92 75 152 01 | 9 275 212 | 92 75 212 01 | 6 | 2 |
| 92 75 207 01 | 9 387 598 | 93 87 598 01 | 26 | 1 |
| 92 75 208 01 | 9 387 598 | 93 87 598 01 | 27 | 1 |
| 92 75 212 01 | 9 387 070 | 93 87 070 01 | 10 | 1 |
| 92 75 213 01 | 9 275 212 | 92 75 212 01 | 5 | 1 |
| 92 75 302 01 | 9 330 748 | 93 30 748 01 | 13 | 1 |
| 92 75 303 01 | 9 330 748 | 93 30 748 01 | 14 | 1 |
| 92 75 308 01 | 9 330 748 | 93 30 748 01 | 40 | 6 |
| 92 75 319 01 | 9 330 748 | 93 30 748 01 | 16 | 1 |
| 92 75 443 | 9 072 112 | 90 72 112 | 85 | 1 |
| 92 75 543 01 | 9 330 748 | 93 30 748 01 | 77 | 1 |
| 92 75 544 01 | 9 275 543 | 92 75 543 01 | 1 | 1 |
| 92 75 590 | 9 075 541 | 90 75 541 | 11 | 1 |
| 92 75 662 08 | 2 997 | 91 51 089 08 | 318 | 1 |
| 92 75 735 | 9 075 678 | 90 75 678 | 3 | 2 |
| 92 75 766 | 9 147 512 | 91 47 512 | 2 | 1 |
| 92 75 766 | X1011583 | 10 11 583 7 | 18 | 3 |
| 92 75 766 | X1011801 | 10 11 801 3 | 16 | 1 |
| 92 75 766 | X1011801 | 10 11 801 4 | 16 | 1 |
| 92 75 826 | X1011611 | 10 11 611 0 | 16 | 1 |
| 92 76 013 01 | 9 686 071 | 96 86 071 01 | 6 | 1 |
| 92 76 014 01 | 9 686 071 | 96 86 071 01 | 7 | 5 |
| 92 76 017 01 | 9 387 598 | 93 87 598 01 | 15 | 1 |
| 92 76 017 01 | 9 686 071 | 96 86 071 01 | 15 | 1 |
| 92 76 018 01 | 9 686 071 | 96 86 071 01 | 20 | 1 |
| 92 76 019 01 | 9 686 071 | 96 86 071 01 | 25 | 1 |
| 92 76 020 01 | 9 686 071 | 96 86 071 01 | 30 | 1 |
| 92 76 021 01 | 9 686 071 | 96 86 071 01 | 32 | 3 |
| 92 76 028 01 | 9 686 071 | 96 86 071 01 | 31 | 1 |
| 92 76 029 01 | 9 686 071 | 96 86 071 01 | 35 | 1 |
| 92 76 102 01 | 9 393 684 | 93 93 684 01 | 15 | 1 |
| 92 76 121 08 | 1 997 | 91 53 489 08 | 131 | 1 |
| 92 76 121 08 | 1 997 | 91 53 489 08 | 133 | 1 |
| 92 76 166 08 | 2 997 | 91 51 089 08 | 204 | 1 |
| 92 76 316 08 | 2 970 103 | 96 43 157 08 | 262 | 1 |
| 92 76 318 08 | 2 997 | 91 51 089 08 | 312 | 1 |
| 92 76 318 08 | 2 997 | 91 51 089 08 | 364 | 1 |
| 92 76 388 01 | 9 387 596 | 93 87 596 01 | 30 | 1 |
| 92 76 393 | 9 079 890 | 90 79 890 | 1 | 2 |
| 92 76 398 01 | 9 686 071 | 96 86 071 01 | 10 | 1 |
| 92 76 426 | 9 072 112 | 90 72 112 | 98 | 1 |
| 92 76 783 08 | 2 997 | 91 51 089 08 | 362 | 1 |
| 92 76 807 08 | 2 997 | 91 51 089 08 | 344 | 1 |
| 92 76 847 08 | 2 997 | 91 51 089 08 | 211 | 1 |
| 92 77 007 01 | 9 444 410 | 94 44 410 03 | 26 | 1 |
| 92 77 167 01 | 9 330 748 | 93 30 748 01 | 70 | 1 |
| 92 77 587 01 | 9 387 070 | 93 87 070 01 | 11 | 1 |
| 92 78 922 08 | 2 970 | 91 55 482 08 | 40 | 1 |
| 92 79 359 08 | 2 102 | 91 51 080 08 | 8 | 1 |
| 92 80 058 08 | 1 997 | 91 53 489 08 | 124 | 1 |
| 92 80 069 08 | 1 997 | 91 53 489 08 | 128 | 1 |
| 92 80 069 08 | 1 997 | 91 53 489 08 | 129 | 1 |
| 92 84 311 08 | 2 913 100 | 91 23 538 08 | 3 | 1 |
| 92 84 584 08 | 2 997 | 91 51 089 08 | 311 | 1 |
| 92 84 591 08 | 2 997 | 91 51 089 08 | 340 | 1 |
| 92 85 698 08 | 1 750 | 91 48 606 08 | 1 | 1 |
| 92 86 201 08 | 1 750 | 91 48 606 08 | 2 | 1 |
| 92 86 596 08 | 3 511 006 | 96 45 029 08 | 1 | 1 |
| 92 87 019 08 | 6 923 101 | 69 23 101 08 | 15 | 1 |
| 92 87 533 08 | 2 997 | 91 51 089 08 | 480 | 1 |
| 92 87 618 08 | 2 997 | 91 51 089 08 | 316 | 1 |
| 92 88 195 08 | 2 920 | 91 55 477 08 | 26 | 1 |
| 92 88 722 08 | 2 971 012 | 96 43 144 08 | 382 | 1 |
| 92 88 753 08 | 2 997 | 91 51 089 08 | 339 | 1 |
| 92 88 756 08 | 2 971 012 | 96 43 144 08 | 381 | 1 |
| 92 92 213 08 | 2 971 012 | 96 43 144 08 | 387 | 1 |
| 92 93 155 08 | 3 501 | 91 05 788 08 | 85 | 1 |
| 92 93 218 08 | 2 997 | 91 51 089 08 | 310 | 1 |
| 92 93 288 08 | 1 997 | 91 53 489 08 | 118 | 1 |
| 92 93 436 08 | 2 920 585 | 91 01 520 08 | 5 | 1 |
| 92 93 614 08 | 2 997 | 91 51 089 08 | 483 | 1 |
| 92 95 081 08 | 3 330 | 91 57 885 08 | 34 | 1 |
| 92 95 299 08 | 3 750 027 | 96 89 527 08 | 1 | 1 |
| 92 95 821 08 | 3 510 100 | 91 49 246 08 | 3 | 1 |
| 92 95 822 08 | 3 500 104 | 92 95 821 08 | 1 | 1 |
| 92 95 916 08 | 3 500 104 | 92 95 821 08 | 6 | 1 |
| 92 96 140 08 | 1 997 | 91 53 489 08 | 103 | 1 |
| 92 96 305 08 | 1 997 | 91 53 489 08 | 120 | 1 |
| 92 96 305 08 | 1 997 | 91 53 489 08 | 123 | 1 |
| 92 96 389 08 | 2 997 | 91 51 089 08 | 358 | 1 |
| 92 96 415 08 | 2 997 | 91 51 089 08 | 206 | 1 |
| 92 96 438 08 | 2 997 | 91 51 089 08 | 205 | 1 |
| 92 96 444 08 | 2 997 | 91 51 089 08 | 323 | 1 |
| 92 96 484 08 | 2 997 | 91 51 089 08 | 354 | 1 |
| 92 96 484 08 | 2 997 | 91 51 089 08 | 356 | 1 |
| 92 97 210 08 | 2 997 | 91 51 089 08 | 394 | 1 |
| 92 98 180 08 | 3 501 | 91 05 788 08 | 29 | 8 |
| 92 98 193 08 | 3 501 | 91 05 788 08 | 28 | 8 |
| 92 99 226 08 | 2 997 | 91 51 089 08 | 329 | 1 |
| 92 99 369 08 | 2 913 004 | 96 20 460 08 | 1 | 1 |
| 92 99 370 08 | 2 913 006 | 96 20 732 08 | 1 | 1 |
| 93 16 963 01 | 2 410 | 91 48 668 08 | 1 | 1 |
| 93 18 075 01 | 9 330 748 | 93 30 748 01 | 5 | 1 |
| 93 19 133 08 | 3 510 001 | 92 52 800 08 | 6 | 1 |

| Item | Page | Assembly | Pos. | Quantity |
|---|---|---|---|---|
| 93 19 278 08 | 2 510 200 | 96 41 258 08 | 17 | 2 |
| 93 30 748 01 | 2 420 | 91 32 936 08 | 1 | 1 |
| 93 30 749 01 | 9 330 748 | 93 30 748 01 | 10 | 1 |
| 93 48 135 08 | 2 520 000 | 91 49 872 08 | 91 | 2 |
| 93 58 590 | X1011998 | 10 11 998 0 | 70 | 1 |
| 93 87 070 01 | 2 440 022 | 96 42 336 08 | 2 | 1 |
| 93 87 596 01 | 9 387 070 | 93 87 070 01 | 1 | 1 |
| 93 87 596 01 | 9 685 586 | 96 85 586 01 | 1 | 1 |
| 93 87 598 01 | 9 387 070 | 93 87 070 01 | 5 | 1 |
| 93 87 600 01 | 9 686 071 | 96 86 071 01 | 5 | 1 |
| 93 87 601 01 | 9 686 071 | 96 86 071 01 | 40 | 1 |
| 93 87 602 01 | 9 686 071 | 96 86 071 01 | 42 | 3 |
| 93 87 604 01 | 9 686 071 | 96 86 071 01 | 45 | 1 |
| 93 87 605 01 | 9 686 071 | 96 86 071 01 | 46 | 1 |
| 93 87 606 01 | 9 686 071 | 96 86 071 01 | 50 | 1 |
| 93 87 607 01 | 9 686 071 | 96 86 071 01 | 55 | 1 |
| 93 87 608 01 | 9 387 598 | 93 87 598 01 | 60 | 1 |
| 93 87 608 01 | 9 686 071 | 96 86 071 01 | 60 | 1 |
| 93 87 609 01 | 9 686 071 | 96 86 071 01 | 65 | 1 |
| 93 89 964 01 | 9 330 748 | 93 30 748 01 | 85 | 1 |
| 93 89 965 01 | 9 330 748 | 93 30 748 01 | 90 | 1 |
| 93 90 487 08 | 3 501 | 91 05 788 08 | 25 | 1 |
| 93 92 503 01 | 9 330 748 | 93 30 748 01 | 15 | 1 |
| 93 92 511 01 | 9 330 748 | 93 30 748 01 | 20 | 5 |
| 93 92 514 01 | 9 330 748 | 93 30 748 01 | 30 | 1 |
| 93 92 515 01 | 9 330 748 | 93 30 748 01 | 35 | 1 |
| 93 92 516 01 | 9 330 748 | 93 30 748 01 | 45 | 1 |
| 93 92 517 01 | 9 330 748 | 93 30 748 01 | 60 | 1 |
| 93 92 573 01 | 9 330 748 | 93 30 748 01 | 50 | 1 |
| 93 93 684 01 | 9 685 586 | 96 85 586 01 | 10 | 1 |
| 93 95 895 01 | 9 686 071 | 96 86 071 01 | (997) | 1 |
| 93 95 896 01 | 9 686 071 | 96 86 071 01 | (998) | 1 |
| 93 95 897 01 | 9 686 071 | 96 86 071 01 | (999) | 1 |
| 94 03 151 08 | 3 511 006 | 96 45 029 08 | 7 | 2 |
| 94 03 800 08 | 3 106 000 | 91 60 313 08 | 30 | 1 |
| 94 03 800 08 | 3 280 | 91 45 571 08 | 2 | 1 |
| 94 12 158 | 1 880 | 91 62 974 08 | 35 | 1 |
| 94 15 054 08 | 2 500 | 91 48 594 08 | 12 | 2 |
| 94 18 472 08 | 3 501 | 91 05 788 08 | 14 | 1 |
| 94 20 537 08 | 1 740 010 | 96 50 675 08 | 12 | 4 |
| 94 24 398 08 | 3 501 | 91 05 788 08 | 20 | 1 |
| 94 28 754 08 | 2 681 | 91 28 102 08 | 252 | 1 |
| 94 40 299 08 | 3 510 100 | 91 49 246 08 | 30 | 1 |
| 94 41 341 03 | 9 330 748 | 93 30 748 01 | 36 | 2 |
| 94 42 231 03 | 9 444 410 | 94 44 410 03 | 2 | 32 |
| 94 42 284 03 | 9 444 410 | 94 44 410 03 | 56 | 1 |
| 94 42 287 03 | 9 444 410 | 94 44 410 03 | 60 | 1 |
| 94 42 439 03 | 9 444 410 | 94 44 410 03 | 5 | 1 |
| 94 44 120 08 | 2 520 000 | 91 49 872 08 | 65 | 1 |
| 94 44 408 03 | 9 444 410 | 94 44 410 03 | 16 | 1 |
| 94 44 410 03 | 1 100 205 | 96 51 633 08 | 3 | 1 |
| 94 44 410 03 | 1 100 210 | 96 51 634 08 | 3 | 1 |
| 94 44 413 03 | 9 444 410 | 94 44 410 03 | 10 | 1 |
| 94 44 414 03 | 9 444 410 | 94 44 410 03 | 17 | 5 |
| 94 44 416 03 | 9 444 410 | 94 44 410 03 | 20 | 1 |
| 94 44 417 03 | 9 444 410 | 94 44 410 03 | 25 | 1 |
| 94 44 418 03 | 9 444 410 | 94 44 410 03 | 27 | 3 |
| 94 44 423 03 | 9 444 410 | 94 44 410 03 | 35 | 1 |
| 94 44 424 03 | 9 444 410 | 94 44 410 03 | 36 | 1 |
| 94 44 425 03 | 9 444 410 | 94 44 410 03 | 37 | 3 |

| Item | Page | Assembly | Pos. | Quantity |
|---|---|---|---|---|
| 94 44 427 03 | 9 444 410 | 94 44 410 03 | 40 | 1 |
| 94 44 428 03 | 9 444 410 | 94 44 410 03 | 45 | 1 |
| 94 44 429 03 | 9 444 410 | 94 44 410 03 | 50 | 1 |
| 94 44 432 03 | 9 444 410 | 94 44 410 03 | 65 | 1 |
| 94 44 433 03 | 9 444 410 | 94 44 410 03 | 80 | 1 |
| 94 55 691 08 | 2 520 000 | 91 49 872 08 | 46 | 1 |
| 94 55 691 08 | 2 955 | 91 49 516 08 | 19 | 1 |
| 94 61 046 08 | 2 210 | 91 81 614 08 | 14 | 2 |
| 94 73 392 08 | 2 955 | 91 49 516 08 | 17 | 2 |
| 94 78 682 08 | 3 500 104 | 92 95 821 08 | 2 | 2 |
| 94 78 682 08 | 3 501 | 91 05 788 08 | 80 | 2 |
| 94 78 682 08 | 3 510 001 | 92 52 800 08 | 2 | 1 |
| 94 89 969 14 | 1 100 205 | 96 51 633 08 | 20 | 4 |
| 94 89 969 14 | 1 100 210 | 96 51 634 08 | 20 | 4 |
| 94 93 475 08 | 3 501 | 91 05 788 08 | 24 | 2 |
| 94 93 476 08 | 3 501 | 91 05 788 08 | 92 | 1 |
| 94 93 480 08 | 3 501 | 91 05 788 08 | 91 | 2 |
| 94 93 614 08 | 3 500 | 91 05 776 08 | 2 | 1 |
| 94 93 614 08 | 3 510 100 | 91 49 246 08 | 44 | 1 |
| 94 93 622 08 | 3 500 | 91 05 776 08 | 3 | 1 |
| 94 93 622 08 | 3 510 100 | 91 49 246 08 | 45 | 1 |
| 94 93 808 08 | 3 510 100 | 91 49 246 08 | 6 | 2 |
| 94 93 809 08 | 3 500 | 91 05 776 08 | 4 | 1 |
| 94 93 809 08 | 3 510 100 | 91 49 246 08 | 46 | 1 |
| 94 93 810 08 | 3 500 | 91 05 776 08 | 5 | 1 |
| 94 93 810 08 | 3 510 100 | 91 49 246 08 | 47 | 1 |
| 95 04 774 08 | 3 501 | 91 05 788 08 | 10 | 4 |
| 95 04 775 08 | 3 501 | 91 05 788 08 | 9 | 4 |
| 95 05 190 08 | 3 100 | 91 59 279 08 | 34 | 1 |
| 95 16 657 08 | 3 501 | 91 05 788 08 | 26 | 1 |
| 95 18 923 08 | 3 106 000 | 91 60 313 08 | 54 | 1 |
| 95 18 924 08 | 3 106 000 | 91 60 313 08 | 35 | 1 |
| 95 19 139 08 | 2 102 | 91 51 080 08 | 2 | 2 |
| 95 19 139 08 | 2 350 | 91 81 361 08 | 4 | 1 |
| 95 21 770 08 | 2 200 | 91 81 095 08 | 60 | 8 |
| 95 21 770 08 | 2 210 | 91 81 614 08 | 9 | 2 |
| 95 22 281 08 | 3 501 | 91 05 788 08 | 19 | 1 |
| 95 31 434 08 | 3 510 006 | 96 20 924 08 | 4 | 1 |
| 95 31 477 08 | 3 510 100 | 91 49 246 08 | 7 | 1 |
| 95 31 623 08 | 3 280 | 91 45 571 08 | 3 | 1 |
| 95 33 651 08 | 2 502 | 91 01 533 08 | 3 | 1 |
| 95 33 653 08 | 2 502 | 91 01 533 08 | 9 | 1 |
| 95 33 654 08 | 2 502 | 91 01 533 08 | 2 | 1 |
| 95 33 655 08 | 2 502 | 91 01 533 08 | 8 | 1 |
| 95 35 154 08 | 2 270 | 91 50 456 08 | 6 | 7 |
| 95 35 154 08 | 2 340 | 91 53 116 08 | 6 | 5 |
| 95 35 155 08 | 2 270 | 91 50 456 08 | 7 | 1 |
| 95 35 155 08 | 2 340 | 91 53 116 08 | 7 | 1 |
| 95 35 264 08 | 2 932 042 | 96 68 587 08 | 2 | 1 |
| 95 35 266 08 | 2 932 042 | 96 68 587 08 | 5 | 1 |
| 95 35 266 08 | 2 932 095 | 96 46 064 08 | 4 | 1 |
| 95 35 272 08 | 2 932 042 | 96 68 587 08 | 4 | 1 |
| 95 35 273 08 | 2 932 095 | 96 46 064 08 | 7 | 1 |
| 95 35 560 08 | 2 502 | 91 01 533 08 | 4 | 2 |
| 95 36 006 08 | 2 970 | 91 55 482 08 | 69 | 1 |
| 95 36 006 08 | 2 971 | 91 50 610 08 | 33 | 1 |
| 95 36 085 08 | 3 510 100 | 91 49 246 08 | 5 | 2 |
| 95 36 200 08 | 3 501 | 91 05 788 08 | 15 | 1 |
| 95 36 201 08 | 3 501 | 91 05 788 08 | 18 | 1 |
| 95 36 413 08 | 2 210 | 91 81 614 08 | 402 | 1 |

| Item | Page | Assembly | Pos. | Quantity |
|---|---|---|---|---|
| 95 36 414 08 | 2 210 | 91 81 614 08 | 403 | 1 |
| 95 36 490 08 | 2 970 092 | 96 22 207 08 | 2 | 1 |
| 95 36 490 08 | 2 971 | 91 50 610 08 | (3) | 1 |
| 95 36 500 08 | 3 101 | 91 60 312 08 | 68 | 16 |
| 95 36 500 08 | 3 106 000 | 91 60 313 08 | 45 | 14 |
| 95 36 500 08 | 3 501 | 91 05 788 08 | 108 | 21 |
| 95 36 500 08 | 3 511 | 91 54 159 08 | 6 | 1 |
| 95 36 500 08 | 3 511 006 | 96 45 029 08 | 28 | 1 |
| 95 36 561 08 | 3 106 000 | 91 60 313 08 | 31 | 2 |
| 95 36 763 08 | 2 270 | 91 50 456 08 | 8 | 2 |
| 95 36 763 08 | 2 340 | 91 53 116 08 | 8 | 2 |
| 95 36 785 08 | 2 502 | 91 01 533 08 | 34 | 2 |
| 95 36 953 08 | 2 510 072 | 96 44 614 08 | 4 | 3 |
| 95 36 953 08 | 2 510 100 | 96 44 750 08 | 30 | 3 |
| 95 36 953 08 | 2 510 200 | 96 41 258 08 | 40 | 5 |
| 95 36 953 08 | 2 510 201 | 96 42 011 08 | 4 | 3 |
| 95 36 953 08 | 2 515 007 | 96 42 014 08 | 5 | 4 |
| 95 36 953 08 | 3 750 026 | 96 89 407 08 | 5 | 2 |
| 95 36 953 08 | 3 750 028 | 96 89 408 08 | 5 | 2 |
| 95 36 969 08 | 2 711 | 91 53 002 08 | 15 | 1 |
| 95 37 009 08 | 2 932 215 | 92 26 129 08 | 2 | 1 |
| 95 37 112 08 | 2 520 000 | 91 49 872 08 | 102 | 1 |
| 95 37 139 08 | 3 106 000 | 91 60 313 08 | 34 | 1 |
| 95 37 141 08 | 3 101 | 91 60 312 08 | 65 | 7 |
| 95 37 261 08 | 3 105 000 | 91 62 546 08 | 9 | 1 |
| 95 37 261 08 | 3 106 000 | 91 60 313 08 | 9 | 1 |
| 95 37 301 08 | 2 932 042 | 96 68 587 08 | 59 | 2 |
| 95 37 446 08 | 2 501 000 | 91 48 769 08 | 15 | 1 |
| 95 37 449 08 | 3 101 | 91 60 312 08 | 61 | 2 |
| 95 37 466 08 | 3 510 006 | 96 20 924 08 | 9 | 1 |
| 95 37 494 08 | 3 106 000 | 91 60 313 08 | 65 | 1 |
| 95 37 495 08 | 3 501 | 91 05 788 08 | 30 | 1 |
| 95 37 507 08 | 2 501 000 | 91 48 769 08 | 16 | 1 |
| 95 37 609 08 | 2 971 | 91 50 610 08 | (1) | 1 |
| 95 37 664 08 | 2 440 022 | 96 42 336 08 | 8 | 2 |
| 95 37 816 08 | 2 950 | 91 49 515 08 | (1) | 2 |
| 95 38 436 08 | 3 330 | 91 57 885 08 | 9 | 1 |
| 95 38 563 08 | 3 501 | 91 05 788 08 | 67 | 1 |
| 95 38 688 08 | 2 210 | 91 81 614 08 | 17 | 2 |
| 95 38 734 08 | 2 450 | 91 53 926 08 | 23 | 5 |
| 95 38 734 08 | 2 510 100 | 96 44 750 08 | 31 | 1 |
| 95 40 160 08 | 2 970 | 91 55 482 08 | 79 | 2 |
| 95 40 160 08 | 2 971 | 91 50 610 08 | 49 | 1 |
| 95 41 137 08 | 2 510 100 | 96 44 750 08 | 12 | 1 |
| 95 41 415 08 | 2 711 | 91 53 002 08 | 17 | 1 |
| 95 41 437 08 | 3 501 | 91 05 788 08 | 99 | 1 |
| 95 41 800 08 | 3 330 | 91 57 885 08 | 8 | 1 |
| 95 43 136 08 | 2 970 092 | 96 22 207 08 | 1 | 1 |
| 95 47 627 08 | 3 105 000 | 91 62 546 08 | 10 | 1 |
| 95 47 627 08 | 3 106 000 | 91 60 313 08 | 10 | 1 |
| 95 47 666 08 | 3 105 000 | 91 62 546 08 | 11 | 1 |
| 95 47 667 08 | 3 106 000 | 91 60 313 08 | 11 | 1 |
| 95 48 362 08 | 2 502 | 91 01 533 08 | 14 | 4 |
| 95 50 448 08 | 3 330 | 91 57 885 08 | 21 | 1 |
| 95 50 449 08 | 3 330 | 91 57 885 08 | 22 | 1 |
| 95 51 123 08 | 3 501 | 91 05 788 08 | 51 | 1 |
| 95 52 153 08 | 2 932 042 | 96 68 587 08 | 7 | 1 |
| 95 54 418 08 | 3 106 000 | 91 60 313 08 | 44 | 2 |
| 95 54 506 08 | 3 101 | 91 60 312 08 | 38 | 2 |
| 95 54 506 08 | 3 102 000 | 91 62 543 08 | 38 | 2 |
| 95 54 506 08 | 3 103 000 | 91 62 544 08 | 38 | 2 |
| 95 54 506 08 | 3 104 000 | 91 62 545 08 | 38 | 2 |
| 95 54 506 08 | 3 105 000 | 91 62 546 08 | 38 | 2 |
| 95 54 507 08 | 3 101 | 91 60 312 08 | 54 | 1 |
| 95 54 507 08 | 3 102 000 | 91 62 543 08 | 54 | 1 |
| 95 54 507 08 | 3 103 000 | 91 62 544 08 | 54 | 1 |
| 95 54 508 08 | 3 101 | 91 60 312 08 | 57 | 1 |
| 95 54 508 08 | 3 102 000 | 91 62 543 08 | 57 | 1 |
| 95 54 508 08 | 3 103 000 | 91 62 544 08 | 57 | 1 |
| 95 55 000 08 | 2 510 072 | 96 44 614 08 | 6 | 1 |
| 95 55 000 08 | 2 510 201 | 96 42 011 08 | 6 | 1 |
| 95 55 239 08 | 3 101 | 91 60 312 08 | 26 | 6 |
| 95 55 324 03 | 1 100 215 | 99 20 783 14 | 16 | 1 |
| 95 55 525 08 | 3 510 100 | 91 49 246 08 | 14 | 1 |
| 95 55 526 08 | 3 510 100 | 91 49 246 08 | 24 | 1 |
| 95 55 602 08 | 3 511 006 | 96 45 029 08 | 5 | 1 |
| 95 55 603 08 | 3 511 006 | 96 45 029 08 | 6 | 1 |
| 95 56 000 08 | 3 330 | 91 57 885 08 | 43 | 5 |
| 95 56 036 08 | 3 330 | 91 57 885 08 | 44 | 1 |
| 95 56 681 08 | 2 920 | 91 55 477 08 | 35 | 1 |
| 95 56 879 08 | 2 920 | 91 55 477 08 | 34 | 1 |
| 95 57 391 08 | 2 520 000 | 91 49 872 08 | 13 | 1 |
| 95 57 463 03 | 1 100 215 | 99 20 783 14 | 12 | 2 |
| 95 57 472 03 | 1 100 215 | 99 20 783 14 | 13 | 10 |
| 95 59 178 08 | 3 330 | 91 57 885 08 | 39 | 2 |
| 95 59 179 08 | 3 330 | 91 57 885 08 | 40 | 4 |
| 95 59 180 08 | 3 330 | 91 57 885 08 | 41 | 2 |
| 95 59 195 08 | 2 970 | 91 55 482 08 | 28 | 2 |
| 95 59 195 08 | 2 970 | 91 55 482 08 | 45 | 1 |
| 95 59 272 08 | 3 101 | 91 60 312 08 | 67 | 5 |
| 95 59 743 08 | 3 510 100 | 91 49 246 08 | 29 | 1 |
| 95 60 636 08 | 2 520 021 | 92 17 203 08 | 5 | 1 |
| 95 60 688 08 | 2 520 018 | 92 13 430 08 | 10 | 1 |
| 95 61 648 08 | 2 350 | 91 81 361 08 | 3 | 1 |
| 95 62 101 14 | 1 100 215 | 99 20 783 14 | 9 | 2 |
| 95 62 110 14 | 1 100 215 | 99 20 783 14 | 18 | 2 |
| 95 62 140 14 | 1 100 205 | 96 51 633 08 | 29 | 2 |
| 95 62 140 14 | 1 100 210 | 96 51 634 08 | 29 | 2 |
| 95 63 963 08 | 2 932 166 | 92 68 911 08 | 1 | 1 |
| 95 64 142 08 | 3 330 | 91 57 885 08 | 17 | 4 |
| 95 64 143 08 | 3 330 | 91 57 885 08 | 45 | 4 |
| 95 64 426 14 | 1 970 | 96 71 367 08 | 5 | 2 |
| 95 64 701 08 | 3 100 | 91 59 279 08 | 24 | 1 |
| 95 65 065 08 | 2 520 020 | 92 50 859 08 | 2 | 1 |
| 95 65 247 08 | 2 522 | 91 10 037 08 | 8 | 1 |
| 95 65 560 08 | 2 520 001 | 92 48 796 08 | 8 | 1 |
| 95 65 956 08 | 2 500 | 91 48 594 08 | 8 | 1 |
| 95 66 267 08 | 2 520 000 | 91 49 872 08 | 87 | 1 |
| 95 66 268 08 | 2 520 000 | 91 49 872 08 | 88 | 1 |
| 95 66 291 08 | 2 520 000 | 91 49 872 08 | 72 | 1 |
| 95 66 574 14 | 1 100 216 | 96 46 363 08 | 8 | 8 |
| 95 66 575 14 | 1 100 216 | 96 46 363 08 | 9 | 4 |
| 95 66 602 08 | 2 502 | 91 01 533 08 | 36 | 1 |
| 95 66 682 08 | 2 520 000 | 91 49 872 08 | 54 | 1 |
| 95 66 683 08 | 2 520 000 | 91 49 872 08 | 55 | 1 |
| 95 66 684 08 | 2 520 000 | 91 49 872 08 | 56 | 1 |
| 95 66 755 08 | 2 520 000 | 91 49 872 08 | 53 | 1 |
| 95 66 761 08 | 2 520 000 | 91 49 872 08 | 62 | 1 |
| 95 67 372 08 | 3 101 | 91 60 312 08 | 66 | 1 |
| 95 67 459 08 | 2 520 000 | 91 49 872 08 | 120 | 1 |

| Item | Page | Assembly | Pos. | Quantity |
|---|---|---|---|---|
| 95 67 586 08 | 3 330 | 91 57 885 08 | 5 | 1 |
| 95 67 891 08 | 2 955 | 91 49 516 08 | 12 | 2 |
| 95 67 926 08 | 2 520 000 | 91 49 872 08 | 20 | 1 |
| 95 67 938 08 | 2 520 000 | 91 49 872 08 | 50 | 1 |
| 95 70 110 08 | 3 102 000 | 91 62 543 08 | 6 | 1 |
| 95 70 110 08 | 3 103 000 | 91 62 544 08 | 6 | 1 |
| 95 70 110 08 | 3 104 000 | 91 62 545 08 | 6 | 1 |
| 95 70 111 08 | 3 102 000 | 91 62 543 08 | 7 | 1 |
| 95 70 111 08 | 3 103 000 | 91 62 544 08 | 7 | 1 |
| 95 70 111 08 | 3 104 000 | 91 62 545 08 | 7 | 1 |
| 95 70 112 08 | 3 102 000 | 91 62 543 08 | 8 | 4 |
| 95 70 112 08 | 3 103 000 | 91 62 544 08 | 8 | 4 |
| 95 70 112 08 | 3 104 000 | 91 62 545 08 | 8 | 4 |
| 95 70 113 08 | 3 102 000 | 91 62 543 08 | 9 | 1 |
| 95 70 113 08 | 3 103 000 | 91 62 544 08 | 9 | 1 |
| 95 70 113 08 | 3 104 000 | 91 62 545 08 | 9 | 1 |
| 95 70 114 08 | 3 102 000 | 91 62 543 08 | 11 | 1 |
| 95 70 176 08 | 3 105 000 | 91 62 546 08 | 6 | 1 |
| 95 70 176 08 | 3 106 000 | 91 60 313 08 | 6 | 1 |
| 95 70 177 08 | 3 105 000 | 91 62 546 08 | 7 | 1 |
| 95 70 177 08 | 3 106 000 | 91 60 313 08 | 7 | 1 |
| 95 70 188 08 | 3 105 000 | 91 62 546 08 | 8 | 4 |
| 95 70 188 08 | 3 106 000 | 91 60 313 08 | 8 | 4 |
| 95 70 189 08 | 3 106 000 | 91 60 313 08 | 19 | 1 |
| 95 70 207 08 | 3 105 000 | 91 62 546 08 | 19 | 1 |
| 95 70 208 08 | 2 520 000 | 91 49 872 08 | 130 | 1 |
| 95 70 252 08 | 3 102 000 | 91 62 543 08 | 19 | 2 |
| 95 70 252 08 | 3 103 000 | 91 62 544 08 | 19 | 2 |
| 95 70 252 08 | 3 104 000 | 91 62 545 08 | 19 | 2 |
| 95 70 325 08 | 3 101 | 91 60 312 08 | 44 | 4 |
| 95 70 325 08 | 3 102 000 | 91 62 543 08 | 44 | 4 |
| 95 70 325 08 | 3 103 000 | 91 62 544 08 | 44 | 4 |
| 95 70 325 08 | 3 104 000 | 91 62 545 08 | 44 | 2 |
| 95 70 325 08 | 3 105 000 | 91 62 546 08 | 44 | 2 |
| 95 70 327 08 | 3 102 000 | 91 62 543 08 | 49 | 2 |
| 95 70 329 08 | 3 101 | 91 60 312 08 | 51 | 1 |
| 95 70 329 08 | 3 102 000 | 91 62 543 08 | 51 | 1 |
| 95 70 329 08 | 3 103 000 | 91 62 544 08 | 51 | 1 |
| 95 70 358 08 | 2 520 000 | 91 49 872 08 | 122 | 1 |
| 95 70 359 08 | 2 520 000 | 91 49 872 08 | 123 | 1 |
| 95 70 378 08 | 2 520 000 | 91 49 872 08 | 124 | 2 |
| 95 70 379 08 | 3 103 000 | 91 62 544 08 | 11 | 1 |
| 95 70 381 08 | 3 103 000 | 91 62 544 08 | 49 | 2 |
| 95 70 399 08 | 3 105 000 | 91 62 546 08 | 49 | 2 |
| 95 70 441 08 | 2 520 000 | 91 49 872 08 | 113 | 1 |
| 95 70 562 08 | 3 104 000 | 91 62 545 08 | 49 | 2 |
| 95 70 563 08 | 3 104 000 | 91 62 545 08 | 11 | 1 |
| 95 70 666 08 | 3 101 | 91 60 312 08 | 49 | 2 |
| 95 70 687 08 | 2 440 022 | 96 42 336 08 | 24 | 3 |
| 95 70 688 08 | 2 440 022 | 96 42 336 08 | 25 | 3 |
| 95 70 952 08 | 2 520 000 | 91 49 872 08 | 143 | 1 |
| 95 70 957 14 | 1 100 205 | 96 51 633 08 | 42 | 4 |
| 95 70 957 14 | 1 100 210 | 96 51 634 08 | 42 | 4 |
| 95 70 958 14 | 1 100 205 | 96 51 633 08 | 43 | 4 |
| 95 70 958 14 | 1 100 210 | 96 51 634 08 | 43 | 4 |
| 95 70 959 14 | 1 100 205 | 96 51 633 08 | 40 | 4 |
| 95 70 959 14 | 1 100 210 | 96 51 634 08 | 40 | 4 |
| 95 71 000 08 | 2 102 | 91 51 080 08 | 1 | 2 |
| 95 71 028 08 | 3 510 100 | 91 49 246 08 | 38 | 1 |
| 95 71 203 08 | 2 680 | 91 53 225 08 | 12 | 3 |

| Item | Page | Assembly | Pos. | Quantity |
|---|---|---|---|---|
| 95 83 404 14 | 1 100 220 | 99 08 404 14 | 5 | 2 |
| 95 83 464 14 | 1 100 220 | 99 08 404 14 | 4 | 2 |
| 95 95 526 14 | 1 100 205 | 96 51 633 08 | 45 | 48 |
| 95 95 526 14 | 1 100 210 | 96 51 634 08 | 45 | 48 |
| 96 00 389 4 | 2 210 008 | 96 48 137 08 | 7 | 1 |
| 96 00 389 5 | 2 210 008 | 96 48 137 08 | 8 | 1 |
| 96 01 619 6 | 3 101 | 91 60 312 08 | 18 | 1 |
| 96 18 681 08 | 3 501 | 91 05 788 08 | 2 | 1 |
| 96 19 338 08 | 2 430 | 91 54 389 08 | 5 | 1 |
| 96 19 448 08 | 2 530 | 91 34 053 08 | 3 | 1 |
| 96 19 563 08 | 2 932 042 | 96 68 587 08 | 47 | 1 |
| 96 19 694 08 | 2 932 167 | 96 32 480 08 | 10 | 1 |
| 96 20 154 08 | 2 340 004 | 96 43 780 08 | 1 | 1 |
| 96 20 157 08 | 3 100 | 91 59 279 08 | 10 | 1 |
| 96 20 219 08 | 3 931 032 | 96 20 959 08 | 10 | 1 |
| 96 20 219 08 | 3 931 100 | 96 20 960 08 | 10 | 1 |
| 96 20 364 08 | 2 975 038 | 91 26 492 08 | 91 | 1 |
| 96 20 460 08 | 2 913 | 91 32 850 08 | 2 | 1 |
| 96 20 465 08 | 2 440 022 | 96 42 336 08 | 1 | 1 |
| 96 20 494 08 | 3 501 | 91 05 788 08 | 4 | 1 |
| 96 20 515 08 | 2 440 022 | 96 42 336 08 | 17 | 2 |
| 96 20 599 08 | 2 913 | 91 32 850 08 | 1 | 1 |
| 96 20 732 08 | 2 913 005 | 96 28 696 08 | 1 | 1 |
| 96 20 750 08 | 2 913 003 | 96 20 599 08 | 9 | 1 |
| 96 20 761 08 | 2 913 006 | 96 20 732 08 | 10 | 1 |
| 96 20 762 08 | 2 913 005 | 96 28 696 08 | 21 | 1 |
| 96 20 863 08 | 2 970 | 91 55 482 08 | 62 | 1 |
| 96 20 924 08 | 3 510 100 | 91 49 246 08 | 2 | 1 |
| 96 20 929 08 | 3 510 006 | 96 20 924 08 | 1 | 1 |
| 96 20 935 08 | 3 100 | 91 59 279 08 | 30 | 1 |
| 96 20 959 08 | 3 500 020 | 91 55 133 08 | 2 | 1 |
| 96 20 960 08 | 3 500 020 | 91 55 133 08 | 3 | 1 |
| 96 20 961 08 | 3 931 100 | 96 20 960 08 | 7 | 1 |
| 96 20 962 08 | 3 931 100 | 96 20 960 08 | 8 | 1 |
| 96 20 963 08 | 3 931 032 | 96 20 959 08 | 6 | 1 |
| 96 20 965 08 | 3 930 | 91 59 068 08 | 4 | 1 |
| 96 20 966 08 | 3 930 341 | 96 20 965 08 | 5 | 1 |
| 96 20 967 08 | 3 930 492 | 96 20 966 08 | 270 | 1 |
| 96 21 102 08 | 3 780 400 | 91 59 294 08 | 5 | 1 |
| 96 21 359 08 | 3 780 400 | 91 59 294 08 | 10 | 1 |
| 96 21 400 08 | 2 998 | 91 51 090 08 | 471 | 1 |
| 96 21 730 08 | 2 971 012 | 96 43 144 08 | 255 | 1 |
| 96 21 863 08 | 2 997 | 91 51 089 08 | 360 | 1 |
| 96 21 897 08 | 2 998 | 91 51 090 08 | 472 | 1 |
| 96 21 938 08 | 3 930 523 | 96 43 943 08 | 6 | 1 |
| 96 22 070 08 | 2 102 | 91 51 080 08 | 24 | 1 |
| 96 22 207 08 | 2 970 | 91 55 482 08 | 99 | 1 |
| 96 22 209 08 | 3 931 032 | 96 20 959 08 | 5 | 1 |
| 96 22 416 08 | 2 997 | 91 51 089 08 | 361 | 1 |
| 96 22 417 08 | 2 997 | 91 51 089 08 | 365 | 1 |
| 96 22 573 08 | 2 997 | 91 51 089 08 | 485 | 1 |
| 96 22 580 08 | 2 975 038 | 91 26 492 08 | (456) | 1 |
| 96 22 582 08 | 2 975 038 | 91 26 492 08 | (455) | 1 |
| 96 22 613 08 | 2 975 038 | 91 26 492 08 | (487) | 1 |
| 96 22 655 08 | 2 975 038 | 91 26 492 08 | 93 | 1 |
| 96 22 885 08 | 2 102 | 91 51 080 08 | 6 | 1 |
| 96 23 339 08 | 2 997 | 91 51 089 08 | 320 | 1 |
| 96 23 355 08 | 2 997 | 91 51 089 08 | 368 | 1 |
| 96 24 299 08 | 2 970 | 91 55 482 08 | 60 | 1 |
| 96 24 300 08 | 2 970 | 91 55 482 08 | 61 | 1 |

| Item | Page | Assembly | Pos. | Quantity |
|---|---|---|---|---|
| 96 24 498 08 | 2 780 854 | 96 37 908 08 | 1 | 1 |
| 96 24 499 08 | 2 780 852 | 96 24 845 08 | 6 | 1 |
| 96 24 553 08 | 2 997 | 91 51 089 08 | 307 | 1 |
| 96 24 749 08 | 2 997 | 91 51 089 08 | 366 | 1 |
| 96 24 845 08 | 2 780 854 | 96 37 908 08 | 2 | 1 |
| 96 25 733 08 | 2 450 025 | 96 35 649 08 | 1 | 1 |
| 96 26 301 08 | 2 510 018 | 96 44 046 08 | 20 | 1 |
| 96 28 366 08 | 2 932 042 | 96 68 587 08 | 42 | 1 |
| 96 28 388 08 | 2 533 | 91 54 254 08 | 5 | 1 |
| 96 28 609 08 | 2 997 | 91 51 089 08 | 326 | 1 |
| 96 28 688 08 | 2 780 852 | 96 24 845 08 | 4 | 1 |
| 96 28 696 08 | 2 913 | 91 32 850 08 | 4 | 1 |
| 96 29 047 08 | XSK_Z480 | SK_Z48005 | 120 | 1 |
| 96 29 049 08 | XSK_Z480 | SK_Z48005 | 110 | 1 |
| 96 29 469 08 | 2 920 083 | 96 31 039 08 | 11 | 1 |
| 96 29 470 08 | 2 920 083 | 96 31 039 08 | 14 | 1 |
| 96 29 964 08 | 2 997 | 91 51 089 08 | 338 | 1 |
| 96 30 133 08 | 2 210 | 91 81 614 08 | 3 | 2 |
| 96 30 135 08 | 2 210 | 91 81 614 08 | 4 | 1 |
| 96 30 137 08 | 2 210 | 91 81 614 08 | (1) | 1 |
| 96 30 446 08 | 2 210 008 | 96 48 137 08 | 1 | 1 |
| 96 30 554 08 | 2 501 000 | 91 48 769 08 | 35 | 1 |
| 96 30 572 08 | 2 210 | 91 81 614 08 | 5 | 1 |
| 96 30 573 08 | 2 210 | 91 81 614 08 | (1) | 1 |
| 96 30 622 08 | 2 510 100 | 96 44 750 08 | 8 | 1 |
| 96 30 654 08 | 2 510 100 | 96 44 750 08 | 9 | 1 |
| 96 31 039 08 | 2 260 | 91 46 555 08 | 5 | 1 |
| 96 31 147 08 | 2 260 | 91 46 555 08 | 1 | 1 |
| 96 31 154 08 | 2 260 006 | 96 31 147 08 | 1 | 1 |
| 96 31 466 08 | 2 920 013 | 96 41 599 08 | 20 | 1 |
| 96 31 626 08 | 2 510 100 | 96 44 750 08 | 3 | 1 |
| 96 31 670 08 | 2 920 013 | 96 41 599 08 | 16 | 1 |
| 96 31 781 08 | 2 510 200 | 96 41 258 08 | 9 | 2 |
| 96 31 865 08 | 2 920 | 91 55 477 08 | 20 | 1 |
| 96 31 967 08 | 2 997 | 91 51 089 08 | 315 | 1 |
| 96 32 114 08 | 2 510 018 | 96 44 046 08 | 10 | 1 |
| 96 32 139 08 | 2 533 001 | 96 41 568 08 | 1 | 1 |
| 96 32 140 08 | 2 200 | 91 81 095 08 | 2 | 1 |
| 96 32 324 08 | 2 200 048 | 96 32 140 08 | 3 | 2 |
| 96 32 480 08 | 2 932 042 | 96 68 587 08 | 16 | 1 |
| 96 32 604 08 | 2 102 | 91 51 080 08 | 20 | 2 |
| 96 32 610 08 | 2 102 022 | 96 32 604 08 | 1 | 1 |
| 96 32 884 08 | 2 998 | 91 51 090 08 | 470 | 1 |
| 96 32 885 08 | 2 210 | 91 81 614 08 | (297) | 1 |
| 96 33 229 08 | 2 920 013 | 96 41 599 08 | 14 | 1 |
| 96 33 352 08 | 2 971 012 | 96 43 144 08 | 258 | 1 |
| 96 33 363 08 | 2 997 | 91 51 089 08 | 363 | 1 |
| 96 33 364 08 | 2 997 | 91 51 089 08 | 302 | 1 |
| 96 33 731 08 | 2 510 201 | 96 42 011 08 | 12 | 1 |
| 96 33 834 08 | 2 440 022 | 96 42 336 08 | 5 | 1 |
| 96 34 184 08 | 2 501 000 | 91 48 769 08 | 2 | 1 |
| 96 34 186 08 | 2 501 022 | 96 34 184 08 | 1 | 1 |
| 96 34 947 08 | 2 520 000 | 91 49 872 08 | 154 | 1 |
| 96 34 985 08 | 3 106 000 | 91 60 313 08 | 66 | 1 |
| 96 35 336 08 | 2 970 | 91 55 482 08 | (290) | 1 |
| 96 35 337 08 | 2 970 | 91 55 482 08 | (291) | 1 |
| 96 35 338 08 | 2 998 | 91 51 090 08 | 430 | 1 |
| 96 35 339 08 | 2 998 | 91 51 090 08 | 431 | 1 |
| 96 35 340 08 | 2 998 | 91 51 090 08 | 432 | 1 |
| 96 35 341 08 | 2 998 | 91 51 090 08 | 433 | 1 |
| 96 35 344 08 | 2 998 | 91 51 090 08 | 468 | 1 |
| 96 35 345 08 | 2 998 | 91 51 090 08 | 473 | 1 |
| 96 35 350 08 | 2 210 | 91 81 614 08 | (190) | 1 |
| 96 35 351 08 | 2 210 | 91 81 614 08 | (191) | 1 |
| 96 35 445 08 | 2 510 100 | 96 44 750 08 | 102 | 1 |
| 96 35 560 08 | 3 106 000 | 91 60 313 08 | 52 | 1 |
| 96 35 574 08 | 1 630 003 | 96 47 650 08 | 2 | 1 |
| 96 35 649 08 | 2 450 | 91 53 926 08 | 1 | 1 |
| 96 35 880 08 | 2 920 013 | 96 41 599 08 | 31 | 1 |
| 96 35 881 08 | 2 920 013 | 96 41 599 08 | 32 | 1 |
| 96 35 930 08 | 1 997 | 91 53 489 08 | 104 | 1 |
| 96 35 952 08 | 2 997 | 91 51 089 08 | 202 | 1 |
| 96 35 995 08 | 2 971 012 | 96 43 144 08 | 383 | 1 |
| 96 35 996 08 | 2 971 012 | 96 43 144 08 | 257 | 1 |
| 96 35 999 08 | 2 970 061 | 96 43 131 08 | 370 | 1 |
| 96 36 055 08 | 2 920 | 91 55 477 08 | 27 | 1 |
| 96 36 056 08 | 2 920 574 | 96 36 055 08 | 5 | 1 |
| 96 36 299 08 | 2 920 | 91 55 477 08 | 16 | 1 |
| 96 36 341 08 | 2 920 013 | 96 41 599 08 | 15 | 1 |
| 96 36 724 08 | 2 102 | 91 51 080 08 | 50 | 1 |
| 96 36 726 08 | 2 102 | 91 51 080 08 | 51 | 1 |
| 96 36 738 08 | 2 531 | 91 48 669 08 | 1 | 1 |
| 96 36 739 08 | 2 531 | 91 48 669 08 | 2 | 1 |
| 96 36 794 08 | 2 510 200 | 96 41 258 08 | 4 | 1 |
| 96 36 804 08 | 2 950 | 91 49 515 08 | 99 | 1 |
| 96 36 933 08 | 2 501 000 | 91 48 769 08 | 6 | 1 |
| 96 36 979 08 | 2 970 061 | 96 43 131 08 | 375 | 1 |
| 96 36 980 08 | 2 997 | 91 51 089 08 | 301 | 1 |
| 96 36 981 08 | 2 997 | 91 51 089 08 | 306 | 1 |
| 96 36 982 08 | 2 997 | 91 51 089 08 | 313 | 1 |
| 96 36 985 08 | 2 997 | 91 51 089 08 | 334 | 1 |
| 96 36 986 08 | 2 997 | 91 51 089 08 | 336 | 1 |
| 96 36 988 08 | 2 997 | 91 51 089 08 | 291 | 1 |
| 96 36 989 08 | 2 997 | 91 51 089 08 | 292 | 1 |
| 96 36 990 08 | 2 997 | 91 51 089 08 | 293 | 1 |
| 96 36 991 08 | 2 970 103 | 96 43 157 08 | 263 | 1 |
| 96 36 993 08 | 2 997 | 91 51 089 08 | 355 | 1 |
| 96 36 994 08 | 2 997 | 91 51 089 08 | 357 | 1 |
| 96 36 995 08 | 2 997 | 91 51 089 08 | 359 | 1 |
| 96 36 996 08 | 2 997 | 91 51 089 08 | 390 | 1 |
| 96 36 997 08 | 2 997 | 91 51 089 08 | 391 | 1 |
| 96 36 997 08 | 2 997 | 91 51 089 08 | 392 | 1 |
| 96 36 998 08 | 2 997 | 91 51 089 08 | 393 | 1 |
| 96 36 999 08 | 2 997 | 91 51 089 08 | 397 | 1 |
| 96 37 000 08 | 2 997 | 91 51 089 08 | 398 | 2 |
| 96 37 009 08 | 2 970 061 | 96 43 131 08 | 372 | 1 |
| 96 37 118 08 | 2 997 | 91 51 089 08 | 290 | 1 |
| 96 37 121 08 | 2 831 021 | 96 38 140 08 | 1102 | 1 |
| 96 37 122 08 | 2 831 021 | 96 38 140 08 | 1103 | 1 |
| 96 37 332 08 | 2 560 | 91 50 900 08 | 1 | 1 |
| 96 37 697 08 | 3 930 718 | 96 56 248 08 | 220 | 1 |
| 96 37 698 08 | 3 930 718 | 96 56 248 08 | 250 | 1 |
| 96 37 699 08 | 3 930 718 | 96 56 248 08 | 260 | 1 |
| 96 37 908 08 | 2 780 850 | 91 60 938 08 | 1 | 1 |
| 96 37 919 08 | 2 270 001 | 96 37 923 08 | 1 | 1 |
| 96 37 923 08 | 2 270 | 91 50 456 08 | 1 | 1 |
| 96 38 140 08 | 2 831 | 91 47 871 08 | 500 | 1 |
| 96 38 196 08 | 2 831 021 | 96 38 140 08 | 1104 | 1 |
| 96 38 574 08 | 2 831 021 | 96 38 140 08 | 1101 | 1 |
| 96 38 773 08 | 2 210 | 91 81 614 08 | 6 | 1 |

| Item | Page | Assembly | Pos. | Quantity |
|---|---|---|---|---|
| 96 38 781 08 | 2 920 013 | 96 41 599 08 | 62 | 1 |
| 96 39 180 08 | 2 970 | 91 55 482 08 | 97 | 1 |
| 96 39 197 08 | 2 997 | 91 51 089 08 | 333 | 1 |
| 96 40 266 08 | 2 510 108 | 96 44 555 08 | 800 | 1 |
| 96 40 606 08 | 2 560 | 91 50 900 08 | 6 | 2 |
| 96 40 962 08 | 2 831 021 | 96 38 140 08 | 1100 | 1 |
| 96 41 044 08 | 2 984 | 91 52 906 08 | 1 | 1 |
| 96 41 045 08 | 2 984 | 91 52 906 08 | 2 | 1 |
| 96 41 093 08 | 2 920 | 91 55 477 08 | 22 | 1 |
| 96 41 095 08 | 2 920 904 | 96 41 093 08 | 5 | 1 |
| 96 41 258 08 | 2 510 | 91 53 981 08 | 2 | 1 |
| 96 41 550 08 | 2 510 100 | 96 44 750 08 | 4 | 1 |
| 96 41 568 08 | 2 533 | 91 54 254 08 | 3 | 1 |
| 96 41 571 08 | 2 533 | 91 54 254 08 | (2) | 1 |
| 96 41 599 08 | 2 920 | 91 55 477 08 | 12 | 1 |
| 96 41 600 08 | 2 920 013 | 96 41 599 08 | 34 | 1 |
| 96 42 011 08 | 2 510 200 | 96 41 258 08 | 1 | 1 |
| 96 42 014 08 | 2 515 | 91 51 084 08 | 1 | 1 |
| 96 42 015 08 | 2 515 007 | 96 42 014 08 | 1 | 1 |
| 96 42 019 08 | 2 510 200 | 96 41 258 08 | 2 | 1 |
| 96 42 021 08 | 2 510 201 | 96 42 011 08 | 1 | 1 |
| 96 42 336 08 | 2 440 | 91 52 288 08 | 1 | 1 |
| 96 42 744 08 | 1 997 | 91 53 489 08 | 143 | 1 |
| 96 42 835 08 | 3 106 000 | 91 60 313 08 | 33 | 5 |
| 96 42 835 08 | 3 511 006 | 96 45 029 08 | 3 | 1 |
| 96 42 856 08 | 2 997 | 91 51 089 08 | 212 | 1 |
| 96 42 857 08 | 2 997 | 91 51 089 08 | 213 | 1 |
| 96 42 858 08 | 2 997 | 91 51 089 08 | 347 | 1 |
| 96 42 859 08 | 2 997 | 91 51 089 08 | 348 | 1 |
| 96 42 864 08 | 2 971 012 | 96 43 144 08 | 385 | 1 |
| 96 42 865 08 | 2 971 012 | 96 43 144 08 | 386 | 1 |
| 96 42 866 08 | 2 970 061 | 96 43 131 08 | 371 | 1 |
| 96 43 131 08 | 2 970 | 91 55 482 08 | 91 | 1 |
| 96 43 144 08 | 2 971 | 91 50 610 08 | 91 | 1 |
| 96 43 157 08 | 2 970 | 91 55 482 08 | 95 | 1 |
| 96 43 245 08 | 1 997 | 91 53 489 08 | 100 | 1 |
| 96 43 246 08 | 1 997 | 91 53 489 08 | 101 | 1 |
| 96 43 247 08 | 1 997 | 91 53 489 08 | 102 | 1 |
| 96 43 248 08 | 1 997 | 91 53 489 08 | 105 | 1 |
| 96 43 249 08 | 1 997 | 91 53 489 08 | 106 | 1 |
| 96 43 250 08 | 1 997 | 91 53 489 08 | 107 | 1 |
| 96 43 251 08 | 1 997 | 91 53 489 08 | 108 | 1 |
| 96 43 252 08 | 1 997 | 91 53 489 08 | 109 | 1 |
| 96 43 253 08 | 1 997 | 91 53 489 08 | 110 | 1 |
| 96 43 253 08 | 1 997 | 91 53 489 08 | 111 | 1 |
| 96 43 253 08 | 1 997 | 91 53 489 08 | 112 | 1 |
| 96 43 253 08 | 1 997 | 91 53 489 08 | 113 | 1 |
| 96 43 254 08 | 1 997 | 91 53 489 08 | 116 | 1 |
| 96 43 255 08 | 1 997 | 91 53 489 08 | 119 | 1 |
| 96 43 256 08 | 1 997 | 91 53 489 08 | 126 | 1 |
| 96 43 256 08 | 1 997 | 91 53 489 08 | 127 | 1 |
| 96 43 257 08 | 1 997 | 91 53 489 08 | 130 | 1 |
| 96 43 257 08 | 1 997 | 91 53 489 08 | 132 | 1 |
| 96 43 258 08 | 1 997 | 91 53 489 08 | 134 | 1 |
| 96 43 259 08 | 1 997 | 91 53 489 08 | 135 | 1 |
| 96 43 260 08 | 1 997 | 91 53 489 08 | 136 | 1 |
| 96 43 261 08 | 1 997 | 91 53 489 08 | 137 | 1 |
| 96 43 262 08 | 1 997 | 91 53 489 08 | 138 | 1 |
| 96 43 262 08 | 1 997 | 91 53 489 08 | 142 | 1 |
| 96 43 263 08 | 1 997 | 91 53 489 08 | 139 | 1 |
| 96 43 264 08 | 1 997 | 91 53 489 08 | 141 | 1 |
| 96 43 274 08 | 1 400 201 | 96 43 983 08 | 180 | 1 |
| 96 43 275 08 | 1 400 201 | 96 43 983 08 | 181 | 1 |
| 96 43 276 08 | 1 400 201 | 96 43 983 08 | 182 | 1 |
| 96 43 276 08 | 1 400 201 | 96 43 983 08 | 189 | 1 |
| 96 43 277 08 | 1 400 201 | 96 43 983 08 | 183 | 1 |
| 96 43 278 08 | 1 400 201 | 96 43 983 08 | 184 | 1 |
| 96 43 278 08 | 1 400 201 | 96 43 983 08 | 188 | 1 |
| 96 43 279 08 | 1 400 201 | 96 43 983 08 | 185 | 1 |
| 96 43 279 08 | 1 400 201 | 96 43 983 08 | 186 | 1 |
| 96 43 280 08 | 1 400 201 | 96 43 983 08 | 187 | 1 |
| 96 43 780 08 | 2 340 | 91 53 116 08 | 1 | 1 |
| 96 43 785 08 | 2 920 | 91 55 477 08 | 21 | 1 |
| 96 43 884 08 | 2 515 007 | 96 42 014 08 | 2 | 1 |
| 96 43 943 08 | 3 930 342 | 96 56 247 08 | 6 | 1 |
| 96 43 983 08 | 1 400 200 | 91 53 791 08 | 4 | 1 |
| 96 44 046 08 | 2 510 100 | 96 44 750 08 | 1 | 1 |
| 96 44 197 08 | 2 984 | 91 52 906 08 | 5 | 1 |
| 96 44 249 08 | 2 560 | 91 50 900 08 | 4 | 2 |
| 96 44 555 08 | 2 510 100 | 96 44 750 08 | 100 | 1 |
| 96 44 614 08 | 2 510 100 | 96 44 750 08 | 2 | 1 |
| 96 44 750 08 | 2 510 | 91 53 981 08 | 1 | 1 |
| 96 45 029 08 | 3 511 | 91 54 159 08 | 1 | 1 |
| 96 45 139 08 | 2 790 901 | 91 54 183 08 | 1 | 1 |
| 96 45 328 08 | 2 510 200 | 96 41 258 08 | 5 | 1 |
| 96 45 806 08 | 2 430 | 91 54 389 08 | 1 | 1 |
| 96 46 061 08 | 2 920 | 91 68 959 08 | 5 | 1 |
| 96 46 064 08 | 2 932 042 | 96 68 587 08 | 13 | 1 |
| 96 46 240 08 | 2 971 | 91 50 610 08 | 99 | 1 |
| 96 46 345 08 | 2 533 | 91 54 254 08 | 4 | 1 |
| 96 46 346 08 | 2 533 | 91 54 254 08 | (1) | 1 |
| 96 46 362 08 | 1 100 | 91 71 033 08 | 2 | 1 |
| 96 46 363 08 | 1 100 | 91 71 033 08 | 3 | 1 |
| 96 46 508 08 | 1 100 205 | 96 51 633 08 | 17 | 3 |
| 96 46 508 08 | 1 100 210 | 96 51 634 08 | 17 | 3 |
| 96 46 911 08 | 2 780 952 | 91 68 736 08 | 1 | 1 |
| 96 46 916 08 | 1 920 | 91 54 759 08 | 1 | 1 |
| 96 46 921 08 | 1 920 307 | 96 46 916 08 | 2 | 1 |
| 96 47 069 08 | 1 920 314 | 96 46 921 08 | 21 | 1 |
| 96 47 649 08 | 1 630 002 | 99 06 183 14 | 1 | 1 |
| 96 47 650 08 | 1 630 002 | 99 06 183 14 | 3 | 2 |
| 96 47 653 08 | 2 560 045 | 96 40 606 08 | 1 | 1 |
| 96 47 958 08 | 2 790 901 | 91 54 183 08 | 2 | 1 |
| 96 48 137 08 | 2 210 | 91 81 614 08 | 2 | 1 |
| 96 48 188 08 | 2 210 008 | 96 48 137 08 | 2 | 1 |
| 96 49 682 08 | 2 520 000 | 91 49 872 08 | 82 | 1 |
| 96 50 100 08 | 1 100 215 | 99 20 783 14 | 15 | 2 |
| 96 50 100 08 | 1 100 215 | 99 20 783 14 | 19 | 2 |
| 96 50 675 08 | 1 740 | 91 56 353 08 | 2 | 1 |
| 96 51 633 08 | 1 100 200 | 96 72 944 08 | 2 | 1 |
| 96 51 634 08 | 1 100 200 | 96 72 944 08 | 3 | 1 |
| 96 53 356 08 | 9 686 071 | 96 86 071 01 | 11 | 1 |
| 96 53 714 08 | 2 920 | 91 55 477 08 | 11 | 1 |
| 96 53 715 08 | 2 920 | 91 55 477 08 | 10 | 1 |
| 96 53 717 08 | 3 920 012 | 96 57 224 08 | 1 | 1 |
| 96 55 621 08 | 2 997 | 91 51 089 08 | 279 | 1 |
| 96 56 247 08 | 3 930 | 91 59 068 08 | 2 | 1 |
| 96 56 248 08 | 3 930 342 | 96 56 247 08 | 5 | 1 |
| 96 56 249 08 | 3 930 718 | 96 56 248 08 | 270 | 1 |
| 96 56 364 08 | 2 210 | 91 81 614 08 | 1 | 1 |

| Item | Page | Assembly | Pos. | Quantity |
|---|---|---|---|---|
| 96 57 037 08 | 2 442 | 91 62 290 08 | 2 | 1 |
| 96 57 037 08 | 3 106 000 | 91 60 313 08 | 50 | 1 |
| 96 57 224 08 | 3 930 342 | 96 56 247 08 | 10 | 1 |
| 96 57 484 08 | 3 920 012 | 96 57 224 08 | 6 | 1 |
| 96 60 513 08 | 2 970 103 | 96 43 157 08 | 260 | 1 |
| 96 61 397 08 | 3 500 | 91 05 776 08 | 880 | 1 |
| 96 61 454 08 | 2 997 | 91 51 089 08 | 332 | 1 |
| 96 64 471 08 | 3 101 | 91 60 312 08 | 3 | 1 |
| 96 64 599 08 | 3 780 400 | 91 59 294 08 | 1 | 1 |
| 96 65 122 08 | 2 681 | 91 28 102 08 | 102 | 1 |
| 96 67 077 08 | 2 790 | 91 68 708 08 | 2 | 1 |
| 96 67 851 08 | 2 780 952 | 91 68 736 08 | 3 | 1 |
| 96 68 587 08 | 2 920 | 91 68 959 08 | 4 | 1 |
| 96 68 588 08 | 2 932 042 | 96 68 587 08 | 12 | 1 |
| 96 68 589 08 | 2 932 042 | 96 68 587 08 | (2) | 1 |
| 96 68 696 08 | 2 970 103 | 96 43 157 08 | 261 | 1 |
| 96 71 367 08 | 1 100 200 | 96 72 944 08 | 5 | 1 |
| 96 72 125 08 | 2 780 870 | 91 70 947 08 | 2 | 1 |
| 96 72 306 03 | 1 100 215 | 99 20 783 14 | 10 | 4 |
| 96 72 328 03 | 1 100 215 | 99 20 783 14 | 14 | 2 |
| 96 72 944 08 | 1 100 | 91 71 033 08 | 1 | 1 |
| 96 72 945 08 | 1 100 200 | 96 72 944 08 | 30 | 1 |
| 96 73 615 08 | 7 739 413 | 77 39 413 08 | 3 | 1 |
| 96 73 763 08 | XSK_Z480 | SK_Z48005 | 410 | 1 |
| 96 74 133 08 | 1 780 650 | 91 43 393 08 | (60) | 1 |
| 96 74 218 08 | X1032706 | 10 32 706 5 | 30 | 1 |
| 96 74 259 08 | 2 520 000 | 91 49 872 08 | 100 | 1 |
| 96 75 699 08 | 1 100 215 | 99 20 783 14 | (1) | 1 |
| 96 75 763 08 | 1 100 215 | 99 20 783 14 | 17 | 8 |
| 96 76 955 08 | 3 511 | 91 54 159 08 | 8 | 1 |
| 96 77 088 08 | 3 511 006 | 96 45 029 08 | 4 | 1 |
| 96 79 365 08 | 2 200 048 | 96 84 070 08 | 1 | 1 |
| 96 84 070 08 | 2 200 048 | 96 32 140 08 | 1 | 1 |
| 96 84 504 08 | 2 520 000 | 91 49 872 08 | 166 | 1 |
| 96 85 586 01 | 2 450 025 | 96 35 649 08 | 2 | 1 |
| 96 86 071 01 | 9 685 586 | 96 85 586 01 | 5 | 1 |
| 96 86 072 01 | 9 686 071 | 96 86 071 01 | 1 | 1 |
| 96 86 073 01 | 9 686 071 | 96 86 071 01 | 75 | 1 |
| 96 89 407 08 | 3 750 008 | 91 75 085 08 | 2 | 1 |
| 96 89 408 08 | 3 750 008 | 91 75 085 08 | 4 | 1 |
| 96 89 527 08 | 3 750 | 91 75 084 08 | 2 | 1 |
| 96 99 977 08 | 9 444 410 | 94 44 410 03 | (999) | 1 |
| 96 99 977 08 | 9 444 410 | 94 44 410 03 | 901 | 1 |
| 97 00 037 08 | 2 210 008 | 96 48 137 08 | 15 | 1 |
| 97 00 759 7 | 2 520 041 | 96 84 504 08 | 2 | 2 |
| 97 00 837 1 | 3 501 | 91 05 788 08 | 118 | 4 |
| 97 00 854 8 | 2 790 024 | 96 67 077 08 | 2 | 1 |
| 97 00 854 9 | 2 790 024 | 96 67 077 08 | 1 | 1 |
| 97 00 979 9 | 2 780 953 | 96 67 851 08 | 1 | 1 |
| 97 01 153 08 | 2 200 048 | 96 32 140 08 | 10 | 1 |
| 97 01 483 08 | 3 102 000 | 91 62 543 08 | 10 | 1 |
| 97 01 483 08 | 3 103 000 | 91 62 544 08 | 10 | 1 |
| 97 01 483 08 | 3 104 000 | 91 62 545 08 | 10 | 1 |
| 97 01 704 4 | 1 880 | 91 62 974 08 | 90 | 4 |
| 97 01 704 5 | 1 880 | 91 62 974 08 | 91 | 4 |
| 97 01 704 6 | 1 880 | 91 62 974 08 | 92 | 4 |
| 97 01 940 08 | 2 522 | 91 10 037 08 | 45 | 1 |
| 97 02 009 08 | 2 260 006 | 96 31 147 08 | 3 | 2 |
| 97 02 447 4 | 2 520 101 | 96 49 682 08 | 1 | 1 |
| 97 02 543 5 | 2 540 | 91 45 984 08 | 8 | 1 |
| 97 02 544 6 | 2 540 | 91 45 984 08 | 47 | 1 |
| 97 02 548 4 | 2 210 008 | 96 48 137 08 | 122 | 4 |
| 97 02 552 0 | 3 511 102 | 96 76 955 08 | 1 | 1 |
| 97 02 983 08 | 3 104 000 | 91 62 545 08 | 51 | 1 |
| 97 02 983 08 | 3 105 000 | 91 62 546 08 | 51 | 1 |
| 97 03 425 08 | 2 520 000 | 91 49 872 08 | 11 | 1 |
| 97 03 453 3 | 2 520 000 | 91 49 872 08 | 165 | 1 |
| 97 03 651 08 | 2 200 | 91 81 095 08 | 10 | 2 |
| 97 03 743 08 | 2 920 585 | 91 01 520 08 | 10 | 1 |
| 97 04 266 7 | 1 100 200 | 96 72 944 08 | 11 | 2 |
| 97 04 469 08 | 2 102 | 91 51 080 08 | 13 | 3 |
| 97 04 551 5 | 3 501 | 91 05 788 08 | 113 | 2 |
| 97 04 551 6 | 3 501 | 91 05 788 08 | 114 | 6 |
| 97 04 551 7 | 3 501 | 91 05 788 08 | 115 | 3 |
| 97 05 004 0 | 3 750 026 | 96 89 407 08 | 1 | 1 |
| 97 05 004 0 | 3 750 028 | 96 89 408 08 | 1 | 1 |
| 97 05 004 1 | 3 750 026 | 96 89 407 08 | 2 | 1 |
| 97 05 004 3 | 3 750 028 | 96 89 408 08 | 2 | 1 |
| 97 05 011 08 | 3 511 006 | 96 45 029 08 | 8 | 4 |
| 97 05 962 08 | 2 420 | 91 32 936 08 | 3 | 1 |
| 97 06 068 9 | 2 881 | 91 80 907 08 | 100 | 1 |
| 97 06 454 08 | 2 920 574 | 96 36 055 08 | 6 | 1 |
| 97 06 891 08 | 2 102 | 91 51 080 08 | 12 | 6 |
| 97 06 941 08 | 2 950 | 91 49 515 08 | 34 | 2 |
| 97 07 598 03 | 1 100 215 | 99 20 783 14 | 4 | 1 |
| 97 07 601 03 | 1 100 215 | 99 20 783 14 | 7 | 1 |
| 97 07 604 03 | 1 100 215 | 99 20 783 14 | 5 | 1 |
| 97 07 607 03 | 1 100 215 | 99 20 783 14 | 6 | 1 |
| 97 07 680 08 | 2 500 | 91 48 594 08 | 5 | 1 |
| 97 08 215 08 | 2 102 | 91 51 080 08 | 14 | 6 |
| 97 08 360 08 | 2 510 200 | 96 41 258 08 | 44 | 3 |
| 97 08 366 08 | 2 510 200 | 96 41 258 08 | 45 | 1 |
| 97 08 796 4 | 2 681 | 91 28 102 08 | 13 | 1 |
| 97 09 068 08 | 2 680 | 91 53 225 08 | 11 | 1 |
| 97 09 288 08 | 2 510 200 | 96 41 258 08 | 18 | 1 |
| 97 09 808 08 | 2 913 | 91 32 850 08 | 5 | 1 |
| 97 09 954 08 | 2 500 | 91 48 594 08 | 9 | 2 |
| 97 10 021 08 | 2 680 | 91 53 225 08 | 100 | 1 |
| 97 11 358 08 | 3 511 006 | 96 45 029 08 | 19 | 1 |
| 97 12 910 08 | 2 932 042 | 96 68 587 08 | 37 | 1 |
| 97 13 393 08 | 2 430 | 91 54 389 08 | 8 | 1 |
| 97 13 426 08 | 2 970 | 91 55 482 08 | 67 | 1 |
| 97 14 053 08 | 2 932 042 | 96 68 587 08 | 3 | 1 |
| 97 15 398 08 | 3 880 005 | 91 13 525 08 | 1 | 1 |
| 97 15 398 08 | 3 880 005 | 96 61 397 08 | 1 | 1 |
| 97 15 399 08 | 3 880 005 | 91 13 525 08 | 2 | 1 |
| 97 15 399 08 | 3 880 005 | 96 61 397 08 | 2 | 1 |
| 97 16 054 08 | 2 530 002 | 96 19 448 08 | 1 | 1 |
| 97 16 260 08 | 2 430 | 91 54 389 08 | 3 | 1 |
| 97 17 015 08 | 2 680 | 91 53 225 08 | 101 | 1 |
| 97 17 070 08 | 2 913 | 91 32 850 08 | 3 | 1 |
| 97 17 132 08 | 2 913 005 | 96 28 696 08 | 2 | 1 |
| 97 17 499 08 | 1 880 | 91 62 974 08 | 2 | 2 |
| 97 17 745 08 | 2 531 001 | 96 36 738 08 | 1 | 1 |
| 97 17 746 08 | 2 531 002 | 96 36 739 08 | 1 | 1 |
| 97 17 998 08 | 2 440 | 91 52 288 08 | 2 | 2 |
| 97 17 999 08 | 2 440 | 91 52 288 08 | 38 | 2 |
| 97 18 123 08 | 2 440 022 | 96 42 336 08 | 28 | 1 |
| 97 18 124 08 | 2 440 022 | 96 42 336 08 | 29 | 1 |
| 97 18 215 08 | 2 510 200 | 96 41 258 08 | 3 | 1 |

| Item | Page | Assembly | Pos. | Quantity |
|---|---|---|---|---|
| 97 18 217 08 | 2 510 200 | 96 41 258 08 | 6 | 1 |
| 97 18 218 08 | 2 510 200 | 96 41 258 08 | 7 | 1 |
| 97 18 507 08 | 2 913 | 91 32 850 08 | 6 | 1 |
| 97 18 511 08 | 2 913 | 91 32 850 08 | 7 | 1 |
| 97 18 512 08 | 2 913 | 91 32 850 08 | 8 | 1 |
| 97 18 513 08 | 2 913 | 91 32 850 08 | 9 | 1 |
| 97 18 514 08 | 2 913 | 91 32 850 08 | 10 | 1 |
| 97 18 849 08 | 3 930 492 | 96 20 966 08 | 5 | 1 |
| 97 18 863 08 | 3 930 718 | 96 56 248 08 | 7 | 1 |
| 97 20 552 08 | 2 102 | 91 51 080 08 | 10 | 1 |
| 97 20 971 08 | 2 540 | 91 45 984 08 | 25 | 1 |
| 97 20 972 08 | 2 540 | 91 45 984 08 | 26 | 2 |
| 97 21 333 08 | 3 101 | 91 60 312 08 | 10 | 1 |
| 97 22 606 08 | 2 681 | 91 28 102 08 | 11 | 1 |
| 97 22 607 08 | 2 681 | 91 28 102 08 | 12 | 1 |
| 97 22 862 08 | 2 430 | 91 54 389 08 | 23 | 1 |
| 97 23 093 08 | 2 970 092 | 96 22 207 08 | 3 | 1 |
| 97 23 359 08 | 3 101 | 91 60 312 08 | 70 | 1 |
| 97 23 508 08 | 2 515 007 | 96 42 014 08 | 3 | 2 |
| 97 23 538 08 | 2 210 008 | 96 48 137 08 | 379 | 2 |
| 97 23 538 08 | 2 520 000 | 91 49 872 08 | 161 | 2 |
| 97 24 267 08 | 3 102 000 | 91 62 543 08 | 33 | 4 |
| 97 24 267 08 | 3 103 000 | 91 62 544 08 | 33 | 4 |
| 97 24 267 08 | 3 104 000 | 91 62 545 08 | 33 | 4 |
| 97 24 267 08 | 3 105 000 | 91 62 546 08 | 33 | 4 |
| 97 24 267 08 | 3 106 000 | 91 60 313 08 | 60 | 4 |
| 97 24 915 08 | 3 501 | 91 05 788 08 | 68 | 1 |
| 97 24 953 08 | 2 970 | 91 55 482 08 | 66 | 1 |
| 97 24 954 08 | 2 970 | 91 55 482 08 | 65 | 1 |
| 97 25 034 08 | 2 102 | 91 51 080 08 | 36 | 1 |
| 97 26 081 08 | 2 350 | 91 81 361 08 | 2 | 1 |
| 97 26 082 08 | 2 350 | 91 81 361 08 | 6 | 1 |
| 97 26 310 08 | 2 780 851 | 96 24 498 08 | 1 | 1 |
| 97 27 698 08 | 2 680 | 91 53 225 08 | 102 | 1 |
| 97 29 623 08 | 2 932 042 | 96 68 587 08 | 8 | 1 |
| 97 29 654 08 | 2 210 | 91 81 614 08 | 250 | 1 |
| 97 29 707 08 | 2 210 008 | 96 48 137 08 | 4 | 1 |
| 97 30 061 08 | 2 500 021 | 92 10 666 08 | 1 | 1 |
| 97 30 132 08 | 2 510 100 | 96 44 750 08 | 32 | 1 |
| 97 30 210 08 | 2 340 004 | 96 43 780 08 | 8 | 1 |
| 97 30 263 08 | 2 510 100 | 96 44 750 08 | 15 | 1 |
| 97 30 732 08 | 2 510 018 | 96 44 046 08 | 100 | 1 |
| 97 30 733 08 | 2 510 018 | 96 44 046 08 | 101 | 1 |
| 97 31 054 08 | 2 450 | 91 53 926 08 | 4 | 2 |
| 97 31 067 08 | 2 450 | 91 53 926 08 | 18 | 4 |
| 97 31 147 08 | 2 450 | 91 53 926 08 | 19 | 4 |
| 97 31 168 08 | 2 450 025 | 96 35 649 08 | 6 | 2 |
| 97 31 787 08 | 3 930 492 | 96 20 966 08 | 4 | 1 |
| 97 33 883 08 | 2 210 | 91 81 614 08 | (299) | 1 |
| 97 35 365 08 | 2 450 025 | 96 35 649 08 | 8 | 6 |
| 97 35 676 08 | 1 100 200 | 96 72 944 08 | 20 | 1 |
| 97 36 182 08 | 2 210 008 | 96 48 137 08 | 20 | 6 |
| 97 36 305 08 | 3 100 | 91 59 279 08 | 13 | 1 |
| 97 36 353 08 | 3 511 | 91 54 159 08 | 3 | 3 |
| 97 36 381 08 | 2 681 | 91 28 102 08 | 10 | 1 |
| 97 36 410 08 | 2 210 | 91 81 614 08 | 202 | 1 |
| 97 36 412 08 | 2 210 | 91 81 614 08 | 200 | 1 |
| 97 36 413 08 | 2 210 | 91 81 614 08 | 201 | 1 |
| 97 36 414 08 | 2 210 | 91 81 614 08 | (1) | 1 |
| 97 36 454 08 | 2 210 | 91 81 614 08 | 251 | 1 |

| Item | Page | Assembly | Pos. | Quantity |
|---|---|---|---|---|
| 97 36 455 08 | 2 210 | 91 81 614 08 | 252 | 1 |
| 97 36 626 08 | 2 913 | 91 32 850 08 | 16 | 1 |
| 97 37 172 08 | 2 210 | 91 81 614 08 | 20 | 3 |
| 97 37 173 08 | 2 210 | 91 81 614 08 | 21 | 1 |
| 97 37 208 08 | 2 984 | 91 52 906 08 | 8 | 1 |
| 97 37 310 08 | 2 500 | 91 48 594 08 | 25 | 1 |
| 97 37 568 08 | 2 681 | 91 28 102 08 | 15 | 1 |
| 97 37 569 08 | 2 681 | 91 28 102 08 | 250 | 1 |
| 97 37 676 08 | 2 510 018 | 96 44 046 08 | 102 | 1 |
| 97 37 747 08 | 3 101 | 91 60 312 08 | 4 | 1 |
| 97 37 747 08 | 3 102 000 | 91 62 543 08 | 67 | 1 |
| 97 37 747 08 | 3 103 000 | 91 62 544 08 | 67 | 1 |
| 97 37 747 08 | 3 104 000 | 91 62 545 08 | 67 | 1 |
| 97 37 747 08 | 3 105 000 | 91 62 546 08 | 67 | 1 |
| 97 37 938 08 | 2 970 | 91 55 482 08 | 36 | 1 |
| 97 38 603 08 | 2 210 | 91 81 614 08 | 10 | 4 |
| 97 38 614 08 | 2 210 | 91 81 614 08 | 203 | 1 |
| 97 38 619 08 | 2 510 100 | 96 44 750 08 | 19 | 1 |
| 97 38 620 08 | 2 510 100 | 96 44 750 08 | 20 | 1 |
| 97 38 621 08 | 2 510 100 | 96 44 750 08 | 21 | 1 |
| 97 38 622 08 | 9 640 266 | 96 40 266 08 | 1 | 1 |
| 97 39 987 08 | 2 790 024 | 96 67 077 08 | 3 | 1 |
| 97 40 366 08 | 9 640 266 | 96 40 266 08 | 2 | 1 |
| 97 41 504 08 | 1 880 | 91 62 974 08 | 84 | 1 |
| 97 41 505 08 | 1 880 | 91 62 974 08 | 85 | 1 |
| 97 41 506 08 | 1 880 | 91 62 974 08 | 86 | 1 |
| 97 41 507 08 | 1 880 | 91 62 974 08 | 87 | 1 |
| 97 42 451 08 | 2 210 | 91 81 614 08 | 18 | 1 |
| 97 42 614 08 | 2 520 000 | 91 49 872 08 | (2) | 2 |
| 97 43 646 08 | 3 101 | 91 60 312 08 | 79 | 1 |
| 97 44 979 08 | 2 440 022 | 96 42 336 08 | 6 | 1 |
| 97 45 012 08 | 2 440 022 | 96 42 336 08 | 16 | 2 |
| 97 45 197 08 | 2 210 | 91 81 614 08 | 19 | 1 |
| 97 45 329 08 | 2 932 119 | 96 46 061 08 | 2 | 1 |
| 97 45 335 08 | 2 932 042 | 96 68 587 08 | 6 | 1 |
| 97 45 587 08 | 2 210 | 91 81 614 08 | 204 | 1 |
| 97 45 632 08 | 2 932 042 | 96 68 587 08 | 1 | 1 |
| 97 45 664 08 | 2 932 042 | 96 68 587 08 | 9 | 1 |
| 97 46 006 08 | 2 210 | 91 81 614 08 | 15 | 1 |
| 97 46 406 08 | 2 501 000 | 91 48 769 08 | 12 | 1 |
| 97 46 893 08 | 2 430 | 91 54 389 08 | 21 | 1 |
| 97 47 300 08 | 2 440 022 | 96 42 336 08 | 41 | 2 |
| 97 47 409 08 | 2 780 852 | 96 24 845 08 | 3 | 1 |
| 97 47 423 08 | 2 510 072 | 96 44 614 08 | 7 | 1 |
| 97 47 497 08 | 2 510 072 | 96 44 614 08 | 20 | 1 |
| 97 47 926 08 | 2 510 100 | 96 44 750 08 | (1) | 1 |
| 97 48 804 08 | 2 510 100 | 96 44 750 08 | 70 | 1 |
| 97 48 847 08 | 2 210 | 91 81 614 08 | 407 | 2 |
| 97 48 958 08 | 3 101 | 91 60 312 08 | 81 | 1 |
| 97 49 111 08 | 3 510 100 | 91 49 246 08 | 20 | 1 |
| 97 49 112 08 | 3 510 100 | 91 49 246 08 | 21 | 1 |
| 97 50 499 08 | 9 640 266 | 96 40 266 08 | 3 | 1 |
| 97 50 770 08 | 2 984 | 91 52 906 08 | 3 | 1 |
| 97 50 794 08 | 2 102 | 91 51 080 08 | 9 | 1 |
| 97 50 846 08 | 2 984 | 91 52 906 08 | 4 | 1 |
| 97 50 847 08 | 2 984 | 91 52 906 08 | 6 | 2 |
| 97 51 429 08 | 2 950 | 91 49 515 08 | (2) | 1 |
| 97 51 432 08 | 2 950 | 91 49 515 08 | (3) | 1 |
| 97 51 516 08 | 2 510 200 | 96 41 258 08 | 27 | 1 |
| 97 51 599 08 | 2 984 | 91 52 906 08 | 7 | 1 |

| Item | Page | Assembly | Pos. | Quantity |
|---|---|---|---|---|
| 97 52 305 08 | 3 750 008 | 91 75 085 08 | 7 | 2 |
| 97 52 577 08 | 2 430 | 91 54 389 08 | 20 | 4 |
| 97 53 529 08 | 2 440 022 | 96 42 336 08 | 48 | 1 |
| 97 55 297 08 | 2 510 100 | 96 44 750 08 | 11 | 2 |
| 97 57 618 08 | 2 571 | 91 50 902 08 | 2 | 2 |
| 97 57 621 08 | 2 560 | 91 50 900 08 | 9 | 4 |
| 97 57 668 08 | 2 102 022 | 96 32 604 08 | 3 | 1 |
| 97 57 695 08 | 2 102 022 | 96 32 604 08 | 2 | 1 |
| 97 57 785 08 | 2 102 | 91 51 080 08 | 37 | 2 |
| 97 58 095 08 | 1 880 | 91 62 974 08 | 76 | 1 |
| 97 58 637 08 | 2 920 904 | 96 41 093 08 | 6 | 1 |
| 97 58 682 08 | 2 430 | 91 54 389 08 | 10 | 1 |
| 97 58 742 08 | 2 270 | 91 50 456 08 | 10 | 1 |
| 97 59 237 08 | 2 210 | 91 81 614 08 | (298) | 1 |
| 97 59 572 08 | 2 510 100 | 96 44 750 08 | 7 | 1 |
| 97 60 496 08 | 2 210 | 91 81 614 08 | 25 | 1 |
| 97 62 491 08 | 3 106 001 | 96 42 835 08 | 1 | 1 |
| 97 65 053 08 | 2 680 | 91 53 225 08 | 103 | 1 |
| 97 65 362 08 | 2 932 042 | 96 68 587 08 | 20 | 1 |
| 97 65 405 08 | 1 100 205 | 96 51 633 08 | 25 | 1 |
| 97 65 405 08 | 1 100 210 | 96 51 634 08 | 25 | 1 |
| 97 65 408 08 | 1 100 205 | 96 51 633 08 | 31 | 2 |
| 97 65 408 08 | 1 100 210 | 96 51 634 08 | 31 | 1 |
| 97 65 409 08 | 2 932 095 | 96 46 064 08 | 28 | 1 |
| 97 65 411 08 | 1 740 010 | 96 50 675 08 | 8 | 4 |
| 97 65 413 08 | 1 400 200 | 91 53 791 08 | 12 | 4 |
| 97 65 415 08 | 1 400 200 | 91 53 791 08 | 11 | 1 |
| 97 65 621 08 | 2 510 100 | 96 44 750 08 | 5 | 1 |
| 97 65 622 08 | 2 510 100 | 96 44 750 08 | 14 | 1 |
| 97 65 623 08 | 2 510 100 | 96 44 750 08 | 6 | 1 |
| 97 65 667 08 | 2 510 100 | 96 44 750 08 | 10 | 1 |
| 97 65 844 08 | 9 640 266 | 96 40 266 08 | 5 | 1 |
| 97 65 845 08 | 9 640 266 | 96 40 266 08 | 7 | 1 |
| 97 65 846 08 | 9 640 266 | 96 40 266 08 | 6 | 1 |
| 97 66 111 08 | 2 571 | 91 50 902 08 | 11 | 1 |
| 97 66 112 08 | 2 571 | 91 50 902 08 | 12 | 1 |
| 97 66 347 08 | 2 984 | 91 52 906 08 | 9 | 1 |
| 97 66 381 08 | 2 450 | 91 53 926 08 | 24 | 1 |
| 97 67 563 08 | 2 210 | 91 81 614 08 | 30 | 1 |
| 97 67 674 08 | 2 790 901 | 91 54 183 08 | 4 | 1 |
| 97 67 995 08 | 2 515 007 | 96 42 014 08 | 14 | 1 |
| 97 68 223 08 | 2 971 | 91 50 610 08 | (4) | 1 |
| 97 68 803 08 | 2 932 042 | 96 68 587 08 | 19 | 1 |
| 97 69 932 08 | 1 100 216 | 96 46 363 08 | 1 | 4 |
| 97 70 502 08 | 2 210 | 91 81 614 08 | 16 | 1 |
| 97 71 376 08 | 1 920 314 | 96 46 921 08 | 1 | 1 |
| 97 72 400 08 | 1 100 215 | 99 20 783 14 | (2) | 2 |
| 97 72 402 08 | 1 100 205 | 96 51 633 08 | 19 | 1 |
| 97 72 402 08 | 1 100 210 | 96 51 634 08 | 19 | 1 |
| 97 72 403 08 | 1 100 215 | 99 20 783 14 | 8 | 2 |
| 97 72 424 08 | 1 630 002 | 99 06 183 14 | 5 | 2 |
| 97 72 521 08 | 1 630 003 | 96 47 650 08 | 1 | 1 |
| 97 72 532 08 | 1 970 | 96 71 367 08 | 27 | 2 |
| 97 72 672 08 | 1 100 215 | 99 20 783 14 | 11 | 4 |
| 97 72 673 08 | 1 740 010 | 96 50 675 08 | 14 | 4 |
| 97 73 088 08 | 2 790 901 | 91 54 183 08 | 3 | 1 |
| 97 73 428 08 | 2 210 008 | 96 48 137 08 | 100 | 1 |
| 97 73 511 08 | 2 210 008 | 96 48 137 08 | 9 | 1 |
| 97 73 512 08 | 2 210 008 | 96 48 137 08 | 10 | 1 |
| 97 73 613 08 | 2 210 008 | 96 48 137 08 | 3 | 1 |

| Item | Page | Assembly | Pos. | Quantity |
|---|---|---|---|---|
| 97 74 410 08 | 1 100 205 | 96 51 633 08 | 22 | 2 |
| 97 74 410 08 | 1 100 210 | 96 51 634 08 | 22 | 2 |
| 97 75 310 08 | 2 510 100 | 96 44 750 08 | 13 | 1 |
| 97 77 537 08 | 1 400 200 | 91 53 791 08 | 13 | 1 |
| 97 79 053 08 | 1 400 200 | 91 53 791 08 | 14 | 1 |
| 97 80 687 08 | 1 100 205 | 96 51 633 08 | 44 | 8 |
| 97 80 687 08 | 1 100 210 | 96 51 634 08 | 44 | 8 |
| 97 86 739 08 | 1 880 | 91 62 974 08 | 11 | 2 |
| 97 86 740 08 | 1 880 | 91 62 974 08 | 12 | 3 |
| 97 86 741 08 | 1 880 | 91 62 974 08 | 14 | 9 |
| 97 86 744 08 | 1 880 | 91 62 974 08 | 29 | 4 |
| 97 86 745 08 | 1 880 | 91 62 974 08 | 31 | 1 |
| 97 86 747 08 | 1 880 | 91 62 974 08 | 49 | 1 |
| 97 86 748 08 | 1 880 | 91 62 974 08 | 63 | 3 |
| 97 86 748 08 | 3 880 005 | 96 61 397 08 | 3 | 10 |
| 97 86 749 08 | 1 880 | 91 62 974 08 | 64 | 1 |
| 97 86 750 08 | 1 880 | 91 62 974 08 | 66 | 2 |
| 97 88 671 08 | 1 880 | 91 62 974 08 | 33 | 1 |
| 97 89 159 08 | 2 210 | 91 81 614 08 | 23 | 1 |
| 97 89 160 08 | 2 210 | 91 81 614 08 | 24 | 1 |
| 97 91 320 08 | 3 106 000 | 91 60 313 08 | 80 | 1 |
| 97 93 206 08 | 2 790 040 | 91 60 499 08 | 1 | 1 |
| 97 94 895 08 | 2 790 040 | 91 60 499 08 | 3 | 1 |
| 98 85 529 | 9 078 962 | 90 78 962 | 4 | 1 |
| 98 85 529 | X1011583 | 10 11 583 7 | 16 | 3 |
| 98 86 591 | 9 075 541 | 90 75 541 | 9 | 1 |
| 98 86 591 | X1011739 | 10 11 739 7 | 20 | 1 |
| 98 86 756 | X1011739 | 10 11 739 7 | 21 | 1 |
| 98 87 461 | 9 079 560 | 90 79 560 | 2 | 1 |
| 98 87 461 | 9 080 525 | 90 80 525 | 3 | 1 |
| 98 88 259 | X1011577 | 10 11 577 6 | 12 | 6 |
| 98 89 290 | 9 072 906 | 90 72 906 | (2) | 2 |
| 98 89 837 | 9 072 112 | 90 72 112 | 90 | 1 |
| 99 06 183 14 | 1 670 300 | 91 49 503 08 | 1 | 6 |
| 99 08 404 14 | 1 100 200 | 96 72 944 08 | 15 | 1 |
| 99 14 563 14 | 1 300 005 | 99 17 196 14 | 3 | 4 |
| 99 17 196 14 | 1 300 | 91 49 493 08 | 1 | 1 |
| 99 20 783 14 | 1 100 200 | 96 72 944 08 | 4 | 1 |
| 99 26 462 14 | 1 400 200 | 91 53 791 08 | 2 | 1 |
| 99 70 401 01 | 3 510 100 | 91 49 246 08 | 31 | 1 |
| 99 70 404 01 | 3 501 | 91 05 788 08 | 77 | 2 |
| SK_Z48005 | | LTR 1100 -0 | 2000 | 1 |

| Description | Item | Pos. | Quantity | Page | Assembly | Description |
|---|---|---|---|---|---|---|
| 12-SIDED SCREW M8X25 X5N | 10 11 813 4 | 6 | 5 | X1011832 | 10 11 832 6 | EXHAUST TC MOUNTING |
| 12-SIDED SCREW M8X25 X5N | 10 11 814 6 | 4 | 2 | X1011832 | 10 11 832 6 | EXHAUST TC MOUNTING |
| ACCESS COMPL | 99 14 563 14 | 3 | 4 | 1 300 005 | 99 17 196 14 | CRAWLER OUTFIT |
| ACCESSORIES | 92 86 201 08 | 2 | 1 | 1 750 | 91 48 606 08 | TOOLS AND ACCESSORIES |
| ACCESSORIES AIR COMPRES | 10 11 793 0 | 334 | 1 | X1015207 | 10 15 207 7 | DIESEL ENGINE |
| ACTUATING HANDLE | 60 60 934 08 | 1 | 1 | 6 060 709 | 60 60 709 08 | BATTERY MAIN SWITCH |
| ACTUATING UNIT | 57 19 355 08 | (1) | 1 | 9 330 748 | 93 30 748 01 | SLEWING GEAR DRIVE |
| ACTUATION SPIKE 1,5 | 70 42 572 08 | 58 | 1 | 2 932 095 | 96 46 064 08 | SWING FRAME FUSE AND RE |
| ACTUATION SPIKE GD-ZN SW | 70 42 534 08 | 3 | 4 | 2 501 022 | 96 34 184 08 | COVER COMPL. |
| ACTUATION SPIKE GD-ZN SW | 70 42 534 08 | 36 | 2 | 2 510 200 | 96 41 258 08 | SLEWING PLATFORM PANELLI |
| ADAPTER BUSHING 25X32 X5 | 97 02 447 4 | 1 | 1 | 2 520 101 | 96 49 682 08 | SPRAY NOZZLE |
| ADAPTER CABLE | 11 00 056 2 | 2 | 1 | 1 681 021 | 96 65 122 08 | SENSOR COMPL. |
| ADAPTER DATA LOGGER | 91 68 736 08 | 412 | 1 | | LTR 1100 -0 | LIEBHERR LTR 1100 |
| ADAPTER WELDED CONSTRU | 92 17 805 08 | 1 | 1 | 3 501 | 91 05 788 08 | MECH. DOUBLE FOLD JIB PR |
| ADAPTOR 18-POL SPF | 66 00 245 08 | 14 | 1 | 2 932 042 | 96 68 587 08 | BASE ASSEMBLY |
| ADAPTOR RI11/4-EDX11/2 A3P | 47 55 033 08 | 655 | 2 | 2 970 | 91 55 482 08 | HYDRAULICS |
| ADDITIONAL BALLAST | 91 50 901 08 | 149 | 1 | | LTR 1100 -0 | LIEBHERR LTR 1100 |
| ADDITIONAL ELECTRICS | 96 19 338 08 | 5 | 1 | 2 430 | 91 54 389 08 | ANGLE THREADED BULKHEA |
| ADDNL.HYDR. FOLDING JIB | 91 26 492 08 | 229 | 1 | | LTR 1100 -0 | LIEBHERR LTR 1100 |
| ADHESIVE 300ML -40/+90 °C | 81 12 029 08 | 95 | 1 | 2 520 000 | 91 49 872 08 | CABIN, GLAZED |
| ADHESIVE CLEANER 250ML | 81 12 051 08 | 85 | 1 | 2 520 000 | 91 49 872 08 | CABIN, GLAZED |
| ADHESIVE INSULATING STRIP | 80 21 020 08 | 150 | 13.5 | 2 510 018 | 96 44 046 08 | RADIATOR HOOD CPL. |
| ADHESIVE INSULATING STRIP | 80 21 020 08 | 30 | 11.13 | 2 510 072 | 96 44 614 08 | FLAP RIGHT PRE-ASS. |
| ADHESIVE INSULATING STRIP | 80 21 020 08 | 50 | 12 | 2 510 108 | 96 44 555 08 | SOUND PROOFING/SOUND I |
| ADHESIVE Kartoon 20stück | 81 12 033 08 | 94 | 1 | 2 520 000 | 91 49 872 08 | CABIN, GLAZED |
| ADHESIVE LABELS | 60 21 710 08 | 21 | 26 | 2 932 119 | 96 46 061 08 | SWING FRAME RELAY CONT |
| ADJUSTING SCREW M10X1 | 10 01 222 5 | 4 | 1 | 9 074 507 | 90 74 507 | ROCKER ARM PRE-ASSY. |
| ADJUSTING SCREW M12X36 8 | 10 11 794 9 | 5 | 1 | X1011795 | 10 11 795 1 | FINAL CONTROL VALVE |
| ADJUSTMENT | 10 80 175 1 | 2 | 1 | 5 923 269 | 59 23 269 14 | VARIABLE DISPLACEMENT MO |
| ADJUSTMENT | 57 07 565 08 | 2 | 1 | 5 530 854 | 55 30 854 08 | THREE-WAY TAP |
| AERATION FILTER | 51 06 673 08 | 5 | 2 | 2 340 004 | 96 43 780 08 | OIL TANK PRE-ASS. |
| AGITATOR PADDLE | 10 01 471 2 | 27 | 1 | X1032706 | 10 32 706 5 | ELECTRIC PUMP |
| AIR COMPRESSOR 293CM3 | 57 00 161 | 1 | 1 | 9 080 294 | 90 80 294 | AIR COMPRESSOR PRE-ASSY |
| AIR COMPRESSOR PRE-ASSY. | 90 80 294 | 330 | 1 | X1015207 | 10 15 207 7 | DIESEL ENGINE |
| AIR COND. COMPRESSOR A | 90 80 525 | 1 | 1 | 2 831 | 91 47 871 08 | AIR COND. UNIT SUPERSTRU |
| AIR COND. EVAPORATOR RFK | 55 31 882 08 | 2 | 1 | 2 831 | 91 47 871 08 | AIR COND. UNIT SUPERSTRU |
| AIR COND. UNIT SUPERSTRUC | 91 47 871 08 | 301 | 1 | | LTR 1100 -0 | LIEBHERR LTR 1100 |
| AIR CONDITIONING COMPRE | 10 11 676 8 | 2 | 1 | 9 080 525 | 90 80 525 | AIR COND. COMPRESSOR A |
| AIR DISCHARGER D=98MM T | 57 05 205 08 | 59 | 2 | 2 520 000 | 91 49 872 08 | CABIN, GLAZED |
| AIR DISCHARGER D=98MM T | 57 05 205 08 | 18 | 2 | 5 530 022 | 55 30 022 08 | WATER HEATING SYSTEM |
| AIR DRYER | 50 26 573 08 | 2 | 1 | 2 950 | 91 49 515 08 | COMPRESSED-AIR SYST.SU |
| AIR DUCT PE | 74 03 054 08 | 3 | 1 | 2 540 | 91 45 984 08 | HEATING, CRANE CABIN |
| AIR FILTER NLG15M³/MIN PP | 10 09 998 1 | 100 | 1 | 2 681 | 91 28 102 08 | AIR FILTER UNIT |
| AIR FILTER UNIT | 91 28 102 08 | 165 | 1 | | LTR 1100 -0 | LIEBHERR LTR 1100 |
| AIR INTAKE PIPE ASS. R-MOT | 10 11 707 2 | 220 | 1 | X1015207 | 10 15 207 7 | DIESEL ENGINE |
| AIR SCOOP 1.5X473X733 DC01 | 97 36 381 08 | 10 | 1 | 2 681 | 91 28 102 08 | AIR FILTER UNIT |
| AIR SUCTION PIPE R-MOTOR | 10 11 707 0 | 1 | 1 | X1011707 | 10 11 707 2 | AIR INTAKE PIPE ASS. |
| AIR TANK DIN 74281 4,5L 15,5 | 50 29 871 08 | 6 | 1 | 2 950 | 91 49 515 08 | COMPRESSED-AIR SYST.SU |
| AIR TANK EN 286-2 20L 15.5B | 50 26 577 08 | 9 | 1 | 2 950 | 91 49 515 08 | COMPRESSED-AIR SYST.SU |
| ALARM 24V | 61 40 047 08 | (5) | 1 | 2 920 | 91 55 477 08 | ELECTR. SYSTEM F.SLEWING |
| ALLEN KEY 3 | 88 51 661 08 | 29 | 1 | 1 750 001 | 92 85 698 08 | MAIN TOOLS |
| ANGLE | 57 16 878 08 | 18 | 1 | X1081388 | 10 81 388 6 | CYLINDER HEAD |
| ANGLE 2.5X170X167 DC01 | 97 03 743 08 | 10 | 1 | 2 920 585 | 91 01 520 08 | ELECTRIC FOR FLASHLIGHT |
| ANGLE 2X40X95 DC01 FE//ZN | 95 38 688 08 | 17 | 2 | 2 210 | 91 81 614 08 | DRIVE ASSEMBLY, PRE-ASSE |
| ANGLE 3X95X40 DC01 FE//ZN | 94 73 392 08 | 17 | 2 | 2 955 | 91 49 516 08 | PNEUM. CRANE OPERATORS |
| ANGLE 4X113X40 S315MC FE// | 97 37 208 08 | 8 | 1 | 2 984 | 91 52 906 08 | OIL COOLER INSTALLATION |
| ANGLE 4X132X195 S315MC FE | 95 36 785 08 | 34 | 2 | 2 502 | 91 01 533 08 | CONTROL STAND |
| ANGLE 4x145x80 S315MC FE// | 97 08 366 08 | 45 | 1 | 2 510 200 | 96 41 258 08 | SLEWING PLATFORM PANELLI |
| ANGLE SCREW DRIVER TX 40 | 10 04 300 2 | 41 | 1 | 1 750 001 | 92 85 698 08 | MAIN TOOLS |
| ANGLE SCREW DRIVER TX30 | 10 47 136 3 | 40 | 1 | 1 750 001 | 92 85 698 08 | MAIN TOOLS |

| Description | Item | Pos. | Quantity | Page | Assembly | Description |
|---|---|---|---|---|---|---|
| ANGLE THREADED BULKHEA | 91 54 389 08 | 121 | 1 | | LTR 1100 -0 | LIEBHERR LTR 1100 |
| ANGLE TRANSMITTER 360° SP | 69 23 100 08 | 5 | 1 | 3 930 482 | 96 20 157 08 | SENSOR ASSEMBLY BASIC B |
| ANGLE TRANSMITTER 360° SP | 69 23 100 08 | 5 | 1 | 3 930 483 | 96 20 935 08 | SENSOR ASSEMBLY HEAD PI |
| ANTENNA | 10 28 963 1 | 2 | 1 | 2 780 851 | 96 24 498 08 | RADIO ANTENNA PRE-ASS. |
| ANTENNA 147MM | 76 24 428 | 18 | 1 | 2 533 003 | 96 28 388 08 | ELECTRIC ADD-ON PARTS CA |
| ANTIDAZZLE 242X171X55 BL | 10 27 921 0 | 2 | 1 | 2 913 003 | 96 20 599 08 | FOIL KEYPAD PRE-ASS. |
| ARM REST 558X115 X132 ABS | 95 33 655 08 | 8 | 1 | 2 502 | 91 01 533 08 | CONTROL STAND |
| ARM REST 558X122X132 ABS | 95 33 653 08 | 9 | 1 | 2 502 | 91 01 533 08 | CONTROL STAND |
| ARM REST 563X127 X190 ABS | 95 33 654 08 | 2 | 1 | 2 502 | 91 01 533 08 | CONTROL STAND |
| ARM REST 563X132 X190 ABS | 95 33 651 08 | 3 | 1 | 2 502 | 91 01 533 08 | CONTROL STAND |
| ARM WELDED SPF | 92 68 310 08 | 2 | 1 | 2 500 | 91 48 594 08 | CRANE DRIVER'S CABIN CPL. |
| ARMREST CPL.LEFT | 92 15 880 08 | 10 | 1 | 2 502 | 91 01 533 08 | CONTROL STAND |
| ARMREST CPL.RIGHT | 92 15 879 08 | 11 | 1 | 2 502 | 91 01 533 08 | CONTROL STAND |
| ARTICULATED HOOK WRENC | 88 51 828 08 | 11 | 1 | 1 750 | 91 48 606 08 | TOOLS AND ACCESSORIES |
| ARTICULATED HOOK WRENCH | 88 51 822 08 | 12 | 1 | 1 750 | 91 48 606 08 | TOOLS AND ACCESSORIES |
| ASH TRAY 92X57,5X26 | 73 66 731 | 51 | 1 | 2 520 000 | 91 49 872 08 | CABIN, GLAZED |
| ASSEMBLY FRAME 56TE | 91 23 538 08 | 43 | 1 | 2 932 042 | 96 68 587 08 | BASE ASSEMBLY |
| ASSEMBLY PARTS F.SLEWIN | 91 51 080 08 | 103 | 1 | | LTR 1100 -0 | LIEBHERR LTR 1100 |
| ASSEMBLY TOOL BOX | 79 00 454 08 | 1 | 1 | 1 750 001 | 92 85 698 08 | MAIN TOOLS |
| ATTACHABLE SLEEVE HOUSIN | 60 22 097 08 | (158) | 3 | 2 932 042 | 96 68 587 08 | BASE ASSEMBLY |
| ATTACHMENT GRIP | 96 84 504 08 | 166 | 1 | 2 520 000 | 91 49 872 08 | CABIN, GLAZED |
| AUDIBLE WARNING DEVICE | 96 43 785 08 | 21 | 1 | 2 920 | 91 55 477 08 | ELECTR. SYSTEM F.SLEWING |
| AUXILIA.SONIC ALARM DEVIC | 92 12 998 08 | 15 | 1 | 2 920 | 91 55 477 08 | ELECTR. SYSTEM F.SLEWING |
| AUXILIARY DRIVE PRE-ASS. | 10 11 783 6 | 1 | 1 | 9 073 767 | 90 73 767 | POWER TAKE-OFF ADD-ON |
| AUXILIARY DRIVE PRE-ASS. | 90 78 962 | 1 | 1 | X1011997 | 10 11 997 6 | POWER TAKE-OFF ADD-ON |
| AUXILIARY HOIST.ROPE W.AC | 91 62 290 08 | 332 | 1 | | LTR 1100 -0 | LIEBHERR LTR 1100 |
| AUXILIARY HOISTING GEAR 2 | 91 52 288 08 | 330 | 1 | | LTR 1100 -0 | LIEBHERR LTR 1100 |
| AUXILIARY REEVING CABLE, C | 91 50 372 08 | 440 | 1 | | LTR 1100 -0 | LIEBHERR LTR 1100 |
| AUXILIARY SWITCH BLOCK 1O | 60 66 533 08 | 12 | 4 | 2 920 574 | 96 36 055 08 | OPERATOR PANEL BALLAST |
| AUXILIARY SWITCH BLOCK 1O | 60 66 533 08 | 11 | 2 | 2 920 904 | 96 41 093 08 | CONTROL DESK SUPPORT |
| AUXILIARY SWITCH BLOCK 1 | 10 02 893 2 | 10 | 2 | 2 920 574 | 96 36 055 08 | OPERATOR PANEL BALLAST |
| AUXILIARY SWITCH BLOCK 1S | 60 66 532 08 | 10 | 14 | 2 920 904 | 96 41 093 08 | CONTROL DESK SUPPORT |
| AXIAL FACE SEAL | 74 90 573 14 | 20 | 1 | 1 100 211 | 74 90 653 14 | CARRYING ROLLER CPL |
| AXIAL FACE SEAL | 76 10 244 03 | 58 | 1 | 9 444 410 | 94 44 410 03 | TRACTION DRIVE |
| AXIAL FACE SEAL CPL | 74 90 685 14 | 4 | 2 | 1 100 214 | 74 90 137 14 | GUIDE WHEEL CPL |
| AXLE | 10 87 495 9 | (1) | 1 | 6 923 097 | 69 23 097 08 | PEDAL TRANSDUCER |
| AXLE | 74 90 153 14 | 3 | 1 | 1 100 214 | 74 90 137 14 | GUIDE WHEEL CPL |
| AXLE 108.0X92 S355J2H FE//ZN | 95 55 602 08 | 5 | 1 | 3 511 006 | 96 45 029 08 | BOOM NOSE PRE-ASS. |
| AXLE 170X310 35NICRMOV125 | 95 71 000 08 | 1 | 2 | 2 102 | 91 51 080 08 | ASSEMBLY PARTS F.SLEWING |
| AXLE HOLDER 12X108X84 S69 | 97 31 054 08 | 4 | 2 | 2 450 | 91 53 926 08 | MAIN HOIST GEAR |
| AXLE HOLDER 20X118X220 S | 97 26 082 08 | 6 | 1 | 2 350 | 91 81 361 08 | LUFFING RAM W. PIVOT |
| AXLE HOLDER 20x250x119 S69 | 95 19 139 08 | 2 | 2 | 2 102 | 91 51 080 08 | ASSEMBLY PARTS F.SLEWING |
| AXLE HOLDER 20x250x119 S69 | 95 19 139 08 | 4 | 1 | 2 350 | 91 81 361 08 | LUFFING RAM W. PIVOT |
| AXLE HOLDER 5X20X46 S700M | 93 19 278 08 | 17 | 2 | 2 510 200 | 96 41 258 08 | SLEWING PLATFORM PANELLI |
| AXLE HOLDER 8X29X100 ST.3 | 96 72 306 03 | 10 | 4 | 1 100 215 | 99 20 783 14 | CENTRE PIECE |
| AXLE HOLDER LN 4/1 S235JR+ | 99 70 401 01 | 31 | 1 | 3 510 100 | 91 49 246 08 | TRANSPORT MOUNTING |
| AXLE HOLDER LN 4/4 S235JR+ | 99 70 404 01 | 77 | 2 | 3 501 | 91 05 788 08 | MECH. DOUBLE FOLD JIB PR |
| AXLE RD100X125 S355J2H FE// | 94 93 475 08 | 24 | 2 | 3 501 | 91 05 788 08 | MECH. DOUBLE FOLD JIB PR |
| AXLE RD100X86 S355J2H FE// | 94 93 476 08 | 92 | 1 | 3 501 | 91 05 788 08 | MECH. DOUBLE FOLD JIB PR |
| AXLE RD110X818 35NICRMOV | 95 36 561 08 | 31 | 2 | 3 106 000 | 91 60 313 08 | TELESCOPIC SECT.5 PRE-AS |
| BACK PART | 57 18 353 08 | 2 | 1 | 7 741 079 | 77 41 079 08 | OPERATOR SEAT |
| BAG | 11 32 072 0 | (1) | 1 | 1 793 010 | 91 69 598 08 | PERSONAL PROTECTION EQ |
| BALANCER ASSEMBLY D934L | 90 74 165 | 90 | 1 | X1015207 | 10 15 207 7 | DIESEL ENGINE |
| BALANCER SHAFT PRE-ASS. | 90 77 131 | 1 | 2 | 9 074 165 | 90 74 165 | BALANCER ASSEMBLY |
| BALL DIN 5401 3 | 61 07 063 08 | 6 | 1 | 5 114 794 | 51 14 794 08 | LOAD HOLDING VALVE |
| BALL DIN 5401 6 G20 | 74 70 002 08 | 22 | 2 | X1087223 | 10 87 223 8 | LUFFING CYLINDER |
| BALL PIN 10X25,59X2 | 10 00 442 6 | 5 | 1 | 9 074 507 | 90 74 507 | ROCKER ARM PRE-ASSY. |
| BALL VALVE BKH12-L-10 A3C | 51 06 976 08 | 19 | 1 | 2 970 | 91 55 482 08 | HYDRAULICS |
| BALL VALVE BKHU DN 10 | 57 17 236 08 | 30 | 1 | X1033367 | 10 33 367 2 | CONTROL BLOCK |
| BALL VALVE COMBINATION | 10 33 368 6 | 20 | 1 | 2 970 | 91 55 482 08 | HYDRAULICS |

| Description | Item | Pos. | Quantity | Page | Assembly | Description |
|---|---|---|---|---|---|---|
| BALLAST EXTENSION RAM 110 | 10 32 633 4 | 1 | 2 | 2 571 | 91 50 902 08 | HYDRAULIC BALLASTING |
| BASE ASSEMBLY | 96 68 587 08 | 4 | 1 | 2 920 | 91 68 959 08 | SWITCHBOX MOUNTING PART |
| BASIC ENGINE D934 L | 10 12 193 2 | 1 | 1 | X1015207 | 10 15 207 7 | DIESEL ENGINE |
| BASIC WIRING CONST.PRE-AS | 96 68 589 08 | (2) | 1 | 2 932 042 | 96 68 587 08 | BASE ASSEMBLY |
| BATTERY 1.5V 16.5AH | 61 32 006 08 | 3 | 10 | 1 750 002 | 92 86 201 08 | ACCESSORIES |
| BATTERY 12V 170AH SPF | 10 44 993 4 | 5 | 2 | 2 920 083 | 96 31 039 08 | ELECTRIC FOR BATTERY BOX |
| BATTERY BOX CPL. | 91 46 555 08 | 107 | 1 | | LTR 1100 -0 | LIEBHERR LTR 1100 |
| BATTERY BOX ST.CONST. | 96 31 154 08 | 1 | 1 | 2 260 006 | 96 31 147 08 | BATTERY BOX, PRE-ASSEMB |
| BATTERY BOX, PRE-ASSEMB | 96 31 147 08 | 1 | 1 | 2 260 | 91 46 555 08 | BATTERY BOX CPL. |
| BATTERY MAIN SWITCH | 60 60 709 08 | 6 | 1 | 2 920 083 | 96 31 039 08 | ELECTRIC FOR BATTERY BOX |
| BATTERY TERMINAL CLAMP M | 61 32 066 08 | 21 | 1 | 2 920 083 | 96 31 039 08 | ELECTRIC FOR BATTERY BOX |
| BATTERY TERMINAL CLAMP | 61 32 065 08 | 22 | 1 | 2 920 083 | 96 31 039 08 | ELECTRIC FOR BATTERY BOX |
| BEARING | 10 00 971 5 | 23 | 2 | 5 530 022 | 55 30 022 08 | WATER HEATING SYSTEM |
| BEARING BLOCK | 55 20 751 08 | 110 | 1 | 2 680 | 91 53 225 08 | EXHAUST SYSTEM CPL. |
| BEARING BLOCK | 97 30 061 08 | 1 | 1 | 2 500 021 | 92 10 666 08 | PILLOW BLOCK PRE-ASS. |
| BEARING BLOCK 40x115x42 AL | 97 03 651 08 | 10 | 2 | 2 200 | 91 81 095 08 | DRIVE ASSEMBLY CPL. |
| BEARING BLOCK GGG40.3 SP | 38 00 346 08 | 1 | 1 | 2 500 022 | 92 10 661 08 | PILLOW BLOCK PRE-ASS. |
| BEARING BLOCK GGG40.3 SP | 38 00 347 08 | 1 | 1 | 2 500 023 | 92 10 663 08 | PILLOW BLOCK PRE-ASS. |
| BEARING BLOCK SPF | 97 36 414 08 | (1) | 1 | 2 210 | 91 81 614 08 | DRIVE ASSEMBLY, PRE-ASSE |
| BEARING BOLT | 59 10 632 08 | 35 | 1 | 2 520 000 | 91 49 872 08 | CABIN, GLAZED |
| BEARING BUSHING 195X117 G | 70 43 388 08 | 2 | 2 | 3 101 | 91 60 312 08 | PIVOT SECTION, PRE-ASSEMB |
| BEARING BUSHING 60X65X28 | 98 88 259 | 12 | 6 | X1011577 | 10 11 577 6 | CRANKCASE |
| BEARING COVER 31CrMoV9 | 90 72 908 | 3 | 1 | 9 072 906 | 90 72 906 | INTERMEDIATE GEAR CPL. |
| BEARING COVER RING | 74 72 584 01 | 4 | 1 | 9 330 748 | 93 30 748 01 | SLEWING GEAR DRIVE |
| BEARING COVER RING | 74 72 725 01 | 19 | 1 | 9 387 596 | 93 87 596 01 | ROPE DRUM |
| BEARING GUMMI | 72 69 114 08 | 2 | 1 | 2 500 021 | 92 10 666 08 | PILLOW BLOCK PRE-ASS. |
| BEARING GUMMI | 72 69 114 08 | 2 | 1 | 2 500 022 | 92 10 661 08 | PILLOW BLOCK PRE-ASS. |
| BEARING GUMMI | 72 69 114 08 | 2 | 1 | 2 500 023 | 92 10 663 08 | PILLOW BLOCK PRE-ASS. |
| BEARING HOUSING, PRE-AS | 90 78 963 | 1 | 1 | 9 078 962 | 90 78 962 | AUXILIARY DRIVE PRE-ASS. |
| BEARING PLATE 12X70X192 P | 28 30 942 08 | 25 | 2 | 3 105 000 | 91 62 546 08 | TELESCOPIC SECT.IV PRE-A |
| BEARING PLATE 12X70X192 P | 28 30 942 08 | 25 | 2 | 3 106 000 | 91 60 313 08 | TELESCOPIC SECT.5 PRE-AS |
| BEARING PLATE 12X70X202 P | 28 30 939 08 | 25 | 2 | 3 102 000 | 91 62 543 08 | TELESCOPIC SECTION 1 PRE |
| BEARING PLATE 12X70X202 P | 28 30 939 08 | 25 | 2 | 3 103 000 | 91 62 544 08 | TELESCOPIC SECT.2 PRE-AS |
| BEARING PLATE 12X70X202 P | 28 30 939 08 | 25 | 2 | 3 104 000 | 91 62 545 08 | TELESCOPIC SECT.3 PRE-ASS |
| BEARING PLATE 12x105x290 P | 28 30 944 08 | 46 | 2 | 3 101 | 91 60 312 08 | PIVOT SECTION, PRE-ASSEMB |
| BEARING PLATE 12x105x290 P | 28 30 944 08 | 46 | 2 | 3 102 000 | 91 62 543 08 | TELESCOPIC SECTION 1 PRE |
| BEARING PLATE 14X105X290 P | 28 30 943 08 | 45 | 2 | 3 101 | 91 60 312 08 | PIVOT SECTION, PRE-ASSEMB |
| BEARING PLATE 14X105X290 P | 28 30 943 08 | 45 | 2 | 3 102 000 | 91 62 543 08 | TELESCOPIC SECTION 1 PRE |
| BEARING PLATE 14X105X290 P | 28 30 943 08 | 45 | 4 | 3 103 000 | 91 62 544 08 | TELESCOPIC SECT.2 PRE-AS |
| BEARING PLATE 14X70X192 P | 28 30 941 08 | 24 | 2 | 3 105 000 | 91 62 546 08 | TELESCOPIC SECT.IV PRE-A |
| BEARING PLATE 14X70X192 P | 28 30 941 08 | 24 | 2 | 3 106 000 | 91 60 313 08 | TELESCOPIC SECT.5 PRE-AS |
| BEARING PLATE 14x70x202 P | 28 30 938 08 | 24 | 2 | 3 102 000 | 91 62 543 08 | TELESCOPIC SECTION 1 PRE |
| BEARING PLATE 14x70x202 P | 28 30 938 08 | 24 | 2 | 3 103 000 | 91 62 544 08 | TELESCOPIC SECT.2 PRE-AS |
| BEARING PLATE 14x70x202 P | 28 30 938 08 | 24 | 2 | 3 104 000 | 91 62 545 08 | TELESCOPIC SECT.3 PRE-ASS |
| BEARING PLATE 18x105x290 P | 28 30 947 08 | 45 | 2 | 3 104 000 | 91 62 545 08 | TELESCOPIC SECT.3 PRE-ASS |
| BEARING PLATE 18x105x290 P | 28 30 947 08 | 45 | 2 | 3 105 000 | 91 62 546 08 | TELESCOPIC SECT.IV PRE-A |
| BEARING PLATE 53X57X192 P | 28 30 937 08 | 23 | 2 | 3 102 000 | 91 62 543 08 | TELESCOPIC SECTION 1 PRE |
| BEARING PLATE 53X57X192 P | 28 30 937 08 | 23 | 2 | 3 103 000 | 91 62 544 08 | TELESCOPIC SECT.2 PRE-AS |
| BEARING PLATE 53X57X192 P | 28 30 937 08 | 23 | 2 | 3 104 000 | 91 62 545 08 | TELESCOPIC SECT.3 PRE-ASS |
| BEARING PLATE 53X57X192 P | 28 30 937 08 | 23 | 2 | 3 105 000 | 91 62 546 08 | TELESCOPIC SECT.IV PRE-A |
| BEARING PLATE 53X57X192 P | 28 30 937 08 | 23 | 2 | 3 106 000 | 91 60 313 08 | TELESCOPIC SECT.5 PRE-AS |
| BEARING PLATE 53X87X200 P | 28 30 936 08 | 22 | 2 | 3 102 000 | 91 62 543 08 | TELESCOPIC SECTION 1 PRE |
| BEARING PLATE 53X87X200 P | 28 30 936 08 | 22 | 2 | 3 103 000 | 91 62 544 08 | TELESCOPIC SECT.2 PRE-AS |
| BEARING PLATE 53X87X200 P | 28 30 936 08 | 22 | 2 | 3 104 000 | 91 62 545 08 | TELESCOPIC SECT.3 PRE-ASS |
| BEARING PLATE 53X87X200 P | 28 30 936 08 | 22 | 2 | 3 105 000 | 91 62 546 08 | TELESCOPIC SECT.IV PRE-A |
| BEARING PLATE 53X87X200 P | 28 30 936 08 | 22 | 2 | 3 106 000 | 91 60 313 08 | TELESCOPIC SECT.5 PRE-AS |
| BEARING PLATE 75X140X190 P | 28 30 940 08 | 12 | 2 | 3 105 000 | 91 62 546 08 | TELESCOPIC SECT.IV PRE-A |
| BEARING PLATE 75X140X190 P | 28 30 940 08 | 12 | 2 | 3 106 000 | 91 60 313 08 | TELESCOPIC SECT.5 PRE-AS |
| BEARING PLATE 75X140X200 P | 28 30 672 08 | 12 | 2 | 3 103 000 | 91 62 544 08 | TELESCOPIC SECT.2 PRE-AS |
| BEARING PLATE 75X140X200 P | 28 30 672 08 | 12 | 2 | 3 104 000 | 91 62 545 08 | TELESCOPIC SECT.3 PRE-ASS |

| Description | Item | Pos. | Quantity | Page | Assembly | Description |
|---|---|---|---|---|---|---|
| BEARING PLATE 75X140X230 P | 28 30 935 08 | 12 | 2 | 3 102 000 | 91 62 543 08 | TELESCOPIC SECTION 1 PRE |
| BEARING RING | 57 01 097 08 | 3 | 1 | 5 701 090 | 57 01 090 08 | DRIVING GEAR |
| BEARING RING | 92 76 017 01 | 15 | 1 | 9 387 598 | 93 87 598 01 | PLANETARY GEARBOX |
| BEARING RING | 92 76 017 01 | 15 | 1 | 9 686 071 | 96 86 071 01 | PLANETARY GEARBOX |
| BEARING RING | 94 42 439 03 | 5 | 1 | 9 444 410 | 94 44 410 03 | TRACTION DRIVE |
| BELT PULLEY | 90 80 505 | 1 | 1 | 9 080 591 | 90 80 591 | CRANKSHAFT ADD-ON PARTS |
| BELT PULLEY 0.5X8PKX51,7 | 90 79 587 | 2 | 1 | X1011864 | 10 11 864 6 | GENERATOR, PRE-ASSEMBLE |
| BELT PULLEY 8PKX51,7 C45 | 11 35 561 8 | 2 | 1 | X1011864 | 10 11 864 6 | GENERATOR, PRE-ASSEMBLE |
| BLADE-TYPE ELECTRIC FUSE | 60 41 040 08 | 12 | 2 | 2 932 095 | 96 46 064 08 | SWING FRAME FUSE AND RE |
| BLANK SOCKET PG11 MS | 60 24 113 08 | 24 | 1 | 2 533 003 | 96 28 388 08 | ELECTRIC ADD-ON PARTS CA |
| BLANKING PLUG 13 | 77 90 183 01 | 91 | 1 | 9 444 410 | 94 44 410 03 | TRACTION DRIVE |
| BLANKING PLUG ISO 8434-1 PL | 47 77 004 08 | 722 | 3 | 2 970 | 91 55 482 08 | HYDRAULICS |
| BLANKING PLUG ISO 8434-1 PL | 47 77 005 08 | 731 | 2 | 2 970 | 91 55 482 08 | HYDRAULICS |
| BLANKING PLUG ISO 8434-1 PL | 47 77 001 08 | 699 | 3 | 2 970 | 91 55 482 08 | HYDRAULICS |
| BLIND | 11 00 696 3 | 44 | 1 | 2 520 000 | 91 49 872 08 | CABIN, GLAZED |
| BLIND | 11 00 696 4 | 45 | 1 | 2 520 000 | 91 49 872 08 | CABIN, GLAZED |
| BLIND RIVET 3,0X3,2-5,0 | 70 42 121 08 | 10 | 2 | 2 913 005 | 96 28 696 08 | INTERIOR HOUSING PRE-ASS. |
| BLIND RIVET 3,2X1,8-3,1 | 70 42 126 08 | 13 | 4 | 2 501 000 | 91 48 769 08 | CRANE DRIVER'S CABIN,PRE |
| BLIND RIVET 3,2X4,3-5,9 | 70 42 127 08 | 22 | 2 | 2 520 000 | 91 49 872 08 | CABIN, GLAZED |
| BLIND RIVET 3,2X4,3-5,9 | 70 42 127 08 | 70 | 12 | 2 932 095 | 96 46 064 08 | SWING FRAME FUSE AND RE |
| BLIND RIVET 4,0X10,5 | 70 42 323 08 | 71 | 25 | 2 932 042 | 96 68 587 08 | BASE ASSEMBLY |
| BLIND RIVET 4,0X10,5 | 70 42 323 08 | 71 | 6 | 2 932 095 | 96 46 064 08 | SWING FRAME FUSE AND RE |
| BLIND RIVET NUT M4 K=1,0-3, | 41 30 062 08 | 70 | 28 | 2 932 042 | 96 68 587 08 | BASE ASSEMBLY |
| BLIND RIVET NUT M5 K=1,0-3,5 | 10 04 259 2 | 69 | 29 | 2 932 042 | 96 68 587 08 | BASE ASSEMBLY |
| BLIND RIVET NUT M5 K=1,5-4,0 | 41 30 046 08 | 39 | 4 | 2 502 | 91 01 533 08 | CONTROL STAND |
| BLIND RIVET NUT M6 K=1,0-3,5 | 10 04 259 3 | 108 | 13 | 2 520 000 | 91 49 872 08 | CABIN, GLAZED |
| BLIND RIVET NUT M8 ST | 41 30 054 08 | 39 | 8 | 2 501 000 | 91 48 769 08 | CRANE DRIVER'S CABIN,PRE |
| BLOCK GR.12 | 51 14 753 14 | 15 | 1 | 1 970 | 96 71 367 08 | UNDERCARRIAGE HYDRAULIC |
| BLOWER | 57 18 304 08 | 15 | 1 | 5 530 022 | 55 30 022 08 | WATER HEATING SYSTEM |
| BOARD | 57 09 912 08 | 51 | 1 | 6 060 516 | 60 60 516 08 | GEAR CAM LIMITSWITCH |
| BOARD 24V | 57 15 561 08 | (2) | 1 | 2 920 585 | 91 01 520 08 | ELECTRIC FOR FLASHLIGHT |
| BOARD CONTROL PANEL AL-B | 97 58 637 08 | 6 | 1 | 2 920 904 | 96 41 093 08 | CONTROL DESK SUPPORT |
| BOARD WELDED | 96 20 929 08 | 1 | 1 | 3 510 006 | 96 20 924 08 | FOLDING BRACKET |
| BOLT HANDLE FE//ZNNI8//CN/ | 96 32 610 08 | 1 | 1 | 2 102 022 | 96 32 604 08 | LOCKING |
| BOOM NOSE | 91 54 159 08 | 356 | 1 | | LTR 1100 -0 | LIEBHERR LTR 1100 |
| BOOM NOSE PRE-ASS. | 96 45 029 08 | 1 | 1 | 3 511 | 91 54 159 08 | BOOM NOSE |
| BOOM NOSE WELDED CONST | 92 86 596 08 | 1 | 1 | 3 511 006 | 96 45 029 08 | BOOM NOSE PRE-ASS. |
| BOWDEN PULL SYSTEM | 57 07 566 08 | 3 | 1 | 5 530 854 | 55 30 854 08 | THREE-WAY TAP |
| BOX NUT DIN 3870 AL10 A3P | 47 74 015 08 | 733 | 1 | 2 970 | 91 55 482 08 | HYDRAULICS |
| BOX NUT DIN 3870 AL12 A3C | 47 74 016 08 | 732 | 2 | 2 970 | 91 55 482 08 | HYDRAULICS |
| BOX NUT DIN 3870 AL18 A3P | 47 74 024 08 | 700 | 3 | 2 970 | 91 55 482 08 | HYDRAULICS |
| BOX NUT DIN 3870 AL28 A3P | 47 74 017 08 | 703 | 1 | 1 970 | 96 71 367 08 | UNDERCARRIAGE HYDRAULIC |
| BOX NUT DIN 3870 AS10 A3P | 47 74 003 08 | 721 | 2 | 2 970 | 91 55 482 08 | HYDRAULICS |
| BOX NUT DIN 3870 AS16 A3P | 47 74 006 08 | 729 | 1 | 1 970 | 96 71 367 08 | UNDERCARRIAGE HYDRAULIC |
| BOX NUT DIN 3870 AS20 A3P | 47 74 007 08 | 730 | 1 | 1 970 | 96 71 367 08 | UNDERCARRIAGE HYDRAULIC |
| BOX NUT DIN 3870 AS30 A3C | 47 74 009 08 | 731 | 4 | 1 970 | 96 71 367 08 | UNDERCARRIAGE HYDRAULIC |
| BOX NUT XM 22X1,5 A2E/A2C | 90 75 763 | 2 | 1 | 9 075 395 | 90 75 395 | HIGH PRESSURE CONNECT |
| BRACING KABINE | 91 54 183 08 | 130 | 1 | | LTR 1100 -0 | LIEBHERR LTR 1100 |
| BRACKET 20.0X72 8 S355J2C+ | 95 16 657 08 | 26 | 1 | 3 501 | 91 05 788 08 | MECH. DOUBLE FOLD JIB PR |
| BRACKET 6.0X314 S235JRG2 | 97 67 995 08 | 14 | 1 | 2 515 007 | 96 42 014 08 | PLATFORM, PRE-ASSEMBLED |
| BRACKET ST | 10 21 652 9 | 60 | 1 | 2 831 | 91 47 871 08 | AIR COND. UNIT SUPERSTRU |
| BRACKET WELDED CONST. | 92 50 027 08 | 5 | 1 | 2 502 | 91 01 533 08 | CONTROL STAND |
| BRACKET WELDED CONST. | 92 50 421 08 | 4 | 1 | 3 510 100 | 91 49 246 08 | TRANSPORT MOUNTING |
| BRACKET WELDED CONST. | 92 52 756 08 | 1 | 1 | 3 510 001 | 92 52 800 08 | CONSOLE PRE-ASS. |
| BRACKET WELDED CONST. | 92 79 359 08 | 8 | 1 | 2 102 | 91 51 080 08 | ASSEMBLY PARTS F.SLEWING |
| BRACKET WELDED CONST. | 96 22 885 08 | 6 | 1 | 2 102 | 91 51 080 08 | ASSEMBLY PARTS F.SLEWING |
| BRACKET WELDED CONST. | 96 36 724 08 | 50 | 1 | 2 102 | 91 51 080 08 | ASSEMBLY PARTS F.SLEWING |
| BRACKET WELDED CONST. | 96 36 726 08 | 51 | 1 | 2 102 | 91 51 080 08 | ASSEMBLY PARTS F.SLEWING |
| BRACKET WELDED CONST. | 96 42 015 08 | 1 | 1 | 2 515 007 | 96 42 014 08 | PLATFORM, PRE-ASSEMBLED |
| BRACKET WELDED CONST. | 96 45 139 08 | 1 | 1 | 2 790 901 | 91 54 183 08 | BRACING |

| Description | Item | Pos. | Quantity | Page | Assembly | Description |
|---|---|---|---|---|---|---|
| BRACKET,LEFT WELDED | 92 50 028 08 | 6 | 1 | 2 502 | 91 01 533 08 | CONTROL STAND |
| BRACKET,LEFT WELDED FE// | 92 57 213 08 | 2 | 1 | 3 330 | 91 57 885 08 | MECHANICAL EXTENSION SYS |
| BRACKET,RIGHT WELDED | 92 50 029 08 | 7 | 1 | 2 502 | 91 01 533 08 | CONTROL STAND |
| BRACKET,RIGHT WELDED FE// | 92 57 214 08 | 3 | 1 | 3 330 | 91 57 885 08 | MECHANICAL EXTENSION SYS |
| BRAKE ACTUATING UNIT | 50 28 075 01 | (1) | 1 | 9 686 071 | 96 86 071 01 | PLANETARY GEARBOX |
| BRAKE HOSE DIN 74310 DN11 | 50 28 104 08 | 27 | 0.85 | 2 540 | 91 45 984 08 | HEATING, CRANE CABIN |
| BRAKE HOSE DIN 74310 DN11 | 50 28 104 08 | 28 | 0.4 | 2 540 | 91 45 984 08 | HEATING, CRANE CABIN |
| BRAKE HOSE DIN 74310 DN11 | 50 28 104 08 | 150 | 1 | 2 997 | 91 51 089 08 | HOSE LINES SUPERSTRUCT |
| BRAKE HOSE DIN 74310 DN11 | 50 28 104 08 | 151 | 0.7 | 2 997 | 91 51 089 08 | HOSE LINES SUPERSTRUCT |
| BRAKE MULTI-DISC SET | 93 95 895 01 | (997) | 1 | 9 686 071 | 96 86 071 01 | PLANETARY GEARBOX |
| BRAKE PACKING SET | 90 01 665 2 | (999) | 1 | 9 330 748 | 93 30 748 01 | SLEWING GEAR DRIVE |
| BRAKE PACKING SET | 93 95 896 01 | (998) | 1 | 9 686 071 | 96 86 071 01 | PLANETARY GEARBOX |
| BRAKE SPRING SET | 93 95 897 01 | (999) | 1 | 9 686 071 | 96 86 071 01 | PLANETARY GEARBOX |
| BRAKE VALVE | 10 34 723 6 | 16 | 1 | X1010109 | 10 10 109 3 | SLEWING GEAR VALVE |
| BRUSH SUPPORT | 10 41 178 5 | 26 | 1 | X1034357 | 10 34 357 4 | CABLE REEL |
| BRUSH SUPPORT | 10 41 178 6 | 27 | 9 | X1034357 | 10 34 357 4 | CABLE REEL |
| BRUSH SUPPORT 10A ERDE | 11 00 314 1 | (1) | 1 | X1034357 | 10 34 357 4 | CABLE REEL |
| BRUSH SUPPORT 10A GOLD | 11 00 314 2 | (1) | 1 | X1034357 | 10 34 357 4 | CABLE REEL |
| BUFFER 30X20 GUMMI 50SH | 97 02 548 4 | 122 | 4 | 2 210 008 | 96 48 137 08 | RADIATOR, PRE-ASSEMBLED |
| BUILT-IN SOCKET 2-POL | 60 52 039 08 | 27 | 1 | 2 932 095 | 96 46 064 08 | SWING FRAME FUSE AND RE |
| BUS PCB | 92 84 311 08 | 3 | 1 | 2 913 100 | 91 23 538 08 | ASSEMBLY FRAME |
| BUSHING | 57 15 822 08 | 2 | 1 | 5 700 161 | 57 00 161 | AIR COMPRESSOR |
| BUSHING 15,1X27,8X10 | 92 75 207 01 | 26 | 1 | 9 387 598 | 93 87 598 01 | PLANETARY GEARBOX |
| BUSHING 16.0X11 E235+N GA | 97 45 012 08 | 16 | 2 | 2 440 022 | 96 42 336 08 | WINCH 2 PRE-ASS. |
| BUSHING 160X180X100 | 11 00 499 6 | 5 | 1 | X1087223 | 10 87 223 8 | LUFFING CYLINDER |
| BUSHING 16X140 9SM28K | 70 45 008 08 | 15 | 2 | 3 102 000 | 91 62 543 08 | TELESCOPIC SECTION 1 PRE |
| BUSHING 16X140 9SM28K | 70 45 008 08 | 15 | 2 | 3 103 000 | 91 62 544 08 | TELESCOPIC SECT.2 PRE-AS |
| BUSHING 16X140 9SM28K | 70 45 008 08 | 15 | 2 | 3 104 000 | 91 62 545 08 | TELESCOPIC SECT.3 PRE-ASS |
| BUSHING 16X140 9SM28K | 70 45 008 08 | 15 | 2 | 3 105 000 | 91 62 546 08 | TELESCOPIC SECT.IV PRE-A |
| BUSHING 16X140 9SM28K | 70 45 008 08 | 15 | 2 | 3 106 000 | 91 60 313 08 | TELESCOPIC SECT.5 PRE-AS |
| BUSHING 35.0X30 42CRMO4+Q | 97 39 987 08 | 3 | 1 | 2 790 024 | 96 67 077 08 | MIRROR RETAINER PRE-ASS. |
| BUSHING 60.3X24 S355J2H | 97 06 891 08 | 12 | 6 | 2 102 | 91 51 080 08 | ASSEMBLY PARTS F.SLEWING |
| BUSHING RD110X13 S960QL | 95 37 261 08 | 9 | 1 | 3 105 000 | 91 62 546 08 | TELESCOPIC SECT.IV PRE-A |
| BUSHING RD110X13 S960QL | 95 37 261 08 | 9 | 1 | 3 106 000 | 91 60 313 08 | TELESCOPIC SECT.5 PRE-AS |
| BUSHING RD115X13 S960QL | 95 70 113 08 | 9 | 1 | 3 102 000 | 91 62 543 08 | TELESCOPIC SECTION 1 PRE |
| BUSHING RD115X13 S960QL | 95 70 113 08 | 9 | 1 | 3 103 000 | 91 62 544 08 | TELESCOPIC SECT.2 PRE-AS |
| BUSHING RD115X13 S960QL | 95 70 113 08 | 9 | 1 | 3 104 000 | 91 62 545 08 | TELESCOPIC SECT.3 PRE-ASS |
| BUSHING RD13,5X8 PA6G | 28 30 916 08 | 21 | 1 | 2 520 001 | 92 48 796 08 | FRONT WINDOW CPL. |
| BUSHING RD150X130 GZ-CU | 97 25 034 08 | 36 | 1 | 2 102 | 91 51 080 08 | ASSEMBLY PARTS F.SLEWING |
| BUSHING RD19,5X7 PA6G | 28 30 914 08 | 25 | 1 | 2 520 001 | 92 48 796 08 | FRONT WINDOW CPL. |
| BUSHING SUPPORT 6-POL 16 | 60 45 265 08 | (152) | 1 | 3 930 492 | 96 20 966 08 | TERMINAL BOX CPL. |
| BUSHING SUPPORT 6-POL 16 | 60 45 265 08 | 11 | 1 | 6 923 101 | 69 23 101 08 | ROPE LENGTH INDICATOR |
| BUTTON | 57 07 567 08 | 4 | 1 | 5 530 854 | 55 30 854 08 | THREE-WAY TAP |
| BUTTON GUMMI | 72 66 108 08 | 17 | 2 | 2 522 | 91 10 037 08 | DOOR CPL. |
| BUTTON HEAD SCREW AEHN | 40 97 044 08 | 14 | 4 | 2 450 | 91 53 926 08 | MAIN HOIST GEAR |
| BUTTON HEAD SCREW AEHN | 10 41 285 1 | 301 | 10 | 2 510 100 | 96 44 750 08 | SLEWING PLATFORM PANELLI |
| BUTTON HEAD SCREW AEHN | 10 41 285 1 | 301 | 8 | 2 681 | 91 28 102 08 | AIR FILTER UNIT |
| BUTTON HEAD SCREW AEHN | 10 41 285 2 | 34 | 4 | 2 510 200 | 96 41 258 08 | SLEWING PLATFORM PANELLI |
| BUTTON HEAD SCREW AEHN | 10 41 285 4 | 7 | 4 | 2 102 | 91 51 080 08 | ASSEMBLY PARTS F.SLEWING |
| BUTTON HEAD SCREW AEHN | 10 41 285 4 | 300 | 6 | 2 210 | 91 81 614 08 | DRIVE ASSEMBLY, PRE-ASSE |
| BUTTON HEAD SCREW AEHN | 10 41 285 4 | 22 | 2 | 2 430 | 91 54 389 08 | ANGLE THREADED BULKHEA |
| BUTTON HEAD SCREW AEHN | 10 41 285 4 | 40 | 10 | 2 440 022 | 96 42 336 08 | WINCH 2 PRE-ASS. |
| BUTTON HEAD SCREW AEHN | 10 41 285 4 | 300 | 3 | 2 510 100 | 96 44 750 08 | SLEWING PLATFORM PANELLI |
| BUTTON HEAD SCREW AEHN | 10 41 285 4 | 43 | 1 | 2 510 200 | 96 41 258 08 | SLEWING PLATFORM PANELLI |
| BUTTON HEAD SCREW AEHN | 10 41 285 4 | 82 | 4 | 2 970 | 91 55 482 08 | HYDRAULICS |
| BUTTON HEAD SCREW AEHN | 10 41 285 4 | 43 | 6 | 2 971 | 91 50 610 08 | HYDR.AUXILIARY HOISTING |
| BUTTON HEAD SCREW AEHN | 10 41 285 4 | 303 | 10 | 2 984 | 91 52 906 08 | OIL COOLER INSTALLATION |
| BUTTON HEAD SCREW AEHN | 10 41 285 4 | 16 | 4 | 3 100 | 91 59 279 08 | TELESCOPIC BOOM CPL. |
| BUTTON HEAD SCREW AEHN | 10 41 285 4 | 69 | 48 | 3 101 | 91 60 312 08 | PIVOT SECTION, PRE-ASSEMB |
| BUTTON HEAD SCREW AEHN | 10 41 285 4 | 43 | 31 | 3 106 000 | 91 60 313 08 | TELESCOPIC SECT.5 PRE-AS |

| Description | Item | Pos. | Quantity | Page | Assembly | Description |
|---|---|---|---|---|---|---|
| BUTTON HEAD SCREW AEHN | 10 41 285 4 | 98 | 23 | 3 501 | 91 05 788 08 | MECH. DOUBLE FOLD JIB PR |
| BUTTON HEAD SCREW AEHN | 10 41 285 4 | 7 | 5 | 3 511 | 91 54 159 08 | BOOM NOSE |
| BUTTON HEAD SCREW AEHN | 10 41 285 4 | 27 | 3 | 3 511 006 | 96 45 029 08 | BOOM NOSE PRE-ASS. |
| BUTTON HEAD SCREW AEHNL | 10 41 285 7 | 26 | 5 | 2 450 | 91 53 926 08 | MAIN HOIST GEAR |
| BUTTON HEAD SCREW AEHNL | 10 41 285 7 | 305 | 6 | 2 510 100 | 96 44 750 08 | SLEWING PLATFORM PANELLI |
| BUTTON HEAD SCREW AEHNL | 10 41 285 7 | 14 | 6 | 2 510 201 | 96 42 011 08 | FLAP PRE-ASS. |
| BUTTON HEAD SCREW AEHNL | 10 41 286 1 | 302 | 2 | 2 510 100 | 96 44 750 08 | SLEWING PLATFORM PANELLI |
| BUTTON HEAD SCREW ISO 73 | 10 87 544 8 | 31 | 4 | 2 440 022 | 96 42 336 08 | WINCH 2 PRE-ASS. |
| BUTTON HEAD SCREW ISO 73 | 10 87 544 8 | 11 | 8 | 2 450 | 91 53 926 08 | MAIN HOIST GEAR |
| BUTTON HEAD SCREW ISO 73 | 10 87 544 8 | 5 | 4 | 2 450 025 | 96 35 649 08 | MAIN HOISTING GEAR PRE-A |
| BUTTON HEAD SCREW ISO 73 | 11 83 504 3 | 300 | 2 | 2 200 048 | 96 84 070 08 | EXPANSION TANK PRE-ASS. |
| BUTTON HEAD SCREW ISO 7 | 40 97 053 08 | 162 | 3 | 2 520 000 | 91 49 872 08 | CABIN, GLAZED |
| BUTTON HEAD SCREW ISO 7 | 40 97 053 08 | 7 | 2 | 2 520 021 | 92 17 203 08 | INSTRUMENT BOX DELIVERY |
| BUTTON HEAD SCREW ISO 7 | 10 87 547 4 | 44 | 10 | 2 502 | 91 01 533 08 | CONTROL STAND |
| BUTTON HEAD SCREW ISO 7 | 40 97 063 08 | 45 | 12 | 2 502 | 91 01 533 08 | CONTROL STAND |
| BUTTON HEAD SCREW ISO 7 | 10 87 546 8 | 303 | 1 | 2 510 100 | 96 44 750 08 | SLEWING PLATFORM PANELLI |
| BUTTON HEAD SCREW ISO 7 | 10 87 546 8 | 144 | 10 | 2 520 000 | 91 49 872 08 | CABIN, GLAZED |
| BUTTON HEAD SCREW ISO 7 | 10 87 546 8 | 27 | 2 | 2 522 | 91 10 037 08 | DOOR CPL. |
| BUTTON HEAD SCREW ISO 7 | 40 97 040 08 | 41 | 8 | 2 502 | 91 01 533 08 | CONTROL STAND |
| BUTTON HEAD SCREW ISO 7 | 40 97 041 08 | 304 | 8 | 2 510 100 | 96 44 750 08 | SLEWING PLATFORM PANELLI |
| BUTTON HEAD SCREW ISO 7 | 40 97 041 08 | 42 | 5 | 2 510 200 | 96 41 258 08 | SLEWING PLATFORM PANELLI |
| BUTTON HEAD SCREW ISO 7 | 40 97 041 08 | 24 | 2 | 2 950 | 91 49 515 08 | COMPRESSED-AIR SYST.SU |
| BUTTON HEAD SCREW ISO 7 | 40 97 041 08 | 302 | 22 | 2 984 | 91 52 906 08 | OIL COOLER INSTALLATION |
| BUTTON HEAD SCREW ISO 7 | 40 97 041 08 | 8 | 8 | 3 750 008 | 91 75 085 08 | LADDER ATTACHMENT |
| BUTZEN BUZ 20S CR6-FREI | 47 77 014 08 | 734 | 1 | 1 970 | 96 71 367 08 | UNDERCARRIAGE HYDRAULIC |
| BUTZEN BUZ 28L A3C | 47 77 008 08 | 757 | 1 | 1 970 | 96 71 367 08 | UNDERCARRIAGE HYDRAULIC |
| CABIN NIBBLING PARTS | 91 49 865 08 | (1) | 1 | 2 520 000 | 91 49 872 08 | CABIN, GLAZED |
| CABIN SHEET METAL SECTIO | 91 49 864 08 | 9 | 1 | 2 520 000 | 91 49 872 08 | CABIN, GLAZED |
| CABIN, GLAZED | 91 49 872 08 | 1 | 1 | 2 501 000 | 91 48 769 08 | CRANE DRIVER'S CABIN,PRE |
| CABLE CHANNEL 60X40/2000 | 60 14 046 08 | 101 | 0.62 | 2 932 042 | 96 68 587 08 | BASE ASSEMBLY |
| CABLE CHANNEL 60X40/2000 | 60 14 046 08 | 106 | 0.35 | 2 932 095 | 96 46 064 08 | SWING FRAME FUSE AND RE |
| CABLE CHANNEL 60X40/2000 | 60 14 046 08 | 107 | 0.295 | 2 932 095 | 96 46 064 08 | SWING FRAME FUSE AND RE |
| CABLE CHANNEL 60X60/2000 | 60 14 073 08 | 102 | 0.45 | 2 932 042 | 96 68 587 08 | BASE ASSEMBLY |
| CABLE CHANNEL 60X60/2000 | 60 14 073 08 | 103 | 0.08 | 2 932 042 | 96 68 587 08 | BASE ASSEMBLY |
| CABLE CLAMP | 72 00 144 08 | 40 | 2 | 3 106 000 | 91 60 313 08 | TELESCOPIC SECT.5 PRE-AS |
| CABLE CLAMP | 72 00 144 08 | 109 | 5 | 3 501 | 91 05 788 08 | MECH. DOUBLE FOLD JIB PR |
| CABLE CLAMP | 72 00 144 08 | 5 | 4 | 3 511 | 91 54 159 08 | BOOM NOSE |
| CABLE CLAMP | 72 00 144 08 | 26 | 2 | 3 511 006 | 96 45 029 08 | BOOM NOSE PRE-ASS. |
| CABLE CLAMP 2X22X90 DC01 | 95 36 500 08 | 68 | 16 | 3 101 | 91 60 312 08 | PIVOT SECTION, PRE-ASSEMB |
| CABLE CLAMP 2X22X90 DC01 | 95 36 500 08 | 45 | 14 | 3 106 000 | 91 60 313 08 | TELESCOPIC SECT.5 PRE-AS |
| CABLE CLAMP 2X22X90 DC01 | 95 36 500 08 | 108 | 21 | 3 501 | 91 05 788 08 | MECH. DOUBLE FOLD JIB PR |
| CABLE CLAMP 2X22X90 DC01 | 95 36 500 08 | 6 | 1 | 3 511 | 91 54 159 08 | BOOM NOSE |
| CABLE CLAMP 2X22X90 DC01 | 95 36 500 08 | 28 | 1 | 3 511 006 | 96 45 029 08 | BOOM NOSE PRE-ASS. |
| CABLE CLAMP POLYAMID | 70 42 805 08 | 18 | 1 | 2 515 007 | 96 42 014 08 | PLATFORM, PRE-ASSEMBLED |
| CABLE CONNECTOR | 60 23 364 08 | 2 | 1 | 2 932 166 | 92 68 911 08 | GROUND RAIL |
| CABLE DRUM COMPL. N1/B7 | 92 07 741 08 | 7 | 1 | 3 930 470 | 92 07 663 08 | ELECTR. F.EXTENDING MECH |
| CABLE GLAND M16X1,5 MS | 60 24 241 08 | 199 | 2 | 3 930 492 | 96 20 966 08 | TERMINAL BOX CPL. |
| CABLE GLAND M20X1,5X6-10 | 60 24 257 08 | 200 | 1 | 3 930 492 | 96 20 966 08 | TERMINAL BOX CPL. |
| CABLE GLAND M20X1,5X6-10 | 60 24 257 08 | 211 | 4 | 3 930 718 | 96 56 248 08 | TERMINAL BOX CPL. |
| CABLE GLAND M25x1,5 MS | 60 24 243 08 | 16 | 1 | 1 920 314 | 96 46 921 08 | TERMINAL BOX, PRE-ASSEMB |
| CABLE GLAND M32X1,5 MS | 60 24 244 08 | 18 | 1 | 1 920 314 | 96 46 921 08 | TERMINAL BOX, PRE-ASSEMB |
| CABLE GLAND PG11 | 60 24 226 08 | 266 | 1 | 2 920 585 | 91 01 520 08 | ELECTRIC FOR FLASHLIGHT |
| CABLE GLAND PG11 | 60 24 226 08 | 7 | 1 | 3 930 523 | 96 43 943 08 | CABLE REEL |
| CABLE GLAND PG13 | 60 24 227 08 | 5 | 2 | X1034357 | 10 34 357 4 | CABLE REEL |
| CABLE GLAND PG9 | 60 24 225 08 | 2 | 1 | 2 920 362 | 96 31 865 08 | ELECTR. FOR WORK AREA LI |
| CABLE HARNESS 3300MM | 55 31 869 08 | 29 | 1 | 2 920 013 | 96 41 599 08 | CABLE LIST ELECTRICAL SYS |
| CABLE HARNESS MOUNTING | 10 11 998 0 | 580 | 1 | X1015207 | 10 15 207 7 | DIESEL ENGINE |
| CABLE HARNESS S417 | 92 17 218 08 | 7 | 1 | 3 930 492 | 96 20 966 08 | TERMINAL BOX CPL. |
| CABLE LIST DRIVER'S CABIN | 96 46 345 08 | 4 | 1 | 2 533 | 91 54 254 08 | EL.INSTRUMENTS F.CRANE D |
| CABLE LIST ELECTRICAL SYS | 96 41 599 08 | 12 | 1 | 2 920 | 91 55 477 08 | ELECTR. SYSTEM F.SLEWING |

| Description | Item | Pos. | Quantity | Page | Assembly | Description |
|---|---|---|---|---|---|---|
| CABLE LOOM | 57 05 132 08 | 5 | 1 | 5 530 854 | 55 30 854 08 | THREE-WAY TAP |
| CABLE LOOM D934 A6 | 10 33 284 3 | 1 | 1 | X1011997 | 10 11 997 9 | WIRING HARNESS ASSEMBLY |
| CABLE REEL | 96 43 943 08 | 6 | 1 | 3 930 342 | 96 56 247 08 | ELECTRIC F.BASE SECTION |
| CABLE REEL 50M 9-POL+PE | 10 34 357 4 | 5 | 1 | 3 930 523 | 96 43 943 08 | CABLE REEL |
| CABLE SLEEVE 4-6 | 60 27 048 08 | 9 | 2 | 6 923 101 | 69 23 101 08 | ROPE LENGTH INDICATOR |
| CABLE SOCKET M11-Z | 60 45 055 08 | 14 | 1 | 6 923 101 | 69 23 101 08 | ROPE LENGTH INDICATOR |
| CABLE TIE 2,5X98-BLACK PA 6. | 60 32 022 08 | 13 | 2 | 2 780 852 | 96 24 845 08 | GSM-MODULE PRE-ASS.LICCO |
| CABLE TIE 2,5X98-BLACK PA 6. | 60 32 022 08 | 8 | 2 | 2 913 004 | 96 20 460 08 | HOUSING PRE-ASSEMBLED |
| CABLE TIE 2,5X98-BLACK PA 6. | 60 32 022 08 | 11 | 1 | 2 913 006 | 96 20 732 08 | FAN PLATE PRE-ASS. |
| CABLE TIE 2,5X98-BLACK PA 6. | 60 32 022 08 | (213) | 100 | 2 932 042 | 96 68 587 08 | BASE ASSEMBLY |
| CABLE TIE 2,5X98-BLACK PA 6. | 60 32 022 08 | 24 | 10 | 2 932 119 | 96 46 061 08 | SWING FRAME RELAY CONT |
| CABLE TIE 3,6X140-SCHWARZ | 60 32 003 08 | (211) | 100 | 2 932 042 | 96 68 587 08 | BASE ASSEMBLY |
| CABLE TIE 3,6X200-SCHWARZ | 60 32 004 08 | (212) | 100 | 2 932 042 | 96 68 587 08 | BASE ASSEMBLY |
| CABLE TIE 3,6X200-SCHWARZ | 60 32 004 08 | 154 | 5 | 3 930 523 | 96 43 943 08 | CABLE REEL |
| CABLE TIE 4,8X292-SCHWARZ | 10 87 458 8 | 22 | 2 | 1 920 314 | 96 46 921 08 | TERMINAL BOX, PRE-ASSEMB |
| CABLE TIE 4,8X292-SCHWARZ | 10 87 458 8 | 30 | 100 | 2 920 | 91 55 477 08 | ELECTR. SYSTEM F.SLEWING |
| CABLE TIE 4,8X292-SCHWARZ | 10 87 458 8 | 12 | 2 | X1011997 | 10 11 997 9 | WIRING HARNESS ASSEMBLY |
| CABLE TIE 4,8X292-SCHWARZ | 10 87 458 8 | 65 | 3 | X1011998 | 10 11 998 0 | CABLE HARNESS MOUNTING |
| CABLES, BASIC CONSTRUCT | 96 68 588 08 | 12 | 1 | 2 932 042 | 96 68 587 08 | BASE ASSEMBLY |
| CAGE NUT M5 | 41 30 026 08 | 110 | 2 | 2 520 000 | 91 49 872 08 | CABIN, GLAZED |
| CAGE NUT M5 | 41 30 026 08 | 94 | 3 | 2 932 042 | 96 68 587 08 | BASE ASSEMBLY |
| CAGE NUT M6 | 41 30 028 08 | 32 | 2 | 2 501 000 | 91 48 769 08 | CRANE DRIVER'S CABIN,PRE |
| CAGE NUT M6 | 41 30 028 08 | 81 | 23 | 2 520 000 | 91 49 872 08 | CABIN, GLAZED |
| CAGE NUT M6 | 41 30 028 08 | 104 | 2 | 2 520 000 | 91 49 872 08 | CABIN, GLAZED |
| CAGE NUT M6 | 41 30 028 08 | 11 | 6 | 2 540 | 91 45 984 08 | HEATING, CRANE CABIN |
| CAGE NUT M6 | 41 30 028 08 | 351 | 8 | 2 681 | 91 28 102 08 | AIR FILTER UNIT |
| CAGE NUT M6 | 41 30 028 08 | 95 | 8 | 2 932 042 | 96 68 587 08 | BASE ASSEMBLY |
| CAGE NUT M6 | 41 30 029 08 | 51 | 2 | 2 522 | 91 10 037 08 | DOOR CPL. |
| CAGE NUT M6 | 41 30 029 08 | 71 | 4 | 3 101 | 91 60 312 08 | PIVOT SECTION, PRE-ASSEMB |
| CAGE NUT M6 | 41 30 029 08 | 2 | 2 | 3 920 012 | 96 57 224 08 | LIMIT SWITCH ADD-ON |
| CAGE NUT M8 | 41 30 031 08 | 25 | 8 | 2 501 000 | 91 48 769 08 | CRANE DRIVER'S CABIN,PRE |
| CAGE NUT M8 | 41 30 031 08 | 14 | 1 | 2 540 | 91 45 984 08 | HEATING, CRANE CABIN |
| CAGE NUT M8 | 41 30 031 08 | 98 | 9 | 2 932 042 | 96 68 587 08 | BASE ASSEMBLY |
| CAGE NUT M8 | 41 30 034 08 | 37 | 4 | 2 502 | 91 01 533 08 | CONTROL STAND |
| CAGE NUT M8 | 41 30 034 08 | 360 | 6 | 2 510 100 | 96 44 750 08 | SLEWING PLATFORM PANELLI |
| CAGE NUT M8 | 41 30 034 08 | 99 | 2 | 2 932 042 | 96 68 587 08 | BASE ASSEMBLY |
| CAGE NUT M8 | 41 30 034 08 | 351 | 5 | 2 984 | 91 52 906 08 | OIL COOLER INSTALLATION |
| CAGE NUT M8 A2/ST A2K | 41 30 032 08 | 46 | 2 | 2 510 200 | 96 41 258 08 | SLEWING PLATFORM PANELLI |
| CAGE NUT M8 A2/ST A2K | 41 30 032 08 | 26 | 3 | 3 100 | 91 59 279 08 | TELESCOPIC BOOM CPL. |
| CAIN MOUNTING | 96 47 653 08 | 1 | 1 | 2 560 045 | 96 40 606 08 | CHAIN HOLDER CPL. |
| CAM ROLLER | 74 66 919 08 | 15 | 4 | 2 522 | 91 10 037 08 | DOOR CPL. |
| CAMS SHAFT BUSHING | 91 32 281 | 11 | 2 | X1011577 | 10 11 577 6 | CRANKCASE |
| CAMS SHAFT BUSHING KS S4 | 90 73 745 | 10 | 5 | X1011577 | 10 11 577 6 | CRANKCASE |
| CAMSHAFT CPL. R-MOTORXD | 10 12 223 3 | 100 | 1 | X1012193 | 10 12 193 2 | BASIC ENGINE |
| CAMSHAFT R-MOTORXD934 | 10 12 256 0 | 1 | 1 | X1012223 | 10 12 223 3 | CAMSHAFT CPL. |
| CAP | 57 15 690 08 | 59 | 1 | 6 060 516 | 60 60 516 08 | GEAR CAM LIMITSWITCH |
| CAP | 57 15 828 08 | 30 | 1 | 5 700 161 | 57 00 161 | AIR COMPRESSOR |
| CAP | 59 10 636 08 | 37 | 1 | 2 520 000 | 91 49 872 08 | CABIN, GLAZED |
| CAP | 59 10 644 08 | 8 | 1 | 2 790 024 | 96 67 077 08 | MIRROR RETAINER PRE-ASS. |
| CAP | 59 15 591 08 | 4 | 1 | 5 910 672 | 59 10 672 08 | WIPER MOTOR |
| CAP MIT NUT | 10 49 148 3 | 59 | 1 | 6 060 516 | 60 60 516 08 | GEAR CAM LIMITSWITCH |
| CAP NUT DIN 1587 M6 6 A2C | 41 21 001 08 | 6 | 1 | 5 910 672 | 59 10 672 08 | WIPER MOTOR |
| CAP NUT DIN 1587 M6 A2-70 | 10 21 936 1 | 9 | 3 | 2 520 001 | 92 48 796 08 | FRONT WINDOW CPL. |
| CAP NUT DIN 986 M4 A2-70 | 40 02 886 | 25 | 4 | X1032706 | 10 32 706 5 | ELECTRIC PUMP |
| CAPACITOR | 55 31 899 08 | 3 | 1 | 2 831 | 91 47 871 08 | AIR COND. UNIT SUPERSTRU |
| CARRIER RAIL NUT DIN 3015-1 | 60 20 180 08 | 19 | 18 | 2 950 | 91 49 515 08 | COMPRESSED-AIR SYST.SU |
| CARRIER RAIL NUT DIN 3015-1 | 60 20 180 08 | 78 | 4 | 3 101 | 91 60 312 08 | PIVOT SECTION, PRE-ASSEMB |
| CARRYING BOLT M8 | 40 97 109 08 | 22 | 2 | 2 510 200 | 96 41 258 08 | SLEWING PLATFORM PANELLI |
| CARRYING ROLLER 107/8/40X | 74 90 145 08 | 4 | 1 | 2 440 022 | 96 42 336 08 | WINCH 2 PRE-ASS. |
| CARRYING ROLLER 107/8/40X | 74 90 145 08 | 3 | 1 | 2 450 | 91 53 926 08 | MAIN HOIST GEAR |

| Description | Item | Pos. | Quantity | Page | Assembly | Description |
|---|---|---|---|---|---|---|
| CARRYING ROLLER 80/5/20X60 | 74 90 107 08 | 35 | 1 | 3 105 000 | 91 62 546 08 | TELESCOPIC SECT.IV PRE-A |
| CARRYING ROLLER 80/5/20X65 | 74 90 092 08 | 35 | 1 | 3 104 000 | 91 62 545 08 | TELESCOPIC SECT.3 PRE-ASS |
| CARRYING ROLLER 80/5/20X70 | 74 90 114 08 | 35 | 1 | 3 103 000 | 91 62 544 08 | TELESCOPIC SECT.2 PRE-AS |
| CARRYING ROLLER 80/5/20X75 | 74 90 093 08 | 35 | 1 | 3 101 | 91 60 312 08 | PIVOT SECTION, PRE-ASSEMB |
| CARRYING ROLLER 80/5/20X75 | 74 90 093 08 | 35 | 1 | 3 102 000 | 91 62 543 08 | TELESCOPIC SECTION 1 PRE |
| CARRYING ROLLER CPL 9835 | 74 90 653 14 | 11 | 2 | 1 100 205 | 96 51 633 08 | CRAWLER CARRIER RIGHT CP |
| CARRYING ROLLER CPL 9835 | 74 90 653 14 | 11 | 2 | 1 100 210 | 96 51 634 08 | CRAWLER TRACK CARRIER LE |
| CARTOUCHE | 57 13 523 08 | 1 | 1 | 5 026 573 | 50 26 573 08 | AIR DRYER |
| CARTOUCHE | 57 13 523 08 | 201 | 1 | 9 629 047 | 96 29 047 08 | FILTER PACKAGE |
| CARTOUCHE | 57 13 523 08 | (15) | 1 | XSK_Z480 | SK_Z48005 | SERVICE |
| CARTRIDGE | 10 03 269 6 | 33 | 1 | X1041191 | 10 41 191 3 | SHEET |
| CAUTION DECAL ACCID.PREV | 94 12 158 | 35 | 1 | 1 880 | 91 62 974 08 | PLATING SPIAN |
| CELL RUBBER 16X8 CELL.RUB | 10 02 810 7 | 103 | 3.1 | 2 520 000 | 91 49 872 08 | CABIN, GLAZED |
| CELL RUBBER 16X8 CELL.RUB | 10 02 810 7 | 9 | 0.16 | 2 913 004 | 96 20 460 08 | HOUSING PRE-ASSEMBLED |
| CELL RUBBER 25X4 NEOPREN | 26 21 078 14 | 12 | 0.12 | 3 750 026 | 96 89 407 08 | HOLDER LEFT |
| CELL RUBBER 25X4 NEOPREN | 26 21 078 14 | 12 | 0.12 | 3 750 028 | 96 89 408 08 | HOLDER RIGHT |
| CELL RUBBER 6X3X10000 CE | 26 21 089 08 | 40 | 2.5 | 2 510 108 | 96 44 555 08 | SOUND PROOFING/SOUND I |
| CELL RUBBER 6X3X10000 CE | 26 21 089 08 | 86 | 1.2 | 2 520 000 | 91 49 872 08 | CABIN, GLAZED |
| CELL RUBBER 6X3X10000 CE | 26 21 089 08 | 22 | 0.36 | 2 540 | 91 45 984 08 | HEATING, CRANE CABIN |
| CELL RUBBER 6X3X10000 CE | 26 21 089 08 | 23 | 0.43 | 2 540 | 91 45 984 08 | HEATING, CRANE CABIN |
| CELL RUBBER 6X3X10000 CE | 26 21 089 08 | 24 | 0.39 | 2 540 | 91 45 984 08 | HEATING, CRANE CABIN |
| CELL RUBBER 6X3X10000 CE | 26 21 089 08 | 7 | 0.18 | 2 913 006 | 96 20 732 08 | FAN PLATE PRE-ASS. |
| CELL RUBBER 8X10 | 26 21 091 08 | 21 | 0.45 | 2 540 | 91 45 984 08 | HEATING, CRANE CABIN |
| CENT. LUBRIC. SYSTEM SUP | 91 53 002 08 | 169 | 1 | | LTR 1100 -0 | LIEBHERR LTR 1100 |
| CENTER STUD | 57 01 105 08 | 3 | 1 | 5 701 095 | 57 01 095 08 | DRIVING GEAR |
| CENTRAL BALLAST 15T | 91 56 353 08 | 80 | 1 | | LTR 1100 -0 | LIEBHERR LTR 1100 |
| CENTRAL BALLAST 7.5T 9835 | 91 94 187 14 | 1 | 2 | 1 740 | 91 56 353 08 | CENTRAL BALLAST |
| CENTRAL LUBRICATING SYS | 92 14 441 08 | 27 | 1 | 2 440 022 | 96 42 336 08 | WINCH 2 PRE-ASS. |
| CENTRAL UNIT C1 8X2A GEP | 91 44 006 08 | 49 | 4 | 2 932 042 | 96 68 587 08 | BASE ASSEMBLY |
| CENTRE PART MACHINING | 10 22 299 9 | 1 | 1 | 1 100 215 | 99 20 783 14 | CENTRE PIECE |
| CENTRE PIECE KPL. | 99 20 783 14 | 4 | 1 | 1 100 200 | 96 72 944 08 | UNDERCARRIAGE CPL. |
| CHAIN BOLT | 78 65 204 14 | 5 | 60 | 1 300 007 | 79 02 584 14 | CRAWLER CHAIN CPL |
| CHAIN BUSHING 48,74X71,45X | 78 65 205 14 | 3 | 60 | 1 300 007 | 79 02 584 14 | CRAWLER CHAIN CPL |
| CHAIN DIN 763 7X49 0.3t ST35 | 10 66 397 0 | 4 | 2 | 3 105 014 | 96 57 037 08 | HOIST LIM.SWITCH PLUMMET |
| CHAIN DIN EN 818-2 10T-2.976 | 10 32 680 3 | 5 | 2 | 2 560 | 91 50 900 08 | COUNTERWEIGHT WITH CLAM |
| CHAIN END BUSHING 48,74X7 | 78 65 203 14 | 4 | 1 | 1 300 007 | 79 02 584 14 | CRAWLER CHAIN CPL |
| CHAIN END SEGMENT CPL | 78 65 281 14 | 99 | 1 | 1 300 007 | 79 02 584 14 | CRAWLER CHAIN CPL |
| CHAIN HOLDER CPL. | 96 40 606 08 | 6 | 2 | 2 560 | 91 50 900 08 | COUNTERWEIGHT WITH CLAM |
| CHAIN LINK | 78 65 266 14 | 1 | 62 | 1 300 007 | 79 02 584 14 | CRAWLER CHAIN CPL |
| CHAIN LINK | 78 65 267 14 | 2 | 62 | 1 300 007 | 79 02 584 14 | CRAWLER CHAIN CPL |
| CHAIN MOUNT WELDED CONS | 96 44 249 08 | 4 | 2 | 2 560 | 91 50 900 08 | COUNTERWEIGHT WITH CLAM |
| CHAIN PIN | 78 65 252 14 | 6 | 1 | 1 300 007 | 79 02 584 14 | CRAWLER CHAIN CPL |
| CHAIN SUSPENSION 10T-2132 | 10 32 681 6 | 17 | 4 | 2 571 | 91 50 902 08 | HYDRAULIC BALLASTING |
| CHARGE AIR ELBOW | 90 79 581 | 4 | 1 | X1011816 | 10 11 816 1 | CONNECTING LINE ADD-ON |
| CHARGE AIR PIPE SPF | 97 36 412 08 | 200 | 1 | 2 210 | 91 81 614 08 | DRIVE ASSEMBLY, PRE-ASSE |
| CHARGE AIR PIPE SPF | 97 36 413 08 | 201 | 1 | 2 210 | 91 81 614 08 | DRIVE ASSEMBLY, PRE-ASSE |
| CHARGE VOLTAGE REGULA | 91 70 947 08 | 456 | 1 | | LTR 1100 -0 | LIEBHERR LTR 1100 |
| CHECK SCREW | 10 42 381 7 | 78 | 1 | X1029147 | 10 29 147 4 | CONTROL BLOCK |
| CHECK SCREW | 10 42 381 7 | 78 | 1 | X1047529 | 10 47 529 1 | VALVE BLOCK |
| CHECK SCREW | 10 42 381 7 | 78 | 1 | X1047529 | 10 47 529 2 | VALVE BLOCK |
| CHECK SCREW | 57 15 297 08 | 77 | 2 | X1029147 | 10 29 147 4 | CONTROL BLOCK |
| CHECK SCREW | 57 15 297 08 | 71 | 2 | X1047529 | 10 47 529 1 | VALVE BLOCK |
| CHECK SCREW | 57 15 297 08 | 71 | 2 | X1047529 | 10 47 529 2 | VALVE BLOCK |
| CHECK SCREW M10 | 40 97 105 08 | 30 | 2 | 2 502 | 91 01 533 08 | CONTROL STAND |
| CHEESE HEAD SCREW DIN 60 | 40 28 018 08 | 310 | 4 | 2 210 008 | 96 48 137 08 | RADIATOR, PRE-ASSEMBLED |
| CHEESE HEAD SCREW DIN 60 | 40 28 059 08 | 28 | 2 | 2 502 | 91 01 533 08 | CONTROL STAND |
| CHEESE HEAD SCREW DIN 6 | 40 28 026 14 | 321 | 2 | 2 210 008 | 96 48 137 08 | RADIATOR, PRE-ASSEMBLED |
| CIRCLIP 35-40 | 92 98 180 08 | 29 | 8 | 3 501 | 91 05 788 08 | MECH. DOUBLE FOLD JIB PR |
| CIRCLIP 45-50 | 92 98 193 08 | 28 | 8 | 3 501 | 91 05 788 08 | MECH. DOUBLE FOLD JIB PR |
| CIRCLIP FUER GRIFFKAPPE | 10 67 884 8 | 4 | 2 | 6 060 950 | 60 60 950 08 | MASTER SWITCH |

| Description | Item | Pos. | Quantity | Page | Assembly | Description |
|---|---|---|---|---|---|---|
| CIRCULAR BEARING B30X30 | 72 69 065 08 | 101 | 3 | 2 510 100 | 96 44 750 08 | SLEWING PLATFORM PANELLI |
| CIRCULAR BEARING B30X30 | 72 69 065 08 | 11 | 8 | 2 984 | 91 52 906 08 | OIL COOLER INSTALLATION |
| CIRCULAR BEARING C50X30X | 72 69 050 08 | 121 | 2 | 2 210 008 | 96 48 137 08 | RADIATOR, PRE-ASSEMBLED |
| CIRCULATING PUMP U4840 | 55 30 545 08 | 29 | 1 | 2 540 | 91 45 984 08 | HEATING, CRANE CABIN |
| CLAMP | 59 10 509 08 | 30 | 3 | 2 520 000 | 91 49 872 08 | CABIN, GLAZED |
| CLAMP - ADD-ON UNIT | 10 11 912 7 | 2 | 1 | X1011914 | 10 11 914 1 | CRANKCASE BREATHER ASS |
| CLAMP DIN 3016-1 10X20XD1 | 73 81 628 | 24 | 1 | X1011998 | 10 11 998 0 | CABLE HARNESS MOUNTING |
| CLAMP DIN 3016-1 10X20XD1 | 73 81 628 | 7 | 1 | X1012024 | 10 12 024 2 | OIL LINE PRE-ASSEMBLY |
| CLAMP DIN 3016-1 10X25XD1 | 73 82 092 | 2 | 2 | X1012024 | 10 12 024 2 | OIL LINE PRE-ASSEMBLY |
| CLAMP DIN 3016-1 12X15XD1 | 73 82 087 | 19 | 1 | X1011998 | 10 11 998 0 | CABLE HARNESS MOUNTING |
| CLAMP DIN 3016-1 12X20XD1 | 73 81 629 | 3 | 4 | X1011997 | 10 11 997 9 | WIRING HARNESS ASSEMBLY |
| CLAMP DIN 3016-1 12X25XD1 | 73 82 091 | 29 | 1 | X1011997 | 10 11 997 9 | WIRING HARNESS ASSEMBLY |
| CLAMP DIN 3016-1 16X15XD1 | 73 81 294 | 20 | 1 | X1011998 | 10 11 998 0 | CABLE HARNESS MOUNTING |
| CLAMP DIN 3016-1 18X20XD1 | 73 81 635 | 27 | 2 | X1011998 | 10 11 998 0 | CABLE HARNESS MOUNTING |
| CLAMP DIN 3016-1 22X20XD1 | 73 81 630 | 3 | 1 | X1011766 | 10 11 766 5 | PIPELINE |
| CLAMP DIN 3016-1 22X20XD1 | 73 81 630 | 7 | 2 | X1011914 | 10 11 914 1 | CRANKCASE BREATHER ASS |
| CLAMP DIN 3016-1 8X15XD1 W | 73 81 771 | 17 | 3 | X1011998 | 10 11 998 0 | CABLE HARNESS MOUNTING |
| CLAMP DIN 3016-1 8X20XD1 W | 73 82 090 | 6 | 2 | 9 080 345 | 90 80 345 | WATER PUMP WITH FASTENIN |
| CLAMP DIN 3016-1 8X20XD1 W | 73 82 090 | 23 | 3 | X1011998 | 10 11 998 0 | CABLE HARNESS MOUNTING |
| CLAMP DIN 3017-1 16/12-20/9 | 46 01 105 | 19 | 1 | X1011914 | 10 11 914 1 | CRANKCASE BREATHER ASS |
| CLAMP DIN 3017-1 16/12-20/9 | 46 01 105 | 12 | 1 | X1012024 | 10 12 024 2 | OIL LINE PRE-ASSEMBLY |
| CLAMP FITTING EQUIPM. PRE | 98 87 461 | 2 | 1 | 9 079 560 | 90 79 560 | GENERATOR ADD-ON |
| CLAMP FITTING EQUIPM. PRE | 98 87 461 | 3 | 1 | 9 080 525 | 90 80 525 | AIR COND. COMPRESSOR A |
| CLAMP LEVER | 70 40 048 08 | 15 | 2 | 2 502 | 91 01 533 08 | CONTROL STAND |
| CLAMP LOCKING DEVICE HA | 70 42 317 08 | 7 | 1 | 2 260 006 | 96 31 147 08 | BATTERY BOX, PRE-ASSEMB |
| CLAMP, CPL.. L 0G 12 PP | 60 20 124 08 | 5 | 1 | 2 571 | 91 50 902 08 | HYDRAULIC BALLASTING |
| CLAMP-HALF AEHNL.DIN 3015 | 73 67 238 | 22 | 8 | 1 100 216 | 96 46 363 08 | MOUNTING PARTS LWE |
| CLAMP-HALF AEHNL.DIN 3015 | 60 20 095 08 | 48 | 16 | 2 971 | 91 50 610 08 | HYDR.AUXILIARY HOISTING |
| CLAMP-HALF DIN 3015-1 10 PP | 60 20 078 08 | 37 | 8 | 3 330 | 91 57 885 08 | MECHANICAL EXTENSION SYS |
| CLAMP-HALF DIN 3015-1 18 AL | 60 20 022 08 | 18 | 36 | 2 950 | 91 49 515 08 | COMPRESSED-AIR SYST.SU |
| CLAMP-HALF DIN 3015-1 L 3 R | 60 20 085 08 | 404 | 6 | 2 210 | 91 81 614 08 | DRIVE ASSEMBLY, PRE-ASSE |
| CLAMP-HALF DIN 3015-1 L 3 R | 70 05 052 | 406 | 4 | 2 210 | 91 81 614 08 | DRIVE ASSEMBLY, PRE-ASSE |
| CLAMP-HALF DIN 3015-1 L 3 R | 70 05 052 | 28 | 10 | 2 920 | 91 55 477 08 | ELECTR. SYSTEM F.SLEWING |
| CLAMP-HALF DIN 3015-1 L 3 R | 70 05 052 | 72 | 2 | 3 101 | 91 60 312 08 | PIVOT SECTION, PRE-ASSEMB |
| CLAMP-HALF DIN 3015-1 L 3 R | 70 05 052 | 33 | 4 | 3 330 | 91 57 885 08 | MECHANICAL EXTENSION SYS |
| CLAMP-HALF DIN 3015-1 L6R 5 | 74 13 103 | 75 | 4 | 3 101 | 91 60 312 08 | PIVOT SECTION, PRE-ASSEMB |
| CLAMPING BOARD 6XM6 | 60 44 124 08 | 1 | 1 | 1 830 102 | 92 26 483 08 | TERMINAL BOARD PRE-ASS. |
| CLAMPING PIECE 12 G20MN5 | 38 00 571 08 | 205 | 10 | 2 210 | 91 81 614 08 | DRIVE ASSEMBLY, PRE-ASSE |
| CLAMPING PIECE 22 | 92 76 388 01 | 30 | 1 | 9 387 596 | 93 87 596 01 | ROPE DRUM |
| CLAMPING SLEEVE DIN 1498 4 | 70 43 396 08 | 104 | 2 | 3 501 | 91 05 788 08 | MECH. DOUBLE FOLD JIB PR |
| CLIP | 60 23 154 08 | 23 | 370 | 2 932 119 | 96 46 061 08 | SWING FRAME RELAY CONT |
| CLIP 23 ST | 10 21 653 4 | 61 | 2 | 2 831 | 91 47 871 08 | AIR COND. UNIT SUPERSTRU |
| CLOGGING INDICATOR | 57 13 561 08 | 4 | 1 | 5 106 681 | 51 06 681 08 | PRESSURE FILTER |
| CLOGGING INDICATOR | 57 13 561 08 | 4 | 1 | 5 106 708 | 51 06 708 08 | LINE FILTER |
| CLOGGING INDICATOR A2D- | 51 06 693 08 | 22 | 1 | 2 340 004 | 96 43 780 08 | OIL TANK PRE-ASS. |
| CLOSE TOLERANCE GROOV | 10 29 225 3 | 149 | 2 | 2 520 000 | 91 49 872 08 | CABIN, GLAZED |
| CLOSING PIN | 70 42 736 08 | 69 | 1 | 2 520 000 | 91 49 872 08 | CABIN, GLAZED |
| CLOSING RING | 57 01 098 08 | 4 | 1 | 5 701 090 | 57 01 090 08 | DRIVING GEAR |
| CLUTCH ASSEMBLY | 10 11 578 0 | 2 | 1 | X1015211 | 10 15 211 6 | DRIVE UNIT |
| CLUTCH FORK | 57 09 911 08 | 34 | 1 | 6 060 516 | 60 60 516 08 | GEAR CAM LIMITSWITCH |
| COLLECTING PIPE | 92 78 922 08 | 40 | 1 | 2 970 | 91 55 482 08 | HYDRAULICS |
| COLLECTING PIPE FE//ZN20// | 92 59 332 08 | 20 | 1 | 2 340 004 | 96 43 780 08 | OIL TANK PRE-ASS. |
| COLLECTING PIPE VERZ SPF | 10 03 310 9 | 49 | 1 | 2 970 | 91 55 482 08 | HYDRAULICS |
| COLLECTING RING 15X16A,24 | 10 28 517 1 | 5 | 1 | 1 920 307 | 96 46 916 08 | ELECTR.FOR CENTER SECTIO |
| COLLER BOLT 20-22MM | 57 17 123 08 | 1 | 1 | 7 739 413 | 77 39 413 08 | POUCH SOCKET |
| COMBI PLIERS DIN 5244 180 | 79 00 315 08 | 62 | 1 | 1 750 001 | 92 85 698 08 | MAIN TOOLS |
| COMBINATED RADIATOR | 97 73 428 08 | 100 | 1 | 2 210 008 | 96 48 137 08 | RADIATOR, PRE-ASSEMBLED |
| COMPACT ROPE WINCH KSW | 93 87 070 01 | 2 | 1 | 2 440 022 | 96 42 336 08 | WINCH 2 PRE-ASS. |
| COMPACT ROPE WINCH KSW | 96 85 586 01 | 2 | 1 | 2 450 025 | 96 35 649 08 | MAIN HOISTING GEAR PRE-A |
| COMPENSATOR 983593114 LH | 91 85 786 14 | 18 | 2 | 2 571 | 91 50 902 08 | HYDRAULIC BALLASTING |

| Description | Item | Pos. | Quantity | Page | Assembly | Description |
|---|---|---|---|---|---|---|
| COMPLEMENT ELECTR., CAB | 92 08 459 08 | 24 | 1 | 2 920 | 91 55 477 08 | ELECTR. SYSTEM F.SLEWING |
| COMPRESSED AIR VESSEL 1L | 50 26 664 08 | 35 | 1 | 2 950 | 91 49 515 08 | COMPRESSED-AIR SYST.SU |
| COMPRESSED-AIR SYST.SU | 91 49 515 08 | 189 | 1 | | LTR 1100 -0 | LIEBHERR LTR 1100 |
| COMPRESSION RING | 50 29 237 08 | 13 | 2 | 2 200 048 | 96 32 140 08 | EXPANSION TANK PRE-ASS. |
| COMPRESSION RING DR/R22 | 50 29 325 08 | 9 | 1 | 2 270 001 | 96 37 923 08 | FUEL TANK, PRE-ASSEMBLED |
| COMPRESSION RING DR/R22 | 50 29 325 08 | 31 | 3 | 2 950 | 91 49 515 08 | COMPRESSED-AIR SYST.SU |
| COMPRESSION RING DR/R22 | 50 29 325 08 | 11 | 2 | 2 955 | 91 49 516 08 | PNEUM. CRANE OPERATORS |
| COMPRESSION RING DR/R26 | 50 29 328 08 | 15 | 1 | 2 200 048 | 96 32 140 08 | EXPANSION TANK PRE-ASS. |
| CONICAL PLUG PE-LLD | 70 02 332 | 92 | 1 | 9 444 410 | 94 44 410 03 | TRACTION DRIVE |
| CONICAL SPRING WASHER D | 42 53 012 08 | 74 | 1 | 3 501 | 91 05 788 08 | MECH. DOUBLE FOLD JIB PR |
| CONNECTING BRANCH ADD-O | 90 77 279 | 221 | 1 | X1015207 | 10 15 207 7 | DIESEL ENGINE |
| CONNECTING DEVICE EN 354 | 11 49 191 0 | 3 | 1 | 1 793 010 | 91 69 598 08 | PERSONAL PROTECTION EQ |
| CONNECTING LINE ADD-ON R | 10 11 816 1 | 230 | 1 | X1015207 | 10 15 207 7 | DIESEL ENGINE |
| CONNECTING LINE R-MOTOR | 10 11 816 2 | 2 | 1 | X1011816 | 10 11 816 1 | CONNECTING LINE ADD-ON |
| CONNECTING LUG | 95 67 891 08 | 12 | 2 | 2 955 | 91 49 516 08 | PNEUM. CRANE OPERATORS |
| CONNECTING LUG | 97 37 938 08 | 36 | 1 | 2 970 | 91 55 482 08 | HYDRAULICS |
| CONNECTING LUG EL 10LX51 | 95 36 006 08 | 69 | 1 | 2 970 | 91 55 482 08 | HYDRAULICS |
| CONNECTING LUG EL 10LX51 | 95 36 006 08 | 33 | 1 | 2 971 | 91 50 610 08 | HYDR.AUXILIARY HOISTING |
| CONNECTING PIECE Al Rm>2 | 10 12 166 6 | 1 | 1 | X1012166 | 10 12 166 7 | CONNECTING PIECE W.O-RIN |
| CONNECTING PIECE PRE-ASS | 10 11 614 6 | 217 | 1 | X1015207 | 10 15 207 7 | DIESEL ENGINE |
| CONNECTING PIECE REMACHI | 97 13 426 08 | 67 | 1 | 2 970 | 91 55 482 08 | HYDRAULICS |
| CONNECTING PIECE W.O-RIN | 10 12 166 7 | 4 | 1 | X1012414 | 10 12 414 0 | OIL SUMP WITH FASTENING |
| CONNECTING PIPE 18X1,5X60 | 55 31 730 08 | 37 | 2 | 2 540 | 91 45 984 08 | HEATING, CRANE CABIN |
| CONNECTING PLATE | 10 41 178 3 | 24 | 1 | X1034357 | 10 34 357 4 | CABLE REEL |
| CONNECTING PLATE | 51 06 626 14 | 3 | 1 | 1 970 | 96 71 367 08 | UNDERCARRIAGE HYDRAULIC |
| CONNECTING PLATE | 57 01 092 08 | 4 | 1 | 5 102 294 | 51 02 294 08 | HYDRO MOTOR |
| CONNECTING PLATE CHEMI | 51 06 629 14 | 13 | 1 | 1 970 | 96 71 367 08 | UNDERCARRIAGE HYDRAULIC |
| CONNECTION CARRIER | 96 86 072 01 | 1 | 1 | 9 686 071 | 96 86 071 01 | PLANETARY GEARBOX |
| CONNECTION FLANGE | 90 79 582 | 1 | 1 | X1011816 | 10 11 816 1 | CONNECTING LINE ADD-ON |
| CONNECTION PIECE | 96 32 324 08 | 3 | 2 | 2 200 048 | 96 32 140 08 | EXPANSION TANK PRE-ASS. |
| CONNECTION STUB | 10 12 000 9 | 1 | 1 | 9 077 279 | 90 77 279 | CONNECTING BRANCH ADD-O |
| CONNECTOR PLUG A AX | 60 23 370 08 | (164) | 2 | 2 932 042 | 96 68 587 08 | BASE ASSEMBLY |
| CONROD | 57 15 825 08 | 11 | 1 | 5 700 161 | 57 00 161 | AIR COMPRESSOR |
| CONROD R-MOTORX88 | 11 34 805 4 | 1 | 1 | 9 076 459 | 90 76 459 | CONROD |
| CONROD R-MOTORX92 | 90 76 459 | 60 | 4 | X1012193 | 10 12 193 2 | BASIC ENGINE |
| CONSOLE | 70 42 297 08 | 7 | 1 | 2 510 201 | 96 42 011 08 | FLAP PRE-ASS. |
| CONSOLE | 90 79 561 | 1 | 1 | 9 079 560 | 90 79 560 | GENERATOR ADD-ON |
| CONSOLE | 96 33 834 08 | 5 | 1 | 2 440 022 | 96 42 336 08 | WINCH 2 PRE-ASS. |
| CONSOLE 3x122x55 Edelstahl | 95 71 203 08 | 12 | 3 | 2 680 | 91 53 225 08 | EXHAUST SYSTEM CPL. |
| CONSOLE 4X151X256 S315MC | 97 38 620 08 | 20 | 1 | 2 510 100 | 96 44 750 08 | SLEWING PLATFORM PANELLI |
| CONSOLE 4X193X136 S315MC | 97 38 619 08 | 19 | 1 | 2 510 100 | 96 44 750 08 | SLEWING PLATFORM PANELLI |
| CONSOLE 4X260X239 S315MC | 95 41 800 08 | 8 | 1 | 3 330 | 91 57 885 08 | MECHANICAL EXTENSION SYS |
| CONSOLE PRE-ASS. | 10 11 547 7 | 1 | 1 | 9 080 525 | 90 80 525 | AIR COND. COMPRESSOR A |
| CONSOLE PRE-ASS. | 92 52 800 08 | 1 | 1 | 3 510 100 | 91 49 246 08 | TRANSPORT MOUNTING |
| CONTACT BOW | 69 10 416 08 | 12 | 15 | X1028517 | 10 28 517 1 | COLLECTING RING |
| CONTACT SET | 57 18 511 08 | 5 | 1 | 6 923 101 | 69 23 101 08 | ROPE LENGTH INDICATOR |
| CONTAINER 2,5 KG | 10 03 827 1 | 29 | 1 | X1032706 | 10 32 706 5 | ELECTRIC PUMP |
| CONTAINER 3L | 59 10 553 08 | 24 | 1 | 2 520 000 | 91 49 872 08 | CABIN, GLAZED |
| CONTAINER COVER | 10 40 981 7 | 34 | 1 | X1032706 | 10 32 706 5 | ELECTRIC PUMP |
| CONTAINER SCREW JOINT | 11 63 212 5 | (1) | 1 | 2 971 | 91 50 610 08 | HYDR.AUXILIARY HOISTING |
| CONTROL BLOCK | 51 13 066 08 | 25 | 1 | 2 970 | 91 55 482 08 | HYDRAULICS |
| CONTROL BLOCK 120BAR NG1 | 10 33 367 2 | 16 | 1 | 2 970 | 91 55 482 08 | HYDRAULICS |
| CONTROL BLOCK SPF | 10 28 524 3 | 3 | 1 | 2 970 | 91 55 482 08 | HYDRAULICS |
| CONTROL BLOCK SPF | 10 29 147 4 | 2 | 1 | 2 971 | 91 50 610 08 | HYDR.AUXILIARY HOISTING |
| CONTROL BOX ANNEXE | 10 11 599 3 | 571 | 1 | X1015207 | 10 15 207 7 | DIESEL ENGINE |
| CONTROL DESK SUPPORT | 96 41 093 08 | 22 | 1 | 2 920 | 91 55 477 08 | ELECTR. SYSTEM F.SLEWING |
| CONTROL GEAR 6POL 24V SP | 60 61 962 08 | 3 | 2 | 2 533 001 | 96 41 568 08 | DASHBOARD ROOF, PRE-AS |
| CONTROL KNOB | 70 22 049 | 20 | 1 | 5 530 022 | 55 30 022 08 | WATER HEATING SYSTEM |
| CONTROL LIGHT 24V | 60 71 354 08 | 153 | 1 | 1 780 182 | 92 01 827 08 | ELECTR. FOR AIR-CONDITION |
| CONTROL LIGHT 24V | 60 71 354 08 | 15 | 2 | 2 533 001 | 96 41 568 08 | DASHBOARD ROOF, PRE-AS |

| Description | Item | Pos. | Quantity | Page | Assembly | Description |
|---|---|---|---|---|---|---|
| CONTROL PANEL CONSOL | 59 10 706 08 | 1 | 1 | 2 520 021 | 92 17 203 08 | INSTRUMENT BOX DELIVERY |
| CONTROL PANEL ROOF | 96 32 139 08 | 1 | 1 | 2 533 001 | 96 41 568 08 | DASHBOARD ROOF, PRE-AS |
| CONTROL PARTS | 90 79 870 | 110 | 4 | X1012193 | 10 12 193 2 | BASIC ENGINE |
| CONTROL PLATE | 51 13 078 08 | 5 | 1 | 2 970 | 91 55 482 08 | HYDRAULICS |
| CONTROL PLATE 60BAR | 51 14 869 08 | 14 | 1 | 2 970 | 91 55 482 08 | HYDRAULICS |
| CONTROL STAND | 91 01 533 08 | 131 | 1 | | LTR 1100 -0 | LIEBHERR LTR 1100 |
| CONTROLLER BOARD KOMP. | 10 04 375 9 | 20 | 1 | 2 913 005 | 96 28 696 08 | INTERIOR HOUSING PRE-ASS. |
| COOLANT PIPE BEND AC-ALS | 90 79 471 | 1 | 1 | 9 079 472 | 90 79 472 | COOLANT PIPE BEND ADD-ON |
| COOLANT PIPE BEND ADD-ON | 90 79 472 | 382 | 1 | X1015207 | 10 15 207 7 | DIESEL ENGINE |
| COOLER GRILL | 96 26 301 08 | 20 | 1 | 2 510 018 | 96 44 046 08 | RADIATOR HOOD CPL. |
| COOLING WATER AIR BLEEDI | 10 11 550 2 | 387 | 1 | X1015207 | 10 15 207 7 | DIESEL ENGINE |
| COOLING WATER HOSE DN10 | 11 62 176 9 | 251 | 4 | 2 200 | 91 81 095 08 | DRIVE ASSEMBLY CPL. |
| COOLING WATER HOSE DN15 | 10 87 308 9 | 9 | 0.05 | 2 540 | 91 45 984 08 | HEATING, CRANE CABIN |
| COOLING WATER HOSE DN22 | 11 62 177 2 | 252 | 2 | 2 200 | 91 81 095 08 | DRIVE ASSEMBLY CPL. |
| COOLING WATER HOSE DN8 B | 10 87 308 5 | 250 | 2.5 | 2 200 | 91 81 095 08 | DRIVE ASSEMBLY CPL. |
| COOLING WATER LINE 12X1 | 10 11 792 8 | 3 | 1 | X1011793 | 10 11 793 0 | ACCESSORIES AIR COMPRES |
| COOLING WATER LINE 12X1 | 10 11 792 9 | 1 | 1 | X1011793 | 10 11 793 0 | ACCESSORIES AIR COMPRES |
| CORE PIN DIN 1472 4X12 | 43 11 002 01 | 24 | 1 | 9 387 596 | 93 87 596 01 | ROPE DRUM |
| CORE PIN ISO 8740 3X20 | 43 12 005 01 | 91 | 3 | 9 330 748 | 93 30 748 01 | SLEWING GEAR DRIVE |
| CORE PIN ISO 8740 4H11X24 S | 43 12 024 01 | 18 | 1 | 9 387 596 | 93 87 596 01 | ROPE DRUM |
| CORRUGATED PIPE DN34 PP- | 60 14 001 08 | (8) | 1.5 | 2 932 042 | 96 68 587 08 | BASE ASSEMBLY |
| COUNTER NUT PG11 MS | 60 25 020 08 | 25 | 1 | 2 533 003 | 96 28 388 08 | ELECTRIC ADD-ON PARTS CA |
| COUNTER NUT PG11 MS | 60 25 020 08 | 267 | 1 | 2 920 585 | 91 01 520 08 | ELECTRIC FOR FLASHLIGHT |
| COUNTER NUT PG29 MS | 60 25 024 08 | 110 | 1 | 2 932 042 | 96 68 587 08 | BASE ASSEMBLY |
| COUNTER NUT PG9 MS | 60 25 019 08 | 3 | 1 | 2 920 362 | 96 31 865 08 | ELECTR. FOR WORK AREA LI |
| COUNTERSUNK SCREW AEH | 40 86 041 08 | 3 | 6 | 2 510 072 | 96 44 614 08 | FLAP RIGHT PRE-ASS. |
| COUNTERSUNK SCREW AEH | 40 86 041 08 | 3 | 6 | 2 510 201 | 96 42 011 08 | FLAP PRE-ASS. |
| COUNTERSUNK SCREW DIN | 46 01 465 | 8 | 2 | 2 790 901 | 91 54 183 08 | BRACING |
| COUNTERSUNK SCREW DIN | 40 86 018 08 | 6 | 3 | 2 500 | 91 48 594 08 | CRANE DRIVER'S CABIN CPL. |
| COUNTERSUNK SCREW DIN 7 | 40 86 058 14 | 6 | 8 | 2 520 021 | 92 17 203 08 | INSTRUMENT BOX DELIVERY |
| COUNTERSUNK SCREW DIN | 10 87 638 8 | 4 | 8 | 2 913 102 | 92 32 870 08 | FAN UNIT |
| COUNTERSUNK SCREW DIN | 40 86 040 08 | 25 | 16 | 2 502 | 91 01 533 08 | CONTROL STAND |
| COUNTERSUNK SCREW DIN | 40 86 040 08 | 4 | 1 | 2 780 851 | 96 24 498 08 | RADIO ANTENNA PRE-ASS. |
| COUNTERSUNK SCREW DIN | 40 86 040 08 | 8 | 1 | 2 780 852 | 96 24 845 08 | GSM-MODULE PRE-ASS.LICCO |
| COUNTERSUNK SCREW DIN | 40 86 040 08 | 67 | 6 | 2 932 042 | 96 68 587 08 | BASE ASSEMBLY |
| COUNTERSUNK SCREW DIN 7 | 40 86 002 08 | 306 | 6 | 2 510 100 | 96 44 750 08 | SLEWING PLATFORM PANELLI |
| COUNTERSUNK SCREW DIN 7 | 40 86 002 08 | 41 | 6 | 2 510 200 | 96 41 258 08 | SLEWING PLATFORM PANELLI |
| COUNTERSUNK SCREW DIN 7 | 40 86 002 08 | 6 | 8 | 2 515 007 | 96 42 014 08 | PLATFORM, PRE-ASSEMBLED |
| COUNTERSUNK SCREW DIN 7 | 40 86 002 08 | 40 | 4 | 2 522 | 91 10 037 08 | DOOR CPL. |
| COUNTERSUNK SCREW DIN 7 | 40 86 002 08 | 4 | 4 | 3 750 026 | 96 89 407 08 | HOLDER LEFT |
| COUNTERSUNK SCREW DIN 7 | 40 86 002 08 | 4 | 4 | 3 750 028 | 96 89 408 08 | HOLDER RIGHT |
| COUNTERSUNK SCREW DIN 7 | 49 02 007 | 53 | 2 | 2 522 | 91 10 037 08 | DOOR CPL. |
| COUNTERSUNK SCREW DIN 7 | 40 86 003 08 | 55 | 3 | 3 101 | 91 60 312 08 | PIVOT SECTION, PRE-ASSEMB |
| COUNTERSUNK SCREW DIN 7 | 40 86 003 08 | 55 | 3 | 3 102 000 | 91 62 543 08 | TELESCOPIC SECTION 1 PRE |
| COUNTERSUNK SCREW DIN 7 | 40 86 003 08 | 55 | 3 | 3 103 000 | 91 62 544 08 | TELESCOPIC SECT.2 PRE-AS |
| COUNTERSUNK SCREW DIN 7 | 46 00 157 | 134 | 6 | 2 520 000 | 91 49 872 08 | CABIN, GLAZED |
| COUNTERSUNK SCREW DIN 7 | 46 00 157 | 34 | 3 | 3 101 | 91 60 312 08 | PIVOT SECTION, PRE-ASSEMB |
| COUNTERSUNK SCREW DIN 7 | 46 00 157 | 60 | 9 | 3 102 000 | 91 62 543 08 | TELESCOPIC SECTION 1 PRE |
| COUNTERSUNK SCREW DIN 7 | 46 00 157 | 60 | 9 | 3 103 000 | 91 62 544 08 | TELESCOPIC SECT.2 PRE-AS |
| COUNTERSUNK SCREW DIN 7 | 46 00 157 | 60 | 9 | 3 104 000 | 91 62 545 08 | TELESCOPIC SECT.3 PRE-ASS |
| COUNTERSUNK SCREW DIN 7 | 46 00 157 | 60 | 9 | 3 105 000 | 91 62 546 08 | TELESCOPIC SECT.IV PRE-A |
| COUNTERSUNK SCREW ISO | 10 29 878 9 | 35 | 4 | 2 502 | 91 01 533 08 | CONTROL STAND |
| COUNTERSUNK SCREW ISO | 46 35 059 | 38 | 2 | 2 522 | 91 10 037 08 | DOOR CPL. |
| COUNTERSUNK SCREW ISO | 10 34 219 1 | 4 | 3 | 9 075 133 | 90 75 133 | CRANKSHAFT SEALING |
| COUNTERSUNK SCREW ISO 2 | 40 70 312 08 | 76 | 4 | 2 520 000 | 91 49 872 08 | CABIN, GLAZED |
| COUNTERSUNK SCREW ISO | 40 06 035 08 | 268 | 2 | 2 920 574 | 96 36 055 08 | OPERATOR PANEL BALLAST |
| COUNTERSUNK SCREW ISO | 40 06 035 08 | 251 | 2 | 2 920 904 | 96 41 093 08 | CONTROL DESK SUPPORT |
| COUNTERSUNK SCREW ISO 7 | 46 35 268 | 101 | 2 | 3 501 | 91 05 788 08 | MECH. DOUBLE FOLD JIB PR |
| COUNTERSUNK SCREW ISO 7 | 40 02 312 | 6 | 12 | 2 340 004 | 96 43 780 08 | OIL TANK PRE-ASS. |
| COUNTERSUNK SCREW ISO 7 | 46 35 125 | 30 | 4 | 2 510 018 | 96 44 046 08 | RADIATOR HOOD CPL. |

| Description | Item | Pos. | Quantity | Page | Assembly | Description |
|---|---|---|---|---|---|---|
| COUNTERWEIGHT CPL. SPF | 96 37 332 08 | 1 | 1 | 2 560 | 91 50 900 08 | COUNTERWEIGHT WITH CLAM |
| COUNTERWEIGHT EN-GJL-20 | 38 00 617 08 | 2 | 1 | 2 560 | 91 50 900 08 | COUNTERWEIGHT WITH CLAM |
| COUNTERWEIGHT EN-GJL-20 | 38 00 619 08 | 3 | 2 | 2 560 | 91 50 900 08 | COUNTERWEIGHT WITH CLAM |
| COUNTERWEIGHT EN-GJL-20 | 38 00 619 08 | 30 | 2 | 2 570 | 91 50 901 08 | ADDITIONAL BALLAST |
| COUNTERWEIGHT WITH CLAM | 91 50 900 08 | 147 | 1 | | LTR 1100 -0 | LIEBHERR LTR 1100 |
| COUPLING | 10 03 757 5 | 17 | 1 | 6 923 101 | 69 23 101 08 | ROPE LENGTH INDICATOR |
| COUPLING | 10 04 040 7 | (2) | 1 | 9 078 680 | 90 78 680 | FUEL PUMP ASSEMBLY |
| COUPLING CPL. 34,3NM/4000 | 10 11 577 1 | 10 | 1 | X1011676 | 10 11 676 8 | AIR CONDITIONING COMPRES |
| COUPLING LEVIER | 57 09 910 08 | 32 | 1 | 6 060 516 | 60 60 516 08 | GEAR CAM LIMITSWITCH |
| COUPLING PLUG | 77 43 727 08 | 2 | 2 | 2 440 012 | 92 14 441 08 | CENTRAL LUBRICATING SYS |
| COUPLING PLUG B2 10-L | 51 15 083 08 | 16 | 1 | 2 971 | 91 50 610 08 | HYDR.AUXILIARY HOISTING |
| COUPLING PLUG B2 10-L | 51 15 150 08 | 11 | 2 | 2 975 152 | 91 05 737 08 | HYDR.F.TELESCOPIC BOOM |
| COUPLING PLUG B3 15-L | 51 15 004 08 | 20 | 1 | 2 971 | 91 50 610 08 | HYDR.AUXILIARY HOISTING |
| COUPLING PLUG B8 38-S | 51 15 123 08 | 12 | 2 | 2 971 | 91 50 610 08 | HYDR.AUXILIARY HOISTING |
| COUPLING ROTARY ENCODE | 96 74 133 08 | (60) | 1 | 1 780 650 | 91 43 393 08 | ELECTRIC SLEWING SENSOR |
| COUPLING SLEEVE | 77 43 726 08 | 1 | 1 | 2 440 012 | 92 14 441 08 | CENTRAL LUBRICATING SYS |
| COUPLING SLEEVE B2 10-L | 51 15 084 08 | 14 | 1 | 2 971 | 91 50 610 08 | HYDR.AUXILIARY HOISTING |
| COUPLING SLEEVE B2 12-L | 51 15 058 08 | 21 | 2 | 2 970 | 91 55 482 08 | HYDRAULICS |
| COUPLING SLEEVE B3 15-L | 51 15 005 08 | 18 | 1 | 2 971 | 91 50 610 08 | HYDR.AUXILIARY HOISTING |
| COUPLING SLEEVE B8 38-S | 51 15 122 08 | 10 | 2 | 2 971 | 91 50 610 08 | HYDR.AUXILIARY HOISTING |
| COVER | 10 11 709 4 | 10 | 1 | X1011611 | 10 11 611 0 | LOCKING PIECES |
| COVER | 10 14 740 9 | 1 | 1 | 9 078 249 | 90 78 249 | LOCKING PIECES |
| COVER | 10 28 635 3 | 3 | 1 | 2 932 167 | 96 32 480 08 | TERMINAL STRIP |
| COVER | 10 28 635 3 | 206 | 1 | 3 930 718 | 96 56 248 08 | TERMINAL BOX CPL. |
| COVER | 10 65 050 7 | (2) | 1 | 2 790 040 | 91 60 499 08 | MIRROR ATTACHM.IN CRANE |
| COVER | 10 66 324 1 | 4 | 1 | X1041191 | 10 41 191 5 | VALVE BLOCK |
| COVER | 10 66 324 2 | 5 | 1 | X1041191 | 10 41 191 5 | VALVE BLOCK |
| COVER | 10 87 323 9 | 7 | 1 | 7 900 391 | 79 00 391 08 | HAND PUMP |
| COVER | 11 17 016 7 | 3 | 1 | X1041191 | 10 41 191 3 | SHEET |
| COVER | 11 21 435 2 | 1 | 1 | 5 531 882 | 55 31 882 08 | AIR COND. EVAPORATOR RFK |
| COVER | 59 10 707 08 | 2 | 1 | 2 520 021 | 92 17 203 08 | INSTRUMENT BOX DELIVERY |
| COVER | 90 77 777 | 1 | 1 | 9 147 512 | 91 47 512 | LOCKING PIECES |
| COVER | 91 78 294 | 5 | 1 | 9 078 962 | 90 78 962 | AUXILIARY DRIVE PRE-ASS. |
| COVER 1.5X450X381 DC01 FE// | 95 18 924 08 | 35 | 1 | 3 106 000 | 91 60 313 08 | TELESCOPIC SECT.5 PRE-AS |
| COVER 170X19,5 | 92 75 046 01 | 17 | 1 | 9 387 596 | 93 87 596 01 | ROPE DRUM |
| COVER 2X341X116 ALMG3 H11 | 97 17 070 08 | 3 | 1 | 2 913 | 91 32 850 08 | LICCON CONSOLE LCD2 |
| COVER 3X790X1190 RST 37-2 | 95 55 324 03 | 16 | 1 | 1 100 215 | 99 20 783 14 | CENTRE PIECE |
| COVER COMPL. | 96 34 184 08 | 2 | 1 | 2 501 000 | 91 48 769 08 | CRANE DRIVER'S CABIN,PRE |
| COVER COMPL. | 96 35 445 08 | 102 | 1 | 2 510 100 | 96 44 750 08 | SLEWING PLATFORM PANELLI |
| COVER COMPL. | 96 75 763 08 | 17 | 8 | 1 100 215 | 99 20 783 14 | CENTRE PIECE |
| COVER DISC 17,2X72X8,3 | 90 76 986 | (2) | 2 | 9 080 525 | 90 80 525 | AIR COND. COMPRESSOR A |
| COVER EN AC-Al Si8 | 10 12 411 6 | 1 | 1 | X1011566 | 10 11 566 4 | LOCKING PIECES |
| COVER LID 12,7 | 59 15 722 08 | 52 | 5 | 2 520 000 | 91 49 872 08 | CABIN, GLAZED |
| COVER LID 12,7 | 59 15 722 08 | 62 | 2 | 3 106 000 | 91 60 313 08 | TELESCOPIC SECT.5 PRE-AS |
| COVER LID 28X30 POLYACETA | 59 15 709 08 | 103 | 6 | 2 510 100 | 96 44 750 08 | SLEWING PLATFORM PANELLI |
| COVER LID 28X30 POLYACETA | 59 15 709 08 | 15 | 6 | 2 510 201 | 96 42 011 08 | FLAP PRE-ASS. |
| COVER LID 28X30 POLYACETA | 59 15 709 08 | 17 | 1 | 2 533 003 | 96 28 388 08 | ELECTRIC ADD-ON PARTS CA |
| COVER LID 36X22 PVC-SW | 10 21 589 2 | 9 | 1 | 2 790 024 | 96 67 077 08 | MIRROR RETAINER PRE-ASS. |
| COVER NRS | 99 08 404 14 | 15 | 1 | 1 100 200 | 96 72 944 08 | UNDERCARRIAGE CPL. |
| COVER PA 66 | 90 78 881 | 1 | 1 | 9 078 250 | 90 78 250 | LOCKING PIECES |
| COVER PLATE | 11 49 411 6 | 41 | 2 | 4 003 006 | 91 04 457 08 | HOOK BLOCK |
| COVER PLATE ST.CONST. | 96 31 626 08 | 3 | 1 | 2 510 100 | 96 44 750 08 | SLEWING PLATFORM PANELLI |
| COVER PLATE ST.CONST. | 96 42 019 08 | 2 | 1 | 2 510 200 | 96 41 258 08 | SLEWING PLATFORM PANELLI |
| COVER RD165X22 S960QL | 95 70 177 08 | 7 | 1 | 3 105 000 | 91 62 546 08 | TELESCOPIC SECT.IV PRE-A |
| COVER RD165X22 S960QL | 95 70 177 08 | 7 | 1 | 3 106 000 | 91 60 313 08 | TELESCOPIC SECT.5 PRE-AS |
| COVER RD175X22 S960QL | 95 70 111 08 | 7 | 1 | 3 102 000 | 91 62 543 08 | TELESCOPIC SECTION 1 PRE |
| COVER RD175X22 S960QL | 95 70 111 08 | 7 | 1 | 3 103 000 | 91 62 544 08 | TELESCOPIC SECT.2 PRE-AS |
| COVER RD175X22 S960QL | 95 70 111 08 | 7 | 1 | 3 104 000 | 91 62 545 08 | TELESCOPIC SECT.3 PRE-ASS |
| COVER RD200X12 PA6G | 28 30 945 08 | 59 | 3 | 3 102 000 | 91 62 543 08 | TELESCOPIC SECTION 1 PRE |
| COVER RD200X12 PA6G | 28 30 945 08 | 59 | 3 | 3 103 000 | 91 62 544 08 | TELESCOPIC SECT.2 PRE-AS |

| Description | Item | Pos. | Quantity | Page | Assembly | Description |
|---|---|---|---|---|---|---|
| COVER RD200X12 PA6G | 28 30 945 08 | 59 | 3 | 3 104 000 | 91 62 545 08 | TELESCOPIC SECT.3 PRE-ASS |
| COVER RD200X12 PA6G | 28 30 945 08 | 59 | 3 | 3 105 000 | 91 62 546 08 | TELESCOPIC SECT.IV PRE-A |
| COVER RD200X25 PA6G | 28 30 954 08 | 59 | 3 | 3 101 | 91 60 312 08 | PIVOT SECTION, PRE-ASSEMB |
| COVER RD245X17 PA6G | 28 81 840 08 | 19 | 1 | 3 101 | 91 60 312 08 | PIVOT SECTION, PRE-ASSEMB |
| COVER RD74X4 S315MC FE// | 95 59 178 08 | 39 | 2 | 3 330 | 91 57 885 08 | MECHANICAL EXTENSION SYS |
| COVER S235JR | 10 11 835 6 | 1 | 1 | 9 080 280 | 90 80 280 | LOCKING PIECES |
| COVER WELDED | 92 13 686 08 | 17 | 1 | 3 101 | 91 60 312 08 | PIVOT SECTION, PRE-ASSEMB |
| COVER WELDED | 96 01 619 6 | 18 | 1 | 3 101 | 91 60 312 08 | PIVOT SECTION, PRE-ASSEMB |
| COVER WELDED | 96 34 186 08 | 1 | 1 | 2 501 022 | 96 34 184 08 | COVER COMPL. |
| COVER WELDED | 96 43 884 08 | 2 | 1 | 2 515 007 | 96 42 014 08 | PLATFORM, PRE-ASSEMBLED |
| COVER WELDED | 96 75 699 08 | (1) | 1 | 1 100 215 | 99 20 783 14 | CENTRE PIECE |
| COVER WELDED SPF | 92 11 802 08 | 2 | 1 | 2 260 006 | 96 31 147 08 | BATTERY BOX, PRE-ASSEMB |
| COVERING SL 010 | 69 26 006 08 | 2 | 1 | 6 923 101 | 69 23 101 08 | ROPE LENGTH INDICATOR |
| CRAMP | 60 27 417 08 | 12 | 6 | 1 920 314 | 96 46 921 08 | TERMINAL BOX, PRE-ASSEMB |
| CRAMP | 60 27 417 08 | 7 | 2 | 2 932 167 | 96 32 480 08 | TERMINAL STRIP |
| CRAMP | 60 27 417 08 | 296 | 6 | 3 930 492 | 96 20 966 08 | TERMINAL BOX CPL. |
| CRANE DRIVER'S CABIN CPL. | 91 48 594 08 | 129 | 1 | | LTR 1100 -0 | LIEBHERR LTR 1100 |
| CRANE DRIVER'S CABIN,PRE- | 91 48 769 08 | 1 | 1 | 2 500 | 91 48 594 08 | CRANE DRIVER'S CABIN CPL. |
| CRANE OPERATOR CAB INST | 91 34 053 08 | 139 | 1 | | LTR 1100 -0 | LIEBHERR LTR 1100 |
| CRANKCASE BREATHER | 90 75 483 | 1 | 1 | X1011914 | 10 11 914 1 | CRANKCASE BREATHER ASS |
| CRANKCASE BREATHER ASSE | 10 11 914 1 | 16 | 1 | X1015207 | 10 15 207 7 | DIESEL ENGINE |
| CRANKCASE CPL. R-MOTOR | 10 11 577 7 | 10 | 1 | X1012193 | 10 12 193 2 | BASIC ENGINE |
| CRANKCASE R-MOTORXD934 | 10 11 577 6 | 1 | 1 | X1011577 | 10 11 577 7 | CRANKCASE CPL. |
| CRANKSHAFT ADD-ON PARTS | 90 80 591 | 53 | 1 | X1015207 | 10 15 207 7 | DIESEL ENGINE |
| CRANKSHAFT R-MOTORXD93 | 10 13 117 7 | 1 | 1 | 9 078 832 | 90 78 832 | CRANKSHAFT WITH GEAR |
| CRANKSHAFT SEALING | 90 75 133 | 52 | 1 | X1012193 | 10 12 193 2 | BASIC ENGINE |
| CRANKSHAFT WITH GEAR R-M | 90 78 832 | 50 | 1 | X1012193 | 10 12 193 2 | BASIC ENGINE |
| CRAWLER CARRIER RIGHT CP | 96 51 633 08 | 2 | 1 | 1 100 200 | 96 72 944 08 | UNDERCARRIAGE CPL. |
| CRAWLER CHAIN | 91 89 127 14 | 2 | 2 | 1 300 005 | 99 17 196 14 | CRAWLER OUTFIT |
| CRAWLER CHAIN CPL 62GL.B7 | 79 02 584 14 | 2 | 1 | 1 300 006 | 91 89 127 14 | CRAWLER CHAIN |
| CRAWLER OUTFIT 900 3-STE | 91 49 493 08 | 30 | 1 | | LTR 1100 -0 | LIEBHERR LTR 1100 |
| CRAWLER OUTFIT 900 3-STEG | 99 17 196 14 | 1 | 1 | 1 300 | 91 49 493 08 | CRAWLER OUTFIT |
| CRAWLER TRACK CARRIER L | 96 51 634 08 | 3 | 1 | 1 100 200 | 96 72 944 08 | UNDERCARRIAGE CPL. |
| CRAWLER TRACK CARRIER, L | 10 22 596 7 | 1 | 1 | 1 100 210 | 96 51 634 08 | CRAWLER TRACK CARRIER LE |
| CRAWLER TRACK CARRIER, | 10 22 596 9 | 1 | 1 | 1 100 205 | 96 51 633 08 | CRAWLER CARRIER RIGHT CP |
| CRAWLER-TRACK CARRIER | 91 49 503 08 | 62 | 1 | | LTR 1100 -0 | LIEBHERR LTR 1100 |
| CRIMP LOCK | 70 42 298 08 | 64 | 10 | 2 533 001 | 96 41 568 08 | DASHBOARD ROOF, PRE-AS |
| CROSS CONNECTING LINK W | 92 50 746 08 | 27 | 1 | 3 501 | 91 05 788 08 | MECH. DOUBLE FOLD JIB PR |
| CUP WHEEL | 74 90 039 08 | 20 | 2 | 2 522 | 91 10 037 08 | DOOR CPL. |
| CUSTOM CIRCUIT MODULE 1 | 92 71 584 08 | (153) | 1 | 3 930 492 | 96 20 966 08 | TERMINAL BOX CPL. |
| CUTOFF RELAY 24V/1S | 63 01 201 08 | 30 | 1 | 2 932 042 | 96 68 587 08 | BASE ASSEMBLY |
| CYL CPL | 79 02 723 14 | 2 | 1 | 1 100 213 | 74 90 654 14 | TENSION JACK HYDR CPL |
| CYL.ROLLER 14X14 | 74 70 061 01 | 17 | 114 | 9 387 598 | 93 87 598 01 | PLANETARY GEARBOX |
| CYL.ROLLER 14X14 | 74 70 061 01 | 17 | 114 | 9 686 071 | 96 86 071 01 | PLANETARY GEARBOX |
| CYL.ROLLER 24X24 | 74 70 059 01 | 3 | 96 | 9 444 410 | 94 44 410 03 | TRACTION DRIVE |
| CYLINDER | 57 01 103 08 | 1 | 1 | 5 701 095 | 57 01 095 08 | DRIVING GEAR |
| CYLINDER BUSHING | 90 80 084 | 1 | 1 | 9 073 083 | 90 73 083 | CYLINDER |
| CYLINDER HEAD | 10 81 388 6 | 4 | 1 | X1047300 | 10 47 300 1 | TELESCOPIC CYLINDER |
| CYLINDER HEAD | 70 25 732 | 23 | 1 | 5 700 161 | 57 00 161 | AIR COMPRESSOR |
| CYLINDER HEAD ASSEMBLY | 10 11 675 9 | 80 | 4 | X1012193 | 10 12 193 2 | BASIC ENGINE |
| CYLINDER HEAD COVER | 10 11 901 1 | 1 | 1 | X1011963 | 10 11 963 6 | CYLINDER HEAD COVER ASS |
| CYLINDER HEAD COVER | 10 11 960 2 | 1 | 1 | X1011961 | 10 11 961 0 | CYLINDER HEAD COVER ASS |
| CYLINDER HEAD COVER ASS | 10 11 961 0 | 82 | 3 | X1015207 | 10 15 207 7 | DIESEL ENGINE |
| CYLINDER HEAD COVER ASS | 10 11 963 6 | 84 | 1 | X1015207 | 10 15 207 7 | DIESEL ENGINE |
| CYLINDER HEAD GASKET Met | 10 12 084 4 | 1 | 1 | X1011585 | 10 11 585 1 | SEAL KIT CYLINDER HEAD |
| CYLINDER HEAD GASKET Met | 10 12 084 4 | 1 | 4 | X1011585 | 10 11 585 2 | SEAL KIT ZYLINDER HEAD CPL |
| CYLINDER HEAD GASKET Met | 10 12 084 4 | 1 | 6 | X1011585 | 10 11 585 3 | SEAL KIT ZYLINDER HEAD CPL |
| CYLINDER HEAD GASKET Met | 10 12 084 4 | 1 | 1 | X1011585 | 10 11 585 9 | SEAL KIT CYLINDER HEAD |
| CYLINDER HEAD GASKET Met | 10 12 084 4 | 2 | 1 | X1011675 | 10 11 675 9 | CYLINDER HEAD ASSEMBLY |
| CYLINDER HEAD PRE-ASSY. | 10 12 036 5 | 1 | 1 | X1011675 | 10 11 675 9 | CYLINDER HEAD ASSEMBLY |

| Description | Item | Pos. | Quantity | Page | Assembly | Description |
|---|---|---|---|---|---|---|
| CYLINDER HEAD PRE-ASSY. | 10 14 155 5 | 1 | 1 | X1011675 | 10 11 675 9 | CYLINDER HEAD ASSEMBLY |
| CYLINDER HEAD R-MOTOR | 10 12 038 3 | 1 | 1 | X1012036 | 10 12 036 5 | CYLINDER HEAD PRE-ASSY. |
| CYLINDER HEAD R-MOTOR | 10 12 038 3 | 1 | 1 | X1014155 | 10 14 155 5 | CYLINDER HEAD PRE-ASSY. |
| CYLINDER MODIFICATION KIT | 96 74 259 08 | 100 | 1 | 2 520 000 | 91 49 872 08 | CABIN, GLAZED |
| CYLINDER R-MOTORXD930 | 90 73 083 | 40 | 4 | X1012193 | 10 12 193 2 | BASIC ENGINE |
| CYLINDER SCREW M16X195 1 | 90 74 501 | 3 | 6 | X1011675 | 10 11 675 9 | CYLINDER HEAD ASSEMBLY |
| CYLINDRICAL ROLLER BEARIN | 74 66 049 08 | 7 | 1 | 4 027 | 91 42 310 08 | LOAD HOOK |
| CYLINDRICAL ROLLER BEARIN | 74 66 071 08 | 37 | 1 | 4 003 006 | 91 04 457 08 | HOOK BLOCK |
| DAMPING PISTON | 51 07 974 08 | 7 | 1 | 5 114 177 | 51 14 177 08 | PRESSURE LIMITING VALVE |
| DASHBOARD | 97 17 745 08 | 1 | 1 | 2 531 001 | 96 36 738 08 | ELECTRIC FOR ARMREST LEF |
| DASHBOARD | 97 17 746 08 | 1 | 1 | 2 531 002 | 96 36 739 08 | ELECTRIC FOR ARMREST RI |
| DASHBOARD 2X228X66 DC01 | 97 16 054 08 | 1 | 1 | 2 530 002 | 96 19 448 08 | DASHBOARD FRONT, PRE-A |
| DASHBOARD FRONT, PRE-AS | 96 19 448 08 | 3 | 1 | 2 530 | 91 34 053 08 | CRANE OPERATOR CAB INS |
| DASHBOARD ROOF, PRE-AS | 96 41 568 08 | 3 | 1 | 2 533 | 91 54 254 08 | EL.INSTRUMENTS F.CRANE D |
| DATALOGGER LDL2 DIGITAL | 10 34 043 8 | 21 | 1 | 2 932 042 | 96 68 587 08 | BASE ASSEMBLY |
| DEEP GROOVE BALL BEARING | 74 51 949 08 | 37 | 1 | X1028517 | 10 28 517 1 | COLLECTING RING |
| DEEP GROOVE BALL BEARIN | 74 51 391 01 | 66 | 1 | 9 330 748 | 93 30 748 01 | SLEWING GEAR DRIVE |
| DEEP GROOVE BALL BEARIN | 74 51 446 08 | 6 | 2 | X1034357 | 10 34 357 4 | CABLE REEL |
| DEFLECTION PULLEY | 57 18 512 08 | 6 | 1 | 6 923 101 | 69 23 101 08 | ROPE LENGTH INDICATOR |
| DEFLECTION PULLEY | 73 82 028 | (1) | 1 | 9 080 525 | 90 80 525 | AIR COND. COMPRESSOR A |
| DELIVERY PUMP | 90 78 681 | 1 | 1 | 9 078 680 | 90 78 680 | FUEL PUMP ASSEMBLY |
| DIAPHRAGM ACCUMULATOR 0 | 51 06 451 08 | 39 | 1 | 2 970 | 91 55 482 08 | HYDRAULICS |
| DIAPHRAGM ACCUMULATOR 0 | 51 06 446 08 | 17 | 1 | 2 970 | 91 55 482 08 | HYDRAULICS |
| DIAPHRAGM GROMMET 35,5/ | 60 27 173 08 | 111 | 5 | 2 210 008 | 96 48 137 08 | RADIATOR, PRE-ASSEMBLED |
| DIAPHRAGM GROMMET 35,5/ | 60 27 173 08 | 106 | 1 | 2 510 100 | 96 44 750 08 | SLEWING PLATFORM PANELLI |
| DIAPHRAGM SOCKET 29/37/44 | 55 30 278 08 | 110 | 1 | 2 210 008 | 96 48 137 08 | RADIATOR, PRE-ASSEMBLED |
| DIESEL ENGINE D934 L A6 | 10 15 207 7 | 1 | 1 | X1015211 | 10 15 211 6 | DRIVE UNIT |
| DIODE SPF | 66 03 006 08 | 21 | 8 | 2 922 001 | 92 84 311 08 | BUS PCB |
| DIODE VARISTOR MODULE SP | 66 01 015 08 | 14 | 2 | 2 932 119 | 96 46 061 08 | SWING FRAME RELAY CONT |
| DIRECTIONAL CONTROL VALV | 10 47 530 0 | 27 | 1 | X1047529 | 10 47 529 1 | VALVE BLOCK |
| DIRECTIONAL CONTROL VALV | 10 47 530 0 | 27 | 1 | X1047529 | 10 47 529 2 | VALVE BLOCK |
| DIRECTIONAL CONTROL VALV | 57 18 176 08 | 2 | 4 | 5 113 078 | 51 13 078 08 | CONTROL PLATE |
| DIRECTIONAL CONTROL VALV | 57 18 889 08 | 3 | 1 | X1010109 | 10 10 109 3 | SLEWING GEAR VALVE |
| DIRECTIONAL CONTROL VALV | 57 18 893 08 | 12 | 2 | X1010109 | 10 10 109 3 | SLEWING GEAR VALVE |
| DIRECTIONAL CONTROL VALV | 57 18 893 08 | 32 | 2 | X1029147 | 10 29 147 4 | CONTROL BLOCK |
| DIRECTIONAL CONTROL VALV | 57 18 893 08 | 32 | 4 | X1041191 | 10 41 191 5 | VALVE BLOCK |
| DIRECTIONAL CONTROL VALV | 57 18 893 08 | 32 | 2 | X1047529 | 10 47 529 1 | VALVE BLOCK |
| DIRECTIONAL CONTROL VALV | 57 18 893 08 | 32 | 2 | X1047529 | 10 47 529 2 | VALVE BLOCK |
| DIRECTIONAL CONTROL VAL | 51 14 936 08 | 7 | 1 | 2 975 152 | 91 05 737 08 | HYDR.F.TELESCOPIC BOOM |
| DIRECTIONAL CONTROL VAL | 51 14 444 08 | 8 | 2 | 2 970 | 91 55 482 08 | HYDRAULICS |
| DIRECTIONAL CONTROL VAL | 51 14 444 08 | 4 | 1 | 2 971 | 91 50 610 08 | HYDR.AUXILIARY HOISTING |
| DIRECTIONAL CONTROL VAL | 10 41 260 5 | 31 | 2 | X1041191 | 10 41 191 5 | VALVE BLOCK |
| DIRECTIONAL CONTROL VALV | 57 17 378 08 | 20 | 1 | X1033367 | 10 33 367 2 | CONTROL BLOCK |
| DIRECTIONAL CONTROL VAL | 51 14 327 14 | 12 | 1 | 1 970 | 96 71 367 08 | UNDERCARRIAGE HYDRAULIC |
| DIRECTIONAL CONTROL VAL | 57 05 279 08 | 9 | 1 | 5 114 869 | 51 14 869 08 | CONTROL PLATE |
| DIRECTIONAL CONTROL VAL | 51 14 091 08 | 8 | 2 | 1 970 | 96 71 367 08 | UNDERCARRIAGE HYDRAULIC |
| DIRECTIONAL CTRL. VALVE 4 | 10 22 699 3 | 1 | 1 | 1 423 101 | 99 26 462 14 | JACK-UP SYSTEM |
| DIRECTIONAL SEAT VALVE 3 | 10 43 033 1 | 18 | 1 | 2 970 | 91 55 482 08 | HYDRAULICS |
| DISC SPRING | 57 01 109 08 | 7 | 4 | 5 701 095 | 57 01 095 08 | DRIVING GEAR |
| DISC SPRING DIN 2093 C 40 | 72 08 019 08 | 33 | 8 | 2 502 | 91 01 533 08 | CONTROL STAND |
| DISK PIN | 11 49 429 9 | 4 | 1 | 4 003 006 | 91 04 457 08 | HOOK BLOCK |
| DISPATCH ASSY.MECH.PART | 91 52 291 08 | 175 | 1 | | LTR 1100 -0 | LIEBHERR LTR 1100 |
| DISPLAY TFT PRE-ASS. TFT | 96 20 762 08 | 21 | 1 | 2 913 005 | 96 28 696 08 | INTERIOR HOUSING PRE-ASS. |
| DISTANCE PLATE 22X137X551 | 28 30 950 08 | 48 | 2 | 3 104 000 | 91 62 545 08 | TELESCOPIC SECT.3 PRE-ASS |
| DISTANCE PLATE 22X141X583 | 28 30 949 08 | 48 | 2 | 3 103 000 | 91 62 544 08 | TELESCOPIC SECT.2 PRE-AS |
| DISTANCE PLATE 22X148X622 | 28 30 948 08 | 48 | 2 | 3 102 000 | 91 62 543 08 | TELESCOPIC SECTION 1 PRE |
| DISTANCE PLATE 22X165X674 | 28 30 863 08 | 48 | 2 | 3 101 | 91 60 312 08 | PIVOT SECTION, PRE-ASSEMB |
| DISTANCE PLATE 22X306X425 | 28 30 951 08 | 48 | 2 | 3 105 000 | 91 62 546 08 | TELESCOPIC SECT.IV PRE-A |
| DISTANCE RING 152X25X50 ST | 95 66 575 14 | 9 | 4 | 1 100 216 | 96 46 363 08 | MOUNTING PARTS LWE |
| DISTANCE RING 48.3X8 S235 | 97 05 011 08 | 8 | 4 | 3 511 006 | 96 45 029 08 | BOOM NOSE PRE-ASS. |

| Description | Item | Pos. | Quantity | Page | Assembly | Description |
|---|---|---|---|---|---|---|
| DISTANCE SLEEVE 11X17,5X | 10 11 999 4 | 13 | 2 | X1011997 | 10 11 997 6 | POWER TAKE-OFF ADD-ON |
| DISTANCE SLEEVE 11X21X12 | 10 13 573 0 | 69 | 1 | X1011997 | 10 11 997 9 | WIRING HARNESS ASSEMBLY |
| DISTANCE SLEEVE 11X21X40 | 90 74 977 | 4 | 8 | X1011810 | 10 11 810 1 | EXHAUST PIPE ASSEMBLY |
| DISTANCE SLEEVE 17X27X30 | 90 80 508 | (4) | 1 | 9 080 525 | 90 80 525 | AIR COND. COMPRESSOR A |
| DISTANCE SLEEVE 27X22 42C | 95 21 770 08 | 60 | 8 | 2 200 | 91 81 095 08 | DRIVE ASSEMBLY CPL. |
| DISTANCE SLEEVE 27X22 42C | 95 21 770 08 | 9 | 2 | 2 210 | 91 81 614 08 | DRIVE ASSEMBLY, PRE-ASSE |
| DISTANCE SLEEVE 8,5X18X10 | 91 32 577 | 2 | 8 | X1011919 | 10 11 919 7 | HEAT PROTECTION W.FASTEN |
| DISTANCE SLEEVE 8,5X18X10 | 91 32 577 | 68 | 3 | X1011997 | 10 11 997 9 | WIRING HARNESS ASSEMBLY |
| DISTANCE STUD M3X12 ST V | 66 00 428 08 | 9 | 4 | 2 922 001 | 92 84 311 08 | BUS PCB |
| DISTANCE STUD M3X13 ST A2 | 66 00 460 08 | 8 | 12 | 2 922 001 | 92 84 311 08 | BUS PCB |
| DISTANCE STUD M3X4,7 STEE | 10 03 021 0 | 12 | 2 | 2 913 005 | 96 28 696 08 | INTERIOR HOUSING PRE-ASS. |
| DISTANCE STUD M3X5 ST SP | 66 00 422 08 | 10 | 4 | 2 922 001 | 92 84 311 08 | BUS PCB |
| DISTANCE STUD M3X8 STEEL | 10 00 924 4 | 11 | 2 | 2 913 005 | 96 28 696 08 | INTERIOR HOUSING PRE-ASS. |
| DISTANCE STUD M3X8 STEEL | 10 00 924 4 | 5 | 2 | 2 913 006 | 96 20 732 08 | FAN PLATE PRE-ASS. |
| DISTANCE STUD M5X12 ST SP | 66 00 429 08 | 11 | 1 | 2 922 001 | 92 84 311 08 | BUS PCB |
| DISTANCE TUBE 114.3X234 S3 | 95 18 923 08 | 54 | 1 | 3 106 000 | 91 60 313 08 | TELESCOPIC SECT.5 PRE-AS |
| DISTANCE TUBE RD114,3X6,3 | 94 03 800 08 | 30 | 1 | 3 106 000 | 91 60 313 08 | TELESCOPIC SECT.5 PRE-AS |
| DISTANCE TUBE RD114,3X6,3 | 94 03 800 08 | 2 | 1 | 3 280 | 91 45 571 08 | INST.BACK SHEAVE FOR BOO |
| DISTRIBUTION BLOCK | 10 02 823 5 | 3 | 1 | 2 711 | 91 53 002 08 | CENT. LUBRIC. SYSTEM SUP |
| DISTRIBUTION BLOCK 4/4 | 11 00 291 4 | 2 | 1 | 2 711 | 91 53 002 08 | CENT. LUBRIC. SYSTEM SUP |
| DISTRIBUTOR BLOCK | 10 11 755 1 | 34 | 1 | X1011573 | 10 11 573 7 | FUEL LINES |
| DOOR CPL. | 91 10 037 08 | 2 | 1 | 2 520 000 | 91 49 872 08 | CABIN, GLAZED |
| DOOR PANE 4MM SPF | 72 57 410 08 | 3 | 1 | 2 522 | 91 10 037 08 | DOOR CPL. |
| DOOR SEAL 2-4X14,8X30 EPD | 26 21 095 08 | 83 | 4 | 2 520 000 | 91 49 872 08 | CABIN, GLAZED |
| DOOR ST.CONST. | 92 11 781 08 | (2) | 1 | 2 520 000 | 91 49 872 08 | CABIN, GLAZED |
| DOUBLE BANJO BOLT 10X1X | 10 11 549 9 | 38 | 1 | X1011573 | 10 11 573 7 | FUEL LINES |
| DOUBLE BANJO BOLT 6X6XM | 10 01 486 4 | 5 | 1 | X1011569 | 10 11 569 6 | LEAK OIL RETURN LINE |
| DOUBLE FOLDING JIB MECH. | 91 55 133 08 | 1 | 1 | 3 500 | 91 05 776 08 | DOUBLE FOLDING JIB MECH. |
| DOUBLE FOLDING JIB MECH. | 91 05 776 08 | 351 | 1 | | LTR 1100 -0 | LIEBHERR LTR 1100 |
| DOUBLE LADDER 2X7-350X2, | 10 87 020 9 | 1 | 1 | 3 750 008 | 91 75 085 08 | LADDER ATTACHMENT |
| DOUBLE LOCKING RING FK7 | 74 71 224 08 | 110 | 8 | 2 210 | 91 81 614 08 | DRIVE ASSEMBLY, PRE-ASSE |
| DOUBLE-ENDED STUD DIN 835 | 49 01 450 | 3 | 3 | X1011553 | 10 11 553 9 | STARTER INSTALLATION |
| DOUBLE-ENDED STUD DIN 83 | 11 11 820 8 | 11 | 12 | X1015211 | 10 15 211 6 | DRIVE UNIT |
| DOUBLE-ENDED STUD DIN 835 | 10 33 299 6 | 11 | 2 | X1011997 | 10 11 997 6 | POWER TAKE-OFF ADD-ON |
| DOUBLE-ENDED STUD DIN 939 | 10 33 095 4 | 9 | 2 | X1011832 | 10 11 832 6 | EXHAUST TC MOUNTING |
| DOUBLE-HEADED SPANNER D | 79 00 033 08 | 11 | 1 | 1 750 001 | 92 85 698 08 | MAIN TOOLS |
| DOUBLE-HEADED SPANNER D | 79 00 022 08 | 12 | 1 | 1 750 001 | 92 85 698 08 | MAIN TOOLS |
| DOUBLE-HEADED SPANNER D | 79 00 024 08 | 13 | 1 | 1 750 001 | 92 85 698 08 | MAIN TOOLS |
| DOUBLE-HEADED SPANNER D | 79 00 036 08 | 15 | 1 | 1 750 001 | 92 85 698 08 | MAIN TOOLS |
| DOUBLE-HEADED SPANNER D | 79 00 025 08 | 16 | 1 | 1 750 001 | 92 85 698 08 | MAIN TOOLS |
| DOUBLE-HEADED SPANNER D | 79 00 026 08 | 17 | 1 | 1 750 001 | 92 85 698 08 | MAIN TOOLS |
| DOUBLE-HEADED SPANNER D | 79 00 028 08 | 18 | 1 | 1 750 001 | 92 85 698 08 | MAIN TOOLS |
| DOUBLE-HEADED SPANNER D | 79 00 029 08 | 19 | 1 | 1 750 001 | 92 85 698 08 | MAIN TOOLS |
| DOUBLE-HEADED SPANNER D | 79 00 039 08 | 20 | 1 | 1 750 001 | 92 85 698 08 | MAIN TOOLS |
| DOUBLE-HEADED SPANNER | 79 00 017 08 | 10 | 1 | 1 750 001 | 92 85 698 08 | MAIN TOOLS |
| DOUBLE-HEADED SPANNER | 10 65 277 2 | 14 | 1 | 1 750 001 | 92 85 698 08 | MAIN TOOLS |
| DOWEL PIN ISO 13337 13X16 | 10 00 444 2 | 7 | 1 | 9 074 505 | 90 74 505 | ROCKER ARM BRACKET PRE |
| DOWEL PIN ISO 8752 10X80 4 | 10 87 587 4 | 39 | 1 | 3 501 | 91 05 788 08 | MECH. DOUBLE FOLD JIB PR |
| DOWEL PIN ISO 8752 12X30 | 53 01 463 08 | 20 | 1 | 2 500 | 91 48 594 08 | CRANE DRIVER'S CABIN CPL. |
| DOWEL PIN ISO 8752 12X85 | 43 20 119 08 | 39 | 1 | 3 510 100 | 91 49 246 08 | TRANSPORT MOUNTING |
| DOWEL PIN ISO 8752 18X36 | 43 20 129 08 | 5 | 4 | 2 102 | 91 51 080 08 | ASSEMBLY PARTS F.SLEWING |
| DOWEL PIN ISO 8752 18X36 | 43 20 129 08 | 7 | 4 | 2 350 | 91 81 361 08 | LUFFING RAM W. PIVOT |
| DOWEL PIN ISO 8752 21X140 | 43 20 131 08 | 5 | 2 | 1 100 214 | 74 90 137 14 | GUIDE WHEEL CPL |
| DOWEL PIN ISO 8752 4X28 480 | 10 87 587 8 | 43 | 1 | 3 501 | 91 05 788 08 | MECH. DOUBLE FOLD JIB PR |
| DOWEL PIN ISO 8752 5X28 | 43 20 043 08 | 6 | 1 | 2 790 024 | 96 67 077 08 | MIRROR RETAINER PRE-ASS. |
| DOWEL PIN ISO 8752 5X36 | 54 07 092 08 | 7 | 1 | 2 790 024 | 96 67 077 08 | MIRROR RETAINER PRE-ASS. |
| DOWEL PIN ISO 8752 6X40 | 43 20 065 08 | 5 | 2 | 2 920 551 | 96 53 715 08 | LIMIT SWITCH ADD-ON |
| DOWEL PIN ISO 8752 8X40 | 43 20 085 08 | 5 | 1 | 9 078 832 | 90 78 832 | CRANKSHAFT WITH GEAR |
| DOWEL PIN ISO 8752 A 8X16 | 43 20 079 08 | 72 | 1 | 9 387 598 | 93 87 598 01 | PLANETARY GEARBOX |
| DOWEL PIN ISO 8752 A 8X16 | 43 20 079 08 | 72 | 1 | 9 686 071 | 96 86 071 01 | PLANETARY GEARBOX |

| Description | Item | Pos. | Quantity | Page | Assembly | Description |
|---|---|---|---|---|---|---|
| DRAW CONNECTING LINK | 92 71 591 08 | 5 | 1 | 3 501 | 91 05 788 08 | MECH. DOUBLE FOLD JIB PR |
| DRAW CONNECTING LINK | 92 71 592 08 | 6 | 1 | 3 501 | 91 05 788 08 | MECH. DOUBLE FOLD JIB PR |
| DRIVE ASSEMBLY CPL. | 91 81 095 08 | 105 | 1 | | LTR 1100 -0 | LIEBHERR LTR 1100 |
| DRIVE ASSEMBLY, PRE-ASSE | 91 81 614 08 | 1 | 1 | 2 200 | 91 81 095 08 | DRIVE ASSEMBLY CPL. |
| DRIVE FLANGE EDELSTAHL | 60 60 126 08 | 6 | 1 | 2 780 800 | 91 15 191 08 | ELECTRIC FOR WINCH 2 |
| DRIVE FLANGE EDELSTAHL | 60 60 126 08 | 6 | 1 | 2 920 200 | 91 27 889 08 | ELECTRIC FOR WINCH 1 |
| DRIVE SHAFT | 93 87 600 01 | 5 | 1 | 9 686 071 | 96 86 071 01 | PLANETARY GEARBOX |
| DRIVE SHAFT M=3,75 Z=15 17 | 94 44 427 03 | 40 | 1 | 9 444 410 | 94 44 410 03 | TRACTION DRIVE |
| DRIVE UNIT AG 934 P303 | 10 15 211 6 | 100 | 1 | 2 210 | 91 81 614 08 | DRIVE ASSEMBLY, PRE-ASSE |
| DRIVE WHEEL 983593114 LH-G | 74 90 652 14 | 6 | 1 | 1 100 205 | 96 51 633 08 | CRAWLER CARRIER RIGHT CP |
| DRIVE WHEEL 983593114 LH-G | 74 90 652 14 | 6 | 1 | 1 100 210 | 96 51 634 08 | CRAWLER TRACK CARRIER LE |
| DRIVER | 10 01 472 9 | 7 | 1 | X1032706 | 10 32 706 5 | ELECTRIC PUMP |
| DRIVING GEAR | 10 28 954 9 | 1 | 1 | 5 102 407 | 51 02 407 08 | HYDRO MOTOR |
| DRIVING GEAR | 57 01 090 08 | 1 | 1 | 5 102 294 | 51 02 294 08 | HYDRO MOTOR |
| DRIVING GEAR | 57 01 095 08 | 1 | 1 | 5 701 090 | 57 01 090 08 | DRIVING GEAR |
| DRIVING GEAR | 57 15 412 08 | 1 | 1 | 5 923 269 | 59 23 269 14 | VARIABLE DISPLACEMENT MO |
| DRIVING SHAFT | 57 01 096 08 | 2 | 1 | 5 701 090 | 57 01 090 08 | DRIVING GEAR |
| DRYER | 57 14 890 08 | 4 | 1 | 2 831 | 91 47 871 08 | AIR COND. UNIT SUPERSTRU |
| DS HYDRO CYLINDER | 10 42 499 4 | (999) | 1 | 2 500 | 91 48 594 08 | CRANE DRIVER'S CABIN CPL. |
| DS LOWERING BRAKE VALVE | 10 80 076 6 | (999) | 1 | 2 970 | 91 55 482 08 | HYDRAULICS |
| DS LOWERING BRAKE VALVE | 10 80 076 8 | 999 | 1 | X1029358 | 10 29 358 6 | LOWERING BRAKE VALVE |
| DS LOWERING BRAKE VALVE | 11 11 420 2 | (999) | 1 | X1010109 | 10 10 109 3 | SLEWING GEAR VALVE |
| DS TELESCOPIC CYLINDER | 10 81 388 7 | 999 | 1 | X1047300 | 10 47 300 1 | TELESCOPIC CYLINDER |
| DSF RING 122X113,36X4 MC66 | 10 47 234 7 | 4 | 1 | X1046728 | 10 46 728 5 | PISTON CPL. |
| DU BUSHING | 70 80 051 08 | 69 | 2 | 3 501 | 91 05 788 08 | MECH. DOUBLE FOLD JIB PR |
| DU BUSHING | 70 80 100 08 | 3 | 2 | 3 500 104 | 92 95 821 08 | MOUNTING PRE-ASS. |
| DU BUSHING | 70 80 100 08 | 81 | 2 | 3 501 | 91 05 788 08 | MECH. DOUBLE FOLD JIB PR |
| DU BUSHING | 70 80 100 08 | 3 | 1 | 3 510 001 | 92 52 800 08 | CONSOLE PRE-ASS. |
| DU BUSHING | 70 80 116 08 | 25 | 2 | 3 510 100 | 91 49 246 08 | TRANSPORT MOUNTING |
| DUST CAP | 51 86 206 08 | 70 | 1 | X1047300 | 10 47 300 1 | TELESCOPIC CYLINDER |
| DUST CAP | 51 86 206 08 | 23 | 2 | X1087223 | 10 87 223 8 | LUFFING CYLINDER |
| DUST PLUG | 74 05 495 | (1) | 1 | 1 970 | 96 71 367 08 | UNDERCARRIAGE HYDRAULIC |
| DUST PLUG DN25 | 73 63 030 | (4) | 1 | 1 970 | 96 71 367 08 | UNDERCARRIAGE HYDRAULIC |
| DUST PLUG DN6 | 73 64 491 | (4) | 1 | 1 970 | 96 71 367 08 | UNDERCARRIAGE HYDRAULIC |
| DUST PROTECTION CAP | 10 87 221 6 | 2 | 1 | 6 060 709 | 60 60 709 08 | BATTERY MAIN SWITCH |
| DUST-PROF COVER | 10 04 006 4 | 12 | 1 | X1011676 | 10 11 676 8 | AIR CONDITIONING COMPRES |
| E/A-MODULE A SPF | 66 01 020 08 | 33 | 1 | 2 932 042 | 96 68 587 08 | BASE ASSEMBLY |
| EARTH CONNECTION PLATE | 90 80 911 | 4 | 1 | 9 078 314 | 90 78 314 | HEATING FLANGE ADD-ON |
| EASY-CHANGE FILTER OEL 9µ | 10 29 729 5 | 8 | 2 | 9 075 368 | 90 75 368 | LUBE OIL FILTER ASSEMBLY |
| EASY-CHANGE FILTER OEL 9µ | 10 29 729 5 | 1 | 2 | 9 629 047 | 96 29 047 08 | FILTER PACKAGE |
| EASY-CHANGE FILTER OEL 9µ | 10 29 729 5 | 1 | 2 | 9 629 049 | 96 29 049 08 | FILTER PACKAGE |
| EASY-CHANGE FILTER OEL 9µ | 10 29 729 5 | (1) | 2 | XSK_Z480 | SK_Z48005 | SERVICE |
| EDGE PROTECTION 1-2X9,5X6, | 26 21 039 08 | 6 | 2.3 | 2 260 006 | 96 31 147 08 | BATTERY BOX, PRE-ASSEMB |
| EDGE PROTECTION 1-2X9,5X6, | 26 21 039 08 | (3) | 0.6 | 2 510 100 | 96 44 750 08 | SLEWING PLATFORM PANELLI |
| EDGE PROTECTION 1-2X9,5X6, | 26 21 039 08 | 60 | 0.295 | 2 932 095 | 96 46 064 08 | SWING FRAME FUSE AND RE |
| EDGE PROTECTION 1-2X9,5X6, | 26 21 039 08 | 7 | 0.16 | 2 932 166 | 92 68 911 08 | GROUND RAIL |
| EDGE PROTECTION 1-2X9,5X6, | 26 21 039 08 | 12 | 0.25 | 2 984 | 91 52 906 08 | OIL COOLER INSTALLATION |
| EDGE SEALING RING DKAZ16 | 47 32 142 08 | 7 | 2 | 9 275 212 | 92 75 212 01 | OIL-LEVEL GAUGE INSTALLAT |
| EL. FOR SUPPLEMENTARY HE | 91 27 894 08 | 4 | 1 | 2 540 | 91 45 984 08 | HEATING, CRANE CABIN |
| EL.2 HOISTING LIMIT SWITCH | 91 59 294 08 | 362 | 1 | | LTR 1100 -0 | LIEBHERR LTR 1100 |
| EL.ADD-ON SET-LIMIT SWITC | 96 53 714 08 | 11 | 1 | 2 920 | 91 55 477 08 | ELECTR. SYSTEM F.SLEWING |
| EL.INSTRUMENTS F.CRANE | 91 54 254 08 | 143 | 1 | | LTR 1100 -0 | LIEBHERR LTR 1100 |
| ELBOW 90° DI=130 GUMMI | 10 09 996 9 | 251 | 1 | 2 681 | 91 28 102 08 | AIR FILTER UNIT |
| ELECTR. F.EXTENDING MECH | 92 07 663 08 | 6 | 1 | 3 930 | 91 59 068 08 | ELECTR. SYSTEM F. BOOM |
| ELECTR. FOR AIR-CONDITION | 92 01 827 08 | 7 | 1 | 2 831 | 91 47 871 08 | AIR COND. UNIT SUPERSTRU |
| ELECTR. FOR CONTROL STAN | 91 48 669 08 | 141 | 1 | | LTR 1100 -0 | LIEBHERR LTR 1100 |
| ELECTR. FOR HEAD SECTION | 96 20 960 08 | 3 | 1 | 3 500 020 | 91 55 133 08 | DOUBLE FOLDING JIB MECH. |
| ELECTR. FOR HEAD SECTION | 96 20 965 08 | 4 | 1 | 3 930 | 91 59 068 08 | ELECTR. SYSTEM F. BOOM |
| ELECTR. FOR WORK AREA LI | 96 31 865 08 | 20 | 1 | 2 920 | 91 55 477 08 | ELECTR. SYSTEM F.SLEWING |
| ELECTR. SYSTEM F. BOOM | 91 59 068 08 | 213 | 1 | | LTR 1100 -0 | LIEBHERR LTR 1100 |

| Description | Item | Pos. | Quantity | Page | Assembly | Description |
|---|---|---|---|---|---|---|
| ELECTR. SYSTEM F.SLEWING | 91 55 477 08 | 179 | 1 | | LTR 1100 -0 | LIEBHERR LTR 1100 |
| ELECTR.FOR CENTER SECTIO | 96 46 916 08 | 1 | 1 | 1 920 | 91 54 759 08 | ELECTR.FOR CRAWLER CARR |
| ELECTR.FOR CRAWLER CARR | 91 54 759 08 | 66 | 1 | | LTR 1100 -0 | LIEBHERR LTR 1100 |
| ELECTR.FOR SLEWING GEAR | 92 11 635 08 | 15 | 1 | 2 920 593 | 96 53 714 08 | EL.ADD-ON SET-LIMIT SWITCH |
| ELECTR.FOR SLEWING GEAR | 96 36 299 08 | 16 | 1 | 2 920 | 91 55 477 08 | ELECTR. SYSTEM F.SLEWING |
| ELECTRIC ADD-ON PARTS CA | 96 28 388 08 | 5 | 1 | 2 533 | 91 54 254 08 | EL.INSTRUMENTS F.CRANE D |
| ELECTRIC F.BASE SECTION | 96 20 959 08 | 2 | 1 | 3 500 020 | 91 55 133 08 | DOUBLE FOLDING JIB MECH. |
| ELECTRIC F.BASE SECTION | 96 56 247 08 | 2 | 1 | 3 930 | 91 59 068 08 | ELECTR. SYSTEM F. BOOM |
| ELECTRIC FAN ATTACHMENT | 92 88 195 08 | 26 | 1 | 2 920 | 91 55 477 08 | ELECTR. SYSTEM F.SLEWING |
| ELECTRIC FOR ARMREST LEF | 96 36 738 08 | 1 | 1 | 2 531 | 91 48 669 08 | ELECTR. FOR CONTROL STAN |
| ELECTRIC FOR ARMREST RI | 96 36 739 08 | 2 | 1 | 2 531 | 91 48 669 08 | ELECTR. FOR CONTROL STAN |
| ELECTRIC FOR BATTERY BOX | 96 31 039 08 | 5 | 1 | 2 260 | 91 46 555 08 | BATTERY BOX CPL. |
| ELECTRIC FOR FLASHLIGHT | 91 01 520 08 | 5 | 1 | 2 533 003 | 96 28 388 08 | ELECTRIC ADD-ON PARTS CA |
| ELECTRIC FOR OIL COOLER | 91 11 097 08 | 20 | 2 | 2 984 | 91 52 906 08 | OIL COOLER INSTALLATION |
| ELECTRIC FOR WINCH 1 | 91 27 889 08 | 10 | 1 | 2 450 | 91 53 926 08 | MAIN HOIST GEAR |
| ELECTRIC FOR WINCH 2 | 91 15 191 08 | 100 | 1 | 2 440 022 | 96 42 336 08 | WINCH 2 PRE-ASS. |
| ELECTRIC PUMP | 10 32 706 5 | 1 | 1 | 2 711 | 91 53 002 08 | CENT. LUBRIC. SYSTEM SUP |
| ELECTRIC SLEWING SENSOR | 91 43 393 08 | 20 | 1 | 2 920 593 | 96 53 714 08 | EL.ADD-ON SET-LIMIT SWITCH |
| EMERGENCY HAND OPERAT | 11 00 781 7 | 3 | 1 | 5 717 378 | 57 17 378 08 | DIRECTIONAL CONTROL VALV |
| EMERGENCY STOP BUTTON | 60 61 441 08 | 47 | 1 | 2 533 001 | 96 41 568 08 | DASHBOARD ROOF, PRE-AS |
| EMPTY CASING | 61 10 011 08 | 2 | 1 | 2 913 100 | 91 23 538 08 | ASSEMBLY FRAME |
| EMPTY CASING 120X220X80 A | 97 18 849 08 | 5 | 1 | 3 930 492 | 96 20 966 08 | TERMINAL BOX CPL. |
| EMPTY CASING 160X260X90X0 | 97 18 863 08 | 7 | 1 | 3 930 718 | 96 56 248 08 | TERMINAL BOX CPL. |
| EMPTY CASING 440X80X70 | 60 66 523 08 | 7 | 1 | 2 920 574 | 96 36 055 08 | OPERATOR PANEL BALLAST |
| EMPTY CASING 560X370X70 | 60 66 537 08 | 7 | 1 | 2 920 904 | 96 41 093 08 | CONTROL DESK SUPPORT |
| EMPTY CASING DRILLED 120X | 97 71 376 08 | 1 | 1 | 1 920 314 | 96 46 921 08 | TERMINAL BOX, PRE-ASSEMB |
| END ANGLE | 60 27 946 08 | 208 | 2 | 3 930 718 | 96 56 248 08 | TERMINAL BOX CPL. |
| END COVER | 91 44 757 | 2 | 1 | X1011883 | 10 11 883 9 | OIL FILLER INLET |
| END COVER | 94 44 428 03 | 45 | 1 | 9 444 410 | 94 44 410 03 | TRACTION DRIVE |
| END COVER DIN 443 B 45 | 54 02 024 08 | 3 | 8 | X1011577 | 10 11 577 7 | CRANKCASE CPL. |
| END COVER DIN 443 St A3C | 49 80 362 | 2 | 4 | X1011577 | 10 11 577 7 | CRANKCASE CPL. |
| END COVER DIN 443 St A3C | 49 80 363 | 10 | 3 | X1012038 | 10 12 038 3 | CYLINDER HEAD |
| END COVER DIN 443 St A3C | 49 81 042 | 12 | 1 | X1012038 | 10 12 038 3 | CYLINDER HEAD |
| END HOLDER | 60 21 101 08 | 4 | 2 | 2 932 167 | 96 32 480 08 | TERMINAL STRIP |
| ENGINE CONTROL SENSORS | 10 11 969 8 | 581 | 1 | X1015207 | 10 15 207 7 | DIESEL ENGINE |
| EQUALIZING RESERVOIR 0,2L | 50 28 073 08 | 7 | 1 | 2 971 | 91 50 610 08 | HYDR.AUXILIARY HOISTING |
| EQUIPMENT CARRIER WELDE | 96 56 364 08 | 1 | 1 | 2 210 | 91 81 614 08 | DRIVE ASSEMBLY, PRE-ASSE |
| ES PIN 10X20 VERZ | 72 51 101 08 | 126 | 1 | 2 520 000 | 91 49 872 08 | CABIN, GLAZED |
| ES PIN 8X16 VERZ | 72 51 118 08 | 12 | 2 | 2 510 072 | 96 44 614 08 | FLAP RIGHT PRE-ASS. |
| ES PIN 8X16 VERZ | 72 51 118 08 | 11 | 2 | 2 510 201 | 96 42 011 08 | FLAP PRE-ASS. |
| ES PIN 8X16 VERZ | 72 51 118 08 | 67 | 1 | 2 520 000 | 91 49 872 08 | CABIN, GLAZED |
| EVAPORATOR | 57 18 690 08 | 10 | 1 | 5 531 882 | 55 31 882 08 | AIR COND. EVAPORATOR RFK |
| EXHAUST DUCT EDELSTAHL | 97 17 015 08 | 101 | 1 | 2 680 | 91 53 225 08 | EXHAUST SYSTEM CPL. |
| EXHAUST DUCT EDELSTAHL | 97 27 698 08 | 102 | 1 | 2 680 | 91 53 225 08 | EXHAUST SYSTEM CPL. |
| EXHAUST PIPE | 10 11 791 4 | 1 | 1 | X1011810 | 10 11 810 1 | EXHAUST PIPE ASSEMBLY |
| EXHAUST PIPE ASSEMBLY D | 10 11 810 1 | 410 | 1 | X1015207 | 10 15 207 7 | DIESEL ENGINE |
| EXHAUST SILENCER | 55 20 237 08 | 68 | 1 | 2 520 000 | 91 49 872 08 | CABIN, GLAZED |
| EXHAUST SILENCER | 55 20 237 08 | 3 | 1 | 2 955 | 91 49 516 08 | PNEUM. CRANE OPERATORS |
| EXHAUST SYSTEM CPL. M.FU | 91 53 225 08 | 163 | 1 | | LTR 1100 -0 | LIEBHERR LTR 1100 |
| EXHAUST TC MOUNTING K26 | 10 11 832 6 | 430 | 1 | X1015207 | 10 15 207 7 | DIESEL ENGINE |
| EXHAUST VALVE SEAT INSE | 90 73 726 | 7 | 2 | X1012038 | 10 12 038 3 | CYLINDER HEAD |
| EXPANSION BOLT M27X145 30 | 40 98 177 08 | 1 | 56 | 1 620 | 91 48 605 08 | FIXING PARTS SLEWING RING |
| EXPANSION BOLT M27X145 30 | 40 98 177 08 | 2 | 33 | 2 410 | 91 48 668 08 | ROLLER SLEWING RING |
| EXPANSION TANK PRE-ASS. | 96 32 140 08 | 2 | 1 | 2 200 | 91 81 095 08 | DRIVE ASSEMBLY CPL. |
| EXPANSION TANK PRE-ASS. | 96 84 070 08 | 1 | 1 | 2 200 048 | 96 32 140 08 | EXPANSION TANK PRE-ASS. |
| EXPANSION TANK WELDED AL | 96 79 365 08 | 1 | 1 | 2 200 048 | 96 84 070 08 | EXPANSION TANK PRE-ASS. |
| EXTENSION DIN 3123 200X3/4" | 79 00 264 08 | 65 | 1 | 1 750 001 | 92 85 698 08 | MAIN TOOLS |
| EXTENSION DIN 3123 400X3/4" | 79 00 263 08 | 64 | 1 | 1 750 001 | 92 85 698 08 | MAIN TOOLS |
| EXTENSION M10X21-SW13 | 77 43 734 08 | 10 | 4 | 2 711 | 91 53 002 08 | CENT. LUBRIC. SYSTEM SUP |
| FALL PROTECTION | 91 51 084 08 | 136 | 1 | | LTR 1100 -0 | LIEBHERR LTR 1100 |

| Description | Item | Pos. | Quantity | Page | Assembly | Description |
|---|---|---|---|---|---|---|
| FAN | 61 07 145 08 | 2 | 1 | 2 913 004 | 96 20 460 08 | HOUSING PRE-ASSEMBLED |
| FAN | 61 07 146 08 | 2 | 2 | 2 913 006 | 96 20 732 08 | FAN PLATE PRE-ASS. |
| FAN 24V | 10 35 483 7 | 3 | 1 | X1009734 | 10 09 734 5 | OIL AIR COOLER |
| FAN 80X80X25 | 61 03 886 14 | 3 | 2 | 2 913 102 | 92 32 870 08 | FAN UNIT |
| FAN HOUSING | 10 35 483 6 | 2 | 1 | X1009734 | 10 09 734 5 | OIL AIR COOLER |
| FAN PLATE | 92 99 370 08 | 1 | 1 | 2 913 006 | 96 20 732 08 | FAN PLATE PRE-ASS. |
| FAN PLATE PRE-ASS. | 96 20 732 08 | 1 | 1 | 2 913 005 | 96 28 696 08 | INTERIOR HOUSING PRE-ASS. |
| FAN SCREEN 1X286X173 DR | 28 81 799 08 | 15 | 1 | 2 913 100 | 91 23 538 08 | ASSEMBLY FRAME |
| FAN UNIT | 92 32 870 08 | 11 | 1 | 2 913 100 | 91 23 538 08 | ASSEMBLY FRAME |
| FASTENING CLAMP 13 | 60 20 033 08 | 9 | 2 | 2 932 215 | 92 26 129 08 | GROUND RAIL |
| FASTENING CLAMP 8 | 60 20 032 08 | 8 | 1 | 2 932 215 | 92 26 129 08 | GROUND RAIL |
| FAULT INDICATOR | 10 42 995 2 | 9 | 1 | X1032706 | 10 32 706 5 | ELECTRIC PUMP |
| FEMALE PLUG 9-POL GERADE | 60 23 219 08 | 6 | 2 | 2 922 001 | 92 84 311 08 | BUS PCB |
| FERRULE 2 CU | 11 17 056 5 | 7 | 16 | 1 100 216 | 96 46 363 08 | MOUNTING PARTS LWE |
| FERRULE 2 CU | 11 17 056 5 | 7 | 2 | 2 102 022 | 96 32 604 08 | LOCKING |
| FERRULE 2 CU | 11 17 056 5 | 46 | 8 | 2 971 | 91 50 610 08 | HYDR.AUXILIARY HOISTING |
| FERRULE 2 CU | 11 17 056 5 | 112 | 2 | 3 501 | 91 05 788 08 | MECH. DOUBLE FOLD JIB PR |
| FERRULE 2 CU | 11 17 056 5 | 11 | 2 | 3 510 006 | 96 20 924 08 | FOLDING BRACKET |
| FERRULE 2 CU | 11 17 056 5 | 4 | 4 | 3 750 027 | 96 89 527 08 | MOUNTING HOOK ROD |
| FILLER NECK CPL. | 10 11 883 8 | 1 | 1 | X1011883 | 10 11 883 9 | OIL FILLER INLET |
| FILLER NECK PA6 | 10 45 098 1 | 15 | 2 | 2 200 048 | 96 84 070 08 | EXPANSION TANK PRE-ASS. |
| FILTER | 57 15 280 08 | 34 | 1 | X1041191 | 10 41 191 3 | SHEET |
| FILTER | 57 15 280 08 | 38 | 1 | X1080297 | 10 80 297 1 | VALVE BLOCK |
| FILTER | 57 18 500 08 | 19 | 1 | 5 530 022 | 55 30 022 08 | WATER HEATING SYSTEM |
| FILTER | 57 18 500 08 | 204 | 1 | 9 629 047 | 96 29 047 08 | FILTER PACKAGE |
| FILTER | 57 18 500 08 | (17) | 1 | XSK_Z480 | SK_Z48005 | SERVICE |
| FILTER BOWL | 57 10 213 08 | 3 | 1 | 5 106 708 | 51 06 708 08 | LINE FILTER |
| FILTER CARTRIDGE 0,005m³/m | 51 06 711 08 | 41 | 3 | 2 970 | 91 55 482 08 | HYDRAULICS |
| FILTER CARTRIDGE 0,005m³/m | 51 06 711 08 | 26 | 2 | 2 971 | 91 50 610 08 | HYDR.AUXILIARY HOISTING |
| FILTER CARTRIDGE 0,005m³/m | 51 06 711 08 | 9 | 1 | 2 975 152 | 91 05 737 08 | HYDR.F.TELESCOPIC BOOM |
| FILTER COVER | 57 08 320 08 | 2 | 1 | X1032665 | 10 32 665 4 | RETURN FILTER |
| FILTER ELEMENT | 10 27 855 3 | 205 | 1 | 9 629 047 | 96 29 047 08 | FILTER PACKAGE |
| FILTER ELEMENT | 10 27 855 3 | 1 | 1 | X1009998 | 10 09 998 1 | AIR FILTER |
| FILTER ELEMENT | 10 27 855 3 | (9) | 1 | XSK_Z480 | SK_Z48005 | SERVICE |
| FILTER INSERT 1m³/min 10µm | 51 06 718 08 | (1) | 1 | 2 340 004 | 96 43 780 08 | OIL TANK PRE-ASS. |
| FILTER INSERT 1m³/min 10µm | 51 06 718 08 | 200 | 2 | 9 629 047 | 96 29 047 08 | FILTER PACKAGE |
| FILTER INSERT 1m³/min 10µm | 51 06 718 08 | 200 | 2 | 9 629 049 | 96 29 049 08 | FILTER PACKAGE |
| FILTER INSERT 1m³/min 10µm | 51 06 718 08 | (11) | 2 | XSK_Z480 | SK_Z48005 | SERVICE |
| FILTER INSERT OEL 10µm | 10 03 761 6 | 1 | 1 | 5 106 708 | 51 06 708 08 | LINE FILTER |
| FILTER INSERT OEL 10µm | 10 03 761 6 | 5 | 1 | 9 629 047 | 96 29 047 08 | FILTER PACKAGE |
| FILTER INSERT OEL 10µm | 10 03 761 6 | 5 | 1 | 9 629 049 | 96 29 049 08 | FILTER PACKAGE |
| FILTER INSERT OEL 10µm | 10 03 761 6 | (4) | 1 | XSK_Z480 | SK_Z48005 | SERVICE |
| FILTER INSERT OEL 10µm | 51 06 692 08 | 4 | 2 | 9 629 047 | 96 29 047 08 | FILTER PACKAGE |
| FILTER INSERT OEL 10µm | 51 06 692 08 | 4 | 2 | 9 629 049 | 96 29 049 08 | FILTER PACKAGE |
| FILTER INSERT OEL 10µm | 51 06 692 08 | 10 | 1 | X1032665 | 10 32 665 4 | RETURN FILTER |
| FILTER INSERT OEL 10µm | 51 06 692 08 | (10) | 2 | XSK_Z480 | SK_Z48005 | SERVICE |
| FILTER INSERT OEL 10µm | 57 05 848 08 | 1 | 1 | 5 106 681 | 51 06 681 08 | PRESSURE FILTER |
| FILTER INSERT OEL 10µm | 57 05 848 08 | 9 | 1 | 9 629 047 | 96 29 047 08 | FILTER PACKAGE |
| FILTER INSERT OEL 10µm | 57 05 848 08 | 9 | 1 | 9 629 049 | 96 29 049 08 | FILTER PACKAGE |
| FILTER INSERT OEL 10µm | 57 05 848 08 | (13) | 1 | XSK_Z480 | SK_Z48005 | SERVICE |
| FILTER PACKAGE 1000 STD. | 96 29 047 08 | 120 | 1 | XSK_Z480 | SK_Z48005 | SERVICE |
| FILTER PACKAGE 500 STD.OW | 96 29 049 08 | 110 | 1 | XSK_Z480 | SK_Z48005 | SERVICE |
| FINAL CONTROL VALVE | 10 11 795 1 | 14 | 1 | X1012193 | 10 12 193 2 | BASIC ENGINE |
| FINGER-HOLD 130.5X70X36 K | 70 42 287 08 | 21 | 1 | 2 522 | 91 10 037 08 | DOOR CPL. |
| FINGER-HOLD X0 KUNSTSTOF | 95 55 000 08 | 6 | 1 | 2 510 072 | 96 44 614 08 | FLAP RIGHT PRE-ASS. |
| FINGER-HOLD X0 KUNSTSTOF | 95 55 000 08 | 6 | 1 | 2 510 201 | 96 42 011 08 | FLAP PRE-ASS. |
| FIRE EXTINGUISHER DIN EN 3 | 10 87 460 8 | 4 | 1 | 1 750 002 | 92 86 201 08 | ACCESSORIES |
| FIRST AID KIST DIN 13164 260 | 78 90 003 08 | 5 | 1 | 1 750 002 | 92 86 201 08 | ACCESSORIES |
| FITTED SCREW DIN 609 M16X1 | 10 04 159 0 | 36 | 2 | 2 501 000 | 91 48 769 08 | CRANE DRIVER'S CABIN,PRE |
| FITTING KEY DIN 6885 A 4X4X1 | 43 40 002 08 | 102 | 1 | 6 060 516 | 60 60 516 08 | GEAR CAM LIMITSWITCH |

| Description | Item | Pos. | Quantity | Page | Assembly | Description |
|---|---|---|---|---|---|---|
| FITTINGS | 92 73 271 | 2 | 2 | 9 075 368 | 90 75 368 | LUBE OIL FILTER ASSEMBLY |
| FITTINGS 3/4-16/M22X1,5 11SM | 90 80 360 | 8 | 1 | X1011614 | 10 11 614 6 | CONNECTING PIECE PRE-ASS |
| FITTINGS 3/4-16/M26X1,5 11SM | 10 11 614 7 | 2 | 1 | X1011614 | 10 11 614 6 | CONNECTING PIECE PRE-ASS |
| FITTINGS RD22/M33X2 MS58 | 22 81 103 08 | 4 | 1 | 2 200 048 | 96 32 140 08 | EXPANSION TANK PRE-ASS. |
| FITTINGS S235JR | 10 11 818 1 | 50 | 1 | X1011969 | 10 11 969 7 | PRESSURE TRANSMITTER AT |
| FIXING DEVICE 2.LIFT TOP | 96 64 599 08 | 1 | 1 | 3 780 400 | 91 59 294 08 | EL.2 HOISTING LIMIT SWITCH |
| FIXING PARTS SLEWING RING | 91 48 605 08 | 29 | 1 | | LTR 1100 -0 | LIEBHERR LTR 1100 |
| FLAME ARRESTOR | 10 28 030 2 | (1) | 2 | 2 920 083 | 96 31 039 08 | ELECTRIC FOR BATTERY BOX |
| FLANGE | 91 79 540 | 19 | 1 | X1011832 | 10 11 832 6 | EXHAUST TC MOUNTING |
| FLANGE | 92 75 047 01 | 23 | 1 | 9 387 596 | 93 87 596 01 | ROPE DRUM |
| FLANGE | 92 75 048 01 | 15 | 1 | 9 387 596 | 93 87 596 01 | ROPE DRUM |
| FLANGE 120X150X217 S355J2+ | 95 64 426 14 | 5 | 2 | 1 970 | 96 71 367 08 | UNDERCARRIAGE HYDRAULIC |
| FLANGE 25.0X16 9 42CRMO4 | 97 00 037 08 | 15 | 1 | 2 210 008 | 96 48 137 08 | RADIATOR, PRE-ASSEMBLED |
| FLANGE 35.0X23 S355J2G3 FE | 97 22 607 08 | 12 | 1 | 2 681 | 91 28 102 08 | AIR FILTER UNIT |
| FLANGE D934 | 90 72 832 | 3 | 1 | 9 074 165 | 90 74 165 | BALANCER ASSEMBLY |
| FLANGE FITTING | 51 15 188 08 | 450 | 1 | 2 210 008 | 96 48 137 08 | RADIATOR, PRE-ASSEMBLED |
| FLANGE FITTING 70.0X80 S355 | 95 36 413 08 | 402 | 1 | 2 210 | 91 81 614 08 | DRIVE ASSEMBLY, PRE-ASSE |
| FLANGE FITTING A3P | 51 00 334 08 | 400 | 2 | 2 210 | 91 81 614 08 | DRIVE ASSEMBLY, PRE-ASSE |
| FLANGE FITTING A3P | 51 01 417 08 | 405 | 1 | 2 210 | 91 81 614 08 | DRIVE ASSEMBLY, PRE-ASSE |
| FLANGE HALF A3P | 51 05 866 08 | 572 | 16 | 1 970 | 96 71 367 08 | UNDERCARRIAGE HYDRAULIC |
| FLANGE HALF A3P | 51 05 866 08 | 500 | 6 | 2 970 | 91 55 482 08 | HYDRAULICS |
| FLANGE HALF A3P | 51 05 875 08 | 534 | 6 | 1 970 | 96 71 367 08 | UNDERCARRIAGE HYDRAULIC |
| FLANGE HALF SAE 1 6000 PSI | 51 05 869 08 | 553 | 4 | 1 970 | 96 71 367 08 | UNDERCARRIAGE HYDRAULIC |
| FLANGE JOINT | 79 00 656 08 | 4 | 1 | 1 750 | 91 48 606 08 | TOOLS AND ACCESSORIES |
| FLANGE JOINT | 79 05 339 08 | 5 | 2 | 1 750 | 91 48 606 08 | TOOLS AND ACCESSORIES |
| FLANGE JOINT | 95 59 195 08 | 28 | 2 | 2 970 | 91 55 482 08 | HYDRAULICS |
| FLANGE JOINT | 95 59 195 08 | 45 | 1 | 2 970 | 91 55 482 08 | HYDRAULICS |
| FLANGE JOINT 20X0 | 97 06 941 08 | 34 | 2 | 2 950 | 91 49 515 08 | COMPRESSED-AIR SYST.SU |
| FLANGE JOINT 36.0X38 11SM | 97 48 847 08 | 407 | 2 | 2 210 | 91 81 614 08 | DRIVE ASSEMBLY, PRE-ASSE |
| FLANGE JOINT 36.0X46 11SM | 97 72 532 08 | 27 | 2 | 1 970 | 96 71 367 08 | UNDERCARRIAGE HYDRAULIC |
| FLANGE JOINT AEHNL.ISO 84 | 47 74 004 14 | 704 | 8 | 1 423 101 | 99 26 462 14 | JACK-UP SYSTEM |
| FLANGE JOINT AEHNL.ISO 84 | 47 32 102 14 | 702 | 1 | 1 423 101 | 99 26 462 14 | JACK-UP SYSTEM |
| FLANGE JOINT AEHNL.ISO 843 | 47 77 049 14 | 89 | 1 | 9 444 410 | 94 44 410 03 | TRACTION DRIVE |
| FLANGE JOINT BUZ 16S CR6-F | 47 77 011 08 | 733 | 1 | 1 970 | 96 71 367 08 | UNDERCARRIAGE HYDRAULIC |
| FLANGE JOINT BUZ 30S CR6-F | 47 77 016 08 | 735 | 4 | 1 970 | 96 71 367 08 | UNDERCARRIAGE HYDRAULIC |
| FLANGE JOINT EGE 12L G1/2 | 47 19 038 08 | 628 | 2 | 2 970 | 91 55 482 08 | HYDRAULICS |
| FLANGE JOINT EGE 12S G1/2A | 47 19 018 08 | 710 | 3 | 2 970 | 91 55 482 08 | HYDRAULICS |
| FLANGE JOINT EGE 16S G3/4 | 47 19 019 08 | 625 | 1 | 2 970 | 91 55 482 08 | HYDRAULICS |
| FLANGE JOINT EGESD10-LR-W | 47 19 011 08 | 672 | 4 | 2 970 | 91 55 482 08 | HYDRAULICS |
| FLANGE JOINT EGESD10-LR-W | 47 19 011 08 | 615 | 4 | 2 971 | 91 50 610 08 | HYDR.AUXILIARY HOISTING |
| FLANGE JOINT EGESD10-LR-W | 47 19 011 08 | 607 | 1 | 2 975 152 | 91 05 737 08 | HYDR.F.TELESCOPIC BOOM |
| FLANGE JOINT EGESD12-LR-W | 47 19 012 08 | 641 | 2 | 2 970 | 91 55 482 08 | HYDRAULICS |
| FLANGE JOINT EGESD12-SR | 47 19 005 08 | 736 | 1 | 1 970 | 96 71 367 08 | UNDERCARRIAGE HYDRAULIC |
| FLANGE JOINT EGESD12-SR | 47 19 005 08 | 608 | 1 | 2 975 038 | 91 26 492 08 | ADDNL.HYDR. FOLDING JIB |
| FLANGE JOINT EGESD15-LM | 47 19 042 08 | 638 | 1 | 2 971 | 91 50 610 08 | HYDR.AUXILIARY HOISTING |
| FLANGE JOINT EGESD16-SR | 47 19 006 08 | 737 | 2 | 1 970 | 96 71 367 08 | UNDERCARRIAGE HYDRAULIC |
| FLANGE JOINT EGESD16-SR | 47 19 006 08 | 679 | 1 | 2 970 | 91 55 482 08 | HYDRAULICS |
| FLANGE JOINT EGESD18-LR-W | 47 19 013 08 | 682 | 1 | 2 970 | 91 55 482 08 | HYDRAULICS |
| FLANGE JOINT EGESD28-LR-W | 47 19 015 08 | 693 | 4 | 2 970 | 91 55 482 08 | HYDRAULICS |
| FLANGE JOINT EGESD38-SR | 47 19 040 08 | 656 | 2 | 2 970 | 91 55 482 08 | HYDRAULICS |
| FLANGE JOINT EGESD38-SR | 47 19 040 08 | 625 | 1 | 2 971 | 91 50 610 08 | HYDR.AUXILIARY HOISTING |
| FLANGE JOINT EGESD42-LR-W | 47 19 036 08 | 21 | 1 | 2 340 004 | 96 43 780 08 | OIL TANK PRE-ASS. |
| FLANGE JOINT EGESD42-LR-W | 47 19 036 08 | 600 | 1 | 2 970 | 91 55 482 08 | HYDRAULICS |
| FLANGE JOINT EL 10L CR6-F | 47 23 302 08 | 706 | 1 | 1 970 | 96 71 367 08 | UNDERCARRIAGE HYDRAULIC |
| FLANGE JOINT EL 10L CR6-F | 47 23 302 08 | 618 | 9 | 2 970 | 91 55 482 08 | HYDRAULICS |
| FLANGE JOINT EL 10L CR6-F | 47 23 302 08 | 611 | 3 | 2 971 | 91 50 610 08 | HYDR.AUXILIARY HOISTING |
| FLANGE JOINT EL 10L CR6-F | 47 23 302 08 | 609 | 2 | 2 975 152 | 91 05 737 08 | HYDR.F.TELESCOPIC BOOM |
| FLANGE JOINT EL 12L M18X1,5 | 24 71 286 02 | 630 | 6 | 2 970 | 91 55 482 08 | HYDRAULICS |
| FLANGE JOINT EL 12L M18X1,5 | 24 71 286 02 | 608 | 3 | 2 971 | 91 50 610 08 | HYDR.AUXILIARY HOISTING |
| FLANGE JOINT EL 12L M18X1,5 | 24 71 286 02 | 604 | 3 | 2 975 152 | 91 05 737 08 | HYDR.F.TELESCOPIC BOOM |

| Description | Item | Pos. | Quantity | Page | Assembly | Description |
|---|---|---|---|---|---|---|
| FLANGE JOINT EL 12S CR6-F | 76 17 461 | 740 | 3 | 1 970 | 96 71 367 08 | UNDERCARRIAGE HYDRAULIC |
| FLANGE JOINT EL 12S CR6-F | 76 17 461 | 711 | 1 | 2 970 | 91 55 482 08 | HYDRAULICS |
| FLANGE JOINT EL 15L CR6-F | 47 23 004 14 | 602 | 1 | 2 970 | 91 55 482 08 | HYDRAULICS |
| FLANGE JOINT EL 15L CR6-F | 47 23 004 14 | 606 | 1 | 2 971 | 91 50 610 08 | HYDR.AUXILIARY HOISTING |
| FLANGE JOINT EL 16S CR6-F | 74 07 098 | 760 | 1 | 1 970 | 96 71 367 08 | UNDERCARRIAGE HYDRAULIC |
| FLANGE JOINT EL 16S CR6-F | 74 07 098 | 619 | 4 | 2 970 | 91 55 482 08 | HYDRAULICS |
| FLANGE JOINT EL 18L CR6-F | 24 71 285 02 | 759 | 1 | 1 970 | 96 71 367 08 | UNDERCARRIAGE HYDRAULIC |
| FLANGE JOINT EL 18L CR6-F | 24 71 285 02 | 612 | 5 | 2 970 | 91 55 482 08 | HYDRAULICS |
| FLANGE JOINT EL 18L CR6-F | 24 71 285 02 | 630 | 1 | 2 971 | 91 50 610 08 | HYDR.AUXILIARY HOISTING |
| FLANGE JOINT EL 22L CR6-F | 24 71 386 02 | 702 | 1 | 2 970 | 91 55 482 08 | HYDRAULICS |
| FLANGE JOINT EL 28L CR6-F | 74 07 120 | 637 | 1 | 2 970 | 91 55 482 08 | HYDRAULICS |
| FLANGE JOINT ELSD38-S A3P | 47 23 319 08 | 648 | 1 | 2 970 | 91 55 482 08 | HYDRAULICS |
| FLANGE JOINT ELSD6-S A3P | 47 23 312 08 | 660 | 3 | 2 970 | 91 55 482 08 | HYDRAULICS |
| FLANGE JOINT ELSD6-S A3P | 47 23 312 08 | 627 | 1 | 2 971 | 91 50 610 08 | HYDR.AUXILIARY HOISTING |
| FLANGE JOINT ELSD6-S A3P | 47 23 312 08 | 605 | 1 | 2 975 038 | 91 26 492 08 | ADDNL.HYDR. FOLDING JIB |
| FLANGE JOINT ET 12L M18X1,5 | 24 71 056 02 | 642 | 2 | 2 970 | 91 55 482 08 | HYDRAULICS |
| FLANGE JOINT ET 15L M22X1,5 | 47 24 304 08 | 606 | 2 | 2 970 | 91 55 482 08 | HYDRAULICS |
| FLANGE JOINT ET 18L CR6-F | 24 71 084 02 | 683 | 2 | 2 970 | 91 55 482 08 | HYDRAULICS |
| FLANGE JOINT ET 6S CR6-FRE | 47 24 312 08 | 730 | 1 | 2 970 | 91 55 482 08 | HYDRAULICS |
| FLANGE JOINT EW 10L M16X1 | 74 03 569 | 701 | 1 | 1 970 | 96 71 367 08 | UNDERCARRIAGE HYDRAULIC |
| FLANGE JOINT EW 10L M16X1 | 74 03 569 | 606 | 1 | 2 950 | 91 49 515 08 | COMPRESSED-AIR SYST.SU |
| FLANGE JOINT EW 10L M16X1 | 74 03 569 | 607 | 2 | 2 955 | 91 49 516 08 | PNEUM. CRANE OPERATORS |
| FLANGE JOINT EW 10L M16X1 | 74 03 569 | 636 | 8 | 2 970 | 91 55 482 08 | HYDRAULICS |
| FLANGE JOINT EW 10L M16X1 | 74 03 569 | 613 | 2 | 2 971 | 91 50 610 08 | HYDR.AUXILIARY HOISTING |
| FLANGE JOINT EW 10L M16X1 | 74 03 569 | 606 | 8 | 2 975 152 | 91 05 737 08 | HYDR.F.TELESCOPIC BOOM |
| FLANGE JOINT EW 10S CR6-F | 76 17 268 | 743 | 4 | 1 970 | 96 71 367 08 | UNDERCARRIAGE HYDRAULIC |
| FLANGE JOINT EW 10S CR6-F | 76 17 268 | 715 | 3 | 2 970 | 91 55 482 08 | HYDRAULICS |
| FLANGE JOINT EW 10S CR6-F | 76 17 268 | 603 | 3 | 2 975 038 | 91 26 492 08 | ADDNL.HYDR. FOLDING JIB |
| FLANGE JOINT EW 12L M18X1 | 24 71 177 02 | 631 | 5 | 2 970 | 91 55 482 08 | HYDRAULICS |
| FLANGE JOINT EW 12L M18X1 | 24 71 177 02 | 610 | 2 | 2 971 | 91 50 610 08 | HYDR.AUXILIARY HOISTING |
| FLANGE JOINT EW 12L M18X1 | 24 71 177 02 | 611 | 1 | 2 975 152 | 91 05 737 08 | HYDR.F.TELESCOPIC BOOM |
| FLANGE JOINT EW 12S CR6-F | 76 17 354 | 744 | 2 | 1 970 | 96 71 367 08 | UNDERCARRIAGE HYDRAULIC |
| FLANGE JOINT EW 12S CR6-F | 76 17 354 | 709 | 4 | 2 970 | 91 55 482 08 | HYDRAULICS |
| FLANGE JOINT EW 12S CR6-F | 76 17 354 | 607 | 1 | 2 975 038 | 91 26 492 08 | ADDNL.HYDR. FOLDING JIB |
| FLANGE JOINT EW 15L CR6-F | 76 15 379 | 607 | 2 | 2 970 | 91 55 482 08 | HYDRAULICS |
| FLANGE JOINT EW 16S CR6-F | 76 17 460 | 745 | 3 | 1 970 | 96 71 367 08 | UNDERCARRIAGE HYDRAULIC |
| FLANGE JOINT EW 16S CR6-F | 76 17 460 | 616 | 6 | 2 970 | 91 55 482 08 | HYDRAULICS |
| FLANGE JOINT EW 18L M26X1 | 24 71 083 02 | 602 | 3 | 2 950 | 91 49 515 08 | COMPRESSED-AIR SYST.SU |
| FLANGE JOINT EW 18L M26X1 | 24 71 083 02 | 623 | 4 | 2 970 | 91 55 482 08 | HYDRAULICS |
| FLANGE JOINT EW 20S CR6-F | 74 07 108 | 746 | 1 | 1 970 | 96 71 367 08 | UNDERCARRIAGE HYDRAULIC |
| FLANGE JOINT EW 20S CR6-F | 74 07 108 | 734 | 1 | 2 970 | 91 55 482 08 | HYDRAULICS |
| FLANGE JOINT EW 25S CR6-F | 74 07 119 | 747 | 1 | 1 970 | 96 71 367 08 | UNDERCARRIAGE HYDRAULIC |
| FLANGE JOINT EW 6L CR6-F | 24 70 217 02 | 613 | 1 | 2 955 | 91 49 516 08 | PNEUM. CRANE OPERATORS |
| FLANGE JOINT EW 6L CR6-F | 24 70 217 02 | 677 | 3 | 2 970 | 91 55 482 08 | HYDRAULICS |
| FLANGE JOINT EW 6L CR6-F | 24 70 217 02 | 611 | 1 | 2 975 038 | 91 26 492 08 | ADDNL.HYDR. FOLDING JIB |
| FLANGE JOINT EW 6S M14X1,5 | 47 25 315 08 | 606 | 4 | 2 955 | 91 49 516 08 | PNEUM. CRANE OPERATORS |
| FLANGE JOINT EW 6S M14X1,5 | 47 25 315 08 | 657 | 8 | 2 970 | 91 55 482 08 | HYDRAULICS |
| FLANGE JOINT EW 6S M14X1,5 | 47 25 315 08 | 643 | 1 | 2 971 | 91 50 610 08 | HYDR.AUXILIARY HOISTING |
| FLANGE JOINT EW 6S M14X1,5 | 47 25 315 08 | 606 | 1 | 2 975 038 | 91 26 492 08 | ADDNL.HYDR. FOLDING JIB |
| FLANGE JOINT EWSD22-L A3P | 47 25 306 08 | 701 | 2 | 2 970 | 91 55 482 08 | HYDRAULICS |
| FLANGE JOINT EWSD22-L A3P | 47 25 306 08 | 9 | 1 | X1011766 | 10 11 766 5 | PIPELINE |
| FLANGE JOINT EWSD38-S A3 | 47 25 318 08 | 639 | 10 | 2 970 | 91 55 482 08 | HYDRAULICS |
| FLANGE JOINT EWSD38-S A3 | 47 25 318 08 | 621 | 4 | 2 971 | 91 50 610 08 | HYDR.AUXILIARY HOISTING |
| FLANGE JOINT G 6LL | 77 43 742 08 | 11 | 1 | 2 711 | 91 53 002 08 | CENT. LUBRIC. SYSTEM SUP |
| FLANGE JOINT GA6-LM22X1,5 | 50 29 461 08 | 614 | 1 | 2 955 | 91 49 516 08 | PNEUM. CRANE OPERATORS |
| FLANGE JOINT GE 10 M14X1,5/ | 10 81 393 6 | 40 | 5 | X1011573 | 10 11 573 7 | FUEL LINES |
| FLANGE JOINT GE 10 M16X1,5/ | 10 81 393 7 | 43 | 2 | X1011573 | 10 11 573 7 | FUEL LINES |
| FLANGE JOINT GE 12 M16X1,5/ | 10 81 394 0 | 37 | 3 | X1011573 | 10 11 573 7 | FUEL LINES |
| FLANGE JOINT GE 12S G1/2A | 47 10 326 08 | 700 | 1 | 1 423 101 | 99 26 462 14 | JACK-UP SYSTEM |
| FLANGE JOINT GE 12S G1/2A | 47 10 326 08 | 713 | 3 | 1 970 | 96 71 367 08 | UNDERCARRIAGE HYDRAULIC |

| Description | Item | Pos. | Quantity | Page | Assembly | Description |
|---|---|---|---|---|---|---|
| FLANGE JOINT GE 12S G1/2A | 47 10 326 08 | 707 | 8 | 2 970 | 91 55 482 08 | HYDRAULICS |
| FLANGE JOINT GE 12S G3/8A | 47 10 327 08 | 701 | 8 | 1 423 101 | 99 26 462 14 | JACK-UP SYSTEM |
| FLANGE JOINT GE 18L M22X1 | 47 10 311 08 | 712 | 1 | 1 970 | 96 71 367 08 | UNDERCARRIAGE HYDRAULIC |
| FLANGE JOINT GE 18L M22X1 | 47 10 311 08 | 600 | 5 | 2 950 | 91 49 515 08 | COMPRESSED-AIR SYST.SU |
| FLANGE JOINT GE 18L M22X1 | 47 10 311 08 | 685 | 1 | 2 970 | 91 55 482 08 | HYDRAULICS |
| FLANGE JOINT GEF.A M24X1, | 10 49 347 9 | 57 | 1 | X1047300 | 10 47 300 1 | TELESCOPIC CYLINDER |
| FLANGE JOINT GR 22/18L A3C | 47 50 307 08 | 724 | 1 | 2 970 | 91 55 482 08 | HYDRAULICS |
| FLANGE JOINT GZ 15L A3P | 47 00 112 08 | 608 | 1 | 2 970 | 91 55 482 08 | HYDRAULICS |
| FLANGE JOINT GZ 18L CR6-F | 47 00 104 08 | 725 | 2 | 2 970 | 91 55 482 08 | HYDRAULICS |
| FLANGE JOINT ISO 8434 EL 3 | 48 23 318 14 | 741 | 4 | 1 970 | 96 71 367 08 | UNDERCARRIAGE HYDRAULIC |
| FLANGE JOINT ISO 8434 EL 3 | 48 23 308 14 | 697 | 1 | 2 970 | 91 55 482 08 | HYDRAULICS |
| FLANGE JOINT ISO 8434 EL 3 | 48 23 308 14 | 603 | 1 | 2 971 | 91 50 610 08 | HYDR.AUXILIARY HOISTING |
| FLANGE JOINT ISO 8434 ET 1 | 48 24 303 14 | 612 | 2 | 2 955 | 91 49 516 08 | PNEUM. CRANE OPERATORS |
| FLANGE JOINT ISO 8434 ET 1 | 48 24 303 14 | 692 | 1 | 2 970 | 91 55 482 08 | HYDRAULICS |
| FLANGE JOINT ISO 8434 ET 1 | 48 24 303 14 | 623 | 1 | 2 971 | 91 50 610 08 | HYDR.AUXILIARY HOISTING |
| FLANGE JOINT ISO 8434 ET 1 | 48 24 313 14 | 742 | 2 | 1 970 | 96 71 367 08 | UNDERCARRIAGE HYDRAULIC |
| FLANGE JOINT ISO 8434 ET 1 | 48 24 313 14 | 717 | 2 | 2 970 | 91 55 482 08 | HYDRAULICS |
| FLANGE JOINT ISO 8434 ET 1 | 48 24 314 14 | 712 | 3 | 2 970 | 91 55 482 08 | HYDRAULICS |
| FLANGE JOINT ISO 8434 ET 1 | 48 24 315 14 | 729 | 1 | 2 970 | 91 55 482 08 | HYDRAULICS |
| FLANGE JOINT ISO 8434 ET 3 | 48 24 318 14 | 670 | 1 | 2 970 | 91 55 482 08 | HYDRAULICS |
| FLANGE JOINT ISO 8434 ET 3 | 48 24 318 14 | 629 | 1 | 2 971 | 91 50 610 08 | HYDR.AUXILIARY HOISTING |
| FLANGE JOINT ISO 8434 EW 3 | 48 25 316 14 | 661 | 2 | 2 970 | 91 55 482 08 | HYDRAULICS |
| FLANGE JOINT ISO 8434 EW 3 | 48 25 309 14 | 668 | 3 | 2 970 | 91 55 482 08 | HYDRAULICS |
| FLANGE JOINT ISO 8434 EW 4 | 48 25 308 14 | 666 | 4 | 2 970 | 91 55 482 08 | HYDRAULICS |
| FLANGE JOINT ISO 8434 GE 10 | 47 10 045 14 | 716 | 2 | 2 970 | 91 55 482 08 | HYDRAULICS |
| FLANGE JOINT ISO 8434 GE 1 | 47 10 082 14 | 758 | 6 | 1 970 | 96 71 367 08 | UNDERCARRIAGE HYDRAULIC |
| FLANGE JOINT ISO 8434 SV 1 | 47 40 024 14 | 703 | 8 | 1 423 101 | 99 26 462 14 | JACK-UP SYSTEM |
| FLANGE JOINT ISO 8434 VKA 1 | 47 77 005 14 | 705 | 8 | 1 423 101 | 99 26 462 14 | JACK-UP SYSTEM |
| FLANGE JOINT ISO 8434-1 GE | 73 62 091 | 711 | 1 | 1 970 | 96 71 367 08 | UNDERCARRIAGE HYDRAULIC |
| FLANGE JOINT ISO 8434-1 GE | 73 62 091 | 643 | 12 | 2 970 | 91 55 482 08 | HYDRAULICS |
| FLANGE JOINT ISO 8434-1 GE | 73 62 091 | 601 | 3 | 2 971 | 91 50 610 08 | HYDR.AUXILIARY HOISTING |
| FLANGE JOINT ISO 8434-1 GE | 73 62 091 | 608 | 4 | 2 975 152 | 91 05 737 08 | HYDR.F.TELESCOPIC BOOM |
| FLANGE JOINT ISO 8434-1 GE | 47 10 397 08 | 603 | 1 | 2 950 | 91 49 515 08 | COMPRESSED-AIR SYST.SU |
| FLANGE JOINT ISO 8434-1 GE | 47 10 397 08 | 605 | 2 | 2 955 | 91 49 516 08 | PNEUM. CRANE OPERATORS |
| FLANGE JOINT ISO 8434-1 GE | 47 10 397 08 | 610 | 4 | 2 970 | 91 55 482 08 | HYDRAULICS |
| FLANGE JOINT ISO 8434-1 GE | 47 10 397 08 | 614 | 1 | 2 971 | 91 50 610 08 | HYDR.AUXILIARY HOISTING |
| FLANGE JOINT ISO 8434-1 GE | 49 81 235 | 10 | 2 | X1011832 | 10 11 832 6 | EXHAUST TC MOUNTING |
| FLANGE JOINT ISO 8434-1 GE | 49 81 235 | 3 | 1 | X1011888 | 10 11 888 4 | OIL DIPSTICK WITH PIPE |
| FLANGE JOINT ISO 8434-1 GE | 47 10 328 08 | 714 | 5 | 1 970 | 96 71 367 08 | UNDERCARRIAGE HYDRAULIC |
| FLANGE JOINT ISO 8434-1 GE | 47 10 328 08 | 714 | 2 | 2 970 | 91 55 482 08 | HYDRAULICS |
| FLANGE JOINT ISO 8434-1 GE | 47 10 328 08 | 609 | 1 | 2 975 038 | 91 26 492 08 | ADDNL.HYDR. FOLDING JIB |
| FLANGE JOINT ISO 8434-1 GE | 47 10 307 08 | 675 | 1 | 2 970 | 91 55 482 08 | HYDRAULICS |
| FLANGE JOINT ISO 8434-1 GE | 49 81 233 | 16 | 1 | X1011793 | 10 11 793 0 | ACCESSORIES AIR COMPRES |
| FLANGE JOINT ISO 8434-1 GE | 49 81 233 | 9 | 2 | X1011997 | 10 11 997 6 | POWER TAKE-OFF ADD-ON |
| FLANGE JOINT RD70X70 S355 | 95 36 414 08 | 403 | 1 | 2 210 | 91 81 614 08 | DRIVE ASSEMBLY, PRE-ASSE |
| FLANGE JOINT RED 15/10L A3 | 47 54 301 08 | 603 | 2 | 2 970 | 91 55 482 08 | HYDRAULICS |
| FLANGE JOINT RED 15/12L C | 47 54 318 08 | 607 | 1 | 2 971 | 91 50 610 08 | HYDR.AUXILIARY HOISTING |
| FLANGE JOINT RED 18/15L A3 | 47 54 356 08 | 613 | 1 | 2 970 | 91 55 482 08 | HYDRAULICS |
| FLANGE JOINT RED 18/15L A3 | 47 54 356 08 | 639 | 1 | 2 971 | 91 50 610 08 | HYDR.AUXILIARY HOISTING |
| FLANGE JOINT RED 42/18L C | 47 54 317 08 | 622 | 1 | 2 970 | 91 55 482 08 | HYDRAULICS |
| FLANGE JOINT REDSD12/10-L | 47 54 314 08 | 681 | 2 | 2 970 | 91 55 482 08 | HYDRAULICS |
| FLANGE JOINT REDSD12/10-L | 47 54 314 08 | 612 | 1 | 2 971 | 91 50 610 08 | HYDR.AUXILIARY HOISTING |
| FLANGE JOINT REDSD12/10-L | 47 54 314 08 | 605 | 4 | 2 975 152 | 91 05 737 08 | HYDR.F.TELESCOPIC BOOM |
| FLANGE JOINT REDSD12/6-S | 47 54 329 08 | 713 | 3 | 2 970 | 91 55 482 08 | HYDRAULICS |
| FLANGE JOINT REDSD16/12-S | 47 54 333 08 | 749 | 4 | 1 970 | 96 71 367 08 | UNDERCARRIAGE HYDRAULIC |
| FLANGE JOINT REDSD16/12-S | 47 54 333 08 | 620 | 2 | 2 970 | 91 55 482 08 | HYDRAULICS |
| FLANGE JOINT REDSD16/6-S | 47 54 331 08 | 634 | 1 | 2 970 | 91 55 482 08 | HYDRAULICS |
| FLANGE JOINT REDSD18/10-L | 47 54 303 08 | 753 | 1 | 1 970 | 96 71 367 08 | UNDERCARRIAGE HYDRAULIC |
| FLANGE JOINT REDSD18/12-L | 47 54 363 08 | 689 | 1 | 2 970 | 91 55 482 08 | HYDRAULICS |
| FLANGE JOINT REDSD18/6-L | 47 54 307 08 | 684 | 1 | 2 970 | 91 55 482 08 | HYDRAULICS |

| Description | Item | Pos. | Quantity | Page | Assembly | Description |
|---|---|---|---|---|---|---|
| FLANGE JOINT REDSD20/12-S | 47 54 348 08 | 752 | 1 | 1 970 | 96 71 367 08 | UNDERCARRIAGE HYDRAULIC |
| FLANGE JOINT REDSD22/18-L | 47 54 360 08 | 720 | 1 | 2 970 | 91 55 482 08 | HYDRAULICS |
| FLANGE JOINT REDSD30/10-S | 47 54 339 08 | 750 | 4 | 1 970 | 96 71 367 08 | UNDERCARRIAGE HYDRAULIC |
| FLANGE JOINT REDSD35/28-L | 47 54 304 08 | 667 | 3 | 2 970 | 91 55 482 08 | HYDRAULICS |
| FLANGE JOINT REDSD38/6-S | 47 54 081 08 | 651 | 1 | 2 970 | 91 55 482 08 | HYDRAULICS |
| FLANGE JOINT REDSD42/35-L | 47 54 367 08 | 726 | 1 | 2 970 | 91 55 482 08 | HYDRAULICS |
| FLANGE JOINT REDSDN10/6-S | 47 54 320 08 | 751 | 2 | 1 970 | 96 71 367 08 | UNDERCARRIAGE HYDRAULIC |
| FLANGE JOINT REDSDN10/6-S | 47 54 320 08 | 604 | 2 | 2 975 038 | 91 26 492 08 | ADDNL.HYDR. FOLDING JIB |
| FLANGE JOINT REDSDN12/6-L | 47 54 302 08 | 676 | 2 | 2 970 | 91 55 482 08 | HYDRAULICS |
| FLANGE JOINT REDSDN20/16- | 47 54 321 08 | 615 | 3 | 2 970 | 91 55 482 08 | HYDRAULICS |
| FLANGE JOINT REDSDN25/20- | 47 54 323 08 | 748 | 1 | 1 970 | 96 71 367 08 | UNDERCARRIAGE HYDRAULIC |
| FLANGE JOINT REDSDN38/30- | 47 54 353 08 | 653 | 5 | 2 970 | 91 55 482 08 | HYDRAULICS |
| FLANGE JOINT REDSDN42/28 | 47 54 313 08 | 694 | 2 | 2 970 | 91 55 482 08 | HYDRAULICS |
| FLANGE JOINT RI G1AXG1/2 C | 47 55 007 08 | 702 | 4 | 1 970 | 96 71 367 08 | UNDERCARRIAGE HYDRAULIC |
| FLANGE JOINT RI M22X1,5/M1 | 73 81 363 | 4 | 2 | 9 080 294 | 90 80 294 | AIR COMPRESSOR PRE-ASSY |
| FLANGE JOINT RI M22X1,5/M1 | 73 81 363 | 5 | 2 | X1011793 | 10 11 793 0 | ACCESSORIES AIR COMPRES |
| FLANGE JOINT RSWS10-LM-W | 47 66 102 08 | 719 | 1 | 2 970 | 91 55 482 08 | HYDRAULICS |
| FLANGE JOINT RSWS10-LR-W | 47 32 305 08 | 723 | 1 | 2 970 | 91 55 482 08 | HYDRAULICS |
| FLANGE JOINT RSWS10-SM-W | 47 32 105 08 | 602 | 1 | 2 975 038 | 91 26 492 08 | ADDNL.HYDR. FOLDING JIB |
| FLANGE JOINT RSWS16-SR-W | 47 32 312 08 | 756 | 4 | 1 970 | 96 71 367 08 | UNDERCARRIAGE HYDRAULIC |
| FLANGE JOINT RSWS16-SR-W | 47 32 312 08 | 665 | 2 | 2 970 | 91 55 482 08 | HYDRAULICS |
| FLANGE JOINT RSWS18-LR-W | 47 66 106 08 | 706 | 1 | 2 970 | 91 55 482 08 | HYDRAULICS |
| FLANGE JOINT RSWS20-SM-W | 47 66 110 08 | 674 | 2 | 2 970 | 91 55 482 08 | HYDRAULICS |
| FLANGE JOINT RSWS6-SR-W | 47 32 306 08 | 671 | 4 | 2 970 | 91 55 482 08 | HYDRAULICS |
| FLANGE JOINT SNV10-L CFX | 47 00 101 08 | 615 | 1 | 2 955 | 91 49 516 08 | PNEUM. CRANE OPERATORS |
| FLANGE JOINT SNV10-L CFX | 47 00 101 08 | 691 | 2 | 2 970 | 91 55 482 08 | HYDRAULICS |
| FLANGE JOINT SNV10-S A3P | 47 00 102 08 | 721 | 3 | 1 970 | 96 71 367 08 | UNDERCARRIAGE HYDRAULIC |
| FLANGE JOINT SNV12-L A3P | 47 00 113 08 | 627 | 2 | 2 970 | 91 55 482 08 | HYDRAULICS |
| FLANGE JOINT SNV12-L A3P | 47 00 113 08 | 609 | 1 | 2 971 | 91 50 610 08 | HYDR.AUXILIARY HOISTING |
| FLANGE JOINT SNV12-S A3P | 47 00 103 08 | 722 | 10 | 1 970 | 96 71 367 08 | UNDERCARRIAGE HYDRAULIC |
| FLANGE JOINT SNV30-S A3P | 47 00 111 08 | 720 | 4 | 1 970 | 96 71 367 08 | UNDERCARRIAGE HYDRAULIC |
| FLANGE JOINT SNV30-S A3P | 47 00 111 08 | 662 | 2 | 2 970 | 91 55 482 08 | HYDRAULICS |
| FLANGE JOINT SNV38-S A3P | 47 00 107 08 | 669 | 1 | 2 970 | 91 55 482 08 | HYDRAULICS |
| FLANGE JOINT SNV38-S A3P | 47 00 107 08 | 620 | 4 | 2 971 | 91 50 610 08 | HYDR.AUXILIARY HOISTING |
| FLANGE JOINT SV 18L CR6-F | 47 40 307 08 | 611 | 1 | 2 970 | 91 55 482 08 | HYDRAULICS |
| FLANGE JOINT T 42L A3C | 47 04 314 08 | 621 | 2 | 2 970 | 91 55 482 08 | HYDRAULICS |
| FLANGE JOINT W 20S CR6-F | 47 02 327 08 | 727 | 1 | 2 970 | 91 55 482 08 | HYDRAULICS |
| FLANGE JOINT W 28L A3C | 47 02 308 08 | 728 | 1 | 2 970 | 91 55 482 08 | HYDRAULICS |
| FLANGE JOINT W 35L A3C | 47 02 311 08 | 696 | 1 | 2 970 | 91 55 482 08 | HYDRAULICS |
| FLANGE JOINT WE 6LL M10x1 | 77 43 738 08 | 2 | 1 | X1100291 | 11 00 291 4 | DISTRIBUTION BLOCK |
| FLANGE JOINT WSV 12S A3C | 47 42 324 08 | 727 | 4 | 1 970 | 96 71 367 08 | UNDERCARRIAGE HYDRAULIC |
| FLANGE JOINT XG10-S A3P | 47 00 324 08 | 649 | 3 | 2 970 | 91 55 482 08 | HYDRAULICS |
| FLANGE JOINT XG16-S A3P | 47 00 327 08 | 626 | 1 | 2 970 | 91 55 482 08 | HYDRAULICS |
| FLANGE JOINT XG20-S A3P | 47 00 328 08 | 707 | 1 | 1 970 | 96 71 367 08 | UNDERCARRIAGE HYDRAULIC |
| FLANGE JOINT XG28-L A3P | 47 00 308 08 | 700 | 1 | 1 970 | 96 71 367 08 | UNDERCARRIAGE HYDRAULIC |
| FLANGE JOINT XG30-S CFX | 47 00 330 08 | 708 | 4 | 1 970 | 96 71 367 08 | UNDERCARRIAGE HYDRAULIC |
| FLANGE JOINT XG38-S A3P | 47 00 331 08 | 647 | 3 | 2 970 | 91 55 482 08 | HYDRAULICS |
| FLANGE JOINT XG38-S A3P | 47 00 331 08 | 640 | 1 | 2 971 | 91 50 610 08 | HYDR.AUXILIARY HOISTING |
| FLANGE JOINT XG42-L A3P | 47 00 309 08 | 698 | 1 | 2 970 | 91 55 482 08 | HYDRAULICS |
| FLANGE JOINT XGAI12-LR A3 | 47 07 013 08 | 690 | 1 | 2 970 | 91 55 482 08 | HYDRAULICS |
| FLANGE JOINT XGAI6-LM A3P | 47 07 300 08 | 28 | 1 | 9 387 070 | 93 87 070 01 | COMPACT ROPE WINCH |
| FLANGE JOINT XGAI6-SR A3P | 47 07 002 08 | 659 | 2 | 2 970 | 91 55 482 08 | HYDRAULICS |
| FLANGE JOINT XGE10-LM-ED | 47 10 305 08 | 617 | 1 | 2 970 | 91 55 482 08 | HYDRAULICS |
| FLANGE JOINT XGE10-LM-ED | 47 10 398 08 | 605 | 2 | 2 950 | 91 49 515 08 | COMPRESSED-AIR SYST.SU |
| FLANGE JOINT XGE10-LM-ED | 47 10 398 08 | 601 | 1 | 2 955 | 91 49 516 08 | PNEUM. CRANE OPERATORS |
| FLANGE JOINT XGE10-LR-ED3 | 47 10 396 08 | 709 | 1 | 1 970 | 96 71 367 08 | UNDERCARRIAGE HYDRAULIC |
| FLANGE JOINT XGE10-LR-ED3 | 47 10 396 08 | 673 | 1 | 2 970 | 91 55 482 08 | HYDRAULICS |
| FLANGE JOINT XGE10-LR-ED3 | 47 10 396 08 | 622 | 1 | 2 971 | 91 50 610 08 | HYDR.AUXILIARY HOISTING |
| FLANGE JOINT XGE12-LR-ED | 47 10 308 08 | 645 | 4 | 2 970 | 91 55 482 08 | HYDRAULICS |
| FLANGE JOINT XGE12-LR-ED | 47 10 308 08 | 600 | 1 | 2 971 | 91 50 610 08 | HYDR.AUXILIARY HOISTING |

| Description | Item | Pos. | Quantity | Page | Assembly | Description |
|---|---|---|---|---|---|---|
| FLANGE JOINT XGE12-LR-ED1 | 47 10 348 08 | 708 | 3 | 2 970 | 91 55 482 08 | HYDRAULICS |
| FLANGE JOINT XGE12-LR-ED1 | 47 10 348 08 | 603 | 4 | 2 975 152 | 91 05 737 08 | HYDR.F.TELESCOPIC BOOM |
| FLANGE JOINT XGE12-LR-ED1 | 47 10 353 08 | 658 | 4 | 2 970 | 91 55 482 08 | HYDRAULICS |
| FLANGE JOINT XGE15-LM-ED | 47 10 309 08 | 5 | 2 | 2 270 001 | 96 37 923 08 | FUEL TANK, PRE-ASSEMBLED |
| FLANGE JOINT XGE15-LR-ED | 47 10 310 08 | 601 | 3 | 2 970 | 91 55 482 08 | HYDRAULICS |
| FLANGE JOINT XGE16-SM-ED | 47 10 330 08 | 715 | 3 | 1 970 | 96 71 367 08 | UNDERCARRIAGE HYDRAULIC |
| FLANGE JOINT XGE16-SR-ED | 47 10 332 08 | 717 | 3 | 1 970 | 96 71 367 08 | UNDERCARRIAGE HYDRAULIC |
| FLANGE JOINT XGE16-SR-ED | 47 10 332 08 | 629 | 7 | 2 970 | 91 55 482 08 | HYDRAULICS |
| FLANGE JOINT XGE16-SR-ED | 47 10 332 08 | 602 | 1 | 2 975 152 | 91 05 737 08 | HYDR.F.TELESCOPIC BOOM |
| FLANGE JOINT XGE16-SR-ED3 | 47 10 331 08 | 716 | 2 | 1 970 | 96 71 367 08 | UNDERCARRIAGE HYDRAULIC |
| FLANGE JOINT XGE16-SR-ED3 | 47 10 331 08 | 624 | 1 | 2 970 | 91 55 482 08 | HYDRAULICS |
| FLANGE JOINT XGE18-LM-ED | 47 66 078 08 | 601 | 1 | 2 950 | 91 49 515 08 | COMPRESSED-AIR SYST.SU |
| FLANGE JOINT XGE18-LR-ED | 47 10 312 08 | 633 | 2 | 2 970 | 91 55 482 08 | HYDRAULICS |
| FLANGE JOINT XGE18-LR-ED3 | 47 10 375 08 | 635 | 1 | 2 970 | 91 55 482 08 | HYDRAULICS |
| FLANGE JOINT XGE20-SM-ED | 47 10 333 08 | 718 | 1 | 1 970 | 96 71 367 08 | UNDERCARRIAGE HYDRAULIC |
| FLANGE JOINT XGE22-LM-ED | 10 03 689 6 | 401 | 1 | 2 210 | 91 81 614 08 | DRIVE ASSEMBLY, PRE-ASSE |
| FLANGE JOINT XGE22-LM-ED | 47 10 313 08 | 2 | 1 | X1011766 | 10 11 766 5 | PIPELINE |
| FLANGE JOINT XGE25-SM-ED | 47 10 335 08 | 719 | 1 | 1 970 | 96 71 367 08 | UNDERCARRIAGE HYDRAULIC |
| FLANGE JOINT XGE28-LM-ED | 47 10 315 08 | 614 | 2 | 2 970 | 91 55 482 08 | HYDRAULICS |
| FLANGE JOINT XGE42-LR-ED | 47 10 347 08 | 640 | 2 | 2 970 | 91 55 482 08 | HYDRAULICS |
| FLANGE JOINT XGE6-LM-ED | 47 10 301 08 | 678 | 2 | 2 970 | 91 55 482 08 | HYDRAULICS |
| FLANGE JOINT XGE6-LR-ED A3 | 47 10 300 08 | 611 | 2 | 2 955 | 91 49 516 08 | PNEUM. CRANE OPERATORS |
| FLANGE JOINT XGE6-LR-ED A3 | 47 10 300 08 | 688 | 1 | 2 970 | 91 55 482 08 | HYDRAULICS |
| FLANGE JOINT XGE6-LR-ED A3 | 47 10 300 08 | 616 | 1 | 2 971 | 91 50 610 08 | HYDR.AUXILIARY HOISTING |
| FLANGE JOINT XGE6-LR-ED A3 | 47 10 300 08 | 610 | 1 | 2 975 038 | 91 26 492 08 | ADDNL.HYDR. FOLDING JIB |
| FLANGE JOINT XGE6-SM-ED | 47 10 302 08 | 603 | 4 | 2 955 | 91 49 516 08 | PNEUM. CRANE OPERATORS |
| FLANGE JOINT XGE6-SR-ED | 47 10 321 08 | 3 | 3 | 2 440 012 | 92 14 441 08 | CENTRAL LUBRICATING SYS |
| FLANGE JOINT XGE6-SR-ED | 47 10 321 08 | 652 | 5 | 2 970 | 91 55 482 08 | HYDRAULICS |
| FLANGE JOINT XGE6-SR-ED | 47 10 321 08 | 604 | 2 | 2 971 | 91 50 610 08 | HYDR.AUXILIARY HOISTING |
| FLANGE JOINT XGE6-SR-ED | 47 10 321 08 | 600 | 1 | 2 975 152 | 91 05 737 08 | HYDR.F.TELESCOPIC BOOM |
| FLANGE JOINT XGEV38-SR-W | 47 10 344 08 | 638 | 11 | 2 970 | 91 55 482 08 | HYDRAULICS |
| FLANGE JOINT XGEV38-SR-W | 47 10 344 08 | 602 | 1 | 2 971 | 91 50 610 08 | HYDR.AUXILIARY HOISTING |
| FLANGE JOINT XGR15/12-L A3 | 47 50 317 08 | 718 | 1 | 2 970 | 91 55 482 08 | HYDRAULICS |
| FLANGE JOINT XGR20/16-S A3 | 47 50 336 08 | 680 | 1 | 2 970 | 91 55 482 08 | HYDRAULICS |
| FLANGE JOINT XSV10-L A3P | 47 40 303 08 | 609 | 1 | 2 970 | 91 55 482 08 | HYDRAULICS |
| FLANGE JOINT XSV12-S A3P | 47 40 324 08 | 724 | 6 | 1 970 | 96 71 367 08 | UNDERCARRIAGE HYDRAULIC |
| FLANGE JOINT XSV15-L A3P | 47 40 305 08 | 605 | 1 | 2 970 | 91 55 482 08 | HYDRAULICS |
| FLANGE JOINT XSV16-S A3P | 47 40 326 08 | 725 | 2 | 1 970 | 96 71 367 08 | UNDERCARRIAGE HYDRAULIC |
| FLANGE JOINT XSV30-S A3P | 47 40 329 08 | 726 | 4 | 1 970 | 96 71 367 08 | UNDERCARRIAGE HYDRAULIC |
| FLANGE JOINT XT10-L A3P | 47 04 303 08 | 610 | 1 | 2 975 152 | 91 05 737 08 | HYDR.F.TELESCOPIC BOOM |
| FLANGE JOINT XT38-S A3P | 47 04 330 08 | 650 | 1 | 2 970 | 91 55 482 08 | HYDRAULICS |
| FLANGE JOINT XW10-L A3P | 47 02 303 08 | 612 | 1 | 2 975 152 | 91 05 737 08 | HYDR.F.TELESCOPIC BOOM |
| FLANGE JOINT XW30-S A3P | 47 02 330 08 | 663 | 6 | 2 970 | 91 55 482 08 | HYDRAULICS |
| FLANGE JOINT XW38-S A3P | 47 02 334 08 | 654 | 3 | 2 970 | 91 55 482 08 | HYDRAULICS |
| FLANGE JOINT XW38-S A3P | 47 02 334 08 | 642 | 1 | 2 971 | 91 50 610 08 | HYDR.AUXILIARY HOISTING |
| FLANGE JOINT XW42-L A3P | 47 02 314 08 | 695 | 1 | 2 970 | 91 55 482 08 | HYDRAULICS |
| FLANGE PLATE 10X59X24 S35 | 97 22 606 08 | 11 | 1 | 2 681 | 91 28 102 08 | AIR FILTER UNIT |
| FLANGE PRE-ASS. | 90 73 163 | 8 | 1 | X1012223 | 10 12 223 3 | CAMSHAFT CPL. |
| FLANGE PRE-ASS. D934 | 90 72 593 | 2 | 1 | 9 074 165 | 90 74 165 | BALANCER ASSEMBLY |
| FLANGE SEAL | 10 34 693 8 | (5) | 1 | 2 270 001 | 96 37 923 08 | FUEL TANK, PRE-ASSEMBLED |
| FLANGE STUB PIPE 38S | 51 15 178 08 | 12 | 3 | 2 975 152 | 91 05 737 08 | HYDR.F.TELESCOPIC BOOM |
| FLANGED BOLT | 11 49 201 8 | 6 | 1 | 4 027 | 91 42 310 08 | LOAD HOOK |
| FLANGED BOLT | 92 75 152 01 | 6 | 2 | 9 275 212 | 92 75 212 01 | OIL-LEVEL GAUGE INSTALLAT |
| FLAP COMPL. | 96 42 021 08 | 1 | 1 | 2 510 201 | 96 42 011 08 | FLAP PRE-ASS. |
| FLAP COMPL. GFK | 92 02 118 08 | 1 | 1 | 2 510 072 | 96 44 614 08 | FLAP RIGHT PRE-ASS. |
| FLAP PRE-ASS. | 96 42 011 08 | 1 | 1 | 2 510 200 | 96 41 258 08 | SLEWING PLATFORM PANELLI |
| FLAP RIGHT PRE-ASS. | 96 44 614 08 | 2 | 1 | 2 510 100 | 96 44 750 08 | SLEWING PLATFORM PANELLI |
| FLASHING LIGHT 13,2W 24V | 60 71 386 08 | 151 | 1 | 2 920 585 | 91 01 520 08 | ELECTRIC FOR FLASHLIGHT |
| FLASHTUBE 24V | 57 15 119 08 | (1) | 1 | 2 920 585 | 91 01 520 08 | ELECTRIC FOR FLASHLIGHT |
| FLAT CLIP 88,9 EDELSTAHL | 55 20 975 08 | 113 | 3 | 2 680 | 91 53 225 08 | EXHAUST SYSTEM CPL. |

| Description | Item | Pos. | Quantity | Page | Assembly | Description |
|---|---|---|---|---|---|---|
| FLAT FUSE LINK 10A 32 | 60 40 071 08 | 9 | 1 | 2 920 083 | 96 31 039 08 | ELECTRIC FOR BATTERY BOX |
| FLAT FUSE LINK 10A 32 | 60 40 071 08 | 15 | 12 | 2 932 095 | 96 46 064 08 | SWING FRAME FUSE AND RE |
| FLAT FUSE LINK 15A | 60 40 072 08 | 16 | 5 | 2 932 095 | 96 46 064 08 | SWING FRAME FUSE AND RE |
| FLAT FUSE LINK 20A | 60 40 073 08 | 266 | 1 | 1 780 182 | 92 01 827 08 | ELECTR. FOR AIR-CONDITION |
| FLAT FUSE LINK 20A | 60 40 073 08 | 17 | 4 | 2 932 095 | 96 46 064 08 | SWING FRAME FUSE AND RE |
| FLAT FUSE LINK 30A | 60 40 074 08 | 18 | 1 | 2 932 095 | 96 46 064 08 | SWING FRAME FUSE AND RE |
| FLAT FUSE LINK 3A | 60 40 077 08 | 5 | 1 | 2 780 870 | 91 70 947 08 | CHARGE VOLTAGE REGULA |
| FLAT FUSE LINK 5A 32 | 60 40 069 08 | 13 | 8 | 2 932 095 | 96 46 064 08 | SWING FRAME FUSE AND RE |
| FLAT FUSE LINK 7,5A | 60 40 070 08 | 14 | 9 | 2 932 095 | 96 46 064 08 | SWING FRAME FUSE AND RE |
| FLAT PLUG | 60 23 048 08 | 9 | 2 | 2 913 102 | 92 32 870 08 | FAN UNIT |
| FLAT PLUG HOUSING 18-POL | 60 23 233 08 | (151) | 30 | 2 932 042 | 96 68 587 08 | BASE ASSEMBLY |
| FLAT PLUG HOUSING FASTIN | 60 23 059 08 | 8 | 1 | 2 913 102 | 92 32 870 08 | FAN UNIT |
| FLAT PLUG HOUSING FASTIN | 60 23 059 08 | (159) | 1 | 2 932 042 | 96 68 587 08 | BASE ASSEMBLY |
| FLAT SEALING RING 17,4X24X | 71 01 211 14 | 7 | 1 | 1 100 212 | 79 02 561 14 | GUIDE WHEEL UNIT CPL |
| FLAT SEALING RING 40X28X3 | 97 01 153 08 | 10 | 1 | 2 200 048 | 96 32 140 08 | EXPANSION TANK PRE-ASS. |
| FLAT SPIRAL SPRING | 10 41 177 8 | 14 | 3 | X1034357 | 10 34 357 4 | CABLE REEL |
| FLAT STEEL 6X20X70 S355MC | 94 15 054 08 | 12 | 2 | 2 500 | 91 48 594 08 | CRANE DRIVER'S CABIN CPL. |
| FLEXIBLE COUPLING VERZ | 10 35 601 8 | 15 | 1 | 2 430 | 91 54 389 08 | ANGLE THREADED BULKHEA |
| FLEXIBLE EXHAUST PIPE | 97 65 053 08 | 103 | 1 | 2 680 | 91 53 225 08 | EXHAUST SYSTEM CPL. |
| FLOOR MAT 16X572X724 HSG | 95 66 761 08 | 62 | 1 | 2 520 000 | 91 49 872 08 | CABIN, GLAZED |
| FLOOR MAT GUMMI+PU SPF | 95 67 926 08 | 20 | 1 | 2 520 000 | 91 49 872 08 | CABIN, GLAZED |
| FLOOR PLATE | 10 30 062 1 | (4) | 1 | 2 920 585 | 91 01 520 08 | ELECTRIC FOR FLASHLIGHT |
| FLOOR PLATE B7B LH-GRAU | 78 65 275 14 | 3 | 62 | 1 300 006 | 91 89 127 14 | CRAWLER CHAIN |
| FLOOR SHEET | 96 41 044 08 | 1 | 1 | 2 984 | 91 52 906 08 | OIL COOLER INSTALLATION |
| FLOOR SHEET WELDED | 96 36 794 08 | 4 | 1 | 2 510 200 | 96 41 258 08 | SLEWING PLATFORM PANELLI |
| FLOOR SHEET WELDED | 96 41 550 08 | 4 | 1 | 2 510 100 | 96 44 750 08 | SLEWING PLATFORM PANELLI |
| FLOW REGULATING CHECK | 51 14 972 08 | 30 | 1 | 2 970 | 91 55 482 08 | HYDRAULICS |
| FLOW REGULATING CHECK | 51 14 972 08 | 29 | 1 | 2 971 | 91 50 610 08 | HYDR.AUXILIARY HOISTING |
| FLYWHEEL ASSEMBLY SAE 1 | 90 77 238 | 530 | 1 | X1015207 | 10 15 207 7 | DIESEL ENGINE |
| FLYWHEEL HOUSING MOUNT | 10 11 582 9 | 520 | 1 | X1015207 | 10 15 207 7 | DIESEL ENGINE |
| FLYWHEEL HOUSING PRE-A | 10 11 814 8 | 1 | 1 | X1011582 | 10 11 582 9 | FLYWHEEL HOUSING MOUNT |
| FLYWHEEL PRE-ASS. SAE 1X1 | 90 77 237 | 1 | 1 | 9 077 238 | 90 77 238 | FLYWHEEL ASSEMBLY |
| FOIL KEYPAD PRE-ASS. | 96 20 599 08 | 1 | 1 | 2 913 | 91 32 850 08 | LICCON CONSOLE LCD2 |
| FOLDING BRACKET | 96 20 924 08 | 2 | 1 | 3 510 100 | 91 49 246 08 | TRANSPORT MOUNTING |
| FOLDING PART WELDED | 92 50 396 08 | 2 | 1 | 3 510 006 | 96 20 924 08 | FOLDING BRACKET |
| FOOT PEDAL | 57 18 908 08 | 1 | 1 | 6 923 097 | 69 23 097 08 | PEDAL TRANSDUCER |
| FORKED LINK DIN 71751 A 8X | 72 50 004 08 | 125 | 1 | 2 520 000 | 91 49 872 08 | CABIN, GLAZED |
| FORM HOSE | 55 17 197 08 | 253 | 2 | 2 210 | 91 81 614 08 | DRIVE ASSEMBLY, PRE-ASSE |
| FORM HOSE | 97 37 569 08 | 250 | 1 | 2 681 | 91 28 102 08 | AIR FILTER UNIT |
| FORM HOSE SPF | 97 02 543 5 | 8 | 1 | 2 540 | 91 45 984 08 | HEATING, CRANE CABIN |
| FORM HOSE SPF | 97 02 544 6 | 47 | 1 | 2 540 | 91 45 984 08 | HEATING, CRANE CABIN |
| FORM HOSE SPF | 97 36 454 08 | 251 | 1 | 2 210 | 91 81 614 08 | DRIVE ASSEMBLY, PRE-ASSE |
| FORM HOSE SPF | 97 36 455 08 | 252 | 1 | 2 210 | 91 81 614 08 | DRIVE ASSEMBLY, PRE-ASSE |
| FORMCLIP 10X55 VERZ | 43 32 009 08 | 5 | 8 | 1 100 216 | 96 46 363 08 | MOUNTING PARTS LWE |
| FRICTION BEARING 30X20 K | 10 21 589 3 | 4 | 1 | 2 790 024 | 96 67 077 08 | MIRROR RETAINER PRE-ASS. |
| FRICTION BEARING 30X36X90 | 70 80 130 08 | 3 | 1 | 2 500 021 | 92 10 666 08 | PILLOW BLOCK PRE-ASS. |
| FRICTION BEARING 30X36X90 | 70 80 130 08 | 3 | 1 | 2 500 022 | 92 10 661 08 | PILLOW BLOCK PRE-ASS. |
| FRICTION BEARING 30X36X90 | 70 80 130 08 | 3 | 1 | 2 500 023 | 92 10 663 08 | PILLOW BLOCK PRE-ASS. |
| FRICTION DISK | 97 55 297 08 | 11 | 2 | 2 510 100 | 96 44 750 08 | SLEWING PLATFORM PANELLI |
| FRONT ELEMENT | 60 66 525 08 | 8 | 4 | 2 920 574 | 96 36 055 08 | OPERATOR PANEL BALLAST |
| FRONT ELEMENT | 60 66 525 08 | 8 | 6 | 2 920 904 | 96 41 093 08 | CONTROL DESK SUPPORT |
| FRONT ELEMENT 1W | 60 66 524 08 | 9 | 2 | 2 920 904 | 96 41 093 08 | CONTROL DESK SUPPORT |
| FRONT FRAME | 69 26 004 08 | 8 | 1 | 2 913 003 | 96 20 599 08 | FOIL KEYPAD PRE-ASS. |
| FRONT WINDOW CPL. | 92 48 796 08 | 3 | 1 | 2 520 000 | 91 49 872 08 | CABIN, GLAZED |
| FRONT WINDOW GLUED SPF | 92 68 891 08 | 1 | 1 | 2 520 001 | 92 48 796 08 | FRONT WINDOW CPL. |
| FUEL FILTER | 55 31 740 08 | 102 | 1 | 9 629 047 | 96 29 047 08 | FILTER PACKAGE |
| FUEL FILTER | 55 31 740 08 | (12) | 1 | XSK_Z480 | SK_Z48005 | SERVICE |
| FUEL FILTER HEAD | 10 04 695 8 | 4 | 1 | X1022282 | 10 22 282 0 | FUEL PREFILTER |
| FUEL FILTER HEAD | 10 15 278 1 | 2 | 1 | X1012580 | 10 12 580 1 | FUEL FINE FILTER |
| FUEL FINE FILTER | 10 12 580 1 | 1 | 1 | X1012500 | 10 12 500 7 | FUEL FINE-FILTER ASSEMBLY |

| Description | Item | Pos. | Quantity | Page | Assembly | Description |
|---|---|---|---|---|---|---|
| FUEL FINE FILTER KRAFTST | 10 42 994 6 | 100 | 1 | 9 629 047 | 96 29 047 08 | FILTER PACKAGE |
| FUEL FINE FILTER KRAFTST | 10 42 994 6 | 100 | 1 | 9 629 049 | 96 29 049 08 | FILTER PACKAGE |
| FUEL FINE FILTER KRAFTST | 10 42 994 6 | 1 | 1 | X1012580 | 10 12 580 1 | FUEL FINE FILTER |
| FUEL FINE FILTER KRAFTST | 10 42 994 6 | (7) | 1 | XSK_Z480 | SK_Z48005 | SERVICE |
| FUEL FINE-FILTER ASSEMBLY | 10 12 500 7 | 201 | 1 | X1015207 | 10 15 207 7 | DIESEL ENGINE |
| FUEL LINE | 90 78 935 | 1 | 1 | X1011569 | 10 11 569 6 | LEAK OIL RETURN LINE |
| FUEL LINES | 10 11 573 7 | 212 | 1 | X1015207 | 10 15 207 7 | DIESEL ENGINE |
| FUEL PREFILTER | 10 04 430 2 | 103 | 1 | 9 629 047 | 96 29 047 08 | FILTER PACKAGE |
| FUEL PREFILTER | 10 04 430 2 | 103 | 1 | 9 629 049 | 96 29 049 08 | FILTER PACKAGE |
| FUEL PREFILTER | 10 04 430 2 | 1 | 1 | X1022282 | 10 22 282 0 | FUEL PREFILTER |
| FUEL PREFILTER | 10 04 430 2 | (6) | 1 | XSK_Z480 | SK_Z48005 | SERVICE |
| FUEL PREFILTER | 10 22 282 0 | 1 | 1 | X1011989 | 10 11 989 1 | FUEL-PREFILTER ASS. |
| FUEL PUMP ASSEMBLY | 90 78 680 | 211 | 1 | X1012193 | 10 12 193 2 | BASIC ENGINE |
| FUEL TANK ADD-ON UNIT | 91 50 456 08 | 108 | 1 | | LTR 1100 -0 | LIEBHERR LTR 1100 |
| FUEL TANK WELDED CONSTR | 96 37 919 08 | 1 | 1 | 2 270 001 | 96 37 923 08 | FUEL TANK, PRE-ASSEMBLED |
| FUEL TANK, PRE-ASSEMBLED | 96 37 923 08 | 1 | 1 | 2 270 | 91 50 456 08 | FUEL TANK ADD-ON UNIT |
| FUEL-PREFILTER ASS. | 10 11 989 1 | 200 | 1 | X1015207 | 10 15 207 7 | DIESEL ENGINE |
| FUSE BOX SMALL 6-POL, LEE | 60 45 016 08 | 8 | 1 | 2 920 083 | 96 31 039 08 | ELECTRIC FOR BATTERY BOX |
| FUSE BOX SMALL 6-POL, LEE | 60 45 016 08 | 10 | 8 | 2 932 095 | 96 46 064 08 | SWING FRAME FUSE AND RE |
| GAS LINE NON-RETURN VALV | 50 00 569 | 8 | 1 | 1 100 212 | 79 02 561 14 | GUIDE WHEEL UNIT CPL |
| GAS SPRING 19X60-550N | 59 10 670 08 | 16 | 1 | 2 502 | 91 01 533 08 | CONTROL STAND |
| GAS SPRING 23X265-500N | 59 10 619 08 | 10 | 2 | 2 510 072 | 96 44 614 08 | FLAP RIGHT PRE-ASS. |
| GAS SPRING 23X265-500N | 59 10 619 08 | 10 | 2 | 2 510 201 | 96 42 011 08 | FLAP PRE-ASS. |
| GAS SPRING 23X325-400N | 59 15 099 08 | 64 | 1 | 2 520 000 | 91 49 872 08 | CABIN, GLAZED |
| GAS SPRING 28X350-900N | 59 15 144 08 | 90 | 1 | 3 501 | 91 05 788 08 | MECH. DOUBLE FOLD JIB PR |
| GAUGE CONNECTION 12S M20 | 74 09 922 | 754 | 1 | 1 970 | 96 71 367 08 | UNDERCARRIAGE HYDRAULIC |
| GAUGE CONNECTION DKO 10 | 51 06 290 08 | 604 | 7 | 2 970 | 91 55 482 08 | HYDRAULICS |
| GAUGE CONNECTION DKO 10 | 51 06 290 08 | 624 | 2 | 2 971 | 91 50 610 08 | HYDR.AUXILIARY HOISTING |
| GAUGE CONNECTION DKO 1 | 56 07 617 | 755 | 2 | 1 970 | 96 71 367 08 | UNDERCARRIAGE HYDRAULIC |
| GAUGE CONNECTION M14X1, | 56 07 616 | 707 | 1 | 1 423 101 | 99 26 462 14 | JACK-UP SYSTEM |
| GEAR CAM LIMITSWITCH 45° | 60 60 516 08 | 5 | 1 | 2 780 800 | 91 15 191 08 | ELECTRIC FOR WINCH 2 |
| GEAR CAM LIMITSWITCH 45° | 60 60 516 08 | 5 | 1 | 2 920 200 | 91 27 889 08 | ELECTRIC FOR WINCH 1 |
| GEAR PUMP WP09 SPF | 10 09 999 3 | 103 | 1 | 2 210 | 91 81 614 08 | DRIVE ASSEMBLY, PRE-ASSE |
| GEAR WHEEL MOTOR AZMF | 10 42 993 3 | 102 | 1 | 2 210 008 | 96 48 137 08 | RADIATOR, PRE-ASSEMBLED |
| GEAR WHEEL Z=100 M=2,5 | 90 73 098 | 3 | 1 | X1012223 | 10 12 223 3 | CAMSHAFT CPL. |
| GEAR WHEEL Z=25 M=2,5 | 90 72 727 | 4 | 1 | 9 074 165 | 90 74 165 | BALANCER ASSEMBLY |
| GEAR WHEEL Z=25 M=2,5 20 | 90 72 833 | 5 | 1 | 9 074 165 | 90 74 165 | BALANCER ASSEMBLY |
| GEAR WHEEL Z=36 M=2,5 | 90 73 343 | 2 | 1 | 9 080 294 | 90 80 294 | AIR COMPRESSOR PRE-ASSY |
| GEAR WHEEL Z=40 M=2,5 20 | 90 79 001 | 3 | 1 | 9 078 962 | 90 78 962 | AUXILIARY DRIVE PRE-ASS. |
| GEAR WHEEL Z=50 M=2,5 | 90 72 834 | 3 | 1 | 9 078 832 | 90 78 832 | CRANKSHAFT WITH GEAR |
| GEAR WHEEL Z=99 M=2,25 16 | 90 73 100 | 13 | 1 | X1012223 | 10 12 223 3 | CAMSHAFT CPL. |
| GENERATOR ADD-ON | 90 79 560 | 441 | 1 | X1015207 | 10 15 207 7 | DIESEL ENGINE |
| GENERATOR, PRE-ASSEMBLE | 10 11 864 6 | 440 | 1 | X1015207 | 10 15 207 7 | DIESEL ENGINE |
| GLUE 10 ml | 81 12 073 01 | 104 | 1 | X1011577 | 10 11 577 7 | CRANKCASE CPL. |
| GLUE 10 ml | 81 12 073 01 | 104 | 1 | X1012038 | 10 12 038 3 | CYLINDER HEAD |
| GLUE 50ml -55/180 °C | 81 12 082 01 | 104 | 1 | 9 074 165 | 90 74 165 | BALANCER ASSEMBLY |
| GREASE GBU Y 131 0.010KG | 10 02 473 3 | 100 | 1 | 9 073 083 | 90 73 083 | CYLINDER |
| GREASE NBU 12 0.05KG TUBE | 86 55 018 | 110 | 1 | 9 078 250 | 90 78 250 | LOCKING PIECES |
| GREASE NBU 12 0.05KG TUBE | 86 55 018 | 110 | 1 | 9 079 472 | 90 79 472 | COOLANT PIPE BEND ADD-ON |
| GREASE NBU 12 0.05KG TUBE | 86 55 018 | 110 | 1 | 9 079 480 | 90 79 480 | POWER UNIT SUPPORT ATT |
| GREASE NBU 30 1KG DOSE | 10 28 570 8 | 100 | 1 | 9 074 165 | 90 74 165 | BALANCER ASSEMBLY |
| GREASE NBU 30 1KG DOSE | 10 28 570 8 | 100 | 1 | 9 078 249 | 90 78 249 | LOCKING PIECES |
| GREASE NBU 30 1KG DOSE | 10 28 570 8 | 100 | 1 | 9 078 962 | 90 78 962 | AUXILIARY DRIVE PRE-ASS. |
| GREASE NBU 30 1KG DOSE | 10 28 570 8 | 100 | 1 | X1011566 | 10 11 566 4 | LOCKING PIECES |
| GREASE NBU 30 1KG DOSE | 10 28 570 8 | 100 | 1 | X1011573 | 10 11 573 7 | FUEL LINES |
| GREASE NBU 30 1KG DOSE | 10 28 570 8 | 100 | 1 | X1011582 | 10 11 582 9 | FLYWHEEL HOUSING MOUNT |
| GREASE NBU 30 1KG DOSE | 10 28 570 8 | 100 | 1 | X1011683 | 10 11 683 9 | INJECTION PUMP ASSEMBLY |
| GREASE NBU 30 1KG DOSE | 10 28 570 8 | 100 | 1 | X1011816 | 10 11 816 1 | CONNECTING LINE ADD-ON |
| GREASE NIPPLE | 77 43 517 14 | 6 | 1 | 1 100 212 | 79 02 561 14 | GUIDE WHEEL UNIT CPL |
| GREASE NIPPLE CAP | 10 01 470 1 | 16 | 1 | X1032706 | 10 32 706 5 | ELECTRIC PUMP |

| Description | Item | Pos. | Quantity | Page | Assembly | Description |
|---|---|---|---|---|---|---|
| GREASE STABURAGS NBU 12 | 10 01 302 5 | 110 | 1 | 9 080 345 | 90 80 345 | WATER PUMP WITH FASTENIN |
| GREASE STABURAGS NBU 30 | 10 28 262 2 | 100 | 1 | X1012166 | 10 12 166 7 | CONNECTING PIECE W.O-RIN |
| GREASE STABURAGS NBU 30 | 10 28 262 2 | 100 | 1 | X1012223 | 10 12 223 3 | CAMSHAFT CPL. |
| GRIP DIN 3122 A 3/4" | 79 00 262 08 | 63 | 1 | 1 750 001 | 92 85 698 08 | MAIN TOOLS |
| GRIP KUNSTSTOFF | 70 42 545 08 | 8 | 2 | 2 501 022 | 96 34 184 08 | COVER COMPL. |
| GRIP KUNSTSTOFF | 70 42 545 08 | 29 | 2 | 2 510 200 | 96 41 258 08 | SLEWING PLATFORM PANELLI |
| GRIP PIPE WELDED | 96 45 328 08 | 5 | 1 | 2 510 200 | 96 41 258 08 | SLEWING PLATFORM PANELLI |
| GRIP SHELL 136X115X49,5 | 70 42 801 08 | 50 | 1 | 2 501 000 | 91 48 769 08 | CRANE DRIVER'S CABIN,PRE |
| GROMMET 10/13,5/17,5 PVC | 60 27 021 08 | 105 | 1 | 2 510 100 | 96 44 750 08 | SLEWING PLATFORM PANELLI |
| GROMMET 10/13,5/17,5 PVC | 60 27 021 08 | 6 | 1 | 2 920 362 | 96 31 865 08 | ELECTR. FOR WORK AREA LI |
| GROMMET 4/6/9 PVC | 60 27 024 08 | 10 | 1 | 2 913 102 | 92 32 870 08 | FAN UNIT |
| GROMMET 6/9/12 PVC | 60 27 172 08 | 15 | 1 | 2 515 007 | 96 42 014 08 | PLATFORM, PRE-ASSEMBLED |
| GROMMET 7/18/24 PVC | 60 27 018 08 | 11 | 2 | 3 750 026 | 96 89 407 08 | HOLDER LEFT |
| GROMMET 7/18/24 PVC | 60 27 018 08 | 11 | 2 | 3 750 028 | 96 89 408 08 | HOLDER RIGHT |
| GROUND RAIL | 92 26 129 08 | 18 | 1 | 2 932 042 | 96 68 587 08 | BASE ASSEMBLY |
| GROUND RAIL | 92 68 911 08 | 17 | 1 | 2 932 042 | 96 68 587 08 | BASE ASSEMBLY |
| GRUB SCREW DIN 913 M6X25 | 40 44 005 08 | 5 | 1 | 5 114 794 | 51 14 794 08 | LOAD HOLDING VALVE |
| GRUB SCREW DIN 914 M8X10 | 40 46 013 08 | 15 | 1 | X1106838 | 11 06 838 7 | TRACK WIDTH ADJUSTING CY |
| GRUB SCREW DIN 915 M12X7 | 51 45 684 08 | 12 | 5 | 2 792 | 91 52 291 08 | DISPATCH ASSY.MECH.PART |
| GRUB SCREW DIN EN ISO 402 | 10 01 773 2 | 21 | 2 | 3 511 006 | 96 45 029 08 | BOOM NOSE PRE-ASS. |
| GRUB SCREW ISO 4026 M16X9 | 11 49 220 2 | 94 | 1 | 3 501 | 91 05 788 08 | MECH. DOUBLE FOLD JIB PR |
| GRUB SCREW ISO 4026 M20X5 | 48 55 098 14 | 26 | 4 | 1 100 215 | 99 20 783 14 | CENTRE PIECE |
| GRUB SCREW ISO 4026 M20X9 | 40 44 076 08 | 63 | 4 | 3 102 000 | 91 62 543 08 | TELESCOPIC SECTION 1 PRE |
| GRUB SCREW ISO 4026 M20X9 | 40 44 076 08 | 63 | 4 | 3 103 000 | 91 62 544 08 | TELESCOPIC SECT.2 PRE-AS |
| GRUB SCREW ISO 4026 M20X9 | 40 44 076 08 | 63 | 4 | 3 104 000 | 91 62 545 08 | TELESCOPIC SECT.3 PRE-ASS |
| GRUB SCREW ISO 4026 M20X9 | 40 44 076 08 | 63 | 4 | 3 105 000 | 91 62 546 08 | TELESCOPIC SECT.IV PRE-A |
| GRUB SCREW ISO 4026 M20X9 | 40 44 076 08 | 61 | 4 | 3 106 000 | 91 60 313 08 | TELESCOPIC SECT.5 PRE-AS |
| GRUB SCREW ISO 4026 M6X3 | 51 07 533 08 | 9 | 1 | 5 711 301 | 57 11 301 08 | PRESSURE LIMITING VALVE |
| GSM MODULE LICCON 1 | 96 37 908 08 | 1 | 1 | 2 780 850 | 91 60 938 08 | TELEDIAGNOSIS MODULE 1 |
| GSM MODULE MC55I QUAD-B | 10 65 269 9 | (10) | 1 | 2 780 852 | 96 24 845 08 | GSM-MODULE PRE-ASS.LICCO |
| GSM-MODULE PRE-ASS.LICCO | 96 24 845 08 | 2 | 1 | 2 780 854 | 96 37 908 08 | GSM MODULE |
| GSM-MODULE PROGRAMMED | 96 28 688 08 | 4 | 1 | 2 780 852 | 96 24 845 08 | GSM-MODULE PRE-ASS.LICCO |
| GUARD | 61 04 133 08 | 11 | 2 | 2 913 102 | 92 32 870 08 | FAN UNIT |
| GUARD RING | 10 12 044 3 | 3 | 1 | 9 075 133 | 90 75 133 | CRANKSHAFT SEALING |
| GUIDE 27X58X360 ENAW6060- | 95 35 560 08 | 4 | 2 | 2 502 | 91 01 533 08 | CONTROL STAND |
| GUIDE 80.0X76 35NICRMOV12 | 97 00 854 8 | 2 | 1 | 2 790 024 | 96 67 077 08 | MIRROR RETAINER PRE-ASS. |
| GUIDE BUSHING 290,7X345X20 | 11 34 182 9 | 3 | 1 | X1087223 | 10 87 223 8 | LUFFING CYLINDER |
| GUIDE ISO 8062-3DCTG6 30X5 | 97 24 267 08 | 33 | 4 | 3 102 000 | 91 62 543 08 | TELESCOPIC SECTION 1 PRE |
| GUIDE ISO 8062-3DCTG6 30X5 | 97 24 267 08 | 33 | 4 | 3 103 000 | 91 62 544 08 | TELESCOPIC SECT.2 PRE-AS |
| GUIDE ISO 8062-3DCTG6 30X5 | 97 24 267 08 | 33 | 4 | 3 104 000 | 91 62 545 08 | TELESCOPIC SECT.3 PRE-ASS |
| GUIDE ISO 8062-3DCTG6 30X5 | 97 24 267 08 | 33 | 4 | 3 105 000 | 91 62 546 08 | TELESCOPIC SECT.IV PRE-A |
| GUIDE ISO 8062-3DCTG6 30X5 | 97 24 267 08 | 60 | 4 | 3 106 000 | 91 60 313 08 | TELESCOPIC SECT.5 PRE-AS |
| GUIDE PA6G | 97 57 785 08 | 37 | 2 | 2 102 | 91 51 080 08 | ASSEMBLY PARTS F.SLEWING |
| GUIDE PLATE | 57 01 104 08 | 2 | 1 | 5 701 095 | 57 01 095 08 | DRIVING GEAR |
| GUIDE PULLEY COMPL. | 90 80 526 | 4 | 1 | 9 080 525 | 90 80 525 | AIR COND. COMPRESSOR A |
| GUIDE TUBE | 57 09 909 08 | 25 | 6 | 6 060 516 | 60 60 516 08 | GEAR CAM LIMITSWITCH |
| GUIDE WHEEL | 74 90 636 14 | 1 | 1 | 1 100 214 | 74 90 137 14 | GUIDE WHEEL CPL |
| GUIDE WHEEL CPL B7X710 | 74 90 137 14 | 1 | 1 | 1 100 212 | 79 02 561 14 | GUIDE WHEEL UNIT CPL |
| GUIDE WHEEL UNIT CPL B7X | 79 02 561 14 | 2 | 1 | 1 100 205 | 96 51 633 08 | CRAWLER CARRIER RIGHT CP |
| GUIDE WHEEL UNIT CPL B7X | 79 02 561 14 | 2 | 1 | 1 100 210 | 96 51 634 08 | CRAWLER TRACK CARRIER LE |
| GUIDING CONE M3 MS SPF | 66 00 420 08 | 13 | 6 | 2 922 001 | 92 84 311 08 | BUS PCB |
| GUIDING CONE M5 PA6G SPF | 66 00 419 08 | 12 | 1 | 2 922 001 | 92 84 311 08 | BUS PCB |
| GUIDING PIPE | 90 79 532 | 2 | 1 | X1011888 | 10 11 888 4 | OIL DIPSTICK WITH PIPE |
| GUIDING ROD LINKS | 10 87 307 1 | 10 | 1 | X1100696 | 11 00 696 4 | BLIND |
| GUIDING ROD RECHTS | 10 87 307 3 | 20 | 1 | X1100696 | 11 00 696 4 | BLIND |
| HAMMER HEAD BOLT M8X20 8 | 40 97 070 08 | 135 | 4 | 2 520 000 | 91 49 872 08 | CABIN, GLAZED |
| HAND GRIP CPL. | 70 42 322 08 | 27 | 1 | 2 520 001 | 92 48 796 08 | FRONT WINDOW CPL. |
| HAND HAMMER DIN 1041 800 | 79 00 300 08 | 60 | 1 | 1 750 001 | 92 85 698 08 | MAIN TOOLS |
| HAND LEVER PRESS | 88 56 021 14 | 6 | 1 | 1 750 | 91 48 606 08 | TOOLS AND ACCESSORIES |
| HAND LEVER PRESS VERZ. | 79 00 420 08 | 70 | 1 | 1 750 001 | 92 85 698 08 | MAIN TOOLS |

| Description | Item | Pos. | Quantity | Page | Assembly | Description |
|---|---|---|---|---|---|---|
| HAND PUMP | 79 00 391 08 | 86 | 1 | 3 501 | 91 05 788 08 | MECH. DOUBLE FOLD JIB PR |
| HANDGRIP 300X25X59,2X254 | 10 33 152 6 | 1 | 1 | 2 520 041 | 96 84 504 08 | ATTACHMENT GRIP |
| HANDLE | 59 10 668 08 | 12 | 1 | 2 520 001 | 92 48 796 08 | FRONT WINDOW CPL. |
| HANDLE CAP | 57 18 247 08 | 1 | 1 | 6 060 950 | 60 60 950 08 | MASTER SWITCH |
| HANDLE WELD.CONST. FE//ZN | 96 35 574 08 | 2 | 1 | 1 630 003 | 96 47 650 08 | PIN COMPL. |
| HAZARD WARNING FLASHER 2 | 60 71 062 08 | 2 | 2 | 1 750 002 | 92 86 201 08 | ACCESSORIES |
| HEAD REST | 77 41 193 08 | 17 | 1 | 2 502 | 91 01 533 08 | CONTROL STAND |
| HEAD SECTION, WELDED CO | 96 20 494 08 | 4 | 1 | 3 501 | 91 05 788 08 | MECH. DOUBLE FOLD JIB PR |
| HEAT EXCHANGER | 57 18 498 08 | 16 | 1 | 5 530 022 | 55 30 022 08 | WATER HEATING SYSTEM |
| HEAT PROTECTION SHEET P | 10 11 792 6 | 1 | 1 | X1011919 | 10 11 919 7 | HEAT PROTECTION W.FASTEN |
| HEAT PROTECTION W.FASTE | 10 11 919 7 | 415 | 1 | X1015207 | 10 15 207 7 | DIESEL ENGINE |
| HEAT SINK 84X12X7,7 ALU | 10 00 812 5 | 13 | 1 | 2 913 005 | 96 28 696 08 | INTERIOR HOUSING PRE-ASS. |
| HEATER CONNECTION SCHLA | 90 79 890 | 386 | 1 | X1015207 | 10 15 207 7 | DIESEL ENGINE |
| HEATING | 50 26 514 08 | 2 | 1 | 5 026 573 | 50 26 573 08 | AIR DRYER |
| HEATING FLANGE ADD-ON | 90 78 314 | 260 | 1 | X1015207 | 10 15 207 7 | DIESEL ENGINE |
| HEATING FLANGE PRE.ASS. | 10 29 998 8 | 1 | 1 | 9 078 314 | 90 78 314 | HEATING FLANGE ADD-ON |
| HEATING HOSE 70X2400 | 55 31 795 08 | 20 | 1 | 2 540 | 91 45 984 08 | HEATING, CRANE CABIN |
| HEATING, CRANE CABIN LICC | 91 45 984 08 | 19 | 1 | 2 501 000 | 91 48 769 08 | CRANE DRIVER'S CABIN,PRE |
| HEATSHRINK SLEEVING 27 - 8 | 60 30 169 08 | 55 | 0.35 | 2 522 | 91 10 037 08 | DOOR CPL. |
| HEATSHRINK SLEEVING 38,1/ | 60 30 323 14 | 30 | 0.6 | 1 970 | 96 71 367 08 | UNDERCARRIAGE HYDRAULIC |
| HEATSHRINK SLEEVING 38,1/1 | 60 30 326 14 | 29 | 0.3 | 1 970 | 96 71 367 08 | UNDERCARRIAGE HYDRAULIC |
| HEATSHRINK SLEEVING 38,1/1 | 60 30 322 14 | 28 | 0.3 | 1 970 | 96 71 367 08 | UNDERCARRIAGE HYDRAULIC |
| HEX CAP NUT RD32X3 SPF | 10 46 691 4 | 22 | 2 | 2 970 | 91 55 482 08 | HYDRAULICS |
| HEX CAP NUT RD32X3 SPF | 10 46 691 4 | 15 | 1 | 2 971 | 91 50 610 08 | HYDR.AUXILIARY HOISTING |
| HEX CAP NUT RD36X3 SPF | 10 46 691 5 | 19 | 1 | 2 971 | 91 50 610 08 | HYDR.AUXILIARY HOISTING |
| HEX CAP NUT RD79X4 SPF | 10 46 691 7 | 11 | 2 | 2 971 | 91 50 610 08 | HYDR.AUXILIARY HOISTING |
| HEX NUT DIN 985 M10 8 FLZN | 10 87 560 6 | 27 | 6 | 2 501 000 | 91 48 769 08 | CRANE DRIVER'S CABIN,PRE |
| HEX NUT DIN 985 M10 8 FLZN | 10 87 560 6 | 32 | 2 | 2 522 | 91 10 037 08 | DOOR CPL. |
| HEX NUT DIN 985 M10 8 FLZN | 10 87 560 6 | 12 | 6 | 2 790 901 | 91 54 183 08 | BRACING |
| HEX NUT DIN 985 M10 8 FLZN | 10 87 560 6 | 31 | 4 | 3 102 000 | 91 62 543 08 | TELESCOPIC SECTION 1 PRE |
| HEX NUT DIN 985 M10 8 FLZN | 10 87 560 6 | 31 | 4 | 3 103 000 | 91 62 544 08 | TELESCOPIC SECT.2 PRE-AS |
| HEX NUT DIN 985 M10 8 FLZN | 10 87 560 6 | 31 | 4 | 3 104 000 | 91 62 545 08 | TELESCOPIC SECT.3 PRE-ASS |
| HEX NUT DIN 985 M10 8 FLZN | 10 87 560 6 | 31 | 4 | 3 105 000 | 91 62 546 08 | TELESCOPIC SECT.IV PRE-A |
| HEX NUT DIN 985 M10 8 FLZN | 10 87 560 6 | 55 | 4 | 3 106 000 | 91 60 313 08 | TELESCOPIC SECT.5 PRE-AS |
| HEX NUT DIN 985 M10 8 FLZN | 10 87 560 6 | 70 | 1 | 3 106 000 | 91 60 313 08 | TELESCOPIC SECT.5 PRE-AS |
| HEX NUT DIN 985 M12 8 FLZN | 10 87 560 7 | 19 | 4 | 3 100 | 91 59 279 08 | TELESCOPIC BOOM CPL. |
| HEX NUT DIN 985 M12 8 FLZN | 10 87 560 7 | 43 | 12 | 3 102 000 | 91 62 543 08 | TELESCOPIC SECTION 1 PRE |
| HEX NUT DIN 985 M12 8 FLZN | 10 87 560 7 | 43 | 12 | 3 103 000 | 91 62 544 08 | TELESCOPIC SECT.2 PRE-AS |
| HEX NUT DIN 985 M12 8 FLZN | 10 87 560 7 | 43 | 8 | 3 104 000 | 91 62 545 08 | TELESCOPIC SECT.3 PRE-ASS |
| HEX NUT DIN 985 M12 8 FLZN | 10 87 560 7 | 43 | 8 | 3 105 000 | 91 62 546 08 | TELESCOPIC SECT.IV PRE-A |
| HEX NUT DIN 985 M12 8 FLZN | 10 87 560 7 | 47 | 4 | 3 330 | 91 57 885 08 | MECHANICAL EXTENSION SYS |
| HEX NUT DIN 985 M16 8 A3C | 41 19 009 08 | 58 | 2 | 3 501 | 91 05 788 08 | MECH. DOUBLE FOLD JIB PR |
| HEX NUT DIN 985 M16 8 A3C | 41 19 009 08 | 23 | 2 | 3 510 100 | 91 49 246 08 | TRANSPORT MOUNTING |
| HEX NUT DIN 985 M16X1,5 10 | 41 19 020 08 | 37 | 2 | 2 501 000 | 91 48 769 08 | CRANE DRIVER'S CABIN,PRE |
| HEX NUT DIN 985 M20 10 A3C | 41 19 024 08 | 4 | 1 | 2 340 | 91 53 116 08 | OIL RESERVOIR, EXTENSION |
| HEX NUT DIN 985 M20 10 A3C | 41 19 024 08 | 34 | 4 | 3 102 000 | 91 62 543 08 | TELESCOPIC SECTION 1 PRE |
| HEX NUT DIN 985 M20 10 A3C | 41 19 024 08 | 34 | 4 | 3 103 000 | 91 62 544 08 | TELESCOPIC SECT.2 PRE-AS |
| HEX NUT DIN 985 M20 10 A3C | 41 19 024 08 | 34 | 4 | 3 104 000 | 91 62 545 08 | TELESCOPIC SECT.3 PRE-ASS |
| HEX NUT DIN 985 M20 10 A3C | 41 19 024 08 | 46 | 4 | 3 105 000 | 91 62 546 08 | TELESCOPIC SECT.IV PRE-A |
| HEX NUT DIN 985 M20 10 A3C | 41 19 024 08 | 59 | 4 | 3 106 000 | 91 60 313 08 | TELESCOPIC SECT.5 PRE-AS |
| HEX NUT DIN 985 M20 10 A3C | 41 19 024 08 | 72 | 2 | 3 501 | 91 05 788 08 | MECH. DOUBLE FOLD JIB PR |
| HEX NUT DIN 985 M3 8 480H | 10 87 639 9 | 12 | 2 | 2 780 852 | 96 24 845 08 | GSM-MODULE PRE-ASS.LICCO |
| HEX NUT DIN 985 M3 8 480H | 10 87 639 9 | 12 | 10 | 2 913 | 91 32 850 08 | LICCON CONSOLE LCD2 |
| HEX NUT DIN 985 M3 8 480H | 10 87 639 9 | 6 | 2 | 2 913 005 | 96 28 696 08 | INTERIOR HOUSING PRE-ASS. |
| HEX NUT DIN 985 M3 8 480H | 10 87 639 9 | 4 | 6 | 2 913 006 | 96 20 732 08 | FAN PLATE PRE-ASS. |
| HEX NUT DIN 985 M4 8 A2C | 41 19 002 08 | 7 | 8 | 2 913 102 | 92 32 870 08 | FAN UNIT |
| HEX NUT DIN 985 M4 8 A2C | 41 19 002 08 | 32 | 2 | 3 100 | 91 59 279 08 | TELESCOPIC BOOM CPL. |
| HEX NUT DIN 985 M5 8 A2C | 41 19 003 08 | 22 | 6 | 2 502 | 91 01 533 08 | CONTROL STAND |
| HEX NUT DIN 985 M5 8 A2C | 41 19 003 08 | 5 | 1 | 2 780 851 | 96 24 498 08 | RADIO ANTENNA PRE-ASS. |
| HEX NUT DIN 985 M5 8 A2C | 41 19 003 08 | 9 | 1 | 2 780 852 | 96 24 845 08 | GSM-MODULE PRE-ASS.LICCO |

| Description | Item | Pos. | Quantity | Page | Assembly | Description |
|---|---|---|---|---|---|---|
| HEX NUT DIN 985 M5 8 A2C | 41 19 003 08 | 92 | 6 | 2 932 042 | 96 68 587 08 | BASE ASSEMBLY |
| HEX NUT DIN 985 M5 8 A2C | 41 19 003 08 | 10 | 3 | 3 750 026 | 96 89 407 08 | HOLDER LEFT |
| HEX NUT DIN 985 M5 8 A2C | 41 19 003 08 | 10 | 3 | 3 750 028 | 96 89 408 08 | HOLDER RIGHT |
| HEX NUT DIN 985 M6 8 A2C | 41 19 004 08 | 5 | 1 | 1 792 004 | 92 51 415 08 | HOSE GUIDE PRE-ASS. |
| HEX NUT DIN 985 M6 8 A2C | 41 19 004 08 | 17 | 2 | 2 501 000 | 91 48 769 08 | CRANE DRIVER'S CABIN,PRE |
| HEX NUT DIN 985 M6 8 A2C | 41 19 004 08 | 10 | 4 | 2 501 022 | 96 34 184 08 | COVER COMPL. |
| HEX NUT DIN 985 M6 8 A2C | 41 19 004 08 | 13 | 2 | 2 515 007 | 96 42 014 08 | PLATFORM, PRE-ASSEMBLED |
| HEX NUT DIN 985 M6 8 A2C | 41 19 004 08 | 75 | 4 | 2 520 000 | 91 49 872 08 | CABIN, GLAZED |
| HEX NUT DIN 985 M6 8 A2C | 41 19 004 08 | 30 | 4 | 2 522 | 91 10 037 08 | DOOR CPL. |
| HEX NUT DIN 985 M6 8 A2C | 41 19 004 08 | 8 | 12 | 2 571 | 91 50 902 08 | HYDRAULIC BALLASTING |
| HEX NUT DIN 985 M6 8 A2C | 41 19 004 08 | 97 | 3 | 2 932 095 | 96 46 064 08 | SWING FRAME FUSE AND RE |
| HEX NUT DIN 985 M6 8 A2C | 41 19 004 08 | 14 | 6 | 2 932 166 | 92 68 911 08 | GROUND RAIL |
| HEX NUT DIN 985 M6 8 A2C | 41 19 004 08 | 74 | 2 | 2 970 | 91 55 482 08 | HYDRAULICS |
| HEX NUT DIN 985 M6 8 A2C | 41 19 004 08 | 42 | 6 | 2 971 | 91 50 610 08 | HYDR.AUXILIARY HOISTING |
| HEX NUT DIN 985 M6 8 A2C | 41 19 004 08 | 69 | 2 | 3 102 000 | 91 62 543 08 | TELESCOPIC SECTION 1 PRE |
| HEX NUT DIN 985 M6 8 A2C | 41 19 004 08 | 69 | 2 | 3 103 000 | 91 62 544 08 | TELESCOPIC SECT.2 PRE-AS |
| HEX NUT DIN 985 M6 8 A2C | 41 19 004 08 | 69 | 2 | 3 104 000 | 91 62 545 08 | TELESCOPIC SECT.3 PRE-ASS |
| HEX NUT DIN 985 M6 8 A2C | 41 19 004 08 | 69 | 2 | 3 105 000 | 91 62 546 08 | TELESCOPIC SECT.IV PRE-A |
| HEX NUT DIN 985 M6 8 A2C | 41 19 004 08 | 88 | 4 | 3 501 | 91 05 788 08 | MECH. DOUBLE FOLD JIB PR |
| HEX NUT DIN 985 M6 8 A2C | 41 19 004 08 | 20 | 1 | 5 910 672 | 59 10 672 08 | WIPER MOTOR |
| HEX NUT DIN 985 M6 A2-70 | 41 19 030 08 | 156 | 3 | 2 520 000 | 91 49 872 08 | CABIN, GLAZED |
| HEX NUT DIN 985 M8 8 480H | 10 87 561 4 | 5 | 1 | 2 790 040 | 91 60 499 08 | MIRROR ATTACHM.IN CRANE |
| HEX NUT DIN 985 M8 8 A2C | 41 19 005 08 | 4 | 8 | 1 100 216 | 96 46 363 08 | MOUNTING PARTS LWE |
| HEX NUT DIN 985 M8 8 A2C | 41 19 005 08 | 11 | 8 | 2 515 007 | 96 42 014 08 | PLATFORM, PRE-ASSEMBLED |
| HEX NUT DIN 985 M8 8 A2C | 41 19 005 08 | 98 | 26 | 2 520 000 | 91 49 872 08 | CABIN, GLAZED |
| HEX NUT DIN 985 M8 8 A2C | 41 19 005 08 | 34 | 8 | 2 522 | 91 10 037 08 | DOOR CPL. |
| HEX NUT DIN 985 M8 8 A2C | 41 19 005 08 | 4 | 4 | 2 790 | 91 68 708 08 | MIRROR ATTACHM.AT SLEW.P |
| HEX NUT DIN 985 M8 8 A2C | 41 19 005 08 | 25 | 2 | 2 831 | 91 47 871 08 | AIR COND. UNIT SUPERSTRU |
| HEX NUT DIN 985 M8 8 A2C | 41 19 005 08 | 100 | 2 | 2 932 042 | 96 68 587 08 | BASE ASSEMBLY |
| HEX NUT DIN 985 M8 8 A2C | 41 19 005 08 | 6 | 8 | 3 750 008 | 91 75 085 08 | LADDER ATTACHMENT |
| HEX NUT EN 1661 M10 8 A3C | 49 80 805 | 4 | 3 | X1011553 | 10 11 553 9 | STARTER INSTALLATION |
| HEX NUT EN 1661 M10 8 A3C | 49 80 805 | 12 | 2 | X1011997 | 10 11 997 6 | POWER TAKE-OFF ADD-ON |
| HEX NUT ISO 4032 M10 10 A3 | 40 00 383 | 14 | 12 | X1015211 | 10 15 211 6 | DRIVE UNIT |
| HEX NUT ISO 4032 M10 10 FLZ | 11 00 280 7 | 18 | 2 | 2 440 022 | 96 42 336 08 | WINCH 2 PRE-ASS. |
| HEX NUT ISO 4032 M10 10 FLZ | 11 00 280 7 | 350 | 7 | 2 680 | 91 53 225 08 | EXHAUST SYSTEM CPL. |
| HEX NUT ISO 4032 M10 8 A2E | 41 15 031 03 | 6 | 2 | 1 300 010 | 99 14 563 14 | ACCESS COMPL |
| HEX NUT ISO 4032 M10 8 A3C | 41 15 144 08 | 22 | 8 | 2 102 | 91 51 080 08 | ASSEMBLY PARTS F.SLEWING |
| HEX NUT ISO 4032 M10 8 A3C | 41 15 144 08 | 352 | 3 | 2 210 | 91 81 614 08 | DRIVE ASSEMBLY, PRE-ASSE |
| HEX NUT ISO 4032 M10 8 A3C | 41 15 144 08 | 30 | 4 | 2 440 022 | 96 42 336 08 | WINCH 2 PRE-ASS. |
| HEX NUT ISO 4032 M10 8 A3C | 41 15 144 08 | 40 | 2 | 2 502 | 91 01 533 08 | CONTROL STAND |
| HEX NUT ISO 4032 M10 8 A3C | 41 15 144 08 | 351 | 11 | 2 510 100 | 96 44 750 08 | SLEWING PLATFORM PANELLI |
| HEX NUT ISO 4032 M10 8 A3C | 41 15 144 08 | 12 | 3 | 2 510 200 | 96 41 258 08 | SLEWING PLATFORM PANELLI |
| HEX NUT ISO 4032 M10 8 A3C | 41 15 144 08 | 141 | 1 | 2 520 000 | 91 49 872 08 | CABIN, GLAZED |
| HEX NUT ISO 4032 M10 8 A3C | 41 15 144 08 | 73 | 1 | 3 106 000 | 91 60 313 08 | TELESCOPIC SECT.5 PRE-AS |
| HEX NUT ISO 4032 M10 8 A3C | 41 15 144 08 | 25 | 2 | 3 511 006 | 96 45 029 08 | BOOM NOSE PRE-ASS. |
| HEX NUT ISO 4032 M12 10 A3 | 41 15 048 08 | 15 | 3 | 2 102 | 91 51 080 08 | ASSEMBLY PARTS F.SLEWING |
| HEX NUT ISO 4032 M12 10 A3 | 49 00 546 03 | 11 | 4 | 1 100 216 | 96 46 363 08 | MOUNTING PARTS LWE |
| HEX NUT ISO 4032 M12 8 A3C | 41 15 143 08 | 356 | 1 | 2 210 | 91 81 614 08 | DRIVE ASSEMBLY, PRE-ASSE |
| HEX NUT ISO 4032 M12 8 A3C | 41 15 143 08 | 23 | 4 | 2 440 022 | 96 42 336 08 | WINCH 2 PRE-ASS. |
| HEX NUT ISO 4032 M12 8 A3C | 41 15 143 08 | 65 | 7 | 3 501 | 91 05 788 08 | MECH. DOUBLE FOLD JIB PR |
| HEX NUT ISO 4032 M12 8 A3C | 41 15 143 08 | 17 | 3 | 3 510 100 | 91 49 246 08 | TRANSPORT MOUNTING |
| HEX NUT ISO 4032 M16 10 A3 | 41 15 050 08 | 57 | 8 | 2 102 | 91 51 080 08 | ASSEMBLY PARTS F.SLEWING |
| HEX NUT ISO 4032 M16 8 A3C | 49 00 124 03 | 21 | 4 | 1 100 205 | 96 51 633 08 | CRAWLER CARRIER RIGHT CP |
| HEX NUT ISO 4032 M16 8 A3C | 49 00 124 03 | 21 | 4 | 1 100 210 | 96 51 634 08 | CRAWLER TRACK CARRIER LE |
| HEX NUT ISO 4032 M16 8 BLAN | 41 15 146 08 | 8 | 1 | 3 500 104 | 92 95 821 08 | MOUNTING PRE-ASS. |
| HEX NUT ISO 4032 M16 8 FLZ | 10 87 561 7 | 3 | 3 | 2 560 045 | 96 40 606 08 | CHAIN HOLDER CPL. |
| HEX NUT ISO 4032 M16 8 FLZ | 10 87 561 7 | 64 | 7 | 3 501 | 91 05 788 08 | MECH. DOUBLE FOLD JIB PR |
| HEX NUT ISO 4032 M16 8 FLZ | 10 87 561 7 | 13 | 10 | 3 510 100 | 91 49 246 08 | TRANSPORT MOUNTING |
| HEX NUT ISO 4032 M2 8 A2C | 41 15 122 08 | 7 | 2 | 5 530 854 | 55 30 854 08 | THREE-WAY TAP |
| HEX NUT ISO 4032 M20 8 FLZ | 10 87 561 8 | 70 | 4 | 3 501 | 91 05 788 08 | MECH. DOUBLE FOLD JIB PR |

| Description | Item | Pos. | Quantity | Page | Assembly | Description |
|---|---|---|---|---|---|---|
| HEX NUT ISO 4032 M20 8 FLZ | 10 87 561 8 | 15 | 4 | 4 003 006 | 91 04 457 08 | HOOK BLOCK |
| HEX NUT ISO 4032 M24 10 FLZ | 10 42 568 8 | 78 | 4 | 3 501 | 91 05 788 08 | MECH. DOUBLE FOLD JIB PR |
| HEX NUT ISO 4032 M3 8 A2C | 41 15 157 08 | 15 | 10 | 2 922 001 | 92 84 311 08 | BUS PCB |
| HEX NUT ISO 4032 M3 8 A2C | 41 15 157 08 | 26 | 22 | 2 932 119 | 96 46 061 08 | SWING FRAME RELAY CONT |
| HEX NUT ISO 4032 M3 8 A2C | 41 15 157 08 | 267 | 2 | 3 930 492 | 96 20 966 08 | TERMINAL BOX CPL. |
| HEX NUT ISO 4032 M30 8 A3C | 41 15 152 08 | 33 | 2 | 1 100 205 | 96 51 633 08 | CRAWLER CARRIER RIGHT CP |
| HEX NUT ISO 4032 M30 8 A3C | 41 15 152 08 | 33 | 2 | 1 100 210 | 96 51 634 08 | CRAWLER TRACK CARRIER LE |
| HEX NUT ISO 4032 M4 8 A2C | 41 15 142 08 | 50 | 1 | 2 522 | 91 10 037 08 | DOOR CPL. |
| HEX NUT ISO 4032 M4 8 A2C | 41 15 142 08 | 6 | 2 | 2 932 215 | 92 26 129 08 | GROUND RAIL |
| HEX NUT ISO 4032 M4 8 A2C | 41 15 142 08 | 105 | 2 | 3 501 | 91 05 788 08 | MECH. DOUBLE FOLD JIB PR |
| HEX NUT ISO 4032 M5 8 A2C | 41 15 148 08 | 10 | 2 | 2 260 006 | 96 31 147 08 | BATTERY BOX, PRE-ASSEMB |
| HEX NUT ISO 4032 M5 8 A2C | 41 15 148 08 | 5 | 4 | 2 711 | 91 53 002 08 | CENT. LUBRIC. SYSTEM SUP |
| HEX NUT ISO 4032 M5 8 A2C | 41 15 148 08 | 10 | 2 | 2 913 100 | 91 23 538 08 | ASSEMBLY FRAME |
| HEX NUT ISO 4032 M5 8 A2C | 41 15 148 08 | 270 | 2 | 2 920 574 | 96 36 055 08 | OPERATOR PANEL BALLAST |
| HEX NUT ISO 4032 M5 8 A2C | 41 15 148 08 | 253 | 2 | 2 920 904 | 96 41 093 08 | CONTROL DESK SUPPORT |
| HEX NUT ISO 4032 M5 8 A2C | 41 15 148 08 | 18 | 1 | 2 922 001 | 92 84 311 08 | BUS PCB |
| HEX NUT ISO 4032 M5 8 A2E | 40 01 007 03 | 23 | 18 | 1 400 200 | 91 53 791 08 | PREPARATION HYDR |
| HEX NUT ISO 4032 M6 10 A2C | 40 00 379 | 42 | 1 | X1011998 | 10 11 998 0 | CABLE HARNESS MOUNTING |
| HEX NUT ISO 4032 M6 10 A2C | 41 15 044 08 | 351 | 4 | 2 210 008 | 96 48 137 08 | RADIATOR, PRE-ASSEMBLED |
| HEX NUT ISO 4032 M6 8 480H | 10 87 562 1 | 5 | 12 | 1 830 102 | 92 26 483 08 | TERMINAL BOARD PRE-ASS. |
| HEX NUT ISO 4032 M6 8 480H | 10 87 562 1 | 54 | 2 | 2 102 | 91 51 080 08 | ASSEMBLY PARTS F.SLEWING |
| HEX NUT ISO 4032 M6 8 480H | 10 87 562 1 | 353 | 10 | 2 210 | 91 81 614 08 | DRIVE ASSEMBLY, PRE-ASSE |
| HEX NUT ISO 4032 M6 8 480H | 10 87 562 1 | 13 | 4 | 2 430 | 91 54 389 08 | ANGLE THREADED BULKHEA |
| HEX NUT ISO 4032 M6 8 480H | 10 87 562 1 | 6 | 4 | 2 501 022 | 96 34 184 08 | COVER COMPL. |
| HEX NUT ISO 4032 M6 8 480H | 10 87 562 1 | 352 | 2 | 2 510 100 | 96 44 750 08 | SLEWING PLATFORM PANELLI |
| HEX NUT ISO 4032 M6 8 480H | 10 87 562 1 | 25 | 12 | 2 510 200 | 96 41 258 08 | SLEWING PLATFORM PANELLI |
| HEX NUT ISO 4032 M6 8 480H | 10 87 562 1 | 26 | 2 | 2 522 | 91 10 037 08 | DOOR CPL. |
| HEX NUT ISO 4032 M6 8 480H | 10 87 562 1 | 63 | 3 | 2 533 001 | 96 41 568 08 | DASHBOARD ROOF, PRE-AS |
| HEX NUT ISO 4032 M6 8 480H | 10 87 562 1 | 6 | 2 | 2 913 004 | 96 20 460 08 | HOUSING PRE-ASSEMBLED |
| HEX NUT ISO 4032 M6 8 480H | 10 87 562 1 | 32 | 2 | 2 920 | 91 55 477 08 | ELECTR. SYSTEM F.SLEWING |
| HEX NUT ISO 4032 M6 8 480H | 10 87 562 1 | 18 | 3 | 2 920 585 | 91 01 520 08 | ELECTRIC FOR FLASHLIGHT |
| HEX NUT ISO 4032 M6 8 480H | 10 87 562 1 | 96 | 1 | 2 932 042 | 96 68 587 08 | BASE ASSEMBLY |
| HEX NUT ISO 4032 M6 8 480H | 10 87 562 1 | 6 | 4 | 2 932 166 | 92 68 911 08 | GROUND RAIL |
| HEX NUT ISO 4032 M6 8 480H | 10 87 562 1 | 31 | 4 | 3 330 | 91 57 885 08 | MECHANICAL EXTENSION SYS |
| HEX NUT ISO 4032 M8 10 480H | 10 29 966 9 | 350 | 16 | 2 210 008 | 96 48 137 08 | RADIATOR, PRE-ASSEMBLED |
| HEX NUT ISO 4032 M8 10 480H | 10 29 966 9 | 16 | 2 | 2 510 072 | 96 44 614 08 | FLAP RIGHT PRE-ASS. |
| HEX NUT ISO 4032 M8 10 480H | 10 29 966 9 | 10 | 4 | 2 932 166 | 92 68 911 08 | GROUND RAIL |
| HEX NUT ISO 4032 M8 10 A2C | 40 00 381 | 7 | 1 | X1011997 | 10 11 997 9 | WIRING HARNESS ASSEMBLY |
| HEX NUT ISO 4032 M8 8 480H | 11 69 387 5 | 31 | 5 | 2 102 | 91 51 080 08 | ASSEMBLY PARTS F.SLEWING |
| HEX NUT ISO 4032 M8 8 480H | 11 69 387 5 | 351 | 8 | 2 210 | 91 81 614 08 | DRIVE ASSEMBLY, PRE-ASSE |
| HEX NUT ISO 4032 M8 8 480H | 11 69 387 5 | 4 | 6 | 2 260 | 91 46 555 08 | BATTERY BOX CPL. |
| HEX NUT ISO 4032 M8 8 480H | 11 69 387 5 | 10 | 2 | 2 440 022 | 96 42 336 08 | WINCH 2 PRE-ASS. |
| HEX NUT ISO 4032 M8 8 480H | 11 69 387 5 | 350 | 12 | 2 510 100 | 96 44 750 08 | SLEWING PLATFORM PANELLI |
| HEX NUT ISO 4032 M8 8 480H | 11 69 387 5 | 15 | 9 | 2 510 200 | 96 41 258 08 | SLEWING PLATFORM PANELLI |
| HEX NUT ISO 4032 M8 8 480H | 11 69 387 5 | 131 | 3 | 2 520 000 | 91 49 872 08 | CABIN, GLAZED |
| HEX NUT ISO 4032 M8 8 480H | 11 69 387 5 | 5 | 1 | 2 560 045 | 96 40 606 08 | CHAIN HOLDER CPL. |
| HEX NUT ISO 4032 M8 8 480H | 11 69 387 5 | 28 | 4 | 2 831 | 91 47 871 08 | AIR COND. UNIT SUPERSTRU |
| HEX NUT ISO 4032 M8 8 480H | 11 69 387 5 | 11 | 2 | 2 920 585 | 91 01 520 08 | ELECTRIC FOR FLASHLIGHT |
| HEX NUT ISO 4032 M8 8 480H | 11 69 387 5 | 12 | 10 | 2 950 | 91 49 515 08 | COMPRESSED-AIR SYST.SU |
| HEX NUT ISO 4032 M8 8 480H | 11 69 387 5 | 15 | 4 | 2 955 | 91 49 516 08 | PNEUM. CRANE OPERATORS |
| HEX NUT ISO 4032 M8 8 480H | 11 69 387 5 | 350 | 16 | 2 984 | 91 52 906 08 | OIL COOLER INSTALLATION |
| HEX NUT ISO 4032 M8 8 480H | 11 69 387 5 | 22 | 2 | 3 511 006 | 96 45 029 08 | BOOM NOSE PRE-ASS. |
| HEX NUT ISO 4032 M8 X5NiCrT | 10 33 095 3 | 8 | 2 | X1011832 | 10 11 832 6 | EXHAUST TC MOUNTING |
| HEX NUT ISO 4035 M16 04 A2K | 41 17 006 08 | 51 | 40 | 1 100 215 | 99 20 783 14 | CENTRE PIECE |
| HEX NUT ISO 4035 M16 04 A2K | 41 17 006 08 | 18 | 4 | 3 330 | 91 57 885 08 | MECHANICAL EXTENSION SYS |
| HEX NUT ISO 4035 M24 05 A3 | 41 17 010 08 | 15 | 1 | 2 500 | 91 48 594 08 | CRANE DRIVER'S CABIN CPL. |
| HEX NUT ISO 4035 M8 04 A2C | 41 01 203 08 | 29 | 1 | 3 511 006 | 96 45 029 08 | BOOM NOSE PRE-ASS. |
| HEX NUT ISO 4036 M20 ST FLZ | 10 54 416 3 | 36 | 4 | 1 100 215 | 99 20 783 14 | CENTRE PIECE |
| HEX NUT ISO 7040 M12 8 A3C | 40 02 564 | 43 | 18 | 3 101 | 91 60 312 08 | PIVOT SECTION, PRE-ASSEMB |
| HEX NUT ISO 7040 M6 8 A2C | 41 19 003 05 | 6 | 2 | 3 101 | 91 60 312 08 | PIVOT SECTION, PRE-ASSEMB |

| Description | Item | Pos. | Quantity | Page | Assembly | Description |
|---|---|---|---|---|---|---|
| HEX NUT ISO 7040 M8 8 A2C | 41 34 126 01 | 352 | 2 | 2 210 008 | 96 48 137 08 | RADIATOR, PRE-ASSEMBLED |
| HEX NUT ISO 8675 M12X1 04 | 59 15 592 08 | 4 | 1 | 2 520 101 | 96 49 682 08 | SPRAY NOZZLE |
| HEX NUT ISO 8675 M12X1 04 | 59 15 592 08 | 3 | 1 | 5 910 672 | 59 10 672 08 | WIPER MOTOR |
| HEX NUT ISO 8675 M12X1,5 04 | 57 03 377 08 | 21 | 1 | X1042993 | 10 42 993 3 | GEAR WHEEL MOTOR |
| HEX NUT M10 8 | 10 41 109 5 | 5 | 2 | X1021997 | 10 21 997 8 | STARTER |
| HEX NUT M10 8 | 10 41 109 5 | 5 | 2 | X1138664 | 11 38 664 4 | STARTER PRE-ASSY. |
| HEX NUT M6 8 | 10 41 109 4 | 3 | 1 | X1021997 | 10 21 997 8 | STARTER |
| HEX NUT M6 8 | 10 41 109 4 | 3 | 1 | X1138664 | 11 38 664 4 | STARTER PRE-ASSY. |
| HEX SCREW DIN 6921 M10X10 | 10 00 546 2 | 5 | 1 | 9 079 560 | 90 79 560 | GENERATOR ADD-ON |
| HEX SCREW DIN 6921 M10X10 | 10 00 546 2 | 12 | 1 | 9 080 525 | 90 80 525 | AIR COND. COMPRESSOR A |
| HEX SCREW DIN 6921 M10X10 | 10 00 546 2 | 3 | 4 | X1011707 | 10 11 707 2 | AIR INTAKE PIPE ASS. |
| HEX SCREW DIN 6921 M10X1 | 10 03 731 2 | 9 | 6 | 9 079 480 | 90 79 480 | POWER UNIT SUPPORT ATT |
| HEX SCREW DIN 6921 M10X20 | 10 03 051 8 | 6 | 2 | 9 078 249 | 90 78 249 | LOCKING PIECES |
| HEX SCREW DIN 6921 M10X20 | 10 03 051 8 | 6 | 4 | 9 078 250 | 90 78 250 | LOCKING PIECES |
| HEX SCREW DIN 6921 M10X20 | 10 03 051 8 | 6 | 2 | 9 078 962 | 90 78 962 | AUXILIARY DRIVE PRE-ASS. |
| HEX SCREW DIN 6921 M10X35 | 10 03 557 8 | 11 | 3 | X1011793 | 10 11 793 0 | ACCESSORIES AIR COMPRES |
| HEX SCREW DIN 6921 M10X35 | 10 33 346 4 | 2 | 2 | X1012500 | 10 12 500 7 | FUEL FINE-FILTER ASSEMBLY |
| HEX SCREW DIN 6921 M10X50 | 10 00 546 1 | 2 | 4 | X1011707 | 10 11 707 2 | AIR INTAKE PIPE ASS. |
| HEX SCREW DIN 6921 M10X60 | 10 03 966 0 | 8 | 12 | 9 079 480 | 90 79 480 | POWER UNIT SUPPORT ATT |
| HEX SCREW DIN 6921 M10X90 | 10 00 613 1 | 3 | 8 | X1011810 | 10 11 810 1 | EXHAUST PIPE ASSEMBLY |
| HEX SCREW DIN 6921 M6X16 | 40 73 502 08 | 28 | 8 | 2 510 200 | 96 41 258 08 | SLEWING PLATFORM PANELLI |
| HEX SCREW DIN 6921 M6X16 | 40 73 502 08 | 40 | 2 | 2 540 | 91 45 984 08 | HEATING, CRANE CABIN |
| HEX SCREW DIN 6921 M6X16 | 40 73 502 08 | 65 | 8 | 2 932 042 | 96 68 587 08 | BASE ASSEMBLY |
| HEX SCREW DIN 6921 M6X16 | 40 73 502 08 | 31 | 5 | X1011998 | 10 11 998 0 | CABLE HARNESS MOUNTING |
| HEX SCREW DIN 6921 M6X20 | 10 01 871 1 | 2 | 4 | 9 078 314 | 90 78 314 | HEATING FLANGE ADD-ON |
| HEX SCREW DIN 6921 M6X20 | 10 01 871 1 | 32 | 3 | X1011998 | 10 11 998 0 | CABLE HARNESS MOUNTING |
| HEX SCREW DIN 6921 M6X30 | 10 29 053 7 | 18 | 4 | X1011573 | 10 11 573 7 | FUEL LINES |
| HEX SCREW DIN 6921 M8X100 | 10 01 404 2 | 4 | 2 | 9 079 472 | 90 79 472 | COOLANT PIPE BEND ADD-ON |
| HEX SCREW DIN 6921 M8X100 | 10 01 404 2 | 5 | 3 | 9 080 525 | 90 80 525 | AIR COND. COMPRESSOR A |
| HEX SCREW DIN 6921 M8X110 | 10 11 292 9 | 5 | 6 | 9 075 678 | 90 75 678 | THERMOSTAT HOUSING ASS |
| HEX SCREW DIN 6921 M8X140 | 10 03 731 0 | 7 | 2 | X1011816 | 10 11 816 1 | CONNECTING LINE ADD-ON |
| HEX SCREW DIN 6921 M8X16 | 10 00 507 8 | 11 | 4 | X1011611 | 10 11 611 0 | LOCKING PIECES |
| HEX SCREW DIN 6921 M8X16 | 10 00 507 8 | 6 | 1 | X1011766 | 10 11 766 5 | PIPELINE |
| HEX SCREW DIN 6921 M8X16 | 10 00 507 8 | 13 | 2 | X1011914 | 10 11 914 1 | CRANKCASE BREATHER ASS |
| HEX SCREW DIN 6921 M8X16 | 10 00 507 8 | 35 | 4 | X1011998 | 10 11 998 0 | CABLE HARNESS MOUNTING |
| HEX SCREW DIN 6921 M8X20 | 10 01 690 6 | 8 | 2 | 9 080 345 | 90 80 345 | WATER PUMP WITH FASTENIN |
| HEX SCREW DIN 6921 M8X20 | 10 01 690 6 | 2 | 2 | X1011912 | 10 11 912 7 | CLAMP - ADD-ON UNIT |
| HEX SCREW DIN 6921 M8X20 | 10 01 690 6 | 3 | 4 | X1011912 | 10 11 912 8 | LOCKING PIECES |
| HEX SCREW DIN 6921 M8X20 | 10 01 690 6 | 8 | 2 | X1011989 | 10 11 989 1 | FUEL-PREFILTER ASS. |
| HEX SCREW DIN 6921 M8X20 | 10 01 690 6 | 4 | 2 | X1011997 | 10 11 997 9 | WIRING HARNESS ASSEMBLY |
| HEX SCREW DIN 6921 M8X20 | 10 01 690 6 | 36 | 1 | X1011998 | 10 11 998 0 | CABLE HARNESS MOUNTING |
| HEX SCREW DIN 6921 M8X20 | 10 01 690 6 | 3 | 1 | X1012024 | 10 12 024 2 | OIL LINE PRE-ASSEMBLY |
| HEX SCREW DIN 6921 M8X25 X | 10 33 620 0 | 3 | 8 | X1011919 | 10 11 919 7 | HEAT PROTECTION W.FASTEN |
| HEX SCREW DIN 6921 M8X30 | 10 00 778 2 | 3 | 2 | 9 079 472 | 90 79 472 | COOLANT PIPE BEND ADD-ON |
| HEX SCREW DIN 6921 M8X30 | 10 00 778 2 | 3 | 4 | 9 080 280 | 90 80 280 | LOCKING PIECES |
| HEX SCREW DIN 6921 M8X30 | 10 00 778 2 | 23 | 1 | X1011914 | 10 11 914 1 | CRANKCASE BREATHER ASS |
| HEX SCREW DIN 6921 M8X30 | 10 00 778 2 | 38 | 1 | X1011997 | 10 11 997 9 | WIRING HARNESS ASSEMBLY |
| HEX SCREW DIN 6921 M8X35 | 10 11 371 1 | 4 | 5 | 9 080 345 | 90 80 345 | WATER PUMP WITH FASTENIN |
| HEX SCREW DIN 6921 M8X35 | 10 11 371 1 | 39 | 1 | X1011998 | 10 11 998 0 | CABLE HARNESS MOUNTING |
| HEX SCREW DIN 6921 M8X40 1 | 10 03 557 5 | 4 | 4 | X1011599 | 10 11 599 3 | CONTROL BOX ANNEXE |
| HEX SCREW DIN 6921 M8X40 | 10 44 078 8 | 40 | 1 | X1011997 | 10 11 997 9 | WIRING HARNESS ASSEMBLY |
| HEX SCREW DIN 6921 M8X50 | 10 00 507 3 | 5 | 4 | X1011739 | 10 11 739 7 | OIL COOLER, PRE-ASSEMBLE |
| HEX SCREW DIN 6921 M8X50 | 10 00 507 3 | 4 | 5 | X1011739 | 10 11 739 8 | OIL COOLER ADD-ON |
| HEX SCREW DIN 6921 M8X60 | 10 02 742 0 | 35 | 2 | X1011573 | 10 11 573 7 | FUEL LINES |
| HEX SCREW DIN 961 M12X1,5X | 40 70 038 08 | 26 | 3 | 2 950 | 91 49 515 08 | COMPRESSED-AIR SYST.SU |
| HEX SCREW EN 1665 M10X30 | 11 65 615 5 | 2 | 5 | 9 079 468 | 90 79 468 | TRANSPORT DEVICE ATTACH |
| HEX SCREW EN 1665 M10X30 | 11 65 615 5 | 4 | 2 | 9 079 560 | 90 79 560 | GENERATOR ADD-ON |
| HEX SCREW EN 1665 M10X30 | 11 65 615 5 | 2 | 4 | 9 079 823 | 90 79 823 | TRANSPORT DEVICE ATTACH |
| HEX SCREW EN 1665 M10X30 | 11 65 615 5 | 3 | 3 | X1011566 | 10 11 566 4 | LOCKING PIECES |
| HEX SCREW EN 1665 M10X30 | 11 65 615 5 | 53 | 1 | X1011997 | 10 11 997 9 | WIRING HARNESS ASSEMBLY |

| Description | Item | Pos. | Quantity | Page | Assembly | Description |
|---|---|---|---|---|---|---|
| HEX SCREW EN 1665 M10X40 | 10 11 249 7 | 13 | 1 | 9 080 525 | 90 80 525 | AIR COND. COMPRESSOR A |
| HEX SCREW EN 1665 M10X60 | 10 01 463 8 | 10 | 2 | 9 080 525 | 90 80 525 | AIR COND. COMPRESSOR A |
| HEX SCREW EN 1665 M10X80 | 10 10 165 7 | 6 | 2 | 9 079 560 | 90 79 560 | GENERATOR ADD-ON |
| HEX SCREW EN 1665 M10X80 | 10 10 165 7 | 14 | 1 | 9 080 525 | 90 80 525 | AIR COND. COMPRESSOR A |
| HEX SCREW EN 1665 M12X40 | 46 01 426 | 3 | 2 | 9 079 560 | 90 79 560 | GENERATOR ADD-ON |
| HEX SCREW EN 1665 M5X10 | 10 87 550 3 | 20 | 2 | 2 533 003 | 96 28 388 08 | ELECTRIC ADD-ON PARTS CA |
| HEX SCREW EN 1665 M5X10 | 10 87 550 3 | 62 | 32 | 2 932 042 | 96 68 587 08 | BASE ASSEMBLY |
| HEX SCREW EN 1665 M8X25 8. | 10 00 900 7 | 3 | 2 | 9 147 512 | 91 47 512 | LOCKING PIECES |
| HEX SCREW EN 1665 M8X25 8. | 10 00 900 7 | 9 | 3 | X1011989 | 10 11 989 1 | FUEL-PREFILTER ASS. |
| HEX SCREW EN 1665 M8X45 8. | 10 01 690 7 | 22 | 1 | X1011914 | 10 11 914 1 | CRANKCASE BREATHER ASS |
| HEX SCREW EN 1665 M8X55 8. | 10 21 801 3 | 3 | 28 | X1012414 | 10 12 414 0 | OIL SUMP WITH FASTENING |
| HEX SCREW EN 1665 M8X80 8. | 10 00 507 4 | 5 | 9 | X1011739 | 10 11 739 8 | OIL COOLER ADD-ON |
| HEX SCREW EN 1665 M8X90 8. | 10 10 030 3 | 4 | 5 | X1011961 | 10 11 961 0 | CYLINDER HEAD COVER ASS |
| HEX SCREW EN 1665 M8X90 8. | 10 10 030 3 | 4 | 5 | X1011963 | 10 11 963 6 | CYLINDER HEAD COVER ASS |
| HEX SCREW ISO 4014 M10X10 | 40 61 098 08 | 328 | 2 | 2 210 | 91 81 614 08 | DRIVE ASSEMBLY, PRE-ASSE |
| HEX SCREW ISO 4014 M10X24 | 40 61 109 08 | 4 | 6 | 2 260 006 | 96 31 147 08 | BATTERY BOX, PRE-ASSEMB |
| HEX SCREW ISO 4014 M12X17 | 46 00 256 | 10 | 4 | 1 100 216 | 96 46 363 08 | MOUNTING PARTS LWE |
| HEX SCREW ISO 4014 M12X50 | 11 65 157 8 | 28 | 16 | 1 100 215 | 99 20 783 14 | CENTRE PIECE |
| HEX SCREW ISO 4014 M12X55 | 11 65 889 1 | 82 | 12 | 3 101 | 91 60 312 08 | PIVOT SECTION, PRE-ASSEMB |
| HEX SCREW ISO 4014 M12X65 | 11 65 889 0 | 4 | 1 | 9 072 906 | 90 72 906 | INTERMEDIATE GEAR CPL. |
| HEX SCREW ISO 4014 M12X75 | 10 87 550 7 | 17 | 4 | 2 340 004 | 96 43 780 08 | OIL TANK PRE-ASS. |
| HEX SCREW ISO 4014 M14X70 | 40 61 108 | 503 | 4 | 2 970 | 91 55 482 08 | HYDRAULICS |
| HEX SCREW ISO 4014 M16X70 | 11 64 237 7 | 12 | 4 | 1 100 205 | 96 51 633 08 | CRAWLER CARRIER RIGHT CP |
| HEX SCREW ISO 4014 M16X70 | 11 64 237 7 | 12 | 4 | 1 100 210 | 96 51 634 08 | CRAWLER TRACK CARRIER LE |
| HEX SCREW ISO 4014 M20X1 | 40 62 129 01 | 7 | 4 | 1 100 214 | 74 90 137 14 | GUIDE WHEEL CPL |
| HEX SCREW ISO 4014 M20X29 | 40 62 147 08 | 16 | 4 | 4 003 006 | 91 04 457 08 | HOOK BLOCK |
| HEX SCREW ISO 4014 M20X75 | 40 61 228 01 | 2 | 1 | 2 340 | 91 53 116 08 | OIL RESERVOIR, EXTENSION |
| HEX SCREW ISO 4014 M24X1 | 40 61 509 14 | 7 | 24 | 1 100 205 | 96 51 633 08 | CRAWLER CARRIER RIGHT CP |
| HEX SCREW ISO 4014 M24X1 | 40 61 509 14 | 7 | 24 | 1 100 210 | 96 51 634 08 | CRAWLER TRACK CARRIER LE |
| HEX SCREW ISO 4014 M24X12 | 46 00 629 | 9 | 48 | 1 100 205 | 96 51 633 08 | CRAWLER CARRIER RIGHT CP |
| HEX SCREW ISO 4014 M24X12 | 46 00 629 | 9 | 48 | 1 100 210 | 96 51 634 08 | CRAWLER TRACK CARRIER LE |
| HEX SCREW ISO 4014 M24X13 | 40 62 227 08 | 6 | 4 | 3 330 | 91 57 885 08 | MECHANICAL EXTENSION SYS |
| HEX SCREW ISO 4014 M6X40 | 40 01 928 | 332 | 2 | 2 210 | 91 81 614 08 | DRIVE ASSEMBLY, PRE-ASSE |
| HEX SCREW ISO 4014 M6X40 | 40 61 032 08 | 155 | 2 | 2 520 000 | 91 49 872 08 | CABIN, GLAZED |
| HEX SCREW ISO 4014 M6X65 | 46 00 356 | 331 | 2 | 2 210 | 91 81 614 08 | DRIVE ASSEMBLY, PRE-ASSE |
| HEX SCREW ISO 4014 M8X110 | 46 00 183 | 14 | 4 | 2 955 | 91 49 516 08 | PNEUM. CRANE OPERATORS |
| HEX SCREW ISO 4014 M8X45 | 40 01 466 | 47 | 2 | 3 106 000 | 91 60 313 08 | TELESCOPIC SECT.5 PRE-AS |
| HEX SCREW ISO 4014 M8X60 8 | 11 65 158 3 | 112 | 3 | 2 520 000 | 91 49 872 08 | CABIN, GLAZED |
| HEX SCREW ISO 4014 M8X80 | 40 01 463 | 133 | 6 | 2 520 000 | 91 49 872 08 | CABIN, GLAZED |
| HEX SCREW ISO 4014 M8X85 8 | 10 87 551 4 | 4 | 1 | 2 560 045 | 96 40 606 08 | CHAIN HOLDER CPL. |
| HEX SCREW ISO 4017 M10X16 | 11 65 247 0 | 23 | 8 | 1 100 205 | 96 51 633 08 | CRAWLER CARRIER RIGHT CP |
| HEX SCREW ISO 4017 M10X16 | 11 65 247 0 | 23 | 6 | 1 100 210 | 96 51 634 08 | CRAWLER TRACK CARRIER LE |
| HEX SCREW ISO 4017 M10X16 | 11 65 247 0 | 31 | 8 | 1 100 215 | 99 20 783 14 | CENTRE PIECE |
| HEX SCREW ISO 4017 M10X16 | 11 65 247 0 | 339 | 1 | 2 210 | 91 81 614 08 | DRIVE ASSEMBLY, PRE-ASSE |
| HEX SCREW ISO 4017 M10X16 | 11 65 247 0 | 14 | 3 | 3 511 006 | 96 45 029 08 | BOOM NOSE PRE-ASS. |
| HEX SCREW ISO 4017 M10X20 | 40 65 098 08 | 10 | 8 | 2 340 004 | 96 43 780 08 | OIL TANK PRE-ASS. |
| HEX SCREW ISO 4017 M10X20 | 40 65 098 08 | 316 | 1 | 2 510 100 | 96 44 750 08 | SLEWING PLATFORM PANELLI |
| HEX SCREW ISO 4017 M10X20 | 11 65 163 2 | 30 | 8 | 1 100 215 | 99 20 783 14 | CENTRE PIECE |
| HEX SCREW ISO 4017 M10X20 | 11 65 163 2 | 8 | 3 | 2 510 200 | 96 41 258 08 | SLEWING PLATFORM PANELLI |
| HEX SCREW ISO 4017 M10X20 | 11 65 163 2 | 7 | 4 | 2 790 901 | 91 54 183 08 | BRACING |
| HEX SCREW ISO 4017 M10X20 | 11 65 163 2 | 85 | 7 | 2 970 | 91 55 482 08 | HYDRAULICS |
| HEX SCREW ISO 4017 M10X20 | 11 65 163 2 | 33 | 5 | 3 101 | 91 60 312 08 | PIVOT SECTION, PRE-ASSEMB |
| HEX SCREW ISO 4017 M10X20 | 11 65 163 2 | 10 | 2 | 3 330 | 91 57 885 08 | MECHANICAL EXTENSION SYS |
| HEX SCREW ISO 4017 M10X25 | 11 63 181 6 | 21 | 6 | 2 102 | 91 51 080 08 | ASSEMBLY PARTS F.SLEWING |
| HEX SCREW ISO 4017 M10X25 | 11 63 181 6 | 310 | 2 | 2 200 | 91 81 095 08 | DRIVE ASSEMBLY CPL. |
| HEX SCREW ISO 4017 M10X25 | 11 63 181 6 | 309 | 4 | 2 210 | 91 81 614 08 | DRIVE ASSEMBLY, PRE-ASSE |
| HEX SCREW ISO 4017 M10X25 | 11 63 181 6 | 307 | 6 | 2 510 100 | 96 44 750 08 | SLEWING PLATFORM PANELLI |
| HEX SCREW ISO 4017 M10X25 | 11 63 181 6 | 300 | 7 | 2 680 | 91 53 225 08 | EXHAUST SYSTEM CPL. |
| HEX SCREW ISO 4017 M10X30 | 40 00 828 | 25 | 2 | 2 102 | 91 51 080 08 | ASSEMBLY PARTS F.SLEWING |
| HEX SCREW ISO 4017 M10X30 | 40 00 828 | 308 | 4 | 2 510 100 | 96 44 750 08 | SLEWING PLATFORM PANELLI |

| Description | Item | Pos. | Quantity | Page | Assembly | Description |
|---|---|---|---|---|---|---|
| HEX SCREW ISO 4017 M10X30 | 40 00 828 | 300 | 4 | 2 681 | 91 28 102 08 | AIR FILTER UNIT |
| HEX SCREW ISO 4017 M10X30 | 40 00 828 | 64 | 4 | 3 101 | 91 60 312 08 | PIVOT SECTION, PRE-ASSEMB |
| HEX SCREW ISO 4017 M10X30 | 40 00 828 | 7 | 2 | X1011989 | 10 11 989 1 | FUEL-PREFILTER ASS. |
| HEX SCREW ISO 4017 M10X35 | 40 66 010 08 | 12 | 6 | 2 440 022 | 96 42 336 08 | WINCH 2 PRE-ASS. |
| HEX SCREW ISO 4017 M10X35 | 40 66 010 08 | 4 | 6 | 2 450 025 | 96 35 649 08 | MAIN HOISTING GEAR PRE-A |
| HEX SCREW ISO 4017 M10X35 | 40 66 010 08 | 6 | 2 | 2 790 901 | 91 54 183 08 | BRACING |
| HEX SCREW ISO 4017 M10X35 | 10 87 551 6 | 536 | 12 | 1 970 | 96 71 367 08 | UNDERCARRIAGE HYDRAULIC |
| HEX SCREW ISO 4017 M10X35 | 10 87 551 6 | 11 | 2 | 2 440 022 | 96 42 336 08 | WINCH 2 PRE-ASS. |
| HEX SCREW ISO 4017 M10X35 | 10 87 551 6 | 140 | 1 | 2 520 000 | 91 49 872 08 | CABIN, GLAZED |
| HEX SCREW ISO 4017 M10X40 | 49 01 287 | 5 | 2 | 2 790 901 | 91 54 183 08 | BRACING |
| HEX SCREW ISO 4017 M10X40 | 11 62 670 6 | 38 | 16 | 1 100 205 | 96 51 633 08 | CRAWLER CARRIER RIGHT CP |
| HEX SCREW ISO 4017 M10X40 | 11 62 670 6 | 38 | 16 | 1 100 210 | 96 51 634 08 | CRAWLER TRACK CARRIER LE |
| HEX SCREW ISO 4017 M10X40 | 11 62 670 6 | 300 | 2 | 2 200 | 91 81 095 08 | DRIVE ASSEMBLY CPL. |
| HEX SCREW ISO 4017 M10X40 | 11 62 670 6 | 24 | 1 | 3 511 006 | 96 45 029 08 | BOOM NOSE PRE-ASS. |
| HEX SCREW ISO 4017 M10X45 | 46 00 355 | 23 | 2 | 2 502 | 91 01 533 08 | CONTROL STAND |
| HEX SCREW ISO 4017 M10X45 | 46 00 355 | 69 | 1 | 3 106 000 | 91 60 313 08 | TELESCOPIC SECT.5 PRE-AS |
| HEX SCREW ISO 4017 M12X12 | 40 65 144 01 | 52 | 1 | 3 501 | 91 05 788 08 | MECH. DOUBLE FOLD JIB PR |
| HEX SCREW ISO 4017 M12X20 | 11 00 272 4 | 2 | 6 | 2 515 | 91 51 084 08 | FALL PROTECTION |
| HEX SCREW ISO 4017 M12X20 | 11 65 100 6 | 26 | 3 | 1 100 205 | 96 51 633 08 | CRAWLER CARRIER RIGHT CP |
| HEX SCREW ISO 4017 M12X20 | 11 65 100 6 | 26 | 3 | 1 100 210 | 96 51 634 08 | CRAWLER TRACK CARRIER LE |
| HEX SCREW ISO 4017 M12X20 | 11 65 100 6 | 63 | 3 | 3 106 000 | 91 60 313 08 | TELESCOPIC SECT.5 PRE-AS |
| HEX SCREW ISO 4017 M12X25 | 40 66 090 08 | 2 | 8 | X1011578 | 10 11 578 0 | CLUTCH ASSEMBLY |
| HEX SCREW ISO 4017 M12X25 | 40 66 087 08 | 53 | 2 | 3 101 | 91 60 312 08 | PIVOT SECTION, PRE-ASSEMB |
| HEX SCREW ISO 4017 M12X25 | 40 66 087 08 | 53 | 2 | 3 102 000 | 91 62 543 08 | TELESCOPIC SECTION 1 PRE |
| HEX SCREW ISO 4017 M12X25 | 40 66 087 08 | 53 | 2 | 3 103 000 | 91 62 544 08 | TELESCOPIC SECT.2 PRE-AS |
| HEX SCREW ISO 4017 M12X25 | 40 66 087 08 | 53 | 2 | 3 104 000 | 91 62 545 08 | TELESCOPIC SECT.3 PRE-ASS |
| HEX SCREW ISO 4017 M12X25 | 40 66 087 08 | 53 | 2 | 3 105 000 | 91 62 546 08 | TELESCOPIC SECT.IV PRE-A |
| HEX SCREW ISO 4017 M12X25 | 11 65 889 2 | 29 | 18 | 1 100 215 | 99 20 783 14 | CENTRE PIECE |
| HEX SCREW ISO 4017 M12X25 | 11 65 889 2 | 27 | 8 | 1 400 200 | 91 53 791 08 | PREPARATION HYDR |
| HEX SCREW ISO 4017 M12X30 | 11 63 174 2 | 50 | 5 | 1 100 211 | 74 90 653 14 | CARRYING ROLLER CPL |
| HEX SCREW ISO 4017 M12X30 | 11 63 174 2 | 56 | 1 | 2 102 | 91 51 080 08 | ASSEMBLY PARTS F.SLEWING |
| HEX SCREW ISO 4017 M12X30 | 11 63 174 2 | 301 | 3 | 2 680 | 91 53 225 08 | EXHAUST SYSTEM CPL. |
| HEX SCREW ISO 4017 M12X30 | 11 63 174 2 | 36 | 2 | 3 101 | 91 60 312 08 | PIVOT SECTION, PRE-ASSEMB |
| HEX SCREW ISO 4017 M12X30 | 11 63 174 2 | 36 | 2 | 3 102 000 | 91 62 543 08 | TELESCOPIC SECTION 1 PRE |
| HEX SCREW ISO 4017 M12X30 | 11 63 174 2 | 36 | 2 | 3 103 000 | 91 62 544 08 | TELESCOPIC SECT.2 PRE-AS |
| HEX SCREW ISO 4017 M12X30 | 11 63 174 2 | 36 | 2 | 3 104 000 | 91 62 545 08 | TELESCOPIC SECT.3 PRE-ASS |
| HEX SCREW ISO 4017 M12X30 | 11 63 174 2 | 36 | 2 | 3 105 000 | 91 62 546 08 | TELESCOPIC SECT.IV PRE-A |
| HEX SCREW ISO 4017 M12X35 | 10 29 957 4 | 17 | 8 | 2 500 | 91 48 594 08 | CRANE DRIVER'S CABIN CPL. |
| HEX SCREW ISO 4017 M12X35 | 11 64 234 9 | 310 | 2 | 2 210 | 91 81 614 08 | DRIVE ASSEMBLY, PRE-ASSE |
| HEX SCREW ISO 4017 M12X35 | 11 64 234 9 | 11 | 4 | 3 101 | 91 60 312 08 | PIVOT SECTION, PRE-ASSEMB |
| HEX SCREW ISO 4017 M12X35 | 11 64 234 9 | 45 | 3 | 3 501 | 91 05 788 08 | MECH. DOUBLE FOLD JIB PR |
| HEX SCREW ISO 4017 M12X40 | 46 00 366 | 19 | 5 | 2 500 | 91 48 594 08 | CRANE DRIVER'S CABIN CPL. |
| HEX SCREW ISO 4017 M12X40 | 11 64 538 4 | 555 | 8 | 1 970 | 96 71 367 08 | UNDERCARRIAGE HYDRAULIC |
| HEX SCREW ISO 4017 M12X40 | 11 64 538 4 | 21 | 4 | 2 440 022 | 96 42 336 08 | WINCH 2 PRE-ASS. |
| HEX SCREW ISO 4017 M12X40 | 11 64 538 4 | 30 | 2 | 2 510 200 | 96 41 258 08 | SLEWING PLATFORM PANELLI |
| HEX SCREW ISO 4017 M12X40 | 11 64 538 4 | 21 | 4 | 3 100 | 91 59 279 08 | TELESCOPIC BOOM CPL. |
| HEX SCREW ISO 4017 M12X40 | 11 64 538 4 | 19 | 1 | 3 510 100 | 91 49 246 08 | TRANSPORT MOUNTING |
| HEX SCREW ISO 4017 M12X50 | 11 84 013 6 | 41 | 12 | 3 101 | 91 60 312 08 | PIVOT SECTION, PRE-ASSEMB |
| HEX SCREW ISO 4017 M12X50 | 11 84 013 6 | 41 | 24 | 3 102 000 | 91 62 543 08 | TELESCOPIC SECTION 1 PRE |
| HEX SCREW ISO 4017 M12X50 | 11 84 013 6 | 41 | 24 | 3 103 000 | 91 62 544 08 | TELESCOPIC SECT.2 PRE-AS |
| HEX SCREW ISO 4017 M12X50 | 11 84 013 6 | 41 | 20 | 3 104 000 | 91 62 545 08 | TELESCOPIC SECT.3 PRE-ASS |
| HEX SCREW ISO 4017 M12X50 | 11 84 013 6 | 41 | 20 | 3 105 000 | 91 62 546 08 | TELESCOPIC SECT.IV PRE-A |
| HEX SCREW ISO 4017 M12X60 | 49 00 643 | 16 | 2 | 3 510 100 | 91 49 246 08 | TRANSPORT MOUNTING |
| HEX SCREW ISO 4017 M12X70 | 40 65 191 | 5 | 4 | 3 102 000 | 91 62 543 08 | TELESCOPIC SECTION 1 PRE |
| HEX SCREW ISO 4017 M12X70 | 40 65 191 | 5 | 4 | 3 103 000 | 91 62 544 08 | TELESCOPIC SECT.2 PRE-AS |
| HEX SCREW ISO 4017 M12X70 | 40 65 191 | 5 | 4 | 3 104 000 | 91 62 545 08 | TELESCOPIC SECT.3 PRE-ASS |
| HEX SCREW ISO 4017 M12X70 | 40 65 191 | 5 | 4 | 3 105 000 | 91 62 546 08 | TELESCOPIC SECT.IV PRE-A |
| HEX SCREW ISO 4017 M12X70 | 40 65 191 | 5 | 4 | 3 106 000 | 91 60 313 08 | TELESCOPIC SECT.5 PRE-AS |
| HEX SCREW ISO 4017 M14X45 | 40 65 145 01 | 574 | 20 | 1 970 | 96 71 367 08 | UNDERCARRIAGE HYDRAULIC |
| HEX SCREW ISO 4017 M14X45 | 40 65 145 01 | 504 | 8 | 2 970 | 91 55 482 08 | HYDRAULICS |

| Description | Item | Pos. | Quantity | Page | Assembly | Description |
|---|---|---|---|---|---|---|
| HEX SCREW ISO 4017 M16X1 | 10 87 551 8 | 2 | 3 | 2 560 045 | 96 40 606 08 | CHAIN HOLDER CPL. |
| HEX SCREW ISO 4017 M16X1 | 10 87 551 8 | 102 | 2 | 3 501 | 91 05 788 08 | MECH. DOUBLE FOLD JIB PR |
| HEX SCREW ISO 4017 M16X13 | 46 35 061 | 12 | 6 | 3 510 100 | 91 49 246 08 | TRANSPORT MOUNTING |
| HEX SCREW ISO 4017 M16X1 | 10 87 580 1 | 15 | 2 | 3 510 100 | 91 49 246 08 | TRANSPORT MOUNTING |
| HEX SCREW ISO 4017 M16X18 | 40 65 306 14 | 50 | 8 | 1 100 215 | 99 20 783 14 | CENTRE PIECE |
| HEX SCREW ISO 4017 M16X25 | 10 00 636 2 | 61 | 4 | 3 501 | 91 05 788 08 | MECH. DOUBLE FOLD JIB PR |
| HEX SCREW ISO 4017 M16X26 | 10 02 323 7 | 43 | 1 | 3 510 100 | 91 49 246 08 | TRANSPORT MOUNTING |
| HEX SCREW ISO 4017 M16X35 | 49 00 123 | 13 | 6 | 1 100 200 | 96 72 944 08 | UNDERCARRIAGE CPL. |
| HEX SCREW ISO 4017 M16X35 | 49 00 123 | 27 | 3 | 1 100 215 | 99 20 783 14 | CENTRE PIECE |
| HEX SCREW ISO 4017 M16X35 | 49 00 123 | 95 | 2 | 3 501 | 91 05 788 08 | MECH. DOUBLE FOLD JIB PR |
| HEX SCREW ISO 4017 M16X40 | 40 66 030 08 | 5 | 8 | 2 350 | 91 81 361 08 | LUFFING RAM W. PIVOT |
| HEX SCREW ISO 4017 M16X40 | 40 66 030 08 | 29 | 4 | 2 501 000 | 91 48 769 08 | CRANE DRIVER'S CABIN,PRE |
| HEX SCREW ISO 4017 M16X40 | 10 87 551 9 | 315 | 4 | 2 210 | 91 81 614 08 | DRIVE ASSEMBLY, PRE-ASSE |
| HEX SCREW ISO 4017 M16X40 | 10 87 551 9 | 22 | 2 | 3 510 100 | 91 49 246 08 | TRANSPORT MOUNTING |
| HEX SCREW ISO 4017 M16X45 | 40 66 031 08 | 4 | 8 | 2 102 | 91 51 080 08 | ASSEMBLY PARTS F.SLEWING |
| HEX SCREW ISO 4017 M16X45 | 40 66 031 08 | 13 | 22 | 2 440 022 | 96 42 336 08 | WINCH 2 PRE-ASS. |
| HEX SCREW ISO 4017 M16X45 | 40 66 031 08 | 3 | 22 | 2 450 025 | 96 35 649 08 | MAIN HOISTING GEAR PRE-A |
| HEX SCREW ISO 4017 M16X45 | 10 87 580 3 | 2 | 3 | 2 270 | 91 50 456 08 | FUEL TANK ADD-ON UNIT |
| HEX SCREW ISO 4017 M16X45 | 10 87 580 3 | 34 | 4 | 2 440 022 | 96 42 336 08 | WINCH 2 PRE-ASS. |
| HEX SCREW ISO 4017 M16X45 | 10 87 580 3 | 13 | 4 | 2 450 | 91 53 926 08 | MAIN HOIST GEAR |
| HEX SCREW ISO 4017 M16X45 | 10 87 580 3 | 8 | 8 | 3 510 100 | 91 49 246 08 | TRANSPORT MOUNTING |
| HEX SCREW ISO 4017 M16X50 | 10 87 552 0 | 15 | 12 | 1 100 205 | 96 51 633 08 | CRAWLER CARRIER RIGHT CP |
| HEX SCREW ISO 4017 M16X50 | 10 87 552 0 | 15 | 12 | 1 100 210 | 96 51 634 08 | CRAWLER TRACK CARRIER LE |
| HEX SCREW ISO 4017 M16X50 | 10 87 552 0 | 316 | 14 | 2 210 | 91 81 614 08 | DRIVE ASSEMBLY, PRE-ASSE |
| HEX SCREW ISO 4017 M16X60 | 40 66 034 08 | 7 | 1 | 3 500 104 | 92 95 821 08 | MOUNTING PRE-ASS. |
| HEX SCREW ISO 4017 M16X60 | 10 87 552 1 | 58 | 8 | 2 102 | 91 51 080 08 | ASSEMBLY PARTS F.SLEWING |
| HEX SCREW ISO 4017 M16X60 | 10 87 552 1 | 55 | 5 | 3 501 | 91 05 788 08 | MECH. DOUBLE FOLD JIB PR |
| HEX SCREW ISO 4017 M16X65 | 46 00 262 | 340 | 8 | 2 200 | 91 81 095 08 | DRIVE ASSEMBLY CPL. |
| HEX SCREW ISO 4017 M16X70 | 46 00 628 | 59 | 1 | 3 501 | 91 05 788 08 | MECH. DOUBLE FOLD JIB PR |
| HEX SCREW ISO 4017 M20X10 | 40 62 072 08 | 18 | 12 | 1 100 205 | 96 51 633 08 | CRAWLER CARRIER RIGHT CP |
| HEX SCREW ISO 4017 M20X10 | 40 62 072 08 | 18 | 12 | 1 100 210 | 96 51 634 08 | CRAWLER TRACK CARRIER LE |
| HEX SCREW ISO 4017 M20X40 | 40 65 207 01 | 25 | 12 | 1 100 215 | 99 20 783 14 | CENTRE PIECE |
| HEX SCREW ISO 4017 M20X45 | 40 65 281 | 4 | 1 | 2 270 | 91 50 456 08 | FUEL TANK ADD-ON UNIT |
| HEX SCREW ISO 4017 M20X45 | 40 65 281 | 3 | 2 | 2 340 | 91 53 116 08 | OIL RESERVOIR, EXTENSION |
| HEX SCREW ISO 4017 M20X55 | 46 00 097 | 36 | 2 | 1 100 205 | 96 51 633 08 | CRAWLER CARRIER RIGHT CP |
| HEX SCREW ISO 4017 M20X55 | 46 00 097 | 36 | 2 | 1 100 210 | 96 51 634 08 | CRAWLER TRACK CARRIER LE |
| HEX SCREW ISO 4017 M20X60 | 10 87 580 6 | 10 | 6 | 3 510 100 | 91 49 246 08 | TRANSPORT MOUNTING |
| HEX SCREW ISO 4017 M30X15 | 40 65 269 14 | 32 | 2 | 1 100 205 | 96 51 633 08 | CRAWLER CARRIER RIGHT CP |
| HEX SCREW ISO 4017 M30X15 | 40 65 269 14 | 32 | 2 | 1 100 210 | 96 51 634 08 | CRAWLER TRACK CARRIER LE |
| HEX SCREW ISO 4017 M3X8 8. | 40 65 000 08 | 11 | 4 | 2 913 | 91 32 850 08 | LICCON CONSOLE LCD2 |
| HEX SCREW ISO 4017 M5X10 | 40 65 060 | 3 | 2 | 1 630 003 | 96 47 650 08 | PIN COMPL. |
| HEX SCREW ISO 4017 M5X12 | 40 00 417 | 25 | 4 | 1 400 200 | 91 53 791 08 | PREPARATION HYDR |
| HEX SCREW ISO 4017 M5X12 | 40 00 417 | 3 | 2 | 1 681 021 | 96 65 122 08 | SENSOR COMPL. |
| HEX SCREW ISO 4017 M5X12 | 40 00 417 | 70 | 4 | 2 970 | 91 55 482 08 | HYDRAULICS |
| HEX SCREW ISO 4017 M5X16 | 40 65 023 08 | 36 | 2 | 2 971 | 91 50 610 08 | HYDR.AUXILIARY HOISTING |
| HEX SCREW ISO 4017 M5X20 | 40 65 025 08 | 82 | 2 | 3 501 | 91 05 788 08 | MECH. DOUBLE FOLD JIB PR |
| HEX SCREW ISO 4017 M5X30 | 40 65 028 08 | 3 | 5 | 2 270 001 | 96 37 923 08 | FUEL TANK, PRE-ASSEMBLED |
| HEX SCREW ISO 4017 M5X55 | 40 65 033 01 | 22 | 6 | 1 400 200 | 91 53 791 08 | PREPARATION HYDR |
| HEX SCREW ISO 4017 M6X10 8 | 11 64 249 7 | 13 | 2 | 2 510 072 | 96 44 614 08 | FLAP RIGHT PRE-ASS. |
| HEX SCREW ISO 4017 M6X10 8 | 11 64 249 7 | 20 | 2 | 2 510 200 | 96 41 258 08 | SLEWING PLATFORM PANELLI |
| HEX SCREW ISO 4017 M6X10 8 | 11 64 249 7 | 77 | 1 | 2 520 000 | 91 49 872 08 | CABIN, GLAZED |
| HEX SCREW ISO 4017 M6X12 8 | 11 69 282 4 | 5 | 6 | 2 501 000 | 91 48 769 08 | CRANE DRIVER'S CABIN,PRE |
| HEX SCREW ISO 4017 M6X12 8 | 11 69 282 4 | 47 | 2 | 2 510 200 | 96 41 258 08 | SLEWING PLATFORM PANELLI |
| HEX SCREW ISO 4017 M6X12 8 | 11 69 282 4 | 8 | 2 | 2 510 201 | 96 42 011 08 | FLAP PRE-ASS. |
| HEX SCREW ISO 4017 M6X16 | 40 65 099 | 302 | 4 | 2 210 008 | 96 48 137 08 | RADIATOR, PRE-ASSEMBLED |
| HEX SCREW ISO 4017 M6X16 | 40 65 099 | 4 | 4 | 2 430 | 91 54 389 08 | ANGLE THREADED BULKHEA |
| HEX SCREW ISO 4017 M6X16 | 40 65 099 | 9 | 4 | 2 501 022 | 96 34 184 08 | COVER COMPL. |
| HEX SCREW ISO 4017 M6X16 | 40 65 099 | 30 | 2 | 2 540 | 91 45 984 08 | HEATING, CRANE CABIN |
| HEX SCREW ISO 4017 M6X16 | 40 65 099 | 5 | 1 | 2 913 004 | 96 20 460 08 | HOUSING PRE-ASSEMBLED |
| HEX SCREW ISO 4017 M6X16 | 40 65 099 | 10 | 3 | 2 920 200 | 91 27 889 08 | ELECTRIC FOR WINCH 1 |

| Description | Item | Pos. | Quantity | Page | Assembly | Description |
|---|---|---|---|---|---|---|
| HEX SCREW ISO 4017 M6X16 | 40 65 099 | 65 | 1 | 2 932 095 | 96 46 064 08 | SWING FRAME FUSE AND RE |
| HEX SCREW ISO 4017 M6X16 | 40 65 099 | 72 | 8 | 2 970 | 91 55 482 08 | HYDRAULICS |
| HEX SCREW ISO 4017 M6X16 | 40 65 099 | 30 | 2 | 3 330 | 91 57 885 08 | MECHANICAL EXTENSION SYS |
| HEX SCREW ISO 4017 M6X20 8 | 11 64 489 9 | 309 | 3 | 2 510 100 | 96 44 750 08 | SLEWING PLATFORM PANELLI |
| HEX SCREW ISO 4017 M6X20 8 | 11 64 489 9 | 24 | 4 | 2 510 200 | 96 41 258 08 | SLEWING PLATFORM PANELLI |
| HEX SCREW ISO 4017 M6X20 8 | 11 64 489 9 | 78 | 15 | 2 520 000 | 91 49 872 08 | CABIN, GLAZED |
| HEX SCREW ISO 4017 M6X20 8 | 11 64 489 9 | 35 | 1 | 2 522 | 91 10 037 08 | DOOR CPL. |
| HEX SCREW ISO 4017 M6X20 8 | 11 64 489 9 | 7 | 11 | 2 571 | 91 50 902 08 | HYDRAULIC BALLASTING |
| HEX SCREW ISO 4017 M6X20 8 | 11 64 489 9 | 66 | 1 | 2 932 042 | 96 68 587 08 | BASE ASSEMBLY |
| HEX SCREW ISO 4017 M6X20 8 | 11 64 489 9 | 66 | 1 | 2 932 095 | 96 46 064 08 | SWING FRAME FUSE AND RE |
| HEX SCREW ISO 4017 M6X20 8 | 11 64 489 9 | 40 | 4 | 2 971 | 91 50 610 08 | HYDR.AUXILIARY HOISTING |
| HEX SCREW ISO 4017 M6X20 | 40 65 326 14 | 150 | 1 | 2 520 000 | 91 49 872 08 | CABIN, GLAZED |
| HEX SCREW ISO 4017 M6X25 8 | 10 87 552 9 | 31 | 2 | 2 501 000 | 91 48 769 08 | CRANE DRIVER'S CABIN,PRE |
| HEX SCREW ISO 4017 M6X25 8 | 10 87 552 9 | 16 | 3 | 2 520 001 | 92 48 796 08 | FRONT WINDOW CPL. |
| HEX SCREW ISO 4017 M6X25 8 | 10 87 552 9 | 25 | 3 | 2 522 | 91 10 037 08 | DOOR CPL. |
| HEX SCREW ISO 4017 M6X25 8 | 10 87 552 9 | 11 | 2 | 2 932 166 | 92 68 911 08 | GROUND RAIL |
| HEX SCREW ISO 4017 M6X25 8 | 10 87 552 9 | 68 | 2 | 3 102 000 | 91 62 543 08 | TELESCOPIC SECTION 1 PRE |
| HEX SCREW ISO 4017 M6X25 8 | 10 87 552 9 | 68 | 2 | 3 103 000 | 91 62 544 08 | TELESCOPIC SECT.2 PRE-AS |
| HEX SCREW ISO 4017 M6X25 8 | 10 87 552 9 | 68 | 2 | 3 104 000 | 91 62 545 08 | TELESCOPIC SECT.3 PRE-ASS |
| HEX SCREW ISO 4017 M6X25 8 | 10 87 552 9 | 68 | 2 | 3 105 000 | 91 62 546 08 | TELESCOPIC SECT.IV PRE-A |
| HEX SCREW ISO 4017 M6X25 8 | 10 87 552 9 | 87 | 4 | 3 501 | 91 05 788 08 | MECH. DOUBLE FOLD JIB PR |
| HEX SCREW ISO 4017 M6X30 | 46 00 102 | 38 | 2 | 2 540 | 91 45 984 08 | HEATING, CRANE CABIN |
| HEX SCREW ISO 4017 M6X30 | 46 00 102 | 5 | 2 | 3 101 | 91 60 312 08 | PIVOT SECTION, PRE-ASSEMB |
| HEX SCREW ISO 4017 M6X30 | 46 00 102 | 15 | 1 | X1011793 | 10 11 793 0 | ACCESSORIES AIR COMPRES |
| HEX SCREW ISO 4017 M6X35 | 49 00 595 | 7 | 2 | 2 501 022 | 96 34 184 08 | COVER COMPL. |
| HEX SCREW ISO 4017 M6X40 | 40 01 998 | 32 | 2 | 2 510 200 | 96 41 258 08 | SLEWING PLATFORM PANELLI |
| HEX SCREW ISO 4017 M6X50 | 46 00 532 | 53 | 2 | 2 102 | 91 51 080 08 | ASSEMBLY PARTS F.SLEWING |
| HEX SCREW ISO 4017 M8X12 8 | 11 69 004 8 | 12 | 3 | 2 540 | 91 45 984 08 | HEATING, CRANE CABIN |
| HEX SCREW ISO 4017 M8X12 8 | 11 69 004 8 | 300 | 8 | 2 984 | 91 52 906 08 | OIL COOLER INSTALLATION |
| HEX SCREW ISO 4017 M8X16 8 | 11 65 161 2 | 307 | 2 | 2 210 | 91 81 614 08 | DRIVE ASSEMBLY, PRE-ASSE |
| HEX SCREW ISO 4017 M8X16 8 | 11 65 161 2 | 300 | 6 | 2 210 008 | 96 48 137 08 | RADIATOR, PRE-ASSEMBLED |
| HEX SCREW ISO 4017 M8X16 8 | 11 65 161 2 | 45 | 4 | 2 440 022 | 96 42 336 08 | WINCH 2 PRE-ASS. |
| HEX SCREW ISO 4017 M8X16 8 | 11 65 161 2 | 13 | 4 | 2 500 | 91 48 594 08 | CRANE DRIVER'S CABIN CPL. |
| HEX SCREW ISO 4017 M8X16 8 | 11 65 161 2 | 132 | 18 | 2 520 000 | 91 49 872 08 | CABIN, GLAZED |
| HEX SCREW ISO 4017 M8X16 8 | 11 65 161 2 | 31 | 12 | 2 522 | 91 10 037 08 | DOOR CPL. |
| HEX SCREW ISO 4017 M8X16 8 | 11 65 161 2 | 30 | 4 | 2 831 | 91 47 871 08 | AIR COND. UNIT SUPERSTRU |
| HEX SCREW ISO 4017 M8X16 8 | 11 65 161 2 | 68 | 9 | 2 932 042 | 96 68 587 08 | BASE ASSEMBLY |
| HEX SCREW ISO 4017 M8X16 8 | 11 65 161 2 | 17 | 4 | 3 100 | 91 59 279 08 | TELESCOPIC BOOM CPL. |
| HEX SCREW ISO 4017 M8X16 8 | 11 65 161 2 | 25 | 3 | 3 100 | 91 59 279 08 | TELESCOPIC BOOM CPL. |
| HEX SCREW ISO 4017 M8X16 8 | 11 65 161 2 | 27 | 15 | 3 101 | 91 60 312 08 | PIVOT SECTION, PRE-ASSEMB |
| HEX SCREW ISO 4017 M8X16 8 | 11 65 161 2 | 4 | 6 | 3 102 000 | 91 62 543 08 | TELESCOPIC SECTION 1 PRE |
| HEX SCREW ISO 4017 M8X16 8 | 11 65 161 2 | 4 | 6 | 3 103 000 | 91 62 544 08 | TELESCOPIC SECT.2 PRE-AS |
| HEX SCREW ISO 4017 M8X16 8 | 11 65 161 2 | 4 | 6 | 3 104 000 | 91 62 545 08 | TELESCOPIC SECT.3 PRE-ASS |
| HEX SCREW ISO 4017 M8X16 8 | 11 65 161 2 | 4 | 4 | 3 105 000 | 91 62 546 08 | TELESCOPIC SECT.IV PRE-A |
| HEX SCREW ISO 4017 M8X16 8 | 11 65 161 2 | 4 | 4 | 3 106 000 | 91 60 313 08 | TELESCOPIC SECT.5 PRE-AS |
| HEX SCREW ISO 4017 M8X16 8 | 11 65 161 2 | 28 | 6 | 3 330 | 91 57 885 08 | MECHANICAL EXTENSION SYS |
| HEX SCREW ISO 4017 M8X16 8 | 11 65 161 2 | 32 | 5 | 3 510 100 | 91 49 246 08 | TRANSPORT MOUNTING |
| HEX SCREW ISO 4017 M8X16 | 40 65 068 08 | 315 | 1 | 2 510 100 | 96 44 750 08 | SLEWING PLATFORM PANELLI |
| HEX SCREW ISO 4017 M8X20 8 | 11 65 176 7 | 20 | 4 | 1 400 200 | 91 53 791 08 | PREPARATION HYDR |
| HEX SCREW ISO 4017 M8X20 8 | 11 65 176 7 | 29 | 2 | 2 102 | 91 51 080 08 | ASSEMBLY PARTS F.SLEWING |
| HEX SCREW ISO 4017 M8X20 8 | 11 65 176 7 | 5 | 2 | 2 102 022 | 96 32 604 08 | LOCKING |
| HEX SCREW ISO 4017 M8X20 8 | 11 65 176 7 | 304 | 8 | 2 210 | 91 81 614 08 | DRIVE ASSEMBLY, PRE-ASSE |
| HEX SCREW ISO 4017 M8X20 8 | 11 65 176 7 | 301 | 13 | 2 210 008 | 96 48 137 08 | RADIATOR, PRE-ASSEMBLED |
| HEX SCREW ISO 4017 M8X20 8 | 11 65 176 7 | 2 | 6 | 2 260 | 91 46 555 08 | BATTERY BOX CPL. |
| HEX SCREW ISO 4017 M8X20 8 | 11 65 176 7 | 27 | 6 | 2 502 | 91 01 533 08 | CONTROL STAND |
| HEX SCREW ISO 4017 M8X20 8 | 11 65 176 7 | 310 | 8 | 2 510 100 | 96 44 750 08 | SLEWING PLATFORM PANELLI |
| HEX SCREW ISO 4017 M8X20 8 | 11 65 176 7 | 10 | 2 | 2 510 200 | 96 41 258 08 | SLEWING PLATFORM PANELLI |
| HEX SCREW ISO 4017 M8X20 8 | 11 65 176 7 | 8 | 8 | 2 515 007 | 96 42 014 08 | PLATFORM, PRE-ASSEMBLED |
| HEX SCREW ISO 4017 M8X20 8 | 11 65 176 7 | 79 | 8 | 2 520 000 | 91 49 872 08 | CABIN, GLAZED |
| HEX SCREW ISO 4017 M8X20 8 | 11 65 176 7 | 28 | 4 | 2 522 | 91 10 037 08 | DOOR CPL. |

| Description | Item | Pos. | Quantity | Page | Assembly | Description |
|---|---|---|---|---|---|---|
| HEX SCREW ISO 4017 M8X20 8 | 11 65 176 7 | 27 | 2 | 2 831 | 91 47 871 08 | AIR COND. UNIT SUPERSTRU |
| HEX SCREW ISO 4017 M8X20 8 | 11 65 176 7 | 21 | 8 | 2 950 | 91 49 515 08 | COMPRESSED-AIR SYST.SU |
| HEX SCREW ISO 4017 M8X20 8 | 11 65 176 7 | 80 | 6 | 2 970 | 91 55 482 08 | HYDRAULICS |
| HEX SCREW ISO 4017 M8X20 8 | 11 65 176 7 | 301 | 4 | 2 984 | 91 52 906 08 | OIL COOLER INSTALLATION |
| HEX SCREW ISO 4017 M8X20 8 | 11 65 176 7 | 28 | 2 | 3 510 100 | 91 49 246 08 | TRANSPORT MOUNTING |
| HEX SCREW ISO 4017 M8X20 8 | 11 65 176 7 | 9 | 2 | 9 077 279 | 90 77 279 | CONNECTING BRANCH ADD-O |
| HEX SCREW ISO 4017 M8X25 8 | 11 64 226 1 | 33 | 4 | 2 102 | 91 51 080 08 | ASSEMBLY PARTS F.SLEWING |
| HEX SCREW ISO 4017 M8X25 8 | 11 64 226 1 | 320 | 8 | 2 210 | 91 81 614 08 | DRIVE ASSEMBLY, PRE-ASSE |
| HEX SCREW ISO 4017 M8X25 8 | 11 64 226 1 | 24 | 16 | 2 501 000 | 91 48 769 08 | CRANE DRIVER'S CABIN,PRE |
| HEX SCREW ISO 4017 M8X25 8 | 11 64 226 1 | 311 | 8 | 2 510 100 | 96 44 750 08 | SLEWING PLATFORM PANELLI |
| HEX SCREW ISO 4017 M8X25 8 | 11 64 226 1 | 14 | 4 | 2 510 200 | 96 41 258 08 | SLEWING PLATFORM PANELLI |
| HEX SCREW ISO 4017 M8X25 8 | 11 64 226 1 | 8 | 2 | 2 932 166 | 92 68 911 08 | GROUND RAIL |
| HEX SCREW ISO 4017 M8X25 | 40 65 076 08 | 313 | 6 | 2 510 100 | 96 44 750 08 | SLEWING PLATFORM PANELLI |
| HEX SCREW ISO 4017 M8X25 | 40 65 901 05 | 158 | 2 | 2 520 000 | 91 49 872 08 | CABIN, GLAZED |
| HEX SCREW ISO 4017 M8X30 8 | 11 82 652 7 | 2 | 8 | 1 100 216 | 96 46 363 08 | MOUNTING PARTS LWE |
| HEX SCREW ISO 4017 M8X30 8 | 11 82 652 7 | 7 | 2 | 2 440 022 | 96 42 336 08 | WINCH 2 PRE-ASS. |
| HEX SCREW ISO 4017 M8X30 8 | 11 82 652 7 | 14 | 4 | 3 100 | 91 59 279 08 | TELESCOPIC BOOM CPL. |
| HEX SCREW ISO 4017 M8X30 8 | 11 82 652 7 | 80 | 3 | 3 101 | 91 60 312 08 | PIVOT SECTION, PRE-ASSEMB |
| HEX SCREW ISO 4017 M8X40 | 49 00 614 | 53 | 4 | 3 501 | 91 05 788 08 | MECH. DOUBLE FOLD JIB PR |
| HEX SCREW ISO 4017 M8X45 | 40 01 667 | 305 | 3 | 2 210 | 91 81 614 08 | DRIVE ASSEMBLY, PRE-ASSE |
| HEX SCREW ISO 4017 M8X60 | 46 00 386 | 29 | 4 | 2 502 | 91 01 533 08 | CONTROL STAND |
| HEX SCREW ISO 4017 M8X80 | 46 00 553 | 33 | 2 | 1 970 | 96 71 367 08 | UNDERCARRIAGE HYDRAULIC |
| HEX SCREW M18X1,9X170 | 91 75 902 | 5 | 10 | X1011577 | 10 11 577 6 | CRANKCASE |
| HEX SCREW M3X0,5X9,1 | 10 04 040 5 | (8) | 2 | X1011683 | 10 11 683 9 | INJECTION PUMP ASSEMBLY |
| HEXAGON KEY DIN 911 10 GLA | 79 00 212 08 | 34 | 1 | 1 750 001 | 92 85 698 08 | MAIN TOOLS |
| HEXAGON KEY DIN 911 12 GLA | 79 00 213 08 | 35 | 1 | 1 750 001 | 92 85 698 08 | MAIN TOOLS |
| HEXAGON KEY DIN 911 4 GLA | 79 00 216 08 | 30 | 1 | 1 750 001 | 92 85 698 08 | MAIN TOOLS |
| HEXAGON KEY DIN 911 5 GLA | 79 00 200 08 | 31 | 1 | 1 750 001 | 92 85 698 08 | MAIN TOOLS |
| HEXAGON KEY DIN 911 6 GLA | 79 00 201 08 | 32 | 1 | 1 750 001 | 92 85 698 08 | MAIN TOOLS |
| HEXAGON KEY DIN 911 8 GLA | 79 00 210 08 | 33 | 1 | 1 750 001 | 92 85 698 08 | MAIN TOOLS |
| HEXALOBULAR HEAD SCREW | 10 11 878 6 | 10 | 6 | 9 080 591 | 90 80 591 | CRANKSHAFT ADD-ON PARTS |
| HEXALOBULAR HEAD SCREW | 10 11 891 0 | 4 | 10 | 9 077 238 | 90 77 238 | FLYWHEEL ASSEMBLY |
| HIGH PRESSURE CONNECT | 90 75 395 | 191 | 1 | X1011585 | 10 11 585 4 | SEAL KIT INJECTION NOZZLE |
| HIGH PRESSURE CONNECT | 90 75 395 | 191 | 1 | X1011709 | 10 11 709 3 | RK INJECTION NOZZLE |
| HIGH PRESSURE CONNECT | 90 75 395 | 191 | 4 | X1012193 | 10 12 193 2 | BASIC ENGINE |
| HIGH PRESSURE CONNECTO | 90 74 677 | 1 | 1 | 9 075 395 | 90 75 395 | HIGH PRESSURE CONNECT |
| HIGHT FIXATION DEVICE EN | 11 00 730 9 | 2 | 1 | 1 793 010 | 91 69 598 08 | PERSONAL PROTECTION EQ |
| HINGE 20X20X40/180° GD-ZN S | 70 42 582 08 | 4 | 2 | 2 520 021 | 92 17 203 08 | INSTRUMENT BOX DELIVERY |
| HINGE 35X35X50/180° NIROS | 10 29 468 4 | 4 | 2 | 2 515 007 | 96 42 014 08 | PLATFORM, PRE-ASSEMBLED |
| HINGE 35X35X50/180° ST FE// | 70 42 281 08 | 2 | 3 | 2 510 072 | 96 44 614 08 | FLAP RIGHT PRE-ASS. |
| HINGE 35X35X50/180° ST FE// | 70 42 281 08 | 2 | 3 | 2 510 201 | 96 42 011 08 | FLAP PRE-ASS. |
| HINGE 35X35X50/180° ST FE// | 70 42 281 08 | 3 | 1 | 3 750 026 | 96 89 407 08 | HOLDER LEFT |
| HINGE 35X35X50/180° ST FE// | 70 42 281 08 | 3 | 1 | 3 750 028 | 96 89 408 08 | HOLDER RIGHT |
| HOIST CYLINDERS 73,15/66,55 | 79 00 388 08 | 84 | 1 | 3 501 | 91 05 788 08 | MECH. DOUBLE FOLD JIB PR |
| HOIST LIM.SWITCH PLUMMET | 96 57 037 08 | 2 | 1 | 2 442 | 91 62 290 08 | AUXILIARY HOIST.ROPE W.A |
| HOIST LIM.SWITCH PLUMMET | 96 57 037 08 | 50 | 1 | 3 106 000 | 91 60 313 08 | TELESCOPIC SECT.5 PRE-AS |
| HOIST ROPE 21X205M -40°C | 10 81 612 5 | 1 | 1 | 2 442 | 91 62 290 08 | AUXILIARY HOIST.ROPE W.A |
| HOIST ROPE 21X205M -40°C | 10 81 612 5 | 1 | 1 | 2 451 | 91 62 289 08 | ROPE WITH ACCESSORIES 1 |
| HOIST ROPE GUIDE PIVOT PI | 96 64 471 08 | 3 | 1 | 3 101 | 91 60 312 08 | PIVOT SECTION, PRE-ASSEMB |
| HOLDER | 10 12 028 4 | 13 | 1 | X1011998 | 10 11 998 0 | CABLE HARNESS MOUNTING |
| HOLDER | 38 00 199 08 | 8 | 1 | 2 520 000 | 91 49 872 08 | CABIN, GLAZED |
| HOLDER | 38 00 201 08 | 10 | 1 | 2 520 000 | 91 49 872 08 | CABIN, GLAZED |
| HOLDER | 60 72 246 08 | 25 | 1 | 2 520 000 | 91 49 872 08 | CABIN, GLAZED |
| HOLDER | 91 90 328 14 | 2 | 1 | 1 630 002 | 99 06 183 14 | TRANSPORT SUPPORT |
| HOLDER | 96 36 933 08 | 6 | 1 | 2 501 000 | 91 48 769 08 | CRANE DRIVER'S CABIN,PRE |
| HOLDER | 96 47 649 08 | 1 | 1 | 1 630 002 | 99 06 183 14 | TRANSPORT SUPPORT |
| HOLDER 3X272X326 DC01 FE// | 95 50 448 08 | 21 | 1 | 3 330 | 91 57 885 08 | MECHANICAL EXTENSION SYS |
| HOLDER 3X272X501 DC01 FE// | 95 50 449 08 | 22 | 1 | 3 330 | 91 57 885 08 | MECHANICAL EXTENSION SYS |
| HOLDER 40X80X40 G-ALMG3 | 97 94 895 08 | 3 | 1 | 2 790 040 | 91 60 499 08 | MIRROR ATTACHM.IN CRANE |
| HOLDER 4X186X408 S315MC | 95 38 436 08 | 9 | 1 | 3 330 | 91 57 885 08 | MECHANICAL EXTENSION SYS |

| Description | Item | Pos. | Quantity | Page | Assembly | Description |
|---|---|---|---|---|---|---|
| HOLDER D934 | 10 11 988 5 | 3 | 1 | X1011989 | 10 11 989 1 | FUEL-PREFILTER ASS. |
| HOLDER D934 S355J0 | 10 11 572 9 | 2 | 1 | X1011989 | 10 11 989 1 | FUEL-PREFILTER ASS. |
| HOLDER FE//ZNNI8//CN//T0 | 96 31 781 08 | 9 | 2 | 2 510 200 | 96 41 258 08 | SLEWING PLATFORM PANELLI |
| HOLDER LEFT | 96 89 407 08 | 2 | 1 | 3 750 008 | 91 75 085 08 | LADDER ATTACHMENT |
| HOLDER PRE-ASSEMBLY FE// | 96 22 070 08 | 24 | 1 | 2 102 | 91 51 080 08 | ASSEMBLY PARTS F.SLEWING |
| HOLDER RIGHT | 96 89 408 08 | 4 | 1 | 3 750 008 | 91 75 085 08 | LADDER ATTACHMENT |
| HOLDER S235JR | 10 11 836 3 | 62 | 1 | X1011998 | 10 11 998 0 | CABLE HARNESS MOUNTING |
| HOLDER X12CRNIS188 | 96 53 717 08 | 1 | 1 | 3 920 012 | 96 57 224 08 | LIMIT SWITCH ADD-ON |
| HOLDER X5CrNi18-10 | 90 80 038 | 9 | 1 | X1011998 | 10 11 998 0 | CABLE HARNESS MOUNTING |
| HOLDING RING 170X90X5 S23 | 94 44 408 03 | 16 | 1 | 9 444 410 | 94 44 410 03 | TRACTION DRIVE |
| HOLLOW KEY | 70 42 711 08 | 7 | 2 | 1 750 002 | 92 86 201 08 | ACCESSORIES |
| HOLLOW KEY | 70 42 711 08 | 39 | 1 | 2 510 200 | 96 41 258 08 | SLEWING PLATFORM PANELLI |
| HOLLOW SCREW 10X1X27 11S | 90 80 466 | 3 | 3 | 9 079 092 | 90 79 092 | PIPELINE INSTALLATION |
| HOLLOW SCREW 10X3 St Rm> | 90 78 685 | 42 | 1 | X1011573 | 10 11 573 7 | FUEL LINES |
| HOLLOW SCREW 11SMnPb30+ | 90 73 678 | 5 | 1 | 9 073 795 | 90 73 795 | PISTON COOLING |
| HOLLOW SCREW DIN 74305 22 | 50 29 401 08 | 7 | 1 | 2 270 001 | 96 37 923 08 | FUEL TANK, PRE-ASSEMBLED |
| HOLLOW SCREW DIN 74305 22 | 50 29 401 08 | 30 | 3 | 2 950 | 91 49 515 08 | COMPRESSED-AIR SYST.SU |
| HOLLOW SCREW DIN 7643 10X | 40 79 240 | 7 | 1 | X1011569 | 10 11 569 6 | LEAK OIL RETURN LINE |
| HOLLOW SCREW DIN 7643 10X | 40 79 240 | 26 | 1 | X1011573 | 10 11 573 7 | FUEL LINES |
| HOLLOW SCREW DIN 7643 12X | 49 80 741 | 30 | 3 | X1011573 | 10 11 573 7 | FUEL LINES |
| HOLLOW SCREW DIN 7643 12X | 49 80 741 | 4 | 4 | X1011793 | 10 11 793 0 | ACCESSORIES AIR COMPRES |
| HOLLOW SCREW DIN 7643 6-3- | 55 31 068 08 | 4 | 3 | X1011569 | 10 11 569 6 | LEAK OIL RETURN LINE |
| HOLLOW SCREW DIN 7643 6-3- | 55 31 068 08 | 9 | 1 | X1011793 | 10 11 793 0 | ACCESSORIES AIR COMPRES |
| HOLLOW SCREW WITH THROT | 73 81 925 | 28 | 2 | X1011573 | 10 11 573 7 | FUEL LINES |
| HOOD | 57 15 562 08 | (3) | 1 | 2 920 585 | 91 01 520 08 | ELECTRIC FOR FLASHLIGHT |
| HOOD 2X357X267 DC01 FE//ZN | 95 05 190 08 | 34 | 1 | 3 100 | 91 59 279 08 | TELESCOPIC BOOM CPL. |
| HOOK BLOCK 63DM SPF | 91 04 457 08 | 312 | 1 | | LTR 1100 -0 | LIEBHERR LTR 1100 |
| HOOK ROD | 92 95 299 08 | 1 | 1 | 3 750 027 | 96 89 527 08 | MOUNTING HOOK ROD |
| HORN 24V | 61 40 031 08 | 16 | 1 | 2 533 003 | 96 28 388 08 | ELECTRIC ADD-ON PARTS CA |
| HOSE 15/18 | 55 31 734 08 | 16 | 3 | 2 540 | 91 45 984 08 | HEATING, CRANE CABIN |
| HOSE 3200 | 51 05 013 08 | 58 | 2 | 2 970 | 91 55 482 08 | HYDRAULICS |
| HOSE 3200 | 51 05 013 08 | 22 | 1 | 2 971 | 91 50 610 08 | HYDR.AUXILIARY HOISTING |
| HOSE CLAMP 120/110-130/12 | 77 42 176 08 | 110 | 4 | 2 681 | 91 28 102 08 | AIR FILTER UNIT |
| HOSE CLAMP 130/120-140/12 | 77 42 842 08 | 111 | 2 | 2 681 | 91 28 102 08 | AIR FILTER UNIT |
| HOSE CLAMP 21/16-27/12 W3 | 11 11 807 7 | 17 | 16 | 2 540 | 91 45 984 08 | HEATING, CRANE CABIN |
| HOSE CLAMP 26/20-32/12 W3 | 77 42 150 08 | 4 | 2 | X1011766 | 10 11 766 5 | PIPELINE |
| HOSE CLAMP 26/20-32/12 W3 | 77 42 150 08 | 12 | 6 | X1011914 | 10 11 914 1 | CRANKCASE BREATHER ASS |
| HOSE CLAMP 26/20-32/12 W3 | 77 42 150 08 | 25 | 2 | X1011989 | 10 11 989 7 | RK OIL RETURN PIPE |
| HOSE CLAMP 32/25-40/12 W3 | 77 42 085 08 | 181 | 2 | 2 200 | 91 81 095 08 | DRIVE ASSEMBLY CPL. |
| HOSE CLAMP 40-60 W3 | 55 08 380 08 | 184 | 2 | 2 200 | 91 81 095 08 | DRIVE ASSEMBLY CPL. |
| HOSE CLAMP 40-60 W3 | 55 08 380 08 | 184 | 2 | 2 210 | 91 81 614 08 | DRIVE ASSEMBLY, PRE-ASSE |
| HOSE CLAMP 41/35-50/12 W3 | 55 08 495 08 | 183 | 2 | 2 210 | 91 81 614 08 | DRIVE ASSEMBLY, PRE-ASSE |
| HOSE CLAMP 60/50-70/12 W3 | 77 42 080 08 | 180 | 2 | 2 210 | 91 81 614 08 | DRIVE ASSEMBLY, PRE-ASSE |
| HOSE CLAMP 60/50-70/12 W3 | 77 42 080 08 | 32 | 4 | 2 502 | 91 01 533 08 | CONTROL STAND |
| HOSE CLAMP 70/60-80/12 W3 | 77 42 143 08 | 181 | 2 | 2 210 | 91 81 614 08 | DRIVE ASSEMBLY, PRE-ASSE |
| HOSE CLAMP 80/70-90/12 W3 | 77 42 064 08 | 182 | 4 | 2 210 | 91 81 614 08 | DRIVE ASSEMBLY, PRE-ASSE |
| HOSE CLAMP 80/70-90/12 W3 | 77 42 064 08 | 19 | 1 | 2 540 | 91 45 984 08 | HEATING, CRANE CABIN |
| HOSE CLAMP 89-94X25 ST | 77 42 252 08 | 112 | 4 | 2 680 | 91 53 225 08 | EXHAUST SYSTEM CPL. |
| HOSE CLAMP DIN 3017-1 12-22 | 10 87 202 2 | 182 | 4 | 2 200 | 91 81 095 08 | DRIVE ASSEMBLY CPL. |
| HOSE CLAMP DIN 3017-1 12-22 | 10 87 202 2 | 42 | 2 | 2 540 | 91 45 984 08 | HEATING, CRANE CABIN |
| HOSE CLAMP DIN 3017-1 12-22 | 10 87 202 2 | 15 | 1 | 2 920 574 | 96 36 055 08 | OPERATOR PANEL BALLAST |
| HOSE CLAMP DIN 3017-1 12-22 | 10 87 202 2 | 15 | 1 | 2 920 904 | 96 41 093 08 | CONTROL DESK SUPPORT |
| HOSE CLAMP DIN 3017-1 12-22 | 10 87 202 2 | 44 | 1 | 2 971 | 91 50 610 08 | HYDR.AUXILIARY HOISTING |
| HOSE CLAMP DIN 3017-1 8-16 | 10 87 202 4 | 183 | 2 | 2 200 | 91 81 095 08 | DRIVE ASSEMBLY CPL. |
| HOSE CLAMP DIN 3017-2 17/16 | 49 81 029 | 19 | 2 | X1011914 | 10 11 914 1 | CRANKCASE BREATHER ASS |
| HOSE CLAMP DIN 3017-3 108/ | 77 42 238 08 | 180 | 1 | 2 200 | 91 81 095 08 | DRIVE ASSEMBLY CPL. |
| HOSE CLAMP DIN 3017-3 108/ | 77 42 238 08 | 185 | 1 | 2 210 | 91 81 614 08 | DRIVE ASSEMBLY, PRE-ASSE |
| HOSE CPL. 1SC 0,4M | 92 60 969 08 | 321 | 1 | 2 997 | 91 51 089 08 | HOSE LINES SUPERSTRUCT |
| HOSE CPL. 1SC 0,54M | 96 23 339 08 | 320 | 1 | 2 997 | 91 51 089 08 | HOSE LINES SUPERSTRUCT |
| HOSE CPL. 1SC 0,7M | 92 87 618 08 | 316 | 1 | 2 997 | 91 51 089 08 | HOSE LINES SUPERSTRUCT |

| Description | Item | Pos. | Quantity | Page | Assembly | Description |
|---|---|---|---|---|---|---|
| HOSE CPL. 1SC 8X1040 | 92 60 492 08 | 319 | 1 | 2 997 | 91 51 089 08 | HOSE LINES SUPERSTRUCT |
| HOSE CPL. 1SC 8X1160 | 92 76 807 08 | 344 | 1 | 2 997 | 91 51 089 08 | HOSE LINES SUPERSTRUCT |
| HOSE CPL. 1SC 8X2300 | 92 61 197 08 | 377 | 1 | 2 970 061 | 96 43 131 08 | HOSE LINES ADDITIONAL PA |
| HOSE CPL. 1SC 8X2500 | 92 63 748 08 | 328 | 1 | 2 997 | 91 51 089 08 | HOSE LINES SUPERSTRUCT |
| HOSE CPL. 1SC 8X3000 | 92 60 719 08 | 209 | 1 | 2 997 | 91 51 089 08 | HOSE LINES SUPERSTRUCT |
| HOSE CPL. 1SC 8X320 | 92 60 418 08 | 210 | 1 | 2 997 | 91 51 089 08 | HOSE LINES SUPERSTRUCT |
| HOSE CPL. 1SC 8X360 | 92 63 787 08 | 254 | 1 | 2 971 012 | 96 43 144 08 | HOSE LINES HOISTING GEAR |
| HOSE CPL. 1SC 8X560 | 92 60 975 08 | 367 | 1 | 2 997 | 91 51 089 08 | HOSE LINES SUPERSTRUCT |
| HOSE CPL. 1SC 8X660 | 92 61 198 08 | 325 | 1 | 2 997 | 91 51 089 08 | HOSE LINES SUPERSTRUCT |
| HOSE CPL. 1SC 8X820 | 96 28 609 08 | 326 | 1 | 2 997 | 91 51 089 08 | HOSE LINES SUPERSTRUCT |
| HOSE CPL. 1SC 8X960 | 96 36 981 08 | 306 | 1 | 2 997 | 91 51 089 08 | HOSE LINES SUPERSTRUCT |
| HOSE CPL. 1SN 25X1900 | 92 99 226 08 | 329 | 1 | 2 997 | 91 51 089 08 | HOSE LINES SUPERSTRUCT |
| HOSE CPL. 1SN 25X2900 | 92 97 210 08 | 394 | 1 | 2 997 | 91 51 089 08 | HOSE LINES SUPERSTRUCT |
| HOSE CPL. 1SN 25X800 | 92 96 415 08 | 206 | 1 | 2 997 | 91 51 089 08 | HOSE LINES SUPERSTRUCT |
| HOSE CPL. 1SN 32X350 | 96 39 197 08 | 333 | 1 | 2 997 | 91 51 089 08 | HOSE LINES SUPERSTRUCT |
| HOSE CPL. 1SN 32X450 | 96 35 995 08 | 383 | 1 | 2 971 012 | 96 43 144 08 | HOSE LINES HOISTING GEAR |
| HOSE CPL. 2755 12X2180 | 96 43 246 08 | 101 | 1 | 1 997 | 91 53 489 08 | HOSE LINES CRAWLER |
| HOSE CPL. 2755 12X2300 | 92 20 994 08 | 115 | 1 | 1 997 | 91 53 489 08 | HOSE LINES CRAWLER |
| HOSE CPL. 2755 12X2750 | 92 24 172 08 | 140 | 1 | 1 997 | 91 53 489 08 | HOSE LINES CRAWLER |
| HOSE CPL. 2755 12X2850 | 92 19 740 08 | 395 | 1 | 2 997 | 91 51 089 08 | HOSE LINES SUPERSTRUCT |
| HOSE CPL. 2755 12X3550 | 96 43 260 08 | 136 | 1 | 1 997 | 91 53 489 08 | HOSE LINES CRAWLER |
| HOSE CPL. 2755 12X480 | 92 37 099 08 | 374 | 1 | 2 970 061 | 96 43 131 08 | HOSE LINES ADDITIONAL PA |
| HOSE CPL. 2755 12X600 | 92 28 852 08 | 373 | 1 | 2 970 061 | 96 43 131 08 | HOSE LINES ADDITIONAL PA |
| HOSE CPL. 2755 16X3000 | 92 53 428 08 | 309 | 1 | 2 997 | 91 51 089 08 | HOSE LINES SUPERSTRUCT |
| HOSE CPL. 2755 16X450 | 96 43 254 08 | 116 | 1 | 1 997 | 91 53 489 08 | HOSE LINES CRAWLER |
| HOSE CPL. 2755 25X1900 | 96 43 249 08 | 106 | 1 | 1 997 | 91 53 489 08 | HOSE LINES CRAWLER |
| HOSE CPL. 2755 25X1950 | 96 43 251 08 | 108 | 1 | 1 997 | 91 53 489 08 | HOSE LINES CRAWLER |
| HOSE CPL. 2755 25X2050 | 96 43 250 08 | 107 | 1 | 1 997 | 91 53 489 08 | HOSE LINES CRAWLER |
| HOSE CPL. 2755 25X2100 | 96 43 253 08 | 110 | 1 | 1 997 | 91 53 489 08 | HOSE LINES CRAWLER |
| HOSE CPL. 2755 25X2100 | 96 43 253 08 | 111 | 1 | 1 997 | 91 53 489 08 | HOSE LINES CRAWLER |
| HOSE CPL. 2755 25X2100 | 96 43 253 08 | 112 | 1 | 1 997 | 91 53 489 08 | HOSE LINES CRAWLER |
| HOSE CPL. 2755 25X2100 | 96 43 253 08 | 113 | 1 | 1 997 | 91 53 489 08 | HOSE LINES CRAWLER |
| HOSE CPL. 2755 25X2150 | 96 43 252 08 | 109 | 1 | 1 997 | 91 53 489 08 | HOSE LINES CRAWLER |
| HOSE CPL. 2755 25X2210 | 96 43 264 08 | 141 | 1 | 1 997 | 91 53 489 08 | HOSE LINES CRAWLER |
| HOSE CPL. 2755 25X2350 | 96 43 263 08 | 139 | 1 | 1 997 | 91 53 489 08 | HOSE LINES CRAWLER |
| HOSE CPL. 2755 25X2960 | 96 43 258 08 | 134 | 1 | 1 997 | 91 53 489 08 | HOSE LINES CRAWLER |
| HOSE CPL. 2755 25X3040 | 96 43 259 08 | 135 | 1 | 1 997 | 91 53 489 08 | HOSE LINES CRAWLER |
| HOSE CPL. 2755 3,5M | 92 22 980 08 | 114 | 1 | 1 997 | 91 53 489 08 | HOSE LINES CRAWLER |
| HOSE CPL. 2SN 1,2M | 92 68 722 08 | 121 | 1 | 1 997 | 91 53 489 08 | HOSE LINES CRAWLER |
| HOSE CPL. 2SN 1,55M | 92 80 069 08 | 128 | 1 | 1 997 | 91 53 489 08 | HOSE LINES CRAWLER |
| HOSE CPL. 2SN 1,55M | 92 80 069 08 | 129 | 1 | 1 997 | 91 53 489 08 | HOSE LINES CRAWLER |
| HOSE CPL. 2SN 10X1480 | 96 43 275 08 | 181 | 1 | 1 400 201 | 96 43 983 08 | HOSE LINES SUPPORT SYSTE |
| HOSE CPL. 2SN 10X2000 | 96 22 417 08 | 365 | 1 | 2 997 | 91 51 089 08 | HOSE LINES SUPERSTRUCT |
| HOSE CPL. 2SN 10X2190 | 96 43 257 08 | 130 | 1 | 1 997 | 91 53 489 08 | HOSE LINES CRAWLER |
| HOSE CPL. 2SN 10X2190 | 96 43 257 08 | 132 | 1 | 1 997 | 91 53 489 08 | HOSE LINES CRAWLER |
| HOSE CPL. 2SN 10X3300 | 96 43 280 08 | 187 | 1 | 1 400 201 | 96 43 983 08 | HOSE LINES SUPPORT SYSTE |
| HOSE CPL. 2SN 10X3360 | 96 43 277 08 | 183 | 1 | 1 400 201 | 96 43 983 08 | HOSE LINES SUPPORT SYSTE |
| HOSE CPL. 2SN 10X3620 | 92 46 186 08 | 117 | 1 | 1 997 | 91 53 489 08 | HOSE LINES CRAWLER |
| HOSE CPL. 2SN 10X3830 | 96 43 279 08 | 185 | 1 | 1 400 201 | 96 43 983 08 | HOSE LINES SUPPORT SYSTE |
| HOSE CPL. 2SN 10X3830 | 96 43 279 08 | 186 | 1 | 1 400 201 | 96 43 983 08 | HOSE LINES SUPPORT SYSTE |
| HOSE CPL. 2SN 10X500 | 92 76 121 08 | 131 | 1 | 1 997 | 91 53 489 08 | HOSE LINES CRAWLER |
| HOSE CPL. 2SN 10X500 | 92 76 121 08 | 133 | 1 | 1 997 | 91 53 489 08 | HOSE LINES CRAWLER |
| HOSE CPL. 2SN 10X5000 | 92 93 288 08 | 118 | 1 | 1 997 | 91 53 489 08 | HOSE LINES CRAWLER |
| HOSE CPL. 2SN 10X5600 | 96 36 980 08 | 301 | 1 | 2 997 | 91 51 089 08 | HOSE LINES SUPERSTRUCT |
| HOSE CPL. 2SN 10X730 | 96 43 278 08 | 184 | 1 | 1 400 201 | 96 43 983 08 | HOSE LINES SUPPORT SYSTE |
| HOSE CPL. 2SN 10X730 | 96 43 278 08 | 188 | 1 | 1 400 201 | 96 43 983 08 | HOSE LINES SUPPORT SYSTE |
| HOSE CPL. 2SN 10X750 | 96 43 245 08 | 100 | 1 | 1 997 | 91 53 489 08 | HOSE LINES CRAWLER |
| HOSE CPL. 2SN 10X790 | 96 43 276 08 | 182 | 1 | 1 400 201 | 96 43 983 08 | HOSE LINES SUPPORT SYSTE |
| HOSE CPL. 2SN 10X790 | 96 43 276 08 | 189 | 1 | 1 400 201 | 96 43 983 08 | HOSE LINES SUPPORT SYSTE |
| HOSE CPL. 2SN 10X850 | 96 43 256 08 | 126 | 1 | 1 997 | 91 53 489 08 | HOSE LINES CRAWLER |

| Description | Item | Pos. | Quantity | Page | Assembly | Description |
|---|---|---|---|---|---|---|
| HOSE CPL. 2SN 10X850 | 96 43 256 08 | 127 | 1 | 1 997 | 91 53 489 08 | HOSE LINES CRAWLER |
| HOSE CPL. 2SN 10X900 | 92 92 213 08 | 387 | 1 | 2 971 012 | 96 43 144 08 | HOSE LINES HOISTING GEAR |
| HOSE CPL. 2SN 12X1200 | 92 76 318 08 | 312 | 1 | 2 997 | 91 51 089 08 | HOSE LINES SUPERSTRUCT |
| HOSE CPL. 2SN 12X1200 | 92 76 318 08 | 364 | 1 | 2 997 | 91 51 089 08 | HOSE LINES SUPERSTRUCT |
| HOSE CPL. 2SN 12X1240 | 92 76 166 08 | 204 | 1 | 2 997 | 91 51 089 08 | HOSE LINES SUPERSTRUCT |
| HOSE CPL. 2SN 12X1300 | 96 33 364 08 | 302 | 1 | 2 997 | 91 51 089 08 | HOSE LINES SUPERSTRUCT |
| HOSE CPL. 2SN 12X1340 | 96 33 363 08 | 363 | 1 | 2 997 | 91 51 089 08 | HOSE LINES SUPERSTRUCT |
| HOSE CPL. 2SN 12X1750 | 92 76 783 08 | 362 | 1 | 2 997 | 91 51 089 08 | HOSE LINES SUPERSTRUCT |
| HOSE CPL. 2SN 12X220 | 92 14 394 08 | 201 | 1 | 2 997 | 91 51 089 08 | HOSE LINES SUPERSTRUCT |
| HOSE CPL. 2SN 12X3000 | 92 45 055 08 | 486 | 1 | 2 997 | 91 51 089 08 | HOSE LINES SUPERSTRUCT |
| HOSE CPL. 2SN 12X3000 | 92 76 847 08 | 211 | 1 | 2 997 | 91 51 089 08 | HOSE LINES SUPERSTRUCT |
| HOSE CPL. 2SN 12X380 | 92 76 316 08 | 262 | 1 | 2 970 103 | 96 43 157 08 | HOSE LINES OIL COOLER |
| HOSE CPL. 2SN 16X1580 | 96 43 274 08 | 180 | 1 | 1 400 201 | 96 43 983 08 | HOSE LINES SUPPORT SYSTE |
| HOSE CPL. 2SN 6X11750 | 96 22 580 08 | (456) | 1 | 2 975 038 | 91 26 492 08 | ADDNL.HYDR. FOLDING JIB |
| HOSE CPL. 2SN 6X1180 | 92 09 786 08 | 384 | 1 | 2 971 012 | 96 43 144 08 | HOSE LINES HOISTING GEAR |
| HOSE CPL. 2SN 6X11900 | 96 22 582 08 | (455) | 1 | 2 975 038 | 91 26 492 08 | ADDNL.HYDR. FOLDING JIB |
| HOSE CPL. 2SN 6X1200 | 92 09 752 08 | 337 | 1 | 2 997 | 91 51 089 08 | HOSE LINES SUPERSTRUCT |
| HOSE CPL. 2SN 6X1650 | 92 93 155 08 | 85 | 1 | 3 501 | 91 05 788 08 | MECH. DOUBLE FOLD JIB PR |
| HOSE CPL. 2SN 6X190 | 96 55 621 08 | 279 | 1 | 2 997 | 91 51 089 08 | HOSE LINES SUPERSTRUCT |
| HOSE CPL. 2SN 6X280 | 96 24 749 08 | 366 | 1 | 2 997 | 91 51 089 08 | HOSE LINES SUPERSTRUCT |
| HOSE CPL. 2SN 6X2900 | 96 22 573 08 | 485 | 1 | 2 997 | 91 51 089 08 | HOSE LINES SUPERSTRUCT |
| HOSE CPL. 2SN 6X380 | 96 35 996 08 | 257 | 1 | 2 971 012 | 96 43 144 08 | HOSE LINES HOISTING GEAR |
| HOSE CPL. 2SN 6X400 | 92 24 554 08 | 305 | 1 | 2 997 | 91 51 089 08 | HOSE LINES SUPERSTRUCT |
| HOSE CPL. 2SN 6X540 | 92 09 842 08 | 396 | 1 | 2 997 | 91 51 089 08 | HOSE LINES SUPERSTRUCT |
| HOSE CPL. 2SN 6X540 | 96 36 999 08 | 397 | 1 | 2 997 | 91 51 089 08 | HOSE LINES SUPERSTRUCT |
| HOSE CPL. 2SN 6X660 | 92 26 459 08 | 331 | 1 | 2 997 | 91 51 089 08 | HOSE LINES SUPERSTRUCT |
| HOSE CPL. 2SN 6X760 | 92 07 273 08 | 330 | 1 | 2 997 | 91 51 089 08 | HOSE LINES SUPERSTRUCT |
| HOSE CPL. 2SN 6X870 | 96 43 262 08 | 138 | 1 | 1 997 | 91 53 489 08 | HOSE LINES CRAWLER |
| HOSE CPL. 2SN 6X870 | 96 43 262 08 | 142 | 1 | 1 997 | 91 53 489 08 | HOSE LINES CRAWLER |
| HOSE CPL. 2SN 8X1300 | 96 36 982 08 | 313 | 1 | 2 997 | 91 51 089 08 | HOSE LINES SUPERSTRUCT |
| HOSE CPL. 2SN 8X13000 | 92 51 852 08 | 10 | 1 | 2 792 | 91 52 291 08 | DISPATCH ASSY.MECH.PART |
| HOSE CPL. 2SN 8X13000 | 92 51 853 08 | 11 | 1 | 2 792 | 91 52 291 08 | DISPATCH ASSY.MECH.PART |
| HOSE CPL. 2SN 8X1400 | 92 96 389 08 | 358 | 1 | 2 997 | 91 51 089 08 | HOSE LINES SUPERSTRUCT |
| HOSE CPL. 2SN 8X1550 | 96 36 995 08 | 359 | 1 | 2 997 | 91 51 089 08 | HOSE LINES SUPERSTRUCT |
| HOSE CPL. 2SN 8X1600 | 96 22 416 08 | 361 | 1 | 2 997 | 91 51 089 08 | HOSE LINES SUPERSTRUCT |
| HOSE CPL. 2SN 8X1700 | 96 21 863 08 | 360 | 1 | 2 997 | 91 51 089 08 | HOSE LINES SUPERSTRUCT |
| HOSE CPL. 2SN 8X1750 | 92 88 756 08 | 381 | 1 | 2 971 012 | 96 43 144 08 | HOSE LINES HOISTING GEAR |
| HOSE CPL. 2SN 8X2250 | 96 35 930 08 | 104 | 1 | 1 997 | 91 53 489 08 | HOSE LINES CRAWLER |
| HOSE CPL. 2SN 8X2280 | 96 43 247 08 | 102 | 1 | 1 997 | 91 53 489 08 | HOSE LINES CRAWLER |
| HOSE CPL. 2SN 8X2300 | 96 43 248 08 | 105 | 1 | 1 997 | 91 53 489 08 | HOSE LINES CRAWLER |
| HOSE CPL. 2SN 8X2300 | 96 43 255 08 | 119 | 1 | 1 997 | 91 53 489 08 | HOSE LINES CRAWLER |
| HOSE CPL. 2SN 8X2350 | 92 96 140 08 | 103 | 1 | 1 997 | 91 53 489 08 | HOSE LINES CRAWLER |
| HOSE CPL. 2SN 8X260 | 92 15 367 08 | 484 | 1 | 2 997 | 91 51 089 08 | HOSE LINES SUPERSTRUCT |
| HOSE CPL. 2SN 8X2650 | 96 42 744 08 | 143 | 1 | 1 997 | 91 53 489 08 | HOSE LINES CRAWLER |
| HOSE CPL. 2SN 8X280 | 96 37 000 08 | 398 | 2 | 2 997 | 91 51 089 08 | HOSE LINES SUPERSTRUCT |
| HOSE CPL. 2SN 8X3100 | 92 26 464 08 | 122 | 1 | 1 997 | 91 53 489 08 | HOSE LINES CRAWLER |
| HOSE CPL. 2SN 8X330 | 92 93 614 08 | 483 | 1 | 2 997 | 91 51 089 08 | HOSE LINES SUPERSTRUCT |
| HOSE CPL. 2SN 8X3450 | 96 43 261 08 | 137 | 1 | 1 997 | 91 53 489 08 | HOSE LINES CRAWLER |
| HOSE CPL. 2SN 8X350 | 92 66 576 08 | 256 | 1 | 2 971 012 | 96 43 144 08 | HOSE LINES HOISTING GEAR |
| HOSE CPL. 2SN 8X360 | 96 36 979 08 | 375 | 1 | 2 970 061 | 96 43 131 08 | HOSE LINES ADDITIONAL PA |
| HOSE CPL. 2SN 8X4500 | 92 96 484 08 | 354 | 1 | 2 997 | 91 51 089 08 | HOSE LINES SUPERSTRUCT |
| HOSE CPL. 2SN 8X4500 | 92 96 484 08 | 356 | 1 | 2 997 | 91 51 089 08 | HOSE LINES SUPERSTRUCT |
| HOSE CPL. 2SN 8X5900 | 96 36 994 08 | 357 | 1 | 2 997 | 91 51 089 08 | HOSE LINES SUPERSTRUCT |
| HOSE CPL. 2SN 8X600 | 92 80 058 08 | 124 | 1 | 1 997 | 91 53 489 08 | HOSE LINES CRAWLER |
| HOSE CPL. 2SN 8X600 | 92 96 305 08 | 120 | 1 | 1 997 | 91 53 489 08 | HOSE LINES CRAWLER |
| HOSE CPL. 2SN 8X600 | 92 96 305 08 | 123 | 1 | 1 997 | 91 53 489 08 | HOSE LINES CRAWLER |
| HOSE CPL. 2SN 8X6100 | 96 36 993 08 | 355 | 1 | 2 997 | 91 51 089 08 | HOSE LINES SUPERSTRUCT |
| HOSE CPL. 2SN 8X960 | 92 06 102 08 | 376 | 1 | 2 970 061 | 96 43 131 08 | HOSE LINES ADDITIONAL PA |
| HOSE CPL. 2TE 0,6M | 92 61 200 08 | 303 | 1 | 2 997 | 91 51 089 08 | HOSE LINES SUPERSTRUCT |
| HOSE CPL. 2TE 0,88M | 92 60 476 08 | 324 | 1 | 2 997 | 91 51 089 08 | HOSE LINES SUPERSTRUCT |

| Description | Item | Pos. | Quantity | Page | Assembly | Description |
|---|---|---|---|---|---|---|
| HOSE CPL. 2TE 1,0M | 92 62 891 08 | 380 | 1 | 2 971 012 | 96 43 144 08 | HOSE LINES HOISTING GEAR |
| HOSE CPL. 2TE 1,2M | 92 75 662 08 | 318 | 1 | 2 997 | 91 51 089 08 | HOSE LINES SUPERSTRUCT |
| HOSE CPL. 2TE 1,36M | 92 84 584 08 | 311 | 1 | 2 997 | 91 51 089 08 | HOSE LINES SUPERSTRUCT |
| HOSE CPL. 2TE 1,36M | 92 93 218 08 | 310 | 1 | 2 997 | 91 51 089 08 | HOSE LINES SUPERSTRUCT |
| HOSE CPL. 2TE 1,3M | 92 60 465 08 | 343 | 1 | 2 997 | 91 51 089 08 | HOSE LINES SUPERSTRUCT |
| HOSE CPL. 2TE 10X250 | 92 62 690 08 | 308 | 1 | 2 997 | 91 51 089 08 | HOSE LINES SUPERSTRUCT |
| HOSE CPL. 2TE 10X430 | 96 33 352 08 | 258 | 1 | 2 971 012 | 96 43 144 08 | HOSE LINES HOISTING GEAR |
| HOSE CPL. 2TE 10X620 | 92 88 722 08 | 382 | 1 | 2 971 012 | 96 43 144 08 | HOSE LINES HOISTING GEAR |
| HOSE CPL. 2TE 10X900 | 92 61 116 08 | 327 | 1 | 2 997 | 91 51 089 08 | HOSE LINES SUPERSTRUCT |
| HOSE CPL. 2TE 10X940 | 92 61 290 08 | 317 | 1 | 2 997 | 91 51 089 08 | HOSE LINES SUPERSTRUCT |
| HOSE CPL. 2TE 12X2200 | 96 35 952 08 | 202 | 1 | 2 997 | 91 51 089 08 | HOSE LINES SUPERSTRUCT |
| HOSE CPL. 2TE 12X3400 | 92 84 591 08 | 340 | 1 | 2 997 | 91 51 089 08 | HOSE LINES SUPERSTRUCT |
| HOSE CPL. 2TE 12X500 | 92 62 890 08 | 203 | 1 | 2 997 | 91 51 089 08 | HOSE LINES SUPERSTRUCT |
| HOSE CPL. 2TE 12X7400 | 96 42 857 08 | 213 | 1 | 2 997 | 91 51 089 08 | HOSE LINES SUPERSTRUCT |
| HOSE CPL. 2TE 16X220 | 92 02 441 08 | 200 | 1 | 2 997 | 91 51 089 08 | HOSE LINES SUPERSTRUCT |
| HOSE CPL. 2TE 16X2800 | 92 96 438 08 | 205 | 1 | 2 997 | 91 51 089 08 | HOSE LINES SUPERSTRUCT |
| HOSE CPL. 2TE 16X4800 | 96 42 856 08 | 212 | 1 | 2 997 | 91 51 089 08 | HOSE LINES SUPERSTRUCT |
| HOSE CPL. 2TE 16X520 | 92 61 374 08 | 322 | 1 | 2 997 | 91 51 089 08 | HOSE LINES SUPERSTRUCT |
| HOSE CPL. 2TE 16X660 | 92 66 073 08 | 353 | 1 | 2 997 | 91 51 089 08 | HOSE LINES SUPERSTRUCT |
| HOSE CPL. 2TE 20X2700 | 92 96 444 08 | 323 | 1 | 2 997 | 91 51 089 08 | HOSE LINES SUPERSTRUCT |
| HOSE CPL. 2TE 3,3M | 92 70 439 08 | 300 | 1 | 2 997 | 91 51 089 08 | HOSE LINES SUPERSTRUCT |
| HOSE CPL. 2TE 6X1000 | 96 24 553 08 | 307 | 1 | 2 997 | 91 51 089 08 | HOSE LINES SUPERSTRUCT |
| HOSE CPL. 2TE 6X350 | 92 09 917 08 | 314 | 1 | 2 997 | 91 51 089 08 | HOSE LINES SUPERSTRUCT |
| HOSE CPL. 2TE 6X370 | 96 21 730 08 | 255 | 1 | 2 971 012 | 96 43 144 08 | HOSE LINES HOISTING GEAR |
| HOSE CPL. 2TE 6X960 | 96 31 967 08 | 315 | 1 | 2 997 | 91 51 089 08 | HOSE LINES SUPERSTRUCT |
| HOSE CPL. 4SH 25X1040 | 96 36 997 08 | 391 | 1 | 2 997 | 91 51 089 08 | HOSE LINES SUPERSTRUCT |
| HOSE CPL. 4SH 25X1040 | 96 36 997 08 | 392 | 1 | 2 997 | 91 51 089 08 | HOSE LINES SUPERSTRUCT |
| HOSE CPL. 4SH 25X1140 | 96 36 996 08 | 390 | 1 | 2 997 | 91 51 089 08 | HOSE LINES SUPERSTRUCT |
| HOSE CPL. 4SH 25X1180 | 96 36 989 08 | 292 | 1 | 2 997 | 91 51 089 08 | HOSE LINES SUPERSTRUCT |
| HOSE CPL. 4SH 25X1380 | 96 36 988 08 | 291 | 1 | 2 997 | 91 51 089 08 | HOSE LINES SUPERSTRUCT |
| HOSE CPL. 4SH 25X300 | 96 37 118 08 | 290 | 1 | 2 997 | 91 51 089 08 | HOSE LINES SUPERSTRUCT |
| HOSE CPL. 4SH 25X810 | 96 36 990 08 | 293 | 1 | 2 997 | 91 51 089 08 | HOSE LINES SUPERSTRUCT |
| HOSE CPL. 4SH 25X920 | 96 36 998 08 | 393 | 1 | 2 997 | 91 51 089 08 | HOSE LINES SUPERSTRUCT |
| HOSE CPL. F6000 31X1770 | 96 42 866 08 | 371 | 1 | 2 970 061 | 96 43 131 08 | HOSE LINES ADDITIONAL PA |
| HOSE CPL. F6000 31X3180 | 96 42 864 08 | 385 | 1 | 2 971 012 | 96 43 144 08 | HOSE LINES HOISTING GEAR |
| HOSE CPL. F6000 31X460 | 96 42 859 08 | 348 | 1 | 2 997 | 91 51 089 08 | HOSE LINES SUPERSTRUCT |
| HOSE CPL. F6000 31X520 | 96 36 985 08 | 334 | 1 | 2 997 | 91 51 089 08 | HOSE LINES SUPERSTRUCT |
| HOSE CPL. F6000 31X540 | 96 42 858 08 | 347 | 1 | 2 997 | 91 51 089 08 | HOSE LINES SUPERSTRUCT |
| HOSE CPL. F6000 31X720 | 96 36 986 08 | 336 | 1 | 2 997 | 91 51 089 08 | HOSE LINES SUPERSTRUCT |
| HOSE CPL. GH134 10X1100 | 96 37 121 08 | 1102 | 1 | 2 831 021 | 96 38 140 08 | HOSE LINES AIR CONDITIONIN |
| HOSE CPL. GH134 13X260 | 96 38 196 08 | 1104 | 1 | 2 831 021 | 96 38 140 08 | HOSE LINES AIR CONDITIONIN |
| HOSE CPL. GH134 13X7300 | 96 40 962 08 | 1100 | 1 | 2 831 021 | 96 38 140 08 | HOSE LINES AIR CONDITIONIN |
| HOSE CPL. GH134 8X700 | 96 37 122 08 | 1103 | 1 | 2 831 021 | 96 38 140 08 | HOSE LINES AIR CONDITIONIN |
| HOSE CPL. GH134 8X8900 | 96 38 574 08 | 1101 | 1 | 2 831 021 | 96 38 140 08 | HOSE LINES AIR CONDITIONIN |
| HOSE CPL. GH506 31X1850 | 96 37 009 08 | 372 | 1 | 2 970 061 | 96 43 131 08 | HOSE LINES ADDITIONAL PA |
| HOSE CPL. GH506 31X1900 | 92 55 190 08 | 481 | 1 | 2 997 | 91 51 089 08 | HOSE LINES SUPERSTRUCT |
| HOSE CPL. GH506 31X1900 | 92 55 190 08 | 482 | 1 | 2 997 | 91 51 089 08 | HOSE LINES SUPERSTRUCT |
| HOSE CPL. GH506 31X1920 | 96 35 999 08 | 370 | 1 | 2 970 061 | 96 43 131 08 | HOSE LINES ADDITIONAL PA |
| HOSE CPL. GH506 31X2000 | 92 87 533 08 | 480 | 1 | 2 997 | 91 51 089 08 | HOSE LINES SUPERSTRUCT |
| HOSE CPL. GH506 31X2750 | 92 88 753 08 | 339 | 1 | 2 997 | 91 51 089 08 | HOSE LINES SUPERSTRUCT |
| HOSE CPL. GH506 31X3700 | 96 42 865 08 | 386 | 1 | 2 971 012 | 96 43 144 08 | HOSE LINES HOISTING GEAR |
| HOSE CPL. GH506 31X820 | 96 29 964 08 | 338 | 1 | 2 997 | 91 51 089 08 | HOSE LINES SUPERSTRUCT |
| HOSE CPL. GH663 38X1480 | 96 68 696 08 | 261 | 1 | 2 970 103 | 96 43 157 08 | HOSE LINES OIL COOLER |
| HOSE CPL. GH663 38X2200 | 96 60 513 08 | 260 | 1 | 2 970 103 | 96 43 157 08 | HOSE LINES OIL COOLER |
| HOSE CPL. GH663 38X470 | 96 36 991 08 | 263 | 1 | 2 970 103 | 96 43 157 08 | HOSE LINES OIL COOLER |
| HOSE CPL. GH663-240,49M | 96 61 454 08 | 332 | 1 | 2 997 | 91 51 089 08 | HOSE LINES SUPERSTRUCT |
| HOSE CPL. HPC 4X450 | 96 23 355 08 | 368 | 1 | 2 997 | 91 51 089 08 | HOSE LINES SUPERSTRUCT |
| HOSE CPL. HPC 4X5100 | 92 32 291 08 | 369 | 1 | 2 997 | 91 51 089 08 | HOSE LINES SUPERSTRUCT |
| HOSE DN16 500 | 51 05 010 08 | 17 | 1 | 2 950 | 91 49 515 08 | COMPRESSED-AIR SYST.SU |
| HOSE DN2X630 | 51 05 692 08 | 55 | 4 | 2 970 | 91 55 482 08 | HYDRAULICS |

| Description | Item | Pos. | Quantity | Page | Assembly | Description |
|---|---|---|---|---|---|---|
| HOSE DN3,5 GUMMI | 59 10 513 08 | 43 | 1 | 2 520 000 | 91 49 872 08 | CABIN, GLAZED |
| HOSE DN4-PVC 740081 | 59 10 053 08 | 28 | 6 | 2 520 000 | 91 49 872 08 | CABIN, GLAZED |
| HOSE DN6-FLEXILON D PA 12 | 10 00 994 3 | 5 | 0.6 | 9 080 345 | 90 80 345 | WATER PUMP WITH FASTENIN |
| HOSE GUIDE PRE-ASS. | 92 51 415 08 | 9 | 1 | 2 792 | 91 52 291 08 | DISPATCH ASSY.MECH.PART |
| HOSE GUIDE WELDED | 92 51 437 08 | 1 | 1 | 1 792 004 | 92 51 415 08 | HOSE GUIDE PRE-ASS. |
| HOSE LINE | 79 00 422 14 | 7 | 1 | 1 750 | 91 48 606 08 | TOOLS AND ACCESSORIES |
| HOSE LINE X300 | 79 00 429 14 | 8 | 1 | 1 750 | 91 48 606 08 | TOOLS AND ACCESSORIES |
| HOSE LINES ADDITIONAL PAR | 96 43 131 08 | 91 | 1 | 2 970 | 91 55 482 08 | HYDRAULICS |
| HOSE LINES AIR CONDITIONI | 96 38 140 08 | 500 | 1 | 2 831 | 91 47 871 08 | AIR COND. UNIT SUPERSTRU |
| HOSE LINES CRAWLER | 91 53 489 08 | 7 | 1 | 1 100 200 | 96 72 944 08 | UNDERCARRIAGE CPL. |
| HOSE LINES FOLDING JIB | 96 20 364 08 | 91 | 1 | 2 975 038 | 91 26 492 08 | ADDNL.HYDR. FOLDING JIB |
| HOSE LINES HOISTING GEAR | 96 43 144 08 | 91 | 1 | 2 971 | 91 50 610 08 | HYDR.AUXILIARY HOISTING |
| HOSE LINES OIL COOLER EL | 96 43 157 08 | 95 | 1 | 2 970 | 91 55 482 08 | HYDRAULICS |
| HOSE LINES SUPERSTRUCT | 91 51 089 08 | 191 | 1 | | LTR 1100 -0 | LIEBHERR LTR 1100 |
| HOSE LINES SUPPORT SYSTE | 96 43 983 08 | 4 | 1 | 1 400 200 | 91 53 791 08 | PREPARATION HYDR |
| HOSE NIPPLE GERADE | 91 40 351 | 5 | 1 | X1011766 | 10 11 766 5 | PIPELINE |
| HOSE NIPPLE GERADE | 91 40 351 | 8 | 1 | X1011914 | 10 11 914 1 | CRANKCASE BREATHER ASS |
| HOSE NIPPLE GERADE | 91 40 351 | 26 | 1 | X1011989 | 10 11 989 7 | RK OIL RETURN PIPE |
| HOSE NIPPLE GERADE 11SM | 90 79 080 | 1 | 1 | X1011550 | 10 11 550 2 | COOLING WATER AIR BLEED |
| HOSE NIPPLE GERADE 11SM | 92 76 393 | 1 | 2 | 9 079 890 | 90 79 890 | HEATER CONNECTION |
| HOSE UNION DIN 74304 M14X | 49 81 033 | 2 | 1 | X1011550 | 10 11 550 2 | COOLING WATER AIR BLEED |
| HOSE UNION JOINT 0° MS | 60 24 408 08 | (7) | 1 | 2 920 | 91 55 477 08 | ELECTR. SYSTEM F.SLEWING |
| HOSE UNION JOINT M32X1,5 M | 60 24 415 08 | 17 | 1 | 1 920 314 | 96 46 921 08 | TERMINAL BOX, PRE-ASSEMB |
| HOUSING | 51 07 969 08 | 1 | 1 | 5 114 177 | 51 14 177 08 | PRESSURE LIMITING VALVE |
| HOUSING | 57 01 091 08 | 3 | 1 | 5 102 294 | 51 02 294 08 | HYDRO MOTOR |
| HOUSING | 70 42 571 08 | 59 | 1 | 2 932 095 | 96 46 064 08 | SWING FRAME FUSE AND RE |
| HOUSING | 92 99 369 08 | 1 | 1 | 2 913 004 | 96 20 460 08 | HOUSING PRE-ASSEMBLED |
| HOUSING 140X540X100 SPF | 60 45 327 08 | 37 | 1 | 2 920 | 91 55 477 08 | ELECTR. SYSTEM F.SLEWING |
| HOUSING 1X400X273 DC01-A- | 61 10 012 08 | 2 | 1 | 2 913 102 | 92 32 870 08 | FAN UNIT |
| HOUSING 25-POL SPF | 60 23 223 08 | (150) | 5 | 2 932 042 | 96 68 587 08 | BASE ASSEMBLY |
| HOUSING 4-POLE | 60 23 313 08 | (157) | 9 | 2 932 042 | 96 68 587 08 | BASE ASSEMBLY |
| HOUSING 6-POL | 60 23 255 08 | (156) | 2 | 2 932 042 | 96 68 587 08 | BASE ASSEMBLY |
| HOUSING 8-POL | 60 23 014 08 | (155) | 1 | 2 932 042 | 96 68 587 08 | BASE ASSEMBLY |
| HOUSING GD-ZN SW GEPULV | 70 42 533 08 | 35 | 2 | 2 510 200 | 96 41 258 08 | SLEWING PLATFORM PANELLI |
| HOUSING GD-ZN SW GEPULV | 70 42 566 08 | 2 | 4 | 2 501 022 | 96 34 184 08 | COVER COMPL. |
| HOUSING LOWER PART | 10 42 941 5 | 2 | 1 | X1009998 | 10 09 998 1 | AIR FILTER |
| HOUSING PRE-ASSEMBLED | 96 20 460 08 | 2 | 1 | 2 913 | 91 32 850 08 | LICCON CONSOLE LCD2 |
| HUB 42CrMo4+N+QT | 92 67 273 | 4 | 1 | 9 072 593 | 90 72 593 | FLANGE PRE-ASS. |
| HUB 42CrMo4+N+QT | 92 67 273 | 13 | 1 | 9 075 541 | 90 75 541 | LUBE OIL PUMP PRE-ASSY. |
| HYDR.AUXILIARY HOISTING | 91 50 610 08 | 333 | 1 | | LTR 1100 -0 | LIEBHERR LTR 1100 |
| HYDR.DOUBLE PUMP LPVD | 90 72 112 | 10 | 1 | X1015211 | 10 15 211 6 | DRIVE UNIT |
| HYDR.F.TELESCOPIC BOOM | 91 05 737 08 | 217 | 1 | | LTR 1100 -0 | LIEBHERR LTR 1100 |
| HYDRAULIC BALLASTING | 91 50 902 08 | 153 | 1 | | LTR 1100 -0 | LIEBHERR LTR 1100 |
| HYDRAULIC-TYPE LUBRICAT.N | 11 08 039 2 | 15 | 1 | X1032706 | 10 32 706 5 | ELECTRIC PUMP |
| HYDRAULIC-TYPE LUBRICAT.N | 77 43 242 | 16 | 2 | 3 102 000 | 91 62 543 08 | TELESCOPIC SECTION 1 PRE |
| HYDRAULIC-TYPE LUBRICAT.N | 77 43 242 | 16 | 2 | 3 103 000 | 91 62 544 08 | TELESCOPIC SECT.2 PRE-AS |
| HYDRAULIC-TYPE LUBRICAT.N | 77 43 242 | 16 | 2 | 3 104 000 | 91 62 545 08 | TELESCOPIC SECT.3 PRE-ASS |
| HYDRAULIC-TYPE LUBRICAT.N | 77 43 242 | 16 | 2 | 3 105 000 | 91 62 546 08 | TELESCOPIC SECT.IV PRE-A |
| HYDRAULIC-TYPE LUBRICAT.N | 77 43 242 | 16 | 2 | 3 106 000 | 91 60 313 08 | TELESCOPIC SECT.5 PRE-AS |
| HYDRAULIC-TYPE LUBRICAT.N | 57 15 786 08 | (1) | 1 | 2 711 | 91 53 002 08 | CENT. LUBRIC. SYSTEM SUP |
| HYDRAULIC-TYPE LUBRICAT. | 77 43 011 01 | 18 | 1 | 9 387 070 | 93 87 070 01 | COMPACT ROPE WINCH |
| HYDRAULIC-TYPE LUBRICAT. | 77 43 011 01 | 18 | 1 | 9 685 586 | 96 85 586 01 | COMPACT ROPE WINCH |
| HYDRAULICS | 91 55 482 08 | 185 | 1 | | LTR 1100 -0 | LIEBHERR LTR 1100 |
| HYDRO CYLINDER 65/36-367 | 51 23 537 08 | 26 | 1 | 3 510 100 | 91 49 246 08 | TRANSPORT MOUNTING |
| HYDRO MOTOR A2FM | 51 02 294 08 | 2 | 1 | 2 420 | 91 32 936 08 | SLEWING GEAR |
| HYDRO MOTOR SPF | 51 02 407 08 | 3 | 1 | 2 440 022 | 96 42 336 08 | WINCH 2 PRE-ASS. |
| HYDRO MOTOR SPF | 51 02 407 08 | 2 | 1 | 2 450 | 91 53 926 08 | MAIN HOIST GEAR |
| IDENTIFICATION STRIP | 60 27 426 08 | 207 | 0.16 | 3 930 492 | 96 20 966 08 | TERMINAL BOX CPL. |
| IDENTIFICATION STRIP 1 - 250 | 60 27 437 08 | 8 | 1 | 1 920 314 | 96 46 921 08 | TERMINAL BOX, PRE-ASSEMB |
| IDENTIFICATION STRIPS | 60 27 629 08 | 8 | 1 | 2 932 167 | 96 32 480 08 | TERMINAL STRIP |

| Description | Item | Pos. | Quantity | Page | Assembly | Description |
|---|---|---|---|---|---|---|
| IGNITION STARTER SWITCH | 60 61 943 08 | 5 | 1 | 2 530 002 | 96 19 448 08 | DASHBOARD FRONT, PRE-A |
| IMITATION LEATHER LINING 1 | 95 70 208 08 | 130 | 1 | 2 520 000 | 91 49 872 08 | CABIN, GLAZED |
| IMPULS TRANSMITTER | 57 09 907 08 | 14 | 1 | 6 060 516 | 60 60 516 08 | GEAR CAM LIMITSWITCH |
| INCLINATION SENSOR +/-5° X/ | 69 23 081 08 | 10 | 1 | 1 920 307 | 96 46 916 08 | ELECTR.FOR CENTER SECTIO |
| INDICATOR LAMP | 60 61 435 08 | 6 | 2 | 2 530 002 | 96 19 448 08 | DASHBOARD FRONT, PRE-A |
| INDICATOR LAMP | 60 61 435 08 | 24 | 3 | 2 531 001 | 96 36 738 08 | ELECTRIC FOR ARMREST LEF |
| INDICATOR LAMP | 60 61 435 08 | 24 | 5 | 2 531 002 | 96 36 739 08 | ELECTRIC FOR ARMREST RI |
| INDUCTIVE SENSOR CONTAC | 11 34 720 6 | (5) | 1 | 3 920 012 | 96 57 224 08 | LIMIT SWITCH ADD-ON |
| INDUCTIVE SENSOR CONTAC | 11 34 720 6 | 6 | 11 | 3 930 464 | 92 95 081 08 | SENSOR INSTALL.TELESCOP. |
| INJECTION LINE R-MOTORXD | 90 80 410 | 215 | 1 | X1011709 | 10 11 709 3 | RK INJECTION NOZZLE |
| INJECTION LINE R-MOTORXD | 90 80 410 | 215 | 4 | X1012193 | 10 12 193 2 | BASIC ENGINE |
| INJECTION NOZZLE W.FASTEN | 10 11 659 1 | 190 | 4 | X1015207 | 10 15 207 7 | DIESEL ENGINE |
| INJECTION PUMP ASSEMBLY | 10 11 683 9 | 170 | 4 | X1012193 | 10 12 193 2 | BASIC ENGINE |
| INJECTION PUMP R-MOTORXD | 10 11 625 7 | 1 | 1 | X1011683 | 10 11 683 9 | INJECTION PUMP ASSEMBLY |
| INJECTOR | 10 11 658 7 | 1 | 1 | X1011709 | 10 11 709 3 | RK INJECTION NOZZLE |
| INLET VALVE | 10 13 675 2 | 2 | 2 | X1014155 | 10 14 155 5 | CYLINDER HEAD PRE-ASSY. |
| INLET VALVE | 90 74 450 | 2 | 2 | X1012036 | 10 12 036 5 | CYLINDER HEAD PRE-ASSY. |
| INLET VALVE SEAT INSERT PL | 90 73 725 | 6 | 2 | X1012038 | 10 12 038 3 | CYLINDER HEAD |
| INNER RING 40X45X20 | 74 74 040 01 | 71 | 1 | 9 330 748 | 93 30 748 01 | SLEWING GEAR DRIVE |
| INNER WHEEL M=2,25 Z=96 | 93 87 607 01 | 55 | 1 | 9 686 071 | 96 86 071 01 | PLANETARY GEARBOX |
| INNER WHEEL M=3,75 Z=90 | 94 44 429 03 | 50 | 1 | 9 444 410 | 94 44 410 03 | TRACTION DRIVE |
| INNER WHEEL M=4 Z=74 | 92 76 018 01 | 20 | 1 | 9 686 071 | 96 86 071 01 | PLANETARY GEARBOX |
| INNER WHEEL M=5 Z=86 | 94 44 413 03 | 10 | 1 | 9 444 410 | 94 44 410 03 | TRACTION DRIVE |
| INPUT BOARD | 91 43 948 08 | 41 | 2 | 2 932 042 | 96 68 587 08 | BASE ASSEMBLY |
| INPUT BOARD | 92 08 065 08 | 5 | 1 | 2 932 214 | 96 28 366 08 | INPUT BOARD CPL. |
| INPUT BOARD CPL. EP0 | 92 68 082 08 | 40 | 1 | 2 932 042 | 96 68 587 08 | BASE ASSEMBLY |
| INPUT BOARD CPL. EP2 | 96 28 366 08 | 42 | 1 | 2 932 042 | 96 68 587 08 | BASE ASSEMBLY |
| INSERTION BRIDGE | 60 27 355 08 | 11 | 35 | 2 932 095 | 96 46 064 08 | SWING FRAME FUSE AND RE |
| INSERTION MODULE | 96 19 694 08 | 10 | 1 | 2 932 167 | 96 32 480 08 | TERMINAL STRIP |
| INSIDE ROOF LINING CPL. | 92 50 859 08 | 18 | 1 | 2 520 000 | 91 49 872 08 | CABIN, GLAZED |
| INST.BACK SHEAVE FOR BO | 91 45 571 08 | 363 | 1 | | LTR 1100 -0 | LIEBHERR LTR 1100 |
| INSTALLATION PARTS F.HYDR | 96 72 945 08 | 30 | 1 | 1 100 200 | 96 72 944 08 | UNDERCARRIAGE CPL. |
| INSTRUMENT BOX CPL. | 92 13 430 08 | 12 | 1 | 2 520 000 | 91 49 872 08 | CABIN, GLAZED |
| INSTRUMENT BOX DELIVERY | 92 17 203 08 | 1 | 1 | 2 520 018 | 92 13 430 08 | INSTRUMENT BOX CPL. |
| INSULATING BUSHING KUNST | 66 00 430 08 | 7 | 1 | 2 913 100 | 91 23 538 08 | ASSEMBLY FRAME |
| INSULATING HOSE DN12X0,65 | 11 08 260 5 | (204) | 5 | 2 932 042 | 96 68 587 08 | BASE ASSEMBLY |
| INSULATING HOSE ISO 3302-1 | 11 00 658 4 | 60 | 3.4 | 2 510 108 | 96 44 555 08 | SOUND PROOFING/SOUND I |
| INSULATING MAT | 97 38 622 08 | 1 | 1 | 9 640 266 | 96 40 266 08 | SOUND PROOFING/SOUND I |
| INSULATING MAT | 97 40 366 08 | 2 | 1 | 9 640 266 | 96 40 266 08 | SOUND PROOFING/SOUND I |
| INSULATING MAT 10X770X894 | 95 66 755 08 | 53 | 1 | 2 520 000 | 91 49 872 08 | CABIN, GLAZED |
| INSULATING MAT 18X312X352 | 95 66 684 08 | 56 | 1 | 2 520 000 | 91 49 872 08 | CABIN, GLAZED |
| INSULATING MAT 18X535X788 | 95 66 682 08 | 54 | 1 | 2 520 000 | 91 49 872 08 | CABIN, GLAZED |
| INSULATING MAT 18X714X759 | 95 66 683 08 | 55 | 1 | 2 520 000 | 91 49 872 08 | CABIN, GLAZED |
| INSULATING MAT 18X942X470 | 95 65 247 08 | 8 | 1 | 2 522 | 91 10 037 08 | DOOR CPL. |
| INSULATING MAT 18x815x215 | 95 70 441 08 | 113 | 1 | 2 520 000 | 91 49 872 08 | CABIN, GLAZED |
| INSULATING MAT 30X1980X98 | 97 47 497 08 | 20 | 1 | 2 510 072 | 96 44 614 08 | FLAP RIGHT PRE-ASS. |
| INSULATING MAT 40X290X260 | 97 65 846 08 | 6 | 1 | 9 640 266 | 96 40 266 08 | SOUND PROOFING/SOUND I |
| INSULATING MAT 40X504X245 | 97 65 845 08 | 7 | 1 | 9 640 266 | 96 40 266 08 | SOUND PROOFING/SOUND I |
| INSULATING MAT 40X740X370 | 97 37 676 08 | 102 | 1 | 2 510 018 | 96 44 046 08 | RADIATOR HOOD CPL. |
| INSULATING MAT 40X850X500 | 97 50 499 08 | 3 | 1 | 9 640 266 | 96 40 266 08 | SOUND PROOFING/SOUND I |
| INSULATING MAT 40X920X330 | 97 65 844 08 | 5 | 1 | 9 640 266 | 96 40 266 08 | SOUND PROOFING/SOUND I |
| INSULATING MAT 40X964X749 | 97 30 733 08 | 101 | 1 | 2 510 018 | 96 44 046 08 | RADIATOR HOOD CPL. |
| INSULATING MAT 40X975X755 | 97 30 732 08 | 100 | 1 | 2 510 018 | 96 44 046 08 | RADIATOR HOOD CPL. |
| INSULATING MAT 5X470X870 | 95 65 065 08 | 2 | 1 | 2 520 020 | 92 50 859 08 | INSIDE ROOF LINING CPL. |
| INSULATING MAT BOTTOM 9 | 97 18 507 08 | 6 | 1 | 2 913 | 91 32 850 08 | LICCON CONSOLE LCD2 |
| INSULATING MAT TOP 11.5X9 | 97 18 514 08 | 10 | 1 | 2 913 | 91 32 850 08 | LICCON CONSOLE LCD2 |
| INSULATING MAT-LOCK 21X36 | 97 18 511 08 | 7 | 1 | 2 913 | 91 32 850 08 | LICCON CONSOLE LCD2 |
| INSULATING RING | 69 10 417 08 | 13 | 37 | X1028517 | 10 28 517 1 | COLLECTING RING |
| INSULATION MAT RIGHT 19X9 | 97 18 513 08 | 9 | 1 | 2 913 | 91 32 850 08 | LICCON CONSOLE LCD2 |
| INTERIOR HOUSING PRE-ASS. | 96 28 696 08 | 4 | 1 | 2 913 | 91 32 850 08 | LICCON CONSOLE LCD2 |

| Description | Item | Pos. | Quantity | Page | Assembly | Description |
|---|---|---|---|---|---|---|
| INTERLOCK BOLT 70.0X342 3 | 97 57 668 08 | 3 | 1 | 2 102 022 | 96 32 604 08 | LOCKING |
| INTERMEDIATE GEAR CPL. | 90 72 906 | 331 | 1 | X1015207 | 10 15 207 7 | DIESEL ENGINE |
| INTERMEDIATE GEAR PRE-AS | 90 72 633 | 3 | 1 | 9 072 593 | 90 72 593 | FLANGE PRE-ASS. |
| INTERMEDIATE GEAR PRE-AS | 90 72 633 | 7 | 1 | 9 075 541 | 90 75 541 | LUBE OIL PUMP PRE-ASSY. |
| INTERMEDIATE GEAR PRE-AS | 90 72 904 | 1 | 1 | 9 072 906 | 90 72 906 | INTERMEDIATE GEAR CPL. |
| INTERMEDIATE PLATE | 10 11 787 8 | 7 | 1 | X1011832 | 10 11 832 6 | EXHAUST TC MOUNTING |
| INTERMEDIATE PLATE 11SM | 90 80 519 | 6 | 1 | 9 080 525 | 90 80 525 | AIR COND. COMPRESSOR A |
| INTERMEDIATE RING | 10 01 473 0 | 8 | 1 | X1032706 | 10 32 706 5 | ELECTRIC PUMP |
| INTERMEDIATE WHEEL AXLE 4 | 90 72 907 | 2 | 1 | 9 072 906 | 90 72 906 | INTERMEDIATE GEAR CPL. |
| INTERNAL LIGHT 10W 24V GLA | 60 71 361 08 | 10 | 1 | 2 533 003 | 96 28 388 08 | ELECTRIC ADD-ON PARTS CA |
| INTERNAL MULTI-DISC | 73 73 505 03 | (5) | 8 | 9 444 410 | 94 44 410 03 | TRACTION DRIVE |
| JACK-UP SYSTEM HYDR. NRS | 99 26 462 14 | 2 | 1 | 1 400 200 | 91 53 791 08 | PREPARATION HYDR |
| JAW | 90 75 372 | 3 | 1 | X1011659 | 10 11 659 1 | INJECTION NOZZLE W.FASTEN |
| KB-RING 122X113,1X3,5 MC66 | 10 47 234 5 | 2 | 1 | X1046728 | 10 46 728 5 | PISTON CPL. |
| KEY | 10 87 343 4 | (1) | 1 | 2 932 095 | 96 46 064 08 | SWING FRAME FUSE AND RE |
| KEY | 57 09 954 08 | 1 | 1 | 6 061 943 | 60 61 943 08 | IGNITION STARTER SWITCH |
| KEY PAD | 69 18 849 08 | 1 | 1 | 2 913 003 | 96 20 599 08 | FOIL KEYPAD PRE-ASS. |
| KEY PLATE 40X310X200 S960Q | 97 57 618 08 | 2 | 2 | 2 571 | 91 50 902 08 | HYDRAULIC BALLASTING |
| KEY SWITCH | 69 27 013 08 | 6 | 1 | 2 913 003 | 96 20 599 08 | FOIL KEYPAD PRE-ASS. |
| KEYPAD BUTTON | 60 61 440 08 | 28 | 1 | 2 531 001 | 96 36 738 08 | ELECTRIC FOR ARMREST LEF |
| KEYPAD BUTTON | 60 61 440 08 | 28 | 3 | 2 531 002 | 96 36 739 08 | ELECTRIC FOR ARMREST RI |
| KNURLED BUTTON PA | 10 80 091 6 | 5 | 1 | 2 520 040 | 72 40 148 08 | LOCKING CABLE |
| KNURLED BUTTON PA | 10 80 091 6 | (5) | 1 | 2 522 | 91 10 037 08 | DOOR CPL. |
| KNURLED WASHER | 59 15 630 08 | 5 | 2 | 2 520 101 | 96 49 682 08 | SPRAY NOZZLE |
| KNURLED WASHER | 59 15 630 08 | 2 | 1 | 5 910 672 | 59 10 672 08 | WIPER MOTOR |
| LADDER ATTACHMENT | 91 75 085 08 | 1 | 1 | 3 750 | 91 75 084 08 | TOOLS |
| LAMELLAR DISK KIT 62,0/56,4 | 10 00 844 8 | 11 | 4 | X1011585 | 10 11 585 1 | SEAL KIT CYLINDER HEAD |
| LAMELLAR DISK KIT 62,0/56,4 | 10 00 844 8 | 11 | 4 | X1011585 | 10 11 585 3 | SEAL KIT ZYLINDER HEAD CPL |
| LAMP | 60 02 233 | (1) | 2 | 2 533 001 | 96 41 568 08 | DASHBOARD ROOF, PRE-AS |
| LAMP SOCKET | 60 61 445 08 | 8 | 2 | 2 530 002 | 96 19 448 08 | DASHBOARD FRONT, PRE-A |
| LAMP SOCKET | 60 61 445 08 | 26 | 2 | 2 531 001 | 96 36 738 08 | ELECTRIC FOR ARMREST LEF |
| LAMP SOCKET | 60 61 445 08 | 26 | 2 | 2 531 002 | 96 36 739 08 | ELECTRIC FOR ARMREST RI |
| LATCH | 11 49 001 0 | 1 | 1 | 5 123 537 | 51 23 537 08 | HYDRO CYLINDER |
| LATCH CLAMP | 60 21 159 08 | 100 | 2 | 3 501 | 91 05 788 08 | MECH. DOUBLE FOLD JIB PR |
| LEAD W1067 | 96 41 095 08 | 5 | 1 | 2 920 904 | 96 41 093 08 | CONTROL DESK SUPPORT |
| LEAD W157E | 92 93 436 08 | 5 | 1 | 2 920 585 | 91 01 520 08 | ELECTRIC FOR FLASHLIGHT |
| LEAD W168 | 96 33 229 08 | 14 | 1 | 2 920 013 | 96 41 599 08 | CABLE LIST ELECTRICAL SYS |
| LEAD W252 | 96 36 056 08 | 5 | 1 | 2 920 574 | 96 36 055 08 | OPERATOR PANEL BALLAST |
| LEAD W291 | 96 29 469 08 | 11 | 1 | 2 920 083 | 96 31 039 08 | ELECTRIC FOR BATTERY BOX |
| LEAD W294 | 96 29 470 08 | 14 | 1 | 2 920 083 | 96 31 039 08 | ELECTRIC FOR BATTERY BOX |
| LEAD W3 | 92 39 303 08 | 10 | 1 | 2 920 083 | 96 31 039 08 | ELECTRIC FOR BATTERY BOX |
| LEAD W306A | 92 06 423 08 | 14 | 1 | 2 780 800 | 91 15 191 08 | ELECTRIC FOR WINCH 2 |
| LEAD W325 | 92 73 180 08 | 15 | 1 | 2 780 800 | 91 15 191 08 | ELECTRIC FOR WINCH 2 |
| LEAD W456B | 92 07 808 08 | 420 | 1 | 3 930 204 | 92 07 741 08 | CABLE DRUM COMPL. |
| LEAD W608 | 96 56 249 08 | 270 | 1 | 3 930 718 | 96 56 248 08 | TERMINAL BOX CPL. |
| LEAD W634 | 96 24 499 08 | 6 | 1 | 2 780 852 | 96 24 845 08 | GSM-MODULE PRE-ASS.LICCO |
| LEAD W635X1050 | 92 12 112 08 | 10 | 4 | 2 932 042 | 96 68 587 08 | BASE ASSEMBLY |
| LEAD W636 | 92 26 706 08 | 11 | 1 | 2 932 042 | 96 68 587 08 | BASE ASSEMBLY |
| LEAD WL290 | 96 31 466 08 | 20 | 1 | 2 920 013 | 96 41 599 08 | CABLE LIST ELECTRICAL SYS |
| LEAD WL292 | 92 12 258 08 | 22 | 1 | 2 920 013 | 96 41 599 08 | CABLE LIST ELECTRICAL SYS |
| LEAD WL451 | 96 20 967 08 | 270 | 1 | 3 930 492 | 96 20 966 08 | TERMINAL BOX CPL. |
| LEAD WL456 | 96 37 698 08 | 250 | 1 | 3 930 718 | 96 56 248 08 | TERMINAL BOX CPL. |
| LEAD WL500 | 96 22 209 08 | 5 | 1 | 3 931 032 | 96 20 959 08 | ELECTRIC F.BASE SECTION |
| LEAD WL502 | 96 20 961 08 | 7 | 1 | 3 931 100 | 96 20 960 08 | ELECTR. FOR HEAD SECTION |
| LEAD WL503 | 96 21 102 08 | 5 | 1 | 3 780 400 | 91 59 294 08 | EL.2 HOISTING LIMIT SWITCH |
| LEAD WL504 | 96 20 963 08 | 6 | 1 | 3 931 032 | 96 20 959 08 | ELECTRIC F.BASE SECTION |
| LEAD WL505 | 96 20 962 08 | 8 | 1 | 3 931 100 | 96 20 960 08 | ELECTR. FOR HEAD SECTION |
| LEAD WL550 | 92 72 494 08 | 4 | 1 | 3 930 523 | 96 43 943 08 | CABLE REEL |
| LEAD WL551 | 96 21 938 08 | 6 | 1 | 3 930 523 | 96 43 943 08 | CABLE REEL |
| LEAD WL602 | 96 37 697 08 | 220 | 1 | 3 930 718 | 96 56 248 08 | TERMINAL BOX CPL. |

| Description | Item | Pos. | Quantity | Page | Assembly | Description |
|---|---|---|---|---|---|---|
| LEAD WL609 | 92 07 849 08 | 290 | 1 | 3 930 492 | 96 20 966 08 | TERMINAL BOX CPL. |
| LEAD WL631 | 92 07 890 08 | 61 | 1 | 2 920 013 | 96 41 599 08 | CABLE LIST ELECTRICAL SYS |
| LEAD WL632 | 96 38 781 08 | 62 | 1 | 2 920 013 | 96 41 599 08 | CABLE LIST ELECTRICAL SYS |
| LEAD WL643 | 96 37 699 08 | 260 | 1 | 3 930 718 | 96 56 248 08 | TERMINAL BOX CPL. |
| LEAK OIL RETURN LINE | 10 11 569 6 | 214 | 1 | X1015207 | 10 15 207 7 | DIESEL ENGINE |
| LEFT-HAND INSULATING MAT | 97 18 512 08 | 8 | 1 | 2 913 | 91 32 850 08 | LICCON CONSOLE LCD2 |
| LEG SPRING 2,5XDI 13,5 | 57 17 419 08 | 19 | 1 | 5 123 537 | 51 23 537 08 | HYDRO CYLINDER |
| LENGTH INDICATOR | 57 17 939 08 | 1 | 1 | 6 923 101 | 69 23 101 08 | ROPE LENGTH INDICATOR |
| LENGTH MEASURING CABLE | 57 18 518 08 | 3 | 1 | 6 923 101 | 69 23 101 08 | ROPE LENGTH INDICATOR |
| LEVEL PROBE L=50 5 V SPF | 10 22 814 3 | 2 | 1 | 2 200 048 | 96 32 140 08 | EXPANSION TANK PRE-ASS. |
| LEVER | 11 00 722 1 | 4 | 1 | 6 923 097 | 69 23 097 08 | PEDAL TRANSDUCER |
| LEVER FASTENER | 11 45 042 0 | 5 | 2 | 2 510 072 | 96 44 614 08 | FLAP RIGHT PRE-ASS. |
| LEVER FASTENER | 11 45 042 0 | 5 | 2 | 2 510 201 | 96 42 011 08 | FLAP PRE-ASS. |
| LEVER FE//ZN20//C | 92 50 739 08 | 12 | 1 | 3 501 | 91 05 788 08 | MECH. DOUBLE FOLD JIB PR |
| LICCON CONSOLE LCD2 KO | 91 32 850 08 | 4 | 1 | 2 530 | 91 34 053 08 | CRANE OPERATOR CAB INS |
| LID PLATE DIN 3015-1 L-DP 5 | 50 05 219 | 78 | 10 | 2 970 | 91 55 482 08 | HYDRAULICS |
| LIGHT BULB 1,2W 30V | 60 70 087 08 | 7 | 2 | 2 530 002 | 96 19 448 08 | DASHBOARD FRONT, PRE-A |
| LIGHT BULB 1,2W 30V | 60 70 087 08 | 18 | 2 | 2 531 001 | 96 36 738 08 | ELECTRIC FOR ARMREST LEF |
| LIGHT BULB 1,2W 30V | 60 70 087 08 | 15 | 2 | 2 531 002 | 96 36 739 08 | ELECTRIC FOR ARMREST RI |
| LIGHT BULB 1,2W 48V | 60 70 117 08 | 14 | 1 | 2 530 002 | 96 19 448 08 | DASHBOARD FRONT, PRE-A |
| LIGHT BULB 1,2W 48V | 60 70 117 08 | 16 | 5 | 2 531 001 | 96 36 738 08 | ELECTRIC FOR ARMREST LEF |
| LIGHT BULB 1,2W 48V | 60 70 117 08 | 16 | 4 | 2 531 002 | 96 36 739 08 | ELECTRIC FOR ARMREST RI |
| LIGHT BULB 1,3W 24V | 60 70 097 08 | (1) | 2 | 2 533 001 | 96 41 568 08 | DASHBOARD ROOF, PRE-AS |
| LIGHT BULB DIN 49848 2,4W 6 | 60 70 111 08 | (1) | 2 | 1 750 002 | 92 86 201 08 | ACCESSORIES |
| LIGHT BULB DIN 72601 10W 24 | 60 70 028 08 | 11 | 1 | 2 533 003 | 96 28 388 08 | ELECTRIC ADD-ON PARTS CA |
| LIGHT BULB DIN 72601 70W 24 | 60 70 211 08 | 13 | 1 | 2 533 003 | 96 28 388 08 | ELECTRIC ADD-ON PARTS CA |
| LIGHT BULB DIN 72601 70W 24 | 60 70 211 08 | 5 | 1 | 2 920 362 | 96 31 865 08 | ELECTR. FOR WORK AREA LI |
| LIGHT BULB DIN 72601 70W 24 | 60 70 211 08 | 1 | 1 | 6 071 509 | 60 71 509 08 | WORK LIGHT |
| LIMIT STOP CPL | 95 57 463 03 | 12 | 2 | 1 100 215 | 99 20 783 14 | CENTRE PIECE |
| LIMIT SWITCH ADD-ON AUSL | 96 53 715 08 | 10 | 1 | 2 920 | 91 55 477 08 | ELECTR. SYSTEM F.SLEWING |
| LIMIT SWITCH ADD-ON AUSL | 96 57 224 08 | 10 | 1 | 3 930 342 | 96 56 247 08 | ELECTRIC F.BASE SECTION |
| LIMIT SWITCH AUSLEGERSTEI | 96 57 484 08 | 6 | 1 | 3 920 012 | 96 57 224 08 | LIMIT SWITCH ADD-ON |
| LIMIT SWITCH TQ200-RFID SP | 10 67 839 5 | (7) | 1 | 3 780 400 | 91 59 294 08 | EL.2 HOISTING LIMIT SWITCH |
| LIMIT SWITCH TQ200-RFID SP | 10 67 839 5 | 7 | 1 | 3 930 483 | 96 20 935 08 | SENSOR ASSEMBLY HEAD PI |
| LINE FILTER | 51 06 708 08 | 23 | 1 | 2 970 | 91 55 482 08 | HYDRAULICS |
| LINEAR GUIDE 04-420 VERZ | 70 42 780 08 | 111 | 2 | 2 520 000 | 91 49 872 08 | CABIN, GLAZED |
| LOAD HOLDING VALVE | 51 14 794 08 | 3 | 1 | 2 975 038 | 91 26 492 08 | ADDNL.HYDR. FOLDING JIB |
| LOAD HOLDING VALVE 280BA | 10 21 831 0 | 26 | 1 | 2 970 | 91 55 482 08 | HYDRAULICS |
| LOAD HOOK 10E SPF | 91 42 310 08 | 310 | 1 | | LTR 1100 -0 | LIEBHERR LTR 1100 |
| LOAD RETAINING VLV ELEM | 11 00 267 8 | 7 | 1 | 5 114 794 | 51 14 794 08 | LOAD HOLDING VALVE |
| LOCATING BOLT 65.0X330 35N | 97 57 621 08 | 9 | 4 | 2 560 | 91 50 900 08 | COUNTERWEIGHT WITH CLAM |
| LOCK PIECE | 55 07 965 08 | 3 | 1 | X1009998 | 10 09 998 1 | AIR FILTER |
| LOCK PIECE FEDERBUEGEL S | 70 42 276 08 | 7 | 1 | 3 750 026 | 96 89 407 08 | HOLDER LEFT |
| LOCK PIECE FEDERBUEGEL S | 70 42 276 08 | 7 | 1 | 3 750 028 | 96 89 408 08 | HOLDER RIGHT |
| LOCK WASHER DIN 6799 4X0, | 50 26 448 08 | 22 | 2 | 2 501 000 | 91 48 769 08 | CRANE DRIVER'S CABIN,PRE |
| LOCK WASHER VS 10 | 42 39 015 08 | 26 | 1 | 9 387 596 | 93 87 596 01 | ROPE DRUM |
| LOCK WASHER VS 10 ZN5/CN | 42 29 913 | 12 | 12 | X1015211 | 10 15 211 6 | DRIVE UNIT |
| LOCK WASHER VS 12 | 42 39 017 08 | 53 | 8 | 9 686 071 | 96 86 071 01 | PLANETARY GEARBOX |
| LOCK WASHER VS 16 | 42 39 020 01 | 53 | 12 | 9 444 410 | 94 44 410 03 | TRACTION DRIVE |
| LOCK WASHER VS 8 ST | 42 39 014 08 | 27 | 16 | 9 330 748 | 93 30 748 01 | SLEWING GEAR DRIVE |
| LOCK WITH FALLING LATCH | 70 42 764 08 | 6 | 1 | 2 522 | 91 10 037 08 | DOOR CPL. |
| LOCKING | 96 32 604 08 | 20 | 2 | 2 102 | 91 51 080 08 | ASSEMBLY PARTS F.SLEWING |
| LOCKING CABLE L=365MM | 72 40 148 08 | 90 | 1 | 2 520 000 | 91 49 872 08 | CABIN, GLAZED |
| LOCKING CABLE L=430MM | 72 40 160 08 | 41 | 1 | 2 522 | 91 10 037 08 | DOOR CPL. |
| LOCKING PIECES | 10 11 566 4 | 452 | 1 | X1015207 | 10 15 207 7 | DIESEL ENGINE |
| LOCKING PIECES | 10 11 611 0 | 521 | 1 | X1015207 | 10 15 207 7 | DIESEL ENGINE |
| LOCKING PIECES | 10 11 912 8 | 522 | 1 | X1015207 | 10 15 207 7 | DIESEL ENGINE |
| LOCKING PIECES | 90 78 249 | 650 | 1 | X1015207 | 10 15 207 7 | DIESEL ENGINE |
| LOCKING PIECES | 90 78 250 | 652 | 1 | X1015207 | 10 15 207 7 | DIESEL ENGINE |
| LOCKING PIECES | 90 79 893 | 630 | 1 | X1015207 | 10 15 207 7 | DIESEL ENGINE |

| Description | Item | Pos. | Quantity | Page | Assembly | Description |
|---|---|---|---|---|---|---|
| LOCKING PIECES | 90 80 280 | 12 | 1 | X1011583 | 10 11 583 7 | SEAL KIT DIESEL ENGINE |
| LOCKING PIECES | 90 80 280 | 5 | 1 | X1011801 | 10 11 801 3 | SEAL KIT AGGREGATE CARR |
| LOCKING PIECES | 90 80 280 | 5 | 1 | X1011801 | 10 11 801 4 | SEAL KIT AGGREGATE CARR |
| LOCKING PIECES | 90 80 280 | 384 | 1 | X1015207 | 10 15 207 7 | DIESEL ENGINE |
| LOCKING PIECES | 91 47 512 | 24 | 1 | X1015207 | 10 15 207 7 | DIESEL ENGINE |
| LOCKING PLATE 30X70X30 S35 | 97 80 687 08 | 44 | 8 | 1 100 205 | 96 51 633 08 | CRAWLER CARRIER RIGHT CP |
| LOCKING PLATE 30X70X30 S35 | 97 80 687 08 | 44 | 8 | 1 100 210 | 96 51 634 08 | CRAWLER TRACK CARRIER LE |
| LOCKING RING DIN 471 100X3 | 10 87 565 2 | 32 | 2 | 3 106 000 | 91 60 313 08 | TELESCOPIC SECT.5 PRE-AS |
| LOCKING RING DIN 471 150X4 | 42 80 083 08 | 3 | 2 | 3 105 002 | 92 73 100 08 | ROPE PULLEY CPL. |
| LOCKING RING DIN 471 150X4 | 42 80 083 08 | 3 | 2 | 3 106 001 | 96 42 835 08 | ROPE PULLEY CPL. |
| LOCKING RING DIN 471 150X4 | 10 87 453 7 | 3 | 2 | 3 501 008 | 92 73 117 08 | ROPE PULLEY CPL. |
| LOCKING RING DIN 471 180X4 | 42 80 094 08 | 3 | 2 | 4 099 001 | 92 40 739 08 | ROPE PULLEY |
| LOCKING RING DIN 471 22X1,7 | 46 30 000 03 | 41 | 6 | 9 330 748 | 93 30 748 01 | SLEWING GEAR DRIVE |
| LOCKING RING DIN 471 28X1,5 | 42 80 024 08 | 6 | 1 | 9 074 505 | 90 74 505 | ROCKER ARM BRACKET PRE |
| LOCKING RING DIN 471 28X2 | 46 30 001 03 | 21 | 5 | 9 330 748 | 93 30 748 01 | SLEWING GEAR DRIVE |
| LOCKING RING DIN 471 35X1,5 | 42 80 029 08 | 92 | 1 | 9 330 748 | 93 30 748 01 | SLEWING GEAR DRIVE |
| LOCKING RING DIN 471 40X1, | 10 87 565 7 | 72 | 1 | 9 330 748 | 93 30 748 01 | SLEWING GEAR DRIVE |
| LOCKING RING DIN 471 40X2,5 | 42 80 033 08 | 33 | 3 | 9 387 598 | 93 87 598 01 | PLANETARY GEARBOX |
| LOCKING RING DIN 471 40X2,5 | 42 80 033 08 | 33 | 3 | 9 686 071 | 96 86 071 01 | PLANETARY GEARBOX |
| LOCKING RING DIN 471 45X1,7 | 42 80 032 03 | 38 | 3 | 9 444 410 | 94 44 410 03 | TRACTION DRIVE |
| LOCKING RING DIN 471 45X2,5 | 42 80 040 08 | 44 | 2 | 9 387 598 | 93 87 598 01 | PLANETARY GEARBOX |
| LOCKING RING DIN 471 45X2,5 | 42 80 040 08 | 44 | 2 | 9 686 071 | 96 86 071 01 | PLANETARY GEARBOX |
| LOCKING RING DIN 471 55X3 | 53 01 333 08 | 8 | 5 | 9 387 598 | 93 87 598 01 | PLANETARY GEARBOX |
| LOCKING RING DIN 471 55X3 | 53 01 333 08 | 8 | 5 | 9 686 071 | 96 86 071 01 | PLANETARY GEARBOX |
| LOCKING RING DIN 471 60X3 4 | 10 87 566 1 | 28 | 3 | 9 444 410 | 94 44 410 03 | TRACTION DRIVE |
| LOCKING RING DIN 471 80X4 | 46 30 003 03 | 18 | 5 | 9 444 410 | 94 44 410 03 | TRACTION DRIVE |
| LOCKING RING DIN 472 125X4 | 42 81 038 08 | 12 | 1 | 5 102 407 | 51 02 407 08 | HYDRO MOTOR |
| LOCKING RING DIN 472 170X4 | 42 81 059 08 | 21 | 1 | 9 387 596 | 93 87 596 01 | ROPE DRUM |
| LOCKING RING DIN 472 28X1,5 | 42 81 100 01 | 29 | 1 | 9 387 598 | 93 87 598 01 | PLANETARY GEARBOX |
| LOCKING RING DIN 472 30X1,2 | 42 81 007 08 | 5 | 1 | X1042993 | 10 42 993 3 | GEAR WHEEL MOTOR |
| LOCKING RING DIN 472 41X1,7 | 42 81 102 01 | 66 | 1 | 9 444 410 | 94 44 410 03 | TRACTION DRIVE |
| LOCKING RING DIN 472 68X2,5 | 42 81 021 08 | 67 | 1 | 9 330 748 | 93 30 748 01 | SLEWING GEAR DRIVE |
| LOCKING RING DIN 472 80X2,5 | 42 81 025 08 | 12 | 1 | 5 701 090 | 57 01 090 08 | DRIVING GEAR |
| LOCKING RING DIN 472 85X3 | 42 81 027 08 | 4 | 1 | 9 387 598 | 93 87 598 01 | PLANETARY GEARBOX |
| LOCKING RING DIN 472 85X3 | 42 81 027 08 | 4 | 1 | 9 686 071 | 96 86 071 01 | PLANETARY GEARBOX |
| LOCKING RING DIN 472 90X3 | 10 17 163 2 | 9 | 1 | 5 923 269 | 59 23 269 14 | VARIABLE DISPLACEMENT MO |
| LOCKING SCREW M10X19 10. | 10 15 353 8 | 2 | 2 | 9 079 870 | 90 79 870 | CONTROL PARTS |
| LOCKING SCREW M10X19 10. | 10 15 353 8 | 4 | 1 | X1011683 | 10 11 683 9 | INJECTION PUMP ASSEMBLY |
| LOUDSPEAKER OVAL 12V 90 | 61 40 307 08 | 19 | 1 | 2 533 003 | 96 28 388 08 | ELECTRIC ADD-ON PARTS CA |
| LOWERING BRAKE VALVE | 57 09 606 08 | 36 | 2 | X1047300 | 10 47 300 1 | TELESCOPIC CYLINDER |
| LOWERING BRAKE VALVE 420 | 51 16 363 14 | 16 | 2 | 2 571 | 91 50 902 08 | HYDRAULIC BALLASTING |
| LOWERING BRAKE VALVE 42 | 10 28 584 5 | 6 | 1 | 2 970 | 91 55 482 08 | HYDRAULICS |
| LOWERING BRAKE VALVE 420 | 10 29 358 6 | 3 | 1 | 2 971 | 91 50 610 08 | HYDR.AUXILIARY HOISTING |
| LOWERING BRAKE VALVE SP | 51 13 199 08 | 7 | 1 | 2 970 | 91 55 482 08 | HYDRAULICS |
| LUBE OIL FILTER ASSEMBLY | 90 75 368 | 150 | 1 | X1012193 | 10 12 193 2 | BASIC ENGINE |
| LUBE OIL PUMP PRE-ASSY. B | 90 75 541 | 1 | 1 | 9 075 540 | 90 75 540 | LUBE OIL PUMP WITH FASTEN |
| LUBE OIL PUMP WITH FASTE | 90 75 540 | 140 | 1 | X1012193 | 10 12 193 2 | BASIC ENGINE |
| LUBRICATING OIL LINE 10X1 | 10 11 834 3 | 12 | 1 | X1011832 | 10 11 832 6 | EXHAUST TC MOUNTING |
| LUBRICATING OIL LINE 6X1 | 90 80 310 | 2 | 1 | X1011793 | 10 11 793 0 | ACCESSORIES AIR COMPRES |
| LUFFING CYLINDER 320/290-3 | 10 87 223 8 | 1 | 1 | 2 350 | 91 81 361 08 | LUFFING RAM W. PIVOT |
| LUFFING RAM W. PIVOT | 91 81 361 08 | 111 | 1 | | LTR 1100 -0 | LIEBHERR LTR 1100 |
| LUMINOUS PUSH BUTTON C | 60 61 437 08 | 12 | 1 | 2 530 002 | 96 19 448 08 | DASHBOARD FRONT, PRE-A |
| LUMINOUS PUSH BUTTON C | 60 61 437 08 | 12 | 5 | 2 531 001 | 96 36 738 08 | ELECTRIC FOR ARMREST LEF |
| LUMINOUS PUSH BUTTON C | 60 61 437 08 | 12 | 1 | 2 531 002 | 96 36 739 08 | ELECTRIC FOR ARMREST RI |
| LUMINOUS PUSH BUTTON C | 60 61 452 08 | 20 | 1 | 2 531 002 | 96 36 739 08 | ELECTRIC FOR ARMREST RI |
| LUMINOUS SWITCH CONTACT | 60 61 447 08 | 14 | 1 | 2 531 001 | 96 36 738 08 | ELECTRIC FOR ARMREST LEF |
| LUMINOUS SWITCH CONTACT | 60 61 447 08 | 14 | 2 | 2 531 002 | 96 36 739 08 | ELECTRIC FOR ARMREST RI |
| LUMP HAMMER DIN 6475 3KG | 79 00 311 08 | 61 | 1 | 1 750 001 | 92 85 698 08 | MAIN TOOLS |
| MAGNET 24V | 10 33 430 5 | (1) | 1 | X1010109 | 10 10 109 3 | SLEWING GEAR VALVE |
| MAGNET 24V | 10 66 309 4 | 1 | 1 | X1043033 | 10 43 033 1 | DIRECTIONAL SEAT VALVE |

| Description | Item | Pos. | Quantity | Page | Assembly | Description |
|---|---|---|---|---|---|---|
| MAGNET 24V | 57 08 278 08 | 1 | 1 | 5 114 444 | 51 14 444 08 | DIRECTIONAL CONTROL VALV |
| MAGNET 24V | 57 11 355 08 | (21) | 1 | 2 975 152 | 91 05 737 08 | HYDR.F.TELESCOPIC BOOM |
| MAGNET 28V | 10 65 012 4 | (1) | 1 | X1047529 | 10 47 529 2 | VALVE BLOCK |
| MAGNET COIL | 57 18 177 08 | 8 | 2 | 5 718 176 | 57 18 176 08 | DIRECTIONAL CONTROL VALV |
| MAGNET COIL | 69 32 086 14 | 1 | 2 | 5 114 327 | 51 14 327 14 | DIRECTIONAL CONTROL VALV |
| MAGNET COIL 1V | 57 02 797 08 | 10 | 1 | 7 029 305 | 70 29 305 | PRESSURE LIMITING VALVE |
| MAGNET COIL 24V | 57 17 127 08 | (1) | 2 | 1 970 | 96 71 367 08 | UNDERCARRIAGE HYDRAULIC |
| MAGNET COIL 24V | 57 18 188 08 | 1 | 1 | 5 717 378 | 57 17 378 08 | DIRECTIONAL CONTROL VALV |
| MAGNET COIL 24V | 57 19 101 08 | 1 | 1 | 5 714 537 | 57 14 537 08 | PRESSURE VALVE |
| MAGNET COIL 28V | 57 08 179 08 | 1 | 1 | 5 705 279 | 57 05 279 08 | DIRECTIONAL CONTROL VALV |
| MAGNET FASTENER | 70 42 268 08 | 14 | 2 | 2 501 000 | 91 48 769 08 | CRANE DRIVER'S CABIN,PRE |
| MAIN BEARING 104/111/32 | 90 73 734 | 1 | 5 | X1011693 | 10 11 693 9 | RS CRANKSHAFT BEARING K |
| MAIN BEARING 104/111/32 MIB | 90 75 606 | 2 | 5 | X1011693 | 10 11 693 9 | RS CRANKSHAFT BEARING K |
| MAIN HOIST GEAR | 91 53 926 08 | 125 | 1 | | LTR 1100 -0 | LIEBHERR LTR 1100 |
| MAIN HOISTING GEAR PRE-A | 96 35 649 08 | 1 | 1 | 2 450 | 91 53 926 08 | MAIN HOIST GEAR |
| MAIN HOISTING GEAR WELDE | 96 25 733 08 | 1 | 1 | 2 450 025 | 96 35 649 08 | MAIN HOISTING GEAR PRE-A |
| MAIN TOOLS | 92 85 698 08 | 1 | 1 | 1 750 | 91 48 606 08 | TOOLS AND ACCESSORIES |
| MALE CONNECTOR GSV6 M10 | 77 43 874 08 | 8 | 1 | 2 711 | 91 53 002 08 | CENT. LUBRIC. SYSTEM SUP |
| MALE CONNECTOR GSV6 M8 | 77 43 866 08 | 4 | 1 | 2 440 012 | 92 14 441 08 | CENTRAL LUBRICATING SYS |
| MALE CONNECTOR GSV6 M8 | 77 43 866 08 | 9 | 1 | 2 711 | 91 53 002 08 | CENT. LUBRIC. SYSTEM SUP |
| MALE CONNECTOR WSV 6 M1 | 77 43 867 08 | 7 | 7 | 2 711 | 91 53 002 08 | CENT. LUBRIC. SYSTEM SUP |
| MANDRIL RIVET 4X10,3 | 70 42 076 08 | 58 | 8 | 2 520 000 | 91 49 872 08 | CABIN, GLAZED |
| MANDRIL RIVET 4X10,3 | 70 42 076 08 | 3 | 4 | 2 913 004 | 96 20 460 08 | HOUSING PRE-ASSEMBLED |
| MANDRIL RIVET 4X10,3 | 70 42 076 08 | 69 | 32 | 2 932 095 | 96 46 064 08 | SWING FRAME FUSE AND RE |
| MANDRIL RIVET 4X10,3 | 70 42 076 08 | 28 | 8 | 2 932 119 | 96 46 061 08 | SWING FRAME RELAY CONT |
| MASTER SWITCH ST2000-LSB- | 60 60 950 08 | 4 | 1 | 2 531 001 | 96 36 738 08 | ELECTRIC FOR ARMREST LEF |
| MASTER SWITCH ST2000-LSB- | 60 60 950 08 | 4 | 1 | 2 531 002 | 96 36 739 08 | ELECTRIC FOR ARMREST RI |
| MEASURING COUPLING SPF | 47 56 033 08 | 54 | 9 | 2 970 | 91 55 482 08 | HYDRAULICS |
| MEASURING COUPLING SPF | 47 56 033 08 | 23 | 1 | 2 971 | 91 50 610 08 | HYDR.AUXILIARY HOISTING |
| MEASURING HOSE DN2 1000 | 47 09 018 08 | 57 | 2 | 2 970 | 91 55 482 08 | HYDRAULICS |
| MEASURING HOSE DN2 4000 | 47 09 017 08 | 59 | 1 | 2 970 | 91 55 482 08 | HYDRAULICS |
| MEASURING STRIP | 11 08 184 1 | 6 | 1 | 2 780 870 | 91 70 947 08 | CHARGE VOLTAGE REGULA |
| MECH. DOUBLE FOLD JIB PRE | 91 05 788 08 | 1 | 1 | 3 500 020 | 91 55 133 08 | DOUBLE FOLDING JIB MECH. |
| MECHANICAL AUXILIARIES | 96 22 207 08 | 99 | 1 | 2 970 | 91 55 482 08 | HYDRAULICS |
| MECHANICAL AUXILIARIES | 96 36 804 08 | 99 | 1 | 2 950 | 91 49 515 08 | COMPRESSED-AIR SYST.SU |
| MECHANICAL AUXILIARIES | 96 46 240 08 | 99 | 1 | 2 971 | 91 50 610 08 | HYDR.AUXILIARY HOISTING |
| MECHANICAL EXTENSION SYS | 91 57 885 08 | 7 | 1 | 3 100 | 91 59 279 08 | TELESCOPIC BOOM CPL. |
| MEGI BUFFER | 72 66 122 08 | 26 | 2 | 2 510 200 | 96 41 258 08 | SLEWING PLATFORM PANELLI |
| MEGI BUFFER | 72 66 122 08 | 7 | 2 | 2 515 007 | 96 42 014 08 | PLATFORM, PRE-ASSEMBLED |
| MEGI BUFFER 20X15-M6 NR 55 | 72 69 073 08 | 104 | 2 | 2 510 100 | 96 44 750 08 | SLEWING PLATFORM PANELLI |
| MEGI BUFFER 20X15-M6 NR 55 | 72 69 073 08 | 19 | 4 | 2 510 200 | 96 41 258 08 | SLEWING PLATFORM PANELLI |
| MEGI BUFFER E75-40-5M16 | 72 66 179 08 | 103 | 1 | 3 501 | 91 05 788 08 | MECH. DOUBLE FOLD JIB PR |
| MICRO SWITCH | 10 33 559 6 | 3 | 4 | 6 060 950 | 60 60 950 08 | MASTER SWITCH |
| MIRROR ATTACHM.AT SLEW. | 91 68 708 08 | 144 | 1 | | LTR 1100 -0 | LIEBHERR LTR 1100 |
| MIRROR ATTACHM.IN CRANE | 91 60 499 08 | 132 | 1 | | LTR 1100 -0 | LIEBHERR LTR 1100 |
| MIRROR RETAINER PRE-ASS. | 96 67 077 08 | 2 | 1 | 2 790 | 91 68 708 08 | MIRROR ATTACHM.AT SLEW.P |
| MIRROR SUPPORT 28X2 ST.37 | 97 93 206 08 | 1 | 1 | 2 790 040 | 91 60 499 08 | MIRROR ATTACHM.IN CRANE |
| MOTOR CONTROL DEVICE LH- | 10 12 389 0 | 570 | 1 | X1015207 | 10 15 207 7 | DIESEL ENGINE |
| MOTOR FLANGE | 93 89 964 01 | 85 | 1 | 9 330 748 | 93 30 748 01 | SLEWING GEAR DRIVE |
| MOTOR FLANGE 60X345/190R | 94 44 433 03 | 80 | 1 | 9 444 410 | 94 44 410 03 | TRACTION DRIVE |
| MOTOR FLANGE A2FM 125 | 96 86 073 01 | 75 | 1 | 9 686 071 | 96 86 071 01 | PLANETARY GEARBOX |
| MOTOR HOUSING | 10 01 469 2 | 3 | 1 | X1032706 | 10 32 706 5 | ELECTRIC PUMP |
| MOTOR HOUSING | 10 49 392 0 | 1 | 1 | X1032706 | 10 32 706 5 | ELECTRIC PUMP |
| MOTOR LEVER | 59 10 630 08 | 42 | 1 | 2 520 000 | 91 49 872 08 | CABIN, GLAZED |
| MOUNTING BOLT | 10 67 520 5 | 18 | 1 | 6 923 101 | 69 23 101 08 | ROPE LENGTH INDICATOR |
| MOUNTING HOOK ROD | 96 89 527 08 | 2 | 1 | 3 750 | 91 75 084 08 | TOOLS |
| MOUNTING PARTS | 96 50 675 08 | 2 | 1 | 1 740 | 91 56 353 08 | CENTRAL BALLAST |
| MOUNTING PARTS LWE | 96 46 363 08 | 3 | 1 | 1 100 | 91 71 033 08 | UNDERCARRIAGE COMPLETE |
| MOUNTING PRE-ASS. | 92 95 821 08 | 3 | 1 | 3 510 100 | 91 49 246 08 | TRANSPORT MOUNTING |
| MOUNTING WELDED | 92 95 822 08 | 1 | 1 | 3 500 104 | 92 95 821 08 | MOUNTING PRE-ASS. |

| Description | Item | Pos. | Quantity | Page | Assembly | Description |
|---|---|---|---|---|---|---|
| MOUNTING WELDED T ZN O | 96 35 560 08 | 52 | 1 | 3 106 000 | 91 60 313 08 | TELESCOPIC SECT.5 PRE-AS |
| MULTI-DISC CARRIER | 92 77 167 01 | 70 | 1 | 9 330 748 | 93 30 748 01 | SLEWING GEAR DRIVE |
| MULTI-DISC CARRIER | 93 87 609 01 | 65 | 1 | 9 686 071 | 96 86 071 01 | PLANETARY GEARBOX |
| MULTI-DISC CARRIER | 94 44 432 03 | 65 | 1 | 9 444 410 | 94 44 410 03 | TRACTION DRIVE |
| MULTI-PLATE PLUG PE-LLD | 77 90 205 08 | 11 | 2 | 2 510 200 | 96 41 258 08 | SLEWING PLATFORM PANELLI |
| MULTIPLE PLUG SOCKET 64- | 60 23 212 08 | 5 | 7 | 2 922 001 | 92 84 311 08 | BUS PCB |
| MUSHROOM-SHAPED DRAWI | 95 70 563 08 | 11 | 1 | 3 104 000 | 91 62 545 08 | TELESCOPIC SECT.3 PRE-ASS |
| MUSHROOM-SHAPED DRAWI | 95 70 379 08 | 11 | 1 | 3 103 000 | 91 62 544 08 | TELESCOPIC SECT.2 PRE-AS |
| MUSHROOM-SHAPED DRAWI | 95 70 114 08 | 11 | 1 | 3 102 000 | 91 62 543 08 | TELESCOPIC SECTION 1 PRE |
| NAME PLATE 20X8 | 60 27 614 08 | 56 | 70 | 2 932 042 | 96 68 587 08 | BASE ASSEMBLY |
| NAME PLATE 20X8 | 60 27 614 08 | 56 | 50 | 2 932 095 | 96 46 064 08 | SWING FRAME FUSE AND RE |
| NAME PLATE 20X8 | 60 27 614 08 | 12 | 10 | 2 932 166 | 92 68 911 08 | GROUND RAIL |
| NAME PLATE 25,4X101,6 | 60 27 601 08 | 1 | 9 | 1 400 201 | 96 43 983 08 | HOSE LINES SUPPORT SYSTE |
| NAME PLATE 25,4X101,6 | 60 27 601 08 | 1 | 25 | 1 997 | 91 53 489 08 | HOSE LINES CRAWLER |
| NAME PLATE 25,4X101,6 | 60 27 601 08 | 1 | 5 | 2 831 021 | 96 38 140 08 | HOSE LINES AIR CONDITIONIN |
| NAME PLATE 25,4X101,6 | 60 27 601 08 | 1 | 3 | 2 970 061 | 96 43 131 08 | HOSE LINES ADDITIONAL PA |
| NAME PLATE 25,4X101,6 | 60 27 601 08 | 1 | 1 | 2 970 103 | 96 43 157 08 | HOSE LINES OIL COOLER |
| NAME PLATE 25,4X101,6 | 60 27 601 08 | 1 | 10 | 2 971 012 | 96 43 144 08 | HOSE LINES HOISTING GEAR |
| NAME PLATE 25,4X101,6 | 60 27 601 08 | (1) | 4 | 2 975 038 | 91 26 492 08 | ADDNL.HYDR. FOLDING JIB |
| NAME PLATE 25,4X101,6 | 60 27 601 08 | 1 | 69 | 2 997 | 91 51 089 08 | HOSE LINES SUPERSTRUCT |
| NAME PLATE 25,4X165,1 | 60 27 602 08 | 2 | 2 | 2 970 061 | 96 43 131 08 | HOSE LINES ADDITIONAL PA |
| NAME PLATE 25,4X165,1 | 60 27 602 08 | 2 | 16 | 2 997 | 91 51 089 08 | HOSE LINES SUPERSTRUCT |
| NAME PLATE 25,4X165,1 | 60 27 603 08 | 2 | 1 | 1 400 201 | 96 43 983 08 | HOSE LINES SUPPORT SYSTE |
| NAME PLATE 25,4X165,1 | 60 27 603 08 | 2 | 18 | 1 997 | 91 53 489 08 | HOSE LINES CRAWLER |
| NAME PLATE 25,4X165,1 | 60 27 603 08 | 3 | 3 | 2 970 061 | 96 43 131 08 | HOSE LINES ADDITIONAL PA |
| NAME PLATE 25,4X165,1 | 60 27 603 08 | 2 | 6 | 2 970 103 | 96 43 157 08 | HOSE LINES OIL COOLER |
| NAME PLATE 25,4X165,1 | 60 27 603 08 | 2 | 3 | 2 971 012 | 96 43 144 08 | HOSE LINES HOISTING GEAR |
| NAME PLATE 25,4X165,1 | 60 27 603 08 | 3 | 26 | 2 997 | 91 51 089 08 | HOSE LINES SUPERSTRUCT |
| NEUTRAL CONDUCTOR BAR | 60 21 018 08 | 1 | 0.095 | 2 932 215 | 92 26 129 08 | GROUND RAIL |
| NITROGEN TENSIONER CPL | 79 03 360 14 | 2 | 1 | 1 100 212 | 79 02 561 14 | GUIDE WHEEL UNIT CPL |
| NON-RETURN VALVE | 10 11 997 1 | 6 | 1 | X1012024 | 10 12 024 2 | OIL LINE PRE-ASSEMBLY |
| NON-RETURN VALVE | 10 43 004 2 | 91 | 1 | X1033367 | 10 33 367 2 | CONTROL BLOCK |
| NON-RETURN VALVE | 10 43 004 2 | 131 | 1 | X1033367 | 10 33 367 2 | CONTROL BLOCK |
| NON-RETURN VALVE | 11 00 721 9 | 3 | 4 | X1100291 | 11 00 291 4 | DISTRIBUTION BLOCK |
| NON-RETURN VALVE | 11 17 027 7 | 2 | 1 | 5 113 066 | 51 13 066 08 | CONTROL BLOCK |
| NON-RETURN VALVE | 51 04 120 08 | 29 | 1 | 2 970 | 91 55 482 08 | HYDRAULICS |
| NON-RETURN VALVE | 51 07 413 08 | 4 | 8 | 5 113 078 | 51 13 078 08 | CONTROL PLATE |
| NON-RETURN VALVE | 51 14 606 08 | 9 | 1 | 2 970 | 91 55 482 08 | HYDRAULICS |
| NON-RETURN VALVE | 51 14 606 08 | 5 | 1 | 2 971 | 91 50 610 08 | HYDR.AUXILIARY HOISTING |
| NON-RETURN VALVE | 57 06 514 08 | 10 | 4 | X1010109 | 10 10 109 3 | SLEWING GEAR VALVE |
| NON-RETURN VALVE | 57 06 514 08 | 27 | 1 | X1029147 | 10 29 147 4 | CONTROL BLOCK |
| NON-RETURN VALVE | 57 06 514 08 | 27 | 2 | X1041191 | 10 41 191 5 | VALVE BLOCK |
| NON-RETURN VALVE | 57 06 514 08 | 17 | 2 | X1080297 | 10 80 297 1 | VALVE BLOCK |
| NON-RETURN VALVE | 57 18 890 08 | 4 | 2 | X1010109 | 10 10 109 3 | SLEWING GEAR VALVE |
| NON-RETURN VALVE | 77 43 781 08 | (1) | 1 | 2 711 | 91 53 002 08 | CENT. LUBRIC. SYSTEM SUP |
| NON-RETURN VALVE 0.1BAR | 51 14 315 14 | 2 | 1 | 1 423 101 | 99 26 462 14 | JACK-UP SYSTEM |
| NON-RETURN VALVE 100BAR | 51 14 501 08 | 19 | 2 | 2 340 004 | 96 43 780 08 | OIL TANK PRE-ASS. |
| NON-RETURN VALVE 100BAR | 51 14 586 08 | 35 | 1 | 2 970 | 91 55 482 08 | HYDRAULICS |
| NON-RETURN VALVE 160BAR | 51 14 439 08 | 10 | 1 | 2 970 | 91 55 482 08 | HYDRAULICS |
| NON-RETURN VALVE 160BAR | 51 14 469 08 | 15 | 1 | 2 970 | 91 55 482 08 | HYDRAULICS |
| NON-RETURN VALVE 250BAR | 51 04 135 08 | 34 | 1 | 2 970 | 91 55 482 08 | HYDRAULICS |
| NON-RETURN VALVE 250BAR | 51 14 937 08 | 8 | 1 | 2 975 152 | 91 05 737 08 | HYDR.F.TELESCOPIC BOOM |
| NON-RETURN VALVE 250BAR | 51 14 917 08 | 24 | 2 | 2 970 | 91 55 482 08 | HYDRAULICS |
| NON-RETURN VALVE 250BAR | 51 14 917 08 | 8 | 1 | 2 971 | 91 50 610 08 | HYDR.AUXILIARY HOISTING |
| NON-RETURN VALVE 400BAR | 51 14 324 08 | 43 | 1 | 2 970 | 91 55 482 08 | HYDRAULICS |
| NON-RETURN VALVE 400BAR | 51 14 324 08 | 32 | 1 | 2 971 | 91 50 610 08 | HYDR.AUXILIARY HOISTING |
| NON-RETURN VALVE 400BAR | 51 04 124 08 | 27 | 1 | 2 970 | 91 55 482 08 | HYDRAULICS |
| NON-RETURN VALVE RHV 10-L | 51 13 118 08 | 44 | 1 | 2 970 | 91 55 482 08 | HYDRAULICS |
| NON-RETURN VALVE RHV 10-L | 51 13 118 08 | 25 | 1 | 2 971 | 91 50 610 08 | HYDR.AUXILIARY HOISTING |
| NON-RETURN VALVE pmax10 | 51 14 815 08 | 6 | 1 | 2 971 | 91 50 610 08 | HYDR.AUXILIARY HOISTING |

| Description | Item | Pos. | Quantity | Page | Assembly | Description |
|---|---|---|---|---|---|---|
| NOZZLE | 59 10 562 08 | 8 | 1 | 2 520 018 | 92 13 430 08 | INSTRUMENT BOX CPL. |
| NOZZLE 0,4 | 51 07 543 08 | 47 | 1 | 2 520 000 | 91 49 872 08 | CABIN, GLAZED |
| NOZZLE 0,4 | 51 07 543 08 | 8 | 2 | 2 950 | 91 49 515 08 | COMPRESSED-AIR SYST.SU |
| NOZZLE 0,4 | 51 07 543 08 | 4 | 1 | 2 955 | 91 49 516 08 | PNEUM. CRANE OPERATORS |
| NOZZLE 0,4 | 51 07 543 08 | 25 | 2 | X1041191 | 10 41 191 3 | SHEET |
| NOZZLE 0,4 | 51 07 543 08 | 112 | 2 | X1041191 | 10 41 191 5 | VALVE BLOCK |
| NOZZLE 0,5 MS | 51 10 627 08 | 42 | 2 | 2 970 | 91 55 482 08 | HYDRAULICS |
| NOZZLE 0,5 MS | 51 10 627 08 | 27 | 1 | 2 971 | 91 50 610 08 | HYDR.AUXILIARY HOISTING |
| NOZZLE 0,5 MS | 51 10 627 08 | 10 | 1 | 2 975 152 | 91 05 737 08 | HYDR.F.TELESCOPIC BOOM |
| NOZZLE 0,5 MS | 51 10 629 08 | 46 | 1 | 2 970 | 91 55 482 08 | HYDRAULICS |
| NOZZLE 0,6 MS | 51 07 544 08 | 18 | 2 | 2 955 | 91 49 516 08 | PNEUM. CRANE OPERATORS |
| NOZZLE 0,6 MS | 51 07 544 08 | 68 | 1 | 2 970 | 91 55 482 08 | HYDRAULICS |
| NOZZLE 0,8 | 57 15 273 08 | 118 | 1 | X1041191 | 10 41 191 5 | VALVE BLOCK |
| NOZZLE 1,3 MS SPF | 10 10 109 2 | 37 | 1 | 2 970 | 91 55 482 08 | HYDRAULICS |
| NOZZLE 1,3 MS SPF | 10 10 109 2 | 34 | 1 | 2 971 | 91 50 610 08 | HYDR.AUXILIARY HOISTING |
| NOZZLE 1,5 | 57 18 771 08 | 6 | 1 | 5 113 078 | 51 13 078 08 | CONTROL PLATE |
| NOZZLE 104 | 59 10 574 08 | 31 | 1 | 2 520 000 | 91 49 872 08 | CABIN, GLAZED |
| NOZZLE D 2,0 M10X10 ST | 51 10 626 08 | 31 | 2 | 2 970 | 91 55 482 08 | HYDRAULICS |
| NOZZLE D=0,6 | 57 06 904 08 | 27 | 2 | X1080297 | 10 80 297 1 | VALVE BLOCK |
| NOZZLE D=0,6 | 57 06 905 08 | 21 | 2 | X1080297 | 10 80 297 1 | VALVE BLOCK |
| NOZZLE D=1,4 | 57 06 307 08 | 121 | 2 | X1041191 | 10 41 191 5 | VALVE BLOCK |
| NOZZLE D=1,6 | 57 17 046 08 | 23 | 1 | X1080297 | 10 80 297 1 | VALVE BLOCK |
| NOZZLE D=2.5 | 57 17 412 08 | 26 | 1 | X1047529 | 10 47 529 2 | VALVE BLOCK |
| NOZZLE DIN 913 D 1,2 M5X5 M | 57 13 622 08 | 24 | 1 | X1041191 | 10 41 191 3 | SHEET |
| NOZZLE DIN 913 D 1,2 M5X5 M | 57 13 622 08 | 119 | 6 | X1041191 | 10 41 191 5 | VALVE BLOCK |
| NOZZLE DIN 913 D=0,6 M10X10 | 51 10 622 08 | 53 | 1 | 2 970 | 91 55 482 08 | HYDRAULICS |
| NUT | 10 21 738 3 | 9 | 2 | 5 718 176 | 57 18 176 08 | DIRECTIONAL CONTROL VALV |
| NUT | 10 21 961 8 | 2 | 1 | 7 029 305 | 70 29 305 | PRESSURE LIMITING VALVE |
| NUT | 57 14 553 08 | (1) | 1 | 5 705 279 | 57 05 279 08 | DIRECTIONAL CONTROL VALV |
| NUT | 70 27 459 | (2) | 2 | 1 970 | 96 71 367 08 | UNDERCARRIAGE HYDRAULIC |
| NUT M10 | 73 81 781 23 | 6 | 1 | 9 074 507 | 90 74 507 | ROCKER ARM PRE-ASSY. |
| NUT M20X1 VERZ | 59 10 640 08 | 40 | 2 | 2 520 000 | 91 49 872 08 | CABIN, GLAZED |
| NUT UNF7/8X14 13.9 | 10 51 504 8 | 5 | 248 | 1 300 006 | 91 89 127 14 | CRAWLER CHAIN |
| O-RING | 10 04 040 0 | (3) | 1 | 9 078 680 | 90 78 680 | FUEL PUMP ASSEMBLY |
| O-RING | 10 04 040 0 | 46 | 1 | X1011583 | 10 11 583 7 | SEAL KIT DIESEL ENGINE |
| O-RING 10,00X2,5 NBR90 | 10 33 738 1 | 7 | 1 | 5 106 976 | 51 06 976 08 | BALL VALVE |
| O-RING 10,00X2,5 NBR90 | 10 33 738 1 | (1) | 2 | X1033367 | 10 33 367 2 | CONTROL BLOCK |
| O-RING 100X5 80 FKM 610 | 10 02 210 1 | 5 | 1 | 9 077 279 | 90 77 279 | CONNECTING BRANCH ADD-O |
| O-RING 10X2,2 NBR70 | 50 29 332 08 | (7) | 2 | 2 970 | 91 55 482 08 | HYDRAULICS |
| O-RING 110X3 NBR70 | 72 64 040 08 | 71 | 1 | 6 060 516 | 60 60 516 08 | GEAR CAM LIMITSWITCH |
| O-RING 120,50X3,53 75 FKM 17 | 73 81 912 | 60 | 1 | X1011583 | 10 11 583 7 | SEAL KIT DIESEL ENGINE |
| O-RING 120,50X3,53 75 FKM 17 | 73 81 912 | 12 | 1 | X1011801 | 10 11 801 3 | SEAL KIT AGGREGATE CARR |
| O-RING 120,50X3,53 75 FKM 17 | 73 81 912 | 12 | 1 | X1011801 | 10 11 801 4 | SEAL KIT AGGREGATE CARR |
| O-RING 125X2 VMQ 70 | 10 00 231 0 | 51 | 1 | X1011583 | 10 11 583 7 | SEAL KIT DIESEL ENGINE |
| O-RING 125X2 VMQ 70 | 10 00 231 0 | 10 | 1 | X1011793 | 10 11 793 0 | ACCESSORIES AIR COMPRES |
| O-RING 12X2 NBR70 | 70 42 748 08 | 5 | 4 | 2 501 022 | 96 34 184 08 | COVER COMPL. |
| O-RING 12X2 NBR70 | 70 42 748 08 | 37 | 2 | 2 510 200 | 96 41 258 08 | SLEWING PLATFORM PANELLI |
| O-RING 12X2 NBR70 | 70 42 748 08 | 8 | 2 | X1047526 | 10 47 526 2 | SHUT OFF DEVICE |
| O-RING 12X2 NBR80 | 72 64 032 08 | 83 | 2 | 9 444 410 | 94 44 410 03 | TRACTION DRIVE |
| O-RING 133,07X1,78 NBR 70 | 10 09 920 8 | 32 | 1 | X1032706 | 10 32 706 5 | ELECTRIC PUMP |
| O-RING 140 75 FKM 17939 | 10 00 649 9 | 4 | 2 | 9 073 083 | 90 73 083 | CYLINDER |
| O-RING 140 75 FKM 17939 | 10 00 649 9 | 1 | 8 | X1011583 | 10 11 583 7 | SEAL KIT DIESEL ENGINE |
| O-RING 140X3 NBR70 | 57 01 637 08 | 5 | 1 | X1032706 | 10 32 706 5 | ELECTRIC PUMP |
| O-RING 14X2 FPM70 | 10 11 397 3 | 14 | 2 | 2 200 048 | 96 32 140 08 | EXPANSION TANK PRE-ASS. |
| O-RING 14X3 NBR70 | 72 64 056 08 | 78 | 8 | 9 387 598 | 93 87 598 01 | PLANETARY GEARBOX |
| O-RING 15,50X2,00 FKM 80 | 10 11 397 5 | 58 | 1 | X1011583 | 10 11 583 7 | SEAL KIT DIESEL ENGINE |
| O-RING 15,50X2,00 FKM 80 | 10 11 397 5 | (2) | 1 | X1011969 | 10 11 969 7 | PRESSURE TRANSMITTER AT |
| O-RING 15,50X2,00 FKM 80 | 10 11 397 5 | 51 | 1 | X1011969 | 10 11 969 7 | PRESSURE TRANSMITTER AT |
| O-RING 15,5X2.5 NBR70 | 10 27 991 4 | (1) | 1 | X1047529 | 10 47 529 1 | VALVE BLOCK |
| O-RING 155X3 NBR 70 SPF | 72 64 266 01 | 31 | 1 | 9 387 070 | 93 87 070 01 | COMPACT ROPE WINCH |

| Description | Item | Pos. | Quantity | Page | Assembly | Description |
|---|---|---|---|---|---|---|
| O-RING 155X3 NBR 70 SPF | 72 64 266 01 | 31 | 1 | 9 685 586 | 96 85 586 01 | COMPACT ROPE WINCH |
| O-RING 15X3 NBR 70 | 72 64 034 01 | 78 | 6 | 9 686 071 | 96 86 071 01 | PLANETARY GEARBOX |
| O-RING 165X3 FKM 70 | 72 64 400 01 | 73 | 1 | 9 330 748 | 93 30 748 01 | SLEWING GEAR DRIVE |
| O-RING 16X2 NBR70 | 72 64 079 08 | (1) | 1 | 2 970 | 91 55 482 08 | HYDRAULICS |
| O-RING 16X2 NBR70 | 72 64 079 08 | 7 | 2 | X1047526 | 10 47 526 2 | SHUT OFF DEVICE |
| O-RING 175X3 NBR 70 | 72 64 536 01 | 24 | 1 | 9 330 748 | 93 30 748 01 | SLEWING GEAR DRIVE |
| O-RING 17X1, 8 | 10 03 010 9 | 2 | 2 | 5 114 327 | 51 14 327 14 | DIRECTIONAL CONTROL VALV |
| O-RING 17X2 FPM70 | 57 10 826 08 | (2) | 1 | 2 970 | 91 55 482 08 | HYDRAULICS |
| O-RING 17X2 NBR90 | 72 64 116 08 | (2) | 1 | 1 970 | 96 71 367 08 | UNDERCARRIAGE HYDRAULIC |
| O-RING 17X2 NBR90 | 72 64 116 08 | (2) | 1 | 1 970 | 96 71 367 08 | UNDERCARRIAGE HYDRAULIC |
| O-RING 180X4 NBR70 | 72 64 018 08 | 2 | 2 | 1 100 301 | 96 72 945 08 | INSTALLATION PARTS F.HYD |
| O-RING 195X3 NBR 70 | 76 10 217 03 | 76 | 1 | 9 387 598 | 93 87 598 01 | PLANETARY GEARBOX |
| O-RING 195X3 NBR 70 | 76 10 217 03 | 76 | 1 | 9 686 071 | 96 86 071 01 | PLANETARY GEARBOX |
| O-RING 19X2,5 FKM80 | 10 21 961 9 | 3 | 1 | 7 029 305 | 70 29 305 | PRESSURE LIMITING VALVE |
| O-RING 20,3X2,4 NBR70 | 50 29 329 08 | 8 | 1 | 2 270 001 | 96 37 923 08 | FUEL TANK, PRE-ASSEMBLED |
| O-RING 20,3X2,4 NBR70 | 50 29 329 08 | 32 | 3 | 2 950 | 91 49 515 08 | COMPRESSED-AIR SYST.SU |
| O-RING 20,3X2,4 NBR70 | 50 29 329 08 | 10 | 2 | 2 955 | 91 49 516 08 | PNEUM. CRANE OPERATORS |
| O-RING 20,90X3 | 10 04 039 9 | 1 | 1 | X1011585 | 10 11 585 4 | SEAL KIT INJECTION NOZZLE |
| O-RING 20X2 NBR90 | 51 07 927 08 | 8 | 2 | 5 106 976 | 51 06 976 08 | BALL VALVE |
| O-RING 20X2,5 NBR70 | 72 64 075 08 | (1) | 1 | 2 210 | 91 81 614 08 | DRIVE ASSEMBLY, PRE-ASSE |
| O-RING 20X4 NBR 70 | 72 64 149 01 | 69 | 1 | 9 330 748 | 93 30 748 01 | SLEWING GEAR DRIVE |
| O-RING 21X2 NBR70 | 72 64 108 08 | 127 | 4 | 2 520 000 | 91 49 872 08 | CABIN, GLAZED |
| O-RING 225X3 NBR 70 | 72 64 696 14 | 71 | 2 | 9 444 410 | 94 44 410 03 | TRACTION DRIVE |
| O-RING 22X1,5 FPM70 | 57 10 827 08 | (3) | 1 | 2 970 | 91 55 482 08 | HYDRAULICS |
| O-RING 22X2 NBR90 | 72 64 184 08 | (8) | 4 | 2 970 | 91 55 482 08 | HYDRAULICS |
| O-RING 23,52X1,78 NBR90 | 51 46 118 08 | (70) | 1 | 9 072 112 | 90 72 112 | HYDR.DOUBLE PUMP |
| O-RING 23X2 | 72 64 642 14 | (3) | 1 | 1 970 | 96 71 367 08 | UNDERCARRIAGE HYDRAULIC |
| O-RING 23X2 | 72 64 642 14 | (3) | 1 | 1 970 | 96 71 367 08 | UNDERCARRIAGE HYDRAULIC |
| O-RING 25X3 FPM70 | 50 07 415 08 | 3 | 1 | X1012038 | 10 12 038 3 | CYLINDER HEAD |
| O-RING 265X4 NBR 70 | 72 64 282 01 | 81 | 1 | 9 444 410 | 94 44 410 03 | TRACTION DRIVE |
| O-RING 26X2,5 NBR70 | 50 26 435 08 | 414 | 1 | 2 210 | 91 81 614 08 | DRIVE ASSEMBLY, PRE-ASSE |
| O-RING 26X3 HNBR 70 | 10 00 426 1 | 12 | 1 | 9 079 480 | 90 79 480 | POWER UNIT SUPPORT ATT |
| O-RING 26X3 HNBR 70 | 10 00 426 1 | 45 | 1 | X1011583 | 10 11 583 7 | SEAL KIT DIESEL ENGINE |
| O-RING 26X3 HNBR 70 | 10 00 426 1 | 13 | 1 | X1011801 | 10 11 801 3 | SEAL KIT AGGREGATE CARR |
| O-RING 26X3 HNBR 70 | 10 00 426 1 | 13 | 1 | X1011801 | 10 11 801 4 | SEAL KIT AGGREGATE CARR |
| O-RING 290X6 NBR70 | 72 64 284 08 | 16 | 1 | 9 387 070 | 93 87 070 01 | COMPACT ROPE WINCH |
| O-RING 300X3 NBR70 | 53 00 325 08 | 51 | 1 | 9 686 071 | 96 86 071 01 | PLANETARY GEARBOX |
| O-RING 300X6 EPDM 70 | 72 64 584 01 | (3) | 1 | 9 686 071 | 96 86 071 01 | PLANETARY GEARBOX |
| O-RING 300X6 NBR70 | 72 64 215 08 | 16 | 1 | 9 685 586 | 96 85 586 01 | COMPACT ROPE WINCH |
| O-RING 330X3 NBR 70 | 72 64 299 01 | 19 | 2 | 9 387 598 | 93 87 598 01 | PLANETARY GEARBOX |
| O-RING 330X3 NBR 70 | 72 64 299 01 | 19 | 2 | 9 686 071 | 96 86 071 01 | PLANETARY GEARBOX |
| O-RING 39,7X3,5 NBR70 | 57 05 889 08 | 3 | 1 | 5 708 320 | 57 08 320 08 | FILTER COVER |
| O-RING 39,7X3,5 NBR70 | 57 05 889 08 | 4 | 1 | X1032665 | 10 32 665 4 | RETURN FILTER |
| O-RING 400X5 NBR 70 | 76 10 378 03 | 57 | 1 | 9 444 410 | 94 44 410 03 | TRACTION DRIVE |
| O-RING 440X4 NBR70 | 72 64 203 08 | 49 | 1 | 9 444 410 | 94 44 410 03 | TRACTION DRIVE |
| O-RING 470X5 NBR 70 | 76 10 617 03 | 6 | 1 | 9 444 410 | 94 44 410 03 | TRACTION DRIVE |
| O-RING 4X1 NBR90 | 51 07 123 08 | 3 | 1 | 5 114 794 | 51 14 794 08 | LOAD HOLDING VALVE |
| O-RING 54X3 NBR70 | 72 64 055 08 | (2) | 1 | 1 970 | 96 71 367 08 | UNDERCARRIAGE HYDRAULIC |
| O-RING 54X3 NBR70 | 72 64 055 08 | (2) | 1 | 1 970 | 96 71 367 08 | UNDERCARRIAGE HYDRAULIC |
| O-RING 59X3 NBR70 | 72 64 076 08 | 2 | 1 | 5 106 708 | 51 06 708 08 | LINE FILTER |
| O-RING 62X4 NBR90 | 72 64 148 08 | (3) | 1 | 1 970 | 96 71 367 08 | UNDERCARRIAGE HYDRAULIC |
| O-RING 62X4 NBR90 | 72 64 148 08 | (3) | 1 | 1 970 | 96 71 367 08 | UNDERCARRIAGE HYDRAULIC |
| O-RING 63,17X2,62 FKM 70 A,G | 73 80 970 | 13 | 1 | X1011585 | 10 11 585 1 | SEAL KIT CYLINDER HEAD |
| O-RING 63,17X2,62 FKM 70 A,G | 73 80 970 | 13 | 1 | X1011585 | 10 11 585 2 | SEAL KIT ZYLINDER HEAD CPL |
| O-RING 63,17X2,62 FKM 70 A,G | 73 80 970 | 13 | 1 | X1011585 | 10 11 585 3 | SEAL KIT ZYLINDER HEAD CPL |
| O-RING 63,17X2,62 FKM 70 A,G | 73 80 970 | 13 | 1 | X1011585 | 10 11 585 9 | SEAL KIT CYLINDER HEAD |
| O-RING 68,26X3,53 FKM 70 | 73 81 593 | 57 | 2 | X1011583 | 10 11 583 7 | SEAL KIT DIESEL ENGINE |
| O-RING 68,26X3,53 FKM 70 | 73 81 593 | 11 | 2 | X1011801 | 10 11 801 3 | SEAL KIT AGGREGATE CARR |
| O-RING 68,26X3,53 FKM 70 | 73 81 593 | 11 | 2 | X1011801 | 10 11 801 4 | SEAL KIT AGGREGATE CARR |
| O-RING 6X1 NBR90 | 57 06 906 08 | 3 | 1 | 5 113 066 | 51 13 066 08 | CONTROL BLOCK |

| Description | Item | Pos. | Quantity | Page | Assembly | Description |
|---|---|---|---|---|---|---|
| O-RING 6X1 NBR90 | 57 06 906 08 | 7 | 1 | 5 711 301 | 57 11 301 08 | PRESSURE LIMITING VALVE |
| O-RING 6X1 NBR90 | 57 06 906 08 | 5 | 1 | 5 718 895 | 57 18 895 08 | PRESSURE VALVE |
| O-RING 6X1 NBR90 | 57 06 906 08 | 33 | 1 | X1032706 | 10 32 706 5 | ELECTRIC PUMP |
| O-RING 80X5,0 80 FKM 610 | 10 02 232 0 | 12 | 2 | X1011585 | 10 11 585 1 | SEAL KIT CYLINDER HEAD |
| O-RING 80X5,0 80 FKM 610 | 10 02 232 0 | 12 | 2 | X1011585 | 10 11 585 2 | SEAL KIT ZYLINDER HEAD CPL |
| O-RING 80X5,0 80 FKM 610 | 10 02 232 0 | 12 | 2 | X1011585 | 10 11 585 3 | SEAL KIT ZYLINDER HEAD CPL |
| O-RING 80X5,0 80 FKM 610 | 10 02 232 0 | 12 | 2 | X1011585 | 10 11 585 9 | SEAL KIT CYLINDER HEAD |
| O-RING 80X5,0 80 FKM 610 | 10 02 232 0 | 21 | 2 | X1011801 | 10 11 801 3 | SEAL KIT AGGREGATE CARR |
| O-RING 80X5,0 80 FKM 610 | 10 02 232 0 | 21 | 2 | X1011801 | 10 11 801 4 | SEAL KIT AGGREGATE CARR |
| O-RING 80X5,0 80 FKM 610 | 10 02 232 0 | 5 | 2 | X1011816 | 10 11 816 1 | CONNECTING LINE ADD-ON |
| O-RING 85X2 HNBR 70 | 10 21 837 0 | 2 | 1 | X1021997 | 10 21 997 8 | STARTER |
| O-RING 85X2 HNBR 70 | 10 21 837 0 | 2 | 1 | X1138664 | 11 38 664 4 | STARTER PRE-ASSY. |
| O-RING 88,49X3,53 | 72 64 311 14 | 6 | 2 | 1 100 214 | 74 90 137 14 | GUIDE WHEEL CPL |
| O-RING 88X3 ACM70 | 57 09 797 08 | 7 | 1 | 5 700 161 | 57 00 161 | AIR COMPRESSOR |
| O-RING 8X2 NBR70 | 50 26 529 08 | 73 | 1 | 9 387 598 | 93 87 598 01 | PLANETARY GEARBOX |
| O-RING 8X2 NBR90 | 10 16 615 7 | 73 | 1 | 9 686 071 | 96 86 071 01 | PLANETARY GEARBOX |
| O-RING 95X3 NBR70 | 72 64 057 08 | 97 | 1 | 9 330 748 | 93 30 748 01 | SLEWING GEAR DRIVE |
| O-RING ARP 568 10,52X1,83 NB | 50 12 437 08 | (1) | 1 | 2 970 | 91 55 482 08 | HYDRAULICS |
| O-RING ARP 568 10,82X1,78 NB | 51 07 181 08 | 27 | 1 | X1117027 | 11 17 027 6 | PRESSURE REDUCTION VALV |
| O-RING ARP 568 101,20X3,53 | 50 12 326 08 | 32 | 1 | 9 072 112 | 90 72 112 | HYDR.DOUBLE PUMP |
| O-RING ARP 568 11,89X1,98 N | 57 11 305 08 | 8 | 1 | 5 711 301 | 57 11 301 08 | PRESSURE LIMITING VALVE |
| O-RING ARP 568 113,89X3,53 | 50 12 444 08 | 2 | 1 | 9 080 345 | 90 80 345 | WATER PUMP WITH FASTENIN |
| O-RING ARP 568 113,89X3,53 | 50 12 444 08 | 10 | 1 | X1011801 | 10 11 801 3 | SEAL KIT AGGREGATE CARR |
| O-RING ARP 568 113,89X3,53 | 50 12 444 08 | 10 | 1 | X1011801 | 10 11 801 4 | SEAL KIT AGGREGATE CARR |
| O-RING ARP 568 117,07X3,53 | 51 46 141 08 | 15 | 1 | 5 102 407 | 51 02 407 08 | HYDRO MOTOR |
| O-RING ARP 568 12,37X2,62 NB | 51 07 461 08 | 1 | 1 | X1021831 | 10 21 831 0 | LOAD HOLDING VALVE |
| O-RING ARP 568 12,37X2,62 NB | 51 07 461 08 | 63 | 2 | X1080297 | 10 80 297 1 | VALVE BLOCK |
| O-RING ARP 568 129,54X5,33 | 72 64 346 08 | 11 | 1 | X1106838 | 11 06 838 7 | TRACK WIDTH ADJUSTING CY |
| O-RING ARP 568 148,49X5,33 | 51 45 275 08 | 9 | 1 | X1032665 | 10 32 665 4 | RETURN FILTER |
| O-RING ARP 568 17,12X2,62 NB | 51 07 101 08 | 25 | 1 | 5 123 931 | 51 23 931 08 | PNEUMATIC CYLINDER |
| O-RING ARP 568 170,82X7 NB | 57 05 883 08 | 1 | 1 | 5 708 320 | 57 08 320 08 | FILTER COVER |
| O-RING ARP 568 170,82X7 NB | 57 05 883 08 | 8 | 2 | X1032665 | 10 32 665 4 | RETURN FILTER |
| O-RING ARP 568 170,82X7 NB | 57 05 883 08 | (14) | 2 | XSK_Z480 | SK_Z48005 | SERVICE |
| O-RING ARP 568 18,72X2,62 NB | 51 07 383 08 | 58 | 1 | X1047300 | 10 47 300 1 | TELESCOPIC CYLINDER |
| O-RING ARP 568 190,09X3,53 | 51 46 042 08 | 12 | 1 | 5 923 269 | 59 23 269 14 | VARIABLE DISPLACEMENT MO |
| O-RING ARP 568 23,52X1,78 N | 57 06 523 08 | 25 | 1 | X1117027 | 11 17 027 6 | PRESSURE REDUCTION VALV |
| O-RING ARP 568 31,42X2,62 NB | 51 57 060 08 | (1) | 1 | 2 210 | 91 81 614 08 | DRIVE ASSEMBLY, PRE-ASSE |
| O-RING ARP 568 32,92X3,53 NB | 51 05 870 08 | 412 | 2 | 2 210 | 91 81 614 08 | DRIVE ASSEMBLY, PRE-ASSE |
| O-RING ARP 568 32,92X3,53 NB | 51 05 870 08 | (1) | 1 | 2 970 | 91 55 482 08 | HYDRAULICS |
| O-RING ARP 568 32,99X2,62 NB | 51 07 617 08 | 5 | 3 | X1003269 | 10 03 269 6 | CARTRIDGE |
| O-RING ARP 568 34,59X2,62 NB | 57 06 852 08 | 26 | 3 | 5 123 931 | 51 23 931 08 | PNEUMATIC CYLINDER |
| O-RING ARP 568 36,17X2,62 NB | 57 02 428 08 | 69 | 1 | 5 709 606 | 57 09 606 08 | LOWERING BRAKE VALVE |
| O-RING ARP 568 37,69X3,53 NB | 51 05 867 08 | 501 | 3 | 2 970 | 91 55 482 08 | HYDRAULICS |
| O-RING ARP 568 37,69X3,53 NB | 51 05 867 08 | (1) | 1 | 2 971 | 91 50 610 08 | HYDR.AUXILIARY HOISTING |
| O-RING ARP 568 37,69X3,53 NB | 51 05 867 08 | 14 | 3 | 2 975 152 | 91 05 737 08 | HYDR.F.TELESCOPIC BOOM |
| O-RING ARP 568 40,87X3,53 NB | 57 00 484 08 | 55 | 1 | X1011583 | 10 11 583 7 | SEAL KIT DIESEL ENGINE |
| O-RING ARP 568 40,87X3,53 NB | 57 00 484 08 | 18 | 1 | X1011801 | 10 11 801 3 | SEAL KIT AGGREGATE CARR |
| O-RING ARP 568 44,12X2,62 NB | 51 46 183 08 | 68 | 1 | 5 709 606 | 57 09 606 08 | LOWERING BRAKE VALVE |
| O-RING ARP 568 44,12X2,62 NB | 51 46 183 08 | 50 | 1 | X1047300 | 10 47 300 1 | TELESCOPIC CYLINDER |
| O-RING ARP 568 5,28X1,78 NB | 72 64 266 08 | 27 | 1 | 5 123 931 | 51 23 931 08 | PNEUMATIC CYLINDER |
| O-RING ARP 568 63,09X3,53 NB | 57 05 888 08 | 11 | 1 | X1032665 | 10 32 665 4 | RETURN FILTER |
| O-RING ARP 568 66,27X3,53 NB | 51 86 485 08 | 6 | 1 | 5 102 294 | 51 02 294 08 | HYDRO MOTOR |
| O-RING ARP 568 69,44X3,53 NB | 51 05 989 08 | 413 | 1 | 2 210 | 91 81 614 08 | DRIVE ASSEMBLY, PRE-ASSE |
| O-RING ARP 568 75,87X2,62 NB | 51 45 304 08 | 15 | 1 | 5 701 090 | 57 01 090 08 | DRIVING GEAR |
| O-RING ARP 568 82,14X3,53 NB | 51 86 236 08 | 10 | 1 | X1106838 | 11 06 838 7 | TRACK WIDTH ADJUSTING CY |
| O-RING ARP 568 9,25X1,78 NB | 51 07 190 08 | 3 | 4 | 5 114 327 | 51 14 327 14 | DIRECTIONAL CONTROL VALV |
| O-RING ARP 568 9,25X1,78 NB | 51 07 190 08 | 26 | 1 | X1117027 | 11 17 027 6 | PRESSURE REDUCTION VALV |
| O-RING ARP 568 9,25X1,78 NB | 51 07 386 08 | 60 | 1 | X1047300 | 10 47 300 1 | TELESCOPIC CYLINDER |
| O-RING ARP 568 98,02X3,53 NB | 51 46 132 08 | 411 | 1 | 2 210 | 91 81 614 08 | DRIVE ASSEMBLY, PRE-ASSE |
| O-RING ARP 568 98,02X3,53 NB | 51 46 132 08 | 6 | 1 | 5 102 407 | 51 02 407 08 | HYDRO MOTOR |

| Description | Item | Pos. | Quantity | Page | Assembly | Description |
|---|---|---|---|---|---|---|
| O-RING ARP 568-NBR70 6,07X1 | 72 64 196 08 | 6 | 1 | 5 718 895 | 57 18 895 08 | PRESSURE VALVE |
| O-RING DIN 3770 25X2,5 FPM7 | 72 64 223 08 | 16 | 1 | 2 200 048 | 96 32 140 08 | EXPANSION TANK PRE-ASS. |
| O-RING DIN 3771 100X3 FKM | 73 81 192 | 2211 | 1 | X1011583 | 10 11 583 7 | SEAL KIT DIESEL ENGINE |
| O-RING DIN 3771 101,20X3,53 | 73 82 158 | 2 | 1 | 9 078 250 | 90 78 250 | LOCKING PIECES |
| O-RING DIN 3771 101,20X3,53 | 73 82 158 | 7 | 1 | 9 078 962 | 90 78 962 | AUXILIARY DRIVE PRE-ASS. |
| O-RING DIN 3771 101,20X3,53 | 73 82 158 | 49 | 3 | X1011583 | 10 11 583 7 | SEAL KIT DIESEL ENGINE |
| O-RING DIN 3771 101,20X3,53 | 73 80 401 | 62 | 1 | X1011583 | 10 11 583 7 | SEAL KIT DIESEL ENGINE |
| O-RING DIN 3771 104,37X3,53 | 73 80 520 | 48 | 2 | X1011583 | 10 11 583 7 | SEAL KIT DIESEL ENGINE |
| O-RING DIN 3771 104,37X3,53 | 73 80 520 | 38 | 1 | X1011801 | 10 11 801 3 | SEAL KIT AGGREGATE CARR |
| O-RING DIN 3771 104,37X3,53 | 73 80 520 | 38 | 1 | X1011801 | 10 11 801 4 | SEAL KIT AGGREGATE CARR |
| O-RING DIN 3771 113,89X3,53 | 72 64 365 | 56 | 1 | X1011583 | 10 11 583 7 | SEAL KIT DIESEL ENGINE |
| O-RING DIN 3771 120X3 VMQ | 91 77 948 | 50 | 1 | X1011583 | 10 11 583 7 | SEAL KIT DIESEL ENGINE |
| O-RING DIN 3771 28X3,55 NB | 72 64 045 08 | 15 | 1 | 2 340 004 | 96 43 780 08 | OIL TANK PRE-ASS. |
| O-RING DIN 3771 29,51X5,33 | 11 00 086 8 | (9) | 1 | 2 200 048 | 96 84 070 08 | EXPANSION TANK PRE-ASS. |
| O-RING DIN 3771 34,65X1,78 | 73 81 270 | 6 | 1 | X1011585 | 10 11 585 1 | SEAL KIT CYLINDER HEAD |
| O-RING DIN 3771 34,65X1,78 | 73 81 270 | 6 | 1 | X1011585 | 10 11 585 2 | SEAL KIT ZYLINDER HEAD CPL |
| O-RING DIN 3771 34,65X1,78 | 73 81 270 | 6 | 1 | X1011585 | 10 11 585 3 | SEAL KIT ZYLINDER HEAD CPL |
| O-RING DIN 3771 34,65X1,78 | 73 81 270 | 6 | 1 | X1011585 | 10 11 585 9 | SEAL KIT CYLINDER HEAD |
| O-RING DIN 3771 35,00X2,00 | 53 01 515 08 | 68 | 1 | 9 330 748 | 93 30 748 01 | SLEWING GEAR DRIVE |
| O-RING DIN 3771 40,64X5,33 | 73 81 566 | 54 | 1 | X1011583 | 10 11 583 7 | SEAL KIT DIESEL ENGINE |
| O-RING DIN 3771 40,64X5,33 | 73 81 566 | 17 | 1 | X1011801 | 10 11 801 3 | SEAL KIT AGGREGATE CARR |
| O-RING DIN 3771 40,64X5,33 | 73 81 566 | 2 | 2 | X1012166 | 10 12 166 7 | CONNECTING PIECE W.O-RIN |
| O-RING DIN 3771 59,92X3,53 | 73 81 779 | 2 | 1 | 9 079 472 | 90 79 472 | COOLANT PIPE BEND ADD-ON |
| O-RING DIN 3771 59,92X3,53 | 73 81 779 | 10 | 2 | 9 079 480 | 90 79 480 | POWER UNIT SUPPORT ATT |
| O-RING DIN 3771 59,92X3,53 | 73 81 779 | 2 | 1 | 9 080 280 | 90 80 280 | LOCKING PIECES |
| O-RING DIN 3771 59,92X3,53 | 73 81 779 | 3 | 2 | 9 080 345 | 90 80 345 | WATER PUMP WITH FASTENIN |
| O-RING DIN 3771 59,92X3,53 | 73 81 779 | 43 | 6 | X1011583 | 10 11 583 7 | SEAL KIT DIESEL ENGINE |
| O-RING DIN 3771 59,92X3,53 | 73 81 779 | 6 | 7 | X1011801 | 10 11 801 3 | SEAL KIT AGGREGATE CARR |
| O-RING DIN 3771 59,92X3,53 | 73 81 779 | 6 | 7 | X1011801 | 10 11 801 4 | SEAL KIT AGGREGATE CARR |
| O-RING DIN 3771 6,20X1,5 FK | 73 81 448 | (1) | 1 | X1047529 | 10 47 529 1 | VALVE BLOCK |
| O-RING DIN 3771 7,00X1,5 FK | 73 81 685 | 8 | 1 | 9 074 165 | 90 74 165 | BALANCER ASSEMBLY |
| O-RING DIN 3771 7,00X1,5 FK | 73 81 685 | 2 | 2 | X1011583 | 10 11 583 7 | SEAL KIT DIESEL ENGINE |
| O-RING DIN 3771 7,00X1,5 FK | 73 81 685 | 14 | 1 | X1012223 | 10 12 223 3 | CAMSHAFT CPL. |
| O-RING DIN 3771 79X4 NBR 70 | 10 29 511 6 | 2 | 1 | 9 075 483 | 90 75 483 | CRANKCASE BREATHER |
| O-RING DIN 3771 91,67X3,53 | 73 80 657 | 61 | 1 | X1011583 | 10 11 583 7 | SEAL KIT DIESEL ENGINE |
| O-RING DIN 3771 94,50X3,00 F | 10 11 625 5 | (1) | 1 | 9 078 314 | 90 78 314 | HEATING FLANGE ADD-ON |
| O-RING DIN 3771 98,02X3,53 H | 73 81 995 | 4 | 1 | X1011566 | 10 11 566 4 | LOCKING PIECES |
| O-RING ISO 3601-1 101,19X3,53 | 10 28 921 0 | 2 | 1 | X1028018 | 10 28 018 1 | TRANSPARENT CONTAINER |
| O-RING ISO 3601-1 17,17X1,78 | 73 81 103 | 2 | 1 | 9 076 534 | 90 76 534 | ROTATIONAL SPEED SENSOR |
| O-RING ISO 3601-1 17,17X1,78 | 73 81 103 | 2 | 1 | X1013307 | 10 13 307 7 | ROTATIONAL SPEED SENSOR |
| O-RING ISO 3601-1 21,95X1,78 | 73 81 415 | 33 | 1 | X1011573 | 10 11 573 7 | FUEL LINES |
| O-RING ISO 3601-1 21,95X1,78 | 73 81 415 | 59 | 1 | X1011583 | 10 11 583 7 | SEAL KIT DIESEL ENGINE |
| O-RING ISO 3601-1 34,59X2,62 | 73 82 059 | 5 | 1 | 9 075 540 | 90 75 540 | LUBE OIL PUMP WITH FASTEN |
| O-RING ISO 3601-1 34,59X2,62 | 73 82 059 | 41 | 1 | X1011583 | 10 11 583 7 | SEAL KIT DIESEL ENGINE |
| O-RING ISO 3601-1 34,59X2,62 | 73 80 653 | 11 | 2 | 9 079 480 | 90 79 480 | POWER UNIT SUPPORT ATT |
| O-RING ISO 3601-1 34,59X2,62 | 73 80 653 | 9 | 1 | X1011582 | 10 11 582 9 | FLYWHEEL HOUSING MOUNT |
| O-RING ISO 3601-1 34,59X2,62 | 73 80 653 | 44 | 4 | X1011583 | 10 11 583 7 | SEAL KIT DIESEL ENGINE |
| O-RING ISO 3601-1 34,59X2,62 | 73 80 653 | 7 | 2 | X1011801 | 10 11 801 3 | SEAL KIT AGGREGATE CARR |
| O-RING ISO 3601-1 34,59X2,62 | 73 80 653 | 7 | 2 | X1011801 | 10 11 801 4 | SEAL KIT AGGREGATE CARR |
| O-RING ISO 3601-1 39,34X2,62 | 73 81 812 | 4 | 1 | 9 075 540 | 90 75 540 | LUBE OIL PUMP WITH FASTEN |
| O-RING ISO 3601-1 39,34X2,62 | 73 81 812 | 40 | 1 | X1011583 | 10 11 583 7 | SEAL KIT DIESEL ENGINE |
| O-RING ISO 3601-1 52,07X2,62 | 73 80 919 | 14 | 1 | X1011585 | 10 11 585 1 | SEAL KIT CYLINDER HEAD |
| O-RING ISO 3601-1 52,07X2,62 | 73 80 919 | 14 | 1 | X1011585 | 10 11 585 2 | SEAL KIT ZYLINDER HEAD CPL |
| O-RING ISO 3601-1 52,07X2,62 | 73 80 919 | 14 | 1 | X1011585 | 10 11 585 3 | SEAL KIT ZYLINDER HEAD CPL |
| O-RING ISO 3601-1 52,07X2,62 | 73 80 919 | 14 | 1 | X1011585 | 10 11 585 9 | SEAL KIT CYLINDER HEAD |
| O-RING ISO 3601-1 52,07X2,62 | 73 80 919 | 8 | 1 | X1011816 | 10 11 816 1 | CONNECTING LINE ADD-ON |
| O-RING ISO 3601-1 82,22X2,62 | 73 80 598 | 52 | 1 | X1011583 | 10 11 583 7 | SEAL KIT DIESEL ENGINE |
| O-RING ISO 3601-1 85,32X3,53 | 73 81 361 | 5 | 2 | 9 073 767 | 90 73 767 | POWER TAKE-OFF ADD-ON |
| O-RING ISO 3601-1 85,32X3,53 | 73 81 361 | 2 | 2 | 9 078 249 | 90 78 249 | LOCKING PIECES |
| O-RING ISO 3601-1 85,32X3,53 | 73 81 361 | 47 | 6 | X1011583 | 10 11 583 7 | SEAL KIT DIESEL ENGINE |

| Description | Item | Pos. | Quantity | Page | Assembly | Description |
|---|---|---|---|---|---|---|
| OIL AIR COOLER | 10 09 734 5 | 10 | 2 | 2 984 | 91 52 906 08 | OIL COOLER INSTALLATION |
| OIL AIR COOLER | 55 06 283 08 | 103 | 1 | 2 210 008 | 96 48 137 08 | RADIATOR, PRE-ASSEMBLED |
| OIL COOLER | 10 32 500 1 | 3 | 1 | X1011739 | 10 11 739 7 | OIL COOLER, PRE-ASSEMBLE |
| OIL COOLER | 10 35 483 5 | 1 | 1 | X1009734 | 10 09 734 5 | OIL AIR COOLER |
| OIL COOLER ADD-ON D934 | 10 11 739 8 | 130 | 1 | X1012193 | 10 12 193 2 | BASIC ENGINE |
| OIL COOLER HOUSING D934 | 10 11 739 6 | 1 | 1 | X1011739 | 10 11 739 7 | OIL COOLER, PRE-ASSEMBLE |
| OIL COOLER INSTALLATION | 91 52 906 08 | 187 | 1 | | LTR 1100 -0 | LIEBHERR LTR 1100 |
| OIL COOLER, PRE-ASSEMBLE | 10 11 739 7 | 1 | 1 | X1011739 | 10 11 739 8 | OIL COOLER ADD-ON |
| OIL DIPSTICK | 10 11 888 5 | 1 | 1 | X1011888 | 10 11 888 4 | OIL DIPSTICK WITH PIPE |
| OIL DIPSTICK 1 1/8" | 50 01 315 01 | 1 | 1 | 9 275 212 | 92 75 212 01 | OIL-LEVEL GAUGE INSTALLAT |
| OIL DIPSTICK 1 1/8" | 92 75 544 01 | 1 | 1 | 9 275 543 | 92 75 543 01 | VENTILATION CONNECTING PI |
| OIL DIPSTICK 1 1/8" | 92 76 102 01 | 15 | 1 | 9 393 684 | 93 93 684 01 | OIL-GAUGING INSTRUMENT |
| OIL DIPSTICK WITH PIPE | 10 11 888 4 | 21 | 1 | X1015207 | 10 15 207 7 | DIESEL ENGINE |
| OIL DRAIN PLUG M26X1,5 | 78 90 119 08 | 9 | 2 | 2 340 004 | 96 43 780 08 | OIL TANK PRE-ASS. |
| OIL DRAINING HOSE COMPL. 1 | 10 03 229 7 | 68 | 1 | 1 750 001 | 92 85 698 08 | MAIN TOOLS |
| OIL FILLER INLET | 10 11 883 9 | 23 | 1 | X1015207 | 10 15 207 7 | DIESEL ENGINE |
| OIL FILTER HOUSING | 11 64 705 9 | 5 | 1 | 5 106 681 | 51 06 681 08 | PRESSURE FILTER |
| OIL LINE PRE-ASSEMBLY 12X | 10 12 024 2 | 25 | 1 | X1015207 | 10 15 207 7 | DIESEL ENGINE |
| OIL RESERVOIR, EXTENSION | 91 53 116 08 | 109 | 1 | | LTR 1100 -0 | LIEBHERR LTR 1100 |
| OIL RETURN PIPE DN19/232 | 10 11 901 9 | 5 | 1 | X1011989 | 10 11 989 7 | RK OIL RETURN PIPE |
| OIL SIGHT GLASS G1" ALU | 77 43 201 08 | 14 | 1 | 2 340 004 | 96 43 780 08 | OIL TANK PRE-ASS. |
| OIL SUMP PRE-ASS. R-MOTO | 10 15 522 1 | 1 | 1 | X1012414 | 10 12 414 0 | OIL SUMP WITH FASTENING |
| OIL SUMP WITH FASTENING R | 10 12 414 0 | 20 | 1 | X1015207 | 10 15 207 7 | DIESEL ENGINE |
| OIL TANK PRE-ASS. | 96 43 780 08 | 1 | 1 | 2 340 | 91 53 116 08 | OIL RESERVOIR, EXTENSION |
| OIL TANK ST.CONST. 723L/653 | 96 20 154 08 | 1 | 1 | 2 340 004 | 96 43 780 08 | OIL TANK PRE-ASS. |
| OIL-GAUGING INSTRUMENT | 93 93 684 01 | 10 | 1 | 9 685 586 | 96 85 586 01 | COMPACT ROPE WINCH |
| OIL-LEVEL GAUGE INSTALLAT | 92 75 212 01 | 10 | 1 | 9 387 070 | 93 87 070 01 | COMPACT ROPE WINCH |
| OPERATING ELEMENT | 57 18 499 08 | 17 | 1 | 5 530 022 | 55 30 022 08 | WATER HEATING SYSTEM |
| OPERATING HOURS COUNTE | 69 17 985 08 | 4 | 1 | 2 533 001 | 96 41 568 08 | DASHBOARD ROOF, PRE-AS |
| OPERATING HOURS COUNTE | 69 18 022 08 | 36 | 1 | 2 932 042 | 96 68 587 08 | BASE ASSEMBLY |
| OPERATOR PANEL BALLAST | 96 36 055 08 | 27 | 1 | 2 920 | 91 55 477 08 | ELECTR. SYSTEM F.SLEWING |
| OPERATOR SEAT 1000/577 | 77 41 079 08 | 1 | 1 | 2 502 | 91 01 533 08 | CONTROL STAND |
| ORIFICE | 60 67 620 08 | 18 | 13 | 2 533 001 | 96 41 568 08 | DASHBOARD ROOF, PRE-AS |
| ORIFICE | 96 44 197 08 | 5 | 1 | 2 984 | 91 52 906 08 | OIL COOLER INSTALLATION |
| ORIFICE 1,5X19,5X111 | 61 10 017 08 | 45 | 3 | 2 932 042 | 96 68 587 08 | BASE ASSEMBLY |
| ORIFICE 1,5X40X262 | 61 10 016 08 | 44 | 2 | 2 932 042 | 96 68 587 08 | BASE ASSEMBLY |
| ORIFICE 2X696X1108 ALMG3 H | 97 18 215 08 | 3 | 1 | 2 510 200 | 96 41 258 08 | SLEWING PLATFORM PANELLI |
| OUTER MULTI-DISC | 73 73 506 03 | (4) | 9 | 9 444 410 | 94 44 410 03 | TRACTION DRIVE |
| OUTLET VALVE | 10 13 675 3 | 4 | 2 | X1014155 | 10 14 155 5 | CYLINDER HEAD PRE-ASSY. |
| OUTLET VALVE | 90 74 451 | 4 | 2 | X1012036 | 10 12 036 5 | CYLINDER HEAD PRE-ASSY. |
| OUTPUT SHAFT M=9 Z=13 | 93 30 749 01 | 10 | 1 | 9 330 748 | 93 30 748 01 | SLEWING GEAR DRIVE |
| OVAL LOAD RING 26X140X260 | 77 39 247 08 | 13 | 1 | 2 792 | 91 52 291 08 | DISPATCH ASSY.MECH.PART |
| OVAL SCREW M4X12 10.9 | 51 45 252 08 | 20 | 7 | 5 701 090 | 57 01 090 08 | DRIVING GEAR |
| OVERFLOW VALVE | 10 03 857 2 | 41 | 1 | X1011573 | 10 11 573 7 | FUEL LINES |
| OVERFLOW VALVE | 50 26 628 08 | 5 | 1 | 2 955 | 91 49 516 08 | PNEUM. CRANE OPERATORS |
| OVERPRESSURE VALVE | 57 13 284 08 | 14 | 1 | X1032706 | 10 32 706 5 | ELECTRIC PUMP |
| OVERPRESSURE VALVE 187 | 57 16 895 08 | 38 | 1 | X1047300 | 10 47 300 1 | TELESCOPIC CYLINDER |
| PADLOCK ABUS-64TI/40 TITAL | 88 52 515 08 | 2 | 1 | 1 750 001 | 92 85 698 08 | MAIN TOOLS |
| PADLOCK ABUS-64TI/40 TITAL | 88 52 515 08 | 3 | 2 | 3 750 008 | 91 75 085 08 | LADDER ATTACHMENT |
| PAN-HEAD SCREW DIN 85 M2X | 40 02 002 08 | 6 | 2 | 5 530 854 | 55 30 854 08 | THREE-WAY TAP |
| PAN-HEAD SCREW ISO 7045 | 40 83 112 08 | 4 | 4 | 2 913 003 | 96 20 599 08 | FOIL KEYPAD PRE-ASS. |
| PAN-HEAD SCREW ISO 7045 | 57 07 568 08 | 9 | 2 | 5 530 854 | 55 30 854 08 | THREE-WAY TAP |
| PAN-HEAD SCREW ISO 7045 | 40 84 006 01 | 25 | 17 | 2 932 119 | 96 46 061 08 | SWING FRAME RELAY CONT |
| PAN-HEAD SCREW ISO 7045 | 40 84 007 01 | 4 | 2 | 2 913 005 | 96 28 696 08 | INTERIOR HOUSING PRE-ASS. |
| PAN-HEAD SCREW ISO 7045 | 40 83 114 08 | 3 | 4 | 2 913 006 | 96 20 732 08 | FAN PLATE PRE-ASS. |
| PAN-HEAD SCREW ISO 7045 M | 40 84 005 01 | 3 | 8 | 2 913 005 | 96 28 696 08 | INTERIOR HOUSING PRE-ASS. |
| PAN-HEAD SCREW ISO 7045 M | 51 45 994 08 | 4 | 12 | 2 913 100 | 91 23 538 08 | ASSEMBLY FRAME |
| PAN-HEAD SCREW ISO 7045 M | 51 45 994 08 | 8 | 4 | 2 932 214 | 96 28 366 08 | INPUT BOARD CPL. |
| PAN-HEAD SCREW ISO 7045 | 10 87 547 2 | 12 | 4 | 2 913 100 | 91 23 538 08 | ASSEMBLY FRAME |
| PAN-HEAD SCREW ISO 7045 M | 40 02 485 | 8 | 4 | 2 501 000 | 91 48 769 08 | CRANE DRIVER'S CABIN,PRE |

| Description | Item | Pos. | Quantity | Page | Assembly | Description |
|---|---|---|---|---|---|---|
| PAN-HEAD SCREW ISO 7045 | 40 84 021 01 | 8 | 2 | 2 260 006 | 96 31 147 08 | BATTERY BOX, PRE-ASSEMB |
| PAN-HEAD SCREW ISO 7045 | 40 84 021 01 | 8 | 3 | 3 750 026 | 96 89 407 08 | HOLDER LEFT |
| PAN-HEAD SCREW ISO 7045 | 40 84 021 01 | 8 | 3 | 3 750 028 | 96 89 408 08 | HOLDER RIGHT |
| PAN-HEAD SCREW ISO 7045 | 40 02 307 | 64 | 2 | 2 932 042 | 96 68 587 08 | BASE ASSEMBLY |
| PAN-HEAD SCREW ISO 7045 | 40 02 308 | 60 | 3 | 2 533 001 | 96 41 568 08 | DASHBOARD ROOF, PRE-AS |
| PAN-HEAD SCREW ISO 7045 | 46 00 723 | 39 | 4 | 2 540 | 91 45 984 08 | HEATING, CRANE CABIN |
| PAN-HEAD SCREW ISO 7045 | 40 02 612 | 15 | 3 | 2 920 585 | 91 01 520 08 | ELECTRIC FOR FLASHLIGHT |
| PAN-HEAD SCREW ISO 7045 | 46 35 128 | 107 | 2 | 2 520 000 | 91 49 872 08 | CABIN, GLAZED |
| PANELLING | 92 50 132 08 | 4 | 1 | 2 520 001 | 92 48 796 08 | FRONT WINDOW CPL. |
| PARALLEL PIN DIN 6325 12M6 | 43 07 096 08 | 2 | 1 | 5 123 537 | 51 23 537 08 | HYDRO CYLINDER |
| PARALLEL PIN ISO 2338 10H11 | 43 06 708 08 | 3 | 1 | 3 102 000 | 91 62 543 08 | TELESCOPIC SECTION 1 PRE |
| PARALLEL PIN ISO 2338 10H11 | 43 06 708 08 | 3 | 1 | 3 103 000 | 91 62 544 08 | TELESCOPIC SECT.2 PRE-AS |
| PARALLEL PIN ISO 2338 10H11 | 43 06 708 08 | 3 | 1 | 3 104 000 | 91 62 545 08 | TELESCOPIC SECT.3 PRE-ASS |
| PARALLEL PIN ISO 2338 10H11 | 43 06 708 08 | 3 | 1 | 3 105 000 | 91 62 546 08 | TELESCOPIC SECT.IV PRE-A |
| PARALLEL PIN ISO 2338 10H11 | 43 06 708 08 | 3 | 1 | 3 106 000 | 91 60 313 08 | TELESCOPIC SECT.5 PRE-AS |
| PARALLEL PIN ISO 2338 4M6X | 57 01 093 08 | 5 | 1 | 5 102 294 | 51 02 294 08 | HYDRO MOTOR |
| PARALLEL PIN ISO 2338 6M6X | 49 80 931 | 17 | 1 | 9 075 541 | 90 75 541 | LUBE OIL PUMP PRE-ASSY. |
| PARALLEL PIN ISO 2338 6M6X | 49 81 267 | 16 | 1 | 9 075 541 | 90 75 541 | LUBE OIL PUMP PRE-ASSY. |
| PARALLEL PIN ISO 8734 6m6X | 49 80 000 | 9 | 1 | 9 074 165 | 90 74 165 | BALANCER ASSEMBLY |
| PARALLEL PIN ISO 8734 8m6X1 | 49 01 106 | 7 | 1 | 9 080 525 | 90 80 525 | AIR COND. COMPRESSOR A |
| PARALLEL PIN ISO 8734 8m6X | 49 80 853 | 5 | 1 | X1012223 | 10 12 223 3 | CAMSHAFT CPL. |
| PASSAGE NIPPLE BLOCK | 77 43 751 08 | 12 | 2 | 2 711 | 91 53 002 08 | CENT. LUBRIC. SYSTEM SUP |
| PEDAL TRANSDUCER 20° SPF | 69 23 097 08 | 1 | 2 | 2 830 041 | 92 88 195 08 | ELECTRIC FAN ATTACHMENT |
| PEDAL TRANSDUCER 23° SPF | 10 29 006 8 | (1) | 1 | 2 920 | 91 55 477 08 | ELECTR. SYSTEM F.SLEWING |
| PEDAL TRANSDUCER 23° SPF | 60 60 168 08 | 6 | 1 | 2 920 563 | 92 08 459 08 | COMPLEMENT ELECTR., CAB |
| PEDESTAL ALMG3 SPF | 72 58 641 08 | 23 | 1 | 2 520 000 | 91 49 872 08 | CABIN, GLAZED |
| PEDESTAL x0 ALMG3 SPF | 95 66 291 08 | 72 | 1 | 2 520 000 | 91 49 872 08 | CABIN, GLAZED |
| PERMANENT MAGNET 9V | 61 70 001 08 | 3 | 1 | 2 780 851 | 96 24 498 08 | RADIO ANTENNA PRE-ASS. |
| PERMANENT MAGNET 9V | 61 70 001 08 | 7 | 1 | 2 780 852 | 96 24 845 08 | GSM-MODULE PRE-ASS.LICCO |
| PERMANENT MAGNET 9V | 61 70 001 08 | 267 | 2 | 2 920 574 | 96 36 055 08 | OPERATOR PANEL BALLAST |
| PERMANENT MAGNET 9V | 61 70 001 08 | 250 | 2 | 2 920 904 | 96 41 093 08 | CONTROL DESK SUPPORT |
| PERSONAL PROTECTION EQ | 91 69 598 08 | 98 | 1 | | LTR 1100 -0 | LIEBHERR LTR 1100 |
| PILLOW BLOCK PRE-ASS. | 92 10 661 08 | 7 | 1 | 2 501 000 | 91 48 769 08 | CRANE DRIVER'S CABIN,PRE |
| PILLOW BLOCK PRE-ASS. | 92 10 663 08 | 10 | 1 | 2 501 000 | 91 48 769 08 | CRANE DRIVER'S CABIN,PRE |
| PILLOW BLOCK PRE-ASS. | 92 10 666 08 | 7 | 1 | 2 500 | 91 48 594 08 | CRANE DRIVER'S CABIN CPL. |
| PILLOW BLOCK PRE-ASS. | 96 30 133 08 | 3 | 2 | 2 210 | 91 81 614 08 | DRIVE ASSEMBLY, PRE-ASSE |
| PILLOW BLOCK ST.CONST. FE | 92 71 525 08 | 4 | 1 | 2 500 | 91 48 594 08 | CRANE DRIVER'S CABIN CPL. |
| PILLOW BLOCK ST.CONST. FE | 92 71 528 08 | 3 | 1 | 2 500 | 91 48 594 08 | CRANE DRIVER'S CABIN CPL. |
| PILLOW BLOCK WELDED RE | 96 30 573 08 | (1) | 1 | 2 210 | 91 81 614 08 | DRIVE ASSEMBLY, PRE-ASSE |
| PILLOW BLOCK WELDED REA | 96 30 137 08 | (1) | 1 | 2 210 | 91 81 614 08 | DRIVE ASSEMBLY, PRE-ASSE |
| PIN | 70 42 291 08 | 21 | 2 | 2 501 000 | 91 48 769 08 | CRANE DRIVER'S CABIN,PRE |
| PIN | 94 42 284 03 | 56 | 1 | 9 444 410 | 94 44 410 03 | TRACTION DRIVE |
| PIN 100.0X120 42CRMO4+QT | 97 07 680 08 | 5 | 1 | 2 500 | 91 48 594 08 | CRANE DRIVER'S CABIN CPL. |
| PIN 10X100 S355J2C+C FE//ZN | 94 18 472 08 | 14 | 1 | 3 501 | 91 05 788 08 | MECH. DOUBLE FOLD JIB PR |
| PIN 115.0X228 35NICRMOV125 | 95 70 176 08 | 6 | 1 | 3 105 000 | 91 62 546 08 | TELESCOPIC SECT.IV PRE-A |
| PIN 115.0X228 35NICRMOV125 | 95 70 176 08 | 6 | 1 | 3 106 000 | 91 60 313 08 | TELESCOPIC SECT.5 PRE-AS |
| PIN 118X340 35NICRMOV125 | 95 66 574 14 | 8 | 8 | 1 100 216 | 96 46 363 08 | MOUNTING PARTS LWE |
| PIN 12.0X140 S355J2C+C FE// | 94 20 537 08 | 12 | 4 | 1 740 010 | 96 50 675 08 | MOUNTING PARTS |
| PIN 120.0X225 35NICRMOV125 | 97 26 081 08 | 2 | 1 | 2 350 | 91 81 361 08 | LUFFING RAM W. PIVOT |
| PIN 125.0X233 35NICRMOV125 | 95 70 110 08 | 6 | 1 | 3 102 000 | 91 62 543 08 | TELESCOPIC SECTION 1 PRE |
| PIN 125.0X233 35NICRMOV125 | 95 70 110 08 | 6 | 1 | 3 103 000 | 91 62 544 08 | TELESCOPIC SECT.2 PRE-AS |
| PIN 125.0X233 35NICRMOV125 | 95 70 110 08 | 6 | 1 | 3 104 000 | 91 62 545 08 | TELESCOPIC SECT.3 PRE-ASS |
| PIN 12X40 CUZN39PB3 | 94 44 120 08 | 65 | 1 | 2 520 000 | 91 49 872 08 | CABIN, GLAZED |
| PIN 160.0x195 35NICRMOV125 | 95 61 648 08 | 3 | 1 | 2 350 | 91 81 361 08 | LUFFING RAM W. PIVOT |
| PIN 160X50 35NICRMOV125 GA | 95 62 140 14 | 29 | 2 | 1 100 205 | 96 51 633 08 | CRAWLER CARRIER RIGHT CP |
| PIN 160X50 35NICRMOV125 GA | 95 62 140 14 | 29 | 2 | 1 100 210 | 96 51 634 08 | CRAWLER TRACK CARRIER LE |
| PIN 20.0X13 5 S355J2C+C FE// | 95 51 123 08 | 51 | 1 | 3 501 | 91 05 788 08 | MECH. DOUBLE FOLD JIB PR |
| PIN 30X45X35 35NICRMOV125 | 97 72 424 08 | 5 | 2 | 1 630 002 | 99 06 183 14 | TRANSPORT SUPPORT |
| PIN 31X132X95 35NICRMOV12 | 97 72 521 08 | 1 | 1 | 1 630 003 | 96 47 650 08 | PIN COMPL. |
| PIN 33.7X126 S355J2H FE//ZN | 97 38 603 08 | 10 | 4 | 2 210 | 91 81 614 08 | DRIVE ASSEMBLY, PRE-ASSE |

| Description | Item | Pos. | Quantity | Page | Assembly | Description |
|---|---|---|---|---|---|---|
| PIN 35.0X264 35NICRMOV125 | 97 36 353 08 | 3 | 3 | 3 511 | 91 54 159 08 | BOOM NOSE |
| PIN 35x81 42CRMO4+QT GASN | 93 19 133 08 | 6 | 1 | 3 510 001 | 92 52 800 08 | CONSOLE PRE-ASS. |
| PIN 40.0X116 42CRMO4+QT GA | 97 09 954 08 | 9 | 2 | 2 500 | 91 48 594 08 | CRANE DRIVER'S CABIN CPL. |
| PIN 40.0X13 3 S355J2G3 FE//ZN | 95 65 956 08 | 8 | 1 | 2 500 | 91 48 594 08 | CRANE DRIVER'S CABIN CPL. |
| PIN 50.0X13 5 35NICRMOV125 | 97 31 067 08 | 18 | 4 | 2 450 | 91 53 926 08 | MAIN HOIST GEAR |
| PIN 50.0X175 35NICRMOV125 | 97 17 998 08 | 2 | 2 | 2 440 | 91 52 288 08 | AUXILIARY HOISTING GEAR 2 |
| PIN 55.0X10 3 35NICRMOV125 | 95 37 664 08 | 8 | 2 | 2 440 022 | 96 42 336 08 | WINCH 2 PRE-ASS. |
| PIN 55.0X305 35NICRMOV125 | 97 58 682 08 | 10 | 1 | 2 430 | 91 54 389 08 | ANGLE THREADED BULKHEA |
| PIN 60.0X675 S355J2C+C FE// | 95 22 281 08 | 19 | 1 | 3 501 | 91 05 788 08 | MECH. DOUBLE FOLD JIB PR |
| PIN 65.0X300 35NICRMOV125 | 97 72 403 08 | 8 | 2 | 1 100 215 | 99 20 783 14 | CENTRE PIECE |
| PIN 75X370 35NICRMOV125 | 95 62 101 14 | 9 | 2 | 1 100 215 | 99 20 783 14 | CENTRE PIECE |
| PIN COMPL. | 96 47 650 08 | 3 | 2 | 1 630 002 | 99 06 183 14 | TRANSPORT SUPPORT |
| PIN COMPL. 80X130 | 96 50 100 08 | 15 | 2 | 1 100 215 | 99 20 783 14 | CENTRE PIECE |
| PIN COMPL. 80X130 | 96 50 100 08 | 19 | 2 | 1 100 215 | 99 20 783 14 | CENTRE PIECE |
| PIN DIN 1435 20X50X43 42CR | 45 12 227 08 | 4 | 3 | 3 500 104 | 92 95 821 08 | MOUNTING PRE-ASS. |
| PIN DIN 1435 20X50X43 42CR | 45 12 227 08 | 21 | 2 | 3 501 | 91 05 788 08 | MECH. DOUBLE FOLD JIB PR |
| PIN DIN 1435 20X50X43 42CR | 45 12 227 08 | 4 | 1 | 3 510 001 | 92 52 800 08 | CONSOLE PRE-ASS. |
| PIN DIN 1436 30X105X97 35NIC | 45 14 308 08 | 4 | 1 | 1 630 002 | 99 06 183 14 | TRANSPORT SUPPORT |
| PIN DIN 1436 30X165X155 ST.5 | 45 14 309 08 | 12 | 1 | 3 510 006 | 96 20 924 08 | FOLDING BRACKET |
| PIN DIN EN 22340 B20X390X37 | 45 25 491 08 | 36 | 2 | 3 106 000 | 91 60 313 08 | TELESCOPIC SECT.5 PRE-AS |
| PIN DIN EN 22340 B55X170 42C | 45 00 448 14 | 22 | 4 | 2 571 | 91 50 902 08 | HYDRAULIC BALLASTING |
| PIN DIN EN 22340-B 20H11X85 | 45 00 220 14 | 9 | 4 | 1 740 010 | 96 50 675 08 | MOUNTING PARTS |
| PIN INSERT | 92 87 019 08 | 15 | 1 | 6 923 101 | 69 23 101 08 | ROPE LENGTH INDICATOR |
| PIN ISO 2340 B 70H11X180 35N | 48 55 010 14 | 19 | 2 | 2 571 | 91 50 902 08 | HYDRAULIC BALLASTING |
| PIN ISO 2340 B16X610X595 ST. | 45 01 188 08 | 37 | 1 | 3 106 000 | 91 60 313 08 | TELESCOPIC SECT.5 PRE-AS |
| PIN ISO 2340 B20X110X94 ST. | 45 25 409 08 | 23 | 1 | 3 501 | 91 05 788 08 | MECH. DOUBLE FOLD JIB PR |
| PIN ISO 2340 B20X110X94 ST. | 45 25 409 08 | 2 | 1 | 3 511 006 | 96 45 029 08 | BOOM NOSE PRE-ASS. |
| PIN ISO 2340 B20X135X120 ST. | 45 00 231 08 | 57 | 2 | 3 501 | 91 05 788 08 | MECH. DOUBLE FOLD JIB PR |
| PIN ISO 2340 B20X190X175 4 | 45 00 235 08 | 13 | 1 | 3 501 | 91 05 788 08 | MECH. DOUBLE FOLD JIB PR |
| PIN ISO 2340 B20X400X387 ST | 45 25 509 08 | 2 | 1 | 1 300 010 | 99 14 563 14 | ACCESS COMPL |
| PIN ISO 2340 B35X130X110 ST. | 45 00 342 08 | 16 | 1 | 3 501 | 91 05 788 08 | MECH. DOUBLE FOLD JIB PR |
| PIN ISO 2340 B50X120X96 35N | 45 25 505 08 | 17 | 3 | 3 501 | 91 05 788 08 | MECH. DOUBLE FOLD JIB PR |
| PIN ISO 2341 B20X115X107 ST | 45 30 209 08 | 35 | 1 | 3 510 100 | 91 49 246 08 | TRANSPORT MOUNTING |
| PIN ISO 2341 B20X123X115 ST | 45 30 203 08 | 22 | 3 | 3 501 | 91 05 788 08 | MECH. DOUBLE FOLD JIB PR |
| PIN ISO 2341 B45X102X85 35N | 45 30 411 08 | 93 | 2 | 3 501 | 91 05 788 08 | MECH. DOUBLE FOLD JIB PR |
| PIN RD30X117 42CRMO4+QT | 95 31 434 08 | 4 | 1 | 3 510 006 | 96 20 924 08 | FOLDING BRACKET |
| PIN RD35X179 S355J2G3 FE// | 95 36 200 08 | 15 | 1 | 3 501 | 91 05 788 08 | MECH. DOUBLE FOLD JIB PR |
| PIN RD35X71 35NICRMOV125 | 94 40 299 08 | 30 | 1 | 3 510 100 | 91 49 246 08 | TRANSPORT MOUNTING |
| PIN RD35X88 35NICRMOV125 | 94 24 398 08 | 20 | 1 | 3 501 | 91 05 788 08 | MECH. DOUBLE FOLD JIB PR |
| PIN RD40X140 35NICRMOV125 | 94 03 151 08 | 7 | 2 | 3 511 006 | 96 45 029 08 | BOOM NOSE PRE-ASS. |
| PIN RD40X160 42CRMO4+QT | 93 90 487 08 | 25 | 1 | 3 501 | 91 05 788 08 | MECH. DOUBLE FOLD JIB PR |
| PIN RD40X270 35NICRMOV125 | 95 04 774 08 | 10 | 4 | 3 501 | 91 05 788 08 | MECH. DOUBLE FOLD JIB PR |
| PIN RD45X360 35NICRMOV125 | 95 04 775 08 | 9 | 4 | 3 501 | 91 05 788 08 | MECH. DOUBLE FOLD JIB PR |
| PIN RD49,5X83 42CRMO4+QT | 95 37 466 08 | 9 | 1 | 3 510 006 | 96 20 924 08 | FOLDING BRACKET |
| PIN RD50X135 35NICRMOV125 | 95 36 201 08 | 18 | 1 | 3 501 | 91 05 788 08 | MECH. DOUBLE FOLD JIB PR |
| PIPE CLAMP 12 PP | 73 82 216 | 17 | 3 | X1011573 | 10 11 573 7 | FUEL LINES |
| PIPE CLAMP 12 PP | 73 82 216 | 13 | 1 | X1011793 | 10 11 793 0 | ACCESSORIES AIR COMPRES |
| PIPE CLAMP 64 | 90 80 051 | 6 | 1 | X1011816 | 10 11 816 1 | CONNECTING LINE ADD-ON |
| PIPE CLAMP PP | 73 82 215 | 16 | 1 | X1011573 | 10 11 573 7 | FUEL LINES |
| PIPE COMPL. | 91 89 986 14 | 10 | 2 | 1 100 200 | 96 72 944 08 | UNDERCARRIAGE CPL. |
| PIPE COMPL. 10X1,5X134 | 92 15 127 08 | 491 | 1 | 2 998 | 91 51 090 08 | PIPELINES SUPERSTRUCTUR |
| PIPE COMPL. 10X1,5X167 | 92 15 130 08 | 494 | 1 | 2 998 | 91 51 090 08 | PIPELINES SUPERSTRUCTUR |
| PIPE COMPL. 10X1,5X174 | 92 15 131 08 | 495 | 1 | 2 998 | 91 51 090 08 | PIPELINES SUPERSTRUCTUR |
| PIPE COMPL. 10X1,5X214 | 92 15 126 08 | 490 | 1 | 2 998 | 91 51 090 08 | PIPELINES SUPERSTRUCTUR |
| PIPE COMPL. 10X1,5X278 | 92 15 132 08 | 496 | 1 | 2 998 | 91 51 090 08 | PIPELINES SUPERSTRUCTUR |
| PIPE COMPL. 10X1,5X679 | 92 15 128 08 | 492 | 1 | 2 998 | 91 51 090 08 | PIPELINES SUPERSTRUCTUR |
| PIPE COMPL. 10X1,5X992 | 92 15 129 08 | 493 | 1 | 2 998 | 91 51 090 08 | PIPELINES SUPERSTRUCTUR |
| PIPE COMPL. 12X1,5X165 | 92 68 945 08 | 476 | 1 | 2 998 | 91 51 090 08 | PIPELINES SUPERSTRUCTUR |
| PIPE COMPL. 18X1,5X188 | 96 35 351 08 | (191) | 1 | 2 210 | 91 81 614 08 | DRIVE ASSEMBLY, PRE-ASSE |
| PIPE COMPL. 18X1,5X2161 | 96 21 897 08 | 472 | 1 | 2 998 | 91 51 090 08 | PIPELINES SUPERSTRUCTUR |

| Description | Item | Pos. | Quantity | Page | Assembly | Description |
|---|---|---|---|---|---|---|
| PIPE COMPL. 18X1,5X2889 | 96 21 400 08 | 471 | 1 | 2 998 | 91 51 090 08 | PIPELINES SUPERSTRUCTUR |
| PIPE COMPL. 18X1,5X319 | 96 35 350 08 | (190) | 1 | 2 210 | 91 81 614 08 | DRIVE ASSEMBLY, PRE-ASSE |
| PIPE COMPL. 18X1,5X829 | 96 32 884 08 | 470 | 1 | 2 998 | 91 51 090 08 | PIPELINES SUPERSTRUCTUR |
| PIPE COMPL. 18X1,5X832 | 96 35 345 08 | 473 | 1 | 2 998 | 91 51 090 08 | PIPELINES SUPERSTRUCTUR |
| PIPE COMPL. 22X2,5X679 | 96 32 885 08 | (297) | 1 | 2 210 | 91 81 614 08 | DRIVE ASSEMBLY, PRE-ASSE |
| PIPE COMPL. 30X4X575 | 96 35 338 08 | 430 | 1 | 2 998 | 91 51 090 08 | PIPELINES SUPERSTRUCTUR |
| PIPE COMPL. 30X4X576 | 96 35 339 08 | 431 | 1 | 2 998 | 91 51 090 08 | PIPELINES SUPERSTRUCTUR |
| PIPE COMPL. 30X4X651 | 96 35 341 08 | 433 | 1 | 2 998 | 91 51 090 08 | PIPELINES SUPERSTRUCTUR |
| PIPE COMPL. 30X4X658 | 96 35 340 08 | 432 | 1 | 2 998 | 91 51 090 08 | PIPELINES SUPERSTRUCTUR |
| PIPE COMPL. 35X2X473 | 96 35 337 08 | (291) | 1 | 2 970 | 91 55 482 08 | HYDRAULICS |
| PIPE COMPL. 38X4X1490 | 92 12 972 08 | 478 | 1 | 2 998 | 91 51 090 08 | PIPELINES SUPERSTRUCTUR |
| PIPE COMPL. 38X4X1612 | 92 12 971 08 | 477 | 1 | 2 998 | 91 51 090 08 | PIPELINES SUPERSTRUCTUR |
| PIPE COMPL. 38X4X356 | 92 12 968 08 | 474 | 3 | 2 998 | 91 51 090 08 | PIPELINES SUPERSTRUCTUR |
| PIPE COMPL. 38X4X453 | 92 12 969 08 | 475 | 1 | 2 998 | 91 51 090 08 | PIPELINES SUPERSTRUCTUR |
| PIPE COMPL. 38X4X610 | 96 35 344 08 | 468 | 1 | 2 998 | 91 51 090 08 | PIPELINES SUPERSTRUCTUR |
| PIPE COMPL. 38X5X153 | 92 12 974 08 | 497 | 1 | 2 998 | 91 51 090 08 | PIPELINES SUPERSTRUCTUR |
| PIPE COMPL. 38X5X206 | 92 12 976 08 | 499 | 1 | 2 998 | 91 51 090 08 | PIPELINES SUPERSTRUCTUR |
| PIPE COMPL. 38X5X258 | 92 12 975 08 | 498 | 1 | 2 998 | 91 51 090 08 | PIPELINES SUPERSTRUCTUR |
| PIPE COMPL. 42X3X1287 | 92 12 973 08 | 479 | 1 | 2 998 | 91 51 090 08 | PIPELINES SUPERSTRUCTUR |
| PIPE COMPL. 42X3X440 | 96 35 336 08 | (290) | 1 | 2 970 | 91 55 482 08 | HYDRAULICS |
| PIPE COMPL. 6X1X210 | 96 22 613 08 | (487) | 1 | 2 975 038 | 91 26 492 08 | ADDNL.HYDR. FOLDING JIB |
| PIPE COMPL. 6X1X55 | 92 12 641 08 | 92 | 1 | 2 520 000 | 91 49 872 08 | CABIN, GLAZED |
| PIPE COMPL. 6X1X55 | 92 12 641 08 | 6 | 1 | 2 955 | 91 49 516 08 | PNEUM. CRANE OPERATORS |
| PIPE COND. FOLDING SEAT | 96 22 655 08 | 93 | 1 | 2 975 038 | 91 26 492 08 | ADDNL.HYDR. FOLDING JIB |
| PIPE SOCKET KUNSTSTOFF | 28 85 002 08 | 57 | 2 | 2 520 000 | 91 49 872 08 | CABIN, GLAZED |
| PIPE WELDED | 96 34 985 08 | 66 | 1 | 3 106 000 | 91 60 313 08 | TELESCOPIC SECT.5 PRE-AS |
| PIPELINE | 10 11 549 1 | 2 | 1 | X1011569 | 10 11 569 6 | LEAK OIL RETURN LINE |
| PIPELINE | 10 11 564 2 | 4 | 1 | X1011573 | 10 11 573 7 | FUEL LINES |
| PIPELINE | 10 11 564 4 | 3 | 1 | X1011569 | 10 11 569 6 | LEAK OIL RETURN LINE |
| PIPELINE | 10 11 573 8 | 6 | 1 | X1011573 | 10 11 573 7 | FUEL LINES |
| PIPELINE | 10 11 574 1 | 10 | 1 | X1011573 | 10 11 573 7 | FUEL LINES |
| PIPELINE | 10 11 599 0 | 8 | 1 | X1011573 | 10 11 573 7 | FUEL LINES |
| PIPELINE | 10 11 599 1 | 2 | 1 | X1011573 | 10 11 573 7 | FUEL LINES |
| PIPELINE | 10 11 600 9 | 3 | 1 | X1011573 | 10 11 573 7 | FUEL LINES |
| PIPELINE | 90 79 091 | 1 | 1 | 9 079 092 | 90 79 092 | PIPELINE INSTALLATION |
| PIPELINE 10X1 | 10 11 564 1 | 7 | 1 | X1011573 | 10 11 573 7 | FUEL LINES |
| PIPELINE 10X1 | 10 11 578 1 | 9 | 1 | X1011573 | 10 11 573 7 | FUEL LINES |
| PIPELINE 10X1 | 10 11 578 2 | 5 | 1 | X1011573 | 10 11 573 7 | FUEL LINES |
| PIPELINE 10X1 | 10 12 024 1 | 1 | 1 | X1012024 | 10 12 024 2 | OIL LINE PRE-ASSEMBLY |
| PIPELINE 22X1,5 | 10 11 766 5 | 333 | 1 | X1015207 | 10 15 207 7 | DIESEL ENGINE |
| PIPELINE 22X1,5 | 10 11 766 6 | 1 | 1 | X1011766 | 10 11 766 5 | PIPELINE |
| PIPELINE 22X1,5 | 10 11 914 2 | 3 | 1 | X1011914 | 10 11 914 1 | CRANKCASE BREATHER ASS |
| PIPELINE 444 | 10 11 573 9 | 1 | 1 | X1011573 | 10 11 573 7 | FUEL LINES |
| PIPELINE 6X1 | 90 78 984 | 10 | 1 | X1011997 | 10 11 997 6 | POWER TAKE-OFF ADD-ON |
| PIPELINE INSTALLATION | 90 79 092 | 381 | 1 | X1012193 | 10 12 193 2 | BASIC ENGINE |
| PIPELINES DRIVE ASSEMBLY | 96 38 773 08 | 6 | 1 | 2 210 | 91 81 614 08 | DRIVE ASSEMBLY, PRE-ASSE |
| PIPELINES OIL COOLER ELEK | 96 39 180 08 | 97 | 1 | 2 970 | 91 55 482 08 | HYDRAULICS |
| PIPELINES SUPERSTRUCTUR | 91 51 090 08 | 193 | 1 | | LTR 1100 -0 | LIEBHERR LTR 1100 |
| PISTON | 51 07 357 08 | 3 | 1 | 5 718 895 | 57 18 895 08 | PRESSURE VALVE |
| PISTON | 57 01 106 08 | 4 | 7 | 5 701 095 | 57 01 095 08 | DRIVING GEAR |
| PISTON | 57 15 826 08 | 13 | 1 | 5 700 161 | 57 00 161 | AIR COMPRESSOR |
| PISTON | 79 02 722 14 | 1 | 1 | 1 100 213 | 74 90 654 14 | TENSION JACK HYDR CPL |
| PISTON | 98 86 591 | 9 | 1 | 9 075 541 | 90 75 541 | LUBE OIL PUMP PRE-ASSY. |
| PISTON | 98 86 591 | 20 | 1 | X1011739 | 10 11 739 7 | OIL COOLER, PRE-ASSEMBLE |
| PISTON 20MnCr5 | 90 75 361 | 1 | 1 | X1011795 | 10 11 795 1 | FINAL CONTROL VALVE |
| PISTON COOLING | 90 73 795 | 15 | 4 | X1012193 | 10 12 193 2 | BASIC ENGINE |
| PISTON COOLING NOZZLE ST | 90 73 796 | 1 | 1 | 9 073 795 | 90 73 795 | PISTON COOLING |
| PISTON CPL. R-MOTORX122 | 10 46 728 5 | 70 | 4 | X1012193 | 10 12 193 2 | BASIC ENGINE |
| PISTON RING MG 122X112,1X2 | 10 47 234 6 | 3 | 1 | X1046728 | 10 46 728 5 | PISTON CPL. |
| PIVOT PIECE ST. CONST. | 96 18 681 08 | 2 | 1 | 3 501 | 91 05 788 08 | MECH. DOUBLE FOLD JIB PR |

| Description | Item | Pos. | Quantity | Page | Assembly | Description |
|---|---|---|---|---|---|---|
| PIVOT PIECE ST. CONST. SPF | 91 60 328 08 | 1 | 1 | 3 101 | 91 60 312 08 | PIVOT SECTION, PRE-ASSEMB |
| PIVOT ROD | 59 10 428 08 | 41 | 1 | 2 520 000 | 91 49 872 08 | CABIN, GLAZED |
| PIVOT SECTION, PRE-ASSEMB | 91 60 312 08 | 1 | 1 | 3 100 | 91 59 279 08 | TELESCOPIC BOOM CPL. |
| PL LATCH | 10 33 187 4 | 5 | 1 | 4 027 | 91 42 310 08 | LOAD HOOK |
| PLAIN BEARING BUSHING 30 | 98 89 290 | (2) | 2 | 9 072 906 | 90 72 906 | INTERMEDIATE GEAR CPL. |
| PLAIN COMPRESSION RING 1 | 57 19 151 08 | 10 | 1 | X1033367 | 10 33 367 2 | CONTROL BLOCK |
| PLAIN COMPRESSION RING 3 | 73 67 610 | 535 | 3 | 1 970 | 96 71 367 08 | UNDERCARRIAGE HYDRAULIC |
| PLAIN COMPRESSION RING 4 | 73 67 611 | 554 | 2 | 1 970 | 96 71 367 08 | UNDERCARRIAGE HYDRAULIC |
| PLAIN COMPRESSION RING 4 | 73 67 612 | 573 | 8 | 1 970 | 96 71 367 08 | UNDERCARRIAGE HYDRAULIC |
| PLANET WHEEL M=2 Z=28 | 92 75 308 01 | 40 | 6 | 9 330 748 | 93 30 748 01 | SLEWING GEAR DRIVE |
| PLANET WHEEL M=2,25 Z=27 | 93 87 602 01 | 42 | 3 | 9 686 071 | 96 86 071 01 | PLANETARY GEARBOX |
| PLANET WHEEL M=2,25 Z=28 | 93 92 511 01 | 20 | 5 | 9 330 748 | 93 30 748 01 | SLEWING GEAR DRIVE |
| PLANET WHEEL M=3,75 Z=37 | 94 44 425 03 | 37 | 3 | 9 444 410 | 94 44 410 03 | TRACTION DRIVE |
| PLANET WHEEL M=4 Z=23 | 92 76 021 01 | 32 | 3 | 9 686 071 | 96 86 071 01 | PLANETARY GEARBOX |
| PLANET WHEEL M=4 Z=26 | 92 76 014 01 | 7 | 5 | 9 686 071 | 96 86 071 01 | PLANETARY GEARBOX |
| PLANET WHEEL M=5 Z=23 | 94 44 418 03 | 27 | 3 | 9 444 410 | 94 44 410 03 | TRACTION DRIVE |
| PLANET WHEEL M=5 Z=30 | 94 44 414 03 | 17 | 5 | 9 444 410 | 94 44 410 03 | TRACTION DRIVE |
| PLANETARY CARRIER | 92 76 020 01 | 30 | 1 | 9 686 071 | 96 86 071 01 | PLANETARY GEARBOX |
| PLANETARY CARRIER | 93 87 601 01 | 40 | 1 | 9 686 071 | 96 86 071 01 | PLANETARY GEARBOX |
| PLANETARY CARRIER | 93 92 503 01 | 15 | 1 | 9 330 748 | 93 30 748 01 | SLEWING GEAR DRIVE |
| PLANETARY CARRIER | 93 92 515 01 | 35 | 1 | 9 330 748 | 93 30 748 01 | SLEWING GEAR DRIVE |
| PLANETARY CARRIER | 93 92 573 01 | 50 | 1 | 9 330 748 | 93 30 748 01 | SLEWING GEAR DRIVE |
| PLANETARY CARRIER | 94 44 417 03 | 25 | 1 | 9 444 410 | 94 44 410 03 | TRACTION DRIVE |
| PLANETARY CARRIER | 94 44 423 03 | 35 | 1 | 9 444 410 | 94 44 410 03 | TRACTION DRIVE |
| PLANETARY GEARBOX 3-STU | 93 87 598 01 | 5 | 1 | 9 387 070 | 93 87 070 01 | COMPACT ROPE WINCH |
| PLANETARY GEARBOX 3-STU | 96 86 071 01 | 5 | 1 | 9 685 586 | 96 85 586 01 | COMPACT ROPE WINCH |
| PLASTIC SPIRAL HOSE NW60 | 55 30 107 08 | 31 | 1 | 2 502 | 91 01 533 08 | CONTROL STAND |
| PLATE | 92 75 303 01 | 14 | 1 | 9 330 748 | 93 30 748 01 | SLEWING GEAR DRIVE |
| PLATE 0 Edelstahl | 97 09 068 08 | 11 | 1 | 2 680 | 91 53 225 08 | EXHAUST SYSTEM CPL. |
| PLATE 1,5X200X310 DC01 FE// | 95 57 391 08 | 13 | 1 | 2 520 000 | 91 49 872 08 | CABIN, GLAZED |
| PLATE 1,5X65X155 DC01 FE// | 95 35 266 08 | 5 | 1 | 2 932 042 | 96 68 587 08 | BASE ASSEMBLY |
| PLATE 1,5X65X155 DC01 FE// | 95 35 266 08 | 4 | 1 | 2 932 095 | 96 46 064 08 | SWING FRAME FUSE AND RE |
| PLATE 1,5X94X105 DC01 | 95 60 636 08 | 5 | 1 | 2 520 021 | 92 17 203 08 | INSTRUMENT BOX DELIVERY |
| PLATE 1.5X158X338 DC01 FE// | 97 29 623 08 | 8 | 1 | 2 932 042 | 96 68 587 08 | BASE ASSEMBLY |
| PLATE 1.5X245X164 DC01 | 95 60 688 08 | 10 | 1 | 2 520 018 | 92 13 430 08 | INSTRUMENT BOX CPL. |
| PLATE 1.5X272X796 DC01 | 97 14 053 08 | 3 | 1 | 2 932 042 | 96 68 587 08 | BASE ASSEMBLY |
| PLATE 1.5X647X828 DC01 | 97 45 329 08 | 2 | 1 | 2 932 119 | 96 46 061 08 | SWING FRAME RELAY CONT |
| PLATE 1.5X67X79 DC01 FE//ZN | 97 68 803 08 | 19 | 1 | 2 932 042 | 96 68 587 08 | BASE ASSEMBLY |
| PLATE 1.5x628x55 DC01 | 95 52 153 08 | 7 | 1 | 2 932 042 | 96 68 587 08 | BASE ASSEMBLY |
| PLATE 10X126X92 S355MC FE// | 97 22 862 08 | 23 | 1 | 2 430 | 91 54 389 08 | ANGLE THREADED BULKHEA |
| PLATE 10X220X290 S960QL | 95 67 586 08 | 5 | 1 | 3 330 | 91 57 885 08 | MECHANICAL EXTENSION SYS |
| PLATE 15X135X128 S690QL | 95 38 563 08 | 67 | 1 | 3 501 | 91 05 788 08 | MECH. DOUBLE FOLD JIB PR |
| PLATE 15X170X190 S690QL | 95 41 437 08 | 99 | 1 | 3 501 | 91 05 788 08 | MECH. DOUBLE FOLD JIB PR |
| PLATE 15X300X120 S355MC FE | 97 65 411 08 | 8 | 4 | 1 740 010 | 96 50 675 08 | MOUNTING PARTS |
| PLATE 15X47X70 S355MC FE// | 97 30 132 08 | 32 | 1 | 2 510 100 | 96 44 750 08 | SLEWING PLATFORM PANELLI |
| PLATE 15X95X220 S960QL | 97 52 577 08 | 20 | 4 | 2 430 | 91 54 389 08 | ANGLE THREADED BULKHEA |
| PLATE 1X128X128 DC01 FE//ZN | 97 04 551 6 | 114 | 6 | 3 501 | 91 05 788 08 | MECH. DOUBLE FOLD JIB PR |
| PLATE 1X171X405 DC01 FE//ZN | 97 45 335 08 | 6 | 1 | 2 932 042 | 96 68 587 08 | BASE ASSEMBLY |
| PLATE 1X176X176 X5CRNI18-1 | 97 47 926 08 | (1) | 1 | 2 510 100 | 96 44 750 08 | SLEWING PLATFORM PANELLI |
| PLATE 1X35X100 DC01 FE//ZN | 95 70 687 08 | 24 | 3 | 2 440 022 | 96 42 336 08 | WINCH 2 PRE-ASS. |
| PLATE 1X35X22 ALMG3 | 61 10 022 08 | 5 | 1 | 2 913 003 | 96 20 599 08 | FOIL KEYPAD PRE-ASS. |
| PLATE 1X467X259 ALMG3 H11 | 97 17 132 08 | 2 | 1 | 2 913 005 | 96 28 696 08 | INTERIOR HOUSING PRE-ASS. |
| PLATE 1X70X70 DC01 FE//ZN20 | 97 00 837 1 | 118 | 4 | 3 501 | 91 05 788 08 | MECH. DOUBLE FOLD JIB PR |
| PLATE 1X70X80 DC01 FE//ZNNI | 95 35 155 08 | 7 | 1 | 2 270 | 91 50 456 08 | FUEL TANK ADD-ON UNIT |
| PLATE 1X70X80 DC01 FE//ZNNI | 95 35 155 08 | 7 | 1 | 2 340 | 91 53 116 08 | OIL RESERVOIR, EXTENSION |
| PLATE 1X95X78 ALMG3 H111 | 97 09 808 08 | 5 | 1 | 2 913 | 91 32 850 08 | LICCON CONSOLE LCD2 |
| PLATE 2.5x225x268 DC01 FE// | 95 70 207 08 | 19 | 1 | 3 105 000 | 91 62 546 08 | TELESCOPIC SECT.IV PRE-A |
| PLATE 2.5x227x177 DC01 FE// | 95 70 189 08 | 19 | 1 | 3 106 000 | 91 60 313 08 | TELESCOPIC SECT.5 PRE-AS |
| PLATE 2.5x229x148 DC01 FE// | 95 70 252 08 | 19 | 2 | 3 102 000 | 91 62 543 08 | TELESCOPIC SECTION 1 PRE |
| PLATE 2.5x229x148 DC01 FE// | 95 70 252 08 | 19 | 2 | 3 103 000 | 91 62 544 08 | TELESCOPIC SECT.2 PRE-AS |

| Description | Item | Pos. | Quantity | Page | Assembly | Description |
|---|---|---|---|---|---|---|
| PLATE 2.5x229x148 DC01 FE// | 95 70 252 08 | 19 | 2 | 3 104 000 | 91 62 545 08 | TELESCOPIC SECT.3 PRE-ASS |
| PLATE 2.5x634x41 DC01 FE//ZN | 97 02 009 08 | 3 | 2 | 2 260 006 | 96 31 147 08 | BATTERY BOX, PRE-ASSEMB |
| PLATE 20X45X230 S690QL | 95 36 085 08 | 5 | 2 | 3 510 100 | 91 49 246 08 | TRANSPORT MOUNTING |
| PLATE 2X103X40 ALMG3 H111 | 97 26 310 08 | 1 | 1 | 2 780 851 | 96 24 498 08 | RADIO ANTENNA PRE-ASS. |
| PLATE 2X1090X1326 DC01 | 97 45 632 08 | 1 | 1 | 2 932 042 | 96 68 587 08 | BASE ASSEMBLY |
| PLATE 2X1144X1092 ALMG3 H | 97 65 621 08 | 5 | 1 | 2 510 100 | 96 44 750 08 | SLEWING PLATFORM PANELLI |
| PLATE 2X114X114 DC01 FE//ZN | 95 70 188 08 | 8 | 4 | 3 105 000 | 91 62 546 08 | TELESCOPIC SECT.IV PRE-A |
| PLATE 2X114X114 DC01 FE//ZN | 95 70 188 08 | 8 | 4 | 3 106 000 | 91 60 313 08 | TELESCOPIC SECT.5 PRE-AS |
| PLATE 2X1162X241 DC01 FE// | 97 45 664 08 | 9 | 1 | 2 932 042 | 96 68 587 08 | BASE ASSEMBLY |
| PLATE 2X124X124 DC01 FE//ZN | 95 70 112 08 | 8 | 4 | 3 102 000 | 91 62 543 08 | TELESCOPIC SECTION 1 PRE |
| PLATE 2X124X124 DC01 FE//ZN | 95 70 112 08 | 8 | 4 | 3 103 000 | 91 62 544 08 | TELESCOPIC SECT.2 PRE-AS |
| PLATE 2X124X124 DC01 FE//ZN | 95 70 112 08 | 8 | 4 | 3 104 000 | 91 62 545 08 | TELESCOPIC SECT.3 PRE-ASS |
| PLATE 2X128X128 DC01 FE//ZN | 97 04 551 7 | 115 | 3 | 3 501 | 91 05 788 08 | MECH. DOUBLE FOLD JIB PR |
| PLATE 2X144X80 DC01 FE//ZN | 95 63 963 08 | 1 | 1 | 2 932 166 | 92 68 911 08 | GROUND RAIL |
| PLATE 2X162X142 ALMG3 H11 | 97 65 362 08 | 20 | 1 | 2 932 042 | 96 68 587 08 | BASE ASSEMBLY |
| PLATE 2X171X133 DC01 FE//ZN | 97 50 847 08 | 6 | 2 | 2 984 | 91 52 906 08 | OIL COOLER INSTALLATION |
| PLATE 2X179X241 DC01 FE//ZN | 97 16 260 08 | 3 | 1 | 2 430 | 91 54 389 08 | ANGLE THREADED BULKHEA |
| PLATE 2X183X140 DC01 FE//ZN | 97 89 160 08 | 24 | 1 | 2 210 | 91 81 614 08 | DRIVE ASSEMBLY, PRE-ASSE |
| PLATE 2X195X66 X5CRNI18-10 | 97 47 423 08 | 7 | 1 | 2 510 072 | 96 44 614 08 | FLAP RIGHT PRE-ASS. |
| PLATE 2X200X100 X5CRNI18-1 | 97 53 529 08 | 48 | 1 | 2 440 022 | 96 42 336 08 | WINCH 2 PRE-ASS. |
| PLATE 2X200X60 DC01 | 97 48 958 08 | 81 | 1 | 3 101 | 91 60 312 08 | PIVOT SECTION, PRE-ASSEMB |
| PLATE 2X212X144 DC01 FE//ZN | 97 89 159 08 | 23 | 1 | 2 210 | 91 81 614 08 | DRIVE ASSEMBLY, PRE-ASSE |
| PLATE 2X214X142 ALMG3 H11 | 97 47 409 08 | 3 | 1 | 2 780 852 | 96 24 845 08 | GSM-MODULE PRE-ASS.LICCO |
| PLATE 2X235X27 DC01 FE//ZN | 97 30 263 08 | 15 | 1 | 2 510 100 | 96 44 750 08 | SLEWING PLATFORM PANELLI |
| PLATE 2X236X22 DC01 FE//ZN | 97 48 804 08 | 70 | 1 | 2 510 100 | 96 44 750 08 | SLEWING PLATFORM PANELLI |
| PLATE 2X245X245 DC01 FE//ZN | 95 37 449 08 | 61 | 2 | 3 101 | 91 60 312 08 | PIVOT SECTION, PRE-ASSEMB |
| PLATE 2X35X100 DC01 FE//ZN | 95 70 688 08 | 25 | 3 | 2 440 022 | 96 42 336 08 | WINCH 2 PRE-ASS. |
| PLATE 2X380X82 DC01 FE//ZN | 97 70 502 08 | 16 | 1 | 2 210 | 91 81 614 08 | DRIVE ASSEMBLY, PRE-ASSE |
| PLATE 2X383X342 DC01 FE//ZN | 97 36 305 08 | 13 | 1 | 3 100 | 91 59 279 08 | TELESCOPIC BOOM CPL. |
| PLATE 2X398X326 ALMG3 H11 | 97 65 623 08 | 6 | 1 | 2 510 100 | 96 44 750 08 | SLEWING PLATFORM PANELLI |
| PLATE 2X42X86 DC01 FE//ZN20 | 95 35 272 08 | 4 | 1 | 2 932 042 | 96 68 587 08 | BASE ASSEMBLY |
| PLATE 2X438X751 DC01 | 97 59 572 08 | 7 | 1 | 2 510 100 | 96 44 750 08 | SLEWING PLATFORM PANELLI |
| PLATE 2X50X76 X5CRNI18-10 | 97 35 365 08 | 8 | 6 | 2 450 025 | 96 35 649 08 | MAIN HOISTING GEAR PRE-A |
| PLATE 2X54X95 DC01 FE//ZN20 | 95 37 009 08 | 2 | 1 | 2 932 215 | 92 26 129 08 | GROUND RAIL |
| PLATE 2X58X171 DC01 FE//ZN | 97 73 511 08 | 9 | 1 | 2 210 008 | 96 48 137 08 | RADIATOR, PRE-ASSEMBLED |
| PLATE 2X58X171 DC01 FE//ZN | 97 73 512 08 | 10 | 1 | 2 210 008 | 96 48 137 08 | RADIATOR, PRE-ASSEMBLED |
| PLATE 2X60X88 DC01 FE//ZN20 | 97 66 347 08 | 9 | 1 | 2 984 | 91 52 906 08 | OIL COOLER INSTALLATION |
| PLATE 2X680X420 DC01 | 95 64 701 08 | 24 | 1 | 3 100 | 91 59 279 08 | TELESCOPIC BOOM CPL. |
| PLATE 2X692X218 DC01 | 97 73 613 08 | 3 | 1 | 2 210 008 | 96 48 137 08 | RADIATOR, PRE-ASSEMBLED |
| PLATE 2X70X80 DC01 | 95 35 154 08 | 6 | 7 | 2 270 | 91 50 456 08 | FUEL TANK ADD-ON UNIT |
| PLATE 2X70X80 DC01 | 95 35 154 08 | 6 | 5 | 2 340 | 91 53 116 08 | OIL RESERVOIR, EXTENSION |
| PLATE 2X722X83 DC01 FE//ZN | 97 65 622 08 | 14 | 1 | 2 510 100 | 96 44 750 08 | SLEWING PLATFORM PANELLI |
| PLATE 2X73X380 DC01 | 97 04 551 5 | 113 | 2 | 3 501 | 91 05 788 08 | MECH. DOUBLE FOLD JIB PR |
| PLATE 2X856X894 DC01 | 97 50 846 08 | 4 | 1 | 2 984 | 91 52 906 08 | OIL COOLER INSTALLATION |
| PLATE 2X900X149 DC01 FE//ZN | 97 67 563 08 | 30 | 1 | 2 210 | 91 81 614 08 | DRIVE ASSEMBLY, PRE-ASSE |
| PLATE 2X900X63 DC01 FE//ZN | 97 45 197 08 | 19 | 1 | 2 210 | 91 81 614 08 | DRIVE ASSEMBLY, PRE-ASSE |
| PLATE 2X915X156 DC01 | 97 29 707 08 | 4 | 1 | 2 210 008 | 96 48 137 08 | RADIATOR, PRE-ASSEMBLED |
| PLATE 3.5X377X524 ALMG3 H | 97 46 406 08 | 12 | 1 | 2 501 000 | 91 48 769 08 | CRANE DRIVER'S CABIN,PRE |
| PLATE 3.5X590X310 ALMG3 H | 97 51 516 08 | 27 | 1 | 2 510 200 | 96 41 258 08 | SLEWING PLATFORM PANELLI |
| PLATE 3X111X222 DC01 FE//ZN | 97 11 358 08 | 19 | 1 | 3 511 006 | 96 45 029 08 | BOOM NOSE PRE-ASS. |
| PLATE 3X128X30 DC01 FE//ZN | 97 31 147 08 | 19 | 4 | 2 450 | 91 53 926 08 | MAIN HOIST GEAR |
| PLATE 3X129X50 DC01 FE//ZN | 97 09 288 08 | 18 | 1 | 2 510 200 | 96 41 258 08 | SLEWING PLATFORM PANELLI |
| PLATE 3X14X189 DC01 FE//ZN | 95 35 273 08 | 7 | 1 | 2 932 095 | 96 46 064 08 | SWING FRAME FUSE AND RE |
| PLATE 3X151X144 DC01 FE//ZN | 97 50 770 08 | 3 | 1 | 2 984 | 91 52 906 08 | OIL COOLER INSTALLATION |
| PLATE 3X151X144 DC01 FE//ZN | 97 51 599 08 | 7 | 1 | 2 984 | 91 52 906 08 | OIL COOLER INSTALLATION |
| PLATE 3X155X180 DC01 FE//ZN | 97 42 451 08 | 18 | 1 | 2 210 | 91 81 614 08 | DRIVE ASSEMBLY, PRE-ASSE |
| PLATE 3X15X50 ALMG3 H111 | 97 20 972 08 | 26 | 2 | 2 540 | 91 45 984 08 | HEATING, CRANE CABIN |
| PLATE 3X160X522 X5CRNI18-1 | 97 05 004 0 | 1 | 1 | 3 750 026 | 96 89 407 08 | HOLDER LEFT |
| PLATE 3X160X522 X5CRNI18-1 | 97 05 004 0 | 1 | 1 | 3 750 028 | 96 89 408 08 | HOLDER RIGHT |
| PLATE 3X164X86 DC01 FE//ZN | 97 65 667 08 | 10 | 1 | 2 510 100 | 96 44 750 08 | SLEWING PLATFORM PANELLI |

| Description | Item | Pos. | Quantity | Page | Assembly | Description |
|---|---|---|---|---|---|---|
| PLATE 3X255X133 DC01 | 97 58 742 08 | 10 | 1 | 2 270 | 91 50 456 08 | FUEL TANK ADD-ON UNIT |
| PLATE 3X292X697 X5CRNI18-1 | 97 05 004 3 | 2 | 1 | 3 750 028 | 96 89 408 08 | HOLDER RIGHT |
| PLATE 3X304X194 S355MC FE// | 97 46 006 08 | 15 | 1 | 2 210 | 91 81 614 08 | DRIVE ASSEMBLY, PRE-ASSE |
| PLATE 3X318X697 X5CRNI18-1 | 97 05 004 1 | 2 | 1 | 3 750 026 | 96 89 407 08 | HOLDER LEFT |
| PLATE 3X33X208 DC01 FE//ZN | 95 37 507 08 | 16 | 1 | 2 501 000 | 91 48 769 08 | CRANE DRIVER'S CABIN,PRE |
| PLATE 3X387X299 DC01 FE//ZN | 97 23 093 08 | 3 | 1 | 2 970 092 | 96 22 207 08 | MECHANICAL AUXILIARIES |
| PLATE 3X40X300 DC01 FE//ZN | 95 37 816 08 | (1) | 2 | 2 950 | 91 49 515 08 | COMPRESSED-AIR SYST.SU |
| PLATE 3X440X204 X5CRNI18-1 | 97 44 979 08 | 6 | 1 | 2 440 022 | 96 42 336 08 | WINCH 2 PRE-ASS. |
| PLATE 3X440X387 DC01 | 95 66 602 08 | 36 | 1 | 2 502 | 91 01 533 08 | CONTROL STAND |
| PLATE 3X45X120 DC01 FE//ZN | 95 37 609 08 | (1) | 1 | 2 971 | 91 50 610 08 | HYDR.AUXILIARY HOISTING |
| PLATE 3X460X398 DC01 FE//ZN | 97 66 112 08 | 12 | 1 | 2 571 | 91 50 902 08 | HYDRAULIC BALLASTING |
| PLATE 3X473X25 DC01 RAL 7 | 97 20 971 08 | 25 | 1 | 2 540 | 91 45 984 08 | HEATING, CRANE CABIN |
| PLATE 3X583X481 DC01 | 97 66 111 08 | 11 | 1 | 2 571 | 91 50 902 08 | HYDRAULIC BALLASTING |
| PLATE 3X60X80 DC01 FE//ZN20 | 97 37 172 08 | 20 | 3 | 2 210 | 91 81 614 08 | DRIVE ASSEMBLY, PRE-ASSE |
| PLATE 3X80X68 DC01 FE//ZNNI | 97 37 173 08 | 21 | 1 | 2 210 | 91 81 614 08 | DRIVE ASSEMBLY, PRE-ASSE |
| PLATE 3X85X30 DC01 FE//ZNNI | 95 40 160 08 | 79 | 2 | 2 970 | 91 55 482 08 | HYDRAULICS |
| PLATE 3X85X30 DC01 FE//ZNNI | 95 40 160 08 | 49 | 1 | 2 971 | 91 50 610 08 | HYDR.AUXILIARY HOISTING |
| PLATE 3X930X580 ALMG3 H11 | 97 75 310 08 | 13 | 1 | 2 510 100 | 96 44 750 08 | SLEWING PLATFORM PANELLI |
| PLATE 4X100X132 S315MC FE// | 95 56 879 08 | 34 | 1 | 2 920 | 91 55 477 08 | ELECTR. SYSTEM F.SLEWING |
| PLATE 4X110X34 S315MC FE// | 97 91 320 08 | 80 | 1 | 3 106 000 | 91 60 313 08 | TELESCOPIC SECT.5 PRE-AS |
| PLATE 4X140X113 S315MC FE// | 95 36 490 08 | 2 | 1 | 2 970 092 | 96 22 207 08 | MECHANICAL AUXILIARIES |
| PLATE 4X140X113 S315MC FE// | 95 36 490 08 | (3) | 1 | 2 971 | 91 50 610 08 | HYDR.AUXILIARY HOISTING |
| PLATE 4X189X173 S315MC FE// | 97 47 300 08 | 41 | 2 | 2 440 022 | 96 42 336 08 | WINCH 2 PRE-ASS. |
| PLATE 4X190X250 S315MC FE// | 95 37 494 08 | 65 | 1 | 3 106 000 | 91 60 313 08 | TELESCOPIC SECT.5 PRE-AS |
| PLATE 4X196X63 S315MC FE// | 95 56 681 08 | 35 | 1 | 2 920 | 91 55 477 08 | ELECTR. SYSTEM F.SLEWING |
| PLATE 4X208X241 S315MC FE// | 97 57 695 08 | 2 | 1 | 2 102 022 | 96 32 604 08 | LOCKING |
| PLATE 4X20X46 S315MC FE// | 95 37 446 08 | 15 | 1 | 2 501 000 | 91 48 769 08 | CRANE DRIVER'S CABIN,PRE |
| PLATE 4X220X150 S315MC FE// | 97 51 432 08 | (3) | 1 | 2 950 | 91 49 515 08 | COMPRESSED-AIR SYST.SU |
| PLATE 4X270X157 S315MC FE// | 95 41 415 08 | 17 | 1 | 2 711 | 91 53 002 08 | CENT. LUBRIC. SYSTEM SUP |
| PLATE 4X290X230 S315MC FE// | 97 23 359 08 | 70 | 1 | 3 101 | 91 60 312 08 | PIVOT SECTION, PRE-ASSEMB |
| PLATE 4X30X105 S315MC FE// | 95 36 969 08 | 15 | 1 | 2 711 | 91 53 002 08 | CENT. LUBRIC. SYSTEM SUP |
| PLATE 4X30X128 S315MC FE// | 97 08 360 08 | 44 | 3 | 2 510 200 | 96 41 258 08 | SLEWING PLATFORM PANELLI |
| PLATE 4X324X189 S315MC FE// | 97 68 223 08 | (4) | 1 | 2 971 | 91 50 610 08 | HYDR.AUXILIARY HOISTING |
| PLATE 4X32X32 ALMG3 H111 | 97 23 538 08 | 379 | 2 | 2 210 008 | 96 48 137 08 | RADIATOR, PRE-ASSEMBLED |
| PLATE 4X32X32 ALMG3 H111 | 97 23 538 08 | 161 | 2 | 2 520 000 | 91 49 872 08 | CABIN, GLAZED |
| PLATE 4X336X157 S315MC FE// | 97 52 305 08 | 7 | 2 | 3 750 008 | 91 75 085 08 | LADDER ATTACHMENT |
| PLATE 4X400X200 S315MC FE// | 97 77 537 08 | 13 | 1 | 1 400 200 | 91 53 791 08 | PREPARATION HYDR |
| PLATE 4X405X460 RST 37-2 | 95 83 404 14 | 5 | 2 | 1 100 220 | 99 08 404 14 | COVER |
| PLATE 4X405X73 S315MC FE// | 97 51 429 08 | (2) | 1 | 2 950 | 91 49 515 08 | COMPRESSED-AIR SYST.SU |
| PLATE 4X440X161 S315MC | 95 70 952 08 | 143 | 1 | 2 520 000 | 91 49 872 08 | CABIN, GLAZED |
| PLATE 4X440X890 S315MC | 97 50 794 08 | 9 | 1 | 2 102 | 91 51 080 08 | ASSEMBLY PARTS F.SLEWING |
| PLATE 4X48X29 S315MC RAL | 97 00 759 7 | 2 | 2 | 2 520 041 | 96 84 504 08 | ATTACHMENT GRIP |
| PLATE 4X510X850 S235JR | 95 83 464 14 | 4 | 2 | 1 100 220 | 99 08 404 14 | COVER |
| PLATE 4X527X430 S315MC | 97 20 552 08 | 10 | 1 | 2 102 | 91 51 080 08 | ASSEMBLY PARTS F.SLEWING |
| PLATE 4X531X839 S315MC | 97 18 218 08 | 7 | 1 | 2 510 200 | 96 41 258 08 | SLEWING PLATFORM PANELLI |
| PLATE 4X55X180 S315MC FE// | 95 43 136 08 | 1 | 1 | 2 970 092 | 96 22 207 08 | MECHANICAL AUXILIARIES |
| PLATE 4X65X80 S315MC FE// | 97 38 621 08 | 21 | 1 | 2 510 100 | 96 44 750 08 | SLEWING PLATFORM PANELLI |
| PLATE 4X68X75 S315MC FE// | 95 70 378 08 | 124 | 2 | 2 520 000 | 91 49 872 08 | CABIN, GLAZED |
| PLATE 4X70X102 S315MC | 95 65 560 08 | 8 | 1 | 2 520 001 | 92 48 796 08 | FRONT WINDOW CPL. |
| PLATE 4X751X215 S315MC | 95 66 267 08 | 87 | 1 | 2 520 000 | 91 49 872 08 | CABIN, GLAZED |
| PLATE 4X75X111 S315MC FE// | 95 70 358 08 | 122 | 1 | 2 520 000 | 91 49 872 08 | CABIN, GLAZED |
| PLATE 4X75X128 S315MC FE// | 95 70 359 08 | 123 | 1 | 2 520 000 | 91 49 872 08 | CABIN, GLAZED |
| PLATE 4X763X326 S315MC | 97 18 217 08 | 6 | 1 | 2 510 200 | 96 41 258 08 | SLEWING PLATFORM PANELLI |
| PLATE 4X76X2O8 S315MC FE// | 95 37 495 08 | 30 | 1 | 3 501 | 91 05 788 08 | MECH. DOUBLE FOLD JIB PR |
| PLATE 4X80X254 S315MC FE// | 95 71 028 08 | 38 | 1 | 3 510 100 | 91 49 246 08 | TRANSPORT MOUNTING |
| PLATE 4x383x125 S315MC FE// | 95 70 325 08 | 44 | 4 | 3 101 | 91 60 312 08 | PIVOT SECTION, PRE-ASSEMB |
| PLATE 4x383x125 S315MC FE// | 95 70 325 08 | 44 | 4 | 3 102 000 | 91 62 543 08 | TELESCOPIC SECTION 1 PRE |
| PLATE 4x383x125 S315MC FE// | 95 70 325 08 | 44 | 4 | 3 103 000 | 91 62 544 08 | TELESCOPIC SECT.2 PRE-AS |
| PLATE 4x383x125 S315MC FE// | 95 70 325 08 | 44 | 2 | 3 104 000 | 91 62 545 08 | TELESCOPIC SECT.3 PRE-ASS |
| PLATE 4x383x125 S315MC FE// | 95 70 325 08 | 44 | 2 | 3 105 000 | 91 62 546 08 | TELESCOPIC SECT.IV PRE-A |

| Description | Item | Pos. | Quantity | Page | Assembly | Description |
|---|---|---|---|---|---|---|
| PLATE 4x440x161 S315MC | 95 66 268 08 | 88 | 1 | 2 520 000 | 91 49 872 08 | CABIN, GLAZED |
| PLATE 4x63x90 S315MC FE//ZN | 95 41 137 08 | 12 | 1 | 2 510 100 | 96 44 750 08 | SLEWING PLATFORM PANELLI |
| PLATE 50X200X20 S355J2+N | 97 17 999 08 | 38 | 2 | 2 440 | 91 52 288 08 | AUXILIARY HOISTING GEAR 2 |
| PLATE 50X250X210 S355J2+N | 97 72 402 08 | 19 | 1 | 1 100 205 | 96 51 633 08 | CRAWLER CARRIER RIGHT CP |
| PLATE 50X250X210 S355J2+N | 97 72 402 08 | 19 | 1 | 1 100 210 | 96 51 634 08 | CRAWLER TRACK CARRIER LE |
| PLATE 5X1099X558 X5CRNI18 | 97 66 381 08 | 24 | 1 | 2 450 | 91 53 926 08 | MAIN HOIST GEAR |
| PLATE 5X110X154 S355MC FE// | 95 55 603 08 | 6 | 1 | 3 511 006 | 96 45 029 08 | BOOM NOSE PRE-ASS. |
| PLATE 5X110X210 S355MC FE// | 97 79 053 08 | 14 | 1 | 1 400 200 | 91 53 791 08 | PREPARATION HYDR |
| PLATE 5X125X74 S355MC FE// | 97 13 393 08 | 8 | 1 | 2 430 | 91 54 389 08 | ANGLE THREADED BULKHEA |
| PLATE 5X140X380 S355MC | 96 72 328 03 | 14 | 2 | 1 100 215 | 99 20 783 14 | CENTRE PIECE |
| PLATE 5X184X184 S960QL | 95 54 506 08 | 38 | 2 | 3 101 | 91 60 312 08 | PIVOT SECTION, PRE-ASSEMB |
| PLATE 5X184X184 S960QL | 95 54 506 08 | 38 | 2 | 3 102 000 | 91 62 543 08 | TELESCOPIC SECTION 1 PRE |
| PLATE 5X184X184 S960QL | 95 54 506 08 | 38 | 2 | 3 103 000 | 91 62 544 08 | TELESCOPIC SECT.2 PRE-AS |
| PLATE 5X184X184 S960QL | 95 54 506 08 | 38 | 2 | 3 104 000 | 91 62 545 08 | TELESCOPIC SECT.3 PRE-ASS |
| PLATE 5X184X184 S960QL | 95 54 506 08 | 38 | 2 | 3 105 000 | 91 62 546 08 | TELESCOPIC SECT.IV PRE-A |
| PLATE 5X200X130 S355MC | 97 74 410 08 | 22 | 2 | 1 100 205 | 96 51 633 08 | CRAWLER CARRIER RIGHT CP |
| PLATE 5X200X130 S355MC | 97 74 410 08 | 22 | 2 | 1 100 210 | 96 51 634 08 | CRAWLER TRACK CARRIER LE |
| PLATE 5X200X309 S355MC | 97 21 333 08 | 10 | 1 | 3 101 | 91 60 312 08 | PIVOT SECTION, PRE-ASSEMB |
| PLATE 5X20X80 S960QL | 95 54 508 08 | 57 | 1 | 3 101 | 91 60 312 08 | PIVOT SECTION, PRE-ASSEMB |
| PLATE 5X20X80 S960QL | 95 54 508 08 | 57 | 1 | 3 102 000 | 91 62 543 08 | TELESCOPIC SECTION 1 PRE |
| PLATE 5X20X80 S960QL | 95 54 508 08 | 57 | 1 | 3 103 000 | 91 62 544 08 | TELESCOPIC SECT.2 PRE-AS |
| PLATE 5X240X130 S355MC | 97 65 408 08 | 31 | 2 | 1 100 205 | 96 51 633 08 | CRAWLER CARRIER RIGHT CP |
| PLATE 5X240X130 S355MC | 97 65 408 08 | 31 | 1 | 1 100 210 | 96 51 634 08 | CRAWLER TRACK CARRIER LE |
| PLATE 5X280X360 S355MC FE// | 97 24 915 08 | 68 | 1 | 3 501 | 91 05 788 08 | MECH. DOUBLE FOLD JIB PR |
| PLATE 5X349X30 S355MC FE// | 97 69 932 08 | 1 | 4 | 1 100 216 | 96 46 363 08 | MOUNTING PARTS LWE |
| PLATE 5X41X63 S960QL | 95 47 627 08 | 10 | 1 | 3 105 000 | 91 62 546 08 | TELESCOPIC SECT.IV PRE-A |
| PLATE 5X41X63 S960QL | 95 47 627 08 | 10 | 1 | 3 106 000 | 91 60 313 08 | TELESCOPIC SECT.5 PRE-AS |
| PLATE 5X60X60 S355MC FE// | 95 36 763 08 | 8 | 2 | 2 270 | 91 50 456 08 | FUEL TANK ADD-ON UNIT |
| PLATE 5X60X60 S355MC FE// | 95 36 763 08 | 8 | 2 | 2 340 | 91 53 116 08 | OIL RESERVOIR, EXTENSION |
| PLATE 5X670X510 S355MC | 97 65 405 08 | 25 | 1 | 1 100 205 | 96 51 633 08 | CRAWLER CARRIER RIGHT CP |
| PLATE 5X670X510 S355MC | 97 65 405 08 | 25 | 1 | 1 100 210 | 96 51 634 08 | CRAWLER TRACK CARRIER LE |
| PLATE 5X80X166 S700MC | 97 43 646 08 | 79 | 1 | 3 101 | 91 60 312 08 | PIVOT SECTION, PRE-ASSEMB |
| PLATE 5X80X488 S355MC FE// | 95 55 239 08 | 26 | 6 | 3 101 | 91 60 312 08 | PIVOT SECTION, PRE-ASSEMB |
| PLATE 5x69x44 S960QL | 97 01 483 08 | 10 | 1 | 3 102 000 | 91 62 543 08 | TELESCOPIC SECTION 1 PRE |
| PLATE 5x69x44 S960QL | 97 01 483 08 | 10 | 1 | 3 103 000 | 91 62 544 08 | TELESCOPIC SECT.2 PRE-AS |
| PLATE 5x69x44 S960QL | 97 01 483 08 | 10 | 1 | 3 104 000 | 91 62 545 08 | TELESCOPIC SECT.3 PRE-ASS |
| PLATE 60X308X36 S960QL FE/ | 95 54 507 08 | 54 | 1 | 3 101 | 91 60 312 08 | PIVOT SECTION, PRE-ASSEMB |
| PLATE 60X308X36 S960QL FE/ | 95 54 507 08 | 54 | 1 | 3 102 000 | 91 62 543 08 | TELESCOPIC SECTION 1 PRE |
| PLATE 60X308X36 S960QL FE/ | 95 54 507 08 | 54 | 1 | 3 103 000 | 91 62 544 08 | TELESCOPIC SECT.2 PRE-AS |
| PLATE 6X346X227 S355MC | 97 65 415 08 | 11 | 1 | 1 400 200 | 91 53 791 08 | PREPARATION HYDR |
| PLATE 8X100X166 S355MC FE// | 97 65 413 08 | 12 | 4 | 1 400 200 | 91 53 791 08 | PREPARATION HYDR |
| PLATE 8X30X58 S355MC FE// | 95 59 743 08 | 29 | 1 | 3 510 100 | 91 49 246 08 | TRANSPORT MOUNTING |
| PLATE 8X315X425 S960QL | 95 70 399 08 | 49 | 2 | 3 105 000 | 91 62 546 08 | TELESCOPIC SECT.IV PRE-A |
| PLATE 8X325X325 S355MC | 97 04 266 7 | 11 | 2 | 1 100 200 | 96 72 944 08 | UNDERCARRIAGE CPL. |
| PLATE 8X394X423 S960QL | 95 70 562 08 | 49 | 2 | 3 104 000 | 91 62 545 08 | TELESCOPIC SECT.3 PRE-ASS |
| PLATE 8X395X448 S960QL | 95 70 381 08 | 49 | 2 | 3 103 000 | 91 62 544 08 | TELESCOPIC SECT.2 PRE-AS |
| PLATE 8X420X477 S960QL | 95 70 327 08 | 49 | 2 | 3 102 000 | 91 62 543 08 | TELESCOPIC SECTION 1 PRE |
| PLATE 8X456X517 S960QL | 95 70 666 08 | 49 | 2 | 3 101 | 91 60 312 08 | PIVOT SECTION, PRE-ASSEMB |
| PLATE 8X70X182 S960QL | 95 55 526 08 | 24 | 1 | 3 510 100 | 91 49 246 08 | TRANSPORT MOUNTING |
| PLATE 8X970X515 S700MC | 97 49 112 08 | 21 | 1 | 3 510 100 | 91 49 246 08 | TRANSPORT MOUNTING |
| PLATE 8x160x79 S700MC | 97 02 983 08 | 51 | 1 | 3 104 000 | 91 62 545 08 | TELESCOPIC SECT.3 PRE-ASS |
| PLATE 8x160x79 S700MC | 97 02 983 08 | 51 | 1 | 3 105 000 | 91 62 546 08 | TELESCOPIC SECT.IV PRE-A |
| PLATE 8x160x79 S960QL | 95 70 329 08 | 51 | 1 | 3 101 | 91 60 312 08 | PIVOT SECTION, PRE-ASSEMB |
| PLATE 8x160x79 S960QL | 95 70 329 08 | 51 | 1 | 3 102 000 | 91 62 543 08 | TELESCOPIC SECTION 1 PRE |
| PLATE 8x160x79 S960QL | 95 70 329 08 | 51 | 1 | 3 103 000 | 91 62 544 08 | TELESCOPIC SECT.2 PRE-AS |
| PLATE GLAS 315X178 | 10 67 511 6 | (1) | 1 | 2 790 | 91 68 708 08 | MIRROR ATTACHM.AT SLEW.P |
| PLATE IDENTIFICATION NUMB | 97 35 676 08 | 20 | 1 | 1 100 200 | 96 72 944 08 | UNDERCARRIAGE CPL. |
| PLATE LEFT WELDMENT | 92 50 296 08 | 12 | 1 | 2 502 | 91 01 533 08 | CONTROL STAND |
| PLATE OPER. HOUR METER | 97 12 910 08 | 37 | 1 | 2 932 042 | 96 68 587 08 | BASE ASSEMBLY |
| PLATE RIGHT WELDMENT | 92 50 297 08 | 13 | 1 | 2 502 | 91 01 533 08 | CONTROL STAND |

| Description | Item | Pos. | Quantity | Page | Assembly | Description |
|---|---|---|---|---|---|---|
| PLATE S315MC FE//ZN20//C | 95 54 418 08 | 44 | 2 | 3 106 000 | 91 60 313 08 | TELESCOPIC SECT.5 PRE-AS |
| PLATE WELDED | 92 68 890 08 | 22 | 1 | 2 520 001 | 92 48 796 08 | FRONT WINDOW CPL. |
| PLATE WELDED FE//ZNNI8//C | 96 00 389 4 | 7 | 1 | 2 210 008 | 96 48 137 08 | RADIATOR, PRE-ASSEMBLED |
| PLATE WELDED FE//ZNNI8//C | 96 00 389 5 | 8 | 1 | 2 210 008 | 96 48 137 08 | RADIATOR, PRE-ASSEMBLED |
| PLATE X5CrNi18-10 | 90 78 684 | 19 | 1 | X1011573 | 10 11 573 7 | FUEL LINES |
| PLATE-COUNTERWEIGHT 40X | 97 06 454 08 | 6 | 1 | 2 920 574 | 96 36 055 08 | OPERATOR PANEL BALLAST |
| PLATFORM, PRE-ASSEMBLED | 96 42 014 08 | 1 | 1 | 2 515 | 91 51 084 08 | FALL PROTECTION |
| PLATING DATA LOGGER | 96 67 851 08 | 3 | 1 | 2 780 952 | 91 68 736 08 | ADAPTER DATA LOGGER |
| PLATING FABRIKDATEN | 91 62 835 08 | 72 | 1 | | LTR 1100 -0 | LIEBHERR LTR 1100 |
| PLATING SPIAN | 91 62 974 08 | 74 | 1 | | LTR 1100 -0 | LIEBHERR LTR 1100 |
| PLUG 18-POL 15A SPF | 60 23 250 08 | 16 | 11 | 2 932 119 | 96 46 061 08 | SWING FRAME RELAY CONT |
| PLUG 6-POL | 60 45 086 08 | 8 | 1 | 6 923 101 | 69 23 101 08 | ROPE LENGTH INDICATOR |
| PLUG 8-POL | 10 04 699 9 | (161) | 8 | 2 932 042 | 96 68 587 08 | BASE ASSEMBLY |
| PLUG 8-POL | 10 04 700 0 | (162) | 8 | 2 932 042 | 96 68 587 08 | BASE ASSEMBLY |
| PLUG 8-POL | 10 04 700 1 | (163) | 8 | 2 932 042 | 96 68 587 08 | BASE ASSEMBLY |
| PLUG BASE 9-POLE | 63 01 229 08 | 31 | 1 | 2 932 042 | 96 68 587 08 | BASE ASSEMBLY |
| PLUG BASE 9-POLE | 63 01 229 08 | 21 | 33 | 2 932 095 | 96 46 064 08 | SWING FRAME FUSE AND RE |
| PLUG PLATE 1.5X585X202 DC0 | 95 35 264 08 | 2 | 1 | 2 932 042 | 96 68 587 08 | BASE ASSEMBLY |
| PLUG SHELL 14-POL | 60 23 360 08 | (154) | 5 | 2 932 042 | 96 68 587 08 | BASE ASSEMBLY |
| PLUG SHELL 14-POL | 60 23 365 08 | 3 | 6 | 2 932 166 | 92 68 911 08 | GROUND RAIL |
| PLUG SHELL 18-POL | 60 23 002 08 | (152) | 23 | 2 932 042 | 96 68 587 08 | BASE ASSEMBLY |
| PLUG-IN CARD G0 COMM.SP.4 | 92 16 203 08 | 48 | 1 | 2 932 042 | 96 68 587 08 | BASE ASSEMBLY |
| PLUG-IN CARD G0Z0 PROG-SP | 91 03 958 08 | 50 | 1 | 2 932 042 | 96 68 587 08 | BASE ASSEMBLY |
| PLUG-IN CARD G0Z1 PROG-S | 91 00 655 08 | 51 | 1 | 2 932 042 | 96 68 587 08 | BASE ASSEMBLY |
| PLUG-IN CARD G0Z2 PROG-S | 91 00 656 08 | 52 | 1 | 2 932 042 | 96 68 587 08 | BASE ASSEMBLY |
| PLUG-IN CARD G0Z3 PROG-S | 91 00 659 08 | 53 | 1 | 2 932 042 | 96 68 587 08 | BASE ASSEMBLY |
| PNEUM. CRANE OPERATORS | 91 49 516 08 | 183 | 1 | | LTR 1100 -0 | LIEBHERR LTR 1100 |
| PNEUMATIC CYLINDER 50MM | 51 23 931 08 | 2 | 1 | 2 430 | 91 54 389 08 | ANGLE THREADED BULKHEA |
| PNEUMATIC CYLINDER ST/AL | 11 63 184 2 | (1) | 1 | 2 520 000 | 91 49 872 08 | CABIN, GLAZED |
| POINTER 2X120X82 X5CRNI18 | 97 46 893 08 | 21 | 1 | 2 430 | 91 54 389 08 | ANGLE THREADED BULKHEA |
| POTENTIOMETER 68R 10W SP | 63 51 137 08 | 39 | 1 | 2 932 095 | 96 46 064 08 | SWING FRAME FUSE AND RE |
| POUCH SOCKET 19-22 SPF | 77 39 413 08 | 123 | 2 | | LTR 1100 -0 | LIEBHERR LTR 1100 |
| POWER SUPPLY 4 | 96 19 563 08 | 47 | 1 | 2 932 042 | 96 68 587 08 | BASE ASSEMBLY |
| POWER SUPPLY LSB 1-FACH | 92 08 669 08 | 6 | 1 | 2 932 214 | 96 28 366 08 | INPUT BOARD CPL. |
| POWER TAKE-OFF ADD-ON | 10 11 997 6 | 654 | 1 | X1015207 | 10 15 207 7 | DIESEL ENGINE |
| POWER TAKE-OFF ADD-ON | 90 73 767 | 210 | 1 | X1012193 | 10 12 193 2 | BASIC ENGINE |
| POWER TAKE-OFF FLANGE | 92 76 398 01 | 10 | 1 | 9 686 071 | 96 86 071 01 | PLANETARY GEARBOX |
| POWER UNIT SUPPORT | 10 13 621 2 | 1 | 1 | 9 079 480 | 90 79 480 | POWER UNIT SUPPORT ATT |
| POWER UNIT SUPPORT ATT | 90 79 480 | 12 | 1 | X1012193 | 10 12 193 2 | BASIC ENGINE |
| PREPARATION HYDR JACKUP | 91 53 791 08 | 40 | 1 | | LTR 1100 -0 | LIEBHERR LTR 1100 |
| PRESSURE CONTROL VALVE | 10 45 005 1 | 49 | 1 | X1080175 | 10 80 175 1 | ADJUSTMENT |
| PRESSURE FILTER | 51 06 681 08 | 32 | 1 | 2 970 | 91 55 482 08 | HYDRAULICS |
| PRESSURE GAUGE CONNECT | 47 09 004 08 | 49 | 1 | 2 520 000 | 91 49 872 08 | CABIN, GLAZED |
| PRESSURE GAUGE CONNECTI | 47 09 003 08 | 610 | 1 | 2 955 | 91 49 516 08 | PNEUM. CRANE OPERATORS |
| PRESSURE LIMITING VALVE | 10 41 260 4 | 29 | 3 | X1041191 | 10 41 191 5 | VALVE BLOCK |
| PRESSURE LIMITING VALVE | 51 16 551 14 | 50 | 2 | X1080175 | 10 80 175 1 | ADJUSTMENT |
| PRESSURE LIMITING VALVE | 57 11 301 08 | 17 | 2 | X1029147 | 10 29 147 4 | CONTROL BLOCK |
| PRESSURE LIMITING VALVE | 57 11 301 08 | 17 | 1 | X1041191 | 10 41 191 3 | SHEET |
| PRESSURE LIMITING VALVE | 57 11 301 08 | 17 | 5 | X1041191 | 10 41 191 5 | VALVE BLOCK |
| PRESSURE LIMITING VALVE | 57 11 301 08 | 17 | 2 | X1047529 | 10 47 529 1 | VALVE BLOCK |
| PRESSURE LIMITING VALVE | 57 11 301 08 | 17 | 2 | X1047529 | 10 47 529 2 | VALVE BLOCK |
| PRESSURE LIMITING VALVE | 57 15 349 08 | 70 | 1 | X1033367 | 10 33 367 2 | CONTROL BLOCK |
| PRESSURE LIMITING VALVE | 57 15 398 08 | 40 | 1 | X1033367 | 10 33 367 2 | CONTROL BLOCK |
| PRESSURE LIMITING VALVE | 57 18 770 08 | 3 | 2 | 5 113 078 | 51 13 078 08 | CONTROL PLATE |
| PRESSURE LIMITING VALVE | 57 19 283 08 | 37 | 1 | X1047300 | 10 47 300 1 | TELESCOPIC CYLINDER |
| PRESSURE LIMITING VALVE | 70 29 305 | 11 | 1 | X1042993 | 10 42 993 3 | GEAR WHEEL MOTOR |
| PRESSURE LIMITING VALVE | 51 14 647 14 | 6 | 1 | 1 970 | 96 71 367 08 | UNDERCARRIAGE HYDRAULIC |
| PRESSURE LIMITING VALVE | 51 14 502 08 | 13 | 1 | 2 970 | 91 55 482 08 | HYDRAULICS |
| PRESSURE LIMITING VALVE | 57 14 001 08 | 60 | 1 | X1033367 | 10 33 367 2 | CONTROL BLOCK |
| PRESSURE LIMITING VALVE | 57 04 271 08 | 50 | 1 | X1033367 | 10 33 367 2 | CONTROL BLOCK |

| Description | Item | Pos. | Quantity | Page | Assembly | Description |
|---|---|---|---|---|---|---|
| PRESSURE LIMITING VALVE | 51 14 177 08 | 12 | 1 | 2 970 | 91 55 482 08 | HYDRAULICS |
| PRESSURE REDUCTION VALV | 11 17 027 6 | 1 | 1 | 5 113 066 | 51 13 066 08 | CONTROL BLOCK |
| PRESSURE REDUCTION VALV | 51 04 385 14 | 7 | 1 | 1 970 | 96 71 367 08 | UNDERCARRIAGE HYDRAULIC |
| PRESSURE SENSOR -0,08-0 | 10 81 691 3 | 1 | 1 | 1 681 021 | 96 65 122 08 | SENSOR COMPL. |
| PRESSURE SENSOR 0-400/400 | 10 81 373 8 | (1) | 2 | 2 970 | 91 55 482 08 | HYDRAULICS |
| PRESSURE SENSOR 0-400/400 | 10 81 618 5 | (1) | 1 | 2 970 | 91 55 482 08 | HYDRAULICS |
| PRESSURE SPRING | 51 07 975 08 | 9 | 1 | 5 114 177 | 51 14 177 08 | PRESSURE LIMITING VALVE |
| PRESSURE SPRING | 51 10 151 08 | 4 | 1 | 5 114 177 | 51 14 177 08 | PRESSURE LIMITING VALVE |
| PRESSURE SPRING | 57 06 310 08 | 3 | 1 | X1003269 | 10 03 269 6 | CARTRIDGE |
| PRESSURE SPRING | 72 00 115 08 | 56 | 1 | 3 501 | 91 05 788 08 | MECH. DOUBLE FOLD JIB PR |
| PRESSURE SPRING | 92 75 208 01 | 27 | 1 | 9 387 598 | 93 87 598 01 | PLANETARY GEARBOX |
| PRESSURE SPRING 1,6X18,2 | 72 00 094 08 | 19 | 4 | 3 330 | 91 57 885 08 | MECHANICAL EXTENSION SYS |
| PRESSURE SPRING 1,9X6,9X2 | 51 07 359 08 | 6 | 1 | 5 711 301 | 57 11 301 08 | PRESSURE LIMITING VALVE |
| PRESSURE SPRING 1,9X6,9X2 | 51 07 359 08 | 4 | 1 | 5 718 895 | 57 18 895 08 | PRESSURE VALVE |
| PRESSURE SPRING 10X100X1 | 72 00 093 08 | 2 | 1 | 3 105 000 | 91 62 546 08 | TELESCOPIC SECT.IV PRE-A |
| PRESSURE SPRING 10X100X1 | 72 00 093 08 | 2 | 1 | 3 106 000 | 91 60 313 08 | TELESCOPIC SECT.5 PRE-AS |
| PRESSURE SPRING 10X105X | 72 00 096 08 | 2 | 1 | 3 102 000 | 91 62 543 08 | TELESCOPIC SECTION 1 PRE |
| PRESSURE SPRING 10X105X | 72 00 096 08 | 2 | 1 | 3 103 000 | 91 62 544 08 | TELESCOPIC SECT.2 PRE-AS |
| PRESSURE SPRING 10X105X | 72 00 096 08 | 2 | 1 | 3 104 000 | 91 62 545 08 | TELESCOPIC SECT.3 PRE-ASS |
| PRESSURE SPRING 2,10X17,8 | 98 86 756 | 21 | 1 | X1011739 | 10 11 739 7 | OIL COOLER, PRE-ASSEMBLE |
| PRESSURE SPRING 2,5X16X61 | 10 12 092 9 | 12 | 1 | X1011795 | 10 11 795 1 | FINAL CONTROL VALVE |
| PRESSURE SPRING 3,40X16, | 73 81 302 | 10 | 1 | 9 075 541 | 90 75 541 | LUBE OIL PUMP PRE-ASSY. |
| PRESSURE SPRING 4,60X28,4 | 90 74 481 | 9 | 4 | X1012036 | 10 12 036 5 | CYLINDER HEAD PRE-ASSY. |
| PRESSURE SPRING 4,60X28,4 | 90 74 481 | 9 | 4 | X1014155 | 10 14 155 5 | CYLINDER HEAD PRE-ASSY. |
| PRESSURE SPRING 4X25X41 E | 11 00 342 6 | 5 | 1 | 2 790 024 | 96 67 077 08 | MIRROR RETAINER PRE-ASS. |
| PRESSURE SPRING DIN 2098 | 72 00 085 08 | 6 | 1 | 3 510 006 | 96 20 924 08 | FOLDING BRACKET |
| PRESSURE SPRING DIN 2098 6 | 72 00 011 08 | 54 | 1 | 3 501 | 91 05 788 08 | MECH. DOUBLE FOLD JIB PR |
| PRESSURE SPRING EN10270- | 72 00 126 08 | 42 | 1 | 3 510 100 | 91 49 246 08 | TRANSPORT MOUNTING |
| PRESSURE SWITCH 1,5-26 BA | 57 14 891 08 | 6 | 1 | 2 831 | 91 47 871 08 | AIR COND. UNIT SUPERSTRU |
| PRESSURE SWITCH 10-100/40 | 51 06 769 08 | 11 | 1 | 2 970 | 91 55 482 08 | HYDRAULICS |
| PRESSURE SWITCH 10-100/40 | 51 06 769 08 | 9 | 1 | 2 971 | 91 50 610 08 | HYDR.AUXILIARY HOISTING |
| PRESSURE TRANSDUCER L | 96 24 299 08 | 60 | 1 | 2 970 | 91 55 482 08 | HYDRAULICS |
| PRESSURE TRANSDUCER LUF | 96 24 300 08 | 61 | 1 | 2 970 | 91 55 482 08 | HYDRAULICS |
| PRESSURE TRANSMITTER 0,5- | 10 10 078 1 | (1) | 1 | X1011969 | 10 11 969 7 | PRESSURE TRANSMITTER AT |
| PRESSURE TRANSMITTER 0-1 | 10 02 512 4 | (1) | 1 | X1011969 | 10 11 969 8 | ENGINE CONTROL SENSORS |
| PRESSURE TRANSMITTER A | 10 11 969 7 | 11 | 1 | X1011969 | 10 11 969 8 | ENGINE CONTROL SENSORS |
| PRESSURE TRANSMITTER C | 90 76 550 | 1 | 1 | X1011969 | 10 11 969 7 | PRESSURE TRANSMITTER AT |
| PRESSURE TRANSMITTER CP | 90 76 531 | 10 | 1 | X1011969 | 10 11 969 8 | ENGINE CONTROL SENSORS |
| PRESSURE VALVE | 57 14 537 08 | 7 | 1 | 5 114 869 | 51 14 869 08 | CONTROL PLATE |
| PRESSURE VALVE | 57 18 891 08 | 6 | 1 | X1010109 | 10 10 109 3 | SLEWING GEAR VALVE |
| PRESSURE VALVE | 57 18 895 08 | 35 | 1 | X1010109 | 10 10 109 3 | SLEWING GEAR VALVE |
| PRESSURE VALVE | 57 18 895 08 | 35 | 1 | X1080297 | 10 80 297 1 | VALVE BLOCK |
| PRESSURE VALVE 350BAR | 10 49 389 3 | 3 | 1 | X1047529 | 10 47 529 2 | VALVE BLOCK |
| PRIMER 250ML | 81 12 035 08 | 96 | 1 | 2 520 000 | 91 49 872 08 | CABIN, GLAZED |
| PRINTED CIRCUIT BOARD(PCB | 66 10 179 08 | 4 | 1 | 2 922 001 | 92 84 311 08 | BUS PCB |
| PROFILE PACKING DIN 3869 1 | 10 04 098 4 | 2 | 1 | 9 076 530 | 90 76 530 | TEMPERATURE PROBE CPL. |
| PROFILE PACKING DIN 3869 1 | 10 04 098 4 | (2) | 1 | X1011969 | 10 11 969 8 | ENGINE CONTROL SENSORS |
| PROFILE PACKING DIN 3869 33 | 10 33 562 9 | 3 | 1 | X1011883 | 10 11 883 9 | OIL FILLER INLET |
| PROTECTING CAP SW10 | 77 90 201 08 | 2 | 6 | 1 830 102 | 92 26 483 08 | TERMINAL BOARD PRE-ASS. |
| PROTECTION GUARD 3x146x4 | 97 05 962 08 | 3 | 1 | 2 420 | 91 32 936 08 | SLEWING GEAR |
| PROTECTIVE INSERT DN25 | 73 63 032 | (4) | 1 | 1 970 | 96 71 367 08 | UNDERCARRIAGE HYDRAULIC |
| PROTECTIVE INSERT DN6 | 73 64 488 | (4) | 1 | 1 970 | 96 71 367 08 | UNDERCARRIAGE HYDRAULIC |
| PROTECTIVE MOTOR SWITCH | 57 09 915 08 | 73 | 3 | 6 060 516 | 60 60 516 08 | GEAR CAM LIMITSWITCH |
| PROTECTIVE PADDING | 52 04 028 08 | 3 | 1 | 1 750 | 91 48 606 08 | TOOLS AND ACCESSORIES |
| PROXIMITY SWITCH BERUEHR | 10 09 761 3 | 1 | 1 | X1100291 | 11 00 291 4 | DISTRIBUTION BLOCK |
| PROXIMITY SWITCH BERUEHR | 57 13 188 08 | 7 | 1 | 3 930 464 | 92 95 081 08 | SENSOR INSTALL.TELESCOP. |
| PROXIMITY SWITCH BERUEHR | 69 27 015 08 | 10 | 2 | 2 920 407 | 92 11 635 08 | ELECTR.FOR SLEWING GEAR |
| PROXIMITY SWITCH BERUEHR | 69 27 015 08 | 10 | 2 | 2 920 554 | 96 19 338 08 | ADDITIONAL ELECTRICS |
| PULL ROD | 10 09 920 9 | 28 | 4 | X1032706 | 10 32 706 5 | ELECTRIC PUMP |
| PULL-BACK PLATE | 57 01 100 08 | 7 | 1 | 5 701 090 | 57 01 090 08 | DRIVING GEAR |

| Description | Item | Pos. | Quantity | Page | Assembly | Description |
|---|---|---|---|---|---|---|
| PUMP ELEMENT | 10 03 827 2 | 13 | 1 | X1032706 | 10 32 706 5 | ELECTRIC PUMP |
| PUMP ELEMENT | 77 43 875 08 | 11 | 1 | X1032706 | 10 32 706 5 | ELECTRIC PUMP |
| PUMP HOUSING | 10 01 469 3 | 4 | 1 | X1032706 | 10 32 706 5 | ELECTRIC PUMP |
| PUMP MP41 SPF | 59 10 554 08 | 26 | 2 | 2 520 000 | 91 49 872 08 | CABIN, GLAZED |
| PUMP RETURN FLOW | 77 43 728 08 | 13 | 1 | 2 711 | 91 53 002 08 | CENT. LUBRIC. SYSTEM SUP |
| PUSH BUTTON | 60 61 430 08 | 11 | 1 | 2 530 002 | 96 19 448 08 | DASHBOARD FRONT, PRE-A |
| PUSH BUTTON | 60 61 430 08 | 10 | 6 | 2 531 001 | 96 36 738 08 | ELECTRIC FOR ARMREST LEF |
| PUSH BUTTON | 60 61 430 08 | 10 | 3 | 2 531 002 | 96 36 739 08 | ELECTRIC FOR ARMREST RI |
| PUSH-BUTTON CAP FLACH G | 60 61 439 08 | 7 | 1 | 2 531 001 | 96 36 738 08 | ELECTRIC FOR ARMREST LEF |
| PUSH-BUTTON CAP FLACH G | 60 61 439 08 | 7 | 3 | 2 531 002 | 96 36 739 08 | ELECTRIC FOR ARMREST RI |
| PUSH-BUTTON CAP FLACH GR | 60 61 451 08 | 6 | 4 | 2 531 001 | 96 36 738 08 | ELECTRIC FOR ARMREST LEF |
| PUSH-BUTTON CAP FLACH RO | 60 61 431 08 | 10 | 1 | 2 530 002 | 96 19 448 08 | DASHBOARD FRONT, PRE-A |
| PUSH-BUTTON CAP FLACH RO | 60 61 431 08 | 8 | 1 | 2 531 001 | 96 36 738 08 | ELECTRIC FOR ARMREST LEF |
| QUICK ACTING COUPLING | 79 00 427 08 | 9 | 1 | 1 750 | 91 48 606 08 | TOOLS AND ACCESSORIES |
| QUICK RELEASE PIN NIROST | 70 40 085 08 | 4 | 2 | 2 440 | 91 52 288 08 | AUXILIARY HOISTING GEAR 2 |
| QUICK-FITTING THREAD COUP | 51 15 112 14 | 23 | 4 | 1 970 | 96 71 367 08 | UNDERCARRIAGE HYDRAULIC |
| QUICK-FITTING THREAD COUP | 51 17 043 14 | 22 | 10 | 1 970 | 96 71 367 08 | UNDERCARRIAGE HYDRAULIC |
| QUICK-FITTING THREAD COUP | 51 15 113 14 | 24 | 4 | 1 970 | 96 71 367 08 | UNDERCARRIAGE HYDRAULIC |
| QUICK-FITTING THREAD COUP | 51 17 042 14 | 21 | 10 | 1 970 | 96 71 367 08 | UNDERCARRIAGE HYDRAULIC |
| QUICK-FITTING THREAD COUP | 51 17 083 14 | 26 | 2 | 1 970 | 96 71 367 08 | UNDERCARRIAGE HYDRAULIC |
| QUICK-FITTING THREAD COUP | 51 17 084 14 | 25 | 2 | 1 970 | 96 71 367 08 | UNDERCARRIAGE HYDRAULIC |
| RADIAL SEAL 70X90X7 | 70 08 986 | 10 | 1 | 5 923 269 | 59 23 269 14 | VARIABLE DISPLACEMENT MO |
| RADIATOR HOOD | 96 32 114 08 | 10 | 1 | 2 510 018 | 96 44 046 08 | RADIATOR HOOD CPL. |
| RADIATOR HOOD CPL. | 96 44 046 08 | 1 | 1 | 2 510 100 | 96 44 750 08 | SLEWING PLATFORM PANELLI |
| RADIATOR, PRE-ASSEMBLED | 96 48 137 08 | 2 | 1 | 2 210 | 91 81 614 08 | DRIVE ASSEMBLY, PRE-ASSE |
| RADIO ANTENNA PRE-ASS. | 96 24 498 08 | 1 | 1 | 2 780 854 | 96 37 908 08 | GSM MODULE |
| RAIL PAIR | 57 18 302 08 | 70 | 1 | 7 741 079 | 77 41 079 08 | OPERATOR SEAT |
| RAILING CROSSBAR | 96 34 947 08 | 154 | 1 | 2 520 000 | 91 49 872 08 | CABIN, GLAZED |
| RAILING ST.CONST. | 92 68 899 08 | 48 | 2 | 2 520 000 | 91 49 872 08 | CABIN, GLAZED |
| RAILING ST.CONST. | 92 71 304 08 | 115 | 1 | 2 520 000 | 91 49 872 08 | CABIN, GLAZED |
| RAILING ST.CONST. | 92 71 305 08 | 116 | 1 | 2 520 000 | 91 49 872 08 | CABIN, GLAZED |
| RAPID FIXING | 57 05 452 08 | 8 | 1 | 5 530 854 | 55 30 854 08 | THREE-WAY TAP |
| REAR LEFT PREM PILLOW BL | 96 30 572 08 | 5 | 1 | 2 210 | 91 81 614 08 | DRIVE ASSEMBLY, PRE-ASSE |
| REAR RIGHT PREM PILLOW BL | 96 30 135 08 | 4 | 1 | 2 210 | 91 81 614 08 | DRIVE ASSEMBLY, PRE-ASSE |
| REAR SHUTTER | 96 41 045 08 | 2 | 1 | 2 984 | 91 52 906 08 | OIL COOLER INSTALLATION |
| REAR VISION MIRROR UNIT 20 | 10 28 684 0 | (1) | 1 | 2 790 040 | 91 60 499 08 | MIRROR ATTACHM.IN CRANE |
| REAR WINDOW 4MM SPF | 72 57 408 08 | 6 | 1 | 2 520 000 | 91 49 872 08 | CABIN, GLAZED |
| RECTANGULAR NOZZLE | 55 30 186 08 | 60 | 3 | 2 520 000 | 91 49 872 08 | CABIN, GLAZED |
| RECTANGULAR PIPE WELDME | 96 47 958 08 | 2 | 1 | 2 790 901 | 91 54 183 08 | BRACING |
| REDUCER M22/M14X1,5 | 10 35 483 9 | 4 | 1 | X1009734 | 10 09 734 5 | OIL AIR COOLER |
| REDUCING PIECE M16X1,5/M1 | 10 12 006 6 | 5 | 1 | X1012580 | 10 12 580 1 | FUEL FINE FILTER |
| REDUCING PIECE MS58 | 22 81 104 08 | 5 | 1 | 2 200 048 | 96 32 140 08 | EXPANSION TANK PRE-ASS. |
| REDUCING PIECE PG13,5/11 | 60 26 040 08 | 8 | 1 | 3 930 523 | 96 43 943 08 | CABLE REEL |
| REDUCTION M20X1,5/M16X1,5 | 60 26 062 08 | (6) | 1 | 2 920 | 91 55 477 08 | ELECTR. SYSTEM F.SLEWING |
| REDUCTION M20X1,5/M16X1,5 | 60 26 062 08 | 198 | 2 | 3 930 492 | 96 20 966 08 | TERMINAL BOX CPL. |
| REDUCTION M32X1,5/M25X1,5 | 60 26 066 08 | 15 | 1 | 1 920 314 | 96 46 921 08 | TERMINAL BOX, PRE-ASSEMB |
| REFLECTOR | 60 72 250 08 | 16 | 4 | 2 533 001 | 96 41 568 08 | DASHBOARD ROOF, PRE-AS |
| REFRIGERANT 12KG FLASCH | 70 20 440 | 8 | 1.6 | 2 831 | 91 47 871 08 | AIR COND. UNIT SUPERSTRU |
| REGULATING VALVE EL-DA | 90 74 716 | 4 | 2 | 9 072 112 | 90 72 112 | HYDR.DOUBLE PUMP |
| REGULATION DEVICE SEAT B | 57 18 300 08 | 23 | 1 | 7 741 079 | 77 41 079 08 | OPERATOR SEAT |
| REGULATION REPAIR KIT | 10 87 267 2 | (1) | 1 | 2 520 000 | 91 49 872 08 | CABIN, GLAZED |
| REGULATOR | 10 47 599 4 | (1) | 1 | X1011864 | 10 11 864 6 | GENERATOR, PRE-ASSEMBLE |
| REGULATOR TEMP.GESTEU | 11 06 853 5 | 3 | 1 | 2 780 870 | 91 70 947 08 | CHARGE VOLTAGE REGULA |
| REINFORCED RUBBER HOSE | 79 00 429 08 | 71 | 1 | 1 750 001 | 92 85 698 08 | MAIN TOOLS |
| RELAY 24V | 63 01 021 08 | 6 | 13 | 2 932 119 | 96 46 061 08 | SWING FRAME RELAY CONT |
| RELAY 24V 10A SPF | 63 01 215 08 | 22 | 32 | 2 932 095 | 96 46 064 08 | SWING FRAME FUSE AND RE |
| RELAY 24V/1S 26X26X24MM | 63 01 051 08 | 20 | 1 | 2 932 095 | 96 46 064 08 | SWING FRAME FUSE AND RE |
| RELAY 24V/1S SPF | 63 01 053 08 | 7 | 1 | 2 920 083 | 96 31 039 08 | ELECTRIC FOR BATTERY BOX |
| REPAIR KIT | 10 87 327 0 | (999) | 1 | 3 501 | 91 05 788 08 | MECH. DOUBLE FOLD JIB PR |
| REPAIR KIT | 11 00 309 4 | 999 | 1 | 5 026 573 | 50 26 573 08 | AIR DRYER |

| Description | Item | Pos. | Quantity | Page | Assembly | Description |
|---|---|---|---|---|---|---|
| REPAIR KIT | 57 15 821 08 | 1 | 1 | 5 700 161 | 57 00 161 | AIR COMPRESSOR |
| REPAIR KIT | 57 15 827 08 | 15 | 1 | 5 700 161 | 57 00 161 | AIR COMPRESSOR |
| REPAIR KIT | 57 18 380 08 | 999 | 1 | 7 900 391 | 79 00 391 08 | HAND PUMP |
| REPAIR KIT -E DF/LF | 10 03 553 4 | (3) | 1 | XSK_Z480 | SK_Z48005 | SERVICE |
| REPAIR KIT CONNECTION H | 98 89 837 | 90 | 1 | 9 072 112 | 90 72 112 | HYDR.DOUBLE PUMP |
| REPAIR KIT CONTROL VALVE | 90 74 997 | (998) | 1 | 9 072 112 | 90 72 112 | HYDR.DOUBLE PUMP |
| REPAIR KIT LOCK RING NG 12 | 92 68 016 | 96 | 1 | 9 072 112 | 90 72 112 | HYDR.DOUBLE PUMP |
| REPAIR KIT MAGNET | 92 73 187 | 97 | 2 | 9 072 112 | 90 72 112 | HYDR.DOUBLE PUMP |
| REPAIR KIT SHAFT NG 125 | 90 73 528 | 93 | 1 | 9 072 112 | 90 72 112 | HYDR.DOUBLE PUMP |
| REPAIR KIT SHAFT NG 125 | 90 73 915 | 95 | 1 | 9 072 112 | 90 72 112 | HYDR.DOUBLE PUMP |
| REPAIR KIT SICHERUNGSKN | 96 73 615 08 | 3 | 1 | 7 739 413 | 77 39 413 08 | POUCH SOCKET |
| REPAIR KIT SOLENOID VALVE | 10 87 707 3 | (998) | 1 | 2 955 | 91 49 516 08 | PNEUM. CRANE OPERATORS |
| REPAIR SET LID NG 100 | 92 75 443 | 85 | 1 | 9 072 112 | 90 72 112 | HYDR.DOUBLE PUMP |
| REPAIR SET PRESSURE GOV | 11 00 308 9 | 998 | 1 | 5 026 573 | 50 26 573 08 | AIR DRYER |
| REPAIR SET SWIVEL YOKE N | 90 73 917 | 84 | 2 | 9 072 112 | 90 72 112 | HYDR.DOUBLE PUMP |
| REPLACEMENT PARTS SET | 10 87 351 7 | 5 | 1 | 6 060 950 | 60 60 950 08 | MASTER SWITCH |
| RESISTANCE MODULE PBTG | 10 02 485 7 | 32 | 1 | 2 932 042 | 96 68 587 08 | BASE ASSEMBLY |
| RESISTOR 15R 5% 50W 50W | 63 50 576 08 | 15 | 1 | 2 913 005 | 96 28 696 08 | INTERIOR HOUSING PRE-ASS. |
| RESISTOR 30R 1% 25W | 63 50 169 08 | 35 | 5 | 2 932 095 | 96 46 064 08 | SWING FRAME FUSE AND RE |
| RESISTOR 47R 1% 25W | 63 50 170 08 | 36 | 1 | 2 932 095 | 96 46 064 08 | SWING FRAME FUSE AND RE |
| RESISTOR NETWORK 1K X8 5 | 63 50 855 08 | 20 | 2 | 2 922 001 | 92 84 311 08 | BUS PCB |
| RESISTOR NETWORK 22K X8 | 63 50 842 08 | 7 | 10 | 2 922 001 | 92 84 311 08 | BUS PCB |
| RETAINER CLIP 75/25 | 77 42 097 08 | 5 | 1 | 2 831 | 91 47 871 08 | AIR COND. UNIT SUPERSTRU |
| RETAINER CPL. | 10 11 599 4 | 2 | 1 | X1011599 | 10 11 599 3 | CONTROL BOX ANNEXE |
| RETAINER CPL. | 10 11 599 6 | 1 | 1 | X1011599 | 10 11 599 3 | CONTROL BOX ANNEXE |
| RETAINER CPL. EDELSTAHL | 96 45 806 08 | 1 | 1 | 2 430 | 91 54 389 08 | ANGLE THREADED BULKHEA |
| RETAINER CPL. S355J0 | 10 11 911 9 | 1 | 1 | X1011912 | 10 11 912 7 | CLAMP - ADD-ON UNIT |
| RETAINING DISK 100X55X6 | 92 76 013 01 | 6 | 1 | 9 686 071 | 96 86 071 01 | PLANETARY GEARBOX |
| RETAINING DISK 125X55X6 | 92 76 028 01 | 31 | 1 | 9 686 071 | 96 86 071 01 | PLANETARY GEARBOX |
| RETAINING DISK 140X60X6 | 92 77 007 01 | 26 | 1 | 9 444 410 | 94 44 410 03 | TRACTION DRIVE |
| RETAINING DISK 4X60X4 | 94 41 341 03 | 36 | 2 | 9 330 748 | 93 30 748 01 | SLEWING GEAR DRIVE |
| RETAINING DISK 70 | 92 75 319 01 | 16 | 1 | 9 330 748 | 93 30 748 01 | SLEWING GEAR DRIVE |
| RETAINING SPRING 3 VERZ | 43 31 028 08 | 140 | 1 | 2 510 100 | 96 44 750 08 | SLEWING PLATFORM PANELLI |
| RETAINING SPRING 3 VERZ | 43 31 028 08 | 57 | 1 | 3 106 000 | 91 60 313 08 | TELESCOPIC SECT.5 PRE-AS |
| RETAINING SPRING 4,5X98 V | 43 31 009 08 | 7 | 1 | 3 510 001 | 92 52 800 08 | CONSOLE PRE-ASS. |
| RETAINING SPRING 4,5X98 V | 43 31 009 08 | 4 | 2 | 3 511 | 91 54 159 08 | BOOM NOSE |
| RETAINING SPRING 4X68 VER | 43 31 012 08 | 39 | 4 | 1 100 205 | 96 51 633 08 | CRAWLER CARRIER RIGHT CP |
| RETAINING SPRING 4X68 VER | 43 31 012 08 | 39 | 4 | 1 100 210 | 96 51 634 08 | CRAWLER TRACK CARRIER LE |
| RETAINING SPRING 4X68 VER | 43 31 012 08 | 7 | 2 | 1 630 002 | 99 06 183 14 | TRANSPORT SUPPORT |
| RETAINING SPRING 4X68 VER | 43 31 012 08 | 4 | 1 | 2 102 022 | 96 32 604 08 | LOCKING |
| RETAINING SPRING 4X68 VER | 43 31 012 08 | 46 | 2 | 2 440 022 | 96 42 336 08 | WINCH 2 PRE-ASS. |
| RETAINING SPRING 4X68 VER | 43 31 012 08 | 38 | 2 | 3 106 000 | 91 60 313 08 | TELESCOPIC SECT.5 PRE-AS |
| RETAINING SPRING 4X68 VER | 43 31 012 08 | 110 | 2 | 3 501 | 91 05 788 08 | MECH. DOUBLE FOLD JIB PR |
| RETAINING SPRING 4X68 VER | 43 31 012 08 | 7 | 1 | 3 510 006 | 96 20 924 08 | FOLDING BRACKET |
| RETAINING SPRING 4X68 VER | 43 31 012 08 | 36 | 1 | 3 510 100 | 91 49 246 08 | TRANSPORT MOUNTING |
| RETAINING SPRING 4X68 VER | 43 31 012 08 | 12 | 1 | 3 511 006 | 96 45 029 08 | BOOM NOSE PRE-ASS. |
| RETAINING SPRING 4X68 VER | 43 31 012 08 | 20 | 1 | 3 511 006 | 96 45 029 08 | BOOM NOSE PRE-ASS. |
| RETAINING SPRING 5X122 A3 | 43 31 025 08 | 67 | 1 | 3 106 000 | 91 60 313 08 | TELESCOPIC SECT.5 PRE-AS |
| RETAINING SPRING 5X122 A3 | 43 31 025 08 | 10 | 1 | 3 511 006 | 96 45 029 08 | BOOM NOSE PRE-ASS. |
| RETAINING SPRING DIN 2194 | 43 31 050 08 | 35 | 3 | 3 501 | 91 05 788 08 | MECH. DOUBLE FOLD JIB PR |
| RETAINING STRAP 25X795 PO | 59 10 638 08 | 18 | 1 | 2 520 001 | 92 48 796 08 | FRONT WINDOW CPL. |
| RETURN FILTER 955MM | 10 32 665 4 | 3 | 2 | 2 340 004 | 96 43 780 08 | OIL TANK PRE-ASS. |
| RIBBED HEX NUT M6 10 | 10 00 336 6 | 3 | 1 | 9 078 314 | 90 78 314 | HEATING FLANGE ADD-ON |
| RING | 57 01 107 08 | 5 | 14 | 5 701 095 | 57 01 095 08 | DRIVING GEAR |
| RING BOLT DIN 580 M12 C15E | 40 26 003 08 | 10 | 1 | 2 270 001 | 96 37 923 08 | FUEL TANK, PRE-ASSEMBLED |
| RING BOLT DIN 580 M12 C15E | 40 26 003 08 | 7 | 1 | 2 340 004 | 96 43 780 08 | OIL TANK PRE-ASS. |
| RING FAN D=654 | 55 06 395 08 | 101 | 1 | 2 210 008 | 96 48 137 08 | RADIATOR, PRE-ASSEMBLED |
| RK BIG-END BEARING D930 SP | 10 11 693 4 | 50 | 1 | 9 076 459 | 90 76 459 | CONROD |
| RK CRANKSHAFT SEAL 110 VO | 10 12 195 2 | 1 | 1 | 9 075 133 | 90 75 133 | CRANKSHAFT SEALING |
| RK CRANKSHAFT SEAL 110 VO | 10 12 195 2 | 4 | 1 | X1011583 | 10 11 583 7 | SEAL KIT DIESEL ENGINE |

| Description | Item | Pos. | Quantity | Page | Assembly | Description |
|---|---|---|---|---|---|---|
| RK CRANKSHAFT SEAL 110 VO | 10 12 195 2 | 1 | 1 | X1011801 | 10 11 801 3 | SEAL KIT AGGREGATE CARR |
| RK CRANKSHAFT SEAL 110 VO | 10 12 195 2 | 1 | 1 | X1011801 | 10 11 801 4 | SEAL KIT AGGREGATE CARR |
| RK CRANKSHAFT SEAL 115 H | 10 12 133 5 | 2 | 1 | 9 075 133 | 90 75 133 | CRANKSHAFT SEALING |
| RK CRANKSHAFT SEAL 115 H | 10 12 133 5 | 5 | 1 | X1011583 | 10 11 583 7 | SEAL KIT DIESEL ENGINE |
| RK CYLINDER+CONTROL PLA | 90 73 918 | 81 | 1 | 9 072 112 | 90 72 112 | HYDR.DOUBLE PUMP |
| RK CYLINDER+CONTROL PLA | 90 73 484 | 79 | 1 | 9 072 112 | 90 72 112 | HYDR.DOUBLE PUMP |
| RK INJECTION NOZZLE | 10 11 709 3 | 998 | 1 | X1011659 | 10 11 659 1 | INJECTION NOZZLE W.FASTEN |
| RK OIL DRAIN SCREW D 930 | 10 28 920 8 | 3 | 1 | X1028018 | 10 28 018 1 | TRANSPARENT CONTAINER |
| RK OIL RETURN PIPE DN 19/23 | 10 11 989 7 | 50 | 1 | X1011832 | 10 11 832 6 | EXHAUST TC MOUNTING |
| RK PISTON WITH GUIDE SHOE | 90 73 393 | 77 | 2 | 9 072 112 | 90 72 112 | HYDR.DOUBLE PUMP |
| RK PULL-BACK BALL+PULL-B.P | 90 73 389 | 78 | 2 | 9 072 112 | 90 72 112 | HYDR.DOUBLE PUMP |
| RK1 BIG-END BEARING D930 S | 10 14 048 7 | 51 | 1 | 9 076 459 | 90 76 459 | CONROD |
| RK2 BIG-END BEARING D930 S | 10 14 048 8 | 52 | 1 | 9 076 459 | 90 76 459 | CONROD |
| ROCKER ARM BRACKET CPL. | 90 79 861 | 81 | 4 | X1015207 | 10 15 207 7 | DIESEL ENGINE |
| ROCKER ARM BRACKET PRE | 90 74 505 | 2 | 1 | 9 079 861 | 90 79 861 | ROCKER ARM BRACKET CPL. |
| ROCKER ARM PRE-ASSY. | 90 74 507 | 3 | 2 | 9 074 505 | 90 74 505 | ROCKER ARM BRACKET PRE |
| ROCKER SWITCH | 60 60 242 08 | 151 | 1 | 1 780 182 | 92 01 827 08 | ELECTR. FOR AIR-CONDITION |
| ROCKER SWITCH | 60 60 242 08 | 8 | 3 | 2 533 001 | 96 41 568 08 | DASHBOARD ROOF, PRE-AS |
| ROCKER SWITCH | 60 60 248 08 | 10 | 3 | 2 533 001 | 96 41 568 08 | DASHBOARD ROOF, PRE-AS |
| ROCKER SWITCH | 60 60 258 08 | 11 | 3 | 2 533 001 | 96 41 568 08 | DASHBOARD ROOF, PRE-AS |
| ROCKER SWITCH | 60 60 279 08 | 9 | 2 | 2 533 001 | 96 41 568 08 | DASHBOARD ROOF, PRE-AS |
| ROCKER SWITCH | 60 60 288 08 | 12 | 1 | 2 533 001 | 96 41 568 08 | DASHBOARD ROOF, PRE-AS |
| ROD PACKING 140 | 71 09 515 01 | (2) | 1 | 9 444 410 | 94 44 410 03 | TRACTION DRIVE |
| ROD PACKING 186 | 71 09 500 01 | (1) | 1 | 9 444 410 | 94 44 410 03 | TRACTION DRIVE |
| ROD SEAL 125X133X6 | 79 02 724 14 | 3 | 1 | 1 100 213 | 74 90 654 14 | TENSION JACK HYDR CPL |
| ROLLER 50.0X25 S355J2G3 FE | 94 78 682 08 | 2 | 2 | 3 500 104 | 92 95 821 08 | MOUNTING PRE-ASS. |
| ROLLER 50.0X25 S355J2G3 FE | 94 78 682 08 | 80 | 2 | 3 501 | 91 05 788 08 | MECH. DOUBLE FOLD JIB PR |
| ROLLER 50.0X25 S355J2G3 FE | 94 78 682 08 | 2 | 1 | 3 510 001 | 92 52 800 08 | CONSOLE PRE-ASS. |
| ROLLER BEARING 100X150X6 | 74 59 025 08 | 2 | 1 | 3 105 002 | 92 73 100 08 | ROPE PULLEY CPL. |
| ROLLER BEARING 100X150X6 | 74 59 025 08 | 2 | 1 | 3 106 001 | 96 42 835 08 | ROPE PULLEY CPL. |
| ROLLER BEARING 100X150X6 | 74 59 025 08 | 2 | 1 | 3 501 008 | 92 73 117 08 | ROPE PULLEY CPL. |
| ROLLER BEARING 120X180X8 | 74 59 027 08 | 2 | 1 | 4 099 001 | 92 40 739 08 | ROPE PULLEY |
| ROLLER CAGE | 92 75 143 01 | 16 | 38 | 9 387 598 | 93 87 598 01 | PLANETARY GEARBOX |
| ROLLER CAGE | 92 75 143 01 | 16 | 38 | 9 686 071 | 96 86 071 01 | PLANETARY GEARBOX |
| ROLLER CAGE | 94 42 231 03 | 2 | 32 | 9 444 410 | 94 44 410 03 | TRACTION DRIVE |
| ROLLER CARRIER WELDED | 92 95 916 08 | 6 | 1 | 3 500 104 | 92 95 821 08 | MOUNTING PRE-ASS. |
| ROLLER CLAMP WELDED | 92 50 730 08 | 7 | 1 | 3 501 | 91 05 788 08 | MECH. DOUBLE FOLD JIB PR |
| ROLLER CLAMP WELDED | 96 20 515 08 | 17 | 2 | 2 440 022 | 96 42 336 08 | WINCH 2 PRE-ASS. |
| ROLLER CLAMP WELDED | 96 77 088 08 | 4 | 1 | 3 511 006 | 96 45 029 08 | BOOM NOSE PRE-ASS. |
| ROLLER MOUNTING FE//ZNNI | 92 74 939 08 | 79 | 2 | 3 501 | 91 05 788 08 | MECH. DOUBLE FOLD JIB PR |
| ROLLER ORIFICE FE//ZNNI8//C | 97 37 747 08 | 4 | 1 | 3 101 | 91 60 312 08 | PIVOT SECTION, PRE-ASSEMB |
| ROLLER ORIFICE FE//ZNNI8//C | 97 37 747 08 | 67 | 1 | 3 102 000 | 91 62 543 08 | TELESCOPIC SECTION 1 PRE |
| ROLLER ORIFICE FE//ZNNI8//C | 97 37 747 08 | 67 | 1 | 3 103 000 | 91 62 544 08 | TELESCOPIC SECT.2 PRE-AS |
| ROLLER ORIFICE FE//ZNNI8//C | 97 37 747 08 | 67 | 1 | 3 104 000 | 91 62 545 08 | TELESCOPIC SECT.3 PRE-ASS |
| ROLLER ORIFICE FE//ZNNI8//C | 97 37 747 08 | 67 | 1 | 3 105 000 | 91 62 546 08 | TELESCOPIC SECT.IV PRE-A |
| ROLLER SLEWING RING | 91 48 668 08 | 117 | 1 | | LTR 1100 -0 | LIEBHERR LTR 1100 |
| ROLLER SLEWING RING | 93 16 963 01 | 1 | 1 | 2 410 | 91 48 668 08 | ROLLER SLEWING RING |
| ROLLER TAPPET | 10 15 353 6 | 1 | 2 | 9 079 870 | 90 79 870 | CONTROL PARTS |
| ROLLER TAPPET D=44 | 90 74 628 | 2 | 1 | X1011683 | 10 11 683 9 | INJECTION PUMP ASSEMBLY |
| ROLLING NOZZLE | 55 31 860 08 | 7 | 3 | 2 520 018 | 92 13 430 08 | INSTRUMENT BOX CPL. |
| ROOF WINDOW 20MM SPF | 72 57 409 08 | 7 | 1 | 2 520 000 | 91 49 872 08 | CABIN, GLAZED |
| ROPE 2 2,3KN EDELSTAHL | 11 16 043 1 | 6 | 2 | 1 100 216 | 96 46 363 08 | MOUNTING PARTS LWE |
| ROPE 2 2,3KN EDELSTAHL | 11 16 043 1 | 6 | 0.75 | 2 102 022 | 96 32 604 08 | LOCKING |
| ROPE 2 2,3KN EDELSTAHL | 11 16 043 1 | 45 | 1.5 | 2 971 | 91 50 610 08 | HYDR.AUXILIARY HOISTING |
| ROPE 2 2,3KN EDELSTAHL | 11 16 043 1 | 111 | 1 | 3 501 | 91 05 788 08 | MECH. DOUBLE FOLD JIB PR |
| ROPE 2 2,3KN EDELSTAHL | 11 16 043 1 | 10 | 1 | 3 510 006 | 96 20 924 08 | FOLDING BRACKET |
| ROPE 2 2,3KN EDELSTAHL | 11 16 043 1 | 3 | 0.4 | 3 750 027 | 96 89 527 08 | MOUNTING HOOK ROD |
| ROPE 6 0,59KN PERLON | 77 34 045 08 | 6 | 1.6 | 1 792 004 | 92 51 415 08 | HOSE GUIDE PRE-ASS. |
| ROPE 6 0,59KN PERLON | 77 34 045 08 | 63 | 1.2 | 3 501 | 91 05 788 08 | MECH. DOUBLE FOLD JIB PR |
| ROPE CLAMP 20-22 GR.7/8" | 77 39 088 08 | 5 | 1 | 2 792 | 91 52 291 08 | DISPATCH ASSY.MECH.PART |

| Description | Item | Pos. | Quantity | Page | Assembly | Description |
|---|---|---|---|---|---|---|
| ROPE CLAMP DIN 1142 S22 V | 77 39 133 08 | 6 | 1 | 2 792 | 91 52 291 08 | DISPATCH ASSY.MECH.PART |
| ROPE DRUM | 93 87 596 01 | 1 | 1 | 9 387 070 | 93 87 070 01 | COMPACT ROPE WINCH |
| ROPE DRUM | 93 87 596 01 | 1 | 1 | 9 685 586 | 96 85 586 01 | COMPACT ROPE WINCH |
| ROPE FIXING POINT | 11 49 429 7 | 2 | 1 | 4 003 006 | 91 04 457 08 | HOOK BLOCK |
| ROPE GUARD CPL | 57 19 260 08 | 10 | 1 | 4 003 006 | 91 04 457 08 | HOOK BLOCK |
| ROPE GUARD LEFT 4X205X173 | 97 18 123 08 | 28 | 1 | 2 440 022 | 96 42 336 08 | WINCH 2 PRE-ASS. |
| ROPE GUARD LEFT 4X311X318 | 97 31 168 08 | 6 | 2 | 2 450 025 | 96 35 649 08 | MAIN HOISTING GEAR PRE-A |
| ROPE GUARD RIGHT 4X205X1 | 97 18 124 08 | 29 | 1 | 2 440 022 | 96 42 336 08 | WINCH 2 PRE-ASS. |
| ROPE LENGTH INDICATOR 10 | 69 23 101 08 | 6 | 1 | 3 930 482 | 96 20 157 08 | SENSOR ASSEMBLY BASIC B |
| ROPE PROTECTION ROD | 57 19 261 08 | 12 | 2 | 4 003 006 | 91 04 457 08 | HOOK BLOCK |
| ROPE PULLEY 525X56 S355J | 97 62 491 08 | 1 | 1 | 3 106 001 | 96 42 835 08 | ROPE PULLEY CPL. |
| ROPE PULLEY CPL. RD640 SP | 92 73 117 08 | 8 | 1 | 3 501 | 91 05 788 08 | MECH. DOUBLE FOLD JIB PR |
| ROPE PULLEY CPL. SPF | 92 73 100 08 | 71 | 1 | 3 106 000 | 91 60 313 08 | TELESCOPIC SECT.5 PRE-AS |
| ROPE PULLEY CPL. SPF | 92 73 100 08 | 1 | 1 | 3 280 | 91 45 571 08 | INST.BACK SHEAVE FOR BOO |
| ROPE PULLEY CPL. SPF | 92 73 100 08 | 11 | 2 | 3 501 | 91 05 788 08 | MECH. DOUBLE FOLD JIB PR |
| ROPE PULLEY CPL. SPF | 96 42 835 08 | 33 | 5 | 3 106 000 | 91 60 313 08 | TELESCOPIC SECT.5 PRE-AS |
| ROPE PULLEY CPL. SPF | 96 42 835 08 | 3 | 1 | 3 511 006 | 96 45 029 08 | BOOM NOSE PRE-ASS. |
| ROPE PULLEY RD485X63 PA6 | 77 39 522 08 | 1 | 1 | 4 099 001 | 92 40 739 08 | ROPE PULLEY |
| ROPE PULLEY RD525X56 PA6 | 28 81 577 08 | 1 | 1 | 3 105 002 | 92 73 100 08 | ROPE PULLEY CPL. |
| ROPE PULLEY RD700X56 PA6 | 28 81 584 08 | 1 | 1 | 3 501 008 | 92 73 117 08 | ROPE PULLEY CPL. |
| ROPE PULLEY SPF | 92 40 739 08 | 1 | 3 | 4 003 006 | 91 04 457 08 | HOOK BLOCK |
| ROPE SLING 5M PP SPF | 77 33 265 08 | 3 | 1 | 3 750 | 91 75 084 08 | TOOLS |
| ROPE SLING DIN EN 13414-3 9. | 77 33 151 08 | 1 | 3 | 1 790 | 91 78 930 08 | SLINGING MEAN |
| ROPE WITH ACCESSORIES 1 | 91 62 289 08 | 127 | 1 | | LTR 1100 -0 | LIEBHERR LTR 1100 |
| ROTARY ENCODER 360° SPF | 69 23 091 08 | 1 | 1 | 1 780 650 | 91 43 393 08 | ELECTRIC SLEWING SENSOR |
| ROTARY FEED THROUGH 6 KA | 10 28 292 8 | 3 | 1 | 1 100 301 | 96 72 945 08 | INSTALLATION PARTS F.HYD |
| ROTARY LOCK 1W | 60 61 433 08 | 30 | 2 | 2 932 095 | 96 46 064 08 | SWING FRAME FUSE AND RE |
| ROTARY SHAFT LIP SEAL BAB | 71 00 626 01 | 63 | 2 | 9 387 598 | 93 87 598 01 | PLANETARY GEARBOX |
| ROTARY SHAFT LIP SEAL BAB | 71 00 626 01 | 63 | 2 | 9 686 071 | 96 86 071 01 | PLANETARY GEARBOX |
| ROTARY SHAFT LIP SEAL DIN | 57 09 914 08 | 69 | 1 | 6 060 516 | 60 60 516 08 | GEAR CAM LIMITSWITCH |
| ROTARY SHAFT LIP SEAL DIN | 71 00 325 08 | 22 | 1 | 9 387 596 | 93 87 596 01 | ROPE DRUM |
| ROTARY SHAFT LIP SEAL DIN | 10 16 746 2 | 64 | 2 | 9 330 748 | 93 30 748 01 | SLEWING GEAR DRIVE |
| ROTARY SHAFT LIP SEAL DIN | 71 00 593 01 | 11 | 1 | 9 330 748 | 93 30 748 01 | SLEWING GEAR DRIVE |
| ROTARY SHAFT LIP SEAL DIN | 71 00 546 01 | 11 | 1 | 9 387 598 | 93 87 598 01 | PLANETARY GEARBOX |
| ROTARY SHAFT LIP SEAL DIN | 71 00 546 01 | (1) | 1 | 9 686 071 | 96 86 071 01 | PLANETARY GEARBOX |
| ROTARY SWITCH 4-STUFIG | 60 60 262 08 | 5 | 1 | 2 920 284 | 91 27 894 08 | EL. FOR SUPPLEMENTARY HE |
| ROTATIONAL SPEED SENSOR | 10 15 494 4 | 1 | 1 | 9 076 534 | 90 76 534 | ROTATIONAL SPEED SENSOR |
| ROTATIONAL SPEED SENSOR | 10 15 494 4 | 1 | 1 | X1013307 | 10 13 307 7 | ROTATIONAL SPEED SENSOR |
| ROTATIONAL SPEED SENSOR | 10 13 307 7 | 20 | 2 | X1011969 | 10 11 969 8 | ENGINE CONTROL SENSORS |
| ROTATIONAL SPEED SENSOR | 90 76 534 | 21 | 1 | X1011969 | 10 11 969 8 | ENGINE CONTROL SENSORS |
| ROTOR GASKET 150X165,5X6, | 10 49 256 6 | (31) | 8 | 1 100 301 | 96 72 945 08 | INSTALLATION PARTS F.HYD |
| RS CRANKSHAFT BEARING KP | 10 11 693 9 | 1 | 1 | 9 076 457 | 90 76 457 | SET MAIN BEARINGS |
| RS CYLINDER LOCK | 57 18 927 08 | 998 | 1 | X1081388 | 10 81 388 6 | CYLINDER HEAD |
| RS TELESCOPIC LOCK | 57 18 926 08 | 997 | 1 | X1081388 | 10 81 388 6 | CYLINDER HEAD |
| RUBBER BEARING 13,51/47,75 | 55 06 406 08 | 11 | 3 | 2 102 | 91 51 080 08 | ASSEMBLY PARTS F.SLEWING |
| RUBBER BELLOWS | 57 19 123 08 | 2 | 1 | 6 060 950 | 60 60 950 08 | MASTER SWITCH |
| RUBBER BUFFER 8,3/26X7,2 3 | 10 11 627 4 | 3 | 8 | X1011599 | 10 11 599 3 | CONTROL BOX ANNEXE |
| RUBBER CONNECTION 12 X 18 | 90 79 603 | 140 | 1 | X1011583 | 10 11 583 7 | SEAL KIT DIESEL ENGINE |
| RUBBER CONNECTION 12 X 18 | 90 79 603 | 18 | 1 | X1011914 | 10 11 914 1 | CRANKCASE BREATHER ASS |
| RUBBER CONNECTION 12 X 18 | 90 79 603 | 11 | 1 | X1012024 | 10 12 024 2 | OIL LINE PRE-ASSEMBLY |
| RUBBER CONNECTION 25 X35 | 92 71 340 | 141 | 2 | X1011583 | 10 11 583 7 | SEAL KIT DIESEL ENGINE |
| RUBBER CONNECTION 25 X35 | 92 71 340 | 6 | 2 | X1011914 | 10 11 914 1 | CRANKCASE BREATHER ASS |
| RUBBER CONNECTION 90GRA | 10 11 631 0 | 4302 | 1 | X1011583 | 10 11 583 7 | SEAL KIT DIESEL ENGINE |
| RUBBER CONNECTION 90GRA | 10 11 631 0 | 7 | 1 | X1011766 | 10 11 766 5 | PIPELINE |
| RUBBER CONNECTION 90GRA | 10 11 631 0 | 10 | 1 | X1011914 | 10 11 914 1 | CRANKCASE BREATHER ASS |
| RUBBER CONNECTION 90GRA | 10 11 631 0 | 24 | 1 | X1011989 | 10 11 989 7 | RK OIL RETURN PIPE |
| RUBBER HOSE 100X6X75 EPD | 94 28 754 08 | 252 | 1 | 2 681 | 91 28 102 08 | AIR FILTER UNIT |
| RUBBER PLATE | 97 37 310 08 | 25 | 1 | 2 500 | 91 48 594 08 | CRANE DRIVER'S CABIN CPL. |
| RUBBER PLATE 184X10X2 GU | 97 72 400 08 | (2) | 2 | 1 100 215 | 99 20 783 14 | CENTRE PIECE |
| RUBBER-METAL RAIL X270 | 97 73 088 08 | 3 | 1 | 2 790 901 | 91 54 183 08 | BRACING |

| Description | Item | Pos. | Quantity | Page | Assembly | Description |
|---|---|---|---|---|---|---|
| RUBBER-METAL STOP BUFF | 72 66 158 08 | 146 | 1 | 2 520 000 | 91 49 872 08 | CABIN, GLAZED |
| RUNNING ROLLER CPL 200X20 | 10 22 581 0 | 8 | 12 | 1 100 205 | 96 51 633 08 | CRAWLER CARRIER RIGHT CP |
| RUNNING ROLLER CPL 200X20 | 10 22 581 0 | 8 | 12 | 1 100 210 | 96 51 634 08 | CRAWLER TRACK CARRIER LE |
| SAE FLANGE CONNECTION GF | 51 07 024 08 | 30 | 1 | 2 971 | 91 50 610 08 | HYDR.AUXILIARY HOISTING |
| SAE FLANGE CONNECTION W | 47 49 067 08 | 51 | 1 | 2 970 | 91 55 482 08 | HYDRAULICS |
| SAE FLANGE CONNECTION W | 47 49 067 08 | 28 | 1 | 2 971 | 91 50 610 08 | HYDR.AUXILIARY HOISTING |
| SAE FLANGE CONNECTION W | 47 49 069 08 | 52 | 1 | 2 970 | 91 55 482 08 | HYDRAULICS |
| SAE FLANGE CONNECTION W | 47 49 066 08 | 571 | 4 | 1 970 | 96 71 367 08 | UNDERCARRIAGE HYDRAULIC |
| SAE INTERMEDIATE FLANGE 1 | 51 15 192 08 | 50 | 2 | 2 970 | 91 55 482 08 | HYDRAULICS |
| SAE INTERMEDIATE FLANGE 1 | 51 15 192 08 | 35 | 2 | 2 971 | 91 50 610 08 | HYDR.AUXILIARY HOISTING |
| SAFETY BUTTON | 10 42 460 1 | (1) | 1 | 7 739 413 | 77 39 413 08 | POUCH SOCKET |
| SAFETY BUTTON | 10 47 066 7 | (2) | 1 | 7 739 413 | 77 39 413 08 | POUCH SOCKET |
| SAFETY DEVICE 8X0,94 | 70 42 712 08 | 66 | 1 | 2 520 000 | 91 49 872 08 | CABIN, GLAZED |
| SAFETY HARNESS EN 361 IK | 11 00 730 5 | 1 | 1 | 1 793 010 | 91 69 598 08 | PERSONAL PROTECTION EQ |
| SAFETY JACKET DIN 30711 | 87 21 019 08 | 6 | 1 | 1 750 002 | 92 86 201 08 | ACCESSORIES |
| SAFETY PLUG W HINGE-LID 5X | 43 32 013 08 | 81 | 1 | 3 106 000 | 91 60 313 08 | TELESCOPIC SECT.5 PRE-AS |
| SAFETY PLUG W HINGE-LID 5X | 43 32 013 08 | 38 | 4 | 3 501 | 91 05 788 08 | MECH. DOUBLE FOLD JIB PR |
| SAFETY PLUG W HINGE-LID 8 | 11 10 158 6 | 10 | 4 | 2 560 | 91 50 900 08 | COUNTERWEIGHT WITH CLAM |
| SAFETY PLUG W HINGE-LID 9 | 57 15 306 08 | 2 | 1 | 7 739 413 | 77 39 413 08 | POUCH SOCKET |
| SAFETY TRAP | 57 17 020 08 | 4 | 1 | 4 027 | 91 42 310 08 | LOAD HOOK |
| SAFETY TRAP | 57 17 143 08 | 34 | 2 | 4 003 006 | 91 04 457 08 | HOOK BLOCK |
| SCRAPER 125X140X9,5 | 73 71 745 | 5 | 1 | 1 100 213 | 74 90 654 14 | TENSION JACK HYDR CPL |
| SCREW | 57 09 414 08 | 2 | 1 | 5 114 794 | 51 14 794 08 | LOAD HOLDING VALVE |
| SCREW 25X25X65 8.8 SPF | 95 64 142 08 | 17 | 4 | 3 330 | 91 57 885 08 | MECHANICAL EXTENSION SYS |
| SCREW CAP | 51 06 623 08 | 2 | 1 | 5 708 320 | 57 08 320 08 | FILTER COVER |
| SCREW CARABINER OVAL 13 | 10 47 304 0 | 3 | 2 | 3 105 014 | 96 57 037 08 | HOIST LIM.SWITCH PLUMMET |
| SCREW DIN 912 M8X25 12.9 | 57 06 138 77 | 9 | 4 | 5 700 161 | 57 00 161 | AIR COMPRESSOR |
| SCREW LOCKING 10ML -50/+1 | 86 55 016 | 105 | 1 | 9 075 368 | 90 75 368 | LUBE OIL FILTER ASSEMBLY |
| SCREW LOCKING 10ML -50/+1 | 86 55 016 | 109 | 1 | X1011997 | 10 11 997 6 | POWER TAKE-OFF ADD-ON |
| SCREW LOCKING 50G | 81 12 017 08 | 100 | 1 | 9 073 795 | 90 73 795 | PISTON COOLING |
| SCREW LOCKING 50ML FLASC | 81 12 057 08 | 109 | 1 | 9 072 593 | 90 72 593 | FLANGE PRE-ASS. |
| SCREW LOCKING 50ML FLASC | 81 12 057 08 | 109 | 1 | 9 075 541 | 90 75 541 | LUBE OIL PUMP PRE-ASSY. |
| SCREW LOCKING 50ML FLASC | 81 12 057 08 | 109 | 1 | 9 079 823 | 90 79 823 | TRANSPORT DEVICE ATTACH |
| SCREW LOCKING 50ML FLASC | 81 12 057 08 | 109 | 1 | 9 080 525 | 90 80 525 | AIR COND. COMPRESSOR A |
| SCREW LOCKING 50ML FLASC | 81 12 057 08 | 109 | 1 | X1011573 | 10 11 573 7 | FUEL LINES |
| SCREW LOCKING 50ML FLASC | 81 12 057 08 | 109 | 1 | X1011599 | 10 11 599 3 | CONTROL BOX ANNEXE |
| SCREW M 10X25 VERZ | 40 97 070 01 | 43 | 3 | 9 686 071 | 96 86 071 01 | PLANETARY GEARBOX |
| SCREW PLUG | 10 65 001 4 | 48 | 1 | X1047300 | 10 47 300 1 | TELESCOPIC CYLINDER |
| SCREW PLUG DIN 906 M12X1,5 | 46 00 370 | 80 | 1 | 1 100 211 | 74 90 653 14 | CARRYING ROLLER CPL |
| SCREW PLUG DIN 908 M20X1,5 | 40 41 003 08 | 12 | 1 | X1032706 | 10 32 706 5 | ELECTRIC PUMP |
| SCREW PLUG DIN 908 M22X1,5 | 40 41 016 08 | 27 | 1 | 5 700 161 | 57 00 161 | AIR COMPRESSOR |
| SCREW PLUG DIN 908 M26X1,5 | 46 00 232 | 29 | 3 | 5 700 161 | 57 00 161 | AIR COMPRESSOR |
| SCREW PLUG DIN 908 M33X2 | 40 41 242 | 54 | 3 | 9 444 410 | 94 44 410 03 | TRACTION DRIVE |
| SCREW PLUG DIN 908 R1" ST | 51 85 717 08 | 55 | 1 | X1047300 | 10 47 300 1 | TELESCOPIC CYLINDER |
| SCREW PLUG G1/4 | 10 47 037 7 | 59 | 1 | X1047300 | 10 47 300 1 | TELESCOPIC CYLINDER |
| SCREW PLUG M20X1,5 MS | 60 24 250 08 | 197 | 2 | 3 930 492 | 96 20 966 08 | TERMINAL BOX CPL. |
| SCREW PLUG M20X1,5 MS | 60 24 250 08 | 216 | 2 | 3 930 718 | 96 56 248 08 | TERMINAL BOX CPL. |
| SCREW PLUG M22X1,5 VERZ | 47 75 003 01 | 8 | 2 | 9 275 212 | 92 75 212 01 | OIL-LEVEL GAUGE INSTALLAT |
| SCREW PLUG M25X1,5 MS | 60 24 251 08 | 212 | 1 | 3 930 718 | 96 56 248 08 | TERMINAL BOX CPL. |
| SCREW PLUG M27X2 | 57 01 094 08 | 11 | 2 | 5 102 294 | 51 02 294 08 | HYDRO MOTOR |
| SCREW PLUG M30X1,5 9SMnP | 90 77 172 | 3 | 1 | X1011795 | 10 11 795 1 | FINAL CONTROL VALVE |
| SCREW PLUG M30X1,5 St Rm | 92 75 590 | 11 | 1 | 9 075 541 | 90 75 541 | LUBE OIL PUMP PRE-ASSY. |
| SCREW PLUG M32X1,5 MS | 60 24 252 08 | 19 | 1 | 1 920 314 | 96 46 921 08 | TERMINAL BOX, PRE-ASSEMB |
| SCREW PLUG RD32X3 SPF | 10 46 691 0 | 17 | 1 | 2 971 | 91 50 610 08 | HYDR.AUXILIARY HOISTING |
| SCREW PLUG RD36X3 SPF | 10 46 691 1 | 21 | 1 | 2 971 | 91 50 610 08 | HYDR.AUXILIARY HOISTING |
| SCREW PLUG RD79X4 SPF | 10 46 691 3 | 13 | 2 | 2 971 | 91 50 610 08 | HYDR.AUXILIARY HOISTING |
| SCREW PLUG VSTI CF | 24 71 173 02 | 706 | 1 | 1 423 101 | 99 26 462 14 | JACK-UP SYSTEM |
| SCREW PLUG VSTI G1/4 CF | 47 75 110 01 | 40 | 4 | X1081388 | 10 81 388 6 | CYLINDER HEAD |
| SCREW PLUG VSTI M10X1 | 73 81 638 | 10 | 2 | X1011582 | 10 11 582 9 | FLYWHEEL HOUSING MOUNT |
| SCREW PLUG VSTI M14X1,5 | 73 80 566 | 6 | 1 | 9 077 279 | 90 77 279 | CONNECTING BRANCH ADD-O |

| Description | Item | Pos. | Quantity | Page | Assembly | Description |
|---|---|---|---|---|---|---|
| SCREW PLUG VSTI M14X1,5 | 73 80 566 | 5 | 1 | X1011550 | 10 11 550 2 | COOLING WATER AIR BLEED |
| SCREW PLUG VSTI M14X1,5 | 73 80 566 | 46 | 1 | X1011573 | 10 11 573 7 | FUEL LINES |
| SCREW PLUG VSTI M14X1,5 | 73 80 566 | 6 | 3 | X1011577 | 10 11 577 7 | CRANKCASE CPL. |
| SCREW PLUG VSTI M14X1,5 | 73 80 566 | 11 | 1 | X1011707 | 10 11 707 2 | AIR INTAKE PIPE ASS. |
| SCREW PLUG VSTI M14X1,5 | 73 80 566 | 3 | 1 | X1011722 | 10 11 722 8 | WATER CONNECTION |
| SCREW PLUG VSTI M14X1,5 | 73 80 566 | 50 | 2 | X1011969 | 10 11 969 8 | ENGINE CONTROL SENSORS |
| SCREW PLUG VSTI M16X1,5 | 10 11 607 8 | 8 | 1 | X1012580 | 10 12 580 1 | FUEL FINE FILTER |
| SCREW PLUG VSTI M16X1,5 | 73 82 203 | 5 | 2 | X1011577 | 10 11 577 7 | CRANKCASE CPL. |
| SCREW PLUG VSTI M18X1,5 | 10 12 962 5 | 22 | 1 | X1015207 | 10 15 207 7 | DIESEL ENGINE |
| SCREW PLUG VSTI M18X1,5 C | 73 80 019 | 51 | 1 | X1011969 | 10 11 969 8 | ENGINE CONTROL SENSORS |
| SCREW PLUG VSTI M22X1,5 C | 73 80 177 | 4 | 2 | X1011577 | 10 11 577 7 | CRANKCASE CPL. |
| SCREW PLUG VSTI M22X1,5 C | 73 80 177 | 14 | 1 | X1011611 | 10 11 611 0 | LOCKING PIECES |
| SCREW PLUG VSTI M22X1,5 C | 73 80 177 | 14 | 2 | X1011739 | 10 11 739 7 | OIL COOLER, PRE-ASSEMBLE |
| SCREW PLUG VSTI M26X1,5 C | 73 81 457 | 10 | 1 | 9 079 890 | 90 79 890 | HEATER CONNECTION |
| SCREW PLUG VSTI M30X1,5 S | 73 82 204 | 8 | 1 | 9 078 250 | 90 78 250 | LOCKING PIECES |
| SCREW PLUG VSTI M30X1,5 S | 73 82 204 | 14 | 2 | 9 079 480 | 90 79 480 | POWER UNIT SUPPORT ATT |
| SCREW PLUG VSTI M30X1,5 S | 73 82 204 | 6 | 1 | X1011550 | 10 11 550 2 | COOLING WATER AIR BLEED |
| SCREW PLUG VSTI M30X1,5 S | 73 82 204 | 23 | 1 | X1011739 | 10 11 739 7 | OIL COOLER, PRE-ASSEMBLE |
| SCREW PLUG VSTI M30X1,5 S | 73 82 204 | 22 | 2 | X1011801 | 10 11 801 3 | SEAL KIT AGGREGATE CARR |
| SCREW PLUG VSTI M30X1,5 S | 73 82 204 | 22 | 2 | X1011801 | 10 11 801 4 | SEAL KIT AGGREGATE CARR |
| SCREW PLUG VSTI M33X2 | 10 04 313 6 | 15 | 1 | 9 079 480 | 90 79 480 | POWER UNIT SUPPORT ATT |
| SCREW PLUG VSTI M38X1,5 | 73 82 202 | 5 | 2 | 9 079 893 | 90 79 893 | LOCKING PIECES |
| SCREW PLUG VSTI M38X1,5 | 73 82 202 | 23 | 2 | X1011801 | 10 11 801 3 | SEAL KIT AGGREGATE CARR |
| SCREW PLUG VSTI M38X1,5 | 73 82 202 | 23 | 2 | X1011801 | 10 11 801 4 | SEAL KIT AGGREGATE CARR |
| SCREW RD70X120 35NICRM | 95 47 667 08 | 11 | 1 | 3 106 000 | 91 60 313 08 | TELESCOPIC SECT.5 PRE-AS |
| SCREW RD70X164 35NICRM | 95 47 666 08 | 11 | 1 | 3 105 000 | 91 62 546 08 | TELESCOPIC SECT.IV PRE-A |
| SCREW UNF7/8X14 12.9 | 78 65 114 14 | 4 | 248 | 1 300 006 | 91 89 127 14 | CRAWLER CHAIN |
| SCREW-ON CONNECTION X0 | 94 55 691 08 | 46 | 1 | 2 520 000 | 91 49 872 08 | CABIN, GLAZED |
| SCREW-ON CONNECTION X0 | 94 55 691 08 | 19 | 1 | 2 955 | 91 49 516 08 | PNEUM. CRANE OPERATORS |
| SCREW-ON HINGE 25X25X50/ | 10 87 117 7 | 57 | 3 | 2 932 042 | 96 68 587 08 | BASE ASSEMBLY |
| SCREWDRIVER 10 CRV-VERNI | 79 00 325 08 | 52 | 1 | 1 750 001 | 92 85 698 08 | MAIN TOOLS |
| SCREWDRIVER 2 CRV-VERNI | 79 00 332 08 | 53 | 1 | 1 750 001 | 92 85 698 08 | MAIN TOOLS |
| SCREWDRIVER 3,5 CRV-VERNI | 79 00 320 08 | 50 | 1 | 1 750 001 | 92 85 698 08 | MAIN TOOLS |
| SCREWDRIVER 5,5 CRV-VERNI | 79 00 323 08 | 51 | 1 | 1 750 001 | 92 85 698 08 | MAIN TOOLS |
| SEAL | 10 11 854 9 | 15 | 1 | X1011801 | 10 11 801 4 | SEAL KIT AGGREGATE CARR |
| SEAL | 10 11 855 0 | 19 | 1 | X1011801 | 10 11 801 4 | SEAL KIT AGGREGATE CARR |
| SEAL | 10 11 855 1 | 18 | 3 | X1011801 | 10 11 801 4 | SEAL KIT AGGREGATE CARR |
| SEAL | 10 11 855 4 | 18 | 1 | X1011585 | 10 11 585 1 | SEAL KIT CYLINDER HEAD |
| SEAL | 10 11 855 4 | 18 | 4 | X1011585 | 10 11 585 2 | SEAL KIT ZYLINDER HEAD CPL |
| SEAL | 10 11 855 4 | 18 | 6 | X1011585 | 10 11 585 3 | SEAL KIT ZYLINDER HEAD CPL |
| SEAL | 10 11 855 4 | 7 | 1 | X1011585 | 10 11 585 4 | SEAL KIT INJECTION NOZZLE |
| SEAL | 10 11 855 4 | 18 | 1 | X1011585 | 10 11 585 9 | SEAL KIT CYLINDER HEAD |
| SEAL | 10 11 855 4 | 7 | 1 | X1011709 | 10 11 709 3 | RK INJECTION NOZZLE |
| SEAL | 10 11 855 4 | 7 | 1 | X1011961 | 10 11 961 0 | CYLINDER HEAD COVER ASS |
| SEAL | 10 11 855 4 | 7 | 1 | X1011963 | 10 11 963 6 | CYLINDER HEAD COVER ASS |
| SEAL | 10 11 855 4 | (8) | 4 | XSK_Z480 | SK_Z48005 | SERVICE |
| SEAL | 10 11 855 6 | 3 | 6 | X1011585 | 10 11 585 1 | SEAL KIT CYLINDER HEAD |
| SEAL | 10 11 855 6 | 3 | 4 | X1011585 | 10 11 585 2 | SEAL KIT ZYLINDER HEAD CPL |
| SEAL | 10 11 855 6 | 3 | 6 | X1011585 | 10 11 585 3 | SEAL KIT ZYLINDER HEAD CPL |
| SEAL | 10 11 855 6 | 3 | 4 | X1011585 | 10 11 585 9 | SEAL KIT CYLINDER HEAD |
| SEAL | 10 11 855 6 | 6 | 4 | X1011707 | 10 11 707 2 | AIR INTAKE PIPE ASS. |
| SEAL | 10 41 178 7 | 29 | 1 | X1034357 | 10 34 357 4 | CABLE REEL |
| SEAL | 73 71 064 | 9 | 1 | 1 100 212 | 79 02 561 14 | GUIDE WHEEL UNIT CPL |
| SEAL | 90 77 329 | 17 | 3 | X1011583 | 10 11 583 7 | SEAL KIT DIESEL ENGINE |
| SEAL | 90 79 124 | 14 | 3 | X1011801 | 10 11 801 4 | SEAL KIT AGGREGATE CARR |
| SEAL | 90 79 608 | 53 | 2 | X1011801 | 10 11 801 4 | SEAL KIT AGGREGATE CARR |
| SEAL | 91 44 762 | (1) | 1 | X1011883 | 10 11 883 9 | OIL FILLER INLET |
| SEAL | 92 73 423 | 4301 | 1 | X1011583 | 10 11 583 7 | SEAL KIT DIESEL ENGINE |
| SEAL | 92 73 423 | 15 | 1 | X1011585 | 10 11 585 2 | SEAL KIT ZYLINDER HEAD CPL |
| SEAL | 92 73 423 | 15 | 1 | X1011585 | 10 11 585 9 | SEAL KIT CYLINDER HEAD |

| Description | Item | Pos. | Quantity | Page | Assembly | Description |
|---|---|---|---|---|---|---|
| SEAL | 92 73 691 | 20 | 1 | X1011583 | 10 11 583 7 | SEAL KIT DIESEL ENGINE |
| SEAL | 92 74 974 | 21 | 1 | X1011583 | 10 11 583 7 | SEAL KIT DIESEL ENGINE |
| SEAL | 98 85 529 | 4 | 1 | 9 078 962 | 90 78 962 | AUXILIARY DRIVE PRE-ASS. |
| SEAL | 98 85 529 | 16 | 3 | X1011583 | 10 11 583 7 | SEAL KIT DIESEL ENGINE |
| SEAL 0,33MM METALOSEAL 1 | 10 12 673 8 | 3 | 1 | 9 079 480 | 90 79 480 | POWER UNIT SUPPORT ATT |
| SEAL 0,33MM METALOSEAL 1 | 10 12 673 8 | 7 | 1 | X1011583 | 10 11 583 7 | SEAL KIT DIESEL ENGINE |
| SEAL 0,33MM METALOSEAL 1 | 10 12 673 8 | 2 | 1 | X1011801 | 10 11 801 3 | SEAL KIT AGGREGATE CARR |
| SEAL 0,33MM METALOSEAL 1 | 10 12 673 8 | 2 | 1 | X1011801 | 10 11 801 4 | SEAL KIT AGGREGATE CARR |
| SEAL 0,33MM METALOSEAL 1 | 10 13 772 1 | 5 | 1 | X1011582 | 10 11 582 9 | FLYWHEEL HOUSING MOUNT |
| SEAL 0,33MM METALOSEAL 1 | 10 13 772 1 | 6 | 1 | X1011583 | 10 11 583 7 | SEAL KIT DIESEL ENGINE |
| SEAL 1,5MM ASBESTFREI AFM | 92 68 131 | 19 | 1 | X1011583 | 10 11 583 7 | SEAL KIT DIESEL ENGINE |
| SEAL 1,5MM ASBESTFREI AFM | 92 68 131 | 18 | 1 | X1011989 | 10 11 989 7 | RK OIL RETURN PIPE |
| SEAL 15X130X 120 POLYOLEFI | 97 03 453 3 | 165 | 1 | 2 520 000 | 91 49 872 08 | CABIN, GLAZED |
| SEAL 1MM | 90 79 130 | 15 | 1 | X1011583 | 10 11 583 7 | SEAL KIT DIESEL ENGINE |
| SEAL 1MM | 90 79 130 | 2 | 1 | X1011912 | 10 11 912 8 | LOCKING PIECES |
| SEAL 1MM AFM 30 | 10 11 770 9 | 1 | 1 | X1011584 | 10 11 584 9 | SEALING SET OIL COOLER |
| SEAL 1MM AFM 30 | 10 11 770 9 | 2 | 1 | X1011739 | 10 11 739 8 | OIL COOLER ADD-ON |
| SEAL 1MM AFM 30 | 10 11 854 7 | 15 | 1 | X1011801 | 10 11 801 3 | SEAL KIT AGGREGATE CARR |
| SEAL 1MM AFM 30 | 10 11 854 7 | 2 | 1 | X1012414 | 10 12 414 0 | OIL SUMP WITH FASTENING |
| SEAL 2MM UNI-BLAU | 90 80 279 | 4 | 1 | 9 075 678 | 90 75 678 | THERMOSTAT HOUSING ASS |
| SEAL 2MM UNI-BLAU | 90 80 279 | 11 | 1 | X1011583 | 10 11 583 7 | SEAL KIT DIESEL ENGINE |
| SEAL 2MM UNI-BLAU | 90 80 279 | 4 | 1 | X1011801 | 10 11 801 3 | SEAL KIT AGGREGATE CARR |
| SEAL 2MM UNI-BLAU | 90 80 279 | 4 | 1 | X1011801 | 10 11 801 4 | SEAL KIT AGGREGATE CARR |
| SEAL AFM 30 | 10 12 064 0 | 17 | 1 | X1011801 | 10 11 801 4 | SEAL KIT AGGREGATE CARR |
| SEAL AFM 30 | 10 12 851 6 | 10 | 1 | X1011583 | 10 11 583 7 | SEAL KIT DIESEL ENGINE |
| SEAL AFM 31 | 92 71 963 | 10 | 2 | X1011585 | 10 11 585 1 | SEAL KIT CYLINDER HEAD |
| SEAL AFM 31 | 92 71 963 | 10 | 2 | X1011585 | 10 11 585 2 | SEAL KIT ZYLINDER HEAD CPL |
| SEAL AFM 31 | 92 71 963 | 10 | 2 | X1011585 | 10 11 585 3 | SEAL KIT ZYLINDER HEAD CPL |
| SEAL AFM 31 | 92 71 963 | 10 | 2 | X1011585 | 10 11 585 9 | SEAL KIT CYLINDER HEAD |
| SEAL AFM 31 | 92 71 963 | 10 | 1 | X1011707 | 10 11 707 2 | AIR INTAKE PIPE ASS. |
| SEAL AFM 31 | 92 71 963 | 20 | 2 | X1011801 | 10 11 801 3 | SEAL KIT AGGREGATE CARR |
| SEAL AFM 31 | 92 71 963 | 20 | 2 | X1011801 | 10 11 801 4 | SEAL KIT AGGREGATE CARR |
| SEAL AFM 31 | 92 71 963 | 10 | 1 | X1011816 | 10 11 816 1 | CONNECTING LINE ADD-ON |
| SEAL AFM 31 TD 2 | 92 75 766 | 2 | 1 | 9 147 512 | 91 47 512 | LOCKING PIECES |
| SEAL AFM 31 TD 2 | 92 75 766 | 18 | 3 | X1011583 | 10 11 583 7 | SEAL KIT DIESEL ENGINE |
| SEAL AFM 31 TD 2 | 92 75 766 | 16 | 1 | X1011801 | 10 11 801 3 | SEAL KIT AGGREGATE CARR |
| SEAL AFM 31 TD 2 | 92 75 766 | 16 | 1 | X1011801 | 10 11 801 4 | SEAL KIT AGGREGATE CARR |
| SEAL ASBESTFREI | 92 68 129 | 16 | 1 | X1011585 | 10 11 585 1 | SEAL KIT CYLINDER HEAD |
| SEAL ASBESTFREI | 92 68 129 | 16 | 1 | X1011585 | 10 11 585 3 | SEAL KIT ZYLINDER HEAD CPL |
| SEAL ASBESTFREI | 92 68 130 | 20 | 1 | X1011832 | 10 11 832 6 | EXHAUST TC MOUNTING |
| SEAL ASBESTFREI | 92 70 109 | 15 | 1 | X1011585 | 10 11 585 1 | SEAL KIT CYLINDER HEAD |
| SEAL ASBESTFREI | 92 70 109 | 15 | 1 | X1011585 | 10 11 585 3 | SEAL KIT ZYLINDER HEAD CPL |
| SEAL DIN 71511 25X48X1,5 A | 49 80 359 | 2 | 2 | X1011584 | 10 11 584 9 | SEALING SET OIL COOLER |
| SEAL DIN 71511 25X48X1,5 A | 49 80 359 | 4 | 2 | X1011739 | 10 11 739 7 | OIL COOLER, PRE-ASSEMBLE |
| SEAL K26 X5CrNi18-10 | 10 11 827 2 | 3 | 1 | X1011832 | 10 11 832 6 | EXHAUST TC MOUNTING |
| SEAL KIT | 10 04 181 5 | 99 | 1 | 5 106 681 | 51 06 681 08 | PRESSURE FILTER |
| SEAL KIT | 10 04 181 5 | (5) | 1 | XSK_Z480 | SK_Z48005 | SERVICE |
| SEAL KIT | 10 11 442 6 | 998 | 4 | X1022699 | 10 22 699 3 | DIRECTIONAL CTRL. VALVE |
| SEAL KIT | 10 21 962 0 | 999 | 1 | 7 029 305 | 70 29 305 | PRESSURE LIMITING VALVE |
| SEAL KIT | 10 28 018 4 | 6 | 1 | X1003269 | 10 03 269 6 | CARTRIDGE |
| SEAL KIT | 10 33 194 6 | 998 | 1 | 7 029 305 | 70 29 305 | PRESSURE LIMITING VALVE |
| SEAL KIT | 10 33 194 7 | 999 | 1 | X1042993 | 10 42 993 3 | GEAR WHEEL MOTOR |
| SEAL KIT | 11 00 522 7 | 998 | 1 | X1043033 | 10 43 033 1 | DIRECTIONAL SEAT VALVE |
| SEAL KIT | 11 12 420 1 | 999 | 1 | X1010109 | 10 10 109 3 | SLEWING GEAR VALVE |
| SEAL KIT | 11 69 195 6 | 999 | 1 | X1022699 | 10 22 699 3 | DIRECTIONAL CTRL. VALVE |
| SEAL KIT | 51 10 433 08 | 999 | 1 | 5 704 271 | 57 04 271 08 | PRESSURE LIMITING VALVE |
| SEAL KIT | 51 10 433 08 | (999) | 1 | X1033367 | 10 33 367 2 | CONTROL BLOCK |
| SEAL KIT | 57 14 912 08 | 999 | 1 | 5 123 537 | 51 23 537 08 | HYDRO CYLINDER |
| SEAL KIT | 57 18 400 08 | (999) | 1 | 1 970 | 96 71 367 08 | UNDERCARRIAGE HYDRAULIC |
| SEAL KIT ABTRIEBSFLANSCH | 96 53 356 08 | 11 | 1 | 9 686 071 | 96 86 071 01 | PLANETARY GEARBOX |

| Description | Item | Pos. | Quantity | Page | Assembly | Description |
|---|---|---|---|---|---|---|
| SEAL KIT AGGREGATE CARR | 10 11 801 3 | 50 | 1 | 9 079 480 | 90 79 480 | POWER UNIT SUPPORT ATT |
| SEAL KIT AGGREGATE CARR | 10 11 801 4 | 51 | 1 | 9 079 480 | 90 79 480 | POWER UNIT SUPPORT ATT |
| SEAL KIT BALLASTING CYLIN | 10 80 171 3 | (999) | 1 | 2 571 | 91 50 902 08 | HYDRAULIC BALLASTING |
| SEAL KIT BBV6 NBR | 51 01 840 01 | (999) | 1 | 2 571 | 91 50 902 08 | HYDRAULIC BALLASTING |
| SEAL KIT CONNECTING BLOC | 11 22 041 8 | 997 | 1 | X1022699 | 10 22 699 3 | DIRECTIONAL CTRL. VALVE |
| SEAL KIT CONNECTING HOUS | 92 69 750 | 91 | 1 | 9 072 112 | 90 72 112 | HYDR.DOUBLE PUMP |
| SEAL KIT CYLINDER | 11 69 050 2 | 999 | 1 | X1087223 | 10 87 223 8 | LUFFING CYLINDER |
| SEAL KIT CYLINDER HEAD | 10 11 585 1 | 997 | 1 | X1011675 | 10 11 675 9 | CYLINDER HEAD ASSEMBLY |
| SEAL KIT CYLINDER HEAD | 10 11 585 9 | 996 | 1 | X1011675 | 10 11 675 9 | CYLINDER HEAD ASSEMBLY |
| SEAL KIT CYLINDER HEAD | 10 81 388 9 | 999 | 1 | X1081388 | 10 81 388 6 | CYLINDER HEAD |
| SEAL KIT DIESEL ENGINE | 10 11 583 7 | 939 | 1 | X1015207 | 10 15 207 7 | DIESEL ENGINE |
| SEAL KIT DIRECTIONAL VALV | 11 00 627 5 | 999 | 1 | 5 717 378 | 57 17 378 08 | DIRECTIONAL CONTROL VALV |
| SEAL KIT DOUBLE PUMP | 92 76 426 | 98 | 1 | 9 072 112 | 90 72 112 | HYDR.DOUBLE PUMP |
| SEAL KIT F.BRAKE | 96 99 977 08 | (999) | 1 | 9 444 410 | 94 44 410 03 | TRACTION DRIVE |
| SEAL KIT F.BRAKE | 96 99 977 08 | 901 | 1 | 9 444 410 | 94 44 410 03 | TRACTION DRIVE |
| SEAL KIT GEAR PUMP | 10 49 271 0 | (999) | 1 | 2 210 | 91 81 614 08 | DRIVE ASSEMBLY, PRE-ASSE |
| SEAL KIT GEAR PUMP | 11 60 019 3 | 1 | 1 | 5 121 425 | 51 21 425 08 | TWO-STAGE PUMP |
| SEAL KIT INJECTION NOZZLE | 10 11 585 4 | 7 | 1 | X1011585 | 10 11 585 1 | SEAL KIT CYLINDER HEAD |
| SEAL KIT INJECTION NOZZLE | 10 11 585 4 | 7 | 4 | X1011585 | 10 11 585 2 | SEAL KIT ZYLINDER HEAD CPL |
| SEAL KIT INJECTION NOZZLE | 10 11 585 4 | 7 | 6 | X1011585 | 10 11 585 3 | SEAL KIT ZYLINDER HEAD CPL |
| SEAL KIT INJECTION NOZZLE | 10 11 585 4 | 7 | 1 | X1011585 | 10 11 585 9 | SEAL KIT CYLINDER HEAD |
| SEAL KIT INJECTION NOZZLE | 10 11 585 4 | 999 | 1 | X1011659 | 10 11 659 1 | INJECTION NOZZLE W.FASTEN |
| SEAL KIT INJECTION PUMP | 10 11 585 5 | 13 | 4 | X1011583 | 10 11 583 7 | SEAL KIT DIESEL ENGINE |
| SEAL KIT INJECTION PUMP | 10 11 585 5 | (999) | 1 | X1011683 | 10 11 683 9 | INJECTION PUMP ASSEMBLY |
| SEAL KIT LIMIT VALVE | 10 87 210 0 | (999) | 1 | X1033367 | 10 33 367 2 | CONTROL BLOCK |
| SEAL KIT LIMIT VALVE | 10 87 210 1 | (999) | 1 | X1033367 | 10 33 367 2 | CONTROL BLOCK |
| SEAL KIT LIMIT VALVE | 10 87 360 7 | (999) | 1 | X1041191 | 10 41 191 5 | VALVE BLOCK |
| SEAL KIT REGULATING VALVE | 92 70 147 | (999) | 1 | 9 072 112 | 90 72 112 | HYDR.DOUBLE PUMP |
| SEAL KIT VALVE BLOCK | 10 41 260 9 | 999 | 1 | X1041191 | 10 41 191 5 | VALVE BLOCK |
| SEAL KIT VALVE BLOCK | 10 41 263 2 | 999 | 1 | X1029147 | 10 29 147 4 | CONTROL BLOCK |
| SEAL KIT VALVE BLOCK | 10 41 263 2 | 999 | 1 | X1047529 | 10 47 529 1 | VALVE BLOCK |
| SEAL KIT VALVE BLOCK | 10 41 263 2 | 999 | 1 | X1047529 | 10 47 529 2 | VALVE BLOCK |
| SEAL KIT ZYLINDER HEAD CPL | 10 11 585 2 | 9 | 1 | X1011583 | 10 11 583 7 | SEAL KIT DIESEL ENGINE |
| SEAL KIT ZYLINDER HEAD CPL | 10 11 585 2 | 998 | 1 | X1011675 | 10 11 675 9 | CYLINDER HEAD ASSEMBLY |
| SEAL KIT ZYLINDER HEAD CPL | 10 11 585 3 | 999 | 1 | X1011675 | 10 11 675 9 | CYLINDER HEAD ASSEMBLY |
| SEAL LOCK NUT M1414X1,5 | 11 32 042 1 | (1) | 2 | X1010109 | 10 10 109 3 | SLEWING GEAR VALVE |
| SEAL METALOSEAL 4 | 10 14 155 7 | 4 | 6 | X1011585 | 10 11 585 1 | SEAL KIT CYLINDER HEAD |
| SEAL METALOSEAL 4 | 10 14 155 7 | 4 | 4 | X1011585 | 10 11 585 2 | SEAL KIT ZYLINDER HEAD CPL |
| SEAL METALOSEAL 4 | 10 14 155 7 | 4 | 6 | X1011585 | 10 11 585 3 | SEAL KIT ZYLINDER HEAD CPL |
| SEAL METALOSEAL 4 | 10 14 155 7 | 4 | 4 | X1011585 | 10 11 585 9 | SEAL KIT CYLINDER HEAD |
| SEAL METALOSEAL 4 | 10 14 155 7 | 6 | 4 | X1011810 | 10 11 810 1 | EXHAUST PIPE ASSEMBLY |
| SEAL-LOCK-SHOULDER NUT M | 70 05 072 | 6 | 1 | X1011795 | 10 11 795 1 | FINAL CONTROL VALVE |
| SEALANT 50ML TUBE | 86 27 609 23 | 112 | 1 | 9 075 678 | 90 75 678 | THERMOSTAT HOUSING ASS |
| SEALANT A80MR HYLOMAR | 87 00 028 08 | 289 | 0.1 | 3 930 492 | 96 20 966 08 | TERMINAL BOX CPL. |
| SEALANT A80MR HYLOMAR | 87 00 028 08 | 289 | 0.1 | 3 930 523 | 96 43 943 08 | CABLE REEL |
| SEALANT A80MR HYLOMAR | 87 00 028 08 | 265 | 0.1 | 3 930 718 | 96 56 248 08 | TERMINAL BOX CPL. |
| SEALING COMPOUND 50ML T | 81 12 013 14 | 108 | 1 | 9 075 678 | 90 75 678 | THERMOSTAT HOUSING ASS |
| SEALING COMPOUND 50ML T | 81 12 013 14 | 108 | 1 | X1011739 | 10 11 739 7 | OIL COOLER, PRE-ASSEMBLE |
| SEALING FRAME | 97 03 425 08 | 11 | 1 | 2 520 000 | 91 49 872 08 | CABIN, GLAZED |
| SEALING FRAME | 97 36 626 08 | 16 | 1 | 2 913 | 91 32 850 08 | LICCON CONSOLE LCD2 |
| SEALING FRAME 651X860 PV | 95 37 112 08 | 102 | 1 | 2 520 000 | 91 49 872 08 | CABIN, GLAZED |
| SEALING NUT M12 | 73 81 226 | 8 | 1 | X1011583 | 10 11 583 7 | SEAL KIT DIESEL ENGINE |
| SEALING NUT M12 | 73 81 226 | 3 | 1 | X1011801 | 10 11 801 3 | SEAL KIT AGGREGATE CARR |
| SEALING NUT M12 | 73 81 226 | 3 | 1 | X1011801 | 10 11 801 4 | SEAL KIT AGGREGATE CARR |
| SEALING NUT M6 | 51 07 534 08 | 10 | 1 | 5 711 301 | 57 11 301 08 | PRESSURE LIMITING VALVE |
| SEALING NUT M6 | 51 07 534 08 | 11 | 1 | X1117027 | 11 17 027 6 | PRESSURE REDUCTION VALV |
| SEALING NUT M8 | 51 07 417 08 | 21 | 1 | 5 114 177 | 51 14 177 08 | PRESSURE LIMITING VALVE |
| SEALING PLUG | 57 15 118 08 | 14 | 1 | 5 704 271 | 57 04 271 08 | PRESSURE LIMITING VALVE |
| SEALING PLUG 9 | 76 10 819 03 | 8 | 2 | 9 444 410 | 94 44 410 03 | TRACTION DRIVE |
| SEALING PLUG CR6-FREI | 73 80 023 | 18 | 1 | 9 075 541 | 90 75 541 | LUBE OIL PUMP PRE-ASSY. |

| Description | Item | Pos. | Quantity | Page | Assembly | Description |
|---|---|---|---|---|---|---|
| SEALING PLUG CR6-FREI | 73 80 123 | 2 | 1 | 9 072 593 | 90 72 593 | FLANGE PRE-ASS. |
| SEALING PLUG M 1-K | 60 45 085 08 | 10 | 1 | 6 923 101 | 69 23 101 08 | ROPE LENGTH INDICATOR |
| SEALING PLUG M1-D | 60 45 121 08 | 153 | 1 | 3 930 492 | 96 20 966 08 | TERMINAL BOX CPL. |
| SEALING PLUG M1-D | 60 45 121 08 | 16 | 1 | 6 923 101 | 69 23 101 08 | ROPE LENGTH INDICATOR |
| SEALING PROFILE 1-4X21,5X1 | 26 21 055 08 | 30 | 0.55 | 2 510 108 | 96 44 555 08 | SOUND PROOFING/SOUND I |
| SEALING PROFILE 1-4X21,5X1 | 26 21 055 08 | 175 | 0.35 | 2 681 | 91 28 102 08 | AIR FILTER UNIT |
| SEALING RING | 50 26 088 08 | 52 | 4 | 2 522 | 91 10 037 08 | DOOR CPL. |
| SEALING RING | 50 26 088 08 | 16 | 2 | 2 955 | 91 49 516 08 | PNEUM. CRANE OPERATORS |
| SEALING RING 10,7X16X1,5 St/ | 10 01 186 4 | 8 | 2 | X1011793 | 10 11 793 0 | ACCESSORIES AIR COMPRES |
| SEALING RING 12,7X18X1,5 St/ | 10 01 186 5 | 27 | 4 | X1011573 | 10 11 573 7 | FUEL LINES |
| SEALING RING 12,7X18X1,5 St/ | 10 01 186 5 | 78 | 4 | X1011583 | 10 11 583 7 | SEAL KIT DIESEL ENGINE |
| SEALING RING 14,7X22X1,5 St/ | 10 01 186 6 | 2 | 8 | 9 079 092 | 90 79 092 | PIPELINE INSTALLATION |
| SEALING RING 14,7X22X1,5 St/ | 10 01 186 6 | 3 | 2 | X1011550 | 10 11 550 2 | COOLING WATER AIR BLEED |
| SEALING RING 14,7X22X1,5 St/ | 10 01 186 6 | 25 | 7 | X1011573 | 10 11 573 7 | FUEL LINES |
| SEALING RING 14,7X22X1,5 St/ | 10 01 186 6 | 74 | 26 | X1011583 | 10 11 583 7 | SEAL KIT DIESEL ENGINE |
| SEALING RING 14,7X22X1,5 St/ | 10 01 186 6 | 9 | 12 | X1011585 | 10 11 585 1 | SEAL KIT CYLINDER HEAD |
| SEALING RING 14,7X22X1,5 St/ | 10 01 186 6 | 9 | 8 | X1011585 | 10 11 585 2 | SEAL KIT ZYLINDER HEAD CPL |
| SEALING RING 14,7X22X1,5 St/ | 10 01 186 6 | 9 | 12 | X1011585 | 10 11 585 3 | SEAL KIT ZYLINDER HEAD CPL |
| SEALING RING 14,7X22X1,5 St/ | 10 01 186 6 | 9 | 8 | X1011585 | 10 11 585 9 | SEAL KIT CYLINDER HEAD |
| SEALING RING 14,7X22X1,5 St/ | 10 01 186 6 | 9 | 2 | X1011801 | 10 11 801 3 | SEAL KIT AGGREGATE CARR |
| SEALING RING 14,7X22X1,5 St/ | 10 01 186 6 | 9 | 2 | X1011801 | 10 11 801 4 | SEAL KIT AGGREGATE CARR |
| SEALING RING 16,7X24X1,5 St/ | 10 01 186 7 | 29 | 6 | X1011573 | 10 11 573 7 | FUEL LINES |
| SEALING RING 16,7X24X1,5 St/ | 10 01 186 7 | 80 | 12 | X1011583 | 10 11 583 7 | SEAL KIT DIESEL ENGINE |
| SEALING RING 16,7X24X1,5 St/ | 10 01 186 7 | 6 | 8 | X1011793 | 10 11 793 0 | ACCESSORIES AIR COMPRES |
| SEALING RING 16,7X24X1,5 St/ | 10 01 186 7 | 3 | 1 | X1012580 | 10 12 580 1 | FUEL FINE FILTER |
| SEALING RING 19,6X24,3X1,5 | 76 10 225 03 | 4 | 1 | 9 275 212 | 92 75 212 01 | OIL-LEVEL GAUGE INSTALLAT |
| SEALING RING 19,6X24,3X1,5 | 76 10 225 03 | 6 | 1 | 9 275 543 | 92 75 543 01 | VENTILATION CONNECTING PI |
| SEALING RING 19,6X24,3X1,5 | 76 10 225 03 | 14 | 1 | 9 393 684 | 93 93 684 01 | OIL-GAUGING INSTRUMENT |
| SEALING RING 22,7X30X2 St/ | 10 01 186 9 | 3 | 2 | 9 080 294 | 90 80 294 | AIR COMPRESSOR PRE-ASSY |
| SEALING RING 22,7X30X2 St/ | 10 01 186 9 | 7 | 2 | X1011793 | 10 11 793 0 | ACCESSORIES AIR COMPRES |
| SEALING RING 26,7X34,93X2 S | 10 01 187 0 | 75 | 5 | X1011583 | 10 11 583 7 | SEAL KIT DIESEL ENGINE |
| SEALING RING 26,7X34,93X2 S | 10 01 187 0 | 8 | 1 | X1011766 | 10 11 766 5 | PIPELINE |
| SEALING RING 26,7X34,93X2 S | 10 01 187 0 | 9 | 1 | X1011914 | 10 11 914 1 | CRANKCASE BREATHER ASS |
| SEALING RING 26,7X34,93X2 S | 10 01 187 0 | 27 | 1 | X1011989 | 10 11 989 7 | RK OIL RETURN PIPE |
| SEALING RING 27X20X1,5 CU | 10 01 469 7 | 10 | 3 | X1032706 | 10 32 706 5 | ELECTRIC PUMP |
| SEALING RING 30,7X39X2 St/ | 10 11 373 1 | 3 | 2 | 9 079 890 | 90 79 890 | HEATER CONNECTION |
| SEALING RING 30,7X39X2 St/ | 10 11 373 1 | 77 | 2 | X1011583 | 10 11 583 7 | SEAL KIT DIESEL ENGINE |
| SEALING RING 30,7X39X2 St/ | 10 11 373 1 | 42 | 2 | X1011801 | 10 11 801 3 | SEAL KIT AGGREGATE CARR |
| SEALING RING 30,7X39X2 St/ | 10 11 373 1 | 42 | 2 | X1011801 | 10 11 801 4 | SEAL KIT AGGREGATE CARR |
| SEALING RING DIN 7603 A 10X | 71 01 015 08 | 6 | 9 | X1011569 | 10 11 569 6 | LEAK OIL RETURN LINE |
| SEALING RING DIN 7603 A 10X | 71 01 015 08 | 61 | 2 | X1011801 | 10 11 801 3 | SEAL KIT AGGREGATE CARR |
| SEALING RING DIN 7603 A 10X | 71 01 015 08 | 61 | 2 | X1011801 | 10 11 801 4 | SEAL KIT AGGREGATE CARR |
| SEALING RING DIN 7603 A 12X | 71 01 017 08 | 29 | 1 | 9 387 070 | 93 87 070 01 | COMPACT ROPE WINCH |
| SEALING RING DIN 7603 A 13X | 71 01 023 08 | (3) | 1 | 2 984 | 91 52 906 08 | OIL COOLER INSTALLATION |
| SEALING RING DIN 7603 A 14X | 71 01 030 08 | 48 | 1 | 2 970 | 91 55 482 08 | HYDRAULICS |
| SEALING RING DIN 7603 A 14X | 71 01 030 08 | 8 | 2 | X1011569 | 10 11 569 6 | LEAK OIL RETURN LINE |
| SEALING RING DIN 7603 A 18X | 71 01 040 08 | (23) | 2 | 2 970 | 91 55 482 08 | HYDRAULICS |
| SEALING RING DIN 7603 A 30X | 71 01 065 08 | 71 | 6 | X1011583 | 10 11 583 7 | SEAL KIT DIESEL ENGINE |
| SEALING RING DIN 7603 A 30X | 71 01 065 08 | 4 | 1 | X1011795 | 10 11 795 1 | FINAL CONTROL VALVE |
| SEALING RING DIN 7603 A 30X | 71 01 065 08 | 8 | 4 | X1011801 | 10 11 801 3 | SEAL KIT AGGREGATE CARR |
| SEALING RING DIN 7603 A 30X | 71 01 065 08 | 8 | 4 | X1011801 | 10 11 801 4 | SEAL KIT AGGREGATE CARR |
| SEALING RING DIN 7603 A 8X | 71 01 007 08 | 18 | 1 | X1011569 | 10 11 569 6 | LEAK OIL RETURN LINE |
| SEALING RING DIN 7603 A10X1 | 70 07 952 | 72 | 4 | X1011583 | 10 11 583 7 | SEAL KIT DIESEL ENGINE |
| SEALING RING DIN 7603 A10X1 | 70 07 952 | 8 | 15 | X1011585 | 10 11 585 1 | SEAL KIT CYLINDER HEAD |
| SEALING RING DIN 7603 A10X1 | 70 07 952 | 8 | 11 | X1011585 | 10 11 585 2 | SEAL KIT ZYLINDER HEAD CPL |
| SEALING RING DIN 7603 A10X1 | 70 07 952 | 8 | 15 | X1011585 | 10 11 585 3 | SEAL KIT ZYLINDER HEAD CPL |
| SEALING RING DIN 7603 A10X1 | 70 07 952 | 8 | 11 | X1011585 | 10 11 585 9 | SEAL KIT CYLINDER HEAD |
| SEALING RING DIN 7603 A14X | 71 01 025 08 | 73 | 4 | X1011583 | 10 11 583 7 | SEAL KIT DIESEL ENGINE |
| SEALING RING DIN 7603 A14X | 71 01 025 08 | 56 | 1 | X1047300 | 10 47 300 1 | TELESCOPIC CYLINDER |
| SEALING RING DIN 7603 A14X | 73 81 225 23 | 2 | 1 | 9 078 233 | 90 78 233 | VALVE |

| Description | Item | Pos. | Quantity | Page | Assembly | Description |
|---|---|---|---|---|---|---|
| SEALING RING DIN 7603 A14X | 73 81 225 23 | 39 | 1 | X1011573 | 10 11 573 7 | FUEL LINES |
| SEALING RING DIN 7603 A14X | 73 81 225 | 70 | 1 | X1011583 | 10 11 583 7 | SEAL KIT DIESEL ENGINE |
| SEALING SET OIL COOLER | 10 11 584 9 | 3 | 1 | X1011583 | 10 11 583 7 | SEAL KIT DIESEL ENGINE |
| SEALING SET OIL COOLER | 10 11 584 9 | 999 | 1 | X1011739 | 10 11 739 8 | OIL COOLER ADD-ON |
| SEALING SET VALVE | 10 66 364 4 | 999 | 1 | 5 113 199 | 51 13 199 08 | LOWERING BRAKE VALVE |
| SEALING SET VALVE | 11 00 353 6 | 999 | 1 | X1043033 | 10 43 033 1 | DIRECTIONAL SEAT VALVE |
| SEALING SET VALVE | 11 45 069 1 | 999 | 1 | 5 705 279 | 57 05 279 08 | DIRECTIONAL CONTROL VALV |
| SEALING SET VALVE | 57 15 619 08 | 999 | 1 | 5 709 606 | 57 09 606 08 | LOWERING BRAKE VALVE |
| SEALING SET VALVE | 57 19 147 08 | (999) | 1 | X1010109 | 10 10 109 3 | SLEWING GEAR VALVE |
| SEAT FRAME | 57 14 948 08 | 15 | 1 | 7 741 079 | 77 41 079 08 | OPERATOR SEAT |
| SEAT PART | 57 18 354 08 | 12 | 1 | 7 741 079 | 77 41 079 08 | OPERATOR SEAT |
| SEAT SWITCH | 57 10 357 08 | 14 | 1 | 7 741 079 | 77 41 079 08 | OPERATOR SEAT |
| SECTION 2-4X15X27 EPDM | 11 69 578 6 | 163 | 5 | 2 520 000 | 91 49 872 08 | CABIN, GLAZED |
| SELECTOR SWITCH | 60 61 666 08 | 18 | 1 | 2 531 002 | 96 36 739 08 | ELECTRIC FOR ARMREST RI |
| SENSOR ASSEMBLY BASIC B | 96 20 157 08 | 10 | 1 | 3 100 | 91 59 279 08 | TELESCOPIC BOOM CPL. |
| SENSOR ASSEMBLY HEAD PI | 96 20 935 08 | 30 | 1 | 3 100 | 91 59 279 08 | TELESCOPIC BOOM CPL. |
| SENSOR COMPL. | 96 65 122 08 | 102 | 1 | 2 681 | 91 28 102 08 | AIR FILTER UNIT |
| SENSOR INSTALL.TELESCOP | 92 95 081 08 | 34 | 1 | 3 330 | 91 57 885 08 | MECHANICAL EXTENSION SYS |
| SENSOR LIFT TOP LIMIT SWI | 96 20 219 08 | 10 | 1 | 3 931 032 | 96 20 959 08 | ELECTRIC F.BASE SECTION |
| SENSOR LIFT TOP LIMIT SWI | 96 20 219 08 | 10 | 1 | 3 931 100 | 96 20 960 08 | ELECTR. FOR HEAD SECTION |
| SENSOR LIFT TOP LIMIT SWI | 96 21 359 08 | 10 | 1 | 3 780 400 | 91 59 294 08 | EL.2 HOISTING LIMIT SWITCH |
| SERRATED LOCK WASHER DI | 11 83 330 8 | 4 | 12 | 1 830 102 | 92 26 483 08 | TERMINAL BOARD PRE-ASS. |
| SERRATED LOCK WASHER DI | 42 52 212 08 | 24 | 8 | 1 100 205 | 96 51 633 08 | CRAWLER CARRIER RIGHT CP |
| SERRATED LOCK WASHER DI | 42 52 212 08 | 24 | 6 | 1 100 210 | 96 51 634 08 | CRAWLER TRACK CARRIER LE |
| SERRATED LOCK WASHER DI | 42 52 216 08 | 14 | 6 | 1 100 200 | 96 72 944 08 | UNDERCARRIAGE CPL. |
| SERRATED LOCK WASHER DI | 42 52 216 08 | 13 | 20 | 1 100 205 | 96 51 633 08 | CRAWLER CARRIER RIGHT CP |
| SERRATED LOCK WASHER DI | 42 52 216 08 | 13 | 20 | 1 100 210 | 96 51 634 08 | CRAWLER TRACK CARRIER LE |
| SERRATED LOCK WASHER DI | 42 52 219 08 | 40 | 12 | 1 100 215 | 99 20 783 14 | CENTRE PIECE |
| SERRATED LOCK WASHER D | 42 52 205 08 | 13 | 4 | 2 913 | 91 32 850 08 | LICCON CONSOLE LCD2 |
| SERRATED LOCK WASHER D | 42 52 205 08 | 7 | 12 | 2 913 005 | 96 28 696 08 | INTERIOR HOUSING PRE-ASS. |
| SERRATED LOCK WASHER D | 42 52 205 08 | 27 | 17 | 2 932 119 | 96 46 061 08 | SWING FRAME RELAY CONT |
| SERRATED LOCK WASHER D | 42 52 205 08 | 9 | 4 | 2 932 214 | 96 28 366 08 | INPUT BOARD CPL. |
| SERRATED LOCK WASHER D | 42 52 207 08 | 82 | 28 | 2 932 042 | 96 68 587 08 | BASE ASSEMBLY |
| SERRATED LOCK WASHER D | 42 52 207 08 | 4 | 4 | 2 932 215 | 92 26 129 08 | GROUND RAIL |
| SERRATED LOCK WASHER D | 42 52 210 08 | 46 | 7 | 1 100 215 | 99 20 783 14 | CENTRE PIECE |
| SERRATED LOCK WASHER D | 42 52 210 08 | 7 | 2 | 2 913 004 | 96 20 460 08 | HOUSING PRE-ASSEMBLED |
| SERRATED LOCK WASHER D | 42 52 210 08 | 86 | 1 | 2 932 042 | 96 68 587 08 | BASE ASSEMBLY |
| SERRATED LOCK WASHER D | 42 52 211 08 | 88 | 9 | 2 932 042 | 96 68 587 08 | BASE ASSEMBLY |
| SERVICE LTR 1100 | SK_Z48005 | 2000 | 1 | | LTR 1100 -0 | LIEBHERR LTR 1100 |
| SERVICE PACKAGE 1000STD | 96 73 763 08 | 410 | 1 | XSK_Z480 | SK_Z48005 | SERVICE |
| SET MAIN BEARINGS D934-SP | 90 76 457 | 51 | 1 | X1012193 | 10 12 193 2 | BASIC ENGINE |
| SET OF FASTENINGS/FASTE | 10 80 064 2 | 31 | 1 | 6 923 101 | 69 23 101 08 | ROPE LENGTH INDICATOR |
| SET OF NAME PLATES FOLDIN | 91 13 525 08 | 355 | 1 | | LTR 1100 -0 | LIEBHERR LTR 1100 |
| SHACKLE 17T SPF | 77 39 303 08 | 3 | 4 | 1 790 | 91 78 930 08 | SLINGING MEAN |
| SHACKLE DIN 82101 0,25T NG0 | 77 39 335 08 | 3 | 1 | 1 792 004 | 92 51 415 08 | HOSE GUIDE PRE-ASS. |
| SHACKLE DIN 82101 0,25T NG0 | 77 39 335 08 | 68 | 1 | 3 106 000 | 91 60 313 08 | TELESCOPIC SECT.5 PRE-AS |
| SHACKLE DIN 82101 0,25T NG0 | 77 39 335 08 | 23 | 1 | 3 511 006 | 96 45 029 08 | BOOM NOSE PRE-ASS. |
| SHAFT | 11 00 649 1 | 20 | 1 | 6 923 101 | 69 23 101 08 | ROPE LENGTH INDICATOR |
| SHAFT SEAL | 10 33 585 5 | 3 | 1 | X1042993 | 10 42 993 3 | GEAR WHEEL MOTOR |
| SHAFT SEAL 35X52X6/5 FKM | 70 22 315 | 14 | 1 | 5 102 294 | 51 02 294 08 | HYDRO MOTOR |
| SHAFT SEAL 35X52X6/5 FKM | 70 22 315 | 14 | 1 | 5 701 090 | 57 01 090 08 | DRIVING GEAR |
| SHAFT SEAL 50X72X7 | 70 03 478 | 14 | 1 | 5 102 407 | 51 02 407 08 | HYDRO MOTOR |
| SHEET | 10 41 191 3 | 1 | 1 | X1028524 | 10 28 524 3 | CONTROL BLOCK |
| SHEET | 10 87 483 1 | 3 | 1 | X1041191 | 10 41 191 5 | VALVE BLOCK |
| SHEET | 92 75 826 | 16 | 1 | X1011611 | 10 11 611 0 | LOCKING PIECES |
| SHEET 15X30X50 PA6G | 28 81 762 08 | 52 | 1 | 2 102 | 91 51 080 08 | ASSEMBLY PARTS F.SLEWING |
| SHEET 16X66X130 PA6G | 28 81 990 08 | 10 | 1 | 2 520 001 | 92 48 796 08 | FRONT WINDOW CPL. |
| SHEET GASKET | 73 63 427 | 60 | 1 | 1 100 211 | 74 90 653 14 | CARRYING ROLLER CPL |
| SHEET GASKET 7,03X15,1X1,5 | 10 04 040 6 | 2 | 1 | X1011585 | 10 11 585 4 | SEAL KIT INJECTION NOZZLE |
| SHEET GASKET 7,6X15,8X1 VI | 57 10 825 08 | (1) | 1 | 2 970 | 91 55 482 08 | HYDRAULICS |

| Description | Item | Pos. | Quantity | Page | Assembly | Description |
|---|---|---|---|---|---|---|
| SHEET METAL NUT M8 | 41 30 070 08 | 13 | 6 | 2 510 201 | 96 42 011 08 | FLAP PRE-ASS. |
| SHEET S355J0 | 10 11 912 9 | 1 | 1 | X1011912 | 10 11 912 8 | LOCKING PIECES |
| SHEET-METAL SCREW DIN 79 | 40 82 000 08 | 60 | 2 | 2 932 042 | 96 68 587 08 | BASE ASSEMBLY |
| SHEET-METAL SCREW DIN 798 | 59 10 070 08 | 43 | 4 | 2 540 | 91 45 984 08 | HEATING, CRANE CABIN |
| SHEET-METAL SCREW DIN 798 | 59 10 059 08 | 5 | 6 | 2 520 018 | 92 13 430 08 | INSTRUMENT BOX CPL. |
| SHEET-METAL SCREW DIN 798 | 40 82 809 08 | 117 | 6 | 2 520 000 | 91 49 872 08 | CABIN, GLAZED |
| SHEET-METAL SCREW ISO 704 | 40 82 505 08 | 164 | 4 | 2 520 000 | 91 49 872 08 | CABIN, GLAZED |
| SHEET-METAL SCREW ISO 70 | 10 87 638 0 | 136 | 4 | 2 520 000 | 91 49 872 08 | CABIN, GLAZED |
| SHEET-METAL SCREW ISO 70 | 40 02 017 | 11 | 4 | 2 501 000 | 91 48 769 08 | CRANE DRIVER'S CABIN,PRE |
| SHEET-METAL SCREW ISO 704 | 10 87 579 3 | 93 | 9 | 2 520 000 | 91 49 872 08 | CABIN, GLAZED |
| SHEET-METAL SCREW ISO 704 | 10 87 579 3 | 23 | 2 | 2 520 001 | 92 48 796 08 | FRONT WINDOW CPL. |
| SHEET-METAL SCREW ISO 704 | 10 87 579 3 | 6 | 2 | 2 520 018 | 92 13 430 08 | INSTRUMENT BOX CPL. |
| SHEET-METAL SCREW ISO 704 | 10 87 579 3 | 33 | 10 | 2 522 | 91 10 037 08 | DOOR CPL. |
| SHEET-METAL SCREW ISO 70 | 40 82 010 14 | 210 | 2 | 3 930 718 | 96 56 248 08 | TERMINAL BOX CPL. |
| SHEET-METAL SCREW ISO 705 | 40 93 405 08 | 105 | 8 | 2 520 000 | 91 49 872 08 | CABIN, GLAZED |
| SHEET-METAL SCREW ISO 705 | 40 82 808 08 | 119 | 10 | 2 520 000 | 91 49 872 08 | CABIN, GLAZED |
| SHIM | 51 07 832 08 | 17 | 1 | 5 114 177 | 51 14 177 08 | PRESSURE LIMITING VALVE |
| SHIM RING DIN 988 25X36X0,1 | 42 20 615 01 | 49 | 6 | 9 686 071 | 96 86 071 01 | PLANETARY GEARBOX |
| SHIM RING DIN 988 25X36X0, | 42 20 614 01 | 48 | 9 | 9 686 071 | 96 86 071 01 | PLANETARY GEARBOX |
| SHIM RING DIN 988 25X36X1,5 | 42 20 621 01 | 47 | 3 | 9 686 071 | 96 86 071 01 | PLANETARY GEARBOX |
| SHIM RING DIN 988 45X56X1 S | 42 20 032 01 | 33 | 3 | 9 444 410 | 94 44 410 03 | TRACTION DRIVE |
| SHIM RING DIN 988 63X80X0,1 | 42 10 004 08 | 17 | 2 | 5 701 090 | 57 01 090 08 | DRIVING GEAR |
| SHIM RING DIN 988 63X80X0,3 | 42 10 005 08 | 18 | 1 | 5 701 090 | 57 01 090 08 | DRIVING GEAR |
| SHUT OFF DEVICE DN125-FL | 10 47 526 2 | 2 | 1 | 2 340 004 | 96 43 780 08 | OIL TANK PRE-ASS. |
| SHUTTER GLUED SPF | 96 33 731 08 | 12 | 1 | 2 510 201 | 96 42 011 08 | FLAP PRE-ASS. |
| SHUTTLE VALVE | 10 11 523 3 | 14 | 1 | X1080175 | 10 80 175 1 | ADJUSTMENT |
| SHUTTLE VALVE | 57 15 295 08 | 28 | 1 | X1029147 | 10 29 147 4 | CONTROL BLOCK |
| SHUTTLE VALVE | 57 15 295 08 | 28 | 1 | X1041191 | 10 41 191 5 | VALVE BLOCK |
| SHUTTLE VALVE | 57 15 295 08 | 28 | 1 | X1047529 | 10 47 529 1 | VALVE BLOCK |
| SHUTTLE VALVE | 57 15 295 08 | 28 | 1 | X1047529 | 10 47 529 2 | VALVE BLOCK |
| SHUTTLE VALVE 500BAR CR6 | 51 14 919 14 | 11 | 3 | 1 970 | 96 71 367 08 | UNDERCARRIAGE HYDRAULIC |
| SIDE PANE 4MM ESG-GLAS SP | 72 57 407 08 | 5 | 1 | 2 520 000 | 91 49 872 08 | CABIN, GLAZED |
| SIDE PANE 4MM SPF | 72 57 406 08 | 4 | 1 | 2 520 000 | 91 49 872 08 | CABIN, GLAZED |
| SIDE PANEL WELDED | 96 30 446 08 | 1 | 1 | 2 210 008 | 96 48 137 08 | RADIATOR, PRE-ASSEMBLED |
| SIDE PANEL WELDED | 96 48 188 08 | 2 | 1 | 2 210 008 | 96 48 137 08 | RADIATOR, PRE-ASSEMBLED |
| SIDE PLATE | 11 62 196 4 | 8 | 2 | 4 003 006 | 91 04 457 08 | HOOK BLOCK |
| SIGN | 11 49 443 2 | (2) | 1 | X1032706 | 10 32 706 5 | ELECTRIC PUMP |
| SIGN | 11 49 458 1 | (3) | 1 | X1032706 | 10 32 706 5 | ELECTRIC PUMP |
| SIGN | 55 30 310 08 | 20 | 1 | 2 831 | 91 47 871 08 | AIR COND. UNIT SUPERSTRU |
| SIGN | 77 26 177 08 | 19 | 1 | 2 533 001 | 96 41 568 08 | DASHBOARD ROOF, PRE-AS |
| SIGN | 77 26 373 08 | 17 | 1 | 1 880 | 91 62 974 08 | PLATING SPIAN |
| SIGN | 77 26 442 08 | 20 | 1 | 2 533 001 | 96 41 568 08 | DASHBOARD ROOF, PRE-AS |
| SIGN | 77 26 448 08 | 46 | 1 | 2 932 042 | 96 68 587 08 | BASE ASSEMBLY |
| SIGN | 77 26 487 08 | 4 | 1 | 3 930 718 | 96 56 248 08 | TERMINAL BOX CPL. |
| SIGN | 77 32 071 08 | 21 | 1 | 2 520 000 | 91 49 872 08 | CABIN, GLAZED |
| SIGN | 97 17 499 08 | 2 | 2 | 1 880 | 91 62 974 08 | PLATING SPIAN |
| SIGN | 97 31 787 08 | 4 | 1 | 3 930 492 | 96 20 966 08 | TERMINAL BOX CPL. |
| SIGN | 97 65 409 08 | 28 | 1 | 2 932 095 | 96 46 064 08 | SWING FRAME FUSE AND RE |
| SIGN 105DBA/100X90 KLEBE | 97 58 095 08 | 76 | 1 | 1 880 | 91 62 974 08 | PLATING SPIAN |
| SIGN 168X62 KLEBEFOLIE SP | 97 86 748 08 | 63 | 3 | 1 880 | 91 62 974 08 | PLATING SPIAN |
| SIGN 168X62 KLEBEFOLIE SP | 97 86 748 08 | 3 | 10 | 3 880 005 | 96 61 397 08 | SIGNS |
| SIGN 168X88 KLEBEFOLIE SP | 97 00 979 9 | 1 | 1 | 2 780 953 | 96 67 851 08 | PLATING |
| SIGN 168X88 KLEBEFOLIE SP | 97 06 068 9 | 100 | 1 | 2 881 | 91 80 907 08 | SIGNAGE COOLANT |
| SIGN 168X88 KLEBEFOLIE SP | 97 86 747 08 | 49 | 1 | 1 880 | 91 62 974 08 | PLATING SPIAN |
| SIGN 168X88 KLEBEFOLIE SP | 97 88 671 08 | 33 | 1 | 1 880 | 91 62 974 08 | PLATING SPIAN |
| SIGN 168X88 KLEBESCHILD SP | 97 01 704 4 | 90 | 4 | 1 880 | 91 62 974 08 | PLATING SPIAN |
| SIGN 168X88 KLEBESCHILD SP | 97 01 704 5 | 91 | 4 | 1 880 | 91 62 974 08 | PLATING SPIAN |
| SIGN 168X88 KLEBESCHILD SP | 97 01 704 6 | 92 | 4 | 1 880 | 91 62 974 08 | PLATING SPIAN |
| SIGN 1X80X80 KLEBEFOLIE SP | 97 41 504 08 | 84 | 1 | 1 880 | 91 62 974 08 | PLATING SPIAN |
| SIGN 1X80X80 KLEBEFOLIE SP | 97 41 505 08 | 85 | 1 | 1 880 | 91 62 974 08 | PLATING SPIAN |

| Description | Item | Pos. | Quantity | Page | Assembly | Description |
|---|---|---|---|---|---|---|
| SIGN 1X80X80 KLEBEFOLIE SP | 97 41 506 08 | 86 | 1 | 1 880 | 91 62 974 08 | PLATING SPIAN |
| SIGN 1X80X80 KLEBEFOLIE SP | 97 41 507 08 | 87 | 1 | 1 880 | 91 62 974 08 | PLATING SPIAN |
| SIGN 208X88 KLEBEFOLIE SP | 97 86 740 08 | 12 | 3 | 1 880 | 91 62 974 08 | PLATING SPIAN |
| SIGN 208X88 KLEBEFOLIE SP | 97 86 741 08 | 14 | 9 | 1 880 | 91 62 974 08 | PLATING SPIAN |
| SIGN 208X88 KLEBEFOLIE SP | 97 86 744 08 | 29 | 4 | 1 880 | 91 62 974 08 | PLATING SPIAN |
| SIGN 208X88 KLEBEFOLIE SP | 97 86 745 08 | 31 | 1 | 1 880 | 91 62 974 08 | PLATING SPIAN |
| SIGN 208X88 KLEBEFOLIE SP | 97 86 749 08 | 64 | 1 | 1 880 | 91 62 974 08 | PLATING SPIAN |
| SIGN 208X88 KLEBEFOLIE SP | 97 86 750 08 | 66 | 2 | 1 880 | 91 62 974 08 | PLATING SPIAN |
| SIGN 225X165 KLEBEFOLIE SP | 97 15 398 08 | 1 | 1 | 3 880 005 | 91 13 525 08 | SET OF NAME PLATES FOLDI |
| SIGN 225X165 KLEBEFOLIE SP | 97 15 398 08 | 1 | 1 | 3 880 005 | 96 61 397 08 | SIGNS |
| SIGN 225X165 KLEBEFOLIE SP | 97 15 399 08 | 2 | 1 | 3 880 005 | 91 13 525 08 | SET OF NAME PLATES FOLDI |
| SIGN 225X165 KLEBEFOLIE SP | 97 15 399 08 | 2 | 1 | 3 880 005 | 96 61 397 08 | SIGNS |
| SIGN 290X100 KLEBEFOLIE SP | 97 86 739 08 | 11 | 2 | 1 880 | 91 62 974 08 | PLATING SPIAN |
| SIGN 6X107X237 G-ALSI12 | 77 26 246 08 | 1 | 1 | 1 881 000 | 91 62 835 08 | PLATING |
| SIGN 70X360X0,1 FOLIE | 10 68 415 6 | 2 | 1 | 4 027 | 91 42 310 08 | LOAD HOOK |
| SIGN 85X55 SPF | 97 02 552 0 | 1 | 1 | 3 511 102 | 96 76 955 08 | SIGNS |
| SIGN 88X450X0,1 FOLIE | 10 66 371 8 | 9 | 2 | 4 003 006 | 91 04 457 08 | HOOK BLOCK |
| SIGN FOLIE | 97 24 953 08 | 66 | 1 | 2 970 | 91 55 482 08 | HYDRAULICS |
| SIGN FOLIE | 97 24 954 08 | 65 | 1 | 2 970 | 91 55 482 08 | HYDRAULICS |
| SIGNAGE COOLANT OW | 91 80 907 08 | 170 | 1 | | LTR 1100 -0 | LIEBHERR LTR 1100 |
| SIGNS DKS | 96 61 397 08 | 880 | 1 | 3 500 | 91 05 776 08 | DOUBLE FOLDING JIB MECH. |
| SIGNS MASTNASE | 96 76 955 08 | 8 | 1 | 3 511 | 91 54 159 08 | BOOM NOSE |
| SIKA-SIL N-PLUS SCHWARZ | 87 00 034 08 | 160 | 1 | 2 520 000 | 91 49 872 08 | CABIN, GLAZED |
| SILENCER | 50 26 616 08 | 3 | 1 | 2 950 | 91 49 515 08 | COMPRESSED-AIR SYST.SU |
| SILICONE RUBBER Palette 200 | 87 00 030 08 | 84 | 2.5 | 2 520 000 | 91 49 872 08 | CABIN, GLAZED |
| SIM-CARD | 10 28 444 4 | 20 | 1 | 2 780 850 | 91 60 938 08 | TELEDIAGNOSIS MODULE 1 |
| SINGLE HOOK | 11 21 222 9 | 3 | 1 | 4 027 | 91 42 310 08 | LOAD HOOK |
| SINGLE-END SPANNER DIN 8 | 88 51 322 08 | 21 | 1 | 1 750 001 | 92 85 698 08 | MAIN TOOLS |
| SINGLE-END SPANNER DIN 8 | 79 00 046 08 | 22 | 1 | 1 750 001 | 92 85 698 08 | MAIN TOOLS |
| SIPHON PIPE | 97 29 654 08 | 250 | 1 | 2 210 | 91 81 614 08 | DRIVE ASSEMBLY, PRE-ASSE |
| SIPHON PIPE SAE100 R4 DN3 | 77 42 367 08 | 304 | 0.37 | 2 997 | 91 51 089 08 | HOSE LINES SUPERSTRUCT |
| SIPHON PIPE SAE100 R4 DN3 | 77 42 367 08 | 346 | 0.76 | 2 997 | 91 51 089 08 | HOSE LINES SUPERSTRUCT |
| SIPHON PIPE SAE100 R4 DN4 | 77 42 365 08 | 345 | 0.76 | 2 997 | 91 51 089 08 | HOSE LINES SUPERSTRUCT |
| SLEEVE | 11 49 379 3 | 1 | 1 | 2 751 | 91 50 372 08 | AUXILIARY REEVING CABLE, C |
| SLEEVE | 57 11 303 08 | 2 | 1 | 5 711 301 | 57 11 301 08 | PRESSURE LIMITING VALVE |
| SLEEVE 20X20 | 93 58 590 | 70 | 1 | X1011998 | 10 11 998 0 | CABLE HARNESS MOUNTING |
| SLEEVE 25X20 11SMN37 FE// | 95 38 734 08 | 23 | 5 | 2 450 | 91 53 926 08 | MAIN HOIST GEAR |
| SLEEVE 25X20 11SMN37 FE// | 95 38 734 08 | 31 | 1 | 2 510 100 | 96 44 750 08 | SLEWING PLATFORM PANELLI |
| SLEEVE 25X20 S355J2G3C+C | 95 56 036 08 | 44 | 1 | 3 330 | 91 57 885 08 | MECHANICAL EXTENSION SYS |
| SLEEVE 25X21 X12CRNIS188 | 95 56 000 08 | 43 | 5 | 3 330 | 91 57 885 08 | MECHANICAL EXTENSION SYS |
| SLEEVE 32X30 X12CRNIS188 | 95 59 180 08 | 41 | 2 | 3 330 | 91 57 885 08 | MECHANICAL EXTENSION SYS |
| SLEEVE 32X41 X12CRNIS188 | 95 59 179 08 | 40 | 4 | 3 330 | 91 57 885 08 | MECHANICAL EXTENSION SYS |
| SLEEVE CONTACT 0,75-1,0MM | 60 45 193 08 | 12 | 8 | 6 923 101 | 69 23 101 08 | ROPE LENGTH INDICATOR |
| SLEEVE X46Cr13 | 10 15 216 8 | 2 | 1 | X1012038 | 10 12 038 3 | CYLINDER HEAD |
| SLEWING GEAR | 91 32 936 08 | 119 | 1 | | LTR 1100 -0 | LIEBHERR LTR 1100 |
| SLEWING GEAR DRIVE DAT 22 | 93 30 748 01 | 1 | 1 | 2 420 | 91 32 936 08 | SLEWING GEAR |
| SLEWING GEAR VALVE SPF | 10 10 109 3 | 4 | 1 | 2 970 | 91 55 482 08 | HYDRAULICS |
| SLEWING PLATFORM PANELL | 96 41 258 08 | 2 | 1 | 2 510 | 91 53 981 08 | TURNTABLE PANELLING |
| SLEWING PLATFORM PANELL | 96 44 750 08 | 1 | 1 | 2 510 | 91 53 981 08 | TURNTABLE PANELLING |
| SLIDE PLATE 33X50X310 PA6 | 28 30 825 08 | 47 | 26 | 3 101 | 91 60 312 08 | PIVOT SECTION, PRE-ASSEMB |
| SLIDE PLATE 8X60X280 PA6G+ | 28 30 826 08 | 56 | 1 | 3 101 | 91 60 312 08 | PIVOT SECTION, PRE-ASSEMB |
| SLIDE PLATE 8X60X280 PA6G+ | 28 30 826 08 | 56 | 1 | 3 102 000 | 91 62 543 08 | TELESCOPIC SECTION 1 PRE |
| SLIDE PLATE 8X60X280 PA6G+ | 28 30 826 08 | 56 | 1 | 3 103 000 | 91 62 544 08 | TELESCOPIC SECT.2 PRE-AS |
| SLIDER | 74 90 637 14 | 2 | 2 | 1 100 214 | 74 90 137 14 | GUIDE WHEEL CPL |
| SLIDER 100X115X250 PA6G+ | 28 30 925 08 | 14 | 1 | 3 330 | 91 57 885 08 | MECHANICAL EXTENSION SYS |
| SLIDER 128X150X167 PA6G+ | 28 30 824 08 | 39 | 2 | 3 101 | 91 60 312 08 | PIVOT SECTION, PRE-ASSEMB |
| SLIDER 30X115X165 PA6G+OE | 28 30 926 08 | 25 | 1 | 3 330 | 91 57 885 08 | MECHANICAL EXTENSION SYS |
| SLIDER 30X90X190 PA6G+OEL | 28 30 907 08 | 4 | 2 | 3 330 | 91 57 885 08 | MECHANICAL EXTENSION SYS |
| SLIDER 40X170X575 PA6G+OE | 28 30 839 08 | 15 | 1 | 3 330 | 91 57 885 08 | MECHANICAL EXTENSION SYS |
| SLIDER 50.0X372X207 PA6G+ | 28 30 924 08 | 13 | 1 | 3 330 | 91 57 885 08 | MECHANICAL EXTENSION SYS |

| Description | Item | Pos. | Quantity | Page | Assembly | Description |
|---|---|---|---|---|---|---|
| SLIDING BLOCK LEFT | 11 65 727 2 | 2 | 2 | X1100696 | 11 00 696 4 | BLIND |
| SLIDING BLOCK RIGHT | 11 65 727 1 | 1 | 2 | X1100696 | 11 00 696 4 | BLIND |
| SLINGING MEAN MONTAGE | 91 78 930 08 | 299 | 1 | | LTR 1100 -0 | LIEBHERR LTR 1100 |
| SLIP RING | 10 41 178 0 | 22 | 1 | X1034357 | 10 34 357 4 | CABLE REEL |
| SLIP RING | 10 41 178 1 | 23 | 9 | X1034357 | 10 34 357 4 | CABLE REEL |
| SLIP RING 60X2 1,5qm | 69 31 044 14 | 11 | 15 | X1028517 | 10 28 517 1 | COLLECTING RING |
| SLIP RING BRACKET 9SMN28 | 10 41 177 9 | 20 | 1 | X1034357 | 10 34 357 4 | CABLE REEL |
| SLIP RING SET | 57 18 510 08 | 4 | 1 | 6 923 101 | 69 23 101 08 | ROPE LENGTH INDICATOR |
| SLIPPER 65X340X450 GS-CK 4 | 30 81 151 14 | 14 | 2 | 1 100 205 | 96 51 633 08 | CRAWLER CARRIER RIGHT CP |
| SLIPPER 65X340X450 GS-CK 4 | 30 81 151 14 | 14 | 2 | 1 100 210 | 96 51 634 08 | CRAWLER TRACK CARRIER LE |
| SLOTTED NUT M38X1,5 | 57 01 101 08 | 9 | 1 | 5 701 090 | 57 01 090 08 | DRIVING GEAR |
| SLOTTED NUT M42X1,5 42CRM | 93 87 608 01 | 60 | 1 | 9 387 598 | 93 87 598 01 | PLANETARY GEARBOX |
| SLOTTED NUT M42X1,5 42CRM | 93 87 608 01 | 60 | 1 | 9 686 071 | 96 86 071 01 | PLANETARY GEARBOX |
| SLOTTED NUT M70X2 C45 | 92 75 302 01 | 13 | 1 | 9 330 748 | 93 30 748 01 | SLEWING GEAR DRIVE |
| SNAP HOOK DIN 5299 C60X6- | 74 40 102 08 | 16 | 1 | 3 330 | 91 57 885 08 | MECHANICAL EXTENSION SYS |
| SNAP LOCK | 70 42 315 08 | 3 | 1 | 2 520 021 | 92 17 203 08 | INSTRUMENT BOX DELIVERY |
| SNAP LOCK ABS | 10 29 615 7 | (2) | 3 | 2 510 100 | 96 44 750 08 | SLEWING PLATFORM PANELLI |
| SNAP RING 420X4.5 | 76 10 186 03 | 61 | 1 | 9 444 410 | 94 44 410 03 | TRACTION DRIVE |
| SNAP RING 52X2 FSt | 49 80 482 | 8 | 1 | X1046728 | 10 46 728 5 | PISTON CPL. |
| SNAP RING DIN 7993 B 40 | 42 85 217 08 | 11 | 2 | 5 123 931 | 51 23 931 08 | PNEUMATIC CYLINDER |
| SOCKET | 63 01 023 08 | 9 | 13 | 2 932 119 | 96 46 061 08 | SWING FRAME RELAY CONT |
| SOCKET DUST-PROOF | 74 05 494 | (1) | 1 | 1 970 | 96 71 367 08 | UNDERCARRIAGE HYDRAULIC |
| SOCKET FOR SPANNER DIN 3 | 73 61 649 | 10 | 1 | 1 750 | 91 48 606 08 | TOOLS AND ACCESSORIES |
| SOCKET FOR SPANNER DIN | 79 00 285 08 | 66 | 1 | 1 750 001 | 92 85 698 08 | MAIN TOOLS |
| SOCKET HEAD SCREW DIN 69 | 10 87 556 1 | 32 | 8 | 3 102 000 | 91 62 543 08 | TELESCOPIC SECTION 1 PRE |
| SOCKET HEAD SCREW DIN 69 | 10 87 556 1 | 32 | 8 | 3 103 000 | 91 62 544 08 | TELESCOPIC SECT.2 PRE-AS |
| SOCKET HEAD SCREW DIN 69 | 10 87 556 1 | 32 | 8 | 3 104 000 | 91 62 545 08 | TELESCOPIC SECT.3 PRE-ASS |
| SOCKET HEAD SCREW DIN 69 | 10 87 556 1 | 32 | 8 | 3 105 000 | 91 62 546 08 | TELESCOPIC SECT.IV PRE-A |
| SOCKET HEAD SCREW DIN 69 | 10 87 556 1 | 53 | 8 | 3 106 000 | 91 60 313 08 | TELESCOPIC SECT.5 PRE-AS |
| SOCKET HEAD SCREW DIN 7 | 49 80 927 | 9 | 3 | X1012223 | 10 12 223 3 | CAMSHAFT CPL. |
| SOCKET HEAD SCREW DIN 79 | 40 83 000 08 | 46 | 3 | 2 522 | 91 10 037 08 | DOOR CPL. |
| SOCKET HEAD SCREW DIN 79 | 49 80 648 | 42 | 2 | X1081388 | 10 81 388 6 | CYLINDER HEAD |
| SOCKET HEAD SCREW DIN 79 | 40 93 609 08 | 13 | 4 | 2 520 001 | 92 48 796 08 | FRONT WINDOW CPL. |
| SOCKET HEAD SCREW DIN 84 | 40 01 701 08 | 266 | 2 | 3 930 492 | 96 20 966 08 | TERMINAL BOX CPL. |
| SOCKET HEAD SCREW DIN 84 | 40 01 016 08 | 61 | 28 | 2 932 042 | 96 68 587 08 | BASE ASSEMBLY |
| SOCKET HEAD SCREW DIN 84 | 40 01 016 08 | 5 | 4 | 2 932 215 | 92 26 129 08 | GROUND RAIL |
| SOCKET HEAD SCREW DIN 84 | 40 01 016 08 | 31 | 2 | 3 100 | 91 59 279 08 | TELESCOPIC BOOM CPL. |
| SOCKET HEAD SCREW DIN 84 | 40 01 063 08 | 22 | 8 | 3 100 | 91 59 279 08 | TELESCOPIC BOOM CPL. |
| SOCKET HEAD SCREW DIN 84 | 51 07 977 08 | 22 | 1 | 5 114 177 | 51 14 177 08 | PRESSURE LIMITING VALVE |
| SOCKET HEAD SCREW DIN 9 | 40 43 624 08 | 85 | 4 | X1041191 | 10 41 191 3 | SHEET |
| SOCKET HEAD SCREW DIN 9 | 40 42 098 08 | 4 | 1 | X1011659 | 10 11 659 1 | INJECTION NOZZLE W.FASTEN |
| SOCKET HEAD SCREW DIN 9 | 51 48 023 08 | 3 | 4 | 5 113 199 | 51 13 199 08 | LOWERING BRAKE VALVE |
| SOCKET HEAD SCREW DIN 91 | 10 87 556 5 | 16 | 4 | 2 340 004 | 96 43 780 08 | OIL TANK PRE-ASS. |
| SOCKET HEAD SCREW DIN 91 | 10 87 556 5 | 505 | 4 | 2 970 | 91 55 482 08 | HYDRAULICS |
| SOCKET HEAD SCREW DIN 91 | 40 43 163 08 | 5 | 4 | X1029358 | 10 29 358 6 | LOWERING BRAKE VALVE |
| SOCKET HEAD SCREW DIN 9 | 40 42 314 08 | 502 | 4 | 2 970 | 91 55 482 08 | HYDRAULICS |
| SOCKET HEAD SCREW DIN 9 | 40 42 314 08 | 502 | 8 | 2 971 | 91 50 610 08 | HYDR.AUXILIARY HOISTING |
| SOCKET HEAD SCREW DIN 9 | 40 43 637 08 | 15 | 4 | 5 114 869 | 51 14 869 08 | CONTROL PLATE |
| SOCKET HEAD SCREW DIN 9 | 40 43 612 08 | 70 | 16 | 5 113 078 | 51 13 078 08 | CONTROL PLATE |
| SOCKET HEAD SCREW DIN 9 | 40 43 612 08 | 16 | 4 | 5 114 869 | 51 14 869 08 | CONTROL PLATE |
| SOCKET HEAD SCREW DIN 9 | 40 43 029 08 | 90 | 4 | X1047529 | 10 47 529 2 | VALVE BLOCK |
| SOCKET HEAD SCREW DIN 9 | 40 43 641 08 | (74) | 4 | 9 072 112 | 90 72 112 | HYDR.DOUBLE PUMP |
| SOCKET HEAD SCREW DIN 9 | 40 42 305 08 | 50 | 4 | 2 971 | 91 50 610 08 | HYDR.AUXILIARY HOISTING |
| SOCKET HEAD SCREW DIN 91 | 40 42 056 08 | 76 | 4 | 2 970 | 91 55 482 08 | HYDRAULICS |
| SOCKET HEAD SCREW ISO 4 | 40 42 104 01 | 23 | 8 | 1 100 216 | 96 46 363 08 | MOUNTING PARTS LWE |
| SOCKET HEAD SCREW ISO 47 | 40 02 442 | 71 | 12 | 9 387 598 | 93 87 598 01 | PLANETARY GEARBOX |
| SOCKET HEAD SCREW ISO 47 | 40 02 442 | 71 | 12 | 9 686 071 | 96 86 071 01 | PLANETARY GEARBOX |
| SOCKET HEAD SCREW ISO 47 | 40 42 012 | 325 | 2 | 2 210 | 91 81 614 08 | DRIVE ASSEMBLY, PRE-ASSE |
| SOCKET HEAD SCREW ISO 47 | 40 42 012 | 320 | 2 | 2 210 008 | 96 48 137 08 | RADIATOR, PRE-ASSEMBLED |
| SOCKET HEAD SCREW ISO 4 | 40 43 122 | (2) | 2 | X1011998 | 10 11 998 0 | CABLE HARNESS MOUNTING |

| Description | Item | Pos. | Quantity | Page | Assembly | Description |
|---|---|---|---|---|---|---|
| SOCKET HEAD SCREW ISO 47 | 46 00 182 | 12 | 6 | 1 100 200 | 96 72 944 08 | UNDERCARRIAGE CPL. |
| SOCKET HEAD SCREW ISO 4 | 10 41 516 2 | 5 | 2 | 1 300 010 | 99 14 563 14 | ACCESS COMPL |
| SOCKET HEAD SCREW ISO 4 | 10 41 516 2 | 341 | 1 | 2 210 | 91 81 614 08 | DRIVE ASSEMBLY, PRE-ASSE |
| SOCKET HEAD SCREW ISO 4 | 10 41 516 2 | 39 | 4 | 2 440 | 91 52 288 08 | AUXILIARY HOISTING GEAR 2 |
| SOCKET HEAD SCREW ISO 4 | 10 41 516 2 | 58 | 2 | 3 101 | 91 60 312 08 | PIVOT SECTION, PRE-ASSEMB |
| SOCKET HEAD SCREW ISO 4 | 10 41 516 2 | 58 | 2 | 3 102 000 | 91 62 543 08 | TELESCOPIC SECTION 1 PRE |
| SOCKET HEAD SCREW ISO 4 | 10 41 516 2 | 58 | 2 | 3 103 000 | 91 62 544 08 | TELESCOPIC SECT.2 PRE-AS |
| SOCKET HEAD SCREW ISO 4 | 10 41 516 2 | 24 | 6 | 3 330 | 91 57 885 08 | MECHANICAL EXTENSION SYS |
| SOCKET HEAD SCREW ISO 4 | 10 41 516 2 | 4 | 1 | X1011997 | 10 11 997 6 | POWER TAKE-OFF ADD-ON |
| SOCKET HEAD SCREW ISO 4 | 40 43 000 | 6 | 2 | 9 073 767 | 90 73 767 | POWER TAKE-OFF ADD-ON |
| SOCKET HEAD SCREW ISO 4 | 40 43 000 | 3 | 2 | X1011683 | 10 11 683 9 | INJECTION PUMP ASSEMBLY |
| SOCKET HEAD SCREW ISO 4 | 10 87 557 2 | 5 | 4 | 2 420 | 91 32 936 08 | SLEWING GEAR |
| SOCKET HEAD SCREW ISO 4 | 40 43 127 | 52 | 24 | 9 444 410 | 94 44 410 03 | TRACTION DRIVE |
| SOCKET HEAD SCREW ISO 4 | 11 69 062 8 | 9 | 2 | 2 790 901 | 91 54 183 08 | BRACING |
| SOCKET HEAD SCREW ISO 4 | 11 69 062 8 | 30 | 8 | 3 102 000 | 91 62 543 08 | TELESCOPIC SECTION 1 PRE |
| SOCKET HEAD SCREW ISO 4 | 11 69 062 8 | 30 | 8 | 3 103 000 | 91 62 544 08 | TELESCOPIC SECT.2 PRE-AS |
| SOCKET HEAD SCREW ISO 4 | 11 69 062 8 | 30 | 8 | 3 104 000 | 91 62 545 08 | TELESCOPIC SECT.3 PRE-ASS |
| SOCKET HEAD SCREW ISO 4 | 11 69 062 8 | 30 | 8 | 3 105 000 | 91 62 546 08 | TELESCOPIC SECT.IV PRE-A |
| SOCKET HEAD SCREW ISO 4 | 11 69 062 8 | 18 | 4 | 3 106 000 | 91 60 313 08 | TELESCOPIC SECT.5 PRE-AS |
| SOCKET HEAD SCREW ISO 4 | 10 87 557 3 | 30 | 6 | 1 100 205 | 96 51 633 08 | CRAWLER CARRIER RIGHT CP |
| SOCKET HEAD SCREW ISO 4 | 10 87 557 3 | 30 | 6 | 1 100 210 | 96 51 634 08 | CRAWLER TRACK CARRIER LE |
| SOCKET HEAD SCREW ISO 47 | 40 42 096 01 | 342 | 1 | 2 210 | 91 81 614 08 | DRIVE ASSEMBLY, PRE-ASSE |
| SOCKET HEAD SCREW ISO 4 | 40 01 595 | 4 | 2 | 9 074 505 | 90 74 505 | ROCKER ARM BRACKET PRE |
| SOCKET HEAD SCREW ISO 47 | 46 00 239 | 25 | 1 | 9 387 596 | 93 87 596 01 | ROPE DRUM |
| SOCKET HEAD SCREW ISO 47 | 46 00 385 | 7 | 15 | X1011582 | 10 11 582 9 | FLYWHEEL HOUSING MOUNT |
| SOCKET HEAD SCREW ISO 4 | 40 42 130 01 | 338 | 2 | 2 210 | 91 81 614 08 | DRIVE ASSEMBLY, PRE-ASSE |
| SOCKET HEAD SCREW ISO 4 | 46 00 167 | 16 | 4 | 1 970 | 96 71 367 08 | UNDERCARRIAGE HYDRAULIC |
| SOCKET HEAD SCREW ISO 4 | 10 87 557 7 | 6 | 2 | 2 420 | 91 32 936 08 | SLEWING GEAR |
| SOCKET HEAD SCREW ISO 47 | 40 42 031 | 26 | 4 | 3 330 | 91 57 885 08 | MECHANICAL EXTENSION SYS |
| SOCKET HEAD SCREW ISO 4 | 12 20 126 3 | 340 | 1 | 2 210 | 91 81 614 08 | DRIVE ASSEMBLY, PRE-ASSE |
| SOCKET HEAD SCREW ISO 4 | 12 20 126 3 | 23 | 4 | 3 330 | 91 57 885 08 | MECHANICAL EXTENSION SYS |
| SOCKET HEAD SCREW ISO 4 | 40 43 164 | 82 | 8 | 9 444 410 | 94 44 410 03 | TRACTION DRIVE |
| SOCKET HEAD SCREW ISO 4 | 10 87 557 8 | 52 | 8 | 9 387 598 | 93 87 598 01 | PLANETARY GEARBOX |
| SOCKET HEAD SCREW ISO 4 | 10 87 557 8 | 52 | 8 | 9 686 071 | 96 86 071 01 | PLANETARY GEARBOX |
| SOCKET HEAD SCREW ISO 4 | 40 43 003 | 86 | 4 | X1029147 | 10 29 147 4 | CONTROL BLOCK |
| SOCKET HEAD SCREW ISO 47 | 40 43 120 08 | 77 | 8 | 9 387 598 | 93 87 598 01 | PLANETARY GEARBOX |
| SOCKET HEAD SCREW ISO 47 | 40 43 120 08 | 77 | 8 | 9 686 071 | 96 86 071 01 | PLANETARY GEARBOX |
| SOCKET HEAD SCREW ISO 4 | 49 80 012 | 6 | 2 | X1011582 | 10 11 582 9 | FLYWHEEL HOUSING MOUNT |
| SOCKET HEAD SCREW ISO 4 | 49 80 012 | 86 | 4 | X1047529 | 10 47 529 1 | VALVE BLOCK |
| SOCKET HEAD SCREW ISO 4 | 49 80 012 | 86 | 4 | X1047529 | 10 47 529 2 | VALVE BLOCK |
| SOCKET HEAD SCREW ISO 47 | 10 01 265 9 | 56 | 8 | 9 387 598 | 93 87 598 01 | PLANETARY GEARBOX |
| SOCKET HEAD SCREW ISO 47 | 10 01 265 9 | 56 | 8 | 9 686 071 | 96 86 071 01 | PLANETARY GEARBOX |
| SOCKET HEAD SCREW ISO 4 | 11 84 014 0 | 40 | 4 | 3 101 | 91 60 312 08 | PIVOT SECTION, PRE-ASSEMB |
| SOCKET HEAD SCREW ISO 4 | 11 84 014 0 | 40 | 4 | 3 102 000 | 91 62 543 08 | TELESCOPIC SECTION 1 PRE |
| SOCKET HEAD SCREW ISO 4 | 11 84 014 0 | 40 | 4 | 3 103 000 | 91 62 544 08 | TELESCOPIC SECT.2 PRE-AS |
| SOCKET HEAD SCREW ISO 4 | 11 84 014 0 | 40 | 4 | 3 104 000 | 91 62 545 08 | TELESCOPIC SECT.3 PRE-ASS |
| SOCKET HEAD SCREW ISO 4 | 11 84 014 0 | 40 | 4 | 3 105 000 | 91 62 546 08 | TELESCOPIC SECT.IV PRE-A |
| SOCKET HEAD SCREW ISO 47 | 40 01 654 | 27 | 6 | 3 330 | 91 57 885 08 | MECHANICAL EXTENSION SYS |
| SOCKET HEAD SCREW ISO 47 | 40 43 126 08 | 4 | 24 | 2 420 | 91 32 936 08 | SLEWING GEAR |
| SOCKET HEAD SCREW ISO 47 | 46 00 054 | 20 | 4 | 3 330 | 91 57 885 08 | MECHANICAL EXTENSION SYS |
| SOCKET HEAD SCREW ISO 47 | 40 42 151 01 | 13 | 12 | 2 975 152 | 91 05 737 08 | HYDR.F.TELESCOPIC BOOM |
| SOCKET HEAD SCREW ISO 4 | 40 00 414 | 12 | 12 | X1012223 | 10 12 223 3 | CAMSHAFT CPL. |
| SOCKET HEAD SCREW ISO 4 | 10 87 637 3 | 575 | 28 | 1 970 | 96 71 367 08 | UNDERCARRIAGE HYDRAULIC |
| SOCKET HEAD SCREW ISO 4 | 40 43 009 | 6 | 2 | 9 074 165 | 90 74 165 | BALANCER ASSEMBLY |
| SOCKET HEAD SCREW ISO 47 | 40 43 181 01 | 21 | 24 | 9 387 598 | 93 87 598 01 | PLANETARY GEARBOX |
| SOCKET HEAD SCREW ISO 47 | 40 43 181 01 | 21 | 24 | 9 686 071 | 96 86 071 01 | PLANETARY GEARBOX |
| SOCKET HEAD SCREW ISO 4 | 40 00 342 03 | 11 | 8 | 9 444 410 | 94 44 410 03 | TRACTION DRIVE |
| SOCKET HEAD SCREW ISO 4 | 40 43 169 01 | 31 | 4 | 9 387 596 | 93 87 596 01 | ROPE DRUM |
| SOCKET HEAD SCREW ISO 47 | 46 00 237 | 51 | 12 | 9 444 410 | 94 44 410 03 | TRACTION DRIVE |
| SOCKET HEAD SCREW ISO 4 | 40 43 177 01 | 6 | 16 | 9 387 070 | 93 87 070 01 | COMPACT ROPE WINCH |

| Description | Item | Pos. | Quantity | Page | Assembly | Description |
|---|---|---|---|---|---|---|
| SOCKET HEAD SCREW ISO 4 | 40 43 177 01 | 6 | 16 | 9 685 586 | 96 85 586 01 | COMPACT ROPE WINCH |
| SOCKET HEAD SCREW ISO 47 | 40 42 143 05 | 3 | 16 | 2 571 | 91 50 902 08 | HYDRAULIC BALLASTING |
| SOCKET HEAD SCREW ISO 4 | 40 43 245 01 | 4 | 24 | 1 100 210 | 96 51 634 08 | CRAWLER TRACK CARRIER LE |
| SOCKET HEAD SCREW ISO 47 | 40 43 245 08 | 4 | 24 | 1 100 205 | 96 51 633 08 | CRAWLER CARRIER RIGHT CP |
| SOCKET HEAD SCREW ISO 4 | 40 42 002 08 | 11 | 2 | 2 780 852 | 96 24 845 08 | GSM-MODULE PRE-ASS.LICCO |
| SOCKET HEAD SCREW ISO 4 | 40 00 996 | 19 | 3 | 6 923 101 | 69 23 101 08 | ROPE LENGTH INDICATOR |
| SOCKET HEAD SCREW ISO 4 | 40 00 996 | 87 | 4 | X1029147 | 10 29 147 4 | CONTROL BLOCK |
| SOCKET HEAD SCREW ISO 4 | 40 00 996 | 87 | 4 | X1047529 | 10 47 529 1 | VALVE BLOCK |
| SOCKET HEAD SCREW ISO 4 | 40 00 996 | 87 | 4 | X1047529 | 10 47 529 2 | VALVE BLOCK |
| SOCKET HEAD SCREW ISO 4 | 46 00 337 | 200 | 4 | 1 880 | 91 62 974 08 | PLATING SPIAN |
| SOCKET HEAD SCREW ISO 4 | 40 01 521 | 138 | 4 | 2 520 000 | 91 49 872 08 | CABIN, GLAZED |
| SOCKET HEAD SCREW ISO 47 | 11 69 004 2 | 137 | 2 | 2 520 000 | 91 49 872 08 | CABIN, GLAZED |
| SOCKET HEAD SCREW ISO 4 | 40 00 899 | 48 | 1 | 2 522 | 91 10 037 08 | DOOR CPL. |
| SOCKET HEAD SCREW ISO 47 | 12 20 461 4 | 4 | 4 | 2 711 | 91 53 002 08 | CENT. LUBRIC. SYSTEM SUP |
| SOCKET HEAD SCREW ISO 4 | 40 43 028 08 | 14 | 4 | 1 970 | 96 71 367 08 | UNDERCARRIAGE HYDRAULIC |
| SOCKET HEAD SCREW ISO 4 | 40 43 028 08 | 19 | 4 | 1 970 | 96 71 367 08 | UNDERCARRIAGE HYDRAULIC |
| SOCKET HEAD SCREW ISO 47 | 40 43 029 14 | 20 | 4 | 1 970 | 96 71 367 08 | UNDERCARRIAGE HYDRAULIC |
| SOCKET HEAD SCREW ISO 4 | 46 00 049 | 62 | 6 | 3 501 | 91 05 788 08 | MECH. DOUBLE FOLD JIB PR |
| SOCKET HEAD SCREW ISO 47 | 40 42 059 08 | 75 | 2 | 2 970 | 91 55 482 08 | HYDRAULICS |
| SOCKET HEAD SCREW ISO 47 | 10 87 558 6 | 4 | 1 | 1 792 004 | 92 51 415 08 | HOSE GUIDE PRE-ASS. |
| SOCKET HEAD SCREW ISO 47 | 10 87 558 6 | 41 | 4 | 2 540 | 91 45 984 08 | HEATING, CRANE CABIN |
| SOCKET HEAD SCREW ISO 47 | 10 87 558 6 | 4 | 2 | 3 920 012 | 96 57 224 08 | LIMIT SWITCH ADD-ON |
| SOCKET HEAD SCREW ISO 47 | 10 87 558 6 | 15 | 3 | 9 075 541 | 90 75 541 | LUBE OIL PUMP PRE-ASSY. |
| SOCKET HEAD SCREW ISO 47 | 10 87 558 6 | 3 | 1 | 9 076 534 | 90 76 534 | ROTATIONAL SPEED SENSOR |
| SOCKET HEAD SCREW ISO 47 | 10 87 558 6 | 3 | 1 | X1013307 | 10 13 307 7 | ROTATIONAL SPEED SENSOR |
| SOCKET HEAD SCREW ISO 4 | 40 42 002 | 33 | 7 | 1 100 215 | 99 20 783 14 | CENTRE PIECE |
| SOCKET HEAD SCREW ISO 4 | 40 42 002 | 10 | 3 | 2 780 800 | 91 15 191 08 | ELECTRIC FOR WINCH 2 |
| SOCKET HEAD SCREW ISO 4 | 40 42 002 | 3 | 4 | 9 078 680 | 90 78 680 | FUEL PUMP ASSEMBLY |
| SOCKET HEAD SCREW ISO 47 | 24 01 962 02 | 15 | 4 | 5 123 931 | 51 23 931 08 | PNEUMATIC CYLINDER |
| SOCKET HEAD SCREW ISO 47 | 10 87 558 8 | 20 | 18 | 2 950 | 91 49 515 08 | COMPRESSED-AIR SYST.SU |
| SOCKET HEAD SCREW ISO 47 | 10 87 558 8 | 6 | 3 | X1032706 | 10 32 706 5 | ELECTRIC PUMP |
| SOCKET HEAD SCREW ISO 47 | 11 82 028 4 | 6 | 1 | 2 571 | 91 50 902 08 | HYDRAULIC BALLASTING |
| SOCKET HEAD SCREW ISO 47 | 11 82 028 4 | 73 | 2 | 3 101 | 91 60 312 08 | PIVOT SECTION, PRE-ASSEMB |
| SOCKET HEAD SCREW ISO 47 | 10 87 559 0 | 14 | 4 | 2 430 | 91 54 389 08 | ANGLE THREADED BULKHEA |
| SOCKET HEAD SCREW ISO 47 | 10 87 559 1 | 306 | 10 | 2 210 | 91 81 614 08 | DRIVE ASSEMBLY, PRE-ASSE |
| SOCKET HEAD SCREW ISO 47 | 10 87 559 1 | 31 | 2 | 2 920 | 91 55 477 08 | ELECTR. SYSTEM F.SLEWING |
| SOCKET HEAD SCREW ISO 47 | 10 87 559 1 | 35 | 2 | 3 330 | 91 57 885 08 | MECHANICAL EXTENSION SYS |
| SOCKET HEAD SCREW ISO 47 | 10 87 559 1 | 21 | 4 | X1033367 | 10 33 367 2 | CONTROL BLOCK |
| SOCKET HEAD SCREW ISO 47 | 10 87 559 2 | 38 | 4 | 3 330 | 91 57 885 08 | MECHANICAL EXTENSION SYS |
| SOCKET HEAD SCREW ISO 47 | 10 87 559 2 | 6 | 4 | X1011599 | 10 11 599 3 | CONTROL BOX ANNEXE |
| SOCKET HEAD SCREW ISO 47 | 40 43 050 | 16 | 4 | 5 123 931 | 51 23 931 08 | PNEUMATIC CYLINDER |
| SOCKET HEAD SCREW ISO 4 | 40 42 111 | 29 | 2 | 2 920 | 91 55 477 08 | ELECTR. SYSTEM F.SLEWING |
| SOCKET HEAD SCREW ISO 47 | 12 20 278 4 | 77 | 4 | 3 101 | 91 60 312 08 | PIVOT SECTION, PRE-ASSEMB |
| SOCKET HEAD SCREW ISO 4 | 40 02 418 | 77 | 14 | 2 970 | 91 55 482 08 | HYDRAULICS |
| SOCKET HEAD SCREW ISO 4 | 40 42 052 08 | 31 | 2 | 1 970 | 96 71 367 08 | UNDERCARRIAGE HYDRAULIC |
| SOCKET HEAD SCREW ISO 4 | 24 00 493 02 | 10 | 2 | 9 074 165 | 90 74 165 | BALANCER ASSEMBLY |
| SOCKET HEAD SCREW ISO 47 | 40 43 080 08 | 85 | 4 | X1029147 | 10 29 147 4 | CONTROL BLOCK |
| SOCKET HEAD SCREW ISO 47 | 40 43 080 08 | 85 | 4 | X1047529 | 10 47 529 1 | VALVE BLOCK |
| SOCKET HEAD SCREW ISO 47 | 40 43 080 08 | 85 | 4 | X1047529 | 10 47 529 2 | VALVE BLOCK |
| SOCKET HEAD SCREW ISO 4 | 10 66 352 3 | 14 | 2 | X1011832 | 10 11 832 6 | EXHAUST TC MOUNTING |
| SOCKET HEAD SCREW ISO 47 | 10 87 559 8 | 26 | 2 | 2 502 | 91 01 533 08 | CONTROL STAND |
| SOCKET HEAD SCREW ISO 47 | 10 87 559 8 | 30 | 9 | 3 101 | 91 60 312 08 | PIVOT SECTION, PRE-ASSEMB |
| SOCKET HEAD SCREW ISO 47 | 10 87 559 8 | 7 | 2 | 5 102 294 | 51 02 294 08 | HYDRO MOTOR |
| SOCKET HEAD SCREW ISO 4 | 24 00 497 02 | 7 | 5 | 9 074 165 | 90 74 165 | BALANCER ASSEMBLY |
| SOCKET HEAD SCREW ISO 47 | 10 87 559 9 | 39 | 8 | 2 102 | 91 51 080 08 | ASSEMBLY PARTS F.SLEWING |
| SOCKET HEAD SCREW ISO 47 | 10 87 559 9 | 6 | 4 | 2 430 | 91 54 389 08 | ANGLE THREADED BULKHEA |
| SOCKET HEAD SCREW ISO 47 | 10 87 559 9 | 3 | 4 | 2 790 | 91 68 708 08 | MIRROR ATTACHM.AT SLEW.P |
| SOCKET HEAD SCREW ISO 47 | 10 87 559 9 | 46 | 4 | 3 330 | 91 57 885 08 | MECHANICAL EXTENSION SYS |
| SOCKET HEAD SCREW ISO 47 | 10 87 559 9 | 26 | 8 | 9 330 748 | 93 30 748 01 | SLEWING GEAR DRIVE |
| SOCKET HEAD SCREW ISO 47 | 10 87 559 9 | 14 | 2 | X1011989 | 10 11 989 7 | RK OIL RETURN PIPE |

| Description | Item | Pos. | Quantity | Page | Assembly | Description |
|---|---|---|---|---|---|---|
| SOCKET HEAD SCREW ISO 4 | 24 00 498 02 | 5 | 2 | 9 072 593 | 90 72 593 | FLANGE PRE-ASS. |
| SOCKET HEAD SCREW ISO 4 | 24 00 498 02 | 14 | 2 | 9 075 541 | 90 75 541 | LUBE OIL PUMP PRE-ASSY. |
| SOCKET HEAD SCREW ISO 4 | 49 01 162 | 18 | 4 | 3 102 000 | 91 62 543 08 | TELESCOPIC SECTION 1 PRE |
| SOCKET HEAD SCREW ISO 4 | 49 01 162 | 18 | 4 | 3 103 000 | 91 62 544 08 | TELESCOPIC SECT.2 PRE-AS |
| SOCKET HEAD SCREW ISO 4 | 49 01 162 | 18 | 4 | 3 104 000 | 91 62 545 08 | TELESCOPIC SECT.3 PRE-ASS |
| SOCKET HEAD SCREW ISO 4 | 49 01 162 | 18 | 4 | 3 105 000 | 91 62 546 08 | TELESCOPIC SECT.IV PRE-A |
| SOCKET HEAD SCREW ISO 4 | 49 01 162 | 56 | 4 | 3 106 000 | 91 60 313 08 | TELESCOPIC SECT.5 PRE-AS |
| SOCKET HEAD SCREW ISO 4 | 40 01 620 | 74 | 8 | 9 330 748 | 93 30 748 01 | SLEWING GEAR DRIVE |
| SOCKET HEAD SCREW ISO 47 | 49 80 840 | 2 | 4 | 5 113 199 | 51 13 199 08 | LOWERING BRAKE VALVE |
| SOCKET HEAD SCREW ISO 47 | 49 80 840 | 72 | 12 | 9 444 410 | 94 44 410 03 | TRACTION DRIVE |
| SOCKET HEAD SCREW ISO 4 | 40 42 070 | 2 | 1 | 9 075 540 | 90 75 540 | LUBE OIL PUMP WITH FASTEN |
| SOCKET HEAD SCREW ISO 4 | 40 42 044 05 | 31 | 6 | X1033367 | 10 33 367 2 | CONTROL BLOCK |
| SOCKET HEAD SCREW ISO 47 | 10 87 560 1 | 4 | 1 | 2 790 040 | 91 60 499 08 | MIRROR ATTACHM.IN CRANE |
| SOCKET HEAD SCREW ISO 47 | 10 87 560 1 | 10 | 4 | 5 102 294 | 51 02 294 08 | HYDRO MOTOR |
| SOCKET HEAD SCREW ISO 47 | 10 87 560 1 | 6 | 4 | X1029358 | 10 29 358 6 | LOWERING BRAKE VALVE |
| SOCKET HEAD SCREW ISO 47 | 10 87 557 0 | 3 | 2 | 2 520 041 | 96 84 504 08 | ATTACHMENT GRIP |
| SOCKET HEAD SCREW ISO 4 | 24 00 508 02 | 3 | 2 | 9 075 540 | 90 75 540 | LUBE OIL PUMP WITH FASTEN |
| SOCKET HEAD SCREW ISO 4 | 49 00 323 | 86 | 10 | 9 330 748 | 93 30 748 01 | SLEWING GEAR DRIVE |
| SOLDERING LUGS | 11 06 860 7 | (1) | 10 | 6 923 101 | 69 23 101 08 | ROPE LENGTH INDICATOR |
| SOLENOID VALVE 12.5BAR | 50 26 596 08 | 13 | 4 | 2 955 | 91 49 516 08 | PNEUM. CRANE OPERATORS |
| SOUND PROOFING/SOUND I | 96 44 555 08 | 100 | 1 | 2 510 100 | 96 44 750 08 | SLEWING PLATFORM PANELLI |
| SOUND PROOFING/SOUND IN | 96 40 266 08 | 800 | 1 | 2 510 108 | 96 44 555 08 | SOUND PROOFING/SOUND I |
| SPACER PIECE | 57 11 304 08 | 5 | 1 | 5 711 301 | 57 11 301 08 | PRESSURE LIMITING VALVE |
| SPACER PIECE RD25 PA6G SC | 28 81 303 08 | 11 | 2 | 2 520 001 | 92 48 796 08 | FRONT WINDOW CPL. |
| SPACER PIECE S355J0 | 90 79 064 | 30 | 1 | 9 076 534 | 90 76 534 | ROTATIONAL SPEED SENSOR |
| SPARE ELEMENT OEL | 10 03 283 5 | 1 | 1 | 9 075 483 | 90 75 483 | CRANKCASE BREATHER |
| SPARE ELEMENT OEL | 10 03 283 5 | 7 | 1 | 9 629 047 | 96 29 047 08 | FILTER PACKAGE |
| SPARE ELEMENT OEL | 10 03 283 5 | 7 | 1 | 9 629 049 | 96 29 049 08 | FILTER PACKAGE |
| SPARE ELEMENT OEL | 10 03 283 5 | (2) | 1 | XSK_Z480 | SK_Z48005 | SERVICE |
| SPARK ARRESTER Edelstahl | 97 10 021 08 | 100 | 1 | 2 680 | 91 53 225 08 | EXHAUST SYSTEM CPL. |
| SPHERICAL CAP | 60 61 442 08 | 13 | 1 | 2 530 002 | 96 19 448 08 | DASHBOARD FRONT, PRE-A |
| SPHERICAL CAP | 60 61 442 08 | 29 | 1 | 2 531 001 | 96 36 738 08 | ELECTRIC FOR ARMREST LEF |
| SPHERICAL CAP | 60 61 442 08 | 30 | 2 | 2 531 002 | 96 36 739 08 | ELECTRIC FOR ARMREST RI |
| SPHERICAL CAP | 60 61 443 08 | 9 | 1 | 2 530 002 | 96 19 448 08 | DASHBOARD FRONT, PRE-A |
| SPHERICAL CAP | 60 61 443 08 | 30 | 1 | 2 531 001 | 96 36 738 08 | ELECTRIC FOR ARMREST LEF |
| SPHERICAL KNOB DIN 319 C40 | 70 40 042 08 | 8 | 1 | 3 510 006 | 96 20 924 08 | FOLDING BRACKET |
| SPHERICAL KNOB DIN 319 E | 11 00 722 3 | 9 | 1 | 6 923 097 | 69 23 097 08 | PEDAL TRANSDUCER |
| SPHERICAL WASHER DIN 631 | 10 87 586 3 | 40 | 1 | 3 510 100 | 91 49 246 08 | TRANSPORT MOUNTING |
| SPHERICAL WASHER DIN 631 | 42 19 002 08 | 5 | 1 | X1011659 | 10 11 659 1 | INJECTION NOZZLE W.FASTEN |
| SPIRIT LEVEL | 71 40 008 08 | 10 | 2 | 1 400 200 | 91 53 791 08 | PREPARATION HYDR |
| SPLIT PIN ISO 1234 10X80 ST | 43 30 103 08 | 24 | 8 | 2 571 | 91 50 902 08 | HYDRAULIC BALLASTING |
| SPLIT PIN ISO 1234 10X80 ST | 43 30 103 08 | 31 | 8 | 3 501 | 91 05 788 08 | MECH. DOUBLE FOLD JIB PR |
| SPLIT PIN ISO 1234 13X100 ST | 43 30 109 08 | 20 | 4 | 2 571 | 91 50 902 08 | HYDRAULIC BALLASTING |
| SPLIT PIN ISO 1234 13X125 ST | 43 30 112 08 | 13 | 4 | 1 100 216 | 96 46 363 08 | MOUNTING PARTS LWE |
| SPLIT PIN ISO 1234 2X12 ST A3 | 43 30 018 08 | 17 | 1 | 2 515 007 | 96 42 014 08 | PLATFORM, PRE-ASSEMBLED |
| SPLIT PIN ISO 1234 3,2X20 ST | 43 30 034 08 | 32 | 4 | 3 501 | 91 05 788 08 | MECH. DOUBLE FOLD JIB PR |
| SPLIT PIN ISO 1234 3,2X32 ST | 43 30 038 08 | 58 | 1 | 3 106 000 | 91 60 313 08 | TELESCOPIC SECT.5 PRE-AS |
| SPLIT PIN ISO 1234 4X40 ST A3 | 43 30 055 08 | 39 | 2 | 3 106 000 | 91 60 313 08 | TELESCOPIC SECT.5 PRE-AS |
| SPLIT PIN ISO 1234 4X40 ST A3 | 43 30 055 08 | 11 | 1 | 3 511 006 | 96 45 029 08 | BOOM NOSE PRE-ASS. |
| SPLIT PIN ISO 1234 5X32 | 43 30 063 14 | 4 | 2 | 1 300 010 | 99 14 563 14 | ACCESS COMPL |
| SPLIT PIN ISO 1234 5X32 | 43 30 063 14 | 11 | 8 | 1 740 010 | 96 50 675 08 | MOUNTING PARTS |
| SPLIT PIN ISO 1234 5X40 ST A3 | 43 30 065 08 | 5 | 3 | 3 500 104 | 92 95 821 08 | MOUNTING PRE-ASS. |
| SPLIT PIN ISO 1234 5X40 ST A3 | 43 30 065 08 | 33 | 9 | 3 501 | 91 05 788 08 | MECH. DOUBLE FOLD JIB PR |
| SPLIT PIN ISO 1234 5X40 ST A3 | 43 30 065 08 | 5 | 1 | 3 510 001 | 92 52 800 08 | CONSOLE PRE-ASS. |
| SPLIT PIN ISO 1234 5X45 ST A2 | 43 30 066 08 | 8 | 3 | 1 630 002 | 99 06 183 14 | TRANSPORT SUPPORT |
| SPLIT PIN ISO 1234 6,3X50 St 4 | 10 18 036 4 | 21 | 2 | 2 500 | 91 48 594 08 | CRANE DRIVER'S CABIN CPL. |
| SPLIT PIN ISO 1234 6,3X50 St 4 | 10 18 036 4 | 5 | 1 | 3 510 006 | 96 20 924 08 | FOLDING BRACKET |
| SPLIT PIN ISO 1234 8X63 ST A2 | 43 30 090 08 | 36 | 2 | 3 501 | 91 05 788 08 | MECH. DOUBLE FOLD JIB PR |
| SPLIT PIN ISO 1234 8X63 ST A2 | 43 30 090 08 | 2 | 1 | 3 511 | 91 54 159 08 | BOOM NOSE |
| SPLIT PIN ISO 1234 8X63 ST A2 | 43 30 090 08 | 9 | 1 | 3 511 006 | 96 45 029 08 | BOOM NOSE PRE-ASS. |

| Description | Item | Pos. | Quantity | Page | Assembly | Description |
|---|---|---|---|---|---|---|
| SPOUT 6,5/6,5/2 GUMMI | 59 10 555 08 | 27 | 2 | 2 520 000 | 91 49 872 08 | CABIN, GLAZED |
| SPRAY BOTTLE | 10 04 511 8 | (999) | 1 | 6 923 101 | 69 23 101 08 | ROPE LENGTH INDICATOR |
| SPRAY NOZZLE | 59 10 547 08 | 2 | 1 | 2 520 101 | 96 49 682 08 | SPRAY NOZZLE |
| SPRAY NOZZLE | 96 49 682 08 | 82 | 1 | 2 520 000 | 91 49 872 08 | CABIN, GLAZED |
| SPRING CUP ABOVE 41Cr4 | 90 74 480 | 7 | 4 | X1012036 | 10 12 036 5 | CYLINDER HEAD PRE-ASSY. |
| SPRING CUP ABOVE 41Cr4 | 90 74 480 | 7 | 4 | X1014155 | 10 14 155 5 | CYLINDER HEAD PRE-ASSY. |
| SPRING LOADED MULTI-DISC | 50 20 363 01 | 80 | 1 | 9 330 748 | 93 30 748 01 | SLEWING GEAR DRIVE |
| SPRING LOADED MULTI-DISC | 50 20 370 01 | 70 | 1 | 9 444 410 | 94 44 410 03 | TRACTION DRIVE |
| SPRING LOADED MULTI-DISC | 50 20 372 01 | 70 | 1 | 9 387 598 | 93 87 598 01 | PLANETARY GEARBOX |
| SPRING LOADED MULTI-DISC | 50 20 372 01 | 70 | 1 | 9 686 071 | 96 86 071 01 | PLANETARY GEARBOX |
| SPRING PLUG 4,5X4X78 A3C | 43 32 062 08 | 2 | 2 | 3 750 027 | 96 89 527 08 | MOUNTING HOOK ROD |
| SPRING PLUG B 7 VERZ | 43 32 066 08 | 4 | 8 | 1 300 005 | 99 17 196 14 | CRAWLER OUTFIT |
| SPRING PLUG DIN 11024 3.2 | 43 32 061 14 | 13 | 4 | 1 740 010 | 96 50 675 08 | MOUNTING PARTS |
| SPRING SET | 10 49 007 2 | 30 | 1 | 6 923 101 | 69 23 101 08 | ROPE LENGTH INDICATOR |
| SPRING SUPPORT | 51 07 970 08 | 3 | 1 | 5 114 177 | 51 14 177 08 | PRESSURE LIMITING VALVE |
| SPRING SUPPORT | 57 01 108 08 | 6 | 1 | 5 701 095 | 57 01 095 08 | DRIVING GEAR |
| SPRING WASHER DIN 137 10 | 10 41 109 3 | 6 | 2 | X1021997 | 10 21 997 8 | STARTER |
| SPRING WASHER DIN 137 10 | 10 41 109 3 | 6 | 2 | X1138664 | 11 38 664 4 | STARTER PRE-ASSY. |
| SPRING WASHER DIN 137 6 X1 | 10 41 109 2 | 4 | 1 | X1021997 | 10 21 997 8 | STARTER |
| SPRING WASHER DIN 137 6 X1 | 10 41 109 2 | 4 | 1 | X1138664 | 11 38 664 4 | STARTER PRE-ASSY. |
| SPRING WASHER DIN 137 B 2 | 42 50 514 08 | 62 | 8 | 3 102 000 | 91 62 543 08 | TELESCOPIC SECTION 1 PRE |
| SPRING WASHER DIN 137 B 2 | 42 50 514 08 | 62 | 8 | 3 103 000 | 91 62 544 08 | TELESCOPIC SECT.2 PRE-AS |
| SPRING WASHER DIN 137 B 2 | 42 50 514 08 | 62 | 8 | 3 104 000 | 91 62 545 08 | TELESCOPIC SECT.3 PRE-ASS |
| SPRING WASHER DIN 137 B 2 | 42 50 514 08 | 62 | 8 | 3 105 000 | 91 62 546 08 | TELESCOPIC SECT.IV PRE-A |
| SPRING WASHER DIN 137 B 2 | 42 50 514 08 | 41 | 4 | 3 106 000 | 91 60 313 08 | TELESCOPIC SECT.5 PRE-AS |
| SPRING-LOADED LOCK VERZ | 70 42 111 08 | 99 | 1 | 2 520 000 | 91 49 872 08 | CABIN, GLAZED |
| SPRING-LOADED PIN | 51 07 973 08 | 6 | 1 | 5 114 177 | 51 14 177 08 | PRESSURE LIMITING VALVE |
| STAND | 70 42 290 08 | 20 | 2 | 2 501 000 | 91 48 769 08 | CRANE DRIVER'S CABIN,PRE |
| STAND PIPE 27X111X113,5 | 92 75 213 01 | 5 | 1 | 9 275 212 | 92 75 212 01 | OIL-LEVEL GAUGE INSTALLAT |
| STARTER 7.8KW 24V | 10 21 997 8 | 1 | 1 | X1011553 | 10 11 553 9 | STARTER INSTALLATION |
| STARTER INSTALLATION 7.8K | 10 11 553 9 | 450 | 1 | X1015207 | 10 15 207 7 | DIESEL ENGINE |
| STARTER PRE-ASSY. 7.8KW 24 | 11 38 664 4 | 1 | 1 | X1011553 | 10 11 553 9 | STARTER INSTALLATION |
| STEEL BALL DIN 5401 15 | 74 70 038 01 | 28 | 1 | 9 387 598 | 93 87 598 01 | PLANETARY GEARBOX |
| STEEP-ANGLE BEARING DIN 6 | 10 01 360 1 | 3 | 1 | 9 387 598 | 93 87 598 01 | PLANETARY GEARBOX |
| STEEP-ANGLE BEARING DIN 6 | 10 01 360 1 | 3 | 1 | 9 686 071 | 96 86 071 01 | PLANETARY GEARBOX |
| STEP | 10 09 916 1 | 1 | 1 | 1 300 010 | 99 14 563 14 | ACCESS COMPL |
| STICKER | 10 66 390 9 | (1) | 1 | X1032706 | 10 32 706 5 | ELECTRIC PUMP |
| STICKER BEHAELTER 2,5KG | 96 74 218 08 | 30 | 1 | X1032706 | 10 32 706 5 | ELECTRIC PUMP |
| STOP PLUG | 10 87 318 0 | 62 | 5 | X1041191 | 10 41 191 3 | SHEET |
| STOP PLUG VSTI 1 1/4" | 11 00 269 6 | 67 | 1 | X1047529 | 10 47 529 1 | VALVE BLOCK |
| STOP PLUG VSTI 1 1/4" | 11 00 269 6 | 67 | 1 | X1047529 | 10 47 529 2 | VALVE BLOCK |
| STOP PLUG VSTI M12X1,5 A3P | 47 77 043 08 | 607 | 1 | 2 950 | 91 49 515 08 | COMPRESSED-AIR SYST.SU |
| STOP PLUG VSTI M12X1,5 A3P | 47 77 043 08 | 604 | 2 | 2 955 | 91 49 516 08 | PNEUM. CRANE OPERATORS |
| STOP PLUG VSTI M12X1,5 A3P | 47 77 043 08 | 22 | 1 | 9 387 070 | 93 87 070 01 | COMPACT ROPE WINCH |
| STOP PLUG VSTI M12X1,5 A3P | 47 77 043 08 | 22 | 1 | 9 685 586 | 96 85 586 01 | COMPACT ROPE WINCH |
| STOP PLUG VSTI1/2"ED A3P | 47 77 042 08 | 704 | 2 | 1 970 | 96 71 367 08 | UNDERCARRIAGE HYDRAULIC |
| STOP PLUG VSTI1/2"ED A3P | 47 77 042 08 | 4 | 1 | X1029358 | 10 29 358 6 | LOWERING BRAKE VALVE |
| STOP PLUG VSTI1/2"ED A3P | 47 77 042 08 | 100 | 1 | X1033367 | 10 33 367 2 | CONTROL BLOCK |
| STOP PLUG VSTI1/2"ED A3P | 47 77 042 08 | 170 | 2 | X1033367 | 10 33 367 2 | CONTROL BLOCK |
| STOP PLUG VSTI1/2"ED A3P | 47 77 042 08 | 48 | 2 | X1080297 | 10 80 297 1 | VALVE BLOCK |
| STOP PLUG VSTI1/8"ED ST A3 | 51 07 415 08 | 17 | 1 | 5 123 931 | 51 23 931 08 | PNEUMATIC CYLINDER |
| STOP PLUG VSTI1/8"ED ST A3 | 51 07 415 08 | 61 | 3 | X1029147 | 10 29 147 4 | CONTROL BLOCK |
| STOP PLUG VSTI1/8"ED ST A3 | 51 07 415 08 | 110 | 2 | X1033367 | 10 33 367 2 | CONTROL BLOCK |
| STOP PLUG VSTI1/8"ED ST A3 | 51 07 415 08 | 61 | 4 | X1041191 | 10 41 191 3 | SHEET |
| STOP PLUG VSTI1/8"ED ST A3 | 51 07 415 08 | 61 | 3 | X1047529 | 10 47 529 1 | VALVE BLOCK |
| STOP PLUG VSTI1/8"ED ST A3 | 51 07 415 08 | 61 | 4 | X1047529 | 10 47 529 2 | VALVE BLOCK |
| STOP PLUG VSTI1/8"ED ST A3 | 51 07 415 08 | 45 | 5 | X1080297 | 10 80 297 1 | VALVE BLOCK |
| STOP PLUG VSTI11/4"ED A3P | 47 77 054 08 | 67 | 1 | X1029147 | 10 29 147 4 | CONTROL BLOCK |
| STOP PLUG VSTI3/4"ED A3P | 47 77 047 08 | 65 | 1 | X1029147 | 10 29 147 4 | CONTROL BLOCK |
| STOP PLUG VSTI3/4"ED A3P | 47 77 047 08 | 65 | 1 | X1047529 | 10 47 529 1 | VALVE BLOCK |

| Description | Item | Pos. | Quantity | Page | Assembly | Description |
|---|---|---|---|---|---|---|
| STOP PLUG VSTI3/4"ED A3P | 47 77 047 08 | 65 | 2 | X1047529 | 10 47 529 2 | VALVE BLOCK |
| STOP PLUG VSTI3/8"ED A3P | 47 77 041 08 | 705 | 1 | 1 970 | 96 71 367 08 | UNDERCARRIAGE HYDRAULIC |
| STOP PLUG VSTI3/8"ED A3P | 47 77 041 08 | 160 | 1 | X1033367 | 10 33 367 2 | CONTROL BLOCK |
| STOP PLUG VSTIM14X1,5ED | 47 77 049 08 | 2 | 4 | 9 330 748 | 93 30 748 01 | SLEWING GEAR DRIVE |
| STOP PLUG VSTIM16X1,5ED | 47 77 044 08 | 21 | 2 | 9 387 070 | 93 87 070 01 | COMPACT ROPE WINCH |
| STOP PLUG VSTIM18X1,5ED | 47 77 051 08 | 6 | 2 | 2 270 001 | 96 37 923 08 | FUEL TANK, PRE-ASSEMBLED |
| STOP PLUG VSTIM22X1,5ED | 47 77 045 08 | 78 | 1 | 9 330 748 | 93 30 748 01 | SLEWING GEAR DRIVE |
| STOP PLUG VSTIM22X1,5ED | 47 77 045 08 | 28 | 1 | 9 393 684 | 93 93 684 01 | OIL-GAUGING INSTRUMENT |
| STOP PLUG VSTIM22X1,5ED | 47 77 045 08 | 3 | 1 | X1029358 | 10 29 358 6 | LOWERING BRAKE VALVE |
| STOP PLUG VSTIM27X2ED A3 | 47 77 056 08 | 87 | 2 | 9 330 748 | 93 30 748 01 | SLEWING GEAR DRIVE |
| STOP PLUG VSTIM33X2ED A3 | 47 77 052 08 | 23 | 1 | 2 340 004 | 96 43 780 08 | OIL TANK PRE-ASS. |
| STOPPER PLUG BAUREIHE_M | 60 45 189 08 | (151) | 3 | 3 930 492 | 96 20 966 08 | TERMINAL BOX CPL. |
| STOPPER PLUG BAUREIHE_M | 60 45 189 08 | 13 | 2 | 6 923 101 | 69 23 101 08 | ROPE LENGTH INDICATOR |
| STOPPER PLUG PG29 MS | 60 25 016 08 | 111 | 1 | 2 932 042 | 96 68 587 08 | BASE ASSEMBLY |
| STOPPER PLUG VSTI1/4"ED A3 | 47 77 040 08 | 1 | 2 | 5 113 199 | 51 13 199 08 | LOWERING BRAKE VALVE |
| STOPPER PLUG VSTI1/4"ED A3 | 47 77 040 08 | 17 | 6 | 5 114 869 | 51 14 869 08 | CONTROL PLATE |
| STOPPER PLUG VSTI1/4"ED A3 | 47 77 040 08 | 2 | 2 | X1029358 | 10 29 358 6 | LOWERING BRAKE VALVE |
| STOPPER PLUG VSTI1/4"ED A3 | 47 77 040 08 | 120 | 4 | X1033367 | 10 33 367 2 | CONTROL BLOCK |
| STOPPER PLUG VSTI1/4"ED A3 | 47 77 040 08 | 62 | 1 | X1047529 | 10 47 529 2 | VALVE BLOCK |
| STOPPER PLUG VSTI1/4"ED A3 | 47 77 040 08 | 46 | 4 | X1080297 | 10 80 297 1 | VALVE BLOCK |
| STOPPER PLUG VSTIM10X1E | 47 77 055 08 | 23 | 2 | 9 387 070 | 93 87 070 01 | COMPACT ROPE WINCH |
| STOPPER PLUG VSTIM10X1E | 47 77 055 08 | 23 | 3 | 9 685 586 | 96 85 586 01 | COMPACT ROPE WINCH |
| STOPPING WEDGE | 97 01 940 08 | 45 | 1 | 2 522 | 91 10 037 08 | DOOR CPL. |
| STOPPING WEDGE 28X35X80 | 95 67 459 08 | 120 | 1 | 2 520 000 | 91 49 872 08 | CABIN, GLAZED |
| STRAINER FILTER | 10 34 659 9 | (1) | 1 | 2 970 | 91 55 482 08 | HYDRAULICS |
| STRAINER FILTER | 10 34 659 9 | 1 | 1 | X1029358 | 10 29 358 6 | LOWERING BRAKE VALVE |
| STRAND 1 0,35 | 60 04 409 08 | 22 | 20 | 2 932 119 | 96 46 061 08 | SWING FRAME RELAY CONT |
| SUBPLATE | 59 16 694 08 | 5 | 1 | 2 540 | 91 45 984 08 | HEATING, CRANE CABIN |
| SUCTION FLANGE | 51 01 462 08 | 451 | 1 | 2 210 008 | 96 48 137 08 | RADIATOR, PRE-ASSEMBLED |
| SUCTION PIPE OIL | 97 45 587 08 | 204 | 1 | 2 210 | 91 81 614 08 | DRIVE ASSEMBLY, PRE-ASSE |
| SUCTION PIPE OIL G-ALSI10M | 97 30 210 08 | 8 | 1 | 2 340 004 | 96 43 780 08 | OIL TANK PRE-ASS. |
| SUCTION PIPE OIL SPF | 97 38 614 08 | 203 | 1 | 2 210 | 91 81 614 08 | DRIVE ASSEMBLY, PRE-ASSE |
| SUN WHEEL M=2 Z=24 | 93 92 516 01 | 45 | 1 | 9 330 748 | 93 30 748 01 | SLEWING GEAR DRIVE |
| SUN WHEEL M=2 Z=24 | 93 92 517 01 | 60 | 1 | 9 330 748 | 93 30 748 01 | SLEWING GEAR DRIVE |
| SUN WHEEL M=2,25 Z=24 | 93 92 514 01 | 30 | 1 | 9 330 748 | 93 30 748 01 | SLEWING GEAR DRIVE |
| SUN WHEEL M=2,25 Z=42 | 93 87 604 01 | 45 | 1 | 9 686 071 | 96 86 071 01 | PLANETARY GEARBOX |
| SUN WHEEL M=4 Z=21 | 92 76 019 01 | 25 | 1 | 9 686 071 | 96 86 071 01 | PLANETARY GEARBOX |
| SUN WHEEL M=4 Z=28 | 92 76 029 01 | 35 | 1 | 9 686 071 | 96 86 071 01 | PLANETARY GEARBOX |
| SUN WHEEL M=5 Z=19 | 90 20 199 1 | 30 | 1 | 9 444 410 | 94 44 410 03 | TRACTION DRIVE |
| SUN WHEEL M=5 Z=24 | 94 44 416 03 | 20 | 1 | 9 444 410 | 94 44 410 03 | TRACTION DRIVE |
| SUPPORT BED | 70 42 781 08 | 51 | 2 | 2 501 000 | 91 48 769 08 | CRANE DRIVER'S CABIN,PRE |
| SUPPORT BED 0 PA6G | 28 81 998 08 | 14 | 1 | 2 520 001 | 92 48 796 08 | FRONT WINDOW CPL. |
| SUPPORT BED 1X200X70 DC0 | 94 93 614 08 | 2 | 1 | 3 500 | 91 05 776 08 | DOUBLE FOLDING JIB MECH. |
| SUPPORT BED 1X200X70 DC0 | 94 93 614 08 | 44 | 1 | 3 510 100 | 91 49 246 08 | TRANSPORT MOUNTING |
| SUPPORT BED 1X280X70 DC0 | 94 93 809 08 | 4 | 1 | 3 500 | 91 05 776 08 | DOUBLE FOLDING JIB MECH. |
| SUPPORT BED 1X280X70 DC0 | 94 93 809 08 | 46 | 1 | 3 510 100 | 91 49 246 08 | TRANSPORT MOUNTING |
| SUPPORT BED 2X200X70 DC0 | 94 93 622 08 | 3 | 1 | 3 500 | 91 05 776 08 | DOUBLE FOLDING JIB MECH. |
| SUPPORT BED 2X200X70 DC0 | 94 93 622 08 | 45 | 1 | 3 510 100 | 91 49 246 08 | TRANSPORT MOUNTING |
| SUPPORT BED 2X280X70 DC0 | 94 93 810 08 | 5 | 1 | 3 500 | 91 05 776 08 | DOUBLE FOLDING JIB MECH. |
| SUPPORT BED 2X280X70 DC0 | 94 93 810 08 | 47 | 1 | 3 510 100 | 91 49 246 08 | TRANSPORT MOUNTING |
| SUPPORT FLANGE | 93 87 606 01 | 50 | 1 | 9 686 071 | 96 86 071 01 | PLANETARY GEARBOX |
| SUPPORT PLATE S235JR | 90 73 189 | 14 | 2 | X1011573 | 10 11 573 7 | FUEL LINES |
| SUPPORT PLATE S235JR | 90 73 189 | 12 | 1 | X1011793 | 10 11 793 0 | ACCESSORIES AIR COMPRES |
| SUPPORT PLATE S235JR | 90 73 190 | 15 | 4 | X1011573 | 10 11 573 7 | FUEL LINES |
| SUPPORT PLATE S235JR | 90 73 190 | 14 | 1 | X1011793 | 10 11 793 0 | ACCESSORIES AIR COMPRES |
| SUPPORT TRESTLE | 60 27 360 08 | 205 | 2 | 3 930 718 | 96 56 248 08 | TERMINAL BOX CPL. |
| SUPPORTING RING | 51 17 101 14 | (1) | 1 | 1 970 | 96 71 367 08 | UNDERCARRIAGE HYDRAULIC |
| SUPPORTING RING | 51 17 101 14 | (1) | 1 | 1 970 | 96 71 367 08 | UNDERCARRIAGE HYDRAULIC |
| SUPPORTING RING | 51 17 102 14 | (1) | 1 | 1 970 | 96 71 367 08 | UNDERCARRIAGE HYDRAULIC |
| SUPPORTING RING | 51 17 102 14 | (1) | 1 | 1 970 | 96 71 367 08 | UNDERCARRIAGE HYDRAULIC |

| Description | Item | Pos. | Quantity | Page | Assembly | Description |
|---|---|---|---|---|---|---|
| SUPPORTING RING | 79 02 725 14 | 4 | 1 | 1 100 213 | 74 90 654 14 | TENSION JACK HYDR CPL |
| SUPPORTING RING 17,5X20,9 | 57 10 828 08 | (4) | 1 | 2 970 | 91 55 482 08 | HYDRAULICS |
| SUPPORTING RING AlMgSi0,5 | 92 75 735 | 3 | 2 | 9 075 678 | 90 75 678 | THERMOSTAT HOUSING ASS |
| SUPPORTING WASHER AEHN | 42 20 119 01 | 32 | 3 | 9 444 410 | 94 44 410 03 | TRACTION DRIVE |
| SUPPORTING WASHER DIN 9 | 42 20 010 01 | 5 | 1 | 9 074 505 | 90 74 505 | ROCKER ARM BRACKET PRE |
| SUPPORTING WASHER DIN 98 | 50 09 001 | 11 | 1 | 5 923 269 | 59 23 269 14 | VARIABLE DISPLACEMENT MO |
| SURFACE SEALING 300ML KA | 10 35 459 5 | 100 | 1 | X1012414 | 10 12 414 0 | OIL SUMP WITH FASTENING |
| SWING FRAME FUSE AND RE | 96 46 064 08 | 13 | 1 | 2 932 042 | 96 68 587 08 | BASE ASSEMBLY |
| SWING FRAME RELAY CONTR | 96 46 061 08 | 5 | 1 | 2 920 | 91 68 959 08 | SWITCHBOX MOUNTING PART |
| SWITCHBOX MOUNTING PART | 91 68 959 08 | 181 | 1 | | LTR 1100 -0 | LIEBHERR LTR 1100 |
| SWITCHING ELEMENT | 69 27 014 08 | 7 | 1 | 2 913 003 | 96 20 599 08 | FOIL KEYPAD PRE-ASS. |
| SWIVEL ELBOW | 59 10 510 08 | 29 | 1 | 2 520 000 | 91 49 872 08 | CABIN, GLAZED |
| SWIVEL SCREW JOINT DG105 | 47 42 340 08 | 2 | 3 | 2 975 152 | 91 05 737 08 | HYDR.F.TELESCOPIC BOOM |
| SWIVEL-JOINT ROLLER BEARI | 54 05 090 08 | 20 | 1 | 9 387 596 | 93 87 596 01 | ROPE DRUM |
| SYMBOL INSERT | 60 67 606 08 | 152 | 2 | 1 780 182 | 92 01 827 08 | ELECTR. FOR AIR-CONDITION |
| SYMBOL INSERT | 60 67 617 08 | 43 | 1 | 2 533 001 | 96 41 568 08 | DASHBOARD ROOF, PRE-AS |
| SYMBOL INSERT | 60 67 633 08 | 267 | 1 | 1 780 182 | 92 01 827 08 | ELECTR. FOR AIR-CONDITION |
| SYMBOL INSERT | 60 67 633 08 | 17 | 1 | 2 533 001 | 96 41 568 08 | DASHBOARD ROOF, PRE-AS |
| SYMBOL INSERT | 60 67 643 08 | 37 | 1 | 2 533 001 | 96 41 568 08 | DASHBOARD ROOF, PRE-AS |
| SYMBOL INSERT | 60 67 669 08 | 30 | 2 | 2 533 001 | 96 41 568 08 | DASHBOARD ROOF, PRE-AS |
| SYMBOL INSERT | 60 67 671 08 | 28 | 1 | 2 533 001 | 96 41 568 08 | DASHBOARD ROOF, PRE-AS |
| SYMBOL INSERT | 60 67 701 08 | 25 | 1 | 2 533 001 | 96 41 568 08 | DASHBOARD ROOF, PRE-AS |
| SYMBOL INSERT | 60 67 702 08 | 23 | 1 | 2 533 001 | 96 41 568 08 | DASHBOARD ROOF, PRE-AS |
| SYMBOL INSERT | 60 67 718 08 | 26 | 1 | 2 533 001 | 96 41 568 08 | DASHBOARD ROOF, PRE-AS |
| SYMBOL INSERT | 60 67 725 08 | 31 | 1 | 2 533 001 | 96 41 568 08 | DASHBOARD ROOF, PRE-AS |
| SYMBOL INSERT | 60 67 757 08 | 29 | 1 | 2 533 001 | 96 41 568 08 | DASHBOARD ROOF, PRE-AS |
| SYMBOL INSERT | 60 67 770 08 | 46 | 1 | 2 533 001 | 96 41 568 08 | DASHBOARD ROOF, PRE-AS |
| SYMBOL INSERT | 60 67 784 08 | 24 | 1 | 2 533 001 | 96 41 568 08 | DASHBOARD ROOF, PRE-AS |
| SYMBOL INSERT | 60 67 817 08 | 38 | 1 | 2 533 001 | 96 41 568 08 | DASHBOARD ROOF, PRE-AS |
| SYMBOL INSERT | 60 67 827 08 | 32 | 1 | 2 533 001 | 96 41 568 08 | DASHBOARD ROOF, PRE-AS |
| SYMBOL INSERT | 60 67 914 08 | 44 | 1 | 2 533 001 | 96 41 568 08 | DASHBOARD ROOF, PRE-AS |
| SYNTHETIC FOAM 40x40x2000 | 28 39 069 08 | 148 | 0.8 | 2 520 000 | 91 49 872 08 | CABIN, GLAZED |
| TALLOW-DROP SCREW 4X10 1 | 10 87 579 5 | 24 | 1 | 5 530 022 | 55 30 022 08 | WATER HEATING SYSTEM |
| TANK SENSOR L=1200 24V SP | 78 90 156 08 | 2 | 1 | 2 270 001 | 96 37 923 08 | FUEL TANK, PRE-ASSEMBLED |
| TAPER | 51 07 921 08 | 4 | 1 | 5 711 301 | 57 11 301 08 | PRESSURE LIMITING VALVE |
| TAPER | 51 07 921 08 | 2 | 1 | 5 718 895 | 57 18 895 08 | PRESSURE VALVE |
| TAPERED ROLLER BEARING | 10 29 377 5 | 10 | 1 | 5 701 090 | 57 01 090 08 | DRIVING GEAR |
| TAPERED ROLLER BEARING | 74 62 014 08 | 12 | 1 | 9 330 748 | 93 30 748 01 | SLEWING GEAR DRIVE |
| TAPERED ROLLER BEARING | 74 62 219 08 | 11 | 1 | 5 701 090 | 57 01 090 08 | DRIVING GEAR |
| TAPERED ROLLER BEARING | 57 14 654 08 | 3 | 1 | 9 330 748 | 93 30 748 01 | SLEWING GEAR DRIVE |
| TAPERED SOCKET DIN 6319 | 10 87 586 2 | 41 | 1 | 3 510 100 | 91 49 246 08 | TRANSPORT MOUNTING |
| TAPPET PUSH ROD | 90 79 131 | 3 | 2 | 9 079 870 | 90 79 870 | CONTROL PARTS |
| TEE 18X18 L=75 GELB GEBR. | 55 31 281 08 | 44 | 1 | 2 540 | 91 45 984 08 | HEATING, CRANE CABIN |
| TEFLON HOSE DN16 750 CR6 | 51 05 005 08 | 4 | 1 | 2 950 | 91 49 515 08 | COMPRESSED-AIR SYST.SU |
| TELEDIAGNOSIS MODULE 1 | 91 60 938 08 | 410 | 1 | | LTR 1100 -0 | LIEBHERR LTR 1100 |
| TELESC.OUTRIGGER LINKS | 10 22 427 8 | 2 | 2 | 1 100 215 | 99 20 783 14 | CENTRE PIECE |
| TELESC.OUTRIGGER RECHTS | 10 22 427 9 | 3 | 2 | 1 100 215 | 99 20 783 14 | CENTRE PIECE |
| TELESCOPIC BOOM CPL. | 91 59 279 08 | 201 | 1 | | LTR 1100 -0 | LIEBHERR LTR 1100 |
| TELESCOPIC CYLINDER 180/1 | 10 47 300 1 | 1 | 1 | 3 330 | 91 57 885 08 | MECHANICAL EXTENSION SYS |
| TELESCOPIC SECT.2 PRE-AS | 91 62 544 08 | 3 | 1 | 3 100 | 91 59 279 08 | TELESCOPIC BOOM CPL. |
| TELESCOPIC SECT.2 WELD.C | 91 45 070 08 | 1 | 1 | 3 103 000 | 91 62 544 08 | TELESCOPIC SECT.2 PRE-AS |
| TELESCOPIC SECT.3 PRE-ASS | 91 62 545 08 | 4 | 1 | 3 100 | 91 59 279 08 | TELESCOPIC BOOM CPL. |
| TELESCOPIC SECT.3 WELD. | 91 45 071 08 | 1 | 1 | 3 104 000 | 91 62 545 08 | TELESCOPIC SECT.3 PRE-ASS |
| TELESCOPIC SECT.4 WELD.C | 91 45 072 08 | 1 | 1 | 3 105 000 | 91 62 546 08 | TELESCOPIC SECT.IV PRE-A |
| TELESCOPIC SECT.5 PRE-ASS | 91 60 313 08 | 6 | 1 | 3 100 | 91 59 279 08 | TELESCOPIC BOOM CPL. |
| TELESCOPIC SECT.5 WELD. | 91 62 607 08 | 1 | 1 | 3 106 000 | 91 60 313 08 | TELESCOPIC SECT.5 PRE-AS |
| TELESCOPIC SECT.IV PRE-AS | 91 62 546 08 | 5 | 1 | 3 100 | 91 59 279 08 | TELESCOPIC BOOM CPL. |
| TELESCOPIC SECTION 1 PRE- | 91 62 543 08 | 2 | 1 | 3 100 | 91 59 279 08 | TELESCOPIC BOOM CPL. |
| TELESCOPIC SECTION 1 WE | 91 45 069 08 | 1 | 1 | 3 102 000 | 91 62 543 08 | TELESCOPIC SECTION 1 PRE |
| TEMPER. SENSOR HYDRAULI | 96 20 863 08 | 62 | 1 | 2 970 | 91 55 482 08 | HYDRAULICS |

| Description | Item | Pos. | Quantity | Page | Assembly | Description |
|---|---|---|---|---|---|---|
| TEMPERATURE PROBE CPL. | 90 76 530 | 451 | 1 | 2 210 | 91 81 614 08 | DRIVE ASSEMBLY, PRE-ASSE |
| TEMPERATURE PROBE CPL. | 90 76 530 | 2 | 1 | X1011969 | 10 11 969 8 | ENGINE CONTROL SENSORS |
| TEMPERATURE SENSOR | 62 90 130 | 1 | 2 | X1011969 | 10 11 969 8 | ENGINE CONTROL SENSORS |
| TEMPERATURE SENSOR -30/+ | 69 11 831 08 | (1) | 1 | 2 970 | 91 55 482 08 | HYDRAULICS |
| TEMPERATURE SENSOR -50/+ | 10 80 026 6 | 4 | 1 | 2 780 870 | 91 70 947 08 | CHARGE VOLTAGE REGULA |
| TEMPERATURE SENSOR SPF | 69 11 806 08 | 1 | 1 | 9 076 530 | 90 76 530 | TEMPERATURE PROBE CPL. |
| TENSION FLANGE 47X2220 | 10 33 448 8 | 107 | 1 | 2 510 100 | 96 44 750 08 | SLEWING PLATFORM PANELLI |
| TENSION JACK HYDR CPL | 74 90 654 14 | 3 | 1 | 1 100 212 | 79 02 561 14 | GUIDE WHEEL UNIT CPL |
| TENSION PLATE PRE-ASS. | 96 30 554 08 | 35 | 1 | 2 501 000 | 91 48 769 08 | CRANE DRIVER'S CABIN,PRE |
| TENSION SPRING | 72 01 085 08 | 24 | 1 | 2 522 | 91 10 037 08 | DOOR CPL. |
| TERMINAL BOARD PRE-ASS. | 92 26 483 08 | 15 | 1 | 2 932 042 | 96 68 587 08 | BASE ASSEMBLY |
| TERMINAL BOX CPL. S413 | 96 56 248 08 | 5 | 1 | 3 930 342 | 96 56 247 08 | ELECTRIC F.BASE SECTION |
| TERMINAL BOX CPL. S417 | 96 20 966 08 | 5 | 1 | 3 930 341 | 96 20 965 08 | ELECTR. FOR HEAD SECTION |
| TERMINAL BOX, PRE-ASSEMB | 96 46 921 08 | 2 | 1 | 1 920 307 | 96 46 916 08 | ELECTR.FOR CENTER SECTIO |
| TERMINAL DISK | 78 65 206 14 | 7 | 2 | 1 300 007 | 79 02 584 14 | CRAWLER CHAIN CPL |
| TERMINAL MARKER 0,2-2,5MM | 60 27 616 08 | 2 | 2 | 2 932 167 | 96 32 480 08 | TERMINAL STRIP |
| TERMINAL RING | 94 42 287 03 | 60 | 1 | 9 444 410 | 94 44 410 03 | TRACTION DRIVE |
| TERMINAL STRIP | 96 32 480 08 | 16 | 1 | 2 932 042 | 96 68 587 08 | BASE ASSEMBLY |
| TERMINAL/CLAMP 6,3/2,8X0,8 | 10 28 635 4 | 11 | 23 | 1 920 314 | 96 46 921 08 | TERMINAL BOX, PRE-ASSEMB |
| TERMINAL/CLAMP 6,3/2,8X0,8 | 10 28 635 4 | 5 | 2 | 2 932 167 | 96 32 480 08 | TERMINAL STRIP |
| TERMINAL/CLAMP 6,3/2,8X0,8 | 10 28 635 4 | 297 | 15 | 3 930 492 | 96 20 966 08 | TERMINAL BOX CPL. |
| TERMINAL/CLAMP 6,3/2,8X0,8 | 10 28 635 4 | 204 | 21 | 3 930 718 | 96 56 248 08 | TERMINAL BOX CPL. |
| TESA-TAPE GREY OR WHITE 1 | 60 32 019 08 | (205) | 0.01 | 2 932 042 | 96 68 587 08 | BASE ASSEMBLY |
| TEST CONNECTION A3P | 47 56 009 08 | 604 | 2 | 2 950 | 91 49 515 08 | COMPRESSED-AIR SYST.SU |
| TEST POINT FITTING BMA3 6S | 47 56 015 08 | 632 | 9 | 2 970 | 91 55 482 08 | HYDRAULICS |
| TEST POINT FITTING BMA3 6S | 47 56 015 08 | 626 | 1 | 2 971 | 91 50 610 08 | HYDR.AUXILIARY HOISTING |
| TEST POINT FITTING EMA3 G1 | 47 56 026 08 | 644 | 3 | 2 970 | 91 55 482 08 | HYDRAULICS |
| THERMAL SWITCH SCHALTEN | 69 11 832 08 | (2) | 1 | 2 984 | 91 52 906 08 | OIL COOLER INSTALLATION |
| THERMOSTAT | 57 18 677 08 | 11 | 1 | 5 531 882 | 55 31 882 08 | AIR COND. EVAPORATOR RFK |
| THERMOSTAT | 73 80 833 | 2 | 2 | 9 075 678 | 90 75 678 | THERMOSTAT HOUSING ASS |
| THERMOSTAT HOUSING ASSE | 90 75 678 | 380 | 1 | X1015207 | 10 15 207 7 | DIESEL ENGINE |
| THERMOSTAT HOUSING PRE | 10 11 998 4 | 1 | 1 | 9 075 678 | 90 75 678 | THERMOSTAT HOUSING ASS |
| THIMBLE AND CLAMP | 57 18 513 08 | 7 | 1 | 6 923 101 | 69 23 101 08 | ROPE LENGTH INDICATOR |
| THREAD LOCK 50ML FLASCH | 81 12 080 01 | 109 | 1 | 9 074 165 | 90 74 165 | BALANCER ASSEMBLY |
| THREADED BUSHING | 90 79 078 | 9 | 1 | X1012038 | 10 12 038 3 | CYLINDER HEAD |
| THREADED CARRIER FE//ZNNI | 96 30 622 08 | 8 | 1 | 2 510 100 | 96 44 750 08 | SLEWING PLATFORM PANELLI |
| THREADED CARRIER FE//ZNNI | 96 30 654 08 | 9 | 1 | 2 510 100 | 96 44 750 08 | SLEWING PLATFORM PANELLI |
| THREADED PIN DIN 976-1 M5 | 66 00 416 08 | 14 | 1 | 2 922 001 | 92 84 311 08 | BUS PCB |
| THREADED PIN RD35X94.5 S3 | 97 04 469 08 | 13 | 3 | 2 102 | 91 51 080 08 | ASSEMBLY PARTS F.SLEWING |
| THREADED PIN RD8X96 8.8 V | 95 37 301 08 | 59 | 2 | 2 932 042 | 96 68 587 08 | BASE ASSEMBLY |
| THREADED PLATE | 70 42 737 08 | 70 | 1 | 2 520 000 | 91 49 872 08 | CABIN, GLAZED |
| THREADED PLATE 15X40X130 | 95 31 477 08 | 7 | 1 | 3 510 100 | 91 49 246 08 | TRANSPORT MOUNTING |
| THREADED PLATE 15X45X300 | 94 93 808 08 | 6 | 2 | 3 510 100 | 91 49 246 08 | TRANSPORT MOUNTING |
| THREADED PLATE 20X40X315 | 97 49 111 08 | 20 | 1 | 3 510 100 | 91 49 246 08 | TRANSPORT MOUNTING |
| THREADED PLATE 8X20X60 S | 95 36 953 08 | 4 | 3 | 2 510 072 | 96 44 614 08 | FLAP RIGHT PRE-ASS. |
| THREADED PLATE 8X20X60 S | 95 36 953 08 | 30 | 3 | 2 510 100 | 96 44 750 08 | SLEWING PLATFORM PANELLI |
| THREADED PLATE 8X20X60 S | 95 36 953 08 | 40 | 5 | 2 510 200 | 96 41 258 08 | SLEWING PLATFORM PANELLI |
| THREADED PLATE 8X20X60 S | 95 36 953 08 | 4 | 3 | 2 510 201 | 96 42 011 08 | FLAP PRE-ASS. |
| THREADED PLATE 8X20X60 S | 95 36 953 08 | 5 | 4 | 2 515 007 | 96 42 014 08 | PLATFORM, PRE-ASSEMBLED |
| THREADED PLATE 8X20X60 S | 95 36 953 08 | 5 | 2 | 3 750 026 | 96 89 407 08 | HOLDER LEFT |
| THREADED PLATE 8X20X60 S | 95 36 953 08 | 5 | 2 | 3 750 028 | 96 89 408 08 | HOLDER RIGHT |
| THREADED ROD DIN 975 M16X | 94 89 969 14 | 20 | 4 | 1 100 205 | 96 51 633 08 | CRAWLER CARRIER RIGHT CP |
| THREADED ROD DIN 975 M16X | 94 89 969 14 | 20 | 4 | 1 100 210 | 96 51 634 08 | CRAWLER TRACK CARRIER LE |
| THREADED ROD RD36X85 42C | 95 70 959 14 | 40 | 4 | 1 100 205 | 96 51 633 08 | CRAWLER CARRIER RIGHT CP |
| THREADED ROD RD36X85 42C | 95 70 959 14 | 40 | 4 | 1 100 210 | 96 51 634 08 | CRAWLER TRACK CARRIER LE |
| THREADED ROD RD36X95 42C | 95 70 958 14 | 43 | 4 | 1 100 205 | 96 51 633 08 | CRAWLER CARRIER RIGHT CP |
| THREADED ROD RD36X95 42C | 95 70 958 14 | 43 | 4 | 1 100 210 | 96 51 634 08 | CRAWLER TRACK CARRIER LE |
| THREE PHASE CURRENT GE | 10 32 624 3 | 1 | 1 | X1011864 | 10 11 864 6 | GENERATOR, PRE-ASSEMBLE |
| THREE-WAY TAP | 55 30 854 08 | 2 | 1 | 2 540 | 91 45 984 08 | HEATING, CRANE CABIN |
| THRUST PIECE RD40X60 42C | 95 70 957 14 | 42 | 4 | 1 100 205 | 96 51 633 08 | CRAWLER CARRIER RIGHT CP |

| Description | Item | Pos. | Quantity | Page | Assembly | Description |
|---|---|---|---|---|---|---|
| THRUST PIECE RD40X60 42C | 95 70 957 14 | 42 | 4 | 1 100 210 | 96 51 634 08 | CRAWLER TRACK CARRIER LE |
| THRUST WASHER | 57 15 823 08 | 4 | 1 | 5 700 161 | 57 00 161 | AIR COMPRESSOR |
| THRUST WASHER | 57 15 824 08 | 6 | 1 | 5 700 161 | 57 00 161 | AIR COMPRESSOR |
| THRUST WASHER | 74 90 156 14 | 40 | 1 | 1 100 211 | 74 90 653 14 | CARRYING ROLLER CPL |
| THRUST WASHER | 93 87 605 01 | 46 | 1 | 9 686 071 | 96 86 071 01 | PLANETARY GEARBOX |
| THRUST WASHER 112X138X3 | 10 11 992 7 | 3 | 2 | X1011693 | 10 11 693 9 | RS CRANKSHAFT BEARING K |
| THRUST WASHER 112X138X3 | 10 11 992 8 | 4 | 2 | X1011693 | 10 11 693 9 | RS CRANKSHAFT BEARING K |
| THRUST WASHER 260X4 | 94 44 424 03 | 36 | 1 | 9 444 410 | 94 44 410 03 | TRACTION DRIVE |
| TIGHT FIT SLEEVE 10,2X17X3 | 90 77 709 | (3) | 1 | 9 080 525 | 90 80 525 | AIR COND. COMPRESSOR A |
| TIGHT FIT SLEEVE 15,5X19,5 | 91 77 636 | 6 | 10 | X1011577 | 10 11 577 6 | CRANKCASE |
| TIGHT FIT SLEEVE 16X20X20 1 | 10 13 434 8 | 3 | 2 | X1011582 | 10 11 582 9 | FLYWHEEL HOUSING MOUNT |
| TIGHT FIT SLEEVE 16X20X20 S | 90 74 798 | 4 | 2 | 9 079 480 | 90 79 480 | POWER UNIT SUPPORT ATT |
| TIGHT FIT SLEEVE 16X20X20 S | 90 74 798 | 9 | 8 | X1011577 | 10 11 577 7 | CRANKCASE CPL. |
| TIGTENING STRAP 206/206/30 | 77 42 113 08 | 7 | 1 | 2 950 | 91 49 515 08 | COMPRESSED-AIR SYST.SU |
| TIGTENING STRAP 240-280/26 | 77 42 105 08 | 10 | 2 | 2 950 | 91 49 515 08 | COMPRESSED-AIR SYST.SU |
| TIGTENING STRAP 260,4//19 | 55 20 752 08 | 111 | 1 | 2 680 | 91 53 225 08 | EXHAUST SYSTEM CPL. |
| TILT CYLINDER 50/25-165 SPF | 10 03 908 5 | 11 | 1 | 2 500 | 91 48 594 08 | CRANE DRIVER'S CABIN CPL. |
| TIN M1 | 60 45 081 08 | 155 | 1 | 3 930 492 | 96 20 966 08 | TERMINAL BOX CPL. |
| TONGUE | 70 42 551 08 | 38 | 2 | 2 510 200 | 96 41 258 08 | SLEWING PLATFORM PANELLI |
| TONGUE | 70 42 590 08 | 4 | 4 | 2 501 022 | 96 34 184 08 | COVER COMPL. |
| TONGUE 13,5 | 70 42 573 08 | 57 | 1 | 2 932 095 | 96 46 064 08 | SWING FRAME FUSE AND RE |
| TOOLING AGENT KANISTER5L | 81 12 031 08 | 97 | 1 | 2 520 000 | 91 49 872 08 | CABIN, GLAZED |
| TOOLS | 91 75 084 08 | 352 | 1 | | LTR 1100 -0 | LIEBHERR LTR 1100 |
| TOOLS AND ACCESSORIES | 91 48 606 08 | 55 | 1 | | LTR 1100 -0 | LIEBHERR LTR 1100 |
| TOOTH LOCK WASHER 12X99 | 93 89 965 01 | 90 | 1 | 9 330 748 | 93 30 748 01 | SLEWING GEAR DRIVE |
| TOOTH LOCK WASHER DIN 6 | 42 51 004 08 | 3 | 4 | 2 913 003 | 96 20 599 08 | FOIL KEYPAD PRE-ASS. |
| TOOTH LOCK WASHER DIN 6 | 42 51 005 08 | 6 | 12 | 2 913 100 | 91 23 538 08 | ASSEMBLY FRAME |
| TOOTH LOCK WASHER DIN 6 | 42 51 005 08 | 17 | 10 | 2 922 001 | 92 84 311 08 | BUS PCB |
| TOOTH LOCK WASHER DIN 6 | 42 51 007 08 | 14 | 4 | 2 913 100 | 91 23 538 08 | ASSEMBLY FRAME |
| TOOTH LOCK WASHER DIN 6 | 42 51 009 08 | 62 | 3 | 2 533 001 | 96 41 568 08 | DASHBOARD ROOF, PRE-AS |
| TOP HAT RAIL 35X27X7,3X1 | 60 21 067 08 | 10 | 0.205 | 1 920 314 | 96 46 921 08 | TERMINAL BOX, PRE-ASSEMB |
| TOP HAT RAIL 35X27X7,3X1 | 60 21 067 08 | 38 | 0.2 | 2 932 042 | 96 68 587 08 | BASE ASSEMBLY |
| TOP HAT RAIL 35X27X7,3X1 | 60 21 067 08 | 1 | 0.15 | 2 932 167 | 96 32 480 08 | TERMINAL STRIP |
| TOP HAT RAIL 35X27X7,3X1 | 60 21 067 08 | 298 | 0.21 | 3 930 492 | 96 20 966 08 | TERMINAL BOX CPL. |
| TOP HAT RAIL 35X27X7,3X1 | 60 21 067 08 | 202 | 0.25 | 3 930 718 | 96 56 248 08 | TERMINAL BOX CPL. |
| TORSIONAL VIBRATION DAM | 10 22 810 0 | 1 | 1 | X1011578 | 10 11 578 0 | CLUTCH ASSEMBLY |
| TOUCH CONTACT TRANSMITT | 60 61 438 08 | 48 | 1 | 2 533 001 | 96 41 568 08 | DASHBOARD ROOF, PRE-AS |
| TOUCH CONTACT TRANSMITT | 60 61 446 08 | 31 | 2 | 2 932 095 | 96 46 064 08 | SWING FRAME FUSE AND RE |
| TRACK GUIDE WELDMENT SP | 96 46 508 08 | 17 | 3 | 1 100 205 | 96 51 633 08 | CRAWLER CARRIER RIGHT CP |
| TRACK GUIDE WELDMENT SP | 96 46 508 08 | 17 | 3 | 1 100 210 | 96 51 634 08 | CRAWLER TRACK CARRIER LE |
| TRACK ROLLER RD85X84 PA6 | 74 90 010 08 | 60 | 2 | 3 501 | 91 05 788 08 | MECH. DOUBLE FOLD JIB PR |
| TRACK WIDTH ADJUSTING C | 11 06 838 7 | 4 | 2 | 1 100 301 | 96 72 945 08 | INSTALLATION PARTS F.HYD |
| TRACTION DRIVE FAT 500P03 | 94 44 410 03 | 3 | 1 | 1 100 205 | 96 51 633 08 | CRAWLER CARRIER RIGHT CP |
| TRACTION DRIVE FAT 500P03 | 94 44 410 03 | 3 | 1 | 1 100 210 | 96 51 634 08 | CRAWLER TRACK CARRIER LE |
| TRANSMISSION MOTOR 24V | 10 35 514 0 | 2 | 1 | X1032706 | 10 32 706 5 | ELECTRIC PUMP |
| TRANSPARENT CONTAINER W | 10 28 018 1 | 2 | 1 | X1022282 | 10 22 282 0 | FUEL PREFILTER |
| TRANSPORT DEVICE ATTAC | 90 79 468 | 481 | 1 | X1015207 | 10 15 207 7 | DIESEL ENGINE |
| TRANSPORT DEVICE ATTACH | 90 79 823 | 480 | 1 | X1015207 | 10 15 207 7 | DIESEL ENGINE |
| TRANSPORT MOUNTING | 91 49 246 08 | 350 | 1 | | LTR 1100 -0 | LIEBHERR LTR 1100 |
| TRANSPORT SUPPORT | 99 06 183 14 | 1 | 6 | 1 670 300 | 91 49 503 08 | CRAWLER-TRACK CARRIER |
| TRANSPORTER CONSOLE S35 | 10 14 194 9 | 1 | 1 | 9 079 468 | 90 79 468 | TRANSPORT DEVICE ATTACH |
| TRANSPORTER CONSOLE S | 90 78 849 | 1 | 1 | 9 079 823 | 90 79 823 | TRANSPORT DEVICE ATTACH |
| TRAVERSE | 10 21 921 9 | 2 | 1 | X1081388 | 10 81 388 6 | CYLINDER HEAD |
| TRAVERSE | 11 49 429 8 | 3 | 1 | 4 003 006 | 91 04 457 08 | HOOK BLOCK |
| TRAVERSE 30X161X190 S690Q | 95 55 525 08 | 14 | 1 | 3 510 100 | 91 49 246 08 | TRANSPORT MOUNTING |
| TREAD ELOXIERT | 97 23 508 08 | 3 | 2 | 2 515 007 | 96 42 014 08 | PLATFORM, PRE-ASSEMBLED |
| TRIP CAM | 57 09 908 08 | 23 | 6 | 6 060 516 | 60 60 516 08 | GEAR CAM LIMITSWITCH |
| TUBE | 97 37 568 08 | 15 | 1 | 2 681 | 91 28 102 08 | AIR FILTER UNIT |
| TUBE 114,3X6,3X132 S355J2H | 95 31 623 08 | 3 | 1 | 3 280 | 91 45 571 08 | INST.BACK SHEAVE FOR BOO |
| TUBE 12X1,5X1252 E235+N | 97 33 883 08 | (299) | 1 | 2 210 | 91 81 614 08 | DRIVE ASSEMBLY, PRE-ASSE |

| Description | Item | Pos. | Quantity | Page | Assembly | Description |
|---|---|---|---|---|---|---|
| TUBE 12X1,5X598 E235+N | 97 59 237 08 | (298) | 1 | 2 210 | 91 81 614 08 | DRIVE ASSEMBLY, PRE-ASSE |
| TUBE 139.7X30 S770QL SPF | 97 72 673 08 | 14 | 4 | 1 740 010 | 96 50 675 08 | MOUNTING PARTS |
| TUBE 16.0X30 E235+N | 97 60 496 08 | 25 | 1 | 2 210 | 91 81 614 08 | DRIVE ASSEMBLY, PRE-ASSE |
| TUBE 16X2X70 E235+N VERZ | 94 61 046 08 | 14 | 2 | 2 210 | 91 81 614 08 | DRIVE ASSEMBLY, PRE-ASSE |
| TUBE 18.0X622 X5CRNI18-10 | 97 00 854 9 | 1 | 1 | 2 790 024 | 96 67 077 08 | MIRROR RETAINER PRE-ASS. |
| TUBE 30.0X77 0 X5CRNI18-10 | 95 67 938 08 | 50 | 1 | 2 520 000 | 91 49 872 08 | CABIN, GLAZED |
| TUBE 30X4X15 E355+N VERZ | 93 48 135 08 | 91 | 2 | 2 520 000 | 91 49 872 08 | CABIN, GLAZED |
| TUBE 88.9X36 S235JRH FE//ZN | 97 72 672 08 | 11 | 4 | 1 100 215 | 99 20 783 14 | CENTRE PIECE |
| TUBE DIN 73378 6X1,5 PA 12-H | 10 87 314 9 | 5 | 5 | 2 440 012 | 92 14 441 08 | CENTRAL LUBRICATING SYS |
| TUBE DIN 73378 6X1,5 PA 12-H | 10 87 314 9 | 14 | 40 | 2 711 | 91 53 002 08 | CENT. LUBRIC. SYSTEM SUP |
| TUBE RD20X5X33 ST.37.4 FE// | 95 48 362 08 | 14 | 4 | 2 502 | 91 01 533 08 | CONTROL STAND |
| TUBE ST12 SPF | 97 08 796 4 | 13 | 1 | 2 681 | 91 28 102 08 | AIR FILTER UNIT |
| TUBULAR RIVET DIN 7340 B2,5 | 44 33 003 08 | 19 | 14 | 2 922 001 | 92 84 311 08 | BUS PCB |
| TURBOCHARGER K26 | 10 32 686 8 | 1 | 1 | X1011832 | 10 11 832 6 | EXHAUST TC MOUNTING |
| TURNING KNOB | 63 50 452 08 | 40 | 1 | 2 932 095 | 96 46 064 08 | SWING FRAME FUSE AND RE |
| TURNTABLE PANELLING | 91 53 981 08 | 135 | 1 | | LTR 1100 -0 | LIEBHERR LTR 1100 |
| TWIN HOOK NR. 016-T 63t GS- | 11 34 137 5 | 30 | 1 | 4 003 006 | 91 04 457 08 | HOOK BLOCK |
| TWO-STAGE PUMP WP15 SPF | 51 21 425 08 | 102 | 1 | 2 210 | 91 81 614 08 | DRIVE ASSEMBLY, PRE-ASSE |
| TYRE INFLATING HOSE | 52 01 904 08 | 67 | 1 | 1 750 001 | 92 85 698 08 | MAIN TOOLS |
| U-PROFILE 1X1000X74 DC01 | 95 37 141 08 | 65 | 7 | 3 101 | 91 60 312 08 | PIVOT SECTION, PRE-ASSEMB |
| U-PROFILE 1X1000X98 DC01 | 95 59 272 08 | 67 | 5 | 3 101 | 91 60 312 08 | PIVOT SECTION, PRE-ASSEMB |
| U-PROFILE 1X500X74 DC01 FE | 95 37 139 08 | 34 | 1 | 3 106 000 | 91 60 313 08 | TELESCOPIC SECT.5 PRE-AS |
| U-PROFILE 1X750X98 DC01 FE | 95 67 372 08 | 66 | 1 | 3 101 | 91 60 312 08 | PIVOT SECTION, PRE-ASSEMB |
| UNDERCARRIAGE COMPLETE | 91 71 033 08 | 2 | 1 | | LTR 1100 -0 | LIEBHERR LTR 1100 |
| UNDERCARRIAGE CPL. B7B | 96 72 944 08 | 1 | 1 | 1 100 | 91 71 033 08 | UNDERCARRIAGE COMPLETE |
| UNDERCARRIAGE HYDRAULIC | 96 71 367 08 | 5 | 1 | 1 100 200 | 96 72 944 08 | UNDERCARRIAGE CPL. |
| UNION PIECE RETOUCH 20X0 | 97 42 614 08 | (2) | 2 | 2 520 000 | 91 49 872 08 | CABIN, GLAZED |
| V-RING 350 NBR,60 SHORE | 71 09 087 01 | 15 | 1 | 9 387 070 | 93 87 070 01 | COMPACT ROPE WINCH |
| V-RING 350 NBR,60 SHORE | 71 09 087 01 | 15 | 1 | 9 685 586 | 96 85 586 01 | COMPACT ROPE WINCH |
| V-RING 350 NBR,60 SHORE | 71 09 087 01 | (2) | 1 | 9 686 071 | 96 86 071 01 | PLANETARY GEARBOX |
| V-RIPPED BELT DIN 7867 8XP | 49 81 176 | 20 | 1 | 9 079 560 | 90 79 560 | GENERATOR ADD-ON |
| V-RIPPED BELT DIN 7867 8XP | 49 81 203 | 20 | 1 | 9 080 525 | 90 80 525 | AIR COND. COMPRESSOR A |
| VALVE | 10 01 183 2 | 1 | 1 | 9 078 233 | 90 78 233 | VALVE |
| VALVE | 10 47 530 2 | 6 | 1 | X1047529 | 10 47 529 2 | VALVE BLOCK |
| VALVE | 10 80 131 5 | 4 | 1 | X1009998 | 10 09 998 1 | AIR FILTER |
| VALVE | 57 14 949 08 | 30 | 1 | 7 741 079 | 77 41 079 08 | OPERATOR SEAT |
| VALVE | 57 18 892 08 | 8 | 2 | X1010109 | 10 10 109 3 | SLEWING GEAR VALVE |
| VALVE | 76 22 478 | 12 | 1 | 5 531 882 | 55 31 882 08 | AIR COND. EVAPORATOR RFK |
| VALVE BLOCK | 10 41 191 5 | 4 | 1 | X1028524 | 10 28 524 3 | CONTROL BLOCK |
| VALVE BLOCK | 10 47 529 1 | 2 | 1 | X1028524 | 10 28 524 3 | CONTROL BLOCK |
| VALVE BLOCK | 10 47 529 2 | 5 | 1 | X1028524 | 10 28 524 3 | CONTROL BLOCK |
| VALVE BLOCK | 10 80 297 1 | 2 | 1 | X1010109 | 10 10 109 3 | SLEWING GEAR VALVE |
| VALVE BRIDGE | 10 11 969 5 | 1 | 2 | 9 079 861 | 90 79 861 | ROCKER ARM BRACKET CPL. |
| VALVE COLLET MK9 | 11 35 751 4 | 8 | 8 | X1012036 | 10 12 036 5 | CYLINDER HEAD PRE-ASSY. |
| VALVE COLLET MK9 | 11 35 751 4 | 8 | 8 | X1014155 | 10 14 155 5 | CYLINDER HEAD PRE-ASSY. |
| VALVE COVER | 11 49 040 6 | 16 | 2 | 2 200 048 | 96 84 070 08 | EXPANSION TANK PRE-ASS. |
| VALVE M14X1,5 | 90 78 233 | 1 | 1 | X1011722 | 10 11 722 8 | WATER CONNECTION |
| VALVE OPERATION | 92 77 587 01 | 11 | 1 | 9 387 070 | 93 87 070 01 | COMPACT ROPE WINCH |
| VALVE SEAT | 51 07 976 08 | 10 | 1 | 5 114 177 | 51 14 177 08 | PRESSURE LIMITING VALVE |
| VALVE SEAT | 57 06 475 08 | 3 | 1 | 5 711 301 | 57 11 301 08 | PRESSURE LIMITING VALVE |
| VALVE SEAT | 57 06 475 08 | 1 | 1 | 5 718 895 | 57 18 895 08 | PRESSURE VALVE |
| VALVE SEAT | 91 33 637 | 11 | 1 | X1011795 | 10 11 795 1 | FINAL CONTROL VALVE |
| VALVE SEGMENT | 11 32 003 4 | 10 | 1 | X1022699 | 10 22 699 3 | DIRECTIONAL CTRL. VALVE |
| VALVE STEM GUIDE | 10 13 906 4 | 4 | 4 | X1012038 | 10 12 038 3 | CYLINDER HEAD |
| VALVE STEM SEAL RING | 10 12 033 4 | 5 | 4 | X1011585 | 10 11 585 1 | SEAL KIT CYLINDER HEAD |
| VALVE STEM SEAL RING | 10 12 033 4 | 5 | 16 | X1011585 | 10 11 585 2 | SEAL KIT ZYLINDER HEAD CPL |
| VALVE STEM SEAL RING | 10 12 033 4 | 5 | 24 | X1011585 | 10 11 585 3 | SEAL KIT ZYLINDER HEAD CPL |
| VALVE STEM SEAL RING | 10 12 033 4 | 5 | 4 | X1011585 | 10 11 585 9 | SEAL KIT CYLINDER HEAD |
| VALVE STEM SEAL RING | 10 12 033 4 | 5 | 4 | X1012036 | 10 12 036 5 | CYLINDER HEAD PRE-ASSY. |
| VALVE STEM SEAL RING | 10 12 033 4 | 5 | 4 | X1014155 | 10 14 155 5 | CYLINDER HEAD PRE-ASSY. |

| Description | Item | Pos. | Quantity | Page | Assembly | Description |
|---|---|---|---|---|---|---|
| VALVE STEM SEAL RING VIV | 10 11 930 5 | 2 | 4 | X1011585 | 10 11 585 1 | SEAL KIT CYLINDER HEAD |
| VALVE STEM SEAL RING VIV | 10 11 930 5 | 2 | 16 | X1011585 | 10 11 585 2 | SEAL KIT ZYLINDER HEAD CPL |
| VALVE STEM SEAL RING VIV | 10 11 930 5 | 2 | 24 | X1011585 | 10 11 585 3 | SEAL KIT ZYLINDER HEAD CPL |
| VALVE STEM SEAL RING VIV | 10 11 930 5 | 2 | 4 | X1011585 | 10 11 585 9 | SEAL KIT CYLINDER HEAD |
| VARIABLE DISPLACEMENT M | 59 23 269 14 | 1 | 2 | 1 100 301 | 96 72 945 08 | INSTALLATION PARTS F.HYD |
| VELCRO 25MMBREIT | 70 42 324 08 | 9 | 0.6 | 2 270 | 91 50 456 08 | FUEL TANK ADD-ON UNIT |
| VENTILATION CONNECTING PI | 92 75 019 01 | 2 | 1 | 9 275 212 | 92 75 212 01 | OIL-LEVEL GAUGE INSTALLAT |
| VENTILATION CONNECTING PI | 92 75 019 01 | 2 | 1 | 9 275 543 | 92 75 543 01 | VENTILATION CONNECTING PI |
| VENTILATION CONNECTING PI | 92 75 019 01 | 13 | 1 | 9 393 684 | 93 93 684 01 | OIL-GAUGING INSTRUMENT |
| VENTILATION CONNECTING PI | 92 75 543 01 | 77 | 1 | 9 330 748 | 93 30 748 01 | SLEWING GEAR DRIVE |
| VENTILATION SCREW | 10 66 491 2 | (1) | 1 | X1022282 | 10 22 282 0 | FUEL PREFILTER |
| VENTILATION SCREW | 70 09 590 | 17 | 1 | X1011569 | 10 11 569 6 | LEAK OIL RETURN LINE |
| VENTILATION SCREW G1/2"X3 | 60 25 013 08 | 293 | 1 | 1 920 314 | 96 46 921 08 | TERMINAL BOX, PRE-ASSEMB |
| VENTILATION SCREW G1/2"X3 | 60 25 013 08 | 293 | 1 | 3 930 492 | 96 20 966 08 | TERMINAL BOX CPL. |
| VENTILATION SCREW G1/2"X3 | 60 25 013 08 | 9 | 1 | 3 930 523 | 96 43 943 08 | CABLE REEL |
| VENTILATION SCREW M20X1,5 | 10 48 866 2 | 307 | 1 | 3 930 718 | 96 56 248 08 | TERMINAL BOX CPL. |
| VENTILATION SCREW R1/4" | 51 86 205 08 | 68 | 1 | X1047300 | 10 47 300 1 | TELESCOPIC CYLINDER |
| VENTILATION UNIT ST VERZ | 72 11 088 01 | 7 | 1 | 9 393 684 | 93 93 684 01 | OIL-GAUGING INSTRUMENT |
| VENTILATION VALVE | 10 42 498 3 | 21 | 2 | X1087223 | 10 87 223 8 | LUFFING CYLINDER |
| VENTILATION VALVE | 72 11 147 01 | 30 | 1 | 9 387 070 | 93 87 070 01 | COMPACT ROPE WINCH |
| VENTILATION VALVE | 72 11 147 01 | 30 | 1 | 9 685 586 | 96 85 586 01 | COMPACT ROPE WINCH |
| VIBRATION DAMPER 32/100X7 | 55 04 580 08 | (2) | 1 | 2 210 | 91 81 614 08 | DRIVE ASSEMBLY, PRE-ASSE |
| VIBRATION DAMPER 32/100X7 | 55 04 580 08 | (2) | 1 | 2 210 | 91 81 614 08 | DRIVE ASSEMBLY, PRE-ASSE |
| VIBRATION DAMPER 32/100X7 | 55 04 580 08 | (2) | 1 | 2 210 | 91 81 614 08 | DRIVE ASSEMBLY, PRE-ASSE |
| VISCOSE DAMPER D934 L | 10 11 852 6 | 8 | 1 | 9 080 591 | 90 80 591 | CRANKSHAFT ADD-ON PARTS |
| VOLTAGE TRANSFORMER 24 | 10 35 540 9 | 35 | 1 | 2 932 042 | 96 68 587 08 | BASE ASSEMBLY |
| WARNING TRIANGLE 430X45 | 10 04 476 2 | 1 | 1 | 1 750 002 | 92 86 201 08 | ACCESSORIES |
| WASHER | 51 07 972 08 | 5 | 1 | 5 114 177 | 51 14 177 08 | PRESSURE LIMITING VALVE |
| WASHER | 55 30 849 08 | 109 | 10 | 2 520 000 | 91 49 872 08 | CABIN, GLAZED |
| WASHER | 57 01 099 08 | 5 | 1 | 5 701 090 | 57 01 090 08 | DRIVING GEAR |
| WASHER | 59 10 635 08 | 39 | 2 | 2 520 000 | 91 49 872 08 | CABIN, GLAZED |
| WASHER 20,2X25X3XA GUMMI | 71 02 074 08 | 38 | 2 | 2 520 000 | 91 49 872 08 | CABIN, GLAZED |
| WASHER 3X21X21 DC01 FE// | 97 36 182 08 | 20 | 6 | 2 210 008 | 96 48 137 08 | RADIATOR, PRE-ASSEMBLED |
| WASHER 40/25X18 42CRMO4 | 95 95 526 14 | 45 | 48 | 1 100 205 | 96 51 633 08 | CRAWLER CARRIER RIGHT CP |
| WASHER 40/25X18 42CRMO4 | 95 95 526 14 | 45 | 48 | 1 100 210 | 96 51 634 08 | CRAWLER TRACK CARRIER LE |
| WASHER 50X5 S355J2C+C | 97 08 215 08 | 14 | 6 | 2 102 | 91 51 080 08 | ASSEMBLY PARTS F.SLEWING |
| WASHER 8,4X16X1,6 -42CrMo4 | 10 11 814 9 | 2 | 2 | X1011832 | 10 11 832 6 | EXHAUST TC MOUNTING |
| WASHER 85,2X139X9,5 | 93 18 075 01 | 5 | 1 | 9 330 748 | 93 30 748 01 | SLEWING GEAR DRIVE |
| WASHER AEHNL.ISO 7089 5 P | 42 00 522 14 | 8 | 1 | 2 913 100 | 91 23 538 08 | ASSEMBLY FRAME |
| WASHER DIN 125 A 6,4 ST VER | 42 00 009 77 | 43 | 2 | X1081388 | 10 81 388 6 | CYLINDER HEAD |
| WASHER DIN 1440 10 ST VER | 42 11 008 08 | 14 | 4 | 2 440 022 | 96 42 336 08 | WINCH 2 PRE-ASS. |
| WASHER DIN 1440 100 ST VER | 42 11 042 08 | 12 | 4 | 1 100 216 | 96 46 363 08 | MOUNTING PARTS LWE |
| WASHER DIN 1440 18 ST VER | 42 11 016 08 | 38 | 2 | 2 501 000 | 91 48 769 08 | CRANE DRIVER'S CABIN,PRE |
| WASHER DIN 1440 22 ST VER | 42 11 018 08 | 3 | 2 | 1 300 010 | 99 14 563 14 | ACCESS COMPL |
| WASHER DIN 1440 22 ST VER | 42 11 018 08 | 381 | 1 | 2 210 008 | 96 48 137 08 | RADIATOR, PRE-ASSEMBLED |
| WASHER DIN 1440 32 ST VER | 42 11 026 08 | 6 | 3 | 1 630 002 | 99 06 183 14 | TRANSPORT SUPPORT |
| WASHER DIN 1440 55 ST VER | 42 11 034 08 | 23 | 8 | 2 571 | 91 50 902 08 | HYDRAULIC BALLASTING |
| WASHER DIN 1440 70 ST VER | 42 11 039 08 | 21 | 4 | 2 571 | 91 50 902 08 | HYDRAULIC BALLASTING |
| WASHER DIN 1441 26 ST VER | 42 12 016 08 | 382 | 1 | 2 210 008 | 96 48 137 08 | RADIATOR, PRE-ASSEMBLED |
| WASHER DIN 6340 13 FLZN SP | 10 17 935 6 | 42 | 36 | 3 101 | 91 60 312 08 | PIVOT SECTION, PRE-ASSEMB |
| WASHER DIN 6340 13 FLZN SP | 10 17 935 6 | 42 | 36 | 3 102 000 | 91 62 543 08 | TELESCOPIC SECTION 1 PRE |
| WASHER DIN 6340 13 FLZN SP | 10 17 935 6 | 42 | 36 | 3 103 000 | 91 62 544 08 | TELESCOPIC SECT.2 PRE-AS |
| WASHER DIN 6340 13 FLZN SP | 10 17 935 6 | 42 | 24 | 3 104 000 | 91 62 545 08 | TELESCOPIC SECT.3 PRE-ASS |
| WASHER DIN 6340 13 FLZN SP | 10 17 935 6 | 42 | 24 | 3 105 000 | 91 62 546 08 | TELESCOPIC SECT.IV PRE-A |
| WASHER DIN 6340 17 C35 A3C | 42 13 004 14 | 16 | 12 | 1 100 205 | 96 51 633 08 | CRAWLER CARRIER RIGHT CP |
| WASHER DIN 6340 17 C35 A3C | 42 13 004 14 | 16 | 12 | 1 100 210 | 96 51 634 08 | CRAWLER TRACK CARRIER LE |
| WASHER DIN 6916 17 -C45 V | 42 15 002 08 | 52 | 24 | 1 100 215 | 99 20 783 14 | CENTRE PIECE |
| WASHER DIN 6916 17 -C45 V | 42 15 002 08 | 3 | 8 | 2 102 | 91 51 080 08 | ASSEMBLY PARTS F.SLEWING |
| WASHER DIN 6916 17 -C45 V | 42 15 002 08 | 380 | 1 | 2 210 008 | 96 48 137 08 | RADIATOR, PRE-ASSEMBLED |
| WASHER DIN 6916 17 -C45 V | 42 15 002 08 | 30 | 4 | 2 501 000 | 91 48 769 08 | CRANE DRIVER'S CABIN,PRE |

| Description | Item | Pos. | Quantity | Page | Assembly | Description |
|---|---|---|---|---|---|---|
| WASHER DIN 6916 21 C 45 A3 | 46 00 222 03 | 10 | 14 | 1 100 205 | 96 51 633 08 | CRAWLER CARRIER RIGHT CP |
| WASHER DIN 6916 21 C 45 A3 | 46 00 222 03 | 10 | 14 | 1 100 210 | 96 51 634 08 | CRAWLER TRACK CARRIER LE |
| WASHER DIN 6916 25 C 45 A3 | 46 00 146 03 | 5 | 48 | 1 100 205 | 96 51 633 08 | CRAWLER CARRIER RIGHT CP |
| WASHER DIN 6916 25 C 45 A3 | 46 00 146 03 | 5 | 48 | 1 100 210 | 96 51 634 08 | CRAWLER TRACK CARRIER LE |
| WASHER DIN 7349 10,5 200HV- | 11 65 858 0 | 378 | 16 | 2 510 100 | 96 44 750 08 | SLEWING PLATFORM PANELLI |
| WASHER DIN 7349 10,5 200HV- | 11 65 858 0 | 375 | 4 | 2 681 | 91 28 102 08 | AIR FILTER UNIT |
| WASHER DIN 7349 10,5 200HV- | 11 65 858 0 | 32 | 9 | 3 101 | 91 60 312 08 | PIVOT SECTION, PRE-ASSEMB |
| WASHER DIN 7349 10,5 200HV- | 11 65 858 0 | 11 | 2 | X1011989 | 10 11 989 1 | FUEL-PREFILTER ASS. |
| WASHER DIN 7349 13 200HV F | 10 00 637 0 | 31 | 2 | 2 510 200 | 96 41 258 08 | SLEWING PLATFORM PANELLI |
| WASHER DIN 7349 13 200HV F | 10 00 637 0 | 75 | 4 | 3 501 | 91 05 788 08 | MECH. DOUBLE FOLD JIB PR |
| WASHER DIN 7349 17 200HV F | 46 00 021 | 59 | 12 | 2 102 | 91 51 080 08 | ASSEMBLY PARTS F.SLEWING |
| WASHER DIN 7349 17 200HV F | 46 00 021 | 3 | 5 | 2 270 | 91 50 456 08 | FUEL TANK ADD-ON UNIT |
| WASHER DIN 7349 17 200HV F | 46 00 021 | 66 | 4 | 3 501 | 91 05 788 08 | MECH. DOUBLE FOLD JIB PR |
| WASHER DIN 7349 17 200HV F | 46 00 021 | 9 | 8 | 3 510 100 | 91 49 246 08 | TRANSPORT MOUNTING |
| WASHER DIN 7349 21 100HV F | 46 00 604 | 5 | 1 | 2 270 | 91 50 456 08 | FUEL TANK ADD-ON UNIT |
| WASHER DIN 7349 21 100HV F | 46 00 604 | 5 | 4 | 2 340 | 91 53 116 08 | OIL RESERVOIR, EXTENSION |
| WASHER DIN 7349 21 100HV F | 46 00 604 | 11 | 6 | 3 510 100 | 91 49 246 08 | TRANSPORT MOUNTING |
| WASHER DIN 7349 4,3 A4 | 11 16 108 4 | 375 | 4 | 2 200 048 | 96 84 070 08 | EXPANSION TANK PRE-ASS. |
| WASHER DIN 7349 6,4 200HV | 40 00 648 | 379 | 4 | 2 510 100 | 96 44 750 08 | SLEWING PLATFORM PANELLI |
| WASHER DIN 7349 6,4 200HV | 40 00 648 | 12 | 2 | 2 515 007 | 96 42 014 08 | PLATFORM, PRE-ASSEMBLED |
| WASHER DIN 7349 6,4 200HV | 40 00 648 | 9 | 23 | 2 571 | 91 50 902 08 | HYDRAULIC BALLASTING |
| WASHER DIN 7349 8,4 200HV F | 11 84 050 1 | 47 | 4 | 2 440 022 | 96 42 336 08 | WINCH 2 PRE-ASS. |
| WASHER DIN 7349 8,4 200HV F | 11 84 050 1 | 376 | 14 | 2 510 100 | 96 44 750 08 | SLEWING PLATFORM PANELLI |
| WASHER DIN 7349 8,4 200HV F | 11 84 050 1 | 5 | 4 | 2 790 | 91 68 708 08 | MIRROR ATTACHM.AT SLEW.P |
| WASHER DIN 7989-2 16 ST V | 42 17 008 08 | 381 | 4 | 2 210 | 91 81 614 08 | DRIVE ASSEMBLY, PRE-ASSE |
| WASHER DIN 7989-2 16 ST V | 42 17 008 08 | 18 | 2 | 3 510 100 | 91 49 246 08 | TRANSPORT MOUNTING |
| WASHER DIN 9021 4 A2C | 42 18 005 08 | 33 | 2 | 3 100 | 91 59 279 08 | TELESCOPIC BOOM CPL. |
| WASHER DIN 9021 4 A2C | 42 18 005 08 | 106 | 2 | 3 501 | 91 05 788 08 | MECH. DOUBLE FOLD JIB PR |
| WASHER DIN 9021 5,3 140HV | 42 18 006 08 | 71 | 4 | 2 970 | 91 55 482 08 | HYDRAULICS |
| WASHER DIN 9021 5,3 140HV | 42 18 006 08 | 218 | 2 | 3 930 718 | 96 56 248 08 | TERMINAL BOX CPL. |
| WASHER DIN EN 28738 20 16 | 42 11 017 14 | 10 | 8 | 1 740 010 | 96 50 675 08 | MOUNTING PARTS |
| WASHER EN 14399-6 12 ST A2 | 42 15 000 08 | 22 | 5 | 2 500 | 91 48 594 08 | CRANE DRIVER'S CABIN CPL. |
| WASHER EN 14399-6 12 ST A2 | 42 15 000 08 | 3 | 6 | 2 515 | 91 51 084 08 | FALL PROTECTION |
| WASHER EN 14399-6 12 ST A2 | 42 15 000 08 | 376 | 3 | 2 680 | 91 53 225 08 | EXHAUST SYSTEM CPL. |
| WASHER EN 14399-6 20 300-3 | 46 00 222 | 46 | 10 | 3 501 | 91 05 788 08 | MECH. DOUBLE FOLD JIB PR |
| WASHER EN 14399-6 24 300-3 | 46 00 146 | 4 | 16 | 2 571 | 91 50 902 08 | HYDRAULIC BALLASTING |
| WASHER EN 14399-6 24 300-3 | 46 00 146 | 7 | 4 | 3 330 | 91 57 885 08 | MECHANICAL EXTENSION SYS |
| WASHER GUMMI | 59 15 631 08 | 3 | 2 | 2 520 101 | 96 49 682 08 | SPRAY NOZZLE |
| WASHER GUMMI | 59 15 631 08 | 1 | 1 | 5 910 672 | 59 10 672 08 | WIPER MOTOR |
| WASHER ISO 7089 10 300HV F | 10 28 979 5 | 44 | 8 | 1 100 215 | 99 20 783 14 | CENTRE PIECE |
| WASHER ISO 7089 10 300HV F | 10 28 979 5 | 7 | 2 | 1 300 010 | 99 14 563 14 | ACCESS COMPL |
| WASHER ISO 7089 10 300HV F | 10 28 979 5 | 377 | 11 | 2 210 | 91 81 614 08 | DRIVE ASSEMBLY, PRE-ASSE |
| WASHER ISO 7089 10 300HV F | 10 28 979 5 | 388 | 1 | 2 210 | 91 81 614 08 | DRIVE ASSEMBLY, PRE-ASSE |
| WASHER ISO 7089 10 300HV F | 10 28 979 5 | 378 | 2 | 2 210 008 | 96 48 137 08 | RADIATOR, PRE-ASSEMBLED |
| WASHER ISO 7089 10 300HV F | 10 28 979 5 | 5 | 6 | 2 260 006 | 96 31 147 08 | BATTERY BOX, PRE-ASSEMB |
| WASHER ISO 7089 10 300HV F | 10 28 979 5 | 11 | 8 | 2 340 004 | 96 43 780 08 | OIL TANK PRE-ASS. |
| WASHER ISO 7089 10 300HV F | 10 28 979 5 | 40 | 4 | 2 440 | 91 52 288 08 | AUXILIARY HOISTING GEAR 2 |
| WASHER ISO 7089 10 300HV F | 10 28 979 5 | 28 | 6 | 2 501 000 | 91 48 769 08 | CRANE DRIVER'S CABIN,PRE |
| WASHER ISO 7089 10 300HV F | 10 28 979 5 | 377 | 4 | 2 510 100 | 96 44 750 08 | SLEWING PLATFORM PANELLI |
| WASHER ISO 7089 10 300HV F | 10 28 979 5 | 142 | 1 | 2 520 000 | 91 49 872 08 | CABIN, GLAZED |
| WASHER ISO 7089 10 300HV F | 10 28 979 5 | 375 | 10 | 2 680 | 91 53 225 08 | EXHAUST SYSTEM CPL. |
| WASHER ISO 7089 10 300HV F | 10 28 979 5 | 11 | 2 | 2 790 901 | 91 54 183 08 | BRACING |
| WASHER ISO 7089 10 300HV F | 10 28 979 5 | 11 | 8 | 3 330 | 91 57 885 08 | MECHANICAL EXTENSION SYS |
| WASHER ISO 7089 10 300HV F | 10 28 979 5 | 47 | 2 | 3 501 | 91 05 788 08 | MECH. DOUBLE FOLD JIB PR |
| WASHER ISO 7089 12 300HV F | 10 28 980 4 | 27 | 3 | 1 100 205 | 96 51 633 08 | CRAWLER CARRIER RIGHT CP |
| WASHER ISO 7089 12 300HV F | 10 28 980 4 | 27 | 3 | 1 100 210 | 96 51 634 08 | CRAWLER TRACK CARRIER LE |
| WASHER ISO 7089 12 300HV F | 10 28 980 4 | 42 | 24 | 1 100 215 | 99 20 783 14 | CENTRE PIECE |
| WASHER ISO 7089 12 300HV F | 10 28 980 4 | 28 | 8 | 1 400 200 | 91 53 791 08 | PREPARATION HYDR |
| WASHER ISO 7089 12 300HV F | 10 28 980 4 | 379 | 3 | 2 210 | 91 81 614 08 | DRIVE ASSEMBLY, PRE-ASSE |
| WASHER ISO 7089 12 300HV F | 10 28 980 4 | 18 | 8 | 2 340 004 | 96 43 780 08 | OIL TANK PRE-ASS. |

| Description | Item | Pos. | Quantity | Page | Assembly | Description |
|---|---|---|---|---|---|---|
| WASHER ISO 7089 12 300HV F | 10 28 980 4 | 7 | 2 | 2 420 | 91 32 936 08 | SLEWING GEAR |
| WASHER ISO 7089 12 300HV F | 10 28 980 4 | 22 | 8 | 2 440 022 | 96 42 336 08 | WINCH 2 PRE-ASS. |
| WASHER ISO 7089 12 300HV F | 10 28 980 4 | 18 | 8 | 2 500 | 91 48 594 08 | CRANE DRIVER'S CABIN CPL. |
| WASHER ISO 7089 12 300HV F | 10 28 980 4 | 20 | 4 | 3 100 | 91 59 279 08 | TELESCOPIC BOOM CPL. |
| WASHER ISO 7089 12 300HV F | 10 28 980 4 | 37 | 32 | 3 101 | 91 60 312 08 | PIVOT SECTION, PRE-ASSEMB |
| WASHER ISO 7089 12 300HV F | 10 28 980 4 | 37 | 14 | 3 102 000 | 91 62 543 08 | TELESCOPIC SECTION 1 PRE |
| WASHER ISO 7089 12 300HV F | 10 28 980 4 | 37 | 14 | 3 103 000 | 91 62 544 08 | TELESCOPIC SECT.2 PRE-AS |
| WASHER ISO 7089 12 300HV F | 10 28 980 4 | 37 | 10 | 3 104 000 | 91 62 545 08 | TELESCOPIC SECT.3 PRE-ASS |
| WASHER ISO 7089 12 300HV F | 10 28 980 4 | 37 | 10 | 3 105 000 | 91 62 546 08 | TELESCOPIC SECT.IV PRE-A |
| WASHER ISO 7089 12 300HV F | 10 28 980 4 | 64 | 3 | 3 106 000 | 91 60 313 08 | TELESCOPIC SECT.5 PRE-AS |
| WASHER ISO 7089 12 300HV F | 10 28 980 4 | 73 | 1 | 3 501 | 91 05 788 08 | MECH. DOUBLE FOLD JIB PR |
| WASHER ISO 7089 12 300HV F | 10 28 980 4 | 3 | 8 | X1011578 | 10 11 578 0 | CLUTCH ASSEMBLY |
| WASHER ISO 7089 12 300HV F | 10 28 980 4 | 8 | 17 | X1011582 | 10 11 582 9 | FLYWHEEL HOUSING MOUNT |
| WASHER ISO 7089 16 300HV F | 10 28 980 6 | 41 | 3 | 1 100 215 | 99 20 783 14 | CENTRE PIECE |
| WASHER ISO 7089 16 300HV F | 10 28 980 6 | 380 | 8 | 2 210 | 91 81 614 08 | DRIVE ASSEMBLY, PRE-ASSE |
| WASHER ISO 7089 16 300HV F | 10 28 980 6 | 15 | 2 | 2 440 022 | 96 42 336 08 | WINCH 2 PRE-ASS. |
| WASHER ISO 7089 18 300HV F | 10 28 980 7 | 42 | 2 | 3 330 | 91 57 885 08 | MECHANICAL EXTENSION SYS |
| WASHER ISO 7089 3 200HV A3 | 46 00 814 | 5 | 12 | 2 913 100 | 91 23 538 08 | ASSEMBLY FRAME |
| WASHER ISO 7089 3 MS | 42 00 501 08 | 268 | 2 | 3 930 492 | 96 20 966 08 | TERMINAL BOX CPL. |
| WASHER ISO 7089 3,5 200HV | 46 00 253 | 16 | 10 | 2 922 001 | 92 84 311 08 | BUS PCB |
| WASHER ISO 7089 30 300HV F | 10 28 981 1 | 10 | 5 | 2 500 | 91 48 594 08 | CRANE DRIVER'S CABIN CPL. |
| WASHER ISO 7089 36 300HV F | 10 28 981 2 | 50 | 2 | 3 501 | 91 05 788 08 | MECH. DOUBLE FOLD JIB PR |
| WASHER ISO 7089 4 200HV A3 | 40 01 645 | 4 | 4 | 2 913 004 | 96 20 460 08 | HOUSING PRE-ASSEMBLED |
| WASHER ISO 7089 4 200HV A3 | 40 01 645 | 13 | 4 | 2 913 100 | 91 23 538 08 | ASSEMBLY FRAME |
| WASHER ISO 7089 4 200HV A3 | 40 01 645 | 5 | 8 | 2 913 102 | 92 32 870 08 | FAN UNIT |
| WASHER ISO 7089 4 200HV A3 | 40 01 645 | 75 | 1 | 2 932 042 | 96 68 587 08 | BASE ASSEMBLY |
| WASHER ISO 7089 4 200HV A3 | 40 01 645 | 72 | 16 | 2 932 095 | 96 46 064 08 | SWING FRAME FUSE AND RE |
| WASHER ISO 7089 4 200HV A3 | 40 01 645 | 29 | 8 | 2 932 119 | 96 46 061 08 | SWING FRAME RELAY CONT |
| WASHER ISO 7089 4 200HV A3 | 40 01 645 | 3 | 1 | 2 932 215 | 92 26 129 08 | GROUND RAIL |
| WASHER ISO 7089 42 300HV F | 10 28 984 7 | 44 | 1 | 3 501 | 91 05 788 08 | MECH. DOUBLE FOLD JIB PR |
| WASHER ISO 7089 45 300HV F | 10 28 985 0 | 48 | 2 | 3 501 | 91 05 788 08 | MECH. DOUBLE FOLD JIB PR |
| WASHER ISO 7089 48 300HV F | 10 28 985 2 | 49 | 6 | 3 501 | 91 05 788 08 | MECH. DOUBLE FOLD JIB PR |
| WASHER ISO 7089 5 200HV A3 | 46 00 305 | 24 | 18 | 1 400 200 | 91 53 791 08 | PREPARATION HYDR |
| WASHER ISO 7089 5 200HV A3 | 46 00 305 | 4 | 2 | 1 630 003 | 96 47 650 08 | PIN COMPL. |
| WASHER ISO 7089 5 200HV A3 | 46 00 305 | 9 | 2 | 2 260 006 | 96 31 147 08 | BATTERY BOX, PRE-ASSEMB |
| WASHER ISO 7089 5 200HV A3 | 46 00 305 | 4 | 5 | 2 270 001 | 96 37 923 08 | FUEL TANK, PRE-ASSEMBLED |
| WASHER ISO 7089 5 200HV A3 | 46 00 305 | 18 | 4 | 2 502 | 91 01 533 08 | CONTROL STAND |
| WASHER ISO 7089 5 200HV A3 | 46 00 305 | 139 | 4 | 2 520 000 | 91 49 872 08 | CABIN, GLAZED |
| WASHER ISO 7089 5 200HV A3 | 46 00 305 | 6 | 4 | 2 711 | 91 53 002 08 | CENT. LUBRIC. SYSTEM SUP |
| WASHER ISO 7089 5 200HV A3 | 46 00 305 | 9 | 3 | 2 913 100 | 91 23 538 08 | ASSEMBLY FRAME |
| WASHER ISO 7089 5 200HV A3 | 46 00 305 | 37 | 2 | 2 971 | 91 50 610 08 | HYDR.AUXILIARY HOISTING |
| WASHER ISO 7089 5 200HV A3 | 46 00 305 | 83 | 2 | 3 501 | 91 05 788 08 | MECH. DOUBLE FOLD JIB PR |
| WASHER ISO 7089 5 200HV A3 | 46 00 305 | 9 | 3 | 3 750 026 | 96 89 407 08 | HOLDER LEFT |
| WASHER ISO 7089 5 200HV A3 | 46 00 305 | 9 | 3 | 3 750 028 | 96 89 408 08 | HOLDER RIGHT |
| WASHER ISO 7089 6 200HV 4 | 10 87 564 7 | 3 | 6 | 1 830 102 | 92 26 483 08 | TERMINAL BOARD PRE-ASS. |
| WASHER ISO 7089 6 200HV 4 | 10 87 564 7 | 32 | 2 | 1 970 | 96 71 367 08 | UNDERCARRIAGE HYDRAULIC |
| WASHER ISO 7089 6 200HV 4 | 10 87 564 7 | 55 | 4 | 2 102 | 91 51 080 08 | ASSEMBLY PARTS F.SLEWING |
| WASHER ISO 7089 6 200HV 4 | 10 87 564 7 | 382 | 4 | 2 210 | 91 81 614 08 | DRIVE ASSEMBLY, PRE-ASSE |
| WASHER ISO 7089 6 200HV 4 | 10 87 564 7 | 375 | 4 | 2 210 008 | 96 48 137 08 | RADIATOR, PRE-ASSEMBLED |
| WASHER ISO 7089 6 200HV 4 | 10 87 564 7 | 12 | 8 | 2 430 | 91 54 389 08 | ANGLE THREADED BULKHEA |
| WASHER ISO 7089 6 200HV 4 | 10 87 564 7 | 18 | 14 | 2 501 000 | 91 48 769 08 | CRANE DRIVER'S CABIN,PRE |
| WASHER ISO 7089 6 200HV 4 | 10 87 564 7 | 21 | 20 | 2 510 200 | 96 41 258 08 | SLEWING PLATFORM PANELLI |
| WASHER ISO 7089 6 200HV 4 | 10 87 564 7 | 16 | 2 | 2 515 007 | 96 42 014 08 | PLATFORM, PRE-ASSEMBLED |
| WASHER ISO 7089 6 200HV 4 | 10 87 564 7 | 73 | 16 | 2 520 000 | 91 49 872 08 | CABIN, GLAZED |
| WASHER ISO 7089 6 200HV 4 | 10 87 564 7 | 26 | 1 | 2 520 001 | 92 48 796 08 | FRONT WINDOW CPL. |
| WASHER ISO 7089 6 200HV 4 | 10 87 564 7 | 37 | 1 | 2 522 | 91 10 037 08 | DOOR CPL. |
| WASHER ISO 7089 6 200HV 4 | 10 87 564 7 | 61 | 6 | 2 533 001 | 96 41 568 08 | DASHBOARD ROOF, PRE-AS |
| WASHER ISO 7089 6 200HV 4 | 10 87 564 7 | 10 | 2 | 2 540 | 91 45 984 08 | HEATING, CRANE CABIN |
| WASHER ISO 7089 6 200HV 4 | 10 87 564 7 | 16 | 3 | 2 920 585 | 91 01 520 08 | ELECTRIC FOR FLASHLIGHT |
| WASHER ISO 7089 6 200HV 4 | 10 87 564 7 | 4 | 4 | 2 932 166 | 92 68 911 08 | GROUND RAIL |

| Description | Item | Pos. | Quantity | Page | Assembly | Description |
|---|---|---|---|---|---|---|
| WASHER ISO 7089 6 200HV 4 | 10 87 564 7 | 7 | 4 | 3 101 | 91 60 312 08 | PIVOT SECTION, PRE-ASSEMB |
| WASHER ISO 7089 6 200HV 4 | 10 87 564 7 | 32 | 4 | 3 330 | 91 57 885 08 | MECHANICAL EXTENSION SYS |
| WASHER ISO 7089 6 200HV 4 | 10 87 564 7 | 89 | 4 | 3 501 | 91 05 788 08 | MECH. DOUBLE FOLD JIB PR |
| WASHER ISO 7089 6 200HV 4 | 10 87 564 7 | 3 | 2 | 3 920 012 | 96 57 224 08 | LIMIT SWITCH ADD-ON |
| WASHER ISO 7089 6 200HV 4 | 10 87 564 7 | 21 | 1 | 5 910 672 | 59 10 672 08 | WIPER MOTOR |
| WASHER ISO 7089 6 200HV 4 | 10 87 564 7 | 47 | 1 | X1011998 | 10 11 998 0 | CABLE HARNESS MOUNTING |
| WASHER ISO 7089 8 200HV-A2 | 42 00 607 05 | 159 | 2 | 2 520 000 | 91 49 872 08 | CABIN, GLAZED |
| WASHER ISO 7089 8 200HV-A4 | 42 00 010 14 | 21 | 4 | 1 400 200 | 91 53 791 08 | PREPARATION HYDR |
| WASHER ISO 7089 8 300HV 4 | 10 28 980 3 | 3 | 24 | 1 100 216 | 96 46 363 08 | MOUNTING PARTS LWE |
| WASHER ISO 7089 8 300HV 4 | 10 28 980 3 | 34 | 2 | 1 970 | 96 71 367 08 | UNDERCARRIAGE HYDRAULIC |
| WASHER ISO 7089 8 300HV 4 | 10 28 980 3 | 30 | 9 | 2 102 | 91 51 080 08 | ASSEMBLY PARTS F.SLEWING |
| WASHER ISO 7089 8 300HV 4 | 10 28 980 3 | 375 | 21 | 2 210 | 91 81 614 08 | DRIVE ASSEMBLY, PRE-ASSE |
| WASHER ISO 7089 8 300HV 4 | 10 28 980 3 | 376 | 16 | 2 210 008 | 96 48 137 08 | RADIATOR, PRE-ASSEMBLED |
| WASHER ISO 7089 8 300HV 4 | 10 28 980 3 | 3 | 12 | 2 260 | 91 46 555 08 | BATTERY BOX CPL. |
| WASHER ISO 7089 8 300HV 4 | 10 28 980 3 | 7 | 4 | 2 430 | 91 54 389 08 | ANGLE THREADED BULKHEA |
| WASHER ISO 7089 8 300HV 4 | 10 28 980 3 | 14 | 4 | 2 500 | 91 48 594 08 | CRANE DRIVER'S CABIN CPL. |
| WASHER ISO 7089 8 300HV 4 | 10 28 980 3 | 20 | 10 | 2 502 | 91 01 533 08 | CONTROL STAND |
| WASHER ISO 7089 8 300HV 4 | 10 28 980 3 | 11 | 2 | 2 510 072 | 96 44 614 08 | FLAP RIGHT PRE-ASS. |
| WASHER ISO 7089 8 300HV 4 | 10 28 980 3 | 380 | 5 | 2 510 100 | 96 44 750 08 | SLEWING PLATFORM PANELLI |
| WASHER ISO 7089 8 300HV 4 | 10 28 980 3 | 23 | 4 | 2 510 200 | 96 41 258 08 | SLEWING PLATFORM PANELLI |
| WASHER ISO 7089 8 300HV 4 | 10 28 980 3 | 9 | 8 | 2 515 007 | 96 42 014 08 | PLATFORM, PRE-ASSEMBLED |
| WASHER ISO 7089 8 300HV 4 | 10 28 980 3 | 80 | 50 | 2 520 000 | 91 49 872 08 | CABIN, GLAZED |
| WASHER ISO 7089 8 300HV 4 | 10 28 980 3 | 4 | 4 | 2 520 041 | 96 84 504 08 | ATTACHMENT GRIP |
| WASHER ISO 7089 8 300HV 4 | 10 28 980 3 | 29 | 20 | 2 522 | 91 10 037 08 | DOOR CPL. |
| WASHER ISO 7089 8 300HV 4 | 10 28 980 3 | 13 | 1 | 2 540 | 91 45 984 08 | HEATING, CRANE CABIN |
| WASHER ISO 7089 8 300HV 4 | 10 28 980 3 | 26 | 10 | 2 831 | 91 47 871 08 | AIR COND. UNIT SUPERSTRU |
| WASHER ISO 7089 8 300HV 4 | 10 28 980 3 | 13 | 2 | 2 920 585 | 91 01 520 08 | ELECTRIC FOR FLASHLIGHT |
| WASHER ISO 7089 8 300HV 4 | 10 28 980 3 | 77 | 2 | 2 932 042 | 96 68 587 08 | BASE ASSEMBLY |
| WASHER ISO 7089 8 300HV 4 | 10 28 980 3 | 13 | 4 | 2 932 166 | 92 68 911 08 | GROUND RAIL |
| WASHER ISO 7089 8 300HV 4 | 10 28 980 3 | 81 | 6 | 2 970 | 91 55 482 08 | HYDRAULICS |
| WASHER ISO 7089 8 300HV 4 | 10 28 980 3 | 375 | 20 | 2 984 | 91 52 906 08 | OIL COOLER INSTALLATION |
| WASHER ISO 7089 8 300HV 4 | 10 28 980 3 | 15 | 7 | 3 100 | 91 59 279 08 | TELESCOPIC BOOM CPL. |
| WASHER ISO 7089 8 300HV 4 | 10 28 980 3 | 31 | 9 | 3 101 | 91 60 312 08 | PIVOT SECTION, PRE-ASSEMB |
| WASHER ISO 7089 8 300HV 4 | 10 28 980 3 | 17 | 6 | 3 102 000 | 91 62 543 08 | TELESCOPIC SECTION 1 PRE |
| WASHER ISO 7089 8 300HV 4 | 10 28 980 3 | 17 | 6 | 3 103 000 | 91 62 544 08 | TELESCOPIC SECT.2 PRE-AS |
| WASHER ISO 7089 8 300HV 4 | 10 28 980 3 | 17 | 6 | 3 104 000 | 91 62 545 08 | TELESCOPIC SECT.3 PRE-ASS |
| WASHER ISO 7089 8 300HV 4 | 10 28 980 3 | 17 | 4 | 3 105 000 | 91 62 546 08 | TELESCOPIC SECT.IV PRE-A |
| WASHER ISO 7089 8 300HV 4 | 10 28 980 3 | 17 | 6 | 3 106 000 | 91 60 313 08 | TELESCOPIC SECT.5 PRE-AS |
| WASHER ISO 7089 8 300HV 4 | 10 28 980 3 | 29 | 10 | 3 330 | 91 57 885 08 | MECHANICAL EXTENSION SYS |
| WASHER ISO 7089 8 300HV 4 | 10 28 980 3 | 71 | 2 | 3 501 | 91 05 788 08 | MECH. DOUBLE FOLD JIB PR |
| WASHER ISO 7089 8 300HV 4 | 10 28 980 3 | 8 | 2 | 9 077 279 | 90 77 279 | CONNECTING BRANCH ADD-O |
| WASHER ISO 7089 8 300HV 4 | 10 28 980 3 | 8 | 1 | X1011997 | 10 11 997 9 | WIRING HARNESS ASSEMBLY |
| WASHER ISO 7092 12 200HV | 42 02 008 08 | 12 | 18 | 3 330 | 91 57 885 08 | MECHANICAL EXTENSION SYS |
| WASHER ISO 7092 20 300HV F | 11 69 132 7 | 61 | 12 | 3 102 000 | 91 62 543 08 | TELESCOPIC SECTION 1 PRE |
| WASHER ISO 7092 20 300HV F | 11 69 132 7 | 61 | 12 | 3 103 000 | 91 62 544 08 | TELESCOPIC SECT.2 PRE-AS |
| WASHER ISO 7092 20 300HV F | 11 69 132 7 | 61 | 12 | 3 104 000 | 91 62 545 08 | TELESCOPIC SECT.3 PRE-ASS |
| WASHER ISO 7092 20 300HV F | 11 69 132 7 | 34 | 12 | 3 105 000 | 91 62 546 08 | TELESCOPIC SECT.IV PRE-A |
| WASHER ISO 7092 20 300HV F | 11 69 132 7 | 42 | 16 | 3 106 000 | 91 60 313 08 | TELESCOPIC SECT.5 PRE-AS |
| WASHER ISO 7092 6 200HV-A2 | 10 03 569 4 | 157 | 3 | 2 520 000 | 91 49 872 08 | CABIN, GLAZED |
| WASHER ISO 7093-1 10 300HV | 11 49 188 9 | 43 | 8 | 1 100 215 | 99 20 783 14 | CENTRE PIECE |
| WASHER ISO 7093-1 10 300HV | 11 49 188 9 | 6 | 20 | 1 100 220 | 99 08 404 14 | COVER |
| WASHER ISO 7093-1 10 300HV | 11 49 188 9 | 16 | 16 | 2 102 | 91 51 080 08 | ASSEMBLY PARTS F.SLEWING |
| WASHER ISO 7093-1 10 300HV | 11 49 188 9 | 376 | 2 | 2 200 | 91 81 095 08 | DRIVE ASSEMBLY CPL. |
| WASHER ISO 7093-1 10 300HV | 11 49 188 9 | 13 | 6 | 2 510 200 | 96 41 258 08 | SLEWING PLATFORM PANELLI |
| WASHER ISO 7093-1 10 300HV | 11 49 188 9 | 36 | 2 | 2 522 | 91 10 037 08 | DOOR CPL. |
| WASHER ISO 7093-1 10 300HV | 11 49 188 9 | 10 | 12 | 2 790 901 | 91 54 183 08 | BRACING |
| WASHER ISO 7093-1 10 300HV | 11 49 188 9 | 27 | 3 | 2 950 | 91 49 515 08 | COMPRESSED-AIR SYST.SU |
| WASHER ISO 7093-1 10 300HV | 11 49 188 9 | 86 | 7 | 2 970 | 91 55 482 08 | HYDRAULICS |
| WASHER ISO 7093-1 10 300HV | 11 49 188 9 | 72 | 2 | 3 106 000 | 91 60 313 08 | TELESCOPIC SECT.5 PRE-AS |
| WASHER ISO 7093-1 12 300HV | 11 18 271 7 | 71 | 1 | 2 520 000 | 91 49 872 08 | CABIN, GLAZED |

| Description | Item | Pos. | Quantity | Page | Assembly | Description |
|---|---|---|---|---|---|---|
| WASHER ISO 7093-1 12 300HV | 11 18 271 7 | 83 | 12 | 3 101 | 91 60 312 08 | PIVOT SECTION, PRE-ASSEMB |
| WASHER ISO 7093-1 6 200HV 4 | 10 87 564 8 | 378 | 10 | 2 210 | 91 81 614 08 | DRIVE ASSEMBLY, PRE-ASSE |
| WASHER ISO 7093-1 6 200HV 4 | 10 87 564 8 | 9 | 2 | 2 510 072 | 96 44 614 08 | FLAP RIGHT PRE-ASS. |
| WASHER ISO 7093-1 6 200HV 4 | 10 87 564 8 | 9 | 2 | 2 510 201 | 96 42 011 08 | FLAP PRE-ASS. |
| WASHER ISO 7093-1 6 200HV 4 | 10 87 564 8 | 15 | 4 | 2 520 001 | 92 48 796 08 | FRONT WINDOW CPL. |
| WASHER ISO 7093-1 6 200HV 4 | 10 87 564 8 | 54 | 2 | 2 522 | 91 10 037 08 | DOOR CPL. |
| WASHER ISO 7093-1 6 200HV 4 | 10 87 564 8 | 76 | 2 | 2 932 042 | 96 68 587 08 | BASE ASSEMBLY |
| WASHER ISO 7093-1 6 200HV 4 | 10 87 564 8 | 73 | 10 | 2 970 | 91 55 482 08 | HYDRAULICS |
| WASHER ISO 7093-1 6 200HV 4 | 10 87 564 8 | 41 | 4 | 2 971 | 91 50 610 08 | HYDR.AUXILIARY HOISTING |
| WASHER ISO 7093-1 6 200HV 4 | 10 87 564 8 | 5 | 1 | 5 910 672 | 59 10 672 08 | WIPER MOTOR |
| WASHER ISO 7093-1 8 200HV | 42 18 009 08 | 28 | 2 | 2 102 | 91 51 080 08 | ASSEMBLY PARTS F.SLEWING |
| WASHER ISO 7093-1 8 200HV | 42 18 009 08 | 9 | 4 | 2 440 022 | 96 42 336 08 | WINCH 2 PRE-ASS. |
| WASHER ISO 7093-1 8 200HV | 42 18 009 08 | 19 | 2 | 2 502 | 91 01 533 08 | CONTROL STAND |
| WASHER ISO 7093-1 8 200HV | 42 18 009 08 | 375 | 4 | 2 510 100 | 96 44 750 08 | SLEWING PLATFORM PANELLI |
| WASHER ISO 7093-1 8 200HV | 42 18 009 08 | 16 | 13 | 2 510 200 | 96 41 258 08 | SLEWING PLATFORM PANELLI |
| WASHER ISO 7093-1 8 200HV | 42 18 009 08 | 10 | 8 | 2 515 007 | 96 42 014 08 | PLATFORM, PRE-ASSEMBLED |
| WASHER ISO 7093-1 8 200HV | 42 18 009 08 | 39 | 2 | 2 522 | 91 10 037 08 | DOOR CPL. |
| WASHER ISO 7093-1 8 200HV | 42 18 009 08 | 29 | 2 | 2 831 | 91 47 871 08 | AIR COND. UNIT SUPERSTRU |
| WASHER ISO 7093-1 8 200HV | 42 18 009 08 | 78 | 9 | 2 932 042 | 96 68 587 08 | BASE ASSEMBLY |
| WASHER ISO 7093-1 8 200HV | 42 18 009 08 | 22 | 16 | 2 950 | 91 49 515 08 | COMPRESSED-AIR SYST.SU |
| WASHER ISO 7093-1 8 200HV | 42 18 009 08 | 18 | 4 | 3 100 | 91 59 279 08 | TELESCOPIC BOOM CPL. |
| WASHER ISO 7093-1 8 200HV | 42 18 009 08 | 28 | 18 | 3 101 | 91 60 312 08 | PIVOT SECTION, PRE-ASSEMB |
| WASHER ISO 7093-1 8 200HV | 42 18 009 08 | 37 | 3 | 3 510 100 | 91 49 246 08 | TRANSPORT MOUNTING |
| WASHER ISO 7093-1 8 200HV | 42 18 009 08 | 31 | 3 | 3 511 006 | 96 45 029 08 | BOOM NOSE PRE-ASS. |
| WASHER LIKE ISO 7089 10 -PA | 42 00 054 14 | 375 | 2 | 2 200 | 91 81 095 08 | DRIVE ASSEMBLY CPL. |
| WASHER RD110X8 S355MC FE | 94 93 480 08 | 91 | 2 | 3 501 | 91 05 788 08 | MECH. DOUBLE FOLD JIB PR |
| WASHER RD20X5,7 PA6G | 28 30 915 08 | 20 | 1 | 2 520 001 | 92 48 796 08 | FRONT WINDOW CPL. |
| WASHER RD22X1 DC01+ZE | 95 64 143 08 | 45 | 4 | 3 330 | 91 57 885 08 | MECHANICAL EXTENSION SYS |
| WASHER RD26X5,7 PA6G | 28 30 913 08 | 24 | 1 | 2 520 001 | 92 48 796 08 | FRONT WINDOW CPL. |
| WASHER SPRING DIN 127 A 4 | 42 40 003 08 | 9 | 4 | 2 501 000 | 91 48 769 08 | CRANE DRIVER'S CABIN,PRE |
| WASHER SPRING DIN 127 A 6 | 42 40 005 08 | 74 | 3 | 2 520 000 | 91 49 872 08 | CABIN, GLAZED |
| WASHER SPRING DIN 127 A 6 | 42 40 005 08 | 12 | 3 | 2 780 800 | 91 15 191 08 | ELECTRIC FOR WINCH 2 |
| WASHER SPRING DIN 127 A 6 | 42 40 005 08 | 33 | 2 | 2 920 | 91 55 477 08 | ELECTR. SYSTEM F.SLEWING |
| WASHER SPRING DIN 127 A 6 | 42 40 005 08 | 12 | 3 | 2 920 200 | 91 27 889 08 | ELECTRIC FOR WINCH 1 |
| WASHER SPRING DIN 127 A 6 | 42 40 005 08 | 17 | 3 | 2 920 585 | 91 01 520 08 | ELECTRIC FOR FLASHLIGHT |
| WASHER SPRING DIN 127 A 8 | 42 40 007 08 | 26 | 8 | 2 501 000 | 91 48 769 08 | CRANE DRIVER'S CABIN,PRE |
| WASHER SPRING DIN 127 A 8 | 42 40 007 08 | 21 | 2 | 2 502 | 91 01 533 08 | CONTROL STAND |
| WASHER SPRING DIN 127 A 8 | 42 40 007 08 | 12 | 2 | 2 920 585 | 91 01 520 08 | ELECTRIC FOR FLASHLIGHT |
| WASHER SPRING DIN 128 A 2 | 46 00 013 03 | 8 | 4 | 1 100 214 | 74 90 137 14 | GUIDE WHEEL CPL |
| WASHER SPRING DIN 128 A 5 | 42 40 004 08 | 269 | 2 | 2 920 574 | 96 36 055 08 | OPERATOR PANEL BALLAST |
| WASHER SPRING DIN 128 A 5 | 42 40 004 08 | 252 | 2 | 2 920 904 | 96 41 093 08 | CONTROL DESK SUPPORT |
| WASHER SPRING DIN 7980 8 F | 42 41 007 08 | 8 | 6 | 5 102 294 | 51 02 294 08 | HYDRO MOTOR |
| WATER CONNECTION D934 | 10 11 722 8 | 132 | 1 | X1015207 | 10 15 207 7 | DIESEL ENGINE |
| WATER DRAIN PLUG M12 PA6 | 60 25 012 08 | 292 | 1 | 1 920 314 | 96 46 921 08 | TERMINAL BOX, PRE-ASSEMB |
| WATER DRAIN PLUG M12 PA6 | 60 25 012 08 | 292 | 1 | 3 930 492 | 96 20 966 08 | TERMINAL BOX CPL. |
| WATER DRAIN PLUG M12 PA6 | 60 25 012 08 | 308 | 1 | 3 930 718 | 96 56 248 08 | TERMINAL BOX CPL. |
| WATER HEATING SYSTEM | 55 30 022 08 | 1 | 1 | 2 540 | 91 45 984 08 | HEATING, CRANE CABIN |
| WATER PIPE SPF | 97 36 410 08 | 202 | 1 | 2 210 | 91 81 614 08 | DRIVE ASSEMBLY, PRE-ASSE |
| WATER PUMP WITH FASTENIN | 90 80 345 | 370 | 1 | X1012193 | 10 12 193 2 | BASIC ENGINE |
| WATER PUMP, PRE-ASSEMB | 90 80 344 | 1 | 1 | 9 080 345 | 90 80 345 | WATER PUMP WITH FASTENIN |
| WATER SENSOR | 10 28 018 5 | 1 | 1 | X1028018 | 10 28 018 1 | TRANSPARENT CONTAINER |
| WATER VALVE | 57 05 449 08 | 1 | 1 | 5 530 854 | 55 30 854 08 | THREE-WAY TAP |
| WEARING RING C60/CuSn8 P | 90 73 188 | 6 | 2 | X1012223 | 10 12 223 3 | CAMSHAFT CPL. |
| WEDGE 48.3X50X310 PA6G | 97 67 674 08 | 4 | 1 | 2 790 901 | 91 54 183 08 | BRACING |
| WEDGING LEFT FRONT CPL | 97 07 604 03 | 5 | 1 | 1 100 215 | 99 20 783 14 | CENTRE PIECE |
| WEDGING LEFT REAR CPL | 97 07 598 03 | 4 | 1 | 1 100 215 | 99 20 783 14 | CENTRE PIECE |
| WEDGING RIGHT FRONT CPL | 97 07 601 03 | 7 | 1 | 1 100 215 | 99 20 783 14 | CENTRE PIECE |
| WEDGING RIGHT REAR CPL | 97 07 607 03 | 6 | 1 | 1 100 215 | 99 20 783 14 | CENTRE PIECE |
| WEIGHT | 11 49 201 7 | 1 | 1 | 4 027 | 91 42 310 08 | LOAD HOOK |
| WEIGHT 50X52X262 EN-GJS4 | 38 82 613 08 | 2 | 1 | 3 105 014 | 96 57 037 08 | HOIST LIM.SWITCH PLUMMET |

| Description | Item | Pos. | Quantity | Page | Assembly | Description |
|---|---|---|---|---|---|---|
| WEIGHT 80X105X230 EN-GJS4 | 38 82 612 08 | 1 | 1 | 3 105 014 | 96 57 037 08 | HOIST LIM.SWITCH PLUMMET |
| WEIGHT ALLOWANCE | 11 11 111 08 | 1050 | -99.75 | 3 106 001 | 96 42 835 08 | ROPE PULLEY CPL. |
| WELD PLATE S315MC RAL704 | 95 62 110 14 | 18 | 2 | 1 100 215 | 99 20 783 14 | CENTRE PIECE |
| WELDED-ON PART LWE | 96 46 362 08 | 2 | 1 | 1 100 | 91 71 033 08 | UNDERCARRIAGE COMPLETE |
| WHEEL NUT DIN 74361 M20X1, | 52 03 033 08 | 10 | 1 | 5 700 161 | 57 00 161 | AIR COMPRESSOR |
| WIDE ANGLE MIRROR 219X17 | 59 10 695 08 | 2 | 1 | 2 790 040 | 91 60 499 08 | MIRROR ATTACHM.IN CRANE |
| WIDE ANGLE MIRROR 316X17 | 59 10 709 08 | 1 | 1 | 2 790 | 91 68 708 08 | MIRROR ATTACHM.AT SLEW.P |
| WINCH | 96 20 465 08 | 1 | 1 | 2 440 022 | 96 42 336 08 | WINCH 2 PRE-ASS. |
| WINCH 2 PRE-ASS. | 96 42 336 08 | 1 | 1 | 2 440 | 91 52 288 08 | AUXILIARY HOISTING GEAR 2 |
| WINDOW | 11 11 006 0 | 39 | 1 | X1032706 | 10 32 706 5 | ELECTRIC PUMP |
| WING SCREW DIN 316 M10X25 | 40 09 029 14 | 7 | 10 | 1 100 220 | 99 08 404 14 | COVER |
| WING SCREW DIN 316 M8X16 4 | 40 09 018 08 | 30 | 1 | 3 511 006 | 96 45 029 08 | BOOM NOSE PRE-ASS. |
| WIPER ARM | 59 10 631 08 | 33 | 1 | 2 520 000 | 91 49 872 08 | CABIN, GLAZED |
| WIPER ARM | 59 10 666 08 | 6 | 1 | 2 520 001 | 92 48 796 08 | FRONT WINDOW CPL. |
| WIPER BEARING | 59 10 633 08 | 36 | 1 | 2 520 000 | 91 49 872 08 | CABIN, GLAZED |
| WIPER BLADE | 59 10 634 08 | 34 | 1 | 2 520 000 | 91 49 872 08 | CABIN, GLAZED |
| WIPER BLADE | 59 10 775 08 | 5 | 1 | 2 520 001 | 92 48 796 08 | FRONT WINDOW CPL. |
| WIPER MOTOR | 59 10 534 08 | 32 | 1 | 2 520 000 | 91 49 872 08 | CABIN, GLAZED |
| WIPER MOTOR | 59 10 672 08 | 3 | 1 | 2 520 001 | 92 48 796 08 | FRONT WINDOW CPL. |
| WIRE BRACKET | 77 90 332 08 | 17 | 1 | 2 520 001 | 92 48 796 08 | FRONT WINDOW CPL. |
| WIRE CLIP | 61 10 461 08 | 20 | 12 | 2 932 119 | 96 46 061 08 | SWING FRAME RELAY CONT |
| WIRES PRE-ASS. -S413 | 92 01 751 08 | 1 | 1 | 3 930 718 | 96 56 248 08 | TERMINAL BOX CPL. |
| WIRES PRE-ASS. S417 | 92 01 753 08 | 6 | 1 | 3 930 492 | 96 20 966 08 | TERMINAL BOX CPL. |
| WIRING HARNESS ASSEMBLY | 10 11 997 9 | 5 | 1 | X1011998 | 10 11 998 0 | CABLE HARNESS MOUNTING |
| WIRING HARNESS PRE-ASS. | 10 12 618 8 | 1 | 1 | X1011998 | 10 11 998 0 | CABLE HARNESS MOUNTING |
| WIRING HARNESS W1066 | 96 47 069 08 | 21 | 1 | 1 920 314 | 96 46 921 08 | TERMINAL BOX, PRE-ASSEMB |
| WIRING HARNESS W156 | 96 46 346 08 | (1) | 1 | 2 533 | 91 54 254 08 | EL.INSTRUMENTS F.CRANE D |
| WIRING HARNESS W159 | 96 41 571 08 | (2) | 1 | 2 533 | 91 54 254 08 | EL.INSTRUMENTS F.CRANE D |
| WIRING HARNESS W160 | 96 31 670 08 | 16 | 1 | 2 920 013 | 96 41 599 08 | CABLE LIST ELECTRICAL SYS |
| WIRING HARNESS W301 | 96 35 880 08 | 31 | 1 | 2 920 013 | 96 41 599 08 | CABLE LIST ELECTRICAL SYS |
| WIRING HARNESS W302 | 96 35 881 08 | 32 | 1 | 2 920 013 | 96 41 599 08 | CABLE LIST ELECTRICAL SYS |
| WIRING HARNESS W304 | 96 41 600 08 | 34 | 1 | 2 920 013 | 96 41 599 08 | CABLE LIST ELECTRICAL SYS |
| WIRING HARNESS W400 | 96 46 911 08 | 1 | 1 | 2 780 952 | 91 68 736 08 | ADAPTER DATA LOGGER |
| WIRING HARNESS W554 | 96 72 125 08 | 2 | 1 | 2 780 870 | 91 70 947 08 | CHARGE VOLTAGE REGULA |
| WIRING HARNESS W647 | 96 20 761 08 | 10 | 1 | 2 913 006 | 96 20 732 08 | FAN PLATE PRE-ASS. |
| WIRING HARNESS W648 | 96 20 750 08 | 9 | 1 | 2 913 003 | 96 20 599 08 | FOIL KEYPAD PRE-ASS. |
| WIRING HARNESS WL150A | 96 36 341 08 | 15 | 1 | 2 920 013 | 96 41 599 08 | CABLE LIST ELECTRICAL SYS |
| WOODRUFF KEY DIN 6888 3X5 | 57 04 355 08 | 18 | 1 | X1042993 | 10 42 993 3 | GEAR WHEEL MOTOR |
| WORK LIGHT 55/70W 12/24V | 60 71 445 08 | 12 | 1 | 2 533 003 | 96 28 388 08 | ELECTRIC ADD-ON PARTS CA |
| WORK LIGHT 70W 24V | 60 71 509 08 | 4 | 1 | 2 920 362 | 96 31 865 08 | ELECTR. FOR WORK AREA LI |
| WP DC01 EN 12329 FE/ZN 12 | 95 57 472 03 | 13 | 10 | 1 100 215 | 99 20 783 14 | CENTRE PIECE |
| YOKE DIN 71752 6X24 VERZ.G | 72 51 002 08 | 49 | 1 | 2 522 | 91 10 037 08 | DOOR CPL. |

| Bezeichnung | Artikel | Pos. | Menge | Seite | Baugruppe | Bezeichnung |
|---|---|---|---|---|---|---|
| ABDECKBLECH | 11 49 411 6 | 41 | 2 | 4 003 006 | 91 04 457 08 | HAKENFLASCHE |
| ABDECKKAPPE 12,7 | 59 15 722 08 | 52 | 5 | 2 520 000 | 91 49 872 08 | KABINE VERGLAST |
| ABDECKKAPPE 12,7 | 59 15 722 08 | 62 | 2 | 3 106 000 | 91 60 313 08 | TELESKOP 5 VORM. |
| ABDECKKAPPE 28X30 POLYA | 59 15 709 08 | 103 | 6 | 2 510 100 | 96 44 750 08 | DREHBUEHNENVERKLEIDUN |
| ABDECKKAPPE 28X30 POLYA | 59 15 709 08 | 15 | 6 | 2 510 201 | 96 42 011 08 | KLAPPE VORM. |
| ABDECKKAPPE 28X30 POLYA | 59 15 709 08 | 17 | 1 | 2 533 003 | 96 28 388 08 | ELEKTRIK ANBAUTEILE KABIN |
| ABDECKKAPPE 36X22 PVC-S | 10 21 589 2 | 9 | 1 | 2 790 024 | 96 67 077 08 | SPIEGELHALTER VORM. |
| ABDECKSCHEIBE 17,2X72X8,3 | 90 76 986 | (2) | 2 | 9 080 525 | 90 80 525 | KLIMAKOMPRESSOR ANBAU |
| ABDECKUNG | 10 65 050 7 | (2) | 1 | 2 790 040 | 91 60 499 08 | SPIEGELANBAU KRANFUEHR |
| ABDECKUNG KPL. SL 010 | 69 26 006 08 | 2 | 1 | 6 923 101 | 69 23 101 08 | SEILLAENGENGEBER |
| ABDECKUNG NRS | 99 08 404 14 | 15 | 1 | 1 100 200 | 96 72 944 08 | UNTERWAGEN KPL. |
| ABGASANLAGE KPL. M.FUNK | 91 53 225 08 | 163 | 1 | | LTR 1100 -0 | LIEBHERR LTR 1100 |
| ABGASLEITUNG EDELSTAHL | 97 17 015 08 | 101 | 1 | 2 680 | 91 53 225 08 | ABGASANLAGE KPL. |
| ABGASLEITUNG EDELSTAHL | 97 27 698 08 | 102 | 1 | 2 680 | 91 53 225 08 | ABGASANLAGE KPL. |
| ABGASLEITUNG FLEXIBEL | 97 65 053 08 | 103 | 1 | 2 680 | 91 53 225 08 | ABGASANLAGE KPL. |
| ABGASROHR | 10 11 791 4 | 1 | 1 | X1011810 | 10 11 810 1 | ABGASROHR ANBAU |
| ABGASROHR ANBAU D934 / K2 | 10 11 810 1 | 410 | 1 | X1015207 | 10 15 207 7 | DIESELMOTOR |
| ABGLAETTMITTEL KANISTER5 | 81 12 031 08 | 97 | 1 | 2 520 000 | 91 49 872 08 | KABINE VERGLAST |
| ABSCHLUSSRING | 94 42 287 03 | 60 | 1 | 9 444 410 | 94 44 410 03 | FAHRANTRIEB |
| ABSPERRORGAN DN125-FLAN | 10 47 526 2 | 2 | 1 | 2 340 004 | 96 43 780 08 | OELBEHAELTER VORM. |
| ABSTANDSBOLZEN M3X12 ST | 66 00 428 08 | 9 | 4 | 2 922 001 | 92 84 311 08 | BUSPLATINE |
| ABSTANDSBOLZEN M3X13 ST | 66 00 460 08 | 8 | 12 | 2 922 001 | 92 84 311 08 | BUSPLATINE |
| ABSTANDSBOLZEN M3X4,7 ST | 10 03 021 0 | 12 | 2 | 2 913 005 | 96 28 696 08 | INNENGEHAEUSE VORM. |
| ABSTANDSBOLZEN M3X5 ST | 66 00 422 08 | 10 | 4 | 2 922 001 | 92 84 311 08 | BUSPLATINE |
| ABSTANDSBOLZEN M3X8 ST | 10 00 924 4 | 11 | 2 | 2 913 005 | 96 28 696 08 | INNENGEHAEUSE VORM. |
| ABSTANDSBOLZEN M3X8 ST | 10 00 924 4 | 5 | 2 | 2 913 006 | 96 20 732 08 | LUEFTERBLECH VORM. |
| ABSTANDSBOLZEN M5X12 ST | 66 00 429 08 | 11 | 1 | 2 922 001 | 92 84 311 08 | BUSPLATINE |
| ABSTREIFER 125X140X9,5 | 73 71 745 | 5 | 1 | 1 100 213 | 74 90 654 14 | SPANNER HYDR KPL |
| ABSTURZSICHERUNG | 91 51 084 08 | 136 | 1 | | LTR 1100 -0 | LIEBHERR LTR 1100 |
| ABTRIEBSFLANSCH | 92 76 398 01 | 10 | 1 | 9 686 071 | 96 86 071 01 | PLANETENGETRIEBE |
| ABTRIEBSWELLE M=9 Z=13 | 93 30 749 01 | 10 | 1 | 9 330 748 | 93 30 748 01 | DREHWERKANTRIEB |
| ACHSE | 10 87 495 9 | (1) | 1 | 6 923 097 | 69 23 097 08 | PEDALGEBER |
| ACHSE | 74 90 153 14 | 3 | 1 | 1 100 214 | 74 90 137 14 | LEITRAD KPL |
| ACHSE 108.0X92 S355J2H FE// | 95 55 602 08 | 5 | 1 | 3 511 006 | 96 45 029 08 | MASTNASE VORM. |
| ACHSE 170X310 35NICRMOV12 | 95 71 000 08 | 1 | 2 | 2 102 | 91 51 080 08 | MONTAGETEILE DREHBUEHN |
| ACHSE RD100X125 S355J2H | 94 93 475 08 | 24 | 2 | 3 501 | 91 05 788 08 | DOPPELKLAPPSPITZE MECH. |
| ACHSE RD100X86 S355J2H FE | 94 93 476 08 | 92 | 1 | 3 501 | 91 05 788 08 | DOPPELKLAPPSPITZE MECH. |
| ACHSE RD110X818 35NICRM | 95 36 561 08 | 31 | 2 | 3 106 000 | 91 60 313 08 | TELESKOP 5 VORM. |
| ACHSHALTER 12X108X84 S69 | 97 31 054 08 | 4 | 2 | 2 450 | 91 53 926 08 | HAUPTHUBWERK |
| ACHSHALTER 20X118X220 S69 | 97 26 082 08 | 6 | 1 | 2 350 | 91 81 361 08 | WIPPZYLINDER M.LAGERUNG |
| ACHSHALTER 20x250x119 S69 | 95 19 139 08 | 2 | 2 | 2 102 | 91 51 080 08 | MONTAGETEILE DREHBUEHN |
| ACHSHALTER 20x250x119 S69 | 95 19 139 08 | 4 | 1 | 2 350 | 91 81 361 08 | WIPPZYLINDER M.LAGERUNG |
| ACHSHALTER 5X20X46 S700M | 93 19 278 08 | 17 | 2 | 2 510 200 | 96 41 258 08 | DREHBUEHNENVERKLEIDUN |
| ACHSHALTER 8X29X100 ST.37 | 96 72 306 03 | 10 | 4 | 1 100 215 | 99 20 783 14 | MITTELTEIL |
| ACHSHALTER LN 4/1 S235JR+ | 99 70 401 01 | 31 | 1 | 3 510 100 | 91 49 246 08 | TRANSPORTHALTERUNG DKS |
| ACHSHALTER LN 4/4 S235JR+ | 99 70 404 01 | 77 | 2 | 3 501 | 91 05 788 08 | DOPPELKLAPPSPITZE MECH. |
| ADAPTER 18-POL SPF | 66 00 245 08 | 14 | 1 | 2 932 042 | 96 68 587 08 | GRUNDAUFBAU |
| ADAPTER DATENLOGGER | 91 68 736 08 | 412 | 1 | | LTR 1100 -0 | LIEBHERR LTR 1100 |
| ADAPTER RI11/4-EDX11/2 A3P | 47 55 033 08 | 655 | 2 | 2 970 | 91 55 482 08 | HYDRAULIK |
| ADAPTER SCHWK. | 92 17 805 08 | 1 | 1 | 3 501 | 91 05 788 08 | DOPPELKLAPPSPITZE MECH. |
| ADAPTERBUCHSE 25X32 X5 | 97 02 447 4 | 1 | 1 | 2 520 101 | 96 49 682 08 | SPRITZDUESE |
| ADAPTERKABEL | 11 00 056 2 | 2 | 1 | 1 681 021 | 96 65 122 08 | SENSOR KPL. |
| AGGREGATETRAEGER | 10 13 621 2 | 1 | 1 | 9 079 480 | 90 79 480 | AGGREGATETRAEGER ANBA |
| AGGREGATETRAEGER ANBA | 90 79 480 | 12 | 1 | X1012193 | 10 12 193 2 | GRUNDMOTOR |
| AGGREGATETRAEGER SCH | 96 56 364 08 | 1 | 1 | 2 210 | 91 81 614 08 | ANTRIEBSAGGREGAT VORM. |
| AKUSTISCHE WARNUNG | 96 43 785 08 | 21 | 1 | 2 920 | 91 55 477 08 | EL.ANLAGE DREHBUEHNE |
| ANBAUTEILE LUFTPRESSER | 10 11 793 0 | 334 | 1 | X1015207 | 10 15 207 7 | DIESELMOTOR |
| ANLAUFRING C60/CuSn8 P | 90 73 188 | 6 | 2 | X1012223 | 10 12 223 3 | NOCKENWELLE KPL. |
| ANLAUFSCHEIBE | 57 15 823 08 | 4 | 1 | 5 700 161 | 57 00 161 | LUFTPRESSER |
| ANLAUFSCHEIBE | 57 15 824 08 | 6 | 1 | 5 700 161 | 57 00 161 | LUFTPRESSER |

| Bezeichnung | Artikel | Pos. | Menge | Seite | Baugruppe | Bezeichnung |
|---|---|---|---|---|---|---|
| ANLAUFSCHEIBE | 74 90 156 14 | 40 | 1 | 1 100 211 | 74 90 653 14 | TRAGROLLE KPL |
| ANLAUFSCHEIBE | 93 87 605 01 | 46 | 1 | 9 686 071 | 96 86 071 01 | PLANETENGETRIEBE |
| ANLAUFSCHEIBE 112X138X3 | 10 11 992 7 | 3 | 2 | X1011693 | 10 11 693 9 | RS KURBELWELLENLAGERU |
| ANLAUFSCHEIBE 112X138X3 | 10 11 992 8 | 4 | 2 | X1011693 | 10 11 693 9 | RS KURBELWELLENLAGERU |
| ANLAUFSCHEIBE 260X4 | 94 44 424 03 | 36 | 1 | 9 444 410 | 94 44 410 03 | FAHRANTRIEB |
| ANLENKSTUECK SCHWK. | 96 18 681 08 | 2 | 1 | 3 501 | 91 05 788 08 | DOPPELKLAPPSPITZE MECH. |
| ANLENKSTUECK SCHWK. SPF | 91 60 328 08 | 1 | 1 | 3 101 | 91 60 312 08 | ANLENKSTUECK VORM. |
| ANLENKSTUECK VORM. | 91 60 312 08 | 1 | 1 | 3 100 | 91 59 279 08 | TELESKOPAUSLEGER KPL. |
| ANSCHLAG KPL. | 95 57 463 03 | 12 | 2 | 1 100 215 | 99 20 783 14 | MITTELTEIL |
| ANSCHLAGMITTEL MONTAGE | 91 78 930 08 | 299 | 1 | | LTR 1100 -0 | LIEBHERR LTR 1100 |
| ANSCHLAGSEIL 5M PP SPF | 77 33 265 08 | 3 | 1 | 3 750 | 91 75 084 08 | WERKZEUG KLAPPSPITZE |
| ANSCHLAGSEIL DIN EN 13414- | 77 33 151 08 | 1 | 3 | 1 790 | 91 78 930 08 | ANSCHLAGMITTEL |
| ANSCHLUSSFLANSCH | 90 79 582 | 1 | 1 | X1011816 | 10 11 816 1 | VERBINDUNGSLEITUNG ANBA |
| ANSCHLUSSPLATTE | 10 41 178 3 | 24 | 1 | X1034357 | 10 34 357 4 | LEITUNGSTROMMEL |
| ANSCHLUSSPLATTE | 51 06 626 14 | 3 | 1 | 1 970 | 96 71 367 08 | HYDRAULIK UNTERWAGEN |
| ANSCHLUSSPLATTE | 57 01 092 08 | 4 | 1 | 5 102 294 | 51 02 294 08 | HYDROMOTOR |
| ANSCHLUSSPLATTE CHEMISC | 51 06 629 14 | 13 | 1 | 1 970 | 96 71 367 08 | HYDRAULIK UNTERWAGEN |
| ANSCHLUSSSTECKER AX | 60 23 370 08 | (164) | 2 | 2 932 042 | 96 68 587 08 | GRUNDAUFBAU |
| ANSCHLUSSSTUECK VORM. | 10 11 614 6 | 217 | 1 | X1015207 | 10 15 207 7 | DIESELMOTOR |
| ANSCHLUSSSTUTZEN | 10 12 000 9 | 1 | 1 | 9 077 279 | 90 77 279 | ANSCHLUSSSTUTZEN ANBAU |
| ANSCHLUSSSTUTZEN ANBAU | 90 77 279 | 221 | 1 | X1015207 | 10 15 207 7 | DIESELMOTOR |
| ANSCHLUSSTRAEGER | 96 86 072 01 | 1 | 1 | 9 686 071 | 96 86 071 01 | PLANETENGETRIEBE |
| ANSCHRAUBSCHARNIER 25X | 10 87 117 7 | 57 | 3 | 2 932 042 | 96 68 587 08 | GRUNDAUFBAU |
| ANSCHWEISSPLATTE S315MC | 95 62 110 14 | 18 | 2 | 1 100 215 | 99 20 783 14 | MITTELTEIL |
| ANSCHWEISSTEILE LWE | 96 46 362 08 | 2 | 1 | 1 100 | 91 71 033 08 | UNTERWAGEN KPL.M.SCHNEL |
| ANTENNE | 10 28 963 1 | 2 | 1 | 2 780 851 | 96 24 498 08 | FUNKANTENNE VORM. |
| ANTENNE 147MM | 76 24 428 | 18 | 1 | 2 533 003 | 96 28 388 08 | ELEKTRIK ANBAUTEILE KABIN |
| ANTRIEBSAGGREGAT KPL. | 91 81 095 08 | 105 | 1 | | LTR 1100 -0 | LIEBHERR LTR 1100 |
| ANTRIEBSAGGREGAT VORM. | 91 81 614 08 | 1 | 1 | 2 200 | 91 81 095 08 | ANTRIEBSAGGREGAT KPL. |
| ANTRIEBSFLANSCH EDELST | 60 60 126 08 | 6 | 1 | 2 780 800 | 91 15 191 08 | ELEKTRIK WINDE 2 |
| ANTRIEBSFLANSCH EDELST | 60 60 126 08 | 6 | 1 | 2 920 200 | 91 27 889 08 | ELEKTRIK WINDE 1 |
| ANTRIEBSGRUPPE AG 934 P30 | 10 15 211 6 | 100 | 1 | 2 210 | 91 81 614 08 | ANTRIEBSAGGREGAT VORM. |
| ANTRIEBSRAD 983593114 LH | 74 90 652 14 | 6 | 1 | 1 100 205 | 96 51 633 08 | RAUPENTRAEGER KPL.RE. |
| ANTRIEBSRAD 983593114 LH | 74 90 652 14 | 6 | 1 | 1 100 210 | 96 51 634 08 | RAUPENTRAEGER KPL.LI. |
| ANTRIEBSWELLE | 93 87 600 01 | 5 | 1 | 9 686 071 | 96 86 071 01 | PLANETENGETRIEBE |
| ANTRIEBSWELLE M=3,75 Z=15 | 94 44 427 03 | 40 | 1 | 9 444 410 | 94 44 410 03 | FAHRANTRIEB |
| ARBEITSSCHEINWERFER 55/7 | 60 71 445 08 | 12 | 1 | 2 533 003 | 96 28 388 08 | ELEKTRIK ANBAUTEILE KABIN |
| ARBEITSSCHEINWERFER 70 | 60 71 509 08 | 4 | 1 | 2 920 362 | 96 31 865 08 | ELEKTRIK ARBEITSSCHEINW |
| ARMATURENBRETT | 97 17 745 08 | 1 | 1 | 2 531 001 | 96 36 738 08 | ELEKTRIK ARMLEHNE LI. |
| ARMATURENBRETT | 97 17 746 08 | 1 | 1 | 2 531 002 | 96 36 739 08 | ELEKTRIK ARMLEHNE RE. |
| ARMATURENBRETT 2X228X66 | 97 16 054 08 | 1 | 1 | 2 530 002 | 96 19 448 08 | ARMATURENBRETT VORM.V |
| ARMATURENBRETT DACH | 96 32 139 08 | 1 | 1 | 2 533 001 | 96 41 568 08 | ARMATURENBRETT DACH VO |
| ARMATURENBRETT DACH VO | 96 41 568 08 | 3 | 1 | 2 533 | 91 54 254 08 | ELEKTRIK KRANFUEHRERKAB |
| ARMATURENBRETT VORM.V | 96 19 448 08 | 3 | 1 | 2 530 | 91 34 053 08 | ELEKTRIK ARMATUREN KRA |
| ARMATURENKASTEN | 59 10 706 08 | 1 | 1 | 2 520 021 | 92 17 203 08 | ARMATURENKASTEN LIEFERU |
| ARMATURENKASTEN KPL. | 92 13 430 08 | 12 | 1 | 2 520 000 | 91 49 872 08 | KABINE VERGLAST |
| ARMATURENKASTEN LIEFERU | 92 17 203 08 | 1 | 1 | 2 520 018 | 92 13 430 08 | ARMATURENKASTEN KPL. |
| ARMAUFLAGE KPL.LI. | 92 15 880 08 | 10 | 1 | 2 502 | 91 01 533 08 | STEUERSTAND |
| ARMAUFLAGE KPL.RE. | 92 15 879 08 | 11 | 1 | 2 502 | 91 01 533 08 | STEUERSTAND |
| ARMLEHNE 558X115 X132 AB | 95 33 655 08 | 8 | 1 | 2 502 | 91 01 533 08 | STEUERSTAND |
| ARMLEHNE 558X122X132 ABS | 95 33 653 08 | 9 | 1 | 2 502 | 91 01 533 08 | STEUERSTAND |
| ARMLEHNE 563X127 X190 AB | 95 33 654 08 | 2 | 1 | 2 502 | 91 01 533 08 | STEUERSTAND |
| ARMLEHNE 563X132 X190 AB | 95 33 651 08 | 3 | 1 | 2 502 | 91 01 533 08 | STEUERSTAND |
| ASCHENBECHER 92X57,5X26 | 73 66 731 | 51 | 1 | 2 520 000 | 91 49 872 08 | KABINE VERGLAST |
| ATL-ANBAU K26 | 10 11 832 6 | 430 | 1 | X1015207 | 10 15 207 7 | DIESELMOTOR |
| AUFFANGGURT EN 361 IK G 2 | 11 00 730 5 | 1 | 1 | 1 793 010 | 91 69 598 08 | PERSOENLICHE SCHUTZAUS |
| AUFKLEBER | 10 66 390 9 | (1) | 1 | X1032706 | 10 32 706 5 | ELEKTROPUMPE |
| AUFKLEBER BEHAELTER 2,5K | 96 74 218 08 | 30 | 1 | X1032706 | 10 32 706 5 | ELEKTROPUMPE |
| AUFLAGEBOCK | 60 27 360 08 | 205 | 2 | 3 930 718 | 96 56 248 08 | KLEMMKASTEN KPL. |
| AUFLAUFKEIL | 97 01 940 08 | 45 | 1 | 2 522 | 91 10 037 08 | TUER KPL. |

| Bezeichnung | Artikel | Pos. | Menge | Seite | Baugruppe | Bezeichnung |
|---|---|---|---|---|---|---|
| AUFLAUFKEIL 28X35X80 PA6G | 95 67 459 08 | 120 | 1 | 2 520 000 | 91 49 872 08 | KABINE VERGLAST |
| AUFNAHMEBOLZEN 65.0X330 | 97 57 621 08 | 9 | 4 | 2 560 | 91 50 900 08 | GEGENGEWICHT M.BEFESTIG |
| AUFSTIEG KPL. | 99 14 563 14 | 3 | 4 | 1 300 005 | 99 17 196 14 | RAUPENBESTUECKUNG |
| AUFSTIEGSTRITT ELOXIERT | 97 23 508 08 | 3 | 2 | 2 515 007 | 96 42 014 08 | PODEST VORM. |
| AUSGLEICHSBEHAELTER 0,2L | 50 28 073 08 | 7 | 1 | 2 971 | 91 50 610 08 | HYDRAULIK HILFSHUBWERK |
| AUSGLEICHSBEHAELTER SCH | 96 79 365 08 | 1 | 1 | 2 200 048 | 96 84 070 08 | AUSGLEICHSBEHAELTER VO |
| AUSGLEICHSBEHAELTER VO | 96 32 140 08 | 2 | 1 | 2 200 | 91 81 095 08 | ANTRIEBSAGGREGAT KPL. |
| AUSGLEICHSBEHAELTER VO | 96 84 070 08 | 1 | 1 | 2 200 048 | 96 32 140 08 | AUSGLEICHSBEHAELTER VO |
| AUSGLEICHSCHEIBE | 51 07 832 08 | 17 | 1 | 5 114 177 | 51 14 177 08 | DRUCKBEGRENZUNGSVENTI |
| AUSGLEICHSKUPPLUNG VER | 10 35 601 8 | 15 | 1 | 2 430 | 91 54 389 08 | DREHBUEHNENARRETIERUN |
| AUSGLEICHWELLE VORM. | 90 77 131 | 1 | 2 | 9 074 165 | 90 74 165 | MASSENAUSGLEICH ANBAU |
| AUSLASSVENTIL | 10 13 675 3 | 4 | 2 | X1014155 | 10 14 155 5 | ZYLINDERKOPF VORM. |
| AUSLASSVENTIL | 90 74 451 | 4 | 2 | X1012036 | 10 12 036 5 | ZYLINDERKOPF VORM. |
| AUSSCHUBMECHANIK | 91 57 885 08 | 7 | 1 | 3 100 | 91 59 279 08 | TELESKOPAUSLEGER KPL. |
| AUSSENLAMELLE | 73 73 506 03 | (4) | 9 | 9 444 410 | 94 44 410 03 | FAHRANTRIEB |
| AUSSTEIFUNG KABINE | 91 54 183 08 | 130 | 1 | | LTR 1100 -0 | LIEBHERR LTR 1100 |
| AXIALZYLINDERROLLENLAGE | 74 66 049 08 | 7 | 1 | 4 027 | 91 42 310 08 | LASTHAKEN |
| AXIALZYLINDERROLLENLAGE | 74 66 071 08 | 37 | 1 | 4 003 006 | 91 04 457 08 | HAKENFLASCHE |
| BALLASTIERZYLINDER 110/100 | 10 32 633 4 | 1 | 2 | 2 571 | 91 50 902 08 | HYDRAULISCHE BALLASTIER |
| BATTERIE 1.5V 16.5AH | 61 32 006 08 | 3 | 10 | 1 750 002 | 92 86 201 08 | ZUBEHOER |
| BATTERIE 12V 170AH SPF | 10 44 993 4 | 5 | 2 | 2 920 083 | 96 31 039 08 | ELEKTRIK BATTERIEKASTEN |
| BATTERIEHAUPTSCHALTER | 60 60 709 08 | 6 | 1 | 2 920 083 | 96 31 039 08 | ELEKTRIK BATTERIEKASTEN |
| BATTERIEKASTEN KPL. | 91 46 555 08 | 107 | 1 | | LTR 1100 -0 | LIEBHERR LTR 1100 |
| BATTERIEKASTEN SCHWK. | 96 31 154 08 | 1 | 1 | 2 260 006 | 96 31 147 08 | BATTERIEKASTEN VORM. |
| BATTERIEKASTEN VORM. | 96 31 147 08 | 1 | 1 | 2 260 | 91 46 555 08 | BATTERIEKASTEN KPL. |
| BATTERIEKLEMME MINUS VER | 61 32 066 08 | 21 | 1 | 2 920 083 | 96 31 039 08 | ELEKTRIK BATTERIEKASTEN |
| BATTERIEKLEMME PLUS VER | 61 32 065 08 | 22 | 1 | 2 920 083 | 96 31 039 08 | ELEKTRIK BATTERIEKASTEN |
| BAUGRUPPENTRAEGER 56TE | 91 23 538 08 | 43 | 1 | 2 932 042 | 96 68 587 08 | GRUNDAUFBAU |
| BE- UND ENTLUEFTUNGSFIL | 72 11 088 01 | 7 | 1 | 9 393 684 | 93 93 684 01 | OELMESSEINRICHTUNG |
| BEDIENKNOPF | 70 22 049 | 20 | 1 | 5 530 022 | 55 30 022 08 | WASSERHEIZGERAET |
| BEDIENPULT BALLAST P13 | 96 36 055 08 | 27 | 1 | 2 920 | 91 55 477 08 | EL.ANLAGE DREHBUEHNE |
| BEDIENTEIL | 57 18 499 08 | 17 | 1 | 5 530 022 | 55 30 022 08 | WASSERHEIZGERAET |
| BEFESTIGUNGSSATZ | 10 80 064 2 | 31 | 1 | 6 923 101 | 69 23 101 08 | SEILLAENGENGEBER |
| BEFESTIGUNGSSCHELLE 13 | 60 20 033 08 | 9 | 2 | 2 932 215 | 92 26 129 08 | VERTEILER MASSE |
| BEFESTIGUNGSSCHELLE 8 | 60 20 032 08 | 8 | 1 | 2 932 215 | 92 26 129 08 | VERTEILER MASSE |
| BEFESTIGUNGSTEILE DREHV | 91 48 605 08 | 29 | 1 | | LTR 1100 -0 | LIEBHERR LTR 1100 |
| BEHAELTER 2,5 KG | 10 03 827 1 | 29 | 1 | X1032706 | 10 32 706 5 | ELEKTROPUMPE |
| BEHAELTER 3L | 59 10 553 08 | 24 | 1 | 2 520 000 | 91 49 872 08 | KABINE VERGLAST |
| BEHAELTERABDECKKAPPE | 10 40 981 7 | 34 | 1 | X1032706 | 10 32 706 5 | ELEKTROPUMPE |
| BEHAELTERVERSCHRAUBUN | 11 63 212 5 | (1) | 1 | 2 971 | 91 50 610 08 | HYDRAULIK HILFSHUBWERK |
| BELUEFTUNGSFILTER | 51 06 673 08 | 5 | 2 | 2 340 004 | 96 43 780 08 | OELBEHAELTER VORM. |
| BESCHILDERUNG DKS | 96 61 397 08 | 880 | 1 | 3 500 | 91 05 776 08 | DOPPELKLAPPSPITZE MECH.K |
| BESCHILDERUNG KLAPPSPITZ | 91 13 525 08 | 355 | 1 | | LTR 1100 -0 | LIEBHERR LTR 1100 |
| BESCHILDERUNG KUEHLMITT | 91 80 907 08 | 170 | 1 | | LTR 1100 -0 | LIEBHERR LTR 1100 |
| BESCHILDERUNG MASTNASE | 96 76 955 08 | 8 | 1 | 3 511 | 91 54 159 08 | MASTNASE |
| BESCHILDERUNG SPANIEN | 91 62 974 08 | 74 | 1 | | LTR 1100 -0 | LIEBHERR LTR 1100 |
| BESTUECKUNGSMODUL | 96 19 694 08 | 10 | 1 | 2 932 167 | 96 32 480 08 | KLEMMENLEISTE |
| BESTUECKUNGSMODUL 1 | 92 71 584 08 | (153) | 1 | 3 930 492 | 96 20 966 08 | KLEMMKASTEN KPL. |
| BETAETIGUNGSDORN 1,5 | 70 42 572 08 | 58 | 1 | 2 932 095 | 96 46 064 08 | SCHWENKRAHMEN SICHERUN |
| BETAETIGUNGSDORN GD-ZN | 70 42 534 08 | 3 | 4 | 2 501 022 | 96 34 184 08 | DECKEL KPL. |
| BETAETIGUNGSDORN GD-ZN | 70 42 534 08 | 36 | 2 | 2 510 200 | 96 41 258 08 | DREHBUEHNENVERKLEIDUN |
| BETAETIGUNGSEINHEIT | 57 19 355 08 | (1) | 1 | 9 330 748 | 93 30 748 01 | DREHWERKANTRIEB |
| BETAETIGUNGSGRIFF | 60 60 934 08 | 1 | 1 | 6 060 709 | 60 60 709 08 | BATTERIEHAUPTSCHALTER |
| BETRIEBSSTUNDENZAEHLER | 69 17 985 08 | 4 | 1 | 2 533 001 | 96 41 568 08 | ARMATURENBRETT DACH VO |
| BETRIEBSSTUNDENZAEHLER | 69 18 022 08 | 36 | 1 | 2 932 042 | 96 68 587 08 | GRUNDAUFBAU |
| BEUTEL | 11 32 072 0 | (1) | 1 | 1 793 010 | 91 69 598 08 | PERSOENLICHE SCHUTZAUS |
| BEZEICHNUNGSSCHILD 20X8 | 60 27 614 08 | 56 | 70 | 2 932 042 | 96 68 587 08 | GRUNDAUFBAU |
| BEZEICHNUNGSSCHILD 20X8 | 60 27 614 08 | 56 | 50 | 2 932 095 | 96 46 064 08 | SCHWENKRAHMEN SICHERUN |
| BEZEICHNUNGSSCHILD 20X8 | 60 27 614 08 | 12 | 10 | 2 932 166 | 92 68 911 08 | VERTEILER MASSE |
| BEZEICHNUNGSSCHILD 25,4X | 60 27 601 08 | 1 | 9 | 1 400 201 | 96 43 983 08 | SCHLAUCHLEITUNGEN ABST |

| Bezeichnung | Artikel | Pos. | Menge | Seite | Baugruppe | Bezeichnung |
|---|---|---|---|---|---|---|
| BEZEICHNUNGSSCHILD 25,4X | 60 27 601 08 | 1 | 25 | 1 997 | 91 53 489 08 | SCHLAUCHLEITUNGEN RAUP |
| BEZEICHNUNGSSCHILD 25,4X | 60 27 601 08 | 1 | 5 | 2 831 021 | 96 38 140 08 | SCHLAUCHLEITUNGEN KLIMA |
| BEZEICHNUNGSSCHILD 25,4X | 60 27 601 08 | 1 | 3 | 2 970 061 | 96 43 131 08 | SCHLAUCHLEITUNGEN ZUSA |
| BEZEICHNUNGSSCHILD 25,4X | 60 27 601 08 | 1 | 1 | 2 970 103 | 96 43 157 08 | SCHLAUCHLEITUNGEN OELKU |
| BEZEICHNUNGSSCHILD 25,4X | 60 27 601 08 | 1 | 10 | 2 971 012 | 96 43 144 08 | SCHLAUCHLEITUNGEN HUBW |
| BEZEICHNUNGSSCHILD 25,4X | 60 27 601 08 | (1) | 4 | 2 975 038 | 91 26 492 08 | ZUSATZHYDRAULIK KLAPPSPI |
| BEZEICHNUNGSSCHILD 25,4X | 60 27 601 08 | 1 | 69 | 2 997 | 91 51 089 08 | SCHLAUCHLEITUNGEN OBER |
| BEZEICHNUNGSSCHILD 25,4X | 60 27 602 08 | 2 | 2 | 2 970 061 | 96 43 131 08 | SCHLAUCHLEITUNGEN ZUSA |
| BEZEICHNUNGSSCHILD 25,4X | 60 27 602 08 | 2 | 16 | 2 997 | 91 51 089 08 | SCHLAUCHLEITUNGEN OBER |
| BEZEICHNUNGSSCHILD 25,4X | 60 27 603 08 | 2 | 1 | 1 400 201 | 96 43 983 08 | SCHLAUCHLEITUNGEN ABST |
| BEZEICHNUNGSSCHILD 25,4X | 60 27 603 08 | 2 | 18 | 1 997 | 91 53 489 08 | SCHLAUCHLEITUNGEN RAUP |
| BEZEICHNUNGSSCHILD 25,4X | 60 27 603 08 | 3 | 3 | 2 970 061 | 96 43 131 08 | SCHLAUCHLEITUNGEN ZUSA |
| BEZEICHNUNGSSCHILD 25,4X | 60 27 603 08 | 2 | 6 | 2 970 103 | 96 43 157 08 | SCHLAUCHLEITUNGEN OELKU |
| BEZEICHNUNGSSCHILD 25,4X | 60 27 603 08 | 2 | 3 | 2 971 012 | 96 43 144 08 | SCHLAUCHLEITUNGEN HUBW |
| BEZEICHNUNGSSCHILD 25,4X | 60 27 603 08 | 3 | 26 | 2 997 | 91 51 089 08 | SCHLAUCHLEITUNGEN OBER |
| BEZEICHNUNGSSTREIFEN | 60 27 629 08 | 8 | 1 | 2 932 167 | 96 32 480 08 | KLEMMENLEISTE |
| BLECH | 92 75 303 01 | 14 | 1 | 9 330 748 | 93 30 748 01 | DREHWERKANTRIEB |
| BLECH 0 Edelstahl | 97 09 068 08 | 11 | 1 | 2 680 | 91 53 225 08 | ABGASANLAGE KPL. |
| BLECH 1,5X200X310 DC01 FE// | 95 57 391 08 | 13 | 1 | 2 520 000 | 91 49 872 08 | KABINE VERGLAST |
| BLECH 1,5X65X155 DC01 FE// | 95 35 266 08 | 5 | 1 | 2 932 042 | 96 68 587 08 | GRUNDAUFBAU |
| BLECH 1,5X65X155 DC01 FE// | 95 35 266 08 | 4 | 1 | 2 932 095 | 96 46 064 08 | SCHWENKRAHMEN SICHERUN |
| BLECH 1,5X94X105 DC01 | 95 60 636 08 | 5 | 1 | 2 520 021 | 92 17 203 08 | ARMATURENKASTEN LIEFERU |
| BLECH 1.5X158X338 DC01 FE// | 97 29 623 08 | 8 | 1 | 2 932 042 | 96 68 587 08 | GRUNDAUFBAU |
| BLECH 1.5X245X164 DC01 | 95 60 688 08 | 10 | 1 | 2 520 018 | 92 13 430 08 | ARMATURENKASTEN KPL. |
| BLECH 1.5X272X796 DC01 | 97 14 053 08 | 3 | 1 | 2 932 042 | 96 68 587 08 | GRUNDAUFBAU |
| BLECH 1.5X647X828 DC01 | 97 45 329 08 | 2 | 1 | 2 932 119 | 96 46 061 08 | SCHWENKRAHMEN RELAISST |
| BLECH 1.5X67X79 DC01 FE//ZN | 97 68 803 08 | 19 | 1 | 2 932 042 | 96 68 587 08 | GRUNDAUFBAU |
| BLECH 1.5x628x55 DC01 | 95 52 153 08 | 7 | 1 | 2 932 042 | 96 68 587 08 | GRUNDAUFBAU |
| BLECH 10X126X92 S355MC FE | 97 22 862 08 | 23 | 1 | 2 430 | 91 54 389 08 | DREHBUEHNENARRETIERUN |
| BLECH 10X220X290 S960QL | 95 67 586 08 | 5 | 1 | 3 330 | 91 57 885 08 | AUSSCHUBMECHANIK |
| BLECH 15X135X128 S690QL | 95 38 563 08 | 67 | 1 | 3 501 | 91 05 788 08 | DOPPELKLAPPSPITZE MECH. |
| BLECH 15X170X190 S690QL | 95 41 437 08 | 99 | 1 | 3 501 | 91 05 788 08 | DOPPELKLAPPSPITZE MECH. |
| BLECH 15X300X120 S355MC | 97 65 411 08 | 8 | 4 | 1 740 010 | 96 50 675 08 | MONTAGETEILE |
| BLECH 15X47X70 S355MC FE// | 97 30 132 08 | 32 | 1 | 2 510 100 | 96 44 750 08 | DREHBUEHNENVERKLEIDUN |
| BLECH 15X95X220 S960QL | 97 52 577 08 | 20 | 4 | 2 430 | 91 54 389 08 | DREHBUEHNENARRETIERUN |
| BLECH 1X128X128 DC01 FE// | 97 04 551 6 | 114 | 6 | 3 501 | 91 05 788 08 | DOPPELKLAPPSPITZE MECH. |
| BLECH 1X171X405 DC01 FE// | 97 45 335 08 | 6 | 1 | 2 932 042 | 96 68 587 08 | GRUNDAUFBAU |
| BLECH 1X176X176 X5CRNI18-1 | 97 47 926 08 | (1) | 1 | 2 510 100 | 96 44 750 08 | DREHBUEHNENVERKLEIDUN |
| BLECH 1X35X100 DC01 FE//ZN | 95 70 687 08 | 24 | 3 | 2 440 022 | 96 42 336 08 | WINDE 2 VORM. |
| BLECH 1X35X22 ALMG3 | 61 10 022 08 | 5 | 1 | 2 913 003 | 96 20 599 08 | FOLIENTASTATUR VORM. |
| BLECH 1X467X259 ALMG3 H11 | 97 17 132 08 | 2 | 1 | 2 913 005 | 96 28 696 08 | INNENGEHAEUSE VORM. |
| BLECH 1X70X70 DC01 FE//ZN | 97 00 837 1 | 118 | 4 | 3 501 | 91 05 788 08 | DOPPELKLAPPSPITZE MECH. |
| BLECH 1X70X80 DC01 FE//ZN | 95 35 155 08 | 7 | 1 | 2 270 | 91 50 456 08 | KRAFTSTOFFBEHAELTER AN |
| BLECH 1X70X80 DC01 FE//ZN | 95 35 155 08 | 7 | 1 | 2 340 | 91 53 116 08 | OELBEHAELTER ANBAU |
| BLECH 1X95X78 ALMG3 H111 | 97 09 808 08 | 5 | 1 | 2 913 | 91 32 850 08 | LICCON KONSOLE LCD2 |
| BLECH 2.5x225x268 DC01 FE// | 95 70 207 08 | 19 | 1 | 3 105 000 | 91 62 546 08 | TELESKOP 4 VORM. |
| BLECH 2.5x227x177 DC01 FE// | 95 70 189 08 | 19 | 1 | 3 106 000 | 91 60 313 08 | TELESKOP 5 VORM. |
| BLECH 2.5x229x148 DC01 FE// | 95 70 252 08 | 19 | 2 | 3 102 000 | 91 62 543 08 | TELESKOP 1 VORM. |
| BLECH 2.5x229x148 DC01 FE// | 95 70 252 08 | 19 | 2 | 3 103 000 | 91 62 544 08 | TELESKOP 2 VORM. |
| BLECH 2.5x229x148 DC01 FE// | 95 70 252 08 | 19 | 2 | 3 104 000 | 91 62 545 08 | TELESKOP 3 VORM. |
| BLECH 2.5x634x41 DC01 FE// | 97 02 009 08 | 3 | 2 | 2 260 006 | 96 31 147 08 | BATTERIEKASTEN VORM. |
| BLECH 20X45X230 S690QL | 95 36 085 08 | 5 | 2 | 3 510 100 | 91 49 246 08 | TRANSPORTHALTERUNG DKS |
| BLECH 2X103X40 ALMG3 H111 | 97 26 310 08 | 1 | 1 | 2 780 851 | 96 24 498 08 | FUNKANTENNE VORM. |
| BLECH 2X1090X1326 DC01 | 97 45 632 08 | 1 | 1 | 2 932 042 | 96 68 587 08 | GRUNDAUFBAU |
| BLECH 2X1144X1092 ALMG3 H | 97 65 621 08 | 5 | 1 | 2 510 100 | 96 44 750 08 | DREHBUEHNENVERKLEIDUN |
| BLECH 2X114X114 DC01 FE// | 95 70 188 08 | 8 | 4 | 3 105 000 | 91 62 546 08 | TELESKOP 4 VORM. |
| BLECH 2X114X114 DC01 FE// | 95 70 188 08 | 8 | 4 | 3 106 000 | 91 60 313 08 | TELESKOP 5 VORM. |
| BLECH 2X1162X241 DC01 FE// | 97 45 664 08 | 9 | 1 | 2 932 042 | 96 68 587 08 | GRUNDAUFBAU |
| BLECH 2X124X124 DC01 FE// | 95 70 112 08 | 8 | 4 | 3 102 000 | 91 62 543 08 | TELESKOP 1 VORM. |
| BLECH 2X124X124 DC01 FE// | 95 70 112 08 | 8 | 4 | 3 103 000 | 91 62 544 08 | TELESKOP 2 VORM. |

| Bezeichnung | Artikel | Pos. | Menge | Seite | Baugruppe | Bezeichnung |
|---|---|---|---|---|---|---|
| BLECH 2X124X124 DC01 FE// | 95 70 112 08 | 8 | 4 | 3 104 000 | 91 62 545 08 | TELESKOP 3 VORM. |
| BLECH 2X128X128 DC01 FE// | 97 04 551 7 | 115 | 3 | 3 501 | 91 05 788 08 | DOPPELKLAPPSPITZE MECH. |
| BLECH 2X144X80 DC01 FE//ZN | 95 63 963 08 | 1 | 1 | 2 932 166 | 92 68 911 08 | VERTEILER MASSE |
| BLECH 2X162X142 ALMG3 H11 | 97 65 362 08 | 20 | 1 | 2 932 042 | 96 68 587 08 | GRUNDAUFBAU |
| BLECH 2X171X133 DC01 FE// | 97 50 847 08 | 6 | 2 | 2 984 | 91 52 906 08 | OELKUEHLER EINBAU |
| BLECH 2X179X241 DC01 FE// | 97 16 260 08 | 3 | 1 | 2 430 | 91 54 389 08 | DREHBUEHNENARRETIERUN |
| BLECH 2X183X140 DC01 FE// | 97 89 160 08 | 24 | 1 | 2 210 | 91 81 614 08 | ANTRIEBSAGGREGAT VORM. |
| BLECH 2X195X66 X5CRNI18-1 | 97 47 423 08 | 7 | 1 | 2 510 072 | 96 44 614 08 | KLAPPE VORM.RECHTS |
| BLECH 2X200X100 X5CRNI18-1 | 97 53 529 08 | 48 | 1 | 2 440 022 | 96 42 336 08 | WINDE 2 VORM. |
| BLECH 2X200X60 DC01 | 97 48 958 08 | 81 | 1 | 3 101 | 91 60 312 08 | ANLENKSTUECK VORM. |
| BLECH 2X212X144 DC01 FE// | 97 89 159 08 | 23 | 1 | 2 210 | 91 81 614 08 | ANTRIEBSAGGREGAT VORM. |
| BLECH 2X214X142 ALMG3 H11 | 97 47 409 08 | 3 | 1 | 2 780 852 | 96 24 845 08 | GSM-MODUL VORM.LICCON 1 |
| BLECH 2X235X27 DC01 FE//ZN | 97 30 263 08 | 15 | 1 | 2 510 100 | 96 44 750 08 | DREHBUEHNENVERKLEIDUN |
| BLECH 2X236X22 DC01 FE//ZN | 97 48 804 08 | 70 | 1 | 2 510 100 | 96 44 750 08 | DREHBUEHNENVERKLEIDUN |
| BLECH 2X245X245 DC01 FE// | 95 37 449 08 | 61 | 2 | 3 101 | 91 60 312 08 | ANLENKSTUECK VORM. |
| BLECH 2X35X100 DC01 FE//ZN | 95 70 688 08 | 25 | 3 | 2 440 022 | 96 42 336 08 | WINDE 2 VORM. |
| BLECH 2X380X82 DC01 FE//ZN | 97 70 502 08 | 16 | 1 | 2 210 | 91 81 614 08 | ANTRIEBSAGGREGAT VORM. |
| BLECH 2X383X342 DC01 FE// | 97 36 305 08 | 13 | 1 | 3 100 | 91 59 279 08 | TELESKOPAUSLEGER KPL. |
| BLECH 2X398X326 ALMG3 H11 | 97 65 623 08 | 6 | 1 | 2 510 100 | 96 44 750 08 | DREHBUEHNENVERKLEIDUN |
| BLECH 2X42X86 DC01 FE//ZN | 95 35 272 08 | 4 | 1 | 2 932 042 | 96 68 587 08 | GRUNDAUFBAU |
| BLECH 2X438X751 DC01 | 97 59 572 08 | 7 | 1 | 2 510 100 | 96 44 750 08 | DREHBUEHNENVERKLEIDUN |
| BLECH 2X50X76 X5CRNI18-10 | 97 35 365 08 | 8 | 6 | 2 450 025 | 96 35 649 08 | HAUPTHUBWERK VORM. |
| BLECH 2X54X95 DC01 FE//ZN | 95 37 009 08 | 2 | 1 | 2 932 215 | 92 26 129 08 | VERTEILER MASSE |
| BLECH 2X58X171 DC01 FE//ZN | 97 73 511 08 | 9 | 1 | 2 210 008 | 96 48 137 08 | KUEHLER VORM. |
| BLECH 2X58X171 DC01 FE//ZN | 97 73 512 08 | 10 | 1 | 2 210 008 | 96 48 137 08 | KUEHLER VORM. |
| BLECH 2X60X88 DC01 FE//ZN | 97 66 347 08 | 9 | 1 | 2 984 | 91 52 906 08 | OELKUEHLER EINBAU |
| BLECH 2X680X420 DC01 | 95 64 701 08 | 24 | 1 | 3 100 | 91 59 279 08 | TELESKOPAUSLEGER KPL. |
| BLECH 2X692X218 DC01 | 97 73 613 08 | 3 | 1 | 2 210 008 | 96 48 137 08 | KUEHLER VORM. |
| BLECH 2X70X80 DC01 | 95 35 154 08 | 6 | 7 | 2 270 | 91 50 456 08 | KRAFTSTOFFBEHAELTER AN |
| BLECH 2X70X80 DC01 | 95 35 154 08 | 6 | 5 | 2 340 | 91 53 116 08 | OELBEHAELTER ANBAU |
| BLECH 2X722X83 DC01 FE//ZN | 97 65 622 08 | 14 | 1 | 2 510 100 | 96 44 750 08 | DREHBUEHNENVERKLEIDUN |
| BLECH 2X73X380 DC01 | 97 04 551 5 | 113 | 2 | 3 501 | 91 05 788 08 | DOPPELKLAPPSPITZE MECH. |
| BLECH 2X856X894 DC01 | 97 50 846 08 | 4 | 1 | 2 984 | 91 52 906 08 | OELKUEHLER EINBAU |
| BLECH 2X900X149 DC01 FE// | 97 67 563 08 | 30 | 1 | 2 210 | 91 81 614 08 | ANTRIEBSAGGREGAT VORM. |
| BLECH 2X900X63 DC01 FE//ZN | 97 45 197 08 | 19 | 1 | 2 210 | 91 81 614 08 | ANTRIEBSAGGREGAT VORM. |
| BLECH 2X915X156 DC01 | 97 29 707 08 | 4 | 1 | 2 210 008 | 96 48 137 08 | KUEHLER VORM. |
| BLECH 3.5X377X524 ALMG3 H | 97 46 406 08 | 12 | 1 | 2 501 000 | 91 48 769 08 | KRANFUEHRERKABINE VORM |
| BLECH 3.5X590X310 ALMG3 H | 97 51 516 08 | 27 | 1 | 2 510 200 | 96 41 258 08 | DREHBUEHNENVERKLEIDUN |
| BLECH 3X111X222 DC01 FE// | 97 11 358 08 | 19 | 1 | 3 511 006 | 96 45 029 08 | MASTNASE VORM. |
| BLECH 3X128X30 DC01 FE//ZN | 97 31 147 08 | 19 | 4 | 2 450 | 91 53 926 08 | HAUPTHUBWERK |
| BLECH 3X129X50 DC01 FE//ZN | 97 09 288 08 | 18 | 1 | 2 510 200 | 96 41 258 08 | DREHBUEHNENVERKLEIDUN |
| BLECH 3X14X189 DC01 FE//ZN | 95 35 273 08 | 7 | 1 | 2 932 095 | 96 46 064 08 | SCHWENKRAHMEN SICHERUN |
| BLECH 3X151X144 DC01 FE// | 97 50 770 08 | 3 | 1 | 2 984 | 91 52 906 08 | OELKUEHLER EINBAU |
| BLECH 3X151X144 DC01 FE// | 97 51 599 08 | 7 | 1 | 2 984 | 91 52 906 08 | OELKUEHLER EINBAU |
| BLECH 3X155X180 DC01 FE// | 97 42 451 08 | 18 | 1 | 2 210 | 91 81 614 08 | ANTRIEBSAGGREGAT VORM. |
| BLECH 3X15X50 ALMG3 H111 | 97 20 972 08 | 26 | 2 | 2 540 | 91 45 984 08 | HEIZUNG OW |
| BLECH 3X160X522 X5CRNI18-1 | 97 05 004 0 | 1 | 1 | 3 750 026 | 96 89 407 08 | HALTER LINKS |
| BLECH 3X160X522 X5CRNI18-1 | 97 05 004 0 | 1 | 1 | 3 750 028 | 96 89 408 08 | HALTER RECHTS |
| BLECH 3X164X86 DC01 FE//ZN | 97 65 667 08 | 10 | 1 | 2 510 100 | 96 44 750 08 | DREHBUEHNENVERKLEIDUN |
| BLECH 3X255X133 DC01 | 97 58 742 08 | 10 | 1 | 2 270 | 91 50 456 08 | KRAFTSTOFFBEHAELTER AN |
| BLECH 3X292X697 X5CRNI18-1 | 97 05 004 3 | 2 | 1 | 3 750 028 | 96 89 408 08 | HALTER RECHTS |
| BLECH 3X304X194 S355MC FE | 97 46 006 08 | 15 | 1 | 2 210 | 91 81 614 08 | ANTRIEBSAGGREGAT VORM. |
| BLECH 3X318X697 X5CRNI18-1 | 97 05 004 1 | 2 | 1 | 3 750 026 | 96 89 407 08 | HALTER LINKS |
| BLECH 3X33X208 DC01 FE//ZN | 95 37 507 08 | 16 | 1 | 2 501 000 | 91 48 769 08 | KRANFUEHRERKABINE VORM |
| BLECH 3X387X299 DC01 FE// | 97 23 093 08 | 3 | 1 | 2 970 092 | 96 22 207 08 | MECH.BEFESTIGUNGSTEILE |
| BLECH 3X40X300 DC01 FE//ZN | 95 37 816 08 | (1) | 2 | 2 950 | 91 49 515 08 | DRUCKLUFTANLAGE OW |
| BLECH 3X440X204 X5CRNI18-1 | 97 44 979 08 | 6 | 1 | 2 440 022 | 96 42 336 08 | WINDE 2 VORM. |
| BLECH 3X440X387 DC01 | 95 66 602 08 | 36 | 1 | 2 502 | 91 01 533 08 | STEUERSTAND |
| BLECH 3X45X120 DC01 FE//ZN | 95 37 609 08 | (1) | 1 | 2 971 | 91 50 610 08 | HYDRAULIK HILFSHUBWERK |
| BLECH 3X460X398 DC01 FE// | 97 66 112 08 | 12 | 1 | 2 571 | 91 50 902 08 | HYDRAULISCHE BALLASTIER |

| Bezeichnung | Artikel | Pos. | Menge | Seite | Baugruppe | Bezeichnung |
|---|---|---|---|---|---|---|
| BLECH 3X473X25 DC01 RAL 7 | 97 20 971 08 | 25 | 1 | 2 540 | 91 45 984 08 | HEIZUNG OW |
| BLECH 3X583X481 DC01 | 97 66 111 08 | 11 | 1 | 2 571 | 91 50 902 08 | HYDRAULISCHE BALLASTIER |
| BLECH 3X60X80 DC01 FE//ZN | 97 37 172 08 | 20 | 3 | 2 210 | 91 81 614 08 | ANTRIEBSAGGREGAT VORM. |
| BLECH 3X80X68 DC01 FE//ZN | 97 37 173 08 | 21 | 1 | 2 210 | 91 81 614 08 | ANTRIEBSAGGREGAT VORM. |
| BLECH 3X85X30 DC01 FE//ZN | 95 40 160 08 | 79 | 2 | 2 970 | 91 55 482 08 | HYDRAULIK |
| BLECH 3X85X30 DC01 FE//ZN | 95 40 160 08 | 49 | 1 | 2 971 | 91 50 610 08 | HYDRAULIK HILFSHUBWERK |
| BLECH 3X930X580 ALMG3 H11 | 97 75 310 08 | 13 | 1 | 2 510 100 | 96 44 750 08 | DREHBUEHNENVERKLEIDUN |
| BLECH 4X100X132 S315MC FE | 95 56 879 08 | 34 | 1 | 2 920 | 91 55 477 08 | EL.ANLAGE DREHBUEHNE |
| BLECH 4X110X34 S315MC FE// | 97 91 320 08 | 80 | 1 | 3 106 000 | 91 60 313 08 | TELESKOP 5 VORM. |
| BLECH 4X140X113 S315MC FE | 95 36 490 08 | 2 | 1 | 2 970 092 | 96 22 207 08 | MECH.BEFESTIGUNGSTEILE |
| BLECH 4X140X113 S315MC FE | 95 36 490 08 | (3) | 1 | 2 971 | 91 50 610 08 | HYDRAULIK HILFSHUBWERK |
| BLECH 4X189X173 S315MC FE | 97 47 300 08 | 41 | 2 | 2 440 022 | 96 42 336 08 | WINDE 2 VORM. |
| BLECH 4X190X250 S315MC FE | 95 37 494 08 | 65 | 1 | 3 106 000 | 91 60 313 08 | TELESKOP 5 VORM. |
| BLECH 4X196X63 S315MC FE// | 95 56 681 08 | 35 | 1 | 2 920 | 91 55 477 08 | EL.ANLAGE DREHBUEHNE |
| BLECH 4X208X241 S315MC FE | 97 57 695 08 | 2 | 1 | 2 102 022 | 96 32 604 08 | VERRIEGELUNG |
| BLECH 4X20X46 S315MC FE// | 95 37 446 08 | 15 | 1 | 2 501 000 | 91 48 769 08 | KRANFUEHRERKABINE VORM |
| BLECH 4X220X150 S315MC FE | 97 51 432 08 | (3) | 1 | 2 950 | 91 49 515 08 | DRUCKLUFTANLAGE OW |
| BLECH 4X270X157 S315MC FE | 95 41 415 08 | 17 | 1 | 2 711 | 91 53 002 08 | ZENTRALSCHMIERANLAGE O |
| BLECH 4X290X230 S315MC FE | 97 23 359 08 | 70 | 1 | 3 101 | 91 60 312 08 | ANLENKSTUECK VORM. |
| BLECH 4X30X105 S315MC FE// | 95 36 969 08 | 15 | 1 | 2 711 | 91 53 002 08 | ZENTRALSCHMIERANLAGE O |
| BLECH 4X30X128 S315MC FE// | 97 08 360 08 | 44 | 3 | 2 510 200 | 96 41 258 08 | DREHBUEHNENVERKLEIDUN |
| BLECH 4X324X189 S315MC FE | 97 68 223 08 | (4) | 1 | 2 971 | 91 50 610 08 | HYDRAULIK HILFSHUBWERK |
| BLECH 4X32X32 ALMG3 H111 | 97 23 538 08 | 379 | 2 | 2 210 008 | 96 48 137 08 | KUEHLER VORM. |
| BLECH 4X32X32 ALMG3 H111 | 97 23 538 08 | 161 | 2 | 2 520 000 | 91 49 872 08 | KABINE VERGLAST |
| BLECH 4X336X157 S315MC FE | 97 52 305 08 | 7 | 2 | 3 750 008 | 91 75 085 08 | LEITER ANBAU |
| BLECH 4X400X200 S315MC FE | 97 77 537 08 | 13 | 1 | 1 400 200 | 91 53 791 08 | HYDRAULIK VORB. |
| BLECH 4X405X460 RST 37-2 | 95 83 404 14 | 5 | 2 | 1 100 220 | 99 08 404 14 | ABDECKUNG |
| BLECH 4X405X73 S315MC FE// | 97 51 429 08 | (2) | 1 | 2 950 | 91 49 515 08 | DRUCKLUFTANLAGE OW |
| BLECH 4X440X161 S315MC | 95 70 952 08 | 143 | 1 | 2 520 000 | 91 49 872 08 | KABINE VERGLAST |
| BLECH 4X440X890 S315MC | 97 50 794 08 | 9 | 1 | 2 102 | 91 51 080 08 | MONTAGETEILE DREHBUEHN |
| BLECH 4X48X29 S315MC RAL | 97 00 759 7 | 2 | 2 | 2 520 041 | 96 84 504 08 | HANDGRIFF ANBAU |
| BLECH 4X510X850 S235JR | 95 83 464 14 | 4 | 2 | 1 100 220 | 99 08 404 14 | ABDECKUNG |
| BLECH 4X527X430 S315MC | 97 20 552 08 | 10 | 1 | 2 102 | 91 51 080 08 | MONTAGETEILE DREHBUEHN |
| BLECH 4X531X839 S315MC | 97 18 218 08 | 7 | 1 | 2 510 200 | 96 41 258 08 | DREHBUEHNENVERKLEIDUN |
| BLECH 4X55X180 S315MC FE// | 95 43 136 08 | 1 | 1 | 2 970 092 | 96 22 207 08 | MECH.BEFESTIGUNGSTEILE |
| BLECH 4X65X80 S315MC FE// | 97 38 621 08 | 21 | 1 | 2 510 100 | 96 44 750 08 | DREHBUEHNENVERKLEIDUN |
| BLECH 4X68X75 S315MC FE// | 95 70 378 08 | 124 | 2 | 2 520 000 | 91 49 872 08 | KABINE VERGLAST |
| BLECH 4X70X102 S315MC | 95 65 560 08 | 8 | 1 | 2 520 001 | 92 48 796 08 | FRONTSCHEIBE KPL. |
| BLECH 4X751X215 S315MC | 95 66 267 08 | 87 | 1 | 2 520 000 | 91 49 872 08 | KABINE VERGLAST |
| BLECH 4X75X111 S315MC FE// | 95 70 358 08 | 122 | 1 | 2 520 000 | 91 49 872 08 | KABINE VERGLAST |
| BLECH 4X75X128 S315MC FE// | 95 70 359 08 | 123 | 1 | 2 520 000 | 91 49 872 08 | KABINE VERGLAST |
| BLECH 4X763X326 S315MC | 97 18 217 08 | 6 | 1 | 2 510 200 | 96 41 258 08 | DREHBUEHNENVERKLEIDUN |
| BLECH 4X76X2O8 S315MC FE// | 95 37 495 08 | 30 | 1 | 3 501 | 91 05 788 08 | DOPPELKLAPPSPITZE MECH. |
| BLECH 4X80X254 S315MC FE// | 95 71 028 08 | 38 | 1 | 3 510 100 | 91 49 246 08 | TRANSPORTHALTERUNG DKS |
| BLECH 4x383x125 S315MC FE// | 95 70 325 08 | 44 | 4 | 3 101 | 91 60 312 08 | ANLENKSTUECK VORM. |
| BLECH 4x383x125 S315MC FE// | 95 70 325 08 | 44 | 4 | 3 102 000 | 91 62 543 08 | TELESKOP 1 VORM. |
| BLECH 4x383x125 S315MC FE// | 95 70 325 08 | 44 | 4 | 3 103 000 | 91 62 544 08 | TELESKOP 2 VORM. |
| BLECH 4x383x125 S315MC FE// | 95 70 325 08 | 44 | 2 | 3 104 000 | 91 62 545 08 | TELESKOP 3 VORM. |
| BLECH 4x383x125 S315MC FE// | 95 70 325 08 | 44 | 2 | 3 105 000 | 91 62 546 08 | TELESKOP 4 VORM. |
| BLECH 4x440x161 S315MC | 95 66 268 08 | 88 | 1 | 2 520 000 | 91 49 872 08 | KABINE VERGLAST |
| BLECH 4x63x90 S315MC FE// | 95 41 137 08 | 12 | 1 | 2 510 100 | 96 44 750 08 | DREHBUEHNENVERKLEIDUN |
| BLECH 50X200X20 S355J2+N | 97 17 999 08 | 38 | 2 | 2 440 | 91 52 288 08 | HILFSHUBWERK WINDE 2 |
| BLECH 50X250X210 S355J2+N | 97 72 402 08 | 19 | 1 | 1 100 205 | 96 51 633 08 | RAUPENTRAEGER KPL.RE. |
| BLECH 50X250X210 S355J2+N | 97 72 402 08 | 19 | 1 | 1 100 210 | 96 51 634 08 | RAUPENTRAEGER KPL.LI. |
| BLECH 5X1099X558 X5CRNI18 | 97 66 381 08 | 24 | 1 | 2 450 | 91 53 926 08 | HAUPTHUBWERK |
| BLECH 5X110X154 S355MC FE | 95 55 603 08 | 6 | 1 | 3 511 006 | 96 45 029 08 | MASTNASE VORM. |
| BLECH 5X110X210 S355MC FE | 97 79 053 08 | 14 | 1 | 1 400 200 | 91 53 791 08 | HYDRAULIK VORB. |
| BLECH 5X125X74 S355MC FE// | 97 13 393 08 | 8 | 1 | 2 430 | 91 54 389 08 | DREHBUEHNENARRETIERUN |
| BLECH 5X140X380 S355MC | 96 72 328 03 | 14 | 2 | 1 100 215 | 99 20 783 14 | MITTELTEIL |
| BLECH 5X184X184 S960QL | 95 54 506 08 | 38 | 2 | 3 101 | 91 60 312 08 | ANLENKSTUECK VORM. |

| Bezeichnung | Artikel | Pos. | Menge | Seite | Baugruppe | Bezeichnung |
|---|---|---|---|---|---|---|
| BLECH 5X184X184 S960QL | 95 54 506 08 | 38 | 2 | 3 102 000 | 91 62 543 08 | TELESKOP 1 VORM. |
| BLECH 5X184X184 S960QL | 95 54 506 08 | 38 | 2 | 3 103 000 | 91 62 544 08 | TELESKOP 2 VORM. |
| BLECH 5X184X184 S960QL | 95 54 506 08 | 38 | 2 | 3 104 000 | 91 62 545 08 | TELESKOP 3 VORM. |
| BLECH 5X184X184 S960QL | 95 54 506 08 | 38 | 2 | 3 105 000 | 91 62 546 08 | TELESKOP 4 VORM. |
| BLECH 5X200X130 S355MC | 97 74 410 08 | 22 | 2 | 1 100 205 | 96 51 633 08 | RAUPENTRAEGER KPL.RE. |
| BLECH 5X200X130 S355MC | 97 74 410 08 | 22 | 2 | 1 100 210 | 96 51 634 08 | RAUPENTRAEGER KPL.LI. |
| BLECH 5X200X309 S355MC | 97 21 333 08 | 10 | 1 | 3 101 | 91 60 312 08 | ANLENKSTUECK VORM. |
| BLECH 5X20X80 S960QL | 95 54 508 08 | 57 | 1 | 3 101 | 91 60 312 08 | ANLENKSTUECK VORM. |
| BLECH 5X20X80 S960QL | 95 54 508 08 | 57 | 1 | 3 102 000 | 91 62 543 08 | TELESKOP 1 VORM. |
| BLECH 5X20X80 S960QL | 95 54 508 08 | 57 | 1 | 3 103 000 | 91 62 544 08 | TELESKOP 2 VORM. |
| BLECH 5X240X130 S355MC | 97 65 408 08 | 31 | 2 | 1 100 205 | 96 51 633 08 | RAUPENTRAEGER KPL.RE. |
| BLECH 5X240X130 S355MC | 97 65 408 08 | 31 | 1 | 1 100 210 | 96 51 634 08 | RAUPENTRAEGER KPL.LI. |
| BLECH 5X280X360 S355MC FE | 97 24 915 08 | 68 | 1 | 3 501 | 91 05 788 08 | DOPPELKLAPPSPITZE MECH. |
| BLECH 5X349X30 S355MC FE// | 97 69 932 08 | 1 | 4 | 1 100 216 | 96 46 363 08 | MONTAGETEILE LWE |
| BLECH 5X41X63 S960QL | 95 47 627 08 | 10 | 1 | 3 105 000 | 91 62 546 08 | TELESKOP 4 VORM. |
| BLECH 5X41X63 S960QL | 95 47 627 08 | 10 | 1 | 3 106 000 | 91 60 313 08 | TELESKOP 5 VORM. |
| BLECH 5X60X60 S355MC FE// | 95 36 763 08 | 8 | 2 | 2 270 | 91 50 456 08 | KRAFTSTOFFBEHAELTER AN |
| BLECH 5X60X60 S355MC FE// | 95 36 763 08 | 8 | 2 | 2 340 | 91 53 116 08 | OELBEHAELTER ANBAU |
| BLECH 5X670X510 S355MC | 97 65 405 08 | 25 | 1 | 1 100 205 | 96 51 633 08 | RAUPENTRAEGER KPL.RE. |
| BLECH 5X670X510 S355MC | 97 65 405 08 | 25 | 1 | 1 100 210 | 96 51 634 08 | RAUPENTRAEGER KPL.LI. |
| BLECH 5X80X166 S700MC | 97 43 646 08 | 79 | 1 | 3 101 | 91 60 312 08 | ANLENKSTUECK VORM. |
| BLECH 5X80X488 S355MC FE// | 95 55 239 08 | 26 | 6 | 3 101 | 91 60 312 08 | ANLENKSTUECK VORM. |
| BLECH 5x69x44 S960QL | 97 01 483 08 | 10 | 1 | 3 102 000 | 91 62 543 08 | TELESKOP 1 VORM. |
| BLECH 5x69x44 S960QL | 97 01 483 08 | 10 | 1 | 3 103 000 | 91 62 544 08 | TELESKOP 2 VORM. |
| BLECH 5x69x44 S960QL | 97 01 483 08 | 10 | 1 | 3 104 000 | 91 62 545 08 | TELESKOP 3 VORM. |
| BLECH 60X308X36 S960QL FE/ | 95 54 507 08 | 54 | 1 | 3 101 | 91 60 312 08 | ANLENKSTUECK VORM. |
| BLECH 60X308X36 S960QL FE/ | 95 54 507 08 | 54 | 1 | 3 102 000 | 91 62 543 08 | TELESKOP 1 VORM. |
| BLECH 60X308X36 S960QL FE/ | 95 54 507 08 | 54 | 1 | 3 103 000 | 91 62 544 08 | TELESKOP 2 VORM. |
| BLECH 6X346X227 S355MC | 97 65 415 08 | 11 | 1 | 1 400 200 | 91 53 791 08 | HYDRAULIK VORB. |
| BLECH 8X100X166 S355MC FE | 97 65 413 08 | 12 | 4 | 1 400 200 | 91 53 791 08 | HYDRAULIK VORB. |
| BLECH 8X30X58 S355MC FE// | 95 59 743 08 | 29 | 1 | 3 510 100 | 91 49 246 08 | TRANSPORTHALTERUNG DKS |
| BLECH 8X315X425 S960QL | 95 70 399 08 | 49 | 2 | 3 105 000 | 91 62 546 08 | TELESKOP 4 VORM. |
| BLECH 8X325X325 S355MC | 97 04 266 7 | 11 | 2 | 1 100 200 | 96 72 944 08 | UNTERWAGEN KPL. |
| BLECH 8X394X423 S960QL | 95 70 562 08 | 49 | 2 | 3 104 000 | 91 62 545 08 | TELESKOP 3 VORM. |
| BLECH 8X395X448 S960QL | 95 70 381 08 | 49 | 2 | 3 103 000 | 91 62 544 08 | TELESKOP 2 VORM. |
| BLECH 8X420X477 S960QL | 95 70 327 08 | 49 | 2 | 3 102 000 | 91 62 543 08 | TELESKOP 1 VORM. |
| BLECH 8X456X517 S960QL | 95 70 666 08 | 49 | 2 | 3 101 | 91 60 312 08 | ANLENKSTUECK VORM. |
| BLECH 8X70X182 S960QL | 95 55 526 08 | 24 | 1 | 3 510 100 | 91 49 246 08 | TRANSPORTHALTERUNG DKS |
| BLECH 8X970X515 S700MC | 97 49 112 08 | 21 | 1 | 3 510 100 | 91 49 246 08 | TRANSPORTHALTERUNG DKS |
| BLECH 8x160x79 S700MC | 97 02 983 08 | 51 | 1 | 3 104 000 | 91 62 545 08 | TELESKOP 3 VORM. |
| BLECH 8x160x79 S700MC | 97 02 983 08 | 51 | 1 | 3 105 000 | 91 62 546 08 | TELESKOP 4 VORM. |
| BLECH 8x160x79 S960QL | 95 70 329 08 | 51 | 1 | 3 101 | 91 60 312 08 | ANLENKSTUECK VORM. |
| BLECH 8x160x79 S960QL | 95 70 329 08 | 51 | 1 | 3 102 000 | 91 62 543 08 | TELESKOP 1 VORM. |
| BLECH 8x160x79 S960QL | 95 70 329 08 | 51 | 1 | 3 103 000 | 91 62 544 08 | TELESKOP 2 VORM. |
| BLECH S315MC FE//ZN20//C | 95 54 418 08 | 44 | 2 | 3 106 000 | 91 60 313 08 | TELESKOP 5 VORM. |
| BLECH SCHWK. | 92 68 890 08 | 22 | 1 | 2 520 001 | 92 48 796 08 | FRONTSCHEIBE KPL. |
| BLECH SCHWK. FE//ZNNI8//CN/ | 96 00 389 4 | 7 | 1 | 2 210 008 | 96 48 137 08 | KUEHLER VORM. |
| BLECH SCHWK. FE//ZNNI8//CN/ | 96 00 389 5 | 8 | 1 | 2 210 008 | 96 48 137 08 | KUEHLER VORM. |
| BLECH SCHWK.LINKS | 92 50 296 08 | 12 | 1 | 2 502 | 91 01 533 08 | STEUERSTAND |
| BLECH SCHWK.RECHTS | 92 50 297 08 | 13 | 1 | 2 502 | 91 01 533 08 | STEUERSTAND |
| BLECH X5CrNi18-10 | 90 78 684 | 19 | 1 | X1011573 | 10 11 573 7 | KRAFTSTOFFLEITUNGEN |
| BLECHMUTTER M8 | 41 30 070 08 | 13 | 6 | 2 510 201 | 96 42 011 08 | KLAPPE VORM. |
| BLECHSCHRAUBE DIN 7971 S | 40 82 000 08 | 60 | 2 | 2 932 042 | 96 68 587 08 | GRUNDAUFBAU |
| BLECHSCHRAUBE DIN 7981 4, | 59 10 070 08 | 43 | 4 | 2 540 | 91 45 984 08 | HEIZUNG OW |
| BLECHSCHRAUBE DIN 7982 3, | 59 10 059 08 | 5 | 6 | 2 520 018 | 92 13 430 08 | ARMATURENKASTEN KPL. |
| BLECHSCHRAUBE DIN 7983 4, | 40 82 809 08 | 117 | 6 | 2 520 000 | 91 49 872 08 | KABINE VERGLAST |
| BLECHSCHRAUBE ISO 7049 4, | 40 82 505 08 | 164 | 4 | 2 520 000 | 91 49 872 08 | KABINE VERGLAST |
| BLECHSCHRAUBE ISO 7049 S | 10 87 638 0 | 136 | 4 | 2 520 000 | 91 49 872 08 | KABINE VERGLAST |
| BLECHSCHRAUBE ISO 7049 S | 40 02 017 | 11 | 4 | 2 501 000 | 91 48 769 08 | KRANFUEHRERKABINE VORM |
| BLECHSCHRAUBE ISO 7049 ST | 10 87 579 3 | 93 | 9 | 2 520 000 | 91 49 872 08 | KABINE VERGLAST |

| Bezeichnung | Artikel | Pos. | Menge | Seite | Baugruppe | Bezeichnung |
|---|---|---|---|---|---|---|
| BLECHSCHRAUBE ISO 7049 ST | 10 87 579 3 | 23 | 2 | 2 520 001 | 92 48 796 08 | FRONTSCHEIBE KPL. |
| BLECHSCHRAUBE ISO 7049 ST | 10 87 579 3 | 6 | 2 | 2 520 018 | 92 13 430 08 | ARMATURENKASTEN KPL. |
| BLECHSCHRAUBE ISO 7049 ST | 10 87 579 3 | 33 | 10 | 2 522 | 91 10 037 08 | TUER KPL. |
| BLECHSCHRAUBE ISO 7049 S | 40 82 010 14 | 210 | 2 | 3 930 718 | 96 56 248 08 | KLEMMKASTEN KPL. |
| BLECHSCHRAUBE ISO 7051 ST | 40 93 405 08 | 105 | 8 | 2 520 000 | 91 49 872 08 | KABINE VERGLAST |
| BLECHSCHRAUBE ISO 7051 ST | 40 82 808 08 | 119 | 10 | 2 520 000 | 91 49 872 08 | KABINE VERGLAST |
| BLENDE | 60 67 620 08 | 18 | 13 | 2 533 001 | 96 41 568 08 | ARMATURENBRETT DACH VO |
| BLENDE | 96 44 197 08 | 5 | 1 | 2 984 | 91 52 906 08 | OELKUEHLER EINBAU |
| BLENDE 1,5X19,5X111 | 61 10 017 08 | 45 | 3 | 2 932 042 | 96 68 587 08 | GRUNDAUFBAU |
| BLENDE 1,5X40X262 | 61 10 016 08 | 44 | 2 | 2 932 042 | 96 68 587 08 | GRUNDAUFBAU |
| BLENDE 2X696X1108 ALMG3 H | 97 18 215 08 | 3 | 1 | 2 510 200 | 96 41 258 08 | DREHBUEHNENVERKLEIDUN |
| BLENDE GEKLEBT SPF | 96 33 731 08 | 12 | 1 | 2 510 201 | 96 42 011 08 | KLAPPE VORM. |
| BLENDENSCHUTZ 242X171X5 | 10 27 921 0 | 2 | 1 | 2 913 003 | 96 20 599 08 | FOLIENTASTATUR VORM. |
| BLINDBUCHSE PG11 MS | 60 24 113 08 | 24 | 1 | 2 533 003 | 96 28 388 08 | ELEKTRIK ANBAUTEILE KABIN |
| BLINDNIET 3,0X3,2-5,0 | 70 42 121 08 | 10 | 2 | 2 913 005 | 96 28 696 08 | INNENGEHAEUSE VORM. |
| BLINDNIET 3,2X1,8-3,1 | 70 42 126 08 | 13 | 4 | 2 501 000 | 91 48 769 08 | KRANFUEHRERKABINE VORM |
| BLINDNIET 3,2X4,3-5,9 | 70 42 127 08 | 22 | 2 | 2 520 000 | 91 49 872 08 | KABINE VERGLAST |
| BLINDNIET 3,2X4,3-5,9 | 70 42 127 08 | 70 | 12 | 2 932 095 | 96 46 064 08 | SCHWENKRAHMEN SICHERUN |
| BLINDNIET 4,0X10,5 | 70 42 323 08 | 71 | 25 | 2 932 042 | 96 68 587 08 | GRUNDAUFBAU |
| BLINDNIET 4,0X10,5 | 70 42 323 08 | 71 | 6 | 2 932 095 | 96 46 064 08 | SCHWENKRAHMEN SICHERUN |
| BLINDNIETMUTTER M4 K=1,0- | 41 30 062 08 | 70 | 28 | 2 932 042 | 96 68 587 08 | GRUNDAUFBAU |
| BLINDNIETMUTTER M5 K=1,0-3 | 10 04 259 2 | 69 | 29 | 2 932 042 | 96 68 587 08 | GRUNDAUFBAU |
| BLINDNIETMUTTER M5 K=1,5-4 | 41 30 046 08 | 39 | 4 | 2 502 | 91 01 533 08 | STEUERSTAND |
| BLINDNIETMUTTER M6 K=1,0-3 | 10 04 259 3 | 108 | 13 | 2 520 000 | 91 49 872 08 | KABINE VERGLAST |
| BLINDNIETMUTTER M8 ST | 41 30 054 08 | 39 | 8 | 2 501 000 | 91 48 769 08 | KRANFUEHRERKABINE VORM |
| BLINDSTOPFEN BAUREIHE_M | 60 45 189 08 | (151) | 3 | 3 930 492 | 96 20 966 08 | KLEMMKASTEN KPL. |
| BLINDSTOPFEN BAUREIHE_M | 60 45 189 08 | 13 | 2 | 6 923 101 | 69 23 101 08 | SEILLAENGENGEBER |
| BLINDSTOPFEN PG29 MS | 60 25 016 08 | 111 | 1 | 2 932 042 | 96 68 587 08 | GRUNDAUFBAU |
| BLINDSTOPFEN VSTI1/4"ED A3 | 47 77 040 08 | 1 | 2 | 5 113 199 | 51 13 199 08 | SENKBREMSVENTIL |
| BLINDSTOPFEN VSTI1/4"ED A3 | 47 77 040 08 | 17 | 6 | 5 114 869 | 51 14 869 08 | STEUERLEISTE |
| BLINDSTOPFEN VSTI1/4"ED A3 | 47 77 040 08 | 2 | 2 | X1029358 | 10 29 358 6 | SENKBREMSVENTIL |
| BLINDSTOPFEN VSTI1/4"ED A3 | 47 77 040 08 | 120 | 4 | X1033367 | 10 33 367 2 | STEUERBLOCK |
| BLINDSTOPFEN VSTI1/4"ED A3 | 47 77 040 08 | 62 | 1 | X1047529 | 10 47 529 2 | VENTILBLOCK |
| BLINDSTOPFEN VSTI1/4"ED A3 | 47 77 040 08 | 46 | 4 | X1080297 | 10 80 297 1 | VENTILBLOCK |
| BLINDSTOPFEN VSTIM10X1E | 47 77 055 08 | 23 | 2 | 9 387 070 | 93 87 070 01 | KOMPAKTSEILWINDE |
| BLINDSTOPFEN VSTIM10X1E | 47 77 055 08 | 23 | 3 | 9 685 586 | 96 85 586 01 | KOMPAKTSEILWINDE |
| BLITZLEUCHTE 13,2W 24V RO | 60 71 386 08 | 151 | 1 | 2 920 585 | 91 01 520 08 | ELEKTRIK BLITZLEUCHTE |
| BLITZROEHRE 24V | 57 15 119 08 | (1) | 1 | 2 920 585 | 91 01 520 08 | ELEKTRIK BLITZLEUCHTE |
| BLOCK GR.12 | 51 14 753 14 | 15 | 1 | 1 970 | 96 71 367 08 | HYDRAULIK UNTERWAGEN |
| BOCK | 70 42 290 08 | 20 | 2 | 2 501 000 | 91 48 769 08 | KRANFUEHRERKABINE VORM |
| BODENBLECH | 96 41 044 08 | 1 | 1 | 2 984 | 91 52 906 08 | OELKUEHLER EINBAU |
| BODENBLECH SCHWK. | 96 36 794 08 | 4 | 1 | 2 510 200 | 96 41 258 08 | DREHBUEHNENVERKLEIDUN |
| BODENBLECH SCHWK. | 96 41 550 08 | 4 | 1 | 2 510 100 | 96 44 750 08 | DREHBUEHNENVERKLEIDUN |
| BODENMATTE 16X572X724 H | 95 66 761 08 | 62 | 1 | 2 520 000 | 91 49 872 08 | KABINE VERGLAST |
| BODENMATTE GUMMI+PU SP | 95 67 926 08 | 20 | 1 | 2 520 000 | 91 49 872 08 | KABINE VERGLAST |
| BODENPLATTE | 10 30 062 1 | (4) | 1 | 2 920 585 | 91 01 520 08 | ELEKTRIK BLITZLEUCHTE |
| BODENPLATTE B7B LH-GRAU | 78 65 275 14 | 3 | 62 | 1 300 006 | 91 89 127 14 | RAUPENKETTE |
| BOERDELSCHEIBE | 59 15 630 08 | 5 | 2 | 2 520 101 | 96 49 682 08 | SPRITZDUESE |
| BOERDELSCHEIBE | 59 15 630 08 | 2 | 1 | 5 910 672 | 59 10 672 08 | WISCHERMOTOR |
| BOLZEN 100.0X120 42CRMO4 | 97 07 680 08 | 5 | 1 | 2 500 | 91 48 594 08 | KRANFUEHRERKABINE KPL. |
| BOLZEN 10X100 S355J2C+C FE | 94 18 472 08 | 14 | 1 | 3 501 | 91 05 788 08 | DOPPELKLAPPSPITZE MECH. |
| BOLZEN 115.0X228 35NICRM | 95 70 176 08 | 6 | 1 | 3 105 000 | 91 62 546 08 | TELESKOP 4 VORM. |
| BOLZEN 115.0X228 35NICRM | 95 70 176 08 | 6 | 1 | 3 106 000 | 91 60 313 08 | TELESKOP 5 VORM. |
| BOLZEN 118X340 35NICRMOV | 95 66 574 14 | 8 | 8 | 1 100 216 | 96 46 363 08 | MONTAGETEILE LWE |
| BOLZEN 12.0X140 S355J2C+C | 94 20 537 08 | 12 | 4 | 1 740 010 | 96 50 675 08 | MONTAGETEILE |
| BOLZEN 120.0X225 35NICRM | 97 26 081 08 | 2 | 1 | 2 350 | 91 81 361 08 | WIPPZYLINDER M.LAGERUNG |
| BOLZEN 125.0X233 35NICRM | 95 70 110 08 | 6 | 1 | 3 102 000 | 91 62 543 08 | TELESKOP 1 VORM. |
| BOLZEN 125.0X233 35NICRM | 95 70 110 08 | 6 | 1 | 3 103 000 | 91 62 544 08 | TELESKOP 2 VORM. |
| BOLZEN 125.0X233 35NICRM | 95 70 110 08 | 6 | 1 | 3 104 000 | 91 62 545 08 | TELESKOP 3 VORM. |
| BOLZEN 12X40 CUZN39PB3 | 94 44 120 08 | 65 | 1 | 2 520 000 | 91 49 872 08 | KABINE VERGLAST |

| Bezeichnung | Artikel | Pos. | Menge | Seite | Baugruppe | Bezeichnung |
|---|---|---|---|---|---|---|
| BOLZEN 160.0x195 35NICRM | 95 61 648 08 | 3 | 1 | 2 350 | 91 81 361 08 | WIPPZYLINDER M.LAGERUNG |
| BOLZEN 160X50 35NICRMOV12 | 95 62 140 14 | 29 | 2 | 1 100 205 | 96 51 633 08 | RAUPENTRAEGER KPL.RE. |
| BOLZEN 160X50 35NICRMOV12 | 95 62 140 14 | 29 | 2 | 1 100 210 | 96 51 634 08 | RAUPENTRAEGER KPL.LI. |
| BOLZEN 20.0X13 5 S355J2C+C | 95 51 123 08 | 51 | 1 | 3 501 | 91 05 788 08 | DOPPELKLAPPSPITZE MECH. |
| BOLZEN 30X45X35 35NICRM | 97 72 424 08 | 5 | 2 | 1 630 002 | 99 06 183 14 | TRANSPORTABSTUETZUNG |
| BOLZEN 31X132X95 35NICRM | 97 72 521 08 | 1 | 1 | 1 630 003 | 96 47 650 08 | BOLZEN KPL. |
| BOLZEN 33.7X126 S355J2H FE | 97 38 603 08 | 10 | 4 | 2 210 | 91 81 614 08 | ANTRIEBSAGGREGAT VORM. |
| BOLZEN 35.0X264 35NICRMOV | 97 36 353 08 | 3 | 3 | 3 511 | 91 54 159 08 | MASTNASE |
| BOLZEN 35x81 42CRMO4+QT | 93 19 133 08 | 6 | 1 | 3 510 001 | 92 52 800 08 | KONSOLE VORM. |
| BOLZEN 40.0X116 42CRMO4+Q | 97 09 954 08 | 9 | 2 | 2 500 | 91 48 594 08 | KRANFUEHRERKABINE KPL. |
| BOLZEN 40.0X13 3 S355J2G3 | 95 65 956 08 | 8 | 1 | 2 500 | 91 48 594 08 | KRANFUEHRERKABINE KPL. |
| BOLZEN 50.0X13 5 35NICRMOV | 97 31 067 08 | 18 | 4 | 2 450 | 91 53 926 08 | HAUPTHUBWERK |
| BOLZEN 50.0X175 35NICRMOV | 97 17 998 08 | 2 | 2 | 2 440 | 91 52 288 08 | HILFSHUBWERK WINDE 2 |
| BOLZEN 55.0X10 3 35NICRMOV | 95 37 664 08 | 8 | 2 | 2 440 022 | 96 42 336 08 | WINDE 2 VORM. |
| BOLZEN 55.0X305 35NICRMOV | 97 58 682 08 | 10 | 1 | 2 430 | 91 54 389 08 | DREHBUEHNENARRETIERUN |
| BOLZEN 60.0X675 S355J2C+C | 95 22 281 08 | 19 | 1 | 3 501 | 91 05 788 08 | DOPPELKLAPPSPITZE MECH. |
| BOLZEN 65.0X300 35NICRMOV | 97 72 403 08 | 8 | 2 | 1 100 215 | 99 20 783 14 | MITTELTEIL |
| BOLZEN 75X370 35NICRMOV12 | 95 62 101 14 | 9 | 2 | 1 100 215 | 99 20 783 14 | MITTELTEIL |
| BOLZEN DIN 1435 20X50X43 42 | 45 12 227 08 | 4 | 3 | 3 500 104 | 92 95 821 08 | HALTERUNG VORM. |
| BOLZEN DIN 1435 20X50X43 42 | 45 12 227 08 | 21 | 2 | 3 501 | 91 05 788 08 | DOPPELKLAPPSPITZE MECH. |
| BOLZEN DIN 1435 20X50X43 42 | 45 12 227 08 | 4 | 1 | 3 510 001 | 92 52 800 08 | KONSOLE VORM. |
| BOLZEN DIN 1436 30X105X97 3 | 45 14 308 08 | 4 | 1 | 1 630 002 | 99 06 183 14 | TRANSPORTABSTUETZUNG |
| BOLZEN DIN 1436 30X165X155 | 45 14 309 08 | 12 | 1 | 3 510 006 | 96 20 924 08 | KLAPPKONSOLE |
| BOLZEN DIN EN 22340 B20X39 | 45 25 491 08 | 36 | 2 | 3 106 000 | 91 60 313 08 | TELESKOP 5 VORM. |
| BOLZEN DIN EN 22340 B55X1 | 45 00 448 14 | 22 | 4 | 2 571 | 91 50 902 08 | HYDRAULISCHE BALLASTIER |
| BOLZEN DIN EN 22340-B 20H11 | 45 00 220 14 | 9 | 4 | 1 740 010 | 96 50 675 08 | MONTAGETEILE |
| BOLZEN ISO 2340 B 70H11X1 | 48 55 010 14 | 19 | 2 | 2 571 | 91 50 902 08 | HYDRAULISCHE BALLASTIER |
| BOLZEN ISO 2340 B16X610X5 | 45 01 188 08 | 37 | 1 | 3 106 000 | 91 60 313 08 | TELESKOP 5 VORM. |
| BOLZEN ISO 2340 B20X110X94 | 45 25 409 08 | 23 | 1 | 3 501 | 91 05 788 08 | DOPPELKLAPPSPITZE MECH. |
| BOLZEN ISO 2340 B20X110X94 | 45 25 409 08 | 2 | 1 | 3 511 006 | 96 45 029 08 | MASTNASE VORM. |
| BOLZEN ISO 2340 B20X135X1 | 45 00 231 08 | 57 | 2 | 3 501 | 91 05 788 08 | DOPPELKLAPPSPITZE MECH. |
| BOLZEN ISO 2340 B20X190X1 | 45 00 235 08 | 13 | 1 | 3 501 | 91 05 788 08 | DOPPELKLAPPSPITZE MECH. |
| BOLZEN ISO 2340 B20X400X3 | 45 25 509 08 | 2 | 1 | 1 300 010 | 99 14 563 14 | AUFSTIEG KPL. |
| BOLZEN ISO 2340 B35X130X1 | 45 00 342 08 | 16 | 1 | 3 501 | 91 05 788 08 | DOPPELKLAPPSPITZE MECH. |
| BOLZEN ISO 2340 B50X120X96 | 45 25 505 08 | 17 | 3 | 3 501 | 91 05 788 08 | DOPPELKLAPPSPITZE MECH. |
| BOLZEN ISO 2341 B20X115X10 | 45 30 209 08 | 35 | 1 | 3 510 100 | 91 49 246 08 | TRANSPORTHALTERUNG DKS |
| BOLZEN ISO 2341 B20X123X11 | 45 30 203 08 | 22 | 3 | 3 501 | 91 05 788 08 | DOPPELKLAPPSPITZE MECH. |
| BOLZEN ISO 2341 B45X102X85 | 45 30 411 08 | 93 | 2 | 3 501 | 91 05 788 08 | DOPPELKLAPPSPITZE MECH. |
| BOLZEN KPL. | 96 47 650 08 | 3 | 2 | 1 630 002 | 99 06 183 14 | TRANSPORTABSTUETZUNG |
| BOLZEN KPL. 80X130 | 96 50 100 08 | 15 | 2 | 1 100 215 | 99 20 783 14 | MITTELTEIL |
| BOLZEN KPL. 80X130 | 96 50 100 08 | 19 | 2 | 1 100 215 | 99 20 783 14 | MITTELTEIL |
| BOLZEN RD30X117 42CRMO4 | 95 31 434 08 | 4 | 1 | 3 510 006 | 96 20 924 08 | KLAPPKONSOLE |
| BOLZEN RD35X179 S355J2G3 | 95 36 200 08 | 15 | 1 | 3 501 | 91 05 788 08 | DOPPELKLAPPSPITZE MECH. |
| BOLZEN RD35X71 35NICRMOV | 94 40 299 08 | 30 | 1 | 3 510 100 | 91 49 246 08 | TRANSPORTHALTERUNG DKS |
| BOLZEN RD35X88 35NICRMOV | 94 24 398 08 | 20 | 1 | 3 501 | 91 05 788 08 | DOPPELKLAPPSPITZE MECH. |
| BOLZEN RD40X140 35NICRM | 94 03 151 08 | 7 | 2 | 3 511 006 | 96 45 029 08 | MASTNASE VORM. |
| BOLZEN RD40X160 42CRMO4 | 93 90 487 08 | 25 | 1 | 3 501 | 91 05 788 08 | DOPPELKLAPPSPITZE MECH. |
| BOLZEN RD40X270 35NICRM | 95 04 774 08 | 10 | 4 | 3 501 | 91 05 788 08 | DOPPELKLAPPSPITZE MECH. |
| BOLZEN RD45X360 35NICRM | 95 04 775 08 | 9 | 4 | 3 501 | 91 05 788 08 | DOPPELKLAPPSPITZE MECH. |
| BOLZEN RD49,5X83 42CRMO4 | 95 37 466 08 | 9 | 1 | 3 510 006 | 96 20 924 08 | KLAPPKONSOLE |
| BOLZEN RD50X135 35NICRM | 95 36 201 08 | 18 | 1 | 3 501 | 91 05 788 08 | DOPPELKLAPPSPITZE MECH. |
| BOLZENGRIFF FE//ZNNI8//CN/ | 96 32 610 08 | 1 | 1 | 2 102 022 | 96 32 604 08 | VERRIEGELUNG |
| BOWDENZUG | 57 07 566 08 | 3 | 1 | 5 530 854 | 55 30 854 08 | DREIWEGEHAHN |
| BREMSBETAETIGUNGSEINHEI | 50 28 075 01 | (1) | 1 | 9 686 071 | 96 86 071 01 | PLANETENGETRIEBE |
| BREMSE-DICHTUNGSSATZ | 90 01 665 2 | (999) | 1 | 9 330 748 | 93 30 748 01 | DREHWERKANTRIEB |
| BREMSE-DICHTUNGSSATZ | 93 95 896 01 | (998) | 1 | 9 686 071 | 96 86 071 01 | PLANETENGETRIEBE |
| BREMSFEDERSATZ | 93 95 897 01 | (999) | 1 | 9 686 071 | 96 86 071 01 | PLANETENGETRIEBE |
| BREMSLAMELLENSATZ | 93 95 895 01 | (997) | 1 | 9 686 071 | 96 86 071 01 | PLANETENGETRIEBE |
| BREMSSCHLAUCH DIN 74310 | 50 28 104 08 | 27 | 0.85 | 2 540 | 91 45 984 08 | HEIZUNG OW |
| BREMSSCHLAUCH DIN 74310 | 50 28 104 08 | 28 | 0.4 | 2 540 | 91 45 984 08 | HEIZUNG OW |

| Bezeichnung | Artikel | Pos. | Menge | Seite | Baugruppe | Bezeichnung |
|---|---|---|---|---|---|---|
| BREMSSCHLAUCH DIN 74310 | 50 28 104 08 | 150 | 1 | 2 997 | 91 51 089 08 | SCHLAUCHLEITUNGEN OBER |
| BREMSSCHLAUCH DIN 74310 | 50 28 104 08 | 151 | 0.7 | 2 997 | 91 51 089 08 | SCHLAUCHLEITUNGEN OBER |
| BREMSVENTIL | 10 34 723 6 | 16 | 1 | X1010109 | 10 10 109 3 | DREHWERKSVENTIL |
| BUCHSE | 57 15 822 08 | 2 | 1 | 5 700 161 | 57 00 161 | LUFTPRESSER |
| BUCHSE 15,1X27,8X10 | 92 75 207 01 | 26 | 1 | 9 387 598 | 93 87 598 01 | PLANETENGETRIEBE |
| BUCHSE 16.0X11 E235+N GA | 97 45 012 08 | 16 | 2 | 2 440 022 | 96 42 336 08 | WINDE 2 VORM. |
| BUCHSE 160X180X100 | 11 00 499 6 | 5 | 1 | X1087223 | 10 87 223 8 | WIPPZYLINDER |
| BUCHSE 16X140 9SM28K | 70 45 008 08 | 15 | 2 | 3 102 000 | 91 62 543 08 | TELESKOP 1 VORM. |
| BUCHSE 16X140 9SM28K | 70 45 008 08 | 15 | 2 | 3 103 000 | 91 62 544 08 | TELESKOP 2 VORM. |
| BUCHSE 16X140 9SM28K | 70 45 008 08 | 15 | 2 | 3 104 000 | 91 62 545 08 | TELESKOP 3 VORM. |
| BUCHSE 16X140 9SM28K | 70 45 008 08 | 15 | 2 | 3 105 000 | 91 62 546 08 | TELESKOP 4 VORM. |
| BUCHSE 16X140 9SM28K | 70 45 008 08 | 15 | 2 | 3 106 000 | 91 60 313 08 | TELESKOP 5 VORM. |
| BUCHSE 35.0X30 42CRMO4+Q | 97 39 987 08 | 3 | 1 | 2 790 024 | 96 67 077 08 | SPIEGELHALTER VORM. |
| BUCHSE 60.3X24 S355J2H | 97 06 891 08 | 12 | 6 | 2 102 | 91 51 080 08 | MONTAGETEILE DREHBUEHN |
| BUCHSE RD110X13 S960QL | 95 37 261 08 | 9 | 1 | 3 105 000 | 91 62 546 08 | TELESKOP 4 VORM. |
| BUCHSE RD110X13 S960QL | 95 37 261 08 | 9 | 1 | 3 106 000 | 91 60 313 08 | TELESKOP 5 VORM. |
| BUCHSE RD115X13 S960QL | 95 70 113 08 | 9 | 1 | 3 102 000 | 91 62 543 08 | TELESKOP 1 VORM. |
| BUCHSE RD115X13 S960QL | 95 70 113 08 | 9 | 1 | 3 103 000 | 91 62 544 08 | TELESKOP 2 VORM. |
| BUCHSE RD115X13 S960QL | 95 70 113 08 | 9 | 1 | 3 104 000 | 91 62 545 08 | TELESKOP 3 VORM. |
| BUCHSE RD13,5X8 PA6G | 28 30 916 08 | 21 | 1 | 2 520 001 | 92 48 796 08 | FRONTSCHEIBE KPL. |
| BUCHSE RD150X130 GZ-CUZN | 97 25 034 08 | 36 | 1 | 2 102 | 91 51 080 08 | MONTAGETEILE DREHBUEHN |
| BUCHSE RD19,5X7 PA6G | 28 30 914 08 | 25 | 1 | 2 520 001 | 92 48 796 08 | FRONTSCHEIBE KPL. |
| BUCHSENKONTAKT 0,75-1,0 | 60 45 193 08 | 12 | 8 | 6 923 101 | 69 23 101 08 | SEILLAENGENGEBER |
| BUCHSENSTECKER 9-POL G | 60 23 219 08 | 6 | 2 | 2 922 001 | 92 84 311 08 | BUSPLATINE |
| BUCHSENTRAEGER 6-POL 16 | 60 45 265 08 | (152) | 1 | 3 930 492 | 96 20 966 08 | KLEMMKASTEN KPL. |
| BUCHSENTRAEGER 6-POL 16 | 60 45 265 08 | 11 | 1 | 6 923 101 | 69 23 101 08 | SEILLAENGENGEBER |
| BUEGEL 20.0X72 8 S355J2C+C | 95 16 657 08 | 26 | 1 | 3 501 | 91 05 788 08 | DOPPELKLAPPSPITZE MECH. |
| BUEGEL 6.0X314 S235JRG2 FE | 97 67 995 08 | 14 | 1 | 2 515 007 | 96 42 014 08 | PODEST VORM. |
| BUEGEL ST | 10 21 652 9 | 60 | 1 | 2 831 | 91 47 871 08 | KLIMAANLAGE OW |
| BUERSTENHALTER | 10 41 178 5 | 26 | 1 | X1034357 | 10 34 357 4 | LEITUNGSTROMMEL |
| BUERSTENHALTER | 10 41 178 6 | 27 | 9 | X1034357 | 10 34 357 4 | LEITUNGSTROMMEL |
| BUERSTENHALTER 10A ERDE | 11 00 314 1 | (1) | 1 | X1034357 | 10 34 357 4 | LEITUNGSTROMMEL |
| BUERSTENHALTER 10A GOLD | 11 00 314 2 | (1) | 1 | X1034357 | 10 34 357 4 | LEITUNGSTROMMEL |
| BUNDBOLZEN 20-22MM | 57 17 123 08 | 1 | 1 | 7 739 413 | 77 39 413 08 | TASCHENSCHLOSS |
| BUNDSCHRAUBE | 11 49 201 8 | 6 | 1 | 4 027 | 91 42 310 08 | LASTHAKEN |
| BUNDSCHRAUBE | 92 75 152 01 | 6 | 2 | 9 275 212 | 92 75 212 01 | OELMESSSTABEINRICHTUNG |
| BUSPLATINE | 92 84 311 08 | 3 | 1 | 2 913 100 | 91 23 538 08 | BAUGRUPPENTRAEGER |
| BUTZEN BUZ 20S CR6-FREI | 47 77 014 08 | 734 | 1 | 1 970 | 96 71 367 08 | HYDRAULIK UNTERWAGEN |
| BUTZEN BUZ 28L A3C | 47 77 008 08 | 757 | 1 | 1 970 | 96 71 367 08 | HYDRAULIK UNTERWAGEN |
| CLIP | 60 23 154 08 | 23 | 370 | 2 932 119 | 96 46 061 08 | SCHWENKRAHMEN RELAISST |
| CLIP 23 ST | 10 21 653 4 | 61 | 2 | 2 831 | 91 47 871 08 | KLIMAANLAGE OW |
| CONTROLLERBOARD KOMP. | 10 04 375 9 | 20 | 1 | 2 913 005 | 96 28 696 08 | INNENGEHAEUSE VORM. |
| DACHSCHEIBE 20MM SPF | 72 57 409 08 | 7 | 1 | 2 520 000 | 91 49 872 08 | KABINE VERGLAST |
| DAEMMMATTE | 97 38 622 08 | 1 | 1 | 9 640 266 | 96 40 266 08 | SCHALLDAEMMUNG |
| DAEMMMATTE | 97 40 366 08 | 2 | 1 | 9 640 266 | 96 40 266 08 | SCHALLDAEMMUNG |
| DAEMMMATTE 10X770X894 P | 95 66 755 08 | 53 | 1 | 2 520 000 | 91 49 872 08 | KABINE VERGLAST |
| DAEMMMATTE 18X312X352 P | 95 66 684 08 | 56 | 1 | 2 520 000 | 91 49 872 08 | KABINE VERGLAST |
| DAEMMMATTE 18X535X788 P | 95 66 682 08 | 54 | 1 | 2 520 000 | 91 49 872 08 | KABINE VERGLAST |
| DAEMMMATTE 18X714X759 P | 95 66 683 08 | 55 | 1 | 2 520 000 | 91 49 872 08 | KABINE VERGLAST |
| DAEMMMATTE 18X942X470 P | 95 65 247 08 | 8 | 1 | 2 522 | 91 10 037 08 | TUER KPL. |
| DAEMMMATTE 18x815x215 | 95 70 441 08 | 113 | 1 | 2 520 000 | 91 49 872 08 | KABINE VERGLAST |
| DAEMMMATTE 30X1980X987 | 97 47 497 08 | 20 | 1 | 2 510 072 | 96 44 614 08 | KLAPPE VORM.RECHTS |
| DAEMMMATTE 40X290X260 ME | 97 65 846 08 | 6 | 1 | 9 640 266 | 96 40 266 08 | SCHALLDAEMMUNG |
| DAEMMMATTE 40X504X245 ME | 97 65 845 08 | 7 | 1 | 9 640 266 | 96 40 266 08 | SCHALLDAEMMUNG |
| DAEMMMATTE 40X740X370 P | 97 37 676 08 | 102 | 1 | 2 510 018 | 96 44 046 08 | KUEHLERHAUBE KPL. |
| DAEMMMATTE 40X850X500 ME | 97 50 499 08 | 3 | 1 | 9 640 266 | 96 40 266 08 | SCHALLDAEMMUNG |
| DAEMMMATTE 40X920X330 ME | 97 65 844 08 | 5 | 1 | 9 640 266 | 96 40 266 08 | SCHALLDAEMMUNG |
| DAEMMMATTE 40X964X749 P | 97 30 733 08 | 101 | 1 | 2 510 018 | 96 44 046 08 | KUEHLERHAUBE KPL. |
| DAEMMMATTE 40X975X755 P | 97 30 732 08 | 100 | 1 | 2 510 018 | 96 44 046 08 | KUEHLERHAUBE KPL. |
| DAEMMMATTE 5X470X870 | 95 65 065 08 | 2 | 1 | 2 520 020 | 92 50 859 08 | HIMMEL KPL. |

| Bezeichnung | Artikel | Pos. | Menge | Seite | Baugruppe | Bezeichnung |
|---|---|---|---|---|---|---|
| DAEMMMATTE LINKS 19X94X | 97 18 512 08 | 8 | 1 | 2 913 | 91 32 850 08 | LICCON KONSOLE LCD2 |
| DAEMMMATTE OBEN 11.5X94X | 97 18 514 08 | 10 | 1 | 2 913 | 91 32 850 08 | LICCON KONSOLE LCD2 |
| DAEMMMATTE RECHTS 19X9 | 97 18 513 08 | 9 | 1 | 2 913 | 91 32 850 08 | LICCON KONSOLE LCD2 |
| DAEMMMATTE UNTEN 9X97X | 97 18 507 08 | 6 | 1 | 2 913 | 91 32 850 08 | LICCON KONSOLE LCD2 |
| DAEMMMATTE VERSCHLUSS | 97 18 511 08 | 7 | 1 | 2 913 | 91 32 850 08 | LICCON KONSOLE LCD2 |
| DAEMPFUNGSKOLBEN | 51 07 974 08 | 7 | 1 | 5 114 177 | 51 14 177 08 | DRUCKBEGRENZUNGSVENTI |
| DATENLOGGER LDL2 DIGITAL | 10 34 043 8 | 21 | 1 | 2 932 042 | 96 68 587 08 | GRUNDAUFBAU |
| DAUERMAGNET 9V | 61 70 001 08 | 3 | 1 | 2 780 851 | 96 24 498 08 | FUNKANTENNE VORM. |
| DAUERMAGNET 9V | 61 70 001 08 | 7 | 1 | 2 780 852 | 96 24 845 08 | GSM-MODUL VORM.LICCON 1 |
| DAUERMAGNET 9V | 61 70 001 08 | 267 | 2 | 2 920 574 | 96 36 055 08 | BEDIENPULT BALLAST |
| DAUERMAGNET 9V | 61 70 001 08 | 250 | 2 | 2 920 904 | 96 41 093 08 | STEUERPULT ABSTUETZUNG |
| DECKBLECH SCHWK. | 96 31 626 08 | 3 | 1 | 2 510 100 | 96 44 750 08 | DREHBUEHNENVERKLEIDUN |
| DECKBLECH SCHWK. | 96 42 019 08 | 2 | 1 | 2 510 200 | 96 41 258 08 | DREHBUEHNENVERKLEIDUN |
| DECKEL | 10 11 709 4 | 10 | 1 | X1011611 | 10 11 611 0 | VERSCHLUSSTEILE |
| DECKEL | 10 14 740 9 | 1 | 1 | 9 078 249 | 90 78 249 | VERSCHLUSSTEILE |
| DECKEL | 10 28 635 3 | 3 | 1 | 2 932 167 | 96 32 480 08 | KLEMMENLEISTE |
| DECKEL | 10 28 635 3 | 206 | 1 | 3 930 718 | 96 56 248 08 | KLEMMKASTEN KPL. |
| DECKEL | 10 66 324 1 | 4 | 1 | X1041191 | 10 41 191 5 | VENTILBLOCK |
| DECKEL | 10 66 324 2 | 5 | 1 | X1041191 | 10 41 191 5 | VENTILBLOCK |
| DECKEL | 10 87 323 9 | 7 | 1 | 7 900 391 | 79 00 391 08 | HANDPUMPE |
| DECKEL | 11 17 016 7 | 3 | 1 | X1041191 | 10 41 191 3 | PLATTE |
| DECKEL | 11 21 435 2 | 1 | 1 | 5 531 882 | 55 31 882 08 | KLIMANACHRUESTVERDAMP |
| DECKEL | 59 10 707 08 | 2 | 1 | 2 520 021 | 92 17 203 08 | ARMATURENKASTEN LIEFERU |
| DECKEL | 90 77 777 | 1 | 1 | 9 147 512 | 91 47 512 | VERSCHLUSSTEILE |
| DECKEL | 91 78 294 | 5 | 1 | 9 078 962 | 90 78 962 | NEBENABTRIEB VORM. |
| DECKEL 1.5X450X381 DC01 FE | 95 18 924 08 | 35 | 1 | 3 106 000 | 91 60 313 08 | TELESKOP 5 VORM. |
| DECKEL 170X19,5 | 92 75 046 01 | 17 | 1 | 9 387 596 | 93 87 596 01 | SEILTROMMEL |
| DECKEL 2X341X116 ALMG3 H | 97 17 070 08 | 3 | 1 | 2 913 | 91 32 850 08 | LICCON KONSOLE LCD2 |
| DECKEL 3X790X1190 RST 37-2 | 95 55 324 03 | 16 | 1 | 1 100 215 | 99 20 783 14 | MITTELTEIL |
| DECKEL EN AC-Al Si8 | 10 12 411 6 | 1 | 1 | X1011566 | 10 11 566 4 | VERSCHLUSSTEILE |
| DECKEL KPL. | 96 34 184 08 | 2 | 1 | 2 501 000 | 91 48 769 08 | KRANFUEHRERKABINE VORM |
| DECKEL KPL. | 96 35 445 08 | 102 | 1 | 2 510 100 | 96 44 750 08 | DREHBUEHNENVERKLEIDUN |
| DECKEL KPL. | 96 75 763 08 | 17 | 8 | 1 100 215 | 99 20 783 14 | MITTELTEIL |
| DECKEL PA 66 | 90 78 881 | 1 | 1 | 9 078 250 | 90 78 250 | VERSCHLUSSTEILE |
| DECKEL RD165X22 S960QL | 95 70 177 08 | 7 | 1 | 3 105 000 | 91 62 546 08 | TELESKOP 4 VORM. |
| DECKEL RD165X22 S960QL | 95 70 177 08 | 7 | 1 | 3 106 000 | 91 60 313 08 | TELESKOP 5 VORM. |
| DECKEL RD175X22 S960QL | 95 70 111 08 | 7 | 1 | 3 102 000 | 91 62 543 08 | TELESKOP 1 VORM. |
| DECKEL RD175X22 S960QL | 95 70 111 08 | 7 | 1 | 3 103 000 | 91 62 544 08 | TELESKOP 2 VORM. |
| DECKEL RD175X22 S960QL | 95 70 111 08 | 7 | 1 | 3 104 000 | 91 62 545 08 | TELESKOP 3 VORM. |
| DECKEL RD200X12 PA6G | 28 30 945 08 | 59 | 3 | 3 102 000 | 91 62 543 08 | TELESKOP 1 VORM. |
| DECKEL RD200X12 PA6G | 28 30 945 08 | 59 | 3 | 3 103 000 | 91 62 544 08 | TELESKOP 2 VORM. |
| DECKEL RD200X12 PA6G | 28 30 945 08 | 59 | 3 | 3 104 000 | 91 62 545 08 | TELESKOP 3 VORM. |
| DECKEL RD200X12 PA6G | 28 30 945 08 | 59 | 3 | 3 105 000 | 91 62 546 08 | TELESKOP 4 VORM. |
| DECKEL RD200X25 PA6G | 28 30 954 08 | 59 | 3 | 3 101 | 91 60 312 08 | ANLENKSTUECK VORM. |
| DECKEL RD245X17 PA6G | 28 81 840 08 | 19 | 1 | 3 101 | 91 60 312 08 | ANLENKSTUECK VORM. |
| DECKEL RD74X4 S315MC FE// | 95 59 178 08 | 39 | 2 | 3 330 | 91 57 885 08 | AUSSCHUBMECHANIK |
| DECKEL S235JR | 10 11 835 6 | 1 | 1 | 9 080 280 | 90 80 280 | VERSCHLUSSTEILE |
| DECKEL SCHWK. | 92 13 686 08 | 17 | 1 | 3 101 | 91 60 312 08 | ANLENKSTUECK VORM. |
| DECKEL SCHWK. | 96 01 619 6 | 18 | 1 | 3 101 | 91 60 312 08 | ANLENKSTUECK VORM. |
| DECKEL SCHWK. | 96 34 186 08 | 1 | 1 | 2 501 022 | 96 34 184 08 | DECKEL KPL. |
| DECKEL SCHWK. | 96 43 884 08 | 2 | 1 | 2 515 007 | 96 42 014 08 | PODEST VORM. |
| DECKEL SCHWK. | 96 75 699 08 | (1) | 1 | 1 100 215 | 99 20 783 14 | MITTELTEIL |
| DECKEL SCHWK. SPF | 92 11 802 08 | 2 | 1 | 2 260 006 | 96 31 147 08 | BATTERIEKASTEN VORM. |
| DECKPLATTE DIN 3015-1 L-DP | 50 05 219 | 78 | 10 | 2 970 | 91 55 482 08 | HYDRAULIK |
| DEHNSCHRAUBE M27X145 30 | 40 98 177 08 | 1 | 56 | 1 620 | 91 48 605 08 | BEFESTIGUNGSTEILE DREH |
| DEHNSCHRAUBE M27X145 30 | 40 98 177 08 | 2 | 33 | 2 410 | 91 48 668 08 | ROLLENDREHVERBINDUNG |
| DICHTKANTENRING DKAZ16 | 47 32 142 08 | 7 | 2 | 9 275 212 | 92 75 212 01 | OELMESSSTABEINRICHTUNG |
| DICHTMITTEL A80MR HYLOMA | 87 00 028 08 | 289 | 0.1 | 3 930 492 | 96 20 966 08 | KLEMMKASTEN KPL. |
| DICHTMITTEL A80MR HYLOMA | 87 00 028 08 | 289 | 0.1 | 3 930 523 | 96 43 943 08 | LEITUNGSTROMMEL |
| DICHTMITTEL A80MR HYLOMA | 87 00 028 08 | 265 | 0.1 | 3 930 718 | 96 56 248 08 | KLEMMKASTEN KPL. |

| Bezeichnung | Artikel | Pos. | Menge | Seite | Baugruppe | Bezeichnung |
|---|---|---|---|---|---|---|
| DICHTMUTTER M12 | 73 81 226 | 8 | 1 | X1011583 | 10 11 583 7 | DS DIESELMOTOR |
| DICHTMUTTER M12 | 73 81 226 | 3 | 1 | X1011801 | 10 11 801 3 | DS AGGREGATETRAEGER |
| DICHTMUTTER M12 | 73 81 226 | 3 | 1 | X1011801 | 10 11 801 4 | DS AGGREGATETRAEGER |
| DICHTMUTTER M6 | 51 07 534 08 | 10 | 1 | 5 711 301 | 57 11 301 08 | DRUCKBEGRENZUNGSVENTI |
| DICHTMUTTER M6 | 51 07 534 08 | 11 | 1 | X1117027 | 11 17 027 6 | DRUCKREDUZIERVENTIL |
| DICHTMUTTER M8 | 51 07 417 08 | 21 | 1 | 5 114 177 | 51 14 177 08 | DRUCKBEGRENZUNGSVENTI |
| DICHTPROFIL 1-4X21,5X10 | 26 21 055 08 | 30 | 0.55 | 2 510 108 | 96 44 555 08 | SCHALLDAEMMUNG |
| DICHTPROFIL 1-4X21,5X10 | 26 21 055 08 | 175 | 0.35 | 2 681 | 91 28 102 08 | LUFTFILTERANLAGE |
| DICHTRAHMEN | 97 03 425 08 | 11 | 1 | 2 520 000 | 91 49 872 08 | KABINE VERGLAST |
| DICHTRAHMEN | 97 36 626 08 | 16 | 1 | 2 913 | 91 32 850 08 | LICCON KONSOLE LCD2 |
| DICHTRAHMEN 651X860 PVC | 95 37 112 08 | 102 | 1 | 2 520 000 | 91 49 872 08 | KABINE VERGLAST |
| DICHTRING | 50 26 088 08 | 52 | 4 | 2 522 | 91 10 037 08 | TUER KPL. |
| DICHTRING | 50 26 088 08 | 16 | 2 | 2 955 | 91 49 516 08 | PNEUMATIK KRANFUEHRERK |
| DICHTRING 10,7X16X1,5 St/FP | 10 01 186 4 | 8 | 2 | X1011793 | 10 11 793 0 | ANBAUTEILE LUFTPRESSER |
| DICHTRING 12,7X18X1,5 St/FP | 10 01 186 5 | 27 | 4 | X1011573 | 10 11 573 7 | KRAFTSTOFFLEITUNGEN |
| DICHTRING 12,7X18X1,5 St/FP | 10 01 186 5 | 78 | 4 | X1011583 | 10 11 583 7 | DS DIESELMOTOR |
| DICHTRING 14,7X22X1,5 St/FP | 10 01 186 6 | 2 | 8 | 9 079 092 | 90 79 092 | ROHRLEITUNG ANBAU |
| DICHTRING 14,7X22X1,5 St/FP | 10 01 186 6 | 3 | 2 | X1011550 | 10 11 550 2 | KUEHLWASSERENTLUEFTUN |
| DICHTRING 14,7X22X1,5 St/FP | 10 01 186 6 | 25 | 7 | X1011573 | 10 11 573 7 | KRAFTSTOFFLEITUNGEN |
| DICHTRING 14,7X22X1,5 St/FP | 10 01 186 6 | 74 | 26 | X1011583 | 10 11 583 7 | DS DIESELMOTOR |
| DICHTRING 14,7X22X1,5 St/FP | 10 01 186 6 | 9 | 12 | X1011585 | 10 11 585 1 | DS ZYLINDERKOPF |
| DICHTRING 14,7X22X1,5 St/FP | 10 01 186 6 | 9 | 8 | X1011585 | 10 11 585 2 | DS ZYLINDERKOPF KPL. |
| DICHTRING 14,7X22X1,5 St/FP | 10 01 186 6 | 9 | 12 | X1011585 | 10 11 585 3 | DS ZYLINDERKOPF KPL. |
| DICHTRING 14,7X22X1,5 St/FP | 10 01 186 6 | 9 | 8 | X1011585 | 10 11 585 9 | DS ZYLINDERKOPF |
| DICHTRING 14,7X22X1,5 St/FP | 10 01 186 6 | 9 | 2 | X1011801 | 10 11 801 3 | DS AGGREGATETRAEGER |
| DICHTRING 14,7X22X1,5 St/FP | 10 01 186 6 | 9 | 2 | X1011801 | 10 11 801 4 | DS AGGREGATETRAEGER |
| DICHTRING 16,7X24X1,5 St/FP | 10 01 186 7 | 29 | 6 | X1011573 | 10 11 573 7 | KRAFTSTOFFLEITUNGEN |
| DICHTRING 16,7X24X1,5 St/FP | 10 01 186 7 | 80 | 12 | X1011583 | 10 11 583 7 | DS DIESELMOTOR |
| DICHTRING 16,7X24X1,5 St/FP | 10 01 186 7 | 6 | 8 | X1011793 | 10 11 793 0 | ANBAUTEILE LUFTPRESSER |
| DICHTRING 16,7X24X1,5 St/FP | 10 01 186 7 | 3 | 1 | X1012580 | 10 12 580 1 | KRAFTSTOFFFEINFILTER |
| DICHTRING 19,6X24,3X1,5 | 76 10 225 03 | 4 | 1 | 9 275 212 | 92 75 212 01 | OELMESSSTABEINRICHTUNG |
| DICHTRING 19,6X24,3X1,5 | 76 10 225 03 | 6 | 1 | 9 275 543 | 92 75 543 01 | ENTLUEFTUNGSSTUTZEN |
| DICHTRING 19,6X24,3X1,5 | 76 10 225 03 | 14 | 1 | 9 393 684 | 93 93 684 01 | OELMESSEINRICHTUNG |
| DICHTRING 22,7X30X2 St/FPM1 | 10 01 186 9 | 3 | 2 | 9 080 294 | 90 80 294 | LUFTPRESSER VORM. |
| DICHTRING 22,7X30X2 St/FPM1 | 10 01 186 9 | 7 | 2 | X1011793 | 10 11 793 0 | ANBAUTEILE LUFTPRESSER |
| DICHTRING 26,7X34,93X2 St/FP | 10 01 187 0 | 75 | 5 | X1011583 | 10 11 583 7 | DS DIESELMOTOR |
| DICHTRING 26,7X34,93X2 St/FP | 10 01 187 0 | 8 | 1 | X1011766 | 10 11 766 5 | ROHRLEITUNG |
| DICHTRING 26,7X34,93X2 St/FP | 10 01 187 0 | 9 | 1 | X1011914 | 10 11 914 1 | KURBELGEHAEUSEENTLUEF |
| DICHTRING 26,7X34,93X2 St/FP | 10 01 187 0 | 27 | 1 | X1011989 | 10 11 989 7 | RS OELRUECKLAUFLEITUNG |
| DICHTRING 27X20X1,5 CU | 10 01 469 7 | 10 | 3 | X1032706 | 10 32 706 5 | ELEKTROPUMPE |
| DICHTRING 30,7X39X2 St/FPM1 | 10 11 373 1 | 3 | 2 | 9 079 890 | 90 79 890 | HEIZUNGSANSCHLUSS |
| DICHTRING 30,7X39X2 St/FPM1 | 10 11 373 1 | 77 | 2 | X1011583 | 10 11 583 7 | DS DIESELMOTOR |
| DICHTRING 30,7X39X2 St/FPM1 | 10 11 373 1 | 42 | 2 | X1011801 | 10 11 801 3 | DS AGGREGATETRAEGER |
| DICHTRING 30,7X39X2 St/FPM1 | 10 11 373 1 | 42 | 2 | X1011801 | 10 11 801 4 | DS AGGREGATETRAEGER |
| DICHTRING DIN 7603 A 10X14 | 71 01 015 08 | 6 | 9 | X1011569 | 10 11 569 6 | LECKOELRUECKLAUF |
| DICHTRING DIN 7603 A 10X14 | 71 01 015 08 | 61 | 2 | X1011801 | 10 11 801 3 | DS AGGREGATETRAEGER |
| DICHTRING DIN 7603 A 10X14 | 71 01 015 08 | 61 | 2 | X1011801 | 10 11 801 4 | DS AGGREGATETRAEGER |
| DICHTRING DIN 7603 A 12X16 | 71 01 017 08 | 29 | 1 | 9 387 070 | 93 87 070 01 | KOMPAKTSEILWINDE |
| DICHTRING DIN 7603 A 13X18 | 71 01 023 08 | (3) | 1 | 2 984 | 91 52 906 08 | OELKUEHLER EINBAU |
| DICHTRING DIN 7603 A 14X20 | 71 01 030 08 | 48 | 1 | 2 970 | 91 55 482 08 | HYDRAULIK |
| DICHTRING DIN 7603 A 14X20 | 71 01 030 08 | 8 | 2 | X1011569 | 10 11 569 6 | LECKOELRUECKLAUF |
| DICHTRING DIN 7603 A 18X22 | 71 01 040 08 | (23) | 2 | 2 970 | 91 55 482 08 | HYDRAULIK |
| DICHTRING DIN 7603 A 30X36 | 71 01 065 08 | 71 | 6 | X1011583 | 10 11 583 7 | DS DIESELMOTOR |
| DICHTRING DIN 7603 A 30X36 | 71 01 065 08 | 4 | 1 | X1011795 | 10 11 795 1 | ENDREGELVENTIL |
| DICHTRING DIN 7603 A 30X36 | 71 01 065 08 | 8 | 4 | X1011801 | 10 11 801 3 | DS AGGREGATETRAEGER |
| DICHTRING DIN 7603 A 30X36 | 71 01 065 08 | 8 | 4 | X1011801 | 10 11 801 4 | DS AGGREGATETRAEGER |
| DICHTRING DIN 7603 A 8X12X1 | 71 01 007 08 | 18 | 1 | X1011569 | 10 11 569 6 | LECKOELRUECKLAUF |
| DICHTRING DIN 7603 A10X15X | 70 07 952 | 72 | 4 | X1011583 | 10 11 583 7 | DS DIESELMOTOR |
| DICHTRING DIN 7603 A10X15X | 70 07 952 | 8 | 15 | X1011585 | 10 11 585 1 | DS ZYLINDERKOPF |
| DICHTRING DIN 7603 A10X15X | 70 07 952 | 8 | 11 | X1011585 | 10 11 585 2 | DS ZYLINDERKOPF KPL. |

| Bezeichnung | Artikel | Pos. | Menge | Seite | Baugruppe | Bezeichnung |
|---|---|---|---|---|---|---|
| DICHTRING DIN 7603 A10X15X | 70 07 952 | 8 | 15 | X1011585 | 10 11 585 3 | DS ZYLINDERKOPF KPL. |
| DICHTRING DIN 7603 A10X15X | 70 07 952 | 8 | 11 | X1011585 | 10 11 585 9 | DS ZYLINDERKOPF |
| DICHTRING DIN 7603 A14X18 | 71 01 025 08 | 73 | 4 | X1011583 | 10 11 583 7 | DS DIESELMOTOR |
| DICHTRING DIN 7603 A14X18 | 71 01 025 08 | 56 | 1 | X1047300 | 10 47 300 1 | TELESKOPZYLINDER |
| DICHTRING DIN 7603 A14X20 | 73 81 225 23 | 2 | 1 | 9 078 233 | 90 78 233 | VENTIL |
| DICHTRING DIN 7603 A14X20 | 73 81 225 23 | 39 | 1 | X1011573 | 10 11 573 7 | KRAFTSTOFFLEITUNGEN |
| DICHTRING DIN 7603 A14X20 | 73 81 225 | 70 | 1 | X1011583 | 10 11 583 7 | DS DIESELMOTOR |
| DICHTSATZ | 10 11 442 6 | 998 | 4 | X1022699 | 10 22 699 3 | WEGESCHIEBER |
| DICHTSATZ | 10 21 962 0 | 999 | 1 | 7 029 305 | 70 29 305 | DRUCKBEGRENZUNGSVENTI |
| DICHTSATZ | 10 28 018 4 | 6 | 1 | X1003269 | 10 03 269 6 | PATRONE |
| DICHTSATZ | 10 33 194 6 | 998 | 1 | 7 029 305 | 70 29 305 | DRUCKBEGRENZUNGSVENTI |
| DICHTSATZ | 11 00 522 7 | 998 | 1 | X1043033 | 10 43 033 1 | WEGESITZVENTIL |
| DICHTSATZ | 11 12 420 1 | 999 | 1 | X1010109 | 10 10 109 3 | DREHWERKSVENTIL |
| DICHTSATZ | 11 69 195 6 | 999 | 1 | X1022699 | 10 22 699 3 | WEGESCHIEBER |
| DICHTSATZ | 51 10 433 08 | 999 | 1 | 5 704 271 | 57 04 271 08 | DRUCKBEGRENZUNGSVENTI |
| DICHTSATZ | 51 10 433 08 | (999) | 1 | X1033367 | 10 33 367 2 | STEUERBLOCK |
| DICHTSATZ | 57 14 912 08 | 999 | 1 | 5 123 537 | 51 23 537 08 | HYDROZYLINDER |
| DICHTSATZ | 57 18 400 08 | (999) | 1 | 1 970 | 96 71 367 08 | HYDRAULIK UNTERWAGEN |
| DICHTSATZ ABTRIEBSFLANSC | 96 53 356 08 | 11 | 1 | 9 686 071 | 96 86 071 01 | PLANETENGETRIEBE |
| DICHTSCHEIBE | 73 63 427 | 60 | 1 | 1 100 211 | 74 90 653 14 | TRAGROLLE KPL |
| DICHTSCHEIBE 7,03X15,1X1,5 | 10 04 040 6 | 2 | 1 | X1011585 | 10 11 585 4 | DS EINSPRITZDUESE |
| DICHTSCHEIBE 7,6X15,8X1 VI | 57 10 825 08 | (1) | 1 | 2 970 | 91 55 482 08 | HYDRAULIK |
| DICHTSTOPFEN 9 | 76 10 819 03 | 8 | 2 | 9 444 410 | 94 44 410 03 | FAHRANTRIEB |
| DICHTSTOPFEN CR6-FREI | 73 80 023 | 18 | 1 | 9 075 541 | 90 75 541 | SCHMIEROELPUMPE VORM. |
| DICHTSTOPFEN CR6-FREI | 73 80 123 | 2 | 1 | 9 072 593 | 90 72 593 | FLANSCH VORM. |
| DICHTUNG | 10 11 854 9 | 15 | 1 | X1011801 | 10 11 801 4 | DS AGGREGATETRAEGER |
| DICHTUNG | 10 11 855 0 | 19 | 1 | X1011801 | 10 11 801 4 | DS AGGREGATETRAEGER |
| DICHTUNG | 10 11 855 1 | 18 | 3 | X1011801 | 10 11 801 4 | DS AGGREGATETRAEGER |
| DICHTUNG | 10 11 855 4 | 18 | 1 | X1011585 | 10 11 585 1 | DS ZYLINDERKOPF |
| DICHTUNG | 10 11 855 4 | 18 | 4 | X1011585 | 10 11 585 2 | DS ZYLINDERKOPF KPL. |
| DICHTUNG | 10 11 855 4 | 18 | 6 | X1011585 | 10 11 585 3 | DS ZYLINDERKOPF KPL. |
| DICHTUNG | 10 11 855 4 | 7 | 1 | X1011585 | 10 11 585 4 | DS EINSPRITZDUESE |
| DICHTUNG | 10 11 855 4 | 18 | 1 | X1011585 | 10 11 585 9 | DS ZYLINDERKOPF |
| DICHTUNG | 10 11 855 4 | 7 | 1 | X1011709 | 10 11 709 3 | RS EINSPRITZDUESE |
| DICHTUNG | 10 11 855 4 | 7 | 1 | X1011961 | 10 11 961 0 | ZYLINDERKOPFDECKEL ANBA |
| DICHTUNG | 10 11 855 4 | 7 | 1 | X1011963 | 10 11 963 6 | ZYLINDERKOPFDECKEL ANBA |
| DICHTUNG | 10 11 855 4 | (8) | 4 | XSK_Z480 | SK_Z48005 | SERVICE |
| DICHTUNG | 10 11 855 6 | 3 | 6 | X1011585 | 10 11 585 1 | DS ZYLINDERKOPF |
| DICHTUNG | 10 11 855 6 | 3 | 4 | X1011585 | 10 11 585 2 | DS ZYLINDERKOPF KPL. |
| DICHTUNG | 10 11 855 6 | 3 | 6 | X1011585 | 10 11 585 3 | DS ZYLINDERKOPF KPL. |
| DICHTUNG | 10 11 855 6 | 3 | 4 | X1011585 | 10 11 585 9 | DS ZYLINDERKOPF |
| DICHTUNG | 10 11 855 6 | 6 | 4 | X1011707 | 10 11 707 2 | LUFTANSAUGROHR ANBAU |
| DICHTUNG | 10 41 178 7 | 29 | 1 | X1034357 | 10 34 357 4 | LEITUNGSTROMMEL |
| DICHTUNG | 73 71 064 | 9 | 1 | 1 100 212 | 79 02 561 14 | LEITRADEINHEIT KPL |
| DICHTUNG | 90 77 329 | 17 | 3 | X1011583 | 10 11 583 7 | DS DIESELMOTOR |
| DICHTUNG | 90 79 124 | 14 | 3 | X1011801 | 10 11 801 4 | DS AGGREGATETRAEGER |
| DICHTUNG | 90 79 608 | 53 | 2 | X1011801 | 10 11 801 4 | DS AGGREGATETRAEGER |
| DICHTUNG | 91 44 762 | (1) | 1 | X1011883 | 10 11 883 9 | OELEINFUELLUNG |
| DICHTUNG | 92 73 423 | 4301 | 1 | X1011583 | 10 11 583 7 | DS DIESELMOTOR |
| DICHTUNG | 92 73 423 | 15 | 1 | X1011585 | 10 11 585 2 | DS ZYLINDERKOPF KPL. |
| DICHTUNG | 92 73 423 | 15 | 1 | X1011585 | 10 11 585 9 | DS ZYLINDERKOPF |
| DICHTUNG | 92 73 691 | 20 | 1 | X1011583 | 10 11 583 7 | DS DIESELMOTOR |
| DICHTUNG | 92 74 974 | 21 | 1 | X1011583 | 10 11 583 7 | DS DIESELMOTOR |
| DICHTUNG | 98 85 529 | 4 | 1 | 9 078 962 | 90 78 962 | NEBENABTRIEB VORM. |
| DICHTUNG | 98 85 529 | 16 | 3 | X1011583 | 10 11 583 7 | DS DIESELMOTOR |
| DICHTUNG 0,33MM METALOS | 10 12 673 8 | 3 | 1 | 9 079 480 | 90 79 480 | AGGREGATETRAEGER ANBA |
| DICHTUNG 0,33MM METALOS | 10 12 673 8 | 7 | 1 | X1011583 | 10 11 583 7 | DS DIESELMOTOR |
| DICHTUNG 0,33MM METALOS | 10 12 673 8 | 2 | 1 | X1011801 | 10 11 801 3 | DS AGGREGATETRAEGER |
| DICHTUNG 0,33MM METALOS | 10 12 673 8 | 2 | 1 | X1011801 | 10 11 801 4 | DS AGGREGATETRAEGER |
| DICHTUNG 0,33MM METALOS | 10 13 772 1 | 5 | 1 | X1011582 | 10 11 582 9 | SCHWUNGRADGEHAEUSE AN |

| Bezeichnung | Artikel | Pos. | Menge | Seite | Baugruppe | Bezeichnung |
|---|---|---|---|---|---|---|
| DICHTUNG 0,33MM METALOS | 10 13 772 1 | 6 | 1 | X1011583 | 10 11 583 7 | DS DIESELMOTOR |
| DICHTUNG 1,5MM ASBESTFR | 92 68 131 | 19 | 1 | X1011583 | 10 11 583 7 | DS DIESELMOTOR |
| DICHTUNG 1,5MM ASBESTFR | 92 68 131 | 18 | 1 | X1011989 | 10 11 989 7 | RS OELRUECKLAUFLEITUNG |
| DICHTUNG 15X130X 120 POL | 97 03 453 3 | 165 | 1 | 2 520 000 | 91 49 872 08 | KABINE VERGLAST |
| DICHTUNG 1MM | 90 79 130 | 15 | 1 | X1011583 | 10 11 583 7 | DS DIESELMOTOR |
| DICHTUNG 1MM | 90 79 130 | 2 | 1 | X1011912 | 10 11 912 8 | VERSCHLUSSTEILE |
| DICHTUNG 1MM AFM 30 | 10 11 770 9 | 1 | 1 | X1011584 | 10 11 584 9 | DS OELKUEHLER |
| DICHTUNG 1MM AFM 30 | 10 11 770 9 | 2 | 1 | X1011739 | 10 11 739 8 | OELKUEHLER ANBAU |
| DICHTUNG 1MM AFM 30 | 10 11 854 7 | 15 | 1 | X1011801 | 10 11 801 3 | DS AGGREGATETRAEGER |
| DICHTUNG 1MM AFM 30 | 10 11 854 7 | 2 | 1 | X1012414 | 10 12 414 0 | OELWANNE MIT BEFEST. |
| DICHTUNG 2MM UNI-BLAU | 90 80 279 | 4 | 1 | 9 075 678 | 90 75 678 | THERMOSTATGEHAEUSE AN |
| DICHTUNG 2MM UNI-BLAU | 90 80 279 | 11 | 1 | X1011583 | 10 11 583 7 | DS DIESELMOTOR |
| DICHTUNG 2MM UNI-BLAU | 90 80 279 | 4 | 1 | X1011801 | 10 11 801 3 | DS AGGREGATETRAEGER |
| DICHTUNG 2MM UNI-BLAU | 90 80 279 | 4 | 1 | X1011801 | 10 11 801 4 | DS AGGREGATETRAEGER |
| DICHTUNG AFM 30 | 10 12 064 0 | 17 | 1 | X1011801 | 10 11 801 4 | DS AGGREGATETRAEGER |
| DICHTUNG AFM 30 | 10 12 851 6 | 10 | 1 | X1011583 | 10 11 583 7 | DS DIESELMOTOR |
| DICHTUNG AFM 31 | 92 71 963 | 10 | 2 | X1011585 | 10 11 585 1 | DS ZYLINDERKOPF |
| DICHTUNG AFM 31 | 92 71 963 | 10 | 2 | X1011585 | 10 11 585 2 | DS ZYLINDERKOPF KPL. |
| DICHTUNG AFM 31 | 92 71 963 | 10 | 2 | X1011585 | 10 11 585 3 | DS ZYLINDERKOPF KPL. |
| DICHTUNG AFM 31 | 92 71 963 | 10 | 2 | X1011585 | 10 11 585 9 | DS ZYLINDERKOPF |
| DICHTUNG AFM 31 | 92 71 963 | 10 | 1 | X1011707 | 10 11 707 2 | LUFTANSAUGROHR ANBAU |
| DICHTUNG AFM 31 | 92 71 963 | 20 | 2 | X1011801 | 10 11 801 3 | DS AGGREGATETRAEGER |
| DICHTUNG AFM 31 | 92 71 963 | 20 | 2 | X1011801 | 10 11 801 4 | DS AGGREGATETRAEGER |
| DICHTUNG AFM 31 | 92 71 963 | 10 | 1 | X1011816 | 10 11 816 1 | VERBINDUNGSLEITUNG ANBA |
| DICHTUNG AFM 31 TD 2 | 92 75 766 | 2 | 1 | 9 147 512 | 91 47 512 | VERSCHLUSSTEILE |
| DICHTUNG AFM 31 TD 2 | 92 75 766 | 18 | 3 | X1011583 | 10 11 583 7 | DS DIESELMOTOR |
| DICHTUNG AFM 31 TD 2 | 92 75 766 | 16 | 1 | X1011801 | 10 11 801 3 | DS AGGREGATETRAEGER |
| DICHTUNG AFM 31 TD 2 | 92 75 766 | 16 | 1 | X1011801 | 10 11 801 4 | DS AGGREGATETRAEGER |
| DICHTUNG ASBESTFREI | 92 68 129 | 16 | 1 | X1011585 | 10 11 585 1 | DS ZYLINDERKOPF |
| DICHTUNG ASBESTFREI | 92 68 129 | 16 | 1 | X1011585 | 10 11 585 3 | DS ZYLINDERKOPF KPL. |
| DICHTUNG ASBESTFREI | 92 68 130 | 20 | 1 | X1011832 | 10 11 832 6 | ATL-ANBAU |
| DICHTUNG ASBESTFREI | 92 70 109 | 15 | 1 | X1011585 | 10 11 585 1 | DS ZYLINDERKOPF |
| DICHTUNG ASBESTFREI | 92 70 109 | 15 | 1 | X1011585 | 10 11 585 3 | DS ZYLINDERKOPF KPL. |
| DICHTUNG DIN 71511 25X48X1 | 49 80 359 | 2 | 2 | X1011584 | 10 11 584 9 | DS OELKUEHLER |
| DICHTUNG DIN 71511 25X48X1 | 49 80 359 | 4 | 2 | X1011739 | 10 11 739 7 | OELKUEHLER VORM. |
| DICHTUNG K26 X5CrNi18-10 | 10 11 827 2 | 3 | 1 | X1011832 | 10 11 832 6 | ATL-ANBAU |
| DICHTUNG METALOSEAL 4 | 10 14 155 7 | 4 | 6 | X1011585 | 10 11 585 1 | DS ZYLINDERKOPF |
| DICHTUNG METALOSEAL 4 | 10 14 155 7 | 4 | 4 | X1011585 | 10 11 585 2 | DS ZYLINDERKOPF KPL. |
| DICHTUNG METALOSEAL 4 | 10 14 155 7 | 4 | 6 | X1011585 | 10 11 585 3 | DS ZYLINDERKOPF KPL. |
| DICHTUNG METALOSEAL 4 | 10 14 155 7 | 4 | 4 | X1011585 | 10 11 585 9 | DS ZYLINDERKOPF |
| DICHTUNG METALOSEAL 4 | 10 14 155 7 | 6 | 4 | X1011810 | 10 11 810 1 | ABGASROHR ANBAU |
| DICHTUNGSMASSE 50ML TUB | 81 12 013 14 | 108 | 1 | 9 075 678 | 90 75 678 | THERMOSTATGEHAEUSE AN |
| DICHTUNGSMASSE 50ML TUB | 81 12 013 14 | 108 | 1 | X1011739 | 10 11 739 7 | OELKUEHLER VORM. |
| DICHTUNGSMITTEL 50ML TUB | 86 27 609 23 | 112 | 1 | 9 075 678 | 90 75 678 | THERMOSTATGEHAEUSE AN |
| DICHTUNGSSATZ | 10 04 181 5 | 99 | 1 | 5 106 681 | 51 06 681 08 | DRUCKFILTER |
| DICHTUNGSSATZ | 10 04 181 5 | (5) | 1 | XSK_Z480 | SK_Z48005 | SERVICE |
| DICHTUNGSSATZ | 10 33 194 7 | 999 | 1 | X1042993 | 10 42 993 3 | ZAHNRADMOTOR |
| DICHTUNGSSATZ BBV6 NBR | 51 01 840 01 | (999) | 1 | 2 571 | 91 50 902 08 | HYDRAULISCHE BALLASTIER |
| DIESELMOTOR D934 L A6 | 10 15 207 7 | 1 | 1 | X1015211 | 10 15 211 6 | ANTRIEBSGRUPPE |
| DIODE SPF | 66 03 006 08 | 21 | 8 | 2 922 001 | 92 84 311 08 | BUSPLATINE |
| DIODEN VARISTORENMODUL | 66 01 015 08 | 14 | 2 | 2 932 119 | 96 46 061 08 | SCHWENKRAHMEN RELAISST |
| DISPLAY VORM. TFT | 96 20 762 08 | 21 | 1 | 2 913 005 | 96 28 696 08 | INNENGEHAEUSE VORM. |
| DISTANZHUELSE 11X17,5X10 | 10 11 999 4 | 13 | 2 | X1011997 | 10 11 997 6 | NEBENABTRIEB ANBAU |
| DISTANZHUELSE 11X21X12 42 | 10 13 573 0 | 69 | 1 | X1011997 | 10 11 997 9 | KABELSATZ ANBAU |
| DISTANZHUELSE 11X21X40 42 | 90 74 977 | 4 | 8 | X1011810 | 10 11 810 1 | ABGASROHR ANBAU |
| DISTANZHUELSE 17X27X30 11 | 90 80 508 | (4) | 1 | 9 080 525 | 90 80 525 | KLIMAKOMPRESSOR ANBAU |
| DISTANZHUELSE 27X22 42C | 95 21 770 08 | 60 | 8 | 2 200 | 91 81 095 08 | ANTRIEBSAGGREGAT KPL. |
| DISTANZHUELSE 27X22 42C | 95 21 770 08 | 9 | 2 | 2 210 | 91 81 614 08 | ANTRIEBSAGGREGAT VORM. |
| DISTANZHUELSE 8,5X18X10 S | 91 32 577 | 2 | 8 | X1011919 | 10 11 919 7 | HITZESCHUTZ MIT BEFESTIG |
| DISTANZHUELSE 8,5X18X10 S | 91 32 577 | 68 | 3 | X1011997 | 10 11 997 9 | KABELSATZ ANBAU |

| Bezeichnung | Artikel | Pos. | Menge | Seite | Baugruppe | Bezeichnung |
|---|---|---|---|---|---|---|
| DISTANZPLATTE 22X137X551 | 28 30 950 08 | 48 | 2 | 3 104 000 | 91 62 545 08 | TELESKOP 3 VORM. |
| DISTANZPLATTE 22X141X583 | 28 30 949 08 | 48 | 2 | 3 103 000 | 91 62 544 08 | TELESKOP 2 VORM. |
| DISTANZPLATTE 22X148X622 | 28 30 948 08 | 48 | 2 | 3 102 000 | 91 62 543 08 | TELESKOP 1 VORM. |
| DISTANZPLATTE 22X165X674 | 28 30 863 08 | 48 | 2 | 3 101 | 91 60 312 08 | ANLENKSTUECK VORM. |
| DISTANZPLATTE 22X306X425 | 28 30 951 08 | 48 | 2 | 3 105 000 | 91 62 546 08 | TELESKOP 4 VORM. |
| DISTANZRING 152X25X50 ST.3 | 95 66 575 14 | 9 | 4 | 1 100 216 | 96 46 363 08 | MONTAGETEILE LWE |
| DISTANZRING 48.3X8 S235JR | 97 05 011 08 | 8 | 4 | 3 511 006 | 96 45 029 08 | MASTNASE VORM. |
| DISTANZROHR 114.3X234 S355 | 95 18 923 08 | 54 | 1 | 3 106 000 | 91 60 313 08 | TELESKOP 5 VORM. |
| DISTANZROHR RD114,3X6,3X3 | 94 03 800 08 | 30 | 1 | 3 106 000 | 91 60 313 08 | TELESKOP 5 VORM. |
| DISTANZROHR RD114,3X6,3X3 | 94 03 800 08 | 2 | 1 | 3 280 | 91 45 571 08 | EINBAU NACKENROLLE |
| DISTANZSTUECK | 57 11 304 08 | 5 | 1 | 5 711 301 | 57 11 301 08 | DRUCKBEGRENZUNGSVENTI |
| DISTANZSTUECK RD25 PA6G | 28 81 303 08 | 11 | 2 | 2 520 001 | 92 48 796 08 | FRONTSCHEIBE KPL. |
| DISTANZSTUECK S355J0 | 90 79 064 | 30 | 1 | 9 076 534 | 90 76 534 | DREHZAHLGEBER KPL. |
| DOPPELHAKEN NR. 016-T 63t | 11 34 137 5 | 30 | 1 | 4 003 006 | 91 04 457 08 | HAKENFLASCHE |
| DOPPELHOHLSCHRAUBE 10X | 10 11 549 9 | 38 | 1 | X1011573 | 10 11 573 7 | KRAFTSTOFFLEITUNGEN |
| DOPPELHOHLSCHRAUBE 6X6 | 10 01 486 4 | 5 | 1 | X1011569 | 10 11 569 6 | LECKOELRUECKLAUF |
| DOPPELKLAPPSPITZE MECH.K | 91 05 776 08 | 351 | 1 | | LTR 1100 -0 | LIEBHERR LTR 1100 |
| DOPPELKLAPPSPITZE MECH. | 91 55 133 08 | 1 | 1 | 3 500 | 91 05 776 08 | DOPPELKLAPPSPITZE MECH.K |
| DOPPELKLAPPSPITZE MECH. | 91 05 788 08 | 1 | 1 | 3 500 020 | 91 55 133 08 | DOPPELKLAPPSPITZE MECH. |
| DOPPELMAULSCHLUESSEL D | 79 00 033 08 | 11 | 1 | 1 750 001 | 92 85 698 08 | GRUNDWERKZEUG |
| DOPPELMAULSCHLUESSEL D | 79 00 022 08 | 12 | 1 | 1 750 001 | 92 85 698 08 | GRUNDWERKZEUG |
| DOPPELMAULSCHLUESSEL D | 79 00 024 08 | 13 | 1 | 1 750 001 | 92 85 698 08 | GRUNDWERKZEUG |
| DOPPELMAULSCHLUESSEL D | 79 00 036 08 | 15 | 1 | 1 750 001 | 92 85 698 08 | GRUNDWERKZEUG |
| DOPPELMAULSCHLUESSEL D | 79 00 025 08 | 16 | 1 | 1 750 001 | 92 85 698 08 | GRUNDWERKZEUG |
| DOPPELMAULSCHLUESSEL D | 79 00 026 08 | 17 | 1 | 1 750 001 | 92 85 698 08 | GRUNDWERKZEUG |
| DOPPELMAULSCHLUESSEL D | 79 00 028 08 | 18 | 1 | 1 750 001 | 92 85 698 08 | GRUNDWERKZEUG |
| DOPPELMAULSCHLUESSEL D | 79 00 029 08 | 19 | 1 | 1 750 001 | 92 85 698 08 | GRUNDWERKZEUG |
| DOPPELMAULSCHLUESSEL D | 79 00 039 08 | 20 | 1 | 1 750 001 | 92 85 698 08 | GRUNDWERKZEUG |
| DOPPELMAULSCHLUESSEL DI | 79 00 017 08 | 10 | 1 | 1 750 001 | 92 85 698 08 | GRUNDWERKZEUG |
| DOPPELMAULSCHLUESSEL | 10 65 277 2 | 14 | 1 | 1 750 001 | 92 85 698 08 | GRUNDWERKZEUG |
| DOPPELSICHERUNGSRING FK | 74 71 224 08 | 110 | 8 | 2 210 | 91 81 614 08 | ANTRIEBSAGGREGAT VORM. |
| DORNNIET 4X10,3 | 70 42 076 08 | 58 | 8 | 2 520 000 | 91 49 872 08 | KABINE VERGLAST |
| DORNNIET 4X10,3 | 70 42 076 08 | 3 | 4 | 2 913 004 | 96 20 460 08 | GEHAEUSE VORM. |
| DORNNIET 4X10,3 | 70 42 076 08 | 69 | 32 | 2 932 095 | 96 46 064 08 | SCHWENKRAHMEN SICHERUN |
| DORNNIET 4X10,3 | 70 42 076 08 | 28 | 8 | 2 932 119 | 96 46 061 08 | SCHWENKRAHMEN RELAISST |
| DOSE M1 | 60 45 081 08 | 155 | 1 | 3 930 492 | 96 20 966 08 | KLEMMKASTEN KPL. |
| DRAEHTE GRUNDAUFBAU KPL | 96 68 588 08 | 12 | 1 | 2 932 042 | 96 68 587 08 | GRUNDAUFBAU |
| DRAEHTE GRUNDAUFBAU VO | 96 68 589 08 | (2) | 1 | 2 932 042 | 96 68 587 08 | GRUNDAUFBAU |
| DRAEHTE VORM. -S413 | 92 01 751 08 | 1 | 1 | 3 930 718 | 96 56 248 08 | KLEMMKASTEN KPL. |
| DRAEHTE VORM. S417 | 92 01 753 08 | 6 | 1 | 3 930 492 | 96 20 966 08 | KLEMMKASTEN KPL. |
| DRAHTBUEGEL | 77 90 332 08 | 17 | 1 | 2 520 001 | 92 48 796 08 | FRONTSCHEIBE KPL. |
| DRAHTHALTER | 61 10 461 08 | 20 | 12 | 2 932 119 | 96 46 061 08 | SCHWENKRAHMEN RELAISST |
| DREHBUEHNENARRETIERUN | 91 54 389 08 | 121 | 1 | | LTR 1100 -0 | LIEBHERR LTR 1100 |
| DREHBUEHNENVERKLEIDUN | 91 53 981 08 | 135 | 1 | | LTR 1100 -0 | LIEBHERR LTR 1100 |
| DREHBUEHNENVERKLEIDUN | 96 41 258 08 | 2 | 1 | 2 510 | 91 53 981 08 | DREHBUEHNENVERKLEIDUN |
| DREHBUEHNENVERKLEIDUN | 96 44 750 08 | 1 | 1 | 2 510 | 91 53 981 08 | DREHBUEHNENVERKLEIDUN |
| DREHDURCHFUEHRUNG 6 KA | 10 28 292 8 | 3 | 1 | 1 100 301 | 96 72 945 08 | HYDR.INSTALLATIONSTEILE |
| DREHFALLENSCHLOSS | 70 42 764 08 | 6 | 1 | 2 522 | 91 10 037 08 | TUER KPL. |
| DREHGEBER 360° SPF | 69 23 091 08 | 1 | 1 | 1 780 650 | 91 43 393 08 | ELEKTRIK DREHWERTGEBER |
| DREHKNOPF | 63 50 452 08 | 40 | 1 | 2 932 095 | 96 46 064 08 | SCHWENKRAHMEN SICHERUN |
| DREHSCHALTER 4-STUFIG | 60 60 262 08 | 5 | 1 | 2 920 284 | 91 27 894 08 | ELEKTRIK HEIZUNG |
| DREHSCHLOSS 1W | 60 61 433 08 | 30 | 2 | 2 932 095 | 96 46 064 08 | SCHWENKRAHMEN SICHERUN |
| DREHSTROMGENERATOR 30 | 10 32 624 3 | 1 | 1 | X1011864 | 10 11 864 6 | GENERATOR VORM. |
| DREHVERSCHRAUBUNG DG1 | 47 42 340 08 | 2 | 3 | 2 975 152 | 91 05 737 08 | HYDRAULIK TELE |
| DREHWERK | 91 32 936 08 | 119 | 1 | | LTR 1100 -0 | LIEBHERR LTR 1100 |
| DREHWERKANTRIEB DAT 225/ | 93 30 748 01 | 1 | 1 | 2 420 | 91 32 936 08 | DREHWERK |
| DREHWERKSVENTIL SPF | 10 10 109 3 | 4 | 1 | 2 970 | 91 55 482 08 | HYDRAULIK |
| DREHZAHLGEBER | 10 15 494 4 | 1 | 1 | 9 076 534 | 90 76 534 | DREHZAHLGEBER KPL. |
| DREHZAHLGEBER | 10 15 494 4 | 1 | 1 | X1013307 | 10 13 307 7 | DREHZAHLGEBER KPL. |
| DREHZAHLGEBER KPL. 10-10 | 10 13 307 7 | 20 | 2 | X1011969 | 10 11 969 8 | MOTORREGELUNGSENSORIK |

| Bezeichnung | Artikel | Pos. | Menge | Seite | Baugruppe | Bezeichnung |
|---|---|---|---|---|---|---|
| DREHZAHLGEBER KPL. 10-10 | 90 76 534 | 21 | 1 | X1011969 | 10 11 969 8 | MOTORREGELUNGSENSORIK |
| DREIWEGEHAHN | 55 30 854 08 | 2 | 1 | 2 540 | 91 45 984 08 | HEIZUNG OW |
| DROSSELRUECKSCHLAGVEN | 51 14 972 08 | 30 | 1 | 2 970 | 91 55 482 08 | HYDRAULIK |
| DROSSELRUECKSCHLAGVEN | 51 14 972 08 | 29 | 1 | 2 971 | 91 50 610 08 | HYDRAULIK HILFSHUBWERK |
| DRUCKAUFNEHMER 0-400/400 | 10 81 373 8 | (1) | 2 | 2 970 | 91 55 482 08 | HYDRAULIK |
| DRUCKAUFNEHMER 0-400/400 | 10 81 618 5 | (1) | 1 | 2 970 | 91 55 482 08 | HYDRAULIK |
| DRUCKBEGRENZUNGSVENTI | 10 41 260 4 | 29 | 3 | X1041191 | 10 41 191 5 | VENTILBLOCK |
| DRUCKBEGRENZUNGSVENTI | 51 16 551 14 | 50 | 2 | X1080175 | 10 80 175 1 | VERSTELLUNG |
| DRUCKBEGRENZUNGSVENTI | 57 11 301 08 | 17 | 2 | X1029147 | 10 29 147 4 | STEUERBLOCK |
| DRUCKBEGRENZUNGSVENTI | 57 11 301 08 | 17 | 1 | X1041191 | 10 41 191 3 | PLATTE |
| DRUCKBEGRENZUNGSVENTI | 57 11 301 08 | 17 | 5 | X1041191 | 10 41 191 5 | VENTILBLOCK |
| DRUCKBEGRENZUNGSVENTI | 57 11 301 08 | 17 | 2 | X1047529 | 10 47 529 1 | VENTILBLOCK |
| DRUCKBEGRENZUNGSVENTI | 57 11 301 08 | 17 | 2 | X1047529 | 10 47 529 2 | VENTILBLOCK |
| DRUCKBEGRENZUNGSVENTI | 57 15 349 08 | 70 | 1 | X1033367 | 10 33 367 2 | STEUERBLOCK |
| DRUCKBEGRENZUNGSVENTI | 57 15 398 08 | 40 | 1 | X1033367 | 10 33 367 2 | STEUERBLOCK |
| DRUCKBEGRENZUNGSVENTI | 57 18 770 08 | 3 | 2 | 5 113 078 | 51 13 078 08 | STEUERLEISTE |
| DRUCKBEGRENZUNGSVENTI | 57 19 283 08 | 37 | 1 | X1047300 | 10 47 300 1 | TELESKOPZYLINDER |
| DRUCKBEGRENZUNGSVENTI | 70 29 305 | 11 | 1 | X1042993 | 10 42 993 3 | ZAHNRADMOTOR |
| DRUCKBEGRENZUNGSVENTI | 51 14 647 14 | 6 | 1 | 1 970 | 96 71 367 08 | HYDRAULIK UNTERWAGEN |
| DRUCKBEGRENZUNGSVENTI | 51 14 502 08 | 13 | 1 | 2 970 | 91 55 482 08 | HYDRAULIK |
| DRUCKBEGRENZUNGSVENTI | 57 14 001 08 | 60 | 1 | X1033367 | 10 33 367 2 | STEUERBLOCK |
| DRUCKBEGRENZUNGSVENTI | 57 04 271 08 | 50 | 1 | X1033367 | 10 33 367 2 | STEUERBLOCK |
| DRUCKBEGRENZUNGSVENTI | 51 14 177 08 | 12 | 1 | 2 970 | 91 55 482 08 | HYDRAULIK |
| DRUCKFEDER | 51 07 975 08 | 9 | 1 | 5 114 177 | 51 14 177 08 | DRUCKBEGRENZUNGSVENTI |
| DRUCKFEDER | 51 10 151 08 | 4 | 1 | 5 114 177 | 51 14 177 08 | DRUCKBEGRENZUNGSVENTI |
| DRUCKFEDER | 57 06 310 08 | 3 | 1 | X1003269 | 10 03 269 6 | PATRONE |
| DRUCKFEDER | 72 00 115 08 | 56 | 1 | 3 501 | 91 05 788 08 | DOPPELKLAPPSPITZE MECH. |
| DRUCKFEDER | 92 75 208 01 | 27 | 1 | 9 387 598 | 93 87 598 01 | PLANETENGETRIEBE |
| DRUCKFEDER 1,6X18,2X44 | 72 00 094 08 | 19 | 4 | 3 330 | 91 57 885 08 | AUSSCHUBMECHANIK |
| DRUCKFEDER 1,9X6,9X21,5 | 51 07 359 08 | 6 | 1 | 5 711 301 | 57 11 301 08 | DRUCKBEGRENZUNGSVENTI |
| DRUCKFEDER 1,9X6,9X21,5 | 51 07 359 08 | 4 | 1 | 5 718 895 | 57 18 895 08 | DRUCKVENTIL |
| DRUCKFEDER 10X100X150 X | 72 00 093 08 | 2 | 1 | 3 105 000 | 91 62 546 08 | TELESKOP 4 VORM. |
| DRUCKFEDER 10X100X150 X | 72 00 093 08 | 2 | 1 | 3 106 000 | 91 60 313 08 | TELESKOP 5 VORM. |
| DRUCKFEDER 10X105X150 SP | 72 00 096 08 | 2 | 1 | 3 102 000 | 91 62 543 08 | TELESKOP 1 VORM. |
| DRUCKFEDER 10X105X150 SP | 72 00 096 08 | 2 | 1 | 3 103 000 | 91 62 544 08 | TELESKOP 2 VORM. |
| DRUCKFEDER 10X105X150 SP | 72 00 096 08 | 2 | 1 | 3 104 000 | 91 62 545 08 | TELESKOP 3 VORM. |
| DRUCKFEDER 2,10X17,80X75,0 | 98 86 756 | 21 | 1 | X1011739 | 10 11 739 7 | OELKUEHLER VORM. |
| DRUCKFEDER 2,5X16X61 OTE | 10 12 092 9 | 12 | 1 | X1011795 | 10 11 795 1 | ENDREGELVENTIL |
| DRUCKFEDER 3,40X16,60X71, | 73 81 302 | 10 | 1 | 9 075 541 | 90 75 541 | SCHMIEROELPUMPE VORM. |
| DRUCKFEDER 4,60X28,40X62,7 | 90 74 481 | 9 | 4 | X1012036 | 10 12 036 5 | ZYLINDERKOPF VORM. |
| DRUCKFEDER 4,60X28,40X62,7 | 90 74 481 | 9 | 4 | X1014155 | 10 14 155 5 | ZYLINDERKOPF VORM. |
| DRUCKFEDER 4X25X41 EN 10 | 11 00 342 6 | 5 | 1 | 2 790 024 | 96 67 077 08 | SPIEGELHALTER VORM. |
| DRUCKFEDER DIN 2098 2X16 | 72 00 085 08 | 6 | 1 | 3 510 006 | 96 20 924 08 | KLAPPKONSOLE |
| DRUCKFEDER DIN 2098 6,3X5 | 72 00 011 08 | 54 | 1 | 3 501 | 91 05 788 08 | DOPPELKLAPPSPITZE MECH. |
| DRUCKFEDER EN10270-3 | 72 00 126 08 | 42 | 1 | 3 510 100 | 91 49 246 08 | TRANSPORTHALTERUNG DKS |
| DRUCKFILTER | 51 06 681 08 | 32 | 1 | 2 970 | 91 55 482 08 | HYDRAULIK |
| DRUCKGEBER 0,5-4,5 BAR | 10 10 078 1 | (1) | 1 | X1011969 | 10 11 969 7 | DRUCKGEBER ANBAU |
| DRUCKGEBER 0-10 BAR | 10 02 512 4 | (1) | 1 | X1011969 | 10 11 969 8 | MOTORREGELUNGSENSORIK |
| DRUCKGEBER ANBAU M18X1 | 10 11 969 7 | 11 | 1 | X1011969 | 10 11 969 8 | MOTORREGELUNGSENSORIK |
| DRUCKGEBER KPL. 0,5-4,5 BA | 90 76 550 | 1 | 1 | X1011969 | 10 11 969 7 | DRUCKGEBER ANBAU |
| DRUCKGEBER KPL. 0-10 BAR | 90 76 531 | 10 | 1 | X1011969 | 10 11 969 8 | MOTORREGELUNGSENSORIK |
| DRUCKGEBER LOAD SENSIN | 96 24 299 08 | 60 | 1 | 2 970 | 91 55 482 08 | HYDRAULIK |
| DRUCKGEBER WIPPZYLINDE | 96 24 300 08 | 61 | 1 | 2 970 | 91 55 482 08 | HYDRAULIK |
| DRUCKLUFTANLAGE OW | 91 49 515 08 | 189 | 1 | | LTR 1100 -0 | LIEBHERR LTR 1100 |
| DRUCKLUFTBEHAELTER 1L 10 | 50 26 664 08 | 35 | 1 | 2 950 | 91 49 515 08 | DRUCKLUFTANLAGE OW |
| DRUCKREDUZIERVENTIL | 11 17 027 6 | 1 | 1 | 5 113 066 | 51 13 066 08 | STEUERBLOCK |
| DRUCKREDUZIERVENTIL 400B | 51 04 385 14 | 7 | 1 | 1 970 | 96 71 367 08 | HYDRAULIK UNTERWAGEN |
| DRUCKREGELVENTIL | 10 45 005 1 | 49 | 1 | X1080175 | 10 80 175 1 | VERSTELLUNG |
| DRUCKRING | 50 29 237 08 | 13 | 2 | 2 200 048 | 96 32 140 08 | AUSGLEICHSBEHAELTER VO |
| DRUCKRING DR/R22X27 | 50 29 325 08 | 9 | 1 | 2 270 001 | 96 37 923 08 | KRAFTSTOFFBEHAELTER VO |

| Bezeichnung | Artikel | Pos. | Menge | Seite | Baugruppe | Bezeichnung |
|---|---|---|---|---|---|---|
| DRUCKRING DR/R22X27 | 50 29 325 08 | 31 | 3 | 2 950 | 91 49 515 08 | DRUCKLUFTANLAGE OW |
| DRUCKRING DR/R22X27 | 50 29 325 08 | 11 | 2 | 2 955 | 91 49 516 08 | PNEUMATIK KRANFUEHRERK |
| DRUCKRING DR/R26X31 | 50 29 328 08 | 15 | 1 | 2 200 048 | 96 32 140 08 | AUSGLEICHSBEHAELTER VO |
| DRUCKROHRSTUTZEN ANBA | 90 75 395 | 191 | 1 | X1011585 | 10 11 585 4 | DS EINSPRITZDUESE |
| DRUCKROHRSTUTZEN ANBA | 90 75 395 | 191 | 1 | X1011709 | 10 11 709 3 | RS EINSPRITZDUESE |
| DRUCKROHRSTUTZEN ANBA | 90 75 395 | 191 | 4 | X1012193 | 10 12 193 2 | GRUNDMOTOR |
| DRUCKROHRSTUTZEN F 00Z | 90 74 677 | 1 | 1 | 9 075 395 | 90 75 395 | DRUCKROHRSTUTZEN ANBA |
| DRUCKSCHALTER 1,5-26 BAR | 57 14 891 08 | 6 | 1 | 2 831 | 91 47 871 08 | KLIMAANLAGE OW |
| DRUCKSCHALTER 10-100/400 | 51 06 769 08 | 11 | 1 | 2 970 | 91 55 482 08 | HYDRAULIK |
| DRUCKSCHALTER 10-100/400 | 51 06 769 08 | 9 | 1 | 2 971 | 91 50 610 08 | HYDRAULIK HILFSHUBWERK |
| DRUCKSENSOR -0,08-0 BAR | 10 81 691 3 | 1 | 1 | 1 681 021 | 96 65 122 08 | SENSOR KPL. |
| DRUCKSTUECK RD40X60 42C | 95 70 957 14 | 42 | 4 | 1 100 205 | 96 51 633 08 | RAUPENTRAEGER KPL.RE. |
| DRUCKSTUECK RD40X60 42C | 95 70 957 14 | 42 | 4 | 1 100 210 | 96 51 634 08 | RAUPENTRAEGER KPL.LI. |
| DRUCKTASTE | 60 61 430 08 | 11 | 1 | 2 530 002 | 96 19 448 08 | ARMATURENBRETT VORM.V |
| DRUCKTASTE | 60 61 430 08 | 10 | 6 | 2 531 001 | 96 36 738 08 | ELEKTRIK ARMLEHNE LI. |
| DRUCKTASTE | 60 61 430 08 | 10 | 3 | 2 531 002 | 96 36 739 08 | ELEKTRIK ARMLEHNE RE. |
| DRUCKVENTIL | 57 14 537 08 | 7 | 1 | 5 114 869 | 51 14 869 08 | STEUERLEISTE |
| DRUCKVENTIL | 57 18 891 08 | 6 | 1 | X1010109 | 10 10 109 3 | DREHWERKSVENTIL |
| DRUCKVENTIL | 57 18 895 08 | 35 | 1 | X1010109 | 10 10 109 3 | DREHWERKSVENTIL |
| DRUCKVENTIL | 57 18 895 08 | 35 | 1 | X1080297 | 10 80 297 1 | VENTILBLOCK |
| DRUCKVENTIL 350BAR | 10 49 389 3 | 3 | 1 | X1047529 | 10 47 529 2 | VENTILBLOCK |
| DS AGGREGATETRAEGER | 10 11 801 3 | 50 | 1 | 9 079 480 | 90 79 480 | AGGREGATETRAEGER ANBA |
| DS AGGREGATETRAEGER | 10 11 801 4 | 51 | 1 | 9 079 480 | 90 79 480 | AGGREGATETRAEGER ANBA |
| DS ANSCHLUSSBLOCK | 11 22 041 8 | 997 | 1 | X1022699 | 10 22 699 3 | WEGESCHIEBER |
| DS ANSCHLUSSGEHAEUSE | 92 69 750 | 91 | 1 | 9 072 112 | 90 72 112 | HYDRAULIKDOPPELPUMPE |
| DS BALLASTIERZYLINDER | 10 80 171 3 | (999) | 1 | 2 571 | 91 50 902 08 | HYDRAULISCHE BALLASTIER |
| DS BREMSE | 96 99 977 08 | (999) | 1 | 9 444 410 | 94 44 410 03 | FAHRANTRIEB |
| DS BREMSE | 96 99 977 08 | 901 | 1 | 9 444 410 | 94 44 410 03 | FAHRANTRIEB |
| DS DIESELMOTOR | 10 11 583 7 | 939 | 1 | X1015207 | 10 15 207 7 | DIESELMOTOR |
| DS DOPPELPUMPE | 92 76 426 | 98 | 1 | 9 072 112 | 90 72 112 | HYDRAULIKDOPPELPUMPE |
| DS DRUCKBEGRENZUNGSV | 10 87 210 0 | (999) | 1 | X1033367 | 10 33 367 2 | STEUERBLOCK |
| DS DRUCKBEGRENZUNGSV | 10 87 210 1 | (999) | 1 | X1033367 | 10 33 367 2 | STEUERBLOCK |
| DS DRUCKBEGRENZUNGSV | 10 87 360 7 | (999) | 1 | X1041191 | 10 41 191 5 | VENTILBLOCK |
| DS EINSPRITZDUESE | 10 11 585 4 | 7 | 1 | X1011585 | 10 11 585 1 | DS ZYLINDERKOPF |
| DS EINSPRITZDUESE | 10 11 585 4 | 7 | 4 | X1011585 | 10 11 585 2 | DS ZYLINDERKOPF KPL. |
| DS EINSPRITZDUESE | 10 11 585 4 | 7 | 6 | X1011585 | 10 11 585 3 | DS ZYLINDERKOPF KPL. |
| DS EINSPRITZDUESE | 10 11 585 4 | 7 | 1 | X1011585 | 10 11 585 9 | DS ZYLINDERKOPF |
| DS EINSPRITZDUESE | 10 11 585 4 | 999 | 1 | X1011659 | 10 11 659 1 | EINSPRITZDUESE MIT BEFEST |
| DS EINSPRITZPUMPE | 10 11 585 5 | 13 | 4 | X1011583 | 10 11 583 7 | DS DIESELMOTOR |
| DS EINSPRITZPUMPE | 10 11 585 5 | (999) | 1 | X1011683 | 10 11 683 9 | EINSPRITZPUMPE ANBAU |
| DS HYDROZYLINDER | 10 42 499 4 | (999) | 1 | 2 500 | 91 48 594 08 | KRANFUEHRERKABINE KPL. |
| DS OELKUEHLER | 10 11 584 9 | 3 | 1 | X1011583 | 10 11 583 7 | DS DIESELMOTOR |
| DS OELKUEHLER | 10 11 584 9 | 999 | 1 | X1011739 | 10 11 739 8 | OELKUEHLER ANBAU |
| DS REGELVENTIL | 92 70 147 | (999) | 1 | 9 072 112 | 90 72 112 | HYDRAULIKDOPPELPUMPE |
| DS SENKBREMSVENTIL | 10 80 076 6 | (999) | 1 | 2 970 | 91 55 482 08 | HYDRAULIK |
| DS SENKBREMSVENTIL | 10 80 076 8 | 999 | 1 | X1029358 | 10 29 358 6 | SENKBREMSVENTIL |
| DS SENKBREMSVENTIL | 11 11 420 2 | (999) | 1 | X1010109 | 10 10 109 3 | DREHWERKSVENTIL |
| DS TELESKOPZYLINDER | 10 81 388 7 | 999 | 1 | X1047300 | 10 47 300 1 | TELESKOPZYLINDER |
| DS VENTIL | 10 66 364 4 | 999 | 1 | 5 113 199 | 51 13 199 08 | SENKBREMSVENTIL |
| DS VENTIL | 11 00 353 6 | 999 | 1 | X1043033 | 10 43 033 1 | WEGESITZVENTIL |
| DS VENTIL | 11 45 069 1 | 999 | 1 | 5 705 279 | 57 05 279 08 | WEGEVENTIL |
| DS VENTIL | 57 15 619 08 | 999 | 1 | 5 709 606 | 57 09 606 08 | SENKBREMSVENTIL |
| DS VENTIL | 57 19 147 08 | (999) | 1 | X1010109 | 10 10 109 3 | DREHWERKSVENTIL |
| DS VENTILBLOCK | 10 41 260 9 | 999 | 1 | X1041191 | 10 41 191 5 | VENTILBLOCK |
| DS VENTILBLOCK | 10 41 263 2 | 999 | 1 | X1029147 | 10 29 147 4 | STEUERBLOCK |
| DS VENTILBLOCK | 10 41 263 2 | 999 | 1 | X1047529 | 10 47 529 1 | VENTILBLOCK |
| DS VENTILBLOCK | 10 41 263 2 | 999 | 1 | X1047529 | 10 47 529 2 | VENTILBLOCK |
| DS WEGEVENTIL | 11 00 627 5 | 999 | 1 | 5 717 378 | 57 17 378 08 | WEGEVENTIL |
| DS ZAHNRADPUMPE | 10 49 271 0 | (999) | 1 | 2 210 | 91 81 614 08 | ANTRIEBSAGGREGAT VORM. |
| DS ZAHNRADPUMPE | 11 60 019 3 | 1 | 1 | 5 121 425 | 51 21 425 08 | ZWEIFACHZAHNRADPUMPE |

| Bezeichnung | Artikel | Pos. | Menge | Seite | Baugruppe | Bezeichnung |
|---|---|---|---|---|---|---|
| DS ZYLINDER | 11 69 050 2 | 999 | 1 | X1087223 | 10 87 223 8 | WIPPZYLINDER |
| DS ZYLINDERKOPF | 10 11 585 1 | 997 | 1 | X1011675 | 10 11 675 9 | ZYLINDERKOPF ANBAU |
| DS ZYLINDERKOPF | 10 11 585 9 | 996 | 1 | X1011675 | 10 11 675 9 | ZYLINDERKOPF ANBAU |
| DS ZYLINDERKOPF | 10 81 388 9 | 999 | 1 | X1081388 | 10 81 388 6 | ZYLINDERKOPF |
| DS ZYLINDERKOPF KPL. | 10 11 585 2 | 9 | 1 | X1011583 | 10 11 583 7 | DS DIESELMOTOR |
| DS ZYLINDERKOPF KPL. | 10 11 585 2 | 998 | 1 | X1011675 | 10 11 675 9 | ZYLINDERKOPF ANBAU |
| DS ZYLINDERKOPF KPL. | 10 11 585 3 | 999 | 1 | X1011675 | 10 11 675 9 | ZYLINDERKOPF ANBAU |
| DSF-RING 122X113,36X4 MC66 | 10 47 234 7 | 4 | 1 | X1046728 | 10 46 728 5 | KOLBEN KPL. |
| DU-BUCHSE | 70 80 051 08 | 69 | 2 | 3 501 | 91 05 788 08 | DOPPELKLAPPSPITZE MECH. |
| DU-BUCHSE | 70 80 100 08 | 3 | 2 | 3 500 104 | 92 95 821 08 | HALTERUNG VORM. |
| DU-BUCHSE | 70 80 100 08 | 81 | 2 | 3 501 | 91 05 788 08 | DOPPELKLAPPSPITZE MECH. |
| DU-BUCHSE | 70 80 100 08 | 3 | 1 | 3 510 001 | 92 52 800 08 | KONSOLE VORM. |
| DU-BUCHSE | 70 80 116 08 | 25 | 2 | 3 510 100 | 91 49 246 08 | TRANSPORTHALTERUNG DKS |
| DUESE | 59 10 562 08 | 8 | 1 | 2 520 018 | 92 13 430 08 | ARMATURENKASTEN KPL. |
| DUESE 0,4 | 51 07 543 08 | 47 | 1 | 2 520 000 | 91 49 872 08 | KABINE VERGLAST |
| DUESE 0,4 | 51 07 543 08 | 8 | 2 | 2 950 | 91 49 515 08 | DRUCKLUFTANLAGE OW |
| DUESE 0,4 | 51 07 543 08 | 4 | 1 | 2 955 | 91 49 516 08 | PNEUMATIK KRANFUEHRERK |
| DUESE 0,4 | 51 07 543 08 | 25 | 2 | X1041191 | 10 41 191 3 | PLATTE |
| DUESE 0,4 | 51 07 543 08 | 112 | 2 | X1041191 | 10 41 191 5 | VENTILBLOCK |
| DUESE 0,5 MS | 51 10 627 08 | 42 | 2 | 2 970 | 91 55 482 08 | HYDRAULIK |
| DUESE 0,5 MS | 51 10 627 08 | 27 | 1 | 2 971 | 91 50 610 08 | HYDRAULIK HILFSHUBWERK |
| DUESE 0,5 MS | 51 10 627 08 | 10 | 1 | 2 975 152 | 91 05 737 08 | HYDRAULIK TELE |
| DUESE 0,5 MS | 51 10 629 08 | 46 | 1 | 2 970 | 91 55 482 08 | HYDRAULIK |
| DUESE 0,6 MS | 51 07 544 08 | 18 | 2 | 2 955 | 91 49 516 08 | PNEUMATIK KRANFUEHRERK |
| DUESE 0,6 MS | 51 07 544 08 | 68 | 1 | 2 970 | 91 55 482 08 | HYDRAULIK |
| DUESE 0,8 | 57 15 273 08 | 118 | 1 | X1041191 | 10 41 191 5 | VENTILBLOCK |
| DUESE 1,3 MS SPF | 10 10 109 2 | 37 | 1 | 2 970 | 91 55 482 08 | HYDRAULIK |
| DUESE 1,3 MS SPF | 10 10 109 2 | 34 | 1 | 2 971 | 91 50 610 08 | HYDRAULIK HILFSHUBWERK |
| DUESE 1,5 | 57 18 771 08 | 6 | 1 | 5 113 078 | 51 13 078 08 | STEUERLEISTE |
| DUESE 104 | 59 10 574 08 | 31 | 1 | 2 520 000 | 91 49 872 08 | KABINE VERGLAST |
| DUESE D 2,0 M10X10 ST | 51 10 626 08 | 31 | 2 | 2 970 | 91 55 482 08 | HYDRAULIK |
| DUESE D=0,6 | 57 06 904 08 | 27 | 2 | X1080297 | 10 80 297 1 | VENTILBLOCK |
| DUESE D=0,6 | 57 06 905 08 | 21 | 2 | X1080297 | 10 80 297 1 | VENTILBLOCK |
| DUESE D=1,4 | 57 06 307 08 | 121 | 2 | X1041191 | 10 41 191 5 | VENTILBLOCK |
| DUESE D=1,6 | 57 17 046 08 | 23 | 1 | X1080297 | 10 80 297 1 | VENTILBLOCK |
| DUESE D=2.5 | 57 17 412 08 | 26 | 1 | X1047529 | 10 47 529 2 | VENTILBLOCK |
| DUESE DIN 913 D 1,2 M5X5 M | 57 13 622 08 | 24 | 1 | X1041191 | 10 41 191 3 | PLATTE |
| DUESE DIN 913 D 1,2 M5X5 M | 57 13 622 08 | 119 | 6 | X1041191 | 10 41 191 5 | VENTILBLOCK |
| DUESE DIN 913 D=0,6 M10X10 | 51 10 622 08 | 53 | 1 | 2 970 | 91 55 482 08 | HYDRAULIK |
| DURCHFUEHRUNGSTUELLE 1 | 60 27 021 08 | 105 | 1 | 2 510 100 | 96 44 750 08 | DREHBUEHNENVERKLEIDUN |
| DURCHFUEHRUNGSTUELLE 1 | 60 27 021 08 | 6 | 1 | 2 920 362 | 96 31 865 08 | ELEKTRIK ARBEITSSCHEINW |
| DURCHFUEHRUNGSTUELLE 4/ | 60 27 024 08 | 10 | 1 | 2 913 102 | 92 32 870 08 | LUEFTEREINHEIT |
| DURCHFUEHRUNGSTUELLE 6 | 60 27 172 08 | 15 | 1 | 2 515 007 | 96 42 014 08 | PODEST VORM. |
| DURCHFUEHRUNGSTUELLE 7/ | 60 27 018 08 | 11 | 2 | 3 750 026 | 96 89 407 08 | HALTER LINKS |
| DURCHFUEHRUNGSTUELLE 7/ | 60 27 018 08 | 11 | 2 | 3 750 028 | 96 89 408 08 | HALTER RECHTS |
| DURCHGANGSNIPPELBLOCK | 77 43 751 08 | 12 | 2 | 2 711 | 91 53 002 08 | ZENTRALSCHMIERANLAGE O |
| E/A-MODUL A SPF | 66 01 020 08 | 33 | 1 | 2 932 042 | 96 68 587 08 | GRUNDAUFBAU |
| EINBAU NACKENROLLE | 91 45 571 08 | 363 | 1 | | LTR 1100 -0 | LIEBHERR LTR 1100 |
| EINBAUSTECKDOSE 2-POL | 60 52 039 08 | 27 | 1 | 2 932 095 | 96 46 064 08 | SCHWENKRAHMEN SICHERUN |
| EINBAUTEILE SCHALTSCHRAN | 91 68 959 08 | 181 | 1 | | LTR 1100 -0 | LIEBHERR LTR 1100 |
| EINFACHHAKEN | 11 21 222 9 | 3 | 1 | 4 027 | 91 42 310 08 | LASTHAKEN |
| EINFUELLSTUTZEN KPL. | 10 11 883 8 | 1 | 1 | X1011883 | 10 11 883 9 | OELEINFUELLUNG |
| EINFUELLSTUTZEN PA6 | 10 45 098 1 | 15 | 2 | 2 200 048 | 96 84 070 08 | AUSGLEICHSBEHAELTER VO |
| EINGANGSPLATINE | 91 43 948 08 | 41 | 2 | 2 932 042 | 96 68 587 08 | GRUNDAUFBAU |
| EINGANGSPLATINE | 92 08 065 08 | 5 | 1 | 2 932 214 | 96 28 366 08 | EINGANGSPLATINE KPL. |
| EINGANGSPLATINE KPL. EP0 | 92 68 082 08 | 40 | 1 | 2 932 042 | 96 68 587 08 | GRUNDAUFBAU |
| EINGANGSPLATINE KPL. EP2 | 96 28 366 08 | 42 | 1 | 2 932 042 | 96 68 587 08 | GRUNDAUFBAU |
| EINLASSVENTIL | 10 13 675 2 | 2 | 2 | X1014155 | 10 14 155 5 | ZYLINDERKOPF VORM. |
| EINLASSVENTIL | 90 74 450 | 2 | 2 | X1012036 | 10 12 036 5 | ZYLINDERKOPF VORM. |
| EINLEGEBRUECKE | 60 27 355 08 | 11 | 35 | 2 932 095 | 96 46 064 08 | SCHWENKRAHMEN SICHERUN |

| Bezeichnung | Artikel | Pos. | Menge | Seite | Baugruppe | Bezeichnung |
|---|---|---|---|---|---|---|
| EINMAULSCHLUESSEL DIN 8 | 88 51 322 08 | 21 | 1 | 1 750 001 | 92 85 698 08 | GRUNDWERKZEUG |
| EINMAULSCHLUESSEL DIN 8 | 79 00 046 08 | 22 | 1 | 1 750 001 | 92 85 698 08 | GRUNDWERKZEUG |
| EINSCHRAUBSTUTZEN X0 | 94 55 691 08 | 46 | 1 | 2 520 000 | 91 49 872 08 | KABINE VERGLAST |
| EINSCHRAUBSTUTZEN X0 | 94 55 691 08 | 19 | 1 | 2 955 | 91 49 516 08 | PNEUMATIK KRANFUEHRERK |
| EINSCHUBKARTE G0 COMM.S | 92 16 203 08 | 48 | 1 | 2 932 042 | 96 68 587 08 | GRUNDAUFBAU |
| EINSCHUBKARTE G0Z0 PROG- | 91 03 958 08 | 50 | 1 | 2 932 042 | 96 68 587 08 | GRUNDAUFBAU |
| EINSCHUBKARTE G0Z1 PROG | 91 00 655 08 | 51 | 1 | 2 932 042 | 96 68 587 08 | GRUNDAUFBAU |
| EINSCHUBKARTE G0Z2 PROG | 91 00 656 08 | 52 | 1 | 2 932 042 | 96 68 587 08 | GRUNDAUFBAU |
| EINSCHUBKARTE G0Z3 PROG | 91 00 659 08 | 53 | 1 | 2 932 042 | 96 68 587 08 | GRUNDAUFBAU |
| EINSPANNBUCHSE DIN 1498 4 | 70 43 396 08 | 104 | 2 | 3 501 | 91 05 788 08 | DOPPELKLAPPSPITZE MECH. |
| EINSPRITZDUESE | 10 11 658 7 | 1 | 1 | X1011709 | 10 11 709 3 | RS EINSPRITZDUESE |
| EINSPRITZDUESE MIT BEFEST | 10 11 659 1 | 190 | 4 | X1015207 | 10 15 207 7 | DIESELMOTOR |
| EINSPRITZLEITUNG R-MOTOR | 90 80 410 | 215 | 1 | X1011709 | 10 11 709 3 | RS EINSPRITZDUESE |
| EINSPRITZLEITUNG R-MOTOR | 90 80 410 | 215 | 4 | X1012193 | 10 12 193 2 | GRUNDMOTOR |
| EINSPRITZPUMPE ANBAU R-M | 10 11 683 9 | 170 | 4 | X1012193 | 10 12 193 2 | GRUNDMOTOR |
| EINSPRITZPUMPE R-MOTOR | 10 11 625 7 | 1 | 1 | X1011683 | 10 11 683 9 | EINSPRITZPUMPE ANBAU |
| EINSTELLSCHRAUBE M10X1 | 10 01 222 5 | 4 | 1 | 9 074 507 | 90 74 507 | KIPPHEBEL VORM. |
| EINSTELLSCHRAUBE M12X36 | 10 11 794 9 | 5 | 1 | X1011795 | 10 11 795 1 | ENDREGELVENTIL |
| EINWEISER ISO 8062-3DCTG6 | 97 24 267 08 | 33 | 4 | 3 102 000 | 91 62 543 08 | TELESKOP 1 VORM. |
| EINWEISER ISO 8062-3DCTG6 | 97 24 267 08 | 33 | 4 | 3 103 000 | 91 62 544 08 | TELESKOP 2 VORM. |
| EINWEISER ISO 8062-3DCTG6 | 97 24 267 08 | 33 | 4 | 3 104 000 | 91 62 545 08 | TELESKOP 3 VORM. |
| EINWEISER ISO 8062-3DCTG6 | 97 24 267 08 | 33 | 4 | 3 105 000 | 91 62 546 08 | TELESKOP 4 VORM. |
| EINWEISER ISO 8062-3DCTG6 | 97 24 267 08 | 60 | 4 | 3 106 000 | 91 60 313 08 | TELESKOP 5 VORM. |
| EL.ANLAGE AUSLEGER | 91 59 068 08 | 213 | 1 | | LTR 1100 -0 | LIEBHERR LTR 1100 |
| EL.ANLAGE DREHBUEHNE | 91 55 477 08 | 179 | 1 | | LTR 1100 -0 | LIEBHERR LTR 1100 |
| EL.GEBER U.ENDSCHALTER | 96 53 714 08 | 11 | 1 | 2 920 | 91 55 477 08 | EL.ANLAGE DREHBUEHNE |
| ELEKTRIK 2.HUBENDSCHALTE | 91 59 294 08 | 362 | 1 | | LTR 1100 -0 | LIEBHERR LTR 1100 |
| ELEKTRIK ANBAUTEILE KABIN | 96 28 388 08 | 5 | 1 | 2 533 | 91 54 254 08 | ELEKTRIK KRANFUEHRERKAB |
| ELEKTRIK ANLENKSTUECK | 96 20 959 08 | 2 | 1 | 3 500 020 | 91 55 133 08 | DOPPELKLAPPSPITZE MECH. |
| ELEKTRIK ANLENKSTUECK | 96 56 247 08 | 2 | 1 | 3 930 | 91 59 068 08 | EL.ANLAGE AUSLEGER |
| ELEKTRIK ARBEITSSCHEINW | 96 31 865 08 | 20 | 1 | 2 920 | 91 55 477 08 | EL.ANLAGE DREHBUEHNE |
| ELEKTRIK ARMATUREN KRA | 91 34 053 08 | 139 | 1 | | LTR 1100 -0 | LIEBHERR LTR 1100 |
| ELEKTRIK ARMLEHNE LI. | 96 36 738 08 | 1 | 1 | 2 531 | 91 48 669 08 | ELEKTRIK STEUERSTAND |
| ELEKTRIK ARMLEHNE RE. | 96 36 739 08 | 2 | 1 | 2 531 | 91 48 669 08 | ELEKTRIK STEUERSTAND |
| ELEKTRIK AUSSCHUBMECHA | 92 07 663 08 | 6 | 1 | 3 930 | 91 59 068 08 | EL.ANLAGE AUSLEGER |
| ELEKTRIK BATTERIEKASTEN | 96 31 039 08 | 5 | 1 | 2 260 | 91 46 555 08 | BATTERIEKASTEN KPL. |
| ELEKTRIK BLITZLEUCHTE | 91 01 520 08 | 5 | 1 | 2 533 003 | 96 28 388 08 | ELEKTRIK ANBAUTEILE KABIN |
| ELEKTRIK DREHBUEHNENARR | 96 19 338 08 | 5 | 1 | 2 430 | 91 54 389 08 | DREHBUEHNENARRETIERUN |
| ELEKTRIK DREHWERK | 92 11 635 08 | 15 | 1 | 2 920 593 | 96 53 714 08 | EL.GEBER U.ENDSCHALTER |
| ELEKTRIK DREHWERKSBRE | 96 36 299 08 | 16 | 1 | 2 920 | 91 55 477 08 | EL.ANLAGE DREHBUEHNE |
| ELEKTRIK DREHWERTGEBER | 91 43 393 08 | 20 | 1 | 2 920 593 | 96 53 714 08 | EL.GEBER U.ENDSCHALTER |
| ELEKTRIK FUSSWIPPE | 92 88 195 08 | 26 | 1 | 2 920 | 91 55 477 08 | EL.ANLAGE DREHBUEHNE |
| ELEKTRIK GASVERSTELLUNG | 92 08 459 08 | 24 | 1 | 2 920 | 91 55 477 08 | EL.ANLAGE DREHBUEHNE |
| ELEKTRIK HEIZUNG | 91 27 894 08 | 4 | 1 | 2 540 | 91 45 984 08 | HEIZUNG OW |
| ELEKTRIK KLIMAANLAGE | 92 01 827 08 | 7 | 1 | 2 831 | 91 47 871 08 | KLIMAANLAGE OW |
| ELEKTRIK KOPFSTUECK | 96 20 960 08 | 3 | 1 | 3 500 020 | 91 55 133 08 | DOPPELKLAPPSPITZE MECH. |
| ELEKTRIK KOPFSTUECK | 96 20 965 08 | 4 | 1 | 3 930 | 91 59 068 08 | EL.ANLAGE AUSLEGER |
| ELEKTRIK KRANFUEHRERKAB | 91 54 254 08 | 143 | 1 | | LTR 1100 -0 | LIEBHERR LTR 1100 |
| ELEKTRIK MITTELSTUECK | 96 46 916 08 | 1 | 1 | 1 920 | 91 54 759 08 | ELEKTRIK RAUPE |
| ELEKTRIK OELKUEHLER | 91 11 097 08 | 20 | 2 | 2 984 | 91 52 906 08 | OELKUEHLER EINBAU |
| ELEKTRIK RAUPE | 91 54 759 08 | 66 | 1 | | LTR 1100 -0 | LIEBHERR LTR 1100 |
| ELEKTRIK STEUERSTAND | 91 48 669 08 | 141 | 1 | | LTR 1100 -0 | LIEBHERR LTR 1100 |
| ELEKTRIK WINDE 1 | 91 27 889 08 | 10 | 1 | 2 450 | 91 53 926 08 | HAUPTHUBWERK |
| ELEKTRIK WINDE 2 | 91 15 191 08 | 100 | 1 | 2 440 022 | 96 42 336 08 | WINDE 2 VORM. |
| ELEKTRIK ZUSATZGLOCKE LM | 92 12 998 08 | 15 | 1 | 2 920 | 91 55 477 08 | EL.ANLAGE DREHBUEHNE |
| ELEKTROPUMPE | 10 32 706 5 | 1 | 1 | 2 711 | 91 53 002 08 | ZENTRALSCHMIERANLAGE O |
| ENDHALTER | 60 21 101 08 | 4 | 2 | 2 932 167 | 96 32 480 08 | KLEMMENLEISTE |
| ENDREGELVENTIL | 10 11 795 1 | 14 | 1 | X1012193 | 10 12 193 2 | GRUNDMOTOR |
| ENDSCHALTER ANBAU AUSL | 96 53 715 08 | 10 | 1 | 2 920 | 91 55 477 08 | EL.ANLAGE DREHBUEHNE |
| ENDSCHALTER ANBAU AUSL | 96 57 224 08 | 10 | 1 | 3 930 342 | 96 56 247 08 | ELEKTRIK ANLENKSTUECK |

| Bezeichnung | Artikel | Pos. | Menge | Seite | Baugruppe | Bezeichnung |
|---|---|---|---|---|---|---|
| ENDSCHALTER AUSLEGERST | 96 57 484 08 | 6 | 1 | 3 920 012 | 96 57 224 08 | ENDSCHALTER ANBAU |
| ENDSCHALTER TQ200-RFID | 10 67 839 5 | (7) | 1 | 3 780 400 | 91 59 294 08 | ELEKTRIK 2.HUBENDSCHALTE |
| ENDSCHALTER TQ200-RFID | 10 67 839 5 | 7 | 1 | 3 930 483 | 96 20 935 08 | GEBERANBAU KOPFSTUECK |
| ENDWINKEL | 60 27 946 08 | 208 | 2 | 3 930 718 | 96 56 248 08 | KLEMMKASTEN KPL. |
| ENTLUEFTUNGSSCHRAUBE | 10 66 491 2 | (1) | 1 | X1022282 | 10 22 282 0 | KRAFTSTOFFVORFILTER |
| ENTLUEFTUNGSSCHRAUBE | 70 09 590 | 17 | 1 | X1011569 | 10 11 569 6 | LECKOELRUECKLAUF |
| ENTLUEFTUNGSSCHRAUBE G | 60 25 013 08 | 293 | 1 | 1 920 314 | 96 46 921 08 | KLEMMKASTEN VORM. |
| ENTLUEFTUNGSSCHRAUBE G | 60 25 013 08 | 293 | 1 | 3 930 492 | 96 20 966 08 | KLEMMKASTEN KPL. |
| ENTLUEFTUNGSSCHRAUBE G | 60 25 013 08 | 9 | 1 | 3 930 523 | 96 43 943 08 | LEITUNGSTROMMEL |
| ENTLUEFTUNGSSCHRAUBE M | 10 48 866 2 | 307 | 1 | 3 930 718 | 96 56 248 08 | KLEMMKASTEN KPL. |
| ENTLUEFTUNGSSCHRAUBE | 51 86 205 08 | 68 | 1 | X1047300 | 10 47 300 1 | TELESKOPZYLINDER |
| ENTLUEFTUNGSSTUTZEN | 92 75 019 01 | 2 | 1 | 9 275 212 | 92 75 212 01 | OELMESSSTABEINRICHTUNG |
| ENTLUEFTUNGSSTUTZEN | 92 75 019 01 | 2 | 1 | 9 275 543 | 92 75 543 01 | ENTLUEFTUNGSSTUTZEN |
| ENTLUEFTUNGSSTUTZEN | 92 75 019 01 | 13 | 1 | 9 393 684 | 93 93 684 01 | OELMESSEINRICHTUNG |
| ENTLUEFTUNGSSTUTZEN | 92 75 543 01 | 77 | 1 | 9 330 748 | 93 30 748 01 | DREHWERKANTRIEB |
| ENTLUEFTUNGSVENTIL | 10 42 498 3 | 21 | 2 | X1087223 | 10 87 223 8 | WIPPZYLINDER |
| ENTLUEFTUNGSVENTIL | 72 11 147 01 | 30 | 1 | 9 387 070 | 93 87 070 01 | KOMPAKTSEILWINDE |
| ENTLUEFTUNGSVENTIL | 72 11 147 01 | 30 | 1 | 9 685 586 | 96 85 586 01 | KOMPAKTSEILWINDE |
| ENTWAESSERUNGSSTOPFEN | 60 25 012 08 | 292 | 1 | 1 920 314 | 96 46 921 08 | KLEMMKASTEN VORM. |
| ENTWAESSERUNGSSTOPFEN | 60 25 012 08 | 292 | 1 | 3 930 492 | 96 20 966 08 | KLEMMKASTEN KPL. |
| ENTWAESSERUNGSSTOPFEN | 60 25 012 08 | 308 | 1 | 3 930 718 | 96 56 248 08 | KLEMMKASTEN KPL. |
| ERSATZELEMENT OEL | 10 03 283 5 | 1 | 1 | 9 075 483 | 90 75 483 | KURBELGEHAEUSEENTLUEFT |
| ERSATZELEMENT OEL | 10 03 283 5 | 7 | 1 | 9 629 047 | 96 29 047 08 | FILTERPAKET |
| ERSATZELEMENT OEL | 10 03 283 5 | 7 | 1 | 9 629 049 | 96 29 049 08 | FILTERPAKET |
| ERSATZELEMENT OEL | 10 03 283 5 | (2) | 1 | XSK_Z480 | SK_Z48005 | SERVICE |
| ERSATZTEILSATZ GRIFF | 10 87 351 7 | 5 | 1 | 6 060 950 | 60 60 950 08 | MEISTERSCHALTER |
| ES BOLZEN 10X20 VERZ | 72 51 101 08 | 126 | 1 | 2 520 000 | 91 49 872 08 | KABINE VERGLAST |
| ES BOLZEN 8X16 VERZ | 72 51 118 08 | 12 | 2 | 2 510 072 | 96 44 614 08 | KLAPPE VORM.RECHTS |
| ES BOLZEN 8X16 VERZ | 72 51 118 08 | 11 | 2 | 2 510 201 | 96 42 011 08 | KLAPPE VORM. |
| ES BOLZEN 8X16 VERZ | 72 51 118 08 | 67 | 1 | 2 520 000 | 91 49 872 08 | KABINE VERGLAST |
| FAECHERSCHEIBE DIN 6798 A | 11 83 330 8 | 4 | 12 | 1 830 102 | 92 26 483 08 | KLEMMBRETT VORM. |
| FAECHERSCHEIBE DIN 6798 J | 42 52 212 08 | 24 | 8 | 1 100 205 | 96 51 633 08 | RAUPENTRAEGER KPL.RE. |
| FAECHERSCHEIBE DIN 6798 J | 42 52 212 08 | 24 | 6 | 1 100 210 | 96 51 634 08 | RAUPENTRAEGER KPL.LI. |
| FAECHERSCHEIBE DIN 6798 J | 42 52 216 08 | 14 | 6 | 1 100 200 | 96 72 944 08 | UNTERWAGEN KPL. |
| FAECHERSCHEIBE DIN 6798 J | 42 52 216 08 | 13 | 20 | 1 100 205 | 96 51 633 08 | RAUPENTRAEGER KPL.RE. |
| FAECHERSCHEIBE DIN 6798 J | 42 52 216 08 | 13 | 20 | 1 100 210 | 96 51 634 08 | RAUPENTRAEGER KPL.LI. |
| FAECHERSCHEIBE DIN 6798 J | 42 52 219 08 | 40 | 12 | 1 100 215 | 99 20 783 14 | MITTELTEIL |
| FAECHERSCHEIBE DIN 6798 J | 42 52 205 08 | 13 | 4 | 2 913 | 91 32 850 08 | LICCON KONSOLE LCD2 |
| FAECHERSCHEIBE DIN 6798 J | 42 52 205 08 | 7 | 12 | 2 913 005 | 96 28 696 08 | INNENGEHAEUSE VORM. |
| FAECHERSCHEIBE DIN 6798 J | 42 52 205 08 | 27 | 17 | 2 932 119 | 96 46 061 08 | SCHWENKRAHMEN RELAISST |
| FAECHERSCHEIBE DIN 6798 J | 42 52 205 08 | 9 | 4 | 2 932 214 | 96 28 366 08 | EINGANGSPLATINE KPL. |
| FAECHERSCHEIBE DIN 6798 J | 42 52 207 08 | 82 | 28 | 2 932 042 | 96 68 587 08 | GRUNDAUFBAU |
| FAECHERSCHEIBE DIN 6798 J | 42 52 207 08 | 4 | 4 | 2 932 215 | 92 26 129 08 | VERTEILER MASSE |
| FAECHERSCHEIBE DIN 6798 J | 42 52 210 08 | 46 | 7 | 1 100 215 | 99 20 783 14 | MITTELTEIL |
| FAECHERSCHEIBE DIN 6798 J | 42 52 210 08 | 7 | 2 | 2 913 004 | 96 20 460 08 | GEHAEUSE VORM. |
| FAECHERSCHEIBE DIN 6798 J | 42 52 210 08 | 86 | 1 | 2 932 042 | 96 68 587 08 | GRUNDAUFBAU |
| FAECHERSCHEIBE DIN 6798 J | 42 52 211 08 | 88 | 9 | 2 932 042 | 96 68 587 08 | GRUNDAUFBAU |
| FAEUSTEL DIN 6475 3KG | 79 00 311 08 | 61 | 1 | 1 750 001 | 92 85 698 08 | GRUNDWERKZEUG |
| FAHRANTRIEB FAT 500P031 | 94 44 410 03 | 3 | 1 | 1 100 205 | 96 51 633 08 | RAUPENTRAEGER KPL.RE. |
| FAHRANTRIEB FAT 500P031 | 94 44 410 03 | 3 | 1 | 1 100 210 | 96 51 634 08 | RAUPENTRAEGER KPL.LI. |
| FAHRERSITZ 1000/577 | 77 41 079 08 | 1 | 1 | 2 502 | 91 01 533 08 | STEUERSTAND |
| FALTENBALG | 57 19 123 08 | 2 | 1 | 6 060 950 | 60 60 950 08 | MEISTERSCHALTER |
| FASSUNG | 63 01 023 08 | 9 | 13 | 2 932 119 | 96 46 061 08 | SCHWENKRAHMEN RELAISST |
| FEDERBOLZEN | 51 07 973 08 | 6 | 1 | 5 114 177 | 51 14 177 08 | DRUCKBEGRENZUNGSVENTI |
| FEDERDRUCKLAMELLENBRE | 50 20 363 01 | 80 | 1 | 9 330 748 | 93 30 748 01 | DREHWERKANTRIEB |
| FEDERDRUCKLAMELLENBRE | 50 20 370 01 | 70 | 1 | 9 444 410 | 94 44 410 03 | FAHRANTRIEB |
| FEDERDRUCKLAMELLENBRE | 50 20 372 01 | 70 | 1 | 9 387 598 | 93 87 598 01 | PLANETENGETRIEBE |
| FEDERDRUCKLAMELLENBRE | 50 20 372 01 | 70 | 1 | 9 686 071 | 96 86 071 01 | PLANETENGETRIEBE |
| FEDERRIEGEL VERZ | 70 42 111 08 | 99 | 1 | 2 520 000 | 91 49 872 08 | KABINE VERGLAST |
| FEDERRING DIN 127 A 4 FST | 42 40 003 08 | 9 | 4 | 2 501 000 | 91 48 769 08 | KRANFUEHRERKABINE VORM |

| Bezeichnung | Artikel | Pos. | Menge | Seite | Baugruppe | Bezeichnung |
|---|---|---|---|---|---|---|
| FEDERRING DIN 127 A 6 FST | 42 40 005 08 | 74 | 3 | 2 520 000 | 91 49 872 08 | KABINE VERGLAST |
| FEDERRING DIN 127 A 6 FST | 42 40 005 08 | 12 | 3 | 2 780 800 | 91 15 191 08 | ELEKTRIK WINDE 2 |
| FEDERRING DIN 127 A 6 FST | 42 40 005 08 | 33 | 2 | 2 920 | 91 55 477 08 | EL.ANLAGE DREHBUEHNE |
| FEDERRING DIN 127 A 6 FST | 42 40 005 08 | 12 | 3 | 2 920 200 | 91 27 889 08 | ELEKTRIK WINDE 1 |
| FEDERRING DIN 127 A 6 FST | 42 40 005 08 | 17 | 3 | 2 920 585 | 91 01 520 08 | ELEKTRIK BLITZLEUCHTE |
| FEDERRING DIN 127 A 8 FST | 42 40 007 08 | 26 | 8 | 2 501 000 | 91 48 769 08 | KRANFUEHRERKABINE VORM |
| FEDERRING DIN 127 A 8 FST | 42 40 007 08 | 21 | 2 | 2 502 | 91 01 533 08 | STEUERSTAND |
| FEDERRING DIN 127 A 8 FST | 42 40 007 08 | 12 | 2 | 2 920 585 | 91 01 520 08 | ELEKTRIK BLITZLEUCHTE |
| FEDERRING DIN 128 A 20 A3C | 46 00 013 03 | 8 | 4 | 1 100 214 | 74 90 137 14 | LEITRAD KPL |
| FEDERRING DIN 128 A 5 FST | 42 40 004 08 | 269 | 2 | 2 920 574 | 96 36 055 08 | BEDIENPULT BALLAST |
| FEDERRING DIN 128 A 5 FST | 42 40 004 08 | 252 | 2 | 2 920 904 | 96 41 093 08 | STEUERPULT ABSTUETZUNG |
| FEDERRING DIN 7980 8 FST V | 42 41 007 08 | 8 | 6 | 5 102 294 | 51 02 294 08 | HYDROMOTOR |
| FEDERSATZ | 10 49 007 2 | 30 | 1 | 6 923 101 | 69 23 101 08 | SEILLAENGENGEBER |
| FEDERSCHEIBE DIN 137 10 X1 | 10 41 109 3 | 6 | 2 | X1021997 | 10 21 997 8 | STARTER |
| FEDERSCHEIBE DIN 137 10 X1 | 10 41 109 3 | 6 | 2 | X1138664 | 11 38 664 4 | STARTER VORM. |
| FEDERSCHEIBE DIN 137 6 X1 | 10 41 109 2 | 4 | 1 | X1021997 | 10 21 997 8 | STARTER |
| FEDERSCHEIBE DIN 137 6 X1 | 10 41 109 2 | 4 | 1 | X1138664 | 11 38 664 4 | STARTER VORM. |
| FEDERSCHEIBE DIN 137 B 20 | 42 50 514 08 | 62 | 8 | 3 102 000 | 91 62 543 08 | TELESKOP 1 VORM. |
| FEDERSCHEIBE DIN 137 B 20 | 42 50 514 08 | 62 | 8 | 3 103 000 | 91 62 544 08 | TELESKOP 2 VORM. |
| FEDERSCHEIBE DIN 137 B 20 | 42 50 514 08 | 62 | 8 | 3 104 000 | 91 62 545 08 | TELESKOP 3 VORM. |
| FEDERSCHEIBE DIN 137 B 20 | 42 50 514 08 | 62 | 8 | 3 105 000 | 91 62 546 08 | TELESKOP 4 VORM. |
| FEDERSCHEIBE DIN 137 B 20 | 42 50 514 08 | 41 | 4 | 3 106 000 | 91 60 313 08 | TELESKOP 5 VORM. |
| FEDERSTECKER 4,5X4X78 A3 | 43 32 062 08 | 2 | 2 | 3 750 027 | 96 89 527 08 | HAKENSTANGE ANBAU |
| FEDERSTECKER B 7 VERZ | 43 32 066 08 | 4 | 8 | 1 300 005 | 99 17 196 14 | RAUPENBESTUECKUNG |
| FEDERSTECKER DIN 11024 3. | 43 32 061 14 | 13 | 4 | 1 740 010 | 96 50 675 08 | MONTAGETEILE |
| FEDERTELLER | 51 07 970 08 | 3 | 1 | 5 114 177 | 51 14 177 08 | DRUCKBEGRENZUNGSVENTI |
| FEDERTELLER | 57 01 108 08 | 6 | 1 | 5 701 095 | 57 01 095 08 | TRIEBWERK |
| FEDERTELLER OBEN 41Cr4 | 90 74 480 | 7 | 4 | X1012036 | 10 12 036 5 | ZYLINDERKOPF VORM. |
| FEDERTELLER OBEN 41Cr4 | 90 74 480 | 7 | 4 | X1014155 | 10 14 155 5 | ZYLINDERKOPF VORM. |
| FERNDIAGNOSE MODUL OW L | 91 60 938 08 | 410 | 1 | | LTR 1100 -0 | LIEBHERR LTR 1100 |
| FETT GBU Y 131 0.010KG | 10 02 473 3 | 100 | 1 | 9 073 083 | 90 73 083 | ZYLINDER |
| FETT NBU 12 0.05KG TUBE | 86 55 018 | 110 | 1 | 9 078 250 | 90 78 250 | VERSCHLUSSTEILE |
| FETT NBU 12 0.05KG TUBE | 86 55 018 | 110 | 1 | 9 079 472 | 90 79 472 | KUEHLMITTELKRUEMMER AN |
| FETT NBU 12 0.05KG TUBE | 86 55 018 | 110 | 1 | 9 079 480 | 90 79 480 | AGGREGATETRAEGER ANBA |
| FETT NBU 30 1KG DOSE | 10 28 570 8 | 100 | 1 | 9 074 165 | 90 74 165 | MASSENAUSGLEICH ANBAU |
| FETT NBU 30 1KG DOSE | 10 28 570 8 | 100 | 1 | 9 078 249 | 90 78 249 | VERSCHLUSSTEILE |
| FETT NBU 30 1KG DOSE | 10 28 570 8 | 100 | 1 | 9 078 962 | 90 78 962 | NEBENABTRIEB VORM. |
| FETT NBU 30 1KG DOSE | 10 28 570 8 | 100 | 1 | X1011566 | 10 11 566 4 | VERSCHLUSSTEILE |
| FETT NBU 30 1KG DOSE | 10 28 570 8 | 100 | 1 | X1011573 | 10 11 573 7 | KRAFTSTOFFLEITUNGEN |
| FETT NBU 30 1KG DOSE | 10 28 570 8 | 100 | 1 | X1011582 | 10 11 582 9 | SCHWUNGRADGEHAEUSE AN |
| FETT NBU 30 1KG DOSE | 10 28 570 8 | 100 | 1 | X1011683 | 10 11 683 9 | EINSPRITZPUMPE ANBAU |
| FETT NBU 30 1KG DOSE | 10 28 570 8 | 100 | 1 | X1011816 | 10 11 816 1 | VERBINDUNGSLEITUNG ANBA |
| FETT STABURAGS NBU 12 0.0 | 10 01 302 5 | 110 | 1 | 9 080 345 | 90 80 345 | WASSERPUMPE MIT BEFEST. |
| FETT STABURAGS NBU 30 0.01 | 10 28 262 2 | 100 | 1 | X1012166 | 10 12 166 7 | VERBINDUNGSSTUECK M.O-R |
| FETT STABURAGS NBU 30 0.01 | 10 28 262 2 | 100 | 1 | X1012223 | 10 12 223 3 | NOCKENWELLE KPL. |
| FEUERLOESCHER DIN EN 3 | 10 87 460 8 | 4 | 1 | 1 750 002 | 92 86 201 08 | ZUBEHOER |
| FILTER | 57 15 280 08 | 34 | 1 | X1041191 | 10 41 191 3 | PLATTE |
| FILTER | 57 15 280 08 | 38 | 1 | X1080297 | 10 80 297 1 | VENTILBLOCK |
| FILTER | 57 18 500 08 | 19 | 1 | 5 530 022 | 55 30 022 08 | WASSERHEIZGERAET |
| FILTER | 57 18 500 08 | 204 | 1 | 9 629 047 | 96 29 047 08 | FILTERPAKET |
| FILTER | 57 18 500 08 | (17) | 1 | XSK_Z480 | SK_Z48005 | SERVICE |
| FILTERDECKEL | 57 08 320 08 | 2 | 1 | X1032665 | 10 32 665 4 | RUECKLAUFFILTER |
| FILTEREINSATZ 1m³/min 10µm | 51 06 718 08 | (1) | 1 | 2 340 004 | 96 43 780 08 | OELBEHAELTER VORM. |
| FILTEREINSATZ 1m³/min 10µm | 51 06 718 08 | 200 | 2 | 9 629 047 | 96 29 047 08 | FILTERPAKET |
| FILTEREINSATZ 1m³/min 10µm | 51 06 718 08 | 200 | 2 | 9 629 049 | 96 29 049 08 | FILTERPAKET |
| FILTEREINSATZ 1m³/min 10µm | 51 06 718 08 | (11) | 2 | XSK_Z480 | SK_Z48005 | SERVICE |
| FILTEREINSATZ OEL 10µm | 10 03 761 6 | 1 | 1 | 5 106 708 | 51 06 708 08 | LEITUNGSFILTER |
| FILTEREINSATZ OEL 10µm | 10 03 761 6 | 5 | 1 | 9 629 047 | 96 29 047 08 | FILTERPAKET |
| FILTEREINSATZ OEL 10µm | 10 03 761 6 | 5 | 1 | 9 629 049 | 96 29 049 08 | FILTERPAKET |
| FILTEREINSATZ OEL 10µm | 10 03 761 6 | (4) | 1 | XSK_Z480 | SK_Z48005 | SERVICE |

| Bezeichnung | Artikel | Pos. | Menge | Seite | Baugruppe | Bezeichnung |
|---|---|---|---|---|---|---|
| FILTEREINSATZ OEL 10µm | 51 06 692 08 | 4 | 2 | 9 629 047 | 96 29 047 08 | FILTERPAKET |
| FILTEREINSATZ OEL 10µm | 51 06 692 08 | 4 | 2 | 9 629 049 | 96 29 049 08 | FILTERPAKET |
| FILTEREINSATZ OEL 10µm | 51 06 692 08 | 10 | 1 | X1032665 | 10 32 665 4 | RUECKLAUFFILTER |
| FILTEREINSATZ OEL 10µm | 51 06 692 08 | (10) | 2 | XSK_Z480 | SK_Z48005 | SERVICE |
| FILTEREINSATZ OEL 10µm | 57 05 848 08 | 1 | 1 | 5 106 681 | 51 06 681 08 | DRUCKFILTER |
| FILTEREINSATZ OEL 10µm | 57 05 848 08 | 9 | 1 | 9 629 047 | 96 29 047 08 | FILTERPAKET |
| FILTEREINSATZ OEL 10µm | 57 05 848 08 | 9 | 1 | 9 629 049 | 96 29 049 08 | FILTERPAKET |
| FILTEREINSATZ OEL 10µm | 57 05 848 08 | (13) | 1 | XSK_Z480 | SK_Z48005 | SERVICE |
| FILTERELEMENT | 10 27 855 3 | 205 | 1 | 9 629 047 | 96 29 047 08 | FILTERPAKET |
| FILTERELEMENT | 10 27 855 3 | 1 | 1 | X1009998 | 10 09 998 1 | LUFTFILTER |
| FILTERELEMENT | 10 27 855 3 | (9) | 1 | XSK_Z480 | SK_Z48005 | SERVICE |
| FILTERPAKET 1000 STD.OW L | 96 29 047 08 | 120 | 1 | XSK_Z480 | SK_Z48005 | SERVICE |
| FILTERPAKET 500 STD.OW L | 96 29 049 08 | 110 | 1 | XSK_Z480 | SK_Z48005 | SERVICE |
| FILTERPATRONE 0,005m³/min 2 | 51 06 711 08 | 41 | 3 | 2 970 | 91 55 482 08 | HYDRAULIK |
| FILTERPATRONE 0,005m³/min 2 | 51 06 711 08 | 26 | 2 | 2 971 | 91 50 610 08 | HYDRAULIK HILFSHUBWERK |
| FILTERPATRONE 0,005m³/min 2 | 51 06 711 08 | 9 | 1 | 2 975 152 | 91 05 737 08 | HYDRAULIK TELE |
| FILTERTOPF | 57 10 213 08 | 3 | 1 | 5 106 708 | 51 06 708 08 | LEITUNGSFILTER |
| FLACHDICHTRING 17,4X24X1, | 71 01 211 14 | 7 | 1 | 1 100 212 | 79 02 561 14 | LEITRADEINHEIT KPL |
| FLACHDICHTRING 40X28X3 NB | 97 01 153 08 | 10 | 1 | 2 200 048 | 96 32 140 08 | AUSGLEICHSBEHAELTER VO |
| FLACHKOPFSCHRAUBE DIN 85 | 40 02 002 08 | 6 | 2 | 5 530 854 | 55 30 854 08 | DREIWEGEHAHN |
| FLACHKOPFSCHRAUBE ISO 7 | 40 83 112 08 | 4 | 4 | 2 913 003 | 96 20 599 08 | FOLIENTASTATUR VORM. |
| FLACHKOPFSCHRAUBE ISO 7 | 57 07 568 08 | 9 | 2 | 5 530 854 | 55 30 854 08 | DREIWEGEHAHN |
| FLACHKOPFSCHRAUBE ISO 7 | 40 84 006 01 | 25 | 17 | 2 932 119 | 96 46 061 08 | SCHWENKRAHMEN RELAISST |
| FLACHKOPFSCHRAUBE ISO 7 | 40 84 007 01 | 4 | 2 | 2 913 005 | 96 28 696 08 | INNENGEHAEUSE VORM. |
| FLACHKOPFSCHRAUBE ISO 7 | 40 83 114 08 | 3 | 4 | 2 913 006 | 96 20 732 08 | LUEFTERBLECH VORM. |
| FLACHKOPFSCHRAUBE ISO 70 | 40 84 005 01 | 3 | 8 | 2 913 005 | 96 28 696 08 | INNENGEHAEUSE VORM. |
| FLACHKOPFSCHRAUBE ISO 70 | 51 45 994 08 | 4 | 12 | 2 913 100 | 91 23 538 08 | BAUGRUPPENTRAEGER |
| FLACHKOPFSCHRAUBE ISO 70 | 51 45 994 08 | 8 | 4 | 2 932 214 | 96 28 366 08 | EINGANGSPLATINE KPL. |
| FLACHKOPFSCHRAUBE ISO 7 | 10 87 547 2 | 12 | 4 | 2 913 100 | 91 23 538 08 | BAUGRUPPENTRAEGER |
| FLACHKOPFSCHRAUBE ISO 70 | 40 02 485 | 8 | 4 | 2 501 000 | 91 48 769 08 | KRANFUEHRERKABINE VORM |
| FLACHKOPFSCHRAUBE ISO 7 | 40 84 021 01 | 8 | 2 | 2 260 006 | 96 31 147 08 | BATTERIEKASTEN VORM. |
| FLACHKOPFSCHRAUBE ISO 7 | 40 84 021 01 | 8 | 3 | 3 750 026 | 96 89 407 08 | HALTER LINKS |
| FLACHKOPFSCHRAUBE ISO 7 | 40 84 021 01 | 8 | 3 | 3 750 028 | 96 89 408 08 | HALTER RECHTS |
| FLACHKOPFSCHRAUBE ISO 7 | 40 02 307 | 64 | 2 | 2 932 042 | 96 68 587 08 | GRUNDAUFBAU |
| FLACHKOPFSCHRAUBE ISO 7 | 40 02 308 | 60 | 3 | 2 533 001 | 96 41 568 08 | ARMATURENBRETT DACH VO |
| FLACHKOPFSCHRAUBE ISO 7 | 46 00 723 | 39 | 4 | 2 540 | 91 45 984 08 | HEIZUNG OW |
| FLACHKOPFSCHRAUBE ISO 7 | 40 02 612 | 15 | 3 | 2 920 585 | 91 01 520 08 | ELEKTRIK BLITZLEUCHTE |
| FLACHKOPFSCHRAUBE ISO 7 | 46 35 128 | 107 | 2 | 2 520 000 | 91 49 872 08 | KABINE VERGLAST |
| FLACHRUNDSCHRAUBE DIN | 40 28 018 08 | 310 | 4 | 2 210 008 | 96 48 137 08 | KUEHLER VORM. |
| FLACHRUNDSCHRAUBE DIN | 40 28 059 08 | 28 | 2 | 2 502 | 91 01 533 08 | STEUERSTAND |
| FLACHRUNDSCHRAUBE DIN 6 | 40 28 026 14 | 321 | 2 | 2 210 008 | 96 48 137 08 | KUEHLER VORM. |
| FLACHSCHELLE 88,9 EDELST | 55 20 975 08 | 113 | 3 | 2 680 | 91 53 225 08 | ABGASANLAGE KPL. |
| FLACHSICHERUNG 2A | 60 41 040 08 | 12 | 2 | 2 932 095 | 96 46 064 08 | SCHWENKRAHMEN SICHERUN |
| FLACHSICHERUNGSEINSATZ | 60 40 071 08 | 9 | 1 | 2 920 083 | 96 31 039 08 | ELEKTRIK BATTERIEKASTEN |
| FLACHSICHERUNGSEINSATZ | 60 40 071 08 | 15 | 12 | 2 932 095 | 96 46 064 08 | SCHWENKRAHMEN SICHERUN |
| FLACHSICHERUNGSEINSATZ | 60 40 072 08 | 16 | 5 | 2 932 095 | 96 46 064 08 | SCHWENKRAHMEN SICHERUN |
| FLACHSICHERUNGSEINSATZ | 60 40 073 08 | 266 | 1 | 1 780 182 | 92 01 827 08 | ELEKTRIK KLIMAANLAGE |
| FLACHSICHERUNGSEINSATZ | 60 40 073 08 | 17 | 4 | 2 932 095 | 96 46 064 08 | SCHWENKRAHMEN SICHERUN |
| FLACHSICHERUNGSEINSATZ | 60 40 074 08 | 18 | 1 | 2 932 095 | 96 46 064 08 | SCHWENKRAHMEN SICHERUN |
| FLACHSICHERUNGSEINSATZ | 60 40 077 08 | 5 | 1 | 2 780 870 | 91 70 947 08 | LADESPANNUNGSREGLER |
| FLACHSICHERUNGSEINSATZ | 60 40 069 08 | 13 | 8 | 2 932 095 | 96 46 064 08 | SCHWENKRAHMEN SICHERUN |
| FLACHSICHERUNGSEINSATZ | 60 40 070 08 | 14 | 9 | 2 932 095 | 96 46 064 08 | SCHWENKRAHMEN SICHERUN |
| FLACHSPANNHEBEL | 70 40 048 08 | 15 | 2 | 2 502 | 91 01 533 08 | STEUERSTAND |
| FLACHSTAHL 6X20X70 S355M | 94 15 054 08 | 12 | 2 | 2 500 | 91 48 594 08 | KRANFUEHRERKABINE KPL. |
| FLACHSTECKER | 60 23 048 08 | 9 | 2 | 2 913 102 | 92 32 870 08 | LUEFTEREINHEIT |
| FLACHSTECKERGEHAEUSE 1 | 60 23 233 08 | (151) | 30 | 2 932 042 | 96 68 587 08 | GRUNDAUFBAU |
| FLACHSTECKERGEHAEUSE | 60 23 059 08 | 8 | 1 | 2 913 102 | 92 32 870 08 | LUEFTEREINHEIT |
| FLACHSTECKERGEHAEUSE | 60 23 059 08 | (159) | 1 | 2 932 042 | 96 68 587 08 | GRUNDAUFBAU |
| FLAECHENDICHTUNG 300ML | 10 35 459 5 | 100 | 1 | X1012414 | 10 12 414 0 | OELWANNE MIT BEFEST. |
| FLANSCH | 91 79 540 | 19 | 1 | X1011832 | 10 11 832 6 | ATL-ANBAU |

| Bezeichnung | Artikel | Pos. | Menge | Seite | Baugruppe | Bezeichnung |
|---|---|---|---|---|---|---|
| FLANSCH | 92 75 047 01 | 23 | 1 | 9 387 596 | 93 87 596 01 | SEILTROMMEL |
| FLANSCH | 92 75 048 01 | 15 | 1 | 9 387 596 | 93 87 596 01 | SEILTROMMEL |
| FLANSCH 120X150X217 S355J | 95 64 426 14 | 5 | 2 | 1 970 | 96 71 367 08 | HYDRAULIK UNTERWAGEN |
| FLANSCH 25.0X16 9 42CRMO4 | 97 00 037 08 | 15 | 1 | 2 210 008 | 96 48 137 08 | KUEHLER VORM. |
| FLANSCH 35.0X23 S355J2G3 | 97 22 607 08 | 12 | 1 | 2 681 | 91 28 102 08 | LUFTFILTERANLAGE |
| FLANSCH D934 | 90 72 832 | 3 | 1 | 9 074 165 | 90 74 165 | MASSENAUSGLEICH ANBAU |
| FLANSCH VORM. | 90 73 163 | 8 | 1 | X1012223 | 10 12 223 3 | NOCKENWELLE KPL. |
| FLANSCH VORM. D934 | 90 72 593 | 2 | 1 | 9 074 165 | 90 74 165 | MASSENAUSGLEICH ANBAU |
| FLANSCHDICHTUNG | 10 34 693 8 | (5) | 1 | 2 270 001 | 96 37 923 08 | KRAFTSTOFFBEHAELTER VO |
| FLANSCHHAELFTE A3P | 51 05 866 08 | 572 | 16 | 1 970 | 96 71 367 08 | HYDRAULIK UNTERWAGEN |
| FLANSCHHAELFTE A3P | 51 05 866 08 | 500 | 6 | 2 970 | 91 55 482 08 | HYDRAULIK |
| FLANSCHHAELFTE A3P | 51 05 875 08 | 534 | 6 | 1 970 | 96 71 367 08 | HYDRAULIK UNTERWAGEN |
| FLANSCHHAELFTE SAE 1 6000 | 51 05 869 08 | 553 | 4 | 1 970 | 96 71 367 08 | HYDRAULIK UNTERWAGEN |
| FLANSCHPLATTE 10X59X24 S | 97 22 606 08 | 11 | 1 | 2 681 | 91 28 102 08 | LUFTFILTERANLAGE |
| FLANSCHSTUTZEN 38S | 51 15 178 08 | 12 | 3 | 2 975 152 | 91 05 737 08 | HYDRAULIK TELE |
| FLANSCHVERSCHRAUBUNG | 51 15 188 08 | 450 | 1 | 2 210 008 | 96 48 137 08 | KUEHLER VORM. |
| FLANSCHVERSCHRAUBUNG | 95 36 413 08 | 402 | 1 | 2 210 | 91 81 614 08 | ANTRIEBSAGGREGAT VORM. |
| FLANSCHVERSCHRAUBUNG | 51 00 334 08 | 400 | 2 | 2 210 | 91 81 614 08 | ANTRIEBSAGGREGAT VORM. |
| FLANSCHVERSCHRAUBUNG | 51 01 417 08 | 405 | 1 | 2 210 | 91 81 614 08 | ANTRIEBSAGGREGAT VORM. |
| FLUEGELSCHRAUBE DIN 316 | 40 09 029 14 | 7 | 10 | 1 100 220 | 99 08 404 14 | ABDECKUNG |
| FLUEGELSCHRAUBE DIN 316 | 40 09 018 08 | 30 | 1 | 3 511 006 | 96 45 029 08 | MASTNASE VORM. |
| FOLIENTASTATUR | 69 18 849 08 | 1 | 1 | 2 913 003 | 96 20 599 08 | FOLIENTASTATUR VORM. |
| FOLIENTASTATUR VORM. | 96 20 599 08 | 1 | 1 | 2 913 | 91 32 850 08 | LICCON KONSOLE LCD2 |
| FORMCLIP 10X55 VERZ | 43 32 009 08 | 5 | 8 | 1 100 216 | 96 46 363 08 | MONTAGETEILE LWE |
| FORMSCHLAUCH | 55 17 197 08 | 253 | 2 | 2 210 | 91 81 614 08 | ANTRIEBSAGGREGAT VORM. |
| FORMSCHLAUCH | 97 37 569 08 | 250 | 1 | 2 681 | 91 28 102 08 | LUFTFILTERANLAGE |
| FORMSCHLAUCH SPF | 97 02 543 5 | 8 | 1 | 2 540 | 91 45 984 08 | HEIZUNG OW |
| FORMSCHLAUCH SPF | 97 02 544 6 | 47 | 1 | 2 540 | 91 45 984 08 | HEIZUNG OW |
| FORMSCHLAUCH SPF | 97 36 454 08 | 251 | 1 | 2 210 | 91 81 614 08 | ANTRIEBSAGGREGAT VORM. |
| FORMSCHLAUCH SPF | 97 36 455 08 | 252 | 1 | 2 210 | 91 81 614 08 | ANTRIEBSAGGREGAT VORM. |
| FRONTELEMENT | 60 66 525 08 | 8 | 4 | 2 920 574 | 96 36 055 08 | BEDIENPULT BALLAST |
| FRONTELEMENT | 60 66 525 08 | 8 | 6 | 2 920 904 | 96 41 093 08 | STEUERPULT ABSTUETZUNG |
| FRONTELEMENT 1W | 60 66 524 08 | 9 | 2 | 2 920 904 | 96 41 093 08 | STEUERPULT ABSTUETZUNG |
| FRONTRAHMEN | 69 26 004 08 | 8 | 1 | 2 913 003 | 96 20 599 08 | FOLIENTASTATUR VORM. |
| FRONTSCHEIBE GEKLEBT SP | 92 68 891 08 | 1 | 1 | 2 520 001 | 92 48 796 08 | FRONTSCHEIBE KPL. |
| FRONTSCHEIBE KPL. | 92 48 796 08 | 3 | 1 | 2 520 000 | 91 49 872 08 | KABINE VERGLAST |
| FUEHRUNG 27X58X360 ENA | 95 35 560 08 | 4 | 2 | 2 502 | 91 01 533 08 | STEUERSTAND |
| FUEHRUNG 80.0X76 35NICRM | 97 00 854 8 | 2 | 1 | 2 790 024 | 96 67 077 08 | SPIEGELHALTER VORM. |
| FUEHRUNG PA6G | 97 57 785 08 | 37 | 2 | 2 102 | 91 51 080 08 | MONTAGETEILE DREHBUEHN |
| FUEHRUNGSBUCHSE 290,7X | 11 34 182 9 | 3 | 1 | X1087223 | 10 87 223 8 | WIPPZYLINDER |
| FUEHRUNGSKONUS M3 MS SP | 66 00 420 08 | 13 | 6 | 2 922 001 | 92 84 311 08 | BUSPLATINE |
| FUEHRUNGSKONUS M5 PA6G | 66 00 419 08 | 12 | 1 | 2 922 001 | 92 84 311 08 | BUSPLATINE |
| FUEHRUNGSROHR | 90 79 532 | 2 | 1 | X1011888 | 10 11 888 4 | OELMESSSTAB MIT ROHR |
| FUEHRUNGSSTANGE LINKS | 10 87 307 1 | 10 | 1 | X1100696 | 11 00 696 4 | ROLLO |
| FUEHRUNGSSTANGE RECHT | 10 87 307 3 | 20 | 1 | X1100696 | 11 00 696 4 | ROLLO |
| FUNKANTENNE VORM. | 96 24 498 08 | 1 | 1 | 2 780 854 | 96 37 908 08 | GSM-MODUL |
| FUNKENFAENGER Edelstahl | 97 10 021 08 | 100 | 1 | 2 680 | 91 53 225 08 | ABGASANLAGE KPL. |
| FUSSPEDAL | 57 18 908 08 | 1 | 1 | 6 923 097 | 69 23 097 08 | PEDALGEBER |
| GABELGELENK DIN 71751 A 8X | 72 50 004 08 | 125 | 1 | 2 520 000 | 91 49 872 08 | KABINE VERGLAST |
| GABELKOPF DIN 71752 6X24 | 72 51 002 08 | 49 | 1 | 2 522 | 91 10 037 08 | TUER KPL. |
| GASFEDER 19X60-550N | 59 10 670 08 | 16 | 1 | 2 502 | 91 01 533 08 | STEUERSTAND |
| GASFEDER 23X265-500N | 59 10 619 08 | 10 | 2 | 2 510 072 | 96 44 614 08 | KLAPPE VORM.RECHTS |
| GASFEDER 23X265-500N | 59 10 619 08 | 10 | 2 | 2 510 201 | 96 42 011 08 | KLAPPE VORM. |
| GASFEDER 23X325-400N | 59 15 099 08 | 64 | 1 | 2 520 000 | 91 49 872 08 | KABINE VERGLAST |
| GASFEDER 28X350-900N | 59 15 144 08 | 90 | 1 | 3 501 | 91 05 788 08 | DOPPELKLAPPSPITZE MECH. |
| GASRUECKSCHLAGVENTIL | 50 00 569 | 8 | 1 | 1 100 212 | 79 02 561 14 | LEITRADEINHEIT KPL |
| GEBER HUB OBEN ENDSCHAL | 96 20 219 08 | 10 | 1 | 3 931 032 | 96 20 959 08 | ELEKTRIK ANLENKSTUECK |
| GEBER HUB OBEN ENDSCHAL | 96 20 219 08 | 10 | 1 | 3 931 100 | 96 20 960 08 | ELEKTRIK KOPFSTUECK |
| GEBER HUB OBEN ENDSCHAL | 96 21 359 08 | 10 | 1 | 3 780 400 | 91 59 294 08 | ELEKTRIK 2.HUBENDSCHALTE |
| GEBERANBAU AUSSCHUBM | 92 95 081 08 | 34 | 1 | 3 330 | 91 57 885 08 | AUSSCHUBMECHANIK |

| Bezeichnung | Artikel | Pos. | Menge | Seite | Baugruppe | Bezeichnung |
|---|---|---|---|---|---|---|
| GEBERANBAU GRUNDAUSLE | 96 20 157 08 | 10 | 1 | 3 100 | 91 59 279 08 | TELESKOPAUSLEGER KPL. |
| GEBERANBAU KOPFSTUECK | 96 20 935 08 | 30 | 1 | 3 100 | 91 59 279 08 | TELESKOPAUSLEGER KPL. |
| GEBLAESE | 57 18 304 08 | 15 | 1 | 5 530 022 | 55 30 022 08 | WASSERHEIZGERAET |
| GEGENGEWICHT EN-GJL-200 | 38 00 617 08 | 2 | 1 | 2 560 | 91 50 900 08 | GEGENGEWICHT M.BEFESTIG |
| GEGENGEWICHT EN-GJL-200 | 38 00 619 08 | 3 | 2 | 2 560 | 91 50 900 08 | GEGENGEWICHT M.BEFESTIG |
| GEGENGEWICHT EN-GJL-200 | 38 00 619 08 | 30 | 2 | 2 570 | 91 50 901 08 | ZUSATZBALLAST |
| GEGENGEWICHT KPL. SPF | 96 37 332 08 | 1 | 1 | 2 560 | 91 50 900 08 | GEGENGEWICHT M.BEFESTIG |
| GEGENGEWICHT M.BEFESTIG | 91 50 900 08 | 147 | 1 | | LTR 1100 -0 | LIEBHERR LTR 1100 |
| GEGENMUTTER PG11 MS | 60 25 020 08 | 25 | 1 | 2 533 003 | 96 28 388 08 | ELEKTRIK ANBAUTEILE KABIN |
| GEGENMUTTER PG11 MS | 60 25 020 08 | 267 | 1 | 2 920 585 | 91 01 520 08 | ELEKTRIK BLITZLEUCHTE |
| GEGENMUTTER PG29 MS | 60 25 024 08 | 110 | 1 | 2 932 042 | 96 68 587 08 | GRUNDAUFBAU |
| GEGENMUTTER PG9 MS | 60 25 019 08 | 3 | 1 | 2 920 362 | 96 31 865 08 | ELEKTRIK ARBEITSSCHEINW |
| GEHAEUSE | 51 07 969 08 | 1 | 1 | 5 114 177 | 51 14 177 08 | DRUCKBEGRENZUNGSVENTI |
| GEHAEUSE | 57 01 091 08 | 3 | 1 | 5 102 294 | 51 02 294 08 | HYDROMOTOR |
| GEHAEUSE | 70 42 571 08 | 59 | 1 | 2 932 095 | 96 46 064 08 | SCHWENKRAHMEN SICHERUN |
| GEHAEUSE | 92 99 369 08 | 1 | 1 | 2 913 004 | 96 20 460 08 | GEHAEUSE VORM. |
| GEHAEUSE 140X540X100 SPF | 60 45 327 08 | 37 | 1 | 2 920 | 91 55 477 08 | EL.ANLAGE DREHBUEHNE |
| GEHAEUSE 1X400X273 DC01- | 61 10 012 08 | 2 | 1 | 2 913 102 | 92 32 870 08 | LUEFTEREINHEIT |
| GEHAEUSE 25-POL SPF | 60 23 223 08 | (150) | 5 | 2 932 042 | 96 68 587 08 | GRUNDAUFBAU |
| GEHAEUSE 4-POLE | 60 23 313 08 | (157) | 9 | 2 932 042 | 96 68 587 08 | GRUNDAUFBAU |
| GEHAEUSE 6-POL | 60 23 255 08 | (156) | 2 | 2 932 042 | 96 68 587 08 | GRUNDAUFBAU |
| GEHAEUSE 8-POL | 60 23 014 08 | (155) | 1 | 2 932 042 | 96 68 587 08 | GRUNDAUFBAU |
| GEHAEUSE GD-ZN SW GEPU | 70 42 533 08 | 35 | 2 | 2 510 200 | 96 41 258 08 | DREHBUEHNENVERKLEIDUN |
| GEHAEUSE GD-ZN SW GEPU | 70 42 566 08 | 2 | 4 | 2 501 022 | 96 34 184 08 | DECKEL KPL. |
| GEHAEUSE VORM. | 96 20 460 08 | 2 | 1 | 2 913 | 91 32 850 08 | LICCON KONSOLE LCD2 |
| GEHAEUSEUNTERTEIL | 10 42 941 5 | 2 | 1 | X1009998 | 10 09 998 1 | LUFTFILTER |
| GELENKHAKENSCHLUESSEL | 88 51 828 08 | 11 | 1 | 1 750 | 91 48 606 08 | WERKZEUG M.ZUBEHOER |
| GELENKHAKENSCHLUESSEL 6 | 88 51 822 08 | 12 | 1 | 1 750 | 91 48 606 08 | WERKZEUG M.ZUBEHOER |
| GELENKSTANGE | 59 10 428 08 | 41 | 1 | 2 520 000 | 91 49 872 08 | KABINE VERGLAST |
| GENERATOR ANBAU | 90 79 560 | 441 | 1 | X1015207 | 10 15 207 7 | DIESELMOTOR |
| GENERATOR VORM. 3080W 28 | 10 11 864 6 | 440 | 1 | X1015207 | 10 15 207 7 | DIESELMOTOR |
| GERAEUSCHDAEMPFER | 50 26 616 08 | 3 | 1 | 2 950 | 91 49 515 08 | DRUCKLUFTANLAGE OW |
| GETRIEBENOCKENENDSCHAL | 60 60 516 08 | 5 | 1 | 2 780 800 | 91 15 191 08 | ELEKTRIK WINDE 2 |
| GETRIEBENOCKENENDSCHAL | 60 60 516 08 | 5 | 1 | 2 920 200 | 91 27 889 08 | ELEKTRIK WINDE 1 |
| GEWICHT | 11 49 201 7 | 1 | 1 | 4 027 | 91 42 310 08 | LASTHAKEN |
| GEWICHT 50X52X262 EN-GJS4 | 38 82 613 08 | 2 | 1 | 3 105 014 | 96 57 037 08 | HUBENDSCHALTER GEWICHT |
| GEWICHT 80X105X230 EN-GJ | 38 82 612 08 | 1 | 1 | 3 105 014 | 96 57 037 08 | HUBENDSCHALTER GEWICHT |
| GEWICHTSZUSCHLAG | 11 11 111 08 | 1050 | -99.75 | 3 106 001 | 96 42 835 08 | SEILROLLE KPL. |
| GEWINDEBOLZEN DIN 976-1 | 66 00 416 08 | 14 | 1 | 2 922 001 | 92 84 311 08 | BUSPLATINE |
| GEWINDEBOLZEN RD35X94.5 | 97 04 469 08 | 13 | 3 | 2 102 | 91 51 080 08 | MONTAGETEILE DREHBUEHN |
| GEWINDEBOLZEN RD8X96 8.8 | 95 37 301 08 | 59 | 2 | 2 932 042 | 96 68 587 08 | GRUNDAUFBAU |
| GEWINDEBUCHSE | 90 79 078 | 9 | 1 | X1012038 | 10 12 038 3 | ZYLINDERKOPF |
| GEWINDEPLATTE | 70 42 737 08 | 70 | 1 | 2 520 000 | 91 49 872 08 | KABINE VERGLAST |
| GEWINDEPLATTE 15X40X130 | 95 31 477 08 | 7 | 1 | 3 510 100 | 91 49 246 08 | TRANSPORTHALTERUNG DKS |
| GEWINDEPLATTE 15X45X300 | 94 93 808 08 | 6 | 2 | 3 510 100 | 91 49 246 08 | TRANSPORTHALTERUNG DKS |
| GEWINDEPLATTE 20X40X315 | 97 49 111 08 | 20 | 1 | 3 510 100 | 91 49 246 08 | TRANSPORTHALTERUNG DKS |
| GEWINDEPLATTE 8X20X60 S | 95 36 953 08 | 4 | 3 | 2 510 072 | 96 44 614 08 | KLAPPE VORM.RECHTS |
| GEWINDEPLATTE 8X20X60 S | 95 36 953 08 | 30 | 3 | 2 510 100 | 96 44 750 08 | DREHBUEHNENVERKLEIDUN |
| GEWINDEPLATTE 8X20X60 S | 95 36 953 08 | 40 | 5 | 2 510 200 | 96 41 258 08 | DREHBUEHNENVERKLEIDUN |
| GEWINDEPLATTE 8X20X60 S | 95 36 953 08 | 4 | 3 | 2 510 201 | 96 42 011 08 | KLAPPE VORM. |
| GEWINDEPLATTE 8X20X60 S | 95 36 953 08 | 5 | 4 | 2 515 007 | 96 42 014 08 | PODEST VORM. |
| GEWINDEPLATTE 8X20X60 S | 95 36 953 08 | 5 | 2 | 3 750 026 | 96 89 407 08 | HALTER LINKS |
| GEWINDEPLATTE 8X20X60 S | 95 36 953 08 | 5 | 2 | 3 750 028 | 96 89 408 08 | HALTER RECHTS |
| GEWINDESICHERUNG 50ML | 81 12 080 01 | 109 | 1 | 9 074 165 | 90 74 165 | MASSENAUSGLEICH ANBAU |
| GEWINDESTANGE DIN 975 M1 | 94 89 969 14 | 20 | 4 | 1 100 205 | 96 51 633 08 | RAUPENTRAEGER KPL.RE. |
| GEWINDESTANGE DIN 975 M1 | 94 89 969 14 | 20 | 4 | 1 100 210 | 96 51 634 08 | RAUPENTRAEGER KPL.LI. |
| GEWINDESTANGE RD36X85 4 | 95 70 959 14 | 40 | 4 | 1 100 205 | 96 51 633 08 | RAUPENTRAEGER KPL.RE. |
| GEWINDESTANGE RD36X85 4 | 95 70 959 14 | 40 | 4 | 1 100 210 | 96 51 634 08 | RAUPENTRAEGER KPL.LI. |
| GEWINDESTANGE RD36X95 4 | 95 70 958 14 | 43 | 4 | 1 100 205 | 96 51 633 08 | RAUPENTRAEGER KPL.RE. |
| GEWINDESTANGE RD36X95 4 | 95 70 958 14 | 43 | 4 | 1 100 210 | 96 51 634 08 | RAUPENTRAEGER KPL.LI. |

| Bezeichnung | Artikel | Pos. | Menge | Seite | Baugruppe | Bezeichnung |
|---|---|---|---|---|---|---|
| GEWINDESTIFT DIN 913 M6X25 | 40 44 005 08 | 5 | 1 | 5 114 794 | 51 14 794 08 | LASTHALTEVENTIL |
| GEWINDESTIFT DIN 914 M8X10 | 40 46 013 08 | 15 | 1 | X1106838 | 11 06 838 7 | SPURVERSTELLZYLINDER |
| GEWINDESTIFT DIN 915 M12X7 | 51 45 684 08 | 12 | 5 | 2 792 | 91 52 291 08 | MECH.TEILE VERSANDMONT |
| GEWINDESTIFT DIN EN ISO 4 | 10 01 773 2 | 21 | 2 | 3 511 006 | 96 45 029 08 | MASTNASE VORM. |
| GEWINDESTIFT ISO 4026 M16 | 11 49 220 2 | 94 | 1 | 3 501 | 91 05 788 08 | DOPPELKLAPPSPITZE MECH. |
| GEWINDESTIFT ISO 4026 M20 | 48 55 098 14 | 26 | 4 | 1 100 215 | 99 20 783 14 | MITTELTEIL |
| GEWINDESTIFT ISO 4026 M20 | 40 44 076 08 | 63 | 4 | 3 102 000 | 91 62 543 08 | TELESKOP 1 VORM. |
| GEWINDESTIFT ISO 4026 M20 | 40 44 076 08 | 63 | 4 | 3 103 000 | 91 62 544 08 | TELESKOP 2 VORM. |
| GEWINDESTIFT ISO 4026 M20 | 40 44 076 08 | 63 | 4 | 3 104 000 | 91 62 545 08 | TELESKOP 3 VORM. |
| GEWINDESTIFT ISO 4026 M20 | 40 44 076 08 | 63 | 4 | 3 105 000 | 91 62 546 08 | TELESKOP 4 VORM. |
| GEWINDESTIFT ISO 4026 M20 | 40 44 076 08 | 61 | 4 | 3 106 000 | 91 60 313 08 | TELESKOP 5 VORM. |
| GEWINDESTIFT ISO 4026 M6X3 | 51 07 533 08 | 9 | 1 | 5 711 301 | 57 11 301 08 | DRUCKBEGRENZUNGSVENTI |
| GEWINDETRAEGER FE//ZNNI8/ | 96 30 622 08 | 8 | 1 | 2 510 100 | 96 44 750 08 | DREHBUEHNENVERKLEIDUN |
| GEWINDETRAEGER FE//ZNNI8/ | 96 30 654 08 | 9 | 1 | 2 510 100 | 96 44 750 08 | DREHBUEHNENVERKLEIDUN |
| GLASEINHEIT 203X154 | 10 28 684 0 | (1) | 1 | 2 790 040 | 91 60 499 08 | SPIEGELANBAU KRANFUEHR |
| GLEICHSTROMGETRIEBEMO | 10 35 514 0 | 2 | 1 | X1032706 | 10 32 706 5 | ELEKTROPUMPE |
| GLEITLAGER 30X20 KUNSTST | 10 21 589 3 | 4 | 1 | 2 790 024 | 96 67 077 08 | SPIEGELHALTER VORM. |
| GLEITLAGER 30X36X90 | 70 80 130 08 | 3 | 1 | 2 500 021 | 92 10 666 08 | LAGERBOCK VORM. |
| GLEITLAGER 30X36X90 | 70 80 130 08 | 3 | 1 | 2 500 022 | 92 10 661 08 | LAGERBOCK VORM. |
| GLEITLAGER 30X36X90 | 70 80 130 08 | 3 | 1 | 2 500 023 | 92 10 663 08 | LAGERBOCK VORM. |
| GLEITLAGERBUCHSE 30X34X | 98 89 290 | (2) | 2 | 9 072 906 | 90 72 906 | ZWISCHENRAD KPL. |
| GLEITPLATTE 33X50X310 PA6 | 28 30 825 08 | 47 | 26 | 3 101 | 91 60 312 08 | ANLENKSTUECK VORM. |
| GLEITPLATTE 8X60X280 PA6 | 28 30 826 08 | 56 | 1 | 3 101 | 91 60 312 08 | ANLENKSTUECK VORM. |
| GLEITPLATTE 8X60X280 PA6 | 28 30 826 08 | 56 | 1 | 3 102 000 | 91 62 543 08 | TELESKOP 1 VORM. |
| GLEITPLATTE 8X60X280 PA6 | 28 30 826 08 | 56 | 1 | 3 103 000 | 91 62 544 08 | TELESKOP 2 VORM. |
| GLEITRINGDICHTUNG | 74 90 573 14 | 20 | 1 | 1 100 211 | 74 90 653 14 | TRAGROLLE KPL |
| GLEITRINGDICHTUNG | 76 10 244 03 | 58 | 1 | 9 444 410 | 94 44 410 03 | FAHRANTRIEB |
| GLEITRINGDICHTUNG KPL. | 74 90 685 14 | 4 | 2 | 1 100 214 | 74 90 137 14 | LEITRAD KPL |
| GLEITSCHUH 65X340X450 GS- | 30 81 151 14 | 14 | 2 | 1 100 205 | 96 51 633 08 | RAUPENTRAEGER KPL.RE. |
| GLEITSCHUH 65X340X450 GS- | 30 81 151 14 | 14 | 2 | 1 100 210 | 96 51 634 08 | RAUPENTRAEGER KPL.LI. |
| GLEITSTUECK | 74 90 637 14 | 2 | 2 | 1 100 214 | 74 90 137 14 | LEITRAD KPL |
| GLEITSTUECK 100X115X250 P | 28 30 925 08 | 14 | 1 | 3 330 | 91 57 885 08 | AUSSCHUBMECHANIK |
| GLEITSTUECK 128X150X167 P | 28 30 824 08 | 39 | 2 | 3 101 | 91 60 312 08 | ANLENKSTUECK VORM. |
| GLEITSTUECK 30X115X165 P | 28 30 926 08 | 25 | 1 | 3 330 | 91 57 885 08 | AUSSCHUBMECHANIK |
| GLEITSTUECK 30X90X190 PA6 | 28 30 907 08 | 4 | 2 | 3 330 | 91 57 885 08 | AUSSCHUBMECHANIK |
| GLEITSTUECK 40X170X575 P | 28 30 839 08 | 15 | 1 | 3 330 | 91 57 885 08 | AUSSCHUBMECHANIK |
| GLEITSTUECK 50.0X372X207 P | 28 30 924 08 | 13 | 1 | 3 330 | 91 57 885 08 | AUSSCHUBMECHANIK |
| GLEITSTUECK LINKS | 11 65 727 2 | 2 | 2 | X1100696 | 11 00 696 4 | ROLLO |
| GLEITSTUECK RECHTS | 11 65 727 1 | 1 | 2 | X1100696 | 11 00 696 4 | ROLLO |
| GLUEHLAMPE 1,2W 30V | 60 70 087 08 | 7 | 2 | 2 530 002 | 96 19 448 08 | ARMATURENBRETT VORM.V |
| GLUEHLAMPE 1,2W 30V | 60 70 087 08 | 18 | 2 | 2 531 001 | 96 36 738 08 | ELEKTRIK ARMLEHNE LI. |
| GLUEHLAMPE 1,2W 30V | 60 70 087 08 | 15 | 2 | 2 531 002 | 96 36 739 08 | ELEKTRIK ARMLEHNE RE. |
| GLUEHLAMPE 1,2W 48V | 60 70 117 08 | 14 | 1 | 2 530 002 | 96 19 448 08 | ARMATURENBRETT VORM.V |
| GLUEHLAMPE 1,2W 48V | 60 70 117 08 | 16 | 5 | 2 531 001 | 96 36 738 08 | ELEKTRIK ARMLEHNE LI. |
| GLUEHLAMPE 1,2W 48V | 60 70 117 08 | 16 | 4 | 2 531 002 | 96 36 739 08 | ELEKTRIK ARMLEHNE RE. |
| GLUEHLAMPE 1,3W 24V | 60 70 097 08 | (1) | 2 | 2 533 001 | 96 41 568 08 | ARMATURENBRETT DACH VO |
| GLUEHLAMPE DIN 49848 2,4W | 60 70 111 08 | (1) | 2 | 1 750 002 | 92 86 201 08 | ZUBEHOER |
| GLUEHLAMPE DIN 72601 10W | 60 70 028 08 | 11 | 1 | 2 533 003 | 96 28 388 08 | ELEKTRIK ANBAUTEILE KABIN |
| GLUEHLAMPE DIN 72601 70W | 60 70 211 08 | 13 | 1 | 2 533 003 | 96 28 388 08 | ELEKTRIK ANBAUTEILE KABIN |
| GLUEHLAMPE DIN 72601 70W | 60 70 211 08 | 5 | 1 | 2 920 362 | 96 31 865 08 | ELEKTRIK ARBEITSSCHEINW |
| GLUEHLAMPE DIN 72601 70W | 60 70 211 08 | 1 | 1 | 6 071 509 | 60 71 509 08 | ARBEITSSCHEINWERFER |
| GRIFF DIN 3122 A 3/4" | 79 00 262 08 | 63 | 1 | 1 750 001 | 92 85 698 08 | GRUNDWERKZEUG |
| GRIFF KUNSTSTOFF | 70 42 545 08 | 8 | 2 | 2 501 022 | 96 34 184 08 | DECKEL KPL. |
| GRIFF KUNSTSTOFF | 70 42 545 08 | 29 | 2 | 2 510 200 | 96 41 258 08 | DREHBUEHNENVERKLEIDUN |
| GRIFF SCHWK. FE//ZNNI8//CN/ | 96 35 574 08 | 2 | 1 | 1 630 003 | 96 47 650 08 | BOLZEN KPL. |
| GRIFFKAPPE | 57 18 247 08 | 1 | 1 | 6 060 950 | 60 60 950 08 | MEISTERSCHALTER |
| GRIFFMULDE 130.5X70X36 K | 70 42 287 08 | 21 | 1 | 2 522 | 91 10 037 08 | TUER KPL. |
| GRIFFMULDE X0 KUNSTSTOF | 95 55 000 08 | 6 | 1 | 2 510 072 | 96 44 614 08 | KLAPPE VORM.RECHTS |
| GRIFFMULDE X0 KUNSTSTOF | 95 55 000 08 | 6 | 1 | 2 510 201 | 96 42 011 08 | KLAPPE VORM. |
| GRIFFROHR SCHWK. | 96 45 328 08 | 5 | 1 | 2 510 200 | 96 41 258 08 | DREHBUEHNENVERKLEIDUN |

| Bezeichnung | Artikel | Pos. | Menge | Seite | Baugruppe | Bezeichnung |
|---|---|---|---|---|---|---|
| GRIFFSCHALE 136X115X49,5 | 70 42 801 08 | 50 | 1 | 2 501 000 | 91 48 769 08 | KRANFUEHRERKABINE VORM |
| GRUNDAUFBAU | 96 68 587 08 | 4 | 1 | 2 920 | 91 68 959 08 | EINBAUTEILE SCHALTSCHRAN |
| GRUNDMOTOR D934 L | 10 12 193 2 | 1 | 1 | X1015207 | 10 15 207 7 | DIESELMOTOR |
| GRUNDWERKZEUG | 92 85 698 08 | 1 | 1 | 1 750 | 91 48 606 08 | WERKZEUG M.ZUBEHOER |
| GSM-MODUL LICCON 1 | 96 37 908 08 | 1 | 1 | 2 780 850 | 91 60 938 08 | FERNDIAGNOSE MODUL OW |
| GSM-MODUL MC55I QUAD-B | 10 65 269 9 | (10) | 1 | 2 780 852 | 96 24 845 08 | GSM-MODUL VORM.LICCON 1 |
| GSM-MODUL PROGRAMMIER | 96 28 688 08 | 4 | 1 | 2 780 852 | 96 24 845 08 | GSM-MODUL VORM.LICCON 1 |
| GSM-MODUL VORM.LICCON 1 | 96 24 845 08 | 2 | 1 | 2 780 854 | 96 37 908 08 | GSM-MODUL |
| GUMMILAGER 13,51/47,75X19, | 55 06 406 08 | 11 | 3 | 2 102 | 91 51 080 08 | MONTAGETEILE DREHBUEHN |
| GUMMIMUFFE 12 X 18 X 45 GU | 90 79 603 | 140 | 1 | X1011583 | 10 11 583 7 | DS DIESELMOTOR |
| GUMMIMUFFE 12 X 18 X 45 GU | 90 79 603 | 18 | 1 | X1011914 | 10 11 914 1 | KURBELGEHAEUSEENTLUEF |
| GUMMIMUFFE 12 X 18 X 45 GU | 90 79 603 | 11 | 1 | X1012024 | 10 12 024 2 | OELLEITUNG VORM. |
| GUMMIMUFFE 25 X35/33X56 L. | 92 71 340 | 141 | 2 | X1011583 | 10 11 583 7 | DS DIESELMOTOR |
| GUMMIMUFFE 25 X35/33X56 L. | 92 71 340 | 6 | 2 | X1011914 | 10 11 914 1 | KURBELGEHAEUSEENTLUEF |
| GUMMIMUFFE 90GRAD | 10 11 631 0 | 4302 | 1 | X1011583 | 10 11 583 7 | DS DIESELMOTOR |
| GUMMIMUFFE 90GRAD | 10 11 631 0 | 7 | 1 | X1011766 | 10 11 766 5 | ROHRLEITUNG |
| GUMMIMUFFE 90GRAD | 10 11 631 0 | 10 | 1 | X1011914 | 10 11 914 1 | KURBELGEHAEUSEENTLUEF |
| GUMMIMUFFE 90GRAD | 10 11 631 0 | 24 | 1 | X1011989 | 10 11 989 7 | RS OELRUECKLAUFLEITUNG |
| GUMMIPANZERSCHLAUCH 30 | 79 00 429 08 | 71 | 1 | 1 750 001 | 92 85 698 08 | GRUNDWERKZEUG |
| GUMMIPLATTE | 97 37 310 08 | 25 | 1 | 2 500 | 91 48 594 08 | KRANFUEHRERKABINE KPL. |
| GUMMIPLATTE 184X10X2 GU | 97 72 400 08 | (2) | 2 | 1 100 215 | 99 20 783 14 | MITTELTEIL |
| GUMMIPUFFER 8,3/26X7,2 30 | 10 11 627 4 | 3 | 8 | X1011599 | 10 11 599 3 | STEUERGERAET ANBAU |
| GUMMISCHLAUCH 100X6X75 E | 94 28 754 08 | 252 | 1 | 2 681 | 91 28 102 08 | LUFTFILTERANLAGE |
| HAFTETIKETT | 60 21 710 08 | 21 | 26 | 2 932 119 | 96 46 061 08 | SCHWENKRAHMEN RELAISST |
| HAFTREINIGER 250ML | 81 12 051 08 | 85 | 1 | 2 520 000 | 91 49 872 08 | KABINE VERGLAST |
| HAKENFLASCHE 63DM SPF | 91 04 457 08 | 312 | 1 | | LTR 1100 -0 | LIEBHERR LTR 1100 |
| HAKENSTANGE | 92 95 299 08 | 1 | 1 | 3 750 027 | 96 89 527 08 | HAKENSTANGE ANBAU |
| HAKENSTANGE ANBAU | 96 89 527 08 | 2 | 1 | 3 750 | 91 75 084 08 | WERKZEUG KLAPPSPITZE |
| HALBRUNDKOPFSCHRAUBE | 40 97 044 08 | 14 | 4 | 2 450 | 91 53 926 08 | HAUPTHUBWERK |
| HALBRUNDKOPFSCHRAUBE | 10 41 285 1 | 301 | 10 | 2 510 100 | 96 44 750 08 | DREHBUEHNENVERKLEIDUN |
| HALBRUNDKOPFSCHRAUBE | 10 41 285 1 | 301 | 8 | 2 681 | 91 28 102 08 | LUFTFILTERANLAGE |
| HALBRUNDKOPFSCHRAUBE | 10 41 285 2 | 34 | 4 | 2 510 200 | 96 41 258 08 | DREHBUEHNENVERKLEIDUN |
| HALBRUNDKOPFSCHRAUBE | 10 41 285 4 | 7 | 4 | 2 102 | 91 51 080 08 | MONTAGETEILE DREHBUEHN |
| HALBRUNDKOPFSCHRAUBE | 10 41 285 4 | 300 | 6 | 2 210 | 91 81 614 08 | ANTRIEBSAGGREGAT VORM. |
| HALBRUNDKOPFSCHRAUBE | 10 41 285 4 | 22 | 2 | 2 430 | 91 54 389 08 | DREHBUEHNENARRETIERUN |
| HALBRUNDKOPFSCHRAUBE | 10 41 285 4 | 40 | 10 | 2 440 022 | 96 42 336 08 | WINDE 2 VORM. |
| HALBRUNDKOPFSCHRAUBE | 10 41 285 4 | 300 | 3 | 2 510 100 | 96 44 750 08 | DREHBUEHNENVERKLEIDUN |
| HALBRUNDKOPFSCHRAUBE | 10 41 285 4 | 43 | 1 | 2 510 200 | 96 41 258 08 | DREHBUEHNENVERKLEIDUN |
| HALBRUNDKOPFSCHRAUBE | 10 41 285 4 | 82 | 4 | 2 970 | 91 55 482 08 | HYDRAULIK |
| HALBRUNDKOPFSCHRAUBE | 10 41 285 4 | 43 | 6 | 2 971 | 91 50 610 08 | HYDRAULIK HILFSHUBWERK |
| HALBRUNDKOPFSCHRAUBE | 10 41 285 4 | 303 | 10 | 2 984 | 91 52 906 08 | OELKUEHLER EINBAU |
| HALBRUNDKOPFSCHRAUBE | 10 41 285 4 | 16 | 4 | 3 100 | 91 59 279 08 | TELESKOPAUSLEGER KPL. |
| HALBRUNDKOPFSCHRAUBE | 10 41 285 4 | 69 | 48 | 3 101 | 91 60 312 08 | ANLENKSTUECK VORM. |
| HALBRUNDKOPFSCHRAUBE | 10 41 285 4 | 43 | 31 | 3 106 000 | 91 60 313 08 | TELESKOP 5 VORM. |
| HALBRUNDKOPFSCHRAUBE | 10 41 285 4 | 98 | 23 | 3 501 | 91 05 788 08 | DOPPELKLAPPSPITZE MECH. |
| HALBRUNDKOPFSCHRAUBE | 10 41 285 4 | 7 | 5 | 3 511 | 91 54 159 08 | MASTNASE |
| HALBRUNDKOPFSCHRAUBE | 10 41 285 4 | 27 | 3 | 3 511 006 | 96 45 029 08 | MASTNASE VORM. |
| HALBRUNDKOPFSCHRAUBE A | 10 41 285 7 | 26 | 5 | 2 450 | 91 53 926 08 | HAUPTHUBWERK |
| HALBRUNDKOPFSCHRAUBE A | 10 41 285 7 | 305 | 6 | 2 510 100 | 96 44 750 08 | DREHBUEHNENVERKLEIDUN |
| HALBRUNDKOPFSCHRAUBE A | 10 41 285 7 | 14 | 6 | 2 510 201 | 96 42 011 08 | KLAPPE VORM. |
| HALBRUNDKOPFSCHRAUBE A | 10 41 286 1 | 302 | 2 | 2 510 100 | 96 44 750 08 | DREHBUEHNENVERKLEIDUN |
| HALBRUNDKOPFSCHRAUBE | 10 87 544 8 | 31 | 4 | 2 440 022 | 96 42 336 08 | WINDE 2 VORM. |
| HALBRUNDKOPFSCHRAUBE | 10 87 544 8 | 11 | 8 | 2 450 | 91 53 926 08 | HAUPTHUBWERK |
| HALBRUNDKOPFSCHRAUBE | 10 87 544 8 | 5 | 4 | 2 450 025 | 96 35 649 08 | HAUPTHUBWERK VORM. |
| HALBRUNDKOPFSCHRAUBE | 11 83 504 3 | 300 | 2 | 2 200 048 | 96 84 070 08 | AUSGLEICHSBEHAELTER VO |
| HALBRUNDKOPFSCHRAUBE I | 40 97 053 08 | 162 | 3 | 2 520 000 | 91 49 872 08 | KABINE VERGLAST |
| HALBRUNDKOPFSCHRAUBE I | 40 97 053 08 | 7 | 2 | 2 520 021 | 92 17 203 08 | ARMATURENKASTEN LIEFERU |
| HALBRUNDKOPFSCHRAUBE I | 10 87 547 4 | 44 | 10 | 2 502 | 91 01 533 08 | STEUERSTAND |
| HALBRUNDKOPFSCHRAUBE I | 40 97 063 08 | 45 | 12 | 2 502 | 91 01 533 08 | STEUERSTAND |
| HALBRUNDKOPFSCHRAUBE I | 10 87 546 8 | 303 | 1 | 2 510 100 | 96 44 750 08 | DREHBUEHNENVERKLEIDUN |

| Bezeichnung | Artikel | Pos. | Menge | Seite | Baugruppe | Bezeichnung |
|---|---|---|---|---|---|---|
| HALBRUNDKOPFSCHRAUBE I | 10 87 546 8 | 144 | 10 | 2 520 000 | 91 49 872 08 | KABINE VERGLAST |
| HALBRUNDKOPFSCHRAUBE I | 10 87 546 8 | 27 | 2 | 2 522 | 91 10 037 08 | TUER KPL. |
| HALBRUNDKOPFSCHRAUBE I | 40 97 040 08 | 41 | 8 | 2 502 | 91 01 533 08 | STEUERSTAND |
| HALBRUNDKOPFSCHRAUBE I | 40 97 041 08 | 304 | 8 | 2 510 100 | 96 44 750 08 | DREHBUEHNENVERKLEIDUN |
| HALBRUNDKOPFSCHRAUBE I | 40 97 041 08 | 42 | 5 | 2 510 200 | 96 41 258 08 | DREHBUEHNENVERKLEIDUN |
| HALBRUNDKOPFSCHRAUBE I | 40 97 041 08 | 24 | 2 | 2 950 | 91 49 515 08 | DRUCKLUFTANLAGE OW |
| HALBRUNDKOPFSCHRAUBE I | 40 97 041 08 | 302 | 22 | 2 984 | 91 52 906 08 | OELKUEHLER EINBAU |
| HALBRUNDKOPFSCHRAUBE I | 40 97 041 08 | 8 | 8 | 3 750 008 | 91 75 085 08 | LEITER ANBAU |
| HALTEGRIFF 300X25X59,2X25 | 10 33 152 6 | 1 | 1 | 2 520 041 | 96 84 504 08 | HANDGRIFF ANBAU |
| HALTEGURT 25X795 POLYES | 59 10 638 08 | 18 | 1 | 2 520 001 | 92 48 796 08 | FRONTSCHEIBE KPL. |
| HALTER | 10 12 028 4 | 13 | 1 | X1011998 | 10 11 998 0 | KABELBAUM ANBAU |
| HALTER | 38 00 199 08 | 8 | 1 | 2 520 000 | 91 49 872 08 | KABINE VERGLAST |
| HALTER | 38 00 201 08 | 10 | 1 | 2 520 000 | 91 49 872 08 | KABINE VERGLAST |
| HALTER | 60 72 246 08 | 25 | 1 | 2 520 000 | 91 49 872 08 | KABINE VERGLAST |
| HALTER | 91 90 328 14 | 2 | 1 | 1 630 002 | 99 06 183 14 | TRANSPORTABSTUETZUNG |
| HALTER | 96 36 933 08 | 6 | 1 | 2 501 000 | 91 48 769 08 | KRANFUEHRERKABINE VORM |
| HALTER | 96 47 649 08 | 1 | 1 | 1 630 002 | 99 06 183 14 | TRANSPORTABSTUETZUNG |
| HALTER 3X272X326 DC01 FE// | 95 50 448 08 | 21 | 1 | 3 330 | 91 57 885 08 | AUSSCHUBMECHANIK |
| HALTER 3X272X501 DC01 FE// | 95 50 449 08 | 22 | 1 | 3 330 | 91 57 885 08 | AUSSCHUBMECHANIK |
| HALTER 40X80X40 G-ALMG3 | 97 94 895 08 | 3 | 1 | 2 790 040 | 91 60 499 08 | SPIEGELANBAU KRANFUEHR |
| HALTER 4X186X408 S315MC | 95 38 436 08 | 9 | 1 | 3 330 | 91 57 885 08 | AUSSCHUBMECHANIK |
| HALTER ANBAU | 10 11 912 7 | 2 | 1 | X1011914 | 10 11 914 1 | KURBELGEHAEUSEENTLUEF |
| HALTER D934 | 10 11 988 5 | 3 | 1 | X1011989 | 10 11 989 1 | KRAFTSTOFFVORFILTERANBA |
| HALTER D934 S355J0 | 10 11 572 9 | 2 | 1 | X1011989 | 10 11 989 1 | KRAFTSTOFFVORFILTERANBA |
| HALTER FE//ZNNI8//CN//T0 | 96 31 781 08 | 9 | 2 | 2 510 200 | 96 41 258 08 | DREHBUEHNENVERKLEIDUN |
| HALTER KPL. | 10 11 599 4 | 2 | 1 | X1011599 | 10 11 599 3 | STEUERGERAET ANBAU |
| HALTER KPL. | 10 11 599 6 | 1 | 1 | X1011599 | 10 11 599 3 | STEUERGERAET ANBAU |
| HALTER KPL. EDELSTAHL | 96 45 806 08 | 1 | 1 | 2 430 | 91 54 389 08 | DREHBUEHNENARRETIERUN |
| HALTER KPL. S355J0 | 10 11 911 9 | 1 | 1 | X1011912 | 10 11 912 7 | HALTER ANBAU |
| HALTER LINKS | 96 89 407 08 | 2 | 1 | 3 750 008 | 91 75 085 08 | LEITER ANBAU |
| HALTER RECHTS | 96 89 408 08 | 4 | 1 | 3 750 008 | 91 75 085 08 | LEITER ANBAU |
| HALTER S235JR | 10 11 836 3 | 62 | 1 | X1011998 | 10 11 998 0 | KABELBAUM ANBAU |
| HALTER VORM. FE//ZNNI8//CN/ | 96 22 070 08 | 24 | 1 | 2 102 | 91 51 080 08 | MONTAGETEILE DREHBUEHN |
| HALTER X12CRNIS188 | 96 53 717 08 | 1 | 1 | 3 920 012 | 96 57 224 08 | ENDSCHALTER ANBAU |
| HALTER X5CrNi18-10 | 90 80 038 | 9 | 1 | X1011998 | 10 11 998 0 | KABELBAUM ANBAU |
| HALTERING 170X90X5 S235J | 94 44 408 03 | 16 | 1 | 9 444 410 | 94 44 410 03 | FAHRANTRIEB |
| HALTERUNG 2.HUB OBEN | 96 64 599 08 | 1 | 1 | 3 780 400 | 91 59 294 08 | ELEKTRIK 2.HUBENDSCHALTE |
| HALTERUNG SCHWK. | 92 95 822 08 | 1 | 1 | 3 500 104 | 92 95 821 08 | HALTERUNG VORM. |
| HALTERUNG SCHWK. T ZN O | 96 35 560 08 | 52 | 1 | 3 106 000 | 91 60 313 08 | TELESKOP 5 VORM. |
| HALTERUNG VORM. | 92 95 821 08 | 3 | 1 | 3 510 100 | 91 49 246 08 | TRANSPORTHALTERUNG DKS |
| HALTESCHEIBE 100X55X6 | 92 76 013 01 | 6 | 1 | 9 686 071 | 96 86 071 01 | PLANETENGETRIEBE |
| HALTESCHEIBE 125X55X6 | 92 76 028 01 | 31 | 1 | 9 686 071 | 96 86 071 01 | PLANETENGETRIEBE |
| HALTESCHEIBE 140X60X6 | 92 77 007 01 | 26 | 1 | 9 444 410 | 94 44 410 03 | FAHRANTRIEB |
| HALTESCHEIBE 4X60X4 | 94 41 341 03 | 36 | 2 | 9 330 748 | 93 30 748 01 | DREHWERKANTRIEB |
| HALTESCHEIBE 70 | 92 75 319 01 | 16 | 1 | 9 330 748 | 93 30 748 01 | DREHWERKANTRIEB |
| HALTETEIL SCHWK. | 96 20 929 08 | 1 | 1 | 3 510 006 | 96 20 924 08 | KLAPPKONSOLE |
| HAMMERKOPFSCHRAUBE M | 40 97 070 08 | 135 | 4 | 2 520 000 | 91 49 872 08 | KABINE VERGLAST |
| HANDGRIFF | 59 10 668 08 | 12 | 1 | 2 520 001 | 92 48 796 08 | FRONTSCHEIBE KPL. |
| HANDGRIFF ANBAU | 96 84 504 08 | 166 | 1 | 2 520 000 | 91 49 872 08 | KABINE VERGLAST |
| HANDGRIFF KPL. | 70 42 322 08 | 27 | 1 | 2 520 001 | 92 48 796 08 | FRONTSCHEIBE KPL. |
| HANDHAMMER DIN 1041 800G | 79 00 300 08 | 60 | 1 | 1 750 001 | 92 85 698 08 | GRUNDWERKZEUG |
| HANDHEBELPRESSE | 88 56 021 14 | 6 | 1 | 1 750 | 91 48 606 08 | WERKZEUG M.ZUBEHOER |
| HANDHEBELPRESSE VERZ. | 79 00 420 08 | 70 | 1 | 1 750 001 | 92 85 698 08 | GRUNDWERKZEUG |
| HANDPUMPE | 79 00 391 08 | 86 | 1 | 3 501 | 91 05 788 08 | DOPPELKLAPPSPITZE MECH. |
| HAUBE | 57 15 562 08 | (3) | 1 | 2 920 585 | 91 01 520 08 | ELEKTRIK BLITZLEUCHTE |
| HAUBE 2X357X267 DC01 FE// | 95 05 190 08 | 34 | 1 | 3 100 | 91 59 279 08 | TELESKOPAUSLEGER KPL. |
| HAUPTHUBWERK | 91 53 926 08 | 125 | 1 | | LTR 1100 -0 | LIEBHERR LTR 1100 |
| HAUPTHUBWERK SCHWK. | 96 25 733 08 | 1 | 1 | 2 450 025 | 96 35 649 08 | HAUPTHUBWERK VORM. |
| HAUPTHUBWERK VORM. | 96 35 649 08 | 1 | 1 | 2 450 | 91 53 926 08 | HAUPTHUBWERK |
| HAUPTLAGER 104/111/32 | 90 73 734 | 1 | 5 | X1011693 | 10 11 693 9 | RS KURBELWELLENLAGERU |

| Bezeichnung | Artikel | Pos. | Menge | Seite | Baugruppe | Bezeichnung |
|---|---|---|---|---|---|---|
| HAUPTLAGER 104/111/32 MIB | 90 75 606 | 2 | 5 | X1011693 | 10 11 693 9 | RS KURBELWELLENLAGERU |
| HEBEL | 11 00 722 1 | 4 | 1 | 6 923 097 | 69 23 097 08 | PEDALGEBER |
| HEBEL FE//ZN20//C | 92 50 739 08 | 12 | 1 | 3 501 | 91 05 788 08 | DOPPELKLAPPSPITZE MECH. |
| HEBELVERSCHLUSS | 11 45 042 0 | 5 | 2 | 2 510 072 | 96 44 614 08 | KLAPPE VORM.RECHTS |
| HEBELVERSCHLUSS | 11 45 042 0 | 5 | 2 | 2 510 201 | 96 42 011 08 | KLAPPE VORM. |
| HECKBLENDE | 96 41 045 08 | 2 | 1 | 2 984 | 91 52 906 08 | OELKUEHLER EINBAU |
| HECKSCHEIBE 4MM SPF | 72 57 408 08 | 6 | 1 | 2 520 000 | 91 49 872 08 | KABINE VERGLAST |
| HEIZFLANSCH ANBAU | 90 78 314 | 260 | 1 | X1015207 | 10 15 207 7 | DIESELMOTOR |
| HEIZFLANSCH VORM. 24V 1,9K | 10 29 998 8 | 1 | 1 | 9 078 314 | 90 78 314 | HEIZFLANSCH ANBAU |
| HEIZUNG | 50 26 514 08 | 2 | 1 | 5 026 573 | 50 26 573 08 | LUFTTROCKNER |
| HEIZUNG OW LICC1 | 91 45 984 08 | 19 | 1 | 2 501 000 | 91 48 769 08 | KRANFUEHRERKABINE VORM |
| HEIZUNGSANSCHLUSS SCHLA | 90 79 890 | 386 | 1 | X1015207 | 10 15 207 7 | DIESELMOTOR |
| HEIZUNGSSCHLAUCH 70X240 | 55 31 795 08 | 20 | 1 | 2 540 | 91 45 984 08 | HEIZUNG OW |
| HILFSEINSCHERSEIL KPL. 16X | 91 50 372 08 | 440 | 1 | | LTR 1100 -0 | LIEBHERR LTR 1100 |
| HILFSHUBSEIL M.ZUBEHOER | 91 62 290 08 | 332 | 1 | | LTR 1100 -0 | LIEBHERR LTR 1100 |
| HILFSHUBWERK WINDE 2 | 91 52 288 08 | 330 | 1 | | LTR 1100 -0 | LIEBHERR LTR 1100 |
| HILFSSCHALTERBLOCK 1OE | 60 66 533 08 | 12 | 4 | 2 920 574 | 96 36 055 08 | BEDIENPULT BALLAST |
| HILFSSCHALTERBLOCK 1OE | 60 66 533 08 | 11 | 2 | 2 920 904 | 96 41 093 08 | STEUERPULT ABSTUETZUNG |
| HILFSSCHALTERBLOCK 1OE+2 | 10 02 893 2 | 10 | 2 | 2 920 574 | 96 36 055 08 | BEDIENPULT BALLAST |
| HILFSSCHALTERBLOCK 1S | 60 66 532 08 | 10 | 14 | 2 920 904 | 96 41 093 08 | STEUERPULT ABSTUETZUNG |
| HIMMEL KPL. | 92 50 859 08 | 18 | 1 | 2 520 000 | 91 49 872 08 | KABINE VERGLAST |
| HITZESCHUTZ MIT BEFESTIGU | 10 11 919 7 | 415 | 1 | X1015207 | 10 15 207 7 | DIESELMOTOR |
| HITZESCHUTZBLECH VORM. | 10 11 792 6 | 1 | 1 | X1011919 | 10 11 919 7 | HITZESCHUTZ MIT BEFESTIG |
| HOEHENSICHERUNGSGERA | 11 00 730 9 | 2 | 1 | 1 793 010 | 91 69 598 08 | PERSOENLICHE SCHUTZAUS |
| HOHLSCHLUESSEL | 70 42 711 08 | 7 | 2 | 1 750 002 | 92 86 201 08 | ZUBEHOER |
| HOHLSCHLUESSEL | 70 42 711 08 | 39 | 1 | 2 510 200 | 96 41 258 08 | DREHBUEHNENVERKLEIDUN |
| HOHLSCHRAUBE 10X1X27 11S | 90 80 466 | 3 | 3 | 9 079 092 | 90 79 092 | ROHRLEITUNG ANBAU |
| HOHLSCHRAUBE 10X3 St Rm> | 90 78 685 | 42 | 1 | X1011573 | 10 11 573 7 | KRAFTSTOFFLEITUNGEN |
| HOHLSCHRAUBE 11SMnPb30+ | 90 73 678 | 5 | 1 | 9 073 795 | 90 73 795 | KOLBENKUEHLUNG |
| HOHLSCHRAUBE DIN 74305 22 | 50 29 401 08 | 7 | 1 | 2 270 001 | 96 37 923 08 | KRAFTSTOFFBEHAELTER VO |
| HOHLSCHRAUBE DIN 74305 22 | 50 29 401 08 | 30 | 3 | 2 950 | 91 49 515 08 | DRUCKLUFTANLAGE OW |
| HOHLSCHRAUBE DIN 7643 10X | 40 79 240 | 7 | 1 | X1011569 | 10 11 569 6 | LECKOELRUECKLAUF |
| HOHLSCHRAUBE DIN 7643 10X | 40 79 240 | 26 | 1 | X1011573 | 10 11 573 7 | KRAFTSTOFFLEITUNGEN |
| HOHLSCHRAUBE DIN 7643 12X | 49 80 741 | 30 | 3 | X1011573 | 10 11 573 7 | KRAFTSTOFFLEITUNGEN |
| HOHLSCHRAUBE DIN 7643 12X | 49 80 741 | 4 | 4 | X1011793 | 10 11 793 0 | ANBAUTEILE LUFTPRESSER |
| HOHLSCHRAUBE DIN 7643 6-3- | 55 31 068 08 | 4 | 3 | X1011569 | 10 11 569 6 | LECKOELRUECKLAUF |
| HOHLSCHRAUBE DIN 7643 6-3- | 55 31 068 08 | 9 | 1 | X1011793 | 10 11 793 0 | ANBAUTEILE LUFTPRESSER |
| HOHLSCHRAUBE M.DROSSEL | 73 81 925 | 28 | 2 | X1011573 | 10 11 573 7 | KRAFTSTOFFLEITUNGEN |
| HORN 24V | 61 40 031 08 | 16 | 1 | 2 533 003 | 96 28 388 08 | ELEKTRIK ANBAUTEILE KABIN |
| HUBENDSCHALTER GEWICHT | 96 57 037 08 | 2 | 1 | 2 442 | 91 62 290 08 | HILFSHUBSEIL M.ZUBEHOER |
| HUBENDSCHALTER GEWICHT | 96 57 037 08 | 50 | 1 | 3 106 000 | 91 60 313 08 | TELESKOP 5 VORM. |
| HUBSEIL 21X205M -40°C SPF | 10 81 612 5 | 1 | 1 | 2 442 | 91 62 290 08 | HILFSHUBSEIL M.ZUBEHOER |
| HUBSEIL 21X205M -40°C SPF | 10 81 612 5 | 1 | 1 | 2 451 | 91 62 289 08 | SEIL F.WINDE 1 |
| HUBSEILFUEHRUNG ANLENKS | 96 64 471 08 | 3 | 1 | 3 101 | 91 60 312 08 | ANLENKSTUECK VORM. |
| HUBZYLINDER 73,15/66,55-61, | 79 00 388 08 | 84 | 1 | 3 501 | 91 05 788 08 | DOPPELKLAPPSPITZE MECH. |
| HUELSE | 11 49 379 3 | 1 | 1 | 2 751 | 91 50 372 08 | HILFSEINSCHERSEIL KPL. |
| HUELSE | 57 11 303 08 | 2 | 1 | 5 711 301 | 57 11 301 08 | DRUCKBEGRENZUNGSVENTI |
| HUELSE 20X20 | 93 58 590 | 70 | 1 | X1011998 | 10 11 998 0 | KABELBAUM ANBAU |
| HUELSE 25X20 11SMN37 FE// | 95 38 734 08 | 23 | 5 | 2 450 | 91 53 926 08 | HAUPTHUBWERK |
| HUELSE 25X20 11SMN37 FE// | 95 38 734 08 | 31 | 1 | 2 510 100 | 96 44 750 08 | DREHBUEHNENVERKLEIDUN |
| HUELSE 25X20 S355J2G3C+C | 95 56 036 08 | 44 | 1 | 3 330 | 91 57 885 08 | AUSSCHUBMECHANIK |
| HUELSE 25X21 X12CRNIS188 | 95 56 000 08 | 43 | 5 | 3 330 | 91 57 885 08 | AUSSCHUBMECHANIK |
| HUELSE 32X30 X12CRNIS188 | 95 59 180 08 | 41 | 2 | 3 330 | 91 57 885 08 | AUSSCHUBMECHANIK |
| HUELSE 32X41 X12CRNIS188 | 95 59 179 08 | 40 | 4 | 3 330 | 91 57 885 08 | AUSSCHUBMECHANIK |
| HUELSE X46Cr13 | 10 15 216 8 | 2 | 1 | X1012038 | 10 12 038 3 | ZYLINDERKOPF |
| HUTMUTTER DIN 1587 M6 6 A2 | 41 21 001 08 | 6 | 1 | 5 910 672 | 59 10 672 08 | WISCHERMOTOR |
| HUTMUTTER DIN 1587 M6 A2-7 | 10 21 936 1 | 9 | 3 | 2 520 001 | 92 48 796 08 | FRONTSCHEIBE KPL. |
| HUTMUTTER DIN 986 M4 A2-7 | 40 02 886 | 25 | 4 | X1032706 | 10 32 706 5 | ELEKTROPUMPE |
| HUTSCHIENE 35X27X7,3X1 | 60 21 067 08 | 10 | 0.205 | 1 920 314 | 96 46 921 08 | KLEMMKASTEN VORM. |
| HUTSCHIENE 35X27X7,3X1 | 60 21 067 08 | 38 | 0.2 | 2 932 042 | 96 68 587 08 | GRUNDAUFBAU |

| Bezeichnung | Artikel | Pos. | Menge | Seite | Baugruppe | Bezeichnung |
|---|---|---|---|---|---|---|
| HUTSCHIENE 35X27X7,3X1 | 60 21 067 08 | 1 | 0.15 | 2 932 167 | 96 32 480 08 | KLEMMENLEISTE |
| HUTSCHIENE 35X27X7,3X1 | 60 21 067 08 | 298 | 0.21 | 3 930 492 | 96 20 966 08 | KLEMMKASTEN KPL. |
| HUTSCHIENE 35X27X7,3X1 | 60 21 067 08 | 202 | 0.25 | 3 930 718 | 96 56 248 08 | KLEMMKASTEN KPL. |
| HYDR.INSTALLATIONSTEILE | 96 72 945 08 | 30 | 1 | 1 100 200 | 96 72 944 08 | UNTERWAGEN KPL. |
| HYDRAULIK | 91 55 482 08 | 185 | 1 | | LTR 1100 -0 | LIEBHERR LTR 1100 |
| HYDRAULIK HILFSHUBWERK | 91 50 610 08 | 333 | 1 | | LTR 1100 -0 | LIEBHERR LTR 1100 |
| HYDRAULIK TELE | 91 05 737 08 | 217 | 1 | | LTR 1100 -0 | LIEBHERR LTR 1100 |
| HYDRAULIK UNTERWAGEN | 96 71 367 08 | 5 | 1 | 1 100 200 | 96 72 944 08 | UNTERWAGEN KPL. |
| HYDRAULIK VORB. JACKUP | 91 53 791 08 | 40 | 1 | | LTR 1100 -0 | LIEBHERR LTR 1100 |
| HYDRAULIKDOPPELPUMPE L | 90 72 112 | 10 | 1 | X1015211 | 10 15 211 6 | ANTRIEBSGRUPPE |
| HYDRAULISCHE BALLASTIER | 91 50 902 08 | 153 | 1 | | LTR 1100 -0 | LIEBHERR LTR 1100 |
| HYDROMOTOR A2FM | 51 02 294 08 | 2 | 1 | 2 420 | 91 32 936 08 | DREHWERK |
| HYDROMOTOR SPF | 51 02 407 08 | 3 | 1 | 2 440 022 | 96 42 336 08 | WINDE 2 VORM. |
| HYDROMOTOR SPF | 51 02 407 08 | 2 | 1 | 2 450 | 91 53 926 08 | HAUPTHUBWERK |
| HYDROZYLINDER 65/36-367 SP | 51 23 537 08 | 26 | 1 | 3 510 100 | 91 49 246 08 | TRANSPORTHALTERUNG DKS |
| IMPULSGEBER | 57 09 907 08 | 14 | 1 | 6 060 516 | 60 60 516 08 | GETRIEBENOCKENENDSCHAL |
| INBUSSCHLUESSEL DIN 911 | 79 00 212 08 | 34 | 1 | 1 750 001 | 92 85 698 08 | GRUNDWERKZEUG |
| INBUSSCHLUESSEL DIN 911 | 79 00 213 08 | 35 | 1 | 1 750 001 | 92 85 698 08 | GRUNDWERKZEUG |
| INBUSSCHLUESSEL DIN 911 4 | 79 00 216 08 | 30 | 1 | 1 750 001 | 92 85 698 08 | GRUNDWERKZEUG |
| INBUSSCHLUESSEL DIN 911 5 | 79 00 200 08 | 31 | 1 | 1 750 001 | 92 85 698 08 | GRUNDWERKZEUG |
| INBUSSCHLUESSEL DIN 911 6 | 79 00 201 08 | 32 | 1 | 1 750 001 | 92 85 698 08 | GRUNDWERKZEUG |
| INBUSSCHLUESSEL DIN 911 8 | 79 00 210 08 | 33 | 1 | 1 750 001 | 92 85 698 08 | GRUNDWERKZEUG |
| INDUKTIVSENSOR CONTACTL | 11 34 720 6 | (5) | 1 | 3 920 012 | 96 57 224 08 | ENDSCHALTER ANBAU |
| INDUKTIVSENSOR CONTACTL | 11 34 720 6 | 6 | 11 | 3 930 464 | 92 95 081 08 | GEBERANBAU AUSSCHUBM |
| INNENGEHAEUSE VORM. | 96 28 696 08 | 4 | 1 | 2 913 | 91 32 850 08 | LICCON KONSOLE LCD2 |
| INNENLAMELLE | 73 73 505 03 | (5) | 8 | 9 444 410 | 94 44 410 03 | FAHRANTRIEB |
| INNENLEUCHTE 10W 24V GLA | 60 71 361 08 | 10 | 1 | 2 533 003 | 96 28 388 08 | ELEKTRIK ANBAUTEILE KABIN |
| INNENRAD M=2,25 Z=96 | 93 87 607 01 | 55 | 1 | 9 686 071 | 96 86 071 01 | PLANETENGETRIEBE |
| INNENRAD M=3,75 Z=90 | 94 44 429 03 | 50 | 1 | 9 444 410 | 94 44 410 03 | FAHRANTRIEB |
| INNENRAD M=4 Z=74 | 92 76 018 01 | 20 | 1 | 9 686 071 | 96 86 071 01 | PLANETENGETRIEBE |
| INNENRAD M=5 Z=86 | 94 44 413 03 | 10 | 1 | 9 444 410 | 94 44 410 03 | FAHRANTRIEB |
| INNENRING 40X45X20 | 74 74 040 01 | 71 | 1 | 9 330 748 | 93 30 748 01 | DREHWERKANTRIEB |
| ISOLIERBUCHSE KUNSTSTOF | 66 00 430 08 | 7 | 1 | 2 913 100 | 91 23 538 08 | BAUGRUPPENTRAEGER |
| ISOLIERRING | 69 10 417 08 | 13 | 37 | X1028517 | 10 28 517 1 | SCHLEIFRINGUEBERTRAEGE |
| ISOLIERSCHLAUCH DN12X0,6 | 11 08 260 5 | (204) | 5 | 2 932 042 | 96 68 587 08 | GRUNDAUFBAU |
| ISOLIERSCHLAUCH ISO 3302- | 11 00 658 4 | 60 | 3.4 | 2 510 108 | 96 44 555 08 | SCHALLDAEMMUNG |
| JACK-UP SYSTEM HYDR. NRS | 99 26 462 14 | 2 | 1 | 1 400 200 | 91 53 791 08 | HYDRAULIK VORB. |
| KABELBAUM 3300MM | 55 31 869 08 | 29 | 1 | 2 920 013 | 96 41 599 08 | KABELLISTE EL.ANLAGE |
| KABELBAUM ANBAU D934 A6 | 10 11 998 0 | 580 | 1 | X1015207 | 10 15 207 7 | DIESELMOTOR |
| KABELBAUM S417 | 92 17 218 08 | 7 | 1 | 3 930 492 | 96 20 966 08 | KLEMMKASTEN KPL. |
| KABELBAUM VORM. D934 A6 | 10 12 618 8 | 1 | 1 | X1011998 | 10 11 998 0 | KABELBAUM ANBAU |
| KABELBINDER 2,5X98-BLACK | 60 32 022 08 | 13 | 2 | 2 780 852 | 96 24 845 08 | GSM-MODUL VORM.LICCON 1 |
| KABELBINDER 2,5X98-BLACK | 60 32 022 08 | 8 | 2 | 2 913 004 | 96 20 460 08 | GEHAEUSE VORM. |
| KABELBINDER 2,5X98-BLACK | 60 32 022 08 | 11 | 1 | 2 913 006 | 96 20 732 08 | LUEFTERBLECH VORM. |
| KABELBINDER 2,5X98-BLACK | 60 32 022 08 | (213) | 100 | 2 932 042 | 96 68 587 08 | GRUNDAUFBAU |
| KABELBINDER 2,5X98-BLACK | 60 32 022 08 | 24 | 10 | 2 932 119 | 96 46 061 08 | SCHWENKRAHMEN RELAISST |
| KABELBINDER 3,6X140-SCH | 60 32 003 08 | (211) | 100 | 2 932 042 | 96 68 587 08 | GRUNDAUFBAU |
| KABELBINDER 3,6X200-SCH | 60 32 004 08 | (212) | 100 | 2 932 042 | 96 68 587 08 | GRUNDAUFBAU |
| KABELBINDER 3,6X200-SCH | 60 32 004 08 | 154 | 5 | 3 930 523 | 96 43 943 08 | LEITUNGSTROMMEL |
| KABELBINDER 4,8X292-SCH | 10 87 458 8 | 22 | 2 | 1 920 314 | 96 46 921 08 | KLEMMKASTEN VORM. |
| KABELBINDER 4,8X292-SCH | 10 87 458 8 | 30 | 100 | 2 920 | 91 55 477 08 | EL.ANLAGE DREHBUEHNE |
| KABELBINDER 4,8X292-SCH | 10 87 458 8 | 12 | 2 | X1011997 | 10 11 997 9 | KABELSATZ ANBAU |
| KABELBINDER 4,8X292-SCH | 10 87 458 8 | 65 | 3 | X1011998 | 10 11 998 0 | KABELBAUM ANBAU |
| KABELDOSE M11-Z | 60 45 055 08 | 14 | 1 | 6 923 101 | 69 23 101 08 | SEILLAENGENGEBER |
| KABELHALTER | 72 00 144 08 | 40 | 2 | 3 106 000 | 91 60 313 08 | TELESKOP 5 VORM. |
| KABELHALTER | 72 00 144 08 | 109 | 5 | 3 501 | 91 05 788 08 | DOPPELKLAPPSPITZE MECH. |
| KABELHALTER | 72 00 144 08 | 5 | 4 | 3 511 | 91 54 159 08 | MASTNASE |
| KABELHALTER | 72 00 144 08 | 26 | 2 | 3 511 006 | 96 45 029 08 | MASTNASE VORM. |
| KABELHALTER 2X22X90 DC01 | 95 36 500 08 | 68 | 16 | 3 101 | 91 60 312 08 | ANLENKSTUECK VORM. |
| KABELHALTER 2X22X90 DC01 | 95 36 500 08 | 45 | 14 | 3 106 000 | 91 60 313 08 | TELESKOP 5 VORM. |

| Bezeichnung | Artikel | Pos. | Menge | Seite | Baugruppe | Bezeichnung |
|---|---|---|---|---|---|---|
| KABELHALTER 2X22X90 DC01 | 95 36 500 08 | 108 | 21 | 3 501 | 91 05 788 08 | DOPPELKLAPPSPITZE MECH. |
| KABELHALTER 2X22X90 DC01 | 95 36 500 08 | 6 | 1 | 3 511 | 91 54 159 08 | MASTNASE |
| KABELHALTER 2X22X90 DC01 | 95 36 500 08 | 28 | 1 | 3 511 006 | 96 45 029 08 | MASTNASE VORM. |
| KABELKANAL 60X40/2000 | 60 14 046 08 | 101 | 0.62 | 2 932 042 | 96 68 587 08 | GRUNDAUFBAU |
| KABELKANAL 60X40/2000 | 60 14 046 08 | 106 | 0.35 | 2 932 095 | 96 46 064 08 | SCHWENKRAHMEN SICHERUN |
| KABELKANAL 60X40/2000 | 60 14 046 08 | 107 | 0.295 | 2 932 095 | 96 46 064 08 | SCHWENKRAHMEN SICHERUN |
| KABELKANAL 60X60/2000 | 60 14 073 08 | 102 | 0.45 | 2 932 042 | 96 68 587 08 | GRUNDAUFBAU |
| KABELKANAL 60X60/2000 | 60 14 073 08 | 103 | 0.08 | 2 932 042 | 96 68 587 08 | GRUNDAUFBAU |
| KABELLISTE EL.ANLAGE | 96 41 599 08 | 12 | 1 | 2 920 | 91 55 477 08 | EL.ANLAGE DREHBUEHNE |
| KABELLISTE KRANFUEHRERK | 96 46 345 08 | 4 | 1 | 2 533 | 91 54 254 08 | ELEKTRIK KRANFUEHRERKAB |
| KABELSATZ | 57 05 132 08 | 5 | 1 | 5 530 854 | 55 30 854 08 | DREIWEGEHAHN |
| KABELSATZ ANBAU D934 A6 | 10 11 997 9 | 5 | 1 | X1011998 | 10 11 998 0 | KABELBAUM ANBAU |
| KABELSATZ D934 A6 | 10 33 284 3 | 1 | 1 | X1011997 | 10 11 997 9 | KABELSATZ ANBAU |
| KABELSTRANG W1066 | 96 47 069 08 | 21 | 1 | 1 920 314 | 96 46 921 08 | KLEMMKASTEN VORM. |
| KABELSTRANG W156 | 96 46 346 08 | (1) | 1 | 2 533 | 91 54 254 08 | ELEKTRIK KRANFUEHRERKAB |
| KABELSTRANG W159 | 96 41 571 08 | (2) | 1 | 2 533 | 91 54 254 08 | ELEKTRIK KRANFUEHRERKAB |
| KABELSTRANG W160 | 96 31 670 08 | 16 | 1 | 2 920 013 | 96 41 599 08 | KABELLISTE EL.ANLAGE |
| KABELSTRANG W301 | 96 35 880 08 | 31 | 1 | 2 920 013 | 96 41 599 08 | KABELLISTE EL.ANLAGE |
| KABELSTRANG W302 | 96 35 881 08 | 32 | 1 | 2 920 013 | 96 41 599 08 | KABELLISTE EL.ANLAGE |
| KABELSTRANG W304 | 96 41 600 08 | 34 | 1 | 2 920 013 | 96 41 599 08 | KABELLISTE EL.ANLAGE |
| KABELSTRANG W400 | 96 46 911 08 | 1 | 1 | 2 780 952 | 91 68 736 08 | ADAPTER DATENLOGGER |
| KABELSTRANG W554 | 96 72 125 08 | 2 | 1 | 2 780 870 | 91 70 947 08 | LADESPANNUNGSREGLER |
| KABELSTRANG W647 | 96 20 761 08 | 10 | 1 | 2 913 006 | 96 20 732 08 | LUEFTERBLECH VORM. |
| KABELSTRANG W648 | 96 20 750 08 | 9 | 1 | 2 913 003 | 96 20 599 08 | FOLIENTASTATUR VORM. |
| KABELSTRANG WL150A | 96 36 341 08 | 15 | 1 | 2 920 013 | 96 41 599 08 | KABELLISTE EL.ANLAGE |
| KABELTUELLE 4-6 | 60 27 048 08 | 9 | 2 | 6 923 101 | 69 23 101 08 | SEILLAENGENGEBER |
| KABELVERBINDER | 60 23 364 08 | 2 | 1 | 2 932 166 | 92 68 911 08 | VERTEILER MASSE |
| KABELVERSCHRAUBUNG M16 | 60 24 241 08 | 199 | 2 | 3 930 492 | 96 20 966 08 | KLEMMKASTEN KPL. |
| KABELVERSCHRAUBUNG M2 | 60 24 257 08 | 200 | 1 | 3 930 492 | 96 20 966 08 | KLEMMKASTEN KPL. |
| KABELVERSCHRAUBUNG M2 | 60 24 257 08 | 211 | 4 | 3 930 718 | 96 56 248 08 | KLEMMKASTEN KPL. |
| KABELVERSCHRAUBUNG M25 | 60 24 243 08 | 16 | 1 | 1 920 314 | 96 46 921 08 | KLEMMKASTEN VORM. |
| KABELVERSCHRAUBUNG M32 | 60 24 244 08 | 18 | 1 | 1 920 314 | 96 46 921 08 | KLEMMKASTEN VORM. |
| KABELVERSCHRAUBUNG PG1 | 60 24 226 08 | 266 | 1 | 2 920 585 | 91 01 520 08 | ELEKTRIK BLITZLEUCHTE |
| KABELVERSCHRAUBUNG PG1 | 60 24 226 08 | 7 | 1 | 3 930 523 | 96 43 943 08 | LEITUNGSTROMMEL |
| KABELVERSCHRAUBUNG PG1 | 60 24 227 08 | 5 | 2 | X1034357 | 10 34 357 4 | LEITUNGSTROMMEL |
| KABELVERSCHRAUBUNG PG9 | 60 24 225 08 | 2 | 1 | 2 920 362 | 96 31 865 08 | ELEKTRIK ARBEITSSCHEINW |
| KABINE BLECHTEILE RAL 703 | 91 49 864 08 | 9 | 1 | 2 520 000 | 91 49 872 08 | KABINE VERGLAST |
| KABINE NIBBELTEILE | 91 49 865 08 | (1) | 1 | 2 520 000 | 91 49 872 08 | KABINE VERGLAST |
| KABINE VERGLAST | 91 49 872 08 | 1 | 1 | 2 501 000 | 91 48 769 08 | KRANFUEHRERKABINE VORM |
| KABINENARM SCHWK. SPF | 92 68 310 08 | 2 | 1 | 2 500 | 91 48 594 08 | KRANFUEHRERKABINE KPL. |
| KAEFIGMUTTER M5 | 41 30 026 08 | 110 | 2 | 2 520 000 | 91 49 872 08 | KABINE VERGLAST |
| KAEFIGMUTTER M5 | 41 30 026 08 | 94 | 3 | 2 932 042 | 96 68 587 08 | GRUNDAUFBAU |
| KAEFIGMUTTER M6 | 41 30 028 08 | 32 | 2 | 2 501 000 | 91 48 769 08 | KRANFUEHRERKABINE VORM |
| KAEFIGMUTTER M6 | 41 30 028 08 | 81 | 23 | 2 520 000 | 91 49 872 08 | KABINE VERGLAST |
| KAEFIGMUTTER M6 | 41 30 028 08 | 104 | 2 | 2 520 000 | 91 49 872 08 | KABINE VERGLAST |
| KAEFIGMUTTER M6 | 41 30 028 08 | 11 | 6 | 2 540 | 91 45 984 08 | HEIZUNG OW |
| KAEFIGMUTTER M6 | 41 30 028 08 | 351 | 8 | 2 681 | 91 28 102 08 | LUFTFILTERANLAGE |
| KAEFIGMUTTER M6 | 41 30 028 08 | 95 | 8 | 2 932 042 | 96 68 587 08 | GRUNDAUFBAU |
| KAEFIGMUTTER M6 | 41 30 029 08 | 51 | 2 | 2 522 | 91 10 037 08 | TUER KPL. |
| KAEFIGMUTTER M6 | 41 30 029 08 | 71 | 4 | 3 101 | 91 60 312 08 | ANLENKSTUECK VORM. |
| KAEFIGMUTTER M6 | 41 30 029 08 | 2 | 2 | 3 920 012 | 96 57 224 08 | ENDSCHALTER ANBAU |
| KAEFIGMUTTER M8 | 41 30 031 08 | 25 | 8 | 2 501 000 | 91 48 769 08 | KRANFUEHRERKABINE VORM |
| KAEFIGMUTTER M8 | 41 30 031 08 | 14 | 1 | 2 540 | 91 45 984 08 | HEIZUNG OW |
| KAEFIGMUTTER M8 | 41 30 031 08 | 98 | 9 | 2 932 042 | 96 68 587 08 | GRUNDAUFBAU |
| KAEFIGMUTTER M8 | 41 30 034 08 | 37 | 4 | 2 502 | 91 01 533 08 | STEUERSTAND |
| KAEFIGMUTTER M8 | 41 30 034 08 | 360 | 6 | 2 510 100 | 96 44 750 08 | DREHBUEHNENVERKLEIDUN |
| KAEFIGMUTTER M8 | 41 30 034 08 | 99 | 2 | 2 932 042 | 96 68 587 08 | GRUNDAUFBAU |
| KAEFIGMUTTER M8 | 41 30 034 08 | 351 | 5 | 2 984 | 91 52 906 08 | OELKUEHLER EINBAU |
| KAEFIGMUTTER M8 A2/ST A2 | 41 30 032 08 | 46 | 2 | 2 510 200 | 96 41 258 08 | DREHBUEHNENVERKLEIDUN |
| KAEFIGMUTTER M8 A2/ST A2 | 41 30 032 08 | 26 | 3 | 3 100 | 91 59 279 08 | TELESKOPAUSLEGER KPL. |

| Bezeichnung | Artikel | Pos. | Menge | Seite | Baugruppe | Bezeichnung |
|---|---|---|---|---|---|---|
| KAELTEMITTEL 12KG FLASCH | 70 20 440 | 8 | 1.6 | 2 831 | 91 47 871 08 | KLIMAANLAGE OW |
| KALOTTE | 60 61 442 08 | 13 | 1 | 2 530 002 | 96 19 448 08 | ARMATURENBRETT VORM.V |
| KALOTTE | 60 61 442 08 | 29 | 1 | 2 531 001 | 96 36 738 08 | ELEKTRIK ARMLEHNE LI. |
| KALOTTE | 60 61 442 08 | 30 | 2 | 2 531 002 | 96 36 739 08 | ELEKTRIK ARMLEHNE RE. |
| KALOTTE | 60 61 443 08 | 9 | 1 | 2 530 002 | 96 19 448 08 | ARMATURENBRETT VORM.V |
| KALOTTE | 60 61 443 08 | 30 | 1 | 2 531 001 | 96 36 738 08 | ELEKTRIK ARMLEHNE LI. |
| KANTENSCHUTZ 1-2X9,5X6,5 | 26 21 039 08 | 6 | 2.3 | 2 260 006 | 96 31 147 08 | BATTERIEKASTEN VORM. |
| KANTENSCHUTZ 1-2X9,5X6,5 | 26 21 039 08 | (3) | 0.6 | 2 510 100 | 96 44 750 08 | DREHBUEHNENVERKLEIDUN |
| KANTENSCHUTZ 1-2X9,5X6,5 | 26 21 039 08 | 60 | 0.295 | 2 932 095 | 96 46 064 08 | SCHWENKRAHMEN SICHERUN |
| KANTENSCHUTZ 1-2X9,5X6,5 | 26 21 039 08 | 7 | 0.16 | 2 932 166 | 92 68 911 08 | VERTEILER MASSE |
| KANTENSCHUTZ 1-2X9,5X6,5 | 26 21 039 08 | 12 | 0.25 | 2 984 | 91 52 906 08 | OELKUEHLER EINBAU |
| KANTENSCHUTZPROFIL 2-4X1 | 11 69 578 6 | 163 | 5 | 2 520 000 | 91 49 872 08 | KABINE VERGLAST |
| KAPPE | 57 15 690 08 | 59 | 1 | 6 060 516 | 60 60 516 08 | GETRIEBENOCKENENDSCHAL |
| KAPPE | 57 15 828 08 | 30 | 1 | 5 700 161 | 57 00 161 | LUFTPRESSER |
| KAPPE | 59 10 636 08 | 37 | 1 | 2 520 000 | 91 49 872 08 | KABINE VERGLAST |
| KAPPE | 59 10 644 08 | 8 | 1 | 2 790 024 | 96 67 077 08 | SPIEGELHALTER VORM. |
| KAPPE | 59 15 591 08 | 4 | 1 | 5 910 672 | 59 10 672 08 | WISCHERMOTOR |
| KAPPE MIT NUT | 10 49 148 3 | 59 | 1 | 6 060 516 | 60 60 516 08 | GETRIEBENOCKENENDSCHAL |
| KARABINERHAKEN DIN 5299 | 74 40 102 08 | 16 | 1 | 3 330 | 91 57 885 08 | AUSSCHUBMECHANIK |
| KARTUSCHE | 57 13 523 08 | 1 | 1 | 5 026 573 | 50 26 573 08 | LUFTTROCKNER |
| KARTUSCHE | 57 13 523 08 | 201 | 1 | 9 629 047 | 96 29 047 08 | FILTERPAKET |
| KARTUSCHE | 57 13 523 08 | (15) | 1 | XSK_Z480 | SK_Z48005 | SERVICE |
| KAUSCHE UND KLEMME | 57 18 513 08 | 7 | 1 | 6 923 101 | 69 23 101 08 | SEILLAENGENGEBER |
| KB-RING 122X113,1X3,5 MC66 | 10 47 234 5 | 2 | 1 | X1046728 | 10 46 728 5 | KOLBEN KPL. |
| KEGEL | 51 07 921 08 | 4 | 1 | 5 711 301 | 57 11 301 08 | DRUCKBEGRENZUNGSVENTI |
| KEGEL | 51 07 921 08 | 2 | 1 | 5 718 895 | 57 18 895 08 | DRUCKVENTIL |
| KEGELPFANNE DIN 6319 19 4 | 10 87 586 2 | 41 | 1 | 3 510 100 | 91 49 246 08 | TRANSPORTHALTERUNG DKS |
| KEGELROLLENLAGER | 10 29 377 5 | 10 | 1 | 5 701 090 | 57 01 090 08 | TRIEBWERK |
| KEGELROLLENLAGER DIN 720 | 74 62 014 08 | 12 | 1 | 9 330 748 | 93 30 748 01 | DREHWERKANTRIEB |
| KEGELROLLENLAGER DIN 720 | 74 62 219 08 | 11 | 1 | 5 701 090 | 57 01 090 08 | TRIEBWERK |
| KEGELROLLENLAGER DIN 720 | 57 14 654 08 | 3 | 1 | 9 330 748 | 93 30 748 01 | DREHWERKANTRIEB |
| KEGELSCHMIERNIPPEL | 11 08 039 2 | 15 | 1 | X1032706 | 10 32 706 5 | ELEKTROPUMPE |
| KEGELSCHMIERNIPPEL DIN 71 | 77 43 242 | 16 | 2 | 3 102 000 | 91 62 543 08 | TELESKOP 1 VORM. |
| KEGELSCHMIERNIPPEL DIN 71 | 77 43 242 | 16 | 2 | 3 103 000 | 91 62 544 08 | TELESKOP 2 VORM. |
| KEGELSCHMIERNIPPEL DIN 71 | 77 43 242 | 16 | 2 | 3 104 000 | 91 62 545 08 | TELESKOP 3 VORM. |
| KEGELSCHMIERNIPPEL DIN 71 | 77 43 242 | 16 | 2 | 3 105 000 | 91 62 546 08 | TELESKOP 4 VORM. |
| KEGELSCHMIERNIPPEL DIN 71 | 77 43 242 | 16 | 2 | 3 106 000 | 91 60 313 08 | TELESKOP 5 VORM. |
| KEGELSCHMIERNIPPEL DIN 71 | 57 15 786 08 | (1) | 1 | 2 711 | 91 53 002 08 | ZENTRALSCHMIERANLAGE O |
| KEGELSCHMIERNIPPEL DIN 7 | 77 43 011 01 | 18 | 1 | 9 387 070 | 93 87 070 01 | KOMPAKTSEILWINDE |
| KEGELSCHMIERNIPPEL DIN 7 | 77 43 011 01 | 18 | 1 | 9 685 586 | 96 85 586 01 | KOMPAKTSEILWINDE |
| KEGELSTOPFEN PE-LLD | 70 02 332 | 92 | 1 | 9 444 410 | 94 44 410 03 | FAHRANTRIEB |
| KEIL 48.3X50X310 PA6G | 97 67 674 08 | 4 | 1 | 2 790 901 | 91 54 183 08 | AUSSTEIFUNG |
| KEILPLATTE 40X310X200 S96 | 97 57 618 08 | 2 | 2 | 2 571 | 91 50 902 08 | HYDRAULISCHE BALLASTIER |
| KEILRIPPENRIEMEN DIN 7867 | 49 81 176 | 20 | 1 | 9 079 560 | 90 79 560 | GENERATOR ANBAU |
| KEILRIPPENRIEMEN DIN 7867 | 49 81 203 | 20 | 1 | 9 080 525 | 90 80 525 | KLIMAKOMPRESSOR ANBAU |
| KENNZEICHNUNGSKARTEN | 60 27 426 08 | 207 | 0.16 | 3 930 492 | 96 20 966 08 | KLEMMKASTEN KPL. |
| KENNZEICHNUNGSKARTEN 1 | 60 27 437 08 | 8 | 1 | 1 920 314 | 96 46 921 08 | KLEMMKASTEN VORM. |
| KERBSTIFT DIN 1472 4X12 | 43 11 002 01 | 24 | 1 | 9 387 596 | 93 87 596 01 | SEILTROMMEL |
| KERBSTIFT ISO 8740 3X20 | 43 12 005 01 | 91 | 3 | 9 330 748 | 93 30 748 01 | DREHWERKANTRIEB |
| KERBSTIFT ISO 8740 4H11X24 | 43 12 024 01 | 18 | 1 | 9 387 596 | 93 87 596 01 | SEILTROMMEL |
| KETTE DIN 763 7X49 0.3t ST35 | 10 66 397 0 | 4 | 2 | 3 105 014 | 96 57 037 08 | HUBENDSCHALTER GEWICHT |
| KETTE DIN EN 818-2 10T-2.976 | 10 32 680 3 | 5 | 2 | 2 560 | 91 50 900 08 | GEGENGEWICHT M.BEFESTIG |
| KETTENAUFNAHME SCHWK. | 96 44 249 08 | 4 | 2 | 2 560 | 91 50 900 08 | GEGENGEWICHT M.BEFESTIG |
| KETTENBOLZEN | 78 65 204 14 | 5 | 60 | 1 300 007 | 79 02 584 14 | RAUPENKETTE KPL |
| KETTENBUCHSE 48,74X71,45X | 78 65 205 14 | 3 | 60 | 1 300 007 | 79 02 584 14 | RAUPENKETTE KPL |
| KETTENENDBOLZEN | 78 65 252 14 | 6 | 1 | 1 300 007 | 79 02 584 14 | RAUPENKETTE KPL |
| KETTENENDBUCHSE 48,74X7 | 78 65 203 14 | 4 | 1 | 1 300 007 | 79 02 584 14 | RAUPENKETTE KPL |
| KETTENENDSEGMENT KPL | 78 65 281 14 | 99 | 1 | 1 300 007 | 79 02 584 14 | RAUPENKETTE KPL |
| KETTENFUEHRUNG SCHWK. | 96 46 508 08 | 17 | 3 | 1 100 205 | 96 51 633 08 | RAUPENTRAEGER KPL.RE. |
| KETTENFUEHRUNG SCHWK. | 96 46 508 08 | 17 | 3 | 1 100 210 | 96 51 634 08 | RAUPENTRAEGER KPL.LI. |

| Bezeichnung | Artikel | Pos. | Menge | Seite | Baugruppe | Bezeichnung |
|---|---|---|---|---|---|---|
| KETTENGEHAENGE 10T-2132 | 10 32 681 6 | 17 | 4 | 2 571 | 91 50 902 08 | HYDRAULISCHE BALLASTIER |
| KETTENGLIED | 78 65 266 14 | 1 | 62 | 1 300 007 | 79 02 584 14 | RAUPENKETTE KPL |
| KETTENGLIED | 78 65 267 14 | 2 | 62 | 1 300 007 | 79 02 584 14 | RAUPENKETTE KPL |
| KETTENHALTER | 96 47 653 08 | 1 | 1 | 2 560 045 | 96 40 606 08 | KETTENHALTER KPL. |
| KETTENHALTER KPL. | 96 40 606 08 | 6 | 2 | 2 560 | 91 50 900 08 | GEGENGEWICHT M.BEFESTIG |
| KIPPHEBEL VORM. | 90 74 507 | 3 | 2 | 9 074 505 | 90 74 505 | KIPPHEBELBOCK VORM. |
| KIPPHEBELBOCK KPL. | 90 79 861 | 81 | 4 | X1015207 | 10 15 207 7 | DIESELMOTOR |
| KIPPHEBELBOCK VORM. D 93 | 90 74 505 | 2 | 1 | 9 079 861 | 90 79 861 | KIPPHEBELBOCK KPL. |
| KIPPSCHALTER | 60 60 242 08 | 151 | 1 | 1 780 182 | 92 01 827 08 | ELEKTRIK KLIMAANLAGE |
| KIPPSCHALTER | 60 60 242 08 | 8 | 3 | 2 533 001 | 96 41 568 08 | ARMATURENBRETT DACH VO |
| KIPPSCHALTER | 60 60 248 08 | 10 | 3 | 2 533 001 | 96 41 568 08 | ARMATURENBRETT DACH VO |
| KIPPSCHALTER | 60 60 258 08 | 11 | 3 | 2 533 001 | 96 41 568 08 | ARMATURENBRETT DACH VO |
| KIPPSCHALTER | 60 60 279 08 | 9 | 2 | 2 533 001 | 96 41 568 08 | ARMATURENBRETT DACH VO |
| KIPPSCHALTER | 60 60 288 08 | 12 | 1 | 2 533 001 | 96 41 568 08 | ARMATURENBRETT DACH VO |
| KIPPZYLINDER 50/25-165 SPF | 10 03 908 5 | 11 | 1 | 2 500 | 91 48 594 08 | KRANFUEHRERKABINE KPL. |
| KLAMMER | 59 10 509 08 | 30 | 3 | 2 520 000 | 91 49 872 08 | KABINE VERGLAST |
| KLAPPE KPL. | 96 42 021 08 | 1 | 1 | 2 510 201 | 96 42 011 08 | KLAPPE VORM. |
| KLAPPE KPL. GFK | 92 02 118 08 | 1 | 1 | 2 510 072 | 96 44 614 08 | KLAPPE VORM.RECHTS |
| KLAPPE VORM. | 96 42 011 08 | 1 | 1 | 2 510 200 | 96 41 258 08 | DREHBUEHNENVERKLEIDUN |
| KLAPPE VORM.RECHTS | 96 44 614 08 | 2 | 1 | 2 510 100 | 96 44 750 08 | DREHBUEHNENVERKLEIDUN |
| KLAPPKONSOLE | 96 20 924 08 | 2 | 1 | 3 510 100 | 91 49 246 08 | TRANSPORTHALTERUNG DKS |
| KLAPPTEIL SCHWK. | 92 50 396 08 | 2 | 1 | 3 510 006 | 96 20 924 08 | KLAPPKONSOLE |
| KLARSICHTBEHAELTER WAS | 10 28 018 1 | 2 | 1 | X1022282 | 10 22 282 0 | KRAFTSTOFFVORFILTER |
| KLEBER 300ML -40/+90 °C | 81 12 029 08 | 95 | 1 | 2 520 000 | 91 49 872 08 | KABINE VERGLAST |
| KLEBER Kartoon 20stück | 81 12 033 08 | 94 | 1 | 2 520 000 | 91 49 872 08 | KABINE VERGLAST |
| KLEBSTOFF 10 ml | 81 12 073 01 | 104 | 1 | X1011577 | 10 11 577 7 | KURBELGEHAEUSE KPL. |
| KLEBSTOFF 10 ml | 81 12 073 01 | 104 | 1 | X1012038 | 10 12 038 3 | ZYLINDERKOPF |
| KLEBSTOFF 50ml -55/180 °C | 81 12 082 01 | 104 | 1 | 9 074 165 | 90 74 165 | MASSENAUSGLEICH ANBAU |
| KLEMMBRETT 6XM6 | 60 44 124 08 | 1 | 1 | 1 830 102 | 92 26 483 08 | KLEMMBRETT VORM. |
| KLEMMBRETT VORM. | 92 26 483 08 | 15 | 1 | 2 932 042 | 96 68 587 08 | GRUNDAUFBAU |
| KLEMME 6,3/2,8X0,8MM² | 10 28 635 4 | 11 | 23 | 1 920 314 | 96 46 921 08 | KLEMMKASTEN VORM. |
| KLEMME 6,3/2,8X0,8MM² | 10 28 635 4 | 5 | 2 | 2 932 167 | 96 32 480 08 | KLEMMENLEISTE |
| KLEMME 6,3/2,8X0,8MM² | 10 28 635 4 | 297 | 15 | 3 930 492 | 96 20 966 08 | KLEMMKASTEN KPL. |
| KLEMME 6,3/2,8X0,8MM² | 10 28 635 4 | 204 | 21 | 3 930 718 | 96 56 248 08 | KLEMMKASTEN KPL. |
| KLEMMENLEISTE | 96 32 480 08 | 16 | 1 | 2 932 042 | 96 68 587 08 | GRUNDAUFBAU |
| KLEMMHAELFTE AEHNL.DIN | 73 67 238 | 22 | 8 | 1 100 216 | 96 46 363 08 | MONTAGETEILE LWE |
| KLEMMHAELFTE AEHNL.DIN | 60 20 095 08 | 48 | 16 | 2 971 | 91 50 610 08 | HYDRAULIK HILFSHUBWERK |
| KLEMMHAELFTE DIN 3015-1 1 | 60 20 078 08 | 37 | 8 | 3 330 | 91 57 885 08 | AUSSCHUBMECHANIK |
| KLEMMHAELFTE DIN 3015-1 18 | 60 20 022 08 | 18 | 36 | 2 950 | 91 49 515 08 | DRUCKLUFTANLAGE OW |
| KLEMMHAELFTE DIN 3015-1 L | 60 20 085 08 | 404 | 6 | 2 210 | 91 81 614 08 | ANTRIEBSAGGREGAT VORM. |
| KLEMMHAELFTE DIN 3015-1 L | 70 05 052 | 406 | 4 | 2 210 | 91 81 614 08 | ANTRIEBSAGGREGAT VORM. |
| KLEMMHAELFTE DIN 3015-1 L | 70 05 052 | 28 | 10 | 2 920 | 91 55 477 08 | EL.ANLAGE DREHBUEHNE |
| KLEMMHAELFTE DIN 3015-1 L | 70 05 052 | 72 | 2 | 3 101 | 91 60 312 08 | ANLENKSTUECK VORM. |
| KLEMMHAELFTE DIN 3015-1 L | 70 05 052 | 33 | 4 | 3 330 | 91 57 885 08 | AUSSCHUBMECHANIK |
| KLEMMHAELFTE DIN 3015-1 L | 74 13 103 | 75 | 4 | 3 101 | 91 60 312 08 | ANLENKSTUECK VORM. |
| KLEMMKASTEN KPL. S413 | 96 56 248 08 | 5 | 1 | 3 930 342 | 96 56 247 08 | ELEKTRIK ANLENKSTUECK |
| KLEMMKASTEN KPL. S417 | 96 20 966 08 | 5 | 1 | 3 930 341 | 96 20 965 08 | ELEKTRIK KOPFSTUECK |
| KLEMMKASTEN VORM. S50 | 96 46 921 08 | 2 | 1 | 1 920 307 | 96 46 916 08 | ELEKTRIK MITTELSTUECK |
| KLEMMSTUECK 12 G20MN5 FE | 38 00 571 08 | 205 | 10 | 2 210 | 91 81 614 08 | ANTRIEBSAGGREGAT VORM. |
| KLEMMSTUECK 22 | 92 76 388 01 | 30 | 1 | 9 387 596 | 93 87 596 01 | SEILTROMMEL |
| KLETTVERSCHLUSS 25MMBR | 70 42 324 08 | 9 | 0.6 | 2 270 | 91 50 456 08 | KRAFTSTOFFBEHAELTER AN |
| KLIMAANLAGE OW 1100-4.1 | 91 47 871 08 | 301 | 1 | | LTR 1100 -0 | LIEBHERR LTR 1100 |
| KLIMAKOMPRESSOR ANBAU | 90 80 525 | 1 | 1 | 2 831 | 91 47 871 08 | KLIMAANLAGE OW |
| KLIMAKOMPRESSOR SD7H15K | 10 11 676 8 | 2 | 1 | 9 080 525 | 90 80 525 | KLIMAKOMPRESSOR ANBAU |
| KLIMANACHRUESTVERDAMP | 55 31 882 08 | 2 | 1 | 2 831 | 91 47 871 08 | KLIMAANLAGE OW |
| KLINKE | 11 49 001 0 | 1 | 1 | 5 123 537 | 51 23 537 08 | HYDROZYLINDER |
| KNOPF | 57 07 567 08 | 4 | 1 | 5 530 854 | 55 30 854 08 | DREIWEGEHAHN |
| KNOPF GUMMI | 72 66 108 08 | 17 | 2 | 2 522 | 91 10 037 08 | TUER KPL. |
| KOLBEN | 51 07 357 08 | 3 | 1 | 5 718 895 | 57 18 895 08 | DRUCKVENTIL |
| KOLBEN | 57 01 106 08 | 4 | 7 | 5 701 095 | 57 01 095 08 | TRIEBWERK |

| Bezeichnung | Artikel | Pos. | Menge | Seite | Baugruppe | Bezeichnung |
|---|---|---|---|---|---|---|
| KOLBEN | 57 15 826 08 | 13 | 1 | 5 700 161 | 57 00 161 | LUFTPRESSER |
| KOLBEN | 79 02 722 14 | 1 | 1 | 1 100 213 | 74 90 654 14 | SPANNER HYDR KPL |
| KOLBEN | 98 86 591 | 9 | 1 | 9 075 541 | 90 75 541 | SCHMIEROELPUMPE VORM. |
| KOLBEN | 98 86 591 | 20 | 1 | X1011739 | 10 11 739 7 | OELKUEHLER VORM. |
| KOLBEN 20MnCr5 | 90 75 361 | 1 | 1 | X1011795 | 10 11 795 1 | ENDREGELVENTIL |
| KOLBEN KPL. R-MOTORX122 | 10 46 728 5 | 70 | 4 | X1012193 | 10 12 193 2 | GRUNDMOTOR |
| KOLBENKUEHLDUESE ST-KOL | 90 73 796 | 1 | 1 | 9 073 795 | 90 73 795 | KOLBENKUEHLUNG |
| KOLBENKUEHLUNG | 90 73 795 | 15 | 4 | X1012193 | 10 12 193 2 | GRUNDMOTOR |
| KOMBIKUEHLER | 97 73 428 08 | 100 | 1 | 2 210 008 | 96 48 137 08 | KUEHLER VORM. |
| KOMBIZANGE DIN 5244 180 | 79 00 315 08 | 62 | 1 | 1 750 001 | 92 85 698 08 | GRUNDWERKZEUG |
| KOMPAKTSEILWINDE KSW 40 | 93 87 070 01 | 2 | 1 | 2 440 022 | 96 42 336 08 | WINDE 2 VORM. |
| KOMPAKTSEILWINDE KSW 40 | 96 85 586 01 | 2 | 1 | 2 450 025 | 96 35 649 08 | HAUPTHUBWERK VORM. |
| KONDENSATOR | 55 31 899 08 | 3 | 1 | 2 831 | 91 47 871 08 | KLIMAANLAGE OW |
| KONSOLE | 70 42 297 08 | 7 | 1 | 2 510 201 | 96 42 011 08 | KLAPPE VORM. |
| KONSOLE | 90 79 561 | 1 | 1 | 9 079 560 | 90 79 560 | GENERATOR ANBAU |
| KONSOLE | 96 33 834 08 | 5 | 1 | 2 440 022 | 96 42 336 08 | WINDE 2 VORM. |
| KONSOLE 3x122x55 Edelstahl | 95 71 203 08 | 12 | 3 | 2 680 | 91 53 225 08 | ABGASANLAGE KPL. |
| KONSOLE 4X151X256 S315MC | 97 38 620 08 | 20 | 1 | 2 510 100 | 96 44 750 08 | DREHBUEHNENVERKLEIDUN |
| KONSOLE 4X193X136 S315MC | 97 38 619 08 | 19 | 1 | 2 510 100 | 96 44 750 08 | DREHBUEHNENVERKLEIDUN |
| KONSOLE 4X260X239 S315MC | 95 41 800 08 | 8 | 1 | 3 330 | 91 57 885 08 | AUSSCHUBMECHANIK |
| KONSOLE SCHWK. | 92 50 027 08 | 5 | 1 | 2 502 | 91 01 533 08 | STEUERSTAND |
| KONSOLE SCHWK. | 92 50 421 08 | 4 | 1 | 3 510 100 | 91 49 246 08 | TRANSPORTHALTERUNG DKS |
| KONSOLE SCHWK. | 92 52 756 08 | 1 | 1 | 3 510 001 | 92 52 800 08 | KONSOLE VORM. |
| KONSOLE SCHWK. | 92 79 359 08 | 8 | 1 | 2 102 | 91 51 080 08 | MONTAGETEILE DREHBUEHN |
| KONSOLE SCHWK. | 96 22 885 08 | 6 | 1 | 2 102 | 91 51 080 08 | MONTAGETEILE DREHBUEHN |
| KONSOLE SCHWK. | 96 36 724 08 | 50 | 1 | 2 102 | 91 51 080 08 | MONTAGETEILE DREHBUEHN |
| KONSOLE SCHWK. | 96 36 726 08 | 51 | 1 | 2 102 | 91 51 080 08 | MONTAGETEILE DREHBUEHN |
| KONSOLE SCHWK. | 96 42 015 08 | 1 | 1 | 2 515 007 | 96 42 014 08 | PODEST VORM. |
| KONSOLE SCHWK. | 96 45 139 08 | 1 | 1 | 2 790 901 | 91 54 183 08 | AUSSTEIFUNG |
| KONSOLE SCHWK.LI. | 92 50 028 08 | 6 | 1 | 2 502 | 91 01 533 08 | STEUERSTAND |
| KONSOLE SCHWK.LI. FE//ZN20 | 92 57 213 08 | 2 | 1 | 3 330 | 91 57 885 08 | AUSSCHUBMECHANIK |
| KONSOLE SCHWK.RE. | 92 50 029 08 | 7 | 1 | 2 502 | 91 01 533 08 | STEUERSTAND |
| KONSOLE SCHWK.RE. FE//ZN | 92 57 214 08 | 3 | 1 | 3 330 | 91 57 885 08 | AUSSCHUBMECHANIK |
| KONSOLE VORM. | 10 11 547 7 | 1 | 1 | 9 080 525 | 90 80 525 | KLIMAKOMPRESSOR ANBAU |
| KONSOLE VORM. | 92 52 800 08 | 1 | 1 | 3 510 100 | 91 49 246 08 | TRANSPORTHALTERUNG DKS |
| KONTAKTSATZ | 57 18 511 08 | 5 | 1 | 6 923 101 | 69 23 101 08 | SEILLAENGENGEBER |
| KONTROLLLEUCHTE 24V | 60 71 354 08 | 153 | 1 | 1 780 182 | 92 01 827 08 | ELEKTRIK KLIMAANLAGE |
| KONTROLLLEUCHTE 24V | 60 71 354 08 | 15 | 2 | 2 533 001 | 96 41 568 08 | ARMATURENBRETT DACH VO |
| KOPFSTUECK SCHWK. | 96 20 494 08 | 4 | 1 | 3 501 | 91 05 788 08 | DOPPELKLAPPSPITZE MECH. |
| KOPFSTUETZE | 77 41 193 08 | 17 | 1 | 2 502 | 91 01 533 08 | STEUERSTAND |
| KRAFTSTOFF-FEINFILTERAN | 10 12 500 7 | 201 | 1 | X1015207 | 10 15 207 7 | DIESELMOTOR |
| KRAFTSTOFFBEHAELTER AN | 91 50 456 08 | 108 | 1 | | LTR 1100 -0 | LIEBHERR LTR 1100 |
| KRAFTSTOFFBEHAELTER SCH | 96 37 919 08 | 1 | 1 | 2 270 001 | 96 37 923 08 | KRAFTSTOFFBEHAELTER VO |
| KRAFTSTOFFBEHAELTER VO | 96 37 923 08 | 1 | 1 | 2 270 | 91 50 456 08 | KRAFTSTOFFBEHAELTER AN |
| KRAFTSTOFFFEINFILTER | 10 12 580 1 | 1 | 1 | X1012500 | 10 12 500 7 | KRAFTSTOFF-FEINFILTERAN |
| KRAFTSTOFFFEINFILTER KRA | 10 42 994 6 | 100 | 1 | 9 629 047 | 96 29 047 08 | FILTERPAKET |
| KRAFTSTOFFFEINFILTER KRA | 10 42 994 6 | 100 | 1 | 9 629 049 | 96 29 049 08 | FILTERPAKET |
| KRAFTSTOFFFEINFILTER KRA | 10 42 994 6 | 1 | 1 | X1012580 | 10 12 580 1 | KRAFTSTOFFFEINFILTER |
| KRAFTSTOFFFEINFILTER KRA | 10 42 994 6 | (7) | 1 | XSK_Z480 | SK_Z48005 | SERVICE |
| KRAFTSTOFFFILTER | 55 31 740 08 | 102 | 1 | 9 629 047 | 96 29 047 08 | FILTERPAKET |
| KRAFTSTOFFFILTER | 55 31 740 08 | (12) | 1 | XSK_Z480 | SK_Z48005 | SERVICE |
| KRAFTSTOFFFILTERKOPF | 10 04 695 8 | 4 | 1 | X1022282 | 10 22 282 0 | KRAFTSTOFFVORFILTER |
| KRAFTSTOFFFILTERKOPF | 10 15 278 1 | 2 | 1 | X1012580 | 10 12 580 1 | KRAFTSTOFFFEINFILTER |
| KRAFTSTOFFFOERDERPUMP | 90 78 681 | 1 | 1 | 9 078 680 | 90 78 680 | KRAFTSTOFFFOERDERPUMP |
| KRAFTSTOFFFOERDERPUMP | 90 78 680 | 211 | 1 | X1012193 | 10 12 193 2 | GRUNDMOTOR |
| KRAFTSTOFFLEITUNG | 90 78 935 | 1 | 1 | X1011569 | 10 11 569 6 | LECKOELRUECKLAUF |
| KRAFTSTOFFLEITUNGEN | 10 11 573 7 | 212 | 1 | X1015207 | 10 15 207 7 | DIESELMOTOR |
| KRAFTSTOFFVORFILTER | 10 04 430 2 | 103 | 1 | 9 629 047 | 96 29 047 08 | FILTERPAKET |
| KRAFTSTOFFVORFILTER | 10 04 430 2 | 103 | 1 | 9 629 049 | 96 29 049 08 | FILTERPAKET |
| KRAFTSTOFFVORFILTER | 10 04 430 2 | 1 | 1 | X1022282 | 10 22 282 0 | KRAFTSTOFFVORFILTER |

| Bezeichnung | Artikel | Pos. | Menge | Seite | Baugruppe | Bezeichnung |
|---|---|---|---|---|---|---|
| KRAFTSTOFFVORFILTER | 10 04 430 2 | (6) | 1 | XSK_Z480 | SK_Z48005 | SERVICE |
| KRAFTSTOFFVORFILTER | 10 22 282 0 | 1 | 1 | X1011989 | 10 11 989 1 | KRAFTSTOFFVORFILTERANBA |
| KRAFTSTOFFVORFILTERANBA | 10 11 989 1 | 200 | 1 | X1015207 | 10 15 207 7 | DIESELMOTOR |
| KRAMPE | 60 27 417 08 | 12 | 6 | 1 920 314 | 96 46 921 08 | KLEMMKASTEN VORM. |
| KRAMPE | 60 27 417 08 | 7 | 2 | 2 932 167 | 96 32 480 08 | KLEMMENLEISTE |
| KRAMPE | 60 27 417 08 | 296 | 6 | 3 930 492 | 96 20 966 08 | KLEMMKASTEN KPL. |
| KRANFUEHRERKABINE KPL. | 91 48 594 08 | 129 | 1 | | LTR 1100 -0 | LIEBHERR LTR 1100 |
| KRANFUEHRERKABINE VORM | 91 48 769 08 | 1 | 1 | 2 500 | 91 48 594 08 | KRANFUEHRERKABINE KPL. |
| KREUZLASCHE SCHWK. | 92 50 746 08 | 27 | 1 | 3 501 | 91 05 788 08 | DOPPELKLAPPSPITZE MECH. |
| KREUZSCHL.SCHR.DREHER 2 | 79 00 332 08 | 53 | 1 | 1 750 001 | 92 85 698 08 | GRUNDWERKZEUG |
| KRUEMMER 90° DI=130 GUMM | 10 09 996 9 | 251 | 1 | 2 681 | 91 28 102 08 | LUFTFILTERANLAGE |
| KUEHLER VORM. | 96 48 137 08 | 2 | 1 | 2 210 | 91 81 614 08 | ANTRIEBSAGGREGAT VORM. |
| KUEHLERGRILL | 96 26 301 08 | 20 | 1 | 2 510 018 | 96 44 046 08 | KUEHLERHAUBE KPL. |
| KUEHLERHAUBE | 96 32 114 08 | 10 | 1 | 2 510 018 | 96 44 046 08 | KUEHLERHAUBE KPL. |
| KUEHLERHAUBE KPL. | 96 44 046 08 | 1 | 1 | 2 510 100 | 96 44 750 08 | DREHBUEHNENVERKLEIDUN |
| KUEHLKOERPER 84X12X7,7 AL | 10 00 812 5 | 13 | 1 | 2 913 005 | 96 28 696 08 | INNENGEHAEUSE VORM. |
| KUEHLMITTELKRUEMMER AC | 90 79 471 | 1 | 1 | 9 079 472 | 90 79 472 | KUEHLMITTELKRUEMMER AN |
| KUEHLMITTELKRUEMMER AN | 90 79 472 | 382 | 1 | X1015207 | 10 15 207 7 | DIESELMOTOR |
| KUEHLWASSERENTLUEFTU | 10 11 550 2 | 387 | 1 | X1015207 | 10 15 207 7 | DIESELMOTOR |
| KUEHLWASSERLEITUNG 12X1 | 10 11 792 8 | 3 | 1 | X1011793 | 10 11 793 0 | ANBAUTEILE LUFTPRESSER |
| KUEHLWASSERLEITUNG 12X1 | 10 11 792 9 | 1 | 1 | X1011793 | 10 11 793 0 | ANBAUTEILE LUFTPRESSER |
| KUEHLWASSERSCHLAUCH DN | 11 62 176 9 | 251 | 4 | 2 200 | 91 81 095 08 | ANTRIEBSAGGREGAT KPL. |
| KUEHLWASSERSCHLAUCH DN | 10 87 308 9 | 9 | 0.05 | 2 540 | 91 45 984 08 | HEIZUNG OW |
| KUEHLWASSERSCHLAUCH DN | 11 62 177 2 | 252 | 2 | 2 200 | 91 81 095 08 | ANTRIEBSAGGREGAT KPL. |
| KUEHLWASSERSCHLAUCH D | 10 87 308 5 | 250 | 2.5 | 2 200 | 91 81 095 08 | ANTRIEBSAGGREGAT KPL. |
| KUGEL DIN 5401 3 | 61 07 063 08 | 6 | 1 | 5 114 794 | 51 14 794 08 | LASTHALTEVENTIL |
| KUGEL DIN 5401 6 G20 | 74 70 002 08 | 22 | 2 | X1087223 | 10 87 223 8 | WIPPZYLINDER |
| KUGELBOLZEN 10X25,59X2 | 10 00 442 6 | 5 | 1 | 9 074 507 | 90 74 507 | KIPPHEBEL VORM. |
| KUGELHAHN BKH12-L-10 A3C | 51 06 976 08 | 19 | 1 | 2 970 | 91 55 482 08 | HYDRAULIK |
| KUGELHAHN BKHU DN 10 | 57 17 236 08 | 30 | 1 | X1033367 | 10 33 367 2 | STEUERBLOCK |
| KUGELHAHNKOMBINATION DN | 10 33 368 6 | 20 | 1 | 2 970 | 91 55 482 08 | HYDRAULIK |
| KUGELKNOPF DIN 319 C40XM | 70 40 042 08 | 8 | 1 | 3 510 006 | 96 20 924 08 | KLAPPKONSOLE |
| KUGELKNOPF DIN 319 E 40 K | 11 00 722 3 | 9 | 1 | 6 923 097 | 69 23 097 08 | PEDALGEBER |
| KUGELSCHEIBE DIN 6319 17 4 | 10 87 586 3 | 40 | 1 | 3 510 100 | 91 49 246 08 | TRANSPORTHALTERUNG DKS |
| KUGELSCHEIBE DIN 6319 C 10 | 42 19 002 08 | 5 | 1 | X1011659 | 10 11 659 1 | EINSPRITZDUESE MIT BEFEST |
| KUGELSPERRBOLZEN NIROST | 70 40 085 08 | 4 | 2 | 2 440 | 91 52 288 08 | HILFSHUBWERK WINDE 2 |
| KUNSTLEDERVERKLEIDUNG 1 | 95 70 208 08 | 130 | 1 | 2 520 000 | 91 49 872 08 | KABINE VERGLAST |
| KUPPLUNG | 10 03 757 5 | 17 | 1 | 6 923 101 | 69 23 101 08 | SEILLAENGENGEBER |
| KUPPLUNG | 10 04 040 7 | (2) | 1 | 9 078 680 | 90 78 680 | KRAFTSTOFFFOERDERPUMP |
| KUPPLUNG DREHGEBER | 96 74 133 08 | (60) | 1 | 1 780 650 | 91 43 393 08 | ELEKTRIK DREHWERTGEBER |
| KUPPLUNG KPL. 34,3NM/4000 | 10 11 577 1 | 10 | 1 | X1011676 | 10 11 676 8 | KLIMAKOMPRESSOR |
| KUPPLUNGSANBAU | 10 11 578 0 | 2 | 1 | X1015211 | 10 15 211 6 | ANTRIEBSGRUPPE |
| KUPPLUNGSGABEL | 57 09 911 08 | 34 | 1 | 6 060 516 | 60 60 516 08 | GETRIEBENOCKENENDSCHAL |
| KUPPLUNGSHEBEL | 57 09 910 08 | 32 | 1 | 6 060 516 | 60 60 516 08 | GETRIEBENOCKENENDSCHAL |
| KUPPLUNGSMUFFE | 77 43 726 08 | 1 | 1 | 2 440 012 | 92 14 441 08 | ZENTRALSCHMIERANLAGE |
| KUPPLUNGSMUFFE B2 10-L | 51 15 084 08 | 14 | 1 | 2 971 | 91 50 610 08 | HYDRAULIK HILFSHUBWERK |
| KUPPLUNGSMUFFE B2 12-L | 51 15 058 08 | 21 | 2 | 2 970 | 91 55 482 08 | HYDRAULIK |
| KUPPLUNGSMUFFE B3 15-L | 51 15 005 08 | 18 | 1 | 2 971 | 91 50 610 08 | HYDRAULIK HILFSHUBWERK |
| KUPPLUNGSMUFFE B8 38-S | 51 15 122 08 | 10 | 2 | 2 971 | 91 50 610 08 | HYDRAULIK HILFSHUBWERK |
| KUPPLUNGSSTECKER | 77 43 727 08 | 2 | 2 | 2 440 012 | 92 14 441 08 | ZENTRALSCHMIERANLAGE |
| KUPPLUNGSSTECKER B2 10-L | 51 15 083 08 | 16 | 1 | 2 971 | 91 50 610 08 | HYDRAULIK HILFSHUBWERK |
| KUPPLUNGSSTECKER B2 10-L | 51 15 150 08 | 11 | 2 | 2 975 152 | 91 05 737 08 | HYDRAULIK TELE |
| KUPPLUNGSSTECKER B3 15-L | 51 15 004 08 | 20 | 1 | 2 971 | 91 50 610 08 | HYDRAULIK HILFSHUBWERK |
| KUPPLUNGSSTECKER B8 38- | 51 15 123 08 | 12 | 2 | 2 971 | 91 50 610 08 | HYDRAULIK HILFSHUBWERK |
| KURBELGEHAEUSE KPL. R-M | 10 11 577 7 | 10 | 1 | X1012193 | 10 12 193 2 | GRUNDMOTOR |
| KURBELGEHAEUSE R-MOTOR | 10 11 577 6 | 1 | 1 | X1011577 | 10 11 577 7 | KURBELGEHAEUSE KPL. |
| KURBELGEHAEUSEENTLUEFT | 10 11 914 1 | 16 | 1 | X1015207 | 10 15 207 7 | DIESELMOTOR |
| KURBELGEHAEUSEENTLUEFT | 90 75 483 | 1 | 1 | X1011914 | 10 11 914 1 | KURBELGEHAEUSEENTLUEF |
| KURBELWELLE MIT ZAHNRAD | 90 78 832 | 50 | 1 | X1012193 | 10 12 193 2 | GRUNDMOTOR |
| KURBELWELLE R-MOTORXD93 | 10 13 117 7 | 1 | 1 | 9 078 832 | 90 78 832 | KURBELWELLE MIT ZAHNRAD |

| Bezeichnung | Artikel | Pos. | Menge | Seite | Baugruppe | Bezeichnung |
|---|---|---|---|---|---|---|
| KURBELWELLENANBAUTEILE | 90 80 591 | 53 | 1 | X1015207 | 10 15 207 7 | DIESELMOTOR |
| KURBELWELLENDICHTUNG | 90 75 133 | 52 | 1 | X1012193 | 10 12 193 2 | GRUNDMOTOR |
| KURBELWELLENLAGERSATZ | 90 76 457 | 51 | 1 | X1012193 | 10 12 193 2 | GRUNDMOTOR |
| KURVENROLLE | 74 66 919 08 | 15 | 4 | 2 522 | 91 10 037 08 | TUER KPL. |
| LADELUFTKRUEMMER | 90 79 581 | 4 | 1 | X1011816 | 10 11 816 1 | VERBINDUNGSLEITUNG ANBA |
| LADELUFTROHR SPF | 97 36 412 08 | 200 | 1 | 2 210 | 91 81 614 08 | ANTRIEBSAGGREGAT VORM. |
| LADELUFTROHR SPF | 97 36 413 08 | 201 | 1 | 2 210 | 91 81 614 08 | ANTRIEBSAGGREGAT VORM. |
| LADESPANNUNGSREGLER | 91 70 947 08 | 456 | 1 | | LTR 1100 -0 | LIEBHERR LTR 1100 |
| LAENGENGEBER | 57 17 939 08 | 1 | 1 | 6 923 101 | 69 23 101 08 | SEILLAENGENGEBER |
| LAENGENMESSKABEL 5 X 0,38 | 57 18 518 08 | 3 | 1 | 6 923 101 | 69 23 101 08 | SEILLAENGENGEBER |
| LAGER | 10 00 971 5 | 23 | 2 | 5 530 022 | 55 30 022 08 | WASSERHEIZGERAET |
| LAGER GUMMI | 72 69 114 08 | 2 | 1 | 2 500 021 | 92 10 666 08 | LAGERBOCK VORM. |
| LAGER GUMMI | 72 69 114 08 | 2 | 1 | 2 500 022 | 92 10 661 08 | LAGERBOCK VORM. |
| LAGER GUMMI | 72 69 114 08 | 2 | 1 | 2 500 023 | 92 10 663 08 | LAGERBOCK VORM. |
| LAGERABDECKRING | 74 72 584 01 | 4 | 1 | 9 330 748 | 93 30 748 01 | DREHWERKANTRIEB |
| LAGERABDECKRING | 74 72 725 01 | 19 | 1 | 9 387 596 | 93 87 596 01 | SEILTROMMEL |
| LAGERBOCK | 55 20 751 08 | 110 | 1 | 2 680 | 91 53 225 08 | ABGASANLAGE KPL. |
| LAGERBOCK | 97 30 061 08 | 1 | 1 | 2 500 021 | 92 10 666 08 | LAGERBOCK VORM. |
| LAGERBOCK 40x115x42 ALMG | 97 03 651 08 | 10 | 2 | 2 200 | 91 81 095 08 | ANTRIEBSAGGREGAT KPL. |
| LAGERBOCK GGG40.3 SPF | 38 00 346 08 | 1 | 1 | 2 500 022 | 92 10 661 08 | LAGERBOCK VORM. |
| LAGERBOCK GGG40.3 SPF | 38 00 347 08 | 1 | 1 | 2 500 023 | 92 10 663 08 | LAGERBOCK VORM. |
| LAGERBOCK SCHWK. FE//ZNNI | 92 71 525 08 | 4 | 1 | 2 500 | 91 48 594 08 | KRANFUEHRERKABINE KPL. |
| LAGERBOCK SCHWK. FE//ZNNI | 92 71 528 08 | 3 | 1 | 2 500 | 91 48 594 08 | KRANFUEHRERKABINE KPL. |
| LAGERBOCK SCHWK.HI.LI. | 96 30 573 08 | (1) | 1 | 2 210 | 91 81 614 08 | ANTRIEBSAGGREGAT VORM. |
| LAGERBOCK SCHWK.HI.RE. | 96 30 137 08 | (1) | 1 | 2 210 | 91 81 614 08 | ANTRIEBSAGGREGAT VORM. |
| LAGERBOCK SPF | 97 36 414 08 | (1) | 1 | 2 210 | 91 81 614 08 | ANTRIEBSAGGREGAT VORM. |
| LAGERBOCK VORM. | 92 10 661 08 | 7 | 1 | 2 501 000 | 91 48 769 08 | KRANFUEHRERKABINE VORM |
| LAGERBOCK VORM. | 92 10 663 08 | 10 | 1 | 2 501 000 | 91 48 769 08 | KRANFUEHRERKABINE VORM |
| LAGERBOCK VORM. | 92 10 666 08 | 7 | 1 | 2 500 | 91 48 594 08 | KRANFUEHRERKABINE KPL. |
| LAGERBOCK VORM. | 96 30 133 08 | 3 | 2 | 2 210 | 91 81 614 08 | ANTRIEBSAGGREGAT VORM. |
| LAGERBOCK VORM.HI.LI. | 96 30 572 08 | 5 | 1 | 2 210 | 91 81 614 08 | ANTRIEBSAGGREGAT VORM. |
| LAGERBOCK VORM.HI.RE. | 96 30 135 08 | 4 | 1 | 2 210 | 91 81 614 08 | ANTRIEBSAGGREGAT VORM. |
| LAGERBOLZEN | 59 10 632 08 | 35 | 1 | 2 520 000 | 91 49 872 08 | KABINE VERGLAST |
| LAGERBUCHSE 195X117 GZ- | 70 43 388 08 | 2 | 2 | 3 101 | 91 60 312 08 | ANLENKSTUECK VORM. |
| LAGERBUCHSE 60X65X28 GLY | 98 88 259 | 12 | 6 | X1011577 | 10 11 577 6 | KURBELGEHAEUSE |
| LAGERDECKEL 31CrMoV9 | 90 72 908 | 3 | 1 | 9 072 906 | 90 72 906 | ZWISCHENRAD KPL. |
| LAGERGEHAEUSE VORM. | 90 78 963 | 1 | 1 | 9 078 962 | 90 78 962 | NEBENABTRIEB VORM. |
| LAGERPLATTE 12X70X192 PA6 | 28 30 942 08 | 25 | 2 | 3 105 000 | 91 62 546 08 | TELESKOP 4 VORM. |
| LAGERPLATTE 12X70X192 PA6 | 28 30 942 08 | 25 | 2 | 3 106 000 | 91 60 313 08 | TELESKOP 5 VORM. |
| LAGERPLATTE 12X70X202 PA6 | 28 30 939 08 | 25 | 2 | 3 102 000 | 91 62 543 08 | TELESKOP 1 VORM. |
| LAGERPLATTE 12X70X202 PA6 | 28 30 939 08 | 25 | 2 | 3 103 000 | 91 62 544 08 | TELESKOP 2 VORM. |
| LAGERPLATTE 12X70X202 PA6 | 28 30 939 08 | 25 | 2 | 3 104 000 | 91 62 545 08 | TELESKOP 3 VORM. |
| LAGERPLATTE 12x105x290 P | 28 30 944 08 | 46 | 2 | 3 101 | 91 60 312 08 | ANLENKSTUECK VORM. |
| LAGERPLATTE 12x105x290 P | 28 30 944 08 | 46 | 2 | 3 102 000 | 91 62 543 08 | TELESKOP 1 VORM. |
| LAGERPLATTE 14X105X290 P | 28 30 943 08 | 45 | 2 | 3 101 | 91 60 312 08 | ANLENKSTUECK VORM. |
| LAGERPLATTE 14X105X290 P | 28 30 943 08 | 45 | 2 | 3 102 000 | 91 62 543 08 | TELESKOP 1 VORM. |
| LAGERPLATTE 14X105X290 P | 28 30 943 08 | 45 | 4 | 3 103 000 | 91 62 544 08 | TELESKOP 2 VORM. |
| LAGERPLATTE 14X70X192 PA6 | 28 30 941 08 | 24 | 2 | 3 105 000 | 91 62 546 08 | TELESKOP 4 VORM. |
| LAGERPLATTE 14X70X192 PA6 | 28 30 941 08 | 24 | 2 | 3 106 000 | 91 60 313 08 | TELESKOP 5 VORM. |
| LAGERPLATTE 14x70x202 PA6 | 28 30 938 08 | 24 | 2 | 3 102 000 | 91 62 543 08 | TELESKOP 1 VORM. |
| LAGERPLATTE 14x70x202 PA6 | 28 30 938 08 | 24 | 2 | 3 103 000 | 91 62 544 08 | TELESKOP 2 VORM. |
| LAGERPLATTE 14x70x202 PA6 | 28 30 938 08 | 24 | 2 | 3 104 000 | 91 62 545 08 | TELESKOP 3 VORM. |
| LAGERPLATTE 18x105x290 P | 28 30 947 08 | 45 | 2 | 3 104 000 | 91 62 545 08 | TELESKOP 3 VORM. |
| LAGERPLATTE 18x105x290 P | 28 30 947 08 | 45 | 2 | 3 105 000 | 91 62 546 08 | TELESKOP 4 VORM. |
| LAGERPLATTE 53X57X192 PA6 | 28 30 937 08 | 23 | 2 | 3 102 000 | 91 62 543 08 | TELESKOP 1 VORM. |
| LAGERPLATTE 53X57X192 PA6 | 28 30 937 08 | 23 | 2 | 3 103 000 | 91 62 544 08 | TELESKOP 2 VORM. |
| LAGERPLATTE 53X57X192 PA6 | 28 30 937 08 | 23 | 2 | 3 104 000 | 91 62 545 08 | TELESKOP 3 VORM. |
| LAGERPLATTE 53X57X192 PA6 | 28 30 937 08 | 23 | 2 | 3 105 000 | 91 62 546 08 | TELESKOP 4 VORM. |
| LAGERPLATTE 53X57X192 PA6 | 28 30 937 08 | 23 | 2 | 3 106 000 | 91 60 313 08 | TELESKOP 5 VORM. |
| LAGERPLATTE 53X87X200 PA6 | 28 30 936 08 | 22 | 2 | 3 102 000 | 91 62 543 08 | TELESKOP 1 VORM. |

| Bezeichnung | Artikel | Pos. | Menge | Seite | Baugruppe | Bezeichnung |
|---|---|---|---|---|---|---|
| LAGERPLATTE 53X87X200 PA6 | 28 30 936 08 | 22 | 2 | 3 103 000 | 91 62 544 08 | TELESKOP 2 VORM. |
| LAGERPLATTE 53X87X200 PA6 | 28 30 936 08 | 22 | 2 | 3 104 000 | 91 62 545 08 | TELESKOP 3 VORM. |
| LAGERPLATTE 53X87X200 PA6 | 28 30 936 08 | 22 | 2 | 3 105 000 | 91 62 546 08 | TELESKOP 4 VORM. |
| LAGERPLATTE 53X87X200 PA6 | 28 30 936 08 | 22 | 2 | 3 106 000 | 91 60 313 08 | TELESKOP 5 VORM. |
| LAGERPLATTE 75X140X190 P | 28 30 940 08 | 12 | 2 | 3 105 000 | 91 62 546 08 | TELESKOP 4 VORM. |
| LAGERPLATTE 75X140X190 P | 28 30 940 08 | 12 | 2 | 3 106 000 | 91 60 313 08 | TELESKOP 5 VORM. |
| LAGERPLATTE 75X140X200 P | 28 30 672 08 | 12 | 2 | 3 103 000 | 91 62 544 08 | TELESKOP 2 VORM. |
| LAGERPLATTE 75X140X200 P | 28 30 672 08 | 12 | 2 | 3 104 000 | 91 62 545 08 | TELESKOP 3 VORM. |
| LAGERPLATTE 75X140X230 P | 28 30 935 08 | 12 | 2 | 3 102 000 | 91 62 543 08 | TELESKOP 1 VORM. |
| LAGERRING | 57 01 097 08 | 3 | 1 | 5 701 090 | 57 01 090 08 | TRIEBWERK |
| LAGERRING | 92 76 017 01 | 15 | 1 | 9 387 598 | 93 87 598 01 | PLANETENGETRIEBE |
| LAGERRING | 92 76 017 01 | 15 | 1 | 9 686 071 | 96 86 071 01 | PLANETENGETRIEBE |
| LAGERRING | 94 42 439 03 | 5 | 1 | 9 444 410 | 94 44 410 03 | FAHRANTRIEB |
| LAMELLENRINGSATZ 62,0/56,4 | 10 00 844 8 | 11 | 4 | X1011585 | 10 11 585 1 | DS ZYLINDERKOPF |
| LAMELLENRINGSATZ 62,0/56,4 | 10 00 844 8 | 11 | 4 | X1011585 | 10 11 585 3 | DS ZYLINDERKOPF KPL. |
| LAMELLENSTOPFEN PE-LLD | 77 90 205 08 | 11 | 2 | 2 510 200 | 96 41 258 08 | DREHBUEHNENVERKLEIDUN |
| LAMELLENTRAEGER | 92 77 167 01 | 70 | 1 | 9 330 748 | 93 30 748 01 | DREHWERKANTRIEB |
| LAMELLENTRAEGER | 93 87 609 01 | 65 | 1 | 9 686 071 | 96 86 071 01 | PLANETENGETRIEBE |
| LAMELLENTRAEGER | 94 44 432 03 | 65 | 1 | 9 444 410 | 94 44 410 03 | FAHRANTRIEB |
| LAMPE | 60 02 233 | (1) | 2 | 2 533 001 | 96 41 568 08 | ARMATURENBRETT DACH VO |
| LAMPENFASSUNG | 60 61 445 08 | 8 | 2 | 2 530 002 | 96 19 448 08 | ARMATURENBRETT VORM.V |
| LAMPENFASSUNG | 60 61 445 08 | 26 | 2 | 2 531 001 | 96 36 738 08 | ELEKTRIK ARMLEHNE LI. |
| LAMPENFASSUNG | 60 61 445 08 | 26 | 2 | 2 531 002 | 96 36 739 08 | ELEKTRIK ARMLEHNE RE. |
| LASTHAKEN 10E SPF | 91 42 310 08 | 310 | 1 | | LTR 1100 -0 | LIEBHERR LTR 1100 |
| LASTHALTEVENTIL | 51 14 794 08 | 3 | 1 | 2 975 038 | 91 26 492 08 | ZUSATZHYDRAULIK KLAPPSPI |
| LASTHALTEVENTIL 280BAR 10 | 10 21 831 0 | 26 | 1 | 2 970 | 91 55 482 08 | HYDRAULIK |
| LASTHALTEVENTILEINSATZ | 11 00 267 8 | 7 | 1 | 5 114 794 | 51 14 794 08 | LASTHALTEVENTIL |
| LAUFROLLE KPL 200X208 9826 | 10 22 581 0 | 8 | 12 | 1 100 205 | 96 51 633 08 | RAUPENTRAEGER KPL.RE. |
| LAUFROLLE KPL 200X208 9826 | 10 22 581 0 | 8 | 12 | 1 100 210 | 96 51 634 08 | RAUPENTRAEGER KPL.LI. |
| LAUFROLLE RD85X84 PA6G | 74 90 010 08 | 60 | 2 | 3 501 | 91 05 788 08 | DOPPELKLAPPSPITZE MECH. |
| LAUTSPRECHER OVAL 12V 90 | 61 40 307 08 | 19 | 1 | 2 533 003 | 96 28 388 08 | ELEKTRIK ANBAUTEILE KABIN |
| LECKOELRUECKLAUF | 10 11 569 6 | 214 | 1 | X1015207 | 10 15 207 7 | DIESELMOTOR |
| LEERGEHAEUSE | 61 10 011 08 | 2 | 1 | 2 913 100 | 91 23 538 08 | BAUGRUPPENTRAEGER |
| LEERGEHAEUSE 120X220X80 | 97 18 849 08 | 5 | 1 | 3 930 492 | 96 20 966 08 | KLEMMKASTEN KPL. |
| LEERGEHAEUSE 160X260X90 | 97 18 863 08 | 7 | 1 | 3 930 718 | 96 56 248 08 | KLEMMKASTEN KPL. |
| LEERGEHAEUSE 440X80X70 | 60 66 523 08 | 7 | 1 | 2 920 574 | 96 36 055 08 | BEDIENPULT BALLAST |
| LEERGEHAEUSE 560X370X70 | 60 66 537 08 | 7 | 1 | 2 920 904 | 96 41 093 08 | STEUERPULT ABSTUETZUNG |
| LEERGEHAEUSE GEBOHRT 12 | 97 71 376 08 | 1 | 1 | 1 920 314 | 96 46 921 08 | KLEMMKASTEN VORM. |
| LEITER ANBAU | 91 75 085 08 | 1 | 1 | 3 750 | 91 75 084 08 | WERKZEUG KLAPPSPITZE |
| LEITERPLATTE SPF | 66 10 179 08 | 4 | 1 | 2 922 001 | 92 84 311 08 | BUSPLATINE |
| LEITERSCHIENE 15X3X1000 | 60 21 018 08 | 1 | 0.095 | 2 932 215 | 92 26 129 08 | VERTEILER MASSE |
| LEITRAD | 74 90 636 14 | 1 | 1 | 1 100 214 | 74 90 137 14 | LEITRAD KPL |
| LEITRAD KPL B7X710 | 74 90 137 14 | 1 | 1 | 1 100 212 | 79 02 561 14 | LEITRADEINHEIT KPL |
| LEITRADEINHEIT KPL B7X710 | 79 02 561 14 | 2 | 1 | 1 100 205 | 96 51 633 08 | RAUPENTRAEGER KPL.RE. |
| LEITRADEINHEIT KPL B7X710 | 79 02 561 14 | 2 | 1 | 1 100 210 | 96 51 634 08 | RAUPENTRAEGER KPL.LI. |
| LEITUNG W1067 | 96 41 095 08 | 5 | 1 | 2 920 904 | 96 41 093 08 | STEUERPULT ABSTUETZUNG |
| LEITUNG W157E | 92 93 436 08 | 5 | 1 | 2 920 585 | 91 01 520 08 | ELEKTRIK BLITZLEUCHTE |
| LEITUNG W168 | 96 33 229 08 | 14 | 1 | 2 920 013 | 96 41 599 08 | KABELLISTE EL.ANLAGE |
| LEITUNG W252 | 96 36 056 08 | 5 | 1 | 2 920 574 | 96 36 055 08 | BEDIENPULT BALLAST |
| LEITUNG W291 | 96 29 469 08 | 11 | 1 | 2 920 083 | 96 31 039 08 | ELEKTRIK BATTERIEKASTEN |
| LEITUNG W294 | 96 29 470 08 | 14 | 1 | 2 920 083 | 96 31 039 08 | ELEKTRIK BATTERIEKASTEN |
| LEITUNG W3 | 92 39 303 08 | 10 | 1 | 2 920 083 | 96 31 039 08 | ELEKTRIK BATTERIEKASTEN |
| LEITUNG W306A | 92 06 423 08 | 14 | 1 | 2 780 800 | 91 15 191 08 | ELEKTRIK WINDE 2 |
| LEITUNG W325 | 92 73 180 08 | 15 | 1 | 2 780 800 | 91 15 191 08 | ELEKTRIK WINDE 2 |
| LEITUNG W456B | 92 07 808 08 | 420 | 1 | 3 930 204 | 92 07 741 08 | LEITUNGSTROMMEL KPL. |
| LEITUNG W608 | 96 56 249 08 | 270 | 1 | 3 930 718 | 96 56 248 08 | KLEMMKASTEN KPL. |
| LEITUNG W634 | 96 24 499 08 | 6 | 1 | 2 780 852 | 96 24 845 08 | GSM-MODUL VORM.LICCON 1 |
| LEITUNG W635X1050 | 92 12 112 08 | 10 | 4 | 2 932 042 | 96 68 587 08 | GRUNDAUFBAU |
| LEITUNG W636 | 92 26 706 08 | 11 | 1 | 2 932 042 | 96 68 587 08 | GRUNDAUFBAU |
| LEITUNG WL290 | 96 31 466 08 | 20 | 1 | 2 920 013 | 96 41 599 08 | KABELLISTE EL.ANLAGE |

| Bezeichnung | Artikel | Pos. | Menge | Seite | Baugruppe | Bezeichnung |
|---|---|---|---|---|---|---|
| LEITUNG WL292 | 92 12 258 08 | 22 | 1 | 2 920 013 | 96 41 599 08 | KABELLISTE EL.ANLAGE |
| LEITUNG WL451 | 96 20 967 08 | 270 | 1 | 3 930 492 | 96 20 966 08 | KLEMMKASTEN KPL. |
| LEITUNG WL456 | 96 37 698 08 | 250 | 1 | 3 930 718 | 96 56 248 08 | KLEMMKASTEN KPL. |
| LEITUNG WL500 | 96 22 209 08 | 5 | 1 | 3 931 032 | 96 20 959 08 | ELEKTRIK ANLENKSTUECK |
| LEITUNG WL502 | 96 20 961 08 | 7 | 1 | 3 931 100 | 96 20 960 08 | ELEKTRIK KOPFSTUECK |
| LEITUNG WL503 | 96 21 102 08 | 5 | 1 | 3 780 400 | 91 59 294 08 | ELEKTRIK 2.HUBENDSCHALTE |
| LEITUNG WL504 | 96 20 963 08 | 6 | 1 | 3 931 032 | 96 20 959 08 | ELEKTRIK ANLENKSTUECK |
| LEITUNG WL505 | 96 20 962 08 | 8 | 1 | 3 931 100 | 96 20 960 08 | ELEKTRIK KOPFSTUECK |
| LEITUNG WL550 | 92 72 494 08 | 4 | 1 | 3 930 523 | 96 43 943 08 | LEITUNGSTROMMEL |
| LEITUNG WL551 | 96 21 938 08 | 6 | 1 | 3 930 523 | 96 43 943 08 | LEITUNGSTROMMEL |
| LEITUNG WL602 | 96 37 697 08 | 220 | 1 | 3 930 718 | 96 56 248 08 | KLEMMKASTEN KPL. |
| LEITUNG WL609 | 92 07 849 08 | 290 | 1 | 3 930 492 | 96 20 966 08 | KLEMMKASTEN KPL. |
| LEITUNG WL631 | 92 07 890 08 | 61 | 1 | 2 920 013 | 96 41 599 08 | KABELLISTE EL.ANLAGE |
| LEITUNG WL632 | 96 38 781 08 | 62 | 1 | 2 920 013 | 96 41 599 08 | KABELLISTE EL.ANLAGE |
| LEITUNG WL643 | 96 37 699 08 | 260 | 1 | 3 930 718 | 96 56 248 08 | KLEMMKASTEN KPL. |
| LEITUNGSFILTER | 51 06 708 08 | 23 | 1 | 2 970 | 91 55 482 08 | HYDRAULIK |
| LEITUNGSHALTER POLYAMID | 70 42 805 08 | 18 | 1 | 2 515 007 | 96 42 014 08 | PODEST VORM. |
| LEITUNGSTROMMEL | 96 43 943 08 | 6 | 1 | 3 930 342 | 96 56 247 08 | ELEKTRIK ANLENKSTUECK |
| LEITUNGSTROMMEL 50M 9-P | 10 34 357 4 | 5 | 1 | 3 930 523 | 96 43 943 08 | LEITUNGSTROMMEL |
| LEITUNGSTROMMEL KPL. N1/B | 92 07 741 08 | 7 | 1 | 3 930 470 | 92 07 663 08 | ELEKTRIK AUSSCHUBMECHA |
| LEUCHTMELDER | 60 61 435 08 | 6 | 2 | 2 530 002 | 96 19 448 08 | ARMATURENBRETT VORM.V |
| LEUCHTMELDER | 60 61 435 08 | 24 | 3 | 2 531 001 | 96 36 738 08 | ELEKTRIK ARMLEHNE LI. |
| LEUCHTMELDER | 60 61 435 08 | 24 | 5 | 2 531 002 | 96 36 739 08 | ELEKTRIK ARMLEHNE RE. |
| LEUCHTSCHALTKONTAKTGEB | 60 61 447 08 | 14 | 1 | 2 531 001 | 96 36 738 08 | ELEKTRIK ARMLEHNE LI. |
| LEUCHTSCHALTKONTAKTGEB | 60 61 447 08 | 14 | 2 | 2 531 002 | 96 36 739 08 | ELEKTRIK ARMLEHNE RE. |
| LEUCHTTASTKONTAKTGEBER | 60 61 437 08 | 12 | 1 | 2 530 002 | 96 19 448 08 | ARMATURENBRETT VORM.V |
| LEUCHTTASTKONTAKTGEBER | 60 61 437 08 | 12 | 5 | 2 531 001 | 96 36 738 08 | ELEKTRIK ARMLEHNE LI. |
| LEUCHTTASTKONTAKTGEBER | 60 61 437 08 | 12 | 1 | 2 531 002 | 96 36 739 08 | ELEKTRIK ARMLEHNE RE. |
| LEUCHTTASTKONTAKTGEBER | 60 61 452 08 | 20 | 1 | 2 531 002 | 96 36 739 08 | ELEKTRIK ARMLEHNE RE. |
| LIBELLE | 71 40 008 08 | 10 | 2 | 1 400 200 | 91 53 791 08 | HYDRAULIK VORB. |
| LICCON KONSOLE LCD2 KOMP | 91 32 850 08 | 4 | 1 | 2 530 | 91 34 053 08 | ELEKTRIK ARMATUREN KRA |
| LINEARFUEHRUNG 04-420 V | 70 42 780 08 | 111 | 2 | 2 520 000 | 91 49 872 08 | KABINE VERGLAST |
| LINSENKOPFSCHRAUBE 4X10 | 10 87 579 5 | 24 | 1 | 5 530 022 | 55 30 022 08 | WASSERHEIZGERAET |
| LINSENSCHRAUBE M4X12 10. | 51 45 252 08 | 20 | 7 | 5 701 090 | 57 01 090 08 | TRIEBWERK |
| LOETOESE | 11 06 860 7 | (1) | 10 | 6 923 101 | 69 23 101 08 | SEILLAENGENGEBER |
| LORDOSENVENTIL | 57 14 949 08 | 30 | 1 | 7 741 079 | 77 41 079 08 | FAHRERSITZ |
| LUEFTER | 61 07 145 08 | 2 | 1 | 2 913 004 | 96 20 460 08 | GEHAEUSE VORM. |
| LUEFTER | 61 07 146 08 | 2 | 2 | 2 913 006 | 96 20 732 08 | LUEFTERBLECH VORM. |
| LUEFTER 24V | 10 35 483 7 | 3 | 1 | X1009734 | 10 09 734 5 | OEL-LUFTKUEHLER |
| LUEFTER 80X80X25 | 61 03 886 14 | 3 | 2 | 2 913 102 | 92 32 870 08 | LUEFTEREINHEIT |
| LUEFTERBLECH | 92 99 370 08 | 1 | 1 | 2 913 006 | 96 20 732 08 | LUEFTERBLECH VORM. |
| LUEFTERBLECH VORM. | 96 20 732 08 | 1 | 1 | 2 913 005 | 96 28 696 08 | INNENGEHAEUSE VORM. |
| LUEFTEREINHEIT | 92 32 870 08 | 11 | 1 | 2 913 100 | 91 23 538 08 | BAUGRUPPENTRAEGER |
| LUEFTERGEHAEUSE | 10 35 483 6 | 2 | 1 | X1009734 | 10 09 734 5 | OEL-LUFTKUEHLER |
| LUEFTERMASKE 1X286X173 D | 28 81 799 08 | 15 | 1 | 2 913 100 | 91 23 538 08 | BAUGRUPPENTRAEGER |
| LUFTANSAUGROHR ANBAU R | 10 11 707 2 | 220 | 1 | X1015207 | 10 15 207 7 | DIESELMOTOR |
| LUFTANSAUGROHR R-MOTOR | 10 11 707 0 | 1 | 1 | X1011707 | 10 11 707 2 | LUFTANSAUGROHR ANBAU |
| LUFTAUSSTROEMER D=98MM | 57 05 205 08 | 59 | 2 | 2 520 000 | 91 49 872 08 | KABINE VERGLAST |
| LUFTAUSSTROEMER D=98MM | 57 05 205 08 | 18 | 2 | 5 530 022 | 55 30 022 08 | WASSERHEIZGERAET |
| LUFTBEHAELTER DIN 74281 4 | 50 29 871 08 | 6 | 1 | 2 950 | 91 49 515 08 | DRUCKLUFTANLAGE OW |
| LUFTBEHAELTER EN 286-2 20L | 50 26 577 08 | 9 | 1 | 2 950 | 91 49 515 08 | DRUCKLUFTANLAGE OW |
| LUFTFILTER NLG15M³/MIN PP | 10 09 998 1 | 100 | 1 | 2 681 | 91 28 102 08 | LUFTFILTERANLAGE |
| LUFTFILTERANLAGE | 91 28 102 08 | 165 | 1 | | LTR 1100 -0 | LIEBHERR LTR 1100 |
| LUFTFUEHRUNG PE | 74 03 054 08 | 3 | 1 | 2 540 | 91 45 984 08 | HEIZUNG OW |
| LUFTHUTZE 1.5X473X733 DC | 97 36 381 08 | 10 | 1 | 2 681 | 91 28 102 08 | LUFTFILTERANLAGE |
| LUFTPRESSER 293CM3 | 57 00 161 | 1 | 1 | 9 080 294 | 90 80 294 | LUFTPRESSER VORM. |
| LUFTPRESSER VORM. 300CM | 90 80 294 | 330 | 1 | X1015207 | 10 15 207 7 | DIESELMOTOR |
| LUFTTROCKNER | 50 26 573 08 | 2 | 1 | 2 950 | 91 49 515 08 | DRUCKLUFTANLAGE OW |
| M-RING 122X112,1X2,5 MC32/ | 10 47 234 6 | 3 | 1 | X1046728 | 10 46 728 5 | KOLBEN KPL. |
| MAGNET 24V | 10 33 430 5 | (1) | 1 | X1010109 | 10 10 109 3 | DREHWERKSVENTIL |

| Bezeichnung | Artikel | Pos. | Menge | Seite | Baugruppe | Bezeichnung |
|---|---|---|---|---|---|---|
| MAGNET 24V | 10 66 309 4 | 1 | 1 | X1043033 | 10 43 033 1 | WEGESITZVENTIL |
| MAGNET 24V | 57 08 278 08 | 1 | 1 | 5 114 444 | 51 14 444 08 | WEGEVENTIL |
| MAGNET 24V | 57 11 355 08 | (21) | 1 | 2 975 152 | 91 05 737 08 | HYDRAULIK TELE |
| MAGNET 28V | 10 65 012 4 | (1) | 1 | X1047529 | 10 47 529 2 | VENTILBLOCK |
| MAGNETSPULE | 57 18 177 08 | 8 | 2 | 5 718 176 | 57 18 176 08 | WEGEVENTIL |
| MAGNETSPULE | 69 32 086 14 | 1 | 2 | 5 114 327 | 51 14 327 14 | WEGEVENTIL |
| MAGNETSPULE 1V | 57 02 797 08 | 10 | 1 | 7 029 305 | 70 29 305 | DRUCKBEGRENZUNGSVENTI |
| MAGNETSPULE 24V | 57 17 127 08 | (1) | 2 | 1 970 | 96 71 367 08 | HYDRAULIK UNTERWAGEN |
| MAGNETSPULE 24V | 57 18 188 08 | 1 | 1 | 5 717 378 | 57 17 378 08 | WEGEVENTIL |
| MAGNETSPULE 24V | 57 19 101 08 | 1 | 1 | 5 714 537 | 57 14 537 08 | DRUCKVENTIL |
| MAGNETSPULE 28V | 57 08 179 08 | 1 | 1 | 5 705 279 | 57 05 279 08 | WEGEVENTIL |
| MAGNETVENTIL 12.5BAR | 50 26 596 08 | 13 | 4 | 2 955 | 91 49 516 08 | PNEUMATIK KRANFUEHRERK |
| MAGNETVERSCHLUSS | 70 42 268 08 | 14 | 2 | 2 501 000 | 91 48 769 08 | KRANFUEHRERKABINE VORM |
| MANOMETERANSCHLUSS | 47 09 004 08 | 49 | 1 | 2 520 000 | 91 49 872 08 | KABINE VERGLAST |
| MANOMETERANSCHLUSS M | 47 09 003 08 | 610 | 1 | 2 955 | 91 49 516 08 | PNEUMATIK KRANFUEHRERK |
| MASSENAUSGLEICH ANBAU | 90 74 165 | 90 | 1 | X1015207 | 10 15 207 7 | DIESELMOTOR |
| MASSEVERBINDUNGSBLECH | 90 80 911 | 4 | 1 | 9 078 314 | 90 78 314 | HEIZFLANSCH ANBAU |
| MASTNASE | 91 54 159 08 | 356 | 1 | | LTR 1100 -0 | LIEBHERR LTR 1100 |
| MASTNASE SCHWK. | 92 86 596 08 | 1 | 1 | 3 511 006 | 96 45 029 08 | MASTNASE VORM. |
| MASTNASE VORM. | 96 45 029 08 | 1 | 1 | 3 511 | 91 54 159 08 | MASTNASE |
| MECH.BEFESTIGUNGSTEILE | 96 22 207 08 | 99 | 1 | 2 970 | 91 55 482 08 | HYDRAULIK |
| MECH.BEFESTIGUNGSTEILE | 96 36 804 08 | 99 | 1 | 2 950 | 91 49 515 08 | DRUCKLUFTANLAGE OW |
| MECH.BEFESTIGUNGSTEILE | 96 46 240 08 | 99 | 1 | 2 971 | 91 50 610 08 | HYDRAULIK HILFSHUBWERK |
| MECH.TEILE VERSANDMONT | 91 52 291 08 | 175 | 1 | | LTR 1100 -0 | LIEBHERR LTR 1100 |
| MEGI-ANSCHLAGPUFFER 50X | 72 66 158 08 | 146 | 1 | 2 520 000 | 91 49 872 08 | KABINE VERGLAST |
| MEGIPUFFER | 72 66 122 08 | 26 | 2 | 2 510 200 | 96 41 258 08 | DREHBUEHNENVERKLEIDUN |
| MEGIPUFFER | 72 66 122 08 | 7 | 2 | 2 515 007 | 96 42 014 08 | PODEST VORM. |
| MEGIPUFFER 20X15-M6 NR 55 | 72 69 073 08 | 104 | 2 | 2 510 100 | 96 44 750 08 | DREHBUEHNENVERKLEIDUN |
| MEGIPUFFER 20X15-M6 NR 55 | 72 69 073 08 | 19 | 4 | 2 510 200 | 96 41 258 08 | DREHBUEHNENVERKLEIDUN |
| MEGIPUFFER E75-40-5M16 | 72 66 179 08 | 103 | 1 | 3 501 | 91 05 788 08 | DOPPELKLAPPSPITZE MECH. |
| MEISTERSCHALTER ST2000- | 60 60 950 08 | 4 | 1 | 2 531 001 | 96 36 738 08 | ELEKTRIK ARMLEHNE LI. |
| MEISTERSCHALTER ST2000- | 60 60 950 08 | 4 | 1 | 2 531 002 | 96 36 739 08 | ELEKTRIK ARMLEHNE RE. |
| MEMBRAN-DURCHFUEHRUN | 60 27 173 08 | 111 | 5 | 2 210 008 | 96 48 137 08 | KUEHLER VORM. |
| MEMBRAN-DURCHFUEHRUN | 60 27 173 08 | 106 | 1 | 2 510 100 | 96 44 750 08 | DREHBUEHNENVERKLEIDUN |
| MEMBRANSPEICHER 0,075L 40 | 51 06 451 08 | 39 | 1 | 2 970 | 91 55 482 08 | HYDRAULIK |
| MEMBRANSPEICHER 0,7L 25 | 51 06 446 08 | 17 | 1 | 2 970 | 91 55 482 08 | HYDRAULIK |
| MEMBRANTUELLE 29/37/44 | 55 30 278 08 | 110 | 1 | 2 210 008 | 96 48 137 08 | KUEHLER VORM. |
| MESSANSCHLUSS BMA3 6S | 47 56 015 08 | 632 | 9 | 2 970 | 91 55 482 08 | HYDRAULIK |
| MESSANSCHLUSS BMA3 6S | 47 56 015 08 | 626 | 1 | 2 971 | 91 50 610 08 | HYDRAULIK HILFSHUBWERK |
| MESSANSCHLUSS EMA3 G1/4 | 47 56 026 08 | 644 | 3 | 2 970 | 91 55 482 08 | HYDRAULIK |
| MESSERTRENNKLEMME 0,2-2 | 60 27 616 08 | 2 | 2 | 2 932 167 | 96 32 480 08 | KLEMMENLEISTE |
| MESSKUPPLUNG SPF | 47 56 033 08 | 54 | 9 | 2 970 | 91 55 482 08 | HYDRAULIK |
| MESSKUPPLUNG SPF | 47 56 033 08 | 23 | 1 | 2 971 | 91 50 610 08 | HYDRAULIK HILFSHUBWERK |
| MESSSCHLAUCH DN2 1000 | 47 09 018 08 | 57 | 2 | 2 970 | 91 55 482 08 | HYDRAULIK |
| MESSSCHLAUCH DN2 4000 | 47 09 017 08 | 59 | 1 | 2 970 | 91 55 482 08 | HYDRAULIK |
| MESSSTREIFEN | 11 08 184 1 | 6 | 1 | 2 780 870 | 91 70 947 08 | LADESPANNUNGSREGLER |
| MESSSTUTZEN 12S M20X1,5 C | 74 09 922 | 754 | 1 | 1 970 | 96 71 367 08 | HYDRAULIK UNTERWAGEN |
| MESSSTUTZEN DKO 10L | 51 06 290 08 | 604 | 7 | 2 970 | 91 55 482 08 | HYDRAULIK |
| MESSSTUTZEN DKO 10L | 51 06 290 08 | 624 | 2 | 2 971 | 91 50 610 08 | HYDRAULIK HILFSHUBWERK |
| MESSSTUTZEN DKO 10S M18 | 56 07 617 | 755 | 2 | 1 970 | 96 71 367 08 | HYDRAULIK UNTERWAGEN |
| MESSSTUTZEN M14X1,5 | 56 07 616 | 707 | 1 | 1 423 101 | 99 26 462 14 | JACK-UP SYSTEM |
| METALLGUMMISCHIENE X270 | 97 73 088 08 | 3 | 1 | 2 790 901 | 91 54 183 08 | AUSSTEIFUNG |
| MIKROSCHALTER | 10 33 559 6 | 3 | 4 | 6 060 950 | 60 60 950 08 | MEISTERSCHALTER |
| MINIMESS-SCHLAUCH 3200 | 51 05 013 08 | 58 | 2 | 2 970 | 91 55 482 08 | HYDRAULIK |
| MINIMESS-SCHLAUCH 3200 | 51 05 013 08 | 22 | 1 | 2 971 | 91 50 610 08 | HYDRAULIK HILFSHUBWERK |
| MITNEHMER | 10 01 472 9 | 7 | 1 | X1032706 | 10 32 706 5 | ELEKTROPUMPE |
| MITTELTEIL BEARBEITUNG | 10 22 299 9 | 1 | 1 | 1 100 215 | 99 20 783 14 | MITTELTEIL |
| MITTELTEIL KPL. | 99 20 783 14 | 4 | 1 | 1 100 200 | 96 72 944 08 | UNTERWAGEN KPL. |
| MITTELZAPFEN | 57 01 105 08 | 3 | 1 | 5 701 095 | 57 01 095 08 | TRIEBWERK |
| MONTAGEBOLZEN | 10 67 520 5 | 18 | 1 | 6 923 101 | 69 23 101 08 | SEILLAENGENGEBER |

| Bezeichnung | Artikel | Pos. | Menge | Seite | Baugruppe | Bezeichnung |
|---|---|---|---|---|---|---|
| MONTAGEPLATTE | 59 16 694 08 | 5 | 1 | 2 540 | 91 45 984 08 | HEIZUNG OW |
| MONTAGETEILE | 96 50 675 08 | 2 | 1 | 1 740 | 91 56 353 08 | ZENTRALBALLAST |
| MONTAGETEILE DREHBUEHN | 91 51 080 08 | 103 | 1 | | LTR 1100 -0 | LIEBHERR LTR 1100 |
| MONTAGETEILE LWE | 96 46 363 08 | 3 | 1 | 1 100 | 91 71 033 08 | UNTERWAGEN KPL.M.SCHNEL |
| MONTAGEWERKZEUGKASTE | 79 00 454 08 | 1 | 1 | 1 750 001 | 92 85 698 08 | GRUNDWERKZEUG |
| MOTORFLANSCH | 93 89 964 01 | 85 | 1 | 9 330 748 | 93 30 748 01 | DREHWERKANTRIEB |
| MOTORFLANSCH 60X345/190R | 94 44 433 03 | 80 | 1 | 9 444 410 | 94 44 410 03 | FAHRANTRIEB |
| MOTORFLANSCH A2FM 125 | 96 86 073 01 | 75 | 1 | 9 686 071 | 96 86 071 01 | PLANETENGETRIEBE |
| MOTORGEHAEUSE | 10 01 469 2 | 3 | 1 | X1032706 | 10 32 706 5 | ELEKTROPUMPE |
| MOTORGEHAEUSE | 10 49 392 0 | 1 | 1 | X1032706 | 10 32 706 5 | ELEKTROPUMPE |
| MOTORHEBEL | 59 10 630 08 | 42 | 1 | 2 520 000 | 91 49 872 08 | KABINE VERGLAST |
| MOTORREGELUNGSENSORIK | 10 11 969 8 | 581 | 1 | X1015207 | 10 15 207 7 | DIESELMOTOR |
| MOTORSTEUERGERAET LH- | 10 12 389 0 | 570 | 1 | X1015207 | 10 15 207 7 | DIESELMOTOR |
| MUTTER | 10 21 961 8 | 2 | 1 | 7 029 305 | 70 29 305 | DRUCKBEGRENZUNGSVENTI |
| MUTTER | 70 27 459 | (2) | 2 | 1 970 | 96 71 367 08 | HYDRAULIK UNTERWAGEN |
| MUTTER M10 | 73 81 781 23 | 6 | 1 | 9 074 507 | 90 74 507 | KIPPHEBEL VORM. |
| MUTTER M20X1 VERZ | 59 10 640 08 | 40 | 2 | 2 520 000 | 91 49 872 08 | KABINE VERGLAST |
| MUTTER UNF7/8X14 13.9 | 10 51 504 8 | 5 | 248 | 1 300 006 | 91 89 127 14 | RAUPENKETTE |
| NABE 42CrMo4+N+QT | 92 67 273 | 4 | 1 | 9 072 593 | 90 72 593 | FLANSCH VORM. |
| NABE 42CrMo4+N+QT | 92 67 273 | 13 | 1 | 9 075 541 | 90 75 541 | SCHMIEROELPUMPE VORM. |
| NAEHERUNGSSCHALTER BER | 10 09 761 3 | 1 | 1 | X1100291 | 11 00 291 4 | VERTEILERKOMBINATION |
| NAEHERUNGSSCHALTER BER | 57 13 188 08 | 7 | 1 | 3 930 464 | 92 95 081 08 | GEBERANBAU AUSSCHUBM |
| NAEHERUNGSSCHALTER BER | 69 27 015 08 | 10 | 2 | 2 920 407 | 92 11 635 08 | ELEKTRIK DREHWERK |
| NAEHERUNGSSCHALTER BER | 69 27 015 08 | 10 | 2 | 2 920 554 | 96 19 338 08 | ELEKTRIK DREHBUEHNENARR |
| NEBENABTRIEB ANBAU | 10 11 997 6 | 654 | 1 | X1015207 | 10 15 207 7 | DIESELMOTOR |
| NEBENABTRIEB ANBAU | 90 73 767 | 210 | 1 | X1012193 | 10 12 193 2 | GRUNDMOTOR |
| NEBENABTRIEB VORM. | 10 11 783 6 | 1 | 1 | 9 073 767 | 90 73 767 | NEBENABTRIEB ANBAU |
| NEBENABTRIEB VORM. | 90 78 962 | 1 | 1 | X1011997 | 10 11 997 6 | NEBENABTRIEB ANBAU |
| NEIGUNGSGEBER +/-5° X/Y SP | 69 23 081 08 | 10 | 1 | 1 920 307 | 96 46 916 08 | ELEKTRIK MITTELSTUECK |
| NETZTEIL 4 | 96 19 563 08 | 47 | 1 | 2 932 042 | 96 68 587 08 | GRUNDAUFBAU |
| NIVEAUSONDE L=50 5 V SPF | 10 22 814 3 | 2 | 1 | 2 200 048 | 96 32 140 08 | AUSGLEICHSBEHAELTER VO |
| NOCKENSCHALTER | 57 09 915 08 | 73 | 3 | 6 060 516 | 60 60 516 08 | GETRIEBENOCKENENDSCHAL |
| NOCKENWELLE KPL. R-MOT | 10 12 223 3 | 100 | 1 | X1012193 | 10 12 193 2 | GRUNDMOTOR |
| NOCKENWELLE R-MOTORXD | 10 12 256 0 | 1 | 1 | X1012223 | 10 12 223 3 | NOCKENWELLE KPL. |
| NOCKENWELLENBUCHSE | 91 32 281 | 11 | 2 | X1011577 | 10 11 577 6 | KURBELGEHAEUSE |
| NOCKENWELLENBUCHSE KS | 90 73 745 | 10 | 5 | X1011577 | 10 11 577 6 | KURBELGEHAEUSE |
| NOT-AUS TASTE | 60 61 441 08 | 47 | 1 | 2 533 001 | 96 41 568 08 | ARMATURENBRETT DACH VO |
| NOTHANDBETAETIGUNG | 11 00 781 7 | 3 | 1 | 5 717 378 | 57 17 378 08 | WEGEVENTIL |
| NUTMUTTER M38X1,5 | 57 01 101 08 | 9 | 1 | 5 701 090 | 57 01 090 08 | TRIEBWERK |
| NUTMUTTER M42X1,5 42CRM | 93 87 608 01 | 60 | 1 | 9 387 598 | 93 87 598 01 | PLANETENGETRIEBE |
| NUTMUTTER M42X1,5 42CRM | 93 87 608 01 | 60 | 1 | 9 686 071 | 96 86 071 01 | PLANETENGETRIEBE |
| NUTMUTTER M70X2 C45 | 92 75 302 01 | 13 | 1 | 9 330 748 | 93 30 748 01 | DREHWERKANTRIEB |
| NUTRING 125X133X6 | 79 02 724 14 | 3 | 1 | 1 100 213 | 74 90 654 14 | SPANNER HYDR KPL |
| O-RING | 10 04 040 0 | (3) | 1 | 9 078 680 | 90 78 680 | KRAFTSTOFFFOERDERPUMP |
| O-RING | 10 04 040 0 | 46 | 1 | X1011583 | 10 11 583 7 | DS DIESELMOTOR |
| O-RING 10,00X2,5 NBR90 | 10 33 738 1 | 7 | 1 | 5 106 976 | 51 06 976 08 | KUGELHAHN |
| O-RING 10,00X2,5 NBR90 | 10 33 738 1 | (1) | 2 | X1033367 | 10 33 367 2 | STEUERBLOCK |
| O-RING 100X5 80 FKM 610 | 10 02 210 1 | 5 | 1 | 9 077 279 | 90 77 279 | ANSCHLUSSSTUTZEN ANBAU |
| O-RING 10X2,2 NBR70 | 50 29 332 08 | (7) | 2 | 2 970 | 91 55 482 08 | HYDRAULIK |
| O-RING 110X3 NBR70 | 72 64 040 08 | 71 | 1 | 6 060 516 | 60 60 516 08 | GETRIEBENOCKENENDSCHAL |
| O-RING 120,50X3,53 75 FKM 17 | 73 81 912 | 60 | 1 | X1011583 | 10 11 583 7 | DS DIESELMOTOR |
| O-RING 120,50X3,53 75 FKM 17 | 73 81 912 | 12 | 1 | X1011801 | 10 11 801 3 | DS AGGREGATETRAEGER |
| O-RING 120,50X3,53 75 FKM 17 | 73 81 912 | 12 | 1 | X1011801 | 10 11 801 4 | DS AGGREGATETRAEGER |
| O-RING 125X2 VMQ 70 | 10 00 231 0 | 51 | 1 | X1011583 | 10 11 583 7 | DS DIESELMOTOR |
| O-RING 125X2 VMQ 70 | 10 00 231 0 | 10 | 1 | X1011793 | 10 11 793 0 | ANBAUTEILE LUFTPRESSER |
| O-RING 12X2 NBR70 | 70 42 748 08 | 5 | 4 | 2 501 022 | 96 34 184 08 | DECKEL KPL. |
| O-RING 12X2 NBR70 | 70 42 748 08 | 37 | 2 | 2 510 200 | 96 41 258 08 | DREHBUEHNENVERKLEIDUN |
| O-RING 12X2 NBR70 | 70 42 748 08 | 8 | 2 | X1047526 | 10 47 526 2 | ABSPERRORGAN |
| O-RING 12X2 NBR80 | 72 64 032 08 | 83 | 2 | 9 444 410 | 94 44 410 03 | FAHRANTRIEB |
| O-RING 133,07X1,78 NBR 70 | 10 09 920 8 | 32 | 1 | X1032706 | 10 32 706 5 | ELEKTROPUMPE |

| Bezeichnung | Artikel | Pos. | Menge | Seite | Baugruppe | Bezeichnung |
|---|---|---|---|---|---|---|
| O-RING 140 75 FKM 17939 | 10 00 649 9 | 4 | 2 | 9 073 083 | 90 73 083 | ZYLINDER |
| O-RING 140 75 FKM 17939 | 10 00 649 9 | 1 | 8 | X1011583 | 10 11 583 7 | DS DIESELMOTOR |
| O-RING 140X3 NBR70 | 57 01 637 08 | 5 | 1 | X1032706 | 10 32 706 5 | ELEKTROPUMPE |
| O-RING 14X2 FPM70 | 10 11 397 3 | 14 | 2 | 2 200 048 | 96 32 140 08 | AUSGLEICHSBEHAELTER VO |
| O-RING 14X3 NBR70 | 72 64 056 08 | 78 | 8 | 9 387 598 | 93 87 598 01 | PLANETENGETRIEBE |
| O-RING 15,50X2,00 FKM 80 | 10 11 397 5 | 58 | 1 | X1011583 | 10 11 583 7 | DS DIESELMOTOR |
| O-RING 15,50X2,00 FKM 80 | 10 11 397 5 | (2) | 1 | X1011969 | 10 11 969 7 | DRUCKGEBER ANBAU |
| O-RING 15,50X2,00 FKM 80 | 10 11 397 5 | 51 | 1 | X1011969 | 10 11 969 7 | DRUCKGEBER ANBAU |
| O-RING 15,5X2.5 NBR70 | 10 27 991 4 | (1) | 1 | X1047529 | 10 47 529 1 | VENTILBLOCK |
| O-RING 155X3 NBR 70 SPF | 72 64 266 01 | 31 | 1 | 9 387 070 | 93 87 070 01 | KOMPAKTSEILWINDE |
| O-RING 155X3 NBR 70 SPF | 72 64 266 01 | 31 | 1 | 9 685 586 | 96 85 586 01 | KOMPAKTSEILWINDE |
| O-RING 15X3 NBR 70 | 72 64 034 01 | 78 | 6 | 9 686 071 | 96 86 071 01 | PLANETENGETRIEBE |
| O-RING 165X3 FKM 70 | 72 64 400 01 | 73 | 1 | 9 330 748 | 93 30 748 01 | DREHWERKANTRIEB |
| O-RING 16X2 NBR70 | 72 64 079 08 | (1) | 1 | 2 970 | 91 55 482 08 | HYDRAULIK |
| O-RING 16X2 NBR70 | 72 64 079 08 | 7 | 2 | X1047526 | 10 47 526 2 | ABSPERRORGAN |
| O-RING 175X3 NBR 70 | 72 64 536 01 | 24 | 1 | 9 330 748 | 93 30 748 01 | DREHWERKANTRIEB |
| O-RING 17X1, 8 | 10 03 010 9 | 2 | 2 | 5 114 327 | 51 14 327 14 | WEGEVENTIL |
| O-RING 17X2 FPM70 | 57 10 826 08 | (2) | 1 | 2 970 | 91 55 482 08 | HYDRAULIK |
| O-RING 17X2 NBR90 | 72 64 116 08 | (2) | 1 | 1 970 | 96 71 367 08 | HYDRAULIK UNTERWAGEN |
| O-RING 17X2 NBR90 | 72 64 116 08 | (2) | 1 | 1 970 | 96 71 367 08 | HYDRAULIK UNTERWAGEN |
| O-RING 180X4 NBR70 | 72 64 018 08 | 2 | 2 | 1 100 301 | 96 72 945 08 | HYDR.INSTALLATIONSTEILE |
| O-RING 195X3 NBR 70 | 76 10 217 03 | 76 | 1 | 9 387 598 | 93 87 598 01 | PLANETENGETRIEBE |
| O-RING 195X3 NBR 70 | 76 10 217 03 | 76 | 1 | 9 686 071 | 96 86 071 01 | PLANETENGETRIEBE |
| O-RING 19X2,5 FKM80 | 10 21 961 9 | 3 | 1 | 7 029 305 | 70 29 305 | DRUCKBEGRENZUNGSVENTI |
| O-RING 20,3X2,4 NBR70 | 50 29 329 08 | 8 | 1 | 2 270 001 | 96 37 923 08 | KRAFTSTOFFBEHAELTER VO |
| O-RING 20,3X2,4 NBR70 | 50 29 329 08 | 32 | 3 | 2 950 | 91 49 515 08 | DRUCKLUFTANLAGE OW |
| O-RING 20,3X2,4 NBR70 | 50 29 329 08 | 10 | 2 | 2 955 | 91 49 516 08 | PNEUMATIK KRANFUEHRERK |
| O-RING 20,90X3 | 10 04 039 9 | 1 | 1 | X1011585 | 10 11 585 4 | DS EINSPRITZDUESE |
| O-RING 20X2 NBR90 | 51 07 927 08 | 8 | 2 | 5 106 976 | 51 06 976 08 | KUGELHAHN |
| O-RING 20X2,5 NBR70 | 72 64 075 08 | (1) | 1 | 2 210 | 91 81 614 08 | ANTRIEBSAGGREGAT VORM. |
| O-RING 20X4 NBR 70 | 72 64 149 01 | 69 | 1 | 9 330 748 | 93 30 748 01 | DREHWERKANTRIEB |
| O-RING 21X2 NBR70 | 72 64 108 08 | 127 | 4 | 2 520 000 | 91 49 872 08 | KABINE VERGLAST |
| O-RING 225X3 NBR 70 | 72 64 696 14 | 71 | 2 | 9 444 410 | 94 44 410 03 | FAHRANTRIEB |
| O-RING 22X1,5 FPM70 | 57 10 827 08 | (3) | 1 | 2 970 | 91 55 482 08 | HYDRAULIK |
| O-RING 22X2 NBR90 | 72 64 184 08 | (8) | 4 | 2 970 | 91 55 482 08 | HYDRAULIK |
| O-RING 23,52X1,78 NBR90 | 51 46 118 08 | (70) | 1 | 9 072 112 | 90 72 112 | HYDRAULIKDOPPELPUMPE |
| O-RING 23X2 | 72 64 642 14 | (3) | 1 | 1 970 | 96 71 367 08 | HYDRAULIK UNTERWAGEN |
| O-RING 23X2 | 72 64 642 14 | (3) | 1 | 1 970 | 96 71 367 08 | HYDRAULIK UNTERWAGEN |
| O-RING 25X3 FPM70 | 50 07 415 08 | 3 | 1 | X1012038 | 10 12 038 3 | ZYLINDERKOPF |
| O-RING 265X4 NBR 70 | 72 64 282 01 | 81 | 1 | 9 444 410 | 94 44 410 03 | FAHRANTRIEB |
| O-RING 26X2,5 NBR70 | 50 26 435 08 | 414 | 1 | 2 210 | 91 81 614 08 | ANTRIEBSAGGREGAT VORM. |
| O-RING 26X3 HNBR 70 | 10 00 426 1 | 12 | 1 | 9 079 480 | 90 79 480 | AGGREGATETRAEGER ANBA |
| O-RING 26X3 HNBR 70 | 10 00 426 1 | 45 | 1 | X1011583 | 10 11 583 7 | DS DIESELMOTOR |
| O-RING 26X3 HNBR 70 | 10 00 426 1 | 13 | 1 | X1011801 | 10 11 801 3 | DS AGGREGATETRAEGER |
| O-RING 26X3 HNBR 70 | 10 00 426 1 | 13 | 1 | X1011801 | 10 11 801 4 | DS AGGREGATETRAEGER |
| O-RING 290X6 NBR70 | 72 64 284 08 | 16 | 1 | 9 387 070 | 93 87 070 01 | KOMPAKTSEILWINDE |
| O-RING 300X3 NBR70 | 53 00 325 08 | 51 | 1 | 9 686 071 | 96 86 071 01 | PLANETENGETRIEBE |
| O-RING 300X6 EPDM 70 | 72 64 584 01 | (3) | 1 | 9 686 071 | 96 86 071 01 | PLANETENGETRIEBE |
| O-RING 300X6 NBR70 | 72 64 215 08 | 16 | 1 | 9 685 586 | 96 85 586 01 | KOMPAKTSEILWINDE |
| O-RING 330X3 NBR 70 | 72 64 299 01 | 19 | 2 | 9 387 598 | 93 87 598 01 | PLANETENGETRIEBE |
| O-RING 330X3 NBR 70 | 72 64 299 01 | 19 | 2 | 9 686 071 | 96 86 071 01 | PLANETENGETRIEBE |
| O-RING 39,7X3,5 NBR70 | 57 05 889 08 | 3 | 1 | 5 708 320 | 57 08 320 08 | FILTERDECKEL |
| O-RING 39,7X3,5 NBR70 | 57 05 889 08 | 4 | 1 | X1032665 | 10 32 665 4 | RUECKLAUFFILTER |
| O-RING 400X5 NBR 70 | 76 10 378 03 | 57 | 1 | 9 444 410 | 94 44 410 03 | FAHRANTRIEB |
| O-RING 440X4 NBR70 | 72 64 203 08 | 49 | 1 | 9 444 410 | 94 44 410 03 | FAHRANTRIEB |
| O-RING 470X5 NBR 70 | 76 10 617 03 | 6 | 1 | 9 444 410 | 94 44 410 03 | FAHRANTRIEB |
| O-RING 4X1 NBR90 | 51 07 123 08 | 3 | 1 | 5 114 794 | 51 14 794 08 | LASTHALTEVENTIL |
| O-RING 54X3 NBR70 | 72 64 055 08 | (2) | 1 | 1 970 | 96 71 367 08 | HYDRAULIK UNTERWAGEN |
| O-RING 54X3 NBR70 | 72 64 055 08 | (2) | 1 | 1 970 | 96 71 367 08 | HYDRAULIK UNTERWAGEN |
| O-RING 59X3 NBR70 | 72 64 076 08 | 2 | 1 | 5 106 708 | 51 06 708 08 | LEITUNGSFILTER |

| Bezeichnung | Artikel | Pos. | Menge | Seite | Baugruppe | Bezeichnung |
|---|---|---|---|---|---|---|
| O-RING 62X4 NBR90 | 72 64 148 08 | (3) | 1 | 1 970 | 96 71 367 08 | HYDRAULIK UNTERWAGEN |
| O-RING 62X4 NBR90 | 72 64 148 08 | (3) | 1 | 1 970 | 96 71 367 08 | HYDRAULIK UNTERWAGEN |
| O-RING 63,17X2,62 FKM 70 A,G | 73 80 970 | 13 | 1 | X1011585 | 10 11 585 1 | DS ZYLINDERKOPF |
| O-RING 63,17X2,62 FKM 70 A,G | 73 80 970 | 13 | 1 | X1011585 | 10 11 585 2 | DS ZYLINDERKOPF KPL. |
| O-RING 63,17X2,62 FKM 70 A,G | 73 80 970 | 13 | 1 | X1011585 | 10 11 585 3 | DS ZYLINDERKOPF KPL. |
| O-RING 63,17X2,62 FKM 70 A,G | 73 80 970 | 13 | 1 | X1011585 | 10 11 585 9 | DS ZYLINDERKOPF |
| O-RING 68,26X3,53 FKM 70 | 73 81 593 | 57 | 2 | X1011583 | 10 11 583 7 | DS DIESELMOTOR |
| O-RING 68,26X3,53 FKM 70 | 73 81 593 | 11 | 2 | X1011801 | 10 11 801 3 | DS AGGREGATETRAEGER |
| O-RING 68,26X3,53 FKM 70 | 73 81 593 | 11 | 2 | X1011801 | 10 11 801 4 | DS AGGREGATETRAEGER |
| O-RING 6X1 NBR90 | 57 06 906 08 | 3 | 1 | 5 113 066 | 51 13 066 08 | STEUERBLOCK |
| O-RING 6X1 NBR90 | 57 06 906 08 | 7 | 1 | 5 711 301 | 57 11 301 08 | DRUCKBEGRENZUNGSVENTI |
| O-RING 6X1 NBR90 | 57 06 906 08 | 5 | 1 | 5 718 895 | 57 18 895 08 | DRUCKVENTIL |
| O-RING 6X1 NBR90 | 57 06 906 08 | 33 | 1 | X1032706 | 10 32 706 5 | ELEKTROPUMPE |
| O-RING 80X5,0 80 FKM 610 | 10 02 232 0 | 12 | 2 | X1011585 | 10 11 585 1 | DS ZYLINDERKOPF |
| O-RING 80X5,0 80 FKM 610 | 10 02 232 0 | 12 | 2 | X1011585 | 10 11 585 2 | DS ZYLINDERKOPF KPL. |
| O-RING 80X5,0 80 FKM 610 | 10 02 232 0 | 12 | 2 | X1011585 | 10 11 585 3 | DS ZYLINDERKOPF KPL. |
| O-RING 80X5,0 80 FKM 610 | 10 02 232 0 | 12 | 2 | X1011585 | 10 11 585 9 | DS ZYLINDERKOPF |
| O-RING 80X5,0 80 FKM 610 | 10 02 232 0 | 21 | 2 | X1011801 | 10 11 801 3 | DS AGGREGATETRAEGER |
| O-RING 80X5,0 80 FKM 610 | 10 02 232 0 | 21 | 2 | X1011801 | 10 11 801 4 | DS AGGREGATETRAEGER |
| O-RING 80X5,0 80 FKM 610 | 10 02 232 0 | 5 | 2 | X1011816 | 10 11 816 1 | VERBINDUNGSLEITUNG ANBA |
| O-RING 85X2 HNBR 70 | 10 21 837 0 | 2 | 1 | X1021997 | 10 21 997 8 | STARTER |
| O-RING 85X2 HNBR 70 | 10 21 837 0 | 2 | 1 | X1138664 | 11 38 664 4 | STARTER VORM. |
| O-RING 88,49X3,53 | 72 64 311 14 | 6 | 2 | 1 100 214 | 74 90 137 14 | LEITRAD KPL |
| O-RING 88X3 ACM70 | 57 09 797 08 | 7 | 1 | 5 700 161 | 57 00 161 | LUFTPRESSER |
| O-RING 8X2 NBR70 | 50 26 529 08 | 73 | 1 | 9 387 598 | 93 87 598 01 | PLANETENGETRIEBE |
| O-RING 8X2 NBR90 | 10 16 615 7 | 73 | 1 | 9 686 071 | 96 86 071 01 | PLANETENGETRIEBE |
| O-RING 95X3 NBR70 | 72 64 057 08 | 97 | 1 | 9 330 748 | 93 30 748 01 | DREHWERKANTRIEB |
| O-RING ARP 568 10,52X1,83 NB | 50 12 437 08 | (1) | 1 | 2 970 | 91 55 482 08 | HYDRAULIK |
| O-RING ARP 568 10,82X1,78 NB | 51 07 181 08 | 27 | 1 | X1117027 | 11 17 027 6 | DRUCKREDUZIERVENTIL |
| O-RING ARP 568 101,20X3,53 | 50 12 326 08 | 32 | 1 | 9 072 112 | 90 72 112 | HYDRAULIKDOPPELPUMPE |
| O-RING ARP 568 11,89X1,98 N | 57 11 305 08 | 8 | 1 | 5 711 301 | 57 11 301 08 | DRUCKBEGRENZUNGSVENTI |
| O-RING ARP 568 113,89X3,53 | 50 12 444 08 | 2 | 1 | 9 080 345 | 90 80 345 | WASSERPUMPE MIT BEFEST. |
| O-RING ARP 568 113,89X3,53 | 50 12 444 08 | 10 | 1 | X1011801 | 10 11 801 3 | DS AGGREGATETRAEGER |
| O-RING ARP 568 113,89X3,53 | 50 12 444 08 | 10 | 1 | X1011801 | 10 11 801 4 | DS AGGREGATETRAEGER |
| O-RING ARP 568 117,07X3,53 | 51 46 141 08 | 15 | 1 | 5 102 407 | 51 02 407 08 | HYDROMOTOR |
| O-RING ARP 568 12,37X2,62 NB | 51 07 461 08 | 1 | 1 | X1021831 | 10 21 831 0 | LASTHALTEVENTIL |
| O-RING ARP 568 12,37X2,62 NB | 51 07 461 08 | 63 | 2 | X1080297 | 10 80 297 1 | VENTILBLOCK |
| O-RING ARP 568 129,54X5,33 | 72 64 346 08 | 11 | 1 | X1106838 | 11 06 838 7 | SPURVERSTELLZYLINDER |
| O-RING ARP 568 148,49X5,33 | 51 45 275 08 | 9 | 1 | X1032665 | 10 32 665 4 | RUECKLAUFFILTER |
| O-RING ARP 568 17,12X2,62 NB | 51 07 101 08 | 25 | 1 | 5 123 931 | 51 23 931 08 | PNEUMATIKZYLINDER |
| O-RING ARP 568 170,82X7 NB | 57 05 883 08 | 1 | 1 | 5 708 320 | 57 08 320 08 | FILTERDECKEL |
| O-RING ARP 568 170,82X7 NB | 57 05 883 08 | 8 | 2 | X1032665 | 10 32 665 4 | RUECKLAUFFILTER |
| O-RING ARP 568 170,82X7 NB | 57 05 883 08 | (14) | 2 | XSK_Z480 | SK_Z48005 | SERVICE |
| O-RING ARP 568 18,72X2,62 NB | 51 07 383 08 | 58 | 1 | X1047300 | 10 47 300 1 | TELESKOPZYLINDER |
| O-RING ARP 568 190,09X3,53 | 51 46 042 08 | 12 | 1 | 5 923 269 | 59 23 269 14 | VERSTELLMOTOR |
| O-RING ARP 568 23,52X1,78 N | 57 06 523 08 | 25 | 1 | X1117027 | 11 17 027 6 | DRUCKREDUZIERVENTIL |
| O-RING ARP 568 31,42X2,62 NB | 51 57 060 08 | (1) | 1 | 2 210 | 91 81 614 08 | ANTRIEBSAGGREGAT VORM. |
| O-RING ARP 568 32,92X3,53 NB | 51 05 870 08 | 412 | 2 | 2 210 | 91 81 614 08 | ANTRIEBSAGGREGAT VORM. |
| O-RING ARP 568 32,92X3,53 NB | 51 05 870 08 | (1) | 1 | 2 970 | 91 55 482 08 | HYDRAULIK |
| O-RING ARP 568 32,99X2,62 NB | 51 07 617 08 | 5 | 3 | X1003269 | 10 03 269 6 | PATRONE |
| O-RING ARP 568 34,59X2,62 NB | 57 06 852 08 | 26 | 3 | 5 123 931 | 51 23 931 08 | PNEUMATIKZYLINDER |
| O-RING ARP 568 36,17X2,62 NB | 57 02 428 08 | 69 | 1 | 5 709 606 | 57 09 606 08 | SENKBREMSVENTIL |
| O-RING ARP 568 37,69X3,53 NB | 51 05 867 08 | 501 | 3 | 2 970 | 91 55 482 08 | HYDRAULIK |
| O-RING ARP 568 37,69X3,53 NB | 51 05 867 08 | (1) | 1 | 2 971 | 91 50 610 08 | HYDRAULIK HILFSHUBWERK |
| O-RING ARP 568 37,69X3,53 NB | 51 05 867 08 | 14 | 3 | 2 975 152 | 91 05 737 08 | HYDRAULIK TELE |
| O-RING ARP 568 40,87X3,53 NB | 57 00 484 08 | 55 | 1 | X1011583 | 10 11 583 7 | DS DIESELMOTOR |
| O-RING ARP 568 40,87X3,53 NB | 57 00 484 08 | 18 | 1 | X1011801 | 10 11 801 3 | DS AGGREGATETRAEGER |
| O-RING ARP 568 44,12X2,62 NB | 51 46 183 08 | 68 | 1 | 5 709 606 | 57 09 606 08 | SENKBREMSVENTIL |
| O-RING ARP 568 44,12X2,62 NB | 51 46 183 08 | 50 | 1 | X1047300 | 10 47 300 1 | TELESKOPZYLINDER |
| O-RING ARP 568 5,28X1,78 NB | 72 64 266 08 | 27 | 1 | 5 123 931 | 51 23 931 08 | PNEUMATIKZYLINDER |

| Bezeichnung | Artikel | Pos. | Menge | Seite | Baugruppe | Bezeichnung |
|---|---|---|---|---|---|---|
| O-RING ARP 568 63,09X3,53 NB | 57 05 888 08 | 11 | 1 | X1032665 | 10 32 665 4 | RUECKLAUFFILTER |
| O-RING ARP 568 66,27X3,53 NB | 51 86 485 08 | 6 | 1 | 5 102 294 | 51 02 294 08 | HYDROMOTOR |
| O-RING ARP 568 69,44X3,53 NB | 51 05 989 08 | 413 | 1 | 2 210 | 91 81 614 08 | ANTRIEBSAGGREGAT VORM. |
| O-RING ARP 568 75,87X2,62 NB | 51 45 304 08 | 15 | 1 | 5 701 090 | 57 01 090 08 | TRIEBWERK |
| O-RING ARP 568 82,14X3,53 NB | 51 86 236 08 | 10 | 1 | X1106838 | 11 06 838 7 | SPURVERSTELLZYLINDER |
| O-RING ARP 568 9,25X1,78 NB | 51 07 190 08 | 3 | 4 | 5 114 327 | 51 14 327 14 | WEGEVENTIL |
| O-RING ARP 568 9,25X1,78 NB | 51 07 190 08 | 26 | 1 | X1117027 | 11 17 027 6 | DRUCKREDUZIERVENTIL |
| O-RING ARP 568 9,25X1,78 NB | 51 07 386 08 | 60 | 1 | X1047300 | 10 47 300 1 | TELESKOPZYLINDER |
| O-RING ARP 568 98,02X3,53 NB | 51 46 132 08 | 411 | 1 | 2 210 | 91 81 614 08 | ANTRIEBSAGGREGAT VORM. |
| O-RING ARP 568 98,02X3,53 NB | 51 46 132 08 | 6 | 1 | 5 102 407 | 51 02 407 08 | HYDROMOTOR |
| O-RING ARP 568-NBR70 6,07X1 | 72 64 196 08 | 6 | 1 | 5 718 895 | 57 18 895 08 | DRUCKVENTIL |
| O-RING DIN 3770 25X2,5 FPM7 | 72 64 223 08 | 16 | 1 | 2 200 048 | 96 32 140 08 | AUSGLEICHSBEHAELTER VO |
| O-RING DIN 3771 100X3 FKM | 73 81 192 | 2211 | 1 | X1011583 | 10 11 583 7 | DS DIESELMOTOR |
| O-RING DIN 3771 101,20X3,53 | 73 82 158 | 2 | 1 | 9 078 250 | 90 78 250 | VERSCHLUSSTEILE |
| O-RING DIN 3771 101,20X3,53 | 73 82 158 | 7 | 1 | 9 078 962 | 90 78 962 | NEBENABTRIEB VORM. |
| O-RING DIN 3771 101,20X3,53 | 73 82 158 | 49 | 3 | X1011583 | 10 11 583 7 | DS DIESELMOTOR |
| O-RING DIN 3771 101,20X3,53 | 73 80 401 | 62 | 1 | X1011583 | 10 11 583 7 | DS DIESELMOTOR |
| O-RING DIN 3771 104,37X3,53 | 73 80 520 | 48 | 2 | X1011583 | 10 11 583 7 | DS DIESELMOTOR |
| O-RING DIN 3771 104,37X3,53 | 73 80 520 | 38 | 1 | X1011801 | 10 11 801 3 | DS AGGREGATETRAEGER |
| O-RING DIN 3771 104,37X3,53 | 73 80 520 | 38 | 1 | X1011801 | 10 11 801 4 | DS AGGREGATETRAEGER |
| O-RING DIN 3771 113,89X3,53 | 72 64 365 | 56 | 1 | X1011583 | 10 11 583 7 | DS DIESELMOTOR |
| O-RING DIN 3771 120X3 VMQ | 91 77 948 | 50 | 1 | X1011583 | 10 11 583 7 | DS DIESELMOTOR |
| O-RING DIN 3771 28X3,55 NB | 72 64 045 08 | 15 | 1 | 2 340 004 | 96 43 780 08 | OELBEHAELTER VORM. |
| O-RING DIN 3771 29,51X5,33 | 11 00 086 8 | (9) | 1 | 2 200 048 | 96 84 070 08 | AUSGLEICHSBEHAELTER VO |
| O-RING DIN 3771 34,65X1,78 | 73 81 270 | 6 | 1 | X1011585 | 10 11 585 1 | DS ZYLINDERKOPF |
| O-RING DIN 3771 34,65X1,78 | 73 81 270 | 6 | 1 | X1011585 | 10 11 585 2 | DS ZYLINDERKOPF KPL. |
| O-RING DIN 3771 34,65X1,78 | 73 81 270 | 6 | 1 | X1011585 | 10 11 585 3 | DS ZYLINDERKOPF KPL. |
| O-RING DIN 3771 34,65X1,78 | 73 81 270 | 6 | 1 | X1011585 | 10 11 585 9 | DS ZYLINDERKOPF |
| O-RING DIN 3771 35,00X2,00 | 53 01 515 08 | 68 | 1 | 9 330 748 | 93 30 748 01 | DREHWERKANTRIEB |
| O-RING DIN 3771 40,64X5,33 | 73 81 566 | 54 | 1 | X1011583 | 10 11 583 7 | DS DIESELMOTOR |
| O-RING DIN 3771 40,64X5,33 | 73 81 566 | 17 | 1 | X1011801 | 10 11 801 3 | DS AGGREGATETRAEGER |
| O-RING DIN 3771 40,64X5,33 | 73 81 566 | 2 | 2 | X1012166 | 10 12 166 7 | VERBINDUNGSSTUECK M.O-R |
| O-RING DIN 3771 59,92X3,53 | 73 81 779 | 2 | 1 | 9 079 472 | 90 79 472 | KUEHLMITTELKRUEMMER AN |
| O-RING DIN 3771 59,92X3,53 | 73 81 779 | 10 | 2 | 9 079 480 | 90 79 480 | AGGREGATETRAEGER ANBA |
| O-RING DIN 3771 59,92X3,53 | 73 81 779 | 2 | 1 | 9 080 280 | 90 80 280 | VERSCHLUSSTEILE |
| O-RING DIN 3771 59,92X3,53 | 73 81 779 | 3 | 2 | 9 080 345 | 90 80 345 | WASSERPUMPE MIT BEFEST. |
| O-RING DIN 3771 59,92X3,53 | 73 81 779 | 43 | 6 | X1011583 | 10 11 583 7 | DS DIESELMOTOR |
| O-RING DIN 3771 59,92X3,53 | 73 81 779 | 6 | 7 | X1011801 | 10 11 801 3 | DS AGGREGATETRAEGER |
| O-RING DIN 3771 59,92X3,53 | 73 81 779 | 6 | 7 | X1011801 | 10 11 801 4 | DS AGGREGATETRAEGER |
| O-RING DIN 3771 6,20X1,5 FK | 73 81 448 | (1) | 1 | X1047529 | 10 47 529 1 | VENTILBLOCK |
| O-RING DIN 3771 7,00X1,5 FK | 73 81 685 | 8 | 1 | 9 074 165 | 90 74 165 | MASSENAUSGLEICH ANBAU |
| O-RING DIN 3771 7,00X1,5 FK | 73 81 685 | 2 | 2 | X1011583 | 10 11 583 7 | DS DIESELMOTOR |
| O-RING DIN 3771 7,00X1,5 FK | 73 81 685 | 14 | 1 | X1012223 | 10 12 223 3 | NOCKENWELLE KPL. |
| O-RING DIN 3771 79X4 NBR 70 | 10 29 511 6 | 2 | 1 | 9 075 483 | 90 75 483 | KURBELGEHAEUSEENTLUEFT |
| O-RING DIN 3771 91,67X3,53 | 73 80 657 | 61 | 1 | X1011583 | 10 11 583 7 | DS DIESELMOTOR |
| O-RING DIN 3771 94,50X3,00 F | 10 11 625 5 | (1) | 1 | 9 078 314 | 90 78 314 | HEIZFLANSCH ANBAU |
| O-RING DIN 3771 98,02X3,53 H | 73 81 995 | 4 | 1 | X1011566 | 10 11 566 4 | VERSCHLUSSTEILE |
| O-RING ISO 3601-1 101,19X3,53 | 10 28 921 0 | 2 | 1 | X1028018 | 10 28 018 1 | KLARSICHTBEHAELTER |
| O-RING ISO 3601-1 17,17X1,78 | 73 81 103 | 2 | 1 | 9 076 534 | 90 76 534 | DREHZAHLGEBER KPL. |
| O-RING ISO 3601-1 17,17X1,78 | 73 81 103 | 2 | 1 | X1013307 | 10 13 307 7 | DREHZAHLGEBER KPL. |
| O-RING ISO 3601-1 21,95X1,78 | 73 81 415 | 33 | 1 | X1011573 | 10 11 573 7 | KRAFTSTOFFLEITUNGEN |
| O-RING ISO 3601-1 21,95X1,78 | 73 81 415 | 59 | 1 | X1011583 | 10 11 583 7 | DS DIESELMOTOR |
| O-RING ISO 3601-1 34,59X2,62 | 73 82 059 | 5 | 1 | 9 075 540 | 90 75 540 | SCHMIEROELPUMPE MIT BE |
| O-RING ISO 3601-1 34,59X2,62 | 73 82 059 | 41 | 1 | X1011583 | 10 11 583 7 | DS DIESELMOTOR |
| O-RING ISO 3601-1 34,59X2,62 | 73 80 653 | 11 | 2 | 9 079 480 | 90 79 480 | AGGREGATETRAEGER ANBA |
| O-RING ISO 3601-1 34,59X2,62 | 73 80 653 | 9 | 1 | X1011582 | 10 11 582 9 | SCHWUNGRADGEHAEUSE AN |
| O-RING ISO 3601-1 34,59X2,62 | 73 80 653 | 44 | 4 | X1011583 | 10 11 583 7 | DS DIESELMOTOR |
| O-RING ISO 3601-1 34,59X2,62 | 73 80 653 | 7 | 2 | X1011801 | 10 11 801 3 | DS AGGREGATETRAEGER |
| O-RING ISO 3601-1 34,59X2,62 | 73 80 653 | 7 | 2 | X1011801 | 10 11 801 4 | DS AGGREGATETRAEGER |
| O-RING ISO 3601-1 39,34X2,62 | 73 81 812 | 4 | 1 | 9 075 540 | 90 75 540 | SCHMIEROELPUMPE MIT BE |

| Bezeichnung | Artikel | Pos. | Menge | Seite | Baugruppe | Bezeichnung |
|---|---|---|---|---|---|---|
| O-RING ISO 3601-1 39,34X2,62 | 73 81 812 | 40 | 1 | X1011583 | 10 11 583 7 | DS DIESELMOTOR |
| O-RING ISO 3601-1 52,07X2,62 | 73 80 919 | 14 | 1 | X1011585 | 10 11 585 1 | DS ZYLINDERKOPF |
| O-RING ISO 3601-1 52,07X2,62 | 73 80 919 | 14 | 1 | X1011585 | 10 11 585 2 | DS ZYLINDERKOPF KPL. |
| O-RING ISO 3601-1 52,07X2,62 | 73 80 919 | 14 | 1 | X1011585 | 10 11 585 3 | DS ZYLINDERKOPF KPL. |
| O-RING ISO 3601-1 52,07X2,62 | 73 80 919 | 14 | 1 | X1011585 | 10 11 585 9 | DS ZYLINDERKOPF |
| O-RING ISO 3601-1 52,07X2,62 | 73 80 919 | 8 | 1 | X1011816 | 10 11 816 1 | VERBINDUNGSLEITUNG ANBA |
| O-RING ISO 3601-1 82,22X2,62 | 73 80 598 | 52 | 1 | X1011583 | 10 11 583 7 | DS DIESELMOTOR |
| O-RING ISO 3601-1 85,32X3,53 | 73 81 361 | 5 | 2 | 9 073 767 | 90 73 767 | NEBENABTRIEB ANBAU |
| O-RING ISO 3601-1 85,32X3,53 | 73 81 361 | 2 | 2 | 9 078 249 | 90 78 249 | VERSCHLUSSTEILE |
| O-RING ISO 3601-1 85,32X3,53 | 73 81 361 | 47 | 6 | X1011583 | 10 11 583 7 | DS DIESELMOTOR |
| OEL-LUFTKUEHLER | 10 09 734 5 | 10 | 2 | 2 984 | 91 52 906 08 | OELKUEHLER EINBAU |
| OEL-LUFTKUEHLER | 55 06 283 08 | 103 | 1 | 2 210 008 | 96 48 137 08 | KUEHLER VORM. |
| OELABLASSSCHLAUCH KPL. 1 | 10 03 229 7 | 68 | 1 | 1 750 001 | 92 85 698 08 | GRUNDWERKZEUG |
| OELABLASSSCHRAUBE M26X | 78 90 119 08 | 9 | 2 | 2 340 004 | 96 43 780 08 | OELBEHAELTER VORM. |
| OELBEHAELTER ANBAU | 91 53 116 08 | 109 | 1 | | LTR 1100 -0 | LIEBHERR LTR 1100 |
| OELBEHAELTER SCHWK. 723L | 96 20 154 08 | 1 | 1 | 2 340 004 | 96 43 780 08 | OELBEHAELTER VORM. |
| OELBEHAELTER VORM. | 96 43 780 08 | 1 | 1 | 2 340 | 91 53 116 08 | OELBEHAELTER ANBAU |
| OELEINFUELLUNG | 10 11 883 9 | 23 | 1 | X1015207 | 10 15 207 7 | DIESELMOTOR |
| OELFILTERTOPF | 11 64 705 9 | 5 | 1 | 5 106 681 | 51 06 681 08 | DRUCKFILTER |
| OELKUEHLER | 10 32 500 1 | 3 | 1 | X1011739 | 10 11 739 7 | OELKUEHLER VORM. |
| OELKUEHLER | 10 35 483 5 | 1 | 1 | X1009734 | 10 09 734 5 | OEL-LUFTKUEHLER |
| OELKUEHLER ANBAU D934 | 10 11 739 8 | 130 | 1 | X1012193 | 10 12 193 2 | GRUNDMOTOR |
| OELKUEHLER EINBAU | 91 52 906 08 | 187 | 1 | | LTR 1100 -0 | LIEBHERR LTR 1100 |
| OELKUEHLER VORM. | 10 11 739 7 | 1 | 1 | X1011739 | 10 11 739 8 | OELKUEHLER ANBAU |
| OELKUEHLERGEHAEUSE D93 | 10 11 739 6 | 1 | 1 | X1011739 | 10 11 739 7 | OELKUEHLER VORM. |
| OELLEITUNG VORM. 12X1 | 10 12 024 2 | 25 | 1 | X1015207 | 10 15 207 7 | DIESELMOTOR |
| OELMESSEINRICHTUNG | 93 93 684 01 | 10 | 1 | 9 685 586 | 96 85 586 01 | KOMPAKTSEILWINDE |
| OELMESSSTAB 1 1/8" | 50 01 315 01 | 1 | 1 | 9 275 212 | 92 75 212 01 | OELMESSSTABEINRICHTUNG |
| OELMESSSTAB 1 1/8" | 92 75 544 01 | 1 | 1 | 9 275 543 | 92 75 543 01 | ENTLUEFTUNGSSTUTZEN |
| OELMESSSTAB 1 1/8" | 92 76 102 01 | 15 | 1 | 9 393 684 | 93 93 684 01 | OELMESSEINRICHTUNG |
| OELMESSSTAB MIT RING | 10 11 888 5 | 1 | 1 | X1011888 | 10 11 888 4 | OELMESSSTAB MIT ROHR |
| OELMESSSTAB MIT ROHR | 10 11 888 4 | 21 | 1 | X1015207 | 10 15 207 7 | DIESELMOTOR |
| OELMESSSTABEINRICHTUNG | 92 75 212 01 | 10 | 1 | 9 387 070 | 93 87 070 01 | KOMPAKTSEILWINDE |
| OELRUECKLAUFLEITUNG DN1 | 10 11 901 9 | 5 | 1 | X1011989 | 10 11 989 7 | RS OELRUECKLAUFLEITUNG |
| OELSTANDSAUGE G1" ALU | 77 43 201 08 | 14 | 1 | 2 340 004 | 96 43 780 08 | OELBEHAELTER VORM. |
| OELWANNE MIT BEFEST. R-M | 10 12 414 0 | 20 | 1 | X1015207 | 10 15 207 7 | DIESELMOTOR |
| OELWANNE VORM. R-MOTOR | 10 15 522 1 | 1 | 1 | X1012414 | 10 12 414 0 | OELWANNE MIT BEFEST. |
| OVALRING 26X140X260 SPF | 77 39 247 08 | 13 | 1 | 2 792 | 91 52 291 08 | MECH.TEILE VERSANDMONT |
| PASSFEDER DIN 6885 A 4X4X1 | 43 40 002 08 | 102 | 1 | 6 060 516 | 60 60 516 08 | GETRIEBENOCKENENDSCHAL |
| PASSHUELSE 10,2X17X36 9S | 90 77 709 | (3) | 1 | 9 080 525 | 90 80 525 | KLIMAKOMPRESSOR ANBAU |
| PASSHUELSE 15,5X19,5X24 | 91 77 636 | 6 | 10 | X1011577 | 10 11 577 6 | KURBELGEHAEUSE |
| PASSHUELSE 16X20X20 100Cr | 10 13 434 8 | 3 | 2 | X1011582 | 10 11 582 9 | SCHWUNGRADGEHAEUSE AN |
| PASSHUELSE 16X20X20 S235J | 90 74 798 | 4 | 2 | 9 079 480 | 90 79 480 | AGGREGATETRAEGER ANBA |
| PASSHUELSE 16X20X20 S235J | 90 74 798 | 9 | 8 | X1011577 | 10 11 577 7 | KURBELGEHAEUSE KPL. |
| PASSKERBSTIFT ISO 8745 6X | 10 29 225 3 | 149 | 2 | 2 520 000 | 91 49 872 08 | KABINE VERGLAST |
| PASSSCHEIBE DIN 988 25X36 | 42 20 615 01 | 49 | 6 | 9 686 071 | 96 86 071 01 | PLANETENGETRIEBE |
| PASSSCHEIBE DIN 988 25X36X | 42 20 614 01 | 48 | 9 | 9 686 071 | 96 86 071 01 | PLANETENGETRIEBE |
| PASSSCHEIBE DIN 988 25X36 | 42 20 621 01 | 47 | 3 | 9 686 071 | 96 86 071 01 | PLANETENGETRIEBE |
| PASSSCHEIBE DIN 988 45X56 | 42 20 032 01 | 33 | 3 | 9 444 410 | 94 44 410 03 | FAHRANTRIEB |
| PASSSCHEIBE DIN 988 63X80X | 42 10 004 08 | 17 | 2 | 5 701 090 | 57 01 090 08 | TRIEBWERK |
| PASSSCHEIBE DIN 988 63X80X | 42 10 005 08 | 18 | 1 | 5 701 090 | 57 01 090 08 | TRIEBWERK |
| PASSSCHRAUBE DIN 609 M16 | 10 04 159 0 | 36 | 2 | 2 501 000 | 91 48 769 08 | KRANFUEHRERKABINE VORM |
| PATRONE | 10 03 269 6 | 33 | 1 | X1041191 | 10 41 191 3 | PLATTE |
| PEDALGEBER 20° SPF | 69 23 097 08 | 1 | 2 | 2 830 041 | 92 88 195 08 | ELEKTRIK FUSSWIPPE |
| PEDALGEBER 23° SPF | 10 29 006 8 | (1) | 1 | 2 920 | 91 55 477 08 | EL.ANLAGE DREHBUEHNE |
| PEDALGEBER 23° SPF | 60 60 168 08 | 6 | 1 | 2 920 563 | 92 08 459 08 | ELEKTRIK GASVERSTELLUNG |
| PERSOENLICHE SCHUTZAUSR | 91 69 598 08 | 98 | 1 | | LTR 1100 -0 | LIEBHERR LTR 1100 |
| PILZKOPFBAND 25MM PS18 | 80 21 020 08 | 150 | 13.5 | 2 510 018 | 96 44 046 08 | KUEHLERHAUBE KPL. |
| PILZKOPFBAND 25MM PS18 | 80 21 020 08 | 30 | 11.13 | 2 510 072 | 96 44 614 08 | KLAPPE VORM.RECHTS |
| PILZKOPFBAND 25MM PS18 | 80 21 020 08 | 50 | 12 | 2 510 108 | 96 44 555 08 | SCHALLDAEMMUNG |

| Bezeichnung | Artikel | Pos. | Menge | Seite | Baugruppe | Bezeichnung |
|---|---|---|---|---|---|---|
| PL FALLE | 10 33 187 4 | 5 | 1 | 4 027 | 91 42 310 08 | LASTHAKEN |
| PLANETENGETRIEBE 3-STUFI | 93 87 598 01 | 5 | 1 | 9 387 070 | 93 87 070 01 | KOMPAKTSEILWINDE |
| PLANETENGETRIEBE 3-STUFI | 96 86 071 01 | 5 | 1 | 9 685 586 | 96 85 586 01 | KOMPAKTSEILWINDE |
| PLANETENRAD M=2 Z=28 | 92 75 308 01 | 40 | 6 | 9 330 748 | 93 30 748 01 | DREHWERKANTRIEB |
| PLANETENRAD M=2,25 Z=27 | 93 87 602 01 | 42 | 3 | 9 686 071 | 96 86 071 01 | PLANETENGETRIEBE |
| PLANETENRAD M=2,25 Z=28 | 93 92 511 01 | 20 | 5 | 9 330 748 | 93 30 748 01 | DREHWERKANTRIEB |
| PLANETENRAD M=3,75 Z=37 | 94 44 425 03 | 37 | 3 | 9 444 410 | 94 44 410 03 | FAHRANTRIEB |
| PLANETENRAD M=4 Z=23 | 92 76 021 01 | 32 | 3 | 9 686 071 | 96 86 071 01 | PLANETENGETRIEBE |
| PLANETENRAD M=4 Z=26 | 92 76 014 01 | 7 | 5 | 9 686 071 | 96 86 071 01 | PLANETENGETRIEBE |
| PLANETENRAD M=5 Z=23 | 94 44 418 03 | 27 | 3 | 9 444 410 | 94 44 410 03 | FAHRANTRIEB |
| PLANETENRAD M=5 Z=30 | 94 44 414 03 | 17 | 5 | 9 444 410 | 94 44 410 03 | FAHRANTRIEB |
| PLANETENTRAEGER | 92 76 020 01 | 30 | 1 | 9 686 071 | 96 86 071 01 | PLANETENGETRIEBE |
| PLANETENTRAEGER | 93 87 601 01 | 40 | 1 | 9 686 071 | 96 86 071 01 | PLANETENGETRIEBE |
| PLANETENTRAEGER | 93 92 503 01 | 15 | 1 | 9 330 748 | 93 30 748 01 | DREHWERKANTRIEB |
| PLANETENTRAEGER | 93 92 515 01 | 35 | 1 | 9 330 748 | 93 30 748 01 | DREHWERKANTRIEB |
| PLANETENTRAEGER | 93 92 573 01 | 50 | 1 | 9 330 748 | 93 30 748 01 | DREHWERKANTRIEB |
| PLANETENTRAEGER | 94 44 417 03 | 25 | 1 | 9 444 410 | 94 44 410 03 | FAHRANTRIEB |
| PLANETENTRAEGER | 94 44 423 03 | 35 | 1 | 9 444 410 | 94 44 410 03 | FAHRANTRIEB |
| PLATINE | 57 09 912 08 | 51 | 1 | 6 060 516 | 60 60 516 08 | GETRIEBENOCKENENDSCHAL |
| PLATINE 24V | 57 15 561 08 | (2) | 1 | 2 920 585 | 91 01 520 08 | ELEKTRIK BLITZLEUCHTE |
| PLATTE | 10 41 191 3 | 1 | 1 | X1028524 | 10 28 524 3 | STEUERBLOCK |
| PLATTE | 10 87 483 1 | 3 | 1 | X1041191 | 10 41 191 5 | VENTILBLOCK |
| PLATTE | 92 75 826 | 16 | 1 | X1011611 | 10 11 611 0 | VERSCHLUSSTEILE |
| PLATTE 15X30X50 PA6G | 28 81 762 08 | 52 | 1 | 2 102 | 91 51 080 08 | MONTAGETEILE DREHBUEHN |
| PLATTE 16X66X130 PA6G | 28 81 990 08 | 10 | 1 | 2 520 001 | 92 48 796 08 | FRONTSCHEIBE KPL. |
| PLATTE S355J0 | 10 11 912 9 | 1 | 1 | X1011912 | 10 11 912 8 | VERSCHLUSSTEILE |
| PLEUELSTANGE | 57 15 825 08 | 11 | 1 | 5 700 161 | 57 00 161 | LUFTPRESSER |
| PLEUELSTANGE R-MOTORX8 | 11 34 805 4 | 1 | 1 | 9 076 459 | 90 76 459 | PLEUELSTANGE |
| PLEUELSTANGE R-MOTORX9 | 90 76 459 | 60 | 4 | X1012193 | 10 12 193 2 | GRUNDMOTOR |
| PNEUMATIK KRANFUEHRERK | 91 49 516 08 | 183 | 1 | | LTR 1100 -0 | LIEBHERR LTR 1100 |
| PNEUMATIKZYLINDER 50MM | 51 23 931 08 | 2 | 1 | 2 430 | 91 54 389 08 | DREHBUEHNENARRETIERUN |
| PNEUMATIKZYLINDER ST/AL | 11 63 184 2 | (1) | 1 | 2 520 000 | 91 49 872 08 | KABINE VERGLAST |
| PODEST ALMG3 SPF | 72 58 641 08 | 23 | 1 | 2 520 000 | 91 49 872 08 | KABINE VERGLAST |
| PODEST VORM. | 96 42 014 08 | 1 | 1 | 2 515 | 91 51 084 08 | ABSTURZSICHERUNG |
| PODEST x0 ALMG3 SPF | 95 66 291 08 | 72 | 1 | 2 520 000 | 91 49 872 08 | KABINE VERGLAST |
| POTENTIOMETER 68R 10W SP | 63 51 137 08 | 39 | 1 | 2 932 095 | 96 46 064 08 | SCHWENKRAHMEN SICHERUN |
| PRATZE | 90 75 372 | 3 | 1 | X1011659 | 10 11 659 1 | EINSPRITZDUESE MIT BEFEST |
| PRESSKLEMME 2 CU | 11 17 056 5 | 7 | 16 | 1 100 216 | 96 46 363 08 | MONTAGETEILE LWE |
| PRESSKLEMME 2 CU | 11 17 056 5 | 7 | 2 | 2 102 022 | 96 32 604 08 | VERRIEGELUNG |
| PRESSKLEMME 2 CU | 11 17 056 5 | 46 | 8 | 2 971 | 91 50 610 08 | HYDRAULIK HILFSHUBWERK |
| PRESSKLEMME 2 CU | 11 17 056 5 | 112 | 2 | 3 501 | 91 05 788 08 | DOPPELKLAPPSPITZE MECH. |
| PRESSKLEMME 2 CU | 11 17 056 5 | 11 | 2 | 3 510 006 | 96 20 924 08 | KLAPPKONSOLE |
| PRESSKLEMME 2 CU | 11 17 056 5 | 4 | 4 | 3 750 027 | 96 89 527 08 | HAKENSTANGE ANBAU |
| PRIMER 250ML | 81 12 035 08 | 96 | 1 | 2 520 000 | 91 49 872 08 | KABINE VERGLAST |
| PROFILDICHTRING DIN 3869 1 | 10 04 098 4 | 2 | 1 | 9 076 530 | 90 76 530 | TEMPERATURFUEHLER KPL. |
| PROFILDICHTRING DIN 3869 1 | 10 04 098 4 | (2) | 1 | X1011969 | 10 11 969 8 | MOTORREGELUNGSENSORIK |
| PROFILDICHTRING DIN 3869 | 10 33 562 9 | 3 | 1 | X1011883 | 10 11 883 9 | OELEINFUELLUNG |
| PRUEFANSCHLUSS A3P | 47 56 009 08 | 604 | 2 | 2 950 | 91 49 515 08 | DRUCKLUFTANLAGE OW |
| PUFFER 30X20 GUMMI 50SH | 97 02 548 4 | 122 | 4 | 2 210 008 | 96 48 137 08 | KUEHLER VORM. |
| PUMPE MP41 SPF | 59 10 554 08 | 26 | 2 | 2 520 000 | 91 49 872 08 | KABINE VERGLAST |
| PUMPENELEMENT | 10 03 827 2 | 13 | 1 | X1032706 | 10 32 706 5 | ELEKTROPUMPE |
| PUMPENELEMENT | 77 43 875 08 | 11 | 1 | X1032706 | 10 32 706 5 | ELEKTROPUMPE |
| PUMPENGEHAEUSE | 10 01 469 3 | 4 | 1 | X1032706 | 10 32 706 5 | ELEKTROPUMPE |
| PUMPENRUECKLAUF | 77 43 728 08 | 13 | 1 | 2 711 | 91 53 002 08 | ZENTRALSCHMIERANLAGE O |
| QUETSCHVERSCHLUSS | 70 42 298 08 | 64 | 10 | 2 533 001 | 96 41 568 08 | ARMATURENBRETT DACH VO |
| RADIALDICHTRING 70X90X7 | 70 08 986 | 10 | 1 | 5 923 269 | 59 23 269 14 | VERSTELLMOTOR |
| RADIALWELLENDICHTRING B | 71 00 626 01 | 63 | 2 | 9 387 598 | 93 87 598 01 | PLANETENGETRIEBE |
| RADIALWELLENDICHTRING B | 71 00 626 01 | 63 | 2 | 9 686 071 | 96 86 071 01 | PLANETENGETRIEBE |
| RADIALWELLENDICHTRING D | 57 09 914 08 | 69 | 1 | 6 060 516 | 60 60 516 08 | GETRIEBENOCKENENDSCHAL |
| RADIALWELLENDICHTRING DI | 71 00 325 08 | 22 | 1 | 9 387 596 | 93 87 596 01 | SEILTROMMEL |

| Bezeichnung | Artikel | Pos. | Menge | Seite | Baugruppe | Bezeichnung |
|---|---|---|---|---|---|---|
| RADIALWELLENDICHTRING DI | 10 16 746 2 | 64 | 2 | 9 330 748 | 93 30 748 01 | DREHWERKANTRIEB |
| RADIALWELLENDICHTRING D | 71 00 593 01 | 11 | 1 | 9 330 748 | 93 30 748 01 | DREHWERKANTRIEB |
| RADIALWELLENDICHTRING DI | 71 00 546 01 | 11 | 1 | 9 387 598 | 93 87 598 01 | PLANETENGETRIEBE |
| RADIALWELLENDICHTRING DI | 71 00 546 01 | (1) | 1 | 9 686 071 | 96 86 071 01 | PLANETENGETRIEBE |
| RADMUTTER DIN 74361 M20X | 52 03 033 08 | 10 | 1 | 5 700 161 | 57 00 161 | LUFTPRESSER |
| RAENDELKNOPF PA | 10 80 091 6 | 5 | 1 | 2 520 040 | 72 40 148 08 | VERRIEGELUNGSZUG |
| RAENDELKNOPF PA | 10 80 091 6 | (5) | 1 | 2 522 | 91 10 037 08 | TUER KPL. |
| RAENDELMUTTER | 10 21 738 3 | 9 | 2 | 5 718 176 | 57 18 176 08 | WEGEVENTIL |
| RAENDELMUTTER | 57 14 553 08 | (1) | 1 | 5 705 279 | 57 05 279 08 | WEGEVENTIL |
| RAUPENBESTUECKUNG 900 3 | 91 49 493 08 | 30 | 1 | | LTR 1100 -0 | LIEBHERR LTR 1100 |
| RAUPENBESTUECKUNG 900 3- | 99 17 196 14 | 1 | 1 | 1 300 | 91 49 493 08 | RAUPENBESTUECKUNG |
| RAUPENKETTE | 91 89 127 14 | 2 | 2 | 1 300 005 | 99 17 196 14 | RAUPENBESTUECKUNG |
| RAUPENKETTE KPL 62GL.B7B | 79 02 584 14 | 2 | 1 | 1 300 006 | 91 89 127 14 | RAUPENKETTE |
| RAUPENTRAEGER KPL.LI. | 96 51 634 08 | 3 | 1 | 1 100 200 | 96 72 944 08 | UNTERWAGEN KPL. |
| RAUPENTRAEGER KPL.RE. | 96 51 633 08 | 2 | 1 | 1 100 200 | 96 72 944 08 | UNTERWAGEN KPL. |
| RAUPENTRAEGER LI. | 10 22 596 7 | 1 | 1 | 1 100 210 | 96 51 634 08 | RAUPENTRAEGER KPL.LI. |
| RAUPENTRAEGER RE. | 10 22 596 9 | 1 | 1 | 1 100 205 | 96 51 633 08 | RAUPENTRAEGER KPL.RE. |
| RECHTECKDUESE | 55 30 186 08 | 60 | 3 | 2 520 000 | 91 49 872 08 | KABINE VERGLAST |
| RECHTECKRING 12,42X1,68 | 57 19 151 08 | 10 | 1 | X1033367 | 10 33 367 2 | STEUERBLOCK |
| RECHTECKRING 32,30X2,80X3, | 73 67 610 | 535 | 3 | 1 970 | 96 71 367 08 | HYDRAULIK UNTERWAGEN |
| RECHTECKRING 40,15X2,80X3, | 73 67 611 | 554 | 2 | 1 970 | 96 71 367 08 | HYDRAULIK UNTERWAGEN |
| RECHTECKRING 45,05X2,80X3, | 73 67 612 | 573 | 8 | 1 970 | 96 71 367 08 | HYDRAULIK UNTERWAGEN |
| REDUKTION M20X1,5/M16X1,5 | 60 26 062 08 | (6) | 1 | 2 920 | 91 55 477 08 | EL.ANLAGE DREHBUEHNE |
| REDUKTION M20X1,5/M16X1,5 | 60 26 062 08 | 198 | 2 | 3 930 492 | 96 20 966 08 | KLEMMKASTEN KPL. |
| REDUKTION M32X1,5/M25X1,5 | 60 26 066 08 | 15 | 1 | 1 920 314 | 96 46 921 08 | KLEMMKASTEN VORM. |
| REDUZIERSTUECK M16X1,5/ | 10 12 006 6 | 5 | 1 | X1012580 | 10 12 580 1 | KRAFTSTOFFFEINFILTER |
| REDUZIERSTUECK MS58 | 22 81 104 08 | 5 | 1 | 2 200 048 | 96 32 140 08 | AUSGLEICHSBEHAELTER VO |
| REDUZIERSTUECK PG13,5/11 | 60 26 040 08 | 8 | 1 | 3 930 523 | 96 43 943 08 | LEITUNGSTROMMEL |
| REDUZIERUNG M22/M14X1,5 | 10 35 483 9 | 4 | 1 | X1009734 | 10 09 734 5 | OEL-LUFTKUEHLER |
| REFLEKTOR | 60 72 250 08 | 16 | 4 | 2 533 001 | 96 41 568 08 | ARMATURENBRETT DACH VO |
| REGELVENTIL EL-DA | 90 74 716 | 4 | 2 | 9 072 112 | 90 72 112 | HYDRAULIKDOPPELPUMPE |
| REGLER | 10 47 599 4 | (1) | 1 | X1011864 | 10 11 864 6 | GENERATOR VORM. |
| REGLER TEMP.GESTEUERT | 11 06 853 5 | 3 | 1 | 2 780 870 | 91 70 947 08 | LADESPANNUNGSREGLER |
| REIBSCHEIBE | 97 55 297 08 | 11 | 2 | 2 510 100 | 96 44 750 08 | DREHBUEHNENVERKLEIDUN |
| REIFENFUELLSCHLAUCH | 52 01 904 08 | 67 | 1 | 1 750 001 | 92 85 698 08 | GRUNDWERKZEUG |
| RELAIS 24V | 63 01 021 08 | 6 | 13 | 2 932 119 | 96 46 061 08 | SCHWENKRAHMEN RELAISST |
| RELAIS 24V 10A SPF | 63 01 215 08 | 22 | 32 | 2 932 095 | 96 46 064 08 | SCHWENKRAHMEN SICHERUN |
| RELAIS 24V/1S 26X26X24MM | 63 01 051 08 | 20 | 1 | 2 932 095 | 96 46 064 08 | SCHWENKRAHMEN SICHERUN |
| RELAIS 24V/1S SPF | 63 01 053 08 | 7 | 1 | 2 920 083 | 96 31 039 08 | ELEKTRIK BATTERIEKASTEN |
| RELAISSTECKSOCKEL 9-POL | 63 01 229 08 | 31 | 1 | 2 932 042 | 96 68 587 08 | GRUNDAUFBAU |
| RELAISSTECKSOCKEL 9-POL | 63 01 229 08 | 21 | 33 | 2 932 095 | 96 46 064 08 | SCHWENKRAHMEN SICHERUN |
| RELING QUERSTANGE | 96 34 947 08 | 154 | 1 | 2 520 000 | 91 49 872 08 | KABINE VERGLAST |
| RELING SCHWK. | 92 68 899 08 | 48 | 2 | 2 520 000 | 91 49 872 08 | KABINE VERGLAST |
| RELING SCHWK. | 92 71 304 08 | 115 | 1 | 2 520 000 | 91 49 872 08 | KABINE VERGLAST |
| RELING SCHWK. | 92 71 305 08 | 116 | 1 | 2 520 000 | 91 49 872 08 | KABINE VERGLAST |
| REPARATURSATZ | 10 87 327 0 | (999) | 1 | 3 501 | 91 05 788 08 | DOPPELKLAPPSPITZE MECH. |
| REPARATURSATZ | 11 00 309 4 | 999 | 1 | 5 026 573 | 50 26 573 08 | LUFTTROCKNER |
| REPARATURSATZ | 57 15 821 08 | 1 | 1 | 5 700 161 | 57 00 161 | LUFTPRESSER |
| REPARATURSATZ | 57 15 827 08 | 15 | 1 | 5 700 161 | 57 00 161 | LUFTPRESSER |
| REPARATURSATZ | 57 18 380 08 | 999 | 1 | 7 900 391 | 79 00 391 08 | HANDPUMPE |
| REPARATURSATZ -E DF/LF | 10 03 553 4 | (3) | 1 | XSK_Z480 | SK_Z48005 | SERVICE |
| REPARATURSATZ SICHERUN | 96 73 615 08 | 3 | 1 | 7 739 413 | 77 39 413 08 | TASCHENSCHLOSS |
| RIEGELKLEMME | 60 21 159 08 | 100 | 2 | 3 501 | 91 05 788 08 | DOPPELKLAPPSPITZE MECH. |
| RIEMENSCHEIBE | 90 80 505 | 1 | 1 | 9 080 591 | 90 80 591 | KURBELWELLENANBAUTEILE |
| RIEMENSCHEIBE 0.5X8PKX51, | 90 79 587 | 2 | 1 | X1011864 | 10 11 864 6 | GENERATOR VORM. |
| RIEMENSCHEIBE 8PKX51,7 C4 | 11 35 561 8 | 2 | 1 | X1011864 | 10 11 864 6 | GENERATOR VORM. |
| RILLENKUGELLAGER DIN 625 | 74 51 949 08 | 37 | 1 | X1028517 | 10 28 517 1 | SCHLEIFRINGUEBERTRAEGE |
| RILLENKUGELLAGER DIN 625 | 74 51 391 01 | 66 | 1 | 9 330 748 | 93 30 748 01 | DREHWERKANTRIEB |
| RILLENKUGELLAGER DIN 625 | 74 51 446 08 | 6 | 2 | X1034357 | 10 34 357 4 | LEITUNGSTROMMEL |
| RING | 57 01 107 08 | 5 | 14 | 5 701 095 | 57 01 095 08 | TRIEBWERK |

| Bezeichnung | Artikel | Pos. | Menge | Seite | Baugruppe | Bezeichnung |
|---|---|---|---|---|---|---|
| RINGLUEFTER D=654 | 55 06 395 08 | 101 | 1 | 2 210 008 | 96 48 137 08 | KUEHLER VORM. |
| RINGSCHRAUBE DIN 580 M12 | 40 26 003 08 | 10 | 1 | 2 270 001 | 96 37 923 08 | KRAFTSTOFFBEHAELTER VO |
| RINGSCHRAUBE DIN 580 M12 | 40 26 003 08 | 7 | 1 | 2 340 004 | 96 43 780 08 | OELBEHAELTER VORM. |
| ROHR | 97 37 568 08 | 15 | 1 | 2 681 | 91 28 102 08 | LUFTFILTERANLAGE |
| ROHR 114,3X6,3X132 S355J2H | 95 31 623 08 | 3 | 1 | 3 280 | 91 45 571 08 | EINBAU NACKENROLLE |
| ROHR 12X1,5X1252 E235+N | 97 33 883 08 | (299) | 1 | 2 210 | 91 81 614 08 | ANTRIEBSAGGREGAT VORM. |
| ROHR 12X1,5X598 E235+N | 97 59 237 08 | (298) | 1 | 2 210 | 91 81 614 08 | ANTRIEBSAGGREGAT VORM. |
| ROHR 139.7X30 S770QL SPF | 97 72 673 08 | 14 | 4 | 1 740 010 | 96 50 675 08 | MONTAGETEILE |
| ROHR 16.0X30 E235+N | 97 60 496 08 | 25 | 1 | 2 210 | 91 81 614 08 | ANTRIEBSAGGREGAT VORM. |
| ROHR 16X2X70 E235+N VERZ | 94 61 046 08 | 14 | 2 | 2 210 | 91 81 614 08 | ANTRIEBSAGGREGAT VORM. |
| ROHR 18.0X622 X5CRNI18-10 | 97 00 854 9 | 1 | 1 | 2 790 024 | 96 67 077 08 | SPIEGELHALTER VORM. |
| ROHR 30.0X77 0 X5CRNI18-10 | 95 67 938 08 | 50 | 1 | 2 520 000 | 91 49 872 08 | KABINE VERGLAST |
| ROHR 30X4X15 E355+N VERZ | 93 48 135 08 | 91 | 2 | 2 520 000 | 91 49 872 08 | KABINE VERGLAST |
| ROHR 88.9X36 S235JRH FE//ZN | 97 72 672 08 | 11 | 4 | 1 100 215 | 99 20 783 14 | MITTELTEIL |
| ROHR DIN 73378 6X1,5 PA 12-H | 10 87 314 9 | 5 | 5 | 2 440 012 | 92 14 441 08 | ZENTRALSCHMIERANLAGE |
| ROHR DIN 73378 6X1,5 PA 12-H | 10 87 314 9 | 14 | 40 | 2 711 | 91 53 002 08 | ZENTRALSCHMIERANLAGE O |
| ROHR KPL. | 91 89 986 14 | 10 | 2 | 1 100 200 | 96 72 944 08 | UNTERWAGEN KPL. |
| ROHR KPL. 10X1,5X134 | 92 15 127 08 | 491 | 1 | 2 998 | 91 51 090 08 | ROHRLEITUNGEN OBERWAGE |
| ROHR KPL. 10X1,5X167 | 92 15 130 08 | 494 | 1 | 2 998 | 91 51 090 08 | ROHRLEITUNGEN OBERWAGE |
| ROHR KPL. 10X1,5X174 | 92 15 131 08 | 495 | 1 | 2 998 | 91 51 090 08 | ROHRLEITUNGEN OBERWAGE |
| ROHR KPL. 10X1,5X214 | 92 15 126 08 | 490 | 1 | 2 998 | 91 51 090 08 | ROHRLEITUNGEN OBERWAGE |
| ROHR KPL. 10X1,5X278 | 92 15 132 08 | 496 | 1 | 2 998 | 91 51 090 08 | ROHRLEITUNGEN OBERWAGE |
| ROHR KPL. 10X1,5X679 | 92 15 128 08 | 492 | 1 | 2 998 | 91 51 090 08 | ROHRLEITUNGEN OBERWAGE |
| ROHR KPL. 10X1,5X992 | 92 15 129 08 | 493 | 1 | 2 998 | 91 51 090 08 | ROHRLEITUNGEN OBERWAGE |
| ROHR KPL. 12X1,5X165 | 92 68 945 08 | 476 | 1 | 2 998 | 91 51 090 08 | ROHRLEITUNGEN OBERWAGE |
| ROHR KPL. 18X1,5X188 | 96 35 351 08 | (191) | 1 | 2 210 | 91 81 614 08 | ANTRIEBSAGGREGAT VORM. |
| ROHR KPL. 18X1,5X2161 | 96 21 897 08 | 472 | 1 | 2 998 | 91 51 090 08 | ROHRLEITUNGEN OBERWAGE |
| ROHR KPL. 18X1,5X2889 | 96 21 400 08 | 471 | 1 | 2 998 | 91 51 090 08 | ROHRLEITUNGEN OBERWAGE |
| ROHR KPL. 18X1,5X319 | 96 35 350 08 | (190) | 1 | 2 210 | 91 81 614 08 | ANTRIEBSAGGREGAT VORM. |
| ROHR KPL. 18X1,5X829 | 96 32 884 08 | 470 | 1 | 2 998 | 91 51 090 08 | ROHRLEITUNGEN OBERWAGE |
| ROHR KPL. 18X1,5X832 | 96 35 345 08 | 473 | 1 | 2 998 | 91 51 090 08 | ROHRLEITUNGEN OBERWAGE |
| ROHR KPL. 22X2,5X679 | 96 32 885 08 | (297) | 1 | 2 210 | 91 81 614 08 | ANTRIEBSAGGREGAT VORM. |
| ROHR KPL. 30X4X575 | 96 35 338 08 | 430 | 1 | 2 998 | 91 51 090 08 | ROHRLEITUNGEN OBERWAGE |
| ROHR KPL. 30X4X576 | 96 35 339 08 | 431 | 1 | 2 998 | 91 51 090 08 | ROHRLEITUNGEN OBERWAGE |
| ROHR KPL. 30X4X651 | 96 35 341 08 | 433 | 1 | 2 998 | 91 51 090 08 | ROHRLEITUNGEN OBERWAGE |
| ROHR KPL. 30X4X658 | 96 35 340 08 | 432 | 1 | 2 998 | 91 51 090 08 | ROHRLEITUNGEN OBERWAGE |
| ROHR KPL. 35X2X473 | 96 35 337 08 | (291) | 1 | 2 970 | 91 55 482 08 | HYDRAULIK |
| ROHR KPL. 38X4X1490 | 92 12 972 08 | 478 | 1 | 2 998 | 91 51 090 08 | ROHRLEITUNGEN OBERWAGE |
| ROHR KPL. 38X4X1612 | 92 12 971 08 | 477 | 1 | 2 998 | 91 51 090 08 | ROHRLEITUNGEN OBERWAGE |
| ROHR KPL. 38X4X356 | 92 12 968 08 | 474 | 3 | 2 998 | 91 51 090 08 | ROHRLEITUNGEN OBERWAGE |
| ROHR KPL. 38X4X453 | 92 12 969 08 | 475 | 1 | 2 998 | 91 51 090 08 | ROHRLEITUNGEN OBERWAGE |
| ROHR KPL. 38X4X610 | 96 35 344 08 | 468 | 1 | 2 998 | 91 51 090 08 | ROHRLEITUNGEN OBERWAGE |
| ROHR KPL. 38X5X153 | 92 12 974 08 | 497 | 1 | 2 998 | 91 51 090 08 | ROHRLEITUNGEN OBERWAGE |
| ROHR KPL. 38X5X206 | 92 12 976 08 | 499 | 1 | 2 998 | 91 51 090 08 | ROHRLEITUNGEN OBERWAGE |
| ROHR KPL. 38X5X258 | 92 12 975 08 | 498 | 1 | 2 998 | 91 51 090 08 | ROHRLEITUNGEN OBERWAGE |
| ROHR KPL. 42X3X1287 | 92 12 973 08 | 479 | 1 | 2 998 | 91 51 090 08 | ROHRLEITUNGEN OBERWAGE |
| ROHR KPL. 42X3X440 | 96 35 336 08 | (290) | 1 | 2 970 | 91 55 482 08 | HYDRAULIK |
| ROHR KPL. 6X1X210 | 96 22 613 08 | (487) | 1 | 2 975 038 | 91 26 492 08 | ZUSATZHYDRAULIK KLAPPSPI |
| ROHR KPL. 6X1X55 | 92 12 641 08 | 92 | 1 | 2 520 000 | 91 49 872 08 | KABINE VERGLAST |
| ROHR KPL. 6X1X55 | 92 12 641 08 | 6 | 1 | 2 955 | 91 49 516 08 | PNEUMATIK KRANFUEHRERK |
| ROHR RD20X5X33 ST.37.4 FE// | 95 48 362 08 | 14 | 4 | 2 502 | 91 01 533 08 | STEUERSTAND |
| ROHR SCHWK. | 96 34 985 08 | 66 | 1 | 3 106 000 | 91 60 313 08 | TELESKOP 5 VORM. |
| ROHR ST12 SPF | 97 08 796 4 | 13 | 1 | 2 681 | 91 28 102 08 | LUFTFILTERANLAGE |
| ROHRLEITUNG | 10 11 549 1 | 2 | 1 | X1011569 | 10 11 569 6 | LECKOELRUECKLAUF |
| ROHRLEITUNG | 10 11 564 2 | 4 | 1 | X1011573 | 10 11 573 7 | KRAFTSTOFFLEITUNGEN |
| ROHRLEITUNG | 10 11 564 4 | 3 | 1 | X1011569 | 10 11 569 6 | LECKOELRUECKLAUF |
| ROHRLEITUNG | 10 11 573 8 | 6 | 1 | X1011573 | 10 11 573 7 | KRAFTSTOFFLEITUNGEN |
| ROHRLEITUNG | 10 11 574 1 | 10 | 1 | X1011573 | 10 11 573 7 | KRAFTSTOFFLEITUNGEN |
| ROHRLEITUNG | 10 11 599 0 | 8 | 1 | X1011573 | 10 11 573 7 | KRAFTSTOFFLEITUNGEN |
| ROHRLEITUNG | 10 11 599 1 | 2 | 1 | X1011573 | 10 11 573 7 | KRAFTSTOFFLEITUNGEN |

| Bezeichnung | Artikel | Pos. | Menge | Seite | Baugruppe | Bezeichnung |
|---|---|---|---|---|---|---|
| ROHRLEITUNG | 10 11 600 9 | 3 | 1 | X1011573 | 10 11 573 7 | KRAFTSTOFFLEITUNGEN |
| ROHRLEITUNG | 90 79 091 | 1 | 1 | 9 079 092 | 90 79 092 | ROHRLEITUNG ANBAU |
| ROHRLEITUNG 10X1 | 10 11 564 1 | 7 | 1 | X1011573 | 10 11 573 7 | KRAFTSTOFFLEITUNGEN |
| ROHRLEITUNG 10X1 | 10 11 578 1 | 9 | 1 | X1011573 | 10 11 573 7 | KRAFTSTOFFLEITUNGEN |
| ROHRLEITUNG 10X1 | 10 11 578 2 | 5 | 1 | X1011573 | 10 11 573 7 | KRAFTSTOFFLEITUNGEN |
| ROHRLEITUNG 10X1 | 10 12 024 1 | 1 | 1 | X1012024 | 10 12 024 2 | OELLEITUNG VORM. |
| ROHRLEITUNG 22X1,5 | 10 11 766 5 | 333 | 1 | X1015207 | 10 15 207 7 | DIESELMOTOR |
| ROHRLEITUNG 22X1,5 | 10 11 766 6 | 1 | 1 | X1011766 | 10 11 766 5 | ROHRLEITUNG |
| ROHRLEITUNG 22X1,5 | 10 11 914 2 | 3 | 1 | X1011914 | 10 11 914 1 | KURBELGEHAEUSEENTLUEF |
| ROHRLEITUNG 444 | 10 11 573 9 | 1 | 1 | X1011573 | 10 11 573 7 | KRAFTSTOFFLEITUNGEN |
| ROHRLEITUNG 6X1 | 90 78 984 | 10 | 1 | X1011997 | 10 11 997 6 | NEBENABTRIEB ANBAU |
| ROHRLEITUNG ANBAU | 90 79 092 | 381 | 1 | X1012193 | 10 12 193 2 | GRUNDMOTOR |
| ROHRLEITUNGEN ANTRIEBSA | 96 38 773 08 | 6 | 1 | 2 210 | 91 81 614 08 | ANTRIEBSAGGREGAT VORM. |
| ROHRLEITUNGEN KLAPPSPI | 96 22 655 08 | 93 | 1 | 2 975 038 | 91 26 492 08 | ZUSATZHYDRAULIK KLAPPSPI |
| ROHRLEITUNGEN OBERWAGE | 91 51 090 08 | 193 | 1 | | LTR 1100 -0 | LIEBHERR LTR 1100 |
| ROHRLEITUNGEN OELKUEHLE | 96 39 180 08 | 97 | 1 | 2 970 | 91 55 482 08 | HYDRAULIK |
| ROHRNIET DIN 7340 B2,5X0,3 | 44 33 003 08 | 19 | 14 | 2 922 001 | 92 84 311 08 | BUSPLATINE |
| ROHRSCHELLE 12 PP | 73 82 216 | 17 | 3 | X1011573 | 10 11 573 7 | KRAFTSTOFFLEITUNGEN |
| ROHRSCHELLE 12 PP | 73 82 216 | 13 | 1 | X1011793 | 10 11 793 0 | ANBAUTEILE LUFTPRESSER |
| ROHRSCHELLE 64 | 90 80 051 | 6 | 1 | X1011816 | 10 11 816 1 | VERBINDUNGSLEITUNG ANBA |
| ROHRSCHELLE PP | 73 82 215 | 16 | 1 | X1011573 | 10 11 573 7 | KRAFTSTOFFLEITUNGEN |
| ROHRSTUTZEN KUNSTSTOFF | 28 85 002 08 | 57 | 2 | 2 520 000 | 91 49 872 08 | KABINE VERGLAST |
| ROLLE 50.0X25 S355J2G3 FE// | 94 78 682 08 | 2 | 2 | 3 500 104 | 92 95 821 08 | HALTERUNG VORM. |
| ROLLE 50.0X25 S355J2G3 FE// | 94 78 682 08 | 80 | 2 | 3 501 | 91 05 788 08 | DOPPELKLAPPSPITZE MECH. |
| ROLLE 50.0X25 S355J2G3 FE// | 94 78 682 08 | 2 | 1 | 3 510 001 | 92 52 800 08 | KONSOLE VORM. |
| ROLLENDREHVERBINDUNG | 91 48 668 08 | 117 | 1 | | LTR 1100 -0 | LIEBHERR LTR 1100 |
| ROLLENDREHVERBINDUNG | 93 16 963 01 | 1 | 1 | 2 410 | 91 48 668 08 | ROLLENDREHVERBINDUNG |
| ROLLENHALTER SCHWK. | 92 50 730 08 | 7 | 1 | 3 501 | 91 05 788 08 | DOPPELKLAPPSPITZE MECH. |
| ROLLENHALTER SCHWK. | 96 20 515 08 | 17 | 2 | 2 440 022 | 96 42 336 08 | WINDE 2 VORM. |
| ROLLENHALTER SCHWK. | 96 77 088 08 | 4 | 1 | 3 511 006 | 96 45 029 08 | MASTNASE VORM. |
| ROLLENHALTERUNG FE//ZNNI | 92 74 939 08 | 79 | 2 | 3 501 | 91 05 788 08 | DOPPELKLAPPSPITZE MECH. |
| ROLLENKAEFIG | 92 75 143 01 | 16 | 38 | 9 387 598 | 93 87 598 01 | PLANETENGETRIEBE |
| ROLLENKAEFIG | 92 75 143 01 | 16 | 38 | 9 686 071 | 96 86 071 01 | PLANETENGETRIEBE |
| ROLLENKAEFIG | 94 42 231 03 | 2 | 32 | 9 444 410 | 94 44 410 03 | FAHRANTRIEB |
| ROLLENMUNDSTUECK FE//ZN | 97 37 747 08 | 4 | 1 | 3 101 | 91 60 312 08 | ANLENKSTUECK VORM. |
| ROLLENMUNDSTUECK FE//ZN | 97 37 747 08 | 67 | 1 | 3 102 000 | 91 62 543 08 | TELESKOP 1 VORM. |
| ROLLENMUNDSTUECK FE//ZN | 97 37 747 08 | 67 | 1 | 3 103 000 | 91 62 544 08 | TELESKOP 2 VORM. |
| ROLLENMUNDSTUECK FE//ZN | 97 37 747 08 | 67 | 1 | 3 104 000 | 91 62 545 08 | TELESKOP 3 VORM. |
| ROLLENMUNDSTUECK FE//ZN | 97 37 747 08 | 67 | 1 | 3 105 000 | 91 62 546 08 | TELESKOP 4 VORM. |
| ROLLENSTOESSEL | 10 15 353 6 | 1 | 2 | 9 079 870 | 90 79 870 | STEUERUNGSTEILE |
| ROLLENSTOESSEL D=44 | 90 74 628 | 2 | 1 | X1011683 | 10 11 683 9 | EINSPRITZPUMPE ANBAU |
| ROLLENTRAEGER SCHWK. | 92 95 916 08 | 6 | 1 | 3 500 104 | 92 95 821 08 | HALTERUNG VORM. |
| ROLLO | 11 00 696 3 | 44 | 1 | 2 520 000 | 91 49 872 08 | KABINE VERGLAST |
| ROLLO | 11 00 696 4 | 45 | 1 | 2 520 000 | 91 49 872 08 | KABINE VERGLAST |
| ROTORDICHTUNG 150X165,5X | 10 49 256 6 | (31) | 8 | 1 100 301 | 96 72 945 08 | HYDR.INSTALLATIONSTEILE |
| RS ANSCHLUSSGEHAEUSE N | 98 89 837 | 90 | 1 | 9 072 112 | 90 72 112 | HYDRAULIKDOPPELPUMPE |
| RS DECKEL NG 100 | 92 75 443 | 85 | 1 | 9 072 112 | 90 72 112 | HYDRAULIKDOPPELPUMPE |
| RS DRUCKREGLER | 11 00 308 9 | 998 | 1 | 5 026 573 | 50 26 573 08 | LUFTTROCKNER |
| RS EINSPRITZDUESE | 10 11 709 3 | 998 | 1 | X1011659 | 10 11 659 1 | EINSPRITZDUESE MIT BEFEST |
| RS KOLBEN MIT GLEITSCHUH | 90 73 393 | 77 | 2 | 9 072 112 | 90 72 112 | HYDRAULIKDOPPELPUMPE |
| RS KURBELWELLENDICHTUN | 10 12 195 2 | 1 | 1 | 9 075 133 | 90 75 133 | KURBELWELLENDICHTUNG |
| RS KURBELWELLENDICHTUN | 10 12 195 2 | 4 | 1 | X1011583 | 10 11 583 7 | DS DIESELMOTOR |
| RS KURBELWELLENDICHTUN | 10 12 195 2 | 1 | 1 | X1011801 | 10 11 801 3 | DS AGGREGATETRAEGER |
| RS KURBELWELLENDICHTUN | 10 12 195 2 | 1 | 1 | X1011801 | 10 11 801 4 | DS AGGREGATETRAEGER |
| RS KURBELWELLENDICHTU | 10 12 133 5 | 2 | 1 | 9 075 133 | 90 75 133 | KURBELWELLENDICHTUNG |
| RS KURBELWELLENDICHTU | 10 12 133 5 | 5 | 1 | X1011583 | 10 11 583 7 | DS DIESELMOTOR |
| RS KURBELWELLENLAGERUN | 10 11 693 9 | 1 | 1 | 9 076 457 | 90 76 457 | KURBELWELLENLAGERSATZ |
| RS MAGNET | 92 73 187 | 97 | 2 | 9 072 112 | 90 72 112 | HYDRAULIKDOPPELPUMPE |
| RS MAGNETVENTIL | 10 87 707 3 | (998) | 1 | 2 955 | 91 49 516 08 | PNEUMATIK KRANFUEHRERK |
| RS OELABLASSSCHRAUBE D | 10 28 920 8 | 3 | 1 | X1028018 | 10 28 018 1 | KLARSICHTBEHAELTER |

| Bezeichnung | Artikel | Pos. | Menge | Seite | Baugruppe | Bezeichnung |
|---|---|---|---|---|---|---|
| RS OELRUECKLAUFLEITUNG | 10 11 989 7 | 50 | 1 | X1011832 | 10 11 832 6 | ATL-ANBAU |
| RS PLEUELLAGER D930 SPUT | 10 11 693 4 | 50 | 1 | 9 076 459 | 90 76 459 | PLEUELSTANGE |
| RS REGELVENTIL NG 125-140 | 90 74 997 | (998) | 1 | 9 072 112 | 90 72 112 | HYDRAULIKDOPPELPUMPE |
| RS RUECKZUGKUGEL+RUECK | 90 73 389 | 78 | 2 | 9 072 112 | 90 72 112 | HYDRAULIKDOPPELPUMPE |
| RS SCHWENKJOCH NG 125 | 90 73 917 | 84 | 2 | 9 072 112 | 90 72 112 | HYDRAULIKDOPPELPUMPE |
| RS TELESKOPVERRIEGELUN | 57 18 926 08 | 997 | 1 | X1081388 | 10 81 388 6 | ZYLINDERKOPF |
| RS VERSCHLUSSRING NG 125 | 92 68 016 | 96 | 1 | 9 072 112 | 90 72 112 | HYDRAULIKDOPPELPUMPE |
| RS VERSTELLUNG | 10 87 267 2 | (1) | 1 | 2 520 000 | 91 49 872 08 | KABINE VERGLAST |
| RS WELLE NG 125 | 90 73 528 | 93 | 1 | 9 072 112 | 90 72 112 | HYDRAULIKDOPPELPUMPE |
| RS WELLE NG 125 | 90 73 915 | 95 | 1 | 9 072 112 | 90 72 112 | HYDRAULIKDOPPELPUMPE |
| RS ZYLINDER+STEUERPLAT | 90 73 918 | 81 | 1 | 9 072 112 | 90 72 112 | HYDRAULIKDOPPELPUMPE |
| RS ZYLINDER+STEUERPLAT | 90 73 484 | 79 | 1 | 9 072 112 | 90 72 112 | HYDRAULIKDOPPELPUMPE |
| RS ZYLINDERVERRIEGELUNG | 57 18 927 08 | 998 | 1 | X1081388 | 10 81 388 6 | ZYLINDERKOPF |
| RS1 PLEUELLAGER D930 SPA | 10 14 048 7 | 51 | 1 | 9 076 459 | 90 76 459 | PLEUELSTANGE |
| RS2 PLEUELLAGER D930 SPA | 10 14 048 8 | 52 | 1 | 9 076 459 | 90 76 459 | PLEUELSTANGE |
| RUECKENLEHNENRASTUNG | 57 18 300 08 | 23 | 1 | 7 741 079 | 77 41 079 08 | FAHRERSITZ |
| RUECKENTEIL | 57 18 353 08 | 2 | 1 | 7 741 079 | 77 41 079 08 | FAHRERSITZ |
| RUECKLAUFFILTER 955MM | 10 32 665 4 | 3 | 2 | 2 340 004 | 96 43 780 08 | OELBEHAELTER VORM. |
| RUECKSCHLAGVENTIL | 10 11 997 1 | 6 | 1 | X1012024 | 10 12 024 2 | OELLEITUNG VORM. |
| RUECKSCHLAGVENTIL | 10 43 004 2 | 91 | 1 | X1033367 | 10 33 367 2 | STEUERBLOCK |
| RUECKSCHLAGVENTIL | 10 43 004 2 | 131 | 1 | X1033367 | 10 33 367 2 | STEUERBLOCK |
| RUECKSCHLAGVENTIL | 11 00 721 9 | 3 | 4 | X1100291 | 11 00 291 4 | VERTEILERKOMBINATION |
| RUECKSCHLAGVENTIL | 11 17 027 7 | 2 | 1 | 5 113 066 | 51 13 066 08 | STEUERBLOCK |
| RUECKSCHLAGVENTIL | 51 04 120 08 | 29 | 1 | 2 970 | 91 55 482 08 | HYDRAULIK |
| RUECKSCHLAGVENTIL | 51 07 413 08 | 4 | 8 | 5 113 078 | 51 13 078 08 | STEUERLEISTE |
| RUECKSCHLAGVENTIL | 51 14 606 08 | 9 | 1 | 2 970 | 91 55 482 08 | HYDRAULIK |
| RUECKSCHLAGVENTIL | 51 14 606 08 | 5 | 1 | 2 971 | 91 50 610 08 | HYDRAULIK HILFSHUBWERK |
| RUECKSCHLAGVENTIL | 57 06 514 08 | 10 | 4 | X1010109 | 10 10 109 3 | DREHWERKSVENTIL |
| RUECKSCHLAGVENTIL | 57 06 514 08 | 27 | 1 | X1029147 | 10 29 147 4 | STEUERBLOCK |
| RUECKSCHLAGVENTIL | 57 06 514 08 | 27 | 2 | X1041191 | 10 41 191 5 | VENTILBLOCK |
| RUECKSCHLAGVENTIL | 57 06 514 08 | 17 | 2 | X1080297 | 10 80 297 1 | VENTILBLOCK |
| RUECKSCHLAGVENTIL | 57 18 890 08 | 4 | 2 | X1010109 | 10 10 109 3 | DREHWERKSVENTIL |
| RUECKSCHLAGVENTIL | 77 43 781 08 | (1) | 1 | 2 711 | 91 53 002 08 | ZENTRALSCHMIERANLAGE O |
| RUECKSCHLAGVENTIL 0.1BA | 51 14 315 14 | 2 | 1 | 1 423 101 | 99 26 462 14 | JACK-UP SYSTEM |
| RUECKSCHLAGVENTIL 100BA | 51 14 501 08 | 19 | 2 | 2 340 004 | 96 43 780 08 | OELBEHAELTER VORM. |
| RUECKSCHLAGVENTIL 100BA | 51 14 586 08 | 35 | 1 | 2 970 | 91 55 482 08 | HYDRAULIK |
| RUECKSCHLAGVENTIL 160BA | 51 14 439 08 | 10 | 1 | 2 970 | 91 55 482 08 | HYDRAULIK |
| RUECKSCHLAGVENTIL 160B | 51 14 469 08 | 15 | 1 | 2 970 | 91 55 482 08 | HYDRAULIK |
| RUECKSCHLAGVENTIL 250BA | 51 04 135 08 | 34 | 1 | 2 970 | 91 55 482 08 | HYDRAULIK |
| RUECKSCHLAGVENTIL 250BA | 51 14 937 08 | 8 | 1 | 2 975 152 | 91 05 737 08 | HYDRAULIK TELE |
| RUECKSCHLAGVENTIL 250BA | 51 14 917 08 | 24 | 2 | 2 970 | 91 55 482 08 | HYDRAULIK |
| RUECKSCHLAGVENTIL 250BA | 51 14 917 08 | 8 | 1 | 2 971 | 91 50 610 08 | HYDRAULIK HILFSHUBWERK |
| RUECKSCHLAGVENTIL 400BA | 51 14 324 08 | 43 | 1 | 2 970 | 91 55 482 08 | HYDRAULIK |
| RUECKSCHLAGVENTIL 400BA | 51 14 324 08 | 32 | 1 | 2 971 | 91 50 610 08 | HYDRAULIK HILFSHUBWERK |
| RUECKSCHLAGVENTIL 400B | 51 04 124 08 | 27 | 1 | 2 970 | 91 55 482 08 | HYDRAULIK |
| RUECKSCHLAGVENTIL RHV 10 | 51 13 118 08 | 44 | 1 | 2 970 | 91 55 482 08 | HYDRAULIK |
| RUECKSCHLAGVENTIL RHV 10 | 51 13 118 08 | 25 | 1 | 2 971 | 91 50 610 08 | HYDRAULIK HILFSHUBWERK |
| RUECKSCHLAGVENTIL pmax10 | 51 14 815 08 | 6 | 1 | 2 971 | 91 50 610 08 | HYDRAULIK HILFSHUBWERK |
| RUECKZUENDSICHERUNG | 10 28 030 2 | (1) | 2 | 2 920 083 | 96 31 039 08 | ELEKTRIK BATTERIEKASTEN |
| RUECKZUGPLATTE | 57 01 100 08 | 7 | 1 | 5 701 090 | 57 01 090 08 | TRIEBWERK |
| RUEHRFLUEGEL | 10 01 471 2 | 27 | 1 | X1032706 | 10 32 706 5 | ELEKTROPUMPE |
| RUNDLAGER B30X30XM8 | 72 69 065 08 | 101 | 3 | 2 510 100 | 96 44 750 08 | DREHBUEHNENVERKLEIDUN |
| RUNDLAGER B30X30XM8 | 72 69 065 08 | 11 | 8 | 2 984 | 91 52 906 08 | OELKUEHLER EINBAU |
| RUNDLAGER C50X30XM10 | 72 69 050 08 | 121 | 2 | 2 210 008 | 96 48 137 08 | KUEHLER VORM. |
| SAE-FLANSCHVERBINDUNG | 51 07 024 08 | 30 | 1 | 2 971 | 91 50 610 08 | HYDRAULIK HILFSHUBWERK |
| SAE-FLANSCHVERBINDUNG W | 47 49 067 08 | 51 | 1 | 2 970 | 91 55 482 08 | HYDRAULIK |
| SAE-FLANSCHVERBINDUNG W | 47 49 067 08 | 28 | 1 | 2 971 | 91 50 610 08 | HYDRAULIK HILFSHUBWERK |
| SAE-FLANSCHVERBINDUNG W | 47 49 069 08 | 52 | 1 | 2 970 | 91 55 482 08 | HYDRAULIK |
| SAE-FLANSCHVERBINDUNG W | 47 49 066 08 | 571 | 4 | 1 970 | 96 71 367 08 | HYDRAULIK UNTERWAGEN |
| SAE-ZWISCHENFLANSCH 1 1/4 | 51 15 192 08 | 50 | 2 | 2 970 | 91 55 482 08 | HYDRAULIK |

| Bezeichnung | Artikel | Pos. | Menge | Seite | Baugruppe | Bezeichnung |
|---|---|---|---|---|---|---|
| SAE-ZWISCHENFLANSCH 1 1/4 | 51 15 192 08 | 35 | 2 | 2 971 | 91 50 610 08 | HYDRAULIK HILFSHUBWERK |
| SAMMELROHR | 92 78 922 08 | 40 | 1 | 2 970 | 91 55 482 08 | HYDRAULIK |
| SAMMELROHR FE//ZN20//C | 92 59 332 08 | 20 | 1 | 2 340 004 | 96 43 780 08 | OELBEHAELTER VORM. |
| SAMMELROHR VERZ SPF | 10 03 310 9 | 49 | 1 | 2 970 | 91 55 482 08 | HYDRAULIK |
| SAUGFLANSCH | 51 01 462 08 | 451 | 1 | 2 210 008 | 96 48 137 08 | KUEHLER VORM. |
| SAUGROHR-OEL | 97 45 587 08 | 204 | 1 | 2 210 | 91 81 614 08 | ANTRIEBSAGGREGAT VORM. |
| SAUGROHR-OEL G-ALSI10MG | 97 30 210 08 | 8 | 1 | 2 340 004 | 96 43 780 08 | OELBEHAELTER VORM. |
| SAUGROHR-OEL SPF | 97 38 614 08 | 203 | 1 | 2 210 | 91 81 614 08 | ANTRIEBSAGGREGAT VORM. |
| SAUGSCHLAUCH | 97 29 654 08 | 250 | 1 | 2 210 | 91 81 614 08 | ANTRIEBSAGGREGAT VORM. |
| SAUGSCHLAUCH SAE100 R4 D | 77 42 367 08 | 304 | 0.37 | 2 997 | 91 51 089 08 | SCHLAUCHLEITUNGEN OBER |
| SAUGSCHLAUCH SAE100 R4 D | 77 42 367 08 | 346 | 0.76 | 2 997 | 91 51 089 08 | SCHLAUCHLEITUNGEN OBER |
| SAUGSCHLAUCH SAE100 R4 D | 77 42 365 08 | 345 | 0.76 | 2 997 | 91 51 089 08 | SCHLAUCHLEITUNGEN OBER |
| SCHAEKEL 17T SPF | 77 39 303 08 | 3 | 4 | 1 790 | 91 78 930 08 | ANSCHLAGMITTEL |
| SCHAEKEL DIN 82101 0,25T N | 77 39 335 08 | 3 | 1 | 1 792 004 | 92 51 415 08 | SCHLAUCHFUEHRUNG VORM. |
| SCHAEKEL DIN 82101 0,25T N | 77 39 335 08 | 68 | 1 | 3 106 000 | 91 60 313 08 | TELESKOP 5 VORM. |
| SCHAEKEL DIN 82101 0,25T N | 77 39 335 08 | 23 | 1 | 3 511 006 | 96 45 029 08 | MASTNASE VORM. |
| SCHALLDAEMMUNG | 96 44 555 08 | 100 | 1 | 2 510 100 | 96 44 750 08 | DREHBUEHNENVERKLEIDUN |
| SCHALLDAEMMUNG LTM 1100- | 96 40 266 08 | 800 | 1 | 2 510 108 | 96 44 555 08 | SCHALLDAEMMUNG |
| SCHALLDAEMPFER | 55 20 237 08 | 68 | 1 | 2 520 000 | 91 49 872 08 | KABINE VERGLAST |
| SCHALLDAEMPFER | 55 20 237 08 | 3 | 1 | 2 955 | 91 49 516 08 | PNEUMATIK KRANFUEHRERK |
| SCHALTELEMENT | 69 27 014 08 | 7 | 1 | 2 913 003 | 96 20 599 08 | FOLIENTASTATUR VORM. |
| SCHALTLITZE 1 0,35 | 60 04 409 08 | 22 | 20 | 2 932 119 | 96 46 061 08 | SCHWENKRAHMEN RELAISST |
| SCHALTNOCKE | 57 09 908 08 | 23 | 6 | 6 060 516 | 60 60 516 08 | GETRIEBENOCKENENDSCHAL |
| SCHARNIER 20X20X40/180° G | 70 42 582 08 | 4 | 2 | 2 520 021 | 92 17 203 08 | ARMATURENKASTEN LIEFERU |
| SCHARNIER 35X35X50/180° N | 10 29 468 4 | 4 | 2 | 2 515 007 | 96 42 014 08 | PODEST VORM. |
| SCHARNIER 35X35X50/180° S | 70 42 281 08 | 2 | 3 | 2 510 072 | 96 44 614 08 | KLAPPE VORM.RECHTS |
| SCHARNIER 35X35X50/180° S | 70 42 281 08 | 2 | 3 | 2 510 201 | 96 42 011 08 | KLAPPE VORM. |
| SCHARNIER 35X35X50/180° S | 70 42 281 08 | 3 | 1 | 3 750 026 | 96 89 407 08 | HALTER LINKS |
| SCHARNIER 35X35X50/180° S | 70 42 281 08 | 3 | 1 | 3 750 028 | 96 89 408 08 | HALTER RECHTS |
| SCHAUMSTOFF 40x40x2000 | 28 39 069 08 | 148 | 0.8 | 2 520 000 | 91 49 872 08 | KABINE VERGLAST |
| SCHEIBE | 51 07 972 08 | 5 | 1 | 5 114 177 | 51 14 177 08 | DRUCKBEGRENZUNGSVENTI |
| SCHEIBE | 55 30 849 08 | 109 | 10 | 2 520 000 | 91 49 872 08 | KABINE VERGLAST |
| SCHEIBE | 57 01 099 08 | 5 | 1 | 5 701 090 | 57 01 090 08 | TRIEBWERK |
| SCHEIBE | 59 10 635 08 | 39 | 2 | 2 520 000 | 91 49 872 08 | KABINE VERGLAST |
| SCHEIBE 20,2X25X3XA GUMMI | 71 02 074 08 | 38 | 2 | 2 520 000 | 91 49 872 08 | KABINE VERGLAST |
| SCHEIBE 3X21X21 DC01 FE// | 97 36 182 08 | 20 | 6 | 2 210 008 | 96 48 137 08 | KUEHLER VORM. |
| SCHEIBE 40/25X18 42CRMO4 | 95 95 526 14 | 45 | 48 | 1 100 205 | 96 51 633 08 | RAUPENTRAEGER KPL.RE. |
| SCHEIBE 40/25X18 42CRMO4 | 95 95 526 14 | 45 | 48 | 1 100 210 | 96 51 634 08 | RAUPENTRAEGER KPL.LI. |
| SCHEIBE 50X5 S355J2C+C | 97 08 215 08 | 14 | 6 | 2 102 | 91 51 080 08 | MONTAGETEILE DREHBUEHN |
| SCHEIBE 8,4X16X1,6 -42CrMo4 | 10 11 814 9 | 2 | 2 | X1011832 | 10 11 832 6 | ATL-ANBAU |
| SCHEIBE 85,2X139X9,5 | 93 18 075 01 | 5 | 1 | 9 330 748 | 93 30 748 01 | DREHWERKANTRIEB |
| SCHEIBE AEHNL.ISO 7089 5 P | 42 00 522 14 | 8 | 1 | 2 913 100 | 91 23 538 08 | BAUGRUPPENTRAEGER |
| SCHEIBE DIN 125 A 6,4 ST VER | 42 00 009 77 | 43 | 2 | X1081388 | 10 81 388 6 | ZYLINDERKOPF |
| SCHEIBE DIN 1440 10 ST VER | 42 11 008 08 | 14 | 4 | 2 440 022 | 96 42 336 08 | WINDE 2 VORM. |
| SCHEIBE DIN 1440 100 ST VER | 42 11 042 08 | 12 | 4 | 1 100 216 | 96 46 363 08 | MONTAGETEILE LWE |
| SCHEIBE DIN 1440 18 ST VER | 42 11 016 08 | 38 | 2 | 2 501 000 | 91 48 769 08 | KRANFUEHRERKABINE VORM |
| SCHEIBE DIN 1440 22 ST VER | 42 11 018 08 | 3 | 2 | 1 300 010 | 99 14 563 14 | AUFSTIEG KPL. |
| SCHEIBE DIN 1440 22 ST VER | 42 11 018 08 | 381 | 1 | 2 210 008 | 96 48 137 08 | KUEHLER VORM. |
| SCHEIBE DIN 1440 32 ST VER | 42 11 026 08 | 6 | 3 | 1 630 002 | 99 06 183 14 | TRANSPORTABSTUETZUNG |
| SCHEIBE DIN 1440 55 ST VER | 42 11 034 08 | 23 | 8 | 2 571 | 91 50 902 08 | HYDRAULISCHE BALLASTIER |
| SCHEIBE DIN 1440 70 ST VER | 42 11 039 08 | 21 | 4 | 2 571 | 91 50 902 08 | HYDRAULISCHE BALLASTIER |
| SCHEIBE DIN 1441 26 ST VER | 42 12 016 08 | 382 | 1 | 2 210 008 | 96 48 137 08 | KUEHLER VORM. |
| SCHEIBE DIN 6340 13 FLZN SP | 10 17 935 6 | 42 | 36 | 3 101 | 91 60 312 08 | ANLENKSTUECK VORM. |
| SCHEIBE DIN 6340 13 FLZN SP | 10 17 935 6 | 42 | 36 | 3 102 000 | 91 62 543 08 | TELESKOP 1 VORM. |
| SCHEIBE DIN 6340 13 FLZN SP | 10 17 935 6 | 42 | 36 | 3 103 000 | 91 62 544 08 | TELESKOP 2 VORM. |
| SCHEIBE DIN 6340 13 FLZN SP | 10 17 935 6 | 42 | 24 | 3 104 000 | 91 62 545 08 | TELESKOP 3 VORM. |
| SCHEIBE DIN 6340 13 FLZN SP | 10 17 935 6 | 42 | 24 | 3 105 000 | 91 62 546 08 | TELESKOP 4 VORM. |
| SCHEIBE DIN 6340 17 C35 A3C | 42 13 004 14 | 16 | 12 | 1 100 205 | 96 51 633 08 | RAUPENTRAEGER KPL.RE. |
| SCHEIBE DIN 6340 17 C35 A3C | 42 13 004 14 | 16 | 12 | 1 100 210 | 96 51 634 08 | RAUPENTRAEGER KPL.LI. |
| SCHEIBE DIN 6916 17 -C45 V | 42 15 002 08 | 52 | 24 | 1 100 215 | 99 20 783 14 | MITTELTEIL |

| Bezeichnung | Artikel | Pos. | Menge | Seite | Baugruppe | Bezeichnung |
|---|---|---|---|---|---|---|
| SCHEIBE DIN 6916 17 -C45 V | 42 15 002 08 | 3 | 8 | 2 102 | 91 51 080 08 | MONTAGETEILE DREHBUEHN |
| SCHEIBE DIN 6916 17 -C45 V | 42 15 002 08 | 380 | 1 | 2 210 008 | 96 48 137 08 | KUEHLER VORM. |
| SCHEIBE DIN 6916 17 -C45 V | 42 15 002 08 | 30 | 4 | 2 501 000 | 91 48 769 08 | KRANFUEHRERKABINE VORM |
| SCHEIBE DIN 6916 21 C 45 A3 | 46 00 222 03 | 10 | 14 | 1 100 205 | 96 51 633 08 | RAUPENTRAEGER KPL.RE. |
| SCHEIBE DIN 6916 21 C 45 A3 | 46 00 222 03 | 10 | 14 | 1 100 210 | 96 51 634 08 | RAUPENTRAEGER KPL.LI. |
| SCHEIBE DIN 6916 25 C 45 A3 | 46 00 146 03 | 5 | 48 | 1 100 205 | 96 51 633 08 | RAUPENTRAEGER KPL.RE. |
| SCHEIBE DIN 6916 25 C 45 A3 | 46 00 146 03 | 5 | 48 | 1 100 210 | 96 51 634 08 | RAUPENTRAEGER KPL.LI. |
| SCHEIBE DIN 7349 10,5 200HV- | 11 65 858 0 | 378 | 16 | 2 510 100 | 96 44 750 08 | DREHBUEHNENVERKLEIDUN |
| SCHEIBE DIN 7349 10,5 200HV- | 11 65 858 0 | 375 | 4 | 2 681 | 91 28 102 08 | LUFTFILTERANLAGE |
| SCHEIBE DIN 7349 10,5 200HV- | 11 65 858 0 | 32 | 9 | 3 101 | 91 60 312 08 | ANLENKSTUECK VORM. |
| SCHEIBE DIN 7349 10,5 200HV- | 11 65 858 0 | 11 | 2 | X1011989 | 10 11 989 1 | KRAFTSTOFFVORFILTERANBA |
| SCHEIBE DIN 7349 13 200HV F | 10 00 637 0 | 31 | 2 | 2 510 200 | 96 41 258 08 | DREHBUEHNENVERKLEIDUN |
| SCHEIBE DIN 7349 13 200HV F | 10 00 637 0 | 75 | 4 | 3 501 | 91 05 788 08 | DOPPELKLAPPSPITZE MECH. |
| SCHEIBE DIN 7349 17 200HV F | 46 00 021 | 59 | 12 | 2 102 | 91 51 080 08 | MONTAGETEILE DREHBUEHN |
| SCHEIBE DIN 7349 17 200HV F | 46 00 021 | 3 | 5 | 2 270 | 91 50 456 08 | KRAFTSTOFFBEHAELTER AN |
| SCHEIBE DIN 7349 17 200HV F | 46 00 021 | 66 | 4 | 3 501 | 91 05 788 08 | DOPPELKLAPPSPITZE MECH. |
| SCHEIBE DIN 7349 17 200HV F | 46 00 021 | 9 | 8 | 3 510 100 | 91 49 246 08 | TRANSPORTHALTERUNG DKS |
| SCHEIBE DIN 7349 21 100HV F | 46 00 604 | 5 | 1 | 2 270 | 91 50 456 08 | KRAFTSTOFFBEHAELTER AN |
| SCHEIBE DIN 7349 21 100HV F | 46 00 604 | 5 | 4 | 2 340 | 91 53 116 08 | OELBEHAELTER ANBAU |
| SCHEIBE DIN 7349 21 100HV F | 46 00 604 | 11 | 6 | 3 510 100 | 91 49 246 08 | TRANSPORTHALTERUNG DKS |
| SCHEIBE DIN 7349 4,3 A4 | 11 16 108 4 | 375 | 4 | 2 200 048 | 96 84 070 08 | AUSGLEICHSBEHAELTER VO |
| SCHEIBE DIN 7349 6,4 200HV | 40 00 648 | 379 | 4 | 2 510 100 | 96 44 750 08 | DREHBUEHNENVERKLEIDUN |
| SCHEIBE DIN 7349 6,4 200HV | 40 00 648 | 12 | 2 | 2 515 007 | 96 42 014 08 | PODEST VORM. |
| SCHEIBE DIN 7349 6,4 200HV | 40 00 648 | 9 | 23 | 2 571 | 91 50 902 08 | HYDRAULISCHE BALLASTIER |
| SCHEIBE DIN 7349 8,4 200HV F | 11 84 050 1 | 47 | 4 | 2 440 022 | 96 42 336 08 | WINDE 2 VORM. |
| SCHEIBE DIN 7349 8,4 200HV F | 11 84 050 1 | 376 | 14 | 2 510 100 | 96 44 750 08 | DREHBUEHNENVERKLEIDUN |
| SCHEIBE DIN 7349 8,4 200HV F | 11 84 050 1 | 5 | 4 | 2 790 | 91 68 708 08 | SPIEGELANBAU DREHBUEHN |
| SCHEIBE DIN 7989-2 16 ST V | 42 17 008 08 | 381 | 4 | 2 210 | 91 81 614 08 | ANTRIEBSAGGREGAT VORM. |
| SCHEIBE DIN 7989-2 16 ST V | 42 17 008 08 | 18 | 2 | 3 510 100 | 91 49 246 08 | TRANSPORTHALTERUNG DKS |
| SCHEIBE DIN 9021 4 A2C | 42 18 005 08 | 33 | 2 | 3 100 | 91 59 279 08 | TELESKOPAUSLEGER KPL. |
| SCHEIBE DIN 9021 4 A2C | 42 18 005 08 | 106 | 2 | 3 501 | 91 05 788 08 | DOPPELKLAPPSPITZE MECH. |
| SCHEIBE DIN 9021 5,3 140HV | 42 18 006 08 | 71 | 4 | 2 970 | 91 55 482 08 | HYDRAULIK |
| SCHEIBE DIN 9021 5,3 140HV | 42 18 006 08 | 218 | 2 | 3 930 718 | 96 56 248 08 | KLEMMKASTEN KPL. |
| SCHEIBE DIN EN 28738 20 16 | 42 11 017 14 | 10 | 8 | 1 740 010 | 96 50 675 08 | MONTAGETEILE |
| SCHEIBE EN 14399-6 12 ST A2 | 42 15 000 08 | 22 | 5 | 2 500 | 91 48 594 08 | KRANFUEHRERKABINE KPL. |
| SCHEIBE EN 14399-6 12 ST A2 | 42 15 000 08 | 3 | 6 | 2 515 | 91 51 084 08 | ABSTURZSICHERUNG |
| SCHEIBE EN 14399-6 12 ST A2 | 42 15 000 08 | 376 | 3 | 2 680 | 91 53 225 08 | ABGASANLAGE KPL. |
| SCHEIBE EN 14399-6 20 300-3 | 46 00 222 | 46 | 10 | 3 501 | 91 05 788 08 | DOPPELKLAPPSPITZE MECH. |
| SCHEIBE EN 14399-6 24 300-3 | 46 00 146 | 4 | 16 | 2 571 | 91 50 902 08 | HYDRAULISCHE BALLASTIER |
| SCHEIBE EN 14399-6 24 300-3 | 46 00 146 | 7 | 4 | 3 330 | 91 57 885 08 | AUSSCHUBMECHANIK |
| SCHEIBE GUMMI | 59 15 631 08 | 3 | 2 | 2 520 101 | 96 49 682 08 | SPRITZDUESE |
| SCHEIBE GUMMI | 59 15 631 08 | 1 | 1 | 5 910 672 | 59 10 672 08 | WISCHERMOTOR |
| SCHEIBE ISO 7089 10 300HV F | 10 28 979 5 | 44 | 8 | 1 100 215 | 99 20 783 14 | MITTELTEIL |
| SCHEIBE ISO 7089 10 300HV F | 10 28 979 5 | 7 | 2 | 1 300 010 | 99 14 563 14 | AUFSTIEG KPL. |
| SCHEIBE ISO 7089 10 300HV F | 10 28 979 5 | 377 | 11 | 2 210 | 91 81 614 08 | ANTRIEBSAGGREGAT VORM. |
| SCHEIBE ISO 7089 10 300HV F | 10 28 979 5 | 388 | 1 | 2 210 | 91 81 614 08 | ANTRIEBSAGGREGAT VORM. |
| SCHEIBE ISO 7089 10 300HV F | 10 28 979 5 | 378 | 2 | 2 210 008 | 96 48 137 08 | KUEHLER VORM. |
| SCHEIBE ISO 7089 10 300HV F | 10 28 979 5 | 5 | 6 | 2 260 006 | 96 31 147 08 | BATTERIEKASTEN VORM. |
| SCHEIBE ISO 7089 10 300HV F | 10 28 979 5 | 11 | 8 | 2 340 004 | 96 43 780 08 | OELBEHAELTER VORM. |
| SCHEIBE ISO 7089 10 300HV F | 10 28 979 5 | 40 | 4 | 2 440 | 91 52 288 08 | HILFSHUBWERK WINDE 2 |
| SCHEIBE ISO 7089 10 300HV F | 10 28 979 5 | 28 | 6 | 2 501 000 | 91 48 769 08 | KRANFUEHRERKABINE VORM |
| SCHEIBE ISO 7089 10 300HV F | 10 28 979 5 | 377 | 4 | 2 510 100 | 96 44 750 08 | DREHBUEHNENVERKLEIDUN |
| SCHEIBE ISO 7089 10 300HV F | 10 28 979 5 | 142 | 1 | 2 520 000 | 91 49 872 08 | KABINE VERGLAST |
| SCHEIBE ISO 7089 10 300HV F | 10 28 979 5 | 375 | 10 | 2 680 | 91 53 225 08 | ABGASANLAGE KPL. |
| SCHEIBE ISO 7089 10 300HV F | 10 28 979 5 | 11 | 2 | 2 790 901 | 91 54 183 08 | AUSSTEIFUNG |
| SCHEIBE ISO 7089 10 300HV F | 10 28 979 5 | 11 | 8 | 3 330 | 91 57 885 08 | AUSSCHUBMECHANIK |
| SCHEIBE ISO 7089 10 300HV F | 10 28 979 5 | 47 | 2 | 3 501 | 91 05 788 08 | DOPPELKLAPPSPITZE MECH. |
| SCHEIBE ISO 7089 12 300HV F | 10 28 980 4 | 27 | 3 | 1 100 205 | 96 51 633 08 | RAUPENTRAEGER KPL.RE. |
| SCHEIBE ISO 7089 12 300HV F | 10 28 980 4 | 27 | 3 | 1 100 210 | 96 51 634 08 | RAUPENTRAEGER KPL.LI. |
| SCHEIBE ISO 7089 12 300HV F | 10 28 980 4 | 42 | 24 | 1 100 215 | 99 20 783 14 | MITTELTEIL |

| Bezeichnung | Artikel | Pos. | Menge | Seite | Baugruppe | Bezeichnung |
|---|---|---|---|---|---|---|
| SCHEIBE ISO 7089 12 300HV F | 10 28 980 4 | 28 | 8 | 1 400 200 | 91 53 791 08 | HYDRAULIK VORB. |
| SCHEIBE ISO 7089 12 300HV F | 10 28 980 4 | 379 | 3 | 2 210 | 91 81 614 08 | ANTRIEBSAGGREGAT VORM. |
| SCHEIBE ISO 7089 12 300HV F | 10 28 980 4 | 18 | 8 | 2 340 004 | 96 43 780 08 | OELBEHAELTER VORM. |
| SCHEIBE ISO 7089 12 300HV F | 10 28 980 4 | 7 | 2 | 2 420 | 91 32 936 08 | DREHWERK |
| SCHEIBE ISO 7089 12 300HV F | 10 28 980 4 | 22 | 8 | 2 440 022 | 96 42 336 08 | WINDE 2 VORM. |
| SCHEIBE ISO 7089 12 300HV F | 10 28 980 4 | 18 | 8 | 2 500 | 91 48 594 08 | KRANFUEHRERKABINE KPL. |
| SCHEIBE ISO 7089 12 300HV F | 10 28 980 4 | 20 | 4 | 3 100 | 91 59 279 08 | TELESKOPAUSLEGER KPL. |
| SCHEIBE ISO 7089 12 300HV F | 10 28 980 4 | 37 | 32 | 3 101 | 91 60 312 08 | ANLENKSTUECK VORM. |
| SCHEIBE ISO 7089 12 300HV F | 10 28 980 4 | 37 | 14 | 3 102 000 | 91 62 543 08 | TELESKOP 1 VORM. |
| SCHEIBE ISO 7089 12 300HV F | 10 28 980 4 | 37 | 14 | 3 103 000 | 91 62 544 08 | TELESKOP 2 VORM. |
| SCHEIBE ISO 7089 12 300HV F | 10 28 980 4 | 37 | 10 | 3 104 000 | 91 62 545 08 | TELESKOP 3 VORM. |
| SCHEIBE ISO 7089 12 300HV F | 10 28 980 4 | 37 | 10 | 3 105 000 | 91 62 546 08 | TELESKOP 4 VORM. |
| SCHEIBE ISO 7089 12 300HV F | 10 28 980 4 | 64 | 3 | 3 106 000 | 91 60 313 08 | TELESKOP 5 VORM. |
| SCHEIBE ISO 7089 12 300HV F | 10 28 980 4 | 73 | 1 | 3 501 | 91 05 788 08 | DOPPELKLAPPSPITZE MECH. |
| SCHEIBE ISO 7089 12 300HV F | 10 28 980 4 | 3 | 8 | X1011578 | 10 11 578 0 | KUPPLUNGSANBAU |
| SCHEIBE ISO 7089 12 300HV F | 10 28 980 4 | 8 | 17 | X1011582 | 10 11 582 9 | SCHWUNGRADGEHAEUSE AN |
| SCHEIBE ISO 7089 16 300HV F | 10 28 980 6 | 41 | 3 | 1 100 215 | 99 20 783 14 | MITTELTEIL |
| SCHEIBE ISO 7089 16 300HV F | 10 28 980 6 | 380 | 8 | 2 210 | 91 81 614 08 | ANTRIEBSAGGREGAT VORM. |
| SCHEIBE ISO 7089 16 300HV F | 10 28 980 6 | 15 | 2 | 2 440 022 | 96 42 336 08 | WINDE 2 VORM. |
| SCHEIBE ISO 7089 18 300HV F | 10 28 980 7 | 42 | 2 | 3 330 | 91 57 885 08 | AUSSCHUBMECHANIK |
| SCHEIBE ISO 7089 3 200HV A3 | 46 00 814 | 5 | 12 | 2 913 100 | 91 23 538 08 | BAUGRUPPENTRAEGER |
| SCHEIBE ISO 7089 3 MS | 42 00 501 08 | 268 | 2 | 3 930 492 | 96 20 966 08 | KLEMMKASTEN KPL. |
| SCHEIBE ISO 7089 3,5 200HV | 46 00 253 | 16 | 10 | 2 922 001 | 92 84 311 08 | BUSPLATINE |
| SCHEIBE ISO 7089 30 300HV F | 10 28 981 1 | 10 | 5 | 2 500 | 91 48 594 08 | KRANFUEHRERKABINE KPL. |
| SCHEIBE ISO 7089 36 300HV F | 10 28 981 2 | 50 | 2 | 3 501 | 91 05 788 08 | DOPPELKLAPPSPITZE MECH. |
| SCHEIBE ISO 7089 4 200HV A3 | 40 01 645 | 4 | 4 | 2 913 004 | 96 20 460 08 | GEHAEUSE VORM. |
| SCHEIBE ISO 7089 4 200HV A3 | 40 01 645 | 13 | 4 | 2 913 100 | 91 23 538 08 | BAUGRUPPENTRAEGER |
| SCHEIBE ISO 7089 4 200HV A3 | 40 01 645 | 5 | 8 | 2 913 102 | 92 32 870 08 | LUEFTEREINHEIT |
| SCHEIBE ISO 7089 4 200HV A3 | 40 01 645 | 75 | 1 | 2 932 042 | 96 68 587 08 | GRUNDAUFBAU |
| SCHEIBE ISO 7089 4 200HV A3 | 40 01 645 | 72 | 16 | 2 932 095 | 96 46 064 08 | SCHWENKRAHMEN SICHERUN |
| SCHEIBE ISO 7089 4 200HV A3 | 40 01 645 | 29 | 8 | 2 932 119 | 96 46 061 08 | SCHWENKRAHMEN RELAISST |
| SCHEIBE ISO 7089 4 200HV A3 | 40 01 645 | 3 | 1 | 2 932 215 | 92 26 129 08 | VERTEILER MASSE |
| SCHEIBE ISO 7089 42 300HV F | 10 28 984 7 | 44 | 1 | 3 501 | 91 05 788 08 | DOPPELKLAPPSPITZE MECH. |
| SCHEIBE ISO 7089 45 300HV F | 10 28 985 0 | 48 | 2 | 3 501 | 91 05 788 08 | DOPPELKLAPPSPITZE MECH. |
| SCHEIBE ISO 7089 48 300HV F | 10 28 985 2 | 49 | 6 | 3 501 | 91 05 788 08 | DOPPELKLAPPSPITZE MECH. |
| SCHEIBE ISO 7089 5 200HV A3 | 46 00 305 | 24 | 18 | 1 400 200 | 91 53 791 08 | HYDRAULIK VORB. |
| SCHEIBE ISO 7089 5 200HV A3 | 46 00 305 | 4 | 2 | 1 630 003 | 96 47 650 08 | BOLZEN KPL. |
| SCHEIBE ISO 7089 5 200HV A3 | 46 00 305 | 9 | 2 | 2 260 006 | 96 31 147 08 | BATTERIEKASTEN VORM. |
| SCHEIBE ISO 7089 5 200HV A3 | 46 00 305 | 4 | 5 | 2 270 001 | 96 37 923 08 | KRAFTSTOFFBEHAELTER VO |
| SCHEIBE ISO 7089 5 200HV A3 | 46 00 305 | 18 | 4 | 2 502 | 91 01 533 08 | STEUERSTAND |
| SCHEIBE ISO 7089 5 200HV A3 | 46 00 305 | 139 | 4 | 2 520 000 | 91 49 872 08 | KABINE VERGLAST |
| SCHEIBE ISO 7089 5 200HV A3 | 46 00 305 | 6 | 4 | 2 711 | 91 53 002 08 | ZENTRALSCHMIERANLAGE O |
| SCHEIBE ISO 7089 5 200HV A3 | 46 00 305 | 9 | 3 | 2 913 100 | 91 23 538 08 | BAUGRUPPENTRAEGER |
| SCHEIBE ISO 7089 5 200HV A3 | 46 00 305 | 37 | 2 | 2 971 | 91 50 610 08 | HYDRAULIK HILFSHUBWERK |
| SCHEIBE ISO 7089 5 200HV A3 | 46 00 305 | 83 | 2 | 3 501 | 91 05 788 08 | DOPPELKLAPPSPITZE MECH. |
| SCHEIBE ISO 7089 5 200HV A3 | 46 00 305 | 9 | 3 | 3 750 026 | 96 89 407 08 | HALTER LINKS |
| SCHEIBE ISO 7089 5 200HV A3 | 46 00 305 | 9 | 3 | 3 750 028 | 96 89 408 08 | HALTER RECHTS |
| SCHEIBE ISO 7089 6 200HV 4 | 10 87 564 7 | 3 | 6 | 1 830 102 | 92 26 483 08 | KLEMMBRETT VORM. |
| SCHEIBE ISO 7089 6 200HV 4 | 10 87 564 7 | 32 | 2 | 1 970 | 96 71 367 08 | HYDRAULIK UNTERWAGEN |
| SCHEIBE ISO 7089 6 200HV 4 | 10 87 564 7 | 55 | 4 | 2 102 | 91 51 080 08 | MONTAGETEILE DREHBUEHN |
| SCHEIBE ISO 7089 6 200HV 4 | 10 87 564 7 | 382 | 4 | 2 210 | 91 81 614 08 | ANTRIEBSAGGREGAT VORM. |
| SCHEIBE ISO 7089 6 200HV 4 | 10 87 564 7 | 375 | 4 | 2 210 008 | 96 48 137 08 | KUEHLER VORM. |
| SCHEIBE ISO 7089 6 200HV 4 | 10 87 564 7 | 12 | 8 | 2 430 | 91 54 389 08 | DREHBUEHNENARRETIERUN |
| SCHEIBE ISO 7089 6 200HV 4 | 10 87 564 7 | 18 | 14 | 2 501 000 | 91 48 769 08 | KRANFUEHRERKABINE VORM |
| SCHEIBE ISO 7089 6 200HV 4 | 10 87 564 7 | 21 | 20 | 2 510 200 | 96 41 258 08 | DREHBUEHNENVERKLEIDUN |
| SCHEIBE ISO 7089 6 200HV 4 | 10 87 564 7 | 16 | 2 | 2 515 007 | 96 42 014 08 | PODEST VORM. |
| SCHEIBE ISO 7089 6 200HV 4 | 10 87 564 7 | 73 | 16 | 2 520 000 | 91 49 872 08 | KABINE VERGLAST |
| SCHEIBE ISO 7089 6 200HV 4 | 10 87 564 7 | 26 | 1 | 2 520 001 | 92 48 796 08 | FRONTSCHEIBE KPL. |
| SCHEIBE ISO 7089 6 200HV 4 | 10 87 564 7 | 37 | 1 | 2 522 | 91 10 037 08 | TUER KPL. |
| SCHEIBE ISO 7089 6 200HV 4 | 10 87 564 7 | 61 | 6 | 2 533 001 | 96 41 568 08 | ARMATURENBRETT DACH VO |

| Bezeichnung | Artikel | Pos. | Menge | Seite | Baugruppe | Bezeichnung |
|---|---|---|---|---|---|---|
| SCHEIBE ISO 7089 6 200HV 4 | 10 87 564 7 | 10 | 2 | 2 540 | 91 45 984 08 | HEIZUNG OW |
| SCHEIBE ISO 7089 6 200HV 4 | 10 87 564 7 | 16 | 3 | 2 920 585 | 91 01 520 08 | ELEKTRIK BLITZLEUCHTE |
| SCHEIBE ISO 7089 6 200HV 4 | 10 87 564 7 | 4 | 4 | 2 932 166 | 92 68 911 08 | VERTEILER MASSE |
| SCHEIBE ISO 7089 6 200HV 4 | 10 87 564 7 | 7 | 4 | 3 101 | 91 60 312 08 | ANLENKSTUECK VORM. |
| SCHEIBE ISO 7089 6 200HV 4 | 10 87 564 7 | 32 | 4 | 3 330 | 91 57 885 08 | AUSSCHUBMECHANIK |
| SCHEIBE ISO 7089 6 200HV 4 | 10 87 564 7 | 89 | 4 | 3 501 | 91 05 788 08 | DOPPELKLAPPSPITZE MECH. |
| SCHEIBE ISO 7089 6 200HV 4 | 10 87 564 7 | 3 | 2 | 3 920 012 | 96 57 224 08 | ENDSCHALTER ANBAU |
| SCHEIBE ISO 7089 6 200HV 4 | 10 87 564 7 | 21 | 1 | 5 910 672 | 59 10 672 08 | WISCHERMOTOR |
| SCHEIBE ISO 7089 6 200HV 4 | 10 87 564 7 | 47 | 1 | X1011998 | 10 11 998 0 | KABELBAUM ANBAU |
| SCHEIBE ISO 7089 8 200HV-A2 | 42 00 607 05 | 159 | 2 | 2 520 000 | 91 49 872 08 | KABINE VERGLAST |
| SCHEIBE ISO 7089 8 200HV-A4 | 42 00 010 14 | 21 | 4 | 1 400 200 | 91 53 791 08 | HYDRAULIK VORB. |
| SCHEIBE ISO 7089 8 300HV 4 | 10 28 980 3 | 3 | 24 | 1 100 216 | 96 46 363 08 | MONTAGETEILE LWE |
| SCHEIBE ISO 7089 8 300HV 4 | 10 28 980 3 | 34 | 2 | 1 970 | 96 71 367 08 | HYDRAULIK UNTERWAGEN |
| SCHEIBE ISO 7089 8 300HV 4 | 10 28 980 3 | 30 | 9 | 2 102 | 91 51 080 08 | MONTAGETEILE DREHBUEHN |
| SCHEIBE ISO 7089 8 300HV 4 | 10 28 980 3 | 375 | 21 | 2 210 | 91 81 614 08 | ANTRIEBSAGGREGAT VORM. |
| SCHEIBE ISO 7089 8 300HV 4 | 10 28 980 3 | 376 | 16 | 2 210 008 | 96 48 137 08 | KUEHLER VORM. |
| SCHEIBE ISO 7089 8 300HV 4 | 10 28 980 3 | 3 | 12 | 2 260 | 91 46 555 08 | BATTERIEKASTEN KPL. |
| SCHEIBE ISO 7089 8 300HV 4 | 10 28 980 3 | 7 | 4 | 2 430 | 91 54 389 08 | DREHBUEHNENARRETIERUN |
| SCHEIBE ISO 7089 8 300HV 4 | 10 28 980 3 | 14 | 4 | 2 500 | 91 48 594 08 | KRANFUEHRERKABINE KPL. |
| SCHEIBE ISO 7089 8 300HV 4 | 10 28 980 3 | 20 | 10 | 2 502 | 91 01 533 08 | STEUERSTAND |
| SCHEIBE ISO 7089 8 300HV 4 | 10 28 980 3 | 11 | 2 | 2 510 072 | 96 44 614 08 | KLAPPE VORM.RECHTS |
| SCHEIBE ISO 7089 8 300HV 4 | 10 28 980 3 | 380 | 5 | 2 510 100 | 96 44 750 08 | DREHBUEHNENVERKLEIDUN |
| SCHEIBE ISO 7089 8 300HV 4 | 10 28 980 3 | 23 | 4 | 2 510 200 | 96 41 258 08 | DREHBUEHNENVERKLEIDUN |
| SCHEIBE ISO 7089 8 300HV 4 | 10 28 980 3 | 9 | 8 | 2 515 007 | 96 42 014 08 | PODEST VORM. |
| SCHEIBE ISO 7089 8 300HV 4 | 10 28 980 3 | 80 | 50 | 2 520 000 | 91 49 872 08 | KABINE VERGLAST |
| SCHEIBE ISO 7089 8 300HV 4 | 10 28 980 3 | 4 | 4 | 2 520 041 | 96 84 504 08 | HANDGRIFF ANBAU |
| SCHEIBE ISO 7089 8 300HV 4 | 10 28 980 3 | 29 | 20 | 2 522 | 91 10 037 08 | TUER KPL. |
| SCHEIBE ISO 7089 8 300HV 4 | 10 28 980 3 | 13 | 1 | 2 540 | 91 45 984 08 | HEIZUNG OW |
| SCHEIBE ISO 7089 8 300HV 4 | 10 28 980 3 | 26 | 10 | 2 831 | 91 47 871 08 | KLIMAANLAGE OW |
| SCHEIBE ISO 7089 8 300HV 4 | 10 28 980 3 | 13 | 2 | 2 920 585 | 91 01 520 08 | ELEKTRIK BLITZLEUCHTE |
| SCHEIBE ISO 7089 8 300HV 4 | 10 28 980 3 | 77 | 2 | 2 932 042 | 96 68 587 08 | GRUNDAUFBAU |
| SCHEIBE ISO 7089 8 300HV 4 | 10 28 980 3 | 13 | 4 | 2 932 166 | 92 68 911 08 | VERTEILER MASSE |
| SCHEIBE ISO 7089 8 300HV 4 | 10 28 980 3 | 81 | 6 | 2 970 | 91 55 482 08 | HYDRAULIK |
| SCHEIBE ISO 7089 8 300HV 4 | 10 28 980 3 | 375 | 20 | 2 984 | 91 52 906 08 | OELKUEHLER EINBAU |
| SCHEIBE ISO 7089 8 300HV 4 | 10 28 980 3 | 15 | 7 | 3 100 | 91 59 279 08 | TELESKOPAUSLEGER KPL. |
| SCHEIBE ISO 7089 8 300HV 4 | 10 28 980 3 | 31 | 9 | 3 101 | 91 60 312 08 | ANLENKSTUECK VORM. |
| SCHEIBE ISO 7089 8 300HV 4 | 10 28 980 3 | 17 | 6 | 3 102 000 | 91 62 543 08 | TELESKOP 1 VORM. |
| SCHEIBE ISO 7089 8 300HV 4 | 10 28 980 3 | 17 | 6 | 3 103 000 | 91 62 544 08 | TELESKOP 2 VORM. |
| SCHEIBE ISO 7089 8 300HV 4 | 10 28 980 3 | 17 | 6 | 3 104 000 | 91 62 545 08 | TELESKOP 3 VORM. |
| SCHEIBE ISO 7089 8 300HV 4 | 10 28 980 3 | 17 | 4 | 3 105 000 | 91 62 546 08 | TELESKOP 4 VORM. |
| SCHEIBE ISO 7089 8 300HV 4 | 10 28 980 3 | 17 | 6 | 3 106 000 | 91 60 313 08 | TELESKOP 5 VORM. |
| SCHEIBE ISO 7089 8 300HV 4 | 10 28 980 3 | 29 | 10 | 3 330 | 91 57 885 08 | AUSSCHUBMECHANIK |
| SCHEIBE ISO 7089 8 300HV 4 | 10 28 980 3 | 71 | 2 | 3 501 | 91 05 788 08 | DOPPELKLAPPSPITZE MECH. |
| SCHEIBE ISO 7089 8 300HV 4 | 10 28 980 3 | 8 | 2 | 9 077 279 | 90 77 279 | ANSCHLUSSSTUTZEN ANBAU |
| SCHEIBE ISO 7089 8 300HV 4 | 10 28 980 3 | 8 | 1 | X1011997 | 10 11 997 9 | KABELSATZ ANBAU |
| SCHEIBE ISO 7092 12 200HV | 42 02 008 08 | 12 | 18 | 3 330 | 91 57 885 08 | AUSSCHUBMECHANIK |
| SCHEIBE ISO 7092 20 300HV F | 11 69 132 7 | 61 | 12 | 3 102 000 | 91 62 543 08 | TELESKOP 1 VORM. |
| SCHEIBE ISO 7092 20 300HV F | 11 69 132 7 | 61 | 12 | 3 103 000 | 91 62 544 08 | TELESKOP 2 VORM. |
| SCHEIBE ISO 7092 20 300HV F | 11 69 132 7 | 61 | 12 | 3 104 000 | 91 62 545 08 | TELESKOP 3 VORM. |
| SCHEIBE ISO 7092 20 300HV F | 11 69 132 7 | 34 | 12 | 3 105 000 | 91 62 546 08 | TELESKOP 4 VORM. |
| SCHEIBE ISO 7092 20 300HV F | 11 69 132 7 | 42 | 16 | 3 106 000 | 91 60 313 08 | TELESKOP 5 VORM. |
| SCHEIBE ISO 7092 6 200HV-A2 | 10 03 569 4 | 157 | 3 | 2 520 000 | 91 49 872 08 | KABINE VERGLAST |
| SCHEIBE ISO 7093-1 10 300HV | 11 49 188 9 | 43 | 8 | 1 100 215 | 99 20 783 14 | MITTELTEIL |
| SCHEIBE ISO 7093-1 10 300HV | 11 49 188 9 | 6 | 20 | 1 100 220 | 99 08 404 14 | ABDECKUNG |
| SCHEIBE ISO 7093-1 10 300HV | 11 49 188 9 | 16 | 16 | 2 102 | 91 51 080 08 | MONTAGETEILE DREHBUEHN |
| SCHEIBE ISO 7093-1 10 300HV | 11 49 188 9 | 376 | 2 | 2 200 | 91 81 095 08 | ANTRIEBSAGGREGAT KPL. |
| SCHEIBE ISO 7093-1 10 300HV | 11 49 188 9 | 13 | 6 | 2 510 200 | 96 41 258 08 | DREHBUEHNENVERKLEIDUN |
| SCHEIBE ISO 7093-1 10 300HV | 11 49 188 9 | 36 | 2 | 2 522 | 91 10 037 08 | TUER KPL. |
| SCHEIBE ISO 7093-1 10 300HV | 11 49 188 9 | 10 | 12 | 2 790 901 | 91 54 183 08 | AUSSTEIFUNG |
| SCHEIBE ISO 7093-1 10 300HV | 11 49 188 9 | 27 | 3 | 2 950 | 91 49 515 08 | DRUCKLUFTANLAGE OW |

| Bezeichnung | Artikel | Pos. | Menge | Seite | Baugruppe | Bezeichnung |
|---|---|---|---|---|---|---|
| SCHEIBE ISO 7093-1 10 300HV | 11 49 188 9 | 86 | 7 | 2 970 | 91 55 482 08 | HYDRAULIK |
| SCHEIBE ISO 7093-1 10 300HV | 11 49 188 9 | 72 | 2 | 3 106 000 | 91 60 313 08 | TELESKOP 5 VORM. |
| SCHEIBE ISO 7093-1 12 300HV | 11 18 271 7 | 71 | 1 | 2 520 000 | 91 49 872 08 | KABINE VERGLAST |
| SCHEIBE ISO 7093-1 12 300HV | 11 18 271 7 | 83 | 12 | 3 101 | 91 60 312 08 | ANLENKSTUECK VORM. |
| SCHEIBE ISO 7093-1 6 200HV 4 | 10 87 564 8 | 378 | 10 | 2 210 | 91 81 614 08 | ANTRIEBSAGGREGAT VORM. |
| SCHEIBE ISO 7093-1 6 200HV 4 | 10 87 564 8 | 9 | 2 | 2 510 072 | 96 44 614 08 | KLAPPE VORM.RECHTS |
| SCHEIBE ISO 7093-1 6 200HV 4 | 10 87 564 8 | 9 | 2 | 2 510 201 | 96 42 011 08 | KLAPPE VORM. |
| SCHEIBE ISO 7093-1 6 200HV 4 | 10 87 564 8 | 15 | 4 | 2 520 001 | 92 48 796 08 | FRONTSCHEIBE KPL. |
| SCHEIBE ISO 7093-1 6 200HV 4 | 10 87 564 8 | 54 | 2 | 2 522 | 91 10 037 08 | TUER KPL. |
| SCHEIBE ISO 7093-1 6 200HV 4 | 10 87 564 8 | 76 | 2 | 2 932 042 | 96 68 587 08 | GRUNDAUFBAU |
| SCHEIBE ISO 7093-1 6 200HV 4 | 10 87 564 8 | 73 | 10 | 2 970 | 91 55 482 08 | HYDRAULIK |
| SCHEIBE ISO 7093-1 6 200HV 4 | 10 87 564 8 | 41 | 4 | 2 971 | 91 50 610 08 | HYDRAULIK HILFSHUBWERK |
| SCHEIBE ISO 7093-1 6 200HV 4 | 10 87 564 8 | 5 | 1 | 5 910 672 | 59 10 672 08 | WISCHERMOTOR |
| SCHEIBE ISO 7093-1 8 200HV | 42 18 009 08 | 28 | 2 | 2 102 | 91 51 080 08 | MONTAGETEILE DREHBUEHN |
| SCHEIBE ISO 7093-1 8 200HV | 42 18 009 08 | 9 | 4 | 2 440 022 | 96 42 336 08 | WINDE 2 VORM. |
| SCHEIBE ISO 7093-1 8 200HV | 42 18 009 08 | 19 | 2 | 2 502 | 91 01 533 08 | STEUERSTAND |
| SCHEIBE ISO 7093-1 8 200HV | 42 18 009 08 | 375 | 4 | 2 510 100 | 96 44 750 08 | DREHBUEHNENVERKLEIDUN |
| SCHEIBE ISO 7093-1 8 200HV | 42 18 009 08 | 16 | 13 | 2 510 200 | 96 41 258 08 | DREHBUEHNENVERKLEIDUN |
| SCHEIBE ISO 7093-1 8 200HV | 42 18 009 08 | 10 | 8 | 2 515 007 | 96 42 014 08 | PODEST VORM. |
| SCHEIBE ISO 7093-1 8 200HV | 42 18 009 08 | 39 | 2 | 2 522 | 91 10 037 08 | TUER KPL. |
| SCHEIBE ISO 7093-1 8 200HV | 42 18 009 08 | 29 | 2 | 2 831 | 91 47 871 08 | KLIMAANLAGE OW |
| SCHEIBE ISO 7093-1 8 200HV | 42 18 009 08 | 78 | 9 | 2 932 042 | 96 68 587 08 | GRUNDAUFBAU |
| SCHEIBE ISO 7093-1 8 200HV | 42 18 009 08 | 22 | 16 | 2 950 | 91 49 515 08 | DRUCKLUFTANLAGE OW |
| SCHEIBE ISO 7093-1 8 200HV | 42 18 009 08 | 18 | 4 | 3 100 | 91 59 279 08 | TELESKOPAUSLEGER KPL. |
| SCHEIBE ISO 7093-1 8 200HV | 42 18 009 08 | 28 | 18 | 3 101 | 91 60 312 08 | ANLENKSTUECK VORM. |
| SCHEIBE ISO 7093-1 8 200HV | 42 18 009 08 | 37 | 3 | 3 510 100 | 91 49 246 08 | TRANSPORTHALTERUNG DKS |
| SCHEIBE ISO 7093-1 8 200HV | 42 18 009 08 | 31 | 3 | 3 511 006 | 96 45 029 08 | MASTNASE VORM. |
| SCHEIBE LIKE ISO 7089 10 -PA | 42 00 054 14 | 375 | 2 | 2 200 | 91 81 095 08 | ANTRIEBSAGGREGAT KPL. |
| SCHEIBE RD110X8 S355MC FE | 94 93 480 08 | 91 | 2 | 3 501 | 91 05 788 08 | DOPPELKLAPPSPITZE MECH. |
| SCHEIBE RD20X5,7 PA6G | 28 30 915 08 | 20 | 1 | 2 520 001 | 92 48 796 08 | FRONTSCHEIBE KPL. |
| SCHEIBE RD22X1 DC01+ZE | 95 64 143 08 | 45 | 4 | 3 330 | 91 57 885 08 | AUSSCHUBMECHANIK |
| SCHEIBE RD26X5,7 PA6G | 28 30 913 08 | 24 | 1 | 2 520 001 | 92 48 796 08 | FRONTSCHEIBE KPL. |
| SCHEIBENBOLZEN | 11 49 429 9 | 4 | 1 | 4 003 006 | 91 04 457 08 | HAKENFLASCHE |
| SCHEIBENFEDER DIN 6888 3 | 57 04 355 08 | 18 | 1 | X1042993 | 10 42 993 3 | ZAHNRADMOTOR |
| SCHELLE DIN 3016-1 10X20X | 73 81 628 | 24 | 1 | X1011998 | 10 11 998 0 | KABELBAUM ANBAU |
| SCHELLE DIN 3016-1 10X20X | 73 81 628 | 7 | 1 | X1012024 | 10 12 024 2 | OELLEITUNG VORM. |
| SCHELLE DIN 3016-1 10X25X | 73 82 092 | 2 | 2 | X1012024 | 10 12 024 2 | OELLEITUNG VORM. |
| SCHELLE DIN 3016-1 12X15X | 73 82 087 | 19 | 1 | X1011998 | 10 11 998 0 | KABELBAUM ANBAU |
| SCHELLE DIN 3016-1 12X20X | 73 81 629 | 3 | 4 | X1011997 | 10 11 997 9 | KABELSATZ ANBAU |
| SCHELLE DIN 3016-1 12X25X | 73 82 091 | 29 | 1 | X1011997 | 10 11 997 9 | KABELSATZ ANBAU |
| SCHELLE DIN 3016-1 16X15X | 73 81 294 | 20 | 1 | X1011998 | 10 11 998 0 | KABELBAUM ANBAU |
| SCHELLE DIN 3016-1 18X20X | 73 81 635 | 27 | 2 | X1011998 | 10 11 998 0 | KABELBAUM ANBAU |
| SCHELLE DIN 3016-1 22X20X | 73 81 630 | 3 | 1 | X1011766 | 10 11 766 5 | ROHRLEITUNG |
| SCHELLE DIN 3016-1 22X20X | 73 81 630 | 7 | 2 | X1011914 | 10 11 914 1 | KURBELGEHAEUSEENTLUEF |
| SCHELLE DIN 3016-1 8X15XD1 | 73 81 771 | 17 | 3 | X1011998 | 10 11 998 0 | KABELBAUM ANBAU |
| SCHELLE DIN 3016-1 8X20XD1 | 73 82 090 | 6 | 2 | 9 080 345 | 90 80 345 | WASSERPUMPE MIT BEFEST. |
| SCHELLE DIN 3016-1 8X20XD1 | 73 82 090 | 23 | 3 | X1011998 | 10 11 998 0 | KABELBAUM ANBAU |
| SCHELLE DIN 3017-1 16/12-20 | 46 01 105 | 19 | 1 | X1011914 | 10 11 914 1 | KURBELGEHAEUSEENTLUEF |
| SCHELLE DIN 3017-1 16/12-20 | 46 01 105 | 12 | 1 | X1012024 | 10 12 024 2 | OELLEITUNG VORM. |
| SCHELLE KPL. L 0G 12 PP | 60 20 124 08 | 5 | 1 | 2 571 | 91 50 902 08 | HYDRAULISCHE BALLASTIER |
| SCHENKELFEDER 2,5XDI 13,5 | 57 17 419 08 | 19 | 1 | 5 123 537 | 51 23 537 08 | HYDROZYLINDER |
| SCHIEBEHOLM LINKS | 10 22 427 8 | 2 | 2 | 1 100 215 | 99 20 783 14 | MITTELTEIL |
| SCHIEBEHOLM RECHTS | 10 22 427 9 | 3 | 2 | 1 100 215 | 99 20 783 14 | MITTELTEIL |
| SCHIEBEKUPPLUNG | 79 00 427 08 | 9 | 1 | 1 750 | 91 48 606 08 | WERKZEUG M.ZUBEHOER |
| SCHIENENPAAR | 57 18 302 08 | 70 | 1 | 7 741 079 | 77 41 079 08 | FAHRERSITZ |
| SCHILD | 11 49 443 2 | (2) | 1 | X1032706 | 10 32 706 5 | ELEKTROPUMPE |
| SCHILD | 11 49 458 1 | (3) | 1 | X1032706 | 10 32 706 5 | ELEKTROPUMPE |
| SCHILD | 55 30 310 08 | 20 | 1 | 2 831 | 91 47 871 08 | KLIMAANLAGE OW |
| SCHILD | 77 26 177 08 | 19 | 1 | 2 533 001 | 96 41 568 08 | ARMATURENBRETT DACH VO |
| SCHILD | 77 26 373 08 | 17 | 1 | 1 880 | 91 62 974 08 | BESCHILDERUNG SPANIEN |

| Bezeichnung | Artikel | Pos. | Menge | Seite | Baugruppe | Bezeichnung |
|---|---|---|---|---|---|---|
| SCHILD | 77 26 442 08 | 20 | 1 | 2 533 001 | 96 41 568 08 | ARMATURENBRETT DACH VO |
| SCHILD | 77 26 448 08 | 46 | 1 | 2 932 042 | 96 68 587 08 | GRUNDAUFBAU |
| SCHILD | 77 26 487 08 | 4 | 1 | 3 930 718 | 96 56 248 08 | KLEMMKASTEN KPL. |
| SCHILD | 77 32 071 08 | 21 | 1 | 2 520 000 | 91 49 872 08 | KABINE VERGLAST |
| SCHILD | 97 17 499 08 | 2 | 2 | 1 880 | 91 62 974 08 | BESCHILDERUNG SPANIEN |
| SCHILD | 97 31 787 08 | 4 | 1 | 3 930 492 | 96 20 966 08 | KLEMMKASTEN KPL. |
| SCHILD | 97 65 409 08 | 28 | 1 | 2 932 095 | 96 46 064 08 | SCHWENKRAHMEN SICHERUN |
| SCHILD 105DBA/100X90 KLEBE | 97 58 095 08 | 76 | 1 | 1 880 | 91 62 974 08 | BESCHILDERUNG SPANIEN |
| SCHILD 168X62 KLEBEFOLIE | 97 86 748 08 | 63 | 3 | 1 880 | 91 62 974 08 | BESCHILDERUNG SPANIEN |
| SCHILD 168X62 KLEBEFOLIE | 97 86 748 08 | 3 | 10 | 3 880 005 | 96 61 397 08 | BESCHILDERUNG |
| SCHILD 168X88 KLEBEFOLIE | 97 00 979 9 | 1 | 1 | 2 780 953 | 96 67 851 08 | ZUSATZBESCHILDERUNG |
| SCHILD 168X88 KLEBEFOLIE | 97 06 068 9 | 100 | 1 | 2 881 | 91 80 907 08 | BESCHILDERUNG KUEHLMIT |
| SCHILD 168X88 KLEBEFOLIE | 97 86 747 08 | 49 | 1 | 1 880 | 91 62 974 08 | BESCHILDERUNG SPANIEN |
| SCHILD 168X88 KLEBEFOLIE | 97 88 671 08 | 33 | 1 | 1 880 | 91 62 974 08 | BESCHILDERUNG SPANIEN |
| SCHILD 168X88 KLEBESCHILD | 97 01 704 4 | 90 | 4 | 1 880 | 91 62 974 08 | BESCHILDERUNG SPANIEN |
| SCHILD 168X88 KLEBESCHILD | 97 01 704 5 | 91 | 4 | 1 880 | 91 62 974 08 | BESCHILDERUNG SPANIEN |
| SCHILD 168X88 KLEBESCHILD | 97 01 704 6 | 92 | 4 | 1 880 | 91 62 974 08 | BESCHILDERUNG SPANIEN |
| SCHILD 1X80X80 KLEBEFOLIE | 97 41 504 08 | 84 | 1 | 1 880 | 91 62 974 08 | BESCHILDERUNG SPANIEN |
| SCHILD 1X80X80 KLEBEFOLIE | 97 41 505 08 | 85 | 1 | 1 880 | 91 62 974 08 | BESCHILDERUNG SPANIEN |
| SCHILD 1X80X80 KLEBEFOLIE | 97 41 506 08 | 86 | 1 | 1 880 | 91 62 974 08 | BESCHILDERUNG SPANIEN |
| SCHILD 1X80X80 KLEBEFOLIE | 97 41 507 08 | 87 | 1 | 1 880 | 91 62 974 08 | BESCHILDERUNG SPANIEN |
| SCHILD 208X88 KLEBEFOLIE | 97 86 740 08 | 12 | 3 | 1 880 | 91 62 974 08 | BESCHILDERUNG SPANIEN |
| SCHILD 208X88 KLEBEFOLIE | 97 86 741 08 | 14 | 9 | 1 880 | 91 62 974 08 | BESCHILDERUNG SPANIEN |
| SCHILD 208X88 KLEBEFOLIE | 97 86 744 08 | 29 | 4 | 1 880 | 91 62 974 08 | BESCHILDERUNG SPANIEN |
| SCHILD 208X88 KLEBEFOLIE | 97 86 745 08 | 31 | 1 | 1 880 | 91 62 974 08 | BESCHILDERUNG SPANIEN |
| SCHILD 208X88 KLEBEFOLIE | 97 86 749 08 | 64 | 1 | 1 880 | 91 62 974 08 | BESCHILDERUNG SPANIEN |
| SCHILD 208X88 KLEBEFOLIE | 97 86 750 08 | 66 | 2 | 1 880 | 91 62 974 08 | BESCHILDERUNG SPANIEN |
| SCHILD 225X165 KLEBEFOLIE | 97 15 398 08 | 1 | 1 | 3 880 005 | 91 13 525 08 | BESCHILDERUNG KLAPPSPITZ |
| SCHILD 225X165 KLEBEFOLIE | 97 15 398 08 | 1 | 1 | 3 880 005 | 96 61 397 08 | BESCHILDERUNG |
| SCHILD 225X165 KLEBEFOLIE | 97 15 399 08 | 2 | 1 | 3 880 005 | 91 13 525 08 | BESCHILDERUNG KLAPPSPITZ |
| SCHILD 225X165 KLEBEFOLIE | 97 15 399 08 | 2 | 1 | 3 880 005 | 96 61 397 08 | BESCHILDERUNG |
| SCHILD 290X100 KLEBEFOLIE | 97 86 739 08 | 11 | 2 | 1 880 | 91 62 974 08 | BESCHILDERUNG SPANIEN |
| SCHILD 6X107X237 G-ALSI12 | 77 26 246 08 | 1 | 1 | 1 881 000 | 91 62 835 08 | ZUSATZBESCHILDERUNG |
| SCHILD 70X360X0,1 FOLIE | 10 68 415 6 | 2 | 1 | 4 027 | 91 42 310 08 | LASTHAKEN |
| SCHILD 85X55 SPF | 97 02 552 0 | 1 | 1 | 3 511 102 | 96 76 955 08 | BESCHILDERUNG |
| SCHILD 88X450X0,1 FOLIE | 10 66 371 8 | 9 | 2 | 4 003 006 | 91 04 457 08 | HAKENFLASCHE |
| SCHILD BALLAST 40X120 AL-B | 97 06 454 08 | 6 | 1 | 2 920 574 | 96 36 055 08 | BEDIENPULT BALLAST |
| SCHILD BEDIENPULT AL-BL | 97 58 637 08 | 6 | 1 | 2 920 904 | 96 41 093 08 | STEUERPULT ABSTUETZUNG |
| SCHILD BETRIEBSSTUNDENZ | 97 12 910 08 | 37 | 1 | 2 932 042 | 96 68 587 08 | GRUNDAUFBAU |
| SCHILD FOLIE | 97 24 953 08 | 66 | 1 | 2 970 | 91 55 482 08 | HYDRAULIK |
| SCHILD FOLIE | 97 24 954 08 | 65 | 1 | 2 970 | 91 55 482 08 | HYDRAULIK |
| SCHILD IDENTNR. IDENT-NR | 97 35 676 08 | 20 | 1 | 1 100 200 | 96 72 944 08 | UNTERWAGEN KPL. |
| SCHLAUCH 15/18 | 55 31 734 08 | 16 | 3 | 2 540 | 91 45 984 08 | HEIZUNG OW |
| SCHLAUCH DN16 500 | 51 05 010 08 | 17 | 1 | 2 950 | 91 49 515 08 | DRUCKLUFTANLAGE OW |
| SCHLAUCH DN2X630 | 51 05 692 08 | 55 | 4 | 2 970 | 91 55 482 08 | HYDRAULIK |
| SCHLAUCH DN3,5 GUMMI | 59 10 513 08 | 43 | 1 | 2 520 000 | 91 49 872 08 | KABINE VERGLAST |
| SCHLAUCH DN4-PVC 740081 | 59 10 053 08 | 28 | 6 | 2 520 000 | 91 49 872 08 | KABINE VERGLAST |
| SCHLAUCH DN6-FLEXILON D | 10 00 994 3 | 5 | 0.6 | 9 080 345 | 90 80 345 | WASSERPUMPE MIT BEFEST. |
| SCHLAUCH KPL. 1SC 0,4M | 92 60 969 08 | 321 | 1 | 2 997 | 91 51 089 08 | SCHLAUCHLEITUNGEN OBER |
| SCHLAUCH KPL. 1SC 0,54M | 96 23 339 08 | 320 | 1 | 2 997 | 91 51 089 08 | SCHLAUCHLEITUNGEN OBER |
| SCHLAUCH KPL. 1SC 0,7M | 92 87 618 08 | 316 | 1 | 2 997 | 91 51 089 08 | SCHLAUCHLEITUNGEN OBER |
| SCHLAUCH KPL. 1SC 8X1040 | 92 60 492 08 | 319 | 1 | 2 997 | 91 51 089 08 | SCHLAUCHLEITUNGEN OBER |
| SCHLAUCH KPL. 1SC 8X1160 | 92 76 807 08 | 344 | 1 | 2 997 | 91 51 089 08 | SCHLAUCHLEITUNGEN OBER |
| SCHLAUCH KPL. 1SC 8X2300 | 92 61 197 08 | 377 | 1 | 2 970 061 | 96 43 131 08 | SCHLAUCHLEITUNGEN ZUSA |
| SCHLAUCH KPL. 1SC 8X2500 | 92 63 748 08 | 328 | 1 | 2 997 | 91 51 089 08 | SCHLAUCHLEITUNGEN OBER |
| SCHLAUCH KPL. 1SC 8X3000 | 92 60 719 08 | 209 | 1 | 2 997 | 91 51 089 08 | SCHLAUCHLEITUNGEN OBER |
| SCHLAUCH KPL. 1SC 8X320 | 92 60 418 08 | 210 | 1 | 2 997 | 91 51 089 08 | SCHLAUCHLEITUNGEN OBER |
| SCHLAUCH KPL. 1SC 8X360 | 92 63 787 08 | 254 | 1 | 2 971 012 | 96 43 144 08 | SCHLAUCHLEITUNGEN HUBW |
| SCHLAUCH KPL. 1SC 8X560 | 92 60 975 08 | 367 | 1 | 2 997 | 91 51 089 08 | SCHLAUCHLEITUNGEN OBER |
| SCHLAUCH KPL. 1SC 8X660 | 92 61 198 08 | 325 | 1 | 2 997 | 91 51 089 08 | SCHLAUCHLEITUNGEN OBER |

| Bezeichnung | Artikel | Pos. | Menge | Seite | Baugruppe | Bezeichnung |
|---|---|---|---|---|---|---|
| SCHLAUCH KPL. 1SC 8X820 | 96 28 609 08 | 326 | 1 | 2 997 | 91 51 089 08 | SCHLAUCHLEITUNGEN OBER |
| SCHLAUCH KPL. 1SC 8X960 | 96 36 981 08 | 306 | 1 | 2 997 | 91 51 089 08 | SCHLAUCHLEITUNGEN OBER |
| SCHLAUCH KPL. 1SN 25X1900 | 92 99 226 08 | 329 | 1 | 2 997 | 91 51 089 08 | SCHLAUCHLEITUNGEN OBER |
| SCHLAUCH KPL. 1SN 25X2900 | 92 97 210 08 | 394 | 1 | 2 997 | 91 51 089 08 | SCHLAUCHLEITUNGEN OBER |
| SCHLAUCH KPL. 1SN 25X800 | 92 96 415 08 | 206 | 1 | 2 997 | 91 51 089 08 | SCHLAUCHLEITUNGEN OBER |
| SCHLAUCH KPL. 1SN 32X350 | 96 39 197 08 | 333 | 1 | 2 997 | 91 51 089 08 | SCHLAUCHLEITUNGEN OBER |
| SCHLAUCH KPL. 1SN 32X450 | 96 35 995 08 | 383 | 1 | 2 971 012 | 96 43 144 08 | SCHLAUCHLEITUNGEN HUBW |
| SCHLAUCH KPL. 2755 12X218 | 96 43 246 08 | 101 | 1 | 1 997 | 91 53 489 08 | SCHLAUCHLEITUNGEN RAUP |
| SCHLAUCH KPL. 2755 12X230 | 92 20 994 08 | 115 | 1 | 1 997 | 91 53 489 08 | SCHLAUCHLEITUNGEN RAUP |
| SCHLAUCH KPL. 2755 12X275 | 92 24 172 08 | 140 | 1 | 1 997 | 91 53 489 08 | SCHLAUCHLEITUNGEN RAUP |
| SCHLAUCH KPL. 2755 12X285 | 92 19 740 08 | 395 | 1 | 2 997 | 91 51 089 08 | SCHLAUCHLEITUNGEN OBER |
| SCHLAUCH KPL. 2755 12X355 | 96 43 260 08 | 136 | 1 | 1 997 | 91 53 489 08 | SCHLAUCHLEITUNGEN RAUP |
| SCHLAUCH KPL. 2755 12X480 | 92 37 099 08 | 374 | 1 | 2 970 061 | 96 43 131 08 | SCHLAUCHLEITUNGEN ZUSA |
| SCHLAUCH KPL. 2755 12X600 | 92 28 852 08 | 373 | 1 | 2 970 061 | 96 43 131 08 | SCHLAUCHLEITUNGEN ZUSA |
| SCHLAUCH KPL. 2755 16X300 | 92 53 428 08 | 309 | 1 | 2 997 | 91 51 089 08 | SCHLAUCHLEITUNGEN OBER |
| SCHLAUCH KPL. 2755 16X450 | 96 43 254 08 | 116 | 1 | 1 997 | 91 53 489 08 | SCHLAUCHLEITUNGEN RAUP |
| SCHLAUCH KPL. 2755 25X190 | 96 43 249 08 | 106 | 1 | 1 997 | 91 53 489 08 | SCHLAUCHLEITUNGEN RAUP |
| SCHLAUCH KPL. 2755 25X195 | 96 43 251 08 | 108 | 1 | 1 997 | 91 53 489 08 | SCHLAUCHLEITUNGEN RAUP |
| SCHLAUCH KPL. 2755 25X205 | 96 43 250 08 | 107 | 1 | 1 997 | 91 53 489 08 | SCHLAUCHLEITUNGEN RAUP |
| SCHLAUCH KPL. 2755 25X210 | 96 43 253 08 | 110 | 1 | 1 997 | 91 53 489 08 | SCHLAUCHLEITUNGEN RAUP |
| SCHLAUCH KPL. 2755 25X210 | 96 43 253 08 | 111 | 1 | 1 997 | 91 53 489 08 | SCHLAUCHLEITUNGEN RAUP |
| SCHLAUCH KPL. 2755 25X210 | 96 43 253 08 | 112 | 1 | 1 997 | 91 53 489 08 | SCHLAUCHLEITUNGEN RAUP |
| SCHLAUCH KPL. 2755 25X210 | 96 43 253 08 | 113 | 1 | 1 997 | 91 53 489 08 | SCHLAUCHLEITUNGEN RAUP |
| SCHLAUCH KPL. 2755 25X215 | 96 43 252 08 | 109 | 1 | 1 997 | 91 53 489 08 | SCHLAUCHLEITUNGEN RAUP |
| SCHLAUCH KPL. 2755 25X221 | 96 43 264 08 | 141 | 1 | 1 997 | 91 53 489 08 | SCHLAUCHLEITUNGEN RAUP |
| SCHLAUCH KPL. 2755 25X235 | 96 43 263 08 | 139 | 1 | 1 997 | 91 53 489 08 | SCHLAUCHLEITUNGEN RAUP |
| SCHLAUCH KPL. 2755 25X296 | 96 43 258 08 | 134 | 1 | 1 997 | 91 53 489 08 | SCHLAUCHLEITUNGEN RAUP |
| SCHLAUCH KPL. 2755 25X304 | 96 43 259 08 | 135 | 1 | 1 997 | 91 53 489 08 | SCHLAUCHLEITUNGEN RAUP |
| SCHLAUCH KPL. 2755 3,5M | 92 22 980 08 | 114 | 1 | 1 997 | 91 53 489 08 | SCHLAUCHLEITUNGEN RAUP |
| SCHLAUCH KPL. 2SN 1,2M | 92 68 722 08 | 121 | 1 | 1 997 | 91 53 489 08 | SCHLAUCHLEITUNGEN RAUP |
| SCHLAUCH KPL. 2SN 1,55M | 92 80 069 08 | 128 | 1 | 1 997 | 91 53 489 08 | SCHLAUCHLEITUNGEN RAUP |
| SCHLAUCH KPL. 2SN 1,55M | 92 80 069 08 | 129 | 1 | 1 997 | 91 53 489 08 | SCHLAUCHLEITUNGEN RAUP |
| SCHLAUCH KPL. 2SN 10X1480 | 96 43 275 08 | 181 | 1 | 1 400 201 | 96 43 983 08 | SCHLAUCHLEITUNGEN ABST |
| SCHLAUCH KPL. 2SN 10X2000 | 96 22 417 08 | 365 | 1 | 2 997 | 91 51 089 08 | SCHLAUCHLEITUNGEN OBER |
| SCHLAUCH KPL. 2SN 10X2190 | 96 43 257 08 | 130 | 1 | 1 997 | 91 53 489 08 | SCHLAUCHLEITUNGEN RAUP |
| SCHLAUCH KPL. 2SN 10X2190 | 96 43 257 08 | 132 | 1 | 1 997 | 91 53 489 08 | SCHLAUCHLEITUNGEN RAUP |
| SCHLAUCH KPL. 2SN 10X3300 | 96 43 280 08 | 187 | 1 | 1 400 201 | 96 43 983 08 | SCHLAUCHLEITUNGEN ABST |
| SCHLAUCH KPL. 2SN 10X3360 | 96 43 277 08 | 183 | 1 | 1 400 201 | 96 43 983 08 | SCHLAUCHLEITUNGEN ABST |
| SCHLAUCH KPL. 2SN 10X3620 | 92 46 186 08 | 117 | 1 | 1 997 | 91 53 489 08 | SCHLAUCHLEITUNGEN RAUP |
| SCHLAUCH KPL. 2SN 10X3830 | 96 43 279 08 | 185 | 1 | 1 400 201 | 96 43 983 08 | SCHLAUCHLEITUNGEN ABST |
| SCHLAUCH KPL. 2SN 10X3830 | 96 43 279 08 | 186 | 1 | 1 400 201 | 96 43 983 08 | SCHLAUCHLEITUNGEN ABST |
| SCHLAUCH KPL. 2SN 10X500 | 92 76 121 08 | 131 | 1 | 1 997 | 91 53 489 08 | SCHLAUCHLEITUNGEN RAUP |
| SCHLAUCH KPL. 2SN 10X500 | 92 76 121 08 | 133 | 1 | 1 997 | 91 53 489 08 | SCHLAUCHLEITUNGEN RAUP |
| SCHLAUCH KPL. 2SN 10X5000 | 92 93 288 08 | 118 | 1 | 1 997 | 91 53 489 08 | SCHLAUCHLEITUNGEN RAUP |
| SCHLAUCH KPL. 2SN 10X5600 | 96 36 980 08 | 301 | 1 | 2 997 | 91 51 089 08 | SCHLAUCHLEITUNGEN OBER |
| SCHLAUCH KPL. 2SN 10X730 | 96 43 278 08 | 184 | 1 | 1 400 201 | 96 43 983 08 | SCHLAUCHLEITUNGEN ABST |
| SCHLAUCH KPL. 2SN 10X730 | 96 43 278 08 | 188 | 1 | 1 400 201 | 96 43 983 08 | SCHLAUCHLEITUNGEN ABST |
| SCHLAUCH KPL. 2SN 10X750 | 96 43 245 08 | 100 | 1 | 1 997 | 91 53 489 08 | SCHLAUCHLEITUNGEN RAUP |
| SCHLAUCH KPL. 2SN 10X790 | 96 43 276 08 | 182 | 1 | 1 400 201 | 96 43 983 08 | SCHLAUCHLEITUNGEN ABST |
| SCHLAUCH KPL. 2SN 10X790 | 96 43 276 08 | 189 | 1 | 1 400 201 | 96 43 983 08 | SCHLAUCHLEITUNGEN ABST |
| SCHLAUCH KPL. 2SN 10X850 | 96 43 256 08 | 126 | 1 | 1 997 | 91 53 489 08 | SCHLAUCHLEITUNGEN RAUP |
| SCHLAUCH KPL. 2SN 10X850 | 96 43 256 08 | 127 | 1 | 1 997 | 91 53 489 08 | SCHLAUCHLEITUNGEN RAUP |
| SCHLAUCH KPL. 2SN 10X900 | 92 92 213 08 | 387 | 1 | 2 971 012 | 96 43 144 08 | SCHLAUCHLEITUNGEN HUBW |
| SCHLAUCH KPL. 2SN 12X1200 | 92 76 318 08 | 312 | 1 | 2 997 | 91 51 089 08 | SCHLAUCHLEITUNGEN OBER |
| SCHLAUCH KPL. 2SN 12X1200 | 92 76 318 08 | 364 | 1 | 2 997 | 91 51 089 08 | SCHLAUCHLEITUNGEN OBER |
| SCHLAUCH KPL. 2SN 12X1240 | 92 76 166 08 | 204 | 1 | 2 997 | 91 51 089 08 | SCHLAUCHLEITUNGEN OBER |
| SCHLAUCH KPL. 2SN 12X1300 | 96 33 364 08 | 302 | 1 | 2 997 | 91 51 089 08 | SCHLAUCHLEITUNGEN OBER |
| SCHLAUCH KPL. 2SN 12X1340 | 96 33 363 08 | 363 | 1 | 2 997 | 91 51 089 08 | SCHLAUCHLEITUNGEN OBER |
| SCHLAUCH KPL. 2SN 12X1750 | 92 76 783 08 | 362 | 1 | 2 997 | 91 51 089 08 | SCHLAUCHLEITUNGEN OBER |
| SCHLAUCH KPL. 2SN 12X220 | 92 14 394 08 | 201 | 1 | 2 997 | 91 51 089 08 | SCHLAUCHLEITUNGEN OBER |

| Bezeichnung | Artikel | Pos. | Menge | Seite | Baugruppe | Bezeichnung |
|---|---|---|---|---|---|---|
| SCHLAUCH KPL. 2SN 12X3000 | 92 45 055 08 | 486 | 1 | 2 997 | 91 51 089 08 | SCHLAUCHLEITUNGEN OBER |
| SCHLAUCH KPL. 2SN 12X3000 | 92 76 847 08 | 211 | 1 | 2 997 | 91 51 089 08 | SCHLAUCHLEITUNGEN OBER |
| SCHLAUCH KPL. 2SN 12X380 | 92 76 316 08 | 262 | 1 | 2 970 103 | 96 43 157 08 | SCHLAUCHLEITUNGEN OELKU |
| SCHLAUCH KPL. 2SN 16X1580 | 96 43 274 08 | 180 | 1 | 1 400 201 | 96 43 983 08 | SCHLAUCHLEITUNGEN ABST |
| SCHLAUCH KPL. 2SN 6X11750 | 96 22 580 08 | (456) | 1 | 2 975 038 | 91 26 492 08 | ZUSATZHYDRAULIK KLAPPSPI |
| SCHLAUCH KPL. 2SN 6X1180 | 92 09 786 08 | 384 | 1 | 2 971 012 | 96 43 144 08 | SCHLAUCHLEITUNGEN HUBW |
| SCHLAUCH KPL. 2SN 6X11900 | 96 22 582 08 | (455) | 1 | 2 975 038 | 91 26 492 08 | ZUSATZHYDRAULIK KLAPPSPI |
| SCHLAUCH KPL. 2SN 6X1200 | 92 09 752 08 | 337 | 1 | 2 997 | 91 51 089 08 | SCHLAUCHLEITUNGEN OBER |
| SCHLAUCH KPL. 2SN 6X1650 | 92 93 155 08 | 85 | 1 | 3 501 | 91 05 788 08 | DOPPELKLAPPSPITZE MECH. |
| SCHLAUCH KPL. 2SN 6X190 | 96 55 621 08 | 279 | 1 | 2 997 | 91 51 089 08 | SCHLAUCHLEITUNGEN OBER |
| SCHLAUCH KPL. 2SN 6X280 | 96 24 749 08 | 366 | 1 | 2 997 | 91 51 089 08 | SCHLAUCHLEITUNGEN OBER |
| SCHLAUCH KPL. 2SN 6X2900 | 96 22 573 08 | 485 | 1 | 2 997 | 91 51 089 08 | SCHLAUCHLEITUNGEN OBER |
| SCHLAUCH KPL. 2SN 6X380 | 96 35 996 08 | 257 | 1 | 2 971 012 | 96 43 144 08 | SCHLAUCHLEITUNGEN HUBW |
| SCHLAUCH KPL. 2SN 6X400 | 92 24 554 08 | 305 | 1 | 2 997 | 91 51 089 08 | SCHLAUCHLEITUNGEN OBER |
| SCHLAUCH KPL. 2SN 6X540 | 92 09 842 08 | 396 | 1 | 2 997 | 91 51 089 08 | SCHLAUCHLEITUNGEN OBER |
| SCHLAUCH KPL. 2SN 6X540 | 96 36 999 08 | 397 | 1 | 2 997 | 91 51 089 08 | SCHLAUCHLEITUNGEN OBER |
| SCHLAUCH KPL. 2SN 6X660 | 92 26 459 08 | 331 | 1 | 2 997 | 91 51 089 08 | SCHLAUCHLEITUNGEN OBER |
| SCHLAUCH KPL. 2SN 6X760 | 92 07 273 08 | 330 | 1 | 2 997 | 91 51 089 08 | SCHLAUCHLEITUNGEN OBER |
| SCHLAUCH KPL. 2SN 6X870 | 96 43 262 08 | 138 | 1 | 1 997 | 91 53 489 08 | SCHLAUCHLEITUNGEN RAUP |
| SCHLAUCH KPL. 2SN 6X870 | 96 43 262 08 | 142 | 1 | 1 997 | 91 53 489 08 | SCHLAUCHLEITUNGEN RAUP |
| SCHLAUCH KPL. 2SN 8X1300 | 96 36 982 08 | 313 | 1 | 2 997 | 91 51 089 08 | SCHLAUCHLEITUNGEN OBER |
| SCHLAUCH KPL. 2SN 8X13000 | 92 51 852 08 | 10 | 1 | 2 792 | 91 52 291 08 | MECH.TEILE VERSANDMONT |
| SCHLAUCH KPL. 2SN 8X13000 | 92 51 853 08 | 11 | 1 | 2 792 | 91 52 291 08 | MECH.TEILE VERSANDMONT |
| SCHLAUCH KPL. 2SN 8X1400 | 92 96 389 08 | 358 | 1 | 2 997 | 91 51 089 08 | SCHLAUCHLEITUNGEN OBER |
| SCHLAUCH KPL. 2SN 8X1550 | 96 36 995 08 | 359 | 1 | 2 997 | 91 51 089 08 | SCHLAUCHLEITUNGEN OBER |
| SCHLAUCH KPL. 2SN 8X1600 | 96 22 416 08 | 361 | 1 | 2 997 | 91 51 089 08 | SCHLAUCHLEITUNGEN OBER |
| SCHLAUCH KPL. 2SN 8X1700 | 96 21 863 08 | 360 | 1 | 2 997 | 91 51 089 08 | SCHLAUCHLEITUNGEN OBER |
| SCHLAUCH KPL. 2SN 8X1750 | 92 88 756 08 | 381 | 1 | 2 971 012 | 96 43 144 08 | SCHLAUCHLEITUNGEN HUBW |
| SCHLAUCH KPL. 2SN 8X2250 | 96 35 930 08 | 104 | 1 | 1 997 | 91 53 489 08 | SCHLAUCHLEITUNGEN RAUP |
| SCHLAUCH KPL. 2SN 8X2280 | 96 43 247 08 | 102 | 1 | 1 997 | 91 53 489 08 | SCHLAUCHLEITUNGEN RAUP |
| SCHLAUCH KPL. 2SN 8X2300 | 96 43 248 08 | 105 | 1 | 1 997 | 91 53 489 08 | SCHLAUCHLEITUNGEN RAUP |
| SCHLAUCH KPL. 2SN 8X2300 | 96 43 255 08 | 119 | 1 | 1 997 | 91 53 489 08 | SCHLAUCHLEITUNGEN RAUP |
| SCHLAUCH KPL. 2SN 8X2350 | 92 96 140 08 | 103 | 1 | 1 997 | 91 53 489 08 | SCHLAUCHLEITUNGEN RAUP |
| SCHLAUCH KPL. 2SN 8X260 | 92 15 367 08 | 484 | 1 | 2 997 | 91 51 089 08 | SCHLAUCHLEITUNGEN OBER |
| SCHLAUCH KPL. 2SN 8X2650 | 96 42 744 08 | 143 | 1 | 1 997 | 91 53 489 08 | SCHLAUCHLEITUNGEN RAUP |
| SCHLAUCH KPL. 2SN 8X280 | 96 37 000 08 | 398 | 2 | 2 997 | 91 51 089 08 | SCHLAUCHLEITUNGEN OBER |
| SCHLAUCH KPL. 2SN 8X3100 | 92 26 464 08 | 122 | 1 | 1 997 | 91 53 489 08 | SCHLAUCHLEITUNGEN RAUP |
| SCHLAUCH KPL. 2SN 8X330 | 92 93 614 08 | 483 | 1 | 2 997 | 91 51 089 08 | SCHLAUCHLEITUNGEN OBER |
| SCHLAUCH KPL. 2SN 8X3450 | 96 43 261 08 | 137 | 1 | 1 997 | 91 53 489 08 | SCHLAUCHLEITUNGEN RAUP |
| SCHLAUCH KPL. 2SN 8X350 | 92 66 576 08 | 256 | 1 | 2 971 012 | 96 43 144 08 | SCHLAUCHLEITUNGEN HUBW |
| SCHLAUCH KPL. 2SN 8X360 | 96 36 979 08 | 375 | 1 | 2 970 061 | 96 43 131 08 | SCHLAUCHLEITUNGEN ZUSA |
| SCHLAUCH KPL. 2SN 8X4500 | 92 96 484 08 | 354 | 1 | 2 997 | 91 51 089 08 | SCHLAUCHLEITUNGEN OBER |
| SCHLAUCH KPL. 2SN 8X4500 | 92 96 484 08 | 356 | 1 | 2 997 | 91 51 089 08 | SCHLAUCHLEITUNGEN OBER |
| SCHLAUCH KPL. 2SN 8X5900 | 96 36 994 08 | 357 | 1 | 2 997 | 91 51 089 08 | SCHLAUCHLEITUNGEN OBER |
| SCHLAUCH KPL. 2SN 8X600 | 92 80 058 08 | 124 | 1 | 1 997 | 91 53 489 08 | SCHLAUCHLEITUNGEN RAUP |
| SCHLAUCH KPL. 2SN 8X600 | 92 96 305 08 | 120 | 1 | 1 997 | 91 53 489 08 | SCHLAUCHLEITUNGEN RAUP |
| SCHLAUCH KPL. 2SN 8X600 | 92 96 305 08 | 123 | 1 | 1 997 | 91 53 489 08 | SCHLAUCHLEITUNGEN RAUP |
| SCHLAUCH KPL. 2SN 8X6100 | 96 36 993 08 | 355 | 1 | 2 997 | 91 51 089 08 | SCHLAUCHLEITUNGEN OBER |
| SCHLAUCH KPL. 2SN 8X960 | 92 06 102 08 | 376 | 1 | 2 970 061 | 96 43 131 08 | SCHLAUCHLEITUNGEN ZUSA |
| SCHLAUCH KPL. 2TE 0,6M | 92 61 200 08 | 303 | 1 | 2 997 | 91 51 089 08 | SCHLAUCHLEITUNGEN OBER |
| SCHLAUCH KPL. 2TE 0,88M | 92 60 476 08 | 324 | 1 | 2 997 | 91 51 089 08 | SCHLAUCHLEITUNGEN OBER |
| SCHLAUCH KPL. 2TE 1,0M | 92 62 891 08 | 380 | 1 | 2 971 012 | 96 43 144 08 | SCHLAUCHLEITUNGEN HUBW |
| SCHLAUCH KPL. 2TE 1,2M | 92 75 662 08 | 318 | 1 | 2 997 | 91 51 089 08 | SCHLAUCHLEITUNGEN OBER |
| SCHLAUCH KPL. 2TE 1,36M | 92 84 584 08 | 311 | 1 | 2 997 | 91 51 089 08 | SCHLAUCHLEITUNGEN OBER |
| SCHLAUCH KPL. 2TE 1,36M | 92 93 218 08 | 310 | 1 | 2 997 | 91 51 089 08 | SCHLAUCHLEITUNGEN OBER |
| SCHLAUCH KPL. 2TE 1,3M | 92 60 465 08 | 343 | 1 | 2 997 | 91 51 089 08 | SCHLAUCHLEITUNGEN OBER |
| SCHLAUCH KPL. 2TE 10X250 | 92 62 690 08 | 308 | 1 | 2 997 | 91 51 089 08 | SCHLAUCHLEITUNGEN OBER |
| SCHLAUCH KPL. 2TE 10X430 | 96 33 352 08 | 258 | 1 | 2 971 012 | 96 43 144 08 | SCHLAUCHLEITUNGEN HUBW |
| SCHLAUCH KPL. 2TE 10X620 | 92 88 722 08 | 382 | 1 | 2 971 012 | 96 43 144 08 | SCHLAUCHLEITUNGEN HUBW |
| SCHLAUCH KPL. 2TE 10X900 | 92 61 116 08 | 327 | 1 | 2 997 | 91 51 089 08 | SCHLAUCHLEITUNGEN OBER |

| Bezeichnung | Artikel | Pos. | Menge | Seite | Baugruppe | Bezeichnung |
|---|---|---|---|---|---|---|
| SCHLAUCH KPL. 2TE 10X940 | 92 61 290 08 | 317 | 1 | 2 997 | 91 51 089 08 | SCHLAUCHLEITUNGEN OBER |
| SCHLAUCH KPL. 2TE 12X2200 | 96 35 952 08 | 202 | 1 | 2 997 | 91 51 089 08 | SCHLAUCHLEITUNGEN OBER |
| SCHLAUCH KPL. 2TE 12X3400 | 92 84 591 08 | 340 | 1 | 2 997 | 91 51 089 08 | SCHLAUCHLEITUNGEN OBER |
| SCHLAUCH KPL. 2TE 12X500 | 92 62 890 08 | 203 | 1 | 2 997 | 91 51 089 08 | SCHLAUCHLEITUNGEN OBER |
| SCHLAUCH KPL. 2TE 12X7400 | 96 42 857 08 | 213 | 1 | 2 997 | 91 51 089 08 | SCHLAUCHLEITUNGEN OBER |
| SCHLAUCH KPL. 2TE 16X220 | 92 02 441 08 | 200 | 1 | 2 997 | 91 51 089 08 | SCHLAUCHLEITUNGEN OBER |
| SCHLAUCH KPL. 2TE 16X2800 | 92 96 438 08 | 205 | 1 | 2 997 | 91 51 089 08 | SCHLAUCHLEITUNGEN OBER |
| SCHLAUCH KPL. 2TE 16X4800 | 96 42 856 08 | 212 | 1 | 2 997 | 91 51 089 08 | SCHLAUCHLEITUNGEN OBER |
| SCHLAUCH KPL. 2TE 16X520 | 92 61 374 08 | 322 | 1 | 2 997 | 91 51 089 08 | SCHLAUCHLEITUNGEN OBER |
| SCHLAUCH KPL. 2TE 16X660 | 92 66 073 08 | 353 | 1 | 2 997 | 91 51 089 08 | SCHLAUCHLEITUNGEN OBER |
| SCHLAUCH KPL. 2TE 20X2700 | 92 96 444 08 | 323 | 1 | 2 997 | 91 51 089 08 | SCHLAUCHLEITUNGEN OBER |
| SCHLAUCH KPL. 2TE 3,3M | 92 70 439 08 | 300 | 1 | 2 997 | 91 51 089 08 | SCHLAUCHLEITUNGEN OBER |
| SCHLAUCH KPL. 2TE 6X1000 | 96 24 553 08 | 307 | 1 | 2 997 | 91 51 089 08 | SCHLAUCHLEITUNGEN OBER |
| SCHLAUCH KPL. 2TE 6X350 | 92 09 917 08 | 314 | 1 | 2 997 | 91 51 089 08 | SCHLAUCHLEITUNGEN OBER |
| SCHLAUCH KPL. 2TE 6X370 | 96 21 730 08 | 255 | 1 | 2 971 012 | 96 43 144 08 | SCHLAUCHLEITUNGEN HUBW |
| SCHLAUCH KPL. 2TE 6X960 | 96 31 967 08 | 315 | 1 | 2 997 | 91 51 089 08 | SCHLAUCHLEITUNGEN OBER |
| SCHLAUCH KPL. 4SH 25X1040 | 96 36 997 08 | 391 | 1 | 2 997 | 91 51 089 08 | SCHLAUCHLEITUNGEN OBER |
| SCHLAUCH KPL. 4SH 25X1040 | 96 36 997 08 | 392 | 1 | 2 997 | 91 51 089 08 | SCHLAUCHLEITUNGEN OBER |
| SCHLAUCH KPL. 4SH 25X1140 | 96 36 996 08 | 390 | 1 | 2 997 | 91 51 089 08 | SCHLAUCHLEITUNGEN OBER |
| SCHLAUCH KPL. 4SH 25X1180 | 96 36 989 08 | 292 | 1 | 2 997 | 91 51 089 08 | SCHLAUCHLEITUNGEN OBER |
| SCHLAUCH KPL. 4SH 25X1380 | 96 36 988 08 | 291 | 1 | 2 997 | 91 51 089 08 | SCHLAUCHLEITUNGEN OBER |
| SCHLAUCH KPL. 4SH 25X300 | 96 37 118 08 | 290 | 1 | 2 997 | 91 51 089 08 | SCHLAUCHLEITUNGEN OBER |
| SCHLAUCH KPL. 4SH 25X810 | 96 36 990 08 | 293 | 1 | 2 997 | 91 51 089 08 | SCHLAUCHLEITUNGEN OBER |
| SCHLAUCH KPL. 4SH 25X920 | 96 36 998 08 | 393 | 1 | 2 997 | 91 51 089 08 | SCHLAUCHLEITUNGEN OBER |
| SCHLAUCH KPL. F6000 31X177 | 96 42 866 08 | 371 | 1 | 2 970 061 | 96 43 131 08 | SCHLAUCHLEITUNGEN ZUSA |
| SCHLAUCH KPL. F6000 31X318 | 96 42 864 08 | 385 | 1 | 2 971 012 | 96 43 144 08 | SCHLAUCHLEITUNGEN HUBW |
| SCHLAUCH KPL. F6000 31X46 | 96 42 859 08 | 348 | 1 | 2 997 | 91 51 089 08 | SCHLAUCHLEITUNGEN OBER |
| SCHLAUCH KPL. F6000 31X52 | 96 36 985 08 | 334 | 1 | 2 997 | 91 51 089 08 | SCHLAUCHLEITUNGEN OBER |
| SCHLAUCH KPL. F6000 31X54 | 96 42 858 08 | 347 | 1 | 2 997 | 91 51 089 08 | SCHLAUCHLEITUNGEN OBER |
| SCHLAUCH KPL. F6000 31X72 | 96 36 986 08 | 336 | 1 | 2 997 | 91 51 089 08 | SCHLAUCHLEITUNGEN OBER |
| SCHLAUCH KPL. GH134 10X1 | 96 37 121 08 | 1102 | 1 | 2 831 021 | 96 38 140 08 | SCHLAUCHLEITUNGEN KLIMA |
| SCHLAUCH KPL. GH134 13X26 | 96 38 196 08 | 1104 | 1 | 2 831 021 | 96 38 140 08 | SCHLAUCHLEITUNGEN KLIMA |
| SCHLAUCH KPL. GH134 13X7 | 96 40 962 08 | 1100 | 1 | 2 831 021 | 96 38 140 08 | SCHLAUCHLEITUNGEN KLIMA |
| SCHLAUCH KPL. GH134 8X700 | 96 37 122 08 | 1103 | 1 | 2 831 021 | 96 38 140 08 | SCHLAUCHLEITUNGEN KLIMA |
| SCHLAUCH KPL. GH134 8X890 | 96 38 574 08 | 1101 | 1 | 2 831 021 | 96 38 140 08 | SCHLAUCHLEITUNGEN KLIMA |
| SCHLAUCH KPL. GH506 31X1 | 96 37 009 08 | 372 | 1 | 2 970 061 | 96 43 131 08 | SCHLAUCHLEITUNGEN ZUSA |
| SCHLAUCH KPL. GH506 31X1 | 92 55 190 08 | 481 | 1 | 2 997 | 91 51 089 08 | SCHLAUCHLEITUNGEN OBER |
| SCHLAUCH KPL. GH506 31X1 | 92 55 190 08 | 482 | 1 | 2 997 | 91 51 089 08 | SCHLAUCHLEITUNGEN OBER |
| SCHLAUCH KPL. GH506 31X1 | 96 35 999 08 | 370 | 1 | 2 970 061 | 96 43 131 08 | SCHLAUCHLEITUNGEN ZUSA |
| SCHLAUCH KPL. GH506 31X2 | 92 87 533 08 | 480 | 1 | 2 997 | 91 51 089 08 | SCHLAUCHLEITUNGEN OBER |
| SCHLAUCH KPL. GH506 31X2 | 92 88 753 08 | 339 | 1 | 2 997 | 91 51 089 08 | SCHLAUCHLEITUNGEN OBER |
| SCHLAUCH KPL. GH506 31X3 | 96 42 865 08 | 386 | 1 | 2 971 012 | 96 43 144 08 | SCHLAUCHLEITUNGEN HUBW |
| SCHLAUCH KPL. GH506 31X82 | 96 29 964 08 | 338 | 1 | 2 997 | 91 51 089 08 | SCHLAUCHLEITUNGEN OBER |
| SCHLAUCH KPL. GH663 38X1 | 96 68 696 08 | 261 | 1 | 2 970 103 | 96 43 157 08 | SCHLAUCHLEITUNGEN OELKU |
| SCHLAUCH KPL. GH663 38X2 | 96 60 513 08 | 260 | 1 | 2 970 103 | 96 43 157 08 | SCHLAUCHLEITUNGEN OELKU |
| SCHLAUCH KPL. GH663 38X47 | 96 36 991 08 | 263 | 1 | 2 970 103 | 96 43 157 08 | SCHLAUCHLEITUNGEN OELKU |
| SCHLAUCH KPL. GH663-240,49 | 96 61 454 08 | 332 | 1 | 2 997 | 91 51 089 08 | SCHLAUCHLEITUNGEN OBER |
| SCHLAUCH KPL. HPC 4X450 | 96 23 355 08 | 368 | 1 | 2 997 | 91 51 089 08 | SCHLAUCHLEITUNGEN OBER |
| SCHLAUCH KPL. HPC 4X5100 | 92 32 291 08 | 369 | 1 | 2 997 | 91 51 089 08 | SCHLAUCHLEITUNGEN OBER |
| SCHLAUCHFUEHRUNG SCH | 92 51 437 08 | 1 | 1 | 1 792 004 | 92 51 415 08 | SCHLAUCHFUEHRUNG VORM. |
| SCHLAUCHFUEHRUNG VORM. | 92 51 415 08 | 9 | 1 | 2 792 | 91 52 291 08 | MECH.TEILE VERSANDMONT |
| SCHLAUCHLEITUNG | 79 00 422 14 | 7 | 1 | 1 750 | 91 48 606 08 | WERKZEUG M.ZUBEHOER |
| SCHLAUCHLEITUNG X300 | 79 00 429 14 | 8 | 1 | 1 750 | 91 48 606 08 | WERKZEUG M.ZUBEHOER |
| SCHLAUCHLEITUNGEN ABST | 96 43 983 08 | 4 | 1 | 1 400 200 | 91 53 791 08 | HYDRAULIK VORB. |
| SCHLAUCHLEITUNGEN HUBW | 96 43 144 08 | 91 | 1 | 2 971 | 91 50 610 08 | HYDRAULIK HILFSHUBWERK |
| SCHLAUCHLEITUNGEN KLAP | 96 20 364 08 | 91 | 1 | 2 975 038 | 91 26 492 08 | ZUSATZHYDRAULIK KLAPPSPI |
| SCHLAUCHLEITUNGEN KLIMA | 96 38 140 08 | 500 | 1 | 2 831 | 91 47 871 08 | KLIMAANLAGE OW |
| SCHLAUCHLEITUNGEN OBER | 91 51 089 08 | 191 | 1 | | LTR 1100 -0 | LIEBHERR LTR 1100 |
| SCHLAUCHLEITUNGEN OELKU | 96 43 157 08 | 95 | 1 | 2 970 | 91 55 482 08 | HYDRAULIK |
| SCHLAUCHLEITUNGEN RAUP | 91 53 489 08 | 7 | 1 | 1 100 200 | 96 72 944 08 | UNTERWAGEN KPL. |

| Bezeichnung | Artikel | Pos. | Menge | Seite | Baugruppe | Bezeichnung |
|---|---|---|---|---|---|---|
| SCHLAUCHLEITUNGEN ZUSAT | 96 43 131 08 | 91 | 1 | 2 970 | 91 55 482 08 | HYDRAULIK |
| SCHLAUCHNIPPEL GERADE | 91 40 351 | 5 | 1 | X1011766 | 10 11 766 5 | ROHRLEITUNG |
| SCHLAUCHNIPPEL GERADE | 91 40 351 | 8 | 1 | X1011914 | 10 11 914 1 | KURBELGEHAEUSEENTLUEF |
| SCHLAUCHNIPPEL GERADE | 91 40 351 | 26 | 1 | X1011989 | 10 11 989 7 | RS OELRUECKLAUFLEITUNG |
| SCHLAUCHNIPPEL GERADE 11 | 90 79 080 | 1 | 1 | X1011550 | 10 11 550 2 | KUEHLWASSERENTLUEFTUN |
| SCHLAUCHNIPPEL GERADE 11 | 92 76 393 | 1 | 2 | 9 079 890 | 90 79 890 | HEIZUNGSANSCHLUSS |
| SCHLAUCHSCHELLE 120/110- | 77 42 176 08 | 110 | 4 | 2 681 | 91 28 102 08 | LUFTFILTERANLAGE |
| SCHLAUCHSCHELLE 130/120- | 77 42 842 08 | 111 | 2 | 2 681 | 91 28 102 08 | LUFTFILTERANLAGE |
| SCHLAUCHSCHELLE 21/16-27/ | 11 11 807 7 | 17 | 16 | 2 540 | 91 45 984 08 | HEIZUNG OW |
| SCHLAUCHSCHELLE 26/20-32/ | 77 42 150 08 | 4 | 2 | X1011766 | 10 11 766 5 | ROHRLEITUNG |
| SCHLAUCHSCHELLE 26/20-32/ | 77 42 150 08 | 12 | 6 | X1011914 | 10 11 914 1 | KURBELGEHAEUSEENTLUEF |
| SCHLAUCHSCHELLE 26/20-32/ | 77 42 150 08 | 25 | 2 | X1011989 | 10 11 989 7 | RS OELRUECKLAUFLEITUNG |
| SCHLAUCHSCHELLE 32/25-40/ | 77 42 085 08 | 181 | 2 | 2 200 | 91 81 095 08 | ANTRIEBSAGGREGAT KPL. |
| SCHLAUCHSCHELLE 40-60 W3 | 55 08 380 08 | 184 | 2 | 2 200 | 91 81 095 08 | ANTRIEBSAGGREGAT KPL. |
| SCHLAUCHSCHELLE 40-60 W3 | 55 08 380 08 | 184 | 2 | 2 210 | 91 81 614 08 | ANTRIEBSAGGREGAT VORM. |
| SCHLAUCHSCHELLE 41/35-50/ | 55 08 495 08 | 183 | 2 | 2 210 | 91 81 614 08 | ANTRIEBSAGGREGAT VORM. |
| SCHLAUCHSCHELLE 60/50-70/ | 77 42 080 08 | 180 | 2 | 2 210 | 91 81 614 08 | ANTRIEBSAGGREGAT VORM. |
| SCHLAUCHSCHELLE 60/50-70/ | 77 42 080 08 | 32 | 4 | 2 502 | 91 01 533 08 | STEUERSTAND |
| SCHLAUCHSCHELLE 70/60-80/ | 77 42 143 08 | 181 | 2 | 2 210 | 91 81 614 08 | ANTRIEBSAGGREGAT VORM. |
| SCHLAUCHSCHELLE 80/70-90/ | 77 42 064 08 | 182 | 4 | 2 210 | 91 81 614 08 | ANTRIEBSAGGREGAT VORM. |
| SCHLAUCHSCHELLE 80/70-90/ | 77 42 064 08 | 19 | 1 | 2 540 | 91 45 984 08 | HEIZUNG OW |
| SCHLAUCHSCHELLE 89-94X25 | 77 42 252 08 | 112 | 4 | 2 680 | 91 53 225 08 | ABGASANLAGE KPL. |
| SCHLAUCHSCHELLE DIN 3017 | 10 87 202 2 | 182 | 4 | 2 200 | 91 81 095 08 | ANTRIEBSAGGREGAT KPL. |
| SCHLAUCHSCHELLE DIN 3017 | 10 87 202 2 | 42 | 2 | 2 540 | 91 45 984 08 | HEIZUNG OW |
| SCHLAUCHSCHELLE DIN 3017 | 10 87 202 2 | 15 | 1 | 2 920 574 | 96 36 055 08 | BEDIENPULT BALLAST |
| SCHLAUCHSCHELLE DIN 3017 | 10 87 202 2 | 15 | 1 | 2 920 904 | 96 41 093 08 | STEUERPULT ABSTUETZUNG |
| SCHLAUCHSCHELLE DIN 3017 | 10 87 202 2 | 44 | 1 | 2 971 | 91 50 610 08 | HYDRAULIK HILFSHUBWERK |
| SCHLAUCHSCHELLE DIN 3017- | 10 87 202 4 | 183 | 2 | 2 200 | 91 81 095 08 | ANTRIEBSAGGREGAT KPL. |
| SCHLAUCHSCHELLE DIN 3017 | 49 81 029 | 19 | 2 | X1011914 | 10 11 914 1 | KURBELGEHAEUSEENTLUEF |
| SCHLAUCHSCHELLE DIN 3017- | 77 42 238 08 | 180 | 1 | 2 200 | 91 81 095 08 | ANTRIEBSAGGREGAT KPL. |
| SCHLAUCHSCHELLE DIN 3017- | 77 42 238 08 | 185 | 1 | 2 210 | 91 81 614 08 | ANTRIEBSAGGREGAT VORM. |
| SCHLAUCHSTUTZEN DIN 7430 | 49 81 033 | 2 | 1 | X1011550 | 10 11 550 2 | KUEHLWASSERENTLUEFTUN |
| SCHLAUCHVERSCHRAUBUNG | 60 24 408 08 | (7) | 1 | 2 920 | 91 55 477 08 | EL.ANLAGE DREHBUEHNE |
| SCHLAUCHVERSCHRAUBUNG | 60 24 415 08 | 17 | 1 | 1 920 314 | 96 46 921 08 | KLEMMKASTEN VORM. |
| SCHLEIFBUEGEL | 69 10 416 08 | 12 | 15 | X1028517 | 10 28 517 1 | SCHLEIFRINGUEBERTRAEGE |
| SCHLEIFRING | 10 41 178 0 | 22 | 1 | X1034357 | 10 34 357 4 | LEITUNGSTROMMEL |
| SCHLEIFRING | 10 41 178 1 | 23 | 9 | X1034357 | 10 34 357 4 | LEITUNGSTROMMEL |
| SCHLEIFRING 60X2 1,5qm | 69 31 044 14 | 11 | 15 | X1028517 | 10 28 517 1 | SCHLEIFRINGUEBERTRAEGE |
| SCHLEIFRINGSATZ | 57 18 510 08 | 4 | 1 | 6 923 101 | 69 23 101 08 | SEILLAENGENGEBER |
| SCHLEIFRINGTRAEGER 9SMN | 10 41 177 9 | 20 | 1 | X1034357 | 10 34 357 4 | LEITUNGSTROMMEL |
| SCHLEIFRINGUEBERTRAEG | 10 28 517 1 | 5 | 1 | 1 920 307 | 96 46 916 08 | ELEKTRIK MITTELSTUECK |
| SCHLIESSBOLZEN | 70 42 736 08 | 69 | 1 | 2 520 000 | 91 49 872 08 | KABINE VERGLAST |
| SCHLUESSEL | 10 87 343 4 | (1) | 1 | 2 932 095 | 96 46 064 08 | SCHWENKRAHMEN SICHERUN |
| SCHLUESSEL | 57 09 954 08 | 1 | 1 | 6 061 943 | 60 61 943 08 | ZUENDSTARTSCHALTER |
| SCHLUESSELSCHALTER | 69 27 013 08 | 6 | 1 | 2 913 003 | 96 20 599 08 | FOLIENTASTATUR VORM. |
| SCHLUSSSCHEIBE | 78 65 206 14 | 7 | 2 | 1 300 007 | 79 02 584 14 | RAUPENKETTE KPL |
| SCHMIERNIPPEL | 77 43 517 14 | 6 | 1 | 1 100 212 | 79 02 561 14 | LEITRADEINHEIT KPL |
| SCHMIERNIPPELKAPPE | 10 01 470 1 | 16 | 1 | X1032706 | 10 32 706 5 | ELEKTROPUMPE |
| SCHMIEROELFILTER ANBAU | 90 75 368 | 150 | 1 | X1012193 | 10 12 193 2 | GRUNDMOTOR |
| SCHMIEROELLEITUNG 10X1 | 10 11 834 3 | 12 | 1 | X1011832 | 10 11 832 6 | ATL-ANBAU |
| SCHMIEROELLEITUNG 6X1 | 90 80 310 | 2 | 1 | X1011793 | 10 11 793 0 | ANBAUTEILE LUFTPRESSER |
| SCHMIEROELPUMPE MIT BEF | 90 75 540 | 140 | 1 | X1012193 | 10 12 193 2 | GRUNDMOTOR |
| SCHMIEROELPUMPE VORM. B | 90 75 541 | 1 | 1 | 9 075 540 | 90 75 540 | SCHMIEROELPUMPE MIT BE |
| SCHNAPPVERSCHLUSS | 70 42 315 08 | 3 | 1 | 2 520 021 | 92 17 203 08 | ARMATURENKASTEN LIEFERU |
| SCHNAPPVERSCHLUSS ABS | 10 29 615 7 | (2) | 3 | 2 510 100 | 96 44 750 08 | DREHBUEHNENVERKLEIDUN |
| SCHNECKE | 57 09 909 08 | 25 | 6 | 6 060 516 | 60 60 516 08 | GETRIEBENOCKENENDSCHAL |
| SCHNELLBEFESTIGER | 57 05 452 08 | 8 | 1 | 5 530 854 | 55 30 854 08 | DREIWEGEHAHN |
| SCHNELLVERSCHRAUBUNGS | 51 15 112 14 | 23 | 4 | 1 970 | 96 71 367 08 | HYDRAULIK UNTERWAGEN |
| SCHNELLVERSCHRAUBUNGS | 51 17 043 14 | 22 | 10 | 1 970 | 96 71 367 08 | HYDRAULIK UNTERWAGEN |
| SCHNELLVERSCHRAUBUNGS | 51 15 113 14 | 24 | 4 | 1 970 | 96 71 367 08 | HYDRAULIK UNTERWAGEN |

| Bezeichnung | Artikel | Pos. | Menge | Seite | Baugruppe | Bezeichnung |
|---|---|---|---|---|---|---|
| SCHNELLVERSCHRAUBUNGS | 51 17 042 14 | 21 | 10 | 1 970 | 96 71 367 08 | HYDRAULIK UNTERWAGEN |
| SCHNELLVERSCHRAUBUNGS | 51 17 083 14 | 26 | 2 | 1 970 | 96 71 367 08 | HYDRAULIK UNTERWAGEN |
| SCHNELLVERSCHRAUBUNGS | 51 17 084 14 | 25 | 2 | 1 970 | 96 71 367 08 | HYDRAULIK UNTERWAGEN |
| SCHRAEGKUGELLAGER DIN 6 | 10 01 360 1 | 3 | 1 | 9 387 598 | 93 87 598 01 | PLANETENGETRIEBE |
| SCHRAEGKUGELLAGER DIN 6 | 10 01 360 1 | 3 | 1 | 9 686 071 | 96 86 071 01 | PLANETENGETRIEBE |
| SCHRAUBE | 57 09 414 08 | 2 | 1 | 5 114 794 | 51 14 794 08 | LASTHALTEVENTIL |
| SCHRAUBE 25X25X65 8.8 SPF | 95 64 142 08 | 17 | 4 | 3 330 | 91 57 885 08 | AUSSCHUBMECHANIK |
| SCHRAUBE DIN 912 M8X25 12. | 57 06 138 77 | 9 | 4 | 5 700 161 | 57 00 161 | LUFTPRESSER |
| SCHRAUBE M 10X25 VERZ | 40 97 070 01 | 43 | 3 | 9 686 071 | 96 86 071 01 | PLANETENGETRIEBE |
| SCHRAUBE RD70X120 35NIC | 95 47 667 08 | 11 | 1 | 3 106 000 | 91 60 313 08 | TELESKOP 5 VORM. |
| SCHRAUBE RD70X164 35NIC | 95 47 666 08 | 11 | 1 | 3 105 000 | 91 62 546 08 | TELESKOP 4 VORM. |
| SCHRAUBE UNF7/8X14 12.9 | 78 65 114 14 | 4 | 248 | 1 300 006 | 91 89 127 14 | RAUPENKETTE |
| SCHRAUBENDREHER 10 CRV | 79 00 325 08 | 52 | 1 | 1 750 001 | 92 85 698 08 | GRUNDWERKZEUG |
| SCHRAUBENDREHER 3,5 CRV | 79 00 320 08 | 50 | 1 | 1 750 001 | 92 85 698 08 | GRUNDWERKZEUG |
| SCHRAUBENDREHER 5,5 CRV | 79 00 323 08 | 51 | 1 | 1 750 001 | 92 85 698 08 | GRUNDWERKZEUG |
| SCHRAUBENSICHERUNG 10M | 86 55 016 | 105 | 1 | 9 075 368 | 90 75 368 | SCHMIEROELFILTER ANBAU |
| SCHRAUBENSICHERUNG 10M | 86 55 016 | 109 | 1 | X1011997 | 10 11 997 6 | NEBENABTRIEB ANBAU |
| SCHRAUBENSICHERUNG 50G | 81 12 017 08 | 100 | 1 | 9 073 795 | 90 73 795 | KOLBENKUEHLUNG |
| SCHRAUBENSICHERUNG 50 | 81 12 057 08 | 109 | 1 | 9 072 593 | 90 72 593 | FLANSCH VORM. |
| SCHRAUBENSICHERUNG 50 | 81 12 057 08 | 109 | 1 | 9 075 541 | 90 75 541 | SCHMIEROELPUMPE VORM. |
| SCHRAUBENSICHERUNG 50 | 81 12 057 08 | 109 | 1 | 9 079 823 | 90 79 823 | TRANSPORTVORRICHTUNG |
| SCHRAUBENSICHERUNG 50 | 81 12 057 08 | 109 | 1 | 9 080 525 | 90 80 525 | KLIMAKOMPRESSOR ANBAU |
| SCHRAUBENSICHERUNG 50 | 81 12 057 08 | 109 | 1 | X1011573 | 10 11 573 7 | KRAFTSTOFFLEITUNGEN |
| SCHRAUBENSICHERUNG 50 | 81 12 057 08 | 109 | 1 | X1011599 | 10 11 599 3 | STEUERGERAET ANBAU |
| SCHRAUBKAPPE | 51 06 623 08 | 2 | 1 | 5 708 320 | 57 08 320 08 | FILTERDECKEL |
| SCHRAUBKARABINER OVAL | 10 47 304 0 | 3 | 2 | 3 105 014 | 96 57 037 08 | HUBENDSCHALTER GEWICHT |
| SCHRUMPFSCHLAUCH 27 - 8 | 60 30 169 08 | 55 | 0.35 | 2 522 | 91 10 037 08 | TUER KPL. |
| SCHRUMPFSCHLAUCH 38,1/19 | 60 30 323 14 | 30 | 0.6 | 1 970 | 96 71 367 08 | HYDRAULIK UNTERWAGEN |
| SCHRUMPFSCHLAUCH 38,1/1 | 60 30 326 14 | 29 | 0.3 | 1 970 | 96 71 367 08 | HYDRAULIK UNTERWAGEN |
| SCHRUMPFSCHLAUCH 38,1/1 | 60 30 322 14 | 28 | 0.3 | 1 970 | 96 71 367 08 | HYDRAULIK UNTERWAGEN |
| SCHUTZBLECH 3x146x437 DC0 | 97 05 962 08 | 3 | 1 | 2 420 | 91 32 936 08 | DREHWERK |
| SCHUTZGITTER | 61 04 133 08 | 11 | 2 | 2 913 102 | 92 32 870 08 | LUEFTEREINHEIT |
| SCHUTZKAPPE SW10 | 77 90 201 08 | 2 | 6 | 1 830 102 | 92 26 483 08 | KLEMMBRETT VORM. |
| SCHUTZPOLSTER | 52 04 028 08 | 3 | 1 | 1 750 | 91 48 606 08 | WERKZEUG M.ZUBEHOER |
| SCHUTZRING | 10 12 044 3 | 3 | 1 | 9 075 133 | 90 75 133 | KURBELWELLENDICHTUNG |
| SCHUTZSTOPFEN DN25 | 73 63 032 | (4) | 1 | 1 970 | 96 71 367 08 | HYDRAULIK UNTERWAGEN |
| SCHUTZSTOPFEN DN6 | 73 64 488 | (4) | 1 | 1 970 | 96 71 367 08 | HYDRAULIK UNTERWAGEN |
| SCHWENKRAHMEN RELAISST | 96 46 061 08 | 5 | 1 | 2 920 | 91 68 959 08 | EINBAUTEILE SCHALTSCHRAN |
| SCHWENKRAHMEN SICHERUN | 96 46 064 08 | 13 | 1 | 2 932 042 | 96 68 587 08 | GRUNDAUFBAU |
| SCHWINGUNGSDAEMPFER 32 | 55 04 580 08 | (2) | 1 | 2 210 | 91 81 614 08 | ANTRIEBSAGGREGAT VORM. |
| SCHWINGUNGSDAEMPFER 32 | 55 04 580 08 | (2) | 1 | 2 210 | 91 81 614 08 | ANTRIEBSAGGREGAT VORM. |
| SCHWINGUNGSDAEMPFER 32 | 55 04 580 08 | (2) | 1 | 2 210 | 91 81 614 08 | ANTRIEBSAGGREGAT VORM. |
| SCHWUNGRAD ANBAU SAE 1 | 90 77 238 | 530 | 1 | X1015207 | 10 15 207 7 | DIESELMOTOR |
| SCHWUNGRAD VORM. SAE 1 | 90 77 237 | 1 | 1 | 9 077 238 | 90 77 238 | SCHWUNGRAD ANBAU |
| SCHWUNGRADGEHAEUSE AN | 10 11 582 9 | 520 | 1 | X1015207 | 10 15 207 7 | DIESELMOTOR |
| SCHWUNGRADGEHAEUSE VO | 10 11 814 8 | 1 | 1 | X1011582 | 10 11 582 9 | SCHWUNGRADGEHAEUSE AN |
| SEAL-LOCK-BUNDMUTTER M | 70 05 072 | 6 | 1 | X1011795 | 10 11 795 1 | ENDREGELVENTIL |
| SEAL-LOCK-MUTTER M1414X1, | 11 32 042 1 | (1) | 2 | X1010109 | 10 10 109 3 | DREHWERKSVENTIL |
| SECHSKANTMUTTER DIN 985 | 10 87 560 6 | 27 | 6 | 2 501 000 | 91 48 769 08 | KRANFUEHRERKABINE VORM |
| SECHSKANTMUTTER DIN 985 | 10 87 560 6 | 32 | 2 | 2 522 | 91 10 037 08 | TUER KPL. |
| SECHSKANTMUTTER DIN 985 | 10 87 560 6 | 12 | 6 | 2 790 901 | 91 54 183 08 | AUSSTEIFUNG |
| SECHSKANTMUTTER DIN 985 | 10 87 560 6 | 31 | 4 | 3 102 000 | 91 62 543 08 | TELESKOP 1 VORM. |
| SECHSKANTMUTTER DIN 985 | 10 87 560 6 | 31 | 4 | 3 103 000 | 91 62 544 08 | TELESKOP 2 VORM. |
| SECHSKANTMUTTER DIN 985 | 10 87 560 6 | 31 | 4 | 3 104 000 | 91 62 545 08 | TELESKOP 3 VORM. |
| SECHSKANTMUTTER DIN 985 | 10 87 560 6 | 31 | 4 | 3 105 000 | 91 62 546 08 | TELESKOP 4 VORM. |
| SECHSKANTMUTTER DIN 985 | 10 87 560 6 | 55 | 4 | 3 106 000 | 91 60 313 08 | TELESKOP 5 VORM. |
| SECHSKANTMUTTER DIN 985 | 10 87 560 6 | 70 | 1 | 3 106 000 | 91 60 313 08 | TELESKOP 5 VORM. |
| SECHSKANTMUTTER DIN 985 | 10 87 560 7 | 19 | 4 | 3 100 | 91 59 279 08 | TELESKOPAUSLEGER KPL. |
| SECHSKANTMUTTER DIN 985 | 10 87 560 7 | 43 | 12 | 3 102 000 | 91 62 543 08 | TELESKOP 1 VORM. |
| SECHSKANTMUTTER DIN 985 | 10 87 560 7 | 43 | 12 | 3 103 000 | 91 62 544 08 | TELESKOP 2 VORM. |

| Bezeichnung | Artikel | Pos. | Menge | Seite | Baugruppe | Bezeichnung |
|---|---|---|---|---|---|---|
| SECHSKANTMUTTER DIN 985 | 10 87 560 7 | 43 | 8 | 3 104 000 | 91 62 545 08 | TELESKOP 3 VORM. |
| SECHSKANTMUTTER DIN 985 | 10 87 560 7 | 43 | 8 | 3 105 000 | 91 62 546 08 | TELESKOP 4 VORM. |
| SECHSKANTMUTTER DIN 985 | 10 87 560 7 | 47 | 4 | 3 330 | 91 57 885 08 | AUSSCHUBMECHANIK |
| SECHSKANTMUTTER DIN 985 | 41 19 009 08 | 58 | 2 | 3 501 | 91 05 788 08 | DOPPELKLAPPSPITZE MECH. |
| SECHSKANTMUTTER DIN 985 | 41 19 009 08 | 23 | 2 | 3 510 100 | 91 49 246 08 | TRANSPORTHALTERUNG DKS |
| SECHSKANTMUTTER DIN 985 | 41 19 020 08 | 37 | 2 | 2 501 000 | 91 48 769 08 | KRANFUEHRERKABINE VORM |
| SECHSKANTMUTTER DIN 985 | 41 19 024 08 | 4 | 1 | 2 340 | 91 53 116 08 | OELBEHAELTER ANBAU |
| SECHSKANTMUTTER DIN 985 | 41 19 024 08 | 34 | 4 | 3 102 000 | 91 62 543 08 | TELESKOP 1 VORM. |
| SECHSKANTMUTTER DIN 985 | 41 19 024 08 | 34 | 4 | 3 103 000 | 91 62 544 08 | TELESKOP 2 VORM. |
| SECHSKANTMUTTER DIN 985 | 41 19 024 08 | 34 | 4 | 3 104 000 | 91 62 545 08 | TELESKOP 3 VORM. |
| SECHSKANTMUTTER DIN 985 | 41 19 024 08 | 46 | 4 | 3 105 000 | 91 62 546 08 | TELESKOP 4 VORM. |
| SECHSKANTMUTTER DIN 985 | 41 19 024 08 | 59 | 4 | 3 106 000 | 91 60 313 08 | TELESKOP 5 VORM. |
| SECHSKANTMUTTER DIN 985 | 41 19 024 08 | 72 | 2 | 3 501 | 91 05 788 08 | DOPPELKLAPPSPITZE MECH. |
| SECHSKANTMUTTER DIN 985 | 10 87 639 9 | 12 | 2 | 2 780 852 | 96 24 845 08 | GSM-MODUL VORM.LICCON 1 |
| SECHSKANTMUTTER DIN 985 | 10 87 639 9 | 12 | 10 | 2 913 | 91 32 850 08 | LICCON KONSOLE LCD2 |
| SECHSKANTMUTTER DIN 985 | 10 87 639 9 | 6 | 2 | 2 913 005 | 96 28 696 08 | INNENGEHAEUSE VORM. |
| SECHSKANTMUTTER DIN 985 | 10 87 639 9 | 4 | 6 | 2 913 006 | 96 20 732 08 | LUEFTERBLECH VORM. |
| SECHSKANTMUTTER DIN 985 | 41 19 002 08 | 7 | 8 | 2 913 102 | 92 32 870 08 | LUEFTEREINHEIT |
| SECHSKANTMUTTER DIN 985 | 41 19 002 08 | 32 | 2 | 3 100 | 91 59 279 08 | TELESKOPAUSLEGER KPL. |
| SECHSKANTMUTTER DIN 985 | 41 19 003 08 | 22 | 6 | 2 502 | 91 01 533 08 | STEUERSTAND |
| SECHSKANTMUTTER DIN 985 | 41 19 003 08 | 5 | 1 | 2 780 851 | 96 24 498 08 | FUNKANTENNE VORM. |
| SECHSKANTMUTTER DIN 985 | 41 19 003 08 | 9 | 1 | 2 780 852 | 96 24 845 08 | GSM-MODUL VORM.LICCON 1 |
| SECHSKANTMUTTER DIN 985 | 41 19 003 08 | 92 | 6 | 2 932 042 | 96 68 587 08 | GRUNDAUFBAU |
| SECHSKANTMUTTER DIN 985 | 41 19 003 08 | 10 | 3 | 3 750 026 | 96 89 407 08 | HALTER LINKS |
| SECHSKANTMUTTER DIN 985 | 41 19 003 08 | 10 | 3 | 3 750 028 | 96 89 408 08 | HALTER RECHTS |
| SECHSKANTMUTTER DIN 985 | 41 19 004 08 | 5 | 1 | 1 792 004 | 92 51 415 08 | SCHLAUCHFUEHRUNG VORM. |
| SECHSKANTMUTTER DIN 985 | 41 19 004 08 | 17 | 2 | 2 501 000 | 91 48 769 08 | KRANFUEHRERKABINE VORM |
| SECHSKANTMUTTER DIN 985 | 41 19 004 08 | 10 | 4 | 2 501 022 | 96 34 184 08 | DECKEL KPL. |
| SECHSKANTMUTTER DIN 985 | 41 19 004 08 | 13 | 2 | 2 515 007 | 96 42 014 08 | PODEST VORM. |
| SECHSKANTMUTTER DIN 985 | 41 19 004 08 | 75 | 4 | 2 520 000 | 91 49 872 08 | KABINE VERGLAST |
| SECHSKANTMUTTER DIN 985 | 41 19 004 08 | 30 | 4 | 2 522 | 91 10 037 08 | TUER KPL. |
| SECHSKANTMUTTER DIN 985 | 41 19 004 08 | 8 | 12 | 2 571 | 91 50 902 08 | HYDRAULISCHE BALLASTIER |
| SECHSKANTMUTTER DIN 985 | 41 19 004 08 | 97 | 3 | 2 932 095 | 96 46 064 08 | SCHWENKRAHMEN SICHERUN |
| SECHSKANTMUTTER DIN 985 | 41 19 004 08 | 14 | 6 | 2 932 166 | 92 68 911 08 | VERTEILER MASSE |
| SECHSKANTMUTTER DIN 985 | 41 19 004 08 | 74 | 2 | 2 970 | 91 55 482 08 | HYDRAULIK |
| SECHSKANTMUTTER DIN 985 | 41 19 004 08 | 42 | 6 | 2 971 | 91 50 610 08 | HYDRAULIK HILFSHUBWERK |
| SECHSKANTMUTTER DIN 985 | 41 19 004 08 | 69 | 2 | 3 102 000 | 91 62 543 08 | TELESKOP 1 VORM. |
| SECHSKANTMUTTER DIN 985 | 41 19 004 08 | 69 | 2 | 3 103 000 | 91 62 544 08 | TELESKOP 2 VORM. |
| SECHSKANTMUTTER DIN 985 | 41 19 004 08 | 69 | 2 | 3 104 000 | 91 62 545 08 | TELESKOP 3 VORM. |
| SECHSKANTMUTTER DIN 985 | 41 19 004 08 | 69 | 2 | 3 105 000 | 91 62 546 08 | TELESKOP 4 VORM. |
| SECHSKANTMUTTER DIN 985 | 41 19 004 08 | 88 | 4 | 3 501 | 91 05 788 08 | DOPPELKLAPPSPITZE MECH. |
| SECHSKANTMUTTER DIN 985 | 41 19 004 08 | 20 | 1 | 5 910 672 | 59 10 672 08 | WISCHERMOTOR |
| SECHSKANTMUTTER DIN 985 | 41 19 030 08 | 156 | 3 | 2 520 000 | 91 49 872 08 | KABINE VERGLAST |
| SECHSKANTMUTTER DIN 985 | 10 87 561 4 | 5 | 1 | 2 790 040 | 91 60 499 08 | SPIEGELANBAU KRANFUEHR |
| SECHSKANTMUTTER DIN 985 | 41 19 005 08 | 4 | 8 | 1 100 216 | 96 46 363 08 | MONTAGETEILE LWE |
| SECHSKANTMUTTER DIN 985 | 41 19 005 08 | 11 | 8 | 2 515 007 | 96 42 014 08 | PODEST VORM. |
| SECHSKANTMUTTER DIN 985 | 41 19 005 08 | 98 | 26 | 2 520 000 | 91 49 872 08 | KABINE VERGLAST |
| SECHSKANTMUTTER DIN 985 | 41 19 005 08 | 34 | 8 | 2 522 | 91 10 037 08 | TUER KPL. |
| SECHSKANTMUTTER DIN 985 | 41 19 005 08 | 4 | 4 | 2 790 | 91 68 708 08 | SPIEGELANBAU DREHBUEHN |
| SECHSKANTMUTTER DIN 985 | 41 19 005 08 | 25 | 2 | 2 831 | 91 47 871 08 | KLIMAANLAGE OW |
| SECHSKANTMUTTER DIN 985 | 41 19 005 08 | 100 | 2 | 2 932 042 | 96 68 587 08 | GRUNDAUFBAU |
| SECHSKANTMUTTER DIN 985 | 41 19 005 08 | 6 | 8 | 3 750 008 | 91 75 085 08 | LEITER ANBAU |
| SECHSKANTMUTTER EN 1661 | 49 80 805 | 4 | 3 | X1011553 | 10 11 553 9 | STARTER ANBAU |
| SECHSKANTMUTTER EN 1661 | 49 80 805 | 12 | 2 | X1011997 | 10 11 997 6 | NEBENABTRIEB ANBAU |
| SECHSKANTMUTTER ISO 4032 | 40 00 383 | 14 | 12 | X1015211 | 10 15 211 6 | ANTRIEBSGRUPPE |
| SECHSKANTMUTTER ISO 403 | 11 00 280 7 | 18 | 2 | 2 440 022 | 96 42 336 08 | WINDE 2 VORM. |
| SECHSKANTMUTTER ISO 403 | 11 00 280 7 | 350 | 7 | 2 680 | 91 53 225 08 | ABGASANLAGE KPL. |
| SECHSKANTMUTTER ISO 403 | 41 15 031 03 | 6 | 2 | 1 300 010 | 99 14 563 14 | AUFSTIEG KPL. |
| SECHSKANTMUTTER ISO 403 | 41 15 144 08 | 22 | 8 | 2 102 | 91 51 080 08 | MONTAGETEILE DREHBUEHN |
| SECHSKANTMUTTER ISO 403 | 41 15 144 08 | 352 | 3 | 2 210 | 91 81 614 08 | ANTRIEBSAGGREGAT VORM. |

| Bezeichnung | Artikel | Pos. | Menge | Seite | Baugruppe | Bezeichnung |
|---|---|---|---|---|---|---|
| SECHSKANTMUTTER ISO 403 | 41 15 144 08 | 30 | 4 | 2 440 022 | 96 42 336 08 | WINDE 2 VORM. |
| SECHSKANTMUTTER ISO 403 | 41 15 144 08 | 40 | 2 | 2 502 | 91 01 533 08 | STEUERSTAND |
| SECHSKANTMUTTER ISO 403 | 41 15 144 08 | 351 | 11 | 2 510 100 | 96 44 750 08 | DREHBUEHNENVERKLEIDUN |
| SECHSKANTMUTTER ISO 403 | 41 15 144 08 | 12 | 3 | 2 510 200 | 96 41 258 08 | DREHBUEHNENVERKLEIDUN |
| SECHSKANTMUTTER ISO 403 | 41 15 144 08 | 141 | 1 | 2 520 000 | 91 49 872 08 | KABINE VERGLAST |
| SECHSKANTMUTTER ISO 403 | 41 15 144 08 | 73 | 1 | 3 106 000 | 91 60 313 08 | TELESKOP 5 VORM. |
| SECHSKANTMUTTER ISO 403 | 41 15 144 08 | 25 | 2 | 3 511 006 | 96 45 029 08 | MASTNASE VORM. |
| SECHSKANTMUTTER ISO 4032 | 41 15 048 08 | 15 | 3 | 2 102 | 91 51 080 08 | MONTAGETEILE DREHBUEHN |
| SECHSKANTMUTTER ISO 4032 | 49 00 546 03 | 11 | 4 | 1 100 216 | 96 46 363 08 | MONTAGETEILE LWE |
| SECHSKANTMUTTER ISO 403 | 41 15 143 08 | 356 | 1 | 2 210 | 91 81 614 08 | ANTRIEBSAGGREGAT VORM. |
| SECHSKANTMUTTER ISO 403 | 41 15 143 08 | 23 | 4 | 2 440 022 | 96 42 336 08 | WINDE 2 VORM. |
| SECHSKANTMUTTER ISO 403 | 41 15 143 08 | 65 | 7 | 3 501 | 91 05 788 08 | DOPPELKLAPPSPITZE MECH. |
| SECHSKANTMUTTER ISO 403 | 41 15 143 08 | 17 | 3 | 3 510 100 | 91 49 246 08 | TRANSPORTHALTERUNG DKS |
| SECHSKANTMUTTER ISO 4032 | 41 15 050 08 | 57 | 8 | 2 102 | 91 51 080 08 | MONTAGETEILE DREHBUEHN |
| SECHSKANTMUTTER ISO 403 | 49 00 124 03 | 21 | 4 | 1 100 205 | 96 51 633 08 | RAUPENTRAEGER KPL.RE. |
| SECHSKANTMUTTER ISO 403 | 49 00 124 03 | 21 | 4 | 1 100 210 | 96 51 634 08 | RAUPENTRAEGER KPL.LI. |
| SECHSKANTMUTTER ISO 403 | 41 15 146 08 | 8 | 1 | 3 500 104 | 92 95 821 08 | HALTERUNG VORM. |
| SECHSKANTMUTTER ISO 4032 | 10 87 561 7 | 3 | 3 | 2 560 045 | 96 40 606 08 | KETTENHALTER KPL. |
| SECHSKANTMUTTER ISO 4032 | 10 87 561 7 | 64 | 7 | 3 501 | 91 05 788 08 | DOPPELKLAPPSPITZE MECH. |
| SECHSKANTMUTTER ISO 4032 | 10 87 561 7 | 13 | 10 | 3 510 100 | 91 49 246 08 | TRANSPORTHALTERUNG DKS |
| SECHSKANTMUTTER ISO 4032 | 41 15 122 08 | 7 | 2 | 5 530 854 | 55 30 854 08 | DREIWEGEHAHN |
| SECHSKANTMUTTER ISO 4032 | 10 87 561 8 | 70 | 4 | 3 501 | 91 05 788 08 | DOPPELKLAPPSPITZE MECH. |
| SECHSKANTMUTTER ISO 4032 | 10 87 561 8 | 15 | 4 | 4 003 006 | 91 04 457 08 | HAKENFLASCHE |
| SECHSKANTMUTTER ISO 403 | 10 42 568 8 | 78 | 4 | 3 501 | 91 05 788 08 | DOPPELKLAPPSPITZE MECH. |
| SECHSKANTMUTTER ISO 4032 | 41 15 157 08 | 15 | 10 | 2 922 001 | 92 84 311 08 | BUSPLATINE |
| SECHSKANTMUTTER ISO 4032 | 41 15 157 08 | 26 | 22 | 2 932 119 | 96 46 061 08 | SCHWENKRAHMEN RELAISST |
| SECHSKANTMUTTER ISO 4032 | 41 15 157 08 | 267 | 2 | 3 930 492 | 96 20 966 08 | KLEMMKASTEN KPL. |
| SECHSKANTMUTTER ISO 403 | 41 15 152 08 | 33 | 2 | 1 100 205 | 96 51 633 08 | RAUPENTRAEGER KPL.RE. |
| SECHSKANTMUTTER ISO 403 | 41 15 152 08 | 33 | 2 | 1 100 210 | 96 51 634 08 | RAUPENTRAEGER KPL.LI. |
| SECHSKANTMUTTER ISO 4032 | 41 15 142 08 | 50 | 1 | 2 522 | 91 10 037 08 | TUER KPL. |
| SECHSKANTMUTTER ISO 4032 | 41 15 142 08 | 6 | 2 | 2 932 215 | 92 26 129 08 | VERTEILER MASSE |
| SECHSKANTMUTTER ISO 4032 | 41 15 142 08 | 105 | 2 | 3 501 | 91 05 788 08 | DOPPELKLAPPSPITZE MECH. |
| SECHSKANTMUTTER ISO 4032 | 41 15 148 08 | 10 | 2 | 2 260 006 | 96 31 147 08 | BATTERIEKASTEN VORM. |
| SECHSKANTMUTTER ISO 4032 | 41 15 148 08 | 5 | 4 | 2 711 | 91 53 002 08 | ZENTRALSCHMIERANLAGE O |
| SECHSKANTMUTTER ISO 4032 | 41 15 148 08 | 10 | 2 | 2 913 100 | 91 23 538 08 | BAUGRUPPENTRAEGER |
| SECHSKANTMUTTER ISO 4032 | 41 15 148 08 | 270 | 2 | 2 920 574 | 96 36 055 08 | BEDIENPULT BALLAST |
| SECHSKANTMUTTER ISO 4032 | 41 15 148 08 | 253 | 2 | 2 920 904 | 96 41 093 08 | STEUERPULT ABSTUETZUNG |
| SECHSKANTMUTTER ISO 4032 | 41 15 148 08 | 18 | 1 | 2 922 001 | 92 84 311 08 | BUSPLATINE |
| SECHSKANTMUTTER ISO 4032 | 40 01 007 03 | 23 | 18 | 1 400 200 | 91 53 791 08 | HYDRAULIK VORB. |
| SECHSKANTMUTTER ISO 403 | 40 00 379 | 42 | 1 | X1011998 | 10 11 998 0 | KABELBAUM ANBAU |
| SECHSKANTMUTTER ISO 403 | 41 15 044 08 | 351 | 4 | 2 210 008 | 96 48 137 08 | KUEHLER VORM. |
| SECHSKANTMUTTER ISO 403 | 10 87 562 1 | 5 | 12 | 1 830 102 | 92 26 483 08 | KLEMMBRETT VORM. |
| SECHSKANTMUTTER ISO 403 | 10 87 562 1 | 54 | 2 | 2 102 | 91 51 080 08 | MONTAGETEILE DREHBUEHN |
| SECHSKANTMUTTER ISO 403 | 10 87 562 1 | 353 | 10 | 2 210 | 91 81 614 08 | ANTRIEBSAGGREGAT VORM. |
| SECHSKANTMUTTER ISO 403 | 10 87 562 1 | 13 | 4 | 2 430 | 91 54 389 08 | DREHBUEHNENARRETIERUN |
| SECHSKANTMUTTER ISO 403 | 10 87 562 1 | 6 | 4 | 2 501 022 | 96 34 184 08 | DECKEL KPL. |
| SECHSKANTMUTTER ISO 403 | 10 87 562 1 | 352 | 2 | 2 510 100 | 96 44 750 08 | DREHBUEHNENVERKLEIDUN |
| SECHSKANTMUTTER ISO 403 | 10 87 562 1 | 25 | 12 | 2 510 200 | 96 41 258 08 | DREHBUEHNENVERKLEIDUN |
| SECHSKANTMUTTER ISO 403 | 10 87 562 1 | 26 | 2 | 2 522 | 91 10 037 08 | TUER KPL. |
| SECHSKANTMUTTER ISO 403 | 10 87 562 1 | 63 | 3 | 2 533 001 | 96 41 568 08 | ARMATURENBRETT DACH VO |
| SECHSKANTMUTTER ISO 403 | 10 87 562 1 | 6 | 2 | 2 913 004 | 96 20 460 08 | GEHAEUSE VORM. |
| SECHSKANTMUTTER ISO 403 | 10 87 562 1 | 32 | 2 | 2 920 | 91 55 477 08 | EL.ANLAGE DREHBUEHNE |
| SECHSKANTMUTTER ISO 403 | 10 87 562 1 | 18 | 3 | 2 920 585 | 91 01 520 08 | ELEKTRIK BLITZLEUCHTE |
| SECHSKANTMUTTER ISO 403 | 10 87 562 1 | 96 | 1 | 2 932 042 | 96 68 587 08 | GRUNDAUFBAU |
| SECHSKANTMUTTER ISO 403 | 10 87 562 1 | 6 | 4 | 2 932 166 | 92 68 911 08 | VERTEILER MASSE |
| SECHSKANTMUTTER ISO 403 | 10 87 562 1 | 31 | 4 | 3 330 | 91 57 885 08 | AUSSCHUBMECHANIK |
| SECHSKANTMUTTER ISO 4032 | 10 29 966 9 | 350 | 16 | 2 210 008 | 96 48 137 08 | KUEHLER VORM. |
| SECHSKANTMUTTER ISO 4032 | 10 29 966 9 | 16 | 2 | 2 510 072 | 96 44 614 08 | KLAPPE VORM.RECHTS |
| SECHSKANTMUTTER ISO 4032 | 10 29 966 9 | 10 | 4 | 2 932 166 | 92 68 911 08 | VERTEILER MASSE |
| SECHSKANTMUTTER ISO 403 | 40 00 381 | 7 | 1 | X1011997 | 10 11 997 9 | KABELSATZ ANBAU |

| Bezeichnung | Artikel | Pos. | Menge | Seite | Baugruppe | Bezeichnung |
|---|---|---|---|---|---|---|
| SECHSKANTMUTTER ISO 403 | 11 69 387 5 | 31 | 5 | 2 102 | 91 51 080 08 | MONTAGETEILE DREHBUEHN |
| SECHSKANTMUTTER ISO 403 | 11 69 387 5 | 351 | 8 | 2 210 | 91 81 614 08 | ANTRIEBSAGGREGAT VORM. |
| SECHSKANTMUTTER ISO 403 | 11 69 387 5 | 4 | 6 | 2 260 | 91 46 555 08 | BATTERIEKASTEN KPL. |
| SECHSKANTMUTTER ISO 403 | 11 69 387 5 | 10 | 2 | 2 440 022 | 96 42 336 08 | WINDE 2 VORM. |
| SECHSKANTMUTTER ISO 403 | 11 69 387 5 | 350 | 12 | 2 510 100 | 96 44 750 08 | DREHBUEHNENVERKLEIDUN |
| SECHSKANTMUTTER ISO 403 | 11 69 387 5 | 15 | 9 | 2 510 200 | 96 41 258 08 | DREHBUEHNENVERKLEIDUN |
| SECHSKANTMUTTER ISO 403 | 11 69 387 5 | 131 | 3 | 2 520 000 | 91 49 872 08 | KABINE VERGLAST |
| SECHSKANTMUTTER ISO 403 | 11 69 387 5 | 5 | 1 | 2 560 045 | 96 40 606 08 | KETTENHALTER KPL. |
| SECHSKANTMUTTER ISO 403 | 11 69 387 5 | 28 | 4 | 2 831 | 91 47 871 08 | KLIMAANLAGE OW |
| SECHSKANTMUTTER ISO 403 | 11 69 387 5 | 11 | 2 | 2 920 585 | 91 01 520 08 | ELEKTRIK BLITZLEUCHTE |
| SECHSKANTMUTTER ISO 403 | 11 69 387 5 | 12 | 10 | 2 950 | 91 49 515 08 | DRUCKLUFTANLAGE OW |
| SECHSKANTMUTTER ISO 403 | 11 69 387 5 | 15 | 4 | 2 955 | 91 49 516 08 | PNEUMATIK KRANFUEHRERK |
| SECHSKANTMUTTER ISO 403 | 11 69 387 5 | 350 | 16 | 2 984 | 91 52 906 08 | OELKUEHLER EINBAU |
| SECHSKANTMUTTER ISO 403 | 11 69 387 5 | 22 | 2 | 3 511 006 | 96 45 029 08 | MASTNASE VORM. |
| SECHSKANTMUTTER ISO 403 | 10 33 095 3 | 8 | 2 | X1011832 | 10 11 832 6 | ATL-ANBAU |
| SECHSKANTMUTTER ISO 4035 | 41 17 006 08 | 51 | 40 | 1 100 215 | 99 20 783 14 | MITTELTEIL |
| SECHSKANTMUTTER ISO 4035 | 41 17 006 08 | 18 | 4 | 3 330 | 91 57 885 08 | AUSSCHUBMECHANIK |
| SECHSKANTMUTTER ISO 4035 | 41 17 010 08 | 15 | 1 | 2 500 | 91 48 594 08 | KRANFUEHRERKABINE KPL. |
| SECHSKANTMUTTER ISO 403 | 41 01 203 08 | 29 | 1 | 3 511 006 | 96 45 029 08 | MASTNASE VORM. |
| SECHSKANTMUTTER ISO 403 | 10 54 416 3 | 36 | 4 | 1 100 215 | 99 20 783 14 | MITTELTEIL |
| SECHSKANTMUTTER ISO 704 | 40 02 564 | 43 | 18 | 3 101 | 91 60 312 08 | ANLENKSTUECK VORM. |
| SECHSKANTMUTTER ISO 7040 | 41 19 003 05 | 6 | 2 | 3 101 | 91 60 312 08 | ANLENKSTUECK VORM. |
| SECHSKANTMUTTER ISO 7040 | 41 34 126 01 | 352 | 2 | 2 210 008 | 96 48 137 08 | KUEHLER VORM. |
| SECHSKANTMUTTER ISO 8675 | 59 15 592 08 | 4 | 1 | 2 520 101 | 96 49 682 08 | SPRITZDUESE |
| SECHSKANTMUTTER ISO 8675 | 59 15 592 08 | 3 | 1 | 5 910 672 | 59 10 672 08 | WISCHERMOTOR |
| SECHSKANTMUTTER ISO 8675 | 57 03 377 08 | 21 | 1 | X1042993 | 10 42 993 3 | ZAHNRADMOTOR |
| SECHSKANTMUTTER M10 8 | 10 41 109 5 | 5 | 2 | X1021997 | 10 21 997 8 | STARTER |
| SECHSKANTMUTTER M10 8 | 10 41 109 5 | 5 | 2 | X1138664 | 11 38 664 4 | STARTER VORM. |
| SECHSKANTMUTTER M6 8 | 10 41 109 4 | 3 | 1 | X1021997 | 10 21 997 8 | STARTER |
| SECHSKANTMUTTER M6 8 | 10 41 109 4 | 3 | 1 | X1138664 | 11 38 664 4 | STARTER VORM. |
| SECHSKANTRIPPENMUTTER | 10 00 336 6 | 3 | 1 | 9 078 314 | 90 78 314 | HEIZFLANSCH ANBAU |
| SECHSKANTSCHRAUBE DIN 6 | 10 00 546 2 | 5 | 1 | 9 079 560 | 90 79 560 | GENERATOR ANBAU |
| SECHSKANTSCHRAUBE DIN 6 | 10 00 546 2 | 12 | 1 | 9 080 525 | 90 80 525 | KLIMAKOMPRESSOR ANBAU |
| SECHSKANTSCHRAUBE DIN 6 | 10 00 546 2 | 3 | 4 | X1011707 | 10 11 707 2 | LUFTANSAUGROHR ANBAU |
| SECHSKANTSCHRAUBE DIN | 10 03 731 2 | 9 | 6 | 9 079 480 | 90 79 480 | AGGREGATETRAEGER ANBA |
| SECHSKANTSCHRAUBE DIN | 10 03 051 8 | 6 | 2 | 9 078 249 | 90 78 249 | VERSCHLUSSTEILE |
| SECHSKANTSCHRAUBE DIN | 10 03 051 8 | 6 | 4 | 9 078 250 | 90 78 250 | VERSCHLUSSTEILE |
| SECHSKANTSCHRAUBE DIN | 10 03 051 8 | 6 | 2 | 9 078 962 | 90 78 962 | NEBENABTRIEB VORM. |
| SECHSKANTSCHRAUBE DIN 6 | 10 03 557 8 | 11 | 3 | X1011793 | 10 11 793 0 | ANBAUTEILE LUFTPRESSER |
| SECHSKANTSCHRAUBE DIN | 10 33 346 4 | 2 | 2 | X1012500 | 10 12 500 7 | KRAFTSTOFF-FEINFILTERAN |
| SECHSKANTSCHRAUBE DIN | 10 00 546 1 | 2 | 4 | X1011707 | 10 11 707 2 | LUFTANSAUGROHR ANBAU |
| SECHSKANTSCHRAUBE DIN 6 | 10 03 966 0 | 8 | 12 | 9 079 480 | 90 79 480 | AGGREGATETRAEGER ANBA |
| SECHSKANTSCHRAUBE DIN 6 | 10 00 613 1 | 3 | 8 | X1011810 | 10 11 810 1 | ABGASROHR ANBAU |
| SECHSKANTSCHRAUBE DIN 6 | 40 73 502 08 | 28 | 8 | 2 510 200 | 96 41 258 08 | DREHBUEHNENVERKLEIDUN |
| SECHSKANTSCHRAUBE DIN 6 | 40 73 502 08 | 40 | 2 | 2 540 | 91 45 984 08 | HEIZUNG OW |
| SECHSKANTSCHRAUBE DIN 6 | 40 73 502 08 | 65 | 8 | 2 932 042 | 96 68 587 08 | GRUNDAUFBAU |
| SECHSKANTSCHRAUBE DIN 6 | 40 73 502 08 | 31 | 5 | X1011998 | 10 11 998 0 | KABELBAUM ANBAU |
| SECHSKANTSCHRAUBE DIN 6 | 10 01 871 1 | 2 | 4 | 9 078 314 | 90 78 314 | HEIZFLANSCH ANBAU |
| SECHSKANTSCHRAUBE DIN 6 | 10 01 871 1 | 32 | 3 | X1011998 | 10 11 998 0 | KABELBAUM ANBAU |
| SECHSKANTSCHRAUBE DIN 6 | 10 29 053 7 | 18 | 4 | X1011573 | 10 11 573 7 | KRAFTSTOFFLEITUNGEN |
| SECHSKANTSCHRAUBE DIN | 10 01 404 2 | 4 | 2 | 9 079 472 | 90 79 472 | KUEHLMITTELKRUEMMER AN |
| SECHSKANTSCHRAUBE DIN | 10 01 404 2 | 5 | 3 | 9 080 525 | 90 80 525 | KLIMAKOMPRESSOR ANBAU |
| SECHSKANTSCHRAUBE DIN | 10 11 292 9 | 5 | 6 | 9 075 678 | 90 75 678 | THERMOSTATGEHAEUSE AN |
| SECHSKANTSCHRAUBE DIN 6 | 10 03 731 0 | 7 | 2 | X1011816 | 10 11 816 1 | VERBINDUNGSLEITUNG ANBA |
| SECHSKANTSCHRAUBE DIN 6 | 10 00 507 8 | 11 | 4 | X1011611 | 10 11 611 0 | VERSCHLUSSTEILE |
| SECHSKANTSCHRAUBE DIN 6 | 10 00 507 8 | 6 | 1 | X1011766 | 10 11 766 5 | ROHRLEITUNG |
| SECHSKANTSCHRAUBE DIN 6 | 10 00 507 8 | 13 | 2 | X1011914 | 10 11 914 1 | KURBELGEHAEUSEENTLUEF |
| SECHSKANTSCHRAUBE DIN 6 | 10 00 507 8 | 35 | 4 | X1011998 | 10 11 998 0 | KABELBAUM ANBAU |
| SECHSKANTSCHRAUBE DIN 6 | 10 01 690 6 | 8 | 2 | 9 080 345 | 90 80 345 | WASSERPUMPE MIT BEFEST. |
| SECHSKANTSCHRAUBE DIN 6 | 10 01 690 6 | 2 | 2 | X1011912 | 10 11 912 7 | HALTER ANBAU |

| Bezeichnung | Artikel | Pos. | Menge | Seite | Baugruppe | Bezeichnung |
|---|---|---|---|---|---|---|
| SECHSKANTSCHRAUBE DIN 6 | 10 01 690 6 | 3 | 4 | X1011912 | 10 11 912 8 | VERSCHLUSSTEILE |
| SECHSKANTSCHRAUBE DIN 6 | 10 01 690 6 | 8 | 2 | X1011989 | 10 11 989 1 | KRAFTSTOFFVORFILTERANBA |
| SECHSKANTSCHRAUBE DIN 6 | 10 01 690 6 | 4 | 2 | X1011997 | 10 11 997 9 | KABELSATZ ANBAU |
| SECHSKANTSCHRAUBE DIN 6 | 10 01 690 6 | 36 | 1 | X1011998 | 10 11 998 0 | KABELBAUM ANBAU |
| SECHSKANTSCHRAUBE DIN 6 | 10 01 690 6 | 3 | 1 | X1012024 | 10 12 024 2 | OELLEITUNG VORM. |
| SECHSKANTSCHRAUBE DIN | 10 33 620 0 | 3 | 8 | X1011919 | 10 11 919 7 | HITZESCHUTZ MIT BEFESTIG |
| SECHSKANTSCHRAUBE DIN 6 | 10 00 778 2 | 3 | 2 | 9 079 472 | 90 79 472 | KUEHLMITTELKRUEMMER AN |
| SECHSKANTSCHRAUBE DIN 6 | 10 00 778 2 | 3 | 4 | 9 080 280 | 90 80 280 | VERSCHLUSSTEILE |
| SECHSKANTSCHRAUBE DIN 6 | 10 00 778 2 | 23 | 1 | X1011914 | 10 11 914 1 | KURBELGEHAEUSEENTLUEF |
| SECHSKANTSCHRAUBE DIN 6 | 10 00 778 2 | 38 | 1 | X1011997 | 10 11 997 9 | KABELSATZ ANBAU |
| SECHSKANTSCHRAUBE DIN 6 | 10 11 371 1 | 4 | 5 | 9 080 345 | 90 80 345 | WASSERPUMPE MIT BEFEST. |
| SECHSKANTSCHRAUBE DIN 6 | 10 11 371 1 | 39 | 1 | X1011998 | 10 11 998 0 | KABELBAUM ANBAU |
| SECHSKANTSCHRAUBE DIN | 10 03 557 5 | 4 | 4 | X1011599 | 10 11 599 3 | STEUERGERAET ANBAU |
| SECHSKANTSCHRAUBE DIN 6 | 10 44 078 8 | 40 | 1 | X1011997 | 10 11 997 9 | KABELSATZ ANBAU |
| SECHSKANTSCHRAUBE DIN 6 | 10 00 507 3 | 5 | 4 | X1011739 | 10 11 739 7 | OELKUEHLER VORM. |
| SECHSKANTSCHRAUBE DIN 6 | 10 00 507 3 | 4 | 5 | X1011739 | 10 11 739 8 | OELKUEHLER ANBAU |
| SECHSKANTSCHRAUBE DIN 6 | 10 02 742 0 | 35 | 2 | X1011573 | 10 11 573 7 | KRAFTSTOFFLEITUNGEN |
| SECHSKANTSCHRAUBE DIN | 40 70 038 08 | 26 | 3 | 2 950 | 91 49 515 08 | DRUCKLUFTANLAGE OW |
| SECHSKANTSCHRAUBE EN 1 | 11 65 615 5 | 2 | 5 | 9 079 468 | 90 79 468 | TRANSPORTVORRICHTUNG |
| SECHSKANTSCHRAUBE EN 1 | 11 65 615 5 | 4 | 2 | 9 079 560 | 90 79 560 | GENERATOR ANBAU |
| SECHSKANTSCHRAUBE EN 1 | 11 65 615 5 | 2 | 4 | 9 079 823 | 90 79 823 | TRANSPORTVORRICHTUNG |
| SECHSKANTSCHRAUBE EN 1 | 11 65 615 5 | 3 | 3 | X1011566 | 10 11 566 4 | VERSCHLUSSTEILE |
| SECHSKANTSCHRAUBE EN 1 | 11 65 615 5 | 53 | 1 | X1011997 | 10 11 997 9 | KABELSATZ ANBAU |
| SECHSKANTSCHRAUBE EN 16 | 10 11 249 7 | 13 | 1 | 9 080 525 | 90 80 525 | KLIMAKOMPRESSOR ANBAU |
| SECHSKANTSCHRAUBE EN 16 | 10 01 463 8 | 10 | 2 | 9 080 525 | 90 80 525 | KLIMAKOMPRESSOR ANBAU |
| SECHSKANTSCHRAUBE EN 16 | 10 10 165 7 | 6 | 2 | 9 079 560 | 90 79 560 | GENERATOR ANBAU |
| SECHSKANTSCHRAUBE EN 16 | 10 10 165 7 | 14 | 1 | 9 080 525 | 90 80 525 | KLIMAKOMPRESSOR ANBAU |
| SECHSKANTSCHRAUBE EN 16 | 46 01 426 | 3 | 2 | 9 079 560 | 90 79 560 | GENERATOR ANBAU |
| SECHSKANTSCHRAUBE EN 1 | 10 87 550 3 | 20 | 2 | 2 533 003 | 96 28 388 08 | ELEKTRIK ANBAUTEILE KABIN |
| SECHSKANTSCHRAUBE EN 1 | 10 87 550 3 | 62 | 32 | 2 932 042 | 96 68 587 08 | GRUNDAUFBAU |
| SECHSKANTSCHRAUBE EN 1 | 10 00 900 7 | 3 | 2 | 9 147 512 | 91 47 512 | VERSCHLUSSTEILE |
| SECHSKANTSCHRAUBE EN 1 | 10 00 900 7 | 9 | 3 | X1011989 | 10 11 989 1 | KRAFTSTOFFVORFILTERANBA |
| SECHSKANTSCHRAUBE EN 1 | 10 01 690 7 | 22 | 1 | X1011914 | 10 11 914 1 | KURBELGEHAEUSEENTLUEF |
| SECHSKANTSCHRAUBE EN 1 | 10 21 801 3 | 3 | 28 | X1012414 | 10 12 414 0 | OELWANNE MIT BEFEST. |
| SECHSKANTSCHRAUBE EN 1 | 10 00 507 4 | 5 | 9 | X1011739 | 10 11 739 8 | OELKUEHLER ANBAU |
| SECHSKANTSCHRAUBE EN 1 | 10 10 030 3 | 4 | 5 | X1011961 | 10 11 961 0 | ZYLINDERKOPFDECKEL ANBA |
| SECHSKANTSCHRAUBE EN 1 | 10 10 030 3 | 4 | 5 | X1011963 | 10 11 963 6 | ZYLINDERKOPFDECKEL ANBA |
| SECHSKANTSCHRAUBE ISO 4 | 40 61 098 08 | 328 | 2 | 2 210 | 91 81 614 08 | ANTRIEBSAGGREGAT VORM. |
| SECHSKANTSCHRAUBE ISO 4 | 40 61 109 08 | 4 | 6 | 2 260 006 | 96 31 147 08 | BATTERIEKASTEN VORM. |
| SECHSKANTSCHRAUBE ISO 4 | 46 00 256 | 10 | 4 | 1 100 216 | 96 46 363 08 | MONTAGETEILE LWE |
| SECHSKANTSCHRAUBE ISO 4 | 11 65 157 8 | 28 | 16 | 1 100 215 | 99 20 783 14 | MITTELTEIL |
| SECHSKANTSCHRAUBE ISO 4 | 11 65 889 1 | 82 | 12 | 3 101 | 91 60 312 08 | ANLENKSTUECK VORM. |
| SECHSKANTSCHRAUBE ISO 4 | 11 65 889 0 | 4 | 1 | 9 072 906 | 90 72 906 | ZWISCHENRAD KPL. |
| SECHSKANTSCHRAUBE ISO 4 | 10 87 550 7 | 17 | 4 | 2 340 004 | 96 43 780 08 | OELBEHAELTER VORM. |
| SECHSKANTSCHRAUBE ISO | 40 61 108 | 503 | 4 | 2 970 | 91 55 482 08 | HYDRAULIK |
| SECHSKANTSCHRAUBE ISO 4 | 11 64 237 7 | 12 | 4 | 1 100 205 | 96 51 633 08 | RAUPENTRAEGER KPL.RE. |
| SECHSKANTSCHRAUBE ISO 4 | 11 64 237 7 | 12 | 4 | 1 100 210 | 96 51 634 08 | RAUPENTRAEGER KPL.LI. |
| SECHSKANTSCHRAUBE ISO | 40 62 129 01 | 7 | 4 | 1 100 214 | 74 90 137 14 | LEITRAD KPL |
| SECHSKANTSCHRAUBE ISO 4 | 40 62 147 08 | 16 | 4 | 4 003 006 | 91 04 457 08 | HAKENFLASCHE |
| SECHSKANTSCHRAUBE ISO | 40 61 228 01 | 2 | 1 | 2 340 | 91 53 116 08 | OELBEHAELTER ANBAU |
| SECHSKANTSCHRAUBE ISO | 40 61 509 14 | 7 | 24 | 1 100 205 | 96 51 633 08 | RAUPENTRAEGER KPL.RE. |
| SECHSKANTSCHRAUBE ISO | 40 61 509 14 | 7 | 24 | 1 100 210 | 96 51 634 08 | RAUPENTRAEGER KPL.LI. |
| SECHSKANTSCHRAUBE ISO 4 | 46 00 629 | 9 | 48 | 1 100 205 | 96 51 633 08 | RAUPENTRAEGER KPL.RE. |
| SECHSKANTSCHRAUBE ISO 4 | 46 00 629 | 9 | 48 | 1 100 210 | 96 51 634 08 | RAUPENTRAEGER KPL.LI. |
| SECHSKANTSCHRAUBE ISO 4 | 40 62 227 08 | 6 | 4 | 3 330 | 91 57 885 08 | AUSSCHUBMECHANIK |
| SECHSKANTSCHRAUBE ISO 4 | 40 01 928 | 332 | 2 | 2 210 | 91 81 614 08 | ANTRIEBSAGGREGAT VORM. |
| SECHSKANTSCHRAUBE ISO 4 | 40 61 032 08 | 155 | 2 | 2 520 000 | 91 49 872 08 | KABINE VERGLAST |
| SECHSKANTSCHRAUBE ISO 4 | 46 00 356 | 331 | 2 | 2 210 | 91 81 614 08 | ANTRIEBSAGGREGAT VORM. |
| SECHSKANTSCHRAUBE ISO | 46 00 183 | 14 | 4 | 2 955 | 91 49 516 08 | PNEUMATIK KRANFUEHRERK |
| SECHSKANTSCHRAUBE ISO 4 | 40 01 466 | 47 | 2 | 3 106 000 | 91 60 313 08 | TELESKOP 5 VORM. |

| Bezeichnung | Artikel | Pos. | Menge | Seite | Baugruppe | Bezeichnung |
|---|---|---|---|---|---|---|
| SECHSKANTSCHRAUBE ISO | 11 65 158 3 | 112 | 3 | 2 520 000 | 91 49 872 08 | KABINE VERGLAST |
| SECHSKANTSCHRAUBE ISO 4 | 40 01 463 | 133 | 6 | 2 520 000 | 91 49 872 08 | KABINE VERGLAST |
| SECHSKANTSCHRAUBE ISO | 10 87 551 4 | 4 | 1 | 2 560 045 | 96 40 606 08 | KETTENHALTER KPL. |
| SECHSKANTSCHRAUBE ISO 4 | 11 65 247 0 | 23 | 8 | 1 100 205 | 96 51 633 08 | RAUPENTRAEGER KPL.RE. |
| SECHSKANTSCHRAUBE ISO 4 | 11 65 247 0 | 23 | 6 | 1 100 210 | 96 51 634 08 | RAUPENTRAEGER KPL.LI. |
| SECHSKANTSCHRAUBE ISO 4 | 11 65 247 0 | 31 | 8 | 1 100 215 | 99 20 783 14 | MITTELTEIL |
| SECHSKANTSCHRAUBE ISO 4 | 11 65 247 0 | 339 | 1 | 2 210 | 91 81 614 08 | ANTRIEBSAGGREGAT VORM. |
| SECHSKANTSCHRAUBE ISO 4 | 11 65 247 0 | 14 | 3 | 3 511 006 | 96 45 029 08 | MASTNASE VORM. |
| SECHSKANTSCHRAUBE ISO | 40 65 098 08 | 10 | 8 | 2 340 004 | 96 43 780 08 | OELBEHAELTER VORM. |
| SECHSKANTSCHRAUBE ISO | 40 65 098 08 | 316 | 1 | 2 510 100 | 96 44 750 08 | DREHBUEHNENVERKLEIDUN |
| SECHSKANTSCHRAUBE ISO 4 | 11 65 163 2 | 30 | 8 | 1 100 215 | 99 20 783 14 | MITTELTEIL |
| SECHSKANTSCHRAUBE ISO 4 | 11 65 163 2 | 8 | 3 | 2 510 200 | 96 41 258 08 | DREHBUEHNENVERKLEIDUN |
| SECHSKANTSCHRAUBE ISO 4 | 11 65 163 2 | 7 | 4 | 2 790 901 | 91 54 183 08 | AUSSTEIFUNG |
| SECHSKANTSCHRAUBE ISO 4 | 11 65 163 2 | 85 | 7 | 2 970 | 91 55 482 08 | HYDRAULIK |
| SECHSKANTSCHRAUBE ISO 4 | 11 65 163 2 | 33 | 5 | 3 101 | 91 60 312 08 | ANLENKSTUECK VORM. |
| SECHSKANTSCHRAUBE ISO 4 | 11 65 163 2 | 10 | 2 | 3 330 | 91 57 885 08 | AUSSCHUBMECHANIK |
| SECHSKANTSCHRAUBE ISO 4 | 11 63 181 6 | 21 | 6 | 2 102 | 91 51 080 08 | MONTAGETEILE DREHBUEHN |
| SECHSKANTSCHRAUBE ISO 4 | 11 63 181 6 | 310 | 2 | 2 200 | 91 81 095 08 | ANTRIEBSAGGREGAT KPL. |
| SECHSKANTSCHRAUBE ISO 4 | 11 63 181 6 | 309 | 4 | 2 210 | 91 81 614 08 | ANTRIEBSAGGREGAT VORM. |
| SECHSKANTSCHRAUBE ISO 4 | 11 63 181 6 | 307 | 6 | 2 510 100 | 96 44 750 08 | DREHBUEHNENVERKLEIDUN |
| SECHSKANTSCHRAUBE ISO 4 | 11 63 181 6 | 300 | 7 | 2 680 | 91 53 225 08 | ABGASANLAGE KPL. |
| SECHSKANTSCHRAUBE ISO | 40 00 828 | 25 | 2 | 2 102 | 91 51 080 08 | MONTAGETEILE DREHBUEHN |
| SECHSKANTSCHRAUBE ISO | 40 00 828 | 308 | 4 | 2 510 100 | 96 44 750 08 | DREHBUEHNENVERKLEIDUN |
| SECHSKANTSCHRAUBE ISO | 40 00 828 | 300 | 4 | 2 681 | 91 28 102 08 | LUFTFILTERANLAGE |
| SECHSKANTSCHRAUBE ISO | 40 00 828 | 64 | 4 | 3 101 | 91 60 312 08 | ANLENKSTUECK VORM. |
| SECHSKANTSCHRAUBE ISO | 40 00 828 | 7 | 2 | X1011989 | 10 11 989 1 | KRAFTSTOFFVORFILTERANBA |
| SECHSKANTSCHRAUBE ISO | 40 66 010 08 | 12 | 6 | 2 440 022 | 96 42 336 08 | WINDE 2 VORM. |
| SECHSKANTSCHRAUBE ISO | 40 66 010 08 | 4 | 6 | 2 450 025 | 96 35 649 08 | HAUPTHUBWERK VORM. |
| SECHSKANTSCHRAUBE ISO | 40 66 010 08 | 6 | 2 | 2 790 901 | 91 54 183 08 | AUSSTEIFUNG |
| SECHSKANTSCHRAUBE ISO 4 | 10 87 551 6 | 536 | 12 | 1 970 | 96 71 367 08 | HYDRAULIK UNTERWAGEN |
| SECHSKANTSCHRAUBE ISO 4 | 10 87 551 6 | 11 | 2 | 2 440 022 | 96 42 336 08 | WINDE 2 VORM. |
| SECHSKANTSCHRAUBE ISO 4 | 10 87 551 6 | 140 | 1 | 2 520 000 | 91 49 872 08 | KABINE VERGLAST |
| SECHSKANTSCHRAUBE ISO 4 | 49 01 287 | 5 | 2 | 2 790 901 | 91 54 183 08 | AUSSTEIFUNG |
| SECHSKANTSCHRAUBE ISO 4 | 11 62 670 6 | 38 | 16 | 1 100 205 | 96 51 633 08 | RAUPENTRAEGER KPL.RE. |
| SECHSKANTSCHRAUBE ISO 4 | 11 62 670 6 | 38 | 16 | 1 100 210 | 96 51 634 08 | RAUPENTRAEGER KPL.LI. |
| SECHSKANTSCHRAUBE ISO 4 | 11 62 670 6 | 300 | 2 | 2 200 | 91 81 095 08 | ANTRIEBSAGGREGAT KPL. |
| SECHSKANTSCHRAUBE ISO 4 | 11 62 670 6 | 24 | 1 | 3 511 006 | 96 45 029 08 | MASTNASE VORM. |
| SECHSKANTSCHRAUBE ISO | 46 00 355 | 23 | 2 | 2 502 | 91 01 533 08 | STEUERSTAND |
| SECHSKANTSCHRAUBE ISO | 46 00 355 | 69 | 1 | 3 106 000 | 91 60 313 08 | TELESKOP 5 VORM. |
| SECHSKANTSCHRAUBE ISO 4 | 40 65 144 01 | 52 | 1 | 3 501 | 91 05 788 08 | DOPPELKLAPPSPITZE MECH. |
| SECHSKANTSCHRAUBE ISO | 11 00 272 4 | 2 | 6 | 2 515 | 91 51 084 08 | ABSTURZSICHERUNG |
| SECHSKANTSCHRAUBE ISO 4 | 11 65 100 6 | 26 | 3 | 1 100 205 | 96 51 633 08 | RAUPENTRAEGER KPL.RE. |
| SECHSKANTSCHRAUBE ISO 4 | 11 65 100 6 | 26 | 3 | 1 100 210 | 96 51 634 08 | RAUPENTRAEGER KPL.LI. |
| SECHSKANTSCHRAUBE ISO 4 | 11 65 100 6 | 63 | 3 | 3 106 000 | 91 60 313 08 | TELESKOP 5 VORM. |
| SECHSKANTSCHRAUBE ISO 4 | 40 66 090 08 | 2 | 8 | X1011578 | 10 11 578 0 | KUPPLUNGSANBAU |
| SECHSKANTSCHRAUBE ISO | 40 66 087 08 | 53 | 2 | 3 101 | 91 60 312 08 | ANLENKSTUECK VORM. |
| SECHSKANTSCHRAUBE ISO | 40 66 087 08 | 53 | 2 | 3 102 000 | 91 62 543 08 | TELESKOP 1 VORM. |
| SECHSKANTSCHRAUBE ISO | 40 66 087 08 | 53 | 2 | 3 103 000 | 91 62 544 08 | TELESKOP 2 VORM. |
| SECHSKANTSCHRAUBE ISO | 40 66 087 08 | 53 | 2 | 3 104 000 | 91 62 545 08 | TELESKOP 3 VORM. |
| SECHSKANTSCHRAUBE ISO | 40 66 087 08 | 53 | 2 | 3 105 000 | 91 62 546 08 | TELESKOP 4 VORM. |
| SECHSKANTSCHRAUBE ISO 4 | 11 65 889 2 | 29 | 18 | 1 100 215 | 99 20 783 14 | MITTELTEIL |
| SECHSKANTSCHRAUBE ISO 4 | 11 65 889 2 | 27 | 8 | 1 400 200 | 91 53 791 08 | HYDRAULIK VORB. |
| SECHSKANTSCHRAUBE ISO 4 | 11 63 174 2 | 50 | 5 | 1 100 211 | 74 90 653 14 | TRAGROLLE KPL |
| SECHSKANTSCHRAUBE ISO 4 | 11 63 174 2 | 56 | 1 | 2 102 | 91 51 080 08 | MONTAGETEILE DREHBUEHN |
| SECHSKANTSCHRAUBE ISO 4 | 11 63 174 2 | 301 | 3 | 2 680 | 91 53 225 08 | ABGASANLAGE KPL. |
| SECHSKANTSCHRAUBE ISO 4 | 11 63 174 2 | 36 | 2 | 3 101 | 91 60 312 08 | ANLENKSTUECK VORM. |
| SECHSKANTSCHRAUBE ISO 4 | 11 63 174 2 | 36 | 2 | 3 102 000 | 91 62 543 08 | TELESKOP 1 VORM. |
| SECHSKANTSCHRAUBE ISO 4 | 11 63 174 2 | 36 | 2 | 3 103 000 | 91 62 544 08 | TELESKOP 2 VORM. |
| SECHSKANTSCHRAUBE ISO 4 | 11 63 174 2 | 36 | 2 | 3 104 000 | 91 62 545 08 | TELESKOP 3 VORM. |
| SECHSKANTSCHRAUBE ISO 4 | 11 63 174 2 | 36 | 2 | 3 105 000 | 91 62 546 08 | TELESKOP 4 VORM. |

| Bezeichnung | Artikel | Pos. | Menge | Seite | Baugruppe | Bezeichnung |
|---|---|---|---|---|---|---|
| SECHSKANTSCHRAUBE ISO | 10 29 957 4 | 17 | 8 | 2 500 | 91 48 594 08 | KRANFUEHRERKABINE KPL. |
| SECHSKANTSCHRAUBE ISO 4 | 11 64 234 9 | 310 | 2 | 2 210 | 91 81 614 08 | ANTRIEBSAGGREGAT VORM. |
| SECHSKANTSCHRAUBE ISO 4 | 11 64 234 9 | 11 | 4 | 3 101 | 91 60 312 08 | ANLENKSTUECK VORM. |
| SECHSKANTSCHRAUBE ISO 4 | 11 64 234 9 | 45 | 3 | 3 501 | 91 05 788 08 | DOPPELKLAPPSPITZE MECH. |
| SECHSKANTSCHRAUBE ISO 4 | 46 00 366 | 19 | 5 | 2 500 | 91 48 594 08 | KRANFUEHRERKABINE KPL. |
| SECHSKANTSCHRAUBE ISO 4 | 11 64 538 4 | 555 | 8 | 1 970 | 96 71 367 08 | HYDRAULIK UNTERWAGEN |
| SECHSKANTSCHRAUBE ISO 4 | 11 64 538 4 | 21 | 4 | 2 440 022 | 96 42 336 08 | WINDE 2 VORM. |
| SECHSKANTSCHRAUBE ISO 4 | 11 64 538 4 | 30 | 2 | 2 510 200 | 96 41 258 08 | DREHBUEHNENVERKLEIDUN |
| SECHSKANTSCHRAUBE ISO 4 | 11 64 538 4 | 21 | 4 | 3 100 | 91 59 279 08 | TELESKOPAUSLEGER KPL. |
| SECHSKANTSCHRAUBE ISO 4 | 11 64 538 4 | 19 | 1 | 3 510 100 | 91 49 246 08 | TRANSPORTHALTERUNG DKS |
| SECHSKANTSCHRAUBE ISO 4 | 11 84 013 6 | 41 | 12 | 3 101 | 91 60 312 08 | ANLENKSTUECK VORM. |
| SECHSKANTSCHRAUBE ISO 4 | 11 84 013 6 | 41 | 24 | 3 102 000 | 91 62 543 08 | TELESKOP 1 VORM. |
| SECHSKANTSCHRAUBE ISO 4 | 11 84 013 6 | 41 | 24 | 3 103 000 | 91 62 544 08 | TELESKOP 2 VORM. |
| SECHSKANTSCHRAUBE ISO 4 | 11 84 013 6 | 41 | 20 | 3 104 000 | 91 62 545 08 | TELESKOP 3 VORM. |
| SECHSKANTSCHRAUBE ISO 4 | 11 84 013 6 | 41 | 20 | 3 105 000 | 91 62 546 08 | TELESKOP 4 VORM. |
| SECHSKANTSCHRAUBE ISO | 49 00 643 | 16 | 2 | 3 510 100 | 91 49 246 08 | TRANSPORTHALTERUNG DKS |
| SECHSKANTSCHRAUBE ISO | 40 65 191 | 5 | 4 | 3 102 000 | 91 62 543 08 | TELESKOP 1 VORM. |
| SECHSKANTSCHRAUBE ISO | 40 65 191 | 5 | 4 | 3 103 000 | 91 62 544 08 | TELESKOP 2 VORM. |
| SECHSKANTSCHRAUBE ISO | 40 65 191 | 5 | 4 | 3 104 000 | 91 62 545 08 | TELESKOP 3 VORM. |
| SECHSKANTSCHRAUBE ISO | 40 65 191 | 5 | 4 | 3 105 000 | 91 62 546 08 | TELESKOP 4 VORM. |
| SECHSKANTSCHRAUBE ISO | 40 65 191 | 5 | 4 | 3 106 000 | 91 60 313 08 | TELESKOP 5 VORM. |
| SECHSKANTSCHRAUBE ISO | 40 65 145 01 | 574 | 20 | 1 970 | 96 71 367 08 | HYDRAULIK UNTERWAGEN |
| SECHSKANTSCHRAUBE ISO | 40 65 145 01 | 504 | 8 | 2 970 | 91 55 482 08 | HYDRAULIK |
| SECHSKANTSCHRAUBE ISO | 10 87 551 8 | 2 | 3 | 2 560 045 | 96 40 606 08 | KETTENHALTER KPL. |
| SECHSKANTSCHRAUBE ISO | 10 87 551 8 | 102 | 2 | 3 501 | 91 05 788 08 | DOPPELKLAPPSPITZE MECH. |
| SECHSKANTSCHRAUBE ISO 4 | 46 35 061 | 12 | 6 | 3 510 100 | 91 49 246 08 | TRANSPORTHALTERUNG DKS |
| SECHSKANTSCHRAUBE ISO | 10 87 580 1 | 15 | 2 | 3 510 100 | 91 49 246 08 | TRANSPORTHALTERUNG DKS |
| SECHSKANTSCHRAUBE ISO 4 | 40 65 306 14 | 50 | 8 | 1 100 215 | 99 20 783 14 | MITTELTEIL |
| SECHSKANTSCHRAUBE ISO 4 | 10 00 636 2 | 61 | 4 | 3 501 | 91 05 788 08 | DOPPELKLAPPSPITZE MECH. |
| SECHSKANTSCHRAUBE ISO 4 | 10 02 323 7 | 43 | 1 | 3 510 100 | 91 49 246 08 | TRANSPORTHALTERUNG DKS |
| SECHSKANTSCHRAUBE ISO | 49 00 123 | 13 | 6 | 1 100 200 | 96 72 944 08 | UNTERWAGEN KPL. |
| SECHSKANTSCHRAUBE ISO | 49 00 123 | 27 | 3 | 1 100 215 | 99 20 783 14 | MITTELTEIL |
| SECHSKANTSCHRAUBE ISO | 49 00 123 | 95 | 2 | 3 501 | 91 05 788 08 | DOPPELKLAPPSPITZE MECH. |
| SECHSKANTSCHRAUBE ISO | 40 66 030 08 | 5 | 8 | 2 350 | 91 81 361 08 | WIPPZYLINDER M.LAGERUNG |
| SECHSKANTSCHRAUBE ISO | 40 66 030 08 | 29 | 4 | 2 501 000 | 91 48 769 08 | KRANFUEHRERKABINE VORM |
| SECHSKANTSCHRAUBE ISO 4 | 10 87 551 9 | 315 | 4 | 2 210 | 91 81 614 08 | ANTRIEBSAGGREGAT VORM. |
| SECHSKANTSCHRAUBE ISO 4 | 10 87 551 9 | 22 | 2 | 3 510 100 | 91 49 246 08 | TRANSPORTHALTERUNG DKS |
| SECHSKANTSCHRAUBE ISO | 40 66 031 08 | 4 | 8 | 2 102 | 91 51 080 08 | MONTAGETEILE DREHBUEHN |
| SECHSKANTSCHRAUBE ISO | 40 66 031 08 | 13 | 22 | 2 440 022 | 96 42 336 08 | WINDE 2 VORM. |
| SECHSKANTSCHRAUBE ISO | 40 66 031 08 | 3 | 22 | 2 450 025 | 96 35 649 08 | HAUPTHUBWERK VORM. |
| SECHSKANTSCHRAUBE ISO 4 | 10 87 580 3 | 2 | 3 | 2 270 | 91 50 456 08 | KRAFTSTOFFBEHAELTER AN |
| SECHSKANTSCHRAUBE ISO 4 | 10 87 580 3 | 34 | 4 | 2 440 022 | 96 42 336 08 | WINDE 2 VORM. |
| SECHSKANTSCHRAUBE ISO 4 | 10 87 580 3 | 13 | 4 | 2 450 | 91 53 926 08 | HAUPTHUBWERK |
| SECHSKANTSCHRAUBE ISO 4 | 10 87 580 3 | 8 | 8 | 3 510 100 | 91 49 246 08 | TRANSPORTHALTERUNG DKS |
| SECHSKANTSCHRAUBE ISO 4 | 10 87 552 0 | 15 | 12 | 1 100 205 | 96 51 633 08 | RAUPENTRAEGER KPL.RE. |
| SECHSKANTSCHRAUBE ISO 4 | 10 87 552 0 | 15 | 12 | 1 100 210 | 96 51 634 08 | RAUPENTRAEGER KPL.LI. |
| SECHSKANTSCHRAUBE ISO 4 | 10 87 552 0 | 316 | 14 | 2 210 | 91 81 614 08 | ANTRIEBSAGGREGAT VORM. |
| SECHSKANTSCHRAUBE ISO | 40 66 034 08 | 7 | 1 | 3 500 104 | 92 95 821 08 | HALTERUNG VORM. |
| SECHSKANTSCHRAUBE ISO 4 | 10 87 552 1 | 58 | 8 | 2 102 | 91 51 080 08 | MONTAGETEILE DREHBUEHN |
| SECHSKANTSCHRAUBE ISO 4 | 10 87 552 1 | 55 | 5 | 3 501 | 91 05 788 08 | DOPPELKLAPPSPITZE MECH. |
| SECHSKANTSCHRAUBE ISO | 46 00 262 | 340 | 8 | 2 200 | 91 81 095 08 | ANTRIEBSAGGREGAT KPL. |
| SECHSKANTSCHRAUBE ISO | 46 00 628 | 59 | 1 | 3 501 | 91 05 788 08 | DOPPELKLAPPSPITZE MECH. |
| SECHSKANTSCHRAUBE ISO 4 | 40 62 072 08 | 18 | 12 | 1 100 205 | 96 51 633 08 | RAUPENTRAEGER KPL.RE. |
| SECHSKANTSCHRAUBE ISO 4 | 40 62 072 08 | 18 | 12 | 1 100 210 | 96 51 634 08 | RAUPENTRAEGER KPL.LI. |
| SECHSKANTSCHRAUBE ISO | 40 65 207 01 | 25 | 12 | 1 100 215 | 99 20 783 14 | MITTELTEIL |
| SECHSKANTSCHRAUBE ISO 4 | 40 65 281 | 4 | 1 | 2 270 | 91 50 456 08 | KRAFTSTOFFBEHAELTER AN |
| SECHSKANTSCHRAUBE ISO 4 | 40 65 281 | 3 | 2 | 2 340 | 91 53 116 08 | OELBEHAELTER ANBAU |
| SECHSKANTSCHRAUBE ISO | 46 00 097 | 36 | 2 | 1 100 205 | 96 51 633 08 | RAUPENTRAEGER KPL.RE. |
| SECHSKANTSCHRAUBE ISO | 46 00 097 | 36 | 2 | 1 100 210 | 96 51 634 08 | RAUPENTRAEGER KPL.LI. |
| SECHSKANTSCHRAUBE ISO 4 | 10 87 580 6 | 10 | 6 | 3 510 100 | 91 49 246 08 | TRANSPORTHALTERUNG DKS |

| Bezeichnung | Artikel | Pos. | Menge | Seite | Baugruppe | Bezeichnung |
|---|---|---|---|---|---|---|
| SECHSKANTSCHRAUBE ISO 4 | 40 65 269 14 | 32 | 2 | 1 100 205 | 96 51 633 08 | RAUPENTRAEGER KPL.RE. |
| SECHSKANTSCHRAUBE ISO 4 | 40 65 269 14 | 32 | 2 | 1 100 210 | 96 51 634 08 | RAUPENTRAEGER KPL.LI. |
| SECHSKANTSCHRAUBE ISO | 40 65 000 08 | 11 | 4 | 2 913 | 91 32 850 08 | LICCON KONSOLE LCD2 |
| SECHSKANTSCHRAUBE ISO 4 | 40 65 060 | 3 | 2 | 1 630 003 | 96 47 650 08 | BOLZEN KPL. |
| SECHSKANTSCHRAUBE ISO 4 | 40 00 417 | 25 | 4 | 1 400 200 | 91 53 791 08 | HYDRAULIK VORB. |
| SECHSKANTSCHRAUBE ISO 4 | 40 00 417 | 3 | 2 | 1 681 021 | 96 65 122 08 | SENSOR KPL. |
| SECHSKANTSCHRAUBE ISO 4 | 40 00 417 | 70 | 4 | 2 970 | 91 55 482 08 | HYDRAULIK |
| SECHSKANTSCHRAUBE ISO 4 | 40 65 023 08 | 36 | 2 | 2 971 | 91 50 610 08 | HYDRAULIK HILFSHUBWERK |
| SECHSKANTSCHRAUBE ISO 4 | 40 65 025 08 | 82 | 2 | 3 501 | 91 05 788 08 | DOPPELKLAPPSPITZE MECH. |
| SECHSKANTSCHRAUBE ISO 4 | 40 65 028 08 | 3 | 5 | 2 270 001 | 96 37 923 08 | KRAFTSTOFFBEHAELTER VO |
| SECHSKANTSCHRAUBE ISO 4 | 40 65 033 01 | 22 | 6 | 1 400 200 | 91 53 791 08 | HYDRAULIK VORB. |
| SECHSKANTSCHRAUBE ISO | 11 64 249 7 | 13 | 2 | 2 510 072 | 96 44 614 08 | KLAPPE VORM.RECHTS |
| SECHSKANTSCHRAUBE ISO | 11 64 249 7 | 20 | 2 | 2 510 200 | 96 41 258 08 | DREHBUEHNENVERKLEIDUN |
| SECHSKANTSCHRAUBE ISO | 11 64 249 7 | 77 | 1 | 2 520 000 | 91 49 872 08 | KABINE VERGLAST |
| SECHSKANTSCHRAUBE ISO | 11 69 282 4 | 5 | 6 | 2 501 000 | 91 48 769 08 | KRANFUEHRERKABINE VORM |
| SECHSKANTSCHRAUBE ISO | 11 69 282 4 | 47 | 2 | 2 510 200 | 96 41 258 08 | DREHBUEHNENVERKLEIDUN |
| SECHSKANTSCHRAUBE ISO | 11 69 282 4 | 8 | 2 | 2 510 201 | 96 42 011 08 | KLAPPE VORM. |
| SECHSKANTSCHRAUBE ISO 4 | 40 65 099 | 302 | 4 | 2 210 008 | 96 48 137 08 | KUEHLER VORM. |
| SECHSKANTSCHRAUBE ISO 4 | 40 65 099 | 4 | 4 | 2 430 | 91 54 389 08 | DREHBUEHNENARRETIERUN |
| SECHSKANTSCHRAUBE ISO 4 | 40 65 099 | 9 | 4 | 2 501 022 | 96 34 184 08 | DECKEL KPL. |
| SECHSKANTSCHRAUBE ISO 4 | 40 65 099 | 30 | 2 | 2 540 | 91 45 984 08 | HEIZUNG OW |
| SECHSKANTSCHRAUBE ISO 4 | 40 65 099 | 5 | 1 | 2 913 004 | 96 20 460 08 | GEHAEUSE VORM. |
| SECHSKANTSCHRAUBE ISO 4 | 40 65 099 | 10 | 3 | 2 920 200 | 91 27 889 08 | ELEKTRIK WINDE 1 |
| SECHSKANTSCHRAUBE ISO 4 | 40 65 099 | 65 | 1 | 2 932 095 | 96 46 064 08 | SCHWENKRAHMEN SICHERUN |
| SECHSKANTSCHRAUBE ISO 4 | 40 65 099 | 72 | 8 | 2 970 | 91 55 482 08 | HYDRAULIK |
| SECHSKANTSCHRAUBE ISO 4 | 40 65 099 | 30 | 2 | 3 330 | 91 57 885 08 | AUSSCHUBMECHANIK |
| SECHSKANTSCHRAUBE ISO | 11 64 489 9 | 309 | 3 | 2 510 100 | 96 44 750 08 | DREHBUEHNENVERKLEIDUN |
| SECHSKANTSCHRAUBE ISO | 11 64 489 9 | 24 | 4 | 2 510 200 | 96 41 258 08 | DREHBUEHNENVERKLEIDUN |
| SECHSKANTSCHRAUBE ISO | 11 64 489 9 | 78 | 15 | 2 520 000 | 91 49 872 08 | KABINE VERGLAST |
| SECHSKANTSCHRAUBE ISO | 11 64 489 9 | 35 | 1 | 2 522 | 91 10 037 08 | TUER KPL. |
| SECHSKANTSCHRAUBE ISO | 11 64 489 9 | 7 | 11 | 2 571 | 91 50 902 08 | HYDRAULISCHE BALLASTIER |
| SECHSKANTSCHRAUBE ISO | 11 64 489 9 | 66 | 1 | 2 932 042 | 96 68 587 08 | GRUNDAUFBAU |
| SECHSKANTSCHRAUBE ISO | 11 64 489 9 | 66 | 1 | 2 932 095 | 96 46 064 08 | SCHWENKRAHMEN SICHERUN |
| SECHSKANTSCHRAUBE ISO | 11 64 489 9 | 40 | 4 | 2 971 | 91 50 610 08 | HYDRAULIK HILFSHUBWERK |
| SECHSKANTSCHRAUBE ISO 4 | 40 65 326 14 | 150 | 1 | 2 520 000 | 91 49 872 08 | KABINE VERGLAST |
| SECHSKANTSCHRAUBE ISO | 10 87 552 9 | 31 | 2 | 2 501 000 | 91 48 769 08 | KRANFUEHRERKABINE VORM |
| SECHSKANTSCHRAUBE ISO | 10 87 552 9 | 16 | 3 | 2 520 001 | 92 48 796 08 | FRONTSCHEIBE KPL. |
| SECHSKANTSCHRAUBE ISO | 10 87 552 9 | 25 | 3 | 2 522 | 91 10 037 08 | TUER KPL. |
| SECHSKANTSCHRAUBE ISO | 10 87 552 9 | 11 | 2 | 2 932 166 | 92 68 911 08 | VERTEILER MASSE |
| SECHSKANTSCHRAUBE ISO | 10 87 552 9 | 68 | 2 | 3 102 000 | 91 62 543 08 | TELESKOP 1 VORM. |
| SECHSKANTSCHRAUBE ISO | 10 87 552 9 | 68 | 2 | 3 103 000 | 91 62 544 08 | TELESKOP 2 VORM. |
| SECHSKANTSCHRAUBE ISO | 10 87 552 9 | 68 | 2 | 3 104 000 | 91 62 545 08 | TELESKOP 3 VORM. |
| SECHSKANTSCHRAUBE ISO | 10 87 552 9 | 68 | 2 | 3 105 000 | 91 62 546 08 | TELESKOP 4 VORM. |
| SECHSKANTSCHRAUBE ISO | 10 87 552 9 | 87 | 4 | 3 501 | 91 05 788 08 | DOPPELKLAPPSPITZE MECH. |
| SECHSKANTSCHRAUBE ISO 4 | 46 00 102 | 38 | 2 | 2 540 | 91 45 984 08 | HEIZUNG OW |
| SECHSKANTSCHRAUBE ISO 4 | 46 00 102 | 5 | 2 | 3 101 | 91 60 312 08 | ANLENKSTUECK VORM. |
| SECHSKANTSCHRAUBE ISO 4 | 46 00 102 | 15 | 1 | X1011793 | 10 11 793 0 | ANBAUTEILE LUFTPRESSER |
| SECHSKANTSCHRAUBE ISO 4 | 49 00 595 | 7 | 2 | 2 501 022 | 96 34 184 08 | DECKEL KPL. |
| SECHSKANTSCHRAUBE ISO 4 | 40 01 998 | 32 | 2 | 2 510 200 | 96 41 258 08 | DREHBUEHNENVERKLEIDUN |
| SECHSKANTSCHRAUBE ISO 4 | 46 00 532 | 53 | 2 | 2 102 | 91 51 080 08 | MONTAGETEILE DREHBUEHN |
| SECHSKANTSCHRAUBE ISO | 11 69 004 8 | 12 | 3 | 2 540 | 91 45 984 08 | HEIZUNG OW |
| SECHSKANTSCHRAUBE ISO | 11 69 004 8 | 300 | 8 | 2 984 | 91 52 906 08 | OELKUEHLER EINBAU |
| SECHSKANTSCHRAUBE ISO | 11 65 161 2 | 307 | 2 | 2 210 | 91 81 614 08 | ANTRIEBSAGGREGAT VORM. |
| SECHSKANTSCHRAUBE ISO | 11 65 161 2 | 300 | 6 | 2 210 008 | 96 48 137 08 | KUEHLER VORM. |
| SECHSKANTSCHRAUBE ISO | 11 65 161 2 | 45 | 4 | 2 440 022 | 96 42 336 08 | WINDE 2 VORM. |
| SECHSKANTSCHRAUBE ISO | 11 65 161 2 | 13 | 4 | 2 500 | 91 48 594 08 | KRANFUEHRERKABINE KPL. |
| SECHSKANTSCHRAUBE ISO | 11 65 161 2 | 132 | 18 | 2 520 000 | 91 49 872 08 | KABINE VERGLAST |
| SECHSKANTSCHRAUBE ISO | 11 65 161 2 | 31 | 12 | 2 522 | 91 10 037 08 | TUER KPL. |
| SECHSKANTSCHRAUBE ISO | 11 65 161 2 | 30 | 4 | 2 831 | 91 47 871 08 | KLIMAANLAGE OW |
| SECHSKANTSCHRAUBE ISO | 11 65 161 2 | 68 | 9 | 2 932 042 | 96 68 587 08 | GRUNDAUFBAU |

| Bezeichnung | Artikel | Pos. | Menge | Seite | Baugruppe | Bezeichnung |
|---|---|---|---|---|---|---|
| SECHSKANTSCHRAUBE ISO | 11 65 161 2 | 17 | 4 | 3 100 | 91 59 279 08 | TELESKOPAUSLEGER KPL. |
| SECHSKANTSCHRAUBE ISO | 11 65 161 2 | 25 | 3 | 3 100 | 91 59 279 08 | TELESKOPAUSLEGER KPL. |
| SECHSKANTSCHRAUBE ISO | 11 65 161 2 | 27 | 15 | 3 101 | 91 60 312 08 | ANLENKSTUECK VORM. |
| SECHSKANTSCHRAUBE ISO | 11 65 161 2 | 4 | 6 | 3 102 000 | 91 62 543 08 | TELESKOP 1 VORM. |
| SECHSKANTSCHRAUBE ISO | 11 65 161 2 | 4 | 6 | 3 103 000 | 91 62 544 08 | TELESKOP 2 VORM. |
| SECHSKANTSCHRAUBE ISO | 11 65 161 2 | 4 | 6 | 3 104 000 | 91 62 545 08 | TELESKOP 3 VORM. |
| SECHSKANTSCHRAUBE ISO | 11 65 161 2 | 4 | 4 | 3 105 000 | 91 62 546 08 | TELESKOP 4 VORM. |
| SECHSKANTSCHRAUBE ISO | 11 65 161 2 | 4 | 4 | 3 106 000 | 91 60 313 08 | TELESKOP 5 VORM. |
| SECHSKANTSCHRAUBE ISO | 11 65 161 2 | 28 | 6 | 3 330 | 91 57 885 08 | AUSSCHUBMECHANIK |
| SECHSKANTSCHRAUBE ISO | 11 65 161 2 | 32 | 5 | 3 510 100 | 91 49 246 08 | TRANSPORTHALTERUNG DKS |
| SECHSKANTSCHRAUBE ISO 4 | 40 65 068 08 | 315 | 1 | 2 510 100 | 96 44 750 08 | DREHBUEHNENVERKLEIDUN |
| SECHSKANTSCHRAUBE ISO | 11 65 176 7 | 20 | 4 | 1 400 200 | 91 53 791 08 | HYDRAULIK VORB. |
| SECHSKANTSCHRAUBE ISO | 11 65 176 7 | 29 | 2 | 2 102 | 91 51 080 08 | MONTAGETEILE DREHBUEHN |
| SECHSKANTSCHRAUBE ISO | 11 65 176 7 | 5 | 2 | 2 102 022 | 96 32 604 08 | VERRIEGELUNG |
| SECHSKANTSCHRAUBE ISO | 11 65 176 7 | 304 | 8 | 2 210 | 91 81 614 08 | ANTRIEBSAGGREGAT VORM. |
| SECHSKANTSCHRAUBE ISO | 11 65 176 7 | 301 | 13 | 2 210 008 | 96 48 137 08 | KUEHLER VORM. |
| SECHSKANTSCHRAUBE ISO | 11 65 176 7 | 2 | 6 | 2 260 | 91 46 555 08 | BATTERIEKASTEN KPL. |
| SECHSKANTSCHRAUBE ISO | 11 65 176 7 | 27 | 6 | 2 502 | 91 01 533 08 | STEUERSTAND |
| SECHSKANTSCHRAUBE ISO | 11 65 176 7 | 310 | 8 | 2 510 100 | 96 44 750 08 | DREHBUEHNENVERKLEIDUN |
| SECHSKANTSCHRAUBE ISO | 11 65 176 7 | 10 | 2 | 2 510 200 | 96 41 258 08 | DREHBUEHNENVERKLEIDUN |
| SECHSKANTSCHRAUBE ISO | 11 65 176 7 | 8 | 8 | 2 515 007 | 96 42 014 08 | PODEST VORM. |
| SECHSKANTSCHRAUBE ISO | 11 65 176 7 | 79 | 8 | 2 520 000 | 91 49 872 08 | KABINE VERGLAST |
| SECHSKANTSCHRAUBE ISO | 11 65 176 7 | 28 | 4 | 2 522 | 91 10 037 08 | TUER KPL. |
| SECHSKANTSCHRAUBE ISO | 11 65 176 7 | 27 | 2 | 2 831 | 91 47 871 08 | KLIMAANLAGE OW |
| SECHSKANTSCHRAUBE ISO | 11 65 176 7 | 21 | 8 | 2 950 | 91 49 515 08 | DRUCKLUFTANLAGE OW |
| SECHSKANTSCHRAUBE ISO | 11 65 176 7 | 80 | 6 | 2 970 | 91 55 482 08 | HYDRAULIK |
| SECHSKANTSCHRAUBE ISO | 11 65 176 7 | 301 | 4 | 2 984 | 91 52 906 08 | OELKUEHLER EINBAU |
| SECHSKANTSCHRAUBE ISO | 11 65 176 7 | 28 | 2 | 3 510 100 | 91 49 246 08 | TRANSPORTHALTERUNG DKS |
| SECHSKANTSCHRAUBE ISO | 11 65 176 7 | 9 | 2 | 9 077 279 | 90 77 279 | ANSCHLUSSSTUTZEN ANBAU |
| SECHSKANTSCHRAUBE ISO | 11 64 226 1 | 33 | 4 | 2 102 | 91 51 080 08 | MONTAGETEILE DREHBUEHN |
| SECHSKANTSCHRAUBE ISO | 11 64 226 1 | 320 | 8 | 2 210 | 91 81 614 08 | ANTRIEBSAGGREGAT VORM. |
| SECHSKANTSCHRAUBE ISO | 11 64 226 1 | 24 | 16 | 2 501 000 | 91 48 769 08 | KRANFUEHRERKABINE VORM |
| SECHSKANTSCHRAUBE ISO | 11 64 226 1 | 311 | 8 | 2 510 100 | 96 44 750 08 | DREHBUEHNENVERKLEIDUN |
| SECHSKANTSCHRAUBE ISO | 11 64 226 1 | 14 | 4 | 2 510 200 | 96 41 258 08 | DREHBUEHNENVERKLEIDUN |
| SECHSKANTSCHRAUBE ISO | 11 64 226 1 | 8 | 2 | 2 932 166 | 92 68 911 08 | VERTEILER MASSE |
| SECHSKANTSCHRAUBE ISO 4 | 40 65 076 08 | 313 | 6 | 2 510 100 | 96 44 750 08 | DREHBUEHNENVERKLEIDUN |
| SECHSKANTSCHRAUBE ISO 4 | 40 65 901 05 | 158 | 2 | 2 520 000 | 91 49 872 08 | KABINE VERGLAST |
| SECHSKANTSCHRAUBE ISO | 11 82 652 7 | 2 | 8 | 1 100 216 | 96 46 363 08 | MONTAGETEILE LWE |
| SECHSKANTSCHRAUBE ISO | 11 82 652 7 | 7 | 2 | 2 440 022 | 96 42 336 08 | WINDE 2 VORM. |
| SECHSKANTSCHRAUBE ISO | 11 82 652 7 | 14 | 4 | 3 100 | 91 59 279 08 | TELESKOPAUSLEGER KPL. |
| SECHSKANTSCHRAUBE ISO | 11 82 652 7 | 80 | 3 | 3 101 | 91 60 312 08 | ANLENKSTUECK VORM. |
| SECHSKANTSCHRAUBE ISO 4 | 49 00 614 | 53 | 4 | 3 501 | 91 05 788 08 | DOPPELKLAPPSPITZE MECH. |
| SECHSKANTSCHRAUBE ISO 4 | 40 01 667 | 305 | 3 | 2 210 | 91 81 614 08 | ANTRIEBSAGGREGAT VORM. |
| SECHSKANTSCHRAUBE ISO 4 | 46 00 386 | 29 | 4 | 2 502 | 91 01 533 08 | STEUERSTAND |
| SECHSKANTSCHRAUBE ISO 4 | 46 00 553 | 33 | 2 | 1 970 | 96 71 367 08 | HYDRAULIK UNTERWAGEN |
| SECHSKANTSCHRAUBE M18X | 91 75 902 | 5 | 10 | X1011577 | 10 11 577 6 | KURBELGEHAEUSE |
| SECHSKANTSCHRAUBE M3X0, | 10 04 040 5 | (8) | 2 | X1011683 | 10 11 683 9 | EINSPRITZPUMPE ANBAU |
| SECHSKANTSTIFTSCHLUESSE | 88 51 661 08 | 29 | 1 | 1 750 001 | 92 85 698 08 | GRUNDWERKZEUG |
| SECHSRUNDSCHRAUBE M16 | 10 11 878 6 | 10 | 6 | 9 080 591 | 90 80 591 | KURBELWELLENANBAUTEILE |
| SECHSRUNDSCHRAUBE M16 | 10 11 891 0 | 4 | 10 | 9 077 238 | 90 77 238 | SCHWUNGRAD ANBAU |
| SEIL 2 2,3KN EDELSTAHL | 11 16 043 1 | 6 | 2 | 1 100 216 | 96 46 363 08 | MONTAGETEILE LWE |
| SEIL 2 2,3KN EDELSTAHL | 11 16 043 1 | 6 | 0.75 | 2 102 022 | 96 32 604 08 | VERRIEGELUNG |
| SEIL 2 2,3KN EDELSTAHL | 11 16 043 1 | 45 | 1.5 | 2 971 | 91 50 610 08 | HYDRAULIK HILFSHUBWERK |
| SEIL 2 2,3KN EDELSTAHL | 11 16 043 1 | 111 | 1 | 3 501 | 91 05 788 08 | DOPPELKLAPPSPITZE MECH. |
| SEIL 2 2,3KN EDELSTAHL | 11 16 043 1 | 10 | 1 | 3 510 006 | 96 20 924 08 | KLAPPKONSOLE |
| SEIL 2 2,3KN EDELSTAHL | 11 16 043 1 | 3 | 0.4 | 3 750 027 | 96 89 527 08 | HAKENSTANGE ANBAU |
| SEIL 6 0,59KN PERLON | 77 34 045 08 | 6 | 1.6 | 1 792 004 | 92 51 415 08 | SCHLAUCHFUEHRUNG VORM. |
| SEIL 6 0,59KN PERLON | 77 34 045 08 | 63 | 1.2 | 3 501 | 91 05 788 08 | DOPPELKLAPPSPITZE MECH. |
| SEIL F.WINDE 1 | 91 62 289 08 | 127 | 1 | | LTR 1100 -0 | LIEBHERR LTR 1100 |
| SEILFESTPUNKT | 11 49 429 7 | 2 | 1 | 4 003 006 | 91 04 457 08 | HAKENFLASCHE |

| Bezeichnung | Artikel | Pos. | Menge | Seite | Baugruppe | Bezeichnung |
|---|---|---|---|---|---|---|
| SEILKLEMME 20-22 GR.7/8" | 77 39 088 08 | 5 | 1 | 2 792 | 91 52 291 08 | MECH.TEILE VERSANDMONT |
| SEILKLEMME DIN 1142 S22 V | 77 39 133 08 | 6 | 1 | 2 792 | 91 52 291 08 | MECH.TEILE VERSANDMONT |
| SEILLAENGENGEBER 10M SP | 69 23 101 08 | 6 | 1 | 3 930 482 | 96 20 157 08 | GEBERANBAU GRUNDAUSLE |
| SEILROLLE 525X56 S355J2G3 | 97 62 491 08 | 1 | 1 | 3 106 001 | 96 42 835 08 | SEILROLLE KPL. |
| SEILROLLE KPL. RD640 SPF | 92 73 117 08 | 8 | 1 | 3 501 | 91 05 788 08 | DOPPELKLAPPSPITZE MECH. |
| SEILROLLE KPL. SPF | 92 73 100 08 | 71 | 1 | 3 106 000 | 91 60 313 08 | TELESKOP 5 VORM. |
| SEILROLLE KPL. SPF | 92 73 100 08 | 1 | 1 | 3 280 | 91 45 571 08 | EINBAU NACKENROLLE |
| SEILROLLE KPL. SPF | 92 73 100 08 | 11 | 2 | 3 501 | 91 05 788 08 | DOPPELKLAPPSPITZE MECH. |
| SEILROLLE KPL. SPF | 96 42 835 08 | 33 | 5 | 3 106 000 | 91 60 313 08 | TELESKOP 5 VORM. |
| SEILROLLE KPL. SPF | 96 42 835 08 | 3 | 1 | 3 511 006 | 96 45 029 08 | MASTNASE VORM. |
| SEILROLLE RD485X63 PA6G | 77 39 522 08 | 1 | 1 | 4 099 001 | 92 40 739 08 | SEILROLLE |
| SEILROLLE RD525X56 PA6G | 28 81 577 08 | 1 | 1 | 3 105 002 | 92 73 100 08 | SEILROLLE KPL. |
| SEILROLLE RD700X56 PA6G | 28 81 584 08 | 1 | 1 | 3 501 008 | 92 73 117 08 | SEILROLLE KPL. |
| SEILROLLE SPF | 92 40 739 08 | 1 | 3 | 4 003 006 | 91 04 457 08 | HAKENFLASCHE |
| SEILSCHUTZ KPL. | 57 19 260 08 | 10 | 1 | 4 003 006 | 91 04 457 08 | HAKENFLASCHE |
| SEILSCHUTZ LI. 4X205X173 S | 97 18 123 08 | 28 | 1 | 2 440 022 | 96 42 336 08 | WINDE 2 VORM. |
| SEILSCHUTZ LI. 4X311X318 S | 97 31 168 08 | 6 | 2 | 2 450 025 | 96 35 649 08 | HAUPTHUBWERK VORM. |
| SEILSCHUTZ RE. 4X205X173 S | 97 18 124 08 | 29 | 1 | 2 440 022 | 96 42 336 08 | WINDE 2 VORM. |
| SEILSCHUTZSTANGE | 57 19 261 08 | 12 | 2 | 4 003 006 | 91 04 457 08 | HAKENFLASCHE |
| SEILTROMMEL | 93 87 596 01 | 1 | 1 | 9 387 070 | 93 87 070 01 | KOMPAKTSEILWINDE |
| SEILTROMMEL | 93 87 596 01 | 1 | 1 | 9 685 586 | 96 85 586 01 | KOMPAKTSEILWINDE |
| SEITENBLECH | 11 62 196 4 | 8 | 2 | 4 003 006 | 91 04 457 08 | HAKENFLASCHE |
| SEITENBLECH SCHWK. | 96 30 446 08 | 1 | 1 | 2 210 008 | 96 48 137 08 | KUEHLER VORM. |
| SEITENBLECH SCHWK. | 96 48 188 08 | 2 | 1 | 2 210 008 | 96 48 137 08 | KUEHLER VORM. |
| SEITENSCHEIBE 4MM ESG-G | 72 57 407 08 | 5 | 1 | 2 520 000 | 91 49 872 08 | KABINE VERGLAST |
| SEITENSCHEIBE 4MM SPF | 72 57 406 08 | 4 | 1 | 2 520 000 | 91 49 872 08 | KABINE VERGLAST |
| SENKBREMSVENTIL | 57 09 606 08 | 36 | 2 | X1047300 | 10 47 300 1 | TELESKOPZYLINDER |
| SENKBREMSVENTIL 420BAR | 51 16 363 14 | 16 | 2 | 2 571 | 91 50 902 08 | HYDRAULISCHE BALLASTIER |
| SENKBREMSVENTIL 420BAR 4 | 10 28 584 5 | 6 | 1 | 2 970 | 91 55 482 08 | HYDRAULIK |
| SENKBREMSVENTIL 420BAR | 10 29 358 6 | 3 | 1 | 2 971 | 91 50 610 08 | HYDRAULIK HILFSHUBWERK |
| SENKBREMSVENTIL SPF | 51 13 199 08 | 7 | 1 | 2 970 | 91 55 482 08 | HYDRAULIK |
| SENKSCHRAUBE AEHNL.DIN 7 | 40 86 041 08 | 3 | 6 | 2 510 072 | 96 44 614 08 | KLAPPE VORM.RECHTS |
| SENKSCHRAUBE AEHNL.DIN 7 | 40 86 041 08 | 3 | 6 | 2 510 201 | 96 42 011 08 | KLAPPE VORM. |
| SENKSCHRAUBE DIN 7991 M | 46 01 465 | 8 | 2 | 2 790 901 | 91 54 183 08 | AUSSTEIFUNG |
| SENKSCHRAUBE DIN 7991 M | 40 86 018 08 | 6 | 3 | 2 500 | 91 48 594 08 | KRANFUEHRERKABINE KPL. |
| SENKSCHRAUBE DIN 7991 M4 | 40 86 058 14 | 6 | 8 | 2 520 021 | 92 17 203 08 | ARMATURENKASTEN LIEFERU |
| SENKSCHRAUBE DIN 7991 M | 10 87 638 8 | 4 | 8 | 2 913 102 | 92 32 870 08 | LUEFTEREINHEIT |
| SENKSCHRAUBE DIN 7991 M | 40 86 040 08 | 25 | 16 | 2 502 | 91 01 533 08 | STEUERSTAND |
| SENKSCHRAUBE DIN 7991 M | 40 86 040 08 | 4 | 1 | 2 780 851 | 96 24 498 08 | FUNKANTENNE VORM. |
| SENKSCHRAUBE DIN 7991 M | 40 86 040 08 | 8 | 1 | 2 780 852 | 96 24 845 08 | GSM-MODUL VORM.LICCON 1 |
| SENKSCHRAUBE DIN 7991 M | 40 86 040 08 | 67 | 6 | 2 932 042 | 96 68 587 08 | GRUNDAUFBAU |
| SENKSCHRAUBE DIN 7991 M6 | 40 86 002 08 | 306 | 6 | 2 510 100 | 96 44 750 08 | DREHBUEHNENVERKLEIDUN |
| SENKSCHRAUBE DIN 7991 M6 | 40 86 002 08 | 41 | 6 | 2 510 200 | 96 41 258 08 | DREHBUEHNENVERKLEIDUN |
| SENKSCHRAUBE DIN 7991 M6 | 40 86 002 08 | 6 | 8 | 2 515 007 | 96 42 014 08 | PODEST VORM. |
| SENKSCHRAUBE DIN 7991 M6 | 40 86 002 08 | 40 | 4 | 2 522 | 91 10 037 08 | TUER KPL. |
| SENKSCHRAUBE DIN 7991 M6 | 40 86 002 08 | 4 | 4 | 3 750 026 | 96 89 407 08 | HALTER LINKS |
| SENKSCHRAUBE DIN 7991 M6 | 40 86 002 08 | 4 | 4 | 3 750 028 | 96 89 408 08 | HALTER RECHTS |
| SENKSCHRAUBE DIN 7991 M6 | 49 02 007 | 53 | 2 | 2 522 | 91 10 037 08 | TUER KPL. |
| SENKSCHRAUBE DIN 7991 M8 | 40 86 003 08 | 55 | 3 | 3 101 | 91 60 312 08 | ANLENKSTUECK VORM. |
| SENKSCHRAUBE DIN 7991 M8 | 40 86 003 08 | 55 | 3 | 3 102 000 | 91 62 543 08 | TELESKOP 1 VORM. |
| SENKSCHRAUBE DIN 7991 M8 | 40 86 003 08 | 55 | 3 | 3 103 000 | 91 62 544 08 | TELESKOP 2 VORM. |
| SENKSCHRAUBE DIN 7991 M8 | 46 00 157 | 134 | 6 | 2 520 000 | 91 49 872 08 | KABINE VERGLAST |
| SENKSCHRAUBE DIN 7991 M8 | 46 00 157 | 34 | 3 | 3 101 | 91 60 312 08 | ANLENKSTUECK VORM. |
| SENKSCHRAUBE DIN 7991 M8 | 46 00 157 | 60 | 9 | 3 102 000 | 91 62 543 08 | TELESKOP 1 VORM. |
| SENKSCHRAUBE DIN 7991 M8 | 46 00 157 | 60 | 9 | 3 103 000 | 91 62 544 08 | TELESKOP 2 VORM. |
| SENKSCHRAUBE DIN 7991 M8 | 46 00 157 | 60 | 9 | 3 104 000 | 91 62 545 08 | TELESKOP 3 VORM. |
| SENKSCHRAUBE DIN 7991 M8 | 46 00 157 | 60 | 9 | 3 105 000 | 91 62 546 08 | TELESKOP 4 VORM. |
| SENKSCHRAUBE ISO 10642 | 10 29 878 9 | 35 | 4 | 2 502 | 91 01 533 08 | STEUERSTAND |
| SENKSCHRAUBE ISO 10642 | 46 35 059 | 38 | 2 | 2 522 | 91 10 037 08 | TUER KPL. |
| SENKSCHRAUBE ISO 14581 | 10 34 219 1 | 4 | 3 | 9 075 133 | 90 75 133 | KURBELWELLENDICHTUNG |

| Bezeichnung | Artikel | Pos. | Menge | Seite | Baugruppe | Bezeichnung |
|---|---|---|---|---|---|---|
| SENKSCHRAUBE ISO 2009 M6 | 40 70 312 08 | 76 | 4 | 2 520 000 | 91 49 872 08 | KABINE VERGLAST |
| SENKSCHRAUBE ISO 2010 M | 40 06 035 08 | 268 | 2 | 2 920 574 | 96 36 055 08 | BEDIENPULT BALLAST |
| SENKSCHRAUBE ISO 2010 M | 40 06 035 08 | 251 | 2 | 2 920 904 | 96 41 093 08 | STEUERPULT ABSTUETZUNG |
| SENKSCHRAUBE ISO 7047 M4 | 46 35 268 | 101 | 2 | 3 501 | 91 05 788 08 | DOPPELKLAPPSPITZE MECH. |
| SENKSCHRAUBE ISO 7047 M5 | 40 02 312 | 6 | 12 | 2 340 004 | 96 43 780 08 | OELBEHAELTER VORM. |
| SENKSCHRAUBE ISO 7047 M6 | 46 35 125 | 30 | 4 | 2 510 018 | 96 44 046 08 | KUEHLERHAUBE KPL. |
| SENSOR KPL. | 96 65 122 08 | 102 | 1 | 2 681 | 91 28 102 08 | LUFTFILTERANLAGE |
| SERVICE LTR 1100 | SK_Z48005 | 2000 | 1 | | LTR 1100 -0 | LIEBHERR LTR 1100 |
| SERVICEPAKET 1000STD OW | 96 73 763 08 | 410 | 1 | XSK_Z480 | SK_Z48005 | SERVICE |
| SICHERHEITSKLAPPSTECKER | 43 32 013 08 | 81 | 1 | 3 106 000 | 91 60 313 08 | TELESKOP 5 VORM. |
| SICHERHEITSKLAPPSTECKER | 43 32 013 08 | 38 | 4 | 3 501 | 91 05 788 08 | DOPPELKLAPPSPITZE MECH. |
| SICHERHEITSKLAPPSTECKER | 11 10 158 6 | 10 | 4 | 2 560 | 91 50 900 08 | GEGENGEWICHT M.BEFESTIG |
| SICHERHEITSKLAPPSTECKER | 57 15 306 08 | 2 | 1 | 7 739 413 | 77 39 413 08 | TASCHENSCHLOSS |
| SICHERHEITSWARNBLINKLEU | 60 71 062 08 | 2 | 2 | 1 750 002 | 92 86 201 08 | ZUBEHOER |
| SICHERUNGSBLECH 30X70X30 | 97 80 687 08 | 44 | 8 | 1 100 205 | 96 51 633 08 | RAUPENTRAEGER KPL.RE. |
| SICHERUNGSBLECH 30X70X30 | 97 80 687 08 | 44 | 8 | 1 100 210 | 96 51 634 08 | RAUPENTRAEGER KPL.LI. |
| SICHERUNGSCLIP 35-40 | 92 98 180 08 | 29 | 8 | 3 501 | 91 05 788 08 | DOPPELKLAPPSPITZE MECH. |
| SICHERUNGSCLIP 45-50 | 92 98 193 08 | 28 | 8 | 3 501 | 91 05 788 08 | DOPPELKLAPPSPITZE MECH. |
| SICHERUNGSCLIP FUER GRI | 10 67 884 8 | 4 | 2 | 6 060 950 | 60 60 950 08 | MEISTERSCHALTER |
| SICHERUNGSDOSE 6-POL, L | 60 45 016 08 | 8 | 1 | 2 920 083 | 96 31 039 08 | ELEKTRIK BATTERIEKASTEN |
| SICHERUNGSDOSE 6-POL, L | 60 45 016 08 | 10 | 8 | 2 932 095 | 96 46 064 08 | SCHWENKRAHMEN SICHERUN |
| SICHERUNGSFALLE | 57 17 020 08 | 4 | 1 | 4 027 | 91 42 310 08 | LASTHAKEN |
| SICHERUNGSFALLE | 57 17 143 08 | 34 | 2 | 4 003 006 | 91 04 457 08 | HAKENFLASCHE |
| SICHERUNGSFEDER 3 VERZ | 43 31 028 08 | 140 | 1 | 2 510 100 | 96 44 750 08 | DREHBUEHNENVERKLEIDUN |
| SICHERUNGSFEDER 3 VERZ | 43 31 028 08 | 57 | 1 | 3 106 000 | 91 60 313 08 | TELESKOP 5 VORM. |
| SICHERUNGSFEDER 4,5X98 V | 43 31 009 08 | 7 | 1 | 3 510 001 | 92 52 800 08 | KONSOLE VORM. |
| SICHERUNGSFEDER 4,5X98 V | 43 31 009 08 | 4 | 2 | 3 511 | 91 54 159 08 | MASTNASE |
| SICHERUNGSFEDER 4X68 V | 43 31 012 08 | 39 | 4 | 1 100 205 | 96 51 633 08 | RAUPENTRAEGER KPL.RE. |
| SICHERUNGSFEDER 4X68 V | 43 31 012 08 | 39 | 4 | 1 100 210 | 96 51 634 08 | RAUPENTRAEGER KPL.LI. |
| SICHERUNGSFEDER 4X68 V | 43 31 012 08 | 7 | 2 | 1 630 002 | 99 06 183 14 | TRANSPORTABSTUETZUNG |
| SICHERUNGSFEDER 4X68 V | 43 31 012 08 | 4 | 1 | 2 102 022 | 96 32 604 08 | VERRIEGELUNG |
| SICHERUNGSFEDER 4X68 V | 43 31 012 08 | 46 | 2 | 2 440 022 | 96 42 336 08 | WINDE 2 VORM. |
| SICHERUNGSFEDER 4X68 V | 43 31 012 08 | 38 | 2 | 3 106 000 | 91 60 313 08 | TELESKOP 5 VORM. |
| SICHERUNGSFEDER 4X68 V | 43 31 012 08 | 110 | 2 | 3 501 | 91 05 788 08 | DOPPELKLAPPSPITZE MECH. |
| SICHERUNGSFEDER 4X68 V | 43 31 012 08 | 7 | 1 | 3 510 006 | 96 20 924 08 | KLAPPKONSOLE |
| SICHERUNGSFEDER 4X68 V | 43 31 012 08 | 36 | 1 | 3 510 100 | 91 49 246 08 | TRANSPORTHALTERUNG DKS |
| SICHERUNGSFEDER 4X68 V | 43 31 012 08 | 12 | 1 | 3 511 006 | 96 45 029 08 | MASTNASE VORM. |
| SICHERUNGSFEDER 4X68 V | 43 31 012 08 | 20 | 1 | 3 511 006 | 96 45 029 08 | MASTNASE VORM. |
| SICHERUNGSFEDER 5X122 A3 | 43 31 025 08 | 67 | 1 | 3 106 000 | 91 60 313 08 | TELESKOP 5 VORM. |
| SICHERUNGSFEDER 5X122 A3 | 43 31 025 08 | 10 | 1 | 3 511 006 | 96 45 029 08 | MASTNASE VORM. |
| SICHERUNGSFEDER DIN 2194 | 43 31 050 08 | 35 | 3 | 3 501 | 91 05 788 08 | DOPPELKLAPPSPITZE MECH. |
| SICHERUNGSKNOPF | 10 42 460 1 | (1) | 1 | 7 739 413 | 77 39 413 08 | TASCHENSCHLOSS |
| SICHERUNGSKNOPF | 10 47 066 7 | (2) | 1 | 7 739 413 | 77 39 413 08 | TASCHENSCHLOSS |
| SICHERUNGSRING DIN 471 1 | 10 87 565 2 | 32 | 2 | 3 106 000 | 91 60 313 08 | TELESKOP 5 VORM. |
| SICHERUNGSRING DIN 471 15 | 42 80 083 08 | 3 | 2 | 3 105 002 | 92 73 100 08 | SEILROLLE KPL. |
| SICHERUNGSRING DIN 471 15 | 42 80 083 08 | 3 | 2 | 3 106 001 | 96 42 835 08 | SEILROLLE KPL. |
| SICHERUNGSRING DIN 471 1 | 10 87 453 7 | 3 | 2 | 3 501 008 | 92 73 117 08 | SEILROLLE KPL. |
| SICHERUNGSRING DIN 471 18 | 42 80 094 08 | 3 | 2 | 4 099 001 | 92 40 739 08 | SEILROLLE |
| SICHERUNGSRING DIN 471 22 | 46 30 000 03 | 41 | 6 | 9 330 748 | 93 30 748 01 | DREHWERKANTRIEB |
| SICHERUNGSRING DIN 471 2 | 42 80 024 08 | 6 | 1 | 9 074 505 | 90 74 505 | KIPPHEBELBOCK VORM. |
| SICHERUNGSRING DIN 471 2 | 46 30 001 03 | 21 | 5 | 9 330 748 | 93 30 748 01 | DREHWERKANTRIEB |
| SICHERUNGSRING DIN 471 3 | 42 80 029 08 | 92 | 1 | 9 330 748 | 93 30 748 01 | DREHWERKANTRIEB |
| SICHERUNGSRING DIN 471 4 | 10 87 565 7 | 72 | 1 | 9 330 748 | 93 30 748 01 | DREHWERKANTRIEB |
| SICHERUNGSRING DIN 471 4 | 42 80 033 08 | 33 | 3 | 9 387 598 | 93 87 598 01 | PLANETENGETRIEBE |
| SICHERUNGSRING DIN 471 4 | 42 80 033 08 | 33 | 3 | 9 686 071 | 96 86 071 01 | PLANETENGETRIEBE |
| SICHERUNGSRING DIN 471 45 | 42 80 032 03 | 38 | 3 | 9 444 410 | 94 44 410 03 | FAHRANTRIEB |
| SICHERUNGSRING DIN 471 4 | 42 80 040 08 | 44 | 2 | 9 387 598 | 93 87 598 01 | PLANETENGETRIEBE |
| SICHERUNGSRING DIN 471 4 | 42 80 040 08 | 44 | 2 | 9 686 071 | 96 86 071 01 | PLANETENGETRIEBE |
| SICHERUNGSRING DIN 471 5 | 53 01 333 08 | 8 | 5 | 9 387 598 | 93 87 598 01 | PLANETENGETRIEBE |
| SICHERUNGSRING DIN 471 5 | 53 01 333 08 | 8 | 5 | 9 686 071 | 96 86 071 01 | PLANETENGETRIEBE |

| Bezeichnung | Artikel | Pos. | Menge | Seite | Baugruppe | Bezeichnung |
|---|---|---|---|---|---|---|
| SICHERUNGSRING DIN 471 60 | 10 87 566 1 | 28 | 3 | 9 444 410 | 94 44 410 03 | FAHRANTRIEB |
| SICHERUNGSRING DIN 471 8 | 46 30 003 03 | 18 | 5 | 9 444 410 | 94 44 410 03 | FAHRANTRIEB |
| SICHERUNGSRING DIN 472 12 | 42 81 038 08 | 12 | 1 | 5 102 407 | 51 02 407 08 | HYDROMOTOR |
| SICHERUNGSRING DIN 472 17 | 42 81 059 08 | 21 | 1 | 9 387 596 | 93 87 596 01 | SEILTROMMEL |
| SICHERUNGSRING DIN 472 2 | 42 81 100 01 | 29 | 1 | 9 387 598 | 93 87 598 01 | PLANETENGETRIEBE |
| SICHERUNGSRING DIN 472 3 | 42 81 007 08 | 5 | 1 | X1042993 | 10 42 993 3 | ZAHNRADMOTOR |
| SICHERUNGSRING DIN 472 41 | 42 81 102 01 | 66 | 1 | 9 444 410 | 94 44 410 03 | FAHRANTRIEB |
| SICHERUNGSRING DIN 472 6 | 42 81 021 08 | 67 | 1 | 9 330 748 | 93 30 748 01 | DREHWERKANTRIEB |
| SICHERUNGSRING DIN 472 8 | 42 81 025 08 | 12 | 1 | 5 701 090 | 57 01 090 08 | TRIEBWERK |
| SICHERUNGSRING DIN 472 8 | 42 81 027 08 | 4 | 1 | 9 387 598 | 93 87 598 01 | PLANETENGETRIEBE |
| SICHERUNGSRING DIN 472 8 | 42 81 027 08 | 4 | 1 | 9 686 071 | 96 86 071 01 | PLANETENGETRIEBE |
| SICHERUNGSRING DIN 472 9 | 10 17 163 2 | 9 | 1 | 5 923 269 | 59 23 269 14 | VERSTELLMOTOR |
| SICHERUNGSSCHEIBE DIN 6 | 50 26 448 08 | 22 | 2 | 2 501 000 | 91 48 769 08 | KRANFUEHRERKABINE VORM |
| SICHERUNGSSCHEIBE VS 10 | 42 39 015 08 | 26 | 1 | 9 387 596 | 93 87 596 01 | SEILTROMMEL |
| SICHERUNGSSCHEIBE VS 10 | 42 29 913 | 12 | 12 | X1015211 | 10 15 211 6 | ANTRIEBSGRUPPE |
| SICHERUNGSSCHEIBE VS 12 | 42 39 017 08 | 53 | 8 | 9 686 071 | 96 86 071 01 | PLANETENGETRIEBE |
| SICHERUNGSSCHEIBE VS 16 | 42 39 020 01 | 53 | 12 | 9 444 410 | 94 44 410 03 | FAHRANTRIEB |
| SICHERUNGSSCHEIBE VS 8 S | 42 39 014 08 | 27 | 16 | 9 330 748 | 93 30 748 01 | DREHWERKANTRIEB |
| SICHERUNGSSCHRAUBE M1 | 10 15 353 8 | 2 | 2 | 9 079 870 | 90 79 870 | STEUERUNGSTEILE |
| SICHERUNGSSCHRAUBE M1 | 10 15 353 8 | 4 | 1 | X1011683 | 10 11 683 9 | EINSPRITZPUMPE ANBAU |
| SICHTFENSTER | 11 11 006 0 | 39 | 1 | X1032706 | 10 32 706 5 | ELEKTROPUMPE |
| SIEBFILTER | 10 34 659 9 | (1) | 1 | 2 970 | 91 55 482 08 | HYDRAULIK |
| SIEBFILTER | 10 34 659 9 | 1 | 1 | X1029358 | 10 29 358 6 | SENKBREMSVENTIL |
| SIGNALWECKER 24V | 61 40 047 08 | (5) | 1 | 2 920 | 91 55 477 08 | EL.ANLAGE DREHBUEHNE |
| SIKA-SIL N-PLUS SCHWARZ | 87 00 034 08 | 160 | 1 | 2 520 000 | 91 49 872 08 | KABINE VERGLAST |
| SILIKONKAUTSCHUK Palette 2 | 87 00 030 08 | 84 | 2.5 | 2 520 000 | 91 49 872 08 | KABINE VERGLAST |
| SIM-KARTE | 10 28 444 4 | 20 | 1 | 2 780 850 | 91 60 938 08 | FERNDIAGNOSE MODUL OW |
| SITZKONTAKTSCHALTER | 57 10 357 08 | 14 | 1 | 7 741 079 | 77 41 079 08 | FAHRERSITZ |
| SITZRAHMEN | 57 14 948 08 | 15 | 1 | 7 741 079 | 77 41 079 08 | FAHRERSITZ |
| SITZTEIL | 57 18 354 08 | 12 | 1 | 7 741 079 | 77 41 079 08 | FAHRERSITZ |
| SL-SICHERUNG 8X0,94 | 70 42 712 08 | 66 | 1 | 2 520 000 | 91 49 872 08 | KABINE VERGLAST |
| SONNENRAD M=2 Z=24 | 93 92 516 01 | 45 | 1 | 9 330 748 | 93 30 748 01 | DREHWERKANTRIEB |
| SONNENRAD M=2 Z=24 | 93 92 517 01 | 60 | 1 | 9 330 748 | 93 30 748 01 | DREHWERKANTRIEB |
| SONNENRAD M=2,25 Z=24 | 93 92 514 01 | 30 | 1 | 9 330 748 | 93 30 748 01 | DREHWERKANTRIEB |
| SONNENRAD M=2,25 Z=42 | 93 87 604 01 | 45 | 1 | 9 686 071 | 96 86 071 01 | PLANETENGETRIEBE |
| SONNENRAD M=4 Z=21 | 92 76 019 01 | 25 | 1 | 9 686 071 | 96 86 071 01 | PLANETENGETRIEBE |
| SONNENRAD M=4 Z=28 | 92 76 029 01 | 35 | 1 | 9 686 071 | 96 86 071 01 | PLANETENGETRIEBE |
| SONNENRAD M=5 Z=19 | 90 20 199 1 | 30 | 1 | 9 444 410 | 94 44 410 03 | FAHRANTRIEB |
| SONNENRAD M=5 Z=24 | 94 44 416 03 | 20 | 1 | 9 444 410 | 94 44 410 03 | FAHRANTRIEB |
| SPANNBAND 206/206/30 ST | 77 42 113 08 | 7 | 1 | 2 950 | 91 49 515 08 | DRUCKLUFTANLAGE OW |
| SPANNBAND 240-280/260/30 S | 77 42 105 08 | 10 | 2 | 2 950 | 91 49 515 08 | DRUCKLUFTANLAGE OW |
| SPANNBAND 260,4//19 | 55 20 752 08 | 111 | 1 | 2 680 | 91 53 225 08 | ABGASANLAGE KPL. |
| SPANNBUEGELVERSCHLUSS | 70 42 317 08 | 7 | 1 | 2 260 006 | 96 31 147 08 | BATTERIEKASTEN VORM. |
| SPANNER HYDR KPL | 74 90 654 14 | 3 | 1 | 1 100 212 | 79 02 561 14 | LEITRADEINHEIT KPL |
| SPANNSCHEIBE DIN 6796 12 F | 42 53 012 08 | 74 | 1 | 3 501 | 91 05 788 08 | DOPPELKLAPPSPITZE MECH. |
| SPANNSCHELLE 75/25 | 77 42 097 08 | 5 | 1 | 2 831 | 91 47 871 08 | KLIMAANLAGE OW |
| SPANNSTIFT ISO 13337 13X16 | 10 00 444 2 | 7 | 1 | 9 074 505 | 90 74 505 | KIPPHEBELBOCK VORM. |
| SPANNSTIFT ISO 8752 10X80 4 | 10 87 587 4 | 39 | 1 | 3 501 | 91 05 788 08 | DOPPELKLAPPSPITZE MECH. |
| SPANNSTIFT ISO 8752 12X30 | 53 01 463 08 | 20 | 1 | 2 500 | 91 48 594 08 | KRANFUEHRERKABINE KPL. |
| SPANNSTIFT ISO 8752 12X85 | 43 20 119 08 | 39 | 1 | 3 510 100 | 91 49 246 08 | TRANSPORTHALTERUNG DKS |
| SPANNSTIFT ISO 8752 18X36 | 43 20 129 08 | 5 | 4 | 2 102 | 91 51 080 08 | MONTAGETEILE DREHBUEHN |
| SPANNSTIFT ISO 8752 18X36 | 43 20 129 08 | 7 | 4 | 2 350 | 91 81 361 08 | WIPPZYLINDER M.LAGERUNG |
| SPANNSTIFT ISO 8752 21X140 | 43 20 131 08 | 5 | 2 | 1 100 214 | 74 90 137 14 | LEITRAD KPL |
| SPANNSTIFT ISO 8752 4X28 4 | 10 87 587 8 | 43 | 1 | 3 501 | 91 05 788 08 | DOPPELKLAPPSPITZE MECH. |
| SPANNSTIFT ISO 8752 5X28 | 43 20 043 08 | 6 | 1 | 2 790 024 | 96 67 077 08 | SPIEGELHALTER VORM. |
| SPANNSTIFT ISO 8752 5X36 | 54 07 092 08 | 7 | 1 | 2 790 024 | 96 67 077 08 | SPIEGELHALTER VORM. |
| SPANNSTIFT ISO 8752 6X40 | 43 20 065 08 | 5 | 2 | 2 920 551 | 96 53 715 08 | ENDSCHALTER ANBAU |
| SPANNSTIFT ISO 8752 8X40 | 43 20 085 08 | 5 | 1 | 9 078 832 | 90 78 832 | KURBELWELLE MIT ZAHNRAD |
| SPANNSTIFT ISO 8752 A 8X16 | 43 20 079 08 | 72 | 1 | 9 387 598 | 93 87 598 01 | PLANETENGETRIEBE |
| SPANNSTIFT ISO 8752 A 8X16 | 43 20 079 08 | 72 | 1 | 9 686 071 | 96 86 071 01 | PLANETENGETRIEBE |

| Bezeichnung | Artikel | Pos. | Menge | Seite | Baugruppe | Bezeichnung |
|---|---|---|---|---|---|---|
| SPANNUNGSWANDLER 24V 12 | 10 35 540 9 | 35 | 1 | 2 932 042 | 96 68 587 08 | GRUNDAUFBAU |
| SPANNVORRICHTUNG VORM. | 98 87 461 | 2 | 1 | 9 079 560 | 90 79 560 | GENERATOR ANBAU |
| SPANNVORRICHTUNG VORM. | 98 87 461 | 3 | 1 | 9 080 525 | 90 80 525 | KLIMAKOMPRESSOR ANBAU |
| SPIEGELANBAU DREHBUEHN | 91 68 708 08 | 144 | 1 | | LTR 1100 -0 | LIEBHERR LTR 1100 |
| SPIEGELANBAU KRANFUEHRE | 91 60 499 08 | 132 | 1 | | LTR 1100 -0 | LIEBHERR LTR 1100 |
| SPIEGELGLAS 315X178 | 10 67 511 6 | (1) | 1 | 2 790 | 91 68 708 08 | SPIEGELANBAU DREHBUEHN |
| SPIEGELHALTER 28X2 ST.37.4 | 97 93 206 08 | 1 | 1 | 2 790 040 | 91 60 499 08 | SPIEGELANBAU KRANFUEHR |
| SPIEGELHALTER VORM. | 96 67 077 08 | 2 | 1 | 2 790 | 91 68 708 08 | SPIEGELANBAU DREHBUEHN |
| SPIRALBLATTFEDER | 10 41 177 8 | 14 | 3 | X1034357 | 10 34 357 4 | LEITUNGSTROMMEL |
| SPIRALSCHLAUCH NW60 KUN | 55 30 107 08 | 31 | 1 | 2 502 | 91 01 533 08 | STEUERSTAND |
| SPLINT ISO 1234 10X80 ST A3 | 43 30 103 08 | 24 | 8 | 2 571 | 91 50 902 08 | HYDRAULISCHE BALLASTIER |
| SPLINT ISO 1234 10X80 ST A3 | 43 30 103 08 | 31 | 8 | 3 501 | 91 05 788 08 | DOPPELKLAPPSPITZE MECH. |
| SPLINT ISO 1234 13X100 ST A2 | 43 30 109 08 | 20 | 4 | 2 571 | 91 50 902 08 | HYDRAULISCHE BALLASTIER |
| SPLINT ISO 1234 13X125 ST A3 | 43 30 112 08 | 13 | 4 | 1 100 216 | 96 46 363 08 | MONTAGETEILE LWE |
| SPLINT ISO 1234 2X12 ST A3C | 43 30 018 08 | 17 | 1 | 2 515 007 | 96 42 014 08 | PODEST VORM. |
| SPLINT ISO 1234 3,2X20 ST A2 | 43 30 034 08 | 32 | 4 | 3 501 | 91 05 788 08 | DOPPELKLAPPSPITZE MECH. |
| SPLINT ISO 1234 3,2X32 ST A2 | 43 30 038 08 | 58 | 1 | 3 106 000 | 91 60 313 08 | TELESKOP 5 VORM. |
| SPLINT ISO 1234 4X40 ST A3C | 43 30 055 08 | 39 | 2 | 3 106 000 | 91 60 313 08 | TELESKOP 5 VORM. |
| SPLINT ISO 1234 4X40 ST A3C | 43 30 055 08 | 11 | 1 | 3 511 006 | 96 45 029 08 | MASTNASE VORM. |
| SPLINT ISO 1234 5X32 | 43 30 063 14 | 4 | 2 | 1 300 010 | 99 14 563 14 | AUFSTIEG KPL. |
| SPLINT ISO 1234 5X32 | 43 30 063 14 | 11 | 8 | 1 740 010 | 96 50 675 08 | MONTAGETEILE |
| SPLINT ISO 1234 5X40 ST A3C | 43 30 065 08 | 5 | 3 | 3 500 104 | 92 95 821 08 | HALTERUNG VORM. |
| SPLINT ISO 1234 5X40 ST A3C | 43 30 065 08 | 33 | 9 | 3 501 | 91 05 788 08 | DOPPELKLAPPSPITZE MECH. |
| SPLINT ISO 1234 5X40 ST A3C | 43 30 065 08 | 5 | 1 | 3 510 001 | 92 52 800 08 | KONSOLE VORM. |
| SPLINT ISO 1234 5X45 ST A2K | 43 30 066 08 | 8 | 3 | 1 630 002 | 99 06 183 14 | TRANSPORTABSTUETZUNG |
| SPLINT ISO 1234 6,3X50 St 480 | 10 18 036 4 | 21 | 2 | 2 500 | 91 48 594 08 | KRANFUEHRERKABINE KPL. |
| SPLINT ISO 1234 6,3X50 St 480 | 10 18 036 4 | 5 | 1 | 3 510 006 | 96 20 924 08 | KLAPPKONSOLE |
| SPLINT ISO 1234 8X63 ST A2K | 43 30 090 08 | 36 | 2 | 3 501 | 91 05 788 08 | DOPPELKLAPPSPITZE MECH. |
| SPLINT ISO 1234 8X63 ST A2K | 43 30 090 08 | 2 | 1 | 3 511 | 91 54 159 08 | MASTNASE |
| SPLINT ISO 1234 8X63 ST A2K | 43 30 090 08 | 9 | 1 | 3 511 006 | 96 45 029 08 | MASTNASE VORM. |
| SPRENGRING 420X4.5 | 76 10 186 03 | 61 | 1 | 9 444 410 | 94 44 410 03 | FAHRANTRIEB |
| SPRENGRING 52X2 FSt | 49 80 482 | 8 | 1 | X1046728 | 10 46 728 5 | KOLBEN KPL. |
| SPRENGRING DIN 7993 B 40 | 42 85 217 08 | 11 | 2 | 5 123 931 | 51 23 931 08 | PNEUMATIKZYLINDER |
| SPRITZDUESE | 59 10 547 08 | 2 | 1 | 2 520 101 | 96 49 682 08 | SPRITZDUESE |
| SPRITZDUESE | 96 49 682 08 | 82 | 1 | 2 520 000 | 91 49 872 08 | KABINE VERGLAST |
| SPRITZE | 10 04 511 8 | (999) | 1 | 6 923 101 | 69 23 101 08 | SEILLAENGENGEBER |
| SPURVERSTELLZYLINDER 14 | 11 06 838 7 | 4 | 2 | 1 100 301 | 96 72 945 08 | HYDR.INSTALLATIONSTEILE |
| STAHLKUGEL DIN 5401 15 | 74 70 038 01 | 28 | 1 | 9 387 598 | 93 87 598 01 | PLANETENGETRIEBE |
| STANGENDICHTUNG 140 | 71 09 515 01 | (2) | 1 | 9 444 410 | 94 44 410 03 | FAHRANTRIEB |
| STANGENDICHTUNG 186 | 71 09 500 01 | (1) | 1 | 9 444 410 | 94 44 410 03 | FAHRANTRIEB |
| STARTER 7.8KW 24V | 10 21 997 8 | 1 | 1 | X1011553 | 10 11 553 9 | STARTER ANBAU |
| STARTER ANBAU 7.8KW 24V | 10 11 553 9 | 450 | 1 | X1015207 | 10 15 207 7 | DIESELMOTOR |
| STARTER VORM. 7.8KW 24V | 11 38 664 4 | 1 | 1 | X1011553 | 10 11 553 9 | STARTER ANBAU |
| STAUBKAPPE | 51 86 206 08 | 70 | 1 | X1047300 | 10 47 300 1 | TELESKOPZYLINDER |
| STAUBKAPPE | 51 86 206 08 | 23 | 2 | X1087223 | 10 87 223 8 | WIPPZYLINDER |
| STAUBMUFFE | 74 05 494 | (1) | 1 | 1 970 | 96 71 367 08 | HYDRAULIK UNTERWAGEN |
| STAUBSCHUTZ | 10 04 006 4 | 12 | 1 | X1011676 | 10 11 676 8 | KLIMAKOMPRESSOR |
| STAUBSCHUTZKAPPE | 10 87 221 6 | 2 | 1 | 6 060 709 | 60 60 709 08 | BATTERIEHAUPTSCHALTER |
| STAUBSTECKER | 74 05 495 | (1) | 1 | 1 970 | 96 71 367 08 | HYDRAULIK UNTERWAGEN |
| STAUBSTECKER DN25 | 73 63 030 | (4) | 1 | 1 970 | 96 71 367 08 | HYDRAULIK UNTERWAGEN |
| STAUBSTECKER DN6 | 73 64 491 | (4) | 1 | 1 970 | 96 71 367 08 | HYDRAULIK UNTERWAGEN |
| STECKANSCHLUSS GSV6 M10 | 77 43 874 08 | 8 | 1 | 2 711 | 91 53 002 08 | ZENTRALSCHMIERANLAGE O |
| STECKANSCHLUSS GSV6 M8 | 77 43 866 08 | 4 | 1 | 2 440 012 | 92 14 441 08 | ZENTRALSCHMIERANLAGE |
| STECKANSCHLUSS GSV6 M8 | 77 43 866 08 | 9 | 1 | 2 711 | 91 53 002 08 | ZENTRALSCHMIERANLAGE O |
| STECKANSCHLUSS WSV 6 M1 | 77 43 867 08 | 7 | 7 | 2 711 | 91 53 002 08 | ZENTRALSCHMIERANLAGE O |
| STECKER 18-POL 15A SPF | 60 23 250 08 | 16 | 11 | 2 932 119 | 96 46 061 08 | SCHWENKRAHMEN RELAISST |
| STECKER 6-POL | 60 45 086 08 | 8 | 1 | 6 923 101 | 69 23 101 08 | SEILLAENGENGEBER |
| STECKER 8-POL | 10 04 699 9 | (161) | 8 | 2 932 042 | 96 68 587 08 | GRUNDAUFBAU |
| STECKER 8-POL | 10 04 700 0 | (162) | 8 | 2 932 042 | 96 68 587 08 | GRUNDAUFBAU |
| STECKER 8-POL | 10 04 700 1 | (163) | 8 | 2 932 042 | 96 68 587 08 | GRUNDAUFBAU |

| Bezeichnung | Artikel | Pos. | Menge | Seite | Baugruppe | Bezeichnung |
|---|---|---|---|---|---|---|
| STECKERBLECH 1.5X585X202 | 95 35 264 08 | 2 | 1 | 2 932 042 | 96 68 587 08 | GRUNDAUFBAU |
| STECKERGEHAEUSE 14-POL | 60 23 360 08 | (154) | 5 | 2 932 042 | 96 68 587 08 | GRUNDAUFBAU |
| STECKERGEHAEUSE 14-POL | 60 23 365 08 | 3 | 6 | 2 932 166 | 92 68 911 08 | VERTEILER MASSE |
| STECKERGEHAEUSE 18-POL | 60 23 002 08 | (152) | 23 | 2 932 042 | 96 68 587 08 | GRUNDAUFBAU |
| STECKERLEISTE 64-POL SPF | 60 23 212 08 | 5 | 7 | 2 922 001 | 92 84 311 08 | BUSPLATINE |
| STECKHUELSENGEHAEUSE 2- | 60 22 097 08 | (158) | 3 | 2 932 042 | 96 68 587 08 | GRUNDAUFBAU |
| STECKSCHLUESSELEINSATZ | 73 61 649 | 10 | 1 | 1 750 | 91 48 606 08 | WERKZEUG M.ZUBEHOER |
| STECKSCHLUESSELEINSATZ | 79 00 285 08 | 66 | 1 | 1 750 001 | 92 85 698 08 | GRUNDWERKZEUG |
| STEHLEITER 2X7-350X2,132M | 10 87 020 9 | 1 | 1 | 3 750 008 | 91 75 085 08 | LEITER ANBAU |
| STEIGROHR 27X111X113,5 | 92 75 213 01 | 5 | 1 | 9 275 212 | 92 75 212 01 | OELMESSSTABEINRICHTUNG |
| STELLSCHRAUBE | 10 42 381 7 | 78 | 1 | X1029147 | 10 29 147 4 | STEUERBLOCK |
| STELLSCHRAUBE | 10 42 381 7 | 78 | 1 | X1047529 | 10 47 529 1 | VENTILBLOCK |
| STELLSCHRAUBE | 10 42 381 7 | 78 | 1 | X1047529 | 10 47 529 2 | VENTILBLOCK |
| STELLSCHRAUBE | 57 15 297 08 | 77 | 2 | X1029147 | 10 29 147 4 | STEUERBLOCK |
| STELLSCHRAUBE | 57 15 297 08 | 71 | 2 | X1047529 | 10 47 529 1 | VENTILBLOCK |
| STELLSCHRAUBE | 57 15 297 08 | 71 | 2 | X1047529 | 10 47 529 2 | VENTILBLOCK |
| STELLSCHRAUBE M10 | 40 97 105 08 | 30 | 2 | 2 502 | 91 01 533 08 | STEUERSTAND |
| STELLWAEHLER | 60 61 666 08 | 18 | 1 | 2 531 002 | 96 36 739 08 | ELEKTRIK ARMLEHNE RE. |
| STEUERBLOCK | 51 13 066 08 | 25 | 1 | 2 970 | 91 55 482 08 | HYDRAULIK |
| STEUERBLOCK 120BAR NG12 | 10 33 367 2 | 16 | 1 | 2 970 | 91 55 482 08 | HYDRAULIK |
| STEUERBLOCK SPF | 10 28 524 3 | 3 | 1 | 2 970 | 91 55 482 08 | HYDRAULIK |
| STEUERBLOCK SPF | 10 29 147 4 | 2 | 1 | 2 971 | 91 50 610 08 | HYDRAULIK HILFSHUBWERK |
| STEUERGERAET 6POL 24V SP | 60 61 962 08 | 3 | 2 | 2 533 001 | 96 41 568 08 | ARMATURENBRETT DACH VO |
| STEUERGERAET ANBAU | 10 11 599 3 | 571 | 1 | X1015207 | 10 15 207 7 | DIESELMOTOR |
| STEUERLEISTE | 51 13 078 08 | 5 | 1 | 2 970 | 91 55 482 08 | HYDRAULIK |
| STEUERLEISTE 60BAR | 51 14 869 08 | 14 | 1 | 2 970 | 91 55 482 08 | HYDRAULIK |
| STEUERPLATTE | 57 01 104 08 | 2 | 1 | 5 701 095 | 57 01 095 08 | TRIEBWERK |
| STEUERPULT ABSTUETZUNG | 96 41 093 08 | 22 | 1 | 2 920 | 91 55 477 08 | EL.ANLAGE DREHBUEHNE |
| STEUERSTAND | 91 01 533 08 | 131 | 1 | | LTR 1100 -0 | LIEBHERR LTR 1100 |
| STEUERUNGSTEILE | 90 79 870 | 110 | 4 | X1012193 | 10 12 193 2 | GRUNDMOTOR |
| STICKSTOFFSPANNER KPL | 79 03 360 14 | 2 | 1 | 1 100 212 | 79 02 561 14 | LEITRADEINHEIT KPL |
| STIFT | 70 42 291 08 | 21 | 2 | 2 501 000 | 91 48 769 08 | KRANFUEHRERKABINE VORM |
| STIFT | 94 42 284 03 | 56 | 1 | 9 444 410 | 94 44 410 03 | FAHRANTRIEB |
| STIFTEINSATZ KPL. | 92 87 019 08 | 15 | 1 | 6 923 101 | 69 23 101 08 | SEILLAENGENGEBER |
| STIFTSCHRAUBE DIN 835 M10 | 49 01 450 | 3 | 3 | X1011553 | 10 11 553 9 | STARTER ANBAU |
| STIFTSCHRAUBE DIN 835 M1 | 11 11 820 8 | 11 | 12 | X1015211 | 10 15 211 6 | ANTRIEBSGRUPPE |
| STIFTSCHRAUBE DIN 835 M10 | 10 33 299 6 | 11 | 2 | X1011997 | 10 11 997 6 | NEBENABTRIEB ANBAU |
| STIFTSCHRAUBE DIN 939 M8X | 10 33 095 4 | 9 | 2 | X1011832 | 10 11 832 6 | ATL-ANBAU |
| STOERANZEIGE | 10 42 995 2 | 9 | 1 | X1032706 | 10 32 706 5 | ELEKTROPUMPE |
| STOESSELSTANGE | 90 79 131 | 3 | 2 | 9 079 870 | 90 79 870 | STEUERUNGSTEILE |
| STOPFEN | 10 87 318 0 | 62 | 5 | X1041191 | 10 41 191 3 | PLATTE |
| STOPFEN VSTI 1 1/4" | 11 00 269 6 | 67 | 1 | X1047529 | 10 47 529 1 | VENTILBLOCK |
| STOPFEN VSTI 1 1/4" | 11 00 269 6 | 67 | 1 | X1047529 | 10 47 529 2 | VENTILBLOCK |
| STOPFEN VSTI M12X1,5 A3P | 47 77 043 08 | 607 | 1 | 2 950 | 91 49 515 08 | DRUCKLUFTANLAGE OW |
| STOPFEN VSTI M12X1,5 A3P | 47 77 043 08 | 604 | 2 | 2 955 | 91 49 516 08 | PNEUMATIK KRANFUEHRERK |
| STOPFEN VSTI M12X1,5 A3P | 47 77 043 08 | 22 | 1 | 9 387 070 | 93 87 070 01 | KOMPAKTSEILWINDE |
| STOPFEN VSTI M12X1,5 A3P | 47 77 043 08 | 22 | 1 | 9 685 586 | 96 85 586 01 | KOMPAKTSEILWINDE |
| STOPFEN VSTI1/2"ED A3P | 47 77 042 08 | 704 | 2 | 1 970 | 96 71 367 08 | HYDRAULIK UNTERWAGEN |
| STOPFEN VSTI1/2"ED A3P | 47 77 042 08 | 4 | 1 | X1029358 | 10 29 358 6 | SENKBREMSVENTIL |
| STOPFEN VSTI1/2"ED A3P | 47 77 042 08 | 100 | 1 | X1033367 | 10 33 367 2 | STEUERBLOCK |
| STOPFEN VSTI1/2"ED A3P | 47 77 042 08 | 170 | 2 | X1033367 | 10 33 367 2 | STEUERBLOCK |
| STOPFEN VSTI1/2"ED A3P | 47 77 042 08 | 48 | 2 | X1080297 | 10 80 297 1 | VENTILBLOCK |
| STOPFEN VSTI1/8"ED ST A3C | 51 07 415 08 | 17 | 1 | 5 123 931 | 51 23 931 08 | PNEUMATIKZYLINDER |
| STOPFEN VSTI1/8"ED ST A3C | 51 07 415 08 | 61 | 3 | X1029147 | 10 29 147 4 | STEUERBLOCK |
| STOPFEN VSTI1/8"ED ST A3C | 51 07 415 08 | 110 | 2 | X1033367 | 10 33 367 2 | STEUERBLOCK |
| STOPFEN VSTI1/8"ED ST A3C | 51 07 415 08 | 61 | 4 | X1041191 | 10 41 191 3 | PLATTE |
| STOPFEN VSTI1/8"ED ST A3C | 51 07 415 08 | 61 | 3 | X1047529 | 10 47 529 1 | VENTILBLOCK |
| STOPFEN VSTI1/8"ED ST A3C | 51 07 415 08 | 61 | 4 | X1047529 | 10 47 529 2 | VENTILBLOCK |
| STOPFEN VSTI1/8"ED ST A3C | 51 07 415 08 | 45 | 5 | X1080297 | 10 80 297 1 | VENTILBLOCK |
| STOPFEN VSTI11/4"ED A3P | 47 77 054 08 | 67 | 1 | X1029147 | 10 29 147 4 | STEUERBLOCK |

| Bezeichnung | Artikel | Pos. | Menge | Seite | Baugruppe | Bezeichnung |
|---|---|---|---|---|---|---|
| STOPFEN VSTI3/4"ED A3P | 47 77 047 08 | 65 | 1 | X1029147 | 10 29 147 4 | STEUERBLOCK |
| STOPFEN VSTI3/4"ED A3P | 47 77 047 08 | 65 | 1 | X1047529 | 10 47 529 1 | VENTILBLOCK |
| STOPFEN VSTI3/4"ED A3P | 47 77 047 08 | 65 | 2 | X1047529 | 10 47 529 2 | VENTILBLOCK |
| STOPFEN VSTI3/8"ED A3P | 47 77 041 08 | 705 | 1 | 1 970 | 96 71 367 08 | HYDRAULIK UNTERWAGEN |
| STOPFEN VSTI3/8"ED A3P | 47 77 041 08 | 160 | 1 | X1033367 | 10 33 367 2 | STEUERBLOCK |
| STOPFEN VSTIM14X1,5ED A3 | 47 77 049 08 | 2 | 4 | 9 330 748 | 93 30 748 01 | DREHWERKANTRIEB |
| STOPFEN VSTIM16X1,5ED A3 | 47 77 044 08 | 21 | 2 | 9 387 070 | 93 87 070 01 | KOMPAKTSEILWINDE |
| STOPFEN VSTIM18X1,5ED A3 | 47 77 051 08 | 6 | 2 | 2 270 001 | 96 37 923 08 | KRAFTSTOFFBEHAELTER VO |
| STOPFEN VSTIM22X1,5ED A3 | 47 77 045 08 | 78 | 1 | 9 330 748 | 93 30 748 01 | DREHWERKANTRIEB |
| STOPFEN VSTIM22X1,5ED A3 | 47 77 045 08 | 28 | 1 | 9 393 684 | 93 93 684 01 | OELMESSEINRICHTUNG |
| STOPFEN VSTIM22X1,5ED A3 | 47 77 045 08 | 3 | 1 | X1029358 | 10 29 358 6 | SENKBREMSVENTIL |
| STOPFEN VSTIM27X2ED A3P | 47 77 056 08 | 87 | 2 | 9 330 748 | 93 30 748 01 | DREHWERKANTRIEB |
| STOPFEN VSTIM33X2ED A3P | 47 77 052 08 | 23 | 1 | 2 340 004 | 96 43 780 08 | OELBEHAELTER VORM. |
| STROMVERSORGUNG LSB 1-F | 92 08 669 08 | 6 | 1 | 2 932 214 | 96 28 366 08 | EINGANGSPLATINE KPL. |
| STUETZBLECH S235JR | 90 73 189 | 14 | 2 | X1011573 | 10 11 573 7 | KRAFTSTOFFLEITUNGEN |
| STUETZBLECH S235JR | 90 73 189 | 12 | 1 | X1011793 | 10 11 793 0 | ANBAUTEILE LUFTPRESSER |
| STUETZBLECH S235JR | 90 73 190 | 15 | 4 | X1011573 | 10 11 573 7 | KRAFTSTOFFLEITUNGEN |
| STUETZBLECH S235JR | 90 73 190 | 14 | 1 | X1011793 | 10 11 793 0 | ANBAUTEILE LUFTPRESSER |
| STUETZFLANSCH | 93 87 606 01 | 50 | 1 | 9 686 071 | 96 86 071 01 | PLANETENGETRIEBE |
| STUETZRING | 51 17 101 14 | (1) | 1 | 1 970 | 96 71 367 08 | HYDRAULIK UNTERWAGEN |
| STUETZRING | 51 17 101 14 | (1) | 1 | 1 970 | 96 71 367 08 | HYDRAULIK UNTERWAGEN |
| STUETZRING | 51 17 102 14 | (1) | 1 | 1 970 | 96 71 367 08 | HYDRAULIK UNTERWAGEN |
| STUETZRING | 51 17 102 14 | (1) | 1 | 1 970 | 96 71 367 08 | HYDRAULIK UNTERWAGEN |
| STUETZRING | 79 02 725 14 | 4 | 1 | 1 100 213 | 74 90 654 14 | SPANNER HYDR KPL |
| STUETZRING 17,5X20,9X1 PTF | 57 10 828 08 | (4) | 1 | 2 970 | 91 55 482 08 | HYDRAULIK |
| STUETZRING AlMgSi0,5 | 92 75 735 | 3 | 2 | 9 075 678 | 90 75 678 | THERMOSTATGEHAEUSE AN |
| STUETZSCHEIBE AEHNL.DIN | 42 20 119 01 | 32 | 3 | 9 444 410 | 94 44 410 03 | FAHRANTRIEB |
| STUETZSCHEIBE DIN 988 S 2 | 42 20 010 01 | 5 | 1 | 9 074 505 | 90 74 505 | KIPPHEBELBOCK VORM. |
| STUETZSCHEIBE DIN 988 S 75 | 50 09 001 | 11 | 1 | 5 923 269 | 59 23 269 14 | VERSTELLMOTOR |
| STUETZSCHRAUBE M8 | 40 97 109 08 | 22 | 2 | 2 510 200 | 96 41 258 08 | DREHBUEHNENVERKLEIDUN |
| STUTZEN | 92 73 271 | 2 | 2 | 9 075 368 | 90 75 368 | SCHMIEROELFILTER ANBAU |
| STUTZEN 3/4-16/M22X1,5 11SM | 90 80 360 | 8 | 1 | X1011614 | 10 11 614 6 | ANSCHLUSSSTUECK VORM. |
| STUTZEN 3/4-16/M26X1,5 11SM | 10 11 614 7 | 2 | 1 | X1011614 | 10 11 614 6 | ANSCHLUSSSTUECK VORM. |
| STUTZEN KPL. | 96 32 324 08 | 3 | 2 | 2 200 048 | 96 32 140 08 | AUSGLEICHSBEHAELTER VO |
| STUTZEN NACHARBEIT ELSD | 97 13 426 08 | 67 | 1 | 2 970 | 91 55 482 08 | HYDRAULIK |
| STUTZEN RD22/M33X2 MS58 | 22 81 103 08 | 4 | 1 | 2 200 048 | 96 32 140 08 | AUSGLEICHSBEHAELTER VO |
| STUTZEN S235JR | 10 11 818 1 | 50 | 1 | X1011969 | 10 11 969 7 | DRUCKGEBER ANBAU |
| SYMBOLEINSATZ | 60 67 606 08 | 152 | 2 | 1 780 182 | 92 01 827 08 | ELEKTRIK KLIMAANLAGE |
| SYMBOLEINSATZ | 60 67 617 08 | 43 | 1 | 2 533 001 | 96 41 568 08 | ARMATURENBRETT DACH VO |
| SYMBOLEINSATZ | 60 67 633 08 | 267 | 1 | 1 780 182 | 92 01 827 08 | ELEKTRIK KLIMAANLAGE |
| SYMBOLEINSATZ | 60 67 633 08 | 17 | 1 | 2 533 001 | 96 41 568 08 | ARMATURENBRETT DACH VO |
| SYMBOLEINSATZ | 60 67 643 08 | 37 | 1 | 2 533 001 | 96 41 568 08 | ARMATURENBRETT DACH VO |
| SYMBOLEINSATZ | 60 67 669 08 | 30 | 2 | 2 533 001 | 96 41 568 08 | ARMATURENBRETT DACH VO |
| SYMBOLEINSATZ | 60 67 671 08 | 28 | 1 | 2 533 001 | 96 41 568 08 | ARMATURENBRETT DACH VO |
| SYMBOLEINSATZ | 60 67 701 08 | 25 | 1 | 2 533 001 | 96 41 568 08 | ARMATURENBRETT DACH VO |
| SYMBOLEINSATZ | 60 67 702 08 | 23 | 1 | 2 533 001 | 96 41 568 08 | ARMATURENBRETT DACH VO |
| SYMBOLEINSATZ | 60 67 718 08 | 26 | 1 | 2 533 001 | 96 41 568 08 | ARMATURENBRETT DACH VO |
| SYMBOLEINSATZ | 60 67 725 08 | 31 | 1 | 2 533 001 | 96 41 568 08 | ARMATURENBRETT DACH VO |
| SYMBOLEINSATZ | 60 67 757 08 | 29 | 1 | 2 533 001 | 96 41 568 08 | ARMATURENBRETT DACH VO |
| SYMBOLEINSATZ | 60 67 770 08 | 46 | 1 | 2 533 001 | 96 41 568 08 | ARMATURENBRETT DACH VO |
| SYMBOLEINSATZ | 60 67 784 08 | 24 | 1 | 2 533 001 | 96 41 568 08 | ARMATURENBRETT DACH VO |
| SYMBOLEINSATZ | 60 67 817 08 | 38 | 1 | 2 533 001 | 96 41 568 08 | ARMATURENBRETT DACH VO |
| SYMBOLEINSATZ | 60 67 827 08 | 32 | 1 | 2 533 001 | 96 41 568 08 | ARMATURENBRETT DACH VO |
| SYMBOLEINSATZ | 60 67 914 08 | 44 | 1 | 2 533 001 | 96 41 568 08 | ARMATURENBRETT DACH VO |
| T-STUECK 18X18 L=75 GELB G | 55 31 281 08 | 44 | 1 | 2 540 | 91 45 984 08 | HEIZUNG OW |
| TANKSENSOR L=1200 24V SP | 78 90 156 08 | 2 | 1 | 2 270 001 | 96 37 923 08 | KRAFTSTOFFBEHAELTER VO |
| TASCHENSCHLOSS 19-22 SPF | 77 39 413 08 | 123 | 2 | | LTR 1100 -0 | LIEBHERR LTR 1100 |
| TASTE | 60 61 440 08 | 28 | 1 | 2 531 001 | 96 36 738 08 | ELEKTRIK ARMLEHNE LI. |
| TASTE | 60 61 440 08 | 28 | 3 | 2 531 002 | 96 36 739 08 | ELEKTRIK ARMLEHNE RE. |
| TASTERKAPPE FLACH GELB | 60 61 439 08 | 7 | 1 | 2 531 001 | 96 36 738 08 | ELEKTRIK ARMLEHNE LI. |

| Bezeichnung | Artikel | Pos. | Menge | Seite | Baugruppe | Bezeichnung |
|---|---|---|---|---|---|---|
| TASTERKAPPE FLACH GELB | 60 61 439 08 | 7 | 3 | 2 531 002 | 96 36 739 08 | ELEKTRIK ARMLEHNE RE. |
| TASTERKAPPE FLACH GRUE | 60 61 451 08 | 6 | 4 | 2 531 001 | 96 36 738 08 | ELEKTRIK ARMLEHNE LI. |
| TASTERKAPPE FLACH ROT | 60 61 431 08 | 10 | 1 | 2 530 002 | 96 19 448 08 | ARMATURENBRETT VORM.V |
| TASTERKAPPE FLACH ROT | 60 61 431 08 | 8 | 1 | 2 531 001 | 96 36 738 08 | ELEKTRIK ARMLEHNE LI. |
| TASTKONTAKTGEBER 2OE+2 | 60 61 438 08 | 48 | 1 | 2 533 001 | 96 41 568 08 | ARMATURENBRETT DACH VO |
| TASTKONTAKTGEBER 2OE+2 | 60 61 446 08 | 31 | 2 | 2 932 095 | 96 46 064 08 | SCHWENKRAHMEN SICHERUN |
| TEFLONSCHLAUCH DN16 750 | 51 05 005 08 | 4 | 1 | 2 950 | 91 49 515 08 | DRUCKLUFTANLAGE OW |
| TELESKOP 1 SCHWK. | 91 45 069 08 | 1 | 1 | 3 102 000 | 91 62 543 08 | TELESKOP 1 VORM. |
| TELESKOP 1 VORM. | 91 62 543 08 | 2 | 1 | 3 100 | 91 59 279 08 | TELESKOPAUSLEGER KPL. |
| TELESKOP 2 SCHWK. | 91 45 070 08 | 1 | 1 | 3 103 000 | 91 62 544 08 | TELESKOP 2 VORM. |
| TELESKOP 2 VORM. | 91 62 544 08 | 3 | 1 | 3 100 | 91 59 279 08 | TELESKOPAUSLEGER KPL. |
| TELESKOP 3 SCHWK. | 91 45 071 08 | 1 | 1 | 3 104 000 | 91 62 545 08 | TELESKOP 3 VORM. |
| TELESKOP 3 VORM. | 91 62 545 08 | 4 | 1 | 3 100 | 91 59 279 08 | TELESKOPAUSLEGER KPL. |
| TELESKOP 4 SCHWK. | 91 45 072 08 | 1 | 1 | 3 105 000 | 91 62 546 08 | TELESKOP 4 VORM. |
| TELESKOP 4 VORM. | 91 62 546 08 | 5 | 1 | 3 100 | 91 59 279 08 | TELESKOPAUSLEGER KPL. |
| TELESKOP 5 SCHWK. | 91 62 607 08 | 1 | 1 | 3 106 000 | 91 60 313 08 | TELESKOP 5 VORM. |
| TELESKOP 5 VORM. | 91 60 313 08 | 6 | 1 | 3 100 | 91 59 279 08 | TELESKOPAUSLEGER KPL. |
| TELESKOPAUSLEGER KPL. | 91 59 279 08 | 201 | 1 | | LTR 1100 -0 | LIEBHERR LTR 1100 |
| TELESKOPZYLINDER 180/135 | 10 47 300 1 | 1 | 1 | 3 330 | 91 57 885 08 | AUSSCHUBMECHANIK |
| TELLERFEDER | 57 01 109 08 | 7 | 4 | 5 701 095 | 57 01 095 08 | TRIEBWERK |
| TELLERFEDER DIN 2093 C 40 | 72 08 019 08 | 33 | 8 | 2 502 | 91 01 533 08 | STEUERSTAND |
| TEMPERATURFUEHLER -50/+ | 10 80 026 6 | 4 | 1 | 2 780 870 | 91 70 947 08 | LADESPANNUNGSREGLER |
| TEMPERATURFUEHLER KPL. | 90 76 530 | 451 | 1 | 2 210 | 91 81 614 08 | ANTRIEBSAGGREGAT VORM. |
| TEMPERATURFUEHLER KPL. | 90 76 530 | 2 | 1 | X1011969 | 10 11 969 8 | MOTORREGELUNGSENSORIK |
| TEMPERATURFUEHLER SPF | 69 11 806 08 | 1 | 1 | 9 076 530 | 90 76 530 | TEMPERATURFUEHLER KPL. |
| TEMPERATURGEBER -30/+13 | 69 11 831 08 | (1) | 1 | 2 970 | 91 55 482 08 | HYDRAULIK |
| TEMPERATURGEBER HYDRA | 96 20 863 08 | 62 | 1 | 2 970 | 91 55 482 08 | HYDRAULIK |
| TEMPERATURSENSOR | 62 90 130 | 1 | 2 | X1011969 | 10 11 969 8 | MOTORREGELUNGSENSORIK |
| TESABAND 19X50M ROHGEW | 60 32 019 08 | (205) | 0.01 | 2 932 042 | 96 68 587 08 | GRUNDAUFBAU |
| THERMOSCHALTER SCHALT | 69 11 832 08 | (2) | 1 | 2 984 | 91 52 906 08 | OELKUEHLER EINBAU |
| THERMOSTAT | 57 18 677 08 | 11 | 1 | 5 531 882 | 55 31 882 08 | KLIMANACHRUESTVERDAMP |
| THERMOSTAT | 73 80 833 | 2 | 2 | 9 075 678 | 90 75 678 | THERMOSTATGEHAEUSE AN |
| THERMOSTATGEHAEUSE ANB | 90 75 678 | 380 | 1 | X1015207 | 10 15 207 7 | DIESELMOTOR |
| THERMOSTATGEHAEUSE VO | 10 11 998 4 | 1 | 1 | 9 075 678 | 90 75 678 | THERMOSTATGEHAEUSE AN |
| TONNENLAGER DIN 635 20219 | 54 05 090 08 | 20 | 1 | 9 387 596 | 93 87 596 01 | SEILTROMMEL |
| TOPFROLLE | 74 90 039 08 | 20 | 2 | 2 522 | 91 10 037 08 | TUER KPL. |
| TORSIONSDAEMPFER | 10 22 810 0 | 1 | 1 | X1011578 | 10 11 578 0 | KUPPLUNGSANBAU |
| TRAGROLLE 107/8/40X590 GA | 74 90 145 08 | 4 | 1 | 2 440 022 | 96 42 336 08 | WINDE 2 VORM. |
| TRAGROLLE 107/8/40X590 GA | 74 90 145 08 | 3 | 1 | 2 450 | 91 53 926 08 | HAUPTHUBWERK |
| TRAGROLLE 80/5/20X600 GALV | 74 90 107 08 | 35 | 1 | 3 105 000 | 91 62 546 08 | TELESKOP 4 VORM. |
| TRAGROLLE 80/5/20X650 GALV | 74 90 092 08 | 35 | 1 | 3 104 000 | 91 62 545 08 | TELESKOP 3 VORM. |
| TRAGROLLE 80/5/20X700 GALV | 74 90 114 08 | 35 | 1 | 3 103 000 | 91 62 544 08 | TELESKOP 2 VORM. |
| TRAGROLLE 80/5/20X750 GALV | 74 90 093 08 | 35 | 1 | 3 101 | 91 60 312 08 | ANLENKSTUECK VORM. |
| TRAGROLLE 80/5/20X750 GALV | 74 90 093 08 | 35 | 1 | 3 102 000 | 91 62 543 08 | TELESKOP 1 VORM. |
| TRAGROLLE KPL 983593114 | 74 90 653 14 | 11 | 2 | 1 100 205 | 96 51 633 08 | RAUPENTRAEGER KPL.RE. |
| TRAGROLLE KPL 983593114 | 74 90 653 14 | 11 | 2 | 1 100 210 | 96 51 634 08 | RAUPENTRAEGER KPL.LI. |
| TRAGSCHIENENMUTTER DIN | 60 20 180 08 | 19 | 18 | 2 950 | 91 49 515 08 | DRUCKLUFTANLAGE OW |
| TRAGSCHIENENMUTTER DIN | 60 20 180 08 | 78 | 4 | 3 101 | 91 60 312 08 | ANLENKSTUECK VORM. |
| TRANSPORTABSTUETZUNG | 99 06 183 14 | 1 | 6 | 1 670 300 | 91 49 503 08 | TRANSPORTRAUPE |
| TRANSPORTHALTERUNG DKS | 91 49 246 08 | 350 | 1 | | LTR 1100 -0 | LIEBHERR LTR 1100 |
| TRANSPORTKONSOLE S355J0 | 10 14 194 9 | 1 | 1 | 9 079 468 | 90 79 468 | TRANSPORTVORRICHTUNG |
| TRANSPORTKONSOLE SCH | 90 78 849 | 1 | 1 | 9 079 823 | 90 79 823 | TRANSPORTVORRICHTUNG |
| TRANSPORTRAUPE | 91 49 503 08 | 62 | 1 | | LTR 1100 -0 | LIEBHERR LTR 1100 |
| TRANSPORTVORRICHTUNG A | 90 79 468 | 481 | 1 | X1015207 | 10 15 207 7 | DIESELMOTOR |
| TRANSPORTVORRICHTUNG | 90 79 823 | 480 | 1 | X1015207 | 10 15 207 7 | DIESELMOTOR |
| TRAVERSE | 10 21 921 9 | 2 | 1 | X1081388 | 10 81 388 6 | ZYLINDERKOPF |
| TRAVERSE | 11 49 429 8 | 3 | 1 | 4 003 006 | 91 04 457 08 | HAKENFLASCHE |
| TRAVERSE 30X161X190 S690Q | 95 55 525 08 | 14 | 1 | 3 510 100 | 91 49 246 08 | TRANSPORTHALTERUNG DKS |
| TRENNRELAIS 24V/1S | 63 01 201 08 | 30 | 1 | 2 932 042 | 96 68 587 08 | GRUNDAUFBAU |
| TRIEBWELLE | 57 01 096 08 | 2 | 1 | 5 701 090 | 57 01 090 08 | TRIEBWERK |

| Bezeichnung | Artikel | Pos. | Menge | Seite | Baugruppe | Bezeichnung |
|---|---|---|---|---|---|---|
| TRIEBWERK | 10 28 954 9 | 1 | 1 | 5 102 407 | 51 02 407 08 | HYDROMOTOR |
| TRIEBWERK | 57 01 090 08 | 1 | 1 | 5 102 294 | 51 02 294 08 | HYDROMOTOR |
| TRIEBWERK | 57 01 095 08 | 1 | 1 | 5 701 090 | 57 01 090 08 | TRIEBWERK |
| TRIEBWERK | 57 15 412 08 | 1 | 1 | 5 923 269 | 59 23 269 14 | VERSTELLMOTOR |
| TRITTSTUFE | 10 09 916 1 | 1 | 1 | 1 300 010 | 99 14 563 14 | AUFSTIEG KPL. |
| TROCKNER | 57 14 890 08 | 4 | 1 | 2 831 | 91 47 871 08 | KLIMAANLAGE OW |
| TUELLE 6,5/6,5/2 GUMMI | 59 10 555 08 | 27 | 2 | 2 520 000 | 91 49 872 08 | KABINE VERGLAST |
| TUER KPL. | 91 10 037 08 | 2 | 1 | 2 520 000 | 91 49 872 08 | KABINE VERGLAST |
| TUER SCHWK. | 92 11 781 08 | (2) | 1 | 2 520 000 | 91 49 872 08 | KABINE VERGLAST |
| TUERDICHTUNG 2-4X14,8X30 | 26 21 095 08 | 83 | 4 | 2 520 000 | 91 49 872 08 | KABINE VERGLAST |
| TUERSCHEIBE 4MM SPF | 72 57 410 08 | 3 | 1 | 2 522 | 91 10 037 08 | TUER KPL. |
| TURBOLADER K26 | 10 32 686 8 | 1 | 1 | X1011832 | 10 11 832 6 | ATL-ANBAU |
| U-PROFIL 1X1000X74 DC01 FE | 95 37 141 08 | 65 | 7 | 3 101 | 91 60 312 08 | ANLENKSTUECK VORM. |
| U-PROFIL 1X1000X98 DC01 FE | 95 59 272 08 | 67 | 5 | 3 101 | 91 60 312 08 | ANLENKSTUECK VORM. |
| U-PROFIL 1X500X74 DC01 FE// | 95 37 139 08 | 34 | 1 | 3 106 000 | 91 60 313 08 | TELESKOP 5 VORM. |
| U-PROFIL 1X750X98 DC01 FE// | 95 67 372 08 | 66 | 1 | 3 101 | 91 60 312 08 | ANLENKSTUECK VORM. |
| UEBERDRUCKVENTIL | 57 13 284 08 | 14 | 1 | X1032706 | 10 32 706 5 | ELEKTROPUMPE |
| UEBERDRUCKVENTIL 187BAR | 57 16 895 08 | 38 | 1 | X1047300 | 10 47 300 1 | TELESKOPZYLINDER |
| UEBERSTROEMVENTIL | 10 03 857 2 | 41 | 1 | X1011573 | 10 11 573 7 | KRAFTSTOFFLEITUNGEN |
| UEBERSTROEMVENTIL | 50 26 628 08 | 5 | 1 | 2 955 | 91 49 516 08 | PNEUMATIK KRANFUEHRERK |
| UEBERWURFMUTTER DIN 38 | 47 74 015 08 | 733 | 1 | 2 970 | 91 55 482 08 | HYDRAULIK |
| UEBERWURFMUTTER DIN 38 | 47 74 016 08 | 732 | 2 | 2 970 | 91 55 482 08 | HYDRAULIK |
| UEBERWURFMUTTER DIN 38 | 47 74 024 08 | 700 | 3 | 2 970 | 91 55 482 08 | HYDRAULIK |
| UEBERWURFMUTTER DIN 38 | 47 74 017 08 | 703 | 1 | 1 970 | 96 71 367 08 | HYDRAULIK UNTERWAGEN |
| UEBERWURFMUTTER DIN 38 | 47 74 003 08 | 721 | 2 | 2 970 | 91 55 482 08 | HYDRAULIK |
| UEBERWURFMUTTER DIN 38 | 47 74 006 08 | 729 | 1 | 1 970 | 96 71 367 08 | HYDRAULIK UNTERWAGEN |
| UEBERWURFMUTTER DIN 38 | 47 74 007 08 | 730 | 1 | 1 970 | 96 71 367 08 | HYDRAULIK UNTERWAGEN |
| UEBERWURFMUTTER DIN 38 | 47 74 009 08 | 731 | 4 | 1 970 | 96 71 367 08 | HYDRAULIK UNTERWAGEN |
| UEBERWURFMUTTER XM 22X | 90 75 763 | 2 | 1 | 9 075 395 | 90 75 395 | DRUCKROHRSTUTZEN ANBA |
| UMBAUSATZ ZYLINDER | 96 74 259 08 | 100 | 1 | 2 520 000 | 91 49 872 08 | KABINE VERGLAST |
| UMLENKROLLE | 57 18 512 08 | 6 | 1 | 6 923 101 | 69 23 101 08 | SEILLAENGENGEBER |
| UMLENKROLLE | 73 82 028 | (1) | 1 | 9 080 525 | 90 80 525 | KLIMAKOMPRESSOR ANBAU |
| UMLENKROLLE VORM. | 90 80 526 | 4 | 1 | 9 080 525 | 90 80 525 | KLIMAKOMPRESSOR ANBAU |
| UMWAELZPUMPE U4840 | 55 30 545 08 | 29 | 1 | 2 540 | 91 45 984 08 | HEIZUNG OW |
| UNTERLAGE | 70 42 781 08 | 51 | 2 | 2 501 000 | 91 48 769 08 | KRANFUEHRERKABINE VORM |
| UNTERLAGE 0 PA6G | 28 81 998 08 | 14 | 1 | 2 520 001 | 92 48 796 08 | FRONTSCHEIBE KPL. |
| UNTERLAGE 1X200X70 DC01 | 94 93 614 08 | 2 | 1 | 3 500 | 91 05 776 08 | DOPPELKLAPPSPITZE MECH.K |
| UNTERLAGE 1X200X70 DC01 | 94 93 614 08 | 44 | 1 | 3 510 100 | 91 49 246 08 | TRANSPORTHALTERUNG DKS |
| UNTERLAGE 1X280X70 DC01 | 94 93 809 08 | 4 | 1 | 3 500 | 91 05 776 08 | DOPPELKLAPPSPITZE MECH.K |
| UNTERLAGE 1X280X70 DC01 | 94 93 809 08 | 46 | 1 | 3 510 100 | 91 49 246 08 | TRANSPORTHALTERUNG DKS |
| UNTERLAGE 2X200X70 DC01 | 94 93 622 08 | 3 | 1 | 3 500 | 91 05 776 08 | DOPPELKLAPPSPITZE MECH.K |
| UNTERLAGE 2X200X70 DC01 | 94 93 622 08 | 45 | 1 | 3 510 100 | 91 49 246 08 | TRANSPORTHALTERUNG DKS |
| UNTERLAGE 2X280X70 DC01 | 94 93 810 08 | 5 | 1 | 3 500 | 91 05 776 08 | DOPPELKLAPPSPITZE MECH.K |
| UNTERLAGE 2X280X70 DC01 | 94 93 810 08 | 47 | 1 | 3 510 100 | 91 49 246 08 | TRANSPORTHALTERUNG DKS |
| UNTERWAGEN KPL. B7B | 96 72 944 08 | 1 | 1 | 1 100 | 91 71 033 08 | UNTERWAGEN KPL.M.SCHNEL |
| UNTERWAGEN KPL.M.SCHNEL | 91 71 033 08 | 2 | 1 | | LTR 1100 -0 | LIEBHERR LTR 1100 |
| V-RING 350 NBR,60 SHORE | 71 09 087 01 | 15 | 1 | 9 387 070 | 93 87 070 01 | KOMPAKTSEILWINDE |
| V-RING 350 NBR,60 SHORE | 71 09 087 01 | 15 | 1 | 9 685 586 | 96 85 586 01 | KOMPAKTSEILWINDE |
| V-RING 350 NBR,60 SHORE | 71 09 087 01 | (2) | 1 | 9 686 071 | 96 86 071 01 | PLANETENGETRIEBE |
| VENTIL | 10 01 183 2 | 1 | 1 | 9 078 233 | 90 78 233 | VENTIL |
| VENTIL | 10 47 530 2 | 6 | 1 | X1047529 | 10 47 529 2 | VENTILBLOCK |
| VENTIL | 10 80 131 5 | 4 | 1 | X1009998 | 10 09 998 1 | LUFTFILTER |
| VENTIL | 57 18 892 08 | 8 | 2 | X1010109 | 10 10 109 3 | DREHWERKSVENTIL |
| VENTIL | 76 22 478 | 12 | 1 | 5 531 882 | 55 31 882 08 | KLIMANACHRUESTVERDAMP |
| VENTIL M14X1,5 | 90 78 233 | 1 | 1 | X1011722 | 10 11 722 8 | WASSERANSCHLUSS |
| VENTILBETAETIGUNG | 92 77 587 01 | 11 | 1 | 9 387 070 | 93 87 070 01 | KOMPAKTSEILWINDE |
| VENTILBLOCK | 10 41 191 5 | 4 | 1 | X1028524 | 10 28 524 3 | STEUERBLOCK |
| VENTILBLOCK | 10 47 529 1 | 2 | 1 | X1028524 | 10 28 524 3 | STEUERBLOCK |
| VENTILBLOCK | 10 47 529 2 | 5 | 1 | X1028524 | 10 28 524 3 | STEUERBLOCK |
| VENTILBLOCK | 10 80 297 1 | 2 | 1 | X1010109 | 10 10 109 3 | DREHWERKSVENTIL |

| Bezeichnung | Artikel | Pos. | Menge | Seite | Baugruppe | Bezeichnung |
|---|---|---|---|---|---|---|
| VENTILBRUECKE | 10 11 969 5 | 1 | 2 | 9 079 861 | 90 79 861 | KIPPHEBELBOCK KPL. |
| VENTILDECKEL | 11 49 040 6 | 16 | 2 | 2 200 048 | 96 84 070 08 | AUSGLEICHSBEHAELTER VO |
| VENTILFUEHRUNG | 10 13 906 4 | 4 | 4 | X1012038 | 10 12 038 3 | ZYLINDERKOPF |
| VENTILKEGELSTUECK MK9 | 11 35 751 4 | 8 | 8 | X1012036 | 10 12 036 5 | ZYLINDERKOPF VORM. |
| VENTILKEGELSTUECK MK9 | 11 35 751 4 | 8 | 8 | X1014155 | 10 14 155 5 | ZYLINDERKOPF VORM. |
| VENTILSCHAFTDICHTRING | 10 12 033 4 | 5 | 4 | X1011585 | 10 11 585 1 | DS ZYLINDERKOPF |
| VENTILSCHAFTDICHTRING | 10 12 033 4 | 5 | 16 | X1011585 | 10 11 585 2 | DS ZYLINDERKOPF KPL. |
| VENTILSCHAFTDICHTRING | 10 12 033 4 | 5 | 24 | X1011585 | 10 11 585 3 | DS ZYLINDERKOPF KPL. |
| VENTILSCHAFTDICHTRING | 10 12 033 4 | 5 | 4 | X1011585 | 10 11 585 9 | DS ZYLINDERKOPF |
| VENTILSCHAFTDICHTRING | 10 12 033 4 | 5 | 4 | X1012036 | 10 12 036 5 | ZYLINDERKOPF VORM. |
| VENTILSCHAFTDICHTRING | 10 12 033 4 | 5 | 4 | X1014155 | 10 14 155 5 | ZYLINDERKOPF VORM. |
| VENTILSCHAFTDICHTRING VIV | 10 11 930 5 | 2 | 4 | X1011585 | 10 11 585 1 | DS ZYLINDERKOPF |
| VENTILSCHAFTDICHTRING VIV | 10 11 930 5 | 2 | 16 | X1011585 | 10 11 585 2 | DS ZYLINDERKOPF KPL. |
| VENTILSCHAFTDICHTRING VIV | 10 11 930 5 | 2 | 24 | X1011585 | 10 11 585 3 | DS ZYLINDERKOPF KPL. |
| VENTILSCHAFTDICHTRING VIV | 10 11 930 5 | 2 | 4 | X1011585 | 10 11 585 9 | DS ZYLINDERKOPF |
| VENTILSEGMENT | 11 32 003 4 | 10 | 1 | X1022699 | 10 22 699 3 | WEGESCHIEBER |
| VENTILSITZ | 51 07 976 08 | 10 | 1 | 5 114 177 | 51 14 177 08 | DRUCKBEGRENZUNGSVENTI |
| VENTILSITZ | 57 06 475 08 | 3 | 1 | 5 711 301 | 57 11 301 08 | DRUCKBEGRENZUNGSVENTI |
| VENTILSITZ | 57 06 475 08 | 1 | 1 | 5 718 895 | 57 18 895 08 | DRUCKVENTIL |
| VENTILSITZ | 91 33 637 | 11 | 1 | X1011795 | 10 11 795 1 | ENDREGELVENTIL |
| VENTILSITZRING AUSLASS PL | 90 73 726 | 7 | 2 | X1012038 | 10 12 038 3 | ZYLINDERKOPF |
| VENTILSITZRING EINLASS PL | 90 73 725 | 6 | 2 | X1012038 | 10 12 038 3 | ZYLINDERKOPF |
| VERBANDSKASTEN DIN 13164 | 78 90 003 08 | 5 | 1 | 1 750 002 | 92 86 201 08 | ZUBEHOER |
| VERBINDUNGSLEITUNG ANB | 10 11 816 1 | 230 | 1 | X1015207 | 10 15 207 7 | DIESELMOTOR |
| VERBINDUNGSLEITUNG R-M | 10 11 816 2 | 2 | 1 | X1011816 | 10 11 816 1 | VERBINDUNGSLEITUNG ANBA |
| VERBINDUNGSMITTEL EN 354 | 11 49 191 0 | 3 | 1 | 1 793 010 | 91 69 598 08 | PERSOENLICHE SCHUTZAUS |
| VERBINDUNGSROHR 18X1,5X | 55 31 730 08 | 37 | 2 | 2 540 | 91 45 984 08 | HEIZUNG OW |
| VERBINDUNGSSTUECK Al Rm | 10 12 166 6 | 1 | 1 | X1012166 | 10 12 166 7 | VERBINDUNGSSTUECK M.O-R |
| VERBINDUNGSSTUECK M.O-R | 10 12 166 7 | 4 | 1 | X1012414 | 10 12 414 0 | OELWANNE MIT BEFEST. |
| VERBINDUNGSSTUTZEN | 95 67 891 08 | 12 | 2 | 2 955 | 91 49 516 08 | PNEUMATIK KRANFUEHRERK |
| VERBINDUNGSSTUTZEN | 97 37 938 08 | 36 | 1 | 2 970 | 91 55 482 08 | HYDRAULIK |
| VERBINDUNGSSTUTZEN EL 1 | 95 36 006 08 | 69 | 1 | 2 970 | 91 55 482 08 | HYDRAULIK |
| VERBINDUNGSSTUTZEN EL 1 | 95 36 006 08 | 33 | 1 | 2 971 | 91 50 610 08 | HYDRAULIK HILFSHUBWERK |
| VERDAMPFER | 57 18 690 08 | 10 | 1 | 5 531 882 | 55 31 882 08 | KLIMANACHRUESTVERDAMP |
| VERKEILUNG LI HINTEN KPL | 97 07 598 03 | 4 | 1 | 1 100 215 | 99 20 783 14 | MITTELTEIL |
| VERKEILUNG LI VORNE KPL | 97 07 604 03 | 5 | 1 | 1 100 215 | 99 20 783 14 | MITTELTEIL |
| VERKEILUNG RE HINTEN KPL | 97 07 607 03 | 6 | 1 | 1 100 215 | 99 20 783 14 | MITTELTEIL |
| VERKEILUNG RE VORNE KPL | 97 07 601 03 | 7 | 1 | 1 100 215 | 99 20 783 14 | MITTELTEIL |
| VERKLEIDUNG SCHWK. | 92 50 132 08 | 4 | 1 | 2 520 001 | 92 48 796 08 | FRONTSCHEIBE KPL. |
| VERLAENGERUNG B DIN 3123 | 79 00 264 08 | 65 | 1 | 1 750 001 | 92 85 698 08 | GRUNDWERKZEUG |
| VERLAENGERUNG B DIN 3123 | 79 00 263 08 | 64 | 1 | 1 750 001 | 92 85 698 08 | GRUNDWERKZEUG |
| VERLAENGERUNG M10X21-S | 77 43 734 08 | 10 | 4 | 2 711 | 91 53 002 08 | ZENTRALSCHMIERANLAGE O |
| VERRIEGELUNG | 96 32 604 08 | 20 | 2 | 2 102 | 91 51 080 08 | MONTAGETEILE DREHBUEHN |
| VERRIEGELUNGSBOLZEN 70.0 | 97 57 668 08 | 3 | 1 | 2 102 022 | 96 32 604 08 | VERRIEGELUNG |
| VERRIEGELUNGSZUG L=365M | 72 40 148 08 | 90 | 1 | 2 520 000 | 91 49 872 08 | KABINE VERGLAST |
| VERRIEGELUNGSZUG L=430M | 72 40 160 08 | 41 | 1 | 2 522 | 91 10 037 08 | TUER KPL. |
| VERSCHLUSS | 55 07 965 08 | 3 | 1 | X1009998 | 10 09 998 1 | LUFTFILTER |
| VERSCHLUSS FEDERBUEGEL | 70 42 276 08 | 7 | 1 | 3 750 026 | 96 89 407 08 | HALTER LINKS |
| VERSCHLUSS FEDERBUEGEL | 70 42 276 08 | 7 | 1 | 3 750 028 | 96 89 408 08 | HALTER RECHTS |
| VERSCHLUSSDECKEL | 91 44 757 | 2 | 1 | X1011883 | 10 11 883 9 | OELEINFUELLUNG |
| VERSCHLUSSDECKEL | 94 44 428 03 | 45 | 1 | 9 444 410 | 94 44 410 03 | FAHRANTRIEB |
| VERSCHLUSSDECKEL DIN 443 | 54 02 024 08 | 3 | 8 | X1011577 | 10 11 577 7 | KURBELGEHAEUSE KPL. |
| VERSCHLUSSDECKEL DIN 443 | 49 80 362 | 2 | 4 | X1011577 | 10 11 577 7 | KURBELGEHAEUSE KPL. |
| VERSCHLUSSDECKEL DIN 443 | 49 80 363 | 10 | 3 | X1012038 | 10 12 038 3 | ZYLINDERKOPF |
| VERSCHLUSSDECKEL DIN 443 | 49 81 042 | 12 | 1 | X1012038 | 10 12 038 3 | ZYLINDERKOPF |
| VERSCHLUSSKAPPE | 57 15 118 08 | 14 | 1 | 5 704 271 | 57 04 271 08 | DRUCKBEGRENZUNGSVENTI |
| VERSCHLUSSKAPPE M 1-K | 60 45 085 08 | 10 | 1 | 6 923 101 | 69 23 101 08 | SEILLAENGENGEBER |
| VERSCHLUSSKAPPE M1-D | 60 45 121 08 | 153 | 1 | 3 930 492 | 96 20 966 08 | KLEMMKASTEN KPL. |
| VERSCHLUSSKAPPE M1-D | 60 45 121 08 | 16 | 1 | 6 923 101 | 69 23 101 08 | SEILLAENGENGEBER |
| VERSCHLUSSMUTTER RD32X | 10 46 691 4 | 22 | 2 | 2 970 | 91 55 482 08 | HYDRAULIK |

| Bezeichnung | Artikel | Pos. | Menge | Seite | Baugruppe | Bezeichnung |
|---|---|---|---|---|---|---|
| VERSCHLUSSMUTTER RD32X | 10 46 691 4 | 15 | 1 | 2 971 | 91 50 610 08 | HYDRAULIK HILFSHUBWERK |
| VERSCHLUSSMUTTER RD36X | 10 46 691 5 | 19 | 1 | 2 971 | 91 50 610 08 | HYDRAULIK HILFSHUBWERK |
| VERSCHLUSSMUTTER RD79X | 10 46 691 7 | 11 | 2 | 2 971 | 91 50 610 08 | HYDRAULIK HILFSHUBWERK |
| VERSCHLUSSRING | 57 01 098 08 | 4 | 1 | 5 701 090 | 57 01 090 08 | TRIEBWERK |
| VERSCHLUSSSCHRAUBE | 10 65 001 4 | 48 | 1 | X1047300 | 10 47 300 1 | TELESKOPZYLINDER |
| VERSCHLUSSSCHRAUBE DIN | 46 00 370 | 80 | 1 | 1 100 211 | 74 90 653 14 | TRAGROLLE KPL |
| VERSCHLUSSSCHRAUBE DIN | 40 41 003 08 | 12 | 1 | X1032706 | 10 32 706 5 | ELEKTROPUMPE |
| VERSCHLUSSSCHRAUBE DIN | 40 41 016 08 | 27 | 1 | 5 700 161 | 57 00 161 | LUFTPRESSER |
| VERSCHLUSSSCHRAUBE DIN | 46 00 232 | 29 | 3 | 5 700 161 | 57 00 161 | LUFTPRESSER |
| VERSCHLUSSSCHRAUBE DIN | 40 41 242 | 54 | 3 | 9 444 410 | 94 44 410 03 | FAHRANTRIEB |
| VERSCHLUSSSCHRAUBE DIN | 51 85 717 08 | 55 | 1 | X1047300 | 10 47 300 1 | TELESKOPZYLINDER |
| VERSCHLUSSSCHRAUBE G1/ | 10 47 037 7 | 59 | 1 | X1047300 | 10 47 300 1 | TELESKOPZYLINDER |
| VERSCHLUSSSCHRAUBE M20 | 60 24 250 08 | 197 | 2 | 3 930 492 | 96 20 966 08 | KLEMMKASTEN KPL. |
| VERSCHLUSSSCHRAUBE M20 | 60 24 250 08 | 216 | 2 | 3 930 718 | 96 56 248 08 | KLEMMKASTEN KPL. |
| VERSCHLUSSSCHRAUBE M22 | 47 75 003 01 | 8 | 2 | 9 275 212 | 92 75 212 01 | OELMESSSTABEINRICHTUNG |
| VERSCHLUSSSCHRAUBE M25 | 60 24 251 08 | 212 | 1 | 3 930 718 | 96 56 248 08 | KLEMMKASTEN KPL. |
| VERSCHLUSSSCHRAUBE M2 | 57 01 094 08 | 11 | 2 | 5 102 294 | 51 02 294 08 | HYDROMOTOR |
| VERSCHLUSSSCHRAUBE M30 | 90 77 172 | 3 | 1 | X1011795 | 10 11 795 1 | ENDREGELVENTIL |
| VERSCHLUSSSCHRAUBE M30 | 92 75 590 | 11 | 1 | 9 075 541 | 90 75 541 | SCHMIEROELPUMPE VORM. |
| VERSCHLUSSSCHRAUBE M32 | 60 24 252 08 | 19 | 1 | 1 920 314 | 96 46 921 08 | KLEMMKASTEN VORM. |
| VERSCHLUSSSCHRAUBE RD3 | 10 46 691 0 | 17 | 1 | 2 971 | 91 50 610 08 | HYDRAULIK HILFSHUBWERK |
| VERSCHLUSSSCHRAUBE RD3 | 10 46 691 1 | 21 | 1 | 2 971 | 91 50 610 08 | HYDRAULIK HILFSHUBWERK |
| VERSCHLUSSSCHRAUBE RD7 | 10 46 691 3 | 13 | 2 | 2 971 | 91 50 610 08 | HYDRAULIK HILFSHUBWERK |
| VERSCHLUSSSCHRAUBE VSTI | 24 71 173 02 | 706 | 1 | 1 423 101 | 99 26 462 14 | JACK-UP SYSTEM |
| VERSCHLUSSSCHRAUBE VST | 47 75 110 01 | 40 | 4 | X1081388 | 10 81 388 6 | ZYLINDERKOPF |
| VERSCHLUSSSCHRAUBE VST | 73 81 638 | 10 | 2 | X1011582 | 10 11 582 9 | SCHWUNGRADGEHAEUSE AN |
| VERSCHLUSSSCHRAUBE VST | 73 80 566 | 6 | 1 | 9 077 279 | 90 77 279 | ANSCHLUSSSTUTZEN ANBAU |
| VERSCHLUSSSCHRAUBE VST | 73 80 566 | 5 | 1 | X1011550 | 10 11 550 2 | KUEHLWASSERENTLUEFTUN |
| VERSCHLUSSSCHRAUBE VST | 73 80 566 | 46 | 1 | X1011573 | 10 11 573 7 | KRAFTSTOFFLEITUNGEN |
| VERSCHLUSSSCHRAUBE VST | 73 80 566 | 6 | 3 | X1011577 | 10 11 577 7 | KURBELGEHAEUSE KPL. |
| VERSCHLUSSSCHRAUBE VST | 73 80 566 | 11 | 1 | X1011707 | 10 11 707 2 | LUFTANSAUGROHR ANBAU |
| VERSCHLUSSSCHRAUBE VST | 73 80 566 | 3 | 1 | X1011722 | 10 11 722 8 | WASSERANSCHLUSS |
| VERSCHLUSSSCHRAUBE VST | 73 80 566 | 50 | 2 | X1011969 | 10 11 969 8 | MOTORREGELUNGSENSORIK |
| VERSCHLUSSSCHRAUBE VST | 10 11 607 8 | 8 | 1 | X1012580 | 10 12 580 1 | KRAFTSTOFFFEINFILTER |
| VERSCHLUSSSCHRAUBE VST | 73 82 203 | 5 | 2 | X1011577 | 10 11 577 7 | KURBELGEHAEUSE KPL. |
| VERSCHLUSSSCHRAUBE VST | 10 12 962 5 | 22 | 1 | X1015207 | 10 15 207 7 | DIESELMOTOR |
| VERSCHLUSSSCHRAUBE VSTI | 73 80 019 | 51 | 1 | X1011969 | 10 11 969 8 | MOTORREGELUNGSENSORIK |
| VERSCHLUSSSCHRAUBE VSTI | 73 80 177 | 4 | 2 | X1011577 | 10 11 577 7 | KURBELGEHAEUSE KPL. |
| VERSCHLUSSSCHRAUBE VSTI | 73 80 177 | 14 | 1 | X1011611 | 10 11 611 0 | VERSCHLUSSTEILE |
| VERSCHLUSSSCHRAUBE VSTI | 73 80 177 | 14 | 2 | X1011739 | 10 11 739 7 | OELKUEHLER VORM. |
| VERSCHLUSSSCHRAUBE VSTI | 73 81 457 | 10 | 1 | 9 079 890 | 90 79 890 | HEIZUNGSANSCHLUSS |
| VERSCHLUSSSCHRAUBE VSTI | 73 82 204 | 8 | 1 | 9 078 250 | 90 78 250 | VERSCHLUSSTEILE |
| VERSCHLUSSSCHRAUBE VSTI | 73 82 204 | 14 | 2 | 9 079 480 | 90 79 480 | AGGREGATETRAEGER ANBA |
| VERSCHLUSSSCHRAUBE VSTI | 73 82 204 | 6 | 1 | X1011550 | 10 11 550 2 | KUEHLWASSERENTLUEFTUN |
| VERSCHLUSSSCHRAUBE VSTI | 73 82 204 | 23 | 1 | X1011739 | 10 11 739 7 | OELKUEHLER VORM. |
| VERSCHLUSSSCHRAUBE VSTI | 73 82 204 | 22 | 2 | X1011801 | 10 11 801 3 | DS AGGREGATETRAEGER |
| VERSCHLUSSSCHRAUBE VSTI | 73 82 204 | 22 | 2 | X1011801 | 10 11 801 4 | DS AGGREGATETRAEGER |
| VERSCHLUSSSCHRAUBE VST | 10 04 313 6 | 15 | 1 | 9 079 480 | 90 79 480 | AGGREGATETRAEGER ANBA |
| VERSCHLUSSSCHRAUBE VST | 73 82 202 | 5 | 2 | 9 079 893 | 90 79 893 | VERSCHLUSSTEILE |
| VERSCHLUSSSCHRAUBE VST | 73 82 202 | 23 | 2 | X1011801 | 10 11 801 3 | DS AGGREGATETRAEGER |
| VERSCHLUSSSCHRAUBE VST | 73 82 202 | 23 | 2 | X1011801 | 10 11 801 4 | DS AGGREGATETRAEGER |
| VERSCHLUSSSTOPFEN 13 | 77 90 183 01 | 91 | 1 | 9 444 410 | 94 44 410 03 | FAHRANTRIEB |
| VERSCHLUSSSTOPFEN ISO 8 | 47 77 004 08 | 722 | 3 | 2 970 | 91 55 482 08 | HYDRAULIK |
| VERSCHLUSSSTOPFEN ISO 8 | 47 77 005 08 | 731 | 2 | 2 970 | 91 55 482 08 | HYDRAULIK |
| VERSCHLUSSSTOPFEN ISO 8 | 47 77 001 08 | 699 | 3 | 2 970 | 91 55 482 08 | HYDRAULIK |
| VERSCHLUSSTEILE | 10 11 566 4 | 452 | 1 | X1015207 | 10 15 207 7 | DIESELMOTOR |
| VERSCHLUSSTEILE | 10 11 611 0 | 521 | 1 | X1015207 | 10 15 207 7 | DIESELMOTOR |
| VERSCHLUSSTEILE | 10 11 912 8 | 522 | 1 | X1015207 | 10 15 207 7 | DIESELMOTOR |
| VERSCHLUSSTEILE | 90 78 249 | 650 | 1 | X1015207 | 10 15 207 7 | DIESELMOTOR |
| VERSCHLUSSTEILE | 90 78 250 | 652 | 1 | X1015207 | 10 15 207 7 | DIESELMOTOR |

| Bezeichnung | Artikel | Pos. | Menge | Seite | Baugruppe | Bezeichnung |
|---|---|---|---|---|---|---|
| VERSCHLUSSTEILE | 90 79 893 | 630 | 1 | X1015207 | 10 15 207 7 | DIESELMOTOR |
| VERSCHLUSSTEILE | 90 80 280 | 12 | 1 | X1011583 | 10 11 583 7 | DS DIESELMOTOR |
| VERSCHLUSSTEILE | 90 80 280 | 5 | 1 | X1011801 | 10 11 801 3 | DS AGGREGATETRAEGER |
| VERSCHLUSSTEILE | 90 80 280 | 5 | 1 | X1011801 | 10 11 801 4 | DS AGGREGATETRAEGER |
| VERSCHLUSSTEILE | 90 80 280 | 384 | 1 | X1015207 | 10 15 207 7 | DIESELMOTOR |
| VERSCHLUSSTEILE | 91 47 512 | 24 | 1 | X1015207 | 10 15 207 7 | DIESELMOTOR |
| VERSCHMUTZUNGSANZEIGE | 57 13 561 08 | 4 | 1 | 5 106 681 | 51 06 681 08 | DRUCKFILTER |
| VERSCHMUTZUNGSANZEIGE | 57 13 561 08 | 4 | 1 | 5 106 708 | 51 06 708 08 | LEITUNGSFILTER |
| VERSCHMUTZUNGSANZEIGE | 51 06 693 08 | 22 | 1 | 2 340 004 | 96 43 780 08 | OELBEHAELTER VORM. |
| VERSCHRAUBUNG | 79 00 656 08 | 4 | 1 | 1 750 | 91 48 606 08 | WERKZEUG M.ZUBEHOER |
| VERSCHRAUBUNG | 79 05 339 08 | 5 | 2 | 1 750 | 91 48 606 08 | WERKZEUG M.ZUBEHOER |
| VERSCHRAUBUNG | 95 59 195 08 | 28 | 2 | 2 970 | 91 55 482 08 | HYDRAULIK |
| VERSCHRAUBUNG | 95 59 195 08 | 45 | 1 | 2 970 | 91 55 482 08 | HYDRAULIK |
| VERSCHRAUBUNG 20X0 | 97 06 941 08 | 34 | 2 | 2 950 | 91 49 515 08 | DRUCKLUFTANLAGE OW |
| VERSCHRAUBUNG 36.0X38 11 | 97 48 847 08 | 407 | 2 | 2 210 | 91 81 614 08 | ANTRIEBSAGGREGAT VORM. |
| VERSCHRAUBUNG 36.0X46 11 | 97 72 532 08 | 27 | 2 | 1 970 | 96 71 367 08 | HYDRAULIK UNTERWAGEN |
| VERSCHRAUBUNG AEHNL.IS | 47 74 004 14 | 704 | 8 | 1 423 101 | 99 26 462 14 | JACK-UP SYSTEM |
| VERSCHRAUBUNG AEHNL.IS | 47 32 102 14 | 702 | 1 | 1 423 101 | 99 26 462 14 | JACK-UP SYSTEM |
| VERSCHRAUBUNG AEHNL.ISO | 47 77 049 14 | 89 | 1 | 9 444 410 | 94 44 410 03 | FAHRANTRIEB |
| VERSCHRAUBUNG BUZ 16S C | 47 77 011 08 | 733 | 1 | 1 970 | 96 71 367 08 | HYDRAULIK UNTERWAGEN |
| VERSCHRAUBUNG BUZ 30S C | 47 77 016 08 | 735 | 4 | 1 970 | 96 71 367 08 | HYDRAULIK UNTERWAGEN |
| VERSCHRAUBUNG EGE 12L G | 47 19 038 08 | 628 | 2 | 2 970 | 91 55 482 08 | HYDRAULIK |
| VERSCHRAUBUNG EGE 12S G | 47 19 018 08 | 710 | 3 | 2 970 | 91 55 482 08 | HYDRAULIK |
| VERSCHRAUBUNG EGE 16S G | 47 19 019 08 | 625 | 1 | 2 970 | 91 55 482 08 | HYDRAULIK |
| VERSCHRAUBUNG EGESD10- | 47 19 011 08 | 672 | 4 | 2 970 | 91 55 482 08 | HYDRAULIK |
| VERSCHRAUBUNG EGESD10- | 47 19 011 08 | 615 | 4 | 2 971 | 91 50 610 08 | HYDRAULIK HILFSHUBWERK |
| VERSCHRAUBUNG EGESD10- | 47 19 011 08 | 607 | 1 | 2 975 152 | 91 05 737 08 | HYDRAULIK TELE |
| VERSCHRAUBUNG EGESD12- | 47 19 012 08 | 641 | 2 | 2 970 | 91 55 482 08 | HYDRAULIK |
| VERSCHRAUBUNG EGESD12- | 47 19 005 08 | 736 | 1 | 1 970 | 96 71 367 08 | HYDRAULIK UNTERWAGEN |
| VERSCHRAUBUNG EGESD12- | 47 19 005 08 | 608 | 1 | 2 975 038 | 91 26 492 08 | ZUSATZHYDRAULIK KLAPPSPI |
| VERSCHRAUBUNG EGESD15- | 47 19 042 08 | 638 | 1 | 2 971 | 91 50 610 08 | HYDRAULIK HILFSHUBWERK |
| VERSCHRAUBUNG EGESD16- | 47 19 006 08 | 737 | 2 | 1 970 | 96 71 367 08 | HYDRAULIK UNTERWAGEN |
| VERSCHRAUBUNG EGESD16- | 47 19 006 08 | 679 | 1 | 2 970 | 91 55 482 08 | HYDRAULIK |
| VERSCHRAUBUNG EGESD18- | 47 19 013 08 | 682 | 1 | 2 970 | 91 55 482 08 | HYDRAULIK |
| VERSCHRAUBUNG EGESD28- | 47 19 015 08 | 693 | 4 | 2 970 | 91 55 482 08 | HYDRAULIK |
| VERSCHRAUBUNG EGESD38- | 47 19 040 08 | 656 | 2 | 2 970 | 91 55 482 08 | HYDRAULIK |
| VERSCHRAUBUNG EGESD38- | 47 19 040 08 | 625 | 1 | 2 971 | 91 50 610 08 | HYDRAULIK HILFSHUBWERK |
| VERSCHRAUBUNG EGESD42- | 47 19 036 08 | 21 | 1 | 2 340 004 | 96 43 780 08 | OELBEHAELTER VORM. |
| VERSCHRAUBUNG EGESD42- | 47 19 036 08 | 600 | 1 | 2 970 | 91 55 482 08 | HYDRAULIK |
| VERSCHRAUBUNG EL 10L CR6 | 47 23 302 08 | 706 | 1 | 1 970 | 96 71 367 08 | HYDRAULIK UNTERWAGEN |
| VERSCHRAUBUNG EL 10L CR6 | 47 23 302 08 | 618 | 9 | 2 970 | 91 55 482 08 | HYDRAULIK |
| VERSCHRAUBUNG EL 10L CR6 | 47 23 302 08 | 611 | 3 | 2 971 | 91 50 610 08 | HYDRAULIK HILFSHUBWERK |
| VERSCHRAUBUNG EL 10L CR6 | 47 23 302 08 | 609 | 2 | 2 975 152 | 91 05 737 08 | HYDRAULIK TELE |
| VERSCHRAUBUNG EL 12L M18 | 24 71 286 02 | 630 | 6 | 2 970 | 91 55 482 08 | HYDRAULIK |
| VERSCHRAUBUNG EL 12L M18 | 24 71 286 02 | 608 | 3 | 2 971 | 91 50 610 08 | HYDRAULIK HILFSHUBWERK |
| VERSCHRAUBUNG EL 12L M18 | 24 71 286 02 | 604 | 3 | 2 975 152 | 91 05 737 08 | HYDRAULIK TELE |
| VERSCHRAUBUNG EL 12S C | 76 17 461 | 740 | 3 | 1 970 | 96 71 367 08 | HYDRAULIK UNTERWAGEN |
| VERSCHRAUBUNG EL 12S C | 76 17 461 | 711 | 1 | 2 970 | 91 55 482 08 | HYDRAULIK |
| VERSCHRAUBUNG EL 15L CR6 | 47 23 004 14 | 602 | 1 | 2 970 | 91 55 482 08 | HYDRAULIK |
| VERSCHRAUBUNG EL 15L CR6 | 47 23 004 14 | 606 | 1 | 2 971 | 91 50 610 08 | HYDRAULIK HILFSHUBWERK |
| VERSCHRAUBUNG EL 16S C | 74 07 098 | 760 | 1 | 1 970 | 96 71 367 08 | HYDRAULIK UNTERWAGEN |
| VERSCHRAUBUNG EL 16S C | 74 07 098 | 619 | 4 | 2 970 | 91 55 482 08 | HYDRAULIK |
| VERSCHRAUBUNG EL 18L CR6 | 24 71 285 02 | 759 | 1 | 1 970 | 96 71 367 08 | HYDRAULIK UNTERWAGEN |
| VERSCHRAUBUNG EL 18L CR6 | 24 71 285 02 | 612 | 5 | 2 970 | 91 55 482 08 | HYDRAULIK |
| VERSCHRAUBUNG EL 18L CR6 | 24 71 285 02 | 630 | 1 | 2 971 | 91 50 610 08 | HYDRAULIK HILFSHUBWERK |
| VERSCHRAUBUNG EL 22L CR6 | 24 71 386 02 | 702 | 1 | 2 970 | 91 55 482 08 | HYDRAULIK |
| VERSCHRAUBUNG EL 28L CR6 | 74 07 120 | 637 | 1 | 2 970 | 91 55 482 08 | HYDRAULIK |
| VERSCHRAUBUNG ELSD38-S | 47 23 319 08 | 648 | 1 | 2 970 | 91 55 482 08 | HYDRAULIK |
| VERSCHRAUBUNG ELSD6-S | 47 23 312 08 | 660 | 3 | 2 970 | 91 55 482 08 | HYDRAULIK |
| VERSCHRAUBUNG ELSD6-S | 47 23 312 08 | 627 | 1 | 2 971 | 91 50 610 08 | HYDRAULIK HILFSHUBWERK |

| Bezeichnung | Artikel | Pos. | Menge | Seite | Baugruppe | Bezeichnung |
|---|---|---|---|---|---|---|
| VERSCHRAUBUNG ELSD6-S | 47 23 312 08 | 605 | 1 | 2 975 038 | 91 26 492 08 | ZUSATZHYDRAULIK KLAPPSPI |
| VERSCHRAUBUNG ET 12L M18 | 24 71 056 02 | 642 | 2 | 2 970 | 91 55 482 08 | HYDRAULIK |
| VERSCHRAUBUNG ET 15L M22 | 47 24 304 08 | 606 | 2 | 2 970 | 91 55 482 08 | HYDRAULIK |
| VERSCHRAUBUNG ET 18L CR6 | 24 71 084 02 | 683 | 2 | 2 970 | 91 55 482 08 | HYDRAULIK |
| VERSCHRAUBUNG ET 6S CR6 | 47 24 312 08 | 730 | 1 | 2 970 | 91 55 482 08 | HYDRAULIK |
| VERSCHRAUBUNG EW 10L M | 74 03 569 | 701 | 1 | 1 970 | 96 71 367 08 | HYDRAULIK UNTERWAGEN |
| VERSCHRAUBUNG EW 10L M | 74 03 569 | 606 | 1 | 2 950 | 91 49 515 08 | DRUCKLUFTANLAGE OW |
| VERSCHRAUBUNG EW 10L M | 74 03 569 | 607 | 2 | 2 955 | 91 49 516 08 | PNEUMATIK KRANFUEHRERK |
| VERSCHRAUBUNG EW 10L M | 74 03 569 | 636 | 8 | 2 970 | 91 55 482 08 | HYDRAULIK |
| VERSCHRAUBUNG EW 10L M | 74 03 569 | 613 | 2 | 2 971 | 91 50 610 08 | HYDRAULIK HILFSHUBWERK |
| VERSCHRAUBUNG EW 10L M | 74 03 569 | 606 | 8 | 2 975 152 | 91 05 737 08 | HYDRAULIK TELE |
| VERSCHRAUBUNG EW 10S C | 76 17 268 | 743 | 4 | 1 970 | 96 71 367 08 | HYDRAULIK UNTERWAGEN |
| VERSCHRAUBUNG EW 10S C | 76 17 268 | 715 | 3 | 2 970 | 91 55 482 08 | HYDRAULIK |
| VERSCHRAUBUNG EW 10S C | 76 17 268 | 603 | 3 | 2 975 038 | 91 26 492 08 | ZUSATZHYDRAULIK KLAPPSPI |
| VERSCHRAUBUNG EW 12L M | 24 71 177 02 | 631 | 5 | 2 970 | 91 55 482 08 | HYDRAULIK |
| VERSCHRAUBUNG EW 12L M | 24 71 177 02 | 610 | 2 | 2 971 | 91 50 610 08 | HYDRAULIK HILFSHUBWERK |
| VERSCHRAUBUNG EW 12L M | 24 71 177 02 | 611 | 1 | 2 975 152 | 91 05 737 08 | HYDRAULIK TELE |
| VERSCHRAUBUNG EW 12S C | 76 17 354 | 744 | 2 | 1 970 | 96 71 367 08 | HYDRAULIK UNTERWAGEN |
| VERSCHRAUBUNG EW 12S C | 76 17 354 | 709 | 4 | 2 970 | 91 55 482 08 | HYDRAULIK |
| VERSCHRAUBUNG EW 12S C | 76 17 354 | 607 | 1 | 2 975 038 | 91 26 492 08 | ZUSATZHYDRAULIK KLAPPSPI |
| VERSCHRAUBUNG EW 15L C | 76 15 379 | 607 | 2 | 2 970 | 91 55 482 08 | HYDRAULIK |
| VERSCHRAUBUNG EW 16S C | 76 17 460 | 745 | 3 | 1 970 | 96 71 367 08 | HYDRAULIK UNTERWAGEN |
| VERSCHRAUBUNG EW 16S C | 76 17 460 | 616 | 6 | 2 970 | 91 55 482 08 | HYDRAULIK |
| VERSCHRAUBUNG EW 18L M | 24 71 083 02 | 602 | 3 | 2 950 | 91 49 515 08 | DRUCKLUFTANLAGE OW |
| VERSCHRAUBUNG EW 18L M | 24 71 083 02 | 623 | 4 | 2 970 | 91 55 482 08 | HYDRAULIK |
| VERSCHRAUBUNG EW 20S C | 74 07 108 | 746 | 1 | 1 970 | 96 71 367 08 | HYDRAULIK UNTERWAGEN |
| VERSCHRAUBUNG EW 20S C | 74 07 108 | 734 | 1 | 2 970 | 91 55 482 08 | HYDRAULIK |
| VERSCHRAUBUNG EW 25S C | 74 07 119 | 747 | 1 | 1 970 | 96 71 367 08 | HYDRAULIK UNTERWAGEN |
| VERSCHRAUBUNG EW 6L CR6 | 24 70 217 02 | 613 | 1 | 2 955 | 91 49 516 08 | PNEUMATIK KRANFUEHRERK |
| VERSCHRAUBUNG EW 6L CR6 | 24 70 217 02 | 677 | 3 | 2 970 | 91 55 482 08 | HYDRAULIK |
| VERSCHRAUBUNG EW 6L CR6 | 24 70 217 02 | 611 | 1 | 2 975 038 | 91 26 492 08 | ZUSATZHYDRAULIK KLAPPSPI |
| VERSCHRAUBUNG EW 6S M14 | 47 25 315 08 | 606 | 4 | 2 955 | 91 49 516 08 | PNEUMATIK KRANFUEHRERK |
| VERSCHRAUBUNG EW 6S M14 | 47 25 315 08 | 657 | 8 | 2 970 | 91 55 482 08 | HYDRAULIK |
| VERSCHRAUBUNG EW 6S M14 | 47 25 315 08 | 643 | 1 | 2 971 | 91 50 610 08 | HYDRAULIK HILFSHUBWERK |
| VERSCHRAUBUNG EW 6S M14 | 47 25 315 08 | 606 | 1 | 2 975 038 | 91 26 492 08 | ZUSATZHYDRAULIK KLAPPSPI |
| VERSCHRAUBUNG EWSD22-L | 47 25 306 08 | 701 | 2 | 2 970 | 91 55 482 08 | HYDRAULIK |
| VERSCHRAUBUNG EWSD22-L | 47 25 306 08 | 9 | 1 | X1011766 | 10 11 766 5 | ROHRLEITUNG |
| VERSCHRAUBUNG EWSD38-S | 47 25 318 08 | 639 | 10 | 2 970 | 91 55 482 08 | HYDRAULIK |
| VERSCHRAUBUNG EWSD38-S | 47 25 318 08 | 621 | 4 | 2 971 | 91 50 610 08 | HYDRAULIK HILFSHUBWERK |
| VERSCHRAUBUNG G 6LL | 77 43 742 08 | 11 | 1 | 2 711 | 91 53 002 08 | ZENTRALSCHMIERANLAGE O |
| VERSCHRAUBUNG GA6-LM22X | 50 29 461 08 | 614 | 1 | 2 955 | 91 49 516 08 | PNEUMATIK KRANFUEHRERK |
| VERSCHRAUBUNG GE 10 M1 | 10 81 393 6 | 40 | 5 | X1011573 | 10 11 573 7 | KRAFTSTOFFLEITUNGEN |
| VERSCHRAUBUNG GE 10 M1 | 10 81 393 7 | 43 | 2 | X1011573 | 10 11 573 7 | KRAFTSTOFFLEITUNGEN |
| VERSCHRAUBUNG GE 12 M1 | 10 81 394 0 | 37 | 3 | X1011573 | 10 11 573 7 | KRAFTSTOFFLEITUNGEN |
| VERSCHRAUBUNG GE 12S G1/ | 47 10 326 08 | 700 | 1 | 1 423 101 | 99 26 462 14 | JACK-UP SYSTEM |
| VERSCHRAUBUNG GE 12S G1/ | 47 10 326 08 | 713 | 3 | 1 970 | 96 71 367 08 | HYDRAULIK UNTERWAGEN |
| VERSCHRAUBUNG GE 12S G1/ | 47 10 326 08 | 707 | 8 | 2 970 | 91 55 482 08 | HYDRAULIK |
| VERSCHRAUBUNG GE 12S G3/ | 47 10 327 08 | 701 | 8 | 1 423 101 | 99 26 462 14 | JACK-UP SYSTEM |
| VERSCHRAUBUNG GE 18L M | 47 10 311 08 | 712 | 1 | 1 970 | 96 71 367 08 | HYDRAULIK UNTERWAGEN |
| VERSCHRAUBUNG GE 18L M | 47 10 311 08 | 600 | 5 | 2 950 | 91 49 515 08 | DRUCKLUFTANLAGE OW |
| VERSCHRAUBUNG GE 18L M | 47 10 311 08 | 685 | 1 | 2 970 | 91 55 482 08 | HYDRAULIK |
| VERSCHRAUBUNG GEF.A M2 | 10 49 347 9 | 57 | 1 | X1047300 | 10 47 300 1 | TELESKOPZYLINDER |
| VERSCHRAUBUNG GR 22/18L | 47 50 307 08 | 724 | 1 | 2 970 | 91 55 482 08 | HYDRAULIK |
| VERSCHRAUBUNG GZ 15L A3 | 47 00 112 08 | 608 | 1 | 2 970 | 91 55 482 08 | HYDRAULIK |
| VERSCHRAUBUNG GZ 18L C | 47 00 104 08 | 725 | 2 | 2 970 | 91 55 482 08 | HYDRAULIK |
| VERSCHRAUBUNG ISO 8434 | 48 23 318 14 | 741 | 4 | 1 970 | 96 71 367 08 | HYDRAULIK UNTERWAGEN |
| VERSCHRAUBUNG ISO 8434 | 48 23 308 14 | 697 | 1 | 2 970 | 91 55 482 08 | HYDRAULIK |
| VERSCHRAUBUNG ISO 8434 | 48 23 308 14 | 603 | 1 | 2 971 | 91 50 610 08 | HYDRAULIK HILFSHUBWERK |
| VERSCHRAUBUNG ISO 8434 | 48 24 303 14 | 612 | 2 | 2 955 | 91 49 516 08 | PNEUMATIK KRANFUEHRERK |
| VERSCHRAUBUNG ISO 8434 | 48 24 303 14 | 692 | 1 | 2 970 | 91 55 482 08 | HYDRAULIK |

| Bezeichnung | Artikel | Pos. | Menge | Seite | Baugruppe | Bezeichnung |
|---|---|---|---|---|---|---|
| VERSCHRAUBUNG ISO 8434 | 48 24 303 14 | 623 | 1 | 2 971 | 91 50 610 08 | HYDRAULIK HILFSHUBWERK |
| VERSCHRAUBUNG ISO 8434 | 48 24 313 14 | 742 | 2 | 1 970 | 96 71 367 08 | HYDRAULIK UNTERWAGEN |
| VERSCHRAUBUNG ISO 8434 | 48 24 313 14 | 717 | 2 | 2 970 | 91 55 482 08 | HYDRAULIK |
| VERSCHRAUBUNG ISO 8434 | 48 24 314 14 | 712 | 3 | 2 970 | 91 55 482 08 | HYDRAULIK |
| VERSCHRAUBUNG ISO 8434 | 48 24 315 14 | 729 | 1 | 2 970 | 91 55 482 08 | HYDRAULIK |
| VERSCHRAUBUNG ISO 8434 | 48 24 318 14 | 670 | 1 | 2 970 | 91 55 482 08 | HYDRAULIK |
| VERSCHRAUBUNG ISO 8434 | 48 24 318 14 | 629 | 1 | 2 971 | 91 50 610 08 | HYDRAULIK HILFSHUBWERK |
| VERSCHRAUBUNG ISO 8434 | 48 25 316 14 | 661 | 2 | 2 970 | 91 55 482 08 | HYDRAULIK |
| VERSCHRAUBUNG ISO 8434 | 48 25 309 14 | 668 | 3 | 2 970 | 91 55 482 08 | HYDRAULIK |
| VERSCHRAUBUNG ISO 8434 | 48 25 308 14 | 666 | 4 | 2 970 | 91 55 482 08 | HYDRAULIK |
| VERSCHRAUBUNG ISO 8434 G | 47 10 045 14 | 716 | 2 | 2 970 | 91 55 482 08 | HYDRAULIK |
| VERSCHRAUBUNG ISO 8434 | 47 10 082 14 | 758 | 6 | 1 970 | 96 71 367 08 | HYDRAULIK UNTERWAGEN |
| VERSCHRAUBUNG ISO 8434 | 47 40 024 14 | 703 | 8 | 1 423 101 | 99 26 462 14 | JACK-UP SYSTEM |
| VERSCHRAUBUNG ISO 8434 V | 47 77 005 14 | 705 | 8 | 1 423 101 | 99 26 462 14 | JACK-UP SYSTEM |
| VERSCHRAUBUNG ISO 8434-1 | 73 62 091 | 711 | 1 | 1 970 | 96 71 367 08 | HYDRAULIK UNTERWAGEN |
| VERSCHRAUBUNG ISO 8434-1 | 73 62 091 | 643 | 12 | 2 970 | 91 55 482 08 | HYDRAULIK |
| VERSCHRAUBUNG ISO 8434-1 | 73 62 091 | 601 | 3 | 2 971 | 91 50 610 08 | HYDRAULIK HILFSHUBWERK |
| VERSCHRAUBUNG ISO 8434-1 | 73 62 091 | 608 | 4 | 2 975 152 | 91 05 737 08 | HYDRAULIK TELE |
| VERSCHRAUBUNG ISO 8434-1 | 47 10 397 08 | 603 | 1 | 2 950 | 91 49 515 08 | DRUCKLUFTANLAGE OW |
| VERSCHRAUBUNG ISO 8434-1 | 47 10 397 08 | 605 | 2 | 2 955 | 91 49 516 08 | PNEUMATIK KRANFUEHRERK |
| VERSCHRAUBUNG ISO 8434-1 | 47 10 397 08 | 610 | 4 | 2 970 | 91 55 482 08 | HYDRAULIK |
| VERSCHRAUBUNG ISO 8434-1 | 47 10 397 08 | 614 | 1 | 2 971 | 91 50 610 08 | HYDRAULIK HILFSHUBWERK |
| VERSCHRAUBUNG ISO 8434-1 | 49 81 235 | 10 | 2 | X1011832 | 10 11 832 6 | ATL-ANBAU |
| VERSCHRAUBUNG ISO 8434-1 | 49 81 235 | 3 | 1 | X1011888 | 10 11 888 4 | OELMESSSTAB MIT ROHR |
| VERSCHRAUBUNG ISO 8434-1 | 47 10 328 08 | 714 | 5 | 1 970 | 96 71 367 08 | HYDRAULIK UNTERWAGEN |
| VERSCHRAUBUNG ISO 8434-1 | 47 10 328 08 | 714 | 2 | 2 970 | 91 55 482 08 | HYDRAULIK |
| VERSCHRAUBUNG ISO 8434-1 | 47 10 328 08 | 609 | 1 | 2 975 038 | 91 26 492 08 | ZUSATZHYDRAULIK KLAPPSPI |
| VERSCHRAUBUNG ISO 8434-1 | 47 10 307 08 | 675 | 1 | 2 970 | 91 55 482 08 | HYDRAULIK |
| VERSCHRAUBUNG ISO 8434-1 | 49 81 233 | 16 | 1 | X1011793 | 10 11 793 0 | ANBAUTEILE LUFTPRESSER |
| VERSCHRAUBUNG ISO 8434-1 | 49 81 233 | 9 | 2 | X1011997 | 10 11 997 6 | NEBENABTRIEB ANBAU |
| VERSCHRAUBUNG NACHAR | 97 42 614 08 | (2) | 2 | 2 520 000 | 91 49 872 08 | KABINE VERGLAST |
| VERSCHRAUBUNG RD70X70 | 95 36 414 08 | 403 | 1 | 2 210 | 91 81 614 08 | ANTRIEBSAGGREGAT VORM. |
| VERSCHRAUBUNG RED 15/10 | 47 54 301 08 | 603 | 2 | 2 970 | 91 55 482 08 | HYDRAULIK |
| VERSCHRAUBUNG RED 15/12L | 47 54 318 08 | 607 | 1 | 2 971 | 91 50 610 08 | HYDRAULIK HILFSHUBWERK |
| VERSCHRAUBUNG RED 18/15 | 47 54 356 08 | 613 | 1 | 2 970 | 91 55 482 08 | HYDRAULIK |
| VERSCHRAUBUNG RED 18/15 | 47 54 356 08 | 639 | 1 | 2 971 | 91 50 610 08 | HYDRAULIK HILFSHUBWERK |
| VERSCHRAUBUNG RED 42/18L | 47 54 317 08 | 622 | 1 | 2 970 | 91 55 482 08 | HYDRAULIK |
| VERSCHRAUBUNG REDSD12/1 | 47 54 314 08 | 681 | 2 | 2 970 | 91 55 482 08 | HYDRAULIK |
| VERSCHRAUBUNG REDSD12/1 | 47 54 314 08 | 612 | 1 | 2 971 | 91 50 610 08 | HYDRAULIK HILFSHUBWERK |
| VERSCHRAUBUNG REDSD12/1 | 47 54 314 08 | 605 | 4 | 2 975 152 | 91 05 737 08 | HYDRAULIK TELE |
| VERSCHRAUBUNG REDSD12/ | 47 54 329 08 | 713 | 3 | 2 970 | 91 55 482 08 | HYDRAULIK |
| VERSCHRAUBUNG REDSD16/1 | 47 54 333 08 | 749 | 4 | 1 970 | 96 71 367 08 | HYDRAULIK UNTERWAGEN |
| VERSCHRAUBUNG REDSD16/1 | 47 54 333 08 | 620 | 2 | 2 970 | 91 55 482 08 | HYDRAULIK |
| VERSCHRAUBUNG REDSD16/ | 47 54 331 08 | 634 | 1 | 2 970 | 91 55 482 08 | HYDRAULIK |
| VERSCHRAUBUNG REDSD18/1 | 47 54 303 08 | 753 | 1 | 1 970 | 96 71 367 08 | HYDRAULIK UNTERWAGEN |
| VERSCHRAUBUNG REDSD18/1 | 47 54 363 08 | 689 | 1 | 2 970 | 91 55 482 08 | HYDRAULIK |
| VERSCHRAUBUNG REDSD18/ | 47 54 307 08 | 684 | 1 | 2 970 | 91 55 482 08 | HYDRAULIK |
| VERSCHRAUBUNG REDSD20/1 | 47 54 348 08 | 752 | 1 | 1 970 | 96 71 367 08 | HYDRAULIK UNTERWAGEN |
| VERSCHRAUBUNG REDSD22/1 | 47 54 360 08 | 720 | 1 | 2 970 | 91 55 482 08 | HYDRAULIK |
| VERSCHRAUBUNG REDSD30/1 | 47 54 339 08 | 750 | 4 | 1 970 | 96 71 367 08 | HYDRAULIK UNTERWAGEN |
| VERSCHRAUBUNG REDSD35/2 | 47 54 304 08 | 667 | 3 | 2 970 | 91 55 482 08 | HYDRAULIK |
| VERSCHRAUBUNG REDSD38/ | 47 54 081 08 | 651 | 1 | 2 970 | 91 55 482 08 | HYDRAULIK |
| VERSCHRAUBUNG REDSD42/3 | 47 54 367 08 | 726 | 1 | 2 970 | 91 55 482 08 | HYDRAULIK |
| VERSCHRAUBUNG REDSDN1 | 47 54 320 08 | 751 | 2 | 1 970 | 96 71 367 08 | HYDRAULIK UNTERWAGEN |
| VERSCHRAUBUNG REDSDN1 | 47 54 320 08 | 604 | 2 | 2 975 038 | 91 26 492 08 | ZUSATZHYDRAULIK KLAPPSPI |
| VERSCHRAUBUNG REDSDN1 | 47 54 302 08 | 676 | 2 | 2 970 | 91 55 482 08 | HYDRAULIK |
| VERSCHRAUBUNG REDSDN20 | 47 54 321 08 | 615 | 3 | 2 970 | 91 55 482 08 | HYDRAULIK |
| VERSCHRAUBUNG REDSDN25 | 47 54 323 08 | 748 | 1 | 1 970 | 96 71 367 08 | HYDRAULIK UNTERWAGEN |
| VERSCHRAUBUNG REDSDN38 | 47 54 353 08 | 653 | 5 | 2 970 | 91 55 482 08 | HYDRAULIK |
| VERSCHRAUBUNG REDSDN4 | 47 54 313 08 | 694 | 2 | 2 970 | 91 55 482 08 | HYDRAULIK |

| Bezeichnung | Artikel | Pos. | Menge | Seite | Baugruppe | Bezeichnung |
|---|---|---|---|---|---|---|
| VERSCHRAUBUNG RI G1AXG1 | 47 55 007 08 | 702 | 4 | 1 970 | 96 71 367 08 | HYDRAULIK UNTERWAGEN |
| VERSCHRAUBUNG RI M22X1, | 73 81 363 | 4 | 2 | 9 080 294 | 90 80 294 | LUFTPRESSER VORM. |
| VERSCHRAUBUNG RI M22X1, | 73 81 363 | 5 | 2 | X1011793 | 10 11 793 0 | ANBAUTEILE LUFTPRESSER |
| VERSCHRAUBUNG RSWS10- | 47 66 102 08 | 719 | 1 | 2 970 | 91 55 482 08 | HYDRAULIK |
| VERSCHRAUBUNG RSWS10- | 47 32 305 08 | 723 | 1 | 2 970 | 91 55 482 08 | HYDRAULIK |
| VERSCHRAUBUNG RSWS10- | 47 32 105 08 | 602 | 1 | 2 975 038 | 91 26 492 08 | ZUSATZHYDRAULIK KLAPPSPI |
| VERSCHRAUBUNG RSWS16- | 47 32 312 08 | 756 | 4 | 1 970 | 96 71 367 08 | HYDRAULIK UNTERWAGEN |
| VERSCHRAUBUNG RSWS16- | 47 32 312 08 | 665 | 2 | 2 970 | 91 55 482 08 | HYDRAULIK |
| VERSCHRAUBUNG RSWS18- | 47 66 106 08 | 706 | 1 | 2 970 | 91 55 482 08 | HYDRAULIK |
| VERSCHRAUBUNG RSWS20- | 47 66 110 08 | 674 | 2 | 2 970 | 91 55 482 08 | HYDRAULIK |
| VERSCHRAUBUNG RSWS6-SR | 47 32 306 08 | 671 | 4 | 2 970 | 91 55 482 08 | HYDRAULIK |
| VERSCHRAUBUNG SNV10-L | 47 00 101 08 | 615 | 1 | 2 955 | 91 49 516 08 | PNEUMATIK KRANFUEHRERK |
| VERSCHRAUBUNG SNV10-L | 47 00 101 08 | 691 | 2 | 2 970 | 91 55 482 08 | HYDRAULIK |
| VERSCHRAUBUNG SNV10-S | 47 00 102 08 | 721 | 3 | 1 970 | 96 71 367 08 | HYDRAULIK UNTERWAGEN |
| VERSCHRAUBUNG SNV12-L | 47 00 113 08 | 627 | 2 | 2 970 | 91 55 482 08 | HYDRAULIK |
| VERSCHRAUBUNG SNV12-L | 47 00 113 08 | 609 | 1 | 2 971 | 91 50 610 08 | HYDRAULIK HILFSHUBWERK |
| VERSCHRAUBUNG SNV12-S | 47 00 103 08 | 722 | 10 | 1 970 | 96 71 367 08 | HYDRAULIK UNTERWAGEN |
| VERSCHRAUBUNG SNV30-S | 47 00 111 08 | 720 | 4 | 1 970 | 96 71 367 08 | HYDRAULIK UNTERWAGEN |
| VERSCHRAUBUNG SNV30-S | 47 00 111 08 | 662 | 2 | 2 970 | 91 55 482 08 | HYDRAULIK |
| VERSCHRAUBUNG SNV38-S | 47 00 107 08 | 669 | 1 | 2 970 | 91 55 482 08 | HYDRAULIK |
| VERSCHRAUBUNG SNV38-S | 47 00 107 08 | 620 | 4 | 2 971 | 91 50 610 08 | HYDRAULIK HILFSHUBWERK |
| VERSCHRAUBUNG SV 18L C | 47 40 307 08 | 611 | 1 | 2 970 | 91 55 482 08 | HYDRAULIK |
| VERSCHRAUBUNG T 42L A3C | 47 04 314 08 | 621 | 2 | 2 970 | 91 55 482 08 | HYDRAULIK |
| VERSCHRAUBUNG W 20S CR6 | 47 02 327 08 | 727 | 1 | 2 970 | 91 55 482 08 | HYDRAULIK |
| VERSCHRAUBUNG W 28L A3C | 47 02 308 08 | 728 | 1 | 2 970 | 91 55 482 08 | HYDRAULIK |
| VERSCHRAUBUNG W 35L A3C | 47 02 311 08 | 696 | 1 | 2 970 | 91 55 482 08 | HYDRAULIK |
| VERSCHRAUBUNG WE 6LL M1 | 77 43 738 08 | 2 | 1 | X1100291 | 11 00 291 4 | VERTEILERKOMBINATION |
| VERSCHRAUBUNG WSV 12S | 47 42 324 08 | 727 | 4 | 1 970 | 96 71 367 08 | HYDRAULIK UNTERWAGEN |
| VERSCHRAUBUNG XG10-S A3 | 47 00 324 08 | 649 | 3 | 2 970 | 91 55 482 08 | HYDRAULIK |
| VERSCHRAUBUNG XG16-S A3 | 47 00 327 08 | 626 | 1 | 2 970 | 91 55 482 08 | HYDRAULIK |
| VERSCHRAUBUNG XG20-S A3 | 47 00 328 08 | 707 | 1 | 1 970 | 96 71 367 08 | HYDRAULIK UNTERWAGEN |
| VERSCHRAUBUNG XG28-L A3 | 47 00 308 08 | 700 | 1 | 1 970 | 96 71 367 08 | HYDRAULIK UNTERWAGEN |
| VERSCHRAUBUNG XG30-S CF | 47 00 330 08 | 708 | 4 | 1 970 | 96 71 367 08 | HYDRAULIK UNTERWAGEN |
| VERSCHRAUBUNG XG38-S A3 | 47 00 331 08 | 647 | 3 | 2 970 | 91 55 482 08 | HYDRAULIK |
| VERSCHRAUBUNG XG38-S A3 | 47 00 331 08 | 640 | 1 | 2 971 | 91 50 610 08 | HYDRAULIK HILFSHUBWERK |
| VERSCHRAUBUNG XG42-L A3 | 47 00 309 08 | 698 | 1 | 2 970 | 91 55 482 08 | HYDRAULIK |
| VERSCHRAUBUNG XGAI12-LR | 47 07 013 08 | 690 | 1 | 2 970 | 91 55 482 08 | HYDRAULIK |
| VERSCHRAUBUNG XGAI6-LM | 47 07 300 08 | 28 | 1 | 9 387 070 | 93 87 070 01 | KOMPAKTSEILWINDE |
| VERSCHRAUBUNG XGAI6-SR | 47 07 002 08 | 659 | 2 | 2 970 | 91 55 482 08 | HYDRAULIK |
| VERSCHRAUBUNG XGE10-LM | 47 10 305 08 | 617 | 1 | 2 970 | 91 55 482 08 | HYDRAULIK |
| VERSCHRAUBUNG XGE10-LM | 47 10 398 08 | 605 | 2 | 2 950 | 91 49 515 08 | DRUCKLUFTANLAGE OW |
| VERSCHRAUBUNG XGE10-LM | 47 10 398 08 | 601 | 1 | 2 955 | 91 49 516 08 | PNEUMATIK KRANFUEHRERK |
| VERSCHRAUBUNG XGE10-LR | 47 10 396 08 | 709 | 1 | 1 970 | 96 71 367 08 | HYDRAULIK UNTERWAGEN |
| VERSCHRAUBUNG XGE10-LR | 47 10 396 08 | 673 | 1 | 2 970 | 91 55 482 08 | HYDRAULIK |
| VERSCHRAUBUNG XGE10-LR | 47 10 396 08 | 622 | 1 | 2 971 | 91 50 610 08 | HYDRAULIK HILFSHUBWERK |
| VERSCHRAUBUNG XGE12-LR | 47 10 308 08 | 645 | 4 | 2 970 | 91 55 482 08 | HYDRAULIK |
| VERSCHRAUBUNG XGE12-LR | 47 10 308 08 | 600 | 1 | 2 971 | 91 50 610 08 | HYDRAULIK HILFSHUBWERK |
| VERSCHRAUBUNG XGE12-LR | 47 10 348 08 | 708 | 3 | 2 970 | 91 55 482 08 | HYDRAULIK |
| VERSCHRAUBUNG XGE12-LR | 47 10 348 08 | 603 | 4 | 2 975 152 | 91 05 737 08 | HYDRAULIK TELE |
| VERSCHRAUBUNG XGE12-LR | 47 10 353 08 | 658 | 4 | 2 970 | 91 55 482 08 | HYDRAULIK |
| VERSCHRAUBUNG XGE15-LM | 47 10 309 08 | 5 | 2 | 2 270 001 | 96 37 923 08 | KRAFTSTOFFBEHAELTER VO |
| VERSCHRAUBUNG XGE15-LR | 47 10 310 08 | 601 | 3 | 2 970 | 91 55 482 08 | HYDRAULIK |
| VERSCHRAUBUNG XGE16-SM | 47 10 330 08 | 715 | 3 | 1 970 | 96 71 367 08 | HYDRAULIK UNTERWAGEN |
| VERSCHRAUBUNG XGE16-SR | 47 10 332 08 | 717 | 3 | 1 970 | 96 71 367 08 | HYDRAULIK UNTERWAGEN |
| VERSCHRAUBUNG XGE16-SR | 47 10 332 08 | 629 | 7 | 2 970 | 91 55 482 08 | HYDRAULIK |
| VERSCHRAUBUNG XGE16-SR | 47 10 332 08 | 602 | 1 | 2 975 152 | 91 05 737 08 | HYDRAULIK TELE |
| VERSCHRAUBUNG XGE16-SR | 47 10 331 08 | 716 | 2 | 1 970 | 96 71 367 08 | HYDRAULIK UNTERWAGEN |
| VERSCHRAUBUNG XGE16-SR | 47 10 331 08 | 624 | 1 | 2 970 | 91 55 482 08 | HYDRAULIK |
| VERSCHRAUBUNG XGE18-LM | 47 66 078 08 | 601 | 1 | 2 950 | 91 49 515 08 | DRUCKLUFTANLAGE OW |
| VERSCHRAUBUNG XGE18-LR | 47 10 312 08 | 633 | 2 | 2 970 | 91 55 482 08 | HYDRAULIK |

| Bezeichnung | Artikel | Pos. | Menge | Seite | Baugruppe | Bezeichnung |
|---|---|---|---|---|---|---|
| VERSCHRAUBUNG XGE18-LR | 47 10 375 08 | 635 | 1 | 2 970 | 91 55 482 08 | HYDRAULIK |
| VERSCHRAUBUNG XGE20-SM | 47 10 333 08 | 718 | 1 | 1 970 | 96 71 367 08 | HYDRAULIK UNTERWAGEN |
| VERSCHRAUBUNG XGE22-LM | 10 03 689 6 | 401 | 1 | 2 210 | 91 81 614 08 | ANTRIEBSAGGREGAT VORM. |
| VERSCHRAUBUNG XGE22-LM | 47 10 313 08 | 2 | 1 | X1011766 | 10 11 766 5 | ROHRLEITUNG |
| VERSCHRAUBUNG XGE25-SM | 47 10 335 08 | 719 | 1 | 1 970 | 96 71 367 08 | HYDRAULIK UNTERWAGEN |
| VERSCHRAUBUNG XGE28-LM | 47 10 315 08 | 614 | 2 | 2 970 | 91 55 482 08 | HYDRAULIK |
| VERSCHRAUBUNG XGE42-LR | 47 10 347 08 | 640 | 2 | 2 970 | 91 55 482 08 | HYDRAULIK |
| VERSCHRAUBUNG XGE6-LM-E | 47 10 301 08 | 678 | 2 | 2 970 | 91 55 482 08 | HYDRAULIK |
| VERSCHRAUBUNG XGE6-LR-E | 47 10 300 08 | 611 | 2 | 2 955 | 91 49 516 08 | PNEUMATIK KRANFUEHRERK |
| VERSCHRAUBUNG XGE6-LR-E | 47 10 300 08 | 688 | 1 | 2 970 | 91 55 482 08 | HYDRAULIK |
| VERSCHRAUBUNG XGE6-LR-E | 47 10 300 08 | 616 | 1 | 2 971 | 91 50 610 08 | HYDRAULIK HILFSHUBWERK |
| VERSCHRAUBUNG XGE6-LR-E | 47 10 300 08 | 610 | 1 | 2 975 038 | 91 26 492 08 | ZUSATZHYDRAULIK KLAPPSPI |
| VERSCHRAUBUNG XGE6-SM-E | 47 10 302 08 | 603 | 4 | 2 955 | 91 49 516 08 | PNEUMATIK KRANFUEHRERK |
| VERSCHRAUBUNG XGE6-SR-E | 47 10 321 08 | 3 | 3 | 2 440 012 | 92 14 441 08 | ZENTRALSCHMIERANLAGE |
| VERSCHRAUBUNG XGE6-SR-E | 47 10 321 08 | 652 | 5 | 2 970 | 91 55 482 08 | HYDRAULIK |
| VERSCHRAUBUNG XGE6-SR-E | 47 10 321 08 | 604 | 2 | 2 971 | 91 50 610 08 | HYDRAULIK HILFSHUBWERK |
| VERSCHRAUBUNG XGE6-SR-E | 47 10 321 08 | 600 | 1 | 2 975 152 | 91 05 737 08 | HYDRAULIK TELE |
| VERSCHRAUBUNG XGEV38- | 47 10 344 08 | 638 | 11 | 2 970 | 91 55 482 08 | HYDRAULIK |
| VERSCHRAUBUNG XGEV38- | 47 10 344 08 | 602 | 1 | 2 971 | 91 50 610 08 | HYDRAULIK HILFSHUBWERK |
| VERSCHRAUBUNG XGR15/12- | 47 50 317 08 | 718 | 1 | 2 970 | 91 55 482 08 | HYDRAULIK |
| VERSCHRAUBUNG XGR20/16- | 47 50 336 08 | 680 | 1 | 2 970 | 91 55 482 08 | HYDRAULIK |
| VERSCHRAUBUNG XSV10-L A3 | 47 40 303 08 | 609 | 1 | 2 970 | 91 55 482 08 | HYDRAULIK |
| VERSCHRAUBUNG XSV12-S | 47 40 324 08 | 724 | 6 | 1 970 | 96 71 367 08 | HYDRAULIK UNTERWAGEN |
| VERSCHRAUBUNG XSV15-L A3 | 47 40 305 08 | 605 | 1 | 2 970 | 91 55 482 08 | HYDRAULIK |
| VERSCHRAUBUNG XSV16-S | 47 40 326 08 | 725 | 2 | 1 970 | 96 71 367 08 | HYDRAULIK UNTERWAGEN |
| VERSCHRAUBUNG XSV30-S | 47 40 329 08 | 726 | 4 | 1 970 | 96 71 367 08 | HYDRAULIK UNTERWAGEN |
| VERSCHRAUBUNG XT10-L A3 | 47 04 303 08 | 610 | 1 | 2 975 152 | 91 05 737 08 | HYDRAULIK TELE |
| VERSCHRAUBUNG XT38-S A3 | 47 04 330 08 | 650 | 1 | 2 970 | 91 55 482 08 | HYDRAULIK |
| VERSCHRAUBUNG XW10-L A3 | 47 02 303 08 | 612 | 1 | 2 975 152 | 91 05 737 08 | HYDRAULIK TELE |
| VERSCHRAUBUNG XW30-S A3 | 47 02 330 08 | 663 | 6 | 2 970 | 91 55 482 08 | HYDRAULIK |
| VERSCHRAUBUNG XW38-S A3 | 47 02 334 08 | 654 | 3 | 2 970 | 91 55 482 08 | HYDRAULIK |
| VERSCHRAUBUNG XW38-S A3 | 47 02 334 08 | 642 | 1 | 2 971 | 91 50 610 08 | HYDRAULIK HILFSHUBWERK |
| VERSCHRAUBUNG XW42-L A3 | 47 02 314 08 | 695 | 1 | 2 970 | 91 55 482 08 | HYDRAULIK |
| VERSTELLMOTOR A6VE 160 | 59 23 269 14 | 1 | 2 | 1 100 301 | 96 72 945 08 | HYDR.INSTALLATIONSTEILE |
| VERSTELLUNG | 10 80 175 1 | 2 | 1 | 5 923 269 | 59 23 269 14 | VERSTELLMOTOR |
| VERSTELLUNG | 57 07 565 08 | 2 | 1 | 5 530 854 | 55 30 854 08 | DREIWEGEHAHN |
| VERTEILER MASSE | 92 26 129 08 | 18 | 1 | 2 932 042 | 96 68 587 08 | GRUNDAUFBAU |
| VERTEILER MASSE | 92 68 911 08 | 17 | 1 | 2 932 042 | 96 68 587 08 | GRUNDAUFBAU |
| VERTEILERBLOCK | 10 11 755 1 | 34 | 1 | X1011573 | 10 11 573 7 | KRAFTSTOFFLEITUNGEN |
| VERTEILERKOMBINATION | 10 02 823 5 | 3 | 1 | 2 711 | 91 53 002 08 | ZENTRALSCHMIERANLAGE O |
| VERTEILERKOMBINATION 4/4 | 11 00 291 4 | 2 | 1 | 2 711 | 91 53 002 08 | ZENTRALSCHMIERANLAGE O |
| VIERKANTROHR SCHWK. T Z | 96 47 958 08 | 2 | 1 | 2 790 901 | 91 54 183 08 | AUSSTEIFUNG |
| VISKOSEDAEMPFER D934 L | 10 11 852 6 | 8 | 1 | 9 080 591 | 90 80 591 | KURBELWELLENANBAUTEILE |
| VORHAENGESCHLOSS ABUS | 88 52 515 08 | 2 | 1 | 1 750 001 | 92 85 698 08 | GRUNDWERKZEUG |
| VORHAENGESCHLOSS ABUS | 88 52 515 08 | 3 | 2 | 3 750 008 | 91 75 085 08 | LEITER ANBAU |
| WAELZLAGER 100X150X67 | 74 59 025 08 | 2 | 1 | 3 105 002 | 92 73 100 08 | SEILROLLE KPL. |
| WAELZLAGER 100X150X67 | 74 59 025 08 | 2 | 1 | 3 106 001 | 96 42 835 08 | SEILROLLE KPL. |
| WAELZLAGER 100X150X67 | 74 59 025 08 | 2 | 1 | 3 501 008 | 92 73 117 08 | SEILROLLE KPL. |
| WAELZLAGER 120X180X80 | 74 59 027 08 | 2 | 1 | 4 099 001 | 92 40 739 08 | SEILROLLE |
| WAERMETAUSCHER | 57 18 498 08 | 16 | 1 | 5 530 022 | 55 30 022 08 | WASSERHEIZGERAET |
| WALZENDUESE | 55 31 860 08 | 7 | 3 | 2 520 018 | 92 13 430 08 | ARMATURENKASTEN KPL. |
| WARNDREIECK 430X45X30 | 10 04 476 2 | 1 | 1 | 1 750 002 | 92 86 201 08 | ZUBEHOER |
| WARNSCHILD UNFALLVERH | 94 12 158 | 35 | 1 | 1 880 | 91 62 974 08 | BESCHILDERUNG SPANIEN |
| WARNWESTE DIN 30711 | 87 21 019 08 | 6 | 1 | 1 750 002 | 92 86 201 08 | ZUBEHOER |
| WASSERANSCHLUSS D934 | 10 11 722 8 | 132 | 1 | X1015207 | 10 15 207 7 | DIESELMOTOR |
| WASSERHEIZGERAET | 55 30 022 08 | 1 | 1 | 2 540 | 91 45 984 08 | HEIZUNG OW |
| WASSERPUMPE MIT BEFEST. | 90 80 345 | 370 | 1 | X1012193 | 10 12 193 2 | GRUNDMOTOR |
| WASSERPUMPE VORM. R-MO | 90 80 344 | 1 | 1 | 9 080 345 | 90 80 345 | WASSERPUMPE MIT BEFEST. |
| WASSERROHR SPF | 97 36 410 08 | 202 | 1 | 2 210 | 91 81 614 08 | ANTRIEBSAGGREGAT VORM. |
| WASSERSONDE | 10 28 018 5 | 1 | 1 | X1028018 | 10 28 018 1 | KLARSICHTBEHAELTER |

| Bezeichnung | Artikel | Pos. | Menge | Seite | Baugruppe | Bezeichnung |
|---|---|---|---|---|---|---|
| WASSERVENTIL | 57 05 449 08 | 1 | 1 | 5 530 854 | 55 30 854 08 | DREIWEGEHAHN |
| WECHSELFILTER OEL 9µm | 10 29 729 5 | 8 | 2 | 9 075 368 | 90 75 368 | SCHMIEROELFILTER ANBAU |
| WECHSELFILTER OEL 9µm | 10 29 729 5 | 1 | 2 | 9 629 047 | 96 29 047 08 | FILTERPAKET |
| WECHSELFILTER OEL 9µm | 10 29 729 5 | 1 | 2 | 9 629 049 | 96 29 049 08 | FILTERPAKET |
| WECHSELFILTER OEL 9µm | 10 29 729 5 | (1) | 2 | XSK_Z480 | SK_Z48005 | SERVICE |
| WECHSELVENTIL | 10 11 523 3 | 14 | 1 | X1080175 | 10 80 175 1 | VERSTELLUNG |
| WECHSELVENTIL | 57 15 295 08 | 28 | 1 | X1029147 | 10 29 147 4 | STEUERBLOCK |
| WECHSELVENTIL | 57 15 295 08 | 28 | 1 | X1041191 | 10 41 191 5 | VENTILBLOCK |
| WECHSELVENTIL | 57 15 295 08 | 28 | 1 | X1047529 | 10 47 529 1 | VENTILBLOCK |
| WECHSELVENTIL | 57 15 295 08 | 28 | 1 | X1047529 | 10 47 529 2 | VENTILBLOCK |
| WECHSELVENTIL 500BAR CR6 | 51 14 919 14 | 11 | 3 | 1 970 | 96 71 367 08 | HYDRAULIK UNTERWAGEN |
| WEGESCHIEBER 420BAR LH-G | 10 22 699 3 | 1 | 1 | 1 423 101 | 99 26 462 14 | JACK-UP SYSTEM |
| WEGESITZVENTIL 350BAR SP | 10 43 033 1 | 18 | 1 | 2 970 | 91 55 482 08 | HYDRAULIK |
| WEGEVENTIL | 10 47 530 0 | 27 | 1 | X1047529 | 10 47 529 1 | VENTILBLOCK |
| WEGEVENTIL | 10 47 530 0 | 27 | 1 | X1047529 | 10 47 529 2 | VENTILBLOCK |
| WEGEVENTIL | 57 18 176 08 | 2 | 4 | 5 113 078 | 51 13 078 08 | STEUERLEISTE |
| WEGEVENTIL | 57 18 889 08 | 3 | 1 | X1010109 | 10 10 109 3 | DREHWERKSVENTIL |
| WEGEVENTIL | 57 18 893 08 | 12 | 2 | X1010109 | 10 10 109 3 | DREHWERKSVENTIL |
| WEGEVENTIL | 57 18 893 08 | 32 | 2 | X1029147 | 10 29 147 4 | STEUERBLOCK |
| WEGEVENTIL | 57 18 893 08 | 32 | 4 | X1041191 | 10 41 191 5 | VENTILBLOCK |
| WEGEVENTIL | 57 18 893 08 | 32 | 2 | X1047529 | 10 47 529 1 | VENTILBLOCK |
| WEGEVENTIL | 57 18 893 08 | 32 | 2 | X1047529 | 10 47 529 2 | VENTILBLOCK |
| WEGEVENTIL 3/2 320BAR | 51 14 936 08 | 7 | 1 | 2 975 152 | 91 05 737 08 | HYDRAULIK TELE |
| WEGEVENTIL 3/2 350BAR | 51 14 444 08 | 8 | 2 | 2 970 | 91 55 482 08 | HYDRAULIK |
| WEGEVENTIL 3/2 350BAR | 51 14 444 08 | 4 | 1 | 2 971 | 91 50 610 08 | HYDRAULIK HILFSHUBWERK |
| WEGEVENTIL 350BAR | 10 41 260 5 | 31 | 2 | X1041191 | 10 41 191 5 | VENTILBLOCK |
| WEGEVENTIL 4/2 NG10-320BA | 57 17 378 08 | 20 | 1 | X1033367 | 10 33 367 2 | STEUERBLOCK |
| WEGEVENTIL 4/2 NG6-320BAR | 51 14 327 14 | 12 | 1 | 1 970 | 96 71 367 08 | HYDRAULIK UNTERWAGEN |
| WEGEVENTIL 4/2 NG6-350BAR | 57 05 279 08 | 9 | 1 | 5 114 869 | 51 14 869 08 | STEUERLEISTE |
| WEGEVENTIL 4/3 NG6-350BAR | 51 14 091 08 | 8 | 2 | 1 970 | 96 71 367 08 | HYDRAULIK UNTERWAGEN |
| WEITWINKELSPIEGEL 219X17 | 59 10 695 08 | 2 | 1 | 2 790 040 | 91 60 499 08 | SPIEGELANBAU KRANFUEHR |
| WEITWINKELSPIEGEL 316X17 | 59 10 709 08 | 1 | 1 | 2 790 | 91 68 708 08 | SPIEGELANBAU DREHBUEHN |
| WELLE | 11 00 649 1 | 20 | 1 | 6 923 101 | 69 23 101 08 | SEILLAENGENGEBER |
| WELLENDICHTRING | 10 33 585 5 | 3 | 1 | X1042993 | 10 42 993 3 | ZAHNRADMOTOR |
| WELLENDICHTRING 35X52X6/ | 70 22 315 | 14 | 1 | 5 102 294 | 51 02 294 08 | HYDROMOTOR |
| WELLENDICHTRING 35X52X6/ | 70 22 315 | 14 | 1 | 5 701 090 | 57 01 090 08 | TRIEBWERK |
| WELLENDICHTRING 50X72X7 | 70 03 478 | 14 | 1 | 5 102 407 | 51 02 407 08 | HYDROMOTOR |
| WELLROHR DN34 PP-MOD | 60 14 001 08 | (8) | 1.5 | 2 932 042 | 96 68 587 08 | GRUNDAUFBAU |
| WERKZEUG KLAPPSPITZE | 91 75 084 08 | 352 | 1 | | LTR 1100 -0 | LIEBHERR LTR 1100 |
| WERKZEUG M.ZUBEHOER | 91 48 606 08 | 55 | 1 | | LTR 1100 -0 | LIEBHERR LTR 1100 |
| WIDERSTAND 15R 5% 50W 50 | 63 50 576 08 | 15 | 1 | 2 913 005 | 96 28 696 08 | INNENGEHAEUSE VORM. |
| WIDERSTAND 30R 1% 25W | 63 50 169 08 | 35 | 5 | 2 932 095 | 96 46 064 08 | SCHWENKRAHMEN SICHERUN |
| WIDERSTAND 47R 1% 25W | 63 50 170 08 | 36 | 1 | 2 932 095 | 96 46 064 08 | SCHWENKRAHMEN SICHERUN |
| WIDERSTANDSMODUL PBTG | 10 02 485 7 | 32 | 1 | 2 932 042 | 96 68 587 08 | GRUNDAUFBAU |
| WIDERSTANDSNETZWERK 1K | 63 50 855 08 | 20 | 2 | 2 922 001 | 92 84 311 08 | BUSPLATINE |
| WIDERSTANDSNETZWERK 2 | 63 50 842 08 | 7 | 10 | 2 922 001 | 92 84 311 08 | BUSPLATINE |
| WINDE 2 SCHWK. | 96 20 465 08 | 1 | 1 | 2 440 022 | 96 42 336 08 | WINDE 2 VORM. |
| WINDE 2 VORM. | 96 42 336 08 | 1 | 1 | 2 440 | 91 52 288 08 | HILFSHUBWERK WINDE 2 |
| WINKEL | 57 16 878 08 | 18 | 1 | X1081388 | 10 81 388 6 | ZYLINDERKOPF |
| WINKEL 2.5X170X167 DC01 | 97 03 743 08 | 10 | 1 | 2 920 585 | 91 01 520 08 | ELEKTRIK BLITZLEUCHTE |
| WINKEL 2X40X95 DC01 FE//ZN | 95 38 688 08 | 17 | 2 | 2 210 | 91 81 614 08 | ANTRIEBSAGGREGAT VORM. |
| WINKEL 3X95X40 DC01 FE//ZN | 94 73 392 08 | 17 | 2 | 2 955 | 91 49 516 08 | PNEUMATIK KRANFUEHRERK |
| WINKEL 4X113X40 S315MC FE | 97 37 208 08 | 8 | 1 | 2 984 | 91 52 906 08 | OELKUEHLER EINBAU |
| WINKEL 4X132X195 S315MC | 95 36 785 08 | 34 | 2 | 2 502 | 91 01 533 08 | STEUERSTAND |
| WINKEL 4x145x80 S315MC FE// | 97 08 366 08 | 45 | 1 | 2 510 200 | 96 41 258 08 | DREHBUEHNENVERKLEIDUN |
| WINKELGEBER 360° SPF | 69 23 100 08 | 5 | 1 | 3 930 482 | 96 20 157 08 | GEBERANBAU GRUNDAUSLE |
| WINKELGEBER 360° SPF | 69 23 100 08 | 5 | 1 | 3 930 483 | 96 20 935 08 | GEBERANBAU KOPFSTUECK |
| WINKELSCHRAUBENDREHER | 10 04 300 2 | 41 | 1 | 1 750 001 | 92 85 698 08 | GRUNDWERKZEUG |
| WINKELSCHRAUBENDREHER | 10 47 136 3 | 40 | 1 | 1 750 001 | 92 85 698 08 | GRUNDWERKZEUG |
| WINKELSTUTZEN | 59 10 510 08 | 29 | 1 | 2 520 000 | 91 49 872 08 | KABINE VERGLAST |

| Bezeichnung | Artikel | Pos. | Menge | Seite | Baugruppe | Bezeichnung |
|---|---|---|---|---|---|---|
| WIPPE 983593114 LH-GRAU | 91 85 786 14 | 18 | 2 | 2 571 | 91 50 902 08 | HYDRAULISCHE BALLASTIER |
| WIPPZYLINDER 320/290-3345 | 10 87 223 8 | 1 | 1 | 2 350 | 91 81 361 08 | WIPPZYLINDER M.LAGERUNG |
| WIPPZYLINDER M.LAGERUNG | 91 81 361 08 | 111 | 1 | | LTR 1100 -0 | LIEBHERR LTR 1100 |
| WISCHERARM | 59 10 631 08 | 33 | 1 | 2 520 000 | 91 49 872 08 | KABINE VERGLAST |
| WISCHERARM | 59 10 666 08 | 6 | 1 | 2 520 001 | 92 48 796 08 | FRONTSCHEIBE KPL. |
| WISCHERBLATT | 59 10 634 08 | 34 | 1 | 2 520 000 | 91 49 872 08 | KABINE VERGLAST |
| WISCHERBLATT | 59 10 775 08 | 5 | 1 | 2 520 001 | 92 48 796 08 | FRONTSCHEIBE KPL. |
| WISCHERMOTOR | 59 10 534 08 | 32 | 1 | 2 520 000 | 91 49 872 08 | KABINE VERGLAST |
| WISCHERMOTOR | 59 10 672 08 | 3 | 1 | 2 520 001 | 92 48 796 08 | FRONTSCHEIBE KPL. |
| WISCHLAGER | 59 10 633 08 | 36 | 1 | 2 520 000 | 91 49 872 08 | KABINE VERGLAST |
| WP DC01 EN 12329 FE/ZN 12 | 95 57 472 03 | 13 | 10 | 1 100 215 | 99 20 783 14 | MITTELTEIL |
| ZAHNRAD Z=100 M=2,5 | 90 73 098 | 3 | 1 | X1012223 | 10 12 223 3 | NOCKENWELLE KPL. |
| ZAHNRAD Z=25 M=2,5 | 90 72 727 | 4 | 1 | 9 074 165 | 90 74 165 | MASSENAUSGLEICH ANBAU |
| ZAHNRAD Z=25 M=2,5 20MnCr | 90 72 833 | 5 | 1 | 9 074 165 | 90 74 165 | MASSENAUSGLEICH ANBAU |
| ZAHNRAD Z=36 M=2,5 | 90 73 343 | 2 | 1 | 9 080 294 | 90 80 294 | LUFTPRESSER VORM. |
| ZAHNRAD Z=40 M=2,5 20MnCr | 90 79 001 | 3 | 1 | 9 078 962 | 90 78 962 | NEBENABTRIEB VORM. |
| ZAHNRAD Z=50 M=2,5 | 90 72 834 | 3 | 1 | 9 078 832 | 90 78 832 | KURBELWELLE MIT ZAHNRAD |
| ZAHNRAD Z=99 M=2,25 16MnCr | 90 73 100 | 13 | 1 | X1012223 | 10 12 223 3 | NOCKENWELLE KPL. |
| ZAHNRADMOTOR AZMF 11CM | 10 42 993 3 | 102 | 1 | 2 210 008 | 96 48 137 08 | KUEHLER VORM. |
| ZAHNRADPUMPE WP09 SPF | 10 09 999 3 | 103 | 1 | 2 210 | 91 81 614 08 | ANTRIEBSAGGREGAT VORM. |
| ZAHNSCHEIBE 12X99/25RD | 93 89 965 01 | 90 | 1 | 9 330 748 | 93 30 748 01 | DREHWERKANTRIEB |
| ZAHNSCHEIBE DIN 6797 A 2,7 | 42 51 004 08 | 3 | 4 | 2 913 003 | 96 20 599 08 | FOLIENTASTATUR VORM. |
| ZAHNSCHEIBE DIN 6797 A 3,2 | 42 51 005 08 | 6 | 12 | 2 913 100 | 91 23 538 08 | BAUGRUPPENTRAEGER |
| ZAHNSCHEIBE DIN 6797 A 3,2 | 42 51 005 08 | 17 | 10 | 2 922 001 | 92 84 311 08 | BUSPLATINE |
| ZAHNSCHEIBE DIN 6797 A 4,3 | 42 51 007 08 | 14 | 4 | 2 913 100 | 91 23 538 08 | BAUGRUPPENTRAEGER |
| ZAHNSCHEIBE DIN 6797 A 6,4 | 42 51 009 08 | 62 | 3 | 2 533 001 | 96 41 568 08 | ARMATURENBRETT DACH VO |
| ZEIGER 2X120X82 X5CRNI18-1 | 97 46 893 08 | 21 | 1 | 2 430 | 91 54 389 08 | DREHBUEHNENARRETIERUN |
| ZELLGUMMI 16X8 CELL.RUBBE | 10 02 810 7 | 103 | 3.1 | 2 520 000 | 91 49 872 08 | KABINE VERGLAST |
| ZELLGUMMI 16X8 CELL.RUBBE | 10 02 810 7 | 9 | 0.16 | 2 913 004 | 96 20 460 08 | GEHAEUSE VORM. |
| ZELLGUMMI 25X4 NEOPRENE | 26 21 078 14 | 12 | 0.12 | 3 750 026 | 96 89 407 08 | HALTER LINKS |
| ZELLGUMMI 25X4 NEOPRENE | 26 21 078 14 | 12 | 0.12 | 3 750 028 | 96 89 408 08 | HALTER RECHTS |
| ZELLGUMMI 6X3X10000 CELL | 26 21 089 08 | 40 | 2.5 | 2 510 108 | 96 44 555 08 | SCHALLDAEMMUNG |
| ZELLGUMMI 6X3X10000 CELL | 26 21 089 08 | 86 | 1.2 | 2 520 000 | 91 49 872 08 | KABINE VERGLAST |
| ZELLGUMMI 6X3X10000 CELL | 26 21 089 08 | 22 | 0.36 | 2 540 | 91 45 984 08 | HEIZUNG OW |
| ZELLGUMMI 6X3X10000 CELL | 26 21 089 08 | 23 | 0.43 | 2 540 | 91 45 984 08 | HEIZUNG OW |
| ZELLGUMMI 6X3X10000 CELL | 26 21 089 08 | 24 | 0.39 | 2 540 | 91 45 984 08 | HEIZUNG OW |
| ZELLGUMMI 6X3X10000 CELL | 26 21 089 08 | 7 | 0.18 | 2 913 006 | 96 20 732 08 | LUEFTERBLECH VORM. |
| ZELLGUMMI 8X10 | 26 21 091 08 | 21 | 0.45 | 2 540 | 91 45 984 08 | HEIZUNG OW |
| ZENTRALBALLAST 15T | 91 56 353 08 | 80 | 1 | | LTR 1100 -0 | LIEBHERR LTR 1100 |
| ZENTRALBALLAST 7.5T 983593 | 91 94 187 14 | 1 | 2 | 1 740 | 91 56 353 08 | ZENTRALBALLAST |
| ZENTRALEINHEIT C1 8X2A G | 91 44 006 08 | 49 | 4 | 2 932 042 | 96 68 587 08 | GRUNDAUFBAU |
| ZENTRALSCHMIERANLAGE | 92 14 441 08 | 27 | 1 | 2 440 022 | 96 42 336 08 | WINDE 2 VORM. |
| ZENTRALSCHMIERANLAGE O | 91 53 002 08 | 169 | 1 | | LTR 1100 -0 | LIEBHERR LTR 1100 |
| ZIEHPILZ 75x225 35NICRMOV | 95 70 563 08 | 11 | 1 | 3 104 000 | 91 62 545 08 | TELESKOP 3 VORM. |
| ZIEHPILZ 75x271 35NICRMOV | 95 70 379 08 | 11 | 1 | 3 103 000 | 91 62 544 08 | TELESKOP 2 VORM. |
| ZIEHPILZ 75x319 35NICRMOV | 95 70 114 08 | 11 | 1 | 3 102 000 | 91 62 543 08 | TELESKOP 1 VORM. |
| ZUBEHOER | 92 86 201 08 | 2 | 1 | 1 750 | 91 48 606 08 | WERKZEUG M.ZUBEHOER |
| ZUENDSTARTSCHALTER | 60 61 943 08 | 5 | 1 | 2 530 002 | 96 19 448 08 | ARMATURENBRETT VORM.V |
| ZUGFEDER | 72 01 085 08 | 24 | 1 | 2 522 | 91 10 037 08 | TUER KPL. |
| ZUGGURT 47X2220 | 10 33 448 8 | 107 | 1 | 2 510 100 | 96 44 750 08 | DREHBUEHNENVERKLEIDUN |
| ZUGLASCHE SCHWK. | 92 71 591 08 | 5 | 1 | 3 501 | 91 05 788 08 | DOPPELKLAPPSPITZE MECH. |
| ZUGLASCHE SCHWK. | 92 71 592 08 | 6 | 1 | 3 501 | 91 05 788 08 | DOPPELKLAPPSPITZE MECH. |
| ZUGLASCHE VORM. | 96 30 554 08 | 35 | 1 | 2 501 000 | 91 48 769 08 | KRANFUEHRERKABINE VORM |
| ZUGSTANGE | 10 09 920 9 | 28 | 4 | X1032706 | 10 32 706 5 | ELEKTROPUMPE |
| ZUNGE | 70 42 551 08 | 38 | 2 | 2 510 200 | 96 41 258 08 | DREHBUEHNENVERKLEIDUN |
| ZUNGE | 70 42 590 08 | 4 | 4 | 2 501 022 | 96 34 184 08 | DECKEL KPL. |
| ZUNGE 13,5 | 70 42 573 08 | 57 | 1 | 2 932 095 | 96 46 064 08 | SCHWENKRAHMEN SICHERUN |
| ZUSATZBALLAST | 91 50 901 08 | 149 | 1 | | LTR 1100 -0 | LIEBHERR LTR 1100 |
| ZUSATZBESCHILDERUNG DA | 96 67 851 08 | 3 | 1 | 2 780 952 | 91 68 736 08 | ADAPTER DATENLOGGER |
| ZUSATZBESCHILDERUNG FA | 91 62 835 08 | 72 | 1 | | LTR 1100 -0 | LIEBHERR LTR 1100 |

| Bezeichnung | Artikel | Pos. | Menge | Seite | Baugruppe | Bezeichnung |
|---|---|---|---|---|---|---|
| ZUSATZHYDRAULIK KLAPPSPI | 91 26 492 08 | 229 | 1 | | LTR 1100 -0 | LIEBHERR LTR 1100 |
| ZWEIFACHZAHNRADPUMPE W | 51 21 425 08 | 102 | 1 | 2 210 | 91 81 614 08 | ANTRIEBSAGGREGAT VORM. |
| ZWISCHENPLATTE | 10 11 787 8 | 7 | 1 | X1011832 | 10 11 832 6 | ATL-ANBAU |
| ZWISCHENPLATTE 11SMnPb3 | 90 80 519 | 6 | 1 | 9 080 525 | 90 80 525 | KLIMAKOMPRESSOR ANBAU |
| ZWISCHENRAD KPL. | 90 72 906 | 331 | 1 | X1015207 | 10 15 207 7 | DIESELMOTOR |
| ZWISCHENRAD VORM. | 90 72 633 | 3 | 1 | 9 072 593 | 90 72 593 | FLANSCH VORM. |
| ZWISCHENRAD VORM. | 90 72 633 | 7 | 1 | 9 075 541 | 90 75 541 | SCHMIEROELPUMPE VORM. |
| ZWISCHENRAD VORM. | 90 72 904 | 1 | 1 | 9 072 906 | 90 72 906 | ZWISCHENRAD KPL. |
| ZWISCHENRADACHSE 42CrM | 90 72 907 | 2 | 1 | 9 072 906 | 90 72 906 | ZWISCHENRAD KPL. |
| ZWISCHENRING | 10 01 473 0 | 8 | 1 | X1032706 | 10 32 706 5 | ELEKTROPUMPE |
| ZWOELFKANTSCHRAUBE M8X | 10 11 813 4 | 6 | 5 | X1011832 | 10 11 832 6 | ATL-ANBAU |
| ZWOELFKANTSCHRAUBE M8X | 10 11 814 6 | 4 | 2 | X1011832 | 10 11 832 6 | ATL-ANBAU |
| ZYL KPL | 79 02 723 14 | 2 | 1 | 1 100 213 | 74 90 654 14 | SPANNER HYDR KPL |
| ZYLINDER | 57 01 103 08 | 1 | 1 | 5 701 095 | 57 01 095 08 | TRIEBWERK |
| ZYLINDER R-MOTORXD930 | 90 73 083 | 40 | 4 | X1012193 | 10 12 193 2 | GRUNDMOTOR |
| ZYLINDERBUCHSE | 90 80 084 | 1 | 1 | 9 073 083 | 90 73 083 | ZYLINDER |
| ZYLINDERKOPF | 10 81 388 6 | 4 | 1 | X1047300 | 10 47 300 1 | TELESKOPZYLINDER |
| ZYLINDERKOPF | 70 25 732 | 23 | 1 | 5 700 161 | 57 00 161 | LUFTPRESSER |
| ZYLINDERKOPF ANBAU R-MO | 10 11 675 9 | 80 | 4 | X1012193 | 10 12 193 2 | GRUNDMOTOR |
| ZYLINDERKOPF R-MOTOR | 10 12 038 3 | 1 | 1 | X1012036 | 10 12 036 5 | ZYLINDERKOPF VORM. |
| ZYLINDERKOPF R-MOTOR | 10 12 038 3 | 1 | 1 | X1014155 | 10 14 155 5 | ZYLINDERKOPF VORM. |
| ZYLINDERKOPF VORM. R-MO | 10 12 036 5 | 1 | 1 | X1011675 | 10 11 675 9 | ZYLINDERKOPF ANBAU |
| ZYLINDERKOPF VORM. R-MO | 10 14 155 5 | 1 | 1 | X1011675 | 10 11 675 9 | ZYLINDERKOPF ANBAU |
| ZYLINDERKOPFDECKEL | 10 11 901 1 | 1 | 1 | X1011963 | 10 11 963 6 | ZYLINDERKOPFDECKEL ANBA |
| ZYLINDERKOPFDECKEL | 10 11 960 2 | 1 | 1 | X1011961 | 10 11 961 0 | ZYLINDERKOPFDECKEL ANBA |
| ZYLINDERKOPFDECKEL ANBA | 10 11 961 0 | 82 | 3 | X1015207 | 10 15 207 7 | DIESELMOTOR |
| ZYLINDERKOPFDECKEL ANBA | 10 11 963 6 | 84 | 1 | X1015207 | 10 15 207 7 | DIESELMOTOR |
| ZYLINDERKOPFDICHTUNG Met | 10 12 084 4 | 1 | 1 | X1011585 | 10 11 585 1 | DS ZYLINDERKOPF |
| ZYLINDERKOPFDICHTUNG Met | 10 12 084 4 | 1 | 4 | X1011585 | 10 11 585 2 | DS ZYLINDERKOPF KPL. |
| ZYLINDERKOPFDICHTUNG Met | 10 12 084 4 | 1 | 6 | X1011585 | 10 11 585 3 | DS ZYLINDERKOPF KPL. |
| ZYLINDERKOPFDICHTUNG Met | 10 12 084 4 | 1 | 1 | X1011585 | 10 11 585 9 | DS ZYLINDERKOPF |
| ZYLINDERKOPFDICHTUNG Met | 10 12 084 4 | 2 | 1 | X1011675 | 10 11 675 9 | ZYLINDERKOPF ANBAU |
| ZYLINDERKOPFSCHRAUBE M | 90 74 501 | 3 | 6 | X1011675 | 10 11 675 9 | ZYLINDERKOPF ANBAU |
| ZYLINDERROLLE 14X14 | 74 70 061 01 | 17 | 114 | 9 387 598 | 93 87 598 01 | PLANETENGETRIEBE |
| ZYLINDERROLLE 14X14 | 74 70 061 01 | 17 | 114 | 9 686 071 | 96 86 071 01 | PLANETENGETRIEBE |
| ZYLINDERROLLE 24X24 | 74 70 059 01 | 3 | 96 | 9 444 410 | 94 44 410 03 | FAHRANTRIEB |
| ZYLINDERSCHRAUBE DIN 69 | 10 87 556 1 | 32 | 8 | 3 102 000 | 91 62 543 08 | TELESKOP 1 VORM. |
| ZYLINDERSCHRAUBE DIN 69 | 10 87 556 1 | 32 | 8 | 3 103 000 | 91 62 544 08 | TELESKOP 2 VORM. |
| ZYLINDERSCHRAUBE DIN 69 | 10 87 556 1 | 32 | 8 | 3 104 000 | 91 62 545 08 | TELESKOP 3 VORM. |
| ZYLINDERSCHRAUBE DIN 69 | 10 87 556 1 | 32 | 8 | 3 105 000 | 91 62 546 08 | TELESKOP 4 VORM. |
| ZYLINDERSCHRAUBE DIN 69 | 10 87 556 1 | 53 | 8 | 3 106 000 | 91 60 313 08 | TELESKOP 5 VORM. |
| ZYLINDERSCHRAUBE DIN 798 | 49 80 927 | 9 | 3 | X1012223 | 10 12 223 3 | NOCKENWELLE KPL. |
| ZYLINDERSCHRAUBE DIN 79 | 40 83 000 08 | 46 | 3 | 2 522 | 91 10 037 08 | TUER KPL. |
| ZYLINDERSCHRAUBE DIN 79 | 49 80 648 | 42 | 2 | X1081388 | 10 81 388 6 | ZYLINDERKOPF |
| ZYLINDERSCHRAUBE DIN 79 | 40 93 609 08 | 13 | 4 | 2 520 001 | 92 48 796 08 | FRONTSCHEIBE KPL. |
| ZYLINDERSCHRAUBE DIN 84 | 40 01 701 08 | 266 | 2 | 3 930 492 | 96 20 966 08 | KLEMMKASTEN KPL. |
| ZYLINDERSCHRAUBE DIN 84 | 40 01 016 08 | 61 | 28 | 2 932 042 | 96 68 587 08 | GRUNDAUFBAU |
| ZYLINDERSCHRAUBE DIN 84 | 40 01 016 08 | 5 | 4 | 2 932 215 | 92 26 129 08 | VERTEILER MASSE |
| ZYLINDERSCHRAUBE DIN 84 | 40 01 016 08 | 31 | 2 | 3 100 | 91 59 279 08 | TELESKOPAUSLEGER KPL. |
| ZYLINDERSCHRAUBE DIN 84 | 40 01 063 08 | 22 | 8 | 3 100 | 91 59 279 08 | TELESKOPAUSLEGER KPL. |
| ZYLINDERSCHRAUBE DIN 84 | 51 07 977 08 | 22 | 1 | 5 114 177 | 51 14 177 08 | DRUCKBEGRENZUNGSVENTI |
| ZYLINDERSCHRAUBE DIN 912 | 40 43 624 08 | 85 | 4 | X1041191 | 10 41 191 3 | PLATTE |
| ZYLINDERSCHRAUBE DIN 912 | 40 42 098 08 | 4 | 1 | X1011659 | 10 11 659 1 | EINSPRITZDUESE MIT BEFEST |
| ZYLINDERSCHRAUBE DIN 912 | 51 48 023 08 | 3 | 4 | 5 113 199 | 51 13 199 08 | SENKBREMSVENTIL |
| ZYLINDERSCHRAUBE DIN 912 | 10 87 556 5 | 16 | 4 | 2 340 004 | 96 43 780 08 | OELBEHAELTER VORM. |
| ZYLINDERSCHRAUBE DIN 912 | 10 87 556 5 | 505 | 4 | 2 970 | 91 55 482 08 | HYDRAULIK |
| ZYLINDERSCHRAUBE DIN 912 | 40 43 163 08 | 5 | 4 | X1029358 | 10 29 358 6 | SENKBREMSVENTIL |
| ZYLINDERSCHRAUBE DIN 912 | 40 42 314 08 | 502 | 4 | 2 970 | 91 55 482 08 | HYDRAULIK |
| ZYLINDERSCHRAUBE DIN 912 | 40 42 314 08 | 502 | 8 | 2 971 | 91 50 610 08 | HYDRAULIK HILFSHUBWERK |
| ZYLINDERSCHRAUBE DIN 912 | 40 43 637 08 | 15 | 4 | 5 114 869 | 51 14 869 08 | STEUERLEISTE |

| Bezeichnung | Artikel | Pos. | Menge | Seite | Baugruppe | Bezeichnung |
|---|---|---|---|---|---|---|
| ZYLINDERSCHRAUBE DIN 912 | 40 43 612 08 | 70 | 16 | 5 113 078 | 51 13 078 08 | STEUERLEISTE |
| ZYLINDERSCHRAUBE DIN 912 | 40 43 612 08 | 16 | 4 | 5 114 869 | 51 14 869 08 | STEUERLEISTE |
| ZYLINDERSCHRAUBE DIN 912 | 40 43 029 08 | 90 | 4 | X1047529 | 10 47 529 2 | VENTILBLOCK |
| ZYLINDERSCHRAUBE DIN 912 | 40 43 641 08 | (74) | 4 | 9 072 112 | 90 72 112 | HYDRAULIKDOPPELPUMPE |
| ZYLINDERSCHRAUBE DIN 912 | 40 42 305 08 | 50 | 4 | 2 971 | 91 50 610 08 | HYDRAULIK HILFSHUBWERK |
| ZYLINDERSCHRAUBE DIN 912 | 40 42 056 08 | 76 | 4 | 2 970 | 91 55 482 08 | HYDRAULIK |
| ZYLINDERSCHRAUBE ISO 476 | 40 42 104 01 | 23 | 8 | 1 100 216 | 96 46 363 08 | MONTAGETEILE LWE |
| ZYLINDERSCHRAUBE ISO 47 | 40 02 442 | 71 | 12 | 9 387 598 | 93 87 598 01 | PLANETENGETRIEBE |
| ZYLINDERSCHRAUBE ISO 47 | 40 02 442 | 71 | 12 | 9 686 071 | 96 86 071 01 | PLANETENGETRIEBE |
| ZYLINDERSCHRAUBE ISO 47 | 40 42 012 | 325 | 2 | 2 210 | 91 81 614 08 | ANTRIEBSAGGREGAT VORM. |
| ZYLINDERSCHRAUBE ISO 47 | 40 42 012 | 320 | 2 | 2 210 008 | 96 48 137 08 | KUEHLER VORM. |
| ZYLINDERSCHRAUBE ISO 476 | 40 43 122 | (2) | 2 | X1011998 | 10 11 998 0 | KABELBAUM ANBAU |
| ZYLINDERSCHRAUBE ISO 47 | 46 00 182 | 12 | 6 | 1 100 200 | 96 72 944 08 | UNTERWAGEN KPL. |
| ZYLINDERSCHRAUBE ISO 476 | 10 41 516 2 | 5 | 2 | 1 300 010 | 99 14 563 14 | AUFSTIEG KPL. |
| ZYLINDERSCHRAUBE ISO 476 | 10 41 516 2 | 341 | 1 | 2 210 | 91 81 614 08 | ANTRIEBSAGGREGAT VORM. |
| ZYLINDERSCHRAUBE ISO 476 | 10 41 516 2 | 39 | 4 | 2 440 | 91 52 288 08 | HILFSHUBWERK WINDE 2 |
| ZYLINDERSCHRAUBE ISO 476 | 10 41 516 2 | 58 | 2 | 3 101 | 91 60 312 08 | ANLENKSTUECK VORM. |
| ZYLINDERSCHRAUBE ISO 476 | 10 41 516 2 | 58 | 2 | 3 102 000 | 91 62 543 08 | TELESKOP 1 VORM. |
| ZYLINDERSCHRAUBE ISO 476 | 10 41 516 2 | 58 | 2 | 3 103 000 | 91 62 544 08 | TELESKOP 2 VORM. |
| ZYLINDERSCHRAUBE ISO 476 | 10 41 516 2 | 24 | 6 | 3 330 | 91 57 885 08 | AUSSCHUBMECHANIK |
| ZYLINDERSCHRAUBE ISO 476 | 10 41 516 2 | 4 | 1 | X1011997 | 10 11 997 6 | NEBENABTRIEB ANBAU |
| ZYLINDERSCHRAUBE ISO 476 | 40 43 000 | 6 | 2 | 9 073 767 | 90 73 767 | NEBENABTRIEB ANBAU |
| ZYLINDERSCHRAUBE ISO 476 | 40 43 000 | 3 | 2 | X1011683 | 10 11 683 9 | EINSPRITZPUMPE ANBAU |
| ZYLINDERSCHRAUBE ISO 476 | 10 87 557 2 | 5 | 4 | 2 420 | 91 32 936 08 | DREHWERK |
| ZYLINDERSCHRAUBE ISO 476 | 40 43 127 | 52 | 24 | 9 444 410 | 94 44 410 03 | FAHRANTRIEB |
| ZYLINDERSCHRAUBE ISO 476 | 11 69 062 8 | 9 | 2 | 2 790 901 | 91 54 183 08 | AUSSTEIFUNG |
| ZYLINDERSCHRAUBE ISO 476 | 11 69 062 8 | 30 | 8 | 3 102 000 | 91 62 543 08 | TELESKOP 1 VORM. |
| ZYLINDERSCHRAUBE ISO 476 | 11 69 062 8 | 30 | 8 | 3 103 000 | 91 62 544 08 | TELESKOP 2 VORM. |
| ZYLINDERSCHRAUBE ISO 476 | 11 69 062 8 | 30 | 8 | 3 104 000 | 91 62 545 08 | TELESKOP 3 VORM. |
| ZYLINDERSCHRAUBE ISO 476 | 11 69 062 8 | 30 | 8 | 3 105 000 | 91 62 546 08 | TELESKOP 4 VORM. |
| ZYLINDERSCHRAUBE ISO 476 | 11 69 062 8 | 18 | 4 | 3 106 000 | 91 60 313 08 | TELESKOP 5 VORM. |
| ZYLINDERSCHRAUBE ISO 476 | 10 87 557 3 | 30 | 6 | 1 100 205 | 96 51 633 08 | RAUPENTRAEGER KPL.RE. |
| ZYLINDERSCHRAUBE ISO 476 | 10 87 557 3 | 30 | 6 | 1 100 210 | 96 51 634 08 | RAUPENTRAEGER KPL.LI. |
| ZYLINDERSCHRAUBE ISO 47 | 40 42 096 01 | 342 | 1 | 2 210 | 91 81 614 08 | ANTRIEBSAGGREGAT VORM. |
| ZYLINDERSCHRAUBE ISO 476 | 40 01 595 | 4 | 2 | 9 074 505 | 90 74 505 | KIPPHEBELBOCK VORM. |
| ZYLINDERSCHRAUBE ISO 47 | 46 00 239 | 25 | 1 | 9 387 596 | 93 87 596 01 | SEILTROMMEL |
| ZYLINDERSCHRAUBE ISO 47 | 46 00 385 | 7 | 15 | X1011582 | 10 11 582 9 | SCHWUNGRADGEHAEUSE AN |
| ZYLINDERSCHRAUBE ISO 476 | 40 42 130 01 | 338 | 2 | 2 210 | 91 81 614 08 | ANTRIEBSAGGREGAT VORM. |
| ZYLINDERSCHRAUBE ISO 476 | 46 00 167 | 16 | 4 | 1 970 | 96 71 367 08 | HYDRAULIK UNTERWAGEN |
| ZYLINDERSCHRAUBE ISO 476 | 10 87 557 7 | 6 | 2 | 2 420 | 91 32 936 08 | DREHWERK |
| ZYLINDERSCHRAUBE ISO 47 | 40 42 031 | 26 | 4 | 3 330 | 91 57 885 08 | AUSSCHUBMECHANIK |
| ZYLINDERSCHRAUBE ISO 476 | 12 20 126 3 | 340 | 1 | 2 210 | 91 81 614 08 | ANTRIEBSAGGREGAT VORM. |
| ZYLINDERSCHRAUBE ISO 476 | 12 20 126 3 | 23 | 4 | 3 330 | 91 57 885 08 | AUSSCHUBMECHANIK |
| ZYLINDERSCHRAUBE ISO 476 | 40 43 164 | 82 | 8 | 9 444 410 | 94 44 410 03 | FAHRANTRIEB |
| ZYLINDERSCHRAUBE ISO 476 | 10 87 557 8 | 52 | 8 | 9 387 598 | 93 87 598 01 | PLANETENGETRIEBE |
| ZYLINDERSCHRAUBE ISO 476 | 10 87 557 8 | 52 | 8 | 9 686 071 | 96 86 071 01 | PLANETENGETRIEBE |
| ZYLINDERSCHRAUBE ISO 476 | 40 43 003 | 86 | 4 | X1029147 | 10 29 147 4 | STEUERBLOCK |
| ZYLINDERSCHRAUBE ISO 47 | 40 43 120 08 | 77 | 8 | 9 387 598 | 93 87 598 01 | PLANETENGETRIEBE |
| ZYLINDERSCHRAUBE ISO 47 | 40 43 120 08 | 77 | 8 | 9 686 071 | 96 86 071 01 | PLANETENGETRIEBE |
| ZYLINDERSCHRAUBE ISO 476 | 49 80 012 | 6 | 2 | X1011582 | 10 11 582 9 | SCHWUNGRADGEHAEUSE AN |
| ZYLINDERSCHRAUBE ISO 476 | 49 80 012 | 86 | 4 | X1047529 | 10 47 529 1 | VENTILBLOCK |
| ZYLINDERSCHRAUBE ISO 476 | 49 80 012 | 86 | 4 | X1047529 | 10 47 529 2 | VENTILBLOCK |
| ZYLINDERSCHRAUBE ISO 47 | 10 01 265 9 | 56 | 8 | 9 387 598 | 93 87 598 01 | PLANETENGETRIEBE |
| ZYLINDERSCHRAUBE ISO 47 | 10 01 265 9 | 56 | 8 | 9 686 071 | 96 86 071 01 | PLANETENGETRIEBE |
| ZYLINDERSCHRAUBE ISO 476 | 11 84 014 0 | 40 | 4 | 3 101 | 91 60 312 08 | ANLENKSTUECK VORM. |
| ZYLINDERSCHRAUBE ISO 476 | 11 84 014 0 | 40 | 4 | 3 102 000 | 91 62 543 08 | TELESKOP 1 VORM. |
| ZYLINDERSCHRAUBE ISO 476 | 11 84 014 0 | 40 | 4 | 3 103 000 | 91 62 544 08 | TELESKOP 2 VORM. |
| ZYLINDERSCHRAUBE ISO 476 | 11 84 014 0 | 40 | 4 | 3 104 000 | 91 62 545 08 | TELESKOP 3 VORM. |
| ZYLINDERSCHRAUBE ISO 476 | 11 84 014 0 | 40 | 4 | 3 105 000 | 91 62 546 08 | TELESKOP 4 VORM. |
| ZYLINDERSCHRAUBE ISO 47 | 40 01 654 | 27 | 6 | 3 330 | 91 57 885 08 | AUSSCHUBMECHANIK |

| Bezeichnung | Artikel | Pos. | Menge | Seite | Baugruppe | Bezeichnung |
|---|---|---|---|---|---|---|
| ZYLINDERSCHRAUBE ISO 47 | 40 43 126 08 | 4 | 24 | 2 420 | 91 32 936 08 | DREHWERK |
| ZYLINDERSCHRAUBE ISO 47 | 46 00 054 | 20 | 4 | 3 330 | 91 57 885 08 | AUSSCHUBMECHANIK |
| ZYLINDERSCHRAUBE ISO 47 | 40 42 151 01 | 13 | 12 | 2 975 152 | 91 05 737 08 | HYDRAULIK TELE |
| ZYLINDERSCHRAUBE ISO 476 | 40 00 414 | 12 | 12 | X1012223 | 10 12 223 3 | NOCKENWELLE KPL. |
| ZYLINDERSCHRAUBE ISO 476 | 10 87 637 3 | 575 | 28 | 1 970 | 96 71 367 08 | HYDRAULIK UNTERWAGEN |
| ZYLINDERSCHRAUBE ISO 476 | 40 43 009 | 6 | 2 | 9 074 165 | 90 74 165 | MASSENAUSGLEICH ANBAU |
| ZYLINDERSCHRAUBE ISO 47 | 40 43 181 01 | 21 | 24 | 9 387 598 | 93 87 598 01 | PLANETENGETRIEBE |
| ZYLINDERSCHRAUBE ISO 47 | 40 43 181 01 | 21 | 24 | 9 686 071 | 96 86 071 01 | PLANETENGETRIEBE |
| ZYLINDERSCHRAUBE ISO 476 | 40 00 342 03 | 11 | 8 | 9 444 410 | 94 44 410 03 | FAHRANTRIEB |
| ZYLINDERSCHRAUBE ISO 476 | 40 43 169 01 | 31 | 4 | 9 387 596 | 93 87 596 01 | SEILTROMMEL |
| ZYLINDERSCHRAUBE ISO 47 | 46 00 237 | 51 | 12 | 9 444 410 | 94 44 410 03 | FAHRANTRIEB |
| ZYLINDERSCHRAUBE ISO 476 | 40 43 177 01 | 6 | 16 | 9 387 070 | 93 87 070 01 | KOMPAKTSEILWINDE |
| ZYLINDERSCHRAUBE ISO 476 | 40 43 177 01 | 6 | 16 | 9 685 586 | 96 85 586 01 | KOMPAKTSEILWINDE |
| ZYLINDERSCHRAUBE ISO 47 | 40 42 143 05 | 3 | 16 | 2 571 | 91 50 902 08 | HYDRAULISCHE BALLASTIER |
| ZYLINDERSCHRAUBE ISO 476 | 40 43 245 01 | 4 | 24 | 1 100 210 | 96 51 634 08 | RAUPENTRAEGER KPL.LI. |
| ZYLINDERSCHRAUBE ISO 47 | 40 43 245 08 | 4 | 24 | 1 100 205 | 96 51 633 08 | RAUPENTRAEGER KPL.RE. |
| ZYLINDERSCHRAUBE ISO 476 | 40 42 002 08 | 11 | 2 | 2 780 852 | 96 24 845 08 | GSM-MODUL VORM.LICCON 1 |
| ZYLINDERSCHRAUBE ISO 476 | 40 00 996 | 19 | 3 | 6 923 101 | 69 23 101 08 | SEILLAENGENGEBER |
| ZYLINDERSCHRAUBE ISO 476 | 40 00 996 | 87 | 4 | X1029147 | 10 29 147 4 | STEUERBLOCK |
| ZYLINDERSCHRAUBE ISO 476 | 40 00 996 | 87 | 4 | X1047529 | 10 47 529 1 | VENTILBLOCK |
| ZYLINDERSCHRAUBE ISO 476 | 40 00 996 | 87 | 4 | X1047529 | 10 47 529 2 | VENTILBLOCK |
| ZYLINDERSCHRAUBE ISO 476 | 46 00 337 | 200 | 4 | 1 880 | 91 62 974 08 | BESCHILDERUNG SPANIEN |
| ZYLINDERSCHRAUBE ISO 476 | 40 01 521 | 138 | 4 | 2 520 000 | 91 49 872 08 | KABINE VERGLAST |
| ZYLINDERSCHRAUBE ISO 47 | 11 69 004 2 | 137 | 2 | 2 520 000 | 91 49 872 08 | KABINE VERGLAST |
| ZYLINDERSCHRAUBE ISO 476 | 40 00 899 | 48 | 1 | 2 522 | 91 10 037 08 | TUER KPL. |
| ZYLINDERSCHRAUBE ISO 47 | 12 20 461 4 | 4 | 4 | 2 711 | 91 53 002 08 | ZENTRALSCHMIERANLAGE O |
| ZYLINDERSCHRAUBE ISO 476 | 40 43 028 08 | 14 | 4 | 1 970 | 96 71 367 08 | HYDRAULIK UNTERWAGEN |
| ZYLINDERSCHRAUBE ISO 476 | 40 43 028 08 | 19 | 4 | 1 970 | 96 71 367 08 | HYDRAULIK UNTERWAGEN |
| ZYLINDERSCHRAUBE ISO 47 | 40 43 029 14 | 20 | 4 | 1 970 | 96 71 367 08 | HYDRAULIK UNTERWAGEN |
| ZYLINDERSCHRAUBE ISO 476 | 46 00 049 | 62 | 6 | 3 501 | 91 05 788 08 | DOPPELKLAPPSPITZE MECH. |
| ZYLINDERSCHRAUBE ISO 47 | 40 42 059 08 | 75 | 2 | 2 970 | 91 55 482 08 | HYDRAULIK |
| ZYLINDERSCHRAUBE ISO 47 | 10 87 558 6 | 4 | 1 | 1 792 004 | 92 51 415 08 | SCHLAUCHFUEHRUNG VORM. |
| ZYLINDERSCHRAUBE ISO 47 | 10 87 558 6 | 41 | 4 | 2 540 | 91 45 984 08 | HEIZUNG OW |
| ZYLINDERSCHRAUBE ISO 47 | 10 87 558 6 | 4 | 2 | 3 920 012 | 96 57 224 08 | ENDSCHALTER ANBAU |
| ZYLINDERSCHRAUBE ISO 47 | 10 87 558 6 | 15 | 3 | 9 075 541 | 90 75 541 | SCHMIEROELPUMPE VORM. |
| ZYLINDERSCHRAUBE ISO 47 | 10 87 558 6 | 3 | 1 | 9 076 534 | 90 76 534 | DREHZAHLGEBER KPL. |
| ZYLINDERSCHRAUBE ISO 47 | 10 87 558 6 | 3 | 1 | X1013307 | 10 13 307 7 | DREHZAHLGEBER KPL. |
| ZYLINDERSCHRAUBE ISO 476 | 40 42 002 | 33 | 7 | 1 100 215 | 99 20 783 14 | MITTELTEIL |
| ZYLINDERSCHRAUBE ISO 476 | 40 42 002 | 10 | 3 | 2 780 800 | 91 15 191 08 | ELEKTRIK WINDE 2 |
| ZYLINDERSCHRAUBE ISO 476 | 40 42 002 | 3 | 4 | 9 078 680 | 90 78 680 | KRAFTSTOFFFOERDERPUMP |
| ZYLINDERSCHRAUBE ISO 47 | 24 01 962 02 | 15 | 4 | 5 123 931 | 51 23 931 08 | PNEUMATIKZYLINDER |
| ZYLINDERSCHRAUBE ISO 47 | 10 87 558 8 | 20 | 18 | 2 950 | 91 49 515 08 | DRUCKLUFTANLAGE OW |
| ZYLINDERSCHRAUBE ISO 47 | 10 87 558 8 | 6 | 3 | X1032706 | 10 32 706 5 | ELEKTROPUMPE |
| ZYLINDERSCHRAUBE ISO 47 | 11 82 028 4 | 6 | 1 | 2 571 | 91 50 902 08 | HYDRAULISCHE BALLASTIER |
| ZYLINDERSCHRAUBE ISO 47 | 11 82 028 4 | 73 | 2 | 3 101 | 91 60 312 08 | ANLENKSTUECK VORM. |
| ZYLINDERSCHRAUBE ISO 47 | 10 87 559 0 | 14 | 4 | 2 430 | 91 54 389 08 | DREHBUEHNENARRETIERUN |
| ZYLINDERSCHRAUBE ISO 47 | 10 87 559 1 | 306 | 10 | 2 210 | 91 81 614 08 | ANTRIEBSAGGREGAT VORM. |
| ZYLINDERSCHRAUBE ISO 47 | 10 87 559 1 | 31 | 2 | 2 920 | 91 55 477 08 | EL.ANLAGE DREHBUEHNE |
| ZYLINDERSCHRAUBE ISO 47 | 10 87 559 1 | 35 | 2 | 3 330 | 91 57 885 08 | AUSSCHUBMECHANIK |
| ZYLINDERSCHRAUBE ISO 47 | 10 87 559 1 | 21 | 4 | X1033367 | 10 33 367 2 | STEUERBLOCK |
| ZYLINDERSCHRAUBE ISO 47 | 10 87 559 2 | 38 | 4 | 3 330 | 91 57 885 08 | AUSSCHUBMECHANIK |
| ZYLINDERSCHRAUBE ISO 47 | 10 87 559 2 | 6 | 4 | X1011599 | 10 11 599 3 | STEUERGERAET ANBAU |
| ZYLINDERSCHRAUBE ISO 47 | 40 43 050 | 16 | 4 | 5 123 931 | 51 23 931 08 | PNEUMATIKZYLINDER |
| ZYLINDERSCHRAUBE ISO 476 | 40 42 111 | 29 | 2 | 2 920 | 91 55 477 08 | EL.ANLAGE DREHBUEHNE |
| ZYLINDERSCHRAUBE ISO 47 | 12 20 278 4 | 77 | 4 | 3 101 | 91 60 312 08 | ANLENKSTUECK VORM. |
| ZYLINDERSCHRAUBE ISO 476 | 40 02 418 | 77 | 14 | 2 970 | 91 55 482 08 | HYDRAULIK |
| ZYLINDERSCHRAUBE ISO 476 | 40 42 052 08 | 31 | 2 | 1 970 | 96 71 367 08 | HYDRAULIK UNTERWAGEN |
| ZYLINDERSCHRAUBE ISO 476 | 24 00 493 02 | 10 | 2 | 9 074 165 | 90 74 165 | MASSENAUSGLEICH ANBAU |
| ZYLINDERSCHRAUBE ISO 47 | 40 43 080 08 | 85 | 4 | X1029147 | 10 29 147 4 | STEUERBLOCK |
| ZYLINDERSCHRAUBE ISO 47 | 40 43 080 08 | 85 | 4 | X1047529 | 10 47 529 1 | VENTILBLOCK |

| Bezeichnung | Artikel | Pos. | Menge | Seite | Baugruppe | Bezeichnung |
|---|---|---|---|---|---|---|
| ZYLINDERSCHRAUBE ISO 47 | 40 43 080 08 | 85 | 4 | X1047529 | 10 47 529 2 | VENTILBLOCK |
| ZYLINDERSCHRAUBE ISO 476 | 10 66 352 3 | 14 | 2 | X1011832 | 10 11 832 6 | ATL-ANBAU |
| ZYLINDERSCHRAUBE ISO 47 | 10 87 559 8 | 26 | 2 | 2 502 | 91 01 533 08 | STEUERSTAND |
| ZYLINDERSCHRAUBE ISO 47 | 10 87 559 8 | 30 | 9 | 3 101 | 91 60 312 08 | ANLENKSTUECK VORM. |
| ZYLINDERSCHRAUBE ISO 47 | 10 87 559 8 | 7 | 2 | 5 102 294 | 51 02 294 08 | HYDROMOTOR |
| ZYLINDERSCHRAUBE ISO 476 | 24 00 497 02 | 7 | 5 | 9 074 165 | 90 74 165 | MASSENAUSGLEICH ANBAU |
| ZYLINDERSCHRAUBE ISO 47 | 10 87 559 9 | 39 | 8 | 2 102 | 91 51 080 08 | MONTAGETEILE DREHBUEHN |
| ZYLINDERSCHRAUBE ISO 47 | 10 87 559 9 | 6 | 4 | 2 430 | 91 54 389 08 | DREHBUEHNENARRETIERUN |
| ZYLINDERSCHRAUBE ISO 47 | 10 87 559 9 | 3 | 4 | 2 790 | 91 68 708 08 | SPIEGELANBAU DREHBUEHN |
| ZYLINDERSCHRAUBE ISO 47 | 10 87 559 9 | 46 | 4 | 3 330 | 91 57 885 08 | AUSSCHUBMECHANIK |
| ZYLINDERSCHRAUBE ISO 47 | 10 87 559 9 | 26 | 8 | 9 330 748 | 93 30 748 01 | DREHWERKANTRIEB |
| ZYLINDERSCHRAUBE ISO 47 | 10 87 559 9 | 14 | 2 | X1011989 | 10 11 989 7 | RS OELRUECKLAUFLEITUNG |
| ZYLINDERSCHRAUBE ISO 476 | 24 00 498 02 | 5 | 2 | 9 072 593 | 90 72 593 | FLANSCH VORM. |
| ZYLINDERSCHRAUBE ISO 476 | 24 00 498 02 | 14 | 2 | 9 075 541 | 90 75 541 | SCHMIEROELPUMPE VORM. |
| ZYLINDERSCHRAUBE ISO 476 | 49 01 162 | 18 | 4 | 3 102 000 | 91 62 543 08 | TELESKOP 1 VORM. |
| ZYLINDERSCHRAUBE ISO 476 | 49 01 162 | 18 | 4 | 3 103 000 | 91 62 544 08 | TELESKOP 2 VORM. |
| ZYLINDERSCHRAUBE ISO 476 | 49 01 162 | 18 | 4 | 3 104 000 | 91 62 545 08 | TELESKOP 3 VORM. |
| ZYLINDERSCHRAUBE ISO 476 | 49 01 162 | 18 | 4 | 3 105 000 | 91 62 546 08 | TELESKOP 4 VORM. |
| ZYLINDERSCHRAUBE ISO 476 | 49 01 162 | 56 | 4 | 3 106 000 | 91 60 313 08 | TELESKOP 5 VORM. |
| ZYLINDERSCHRAUBE ISO 476 | 40 01 620 | 74 | 8 | 9 330 748 | 93 30 748 01 | DREHWERKANTRIEB |
| ZYLINDERSCHRAUBE ISO 47 | 49 80 840 | 2 | 4 | 5 113 199 | 51 13 199 08 | SENKBREMSVENTIL |
| ZYLINDERSCHRAUBE ISO 47 | 49 80 840 | 72 | 12 | 9 444 410 | 94 44 410 03 | FAHRANTRIEB |
| ZYLINDERSCHRAUBE ISO 476 | 40 42 070 | 2 | 1 | 9 075 540 | 90 75 540 | SCHMIEROELPUMPE MIT BE |
| ZYLINDERSCHRAUBE ISO 476 | 40 42 044 05 | 31 | 6 | X1033367 | 10 33 367 2 | STEUERBLOCK |
| ZYLINDERSCHRAUBE ISO 47 | 10 87 560 1 | 4 | 1 | 2 790 040 | 91 60 499 08 | SPIEGELANBAU KRANFUEHR |
| ZYLINDERSCHRAUBE ISO 47 | 10 87 560 1 | 10 | 4 | 5 102 294 | 51 02 294 08 | HYDROMOTOR |
| ZYLINDERSCHRAUBE ISO 47 | 10 87 560 1 | 6 | 4 | X1029358 | 10 29 358 6 | SENKBREMSVENTIL |
| ZYLINDERSCHRAUBE ISO 47 | 10 87 557 0 | 3 | 2 | 2 520 041 | 96 84 504 08 | HANDGRIFF ANBAU |
| ZYLINDERSCHRAUBE ISO 476 | 24 00 508 02 | 3 | 2 | 9 075 540 | 90 75 540 | SCHMIEROELPUMPE MIT BE |
| ZYLINDERSCHRAUBE ISO 476 | 49 00 323 | 86 | 10 | 9 330 748 | 93 30 748 01 | DREHWERKANTRIEB |
| ZYLINDERSTIFT DIN 6325 12 | 43 07 096 08 | 2 | 1 | 5 123 537 | 51 23 537 08 | HYDROZYLINDER |
| ZYLINDERSTIFT ISO 2338 10H | 43 06 708 08 | 3 | 1 | 3 102 000 | 91 62 543 08 | TELESKOP 1 VORM. |
| ZYLINDERSTIFT ISO 2338 10H | 43 06 708 08 | 3 | 1 | 3 103 000 | 91 62 544 08 | TELESKOP 2 VORM. |
| ZYLINDERSTIFT ISO 2338 10H | 43 06 708 08 | 3 | 1 | 3 104 000 | 91 62 545 08 | TELESKOP 3 VORM. |
| ZYLINDERSTIFT ISO 2338 10H | 43 06 708 08 | 3 | 1 | 3 105 000 | 91 62 546 08 | TELESKOP 4 VORM. |
| ZYLINDERSTIFT ISO 2338 10H | 43 06 708 08 | 3 | 1 | 3 106 000 | 91 60 313 08 | TELESKOP 5 VORM. |
| ZYLINDERSTIFT ISO 2338 4M | 57 01 093 08 | 5 | 1 | 5 102 294 | 51 02 294 08 | HYDROMOTOR |
| ZYLINDERSTIFT ISO 2338 6M | 49 80 931 | 17 | 1 | 9 075 541 | 90 75 541 | SCHMIEROELPUMPE VORM. |
| ZYLINDERSTIFT ISO 2338 6M | 49 81 267 | 16 | 1 | 9 075 541 | 90 75 541 | SCHMIEROELPUMPE VORM. |
| ZYLINDERSTIFT ISO 8734 6m | 49 80 000 | 9 | 1 | 9 074 165 | 90 74 165 | MASSENAUSGLEICH ANBAU |
| ZYLINDERSTIFT ISO 8734 8m6 | 49 01 106 | 7 | 1 | 9 080 525 | 90 80 525 | KLIMAKOMPRESSOR ANBAU |
| ZYLINDERSTIFT ISO 8734 8m | 49 80 853 | 5 | 1 | X1012223 | 10 12 223 3 | NOCKENWELLE KPL. |