Ersatzteilkatalog
Spare parts catalogue
Catalogue de pièces de rechange
Catálogue de repuestos
Каталог запасных частей

LIEBHERR

VORBEMERKUNGEN
Dieser Ersatzteilkatalog soll Ihnen die Ermittlung und Bestellung von Ersatzteilen für die Wartung bzw. Reparatur Ihres Liebherr-Kranes erleichtern.
Zum schnelleren Auffinden der Ersatzteile sind im Inhaltsverzeichnis die in Ihrem Kran verwendeten Baugruppen aufgeführt.

Inhaltsverzeichnis
Im Inhaltsverzeichnis verweist der Pfeil (⇨) in der zweiten Textzeile der Baugruppenartikelnummer. auf die Artikel-Nr. hin.

Bild und Textseiten
Die Bild- und Textseiten für die Baugruppen und Einzelteile sind sortiert nach Unterwagen, Oberwagen und Ausleger. Ein Artikel kann aus einer oder mehreren Bild- und/oder Textseiten bestehen.

Verweise
- Ein Pfeil (→) in der Stückliste führt zu einer detaillierten Bild- und/oder Textseite des Artikels
- Befindet sich eine Positionsnummer in Klammern (x), handelt es sich um Einzelteile des vorangegangenen Artikels
- Schlauchleitungen (Unterwagen, Oberwagen, Ausleger) werden folgendermaßen dargestellt:

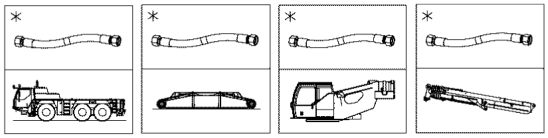

- Rohrleitungen (Unterwagen, Oberwagen, Ausleger) werden folgendermaßen dargestellt:

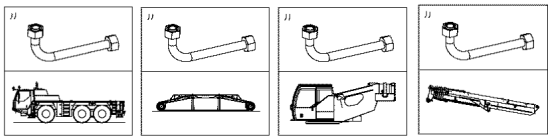

Fahrtrichtung
Der Pfeil (⇦/⇨) in der Abbildung verweist auf die Fahrtrichtung des Krans.

Numerischer Index
Der numerische Index ist sortiert nach Artikel-Nr. mit Hinweisen auf die Baugruppen-Nr. und Position-Nr.

Alphabetischer Index
Der alphabetische Index ist sortiert nach Bezeichnung mit Hinweisen auf Artikel-Nr., Position-Nr. und Baugruppen-Nr.
Für die sachliche Richtigkeit des Kataloges ist ausschließlich der deutsche Text maßgebend.

PRELIMINARY REMARKS

This spare parts catalogue should make it easier for you to identify and order spare parts for the maintenance and repair of your Liebherr crane.
In order to find the spare parts faster, the assemblies used in your crane are listed in the table of contents.

Table of contents

In the table of contents, the arrow (⇨) in the second text row of the assembly article no. refers to the article no.

Illustration and text pages

The illustration and text pages for the assemblies and individual parts are sorted according to chassis, superstructure and boom. An item can consist of one or multiple illustration and / or text pages.

References

- An arrow (→) in the parts list leads to a detailed image and / or text page of the item
- If there is a position number between parentheses (x), then it is an individual part of the previous item.
- Hoses (chassis, superstructure, boom) are shown as follows:

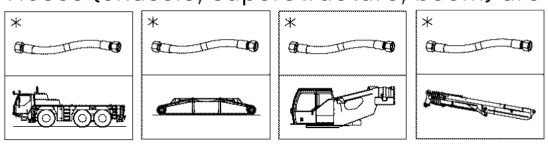

- Piping (chassis, superstructure, boom) is shown as follows:

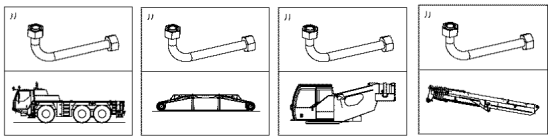

Travel direction

The arrow (⇦/⇨) in the illustration refers to the travel direction of the crane.

Numeric index

The numerical index is sorted according to the item no. with references to the assembly no. and the position no.

Alphabetic index

The alphabetic index is sorted according to the designation with references to the article no., position no. and assembly no.
For the factual accuracy of the catalogue, only the German text is applicable.

REMARQUES PREALABLES

Ce catalogue de pièces de rechange est conçu pour faciliter la sélection et la commande des pièces de rechange pour les opérations de maintenance et de réparation sur votre grue Liebherr.
Les groupes de composants utilisés sur votre grue sont énumérés dans la table des matières, pour en faciliter la recherche.

Table des matières

Dans la table des matières, la flèche (⇨), dans la deuxième ligne de texte de la référence des groupes de composants, renvoie à la référence de chaque article.

Pages d'illustrations et de texte

Les pages d'illustrations et de texte dédiées aux groupes de composants et différentes pièces sont triées selon le châssis, la partie tournante et la flèche. Un article peut être constitué d'une ou plusieurs pages d'illustrations et/ou de texte.

Renvois

- Une flèche (→) dans la nomenclature mène à une page d'illustrations et/ou de texte détaillée de l'article
- Un numéro de position entre parenthèses (x) correspond à différentes pièces de l'article précédent
- Les conduites flexibles (châssis, partie tournante, flèche) sont représentées de la manière suivante :

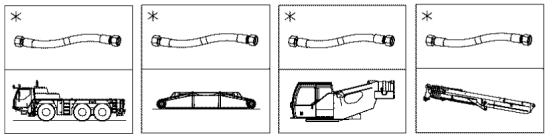

- Les conduites (châssis, partie tournante, flèche) sont représentées de la manière suivante :

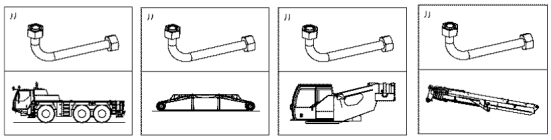

Sens de marche

La flèche (⇦/⇨) sur l'illustration renvoie au sens de marche de la grue.

Index numérique

L'index numérique est trié selon la référence article avec des indications sur le numéro de groupe de composants et le numéro de position.

Index alphabétique

L'index alphabétique est trié selon la désignation de l'article avec des indications sur la référence article, le numéro de position et le numéro de groupe de composants.
Seul le texte en langue allemande est déterminant pour la fiabilité du catalogue.

OBSERVACIONES PREVIAS

Este catálogo de piezas de repuesto debe servir para facilitarle la labor de encontrar y pedir las piezas de repuesto que necesita para el mantenimiento o la reparación de su grúa Liebherr.
Para que encuentre más rápido las piezas de repuesto, en el índice se enumeran los grupos constructivos usados en su grúa.

Índice

En el índice, la flecha (⇨) que hay en la segunda línea de texto del número de artículo del grupo constructivo se refiere al n.° de artículo.

Páginas de imagen y de texto

Las páginas de imagen y de texto para los grupos constructivos y las piezas individuales están clasificadas según el chasis inferior, la superestructura y la pluma. Un artículo puede constar de una o varias páginas de imagen y/o de texto.

Referencias

- Una flecha (→) en la lista de piezas conduce a una página de imagen y/o de texto detallada del artículo
- Si hay un número de posición entre paréntesis (x), se trata de piezas individuales del artículo precedente
- Las tuberías flexibles (chasis inferior, superestructura, pluma) se representan de la manera siguiente:

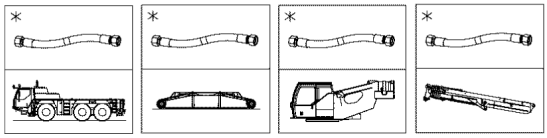

- Las tuberías rígidas (chasis inferior, superestructura, pluma) se representan de la manera siguiente:

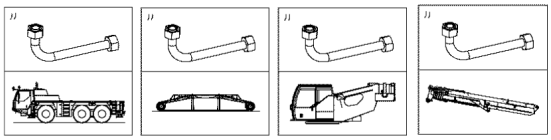

Dirección de marcha

La flecha (⇦/⇨) de la figura se refiere a la dirección de marcha de la grúa.

Índice numérico

El índice numérico está clasificado según el n.° de artículo, con alusiones al n.° de grupo constructivo y el n.° de posición.

Índice alfabético

El índice alfabético está clasificado según la denominación, con alusiones al n.° de artículo, el n.° de posición y el n.° de grupo constructivo.
La versión correcta determinante del catálogo es exclusivamente el texto en alemán.

ПРЕДВАРИТЕЛЬНЫЕ ЗАМЕЧАНИЯ

Этот каталог запасных частей поможет легче определить и заказать запасные части для техобслуживания или ремонта крана Liebherr.
Чтобы можно было быстрее найти запасные части, используемые в вашем кране конструктивные узлы, приведены в перечне.

Перечень

В содержании стрелка (⇨) во второй текстовой строке номера артикула конструктивного узла указывает на номер артикула.

Страницы с рисунками и текстами

Страницы с рисунками и описанием конструктивных узлов и отдельных частей рассортированы согласно их принадлежности ходовому устройству, поворотной платформе и стреле. Один артикул может включать одну или несколько страниц с рисунками и / или текстами.

Ссылки

- Стрелка (→) в спецификации ведёт к странице с подробным рисунком и / или описанием.
- Если номер позиции заключён в скобки (x), речь идёт об отдельных частях из предыдущего артикула.
- Шлангопроводы (ходовое устройство, поворотная платформа, стрела) представлены следующим образом:

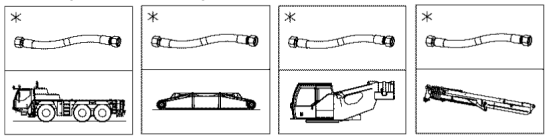

- Трубопроводы (ходовое устройство, поворотная платформа, стрела) представлены следующим образом:

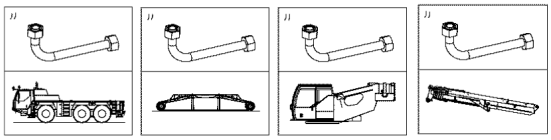

Направление движения

Стрелка (⇦/⇨) на рисунке указывает на направление движения крана.

Числовой индекс

Числовой индекс сортирует по номеру артикула с указанием номера конструктивного узла и позиции.

Алфавитный индекс

Алфавитный индекс сортирует по наименованию со указанием номера артикула, номера позиции и номера конструктивного узла.
Определяющим для правильности предметной классификации каталога является исключительно немецкий текст.

WIE BESTELLE ICH EIN ERSATZTEIL

Prüfen Sie zunächst, ob der Kran-Typ und die Werk-Nr. auf dem Typenschild Ihres Liebherr-Kranes mit dem Kran-Typ und der Werk-Nr. im Ersatzteilkatalog übereinstimmen.

Ihre Bestellung muss folgende Angaben enthalten:

anzugeben:	**zu ersehen:**	**Beispiel:**
Krantyp	Typenschild	LTM 1070-4.2
Werk-Nr.	Typenschild	060647
Bestellmenge	Ihr Bedarf	1 Stück
Artikel-Nr.	Bildseite/Textseite	938587501
Bezeichnung	Bildseite/Textseite	Seilwinde
Versandanschrift		
Versandart		

ACHTUNG:

Bei Aggregaten, für die auch Einzelteile bestellt werden können, weist der Pfeil (⇨) in der zweiten Textzeile der Bezeichnung auf die entsprechende Artikelnummer hin.

Bildseiten der Leitungssysteme (Hydraulik, Pneumatik, Elektrik) beinhalten nicht alle Aggregate.

Diese Aggregate sind auf den Bildseiten zu sehen, die die Einbaulage darstellen.

Für die Lieferung von Ersatzteilen gelten unsere Lieferungs- und Zahlungsbedingungen.

HOW DO I ORDER A SPARE PART

First check if the crane type and the plant no. on the data tag of your Liebherr crane comply with the crane type and plant number in the spare parts catalogue.

Your order must include the following data:

indicate:	**refer to:**	**Example:**
Crane type	Data tag	LTM 1070-4.2
Factory No.	Data tag	060647
Order amount	Your requirement	1 item
Article no.	Figure page / text page	938587501
Designation	Figure page / text page	Rope winch
Shipping address		
Shipping method		

NOTICE:

In the case of aggregates for which individual parts can also be ordered, the arrow (⇨) in the second line of text of the designation refers to the corresponding article number.

Figure pages for the hydraulic, pneumatic and electrical lines do not contain all aggregates.

These aggregates can be seen on the figure pages that represent the installation position.

For the delivery of the spare parts, our delivery and payment conditions apply.

COMMENT COMMANDER UNE PIECE DE RECHANGE

Commencer par vérifier si le type de grue et le numéro d'usine sur la plaque signalétique de votre grue Liebherr correspondent bien au type de grue et au numéro d'usine dans le catalogue des pièces de rechange.

Votre commande doit contenir les informations suivantes :

A indiquer :	**Information disponible :**	**Exemple :**
Type de grue	Plaque signalétique	LTM 1070-4.2
Numéro d'usine	Plaque signalétique	060647
Quantité commandée	Votre besoin	1 pce
Référence	Page d'illustrations / de texte	938587501
Désignation	Page d'illustrations / de texte	Treuil à câble
Adresse d'expédition		
Mode d'expédition		

ATTENTION :

Pour les groupes comportant des pièces pouvant être commandées séparément, la flèche (⇨), dans la deuxième ligne de texte de la désignation, indique la référence de l'article.

Les pages d'illustration des systèmes de conduites (hydraulique, pneumatique, électrique) ne détaillent pas tous les groupes disponibles.

Ces groupes sont détaillés sur les pages d'illustration représentant la position de montage.

La livraison des pièces de rechange est régie par nos conditions générales de vente.

CÓMO PEDIR UNA PIEZA DE REPUESTO

Compruebe primero si el modelo de grúa y el n.° de fábrica que hay en la placa de características de su grúa Liebherr coinciden con el modelo de grúa y el n.° de fábrica indicados en el catálogo de piezas de repuesto.

Su pedido debe contener los siguientes datos:

Qué indicar:	**Dónde consultarlo:**	**Ejemplo:**
Modelo de grúa	Placa de características	LTM 1070-4.2
N.° de fábrica	Placa de características	060647
Cantidad de pedido	Según su demanda	1 unidad
N.° de artículo	Página de imagen/Página de texto	938587501
Denominación	Página de imagen/Página de texto	Cabrestante
Dirección de envío		
Forma de envío		

ATENCIÓN:

En el caso de agregados para los que también se pueden pedir piezas individuales, la flecha (⇨) de la segunda línea de texto de la denominación alude al número de artículo correspondiente.

Las páginas de imagen de los sistemas de control (sistema hidráulico, sistema neumático, sistema eléctrico) no incluyen todos los agregados.

Estos agregados se pueden ver en las páginas de imagen que representan la posición de montaje.

Para el suministro de piezas de repuesto son válidas nuestras condiciones de envío y de pago.

КАК ЗАКАЗАТЬ ЗАПАСНУЮ ЧАСТЬ

Сначала проверьте, совпадает ли тип и заводской номер крана, указанные на заводской табличке данного крана Liebherr, с типом и заводским номером крана в каталоге запасных частей.

Ваш заказ должен содержать следующую информацию:

Следует указать:	**Следует смотреть:**	**Пример:**
Тип крана	Заводская табличка	LTM 1070-4.2
Заводской номер	Заводская табличка	060647
Объём заказа	По потребности	1 шт.
Номер артикула	Страницы с рисунками / страницы с описанием	938587501
Название	Страницы с рисунками / страницы с описанием	Канатная лебёдка
Адрес отправки		
Способ отправки		

ВНИМАНИЕ!

В агрегатах, для которых также можно заказать отдельные части, стрелка (⇨) во второй текстовой строке названия указывает на соответствующий номер артикула.

Страницы с рисунками модульного размера трубопроводов и каналов (гидравлических, пневматических, электрических) охватывают не все агрегаты.

Эти агрегаты можно найти на страницах с рисунками, представляющих монтажное положение.

На поставку запасных частей распространяются наши Условия поставки и оплаты.

Pos.	Item	Quantity	Description	Bezeichnung
2	91001569	1	CRAWLER TRACK TRAVEL GEAR CPL. ⇨ ❑ 16	RAUPENFAHRWERK KPL.
4	919499308	1	CENTRAL SECTION CRAWLER COMPL. ⇨ ❑ 32	RAUPENMITTELTEIL KPL.
6	918925508	2	CROSS BEAM CPL. ⇨ ❑ 68	QUERTRAEGER KPL.
8	917436708	2	FLOOR SHEET COMPL. 1.0M ⇨ ❑ 69	BODENPLATTEN KPL.
10	91001371	1	CRAWLER TRACK CARRIER LEFT CPL ⇨ ❑ 70	RAUPENTRAEGER KPL.LI.
11	91001373	1	CRAWLER CARRIER RIGHT CPL ⇨ ❑ 103	RAUPENTRAEGER KPL.RE.
13	917691008	1	FALL PROTECTION ⇨ ❑ 117	ABSTURZSICHERUNG
14	919644008	1	HYDRAULIC SUPPORT ⇨ ❑ 126	HYDRAULISCHE ABSTUETZUN
20	917257108	1	CENTRALIZED LUBRICATION SYSTEM ⇨ ❑ 133	ZENTRALSCHMIERUNG RAUPE
22	919499408	1	CENTRAL BALLAST ⇨ ❑ 148	ZENTRALBALLAST
23	919499508	1	BALLAST MONITORING ⇨ ❑ 140	BALLASTUEBERWACHUNG
24	919328608	1	TOOLS AND ACCESSORIES ⇨ ❑ 151	WERKZEUG M.ZUBEHOER
26	91001571	1	BOLT EXTRACTION DEVICE ⇨ ❑ 154	BOLZENZIEHVORRICHTUNG
30	919087608	1	ROTARY FEED THROUGH ⇨ ❑ 145	DREHDURCHFUEHRUNG
39	915731908	2	EL.COMP. DISPATCH ASSEMBLY ⇨ ❑ 160	EL.TEILE VERSANDMONTAGE
40	916283508	1	PLATING FABRIKDATEN ⇨ ❑ 161	ZUSATZBESCHILDERUNG
42	917862808	1	LABELLING GREAT BRITAIN ⇨ ❑ 162	BESCHILDERUNG GROSSBRITA
44	917258108	1	HATCHING PLAN SPF ⇨ ❑ 165	SCHRAFFURPLAN
46	916959808	1	PERSONAL PROTECTION EQUIPMENT ⇨ ❑ 167	PERSOENLICHE SCHUTZAUSRU
78	919553608	1	ADDITIONAL SIGNAGE CALIFORNIA ⇨ ❑ 168	ZUSATZBESCHILD.CALIFORNIE
103	918731108	1	ASSEMBLY PARTS F.SLEWING PLTF. ⇨ ❑ 170	MONTAGETEILE DREHBUEHNE
104	919832508	1	DIESEL ENGINE PURCHASED PARTS ⇨ ❑ 173	DIESELMOTOR KAUFTEIL
105	918731408	1	DRIVE ASSEMBLY CPL. ⇨ ❑ 279	ANTRIEBSAGGREGAT KPL.
107	918955408	1	BATTERY BOX CPL. ⇨ ❑ 332	BATTERIEKASTEN KPL.
108	917626608	1	FUEL TANK ADD-ON UNIT ⇨ ❑ 336	KRAFTSTOFFBEHAELTER ANBA
109	91002861	1	FUEL FEED ⇨ ❑ 340	KRAFTSTOFFFOERDERUNG
110	917825508	1	OIL RESERVOIR, EXTENSION ⇨ ❑ 344	OELBEHAELTER ANBAU
111	919617008	1	LUFFING RAM W. PIVOT ⇨ ❑ 646	WIPPZYLINDER M.LAGERUNG
117	917259408	1	ROLLER SLEWING RING ⇨ ❑ 349	ROLLENDREHVERBINDUNG
119	919369308	1	SLEWING GEAR ⇨ ❑ 351	DREHWERK

Pos.	Item	Quantity	Description	Bezeichnung
121	917259608	1	ROTATING PLATFORM LOCK ⇨ ❑ 362	DREHBUEHNENARRETIERUNG
122	10040024	2	POUCH SOCKET 23-26 SPF ⇨ ❑ 649	TASCHENSCHLOSS
125	917259708	1	MAIN HOIST GEAR ⇨ ❑ 364	HAUPTHUBWERK
127	917259808	1	ROPE WITH ACCESSORIES 1 ⇨ ❑ 650	SEIL F.WINDE 1
129	917259908	1	CRANE DRIVER CAB ADDITION ⇨ ❑ 377	KRANFUEHRERKABINE ANBAU
130	919010208	1	CRANE OPERATOR CABIN PREASS 2 ⇨ ❑ 380	KRANFUEHRERKABINE VORM.2
131	917304508	1	CRANE OPERATOR CABIN PREASS 1 ⇨ ❑ 394	KRANFUEHRERKABINE VORM.1
132	917304608	1	CRANE DRIVER CABIN, UNFINISHED ⇨ ❑ 417	KRANFUEHRERKABINE ROH
133	917304708	1	SLIDING DOOR INSTALLATION SPF ⇨ ❑ 418	SCHIEBETUER EINBAU
134	917676208	1	HEATING CRANE DRIVER'S CABIN MIT KLI ⇨ ❑ 425	HEIZUNG KRANFUEHRERKABIN
135	918810308	1	CONTROL STAND ⇨ ❑ 431	STEUERSTAND
138	916049908	1	MIRROR ATTACHM.IN CRANE CABIN ⇨ ❑ 440	SPIEGELANBAU KRANFUEHRER
139	918731508	1	TURNTABLE PANELLING ⇨ ❑ 441	DREHBUEHNENVERKLEIDUNG
140	917260108	1	FALL PROTECTION ⇨ ❑ 458	ABSTURZSICHERUNG
141	917610208	1	ADDITIONAL PARTS DREHBUEHNVERKL. ⇨ ❑ 459	ZUSATZTEILE
143	919783608	1	EL.INSTRUMENTS F.CRANE DRIV.CA ⇨ ❑ 460	ELEKTRIK KRANFUEHRERKABIN
144	917260408	1	MIRROR ATTACHM.AT SLEW.PLATFOR ⇨ ❑ 476	SPIEGELANBAU DREHBUEHNE
145	918759808	1	ADD HEATING SUPERSTRUCTURE ⇨ ❑ 478	ZUSATZHEIZUNG OW
146	917260608	1	COUNTERWEIGHT WITH CLAMP ⇨ ❑ 651	GEGENGEWICHT M.BEFESTIG
147	917404508	1	BALLAST DREHBUEHNE 4X10T ⇨ ❑ 655	BALLAST
148	917404008	1	ADDITIONAL BALLAST ⇨ ❑ 656	ZUSATZBALLAST
150	917618608	1	ADD-ON PARTS BTT ⇨ ❑ 487	ANBAUTEILE
153	918956108	1	HYDRAULIC BALLASTING ⇨ ❑ 489	HYDRAULISCHE BALLASTIERUN
155	917676308	1	COMPRESSED-AIR SYST.SUPERSTR. ⇨ ❑ 494	DRUCKLUFTANLAGE OW
162	918731808	1	UREA PLANT ⇨ ❑ 498	HARNSTOFFANLAGE
163	919674408	1	EXHAUST SYSTEM ⇨ ❑ 505	ABGASANLAGE
164	919373908	1	ADDITIONAL PART LEVEL 5 ⇨ ❑ 517	ZUSATZTEILE STUFE 5
165	918731908	1	AIR FILTER UNIT ⇨ ❑ 519	LUFTFILTERANLAGE
169	917261208	1	CENT. LUBRIC. SYSTEM SUPERST. ⇨ ❑ 522	ZENTRALSCHMIERANLAGE OW
175	919028808	1	DISPATCH ASSY.MECH.PARTS ⇨ ❑ 657	MECH.TEILE VERSANDMONTAG

Pos.	Item	Quantity	Description	Bezeichnung
179	919410708	1	ELECTR. SYSTEM F.SLEWING PLATF ⇨ ❑ 527	EL.ANLAGE DREHBUEHNE
181	91000922	1	SWITCHBOX MOUNTING PARTS ⇨ ❑ 539	EINBAUTEILE SCHALTSCHRAN
185	918732808	1	HYDRAULICS ⇨ ❑ 552	HYDRAULIK
187	917261808	1	OIL COOLER INSTALLATION ⇨ ❑ 591	OELKUEHLER EINBAU
191	918739608	1	HOSE LINES SUPERSTRUCTURE STUFE 5 ⇨ ❑ 595	SCHLAUCHLEITUNGEN OBER
193	918956208	1	PIPELINES SUPERSTRUCTURE ⇨ ❑ 598	ROHRLEITUNGEN OBERWAGE
195	918802108	2	BALLAST MONITORING ENCODER ⇨ ❑ 660	GEBER BALLASTUEBERWACH
199	916166208	1	CAR RADIO ⇨ ❑ 661	AUTORADIO
201	918804808	1	TELESCOPIC BOOM CPL. SPF ⇨ ❑ 663	TELESKOPAUSLEGER KPL.
203	917262208	1	ELECTR. SYSTEM F. BOOM ⇨ ❑ 706	EL.ANLAGE AUSLEGER
217	917262408	1	HYDR.F.TELESCOPIC BOOM ⇨ ❑ 715	HYDRAULIK TELE
229	917262508	1	ADDNL.HYDR. FOLDING JIB ⇨ ❑ 720	ZUSATZHYDRAULIK KLAPPSPI
285	917379608	1	CARRIER, MEAS. & WARN. DEVICE WW+HF ⇨ ❑ 740	TRAEGER MESS-U.WARNEINRI
286	917551608	1	ADD-ON PARTS TELE ⇨ ❑ 747	ANBAUTEILE
299	917611508	1	SLINGING MEAN ⇨ ❑ 748	ANSCHLAGMITTEL
301	918628408	1	AIR COND. UNIT SUPERSTRUCTURE ⇨ ❑ 600	KLIMAANLAGE OW
302	917265308	1	ADDNL.HYDR. FOLDING JIB ⇨ ❑ 726	ZUSATZHYDRAULIK KLAPPSPI
304	917531708	1	BALLAST TRAVERSE 70T ⇨ ❑ 752	BALLASTTRAVERSE
310	919007108	1	LOAD HOOK 12.5E SPF ⇨ ❑ 753	LASTHAKEN
316	910836808	1	HOOK BLOCK 125DM SPF ⇨ ❑ 754	HAKENFLASCHE
321	918124908	1	A-HEADL.SEARCHLIGHT PIVOT SEC. EL.VE ⇨ ❑ 731	A-SCHEINWERFER ANLENKSTU
330	917267108	1	AUXILIARY HOISTING GEAR 2 ⇨ ❑ 602	HILFSHUBWERK WINDE 2
332	917267208	1	AUXILIARY HOIST.ROPE W.ACCESSO ⇨ ❑ 756	HILFSHUBSEIL M.ZUBEHOER
333	917267308	1	HYDR.AUXILIARY HOISTING ⇨ ❑ 614	HYDRAULIK HILFSHUBWERK
334	917413208	1	SELF-ERECT. AUX. HOIST GEAR ⇨ ❑ 757	SELBSTMONTAGE HILFSHUBW
350	917267508	1	TRANSPORT MOUNTING ⇨ ❑ 759	TRANSPORTHALTERUNG DKS
352	917268108	1	TOOLS ⇨ ❑ 766	WERKZEUG KLAPPSPITZE
356	917268408	1	BOOM NOSE ⇨ ❑ 733	MASTNASE
362	918197708	1	EL.2 HOISTING LIMIT SWITCH ⇨ ❑ 735	ELEKTRIK 2.HUBENDSCHALTE
363	910040808	1	2nd NECK PULLEY INSTALLATION ⇨ ❑ 739	2.NACKENROLLE EINBAU

Pos.	Item	Quantity	Description	Bezeichnung
364	917966708	1	ADDNL.HYDR. FOLDING JIB DB ⇨ ❑ 620	ZUSATZHYDRAULIK KLAPPSPI
381	918462708	1	EXTERNAL FEED 230V-110V ⇨ ❑ 625	FREMDEINSPEISUNG
383	917269308	1	CHARGER 110V ⇨ ❑ 626	LADEGERAET
389	917269408	1	CONSOLE AUX. REPLENISHING ⇨ ❑ 627	KONSOLE FREMDEINSPEISUN
391	915432508	1	RADIO PREPARATION UPPER CARRIA ⇨ ❑ 628	FUNKVORBEREITUNG OW
401	918377508	1	COOLING WATER PRE-HEATING 110V ⇨ ❑ 629	KUEHLWASSERVORWAERMUN
417	918462408	1	SIGN EXTERNAL SUPPLY 110V ⇨ ❑ 769	BESCHILDERUNG FREMDEINSP
421	919127808	1	SIGN TRANSPORT HOLDER ⇨ ❑ 770	BESCHILDERUNG TRANSPOR
438	918989008	1	A-HEADLIGHT SLEWING PLATFORM ⇨ ❑ 631	A-SCHEINWERFER DREHBUEHN
440	915037208	1	AUXILIARY REEVING CABLE, COMPL 16X18 ⇨ ❑ 772	HILFSEINSCHERSEIL KPL.
491	918992008	1	CAMERA MONITOR OW ⇨ ❑ 633	KAMERAUEBERWACHUNG OW

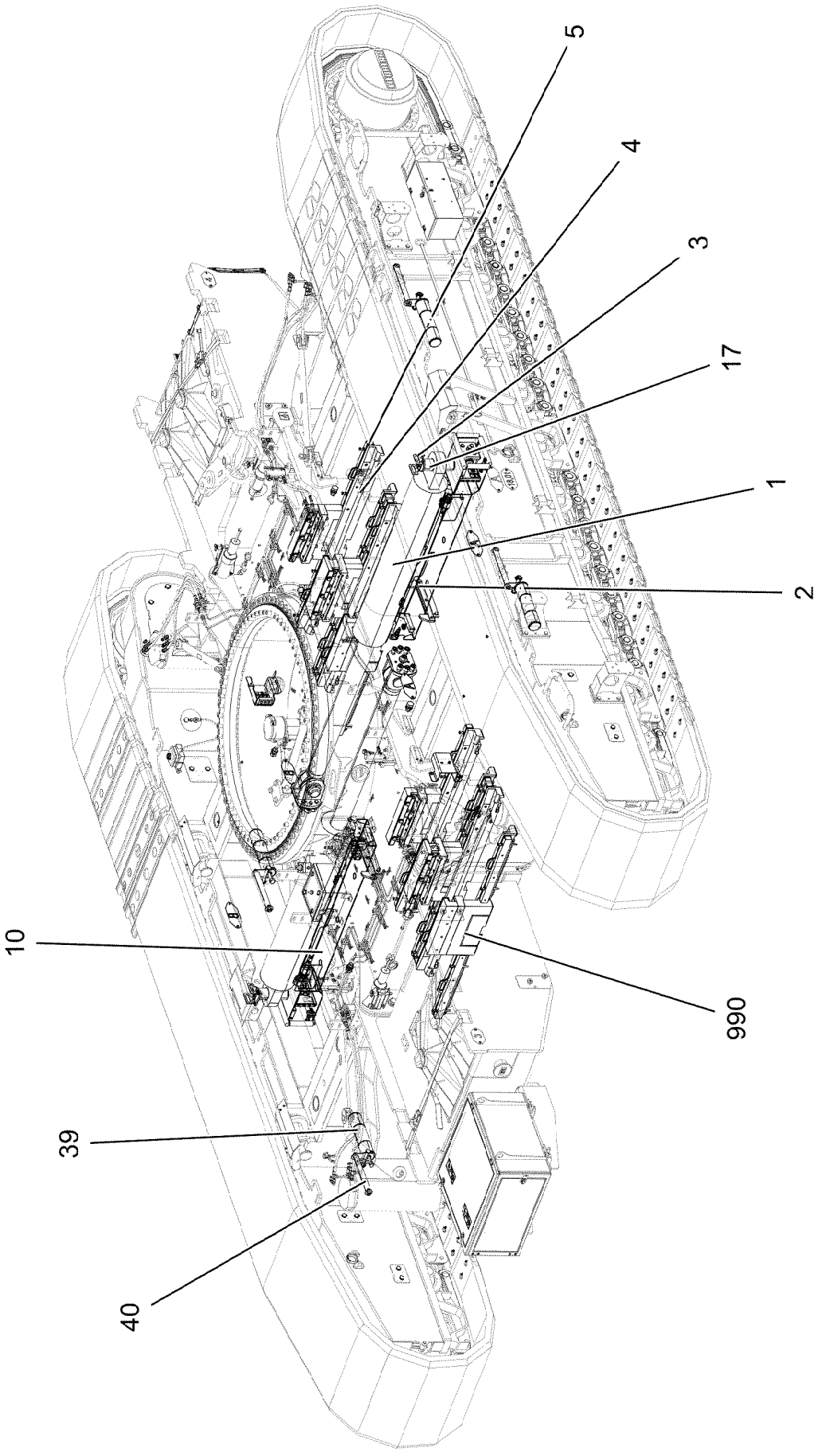
5
4
3
17
1
2
10
990
39
40

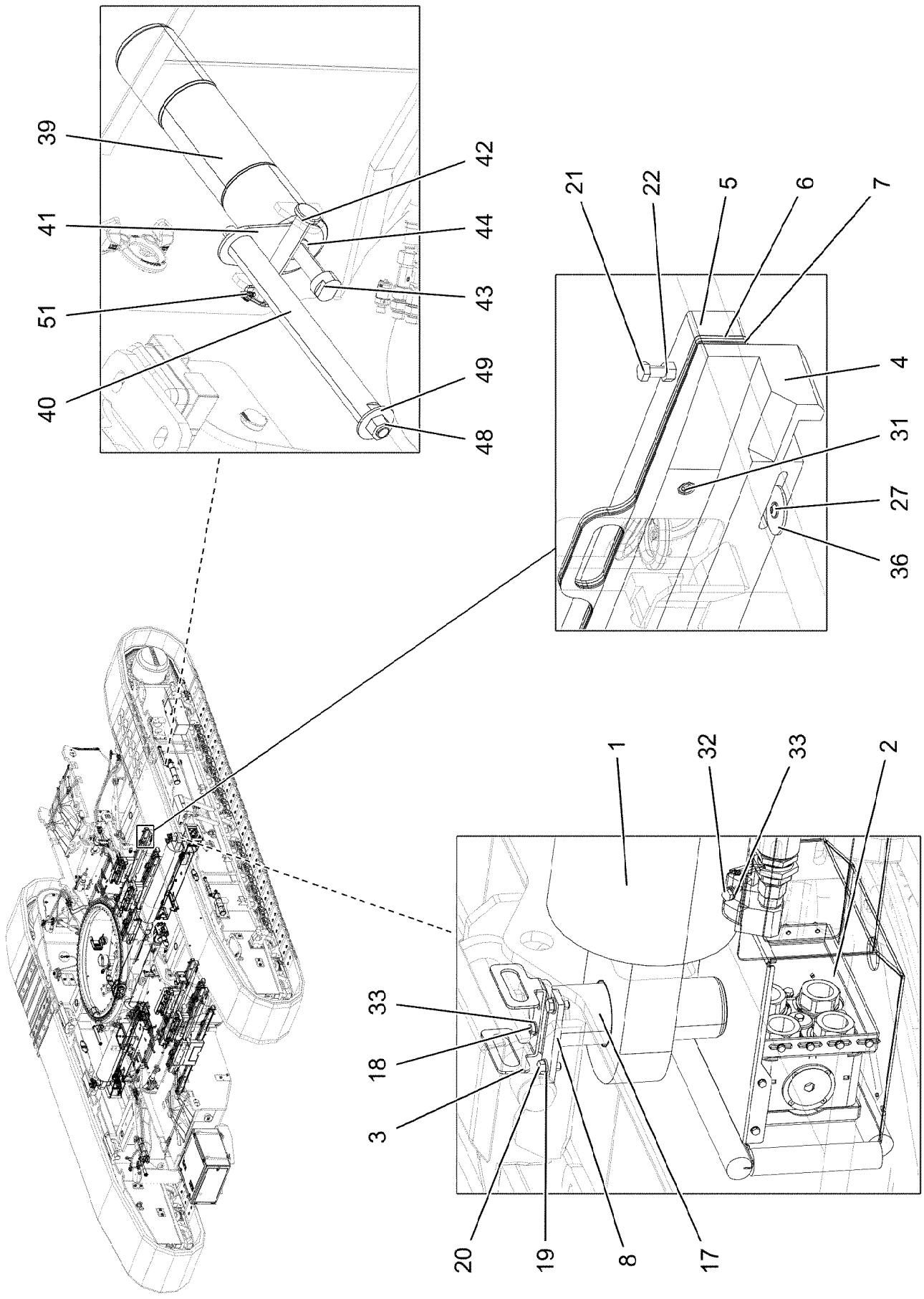
39
41
51
40
42
44
43
49
48
21
22
5
6
7
4
31
27
36
1
32
33
2
33
18
3
20
19
8
17

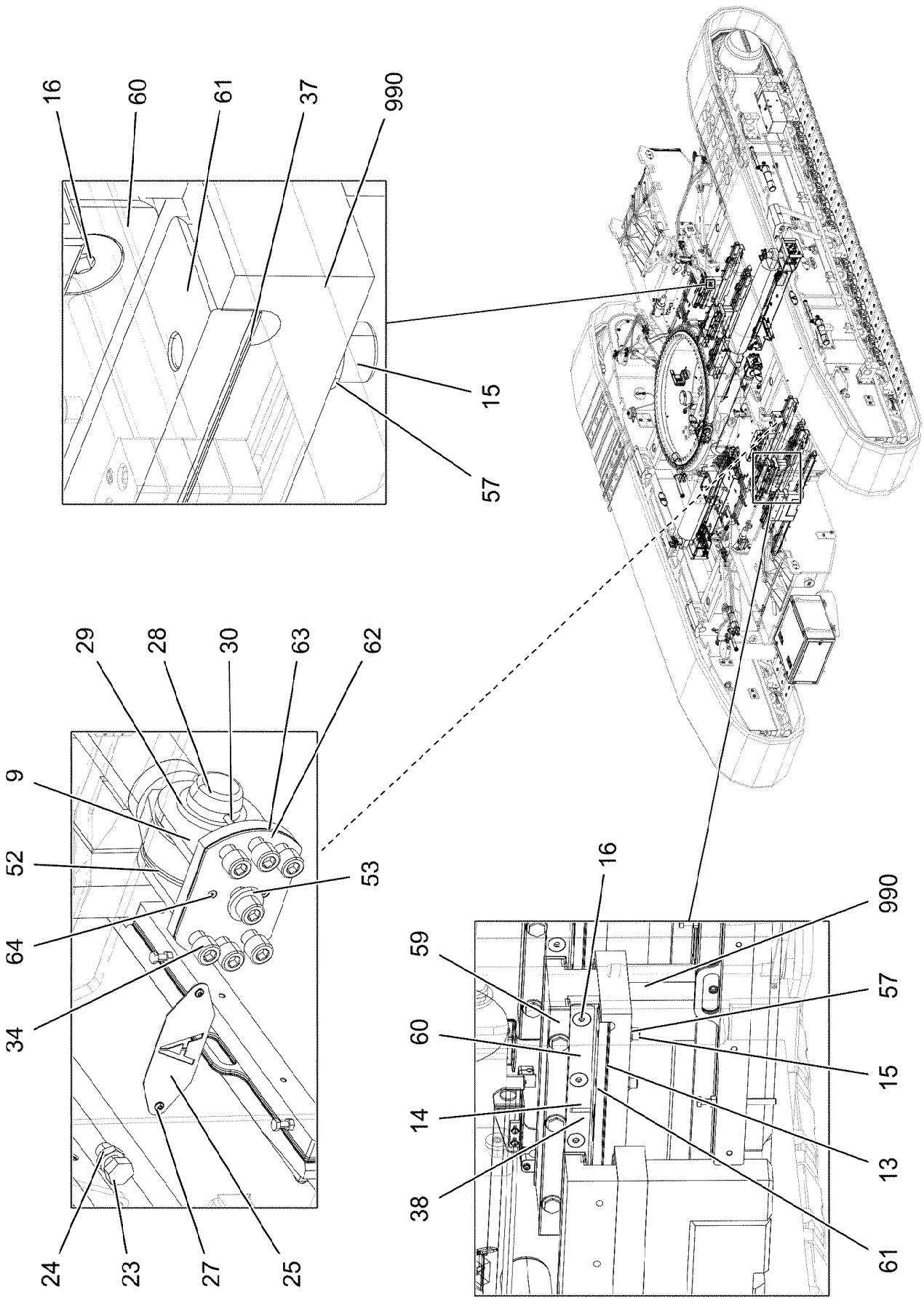
16
60
61
37
990
15
57
29
28
30
63
62
9
52
53
64
34
24
23
27
25
16
990
59
57
60
15
14
13
38
61

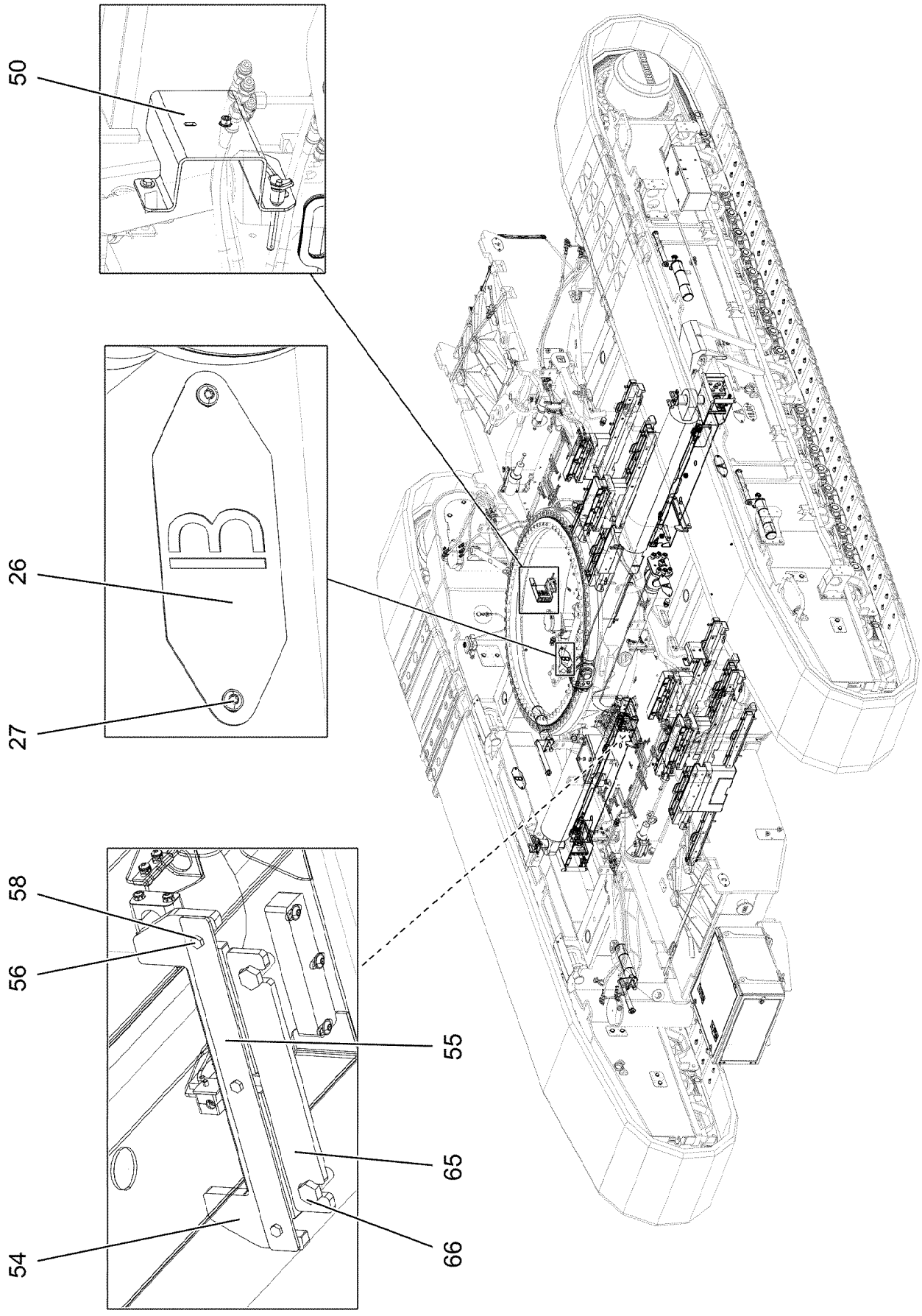
50
26
27
58
56
55
65
54
66

Pos.	Item	Quantity	Description	Bezeichnung
1	12102931	2	TRACK WIDTH ADJUSTING CYLINDER 250/1 ⇨ ❑ 22	SPURVERSTELLZYLINDER
2	96034894	1	PROTECTION PLATE CPL. ⇨ ❑ 24	SCHUTZBLECH KPL.LI.
3	97100419	2	GRIP 4X110X245 S315MC	GRIFF
4	97031639	8	SLIDE PLATE 120X100X2090 PA6G+OEL	GLEITPLATTE
5	97031640	16	DISTANCE PLATE 60X37X730 PA6G+OEL	DISTANZPLATTE
6	97031641	32	PLATE 4X730X110 ALMG3 H111	BLECH
7	97031642	32	PLATE 2X730X110 ALMG3 H111	BLECH
8	942164608	2	AXLE HOLDER 10X140X40 S355MC FE//ZNNI	ACHSHALTER
9	967996008	2	BRACKET WELDED CONST.	KONSOLE SCHWK.
10	96034977	1	PROTECTION PLATE ⇨ ❑ 27	SCHUTZBLECH KPL.RE.
13	97031991	40	PLATE 2X516X55 DC01 FE//ZNNI8//CN//T0	BLECH
14	97031992	16	PLATE 2X516X48 DC01 FE//ZNNI8//CN//T0	BLECH
15	12692012	32	SOCKET HEAD SCREW ISO 4762 M16X65 8	ZYLINDERSCHRAUBE
16	10878064	56	COUNTERSUNK SCREW ISO 10642 M16X30	SENKSCHRAUBE
17	97032012	2	PIN 110.0X277 35NICRMOV125 SPF	BOLZEN
18	10179392	4	SOCKET HEAD SCREW DIN 7984 M10X20 08	ZYLINDERSCHRAUBE
19	10289804	4	WASHER ISO 7089 12 300HV FLZN SPF	SCHEIBE
20	11658892	4	HEX SCREW ISO 4017 M12X25 8.8 FLZN SP	SECHSKANTSCHRAUBE
21	10178901	32	HEX SCREW ISO 4017 M12X150 8.8 FLZN SP	SECHSKANTSCHRAUBE
22	10875616	32	HEX NUT ISO 4032 M12 8 FLZN SPF	SECHSKANTMUTTER
23	12228747	4	HEX SCREW ISO 4017 M30X60 8.8 FLZN SP	SECHSKANTSCHRAUBE
24	4635422	4	HEX NUT ISO 4035 M30 05 FLZN SPF	SECHSKANTMUTTER
25	97037945	2	PLATE 2X290X100 DC01 FE//ZNNI8//CN//T0	BLECH
26	97011478	2	PLATE 2X100X290 DC01 FE//ZNNI8//CN//T0	BLECH
27	12102696	24	BUTTON HEAD SCREW ISO 7380-2 M8X10 0	HALBRUNDKOPFSCHRAUBE
28	951111408	2	PIN RD100X193 35NICRMOV125	BOLZEN
29	421104208	2	WASHER DIN 1440 100 ST VERZ	SCHEIBE
30	10180381	2	SPLIT PIN ISO 1234 13X125 St 480H SPF	SPLINT
31	10876374	48	SOCKET HEAD SCREW ISO 4762 M12X60 8	ZYLINDERSCHRAUBE
32	11631816	8	HEX SCREW ISO 4017 M10X25 8.8 FLZN SP	SECHSKANTSCHRAUBE
33	10289795	12	WASHER ISO 7089 10 300HV FLZN SPF	SCHEIBE
34	10878580	14	SOCKET HEAD SCREW ISO 4762 M30X70 8	ZYLINDERSCHRAUBE
36	97017499	16	WASHER 3X54X54 X5CRNI18-10	SCHEIBE
37	97035163	8	PLATE 1X516X55 DC01 FE//ZNNI8//CN//T0	BLECH
38	97035164	8	PLATE 1X516X48 DC01 FE//ZNNI8//CN//T0	BLECH
39	97158080	4	PIN 110.0X452 35NICRMOV125 SPF	BOLZEN
40	97036914	4	GUIDING ROD 45.0X455 35NICRMOV125 SP	FUEHRUNGSSTANGE
41	97061426	4	PLATE 5X90X189 S355MC FE//ZNNI8//CN//T	BLECH
42	97036916	4	PIN WITH HEAD 45.0X167 35NICRMOV125	BOLZEN MIT KOPF
43	97150259	4	PIN 40.0X118 35NICRMOV125 GASN. SPF	BOLZEN
44	10289808	4	WASHER ISO 7089 20 300HV FLZN SPF	SCHEIBE
48	10875618	4	HEX NUT ISO 4032 M20 8 FLZN SPF	SECHSKANTMUTTER
49	4600328	4	WASHER ISO 7093-1 20 300HV FLZN SPF	SCHEIBE
50	968019508	1	LIMIT SWITCH ADD-ON ⇨ ❑ 30	ENDSCHALTER ANBAU
51	10875870	4	SAFETY PLUG W HINGE-LID 6X42X5,5X32 4	SICHERHEITSKLAPPSTECKER
52	935508808	8	COVER RD190X6 S355MC FE//ZNNI8//CN//T	DECKEL
53	12226080	2	WASHER DIN 7349 31 100HV FLZN SPF	SCHEIBE
54	97038559	2	SLIDE PLATE 15X120X450 PA6G+OEL	GLEITPLATTE
55	97038560	2	PLATE 4X450X40 S315MC FE//ZNNI8//CN//T	BLECH
56	500411708	6	HEX SCREW ISO 4017 M8X28 8.8	SECHSKANTSCHRAUBE
57	10289806	32	WASHER ISO 7089 16 300HV FLZN SPF	SCHEIBE
58	420060705	6	WASHER ISO 7089 8 200HV-A2	SCHEIBE
59	97049098	8	SLIDE SHEET 560X46X 35 CUZN25AL5	GLEITBLECH
60	97043682	8	SLIDE SHEET 520X50X 13 CUZN25AL5	GLEITBLECH
61	97043683	8	SLIDE SHEET 520X57X 18 CUZN25AL5	GLEITBLECH
62	97039973	2	PLATE 5X280X200 S355MC FE//ZNNI8//CN//T	BLECH

Pos.	Item	Quantity	Description	Bezeichnung
63	97039974	4	PLATE 2X200X280 DC01 FE//ZNNI8//CN//T0	BLECH
64	10875553	4	COUNTERSUNK SCREW DIN 7991 M8X25 8	SENKSCHRAUBE
65	97050776	2	PLATE 10X50X350 S355MC	BLECH
66	10875519	4	HEX SCREW ISO 4017 M16X40 8.8 FLZN SP	SECHSKANTSCHRAUBE

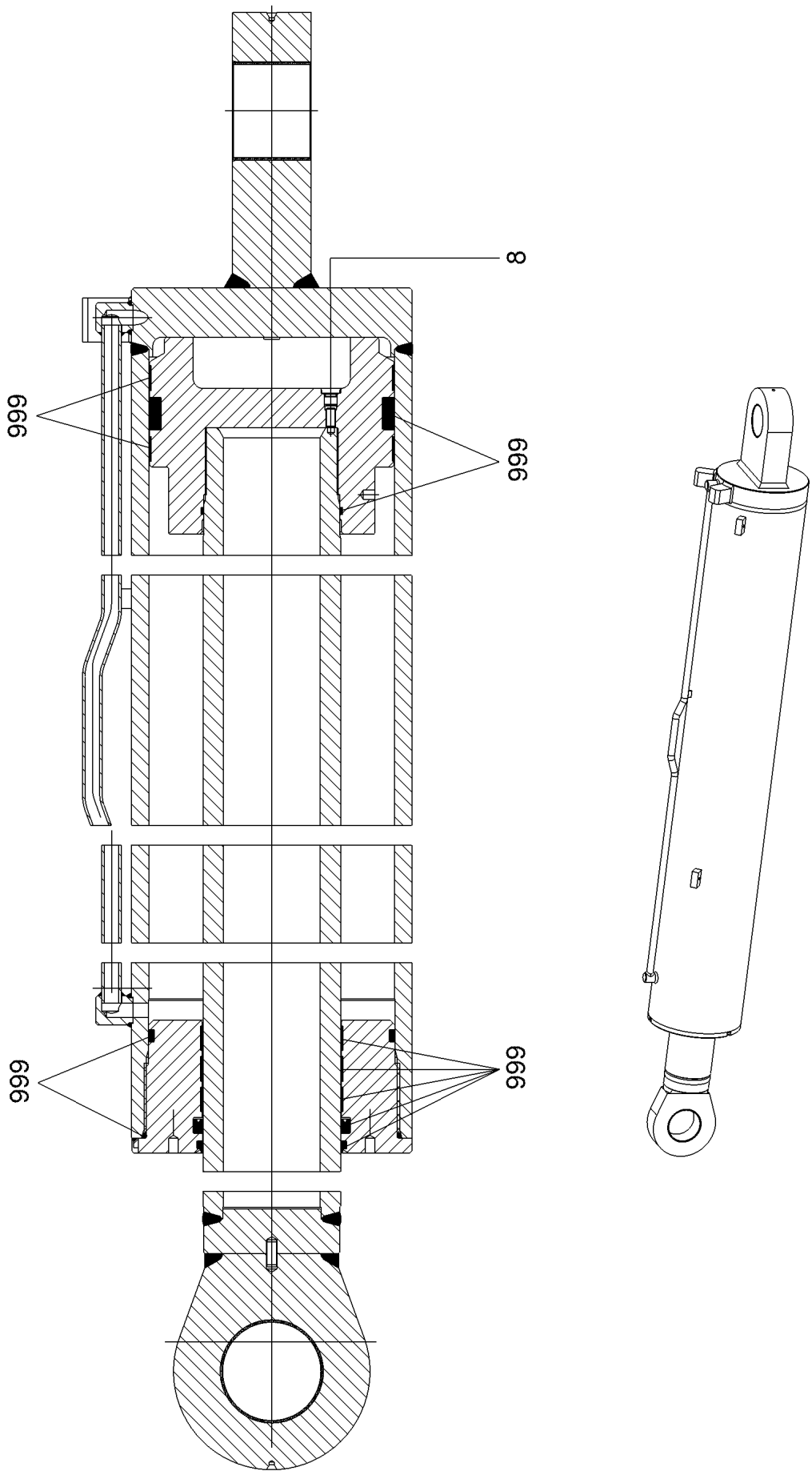
8
999
999
999
999

Pos.	Item	Quantity	Description	Bezeichnung
8	4048002	1	GRUB SCREW DIN 915 M10X25 45H	GEWINDESTIFT
999	10871692	1	SEAL KIT CYLINDER	DS ZYLINDER

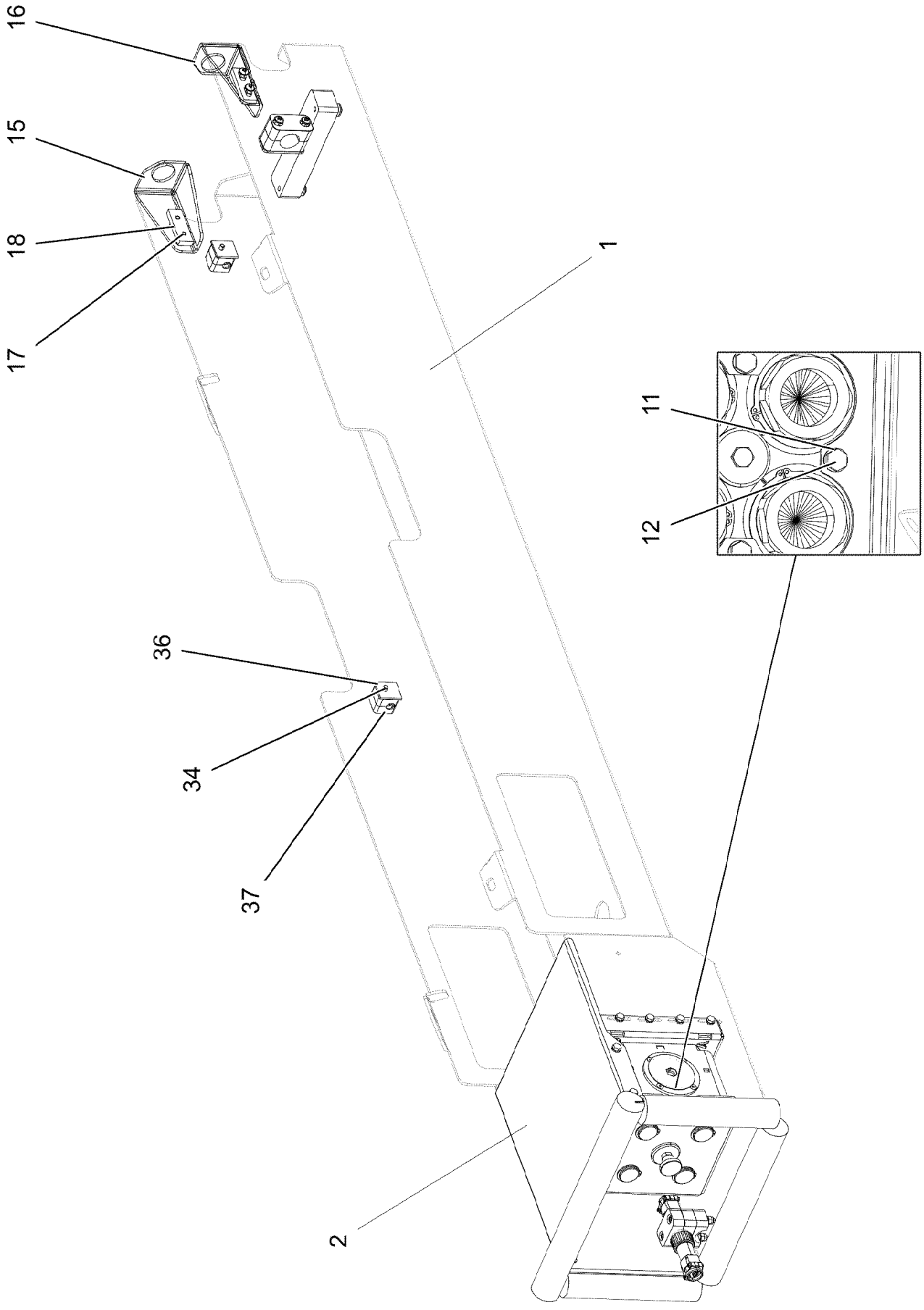

18.7.2022 004551 LIEBHERR	**etk_en_de_047654 LTR 1220** **PROTECTION PLATE CPL.** **SCHUTZBLECH KPL.LI.**	❑ 24 (1/3) **96034894**

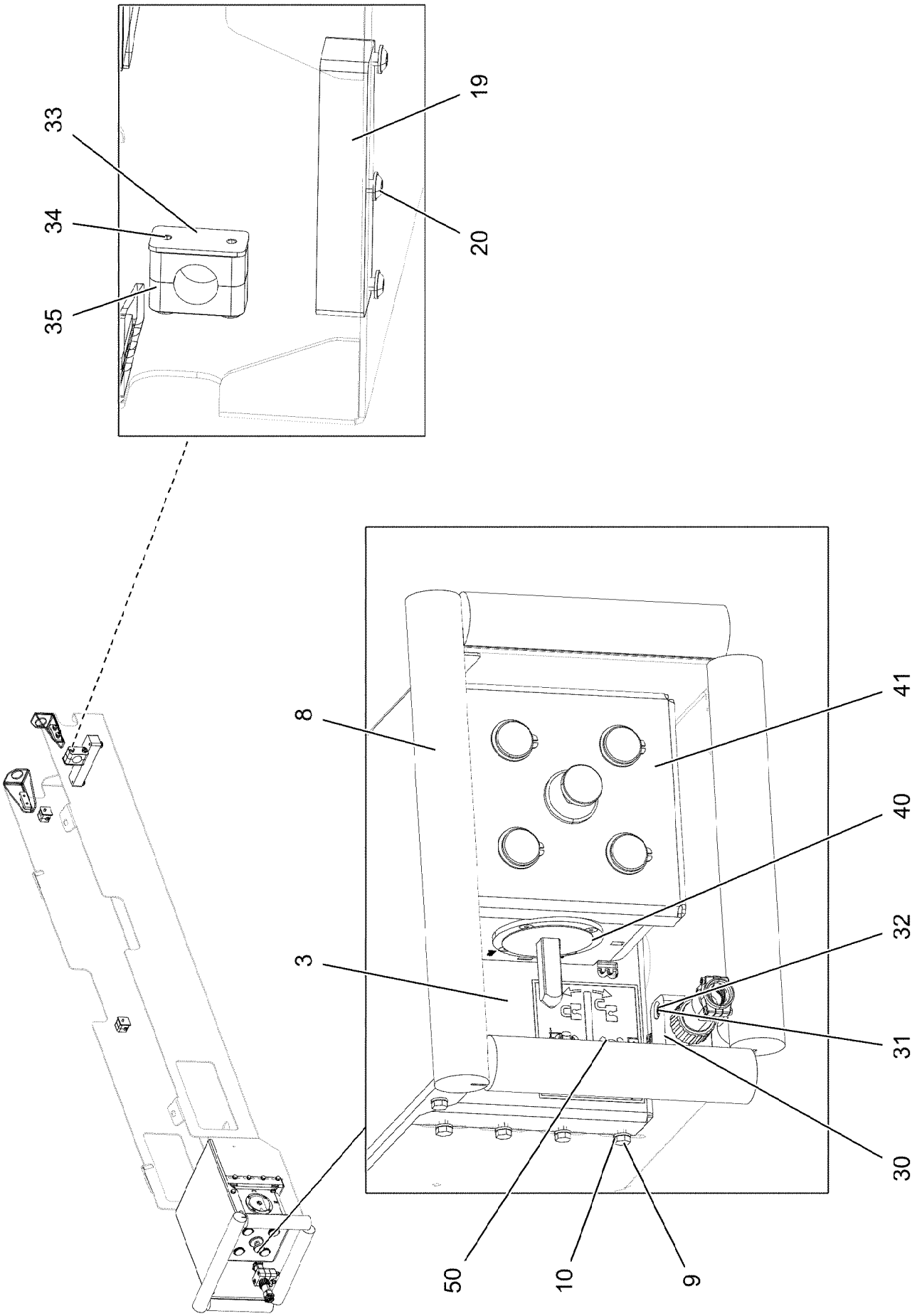

18.7.2022 004552 LIEBHERR	**etk_en_de_047654 LTR 1220** **PROTECTION PLATE CPL.** **SCHUTZBLECH KPL.LI.**	❑ 25 (2/3) **96034894**

Pos.	Item	Quantity	Description	Bezeichnung
1	97093430	1	PLATE 4X2114X788 S315MC FE//ZNNI8//CN/	BLECH
2	97103093	1	PLATE 2X368X357 DC01 FE//ZNNI8//CN//T0	BLECH
3	97093429	1	PLATE 4X348X241 S315MC FE//ZNNI8//CN//T	BLECH
8	7014524	1	CLAMPING PROFILE 40X1M PUR-HAUT	KLEMMPROFIL
9	11692824	12	HEX SCREW ISO 4017 M6X12 8.8 480H SPF	SECHSKANTSCHRAUBE
10	10197771	12	WASHER ISO 7089 6 200HV ZNNI-480H SPF	SCHEIBE
11	12103465	4	WASHER ISO 7089 8 300HV ZNNI-480H SPF	SCHEIBE
12	11651612	4	HEX SCREW ISO 4017 M8X16 8.8 480H SPF	SECHSKANTSCHRAUBE
15	97033935	1	PLATE 4X168X113 S315MC FE//ZNNI8//CN//T	BLECH
16	97033897	1	PLATE 4X168X113 S315MC FE//ZNNI8//CN//T	BLECH
17	10412851	4	BUTTON HEAD SCREW AEHNL.ISO 7380-2	HALBRUNDKOPFSCHRAUBE
18	953695308	2	THREADED PLATE 8.0 X0 S235JR FE//ZNNI8/	GEWINDEPLATTE
19	97033902	1	HOLDER 40X30X175 PA6G+OEL	HALTER
20	10875485	3	BUTTON HEAD SCREW AEHNL.ISO 7380-2	HALBRUNDKOPFSCHRAUBE
30	7005052	3	CLAMP-HALF DIN 3015-1 L 3 R 25 PP SW	KLEMMHAELFTE
31	12202784	2	SOCKET HEAD SCREW ISO 4762 M6X60 8.8	ZYLINDERSCHRAUBE
32	11004444	2	HEX NUT AEHNL.ISO 7040 M6 A2-70	SECHSKANTMUTTER
33	10802205	1	WELD PLATE DIN 3015-1 L-AP-K 4 W1 ZNNI	ANSCHWEISSPLATTE
34	11161571	4	BUTTON HEAD SCREW AEHNL.ISO 7380-2	HALBRUNDKOPFSCHRAUBE
35	602008808	2	CLAMP-HALF DIN 3015-1 L 4 R 28 PP SW	KLEMMHAELFTE
36	602015408	2	WELD PLATE DIN 3015-1 L-AP-K 0 W1	ANSCHWEISSPLATTE
37	7365090	4	CLAMP-HALF DIN 3015-1 L 0 R 12 PP SW	KLEMMHAELFTE
40	12101183	1	QUICK RELEASE FITTING	SCHNELLVERSCHLUSSKUPPL
41	10551191	1	LID CPL	DECKEL KPL
50	97133618	1	INFORMATION SIGN 90X80 KLEBEFOLIE	HINWEISSCHILD

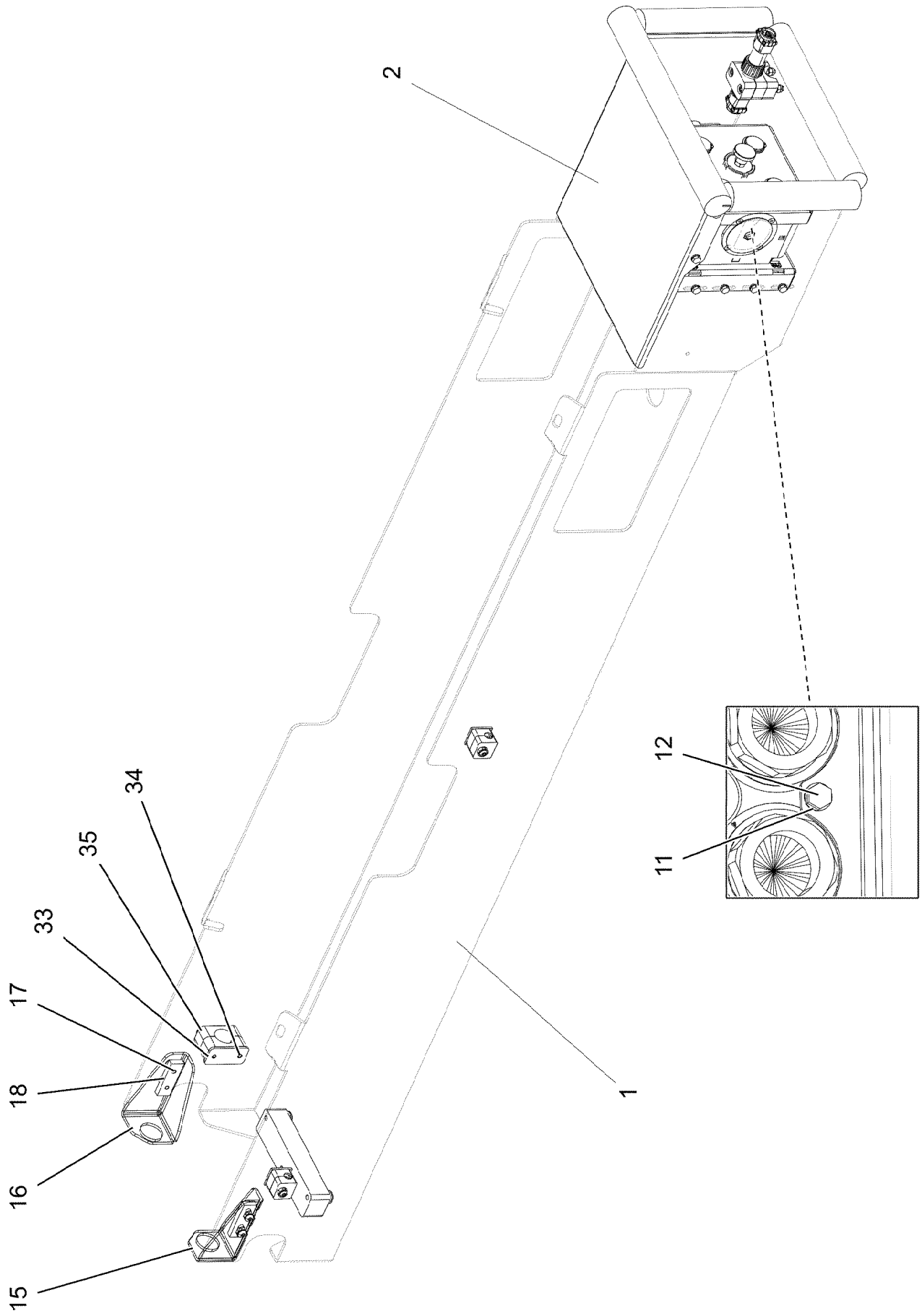

18.7.2022 004553 LIEBHERR	**etk_en_de_047654 LTR 1220** **PROTECTION PLATE** **SCHUTZBLECH KPL.RE.**	❑ 27 (1/3) **96034977**

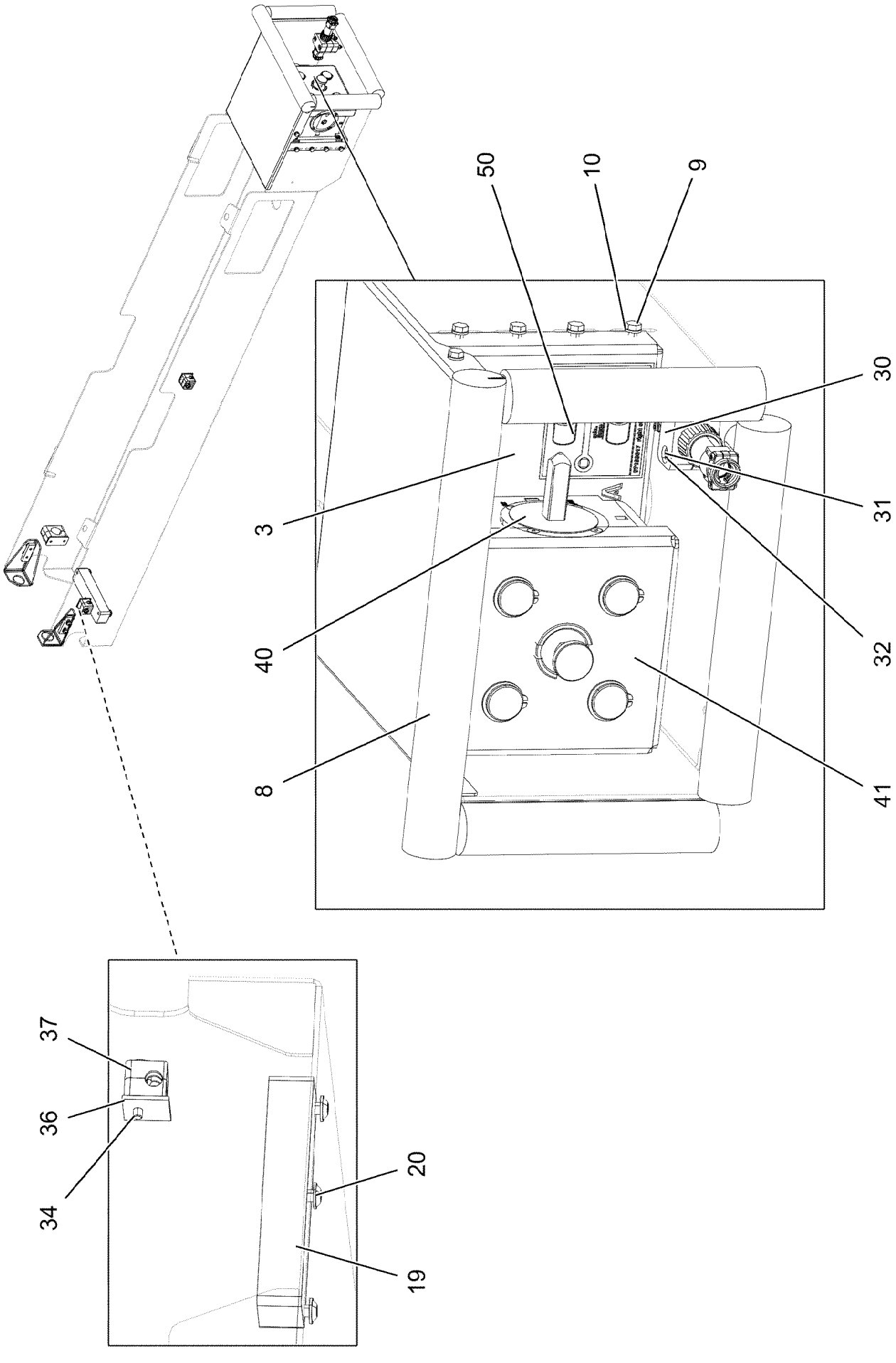

18.7.2022 004554 LIEBHERR	**etk_en_de_047654 LTR 1220** **PROTECTION PLATE** **SCHUTZBLECH KPL.RE.**	❑ 28 (2/3) **96034977**

Pos.	Item	Quantity	Description	Bezeichnung
1	97093430	1	PLATE 4X2114X788 S315MC FE//ZNNI8//CN/	BLECH
2	97103093	1	PLATE 2X368X357 DC01 FE//ZNNI8//CN//T0	BLECH
3	97118611	1	PLATE 4X348X241 S315MC FE//ZNNI8//CN//T	BLECH
8	7014524	1	CLAMPING PROFILE 40X1M PUR-HAUT	KLEMMPROFIL
9	11692824	12	HEX SCREW ISO 4017 M6X12 8.8 480H SPF	SECHSKANTSCHRAUBE
10	10197771	12	WASHER ISO 7089 6 200HV ZNNI-480H SPF	SCHEIBE
11	12103465	4	WASHER ISO 7089 8 300HV ZNNI-480H SPF	SCHEIBE
12	11651612	4	HEX SCREW ISO 4017 M8X16 8.8 480H SPF	SECHSKANTSCHRAUBE
15	97033935	1	PLATE 4X168X113 S315MC FE//ZNNI8//CN//T	BLECH
16	97033897	1	PLATE 4X168X113 S315MC FE//ZNNI8//CN//T	BLECH
17	10412851	4	BUTTON HEAD SCREW AEHNL.ISO 7380-2	HALBRUNDKOPFSCHRAUBE
18	953695308	2	THREADED PLATE 8.0 X0 S235JR FE//ZNNI8/	GEWINDEPLATTE
19	97033902	1	HOLDER 40X30X175 PA6G+OEL	HALTER
20	10875485	3	BUTTON HEAD SCREW AEHNL.ISO 7380-2	HALBRUNDKOPFSCHRAUBE
30	7005052	3	CLAMP-HALF DIN 3015-1 L 3 R 25 PP SW	KLEMMHAELFTE
31	12202784	2	SOCKET HEAD SCREW ISO 4762 M6X60 8.8	ZYLINDERSCHRAUBE
32	11004444	2	HEX NUT AEHNL.ISO 7040 M6 A2-70	SECHSKANTMUTTER
33	10802205	1	WELD PLATE DIN 3015-1 L-AP-K 4 W1 ZNNI	ANSCHWEISSPLATTE
34	11161571	4	BUTTON HEAD SCREW AEHNL.ISO 7380-2	HALBRUNDKOPFSCHRAUBE
35	602008808	2	CLAMP-HALF DIN 3015-1 L 4 R 28 PP SW	KLEMMHAELFTE
36	602015408	2	WELD PLATE DIN 3015-1 L-AP-K 0 W1	ANSCHWEISSPLATTE
37	7365090	4	CLAMP-HALF DIN 3015-1 L 0 R 12 PP SW	KLEMMHAELFTE
40	12101183	1	QUICK RELEASE FITTING	SCHNELLVERSCHLUSSKUPPL
41	10551191	1	LID CPL	DECKEL KPL
50	97133617	1	INFORMATION SIGN 90X80 KLEBEFOLIE SP	HINWEISSCHILD

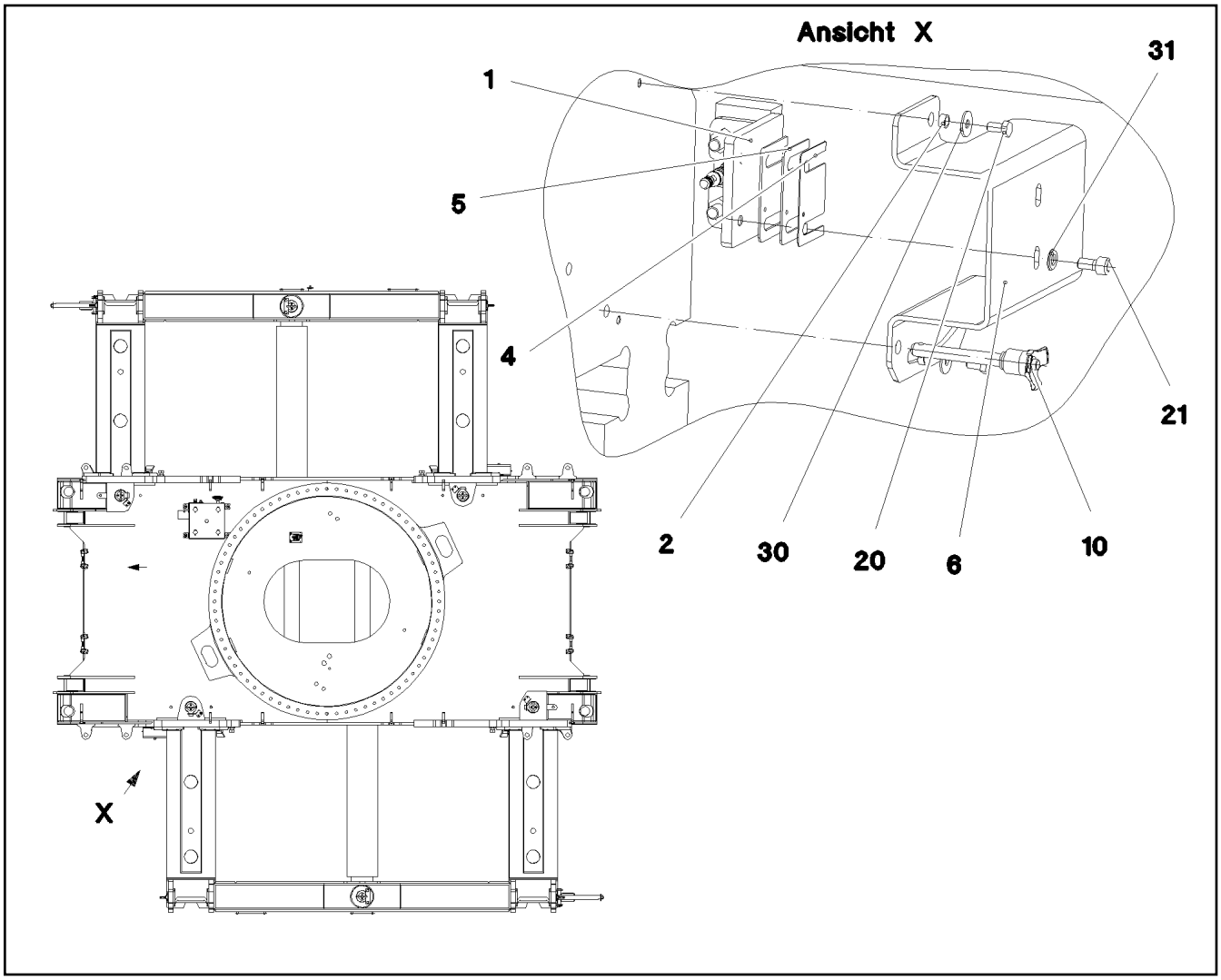

Pos.	Item	Quantity	Description	Bezeichnung
1	968036408	2	LIMIT SWITCH, PRE-ASSEMBLED ⇨ ❑ 31	ENDSCHALTER VORM.
2	97032611	4	SLEEVE 12.0X6 E235+N FE//ZN20//F	HUELSE
4	97032616	6	PLATE 1X90X60 DC01 FE//ZNNI8//CN//T0	BLECH
5	97032617	8	PLATE 2X90X60 DC01 FE//ZNNI8//CN//T0	BLECH
6	97032619	2	HOOD 5X220X434 S355MC FE//ZNNI8//CN//T	HAUBE
10	704008508	2	QUICK RELEASE PIN NIROSTA	KUGELSPERRBOLZEN
11	10354922	6	TRANSPONDER SPF	TRANSPONDER
20	11651612	4	HEX SCREW ISO 4017 M8X16 8.8 480H SPF	SECHSKANTSCHRAUBE
21	10415162	4	SOCKET HEAD SCREW ISO 4762 M10X25 8	ZYLINDERSCHRAUBE
30	11140469	4	WASHER ISO 7093-1 8 200HV 480H SPF	SCHEIBE
31	10289795	4	WASHER ISO 7089 10 300HV FLZN SPF	SCHEIBE

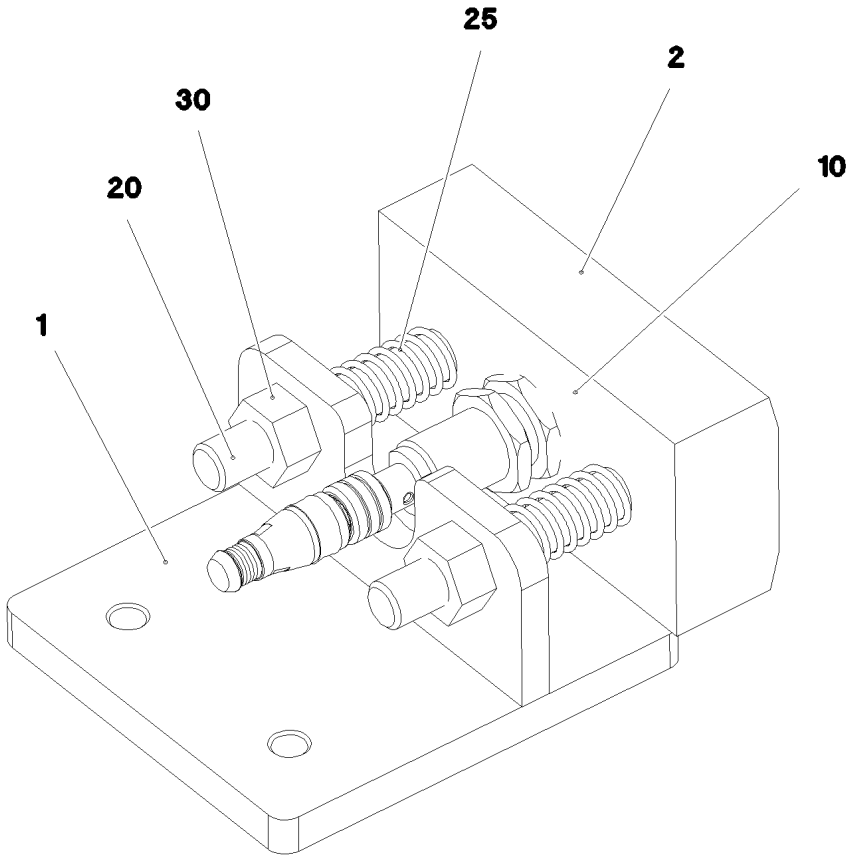

Pos.	Item	Quantity	Description	Bezeichnung
1	968036508	1	ANGLE FE//ZNNI8//CN//T0	WINKEL SCHWK.
2	97032618	1	SLIDER 110X56X30 PA6G	GLEITBLOCK
10	10354584	1	INDUCTIVE SENSOR BERUEHRUNGSLOS	INDUKTIVSENSOR
20	12103956	2	SOCKET HEAD SCREW DIN 7984 M12X80 08	ZYLINDERSCHRAUBE
25	12101506	2	COMPRESSION SPRING 1,6X14,4X59,3 EN	DRUCKFEDER
30	10875616	2	HEX NUT ISO 4032 M12 8 FLZN SPF	SECHSKANTMUTTER

Pos.	Item	Quantity	Description	Bezeichnung
1	917511508	1	CRAWLER CENTRE PART PREASS ⇨ ❑ 33	RAUPENMITTELTEIL VORM.
2	919510708	1	ELECTR.FOR CRAWLER CARRIER ⇨ ❑ 37	ELEKTRIK RAUPE
3	919296608	1	HYDRAULIC EQUIPM.CENTER PART ⇨ ❑ 53	HYDRAULIK MITTELTEIL

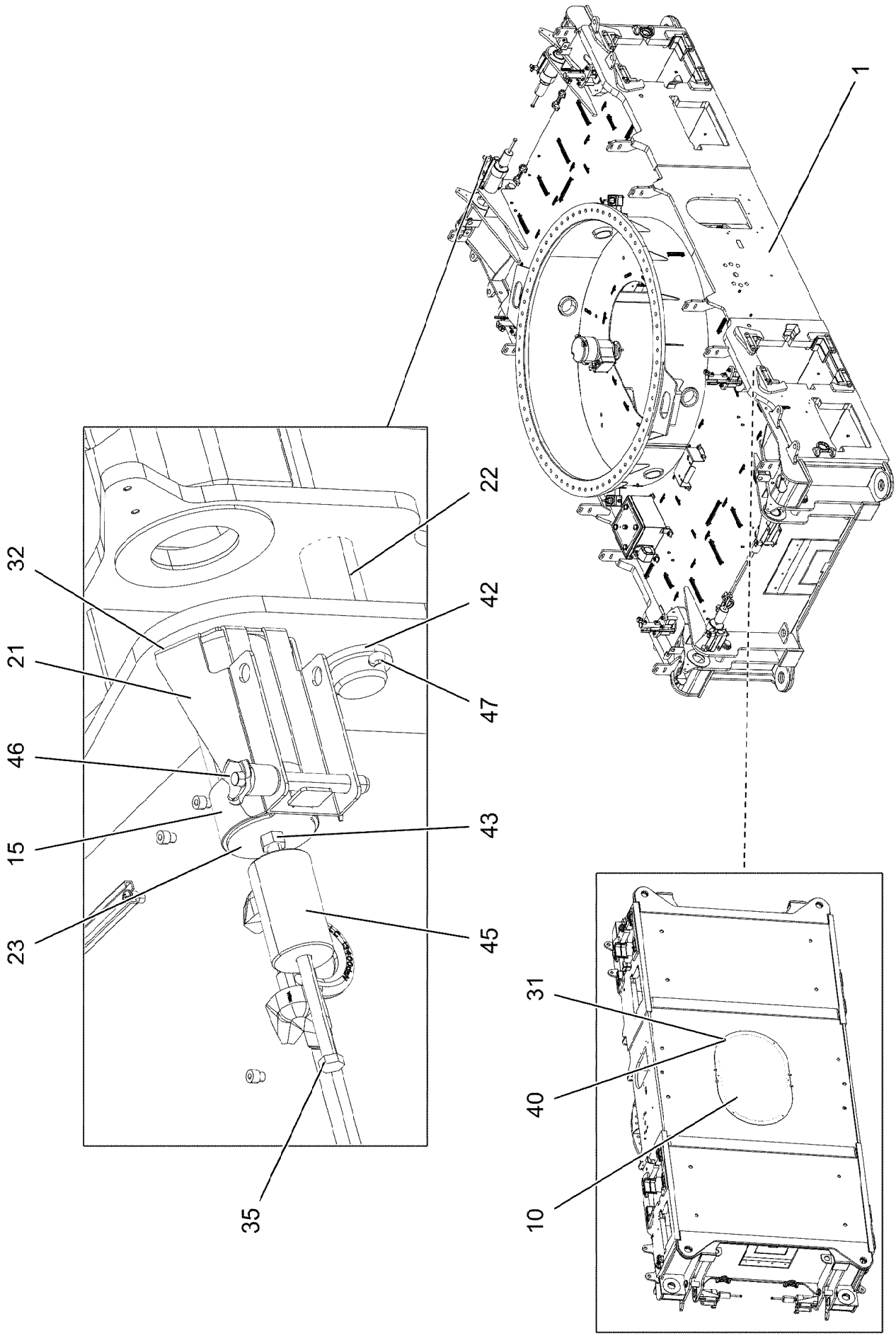

18.7.2022 077643 LIEBHERR	**etk_en_de_047654 LTR 1220** **CRAWLER CENTRE PART PREASS** **RAUPENMITTELTEIL VORM.**	❑ 33 (1/3) **917511508**

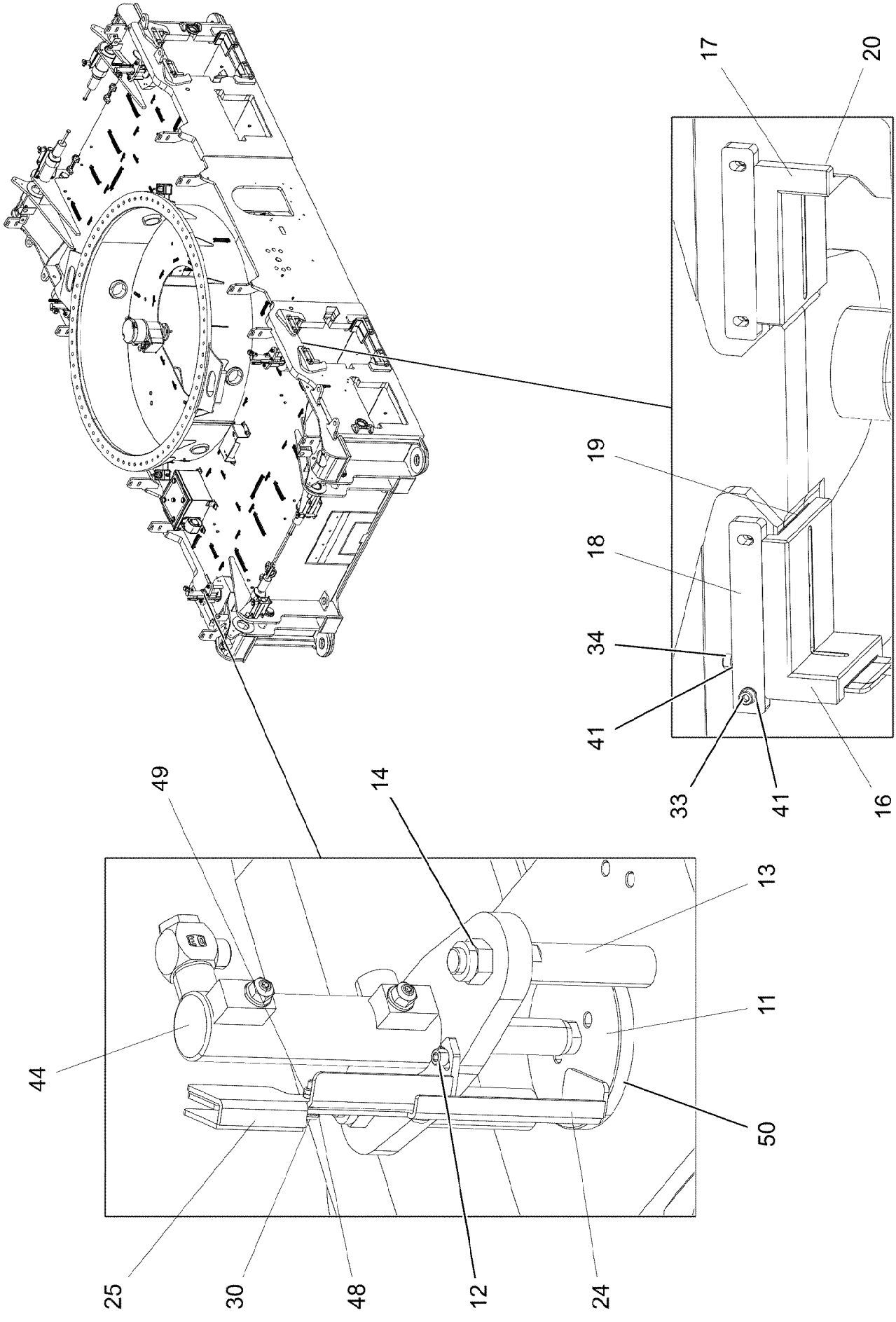
17
20
19
18
34
41
33
41
16
49
14
13
11
44
50
25
30
48
12
24

Pos.	Item	Quantity	Description	Bezeichnung
1	917511608	1	CENTRAL SECTION CRAWLER	RAUPENMITTELTEIL
10	97031860	1	COVER 4X1260X860 ALMG3 H111	DECKEL
11	97043050	4	PIN 110.0X170 35NICRMOV125 SPF	BOLZEN
12	10875586	8	SOCKET HEAD SCREW ISO 4762 M6X16 8.8	ZYLINDERSCHRAUBE
13	97043051	8	THREADED PIN 25.0X160 S355J2+AR FE//ZN	GEWINDEBOLZEN
14	10875609	8	HEX NUT DIN 985 M16 8 FLZN SPF	SECHSKANTMUTTER
15	97039932	4	PIN 110.0X245 35NICRMOV125 SPF	BOLZEN
16	97039611	8	SLIDER 150X130X70 CUZN25AL5	GLEITSTUECK
17	97039612	8	SLIDER 150X130X70 CUZN25AL5	GLEITSTUECK
18	97039613	16	RETAINING STRIP 15X180X30 S355MC FE//	HALTELEISTE
19	97042769	16	PLATE 1X133X94 DC01 FE//ZNNI8//CN//T0	BLECH
20	97042770	16	PLATE 1X65X94 DC01 FE//ZNNI8//CN//T0	BLECH
21	97032133	4	PLATE 4X499X309 S315MC FE//ZNNI8//CN//T	BLECH
22	97033301	4	PIN 65.0X225 35NICRMOV125 SPF	BOLZEN
23	97053626	4	PLATE 4X155X100 S315MC FE//ZNNI8//CN//T	BLECH
24	97043049	4	PLATE 3X286X61 X5CRNI18-10	BLECH
25	968765608	4	CLAMP WELDED CONST. FE//ZNNI8//CN//T0	HALTER SCHWK.
30	10412852	8	BUTTON HEAD SCREW AEHNL.ISO 7380-2	HALBRUNDKOPFSCHRAUBE
31	11652470	6	HEX SCREW ISO 4017 M10X16 8.8 FLZN SP	SECHSKANTSCHRAUBE
32	12219296	8	SOCKET HEAD SCREW ISO 4762 M10X20 8	ZYLINDERSCHRAUBE
33	10875599	32	SOCKET HEAD SCREW ISO 4762 M8X25 8.8	ZYLINDERSCHRAUBE
34	12202976	32	SOCKET HEAD SCREW ISO 4762 M8X40 8.8	ZYLINDERSCHRAUBE
35	10878582	4	HEX SCREW ISO 4014 M16X300 8.8 FLZN SP	SECHSKANTSCHRAUBE
40	10289795	6	WASHER ISO 7089 10 300HV FLZN SPF	SCHEIBE
41	10299679	64	WASHER ISO 7092 8 200HV 480H SPF	SCHEIBE
42	10179340	8	WASHER DIN 1440 60 -St FLZN SPF	SCHEIBE
43	10875617	4	HEX NUT ISO 4032 M16 8 FLZN SPF	SECHSKANTMUTTER
44	10870204	4	LOCKING CYLINDER 32/22-65 SPF ⇨ ❑ 36	VERRIEGELUNGSZYLINDER
45	979443608	4	SLEEVE 70.0X120 S355J2+AR FE//ZNNI8//C	HUELSE
46	11320194	4	QUICK RELEASE PIN 20X171,2X100 NIROST	KUGELSPERRBOLZEN
47	10180375	8	SPLIT PIN ISO 1234 10X80 St 480H SPF	SPLINT
48	420010405	16	WASHER AEHNL.ISO 7089 6 -PA 66	SCHEIBE
49	411903008	8	HEX NUT DIN 985 M6 A2-70	SECHSKANTMUTTER
50	726433408	4	O-RING 94X3 NBR70	O-RING

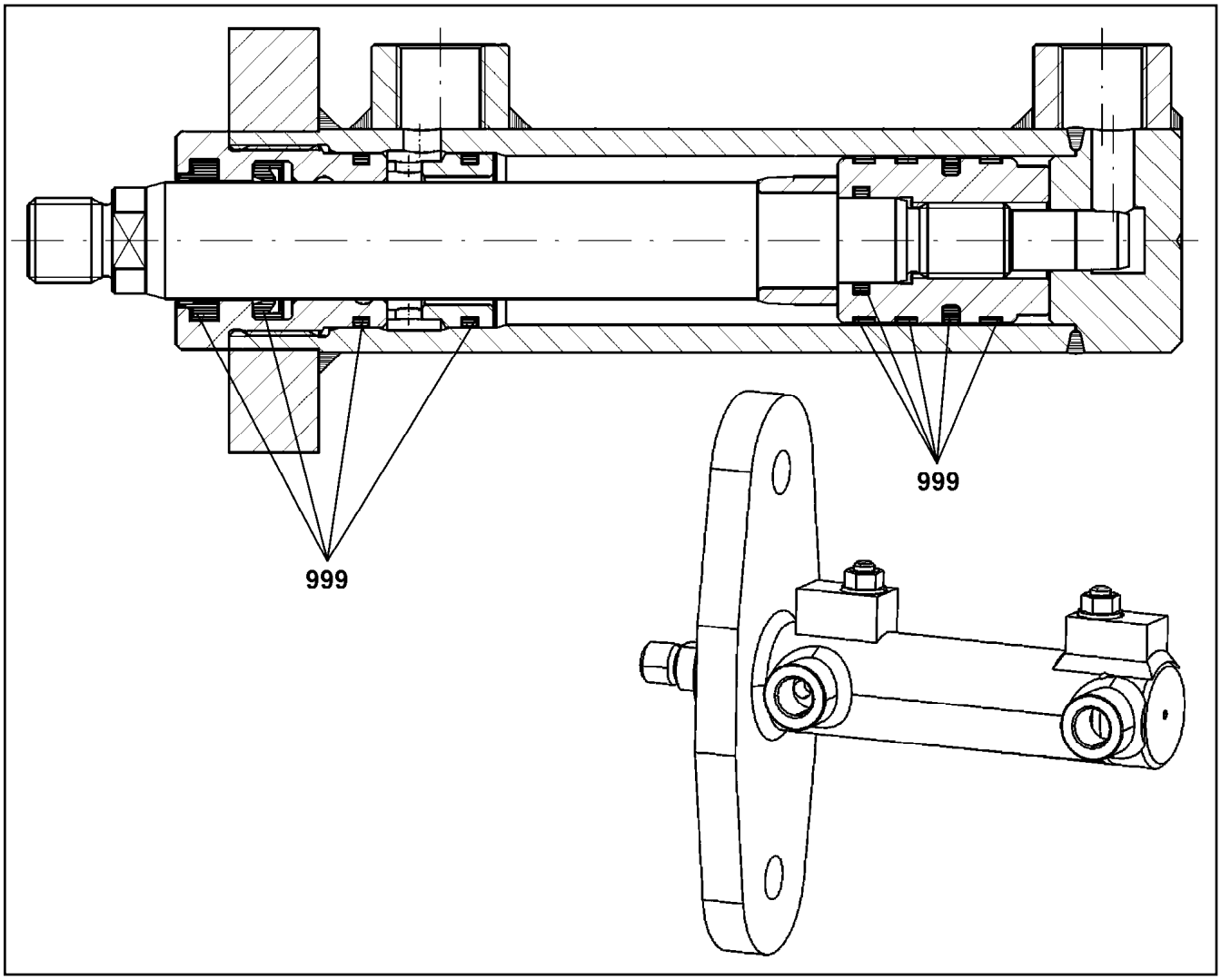

Pos.	Item	Quantity	Description	Bezeichnung
999	11621953	1	SEAL KIT CYLINDER	DS ZYLINDER

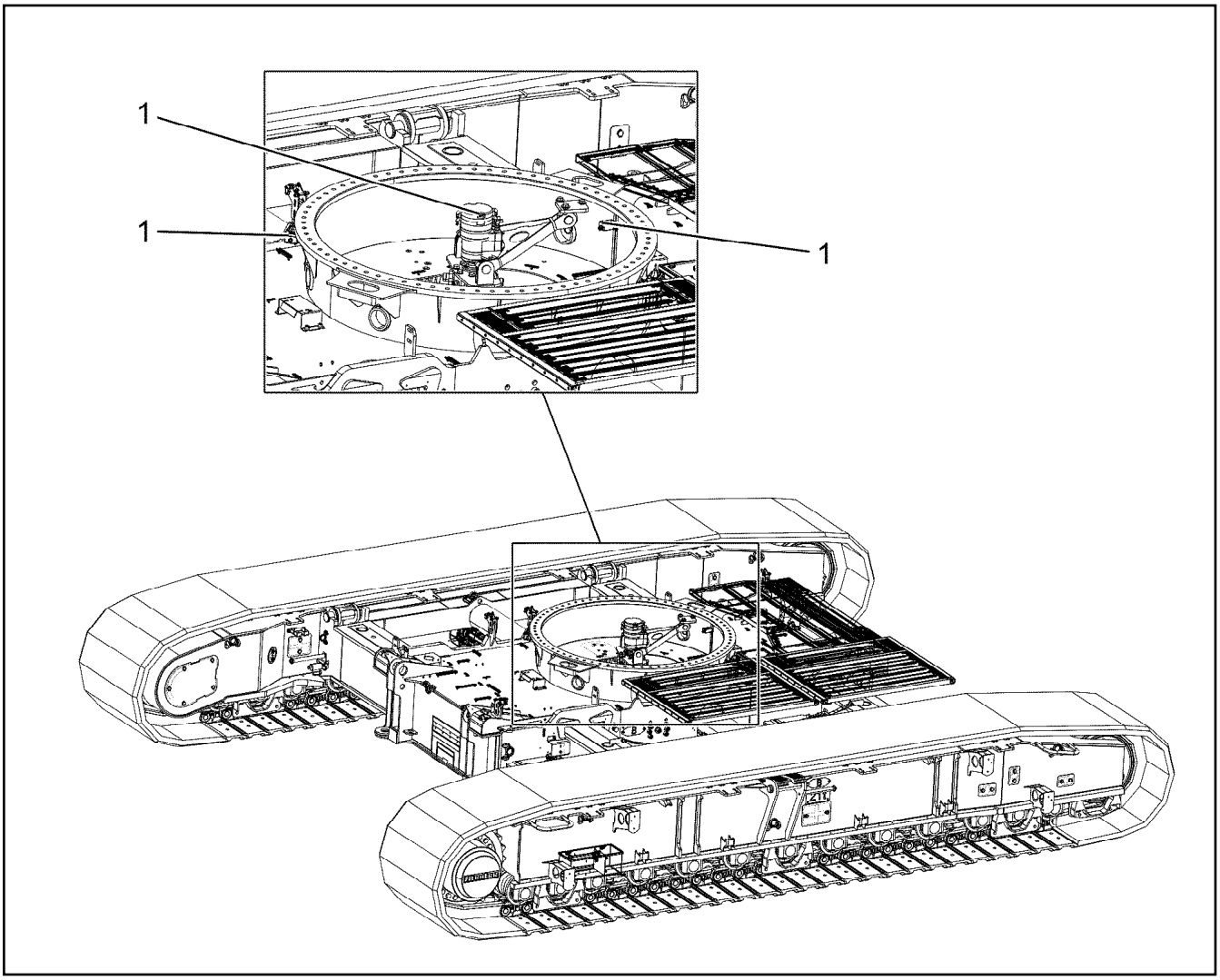

Pos.	Item	Quantity	Description	Bezeichnung
1	96045225	1	ELECTR.FOR CENTER SECTION ⇨ ❑ 38	ELEKTRIK MITTELSTUECK

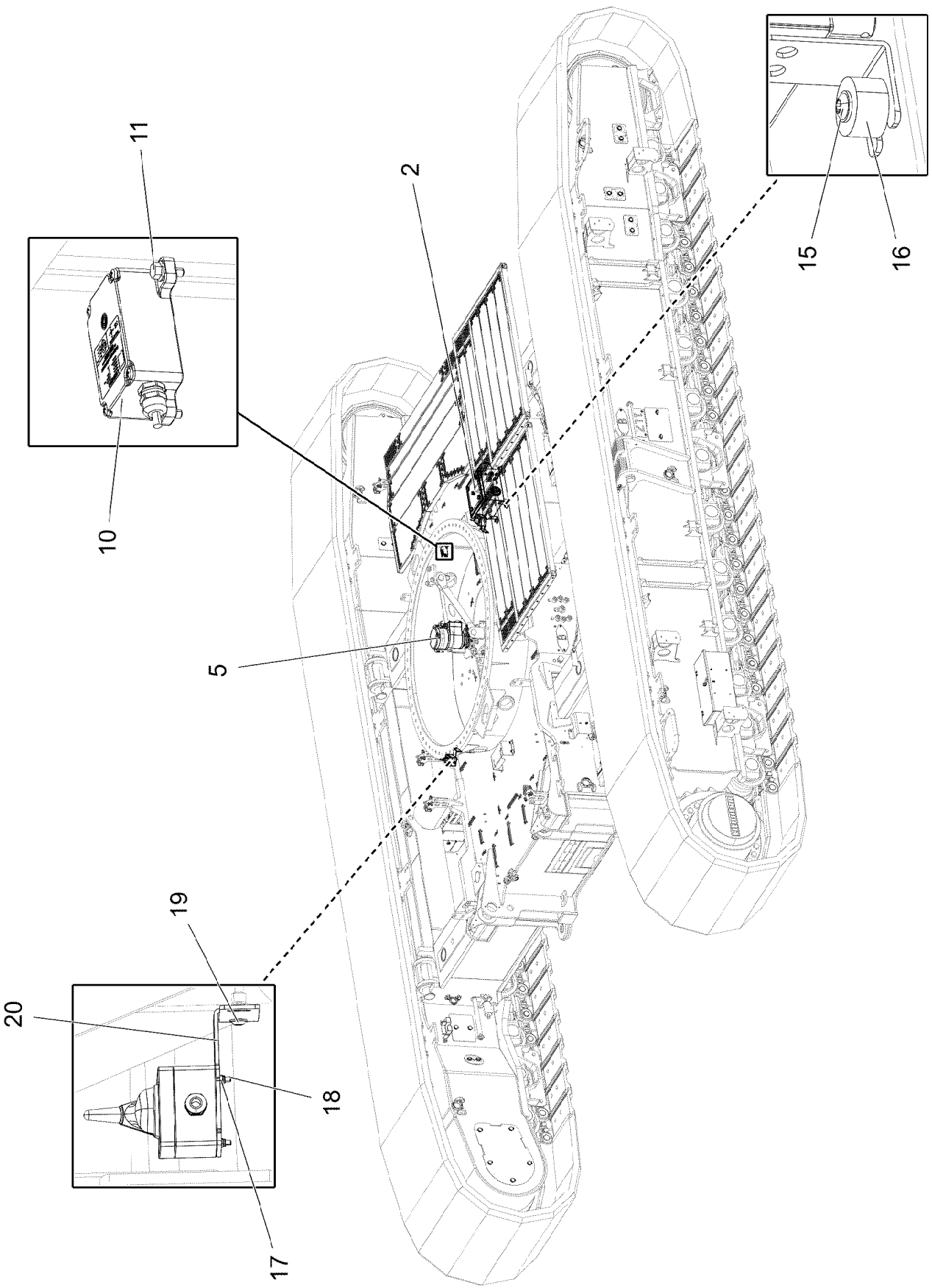
11
2
15
16
10
5
19
20
18
17

Pos.	Item	Quantity	Description	Bezeichnung
2	96045226	1	SWITCH BOX COMPL. S200 ⇨ ❑ 40	SCHALTKASTEN VORM.
5	11346779	1	SLIP RING TRANSMITTER 21X16A/24V SPF ⇨ ❑ 51	SCHLEIFRINGUEBERTRAGER
10	11001194	1	INCLINATION SENSOR +/-25° ALU SPF	NEIGUNGSGEBER
11	11840297	3	HEX SCREW EN 1665 M6X16 8.8 480H SPF	SECHSKANTSCHRAUBE
15	10875485	4	BUTTON HEAD SCREW AEHNL.ISO 7380-2	HALBRUNDKOPFSCHRAUBE
16	978787708	4	SLEEVE 33.0X19 FE//ZNNI8//CN//T0	HUELSE
17	10301317	4	HEX NUT DIN 985 M5 A2-70	SECHSKANTMUTTER
18	10875584	4	SOCKET HEAD SCREW ISO 4762 M5X25 8.8	ZYLINDERSCHRAUBE
19	12102696	4	BUTTON HEAD SCREW ISO 7380-2 M8X10 0	HALBRUNDKOPFSCHRAUBE
20	97037626	2	PLATE 4X125X178 S315MC FE//ZNNI8//CN//T	BLECH

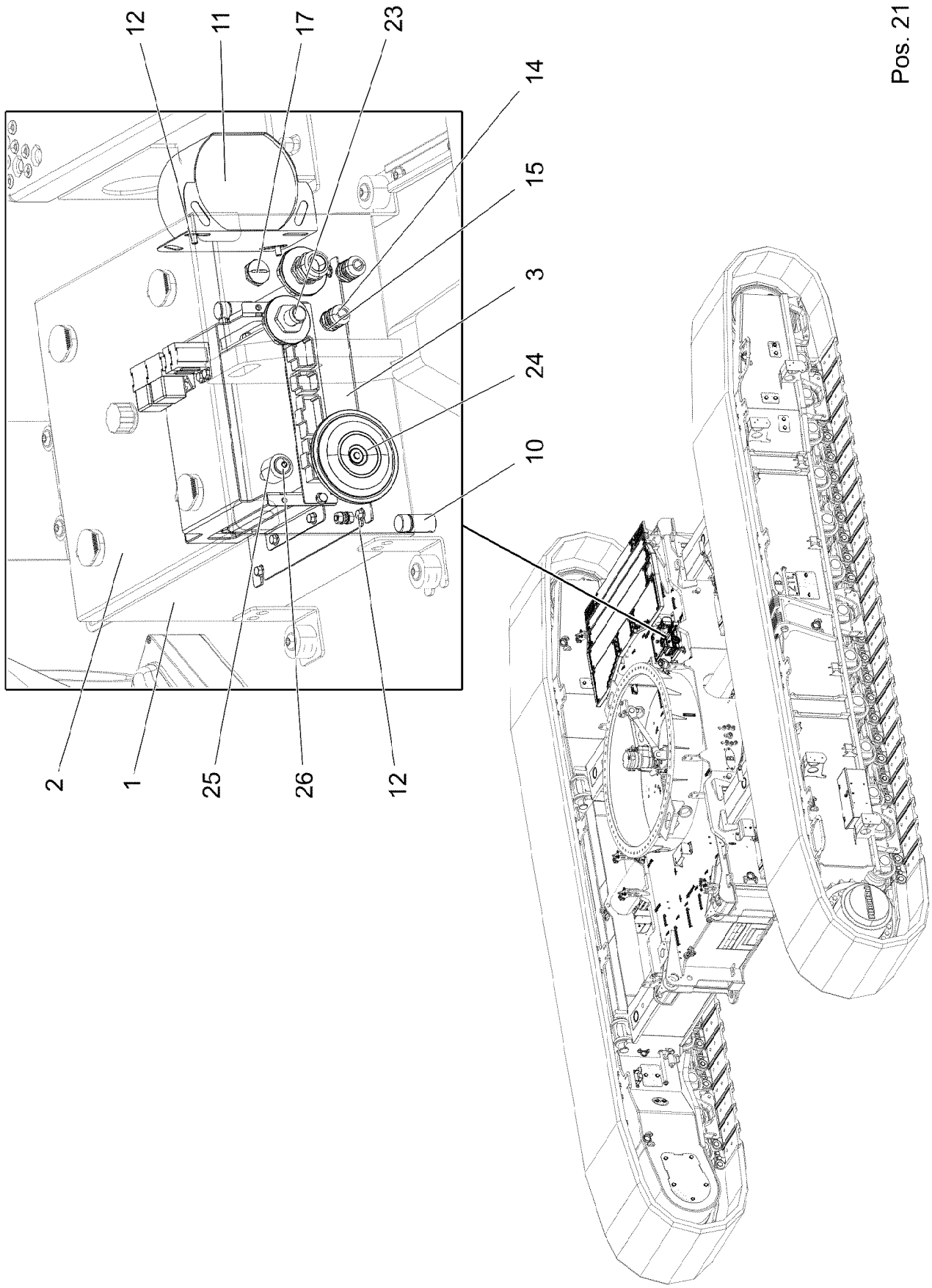
12
11
17
23
14
15
3
24
10
2
1
25
26
12
Pos. 21

Pos.	Item	Quantity	Description	Bezeichnung
1	968049608	1	SWITCH BOX WELDED RAL 7037 SPF	SCHALTKASTEN SCHWK.
2	966167808	1	COVER COMPL. ⇨ ❑ 42	DECKEL KPL.
3	968054008	1	MOUNTING PLATE PRE-ASS. ⇨ ❑ 43	MONTAGEPLATTE VORM.
4	966204108	2	ANTENNA CPL. ⇨ ❑ 46	ANTENNE KPL.
10	602501208	2	WATER DRAIN PLUG M12 PA6G SPF	ENTWAESSERUNGSSTOPFEN
11	614009908	1	FALL-BACK GUARD 12-36V 82-107DBA	RUECKFAHRWARNUNG
12	10876387	6	HEX SCREW M5X16 10.9 480H SPF	SECHSKANTSCHRAUBE
14	602424108	2	CABLE GLAND M16X1,5X4-11 MS	KABELVERSCHRAUBUNG
15	602504108	2	HEX NUT M16X1,5 MS	SECHSKANTMUTTER
17	602425008	1	SCREW PLUG 15 M20X 1,5 MS	VERSCHLUSSSCHRAUBE
18	602504208	1	HEX NUT M20X1,5 MS	SECHSKANTMUTTER
21	96045227	1	WIRING HARNESS W200 ⇨ ❑ 48	KABELSTRANG
23	96045228	1	WIRING HARNESS W202 ⇨ ❑ 49	KABELSTRANG
24	614003108	1	HORN 24V	HORN
25	953873408	1	SLEEVE 25X20 11SMN37 FE//ZNNI8//CN//T0	HUELSE
26	12100221	1	BUTTON HEAD SCREW ISO 7380-2 M8X40	HALBRUNDKOPFSCHRAUBE

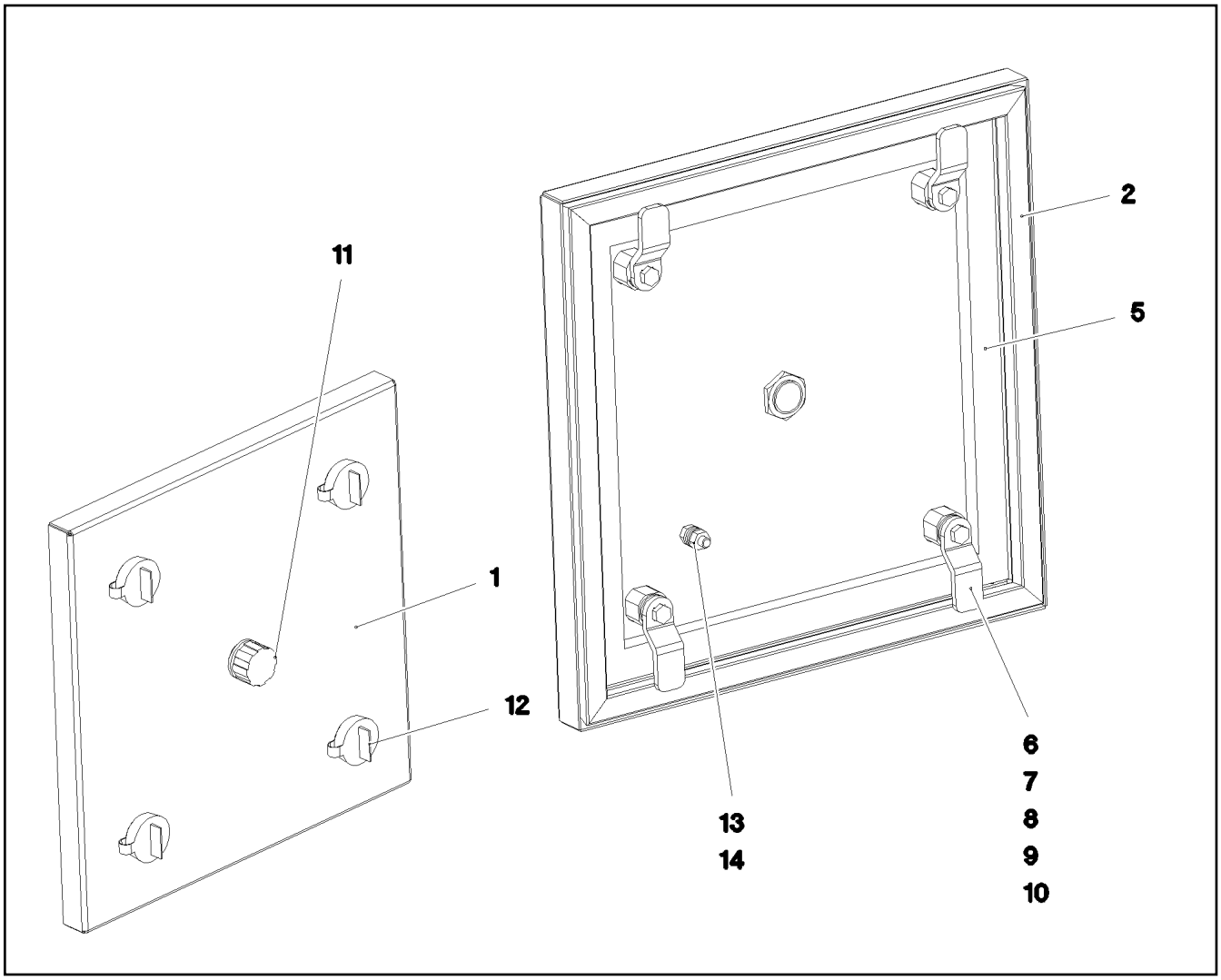

Pos.	Item	Quantity	Description	Bezeichnung
1	966189708	1	COVER GLUED	DECKEL GEKLEBT
2	979896308	1	SEALING PROFILE	ABDICHTPROFIL
5	262104308	1.08	CELL RUBBER 20X12 CR SCHWARZ	ZELLGUMMI
6	704253308	4	HOUSING GD-ZN SW GEPULVERT	GEHAEUSE
(1)	704253408	1	ACTUATION SPIKE GD-ZN SW GEPULVERT	BETAETIGUNGSDORN
7	704253408	4	ACTUATION SPIKE GD-ZN SW GEPULVERT	BETAETIGUNGSDORN
8	704256708	4	TONGUE	ZUNGE
9	704274808	4	O-RING 12X2 NBR70	O-RING
10	704274908	4	FLAT GASKET	FLACHDICHTUNG
11	602501308	1	VENTILATION SCREW G1/2"X30 POLYAMID	ENTLUEFTUNGSSCHRAUBE
12	704254808	4	DUST CAP POLYETHYLEN SCHWARZ	STAUBKAPPE
13	10197764	2	HEX NUT ISO 4032 M6 10 ZNNI-480H SPF	SECHSKANTMUTTER
14	10197771	2	WASHER ISO 7089 6 200HV ZNNI-480H SPF	SCHEIBE

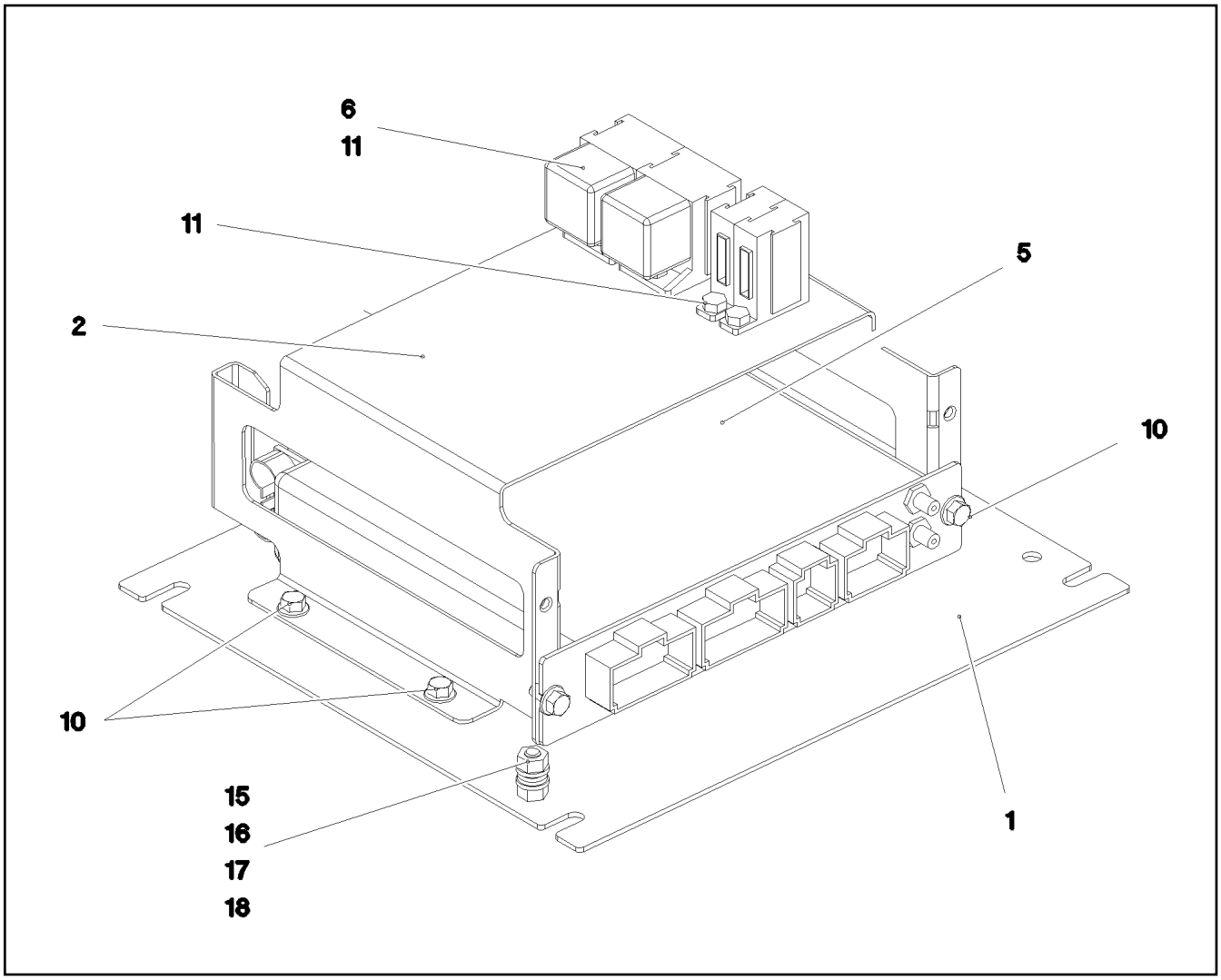

Pos.	Item	Quantity	Description	Bezeichnung
1	97032989	1	SUBPLATE 2X275X250 DC01 FE//ZNNI8//CN/	MONTAGEPLATTE
2	97032990	1	PLATE 1.5X404X230 DC01 FE//ZNNI8//CN//T	BLECH
5	968252908	1	BTB PROGRAMMED ⇨ ❑ 44	BTB PROGRAMMIERT
6	630121508	2	CENTER-ZERO RELAY 24V 10A SPF	WECHSLERRELAIS
10	10875503	6	HEX SCREW EN 1665 M5X10 10.9 480H SPF	SECHSKANTSCHRAUBE
11	4600871	4	HEX SCREW ISO 4017 M5X8 8.8 A2C	SECHSKANTSCHRAUBE
15	11644899	1	HEX SCREW ISO 4017 M6X20 8.8 480H SPF	SECHSKANTSCHRAUBE
16	10197764	2	HEX NUT ISO 4032 M6 10 ZNNI-480H SPF	SECHSKANTMUTTER
17	10197771	2	WASHER ISO 7089 6 200HV ZNNI-480H SPF	SCHEIBE
18	12102694	1	SERRATED LOCK WASHER DIN 6798 A 6.4	FAECHERSCHEIBE

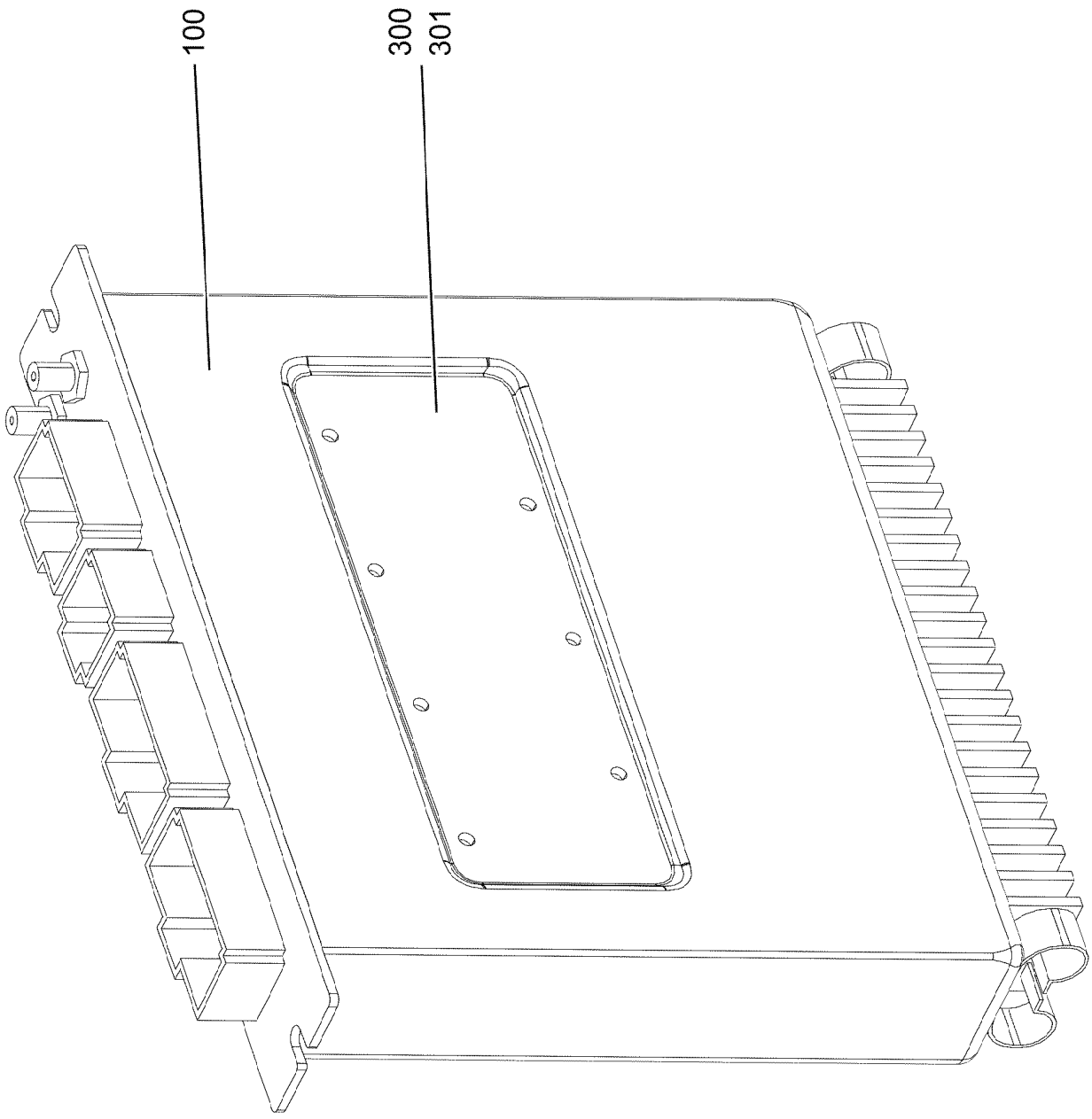
100
300
301

Pos.	Item	Quantity	Description	Bezeichnung
100	11212256	1	REMOTE CONTROL APPARATUS LSB-BTB-	FERNSTEUEREMPFAENGER
300	10288121	1	NAME PLATE 70X40 POLYESTER SPF	BEZEICHNUNGSSCHILD
301	11007853	1	LABELS 10X90 POLYESTER	ETIKETTEN

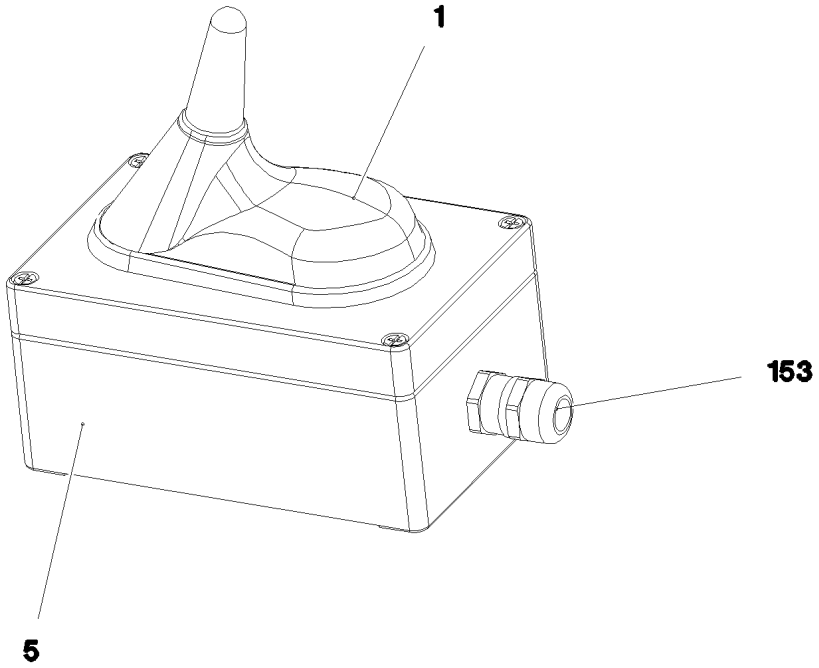

Pos.	Item	Quantity	Description	Bezeichnung
4	10450273	1	ANTENNA ⇨ ❑ 47	ANTENNE
5	979204408	1	EMPTY CASING 80.0X0 AL	LEERGEHAEUSE
153	602424108	1	CABLE GLAND M16X1,5X4-11 MS	KABELVERSCHRAUBUNG
160	10475426	3.4	CORRUGATED PIPE DN10 PA 6	WELLROHR

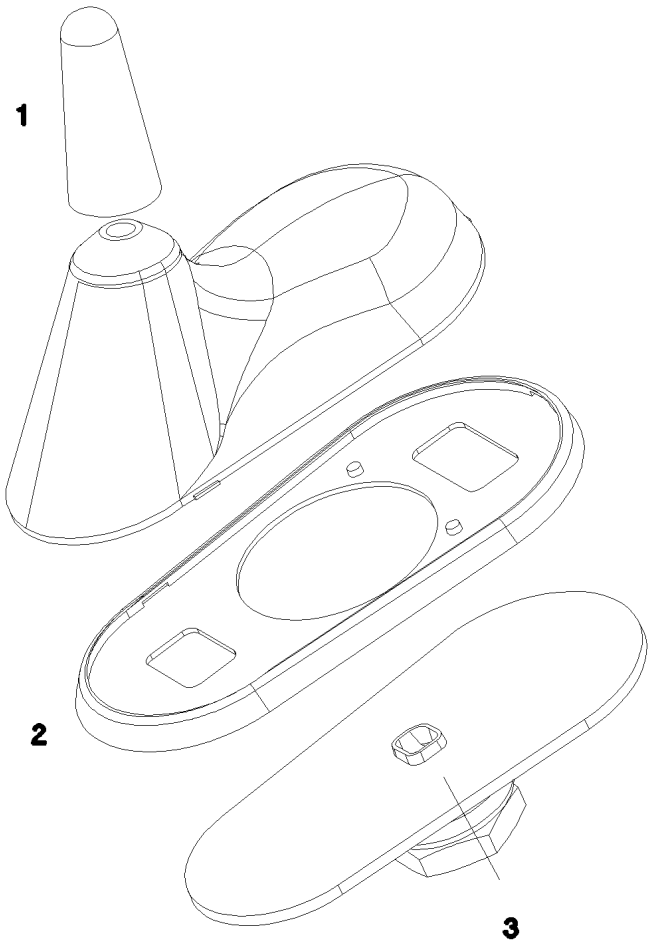

Pos.	Item	Quantity	Description	Bezeichnung
1	10815004	1	ANTENNA ROD	ANTENNENSTAB
2	10815005	1	SEAL	DICHTUNG
3	10815006	1	SLEEVE	HUELSE
4	11692299	1	CONNECTING CABLE 4M	VERBINDUNGSKABEL

Pos.	Item	Quantity	Description	Bezeichnung
5	12100217	0.4	DATA LINE 2 X 1 FEP SPF	DATENLEITUNG
6	12100217	0.4	DATA LINE 2 X 1 FEP SPF	DATENLEITUNG
7	11840113	0.3	BUS LINE 2 X 0,5	BUSLEITUNG
8	11840113	0.4	BUS LINE 2 X 0,5	BUSLEITUNG
9	11840113	0.45	BUS LINE 2 X 0,5	BUSLEITUNG
34	602217908	5	CABLE LUG DIN 46237 M6/1-2,5mm²	KABELSCHUH
39	602213308	1	CABLE LUG DIN 46237 6/6mm² VERZINNT	KABELSCHUH
72	602203408	6	RECEPTACLE 6,3X1-2,5 MESSING VERZINN	STECKHUELSE
75	602203908	2	FLAT PLUG 6,3X1-2,5 SN	FLACHSTECKER
120	602323208	21	FLAT PLUG 1,0-2,5MM2	FLACHSTECKER
121	602300108	14	CONTACT 1-2,5MM2	KONTAKT
124	602323508	34	FLAT PLUG 2,8X0,5-1 SN	FLACHSTECKER
125	602300308	35	CONTACT 0,5-1MM2	KONTAKT
305	10870540	25.99	ELECTR.CABLE 1,0	KFZ-LEITUNG
500	923512208	18	CABLE MARKER	KABELMARKER
501	10099856	2	HOUSING 21-POLE	GEHAEUSE
502	10099868	2	CONTACT RETAINING PIN JPT 21 POL	KONTAKTSICHERUNGSSTIFT
503	602323308	3	FLAT PLUG HOUSING 18-POL	FLACHSTECKERGEHAEUSE
504	604501708	2	ATTACHABLE SLEEVE HOUSING	STECKHUELSENGEHAEUSE
505	604007008	1	FLAT FUSE LINK 7,5A	FLACHSICHERUNGSEINSATZ
506	630122908	2	PLUG BASE 9-POLE	RELAISSTECKSOCKEL
507	10021571	1	PLUG SHELL 8-POL	STECKERGEHAEUSE
508	10099860	1	HOUSING 9-POL	GEHAEUSE
509	10045101	1	CONTACT RETAINING PIN 9POL GELB	KONTAKTSICHERUNGSSTIFT
510	10099861	1	HOUSING 12-POL	GEHAEUSE
511	10099866	1	CONTACT RETAINING PIN JPT 12 POL	KONTAKTSICHERUNGSSTIFT
512	10099863	1	HOUSING 15-POLE	GEHAEUSE
513	10099867	1	CONTACT RETAINING PIN JPT 15 POLE	KONTAKTSICHERUNGSSTIFT
514	602335908	1	PLUG SHELL 4-POL	STECKERGEHAEUSE
515	604006908	1	FLAT FUSE LINK 5A 32	FLACHSICHERUNGSEINSATZ
516	602209708	1	ATTACHABLE SLEEVE HOUSING 2-POL	STECKHUELSENGEHAEUSE
517	602305908	1	FLAT PLUG HOUSING FASTIN-FASTON	FLACHSTECKERGEHAEUSE
642	602339108	4	RECEPTACLE 5X1,5-2,5	STECKHUELSE
758	11080881	5	RECEPTACLE 6,3X0,5-1,0 VERZINNT	STECKHUELSE
996	965622108	20	LETTERING WIRE	BESCHRIFTUNG ADER
998	965622208	1	LETTERING WIRING HARNESS	BESCHRIFTUNG KABELBAUM

Pos.	Item	Quantity	Description	Bezeichnung
5	680001408	1	COUPLING SOCKET 4-POL SPF	KUPPLUNGSDOSE
6	10678491	1	COUPLING SOCKET 4-POL SPF	KUPPLUNGSDOSE
7	11840113	1.63	BUS LINE 2 X 0,5	BUSLEITUNG
8	11840113	4.66	BUS LINE 2 X 0,5	BUSLEITUNG
9	600463908	3.13	CONTROL LEAD 4 X 0,5 SPF	STEUERLEITUNG
10	600463908	2.63	CONTROL LEAD 4 X 0,5 SPF	STEUERLEITUNG
11	10815830	4.96	LEAD 2 X 0,5	LEITUNG
12	10815830	4.96	LEAD 2 X 0,5	LEITUNG
13	10815830	4.16	LEAD 2 X 0,5	LEITUNG
14	10815830	4.16	LEAD 2 X 0,5	LEITUNG
15	11620017	2.63	LEAD 2 X 1	LEITUNG
16	600463908	6.06	CONTROL LEAD 4 X 0,5 SPF	STEUERLEITUNG
17	600463908	6.06	CONTROL LEAD 4 X 0,5 SPF	STEUERLEITUNG
18	10871285	1.8	LEAD 7 G 1	LEITUNG
86	602307708	2	WIRED END FERRULE DIN 46228-1 A1X5 V	ADERENDHUELSE
95	6202444	3	PIN CONTACT 0,75-1,5MM2	STIFTKONTAKT
96	6202434	4	SLEEVE CONTACT 0,75-1,5MM2	BUCHSENKONTAKT
114	602307808	8	WIRED END FERRULE DIN 46228-1 A0,5X5 E	ADERENDHUELSE
121	602300108	1	CONTACT 1-2,5MM2	KONTAKT
125	602300308	19	CONTACT 0,5-1MM2	KONTAKT
134	602303308	2	RECEPTACLE FOR TABS 6,3X0,5-1,5	FLACHSTECKHUELSE
202	11082602	2.31	INSULATING HOSE DN6X0,5 PUR SPF	ISOLIERSCHLAUCH
203	11082603	2.41	INSULATING HOSE DN8X0,65 PUR SPF	ISOLIERSCHLAUCH
204	11082604	4.29	INSULATING HOSE DN10X0,65 PUR SPF	ISOLIERSCHLAUCH
224	11124207	1.23	CABLE CONDUIT DN20X0,6 PUR SPF	KABELSCHLAUCH
226	11124209	0.35	CABLE CONDUIT DN30X0,6 PUR SPF	KABELSCHLAUCH
261	12104809	2	CABLE TIE 3,6X142-SCHWARZ PA66 SPF	KABELBINDER
305	10870540	36.53	ELECTR.CABLE 1,0	KFZ-LEITUNG
500	923512208	26	CABLE MARKER	KABELMARKER
501	602301408	1	HOUSING 8-POL	GEHAEUSE
502	605251608	1	PLUG SOCKET BODY 4-POLE AL	STECKDOSENKOERPER
503	920381108	1	PLUG	STECKER
504	602300208	2	PLUG SHELL 18-POL	STECKERGEHAEUSE
505	605007908	3	APPLIANCE SOCKET 3-POL	GERAETESTECKDOSE
506	604526508	5	BUSHING SUPPORT 6-POL 16A	BUCHSENTRAEGER
507	602339308	3	HOUSING 4-POL	GEHAEUSE
508	605212708	1	PLUG SOCKET BODY 3-POL	STECKDOSENKOERPER
509	604526608	4	PIN CARRIER 6-POL 16A	STIFTTRAEGER
510	605006608	2	DEVICE PLUG DIN 43650 4-POLE	GERAETESTECKER
511	604509408	1	CABLE SLEEVE 8-10	KABELTUELLE
512	602504508	1	HEX NUT M40X1,50 MS	SECHSKANTMUTTER
513	602440708	1	HOSE UNION JOINT 0 MS	SCHLAUCHVERSCHRAUBUNG
514	604508608	3	PLUG 6-POL	STECKER
515	604508508	5	SEALING PLUG M 1-K	VERSCHLUSSKAPPE
516	602339608	3	PROTECTING CAP STECKER 4-POL ELAST	SCHUTZKAPPE
517	605012408	1	PLUG BODY 3-POL	STECKERKOERPER
518	605215508	2	CLAMP SURE-SEAL	KLAMMER
519	605212808	3	MOULDING 317-1397-000 SUR	FORMTEIL
520	602704808	6	CABLE SLEEVE 4-6	KABELTUELLE
521	967709108	1	WIRING HARNESS WRCAN	KABELSTRANG
522	604505508	4	CABLE SOCKET M11-Z	KABELDOSE
523	604512108	4	SEALING PLUG M1-D	VERSCHLUSSKAPPE
524	10476383	2	PLUG M1	STECKER
525	602421908	2	INSERT M20 2X5 NBR	MEHRFACHDICHTEINSATZ
526	602441001	2	CABLE GLAND M20X1,5X5-10 MS	KABELVERSCHRAUBUNG
527	602424108	4	CABLE GLAND M16X1,5X4-11 MS	KABELVERSCHRAUBUNG
617	602329108	12	CONTACT 0,5-1MM2	KONTAKT
629	604519308	6	SLEEVE CONTACT 0,75-1,0MM2	BUCHSENKONTAKT
690	10335820	14	SLEEVE CONTACT 0,2-0,5MM2	BUCHSENKONTAKT
719	10493972	16	PIN CONTACT 0,5MM2 SILBER	STIFTKONTAKT

Pos.	Item	Quantity	Description	Bezeichnung
721	10493970	16	SLEEVE CONTACT 0,5MM2 SILBER	BUCHSENKONTAKT
802	602330808	12	SINGLE STRAND SEALING 1,2-2,1MM BLAU	EINZELADERABDICHTUNG
811	692404908	3	STOPPER PLUG	BLINDSTOPFEN
812	604518908	25	STOPPER PLUG BAUREIHE_M1	BLINDSTOPFEN
813	605619708	1	SINGLE STRAND SEALING 2	EINZELADERABDICHTUNG
996	965622108	20	LETTERING WIRE	BESCHRIFTUNG ADER
998	965622208	1	LETTERING WIRING HARNESS	BESCHRIFTUNG KABELBAUM

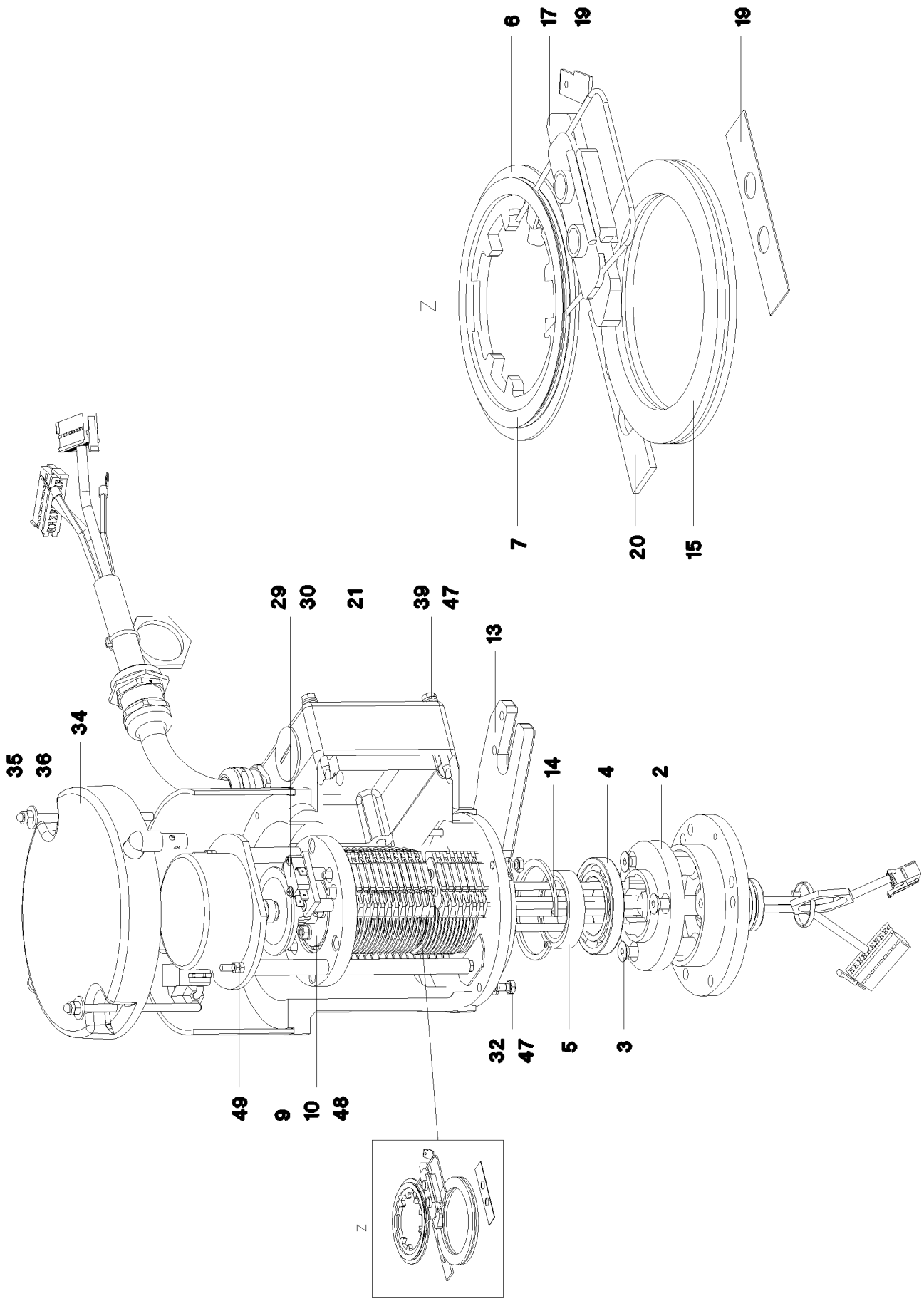

18.7.2022 089028 LIEBHERR	**etk_en_de_047654 LTR 1220** **SLIP RING TRANSMITTER** **SCHLEIFRINGUEBERTRAGER**	❑ 51 (1/2) **11346779**

Pos.	Item	Quantity	Description	Bezeichnung
2	11007300	1	ADAPTER RING	ADAPTERRING
3	10875553	3	COUNTERSUNK SCREW DIN 7991 M8X25 8	SENKSCHRAUBE
4	10114839	1	DEEP GROOVE BALL BEARING	RILLENKUGELLAGER
5	11181884	1	SPACER RING	ABSTANDSRING
6	691041708	37	INSULATING RING	ISOLIERRING
7	10114843	21	SLIP RING 60X2 2,5²	SCHLEIFRING
8	10114850	15	SEPARATING RING	TRENNRING
9	691041808	1	COVER DISK 8X60	DECKSCHEIBE
10	10114838	1	DEEP GROOVE BALL BEARING 50X65X7	RILLENKUGELLAGER
12	11181886	1	TRIP CAM	SCHALTNOCKE
13	11100949	1	BEARING MOUNT	LAGERAUFNAHME
14	10171628	1	LOCKING RING DIN 472 72X2,5 FLZNNC-120	SICHERUNGSRING
17	691043108	35	CONTACT BOW HOLDER	SCHLEIFBUEGELHALTER
18	10115155	4	EQUALIZER PLATE	AUSGLEICHSPLATTE
19	691041608	21	CONTACT BOW	SCHLEIFBUEGEL
20	10359124	2	EQUALIZER PLATE	AUSGLEICHSPLATTE
21	10359128	2	CONTACT BOW HOLDER	SCHLEIFBUEGELHALTER
29	571486808	1	SNAP SWITCH	SCHNAPPSCHALTER
30	570824177	2	SPRING WASHER DIN 137 B 3 VERZ	FEDERSCHEIBE
32	4002860	4	HEX SCREW ISO 4017 M6X20 A2-70	SECHSKANTSCHRAUBE
34	11181887	1	HOOD COVER	HAUBENDECKEL
35	10540500	2	WASHER ISO 7093-1 6 200HV-A4	SCHEIBE
36	691035008	2	CAP NUT DIN 986 M6	HUTMUTTER
39	10181340	4	HEX SCREW ISO 4017 M6X60 8.8 480H SPF	SECHSKANTSCHRAUBE
47	425050608	11	SPRING WASHER DIN 137 B 6 A3C	FEDERSCHEIBE
48	10197764	12	HEX NUT ISO 4032 M6 10 ZNNI-480H SPF	SECHSKANTMUTTER
49	411514877	7	HEX NUT DIN 934 M5 8 VERZ	SECHSKANTMUTTER
50	12104246	1	LEAD	LEITUNG

Pos.	Item	Quantity	Description	Bezeichnung
4	96035801	1	HYDRAULIC EQUIPM.CENTER PART ⇨ ❑ 54	HYDRAULIK MITTELTEIL

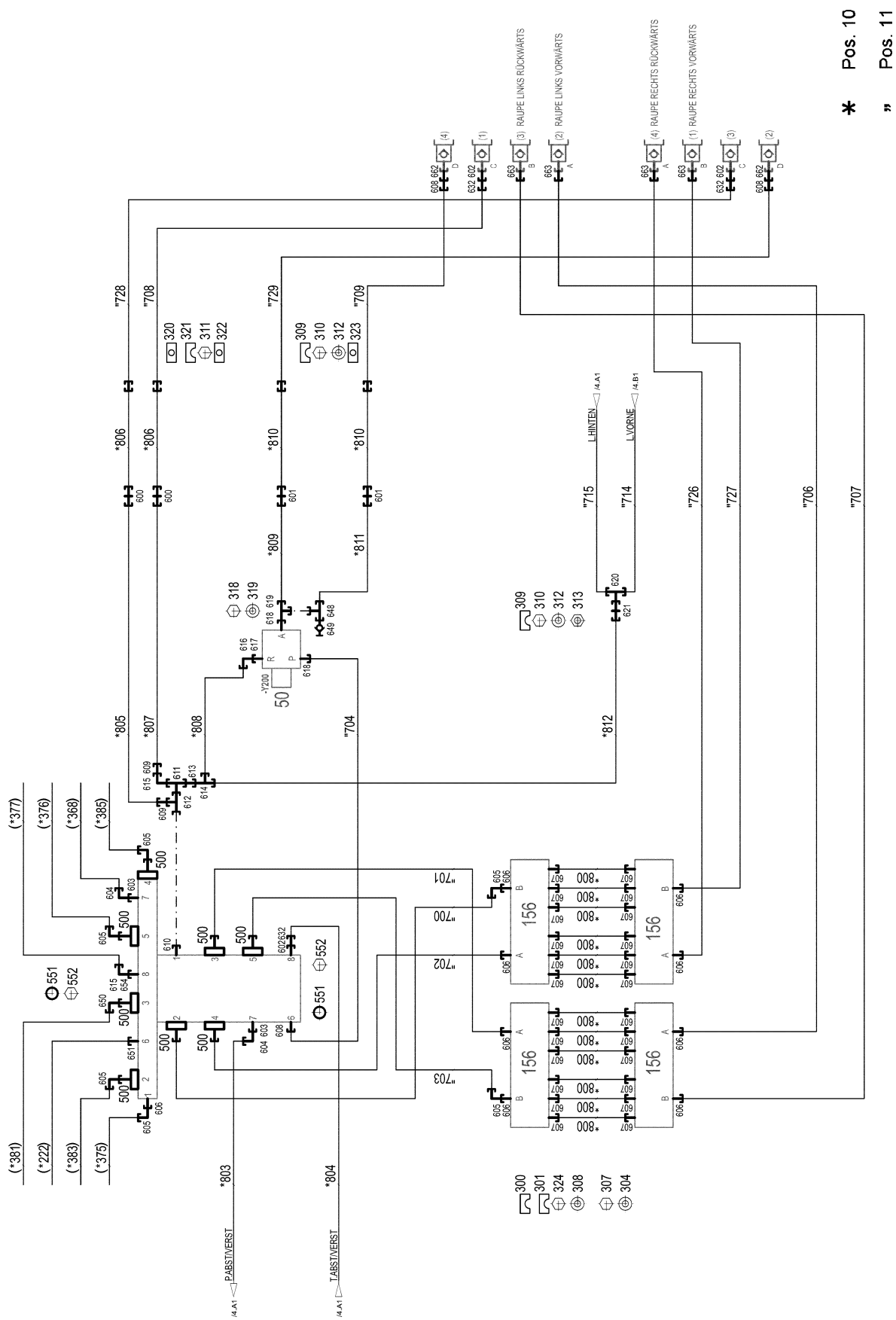

RAUPE LINKS RÜCKWÄRTS
RAUPE LINKS VORWÄRTS
RAUPE RECHTS RÜCKWÄRTS
RAUPE RECHTS VORWÄRTS
L.HINTEN
L.VORNE
P.ABST/VERST
T.ABST/VERST
* Pos. 10
" Pos. 11

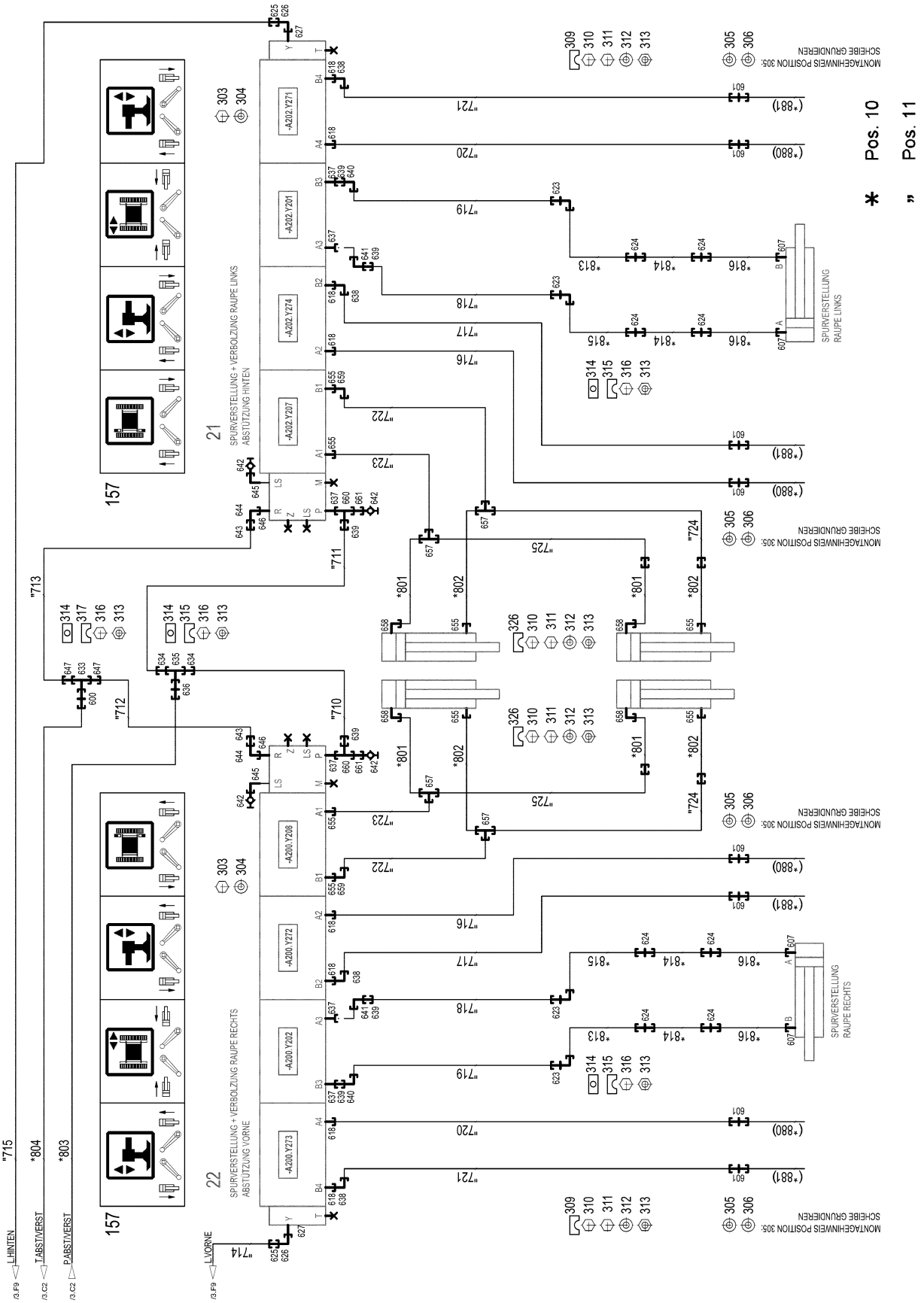
Pos. 10
* Pos. 11
SPURVERSTELLUNG + VERBOLZUNG RAUPE LINKS
ABSTÜTZUNG HINTEN
SPURVERSTELLUNG + VERBOLZUNG RAUPE RECHTS
ABSTÜTZUNG VORNE
SPURVERSTELLUNG RAUPE LINKS
SPURVERSTELLUNG RAUPE RECHTS
MONTAGEHINWEIS POSITION 305: SCHEIBE GRUNDIEREN
L HINTEN
T ABST/VERST
P ABST/VERST
L VORNE

Pos.	Item	Quantity	Description	Bezeichnung
10	96035802	1	HOSE LINES CENTRE SECTION ⇨ ❑ 58	SCHLAUCHLEITUNGEN MITTELT
11	96035803	1	PIPELINES CENTER PART ⇨ ❑ 59	ROHRLEITUNGEN MITTELTEIL
21	11643183	1	CONTROL BLOCK 420BAR SPF ⇨ ❑ 61	STEUERBLOCK
22	11643184	1	CONTROL BLOCK 420BAR SPF ⇨ ❑ 64	STEUERBLOCK
50	511444408	1	DIRECTIONAL CONTROL VALVE 3/2 350BA ⇨ ❑ 67	WEGEVENTIL
156	11214049	4	DISTRIBUTOR BLOCK G1 1/2 /8 C45+C VER	VERTEILERBLOCK
157	97044048	2	SIGN 158X33X1 AL-BL	SCHILD
300	97037153	6	PIPE CLAMP PART 26X50X332 PA6G	ROHRSCHELLENTEIL
301	97037154	6	PIPE CLAMP PART 26X50X332 PA6G	ROHRSCHELLENTEIL
303	11651612	8	HEX SCREW ISO 4017 M8X16 8.8 480H SPF	SECHSKANTSCHRAUBE
304	11840501	20	WASHER DIN 7349 8,4 200HV 480H SPF	SCHEIBE
305	10179985	8	WASHER DIN 6340 21 FLZN SPF	SCHEIBE
306	10875637	4	WASHER DIN 1441 21 ST FLZN SPF	SCHEIBE
307	10876620	12	HEX SCREW ISO 4014 M8X100 8.8 480H SP	SECHSKANTSCHRAUBE
308	12103465	24	WASHER ISO 7089 8 300HV ZNNI-480H SPF	SCHEIBE
309	7365090	62	CLAMP-HALF DIN 3015-1 L 0 R 12 PP SW	KLEMMHAELFTE
310	10875588	27	SOCKET HEAD SCREW ISO 4762 M6X25 8.8	ZYLINDERSCHRAUBE
311	12203634	22	SOCKET HEAD SCREW ISO 4762 M6X50 8.8	ZYLINDERSCHRAUBE
312	10197771	45	WASHER ISO 7089 6 200HV ZNNI-480H SPF	SCHEIBE
313	602018008	61	CARRIER RAIL NUT DIN 3015-1 L TM M6 W1	TRAGSCHIENENMUTTER
314	7005053	10	LID PLATE DIN 3015-1 L-DP 3 W1-ZN	DECKPLATTE
315	602008408	14	CLAMP-HALF DIN 3015-1 L 3 G 20 PP SW	KLEMMHAELFTE
316	10875591	20	SOCKET HEAD SCREW ISO 4762 M6X40 8.8	ZYLINDERSCHRAUBE
317	602008508	6	CLAMP-HALF DIN 3015-1 L 3 R 22 PP SW	KLEMMHAELFTE
318	11692824	2	HEX SCREW ISO 4017 M6X12 8.8 480H SPF	SECHSKANTSCHRAUBE
319	11693878	2	WASHER DIN 7349 6,4 200HV 480H SPF	SCHEIBE
320	7008583	2	LID PLATE DIN 3015-1 L-DP 4 W1-ZN	DECKPLATTE
321	602008808	4	CLAMP-HALF DIN 3015-1 L 4 R 28 PP SW	KLEMMHAELFTE
322	10802205	2	WELD PLATE DIN 3015-1 L-AP-K 4 W1 ZNNI	ANSCHWEISSPLATTE
323	602015408	4	WELD PLATE DIN 3015-1 L-AP-K 0 W1	ANSCHWEISSPLATTE
324	12202976	24	SOCKET HEAD SCREW ISO 4762 M8X40 8.8	ZYLINDERSCHRAUBE
326	602007808	64	CLAMP-HALF DIN 3015-1 L 0 G 10 PP SW	KLEMMHAELFTE
500	511517808	8	FLANGE STUB PIPE AFG 38S G1 1/4 CR6-F	FLANSCHSTUTZEN
551	510586708	8	O-RING ARP 568 37,69X3,53 NBR90	O-RING
552	10876373	32	SOCKET HEAD SCREW ISO 4762 M14X45 8	ZYLINDERSCHRAUBE
600	474001008	3	FITTING XSV28-L CR6-FREI	VERSCHRAUBUNG
601	474032408	10	FITTING XSV12-S CR6-FREI	VERSCHRAUBUNG
602	471034508	3	FITTING XGE35-LR-ED CR6-FREI	VERSCHRAUBUNG
603	471033608	2	FITTING XGE25-SR-ED CR6-FREI	VERSCHRAUBUNG
604	7407119	2	FITTING EW 25S CR6-FREI	VERSCHRAUBUNG
605	472531808	6	FITTING EWSD38-S CR6-FREI	VERSCHRAUBUNG
606	471034408	9	FITTING XGEV38-SR-WD CR6-FREI	VERSCHRAUBUNG
607	471033408	28	FITTING XGE20-SR-ED CR6-FREI	VERSCHRAUBUNG
608	471032608	3	FITTING GE 12S G1/2A CR6-FREI	VERSCHRAUBUNG
609	475431308	2	FITTING RED 42/28L CR6-FREI	VERSCHRAUBUNG
610	471034708	1	FITTING GE 42L G1 1/2 CR6-FREI	VERSCHRAUBUNG
611	482431114	1	FITTING ISO 8434 ET 42L CR6-FREI	VERSCHRAUBUNG
612	7367986	1	FITTING EL 42L CR6-FREI	VERSCHRAUBUNG
613	475407208	1	FITTING REDSDN42/12-L CR6-FREI	VERSCHRAUBUNG
614	247128602	1	L NECK EL 12L M18X1,5 CR6-FREI	L-STUTZEN
615	482530814	2	FITTING ISO 8434 EW 42L CR6-FREI	VERSCHRAUBUNG
616	247117702	1	SWIVEL ELBOW EW 12L M18X1,5 CR6-FREI	WINKELSTUTZEN
617	471030808	1	FITTING XGE12-LR-ED CR6-FREI	VERSCHRAUBUNG
618	471032708	10	FITTING GE 12S G3/8A CR6-FREI	VERSCHRAUBUNG
619	7617461	1	FITTING EL 12S CR6-FREI	VERSCHRAUBUNG

Pos.	Item	Quantity	Description	Bezeichnung
620	247105602	1	T CONNECTION PIECE ET 12L CR6-FREI	T-STUTZEN
621	474000408	1	FITTING XSV12-L CR6-FREI	VERSCHRAUBUNG
623	474232808	4	FITTING WSV 20S CR6-FREI	VERSCHRAUBUNG
624	474032708	8	FITTING XSV20-S CR6-FREI	VERSCHRAUBUNG
625	475030108	2	FITTING XGR12/6-L CR6-FREI	VERSCHRAUBUNG
626	247021702	2	SWIVEL ELBOW EW 6L CR6-FREI	WINKELSTUTZEN
627	471900108	2	FITTING EGESD6-LR-WD CR6-FREI	VERSCHRAUBUNG
632	475430408	3	FITTING REDSD35/28-L CR6-FREI	VERSCHRAUBUNG
633	7407122	1	FITTING ET 28L M36X2 CR6-FREI	VERSCHRAUBUNG
634	475432308	2	FITTING REDSDN25/20-S CR6-FREI	VERSCHRAUBUNG
635	7367774	1	FITTING ET 25S CR6-FREI	VERSCHRAUBUNG
636	474032808	1	FITTING SV 25S CR6-FREI	VERSCHRAUBUNG
637	471900608	6	FITTING EGESD16-SR-WD CR6-FREI	VERSCHRAUBUNG
638	7617354	4	FITTING EW 12S CR6-FREI	VERSCHRAUBUNG
639	475033608	6	FITTING GR 20/16S CR6-FREI	VERSCHRAUBUNG
640	7407108	2	FITTING EW 20S M30X2 CR6-FREI	VERSCHRAUBUNG
641	7617460	2	FITTING EW 16S CR6-FREI	VERSCHRAUBUNG
642	475601508	4	TEST POINT FITTING BMA3 6S CR6-FREI	MESSANSCHLUSS
643	475030708	2	FITTING GR 22/18L CR6-FREI	VERSCHRAUBUNG
644	247108302	2	SWIVEL ELBOW EW 18L M26X1,5 CR6-FREI	WINKELSTUTZEN
645	473230608	2	FITTING RSWS6-SR-WD CR6-FREI	VERSCHRAUBUNG
646	471901308	2	FITTING EGE 18L G1/2A CR6-FREI	VERSCHRAUBUNG
647	475430508	2	FITTING REDSD28/22-L CR6-FREI	VERSCHRAUBUNG
648	482431414	1	FITTING ISO 8434 ET 12S CR6-FREI	VERSCHRAUBUNG
649	7409922	1	GAUGE CONNECTION 12S M20X1,5 CR6-F	MESSSTUTZEN
650	10467292	1	FITTING EV38S M52X2 CR6-FREI	VERSCHRAUBUNG
651	471031008	1	FITTING XGE15-LR-ED CR6-FREI	VERSCHRAUBUNG
654	10476913	1	SCREW-ON CONNECTION GE 42L G11/4 C	EINSCHRAUBSTUTZEN
655	471032808	8	FITTING ISO 8434-1 GE 10S G3/8A CR6-FRE	VERSCHRAUBUNG
657	470402208	4	FITTING T 10S CR6-FREI	VERSCHRAUBUNG
658	473231008	4	FITTING RSWS10-SR-WD CR6-FREI	VERSCHRAUBUNG
659	7617268	2	FITTING EW 10S CR6-FREI	VERSCHRAUBUNG
660	482431514	2	FITTING ISO 8434 ET 16S CR6-FREI	VERSCHRAUBUNG
661	475433108	2	FITTING REDSD16/6-S CR6-FREI	VERSCHRAUBUNG
662	475501108	2	ADAPTOR RI11/4-EDX1/2 CR6-FREI	ADAPTER
663	7410455	4	SCREW-ON CONNECTION GE 38S G1 1/4A	EINSCHRAUBSTUTZEN

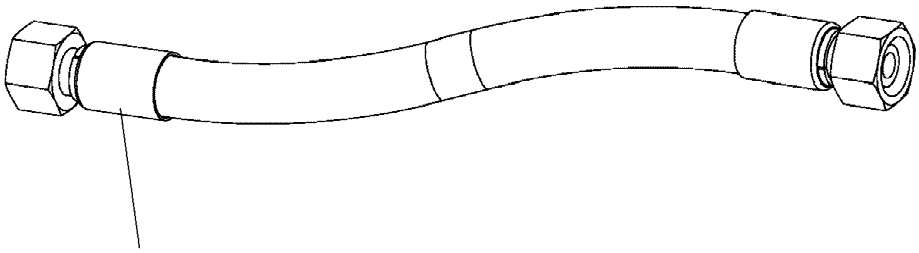

Schlauchnummer
Hose number
Numéro de flexible
Número de flexible
Номера шланга

Die Schlauchnummern auf den Schläuchen entsprechen den Positionen in der Schlauchliste.

The hose numbers from the hoses are in accordance with the items in the hose list.

Les numéros indiqués sur les flexibles correspondent aux repères de la nomenclature des flexibles.

Los números indicados en los flexibles corresponden a las posiciones de la lista de flexibles.

Нанесенные на шлангах номера соответствуют позициям в перечне.

Pos.	Item	Quantity	Description	Bezeichnung
800	920715608	12	HOSE CPL. GH425-10 16X1750	SCHLAUCH KPL.
801	928874708	4	HOSE CPL. 2SN 8X400	SCHLAUCH KPL.
802	968585908	4	HOSE CPL. 2SN 8X320	SCHLAUCH KPL.
803	923702508	1	HOSE CPL. GH425-12 19X960	SCHLAUCH KPL.
804	968144708	1	HOSE CPL. 1SN 25X700	SCHLAUCH KPL.
805	968144208	1	HOSE CPL. 1SN 25X1900	SCHLAUCH KPL.
806	928033508	2	HOSE CPL. 1SN 25X1750	SCHLAUCH KPL.
807	968144308	1	HOSE CPL. 1SN 25X1300	SCHLAUCH KPL.
808	926465408	1	HOSE CPL. 2TE 10X1000	SCHLAUCH KPL.
809	929752308	1	HOSE CPL. 2TE 10X600	SCHLAUCH KPL.
810	928865508	2	HOSE CPL. 2SN 10X1700	SCHLAUCH KPL.
811	968144408	1	HOSE CPL. 2TE 10X1900	SCHLAUCH KPL.
812	926041708	1	HOSE CPL. 2TE 10X500	SCHLAUCH KPL.
813	924496108	2	HOSE CPL. GH425-10 16X1160	SCHLAUCH KPL.
814	920715608	4	HOSE CPL. GH425-10 16X1750	SCHLAUCH KPL.
815	926315908	2	HOSE CPL. GH425-10 16X740	SCHLAUCH KPL.
816	96035865	4	HOSE CPL. GH425-10 16X1520	SCHLAUCH KPL.
890	968841908	1	HOSE CPL. HPC 4X2850	SCHLAUCH KPL.
891	920983508	1	HOSE CPL. HPC 4X4900	SCHLAUCH KPL.

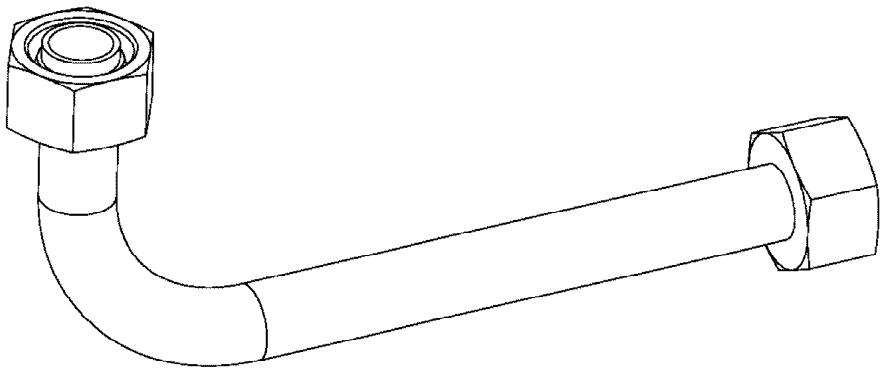

Die Positionsnummern der Rohre auf den Bildtafeln entsprechen den Positionen in der Rohrliste.

The pipe numbers from the illustrations are in accordance with the items in the pipe list.

Les numéros des tuyaux sur les illustrations correspondent aux repères de la nomenclature des tuyaux.

Los números de tubos en las ilustraciones corresponden a las posiciones de la lista de tubos.

Номера позиций труб на изображениях соответствуют позициям в перечне труб.

Pos.	Item	Quantity	Description	Bezeichnung
700	968166708	1	PIPE COMPL. 38X5X -	ROHR KPL.
701	968166808	1	PIPE COMPL. 38X5X -	ROHR KPL.
702	968166908	1	PIPE COMPL. 38X5X -	ROHR KPL.
703	968167008	1	PIPE COMPL. 38X5X -	ROHR KPL.
704	968167108	1	PIPE COMPL. 12X1,5X780 12S - 12S	ROHR KPL.
706	96035905	1	PIPE COMPL. 38X5X1775 38X1,5 AS38 38x5 -	ROHR KPL.
707	96035906	1	PIPE COMPL. 38X5X1779,1 38X1,5 AS38 38	ROHR KPL.
708	96035907	1	PIPE COMPL. 28X2X1847,9 PR28-L AL28 - P	ROHR KPL.
709	96035909	1	PIPE COMPL. 12X1,5X1875,7 PR12-S/L AS12	ROHR KPL.
710	969165508	1	PIPE COMPL. 20X2,5X1931 20S - 20S	ROHR KPL.
711	969165608	1	PIPE COMPL. 20X2,5X1472 20S - 20S	ROHR KPL.
712	968167808	1	PIPE COMPL. 22X2,5X2118 22L - 22L	ROHR KPL.
713	968167908	1	PIPE COMPL. 22X2,5X1631 22L - 22L	ROHR KPL.
714	968168008	1	PIPE COMPL. 12X1,5X2292 12L - 12L	ROHR KPL.
715	968168108	1	PIPE COMPL. 12X1,5X1680 12L - 12L	ROHR KPL.
716	968168208	2	PIPE COMPL. 12X1,5X2093 12S - 12S	ROHR KPL.
717	968168308	2	PIPE COMPL. 12X1,5X1991 12S - 12S	ROHR KPL.
718	968168408	2	PIPE COMPL. 20X2,5X1768 20S - 20S	ROHR KPL.
719	968168508	2	PIPE COMPL. 20X2,5X1842 20S - 20S	ROHR KPL.
720	968168608	2	PIPE COMPL. 12X1,5X2102 12S - 12S	ROHR KPL.
721	968168708	2	PIPE COMPL. 12X1,5X1993 12S - 12S	ROHR KPL.
722	968593808	2	PIPE COMPL. 10X1,5X1951 10S - 10S	ROHR KPL.
723	968593908	2	PIPE COMPL. 10X1,5X2030 10S - 10S	ROHR KPL.
724	968594008	2	PIPE COMPL. 10X1,5X2479 G10S - 10S	ROHR KPL.
725	968594108	2	PIPE COMPL. 10X1,5X2512 G10S - 10S	ROHR KPL.
726	96035910	1	PIPE COMPL. 38X5X1774,6 38X1,5 AS38 38	ROHR KPL.
727	96035911	1	PIPE COMPL. 38X5X1779,5 38X1,5 AS38 38	ROHR KPL.
728	96035912	1	PIPE COMPL. 28X2X1823,6 PR28-L AL28 - P	ROHR KPL.
729	96035913	1	PIPE COMPL. 12X1,5X1881,6 PR12-S/L AS12	ROHR KPL.
770	968205108	4	PIPE COMPL. 6X1X327 AL6 - AL6	ROHR KPL.
771	968205208	4	PIPE COMPL. 6X1X327 AL6 - AL6	ROHR KPL.
772	97039386	4	TUBE 6X1X132 E235+N	ROHR
773	97039387	4	TUBE 6X1X132 E235+N	ROHR
774	97039388	4	TUBE 6X1X1161 E235+N	ROHR
775	97039389	4	TUBE 6X1X1169 E235+N	ROHR

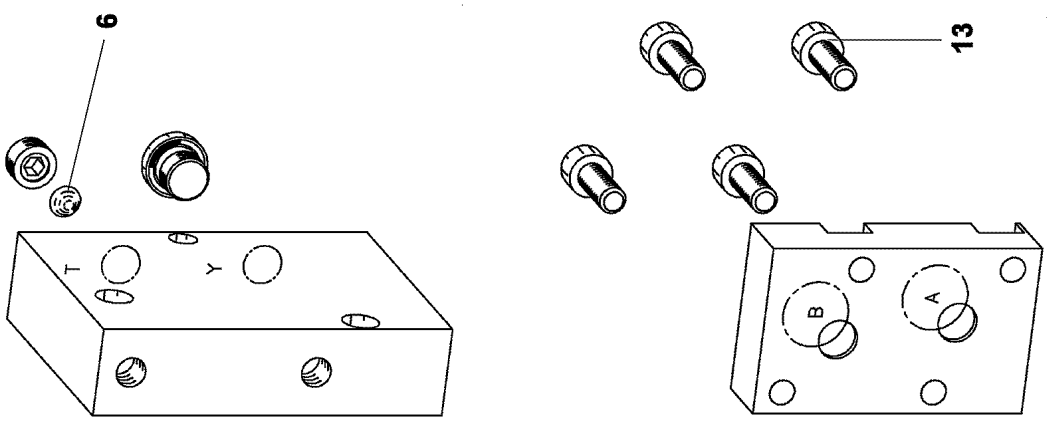
6
13
T
Y
B
A

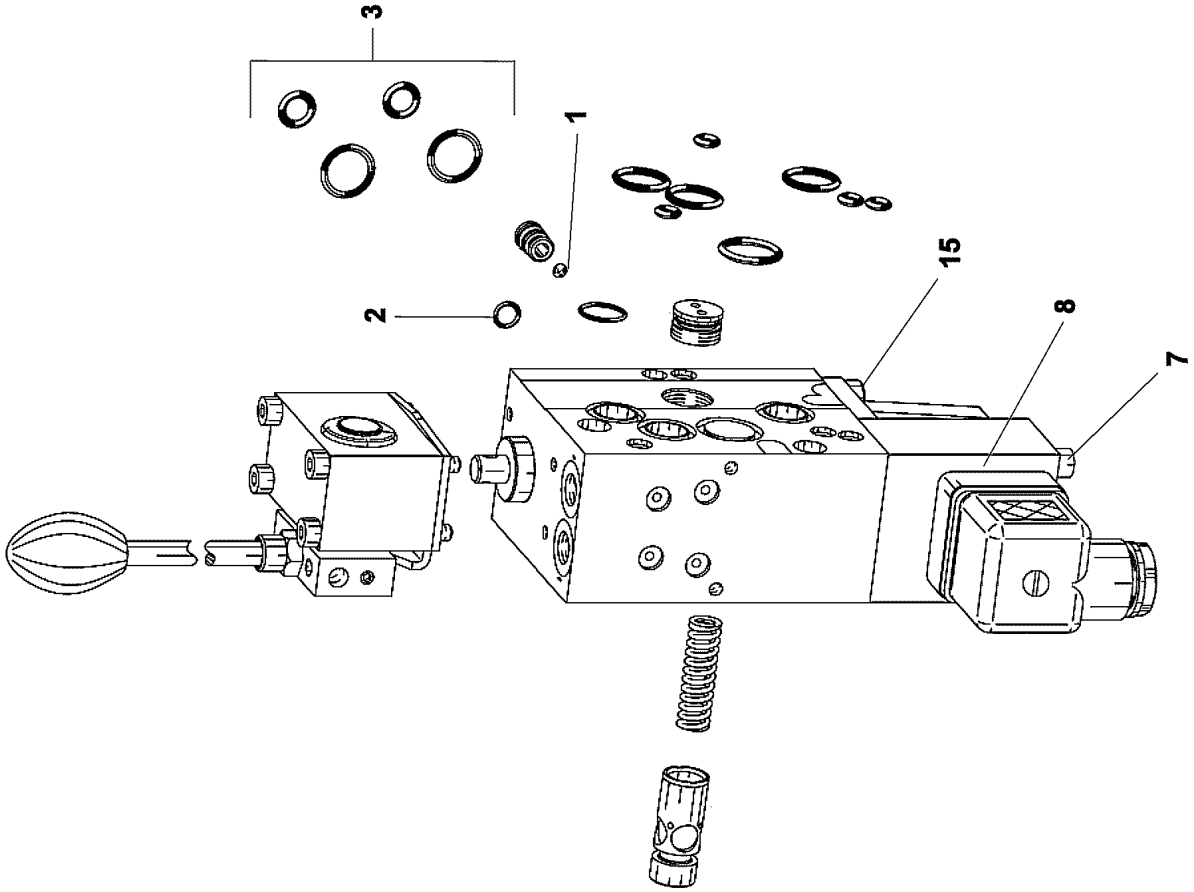
3
1
2
15
8
7

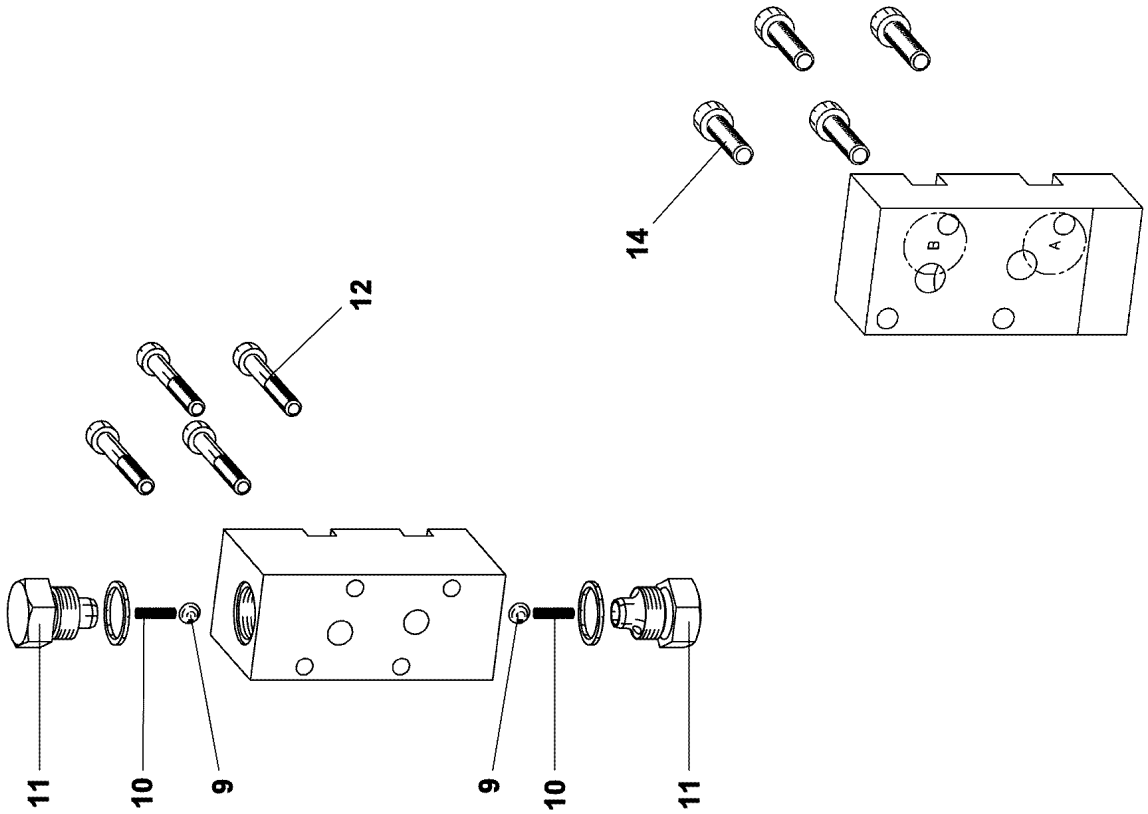
14
12
11
10
9
9
10
11

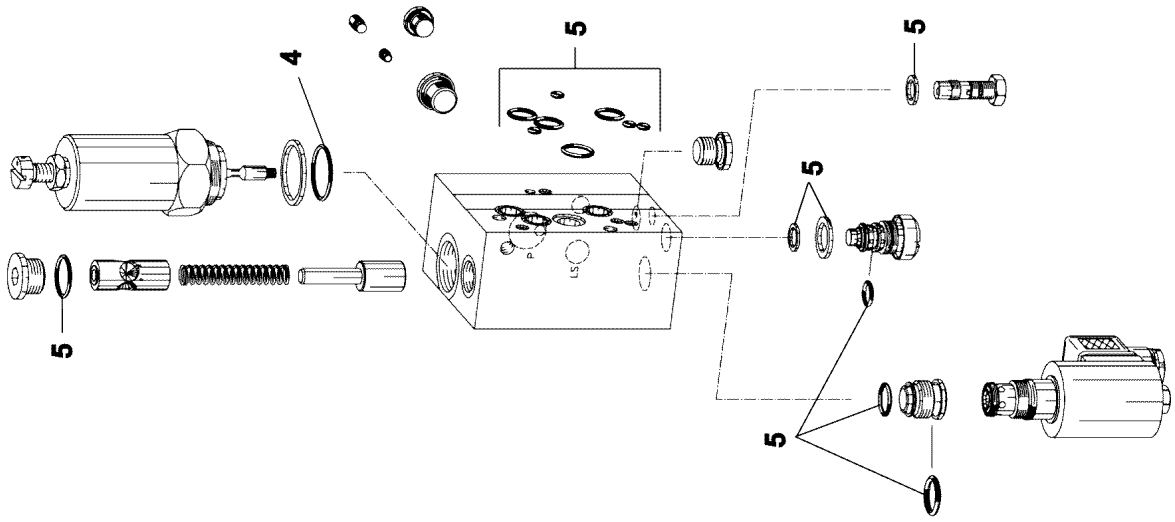
4
5
5
5
5
5

Pos.	Item	Quantity	Description	Bezeichnung
1	511036508	1	BALL DIN 5401 3,5	KUGEL
2	553136608	2	O-RING 5X1 NBR70	O-RING
3	11691956	1	SEAL KIT	DICHTSATZ
4	514611808	1	O-RING 23,52X1,78 NBR90	O-RING
5	11220418	1	SEAL KIT CONNECTING BLOCK	DS ANSCHLUSSBLOCK
6	570862108	1	BALL DIN 5401 7	KUGEL
7	10876395	4	SOCKET HEAD SCREW ISO 4762 M4X12 8.8	ZYLINDERSCHRAUBE
8	10114441	1	TWIN MAGNET	ZWILLINGSMAGNET
9	518512408	2	BALL DIN 5401 7,5	KUGEL
10	511025508	2	COMPRESSION SPRING	DRUCKFEDER
11	511025408	2	SCREW PLUG	VERSCHLUSSSCHRAUBE
12	4002698	4	SOCKET HEAD SCREW ISO 4762 M6X45 10.	ZYLINDERSCHRAUBE
13	10875586	4	SOCKET HEAD SCREW ISO 4762 M6X16 8.8	ZYLINDERSCHRAUBE
14	404291213	4	SOCKET HEAD SCREW ISO 4762 M6X25 A 2	ZYLINDERSCHRAUBE
15	10876395	4	SOCKET HEAD SCREW ISO 4762 M4X12 8.8	ZYLINDERSCHRAUBE
20	12102524	2	CONNECTOR PLUG A	ANSCHLUSSSTECKER
21	12104437	1	THREADED DISK	GEWINDESCHEIBE

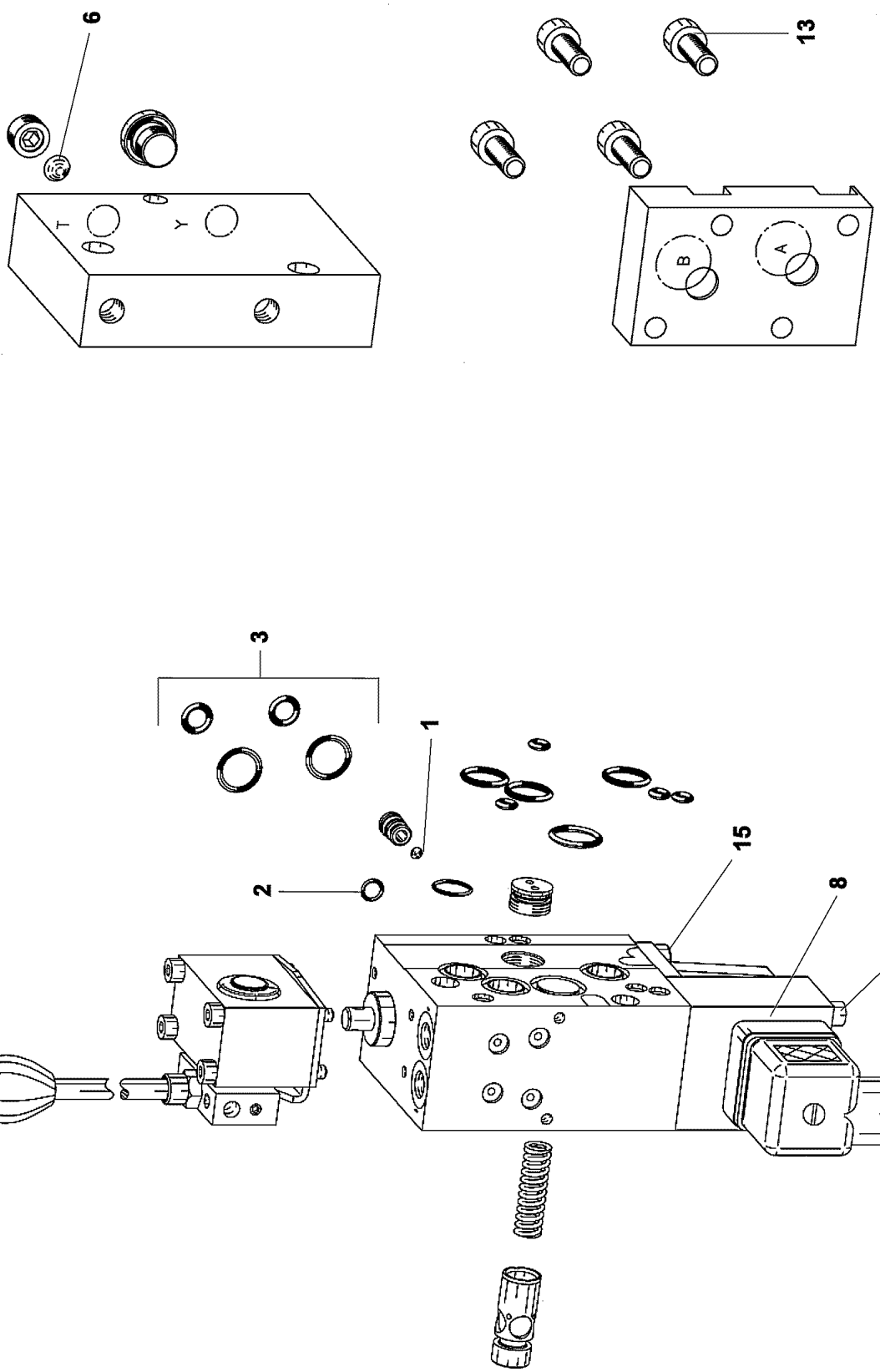
6
13
T
Y
B
A
3
1
2
15
8
7

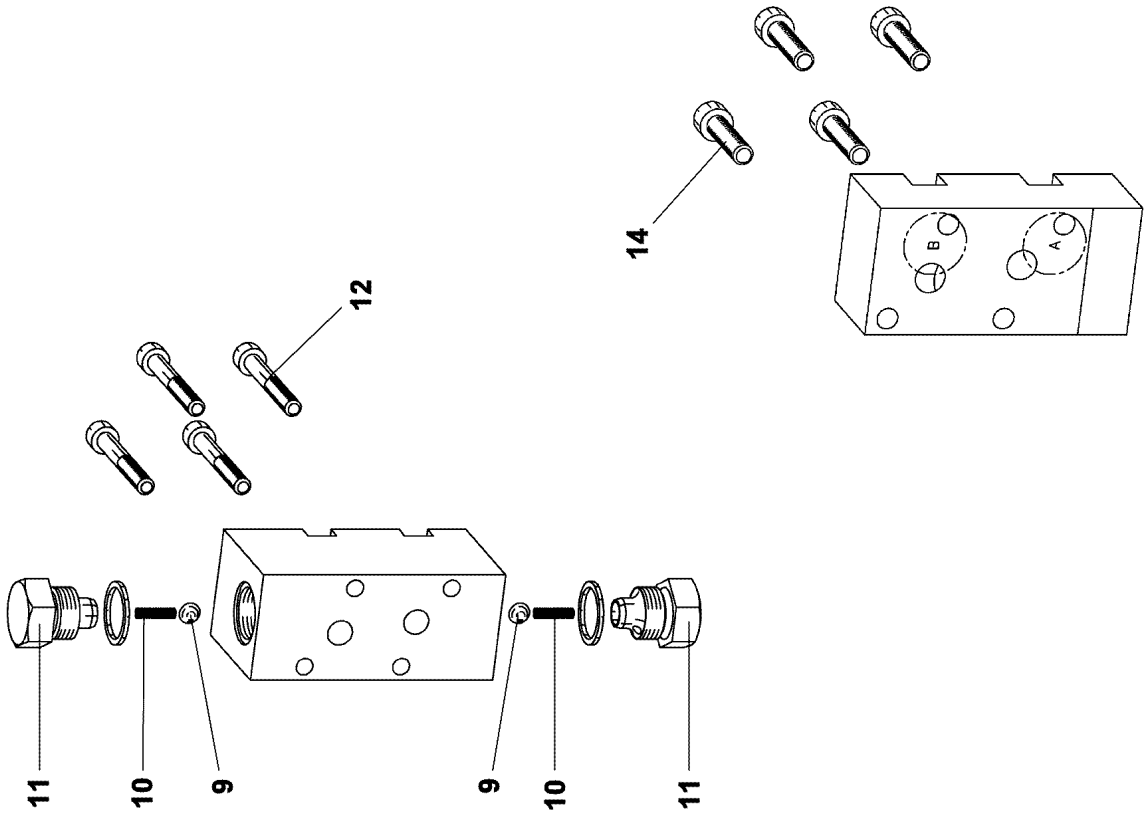
14
12
11
10
9
9
10
11

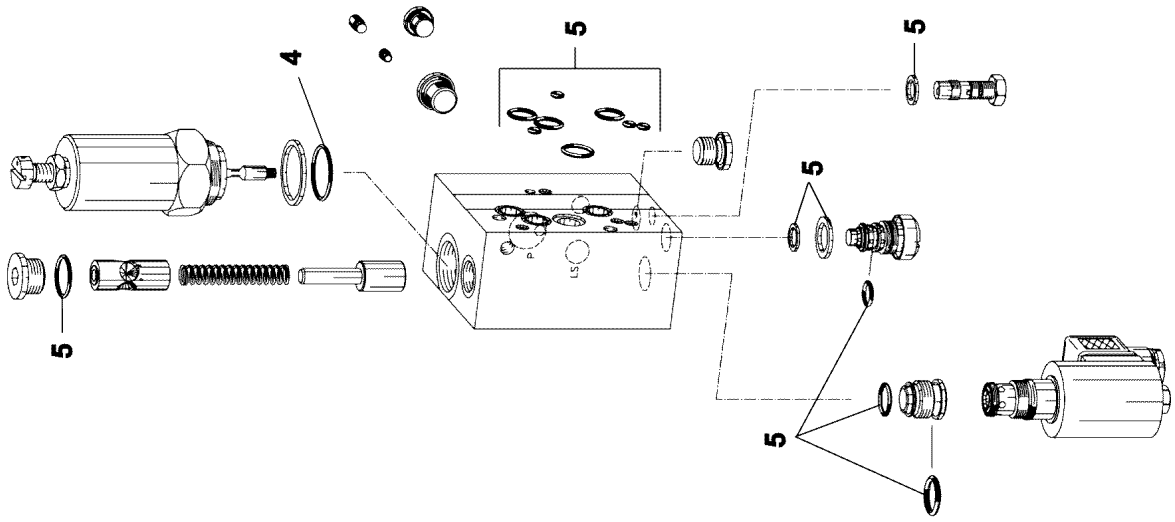
4
5
5
5
5
5

Pos.	Item	Quantity	Description	Bezeichnung
1	511036508	1	BALL DIN 5401 3,5	KUGEL
2	553136608	2	O-RING 5X1 NBR70	O-RING
3	11691956	1	SEAL KIT	DICHTSATZ
4	514611808	1	O-RING 23,52X1,78 NBR90	O-RING
5	11220418	1	SEAL KIT CONNECTING BLOCK	DS ANSCHLUSSBLOCK
6	570862108	1	BALL DIN 5401 7	KUGEL
7	4901531	3	SOCKET HEAD SCREW ISO 4762 M4X50 8.8	ZYLINDERSCHRAUBE
8	10114441	1	TWIN MAGNET	ZWILLINGSMAGNET
9	518512408	2	BALL DIN 5401 7,5	KUGEL
10	511025508	2	COMPRESSION SPRING	DRUCKFEDER
11	511025408	2	SCREW PLUG	VERSCHLUSSSCHRAUBE
12	4002698	4	SOCKET HEAD SCREW ISO 4762 M6X45 10.	ZYLINDERSCHRAUBE
13	10875586	4	SOCKET HEAD SCREW ISO 4762 M6X16 8.8	ZYLINDERSCHRAUBE
14	404291213	4	SOCKET HEAD SCREW ISO 4762 M6X25 A 2	ZYLINDERSCHRAUBE
15	10876395	4	SOCKET HEAD SCREW ISO 4762 M4X12 8.8	ZYLINDERSCHRAUBE

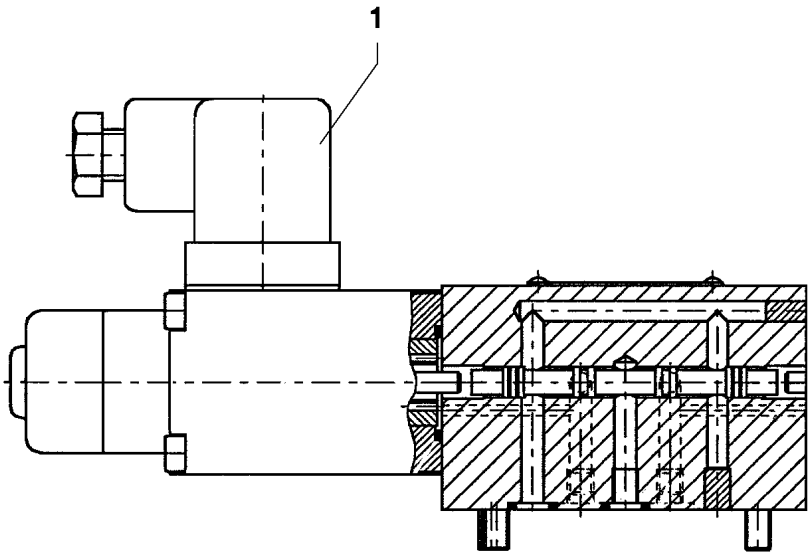

Pos.	Item	Quantity	Description	Bezeichnung
1	570827808	1	MAGNET 24V	MAGNET

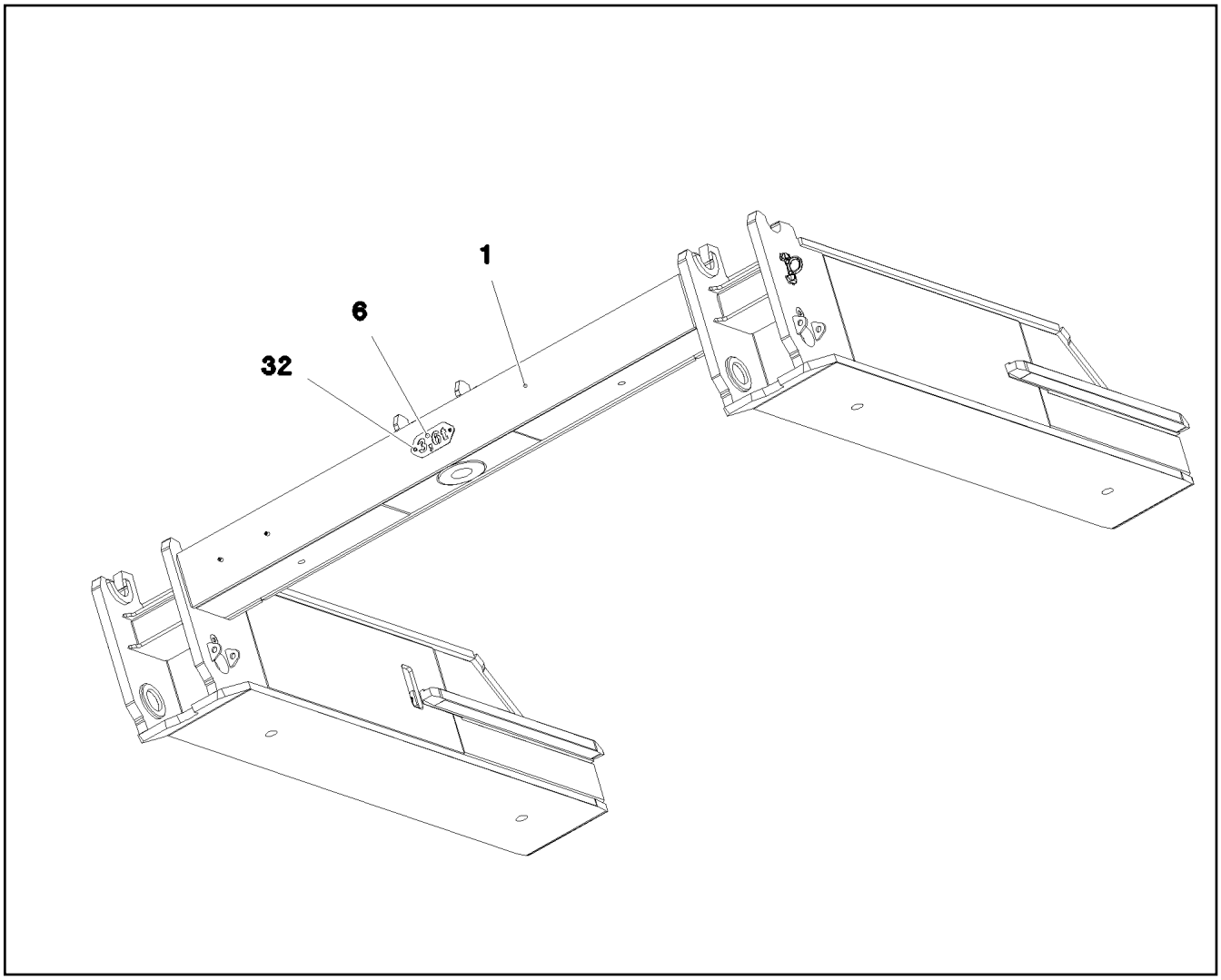

Pos.	Item	Quantity	Description	Bezeichnung
1	96023109	1	CROSS MEMBER STEEL CONSTRUCT.	QUERTRAEGER STAHLBAU
6	975231708	1	SIGN 4X228X100 S315MC FE//ZNNI8//CN//T0	SCHILD
32	12102696	2	BUTTON HEAD SCREW ISO 7380-2 M8X10 0	HALBRUNDKOPFSCHRAUBE

Pos.	Item	Quantity	Description	Bezeichnung
1	11695999	1	CRAWLER CHAIN CPL.	RAUPENKETTE KPL.
(1)	790202814	288	TRACK PAD NUT UNF1 1/8X12 12	BODENPLATTENMUTTER
(2)	485501414	288	SCREW UNF1 1/8"X12X130 12.9	SCHRAUBE
(3)	10224095	72	FLOOR PLATE B9HDS 983593114 LH-GRAU	BODENPLATTE
(4)	12106552	1	CRAWLER CHAIN	RAUPENKETTE
(997)	11658888	1	REPAIR SEGMENT 1-FACH	REPARATURSEGMENT

Pos.	Item	Quantity	Description	Bezeichnung
1	91001377	1	CRAWLER SUPPORT PREASS LS ⇨ ❑ 71	RAUPENTRAEGER VORM.LI.
4	919296508	1	HYDR.TRAVEL DRIVE ⇨ ❑ 96	HYDR.FAHRANTRIEB

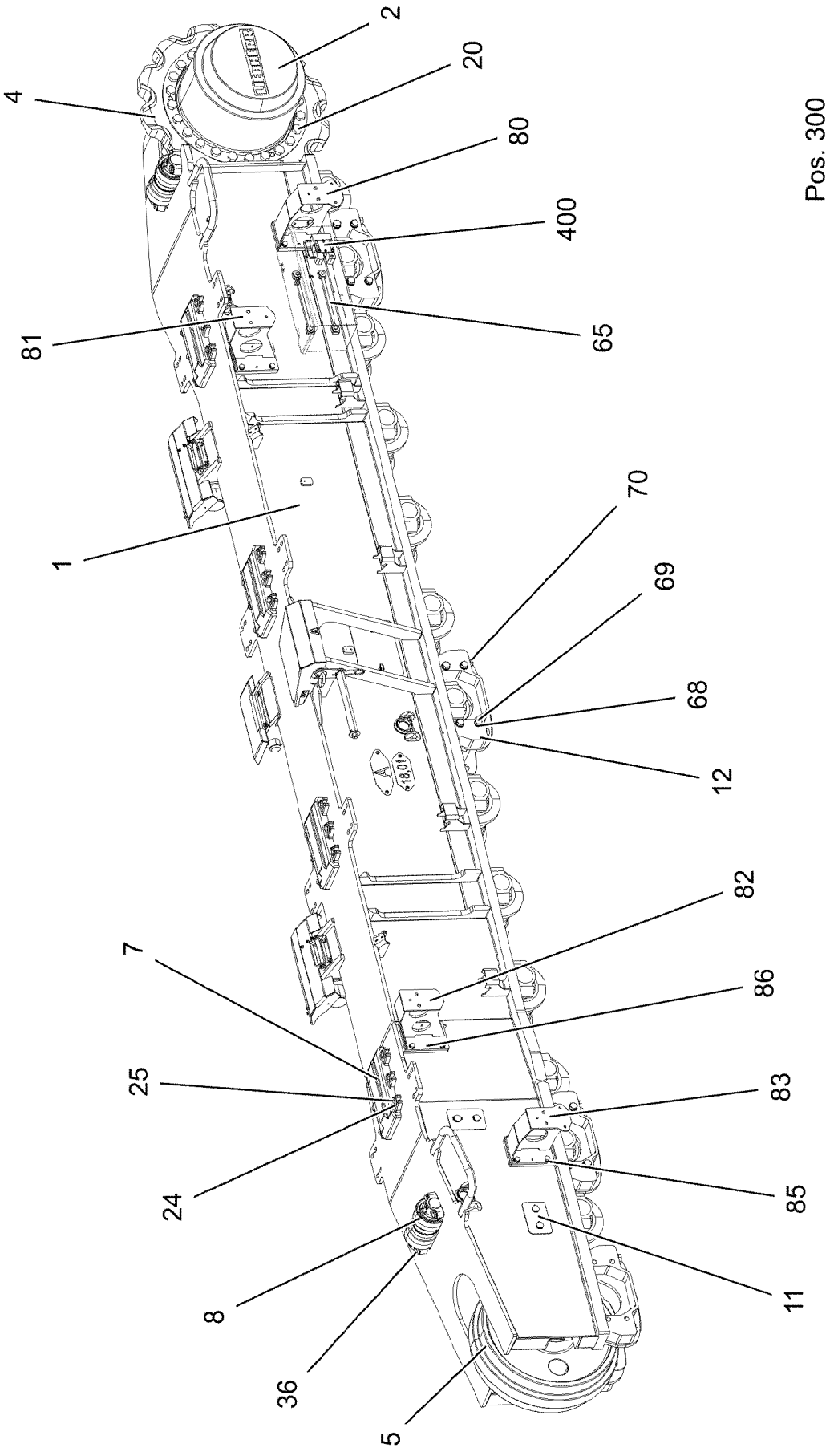
Pos. 300
2
20
4
80
400
81
65
1
70
69
68
12
82
7
86
25
83
24
85
8
11
36
5

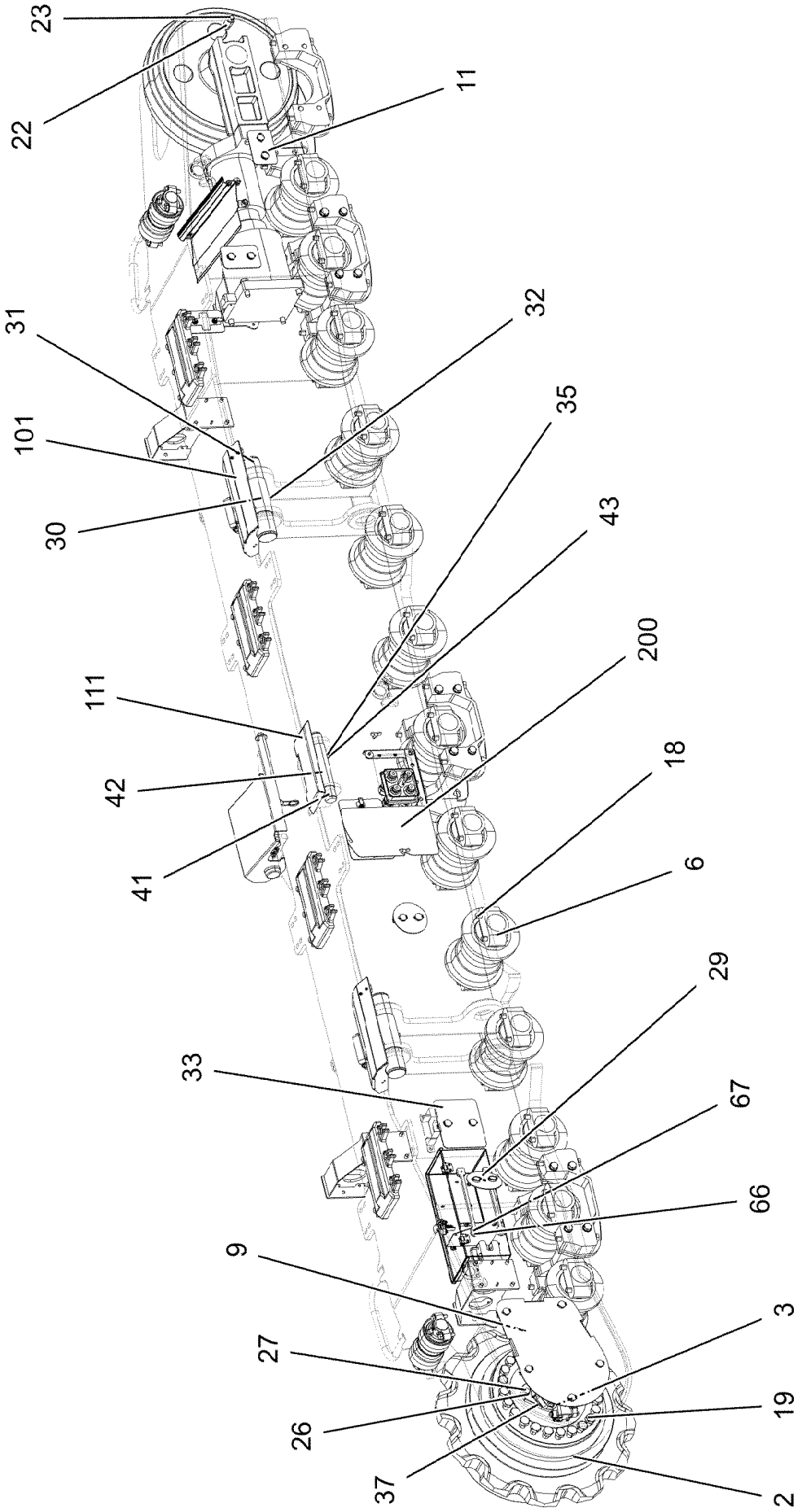
23
22
11
31
32
101
35
30
43
200
111
18
42
6
41
29
33
67
66
9
3
27
19
26
2
37

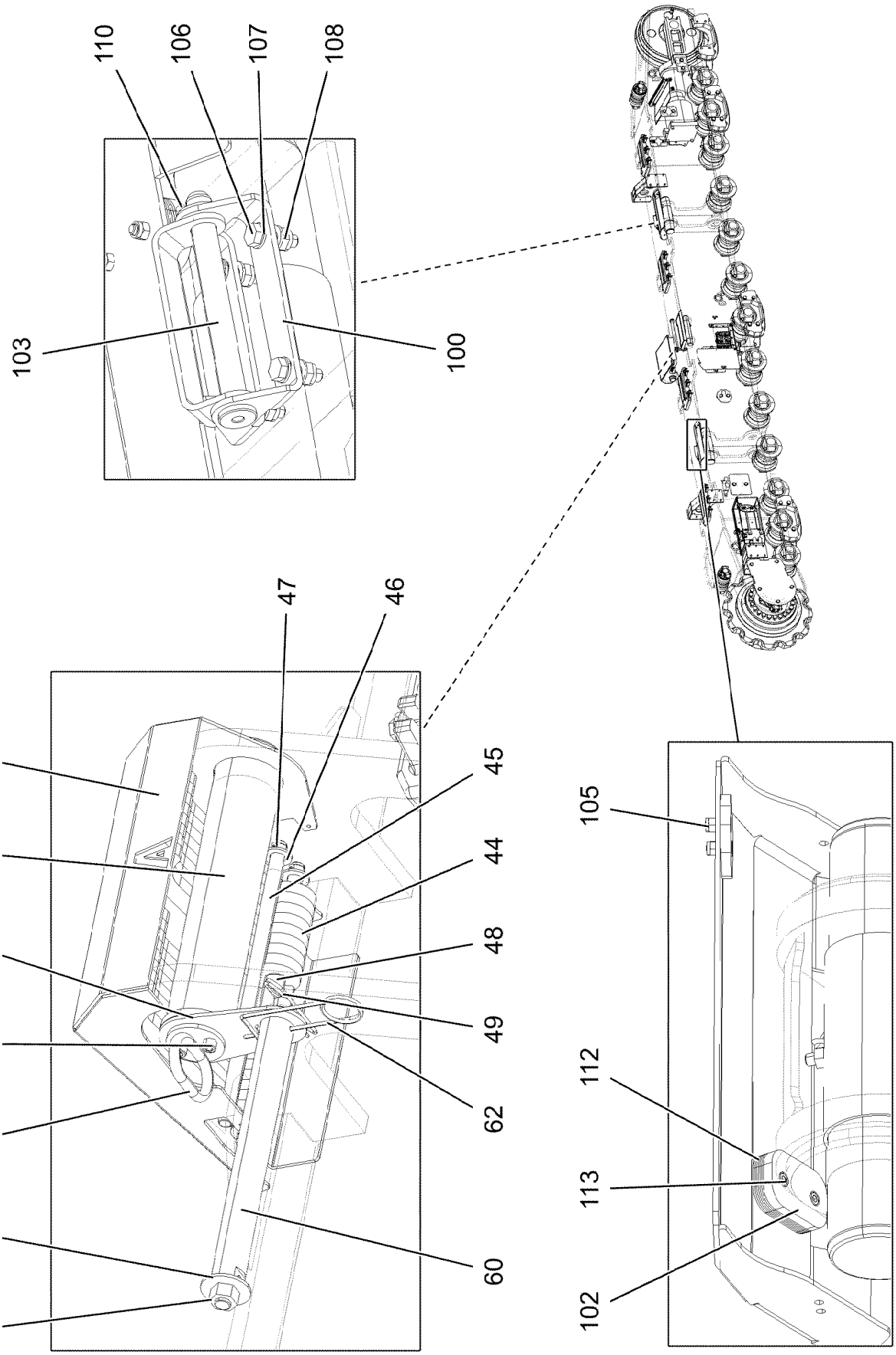
110
106
107
108
103
100
47
46
87
52
61
58
56
63
64
45
44
48
49
62
60
105
112
113
102

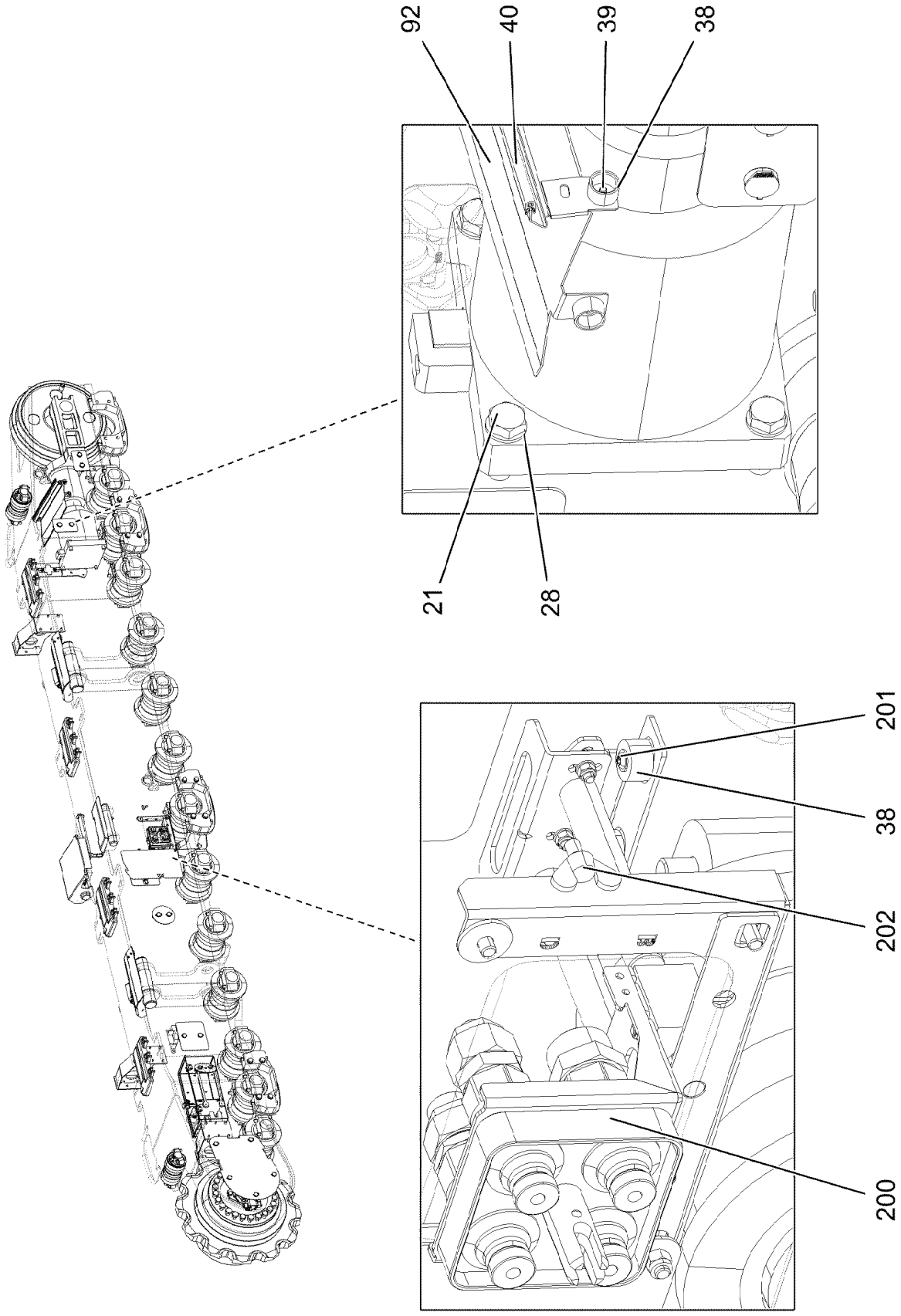
92
40
39
38
21
28
201
38
202
200

Pos.	Item	Quantity	Description	Bezeichnung
1	96018230	1	CRAWLER CARRIER STEEL CONSTR.	RAUPENTRAEGER STAHLBAU LI
2	90028956	1	TRACTION DRIVE FAT 600P049 RAL 7043 ⇨ ❑ 77	FAHRANTRIEB
3	11182596	1	VARIABLE DISPLACEMENT MOTOR A6VE 1 ⇨ ❑ 79	VERSTELLMOTOR
4	749056414	1	DRIVE WHEEL 12XB9SX260,35 LH-GRAU	ANTRIEBSRAD
5	11320954	1	GUIDE WHEEL UNIT B9HDSX740 ⇨ ❑ 82	LEITRADEINHEIT
6	11320962	13	TRACK ROLLER 250X250	LAUFROLLE
7	308115114	4	SLIPPER 65X340X450 GS-CK 45 983593114	GLEITSCHUH
8	10877342	2	CARRYING ROLLER D8KX165	TRAGROLLE
9	967972208	1	COVER PRE-ASSY. ⇨ ❑ 86	DECKEL VORM.
10	967972308	1	COVER PRE-ASSY. ⇨ ❑ 87	DECKEL VORM.
11	967972408	4	COVER PRE-ASSY. ⇨ ❑ 88	DECKEL VORM.
12	96058512	8	PLATE WELDED	BLECH SCHWK.
13	97152371	6	PLATE 50X349X170 S355J2+N	BLECH
18	12691274	52	HEX SCREW ISO 4014 M24X120 10.9 FLZN	SECHSKANTSCHRAUBE
19	11342133	24	HEX SCREW ISO 4014 M30X110 12.9 FLZN	SECHSKANTSCHRAUBE
20	406209008	24	HEX SCREW ISO 4014 M30X120 10.9 FLZN	SECHSKANTSCHRAUBE
21	4901595	4	HEX SCREW ISO 4017 M24X80 10.9 FLZN SP	SECHSKANTSCHRAUBE
22	956078908	1	SLEEVE RD40X50 42CRMO4+QT GASN. SP	HUELSE
23	10293537	1	SOCKET HEAD SCREW ISO 4762 M24X70 10	ZYLINDERSCHRAUBE
24	4600021	24	WASHER DIN 7349 17 200HV FLZN SPF	SCHEIBE
25	10875520	24	HEX SCREW ISO 4017 M16X50 8.8 FLZN SP	SECHSKANTSCHRAUBE
26	4600222	2	WASHER EN 14399-6 20 300-370HV FLZN SP	SCHEIBE
27	406604208	2	HEX SCREW ISO 4017 M20X60 10.9 FLZN SP	SECHSKANTSCHRAUBE
28	10289810	4	WASHER ISO 7089 24 300HV FLZN SPF	SCHEIBE
29	968270108	1	COVER PRE-ASSY. ⇨ ❑ 89	DECKEL VORM.
30	97031480	2	SLEEVE 108.0X196 S235JRH FE//ZNNI8//CN/	HUELSE
31	97031481	2	PIN 105.0X452 35NICRMOV125 SPF	BOLZEN
32	4601290	2	HEX SCREW ISO 4014 M12X130 10.9 A3C SP	SECHSKANTSCHRAUBE
33	968274208	1	COVER PRE-ASSY. ⇨ ❑ 90	DECKEL VORM.
34	968709108	1	COVER PRE-ASSY. ⇨ ❑ 91	DECKEL VORM.
35	10875616	3	HEX NUT ISO 4032 M12 8 FLZN SPF	SECHSKANTMUTTER
36	10178883	8	HEX SCREW ISO 4014 M18X70 8.8 FLZN SP	SECHSKANTSCHRAUBE
37	11493868	1	O-RING 192X4 SPF	O-RING
38	978787708	6	SLEEVE 33.0X19 FE//ZNNI8//CN//T0	HUELSE
39	12102696	4	BUTTON HEAD SCREW ISO 7380-2 M8X10 0	HALBRUNDKOPFSCHRAUBE
40	262105508	0.56	SEALING PROFILE 1-4X21,5X10	DICHTPROFIL
41	97100242	1	PIN 70.0X390 35NICRMOV125	BOLZEN
42	97100243	1	SLEEVE 65.0X248 E235+N	HUELSE
43	10875508	1	HEX SCREW ISO 4014 M12X80 8.8 FLZN SP	SECHSKANTSCHRAUBE
44	97040155	16	SPACER PIECE PA6G	DISTANZSTUECK
45	97032409	2	PIN 18.0X410 S355J2C+C FE//ZNNI8//CN//T0	BOLZEN
46	10289807	4	WASHER ISO 7089 18 300HV FLZN SPF	SCHEIBE
47	10172636	4	SPLIT PIN ISO 1234 3,2X40 A4	SPLINT
48	97032370	1	PLATE 2.5X73X78 DC01 FE//ZNNI8//CN//T0	BLECH
49	433101208	1	RETAINING SPRING 4X68 ISO 2081 FE/ZN8/	SICHERUNGSFEDER
52	97032383	1	PIN 90.0X415 35NICRMOV125 SPF	BOLZEN
56	962963808	1	HANDLE WELD.CONST. FE//ZNNI8//CN//T0	GRIFF SCHWK.
58	10875571	2	SOCKET HEAD SCREW ISO 4762 M10X30 8	ZYLINDERSCHRAUBE
60	97037244	1	GUIDING ROD 45.0X445 35NICRMOV125 SP	FUEHRUNGSSTANGE
61	97034262	1	PLATE 5X190X90 S355MC FE//ZNNI8//CN//T	BLECH
62	433100908	1	RETAINING SPRING 4,5X98 ISO 2081 FE/ZN	SICHERUNGSFEDER

Pos.	Item	Quantity	Description	Bezeichnung
63	4600328	1	WASHER ISO 7093-1 20 300HV FLZN SPF	SCHEIBE
64	10875618	1	HEX NUT ISO 4032 M20 8 FLZN SPF	SECHSKANTMUTTER
65	968420608	1	STORAGE BOX ⇨ ❑ 92	STAUKASTEN VORM.
66	10197730	4	HEX SCREW ISO 4017 M10X20 8.8 ZNNI-480	SECHSKANTSCHRAUBE
67	940116008	4	WASHER 4X40X40 S315MC FE//ZNNI8//CN//T	SCHEIBE
68	12699046	92	LOCK WASHER RIPP LOCK 24 ST FLZN	SICHERUNGSSCHEIBE
69	10178891	24	HEX SCREW ISO 4014 M24X130 10.9 FLZN	SECHSKANTSCHRAUBE
70	10178897	16	HEX SCREW ISO 4014 M24X210 10.9 FLZN	SECHSKANTSCHRAUBE
80	96000309	1	BRACKET WELDED CONST.	KONSOLE SCHWK.
81	96000310	1	BRACKET WELDED CONST.	KONSOLE SCHWK.
82	96000311	1	BRACKET WELDED CONST.	KONSOLE SCHWK.
83	96000312	1	BRACKET WELDED CONST.	KONSOLE SCHWK.
84	12214938	16	HEX SCREW ISO 4017 M16X35 8.8 FLZN SP	SECHSKANTSCHRAUBE
85	10289806	16	WASHER ISO 7089 16 300HV FLZN SPF	SCHEIBE
86	430608708	8	PARALLEL PIN ISO 2338 10M6X36 ST	ZYLINDERSTIFT
87	97066482	1	HOOD/BONNET LEFT 4X585X711 S315MC	HAUBE LI.
92	97155412	1	PLATE 2X388X685 ALMG3 H111 SPF	BLECH
100	97103682	2	PLATE 5X86X267 S355MC FE//ZNNI8//CN//T	BLECH
101	97103683	2	PLATE 5X649X337 S355MC FE//ZNNI8//CN//T	BLECH
102	97070985	4	LIMIT STOP 90X60X10 PA6G NATUR	ANSCHLAG
103	97073453	2	LOCKING BOLT 30.0X200 35NICRMOV125	SICHERUNGSBOLZEN
104	12216054	4	SOCKET HEAD SCREW DIN 7984 M8X20 08	ZYLINDERSCHRAUBE
105	11656731	8	HEX NUT ISO 7040 M8 8 480H SPF	SECHSKANTMUTTER
106	11691328	10	HEX SCREW ISO 4017 M10X35 8.8 FLZN SP	SECHSKANTSCHRAUBE
107	10289795	20	WASHER ISO 7089 10 300HV FLZN SPF	SCHEIBE
108	10197769	10	HEX NUT DIN 985 M10 8 ZNNI-480H SPF	SECHSKANTMUTTER
109	10289808	2	WASHER ISO 7089 20 300HV FLZN SPF	SCHEIBE
110	10180354	2	SPLIT PIN ISO 1234 4X40 St 480H SPF	SPLINT
111	97104844	1	PLATE 5X443X254 S355MC FE//ZNNI8//CN//T	BLECH
112	97104898	12	PLATE 2X90X60 DC01 FE//ZNNI8//CN//T0	BLECH
113	571310608	4	SOCKET HEAD SCREW DIN 6912 M8X35 08.	ZYLINDERSCHRAUBE
200	96034962	1	GUIDE LEFT ⇨ ❑ 93	FUEHRUNG LI.
201	10876082	2	BUTTON HEAD SCREW AEHNL.ISO 7380-2	HALBRUNDKOPFSCHRAUBE
202	4600612	2	WING SCREW DIN 316 M12X20 4.6 FLZN SP	FLUEGELSCHRAUBE
300	96050169	1	LEVER PRE-ASSY.	HEBEL VORM.
(1)	12103320	1	FINE TOOTH RATCHET DIN 3120-A 12,5	FEINZAHNKNARRE
(2)	12103321	1	WRENCH SOCKET 1/2"-14WN	STECKNUSS
400	96062678	1	LEVER PRE-ASSY. ⇨ ❑ 95	HEBEL VORM.

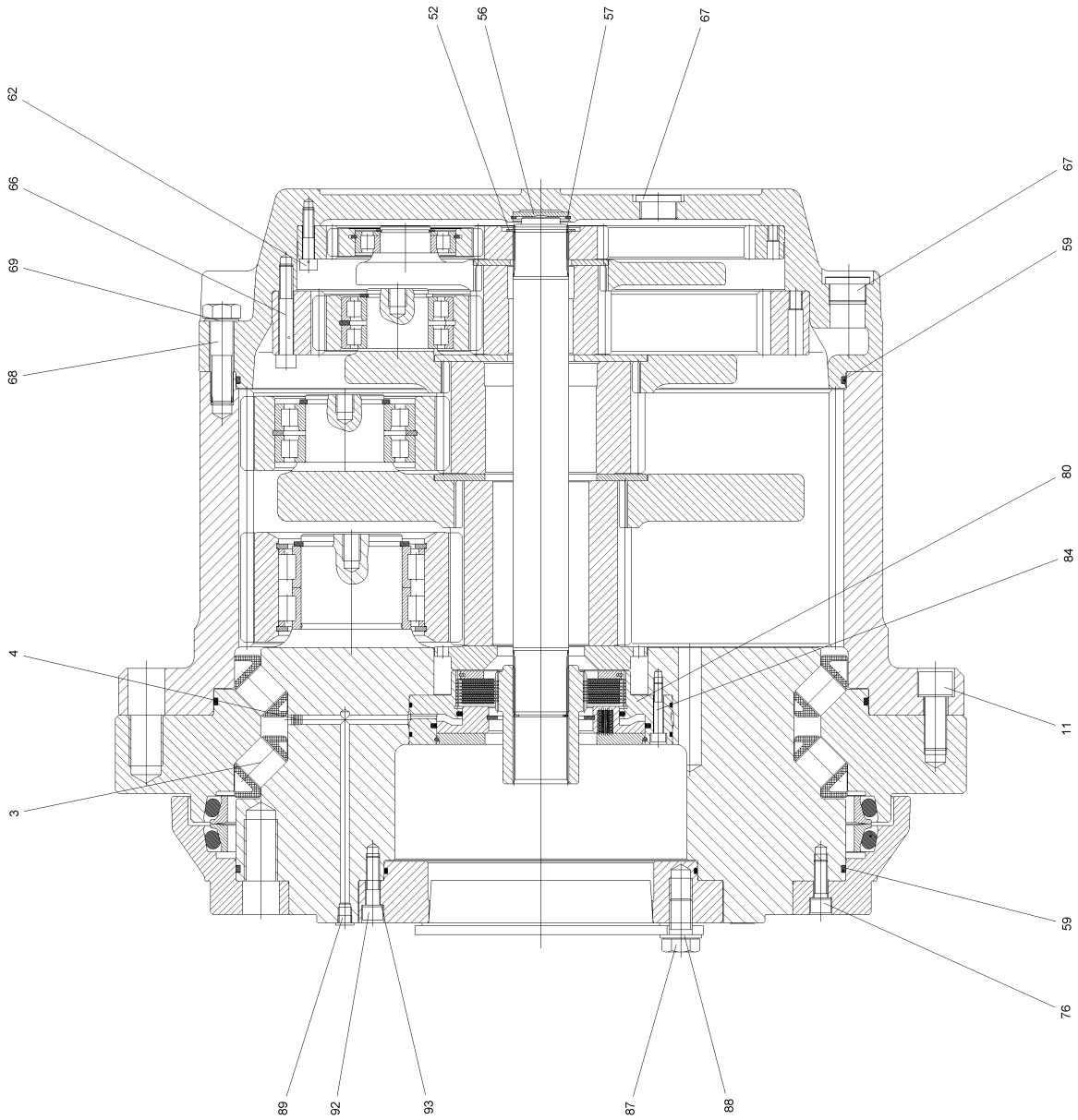
52
56
57
67
62
66
69
68
67
59
80
84
4
11
3
59
76
89
92
93
87
88

Pos.	Item	Quantity	Description	Bezeichnung
3	747004501	78	CYL.ROLLER DIN 5402-1 32X32	ZYLINDERROLLE
8	761081903	1	SEALING PLUG 9	DICHTSTOPFEN
11	404320908	12	SOCKET HEAD SCREW ISO 4762 M20X50 10	ZYLINDERSCHRAUBE
52	10171585	1	LOCKING RING DIN 471 50X2 FLZNNC-120H	SICHERUNGSRING
56	944303303	1	RETAINING DISK 50X4	HALTESCHEIBE
57	429612001	1	L RING 50X2	L-RING
59	761035303	2	O-RING 530X5 NBR 70	O-RING
62	404309408	24	SOCKET HEAD SCREW ISO 4762 M10X45 10	ZYLINDERSCHRAUBE
66	11320850	24	SOCKET HEAD SCREW ISO 4762 M12X75 10	ZYLINDERSCHRAUBE
67	409710601	4	SCREW PLUG M33X2 ST Fe//ZnNi5//Cn//T0	VERSCHLUSSSCHRAUBE
68	11656999	12	HEX SCREW ISO 4014 M20X75 8.8 FLZN SP	SECHSKANTSCHRAUBE
69	423912001	12	LOCK WASHER VS 20 ZN8M+PASSIVIERUN	SICHERUNGSSCHEIBE
76	10875578	8	SOCKET HEAD SCREW ISO 4762 M12X35 8	ZYLINDERSCHRAUBE
80	502037001	1	SPRING LOADED MULTI-DISC BRAKE	FEDERDRUCKLAMELLENBREMS
(4)	737350603	9	OUTER MULTI-DISC	AUSSENLAMELLE
(5)	737350503	8	INTERNAL MULTI-DISC	INNENLAMELLE
(999)	969997708	1	SEAL KIT F.BRAKE	DS BREMSE
84	4600335	12	SOCKET HEAD SCREW ISO 4762 M8X45 10.	ZYLINDERSCHRAUBE
87	12224035	2	HEX SCREW ISO 4017 M20X30 8.8 FLZN SP	SECHSKANTSCHRAUBE
88	420002101	2	WASHER ISO 7089 20 200HV A3C	SCHEIBE
92	10875565	8	SOCKET HEAD SCREW ISO 4762 M12X40 8	ZYLINDERSCHRAUBE
93	423911201	8	LOCK WASHER VS 12 ZN8M+PASSIVIERUN	SICHERUNGSSCHEIBE

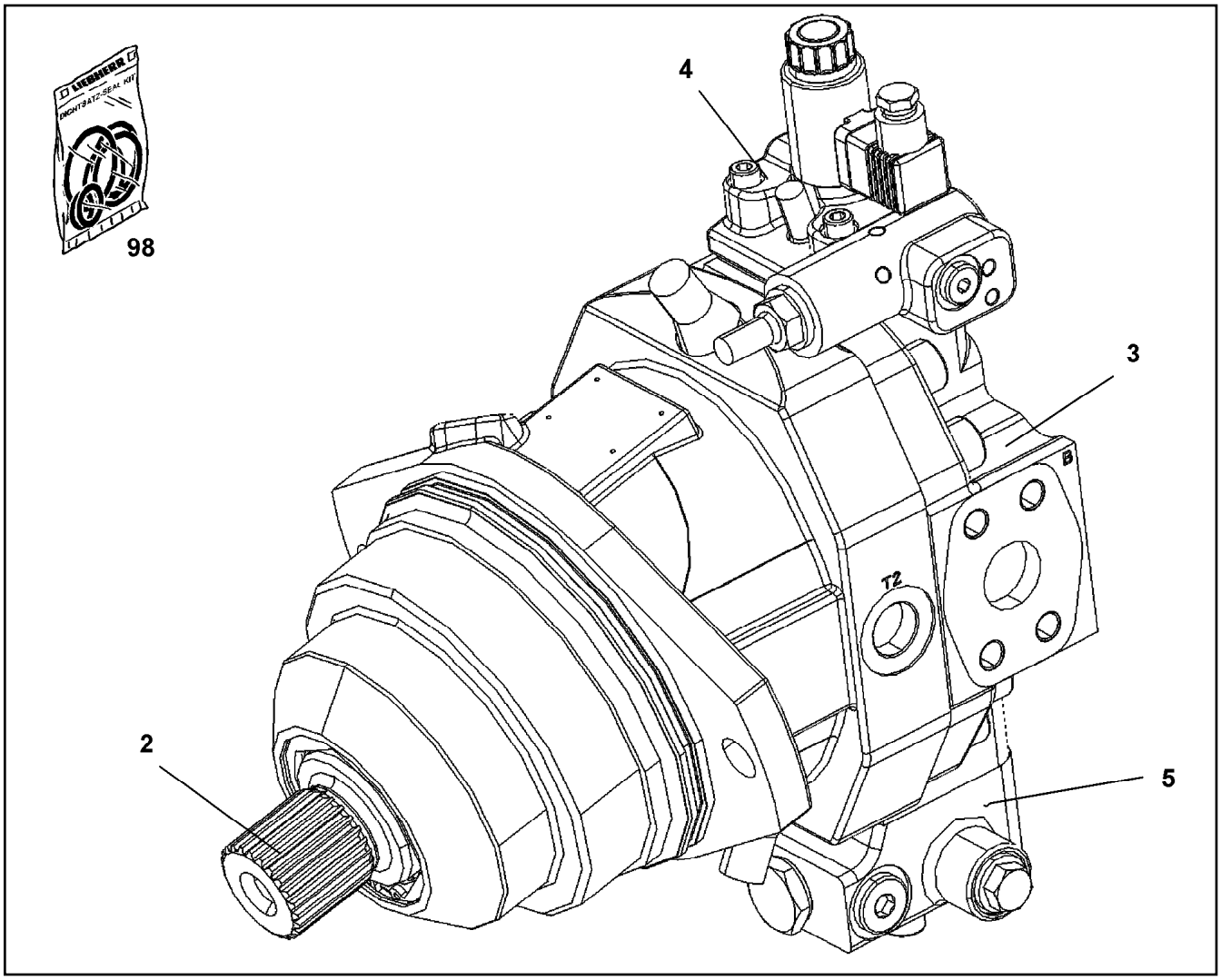

Pos.	Item	Quantity	Description	Bezeichnung
2	11066818	1	DRIVING GEAR	TRIEBWERK
3	11066829	1	NON-RETURN VALVE	RUECKSCHLAGVENTIL
4	11161917	1	CONTROL ELEMENT ⇨ ❑ 80	STEUERTEIL
5	10871726	1	FLUSH-/FEED PRESSURE VALVE	SPUEL + SPEISEDRUCKVENTIL

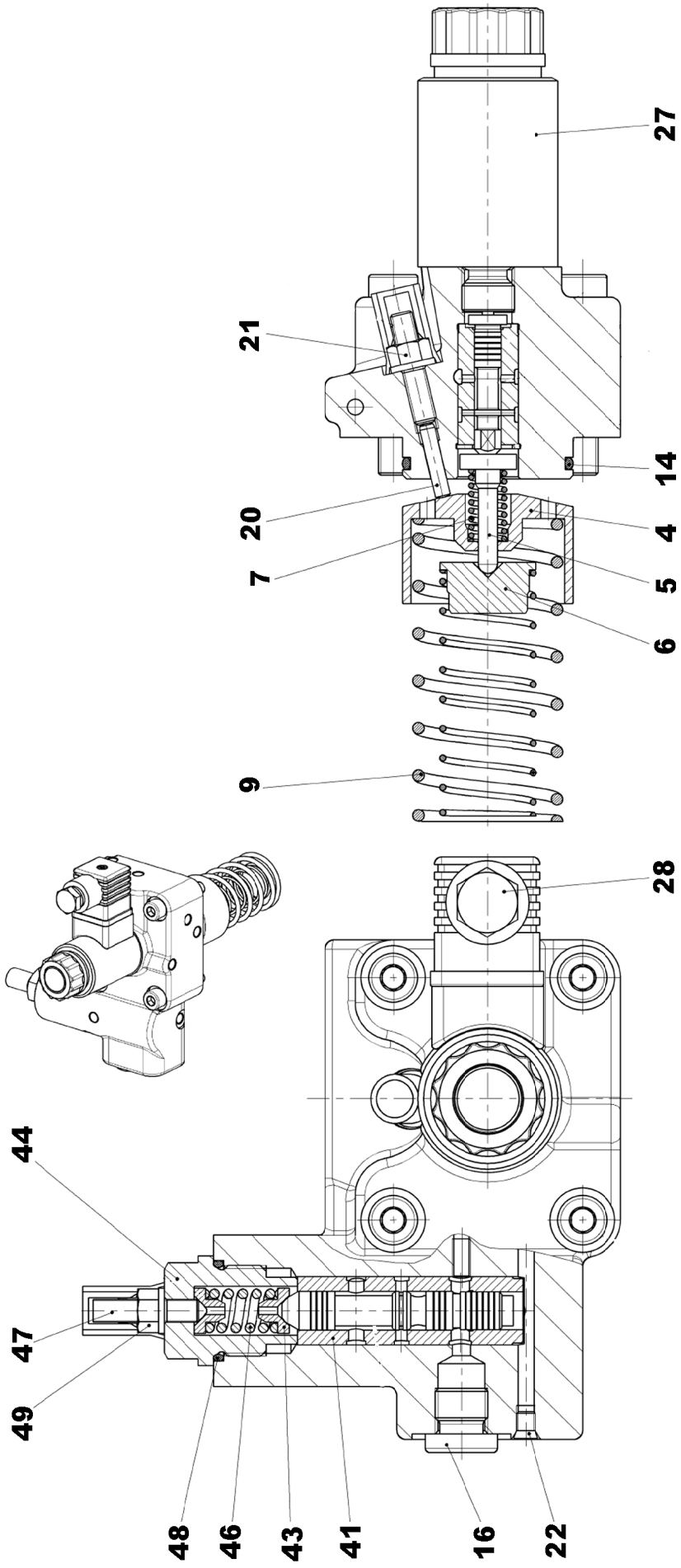
27
21
14
20
4
7
5
6
9
28
44
47
49
48
46
43
41
16
22

Pos.	Item	Quantity	Description	Bezeichnung
4	7022128	1	ADJUSTING BUSHING	EINSTELLBUCHSE
5	7414494	1	SPRING SUPPORT	FEDERTELLER
6	571115308	1	SPRING SUPPORT	FEDERTELLER
7	10217532	1	COMPRESSION SPRING	DRUCKFEDER
9	571115508	1	COMPRESSION SPRING	DRUCKFEDER
14	10097960	1	O-RING 39,34X2,62 FKM 70	O-RING
16	7414500	1	SCREW PLUG M14X1,5	VERSCHLUSSSCHRAUBE
20	4601499	1	PARALLEL PIN DIN 6325 4m6X20	ZYLINDERSTIFT
21	514591708	1	COLLAR NUT M6	BUNDMUTTER
22	5616114	1	DOUBLE PLUG	DOPPELABREISSSTOPFEN
27	11161919	1	PROPORTIONAL MAGNET	PROPORTIONALMAGNET
(1)	10332420	1	NUT	RAENDELMUTTER
28	11450030	1	DIE PLUG	LEITUNGSDOSE
41	5009648	1	CONTROL BUSHING	STEUERBUCHSE
43	7027055	1	SPRING SUPPORT	FEDERTELLER
44	7027056	1	SCREW PLUG	VERSCHLUSSSCHRAUBE
46	7027053	1	COMPRESSION SPRING	DRUCKFEDER
47	10488035	1	GRUB SCREW	GEWINDESTIFT
48	10332172	1	O-RING	O-RING
49	7027052	1	SEAL-LOCK-SHOULDER NUT M6X0,5	SEAL-LOCK-BUNDMUTTER

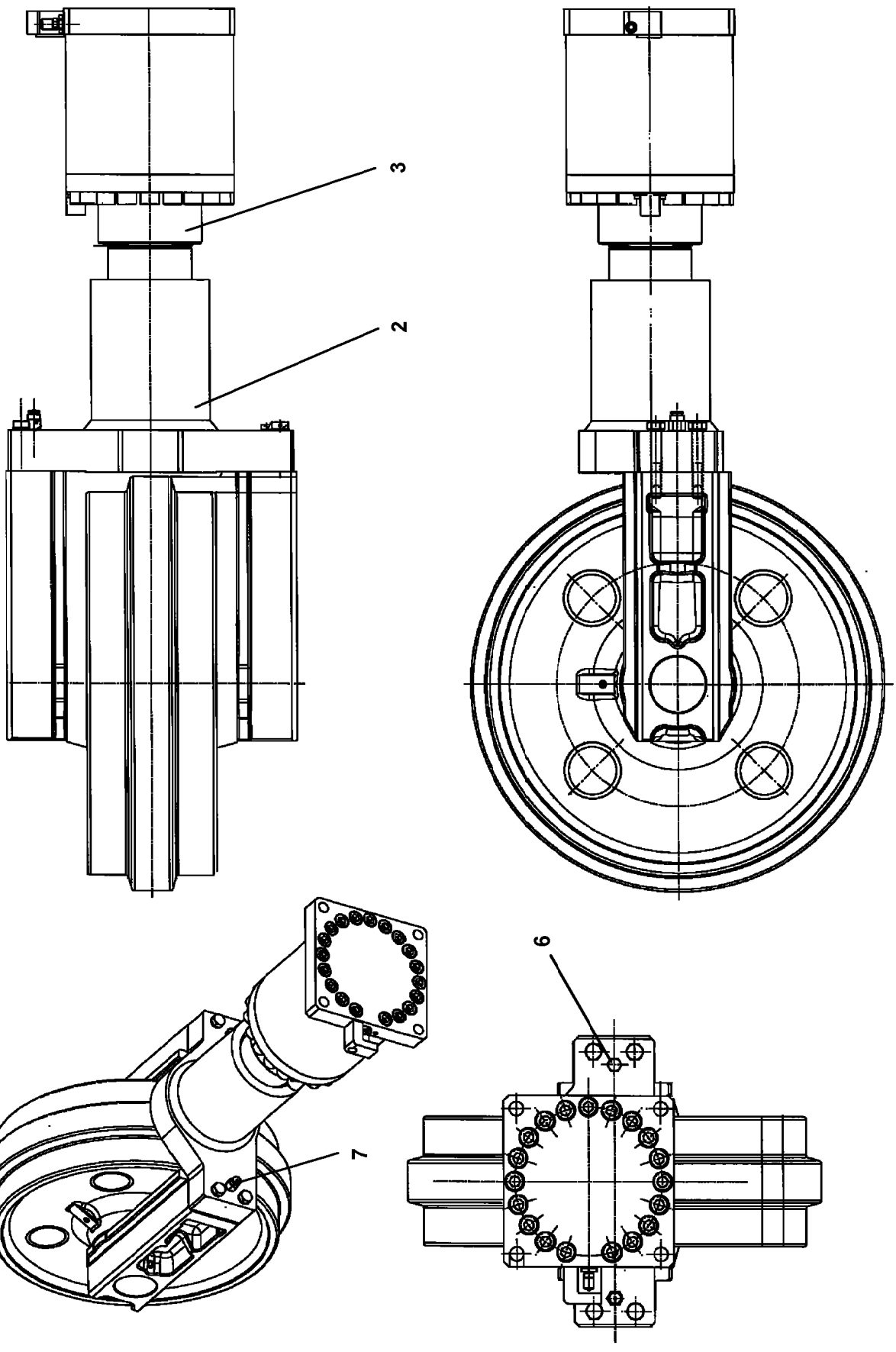
3
2
6
7
6

Pos.	Item	Quantity	Description	Bezeichnung
1	12105240	1	IDLER CPL. B9X740	LEITRAD KPL.
2	10877686	1	TENSION JACK HYDR CPL ⇨ ❑ 84	SPANNER HYDR KPL
3	10877685	1	NITROGEN TENSIONER CPL	STICKSTOFFSPANNER KPL
(16)	7002253	1	REDUCING PIECE	REDUZIERSTUECK
(17)	7371061	1	AIR FILTER	LUFTFILTER
(999)	12102278	1	SEAL KIT	DICHTSATZ
6	710121114	2	FLAT SEALING RING 17,4X24X1,5	FLACHDICHTRING
7	774351714	1	GREASE NIPPLE M16X1.5	SCHMIERNIPPEL

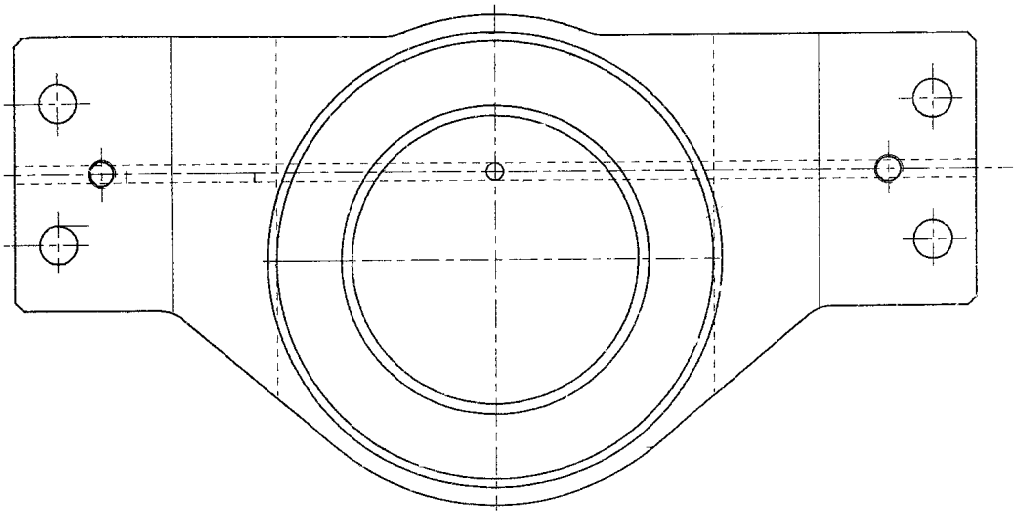

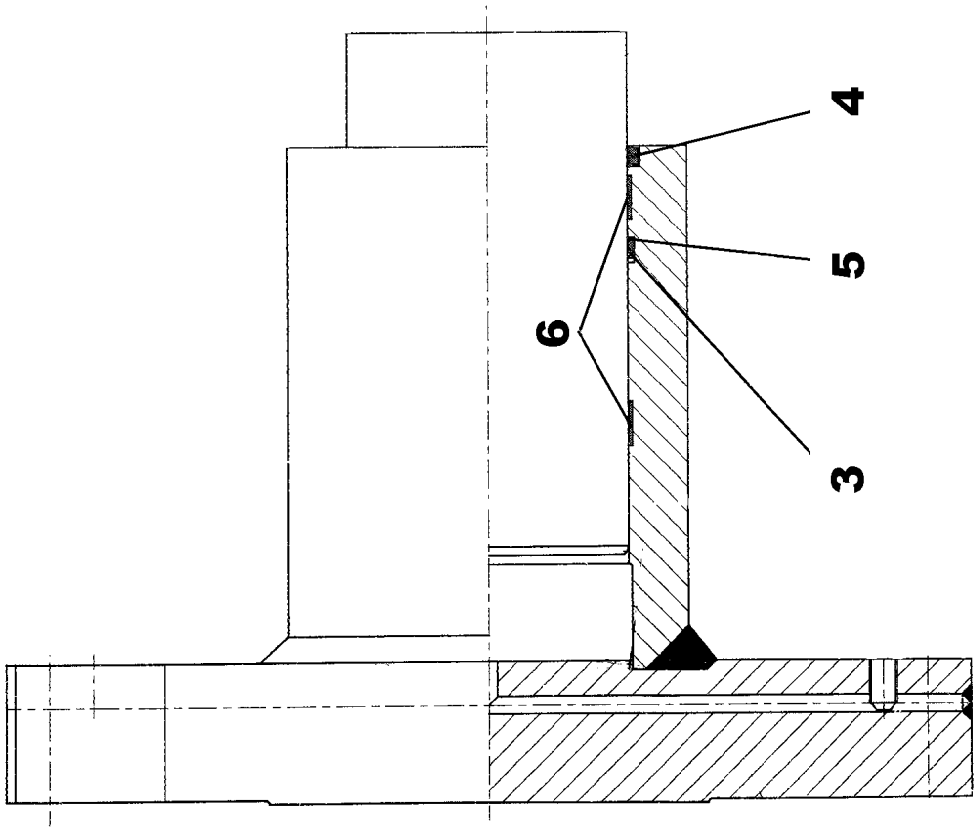
4
5
6
3

Pos.	Item	Quantity	Description	Bezeichnung
3	7367566	1	ROD SEAL 160X168X11,5	NUTRING
4	7367567	1	SCRAPER 160X175X9	ABSTREIFER
5	7367565	1	SUPPORTING RING 160,1X167,9X2	STUETZRING
6	7367564	2	GUIDING TAPE 160X25	FUEHRUNGSBAND

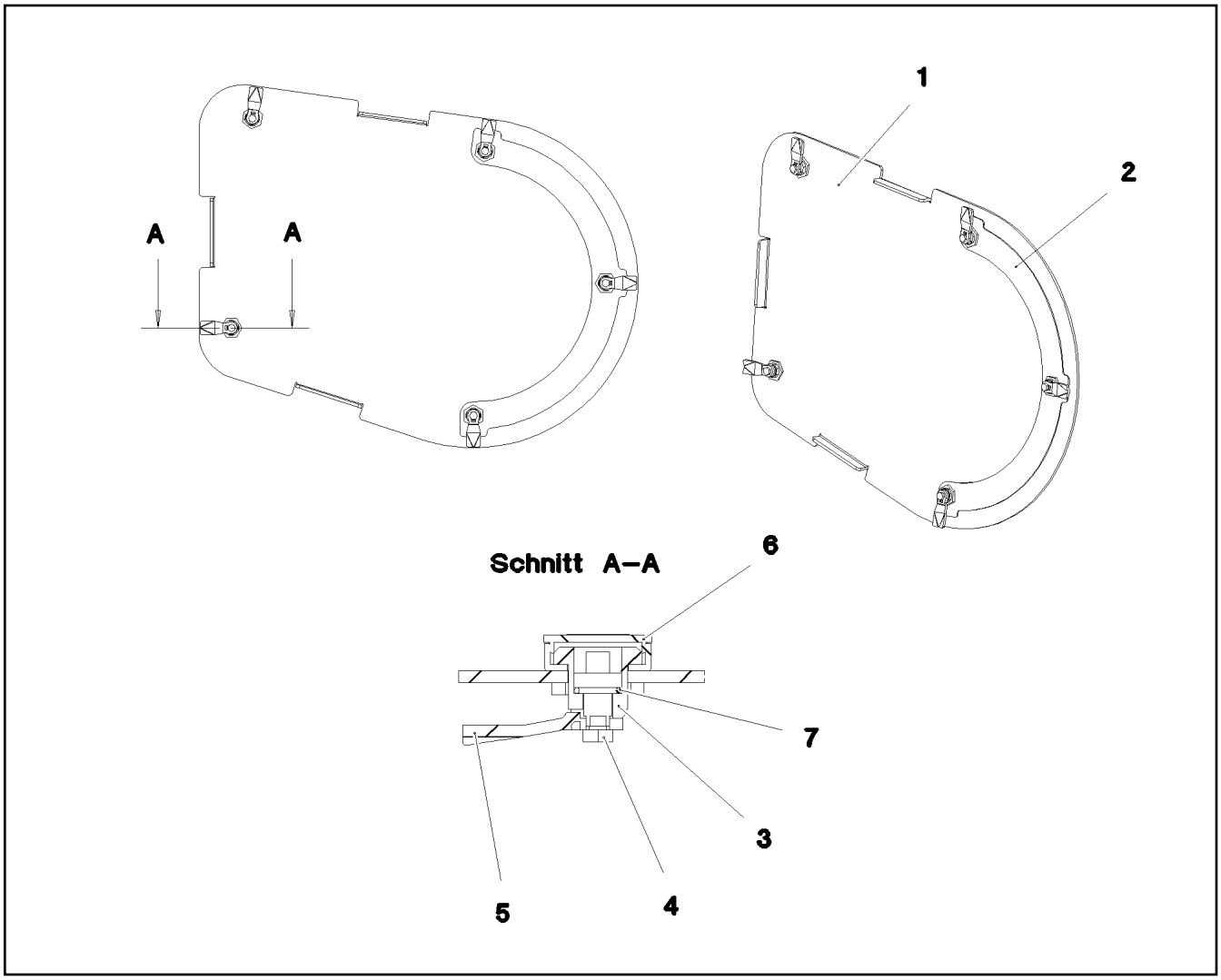

Pos.	Item	Quantity	Description	Bezeichnung
1	97031266	1	PLATE 4X668X480 ALMG3 H111 SPF	BLECH
2	97031267	1	PLATE 2X244X449 ALMG3 H111 SPF	BLECH
3	704253308	5	HOUSING GD-ZN SW GEPULVERT	GEHAEUSE
4	704253408	5	ACTUATION SPIKE GD-ZN SW GEPULVERT	BETAETIGUNGSDORN
5	704253708	5	TONGUE	ZUNGE
6	704254808	5	DUST CAP POLYETHYLEN SCHWARZ	STAUBKAPPE
7	704274808	5	O-RING 12X2 NBR70	O-RING

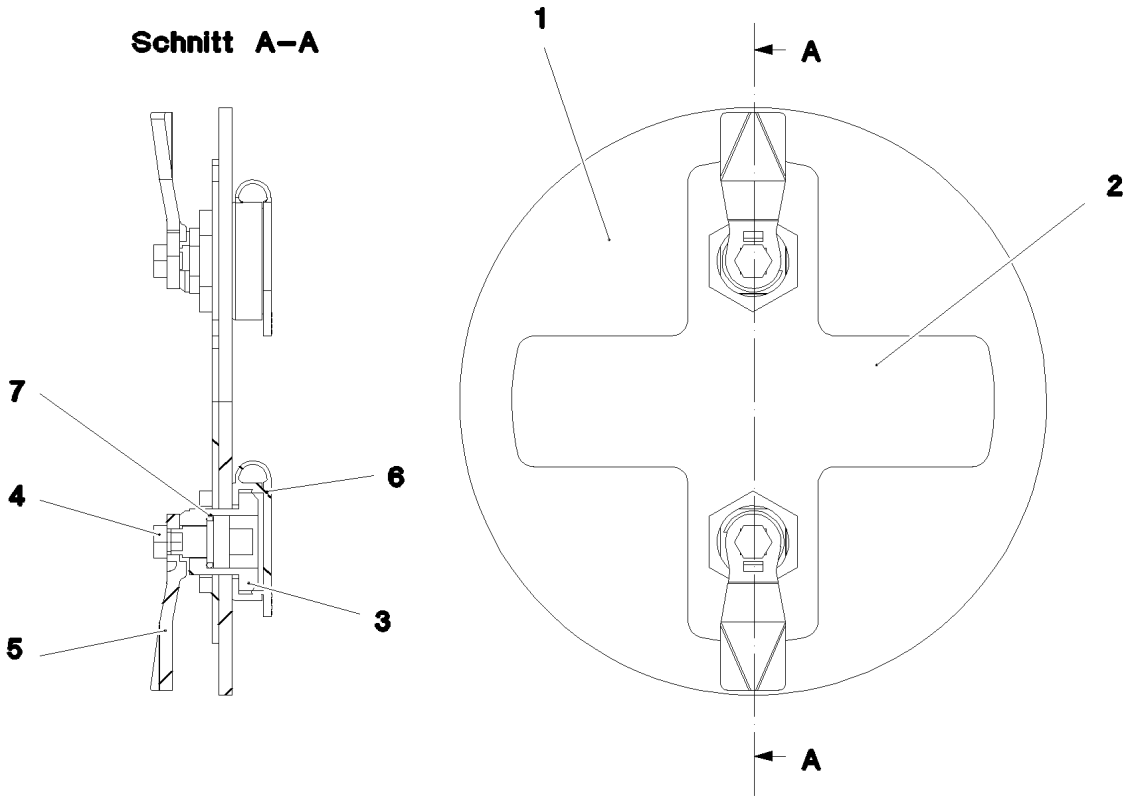

Pos.	Item	Quantity	Description	Bezeichnung
1	97031271	1	PLATE 4X180X180 ALMG3 H111 SPF	BLECH
2	97031272	1	PLATE 2X148X148 ALMG3 H111 SPF	BLECH
3	704253308	2	HOUSING GD-ZN SW GEPULVERT	GEHAEUSE
4	704253408	2	ACTUATION SPIKE GD-ZN SW GEPULVERT	BETAETIGUNGSDORN
5	704259008	2	TONGUE 45X19 STAHL VERZ	ZUNGE
6	704254808	2	DUST CAP POLYETHYLEN SCHWARZ	STAUBKAPPE
7	704274808	2	O-RING 12X2 NBR70	O-RING

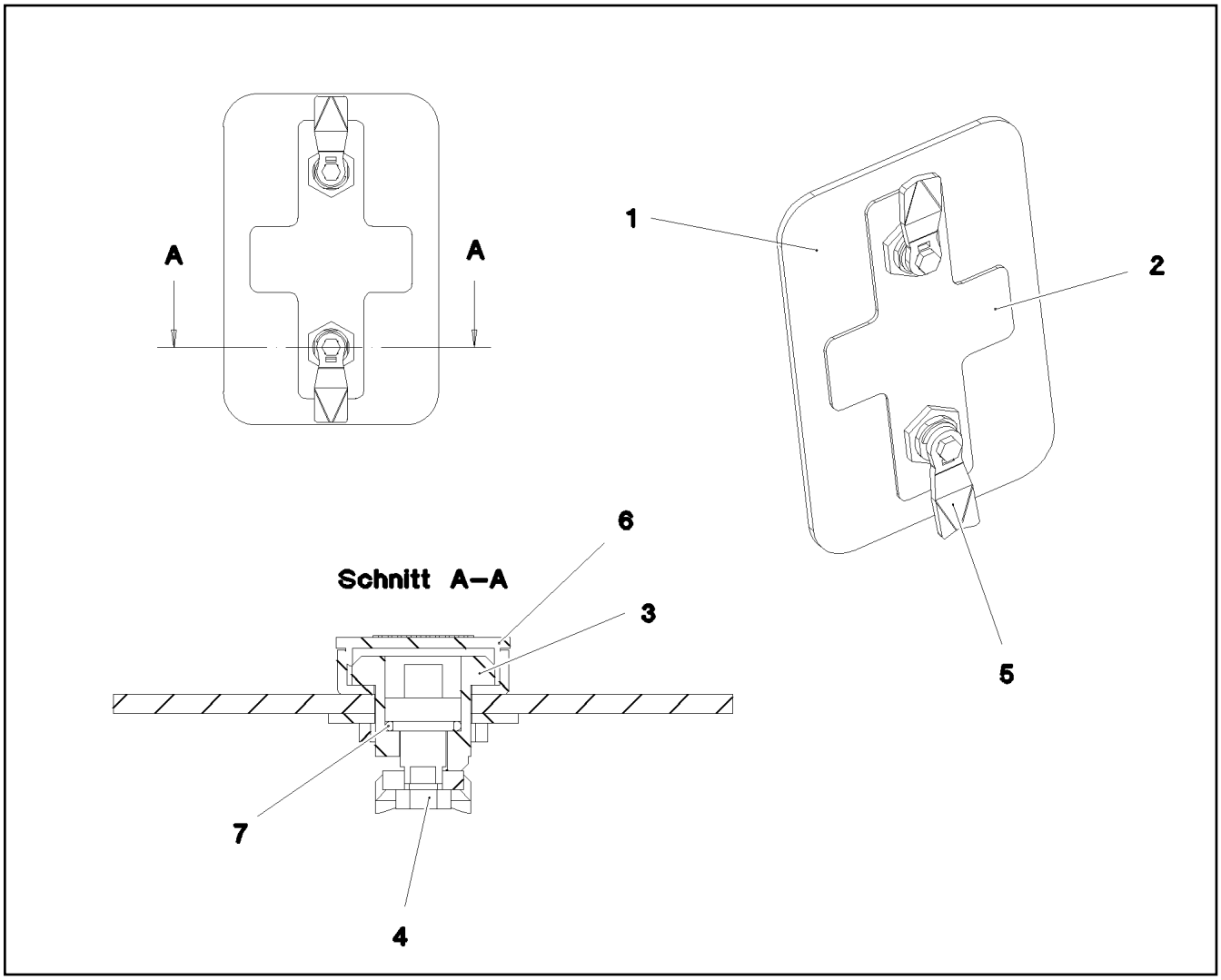

Pos.	Item	Quantity	Description	Bezeichnung
1	97031273	1	PLATE 4X130X200 ALMG3 H111 SPF	BLECH
2	97031274	1	PLATE 2X98X168 ALMG3 H111 SPF	BLECH
3	704253308	2	HOUSING GD-ZN SW GEPULVERT	GEHAEUSE
4	704253408	2	ACTUATION SPIKE GD-ZN SW GEPULVERT	BETAETIGUNGSDORN
5	704259008	2	TONGUE 45X19 STAHL VERZ	ZUNGE
6	704254808	2	DUST CAP POLYETHYLEN SCHWARZ	STAUBKAPPE
7	704274808	2	O-RING 12X2 NBR70	O-RING

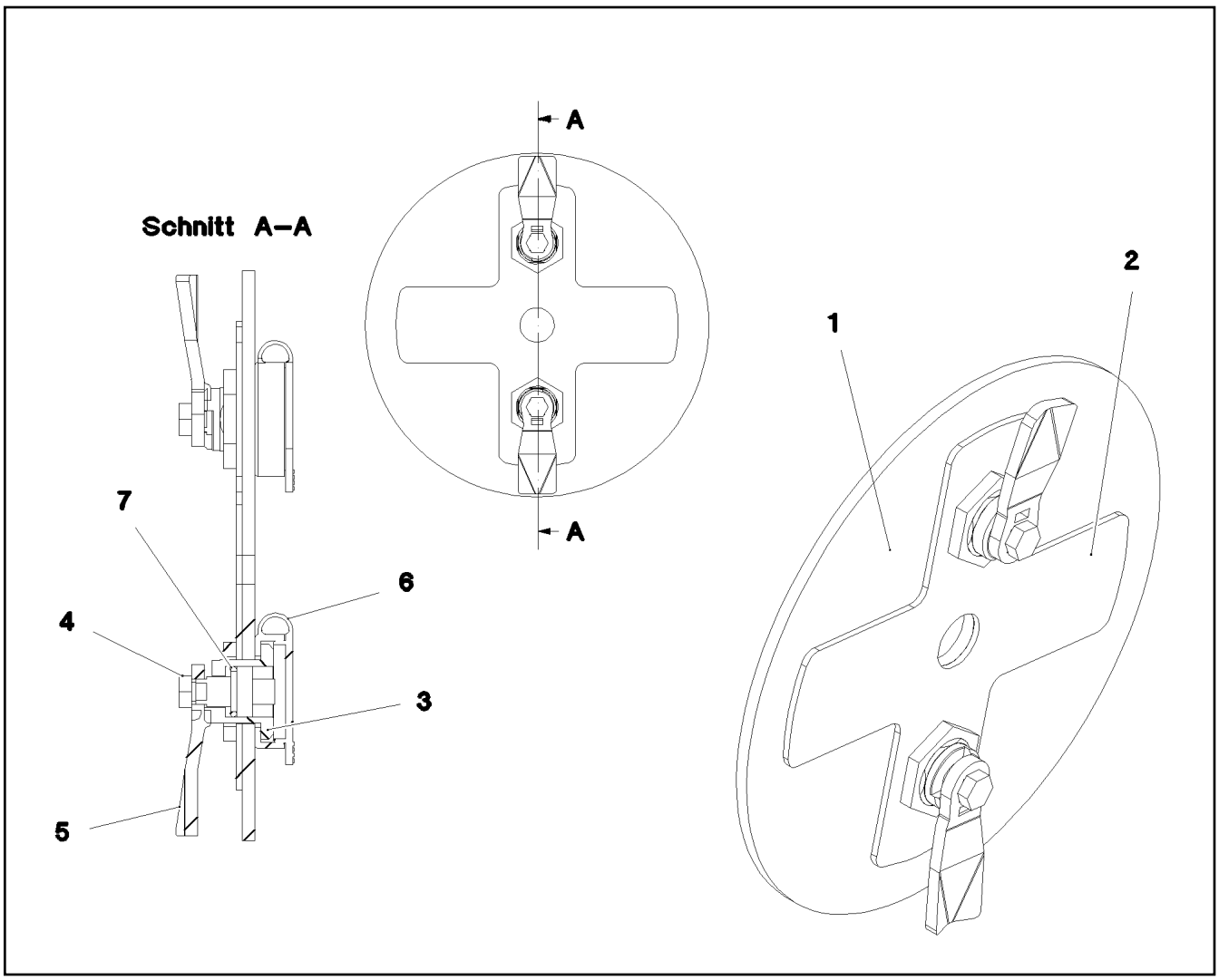

Pos.	Item	Quantity	Description	Bezeichnung
1	97037975	1	PLATE 4X180X180 ALMG3 H111 SPF	BLECH
2	97031272	1	PLATE 2X148X148 ALMG3 H111 SPF	BLECH
3	704253308	2	HOUSING GD-ZN SW GEPULVERT	GEHAEUSE
4	704253408	2	ACTUATION SPIKE GD-ZN SW GEPULVERT	BETAETIGUNGSDORN
5	704253708	2	TONGUE	ZUNGE
6	704254808	2	DUST CAP POLYETHYLEN SCHWARZ	STAUBKAPPE
7	704274808	2	O-RING 12X2 NBR70	O-RING

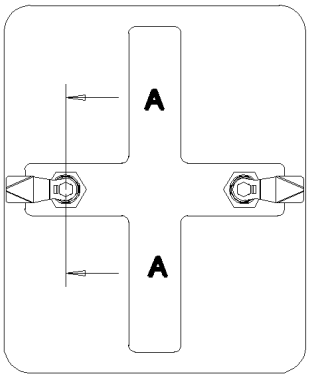

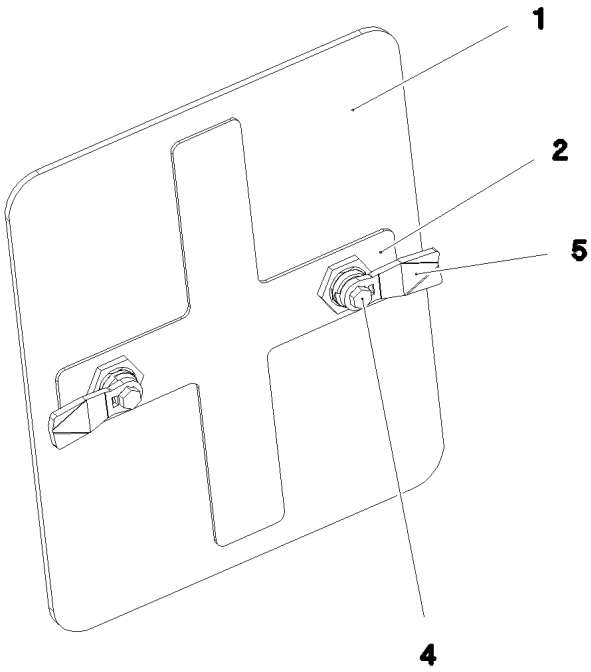

Schnitt A–A

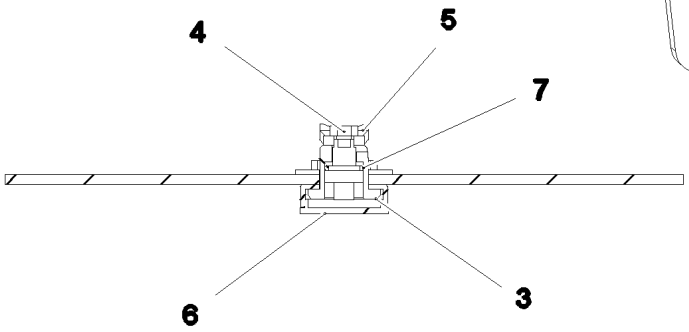

Pos.	Item	Quantity	Description	Bezeichnung
1	97038088	1	PLATE 4X230X280 ALMG3 H111 SPF	BLECH
2	97038089	1	PLATE 2X198X248 ALMG3 H111 SPF	BLECH
3	704253308	2	HOUSING GD-ZN SW GEPULVERT	GEHAEUSE
4	704253408	2	ACTUATION SPIKE GD-ZN SW GEPULVERT	BETAETIGUNGSDORN
5	704253708	2	TONGUE	ZUNGE
6	704254808	2	DUST CAP POLYETHYLEN SCHWARZ	STAUBKAPPE
7	704274808	2	O-RING 12X2 NBR70	O-RING

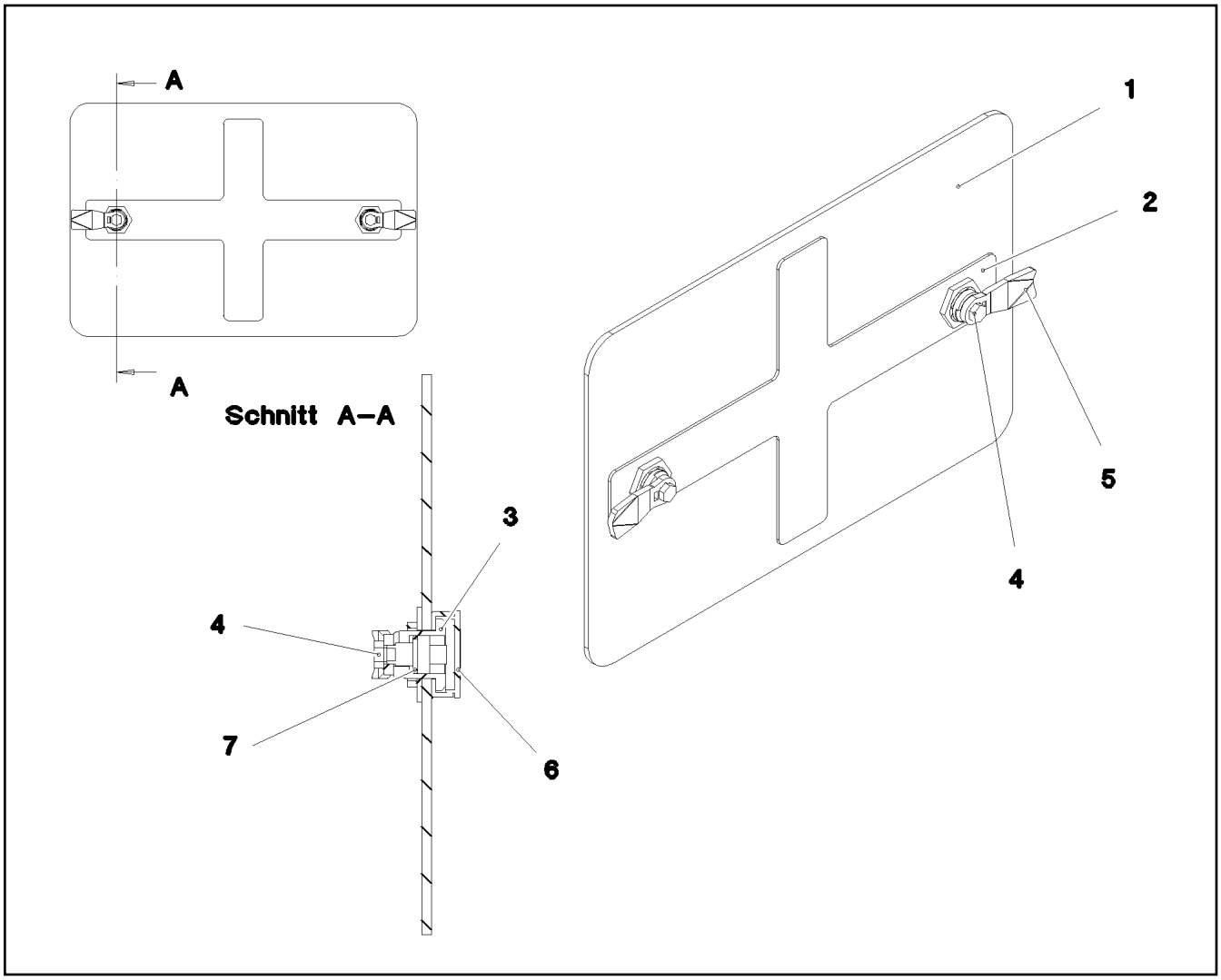

Pos.	Item	Quantity	Description	Bezeichnung
1	97045974	1	PLATE 4X350X235 ALMG3 H111 SPF	BLECH
2	97045975	1	PLATE 2X203X318 ALMG3 H111 SPF	BLECH
4	704278708	2	LATCH GD-ZN SW GEPULVERT	KNEBELVORREIBER
5	704259008	2	TONGUE 45X19 STAHL VERZ	ZUNGE

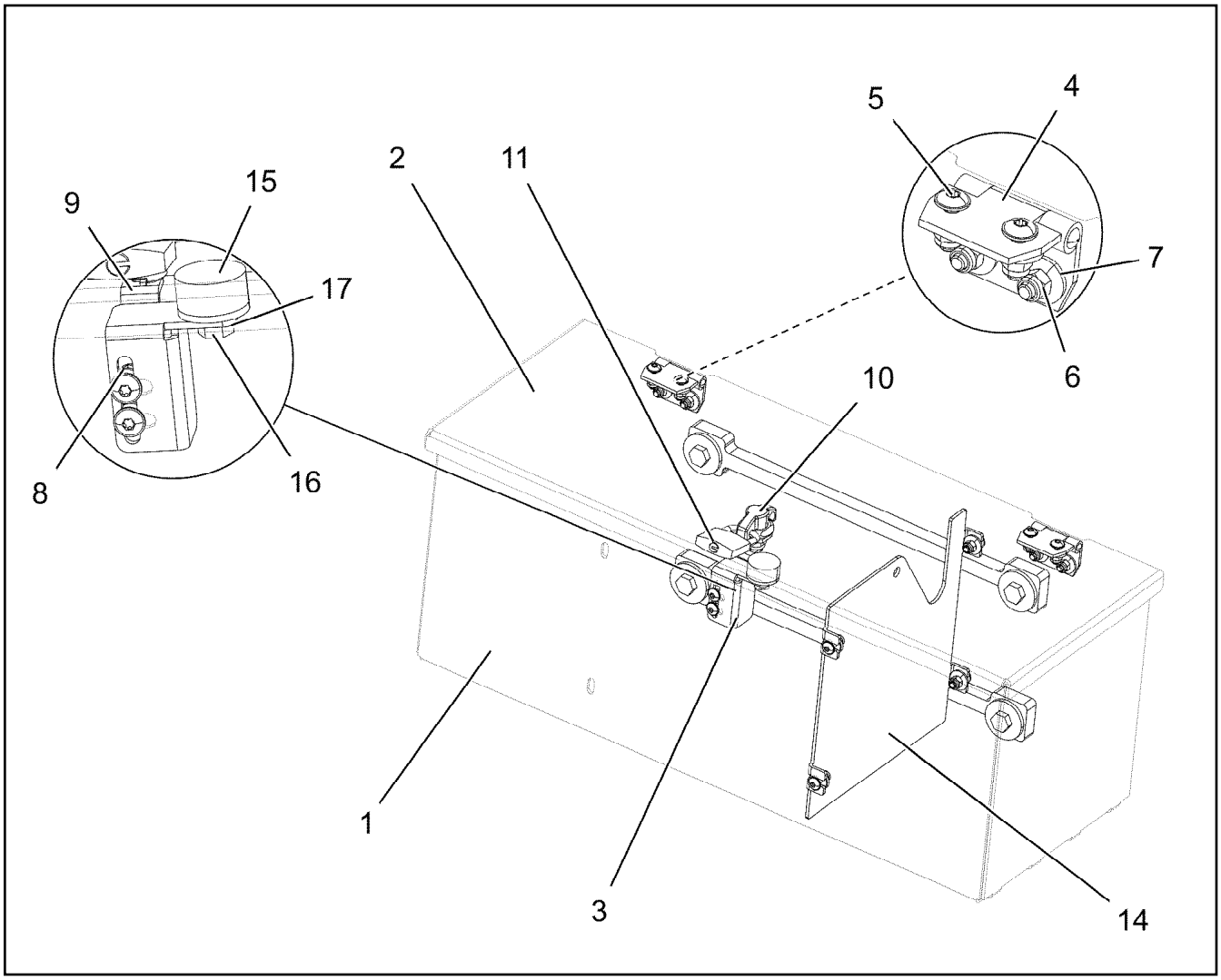

Pos.	Item	Quantity	Description	Bezeichnung
1	97040643	1	PLATE 3X1101X716 DC01	BLECH
2	97040644	1	PLATE 3X678X272 DC01	BLECH
3	97040645	1	PLATE 3X80X55 DC01	BLECH
4	10294684	2	HINGE 35X35X50/180° NIROSTA ROHBLANK	SCHARNIER
5	10412852	14	BUTTON HEAD SCREW AEHNL.ISO 7380-2	HALBRUNDKOPFSCHRAUBE
6	11004444	14	HEX NUT AEHNL.ISO 7040 M6 A2-70	SECHSKANTMUTTER
7	429900308	12	SHEET GASKET 7X19X4 A2	DICHTSCHEIBE
8	420000414	2	WASHER ISO 7089 6 200HV-A4	SCHEIBE
9	704254008	1	TONGUE	ZUNGE
10	704278708	1	LATCH GD-ZN SW GEPULVERT	KNEBELVORREIBER
11	885251508	1	PADLOCK ABUS-64TI/40 TITALIUM	VORHAENGESCHLOSS
14	97041755	1	PLATE 3X231X267 DC01	BLECH
15	10030440	1	MEGI BUFFER 30X17 M8 75°SHORE	MEGIPUFFER
16	11690048	1	HEX SCREW ISO 4017 M8X12 8.8 480H SPF	SECHSKANTSCHRAUBE
17	12103465	1	WASHER ISO 7089 8 300HV ZNNI-480H SPF	SCHEIBE

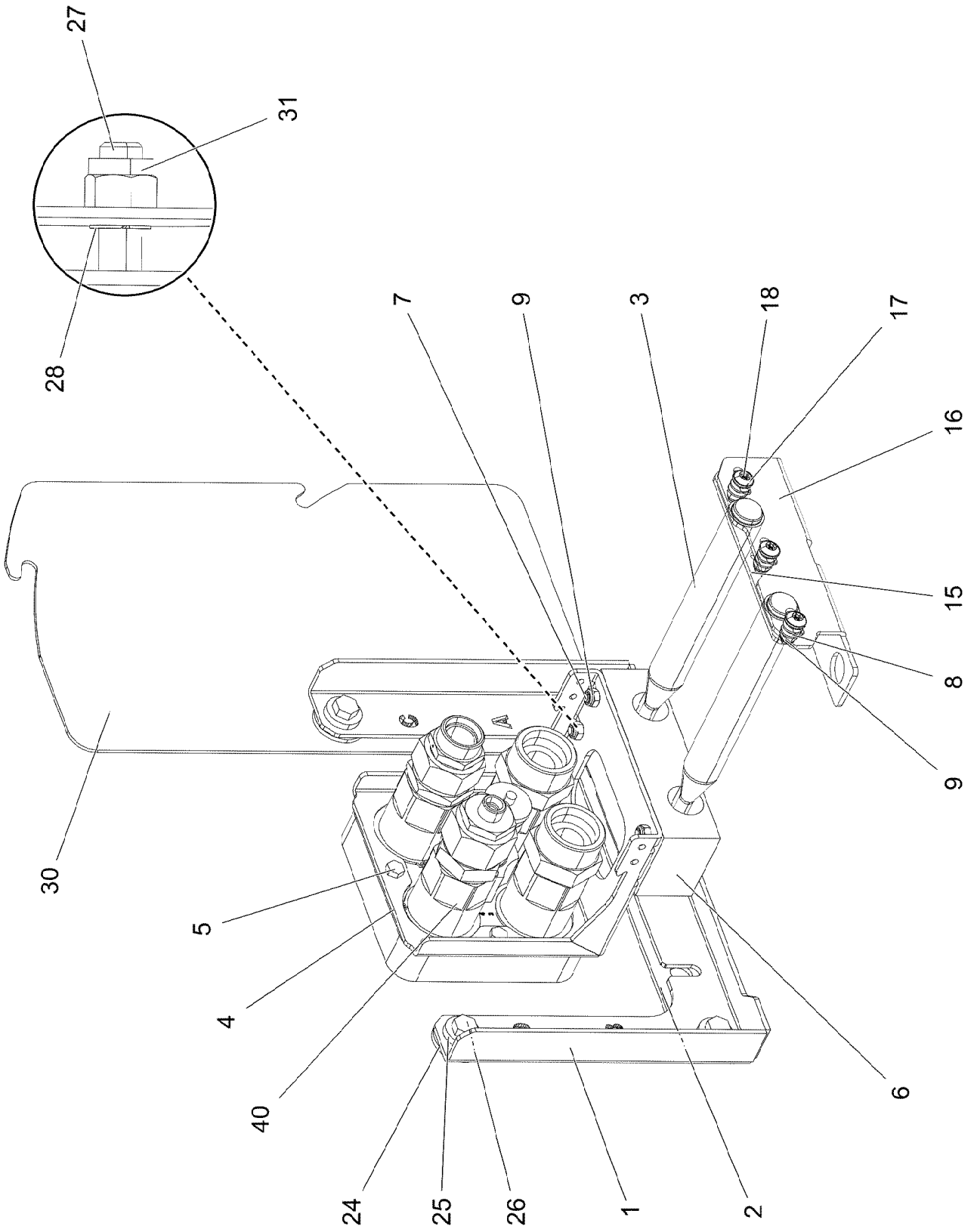

18.7.2022 004578 LIEBHERR	**etk_en_de_047654 LTR 1220** **GUIDE LEFT** **FUEHRUNG LI.**	93 (1/2) **96034962**

Pos.	Item	Quantity	Description	Bezeichnung
1	97093427	1	PLATE 4X463X307 S315MC FE//ZNNI8//CN//T	BLECH
2	97097713	1	PLATE 4X383X50 S315MC FE//ZNNI8//CN//T	BLECH
3	97133544	2	ROD 30.0X339 S355J2C+C FE//ZNNI8//CN//T	STANGE
4	97093428	1	PLATE 4X239X313 S315MC FE//ZNNI8//CN//T	BLECH
5	11651612	4	HEX SCREW ISO 4017 M8X16 8.8 480H SPF	SECHSKANTSCHRAUBE
6	97093433	1	GUIDE 180X70X 50 PA6G	FUEHRUNG
7	12201166	4	SOCKET HEAD SCREW ISO 4762 M8X60 8.8	ZYLINDERSCHRAUBE
8	12103465	7	WASHER ISO 7089 8 300HV ZNNI-480H SPF	SCHEIBE
9	10875614	7	HEX NUT DIN 985 M8 8 480H SPF	SECHSKANTMUTTER
15	97093426	1	PLATE 4X180X99 S315MC FE//ZNNI8//CN//T	BLECH
16	97093425	1	PLATE 4X230X107 S315MC FE//ZNNI8//CN//T	BLECH
17	10166990	6	WASHER AEHNL.ISO 7089 8 PA 6.6	SCHEIBE
18	10875486	3	BUTTON HEAD SCREW AEHNL.ISO 7380-2	HALBRUNDKOPFSCHRAUBE
24	10875639	2	WASHER DIN 440 13,5 ST FLZN SPF	SCHEIBE
25	10006370	4	WASHER DIN 7349 13 200HV FLZN SPF	SCHEIBE
26	11658892	3	HEX SCREW ISO 4017 M12X25 8.8 FLZN SP	SECHSKANTSCHRAUBE
27	11840136	1	HEX SCREW ISO 4017 M12X50 8.8 FLZN	SECHSKANTSCHRAUBE
28	12209429	1	BEARING 12X17X4,6	LAGER
30	97118618	1	PLATE 3X286X480 ALMG3 H111 PULVERBE	BLECH
31	11840127	1	HEX NUT ISO 7040 M12 8 FLZN SPF	SECHSKANTMUTTER
40	12101576	1	QUICK RELEASE FITTING	SCHNELLVERSCHLUSSKUPPL

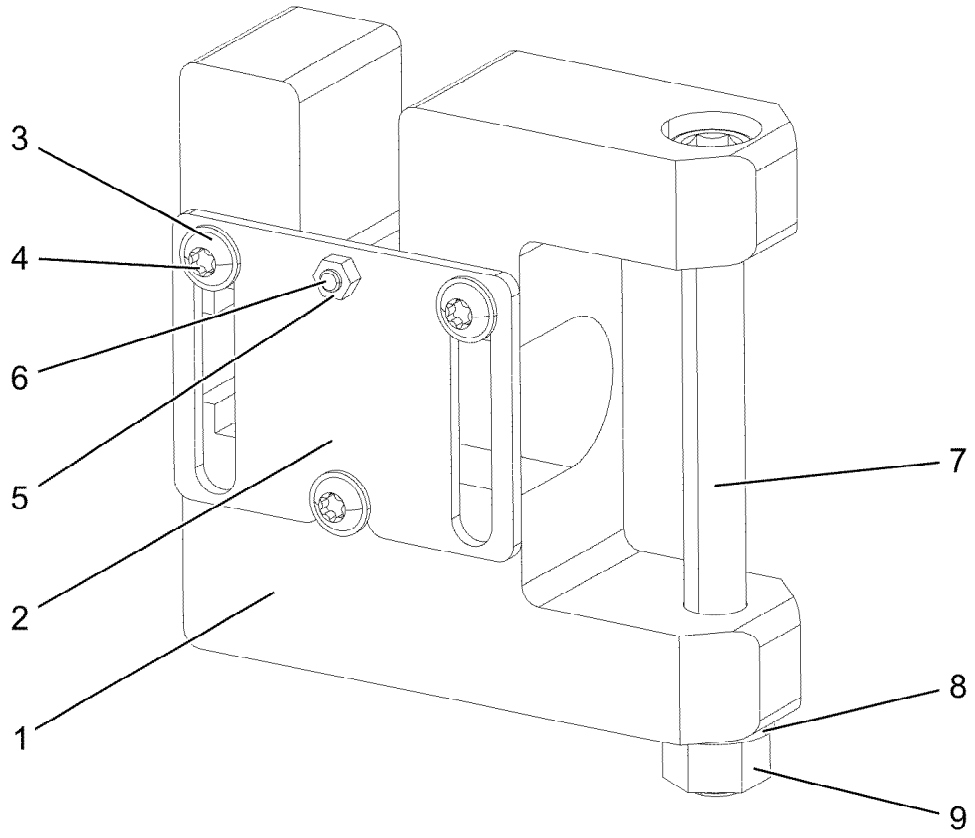

Pos.	Item	Quantity	Description	Bezeichnung
1	97158146	1	PLATE 50X160X165 S355J2+N FE//ZNNI8//C	BLECH
2	97158147	1	PLATE 4X78X102 S315MC FE//ZNNI8//CN//T	BLECH
3	10354377	3	DISTANCE SLEEVE 12X8,2X5 PA66	DISTANZHUELSE
4	10875485	3	BUTTON HEAD SCREW AEHNL.ISO 7380-2	HALBRUNDKOPFSCHRAUBE
5	10299668	1	HEX NUT ISO 4032 M6 10 480H SPF	SECHSKANTMUTTER
6	12216186	1	HEX SCREW ISO 4014 M6X65 8.8 480H SPF	SECHSKANTSCHRAUBE
7	12209898	1	SOCKET HEAD SCREW ISO 4762 M16X160 8	ZYLINDERSCHRAUBE
8	10289806	1	WASHER ISO 7089 16 300HV FLZN SPF	SCHEIBE
9	10875617	1	HEX NUT ISO 4032 M16 8 FLZN SPF	SECHSKANTMUTTER

Pos.	Item	Quantity	Description	Bezeichnung
4	96035796	1	HYDR.TRAVEL DRIVE ⇨ ❑ 97	HYDR.FAHRANTRIEB

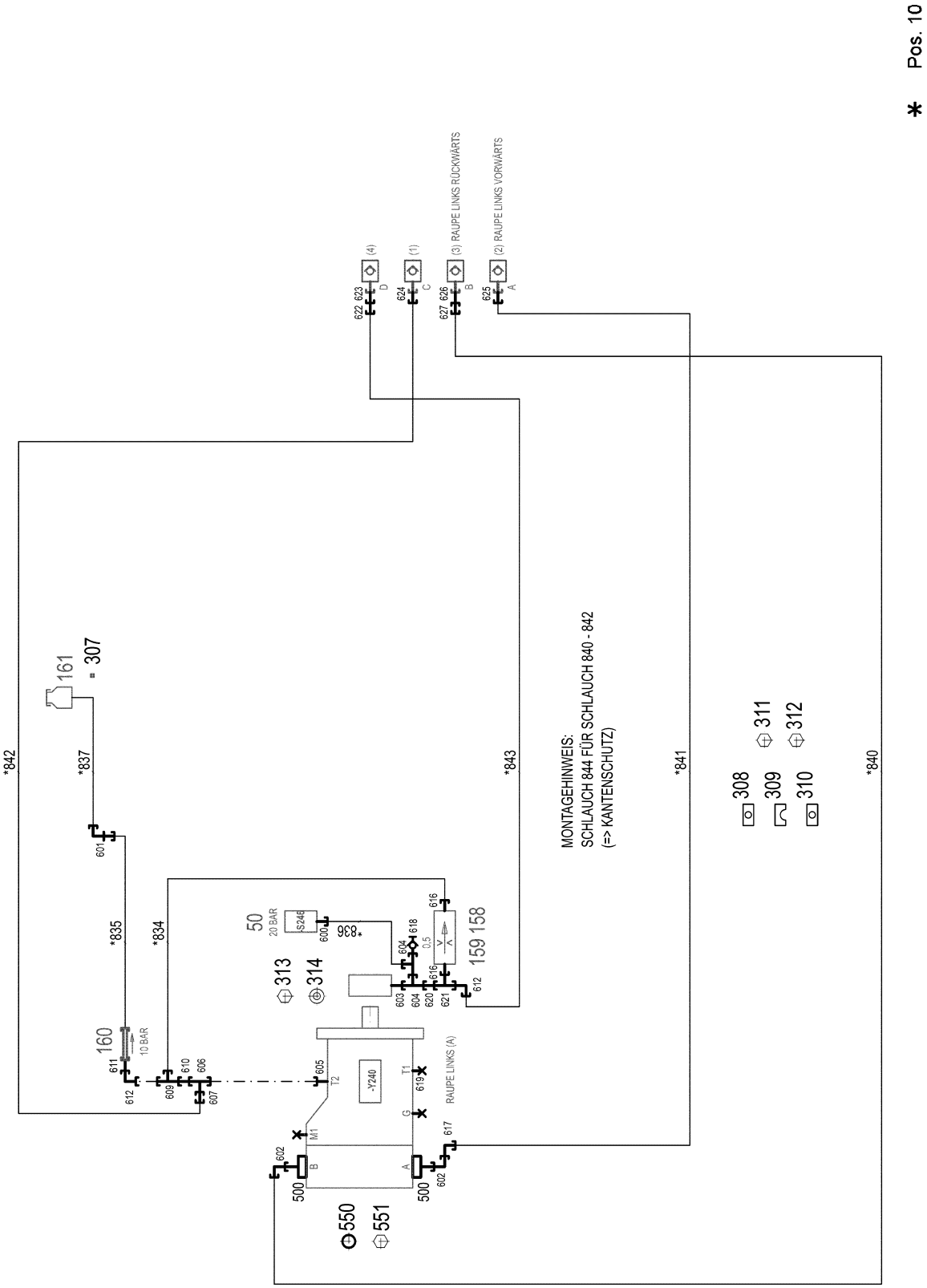

* Pos. 10
(4)
(1)
(3) RAUPE LINKS RÜCKWÄRTS
(2) RAUPE LINKS VORWÄRTS
MONTAGEHINWEIS:
SCHLAUCH 844 FÜR SCHLAUCH 840 - 842
(=> KANTENSCHUTZ)
RAUPE LINKS (A)
10 BAR
20 BAR
-Y240

Pos.	Item	Quantity	Description	Bezeichnung
10	96035799	1	HOSE LINES CRAWLER ⇨ ❑ 99	SCHLAUCHLEITUNGEN RAUPE
50	510676908	1	PRESSURE SWITCH 10-100/400 BAR	DRUCKSCHALTER
158	510671108	1	FILTER CARTRIDGE 0,005m³/min 25µm	FILTERPATRONE
159	511062708	1	NOZZLE 0,5 M5X9 MS	DUESE
160	511481508	1	NON-RETURN VALVE 250BAR 10BAR CR6-F	RUECKSCHLAGVENTIL
161	96028333	1	EXPANSION TANK CPL. ⇨ ❑ 100	AUSGLEICHSBEHAELTER KPL.
307	10872024	1	HOSE CLAMP DIN 3017-1 12/8-16/9 W3	SCHLAUCHSCHELLE
308	12102954	2	LID PLATE DIN 3015-1 L-DP 6 W1-ZN	DECKPLATTE
309	602010108	6	CLAMP-HALF DIN 3015-1 L 6 R 44,5 PP SW	KLEMMHAELFTE
310	11008020	2	WELD PLATE DIN 3015-1 L-AP-K 6 W1 ZNNI	ANSCHWEISSPLATTE
311	12100256	2	SOCKET HEAD SCREW ISO 4762 M6X150 8	ZYLINDERSCHRAUBE
312	12203635	2	SOCKET HEAD SCREW ISO 4762 M6X90 8.8	ZYLINDERSCHRAUBE
313	11647548	2	HEX SCREW ISO 4017 M5X16 8.8 480H SPF	SECHSKANTSCHRAUBE
314	10197808	2	WASHER ISO 7089 5 200HV ZNNI-480H	SCHEIBE
500	511517808	2	FLANGE STUB PIPE AFG 38S G1 1/4 CR6-F	FLANSCHSTUTZEN
550	510586708	2	O-RING ARP 568 37,69X3,53 NBR90	O-RING
551	10876373	8	SOCKET HEAD SCREW ISO 4762 M14X45 8	ZYLINDERSCHRAUBE
600	7362091	1	FITTING ISO 8434-1 GE 10L G1/4A CR6-FREI	VERSCHRAUBUNG
601	474200408	1	FITTING XWSV12-L CR6-FREI	VERSCHRAUBUNG
602	472531808	2	FITTING EWSD38-S CR6-FREI	VERSCHRAUBUNG
603	471903908	1	FITTING EGE 10L M12X1,5 CR6-FREI	VERSCHRAUBUNG
604	472330208	2	FITTING EL 10L CR6-FREI	VERSCHRAUBUNG
605	471902408	1	FITTING EGESD22-LM-WD CR6-FREI	VERSCHRAUBUNG
606	482430614	1	FITTING ISO 8434 ET 22L CR6-FREI	VERSCHRAUBUNG
607	475031208	1	FITTING XGR35/22-L CR6-FREI	VERSCHRAUBUNG
609	247128602	1	L NECK EL 12L M18X1,5 CR6-FREI	L-STUTZEN
610	475436108	1	FITTING REDSD22/12-L CR6-FREI	VERSCHRAUBUNG
611	470011308	1	FITTING SNV12-L CR6-FREI	VERSCHRAUBUNG
612	247117702	2	SWIVEL ELBOW EW 12L M18X1,5 CR6-FREI	WINKELSTUTZEN
616	471035308	2	FITTING XGE12-LR-ED1/4" CR6-FREI	VERSCHRAUBUNG
617	10467292	1	FITTING EV38S M52X2 CR6-FREI	VERSCHRAUBUNG
618	510629008	1	TEST POINT FITTING VKA3 10LM16X1,5 CR6	MESSANSCHLUSS
619	477705808	1	STOP PLUG VSTIM26X1,5ED CR6-FREI	STOPFEN
620	475431408	1	FITTING REDSD12/10-L CR6-FREI	VERSCHRAUBUNG
621	247105602	1	T CONNECTION PIECE ET 12L CR6-FREI	T-STUTZEN
622	471032608	1	FITTING GE 12S G1/2A CR6-FREI	VERSCHRAUBUNG
623	475501108	1	ADAPTOR RI11/4-EDX1/2 CR6-FREI	ADAPTER
624	471034508	1	FITTING XGE35-LR-ED CR6-FREI	VERSCHRAUBUNG
625	7410455	1	SCREW-ON CONNECTION GE 38S G1 1/4A	EINSCHRAUBSTUTZEN
626	10876353	1	FITTING EGE 38S G1 1/4 CR6-FREI	VERSCHRAUBUNG
627	470033108	1	FITTING XG38-S CR6-FREI	VERSCHRAUBUNG

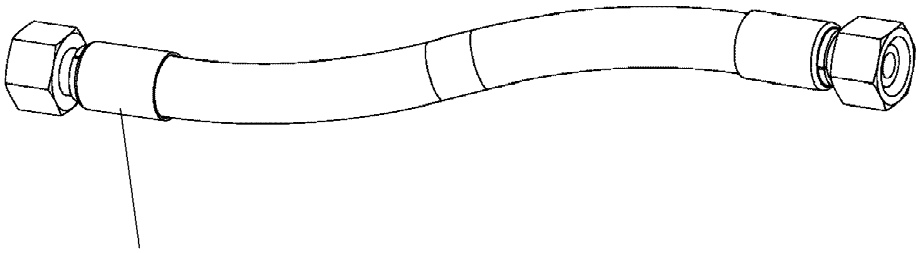

Schlauchnummer
Hose number
Numéro de flexible
Número de flexible
Номера шланга

Die Schlauchnummern auf den Schläuchen entsprechen den Positionen in der Schlauchliste.

The hose numbers from the hoses are in accordance with the items in the hose list.

Les numéros indiqués sur les flexibles correspondent aux repères de la nomenclature des flexibles.

Los números indicados en los flexibles corresponden a las posiciones de la lista de flexibles.

Нанесенные на шлангах номера соответствуют позициям в перечне.

Pos.	Item	Quantity	Description	Bezeichnung
834	926120008	1	HOSE CPL. 2TE 10X600	SCHLAUCH KPL.
835	926976308	1	HOSE CPL. 2TE 10X1060	SCHLAUCH KPL.
836	96044685	1	HOSE CPL. 1SC 8X460	SCHLAUCH KPL.
837	968143708	1	HOSE CPL. 2TE 8X700	SCHLAUCH KPL.
840	96035888	1	HOSE CPL. 4ST+ 31X3550	SCHLAUCH KPL.
841	96035889	1	HOSE CPL. 4ST+ 31X3450	SCHLAUCH KPL.
842	968148408	1	HOSE CPL. 1SN 32X3500	SCHLAUCH KPL.
843	96035894	1	HOSE CPL. 2SN 10X3550	SCHLAUCH KPL.
844	96014317	1	HOSE CPL. CONTI-KWS 42X500	SCHLAUCH KPL.

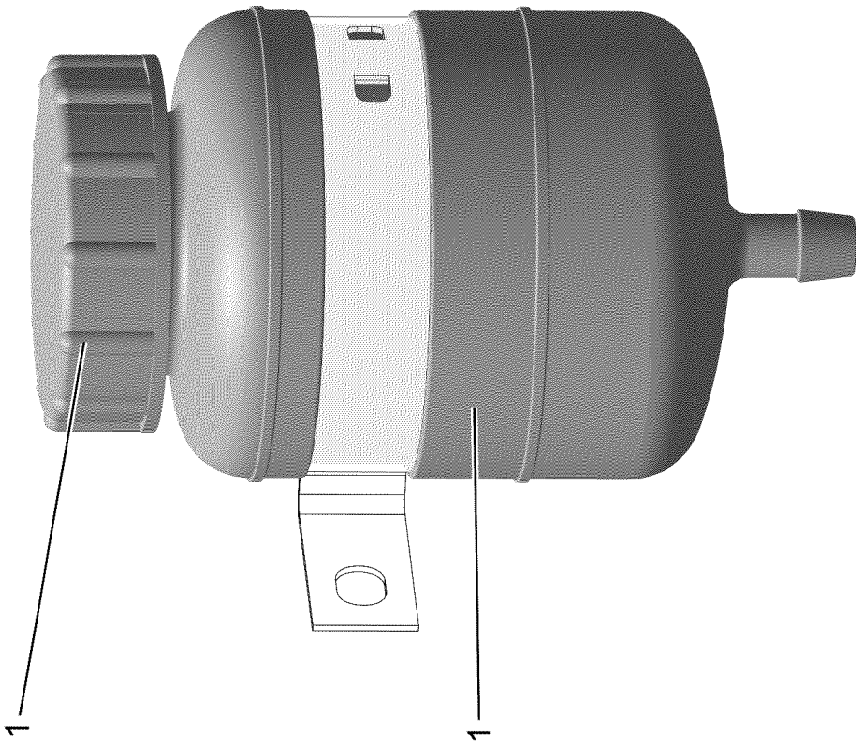
1
1

Pos.	Item	Quantity	Description	Bezeichnung
1	502806508	1	EQUALIZING RESERVOIR 1L ⇨ ❑ 102	AUSGLEICHSBEHAELTER
2	10878281	1	CONTAINER SCREW JOINT	BEHAELTERVERSCHRAUBUNG

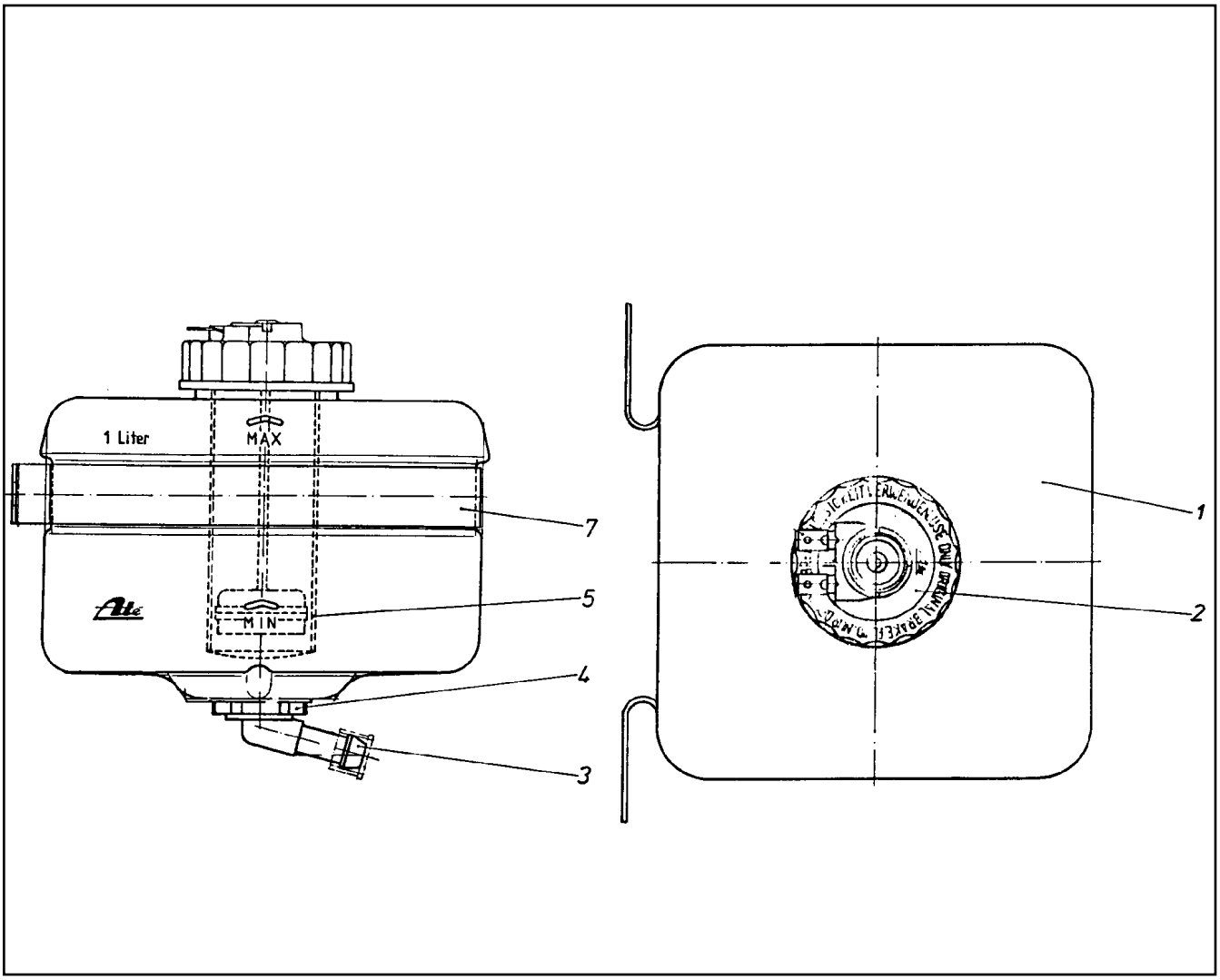

Pos.	Item	Quantity	Description	Bezeichnung
1	570065908	1	EQUALIZING RESERVOIR	AUSGLEICHSBEHAELTER
2	570066008	1	FITTING	VERSCHRAUBUNG
3	570066108	1	PIPE ELBOW	KNIESTUECK
4	570066208	1	CONTAINER PLUG	BEHAELTERSTOPFEN
5	570066308	1	SIEVE SLEEVE	SIEBHUELSE
7	570066408	1	FASTENING CLAMP	BEFESTIGUNGSSCHELLE

Pos.	Item	Quantity	Description	Bezeichnung
1	91001378	1	CRAWLER SUPPORT PREASS RS ⇨ ❑ 104	RAUPENTRAEGER VORM.RE.
4	919296408	1	HYDR.TRAVEL DRIVE ⇨ ❑ 113	HYDR.FAHRANTRIEB

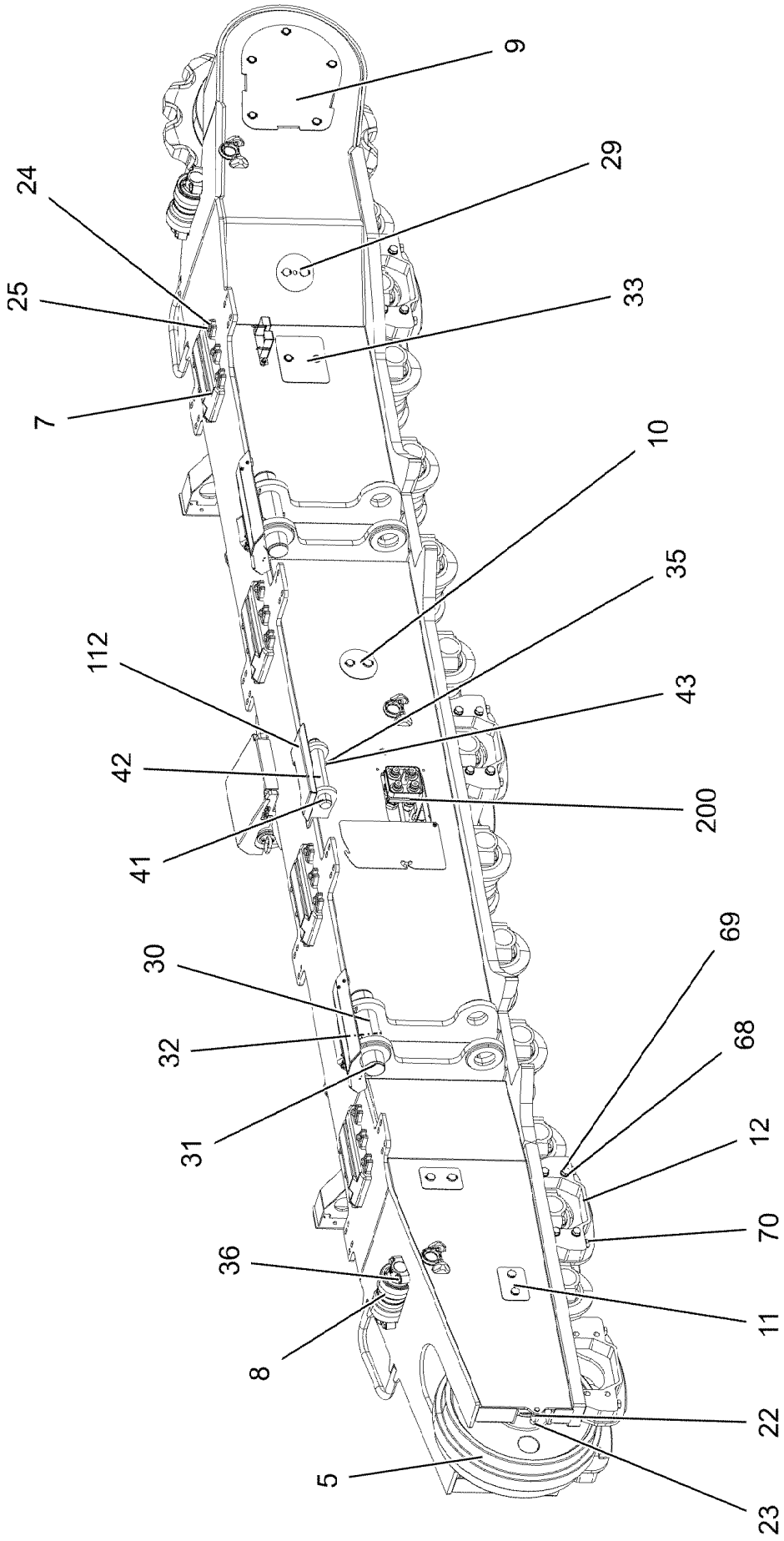
9
29
24
33
25
7
10
35
112
43
42
200
41
69
30
68
32
12
31
70
36
11
8
22
5
23

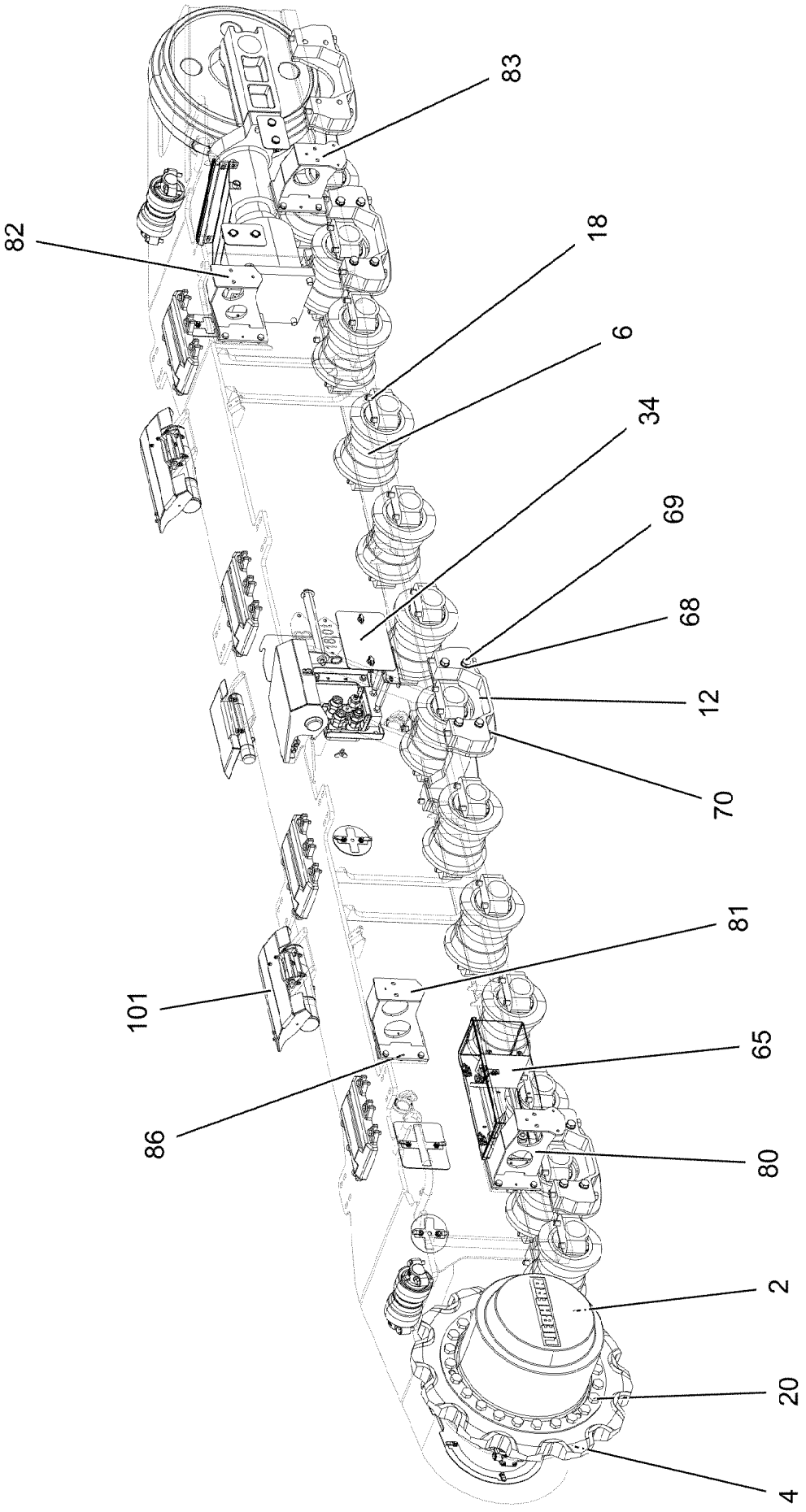
83
82
18
6
34
69
68
12
70
81
101
65
86
80
2
20
4

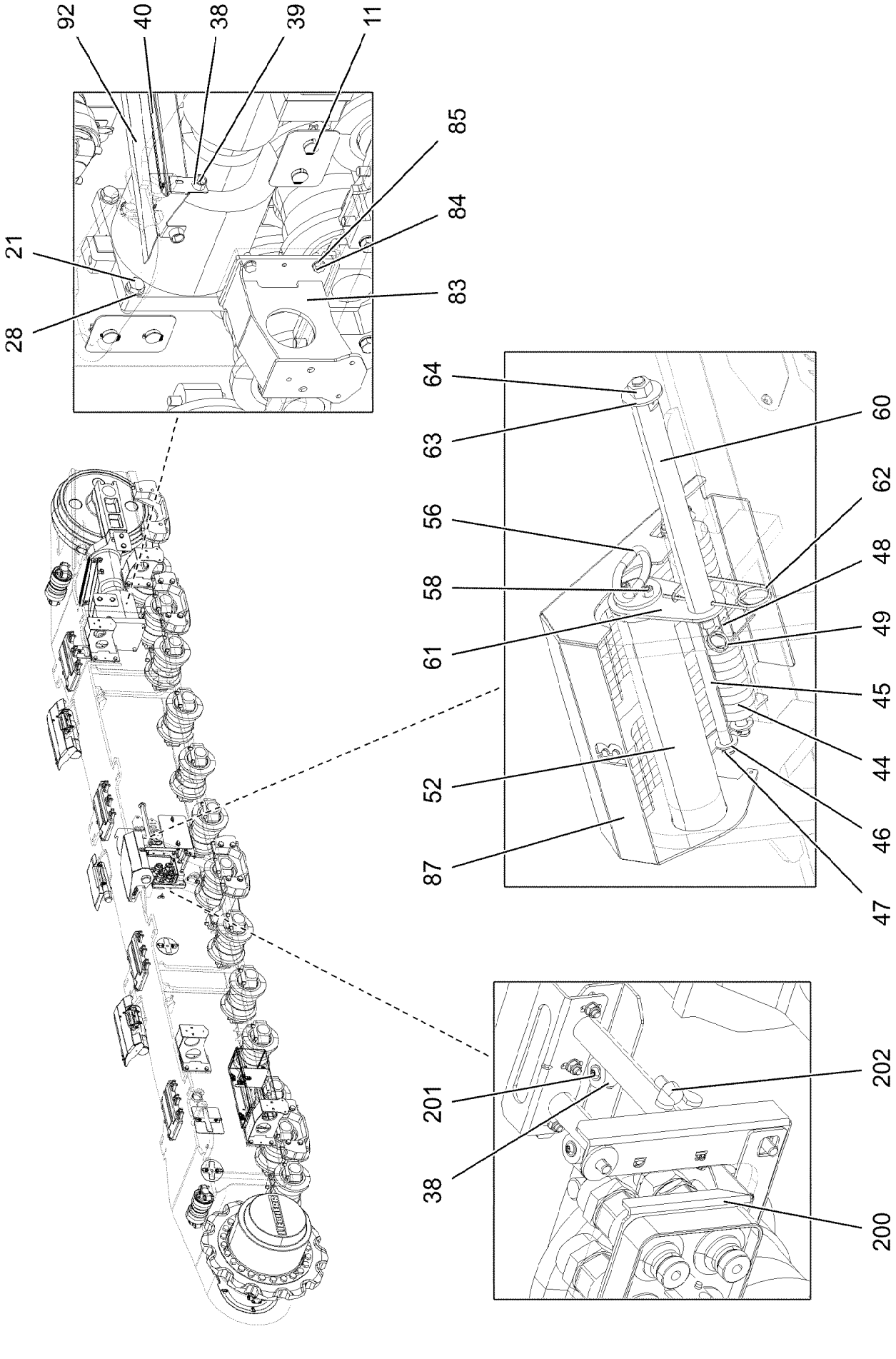
92
40
38
39
11
85
84
21
83
28
64
63
60
56
62
58
48
61
49
45
52
44
46
87
47
201
202
38
200

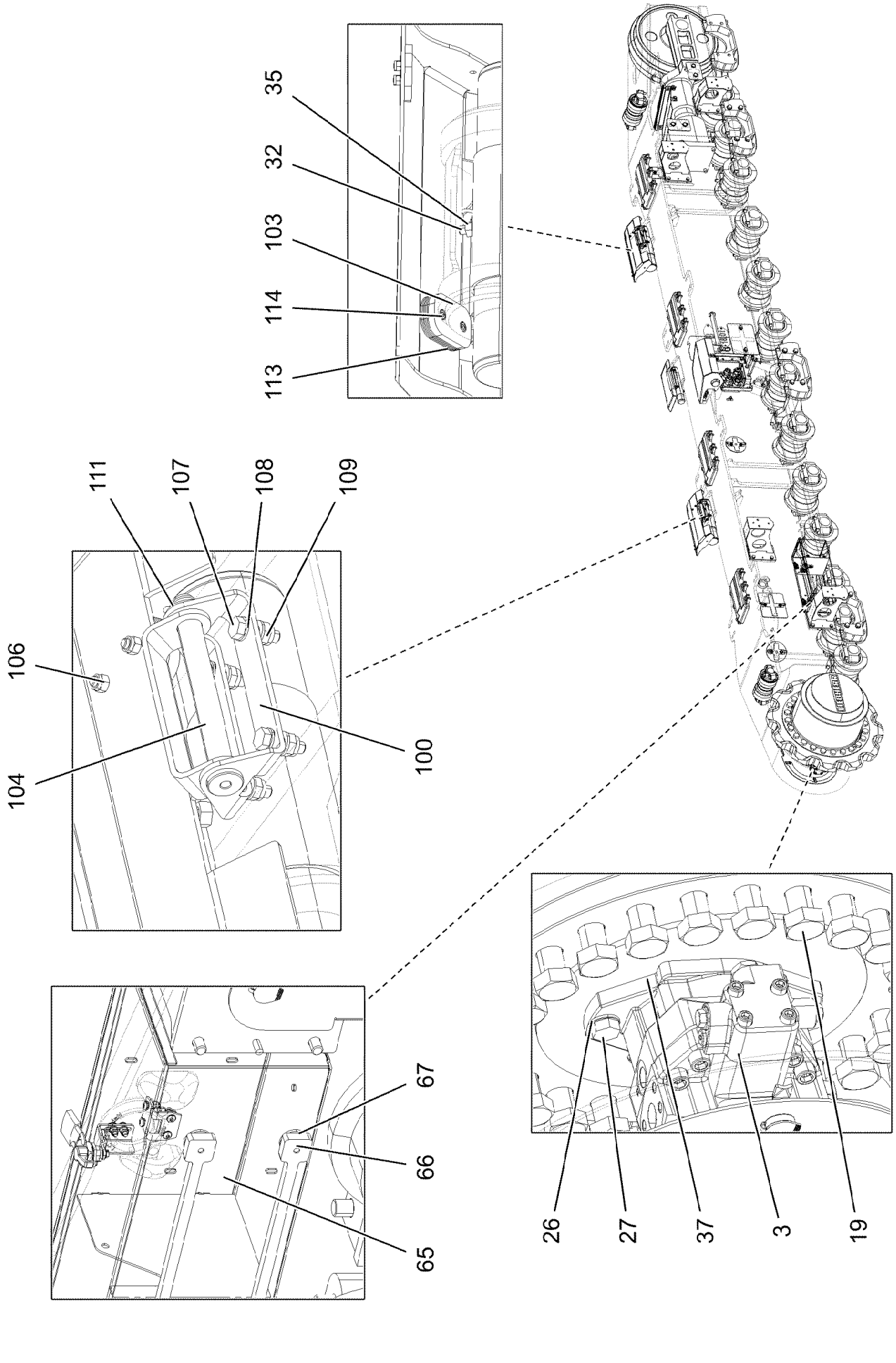
35
32
103
114
113
111
107
108
109
106
104
100
67
66
65
26
27
37
3
19

Pos.	Item	Quantity	Description	Bezeichnung
1	96019396	1	CRAWLER CARRIER STEEL CONTSR.	RAUPENTRAEGER STAHLBAU
2	90028956	1	TRACTION DRIVE FAT 600P049 RAL 7043 ⇨ ❑ 77	FAHRANTRIEB
3	11182596	1	VARIABLE DISPLACEMENT MOTOR A6VE 1 ⇨ ❑ 79	VERSTELLMOTOR
4	749056414	1	DRIVE WHEEL 12XB9SX260,35 LH-GRAU	ANTRIEBSRAD
5	11320954	1	GUIDE WHEEL UNIT B9HDSX740 ⇨ ❑ 82	LEITRADEINHEIT
6	11320962	13	TRACK ROLLER 250X250	LAUFROLLE
7	308115114	4	SLIPPER 65X340X450 GS-CK 45 983593114	GLEITSCHUH
8	10877342	2	CARRYING ROLLER D8KX165	TRAGROLLE
9	968055808	1	COVER PRE-ASSY. ⇨ ❑ 110	DECKEL VORM.
10	967972308	1	COVER PRE-ASSY. ⇨ ❑ 87	DECKEL VORM.
11	967972408	4	COVER PRE-ASSY. ⇨ ❑ 88	DECKEL VORM.
12	96058512	8	PLATE WELDED	BLECH SCHWK.
13	97152371	6	PLATE 50X349X170 S355J2+N	BLECH
18	12691274	52	HEX SCREW ISO 4014 M24X120 10.9 FLZN	SECHSKANTSCHRAUBE
19	11342133	24	HEX SCREW ISO 4014 M30X110 12.9 FLZN	SECHSKANTSCHRAUBE
20	406209008	24	HEX SCREW ISO 4014 M30X120 10.9 FLZN	SECHSKANTSCHRAUBE
21	4901595	4	HEX SCREW ISO 4017 M24X80 10.9 FLZN SP	SECHSKANTSCHRAUBE
22	956078908	1	SLEEVE RD40X50 42CRMO4+QT GASN. SP	HUELSE
23	10293537	1	SOCKET HEAD SCREW ISO 4762 M24X70 10	ZYLINDERSCHRAUBE
24	4600021	24	WASHER DIN 7349 17 200HV FLZN SPF	SCHEIBE
25	10875520	24	HEX SCREW ISO 4017 M16X50 8.8 FLZN SP	SECHSKANTSCHRAUBE
26	4600222	2	WASHER EN 14399-6 20 300-370HV FLZN SP	SCHEIBE
27	406604208	2	HEX SCREW ISO 4017 M20X60 10.9 FLZN SP	SECHSKANTSCHRAUBE
28	10289810	4	WASHER ISO 7089 24 300HV FLZN SPF	SCHEIBE
29	968270108	1	COVER PRE-ASSY. ⇨ ❑ 89	DECKEL VORM.
30	97031480	2	SLEEVE 108.0X196 S235JRH FE//ZNNI8//CN/	HUELSE
31	97031481	2	PIN 105.0X452 35NICRMOV125 SPF	BOLZEN
32	4601290	2	HEX SCREW ISO 4014 M12X130 10.9 A3C SP	SECHSKANTSCHRAUBE
33	968274208	1	COVER PRE-ASSY. ⇨ ❑ 90	DECKEL VORM.
34	968709108	1	COVER PRE-ASSY. ⇨ ❑ 91	DECKEL VORM.
35	10875616	3	HEX NUT ISO 4032 M12 8 FLZN SPF	SECHSKANTMUTTER
36	10178883	8	HEX SCREW ISO 4014 M18X70 8.8 FLZN SP	SECHSKANTSCHRAUBE
37	11493868	1	O-RING 192X4 SPF	O-RING
38	978787708	6	SLEEVE 33.0X19 FE//ZNNI8//CN//T0	HUELSE
39	12102696	4	BUTTON HEAD SCREW ISO 7380-2 M8X10 0	HALBRUNDKOPFSCHRAUBE
40	262105508	0.56	SEALING PROFILE 1-4X21,5X10	DICHTPROFIL
41	97100242	1	PIN 70.0X390 35NICRMOV125	BOLZEN
42	97100243	1	SLEEVE 65.0X248 E235+N	HUELSE
43	10875508	1	HEX SCREW ISO 4014 M12X80 8.8 FLZN SP	SECHSKANTSCHRAUBE
44	97040155	16	SPACER PIECE PA6G	DISTANZSTUECK
45	97032409	2	PIN 18.0X410 S355J2C+C FE//ZNNI8//CN//T0	BOLZEN
46	10289807	4	WASHER ISO 7089 18 300HV FLZN SPF	SCHEIBE
47	10172636	4	SPLIT PIN ISO 1234 3,2X40 A4	SPLINT
48	97032370	1	PLATE 2.5X73X78 DC01 FE//ZNNI8//CN//T0	BLECH
49	433101208	1	RETAINING SPRING 4X68 ISO 2081 FE/ZN8/	SICHERUNGSFEDER
52	97032383	1	PIN 90.0X415 35NICRMOV125 SPF	BOLZEN
56	962963808	1	HANDLE WELD.CONST. FE//ZNNI8//CN//T0	GRIFF SCHWK.
58	10875571	2	SOCKET HEAD SCREW ISO 4762 M10X30 8	ZYLINDERSCHRAUBE
60	97037244	1	GUIDING ROD 45.0X445 35NICRMOV125 SP	FUEHRUNGSSTANGE
61	97034262	1	PLATE 5X190X90 S355MC FE//ZNNI8//CN//T	BLECH
62	433100908	1	RETAINING SPRING 4,5X98 ISO 2081 FE/ZN	SICHERUNGSFEDER

Pos.	Item	Quantity	Description	Bezeichnung
63	4600328	1	WASHER ISO 7093-1 20 300HV FLZN SPF	SCHEIBE
64	10875618	1	HEX NUT ISO 4032 M20 8 FLZN SPF	SECHSKANTMUTTER
65	968420608	1	STORAGE BOX ⇨ ❑ 92	STAUKASTEN VORM.
66	10197730	4	HEX SCREW ISO 4017 M10X20 8.8 ZNNI-480	SECHSKANTSCHRAUBE
67	940116008	4	WASHER 4X40X40 S315MC FE//ZNNI8//CN//T	SCHEIBE
68	12699046	92	LOCK WASHER RIPP LOCK 24 ST FLZN	SICHERUNGSSCHEIBE
69	10178891	24	HEX SCREW ISO 4014 M24X130 10.9 FLZN	SECHSKANTSCHRAUBE
70	10178897	16	HEX SCREW ISO 4014 M24X210 10.9 FLZN	SECHSKANTSCHRAUBE
80	96000309	1	BRACKET WELDED CONST.	KONSOLE SCHWK.
81	96000310	1	BRACKET WELDED CONST.	KONSOLE SCHWK.
82	96000311	1	BRACKET WELDED CONST.	KONSOLE SCHWK.
83	96000312	1	BRACKET WELDED CONST.	KONSOLE SCHWK.
84	12214938	16	HEX SCREW ISO 4017 M16X35 8.8 FLZN SP	SECHSKANTSCHRAUBE
85	10289806	16	WASHER ISO 7089 16 300HV FLZN SPF	SCHEIBE
86	430608708	8	PARALLEL PIN ISO 2338 10M6X36 ST	ZYLINDERSTIFT
87	97066483	1	HOOD RIGHT 4X585X711 S315MC FE//ZNNI	HAUBE RE.
92	97155761	1	PLATE 2X388X685 ALMG3 H111 SPF	BLECH
100	97103682	2	PLATE 5X86X267 S355MC FE//ZNNI8//CN//T	BLECH
101	97103683	2	PLATE 5X649X337 S355MC FE//ZNNI8//CN//T	BLECH
103	97070985	4	LIMIT STOP 90X60X10 PA6G NATUR	ANSCHLAG
104	97073453	2	LOCKING BOLT 30.0X200 35NICRMOV125	SICHERUNGSBOLZEN
105	12216054	4	SOCKET HEAD SCREW DIN 7984 M8X20 08	ZYLINDERSCHRAUBE
106	11656731	8	HEX NUT ISO 7040 M8 8 480H SPF	SECHSKANTMUTTER
107	11691328	10	HEX SCREW ISO 4017 M10X35 8.8 FLZN SP	SECHSKANTSCHRAUBE
108	10289795	20	WASHER ISO 7089 10 300HV FLZN SPF	SCHEIBE
109	10197769	10	HEX NUT DIN 985 M10 8 ZNNI-480H SPF	SECHSKANTMUTTER
110	10289808	2	WASHER ISO 7089 20 300HV FLZN SPF	SCHEIBE
111	10180354	2	SPLIT PIN ISO 1234 4X40 St 480H SPF	SPLINT
112	97104844	1	PLATE 5X443X254 S355MC FE//ZNNI8//CN//T	BLECH
113	97104898	12	PLATE 2X90X60 DC01 FE//ZNNI8//CN//T0	BLECH
114	571310608	4	SOCKET HEAD SCREW DIN 6912 M8X35 08.	ZYLINDERSCHRAUBE
200	96034980	1	GUIDE RIGHT ⇨ ❑ 111	FUEHRUNG RE.
201	10876082	2	BUTTON HEAD SCREW AEHNL.ISO 7380-2	HALBRUNDKOPFSCHRAUBE
202	4600612	2	WING SCREW DIN 316 M12X20 4.6 FLZN SP	FLUEGELSCHRAUBE

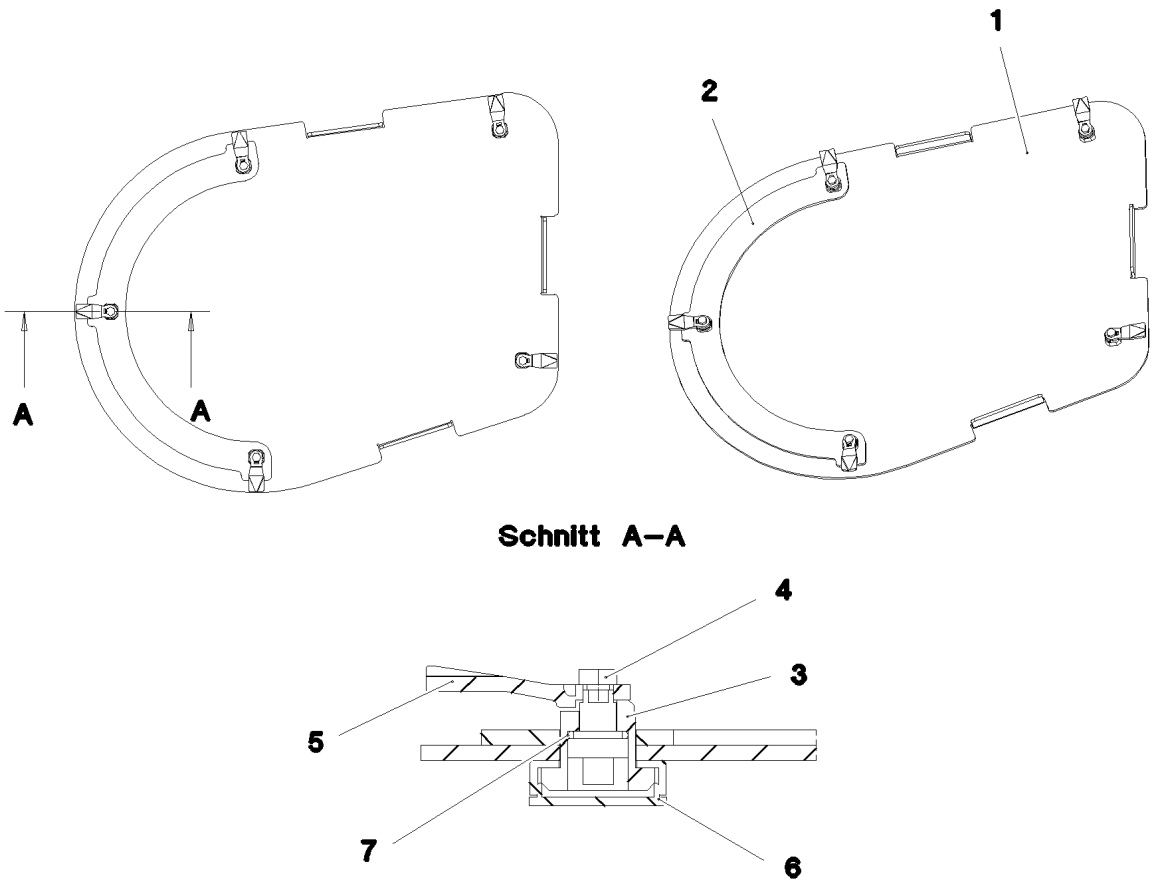

Pos.	Item	Quantity	Description	Bezeichnung
1	97033100	1	PLATE 4X668X480 ALMG3 H111 SPF	BLECH
2	97031267	1	PLATE 2X244X449 ALMG3 H111 SPF	BLECH
3	704253308	5	HOUSING GD-ZN SW GEPULVERT	GEHAEUSE
4	704253408	5	ACTUATION SPIKE GD-ZN SW GEPULVERT	BETAETIGUNGSDORN
5	704253708	5	TONGUE	ZUNGE
6	704254808	5	DUST CAP POLYETHYLEN SCHWARZ	STAUBKAPPE
7	704274808	5	O-RING 12X2 NBR70	O-RING

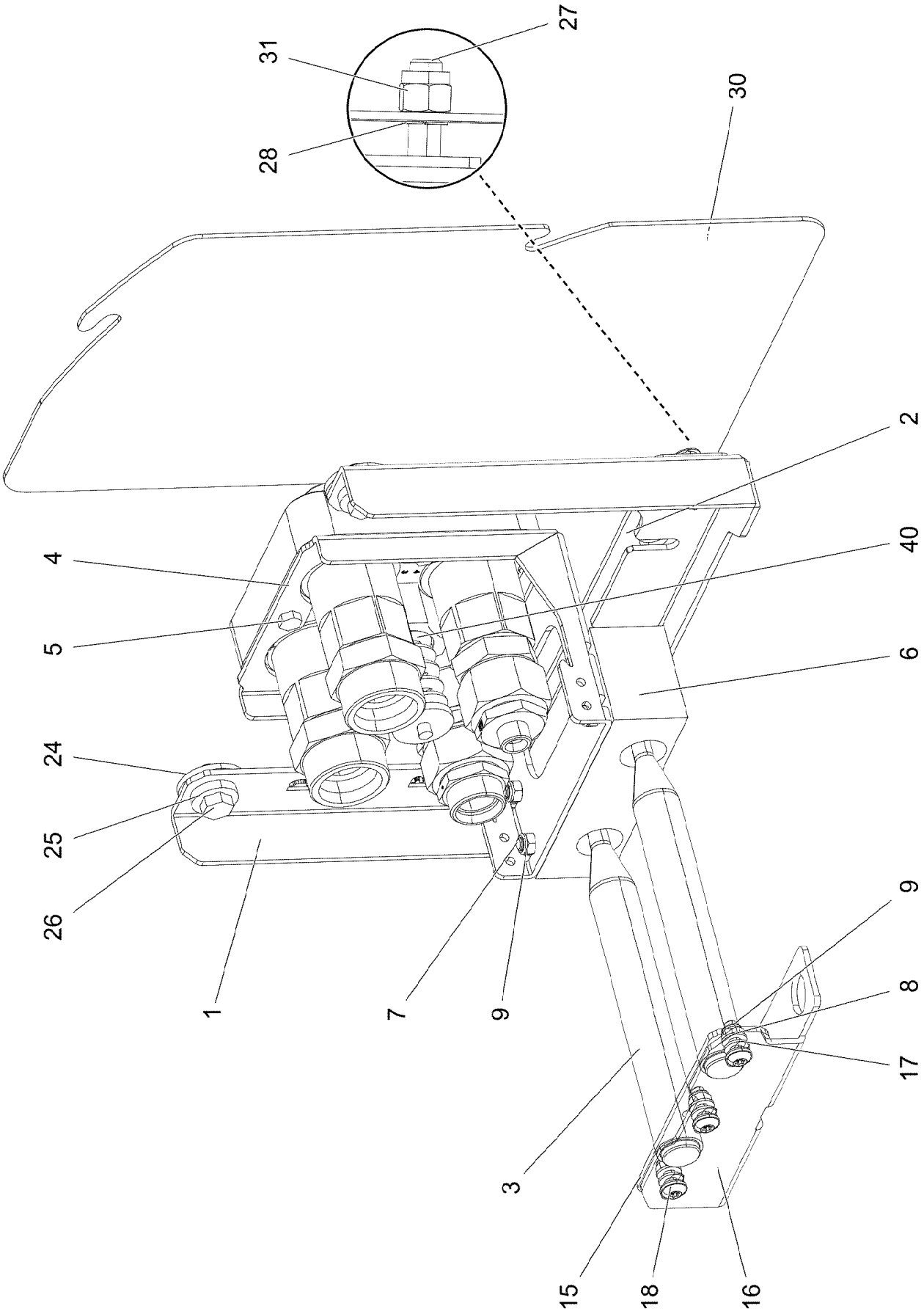

18.7.2022 004577 LIEBHERR	**etk_en_de_047654 LTR 1220** **GUIDE RIGHT** **FUEHRUNG RE.**	❑ 111 (1/2) **96034980**

Pos.	Item	Quantity	Description	Bezeichnung
1	97093427	1	PLATE 4X463X307 S315MC FE//ZNNI8//CN//T	BLECH
2	97097713	1	PLATE 4X383X50 S315MC FE//ZNNI8//CN//T	BLECH
3	97133544	2	ROD 30.0X339 S355J2C+C FE//ZNNI8//CN//T	STANGE
4	97093428	1	PLATE 4X239X313 S315MC FE//ZNNI8//CN//T	BLECH
5	11651612	4	HEX SCREW ISO 4017 M8X16 8.8 480H SPF	SECHSKANTSCHRAUBE
6	97093433	1	GUIDE 180X70X 50 PA6G	FUEHRUNG
7	12201166	4	SOCKET HEAD SCREW ISO 4762 M8X60 8.8	ZYLINDERSCHRAUBE
8	12103465	7	WASHER ISO 7089 8 300HV ZNNI-480H SPF	SCHEIBE
9	10875614	7	HEX NUT DIN 985 M8 8 480H SPF	SECHSKANTMUTTER
15	97093426	1	PLATE 4X180X99 S315MC FE//ZNNI8//CN//T	BLECH
16	97118621	1	PLATE 4X230X107 S315MC FE//ZNNI8//CN//T	BLECH
17	10166990	6	WASHER AEHNL.ISO 7089 8 PA 6.6	SCHEIBE
18	10875486	3	BUTTON HEAD SCREW AEHNL.ISO 7380-2	HALBRUNDKOPFSCHRAUBE
24	10875639	2	WASHER DIN 440 13,5 ST FLZN SPF	SCHEIBE
25	10006370	4	WASHER DIN 7349 13 200HV FLZN SPF	SCHEIBE
26	11658892	3	HEX SCREW ISO 4017 M12X25 8.8 FLZN SP	SECHSKANTSCHRAUBE
27	11840136	1	HEX SCREW ISO 4017 M12X50 8.8 FLZN	SECHSKANTSCHRAUBE
28	12209429	1	BEARING 12X17X4,6	LAGER
30	97118618	1	PLATE 3X286X480 ALMG3 H111 PULVERBE	BLECH
31	11840127	1	HEX NUT ISO 7040 M12 8 FLZN SPF	SECHSKANTMUTTER
40	12101576	1	QUICK RELEASE FITTING	SCHNELLVERSCHLUSSKUPPL

Pos.	Item	Quantity	Description	Bezeichnung
4	96035792	1	HYDR.TRAVEL DRIVE ⇨ ❑ 114	HYDR.FAHRANTRIEB

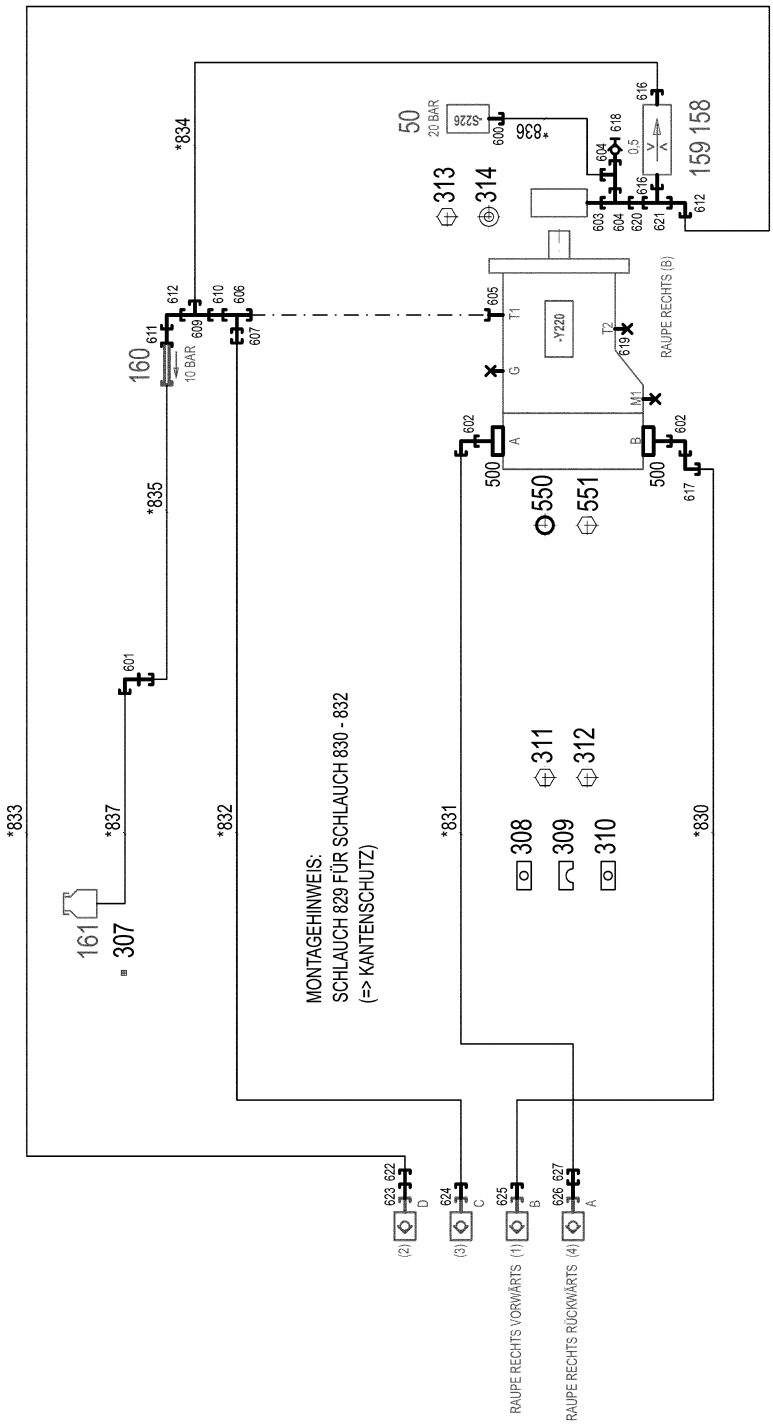
MONTAGEHINWEIS:
SCHLAUCH 829 FÜR SCHLAUCH 830 - 832
(=> KANTENSCHUTZ)
RAUPE RECHTS VORWÄRTS (1)
RAUPE RECHTS RÜCKWÄRTS (4)
RAUPE RECHTS (B)
-Y220
-S226
10 BAR
20 BAR
*833
*837
*832
*831
*830
*835
*834
*836
161
307
160
500
550
551
308
309
310
311
312
313
314
50
159 158

* Pos. 10

Pos.	Item	Quantity	Description	Bezeichnung
10	96035798	1	HOSE LINES CRAWLER ⇨ ❑ 116	SCHLAUCHLEITUNGEN RAUPE
50	510676908	1	PRESSURE SWITCH 10-100/400 BAR	DRUCKSCHALTER
158	510671108	1	FILTER CARTRIDGE 0,005m³/min 25µm	FILTERPATRONE
159	511062708	1	NOZZLE 0,5 M5X9 MS	DUESE
160	511481508	1	NON-RETURN VALVE 250BAR 10BAR CR6-F	RUECKSCHLAGVENTIL
161	96028333	1	EXPANSION TANK CPL. ⇨ ❑ 100	AUSGLEICHSBEHAELTER KPL.
307	10872024	1	HOSE CLAMP DIN 3017-1 12/8-16/9 W3	SCHLAUCHSCHELLE
308	12102954	2	LID PLATE DIN 3015-1 L-DP 6 W1-ZN	DECKPLATTE
309	602010108	6	CLAMP-HALF DIN 3015-1 L 6 R 44,5 PP SW	KLEMMHAELFTE
310	11008020	2	WELD PLATE DIN 3015-1 L-AP-K 6 W1 ZNNI	ANSCHWEISSPLATTE
311	12100256	2	SOCKET HEAD SCREW ISO 4762 M6X150 8	ZYLINDERSCHRAUBE
312	12203635	2	SOCKET HEAD SCREW ISO 4762 M6X90 8.8	ZYLINDERSCHRAUBE
313	11647548	2	HEX SCREW ISO 4017 M5X16 8.8 480H SPF	SECHSKANTSCHRAUBE
314	10197808	2	WASHER ISO 7089 5 200HV ZNNI-480H	SCHEIBE
500	511517808	2	FLANGE STUB PIPE AFG 38S G1 1/4 CR6-F	FLANSCHSTUTZEN
550	510586708	2	O-RING ARP 568 37,69X3,53 NBR90	O-RING
551	10876373	8	SOCKET HEAD SCREW ISO 4762 M14X45 8	ZYLINDERSCHRAUBE
600	7362091	1	FITTING ISO 8434-1 GE 10L G1/4A CR6-FREI	VERSCHRAUBUNG
601	474200408	1	FITTING XWSV12-L CR6-FREI	VERSCHRAUBUNG
602	472531808	2	FITTING EWSD38-S CR6-FREI	VERSCHRAUBUNG
603	471903908	1	FITTING EGE 10L M12X1,5 CR6-FREI	VERSCHRAUBUNG
604	472330208	2	FITTING EL 10L CR6-FREI	VERSCHRAUBUNG
605	471902408	1	FITTING EGESD22-LM-WD CR6-FREI	VERSCHRAUBUNG
606	482430614	1	FITTING ISO 8434 ET 22L CR6-FREI	VERSCHRAUBUNG
607	475031208	1	FITTING XGR35/22-L CR6-FREI	VERSCHRAUBUNG
609	247128602	1	L NECK EL 12L M18X1,5 CR6-FREI	L-STUTZEN
610	475436108	1	FITTING REDSD22/12-L CR6-FREI	VERSCHRAUBUNG
611	470011308	1	FITTING SNV12-L CR6-FREI	VERSCHRAUBUNG
612	247117702	2	SWIVEL ELBOW EW 12L M18X1,5 CR6-FREI	WINKELSTUTZEN
616	471035308	2	FITTING XGE12-LR-ED1/4" CR6-FREI	VERSCHRAUBUNG
617	10467292	1	FITTING EV38S M52X2 CR6-FREI	VERSCHRAUBUNG
618	510629008	1	TEST POINT FITTING VKA3 10LM16X1,5 CR6	MESSANSCHLUSS
619	477705808	1	STOP PLUG VSTIM26X1,5ED CR6-FREI	STOPFEN
620	475431408	1	FITTING REDSD12/10-L CR6-FREI	VERSCHRAUBUNG
621	247105602	1	T CONNECTION PIECE ET 12L CR6-FREI	T-STUTZEN
622	471032608	1	FITTING GE 12S G1/2A CR6-FREI	VERSCHRAUBUNG
623	475501108	1	ADAPTOR RI11/4-EDX1/2 CR6-FREI	ADAPTER
624	471034508	1	FITTING XGE35-LR-ED CR6-FREI	VERSCHRAUBUNG
625	7410455	1	SCREW-ON CONNECTION GE 38S G1 1/4A	EINSCHRAUBSTUTZEN
626	10876353	1	FITTING EGE 38S G1 1/4 CR6-FREI	VERSCHRAUBUNG
627	470033108	1	FITTING XG38-S CR6-FREI	VERSCHRAUBUNG

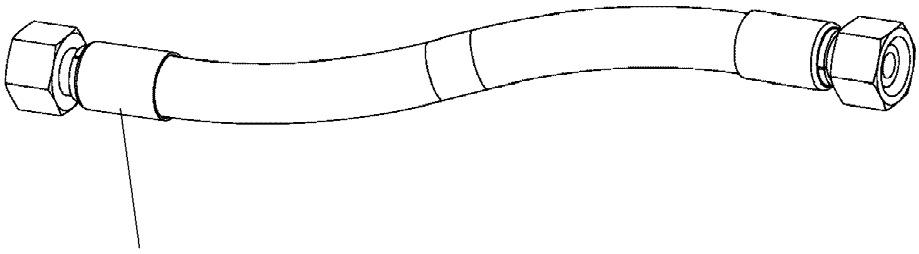

Schlauchnummer
Hose number
Numéro de flexible
Número de flexible
Номера шланга

Die Schlauchnummern auf den Schläuchen entsprechen den Positionen in der Schlauchliste.

The hose numbers from the hoses are in accordance with the items in the hose list.

Les numéros indiqués sur les flexibles correspondent aux repères de la nomenclature des flexibles.

Los números indicados en los flexibles corresponden a las posiciones de la lista de flexibles.

Нанесенные на шлангах номера соответствуют позициям в перечне.

Pos.	Item	Quantity	Description	Bezeichnung
829	96014317	1	HOSE CPL. CONTI-KWS 42X500	SCHLAUCH KPL.
830	96035890	1	HOSE CPL. 4ST+ 31X4100	SCHLAUCH KPL.
831	96035891	1	HOSE CPL. 4ST+ 31X4200	SCHLAUCH KPL.
832	96035892	1	HOSE CPL. 1SN 32X4250	SCHLAUCH KPL.
833	96035893	1	HOSE CPL. 2SN 10X4050	SCHLAUCH KPL.
834	926120008	1	HOSE CPL. 2TE 10X600	SCHLAUCH KPL.
835	926976308	1	HOSE CPL. 2TE 10X1060	SCHLAUCH KPL.
836	96044685	1	HOSE CPL. 1SC 8X460	SCHLAUCH KPL.
837	968143708	1	HOSE CPL. 2TE 8X700	SCHLAUCH KPL.

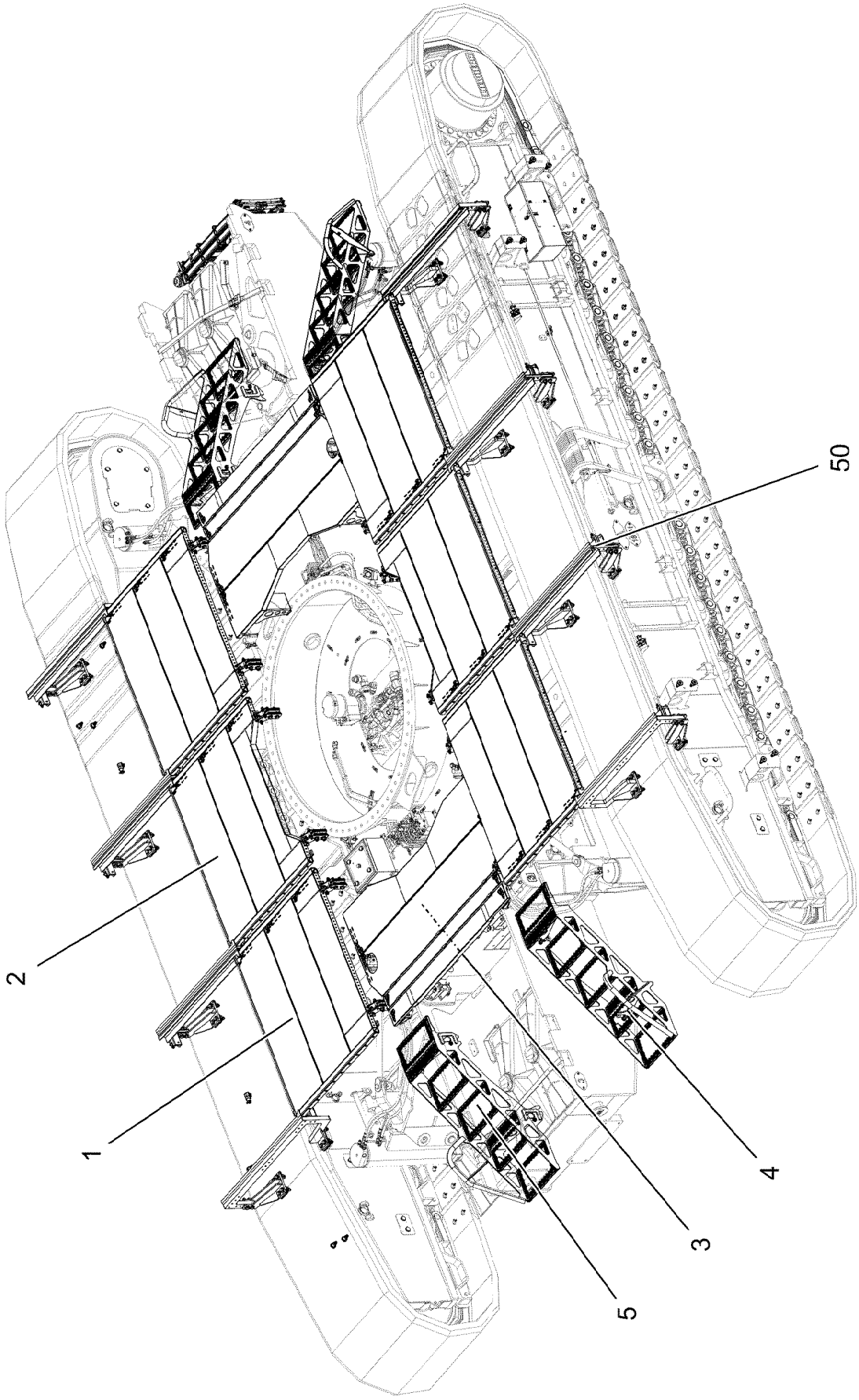
50
2
1
4
3
5

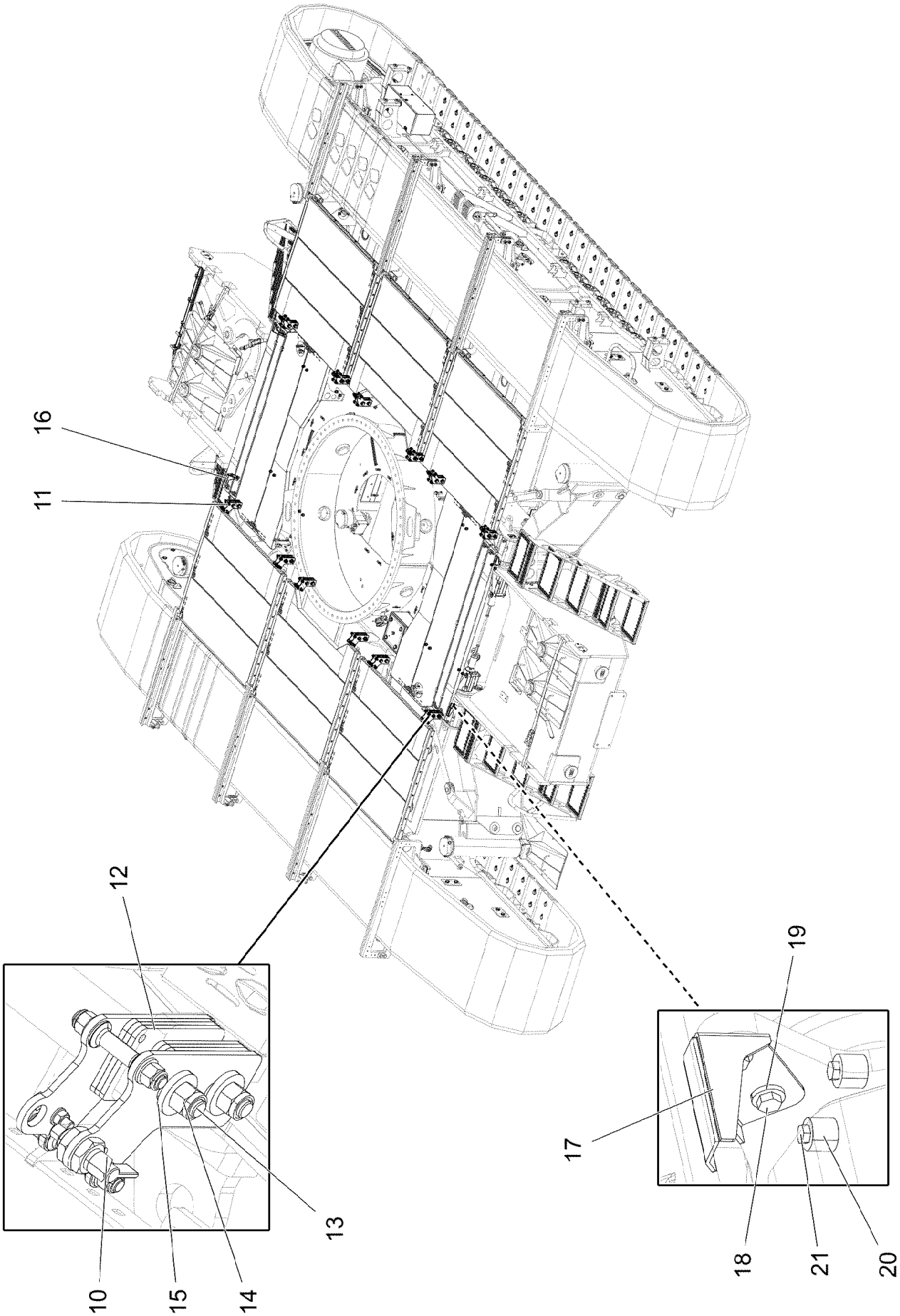
16
11
12
13
10
15
14
19
17
18
21
20

Pos.	Item	Quantity	Description	Bezeichnung
1	11346547	4	PEDESTAL 50X1350X1610 STAHL T ZN O	PODEST
(2)	12210567	40	RIVET NUT M8	NIETMUTTER
(3)	12106689	4	SLIDING RAIL	GLEITSCHIENE
(4)	408606414	40	COUNTERSUNK SCREW DIN 7991 M8X25 A4	SENKSCHRAUBE
2	11346548	2	PEDESTAL 50X1350X1610 T ZN O	PODEST
3	11346549	2	PEDESTAL 50X1166X2200 STAHL T ZN O	PODEST
4	11213246	2	STAIR 5-631X0,754M ALMG3 ELOXIERT SPF	TREPPE
5	11213247	2	STAIR 5-631X0,754M ALMG3 ELOXIERT SPF	TREPPE
10	968038208	6	BEARING AHEAD LEFT SIDE ⇨ ❑ 120	LAGERUNG VORN LI.
11	968038308	6	BEARING AHEAD RIGHT SIDE ⇨ ❑ 121	LAGERUNG VORN RE.
12	97032691	72	PLATE 5X70X130 S355MC FE//ZNNI8//CN//T	BLECH
13	10878688	24	HEX SCREW ISO 4014 M16X95 8.8 FLZN SP	SECHSKANTSCHRAUBE
14	10875859	24	HEX NUT ISO 7040 M16 8 FLZN SPF	SECHSKANTMUTTER
15	4600021	48	WASHER DIN 7349 17 200HV FLZN SPF	SCHEIBE
16	97039156	2	SUPPORTING BRACKET 3X206X185 S355M	STUETZKONSOLE
17	97039157	2	SUPPORTING BRACKET 3X206X185 S355M	STUETZKONSOLE
18	10197730	8	HEX SCREW ISO 4017 M10X20 8.8 ZNNI-480	SECHSKANTSCHRAUBE
19	4902172	8	WASHER DIN 7349 10,5 140HV-A4	SCHEIBE
20	953873408	16	SLEEVE 25X20 11SMN37 FE//ZNNI8//CN//T0	HUELSE
21	11651612	16	HEX SCREW ISO 4017 M8X16 8.8 480H SPF	SECHSKANTSCHRAUBE
50	968046208	2	ADD-ON PARTS RAUPENTRAEGER ⇨ ❑ 122	ANBAUTEILE

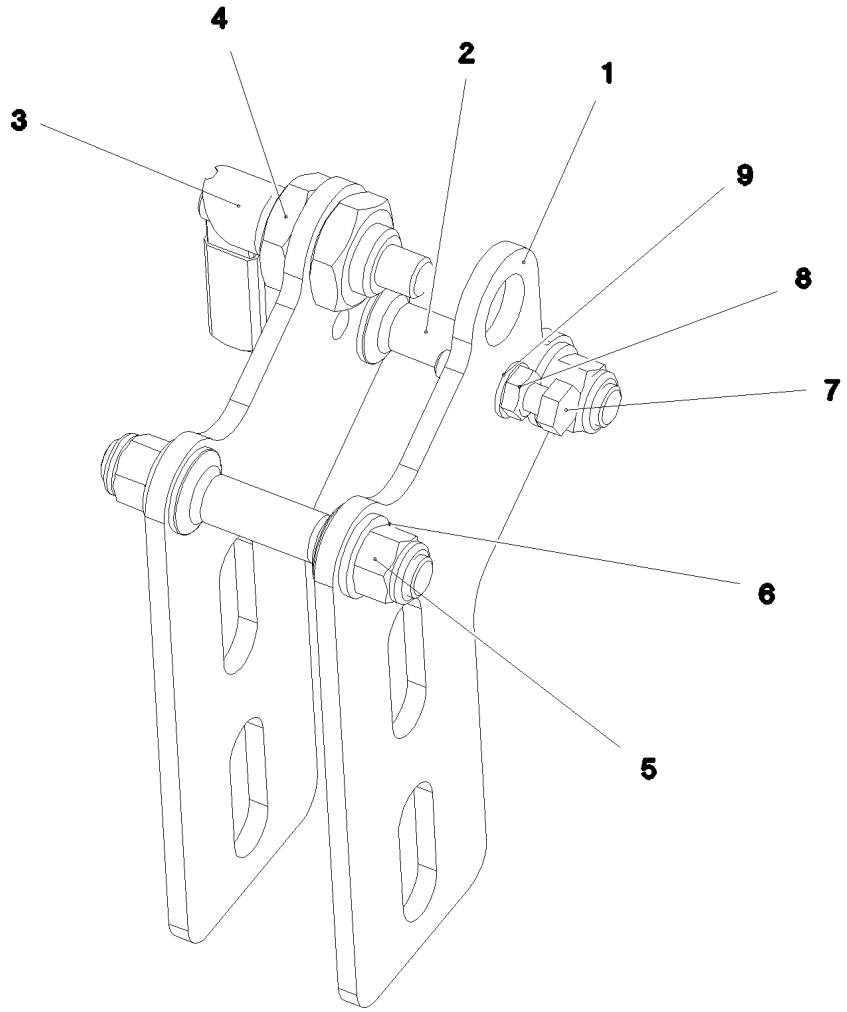

Pos.	Item	Quantity	Description	Bezeichnung
1	97032646	2	BEARING 6X129X209 S355MC FE//ZNNI8//C	LAGERUNG
2	97032647	2	PIN 25.0X100 S355J2G3C+C FE//ZNNI8//CN/	BOLZEN
3	10010025	1	SNAP-IN LOCK NIROSTA	RASTRIEGEL
4	10285016	2	HEX NUT ISO 8675 M20X1,5 A2-035	SECHSKANTMUTTER
5	11840127	4	HEX NUT ISO 7040 M12 8 FLZN SPF	SECHSKANTMUTTER
6	10410178	4	WASHER ISO 7089 12 200HV-A2	SCHEIBE
7	11692827	1	HEX SCREW ISO 4017 M8X35 8.8 480H SPF	SECHSKANTSCHRAUBE
8	11693875	2	HEX NUT ISO 4032 M8 8 480H SPF	SECHSKANTMUTTER
9	12103465	2	WASHER ISO 7089 8 300HV ZNNI-480H SPF	SCHEIBE

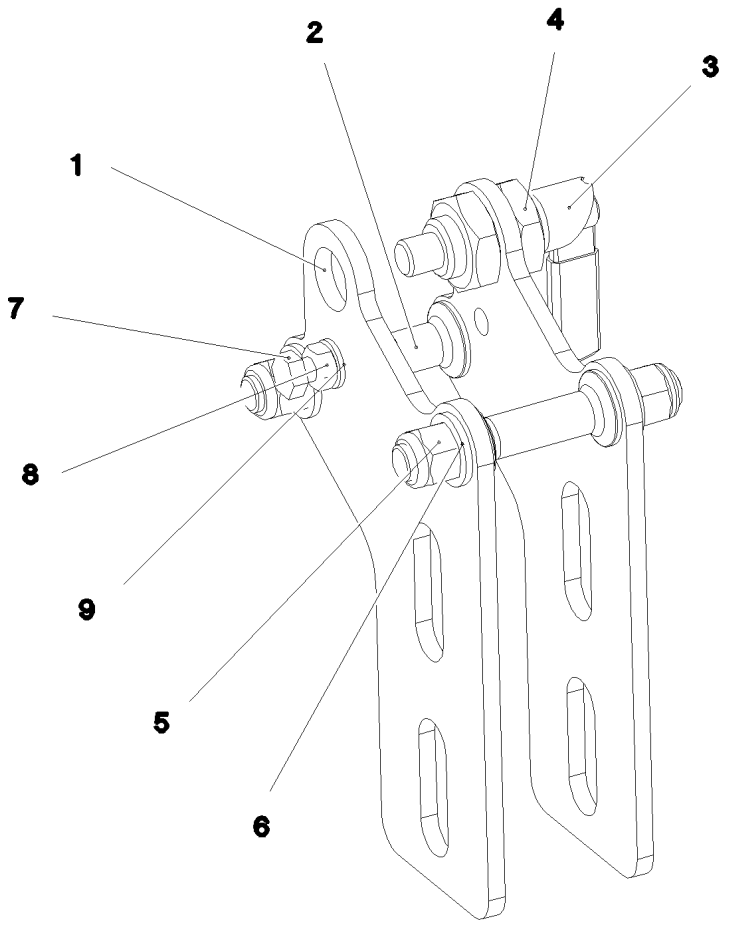

Pos.	Item	Quantity	Description	Bezeichnung
1	97032646	2	BEARING 6X129X209 S355MC FE//ZNNI8//C	LAGERUNG
2	97032647	2	PIN 25.0X100 S355J2G3C+C FE//ZNNI8//CN/	BOLZEN
3	10010025	1	SNAP-IN LOCK NIROSTA	RASTRIEGEL
4	10285016	2	HEX NUT ISO 8675 M20X1,5 A2-035	SECHSKANTMUTTER
5	11840127	4	HEX NUT ISO 7040 M12 8 FLZN SPF	SECHSKANTMUTTER
6	10410178	4	WASHER ISO 7089 12 200HV-A2	SCHEIBE
7	11692827	1	HEX SCREW ISO 4017 M8X35 8.8 480H SPF	SECHSKANTSCHRAUBE
8	11693875	2	HEX NUT ISO 4032 M8 8 480H SPF	SECHSKANTMUTTER
9	12103465	2	WASHER ISO 7089 8 300HV ZNNI-480H SPF	SCHEIBE

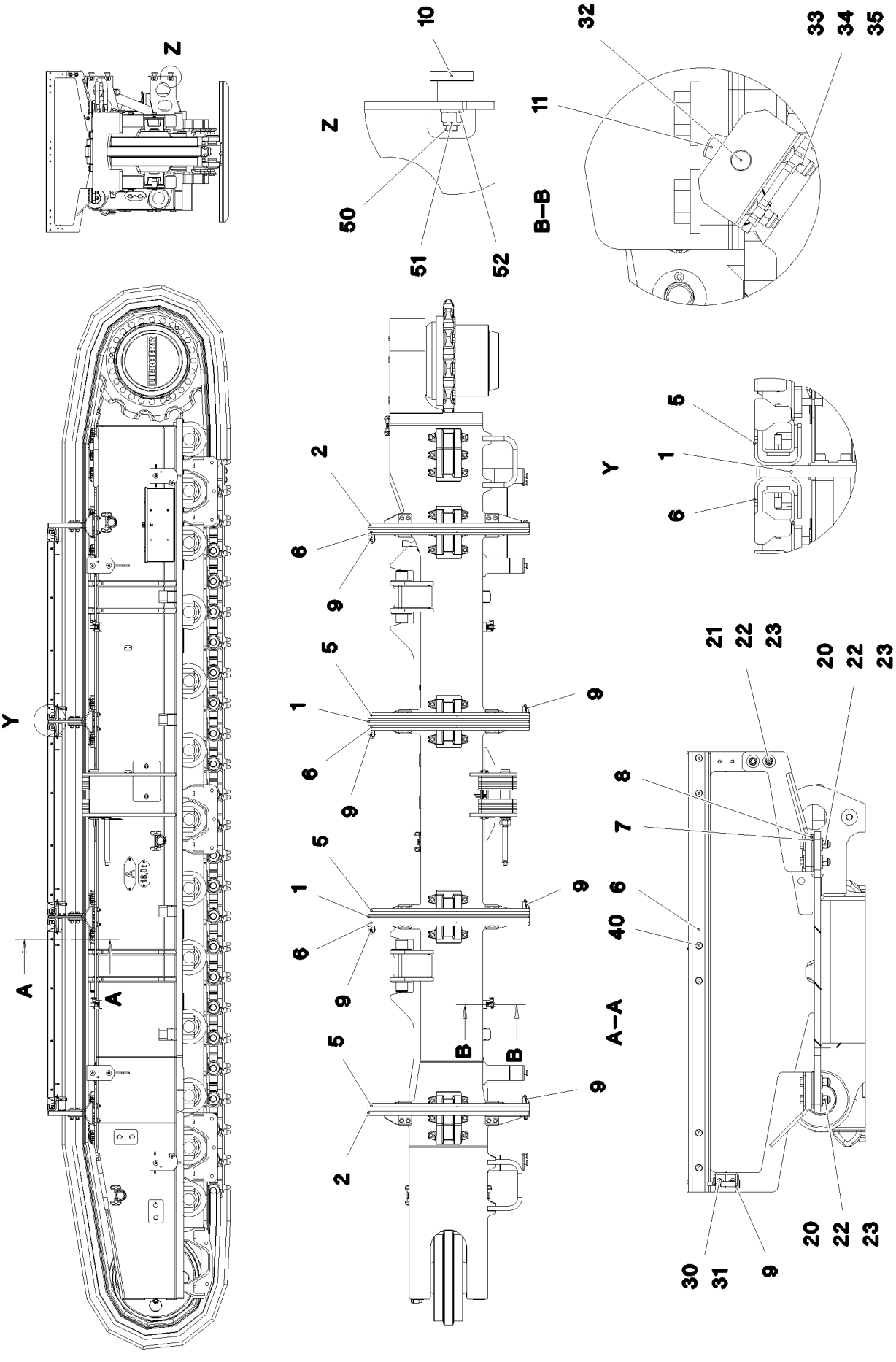

18.7.2022 077698 LIEBHERR	**etk_en_de_047654 LTR 1220** **ADD-ON PARTS** **ANBAUTEILE**	❑ 122 (1/3) **968046208**

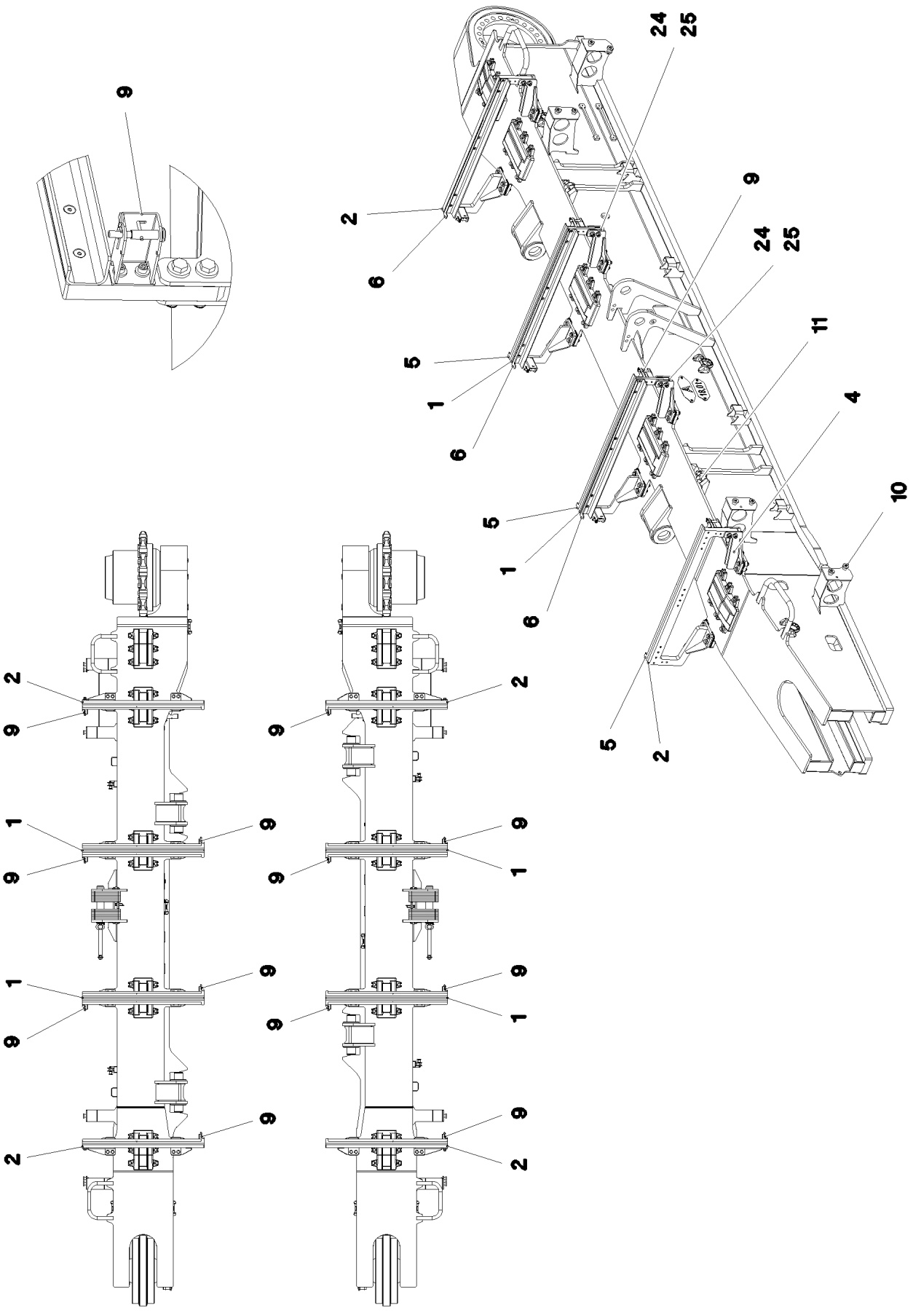
9
24
25
2
6
9
24
25
5
1
6
11
4
10
5
1
6
5
2
2
9
1
9
9
1
9
2
2
9
9
1
9
9
1
9
2

Pos.	Item	Quantity	Description	Bezeichnung
1	968050708	2	CARRIER	TRAEGER SCHWK.
2	968710308	2	CARRIER T ZN O	TRAEGER SCHWK.
4	968052308	4	BEARING WELDED	LAGERUNG SCHWK.
5	97032836	3	GUIDING RAIL 5X1380X184 S700MC FLZN	FUEHRUNGSSCHIENE
6	97032837	3	GUIDING RAIL 5X1380X184 S700MC FLZN	FUEHRUNGSSCHIENE
7	97032838	32	PLATE 4X60X115 S315MC FE//ZNNI8//CN//T	BLECH
8	97032839	32	PLATE 1X60X115 DC01 FE//ZNNI8//CN//T0	BLECH
9	968331708	6	FUSE HOLDER RAUPENTRAEGER ⇨ ❑ 125	SICHERUNGSHALTER
10	97032692	8	BUSHING 45.0X32 35NICRMOV125 SPF	BUCHSE
11	97039576	2	PLATE 3X70X105 S355MC FE//ZNNI8//CN//T	BLECH
20	10878687	32	HEX SCREW ISO 4014 M16X85 8.8 FLZN SP	SECHSKANTSCHRAUBE
21	12224034	8	HEX SCREW ISO 4014 M16X90 8.8 FLZN SP	SECHSKANTSCHRAUBE
22	10875859	40	HEX NUT ISO 7040 M16 8 FLZN SPF	SECHSKANTMUTTER
23	4600021	80	WASHER DIN 7349 17 200HV FLZN SPF	SCHEIBE
24	97033383	4	DISTANCE PLATE 8X60X120 S355MC FE//ZN	DISTANZBLECH
25	97033390	4	DISTANCE PLATE 1X60X120 DC01 FE//ZNNI	DISTANZBLECH
30	404230108	12	SOCKET HEAD SCREW ISO 4762 M10X25 A2	ZYLINDERSCHRAUBE
31	11658580	12	WASHER DIN 7349 10,5 200HV-St FLZN SPF	SCHEIBE
32	10490116	2	QUICK RELEASE PIN 12X90X40 NIROSTA	KUGELSPERRBOLZEN
33	11113906	4	COUNTERSUNK SCREW DIN 7991 M6X20 A	SENKSCHRAUBE
34	10540500	4	WASHER ISO 7093-1 6 200HV-A4	SCHEIBE
35	11656734	4	HEX NUT ISO 7040 M6 8 480H SPF	SECHSKANTMUTTER
40	10179447	36	COUNTERSUNK SCREW DIN 7991 M10X20 8	SENKSCHRAUBE
50	11840140	8	SOCKET HEAD SCREW ISO 4762 M12X50 8	ZYLINDERSCHRAUBE
51	11840127	8	HEX NUT ISO 7040 M12 8 FLZN SPF	SECHSKANTMUTTER
52	10410178	8	WASHER ISO 7089 12 200HV-A2	SCHEIBE

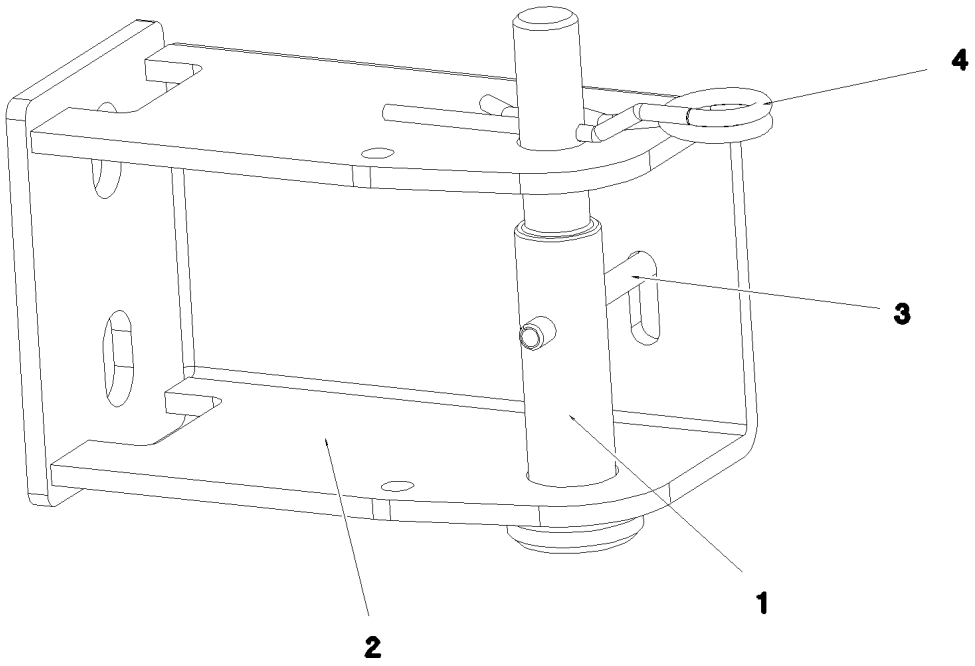

Pos.	Item	Quantity	Description	Bezeichnung
1	97039420	1	PIN 25.0X100 S355J2G3C+C FE//ZNNI8//CN/	BOLZEN
2	97032840	1	HOLDER 4X173X175 X5CRNI18-10	HALTER
3	10663567	1	DOWEL PIN ISO 8752 5X50 A2	SPANNSTIFT
4	10875868	1	SPRING PLUG 3-3,5-62 480H SPF	FEDERSTECKER

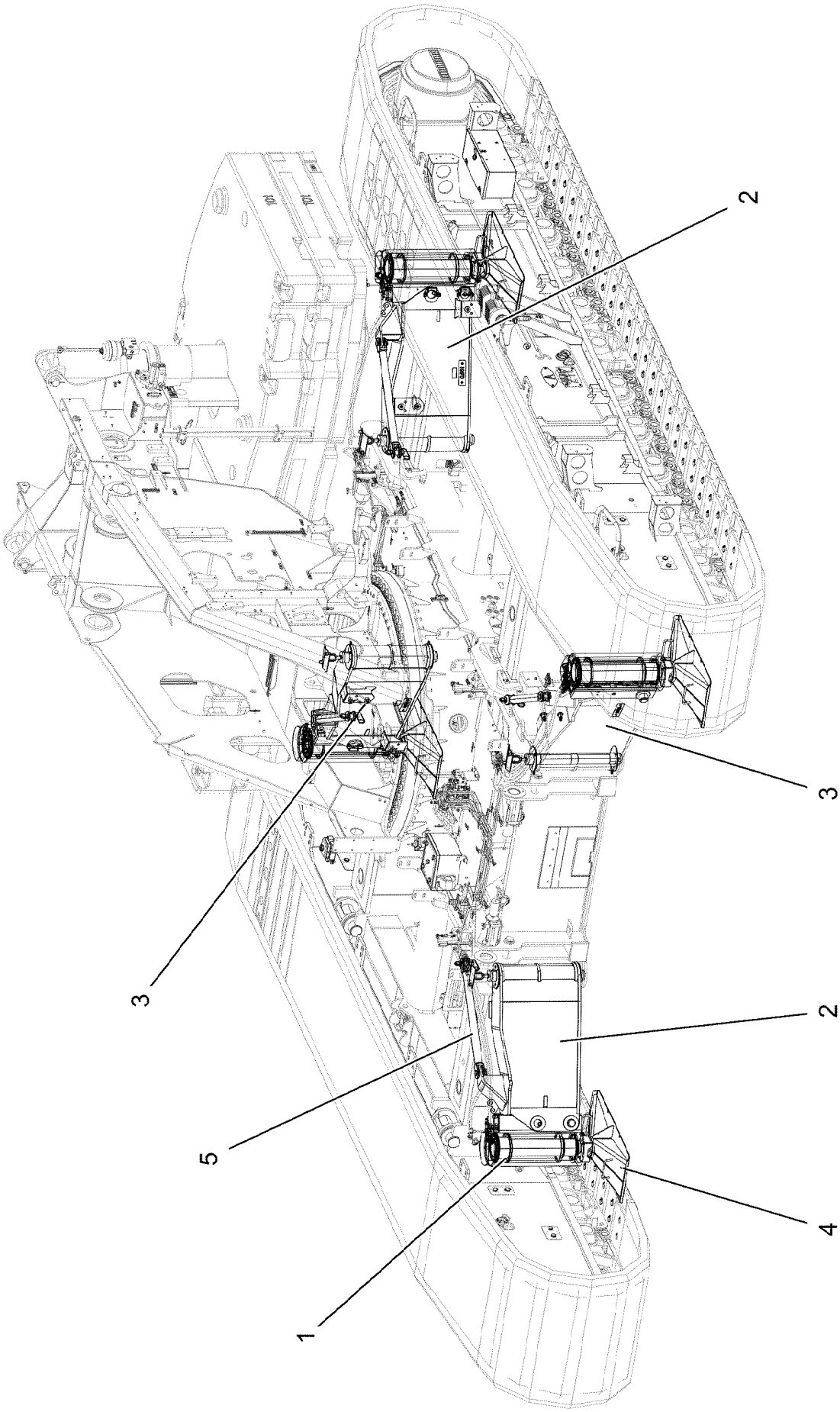
Pos. 100
2
3
3
2
5
4
1

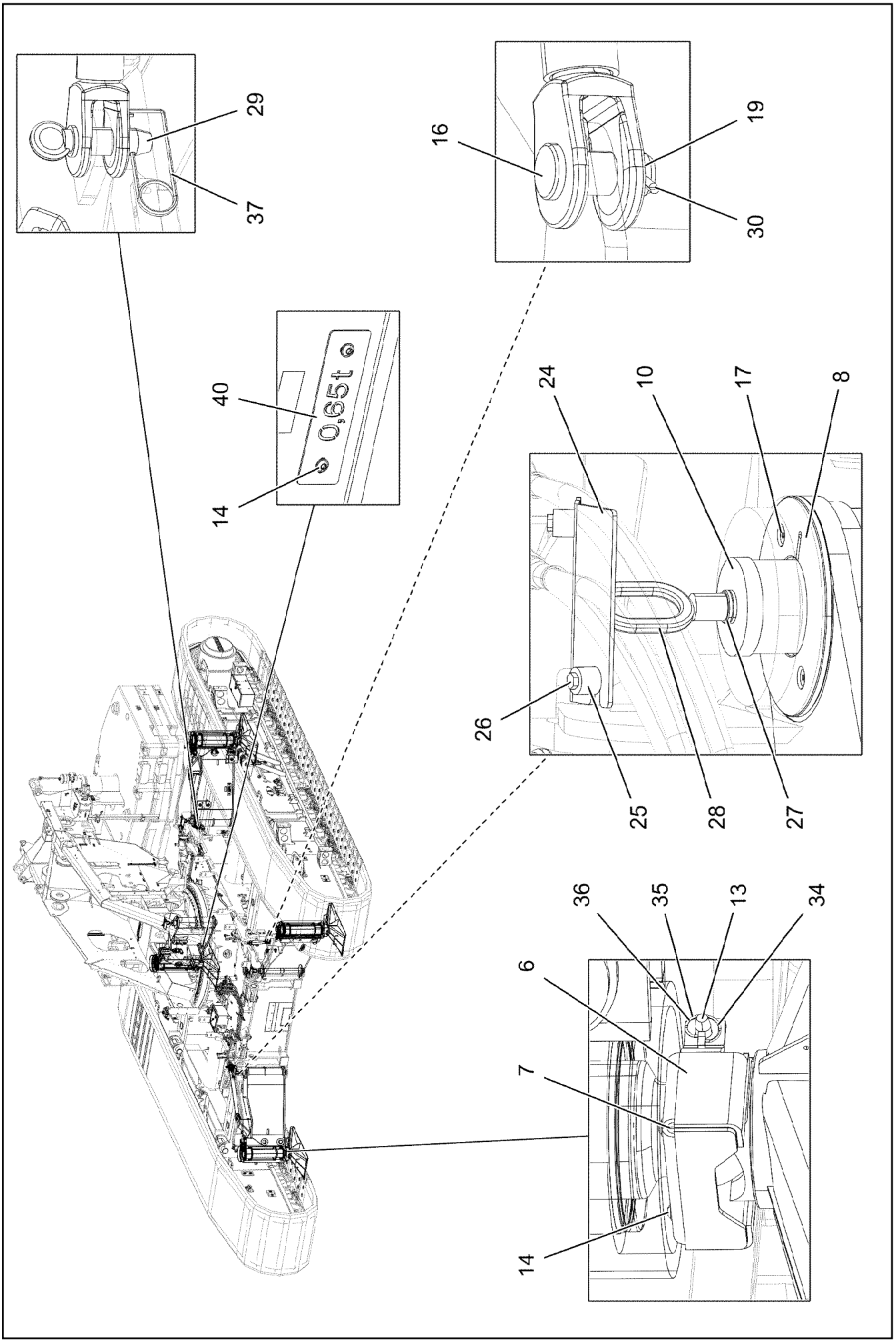
29
37
16
19
30
40
14
0,35t
24
10
17
8
26
25
28
27
36
35
13
34
6
7
14

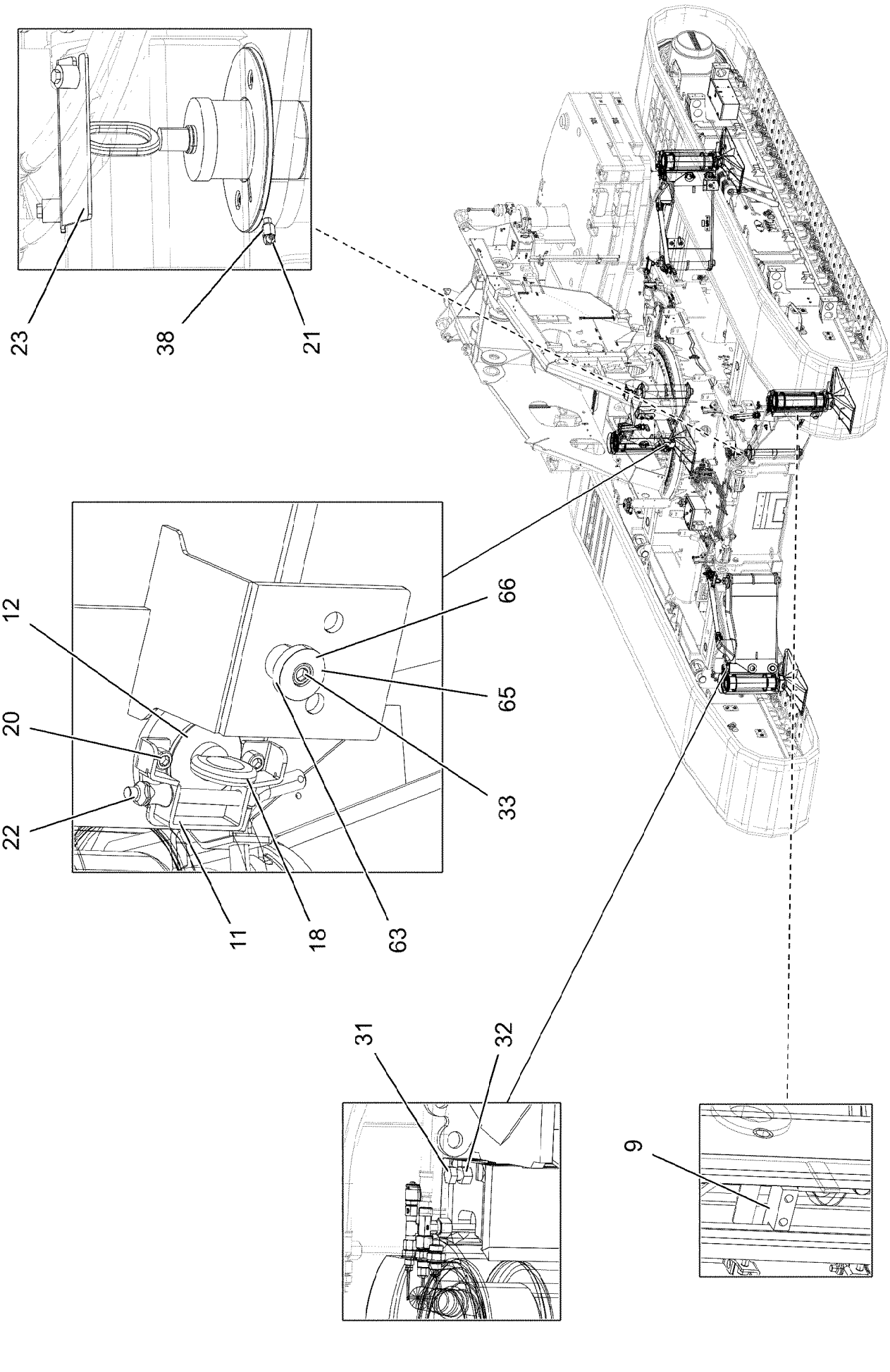
23
38
21
12
20
22
66
65
33
11
18
63
31
32
9

Pos.	Item	Quantity	Description	Bezeichnung
1	11182950	4	SUPPORT CYLINDER 240/210-860 SPF	ABSTUETZZYLINDER
(1)	11214357	1	CARTRIDGE FOR BRAKE VALVE 600BAR G	BREMSVENTILPATRONE
(999)	10878366	1	DS SUPPORT CYLINDER	DS ABSTUETZZYLINDER
2	96049688	2	BRACKET WELDED CONST.	KONSOLE SCHWK.
3	96049689	2	BRACKET WELDED CONST.	KONSOLE SCHWK.
4	967996608	4	SUPPORT PLATE ST.CONST.	ABSTUETZPLATTE SCHWK.
5	964581908	4	ROD ST.CONST.	STANGE SCHWK.
6	968014908	4	BRACKET WELDED CONST. FE//ZNNI8//CN/	KONSOLE SCHWK.
7	97032167	4	INSERT PART 10X91X152 PA6G+OEL	EINLEGETEIL
8	97032155	8	THRUST WASHER 200X7 GZ-CUZN25AL5	ANLAUFSCHEIBE
9	97052637	4	PLATE 25X107X49 S690QL	BLECH
10	97032093	4	PIN 90.0X785 35NICRMOV125 SPF	BOLZEN
11	969168408	8	BRACKET WELDED CONST. FE//ZNNI8//CN/	KONSOLE SCHWK.
12	97032197	4	PIN 70.0X283 35NICRMOV125 SPF	BOLZEN
13	968014808	4	COTTER PIN FE//ZNNI8//CN//T0	STECKER SCHWK.
14	10875485	16	BUTTON HEAD SCREW AEHNL.ISO 7380-2	HALBRUNDKOPFSCHRAUBE
16	10027134	4	PIN DIN 1436 35X82X72 35NICRMOV125 GA	BOLZEN
17	10875552	16	COUNTERSUNK SCREW DIN 7991 M8X16 8	SENKSCHRAUBE
18	10179932	8	RING BOLT DIN 580 M12 C15E FLZN	RINGSCHRAUBE
19	948717708	4	WASHER RD60X2 ALMG3 H111	SCHEIBE
20	12222407	16	SOCKET HEAD SCREW ISO 4762 M10X16 8	ZYLINDERSCHRAUBE
21	774301808	8	GREASE NIPPLE DIN 71412 C M10X1	SCHMIERNIPPEL
22	11160586	4	QUICK RELEASE PIN 12X115X80 NIROSTA	KUGELSPERRBOLZEN
23	97033009	2	PLATE 4X180X143 S700MC	BLECH
24	97033010	2	PLATE 4X180X145 S700MC	BLECH
25	953873408	8	SLEEVE 25X20 11SMN37 FE//ZNNI8//CN//T0	HUELSE
26	11651612	8	HEX SCREW ISO 4017 M8X16 8.8 480H SPF	SECHSKANTSCHRAUBE
27	421500201	8	WASHER EN 14399-6 16 300-370HV-ST A3B	SCHEIBE
28	925642908	4	HANDLE GRIP WELDED FE//ZNNI8//CN//T0	GEWINDEGRIFF SCHWK.
29	97032320	4	PIN 45.0X105 35NICRMOV125 SPF	BOLZEN
30	10875873	4	SPLIT PIN ISO 1234 8X63 ST 480H SPF	SPLINT
31	10001467	4	HEX SCREW ISO 4017 M16X80 8.8 FLZN SP	SECHSKANTSCHRAUBE
32	10875617	4	HEX NUT ISO 4032 M16 8 FLZN SPF	SECHSKANTMUTTER
33	11840140	14	SOCKET HEAD SCREW ISO 4762 M12X50 8	ZYLINDERSCHRAUBE
34	10875869	4	SAFETY PLUG W HINGE-LID 5X29X4,7X25 4	SICHERHEITSKLAPPSTECKER
35	11160431	2	ROPE 2 2,3KN EDELSTAHL	SEIL
36	11170565	8	FERRULE 2 CU	PRESSKLEMME
37	433100908	4	RETAINING SPRING 4,5X98 ISO 2081 FE/ZN	SICHERUNGSFEDER
38	774374508	8	EXTENSION M8X1	VERLAENGERUNG
40	97046465	4	PLATE 2X200X60 DC01 FE//ZNNI8//CN//T0	BLECH
63	97032692	12	BUSHING 45.0X32 35NICRMOV125 SPF	BUCHSE
65	10410178	12	WASHER ISO 7089 12 200HV-A2	SCHEIBE
66	11840127	12	HEX NUT ISO 7040 M12 8 FLZN SPF	SECHSKANTMUTTER
100	917430308	1	HYDRAULIC SUPPORT ⇨ ❑ 130	HYDRAULIK ABSTUETZUNG

Pos.	Item	Quantity	Description	Bezeichnung
4	968077208	1	HYDRAULIC SUPPORT ⇨ ❑ 131	HYDRAULIK ABSTUETZUNG

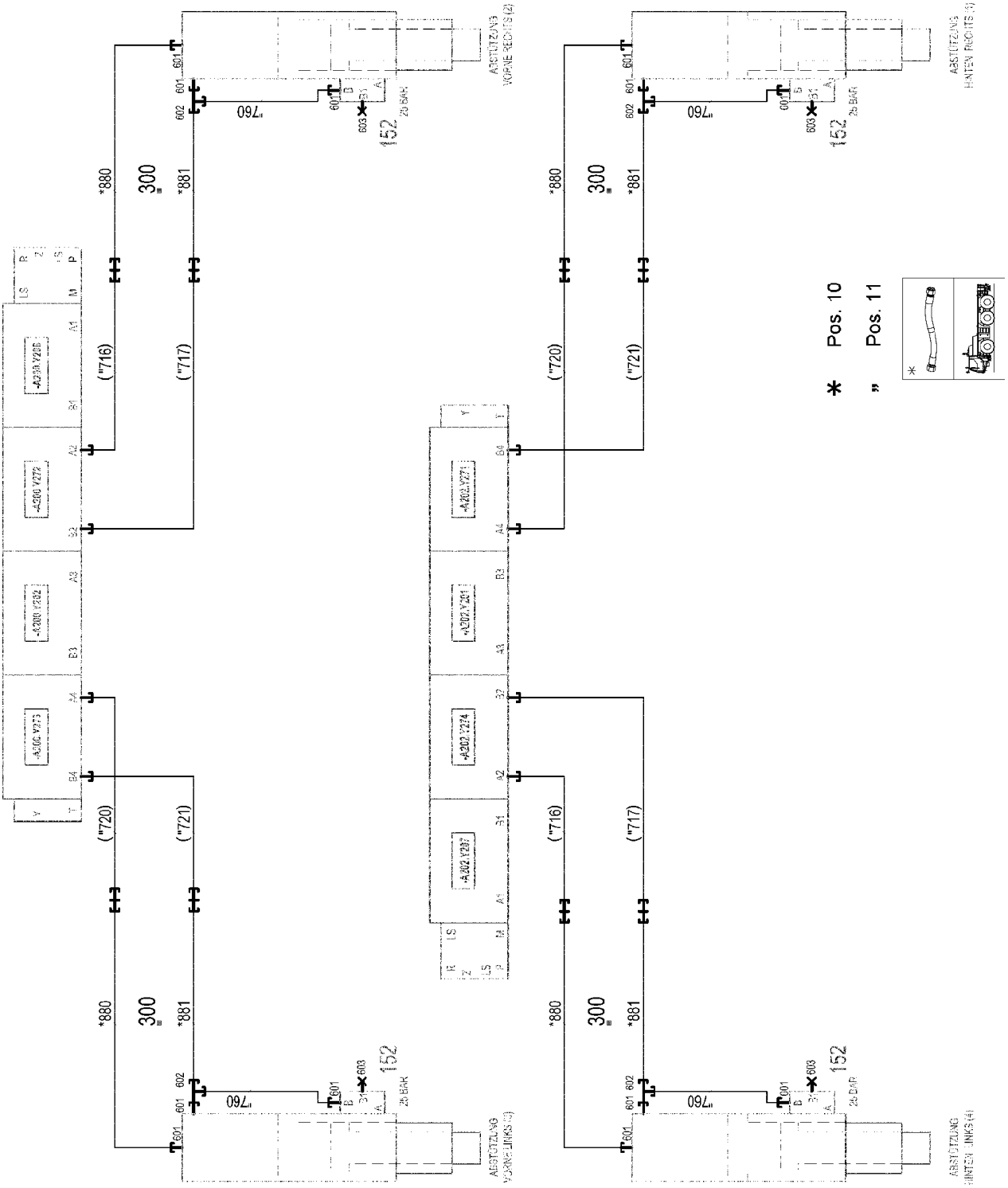
Pos. 10
Pos. 11

Pos.	Item	Quantity	Description	Bezeichnung
10	968077308	1	HOSE LINES SUPPORT SYSTEM	SCHLAUCHLEITUNGEN ABSTUE
(880)	929310208	4	HOSE CPL. 2SN 10X1500	SCHLAUCH KPL.
(881)	926555408	4	HOSE CPL. 2SN 10X1460	SCHLAUCH KPL.
11	968078808	1	PIPELINE SUPPORT	ROHRLEITUNGEN ABSTUETZUN
(760)	968168808	4	PIPE COMPL. 12X1,5X467 12S - 12S	ROHR KPL.
152	511322808	4	PRETENSIONING VALVE 25BAR	VORSPANNVENTIL
(14)	11659651	1	HOLDING RING	HALTERING
(15)	11493963	1	HOLLOW SCREW M18X1,5 C 45K	HOHLSCHRAUBE
(99)	10802870	1	SEALING SET VALVE	DS VENTIL
300	10449843	5.2	HOSE GUARD DN44-65 SGX50 PE	SCHLAUCHSCHUTZ
601	471032908	12	FITTING GE 12S M18X1,5 CR6-FREI	VERSCHRAUBUNG
602	7617461	4	FITTING EL 12S CR6-FREI	VERSCHRAUBUNG
603	477704408	4	STOP PLUG VSTIM16X1,5ED CR6-FREI	STOPFEN

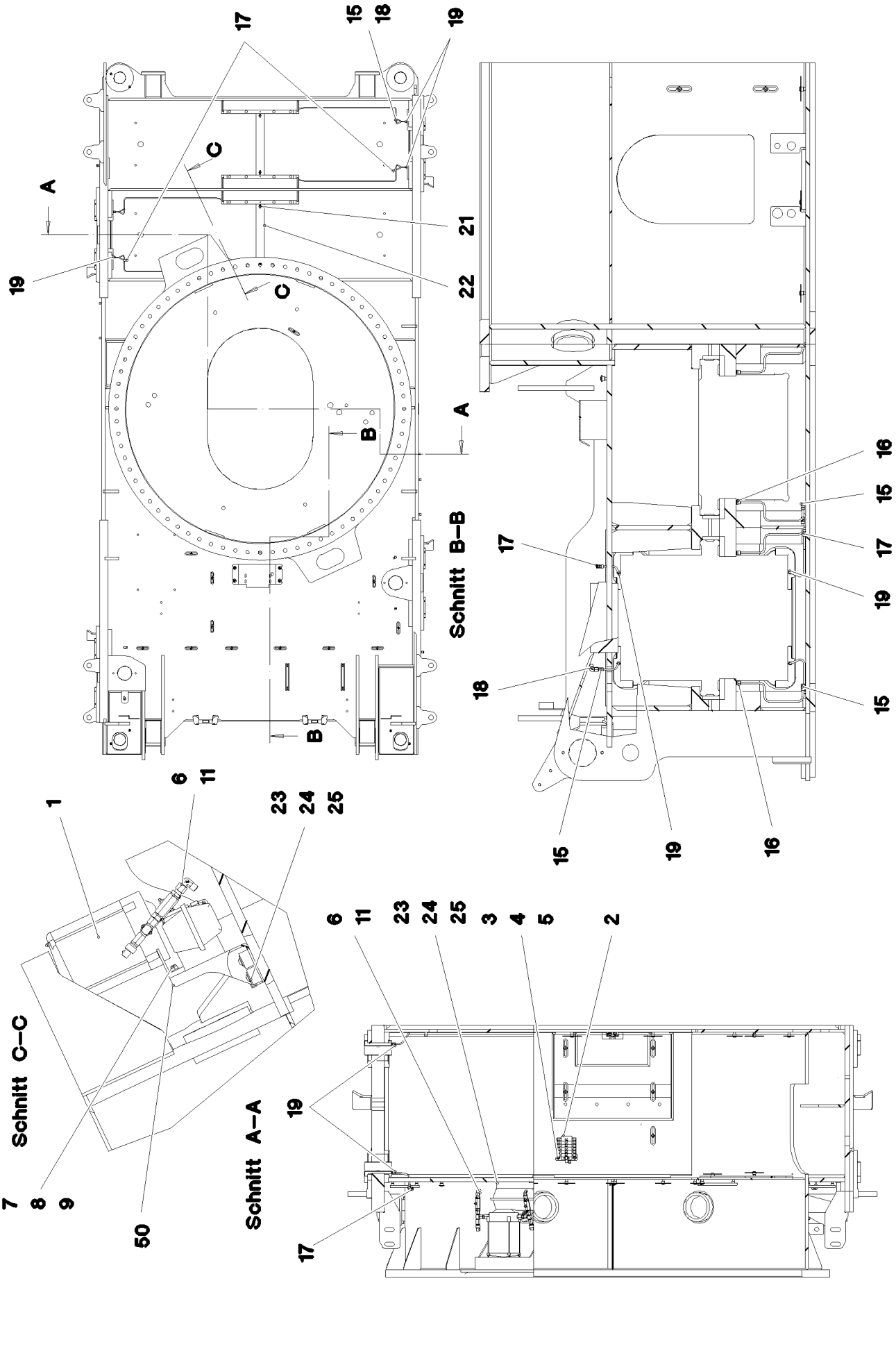
17
15
18
19
A
C
21
22
19
C
B
A
B
Schnitt B–B
16
15
17
17
19
18
15
15
19
16
6
11
23
24
25
1
Schnitt C–C
7
8
9
50
Schnitt A–A
6
11
23
24
25
3
4
5
2
19
17

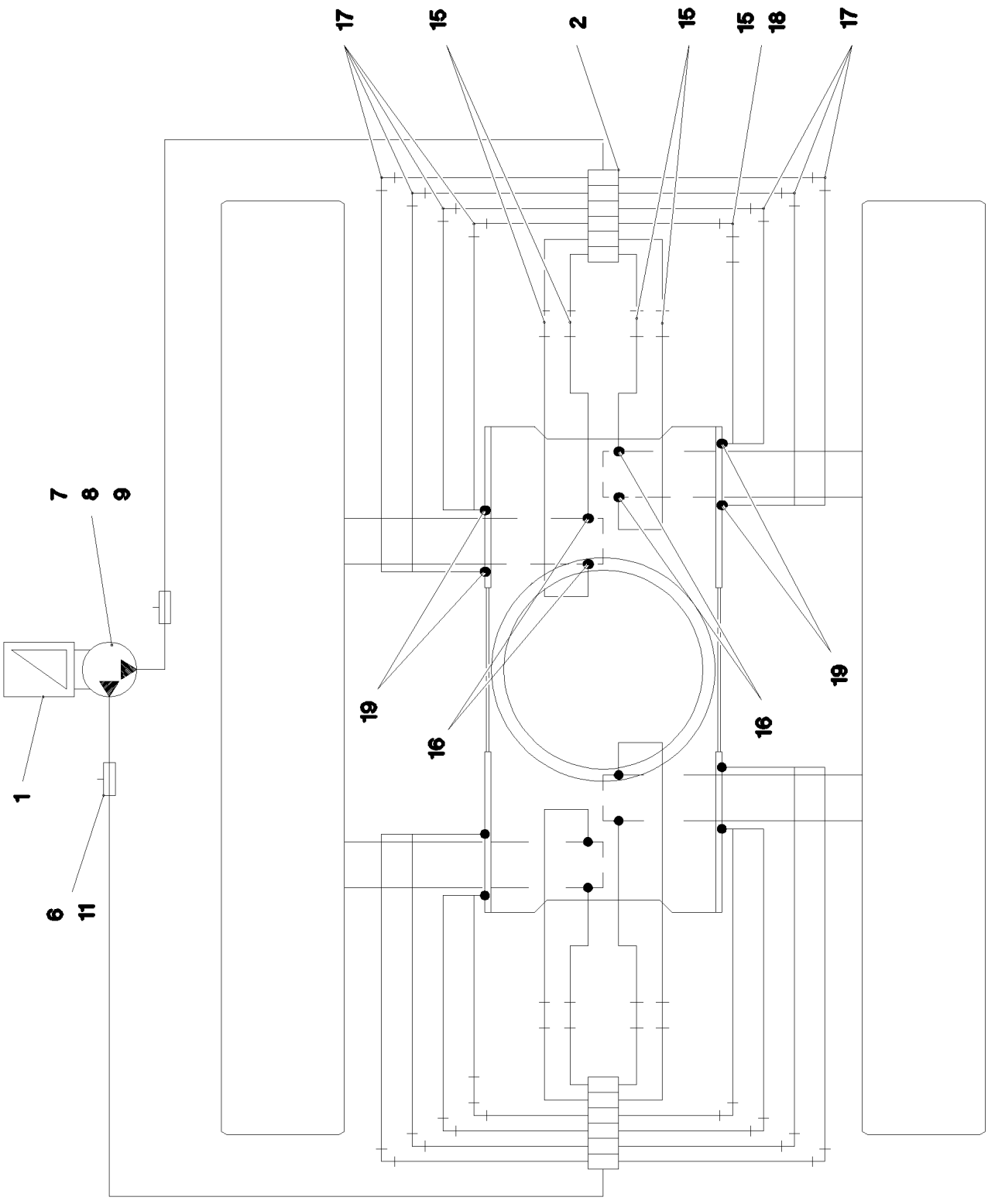
17
15
2
15
15
18
17
7
8
9
19
16
16
19
1
6
11

Pos.	Item	Quantity	Description	Bezeichnung
1	11347526	1	ELECTRIC PUMP EP-1 ⇨ ❑ 136	ELEKTROPUMPE
2	11347500	2	DISTRIBUTION BLOCK MX-F 6/12 ⇨ ❑ 137	VERTEILERKOMBINATION
3	12204614	4	SOCKET HEAD SCREW ISO 4762 M5X35 8.8	ZYLINDERSCHRAUBE
4	10875620	4	HEX NUT ISO 4032 M5 8 480H SPF	SECHSKANTMUTTER
5	10197808	4	WASHER ISO 7089 5 200HV ZNNI-480H	SCHEIBE
6	774375108	2	PASSAGE NIPPLE BLOCK ⇨ ❑ 139	DURCHGANGSNIPPELBLOCK
7	10197831	2	HEX SCREW ISO 4017 M8X25 8.8 ZNNI-480	SECHSKANTSCHRAUBE
8	12103465	2	WASHER ISO 7089 8 300HV ZNNI-480H SPF	SCHEIBE
9	11693875	2	HEX NUT ISO 4032 M8 8 480H SPF	SECHSKANTMUTTER
11	472531508	2	FITTING EW 6S M14X1,5 CR6-FREI	VERSCHRAUBUNG
13	477101408	22	PROFILE RING PR6-S/L A3P	PROFILRING
14	477401308	22	BOX NUT AL6 A3P	UEBERWURFMUTTER
15	470030108	10	FITTING XG6-L CR6-FREI	VERSCHRAUBUNG
16	471030108	8	FITTING XGE6-LM-ED CR6-FREI	VERSCHRAUBUNG
17	470200108	14	FITTING W 6L	VERSCHRAUBUNG
18	247021702	2	SWIVEL ELBOW EW 6L CR6-FREI	WINKELSTUTZEN
19	774374808	16	FITTING GE 6LL M8X1	VERSCHRAUBUNG
21	12102696	8	BUTTON HEAD SCREW ISO 7380-2 M8X10 0	HALBRUNDKOPFSCHRAUBE
22	97042011	4	U-PROFILE 1X500X89 DC01 FE//ZNNI8//CN/	U-PROFIL
23	10875485	3	BUTTON HEAD SCREW AEHNL.ISO 7380-2	HALBRUNDKOPFSCHRAUBE
24	11140469	3	WASHER ISO 7093-1 8 200HV 480H SPF	SCHEIBE
25	978787708	3	SLEEVE 33.0X19 FE//ZNNI8//CN//T0	HUELSE
26	774383508	10	TUBING COIL 9	ROHRWENDEL
27	10873149	50	POLYAMID PIPE DIN 73378 6X1,5 PA 12-HL	POLYAMIDROHR
50	97047676	1	HOLDER 4X337X245 S315MC	HALTER

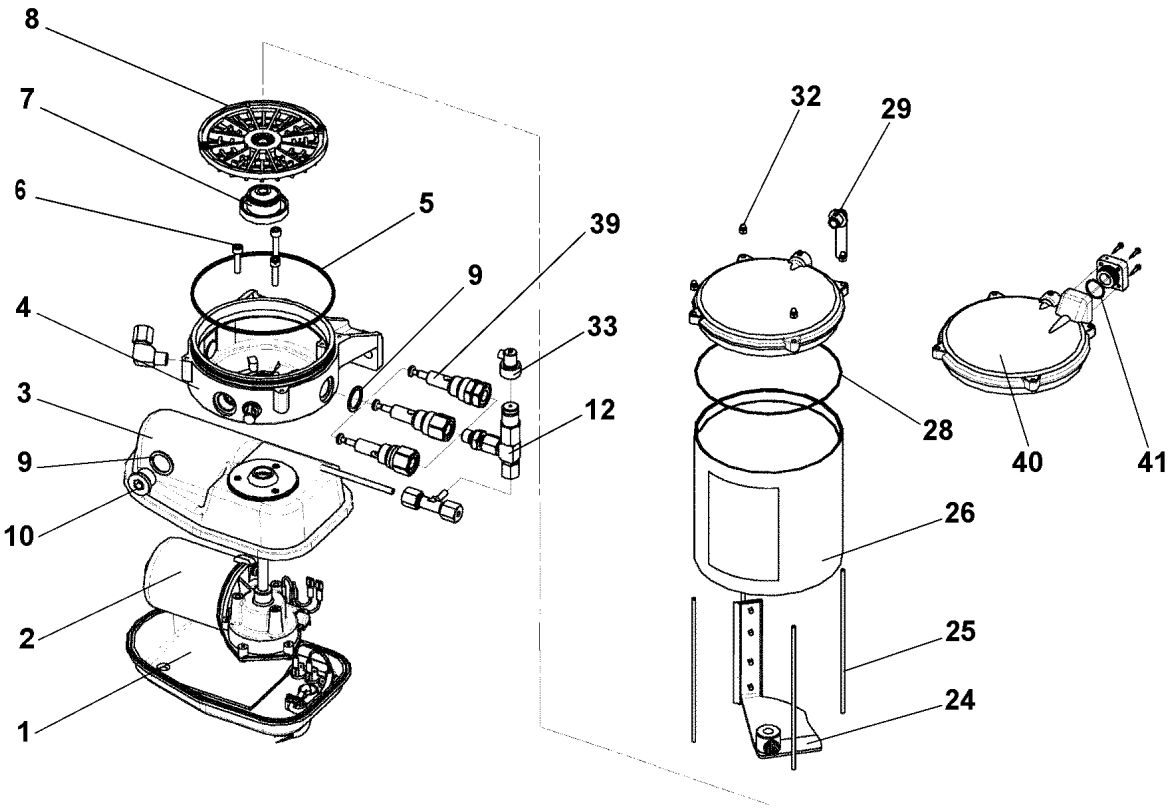

Pos.	Item	Quantity	Description	Bezeichnung
1	10675728	1	MOTOR HOUSING UNTEN	MOTORGEHAEUSE
2	10355140	1	TRANSMISSION MOTOR 24V	GLEICHSTROMGETRIEBEMOTO
3	10014692	1	MOTOR HOUSING	MOTORGEHAEUSE
4	10014693	1	PUMP HOUSING	PUMPENGEHAEUSE
5	726452801	1	O-RING 135X3 NBR 70 SPF	O-RING
6	10875588	3	SOCKET HEAD SCREW ISO 4762 M6X25 8.8	ZYLINDERSCHRAUBE
7	10014729	1	DRIVER	MITNEHMER
8	10014730	1	INTERMEDIATE RING	ZWISCHENRING
9	10014697	3	SEALING RING 27X20X1,5 CU	DICHTRING
10	12218194	1	SCREW PLUG DIN 908 M20X1,5 St FLZN SP	VERSCHLUSSSCHRAUBE
12	571328408	2	PRESSURE RELIEF VALVE	UEBERDRUCKVENTIL
24	10664141	1	AGITATOR PADDLE	RUEHRFLUEGEL
25	10099209	4	PULL ROD	ZUGSTANGE
26	10038271	1	CONTAINER	BEHAELTER
27	967421808	1	STICKER BEHAELTER 2,5KG	AUFKLEBER
(1)	10663909	1	STICKER	AUFKLEBER
(2)	11494432	1	SIGN	SCHILD
(3)	11494581	1	SIGN	SCHILD
28	10099208	1	O-RING 133,07X1,78 NBR 70	O-RING
29	10292724	1	VENTILATION TUBE	ENTLUEFTUNGSROHR
32	4002886	4	CAP NUT DIN 986 M4 A2-70	HUTMUTTER
33	10429952	2	FAULT INDICATOR	STOERANZEIGE
39	11001770	2	PUMP ELEMENT	PUMPENELEMENT
40	12102477	1	COVER	BEHAELTERDECKEL
41	502624508	1	O-RING 19X1,5 NBR70	O-RING

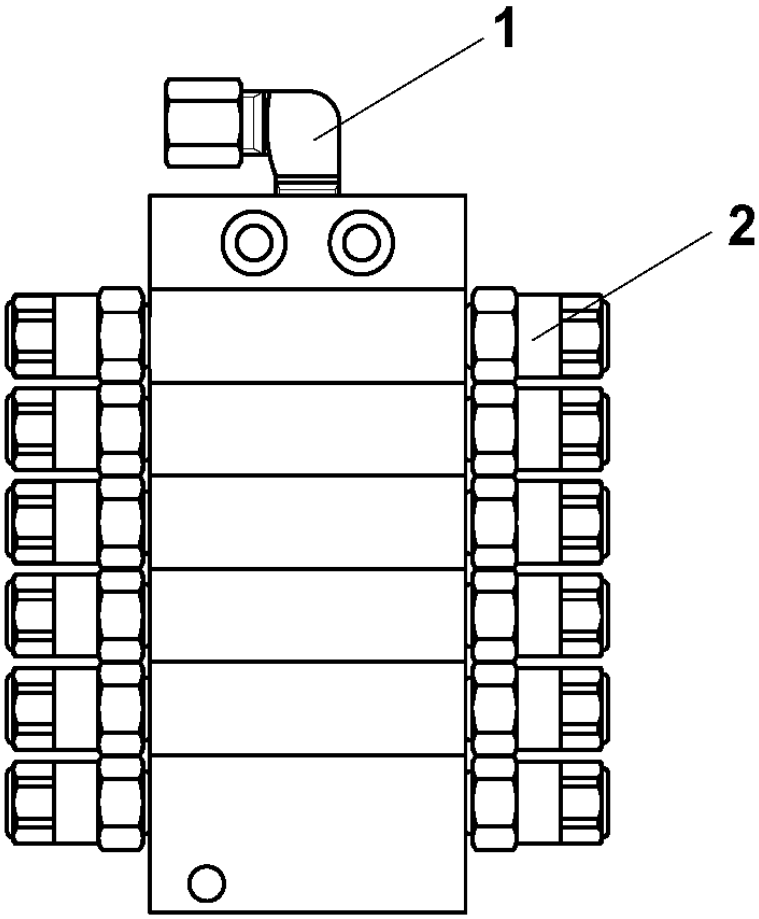
1
2

Pos.	Item	Quantity	Description	Bezeichnung
1	774373808	1	FITTING WE 6LL M10x1	VERSCHRAUBUNG
2	11183029	12	PLUG-IN CONNECTOR GERADE 6MM	STECKVERBINDER

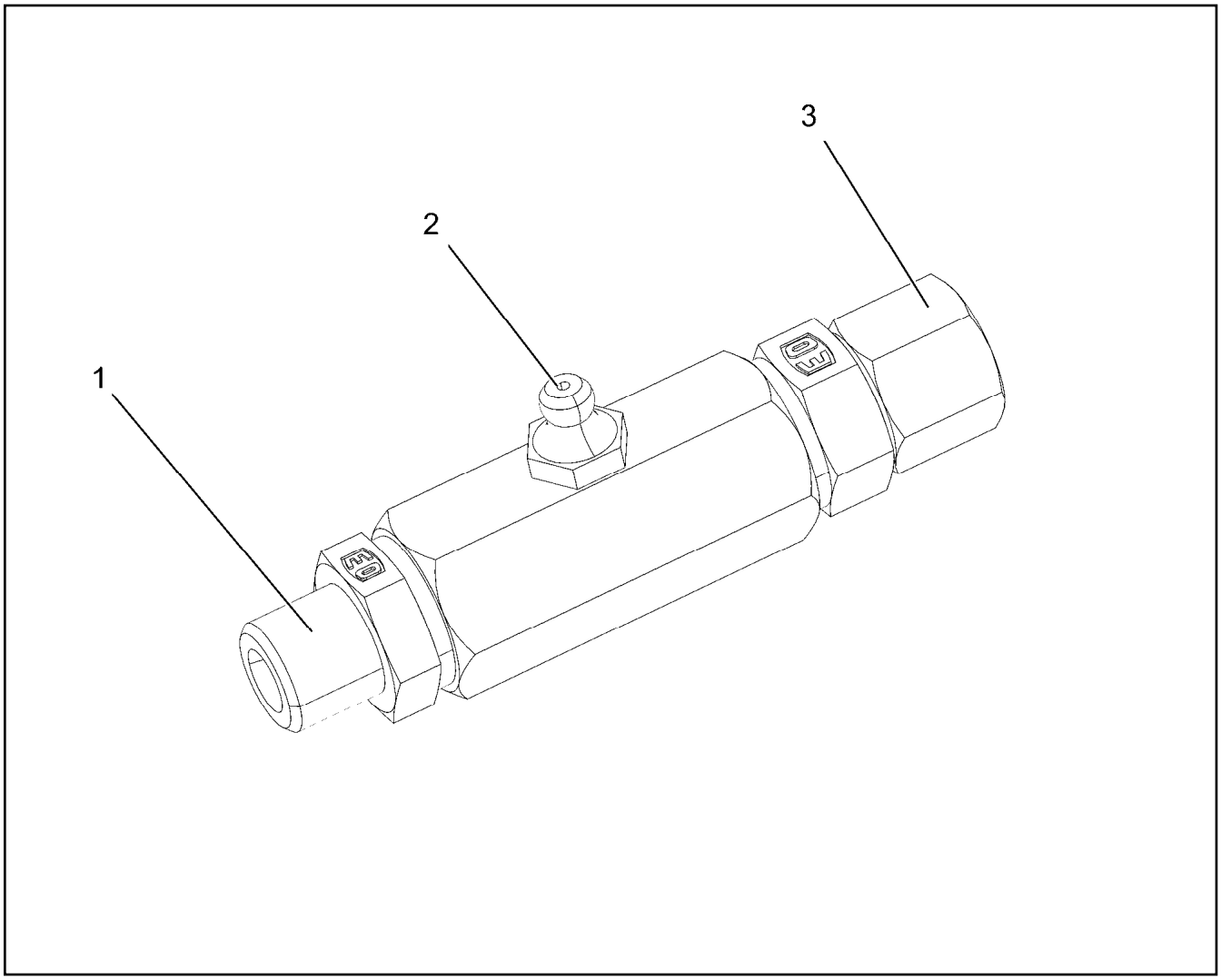

Pos.	Item	Quantity	Description	Bezeichnung
1	10014698	1	PIPE SOCKET R1/4"	ROHRSTUTZEN
2	571578608	1	HYDRAULIC-TYPE LUBRICAT.NIPPLE DIN 71	KEGELSCHMIERNIPPEL
3	11081053	1	FITTING	VERSCHRAUBUNG

Pos.	Item	Quantity	Description	Bezeichnung
10	96045204	1	CABLE LIST ⇨ ❑ 141	KABELLISTE
30	96045206	1	MECHANICAL AUXILIARIES ⇨ ❑ 143	MECHANISCHE ANBAUTEILE

Pos.	Item	Quantity	Description	Bezeichnung
30	96045205	1	WIRING HARNESS W227 ⇨ ❑ 142	KABELSTRANG

Pos.	Item	Quantity	Description	Bezeichnung
5	10871126	1	COUPLING SOCKET 4-POL SPF	KUPPLUNGSDOSE
6	10873383	1	COUPLING SOCKET 4-POL SPF	KUPPLUNGSDOSE
500	923512208	3	CABLE MARKER	KABELMARKER
501	604526608	1	PIN CARRIER 6-POL 16A	STIFTTRAEGER
502	604512108	1	SEALING PLUG M1-D	VERSCHLUSSKAPPE
503	10476382	1	CABLE SOCKET M1	KABELDOSE
504	602421908	1	INSERT M20 2X5 NBR	MEHRFACHDICHTEINSATZ
505	602441001	1	CABLE GLAND M20X1,5X5-10 MS	KABELVERSCHRAUBUNG
719	10493972	6	PIN CONTACT 0,5MM2 SILBER	STIFTKONTAKT
812	604518908	1	STOPPER PLUG BAUREIHE_M1	BLINDSTOPFEN
998	965622208	3	LETTERING WIRING HARNESS	BESCHRIFTUNG KABELBAUM

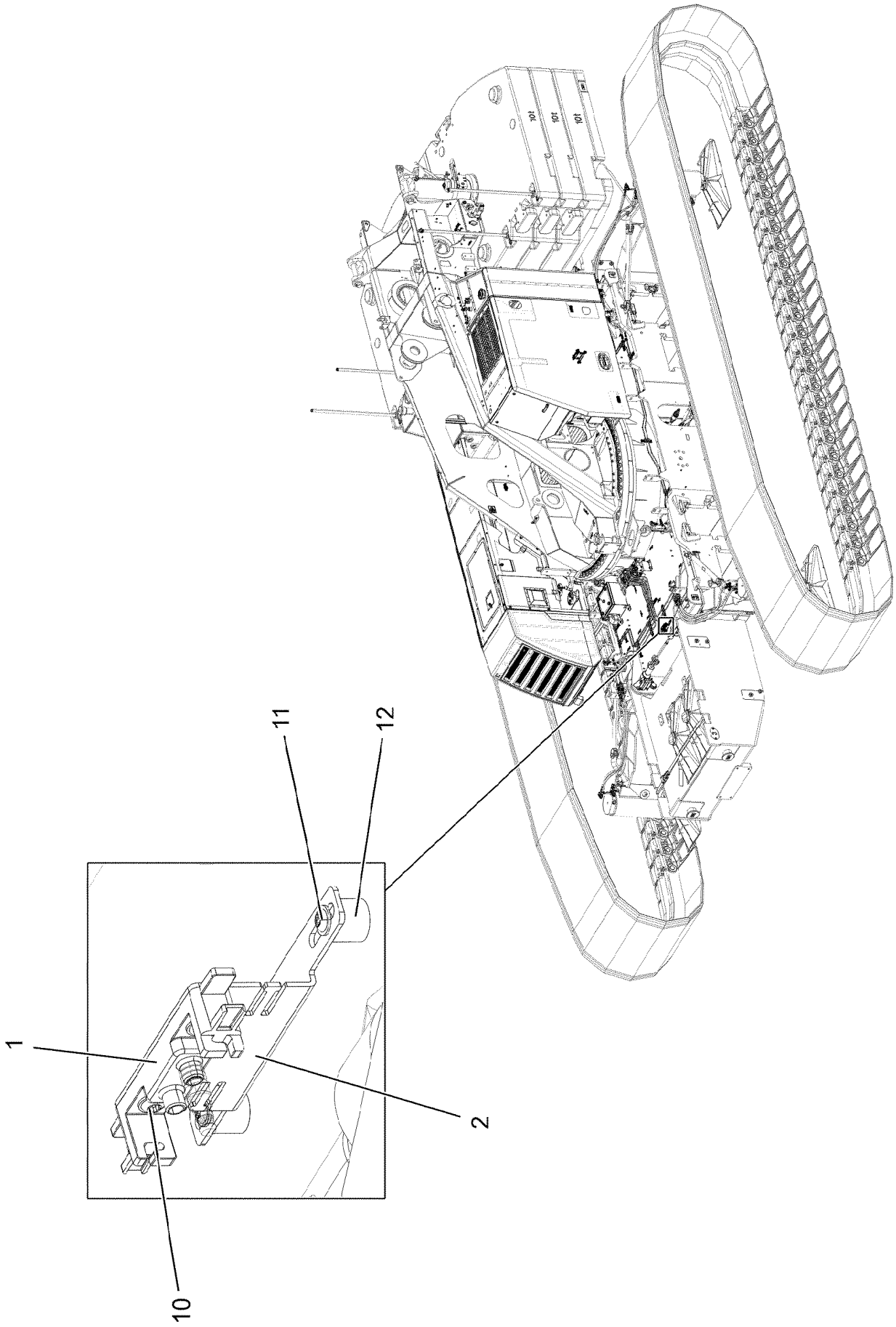
101
101
101
11
12
1
2
10

Pos.	Item	Quantity	Description	Bezeichnung
1	97098446	2	HOLDER PA6MDGF30 SPF	HALTER
2	97132207	2	PLATE 3X240X109 S355MC FE//ZNNI8//CN//T	BLECH
10	10875471	4	BUTTON HEAD SCREW AEHNL.ISO 7380-2	HALBRUNDKOPFSCHRAUBE
11	10876082	4	BUTTON HEAD SCREW AEHNL.ISO 7380-2	HALBRUNDKOPFSCHRAUBE
12	953873408	4	SLEEVE 25X20 11SMN37 FE//ZNNI8//CN//T0	HUELSE

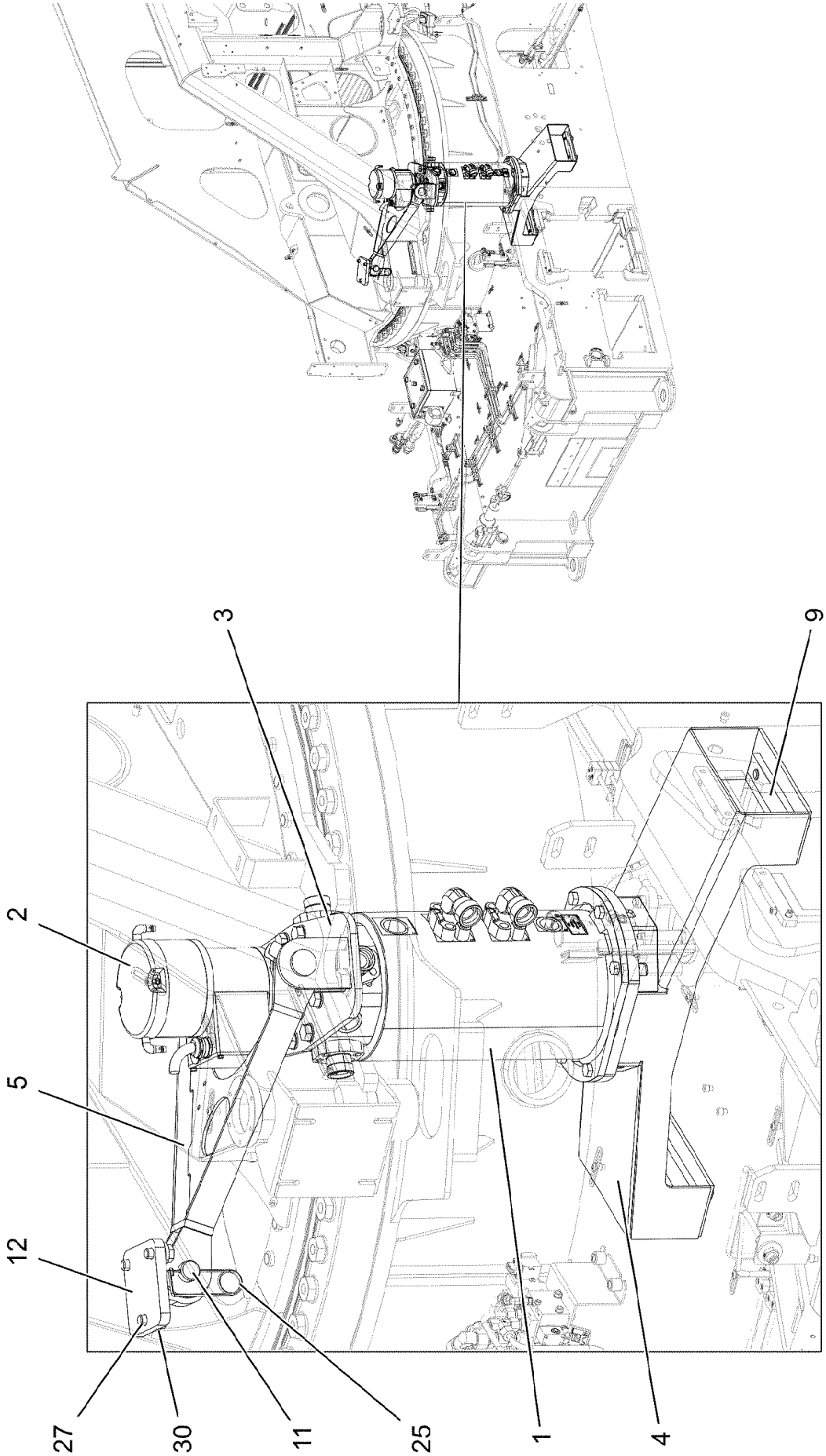
3
9
2
5
12
27
30
11
25
1
4

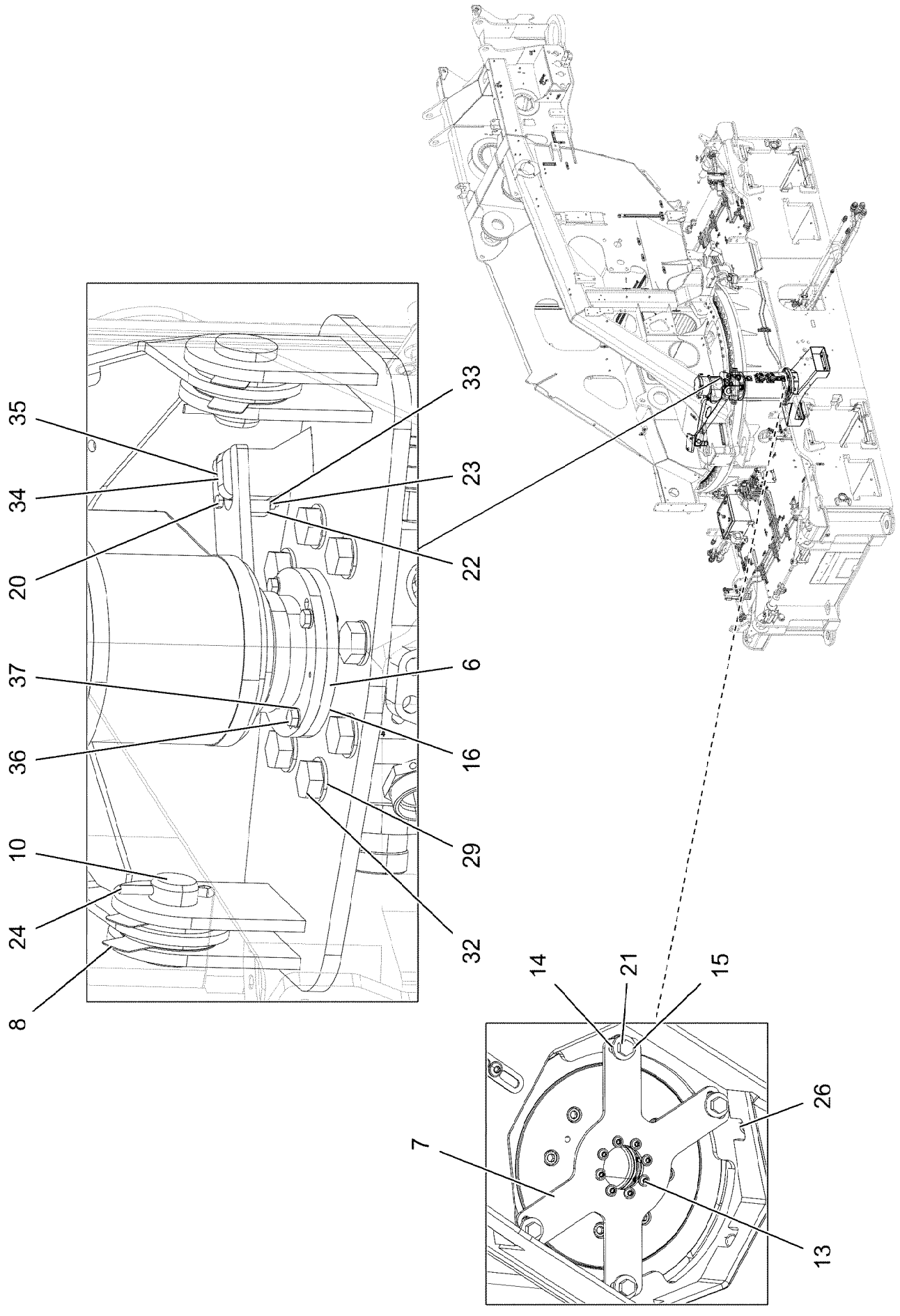
35
34
20
37
36
10
24
8
33
23
22
6
16
29
32
14
21
15
26
7
13

Pos.	Item	Quantity	Description	Bezeichnung
1	11182736	1	ROTARY FEED THROUGH SPF	DREHDURCHFUEHRUNG
(23)	10873566	2	SEALINGSET ROTARY TRANSMISSION	DS DREHDURCHFUEHRUNG
3	967996108	1	ACTUATOR WELDED	MITNEHMER SCHWK.
4	968011508	1	BRACKET WELDED CONST.	KONSOLE SCHWK.
5	961727008	1	DRAWBAR WELDED	DEICHSEL SCHWK.
6	968011608	1	PIPE WELDED	ROHR SCHWK.
7	97032020	1	PLATE 5X269X181 S355MC FE//ZNNI8//CN//T	BLECH
8	970904808	8	PLATE 80X110 DC01 FE//ZNNI8//CN//T0	BLECH
9	953608508	2	PLATE 20X45X230 S690QL	BLECH
10	451237208	2	PIN DIN 1435 40X60X50 S355J2C+C FE//ZN	BOLZEN
11	451237508	1	PIN DIN 1435 40X80X68 S355J2C+C FE//ZN	BOLZEN
12	96036907	1	BRACKET WELDED CONST.	KONSOLE SCHWK.
13	10875468	8	BUTTON HEAD SCREW AEHNL.ISO 7380-2	HALBRUNDKOPFSCHRAUBE
14	421300208	8	WASHER DIN 6340 10,5 C35	SCHEIBE
15	941530008	4	SLEEVE RD20X15 S355J2+AR FE//ZNNI8//C	HUELSE
16	97038484	2	HALF SHELL 80X25 PA6G + OEL	HALBSCHALE
20	12216202	2	HEX SCREW ISO 4017 M6X50 8.8 480H SPF	SECHSKANTSCHRAUBE
21	11626706	4	HEX SCREW ISO 4017 M10X40 8.8 FLZN SP	SECHSKANTSCHRAUBE
22	288176208	1	SHEET 15X30X50 PA6G	PLATTE
23	10197764	2	HEX NUT ISO 4032 M6 10 ZNNI-480H SPF	SECHSKANTMUTTER
24	10875873	2	SPLIT PIN ISO 1234 8X63 ST 480H SPF	SPLINT
25	433100908	1	RETAINING SPRING 4,5X98 ISO 2081 FE/ZN	SICHERUNGSFEDER
26	10875803	6	HEX SCREW ISO 4017 M16X45 8.8 FLZN SP	SECHSKANTSCHRAUBE
27	4600199	3	HEX SCREW ISO 4017 M20X40 8.8 FLZN SP	SECHSKANTSCHRAUBE
29	10289808	12	WASHER ISO 7089 20 300HV FLZN SPF	SCHEIBE
30	4600604	3	WASHER DIN 7349 21 100HV FLZN SPF	SCHEIBE
32	4065281	12	HEX SCREW ISO 4017 M20X45 8.8 FLZN SP	SECHSKANTSCHRAUBE
33	10197771	2	WASHER ISO 7089 6 200HV ZNNI-480H SPF	SCHEIBE
34	10875616	1	HEX NUT ISO 4032 M12 8 FLZN SPF	SECHSKANTMUTTER
35	11645386	1	HEX SCREW ISO 4017 M12X45 8.8 FLZN SP	SECHSKANTSCHRAUBE
36	10197831	4	HEX SCREW ISO 4017 M8X25 8.8 ZNNI-480	SECHSKANTSCHRAUBE
37	12103465	4	WASHER ISO 7089 8 300HV ZNNI-480H SPF	SCHEIBE

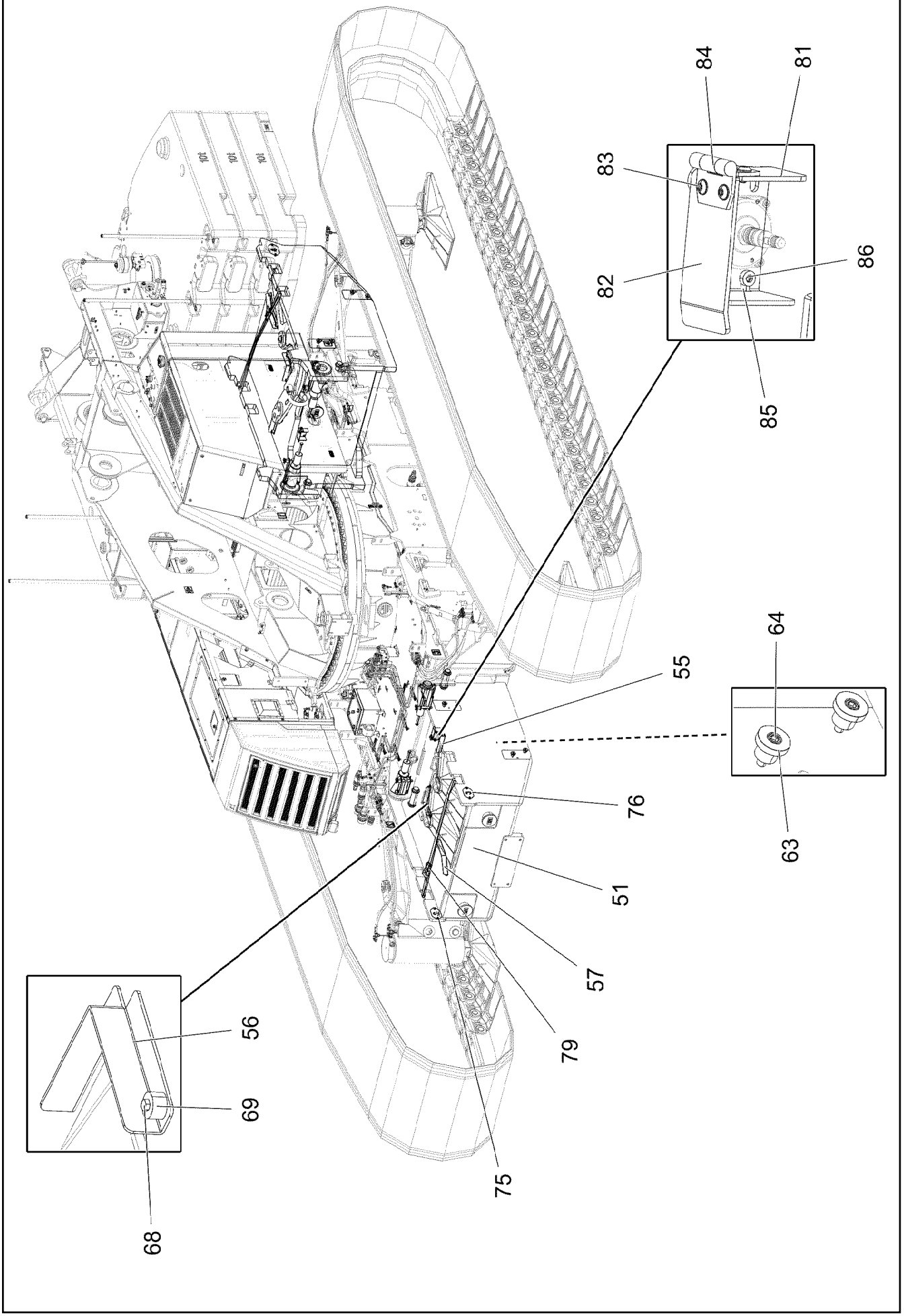
84
81
83
86
82
85
64
55
76
63
51
57
56
79
69
75
68

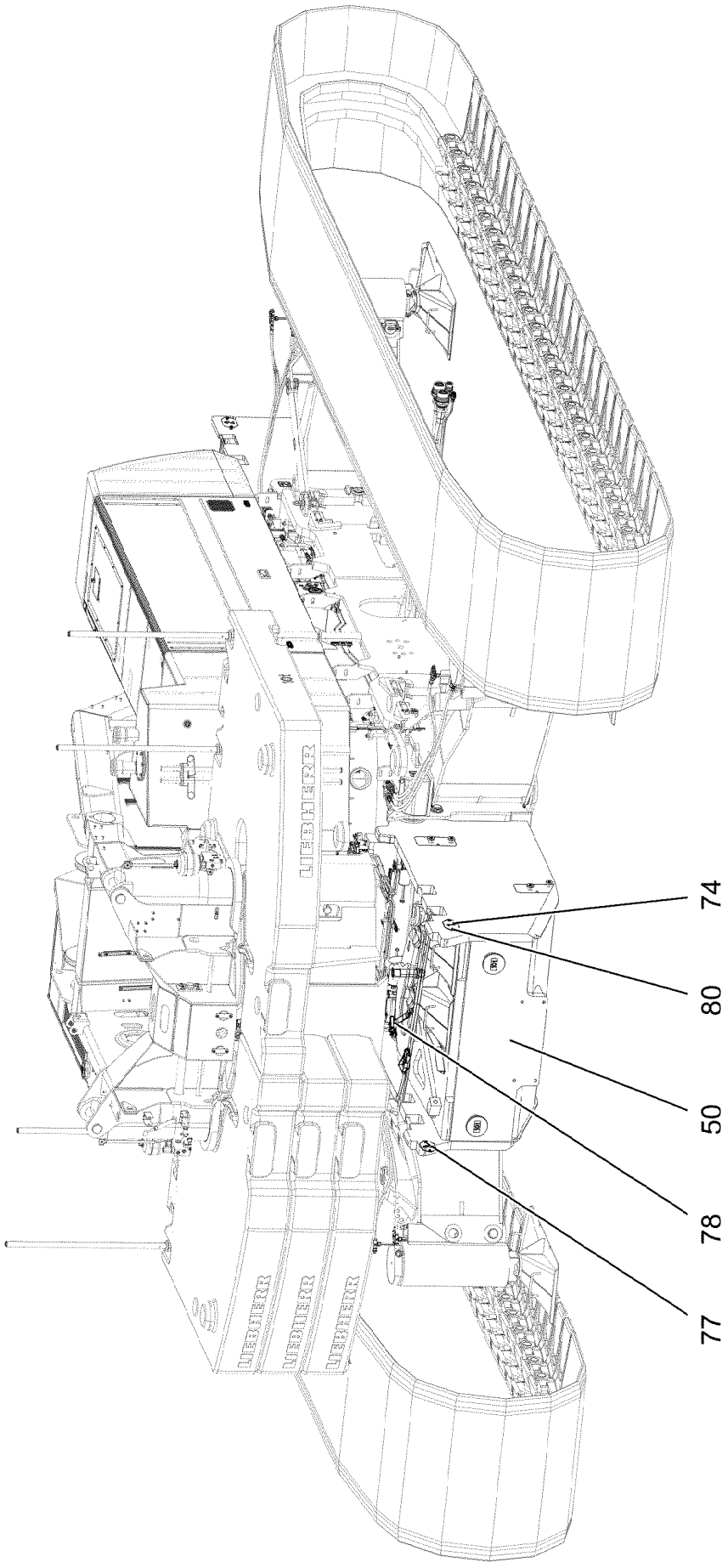
74
80
50
78
77

Pos.	Item	Quantity	Description	Bezeichnung
50	96045601	1	CENTRAL COUNTERWEIGHT WELDED SPF	ZENTRALBALLAST SCHWK.
51	96045603	1	CENTRAL COUNTERWEIGHT WELDED SPF	ZENTRALBALLAST SCHWK.
55	97015127	2	PLATE 4X210X88 S315MC FE//ZNNI8//CN//T	BLECH
56	97033250	2	PLATE 4X396X88 S315MC FE//ZNNI8//CN//T	BLECH
57	97033251	2	PLATE 4X449X88 S315MC FE//ZNNI8//CN//T	BLECH
63	97032692	16	BUSHING 45.0X32 35NICRMOV125 SPF	BUCHSE
64	10875578	12	SOCKET HEAD SCREW ISO 4762 M12X35 8	ZYLINDERSCHRAUBE
68	11651612	16	HEX SCREW ISO 4017 M8X16 8.8 480H SPF	SECHSKANTSCHRAUBE
69	978787708	12	SLEEVE 33.0X19 FE//ZNNI8//CN//T0	HUELSE
74	97011112	1	PLATE DC01 FE//ZNNI8//CN//T0	BLECH
75	97011113	1	PLATE DC01 FE//ZNNI8//CN//T0	BLECH
76	97011114	1	PLATE DC01 FE//ZNNI8//CN//T0	BLECH
77	97011115	1	PLATE DC01 FE//ZNNI8//CN//T0	BLECH
78	11481963	1	LASHING STRAP 1MX35MM POLYTEX SPF	ZURRGURT
79	10491593	2	LASHING STRAP 4MX35MM POLYTEX SPF	ZURRGURT
80	12102696	8	BUTTON HEAD SCREW ISO 7380-2 M8X10 0	HALBRUNDKOPFSCHRAUBE
81	97132168	2	PLATE 4X74X219 S315MC FE//ZNNI8//CN//T	BLECH
82	97132169	2	PLATE 4X62X134 S315MC	BLECH
83	10813359	8	BUTTON HEAD SCREW AEHNL.ISO 7380-2	HALBRUNDKOPFSCHRAUBE
84	704228108	2	HINGE 35X35X50/180° ST FE//ZN12//B	SCHARNIER
85	953873408	4	SLEEVE 25X20 11SMN37 FE//ZNNI8//CN//T0	HUELSE
86	10875559	4	SOCKET HEAD SCREW DIN 6912 M8X16 08	ZYLINDERSCHRAUBE

Pos.	Item	Quantity	Description	Bezeichnung
1	928569808	1	MAIN TOOLS ⇨ ❑ 152	GRUNDWERKZEUG
2	928620108	1	ACCESSORIES ⇨ ❑ 153	ZUBEHOER
3	520402808	1	PROTECTIVE PADDING	SCHUTZPOLSTER
4	790065608	1	FITTING	VERSCHRAUBUNG
5	790533908	2	FITTING	VERSCHRAUBUNG
6	885602114	1	HAND LEVER PRESS	HANDHEBELPRESSE
(1)	12104544	1	HOSE DIN1283 11X300	SCHLAUCH
7	790042214	1	HOSE LINE X300	SCHLAUCHLEITUNG
8	790042914	1	HOSE LINE X300	SCHLAUCHLEITUNG
9	790042708	1	QUICK ACTING COUPLING	SCHIEBEKUPPLUNG
10	8008673	1	SOCKET FOR SPANNER SW46	STECKSCHLUESSELEINSATZ
11	890020214	1	WRENCH SOCKET SW1 11/16"	STECKNUSS
21	97126865	1	GAUGE 1.5X130X25 X5CRNI18-10	LEHRE
100	966796408	1	CLUTCH WRENCH 90MM	KUPPLUNGSSCHLUESSEL

Pos.	Item	Quantity	Description	Bezeichnung
1	790045408	1	ASSEMBLY TOOL BOX	MONTAGEWERKZEUGKASTEN
2	885251508	1	PADLOCK ABUS-64TI/40 TITALIUM	VORHAENGESCHLOSS
10	790001708	1	DOUBLE-HEADED SPANNER DIN 3110 SW8	DOPPELMAULSCHLUESSEL
11	790003308	1	DOUBLE-HEADED SPANNER DIN 3110 SW10	DOPPELMAULSCHLUESSEL
12	790002208	1	DOUBLE-HEADED SPANNER DIN 3110 SW12	DOPPELMAULSCHLUESSEL
13	790002408	1	DOUBLE-HEADED SPANNER DIN 3110 SW14	DOPPELMAULSCHLUESSEL
14	10652772	1	DOUBLE-HEADED SPANNER SW16X18 CRV-	DOPPELMAULSCHLUESSEL
15	790003608	1	DOUBLE-HEADED SPANNER DIN 3110 SW17	DOPPELMAULSCHLUESSEL
16	790002508	1	DOUBLE-HEADED SPANNER DIN 3110 SW19	DOPPELMAULSCHLUESSEL
17	790002608	1	DOUBLE-HEADED SPANNER DIN 3110 SW24	DOPPELMAULSCHLUESSEL
18	790002808	1	DOUBLE-HEADED SPANNER DIN 3110 SW30	DOPPELMAULSCHLUESSEL
19	790002908	1	DOUBLE-HEADED SPANNER DIN 3110 SW36	DOPPELMAULSCHLUESSEL
20	790003908	1	DOUBLE-HEADED SPANNER DIN 3110 46X5	DOPPELMAULSCHLUESSEL
21	885132208	1	SINGLE-END SPANNER DIN 894 55	EINMAULSCHLUESSEL
22	790004608	1	SINGLE-END SPANNER DIN 894 60	EINMAULSCHLUESSEL
29	885166108	1	ALLEN KEY GR.3	SECHSKANTSTIFTSCHLUESSE
30	790021608	1	HEXAGON KEY DIN 911 4 GLANZVERN.	INBUSSCHLUESSEL
31	790020008	1	HEXAGON KEY DIN 911 5 GLANZVERN.	INBUSSCHLUESSEL
32	790020108	1	HEXAGON KEY DIN 911 6 GLANZVERN.	INBUSSCHLUESSEL
33	790021008	1	HEXAGON KEY DIN 911 GR.8 GLANZVERN.	INBUSSCHLUESSEL
34	790021208	1	HEXAGON KEY DIN 911 10 GLANZVERN.	INBUSSCHLUESSEL
35	790021308	1	HEXAGON KEY DIN 911 12 GLANZVERN.	INBUSSCHLUESSEL
40	10471363	1	ANGLE SCREW DRIVER TX30 PHOSPHATI	WINKELSCHRAUBENDREHER
41	10043002	1	ANGLE SCREW DRIVER TX 40 BRUENIERT	WINKELSCHRAUBENDREHER
50	790032008	1	SCREWDRIVER 3,5 CRV-VERNICKELT	SCHRAUBENDREHER
51	790032308	1	SCREWDRIVER 5,5 CRV-VERNICKELT	SCHRAUBENDREHER
52	790032508	1	SCREWDRIVER 10 CRV-VERNICKELT	SCHRAUBENDREHER
53	790033208	1	SCREWDRIVER 2 CRV-VERNICKELT	KREUZSCHL.SCHR.DREHER
60	790030008	1	HAND HAMMER DIN 1041 800G	HANDHAMMER
61	790031108	1	LUMP HAMMER DIN 6475 3000	FAEUSTEL
62	790031508	1	COMBI PLIERS DIN 5244 180	KOMBIZANGE
63	790026208	1	GRIP DIN 3122 A 3/4"	GRIFF
64	790026308	1	EXTENSION DIN 3123 400X3/4"	VERLAENGERUNG B
65	790026408	1	EXTENSION DIN 3123 200X3/4"	VERLAENGERUNG B
66	790028508	1	SOCKET FOR SPANNER DIN 3129 32X3/4" C	STECKSCHLUESSELEINSATZ
67	520190408	1	TYRE INFLATING HOSE 4,5X10000	REIFENFUELLSCHLAUCH
68	10032297	1	OIL DRAINING HOSE COMPL. 20X1500	OELABLASSSCHLAUCH KPL.
70	790042008	1	HAND LEVER PRESS VERZ.	HANDHEBELPRESSE
71	790042908	1	REINFORCED RUBBER HOSE 300 RH-30 M1	GUMMIPANZERSCHLAUCH

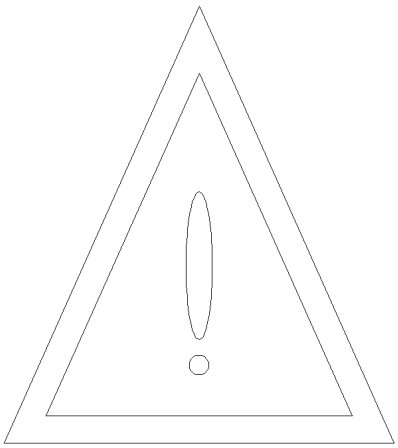

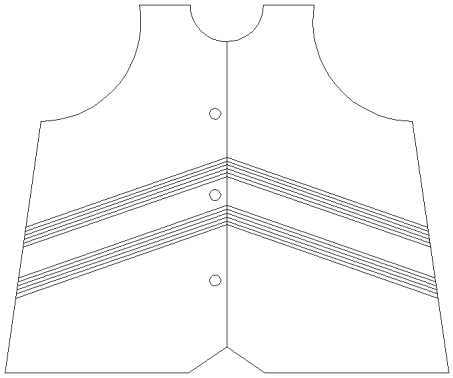

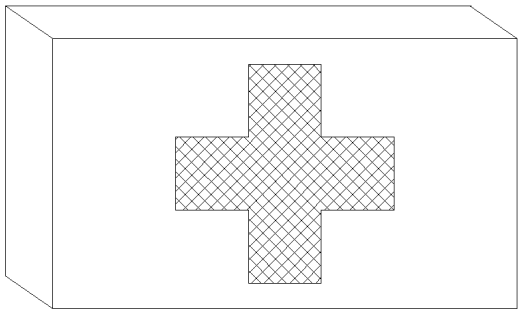

Pos.	Item	Quantity	Description	Bezeichnung
1	10044762	1	WARNING TRIANGLE 430X45X30	WARNDREIECK
2	607106208	2	HAZARD WARNING FLASHER 2,4W 6V WEI	SICHERHEITSWARNBLINKLEUC
(1)	607011108	2	LIGHT BULB DIN 49848 2,4W 6V	GLUEHLAMPE
3	613200608	10	BATTERY 1.5V 16.5AH	BATTERIE
4	12101159	1	FIRE EXTINGUISHER DIN EN 3	FEUERLOESCHER
5	789000308	1	FIRST AID KIST DIN 13164 260X170X80	VERBANDSKASTEN
6	872101908	1	SAFETY JACKET EN ISO 20471 GR.ONESIZE	WARNWESTE
7	704271108	2	HOLLOW KEY	HOHLSCHLUESSEL
8	10877437	1	ASSORTMENT BOX FLACHSICHERUNG	SORTIMENTKASTEN

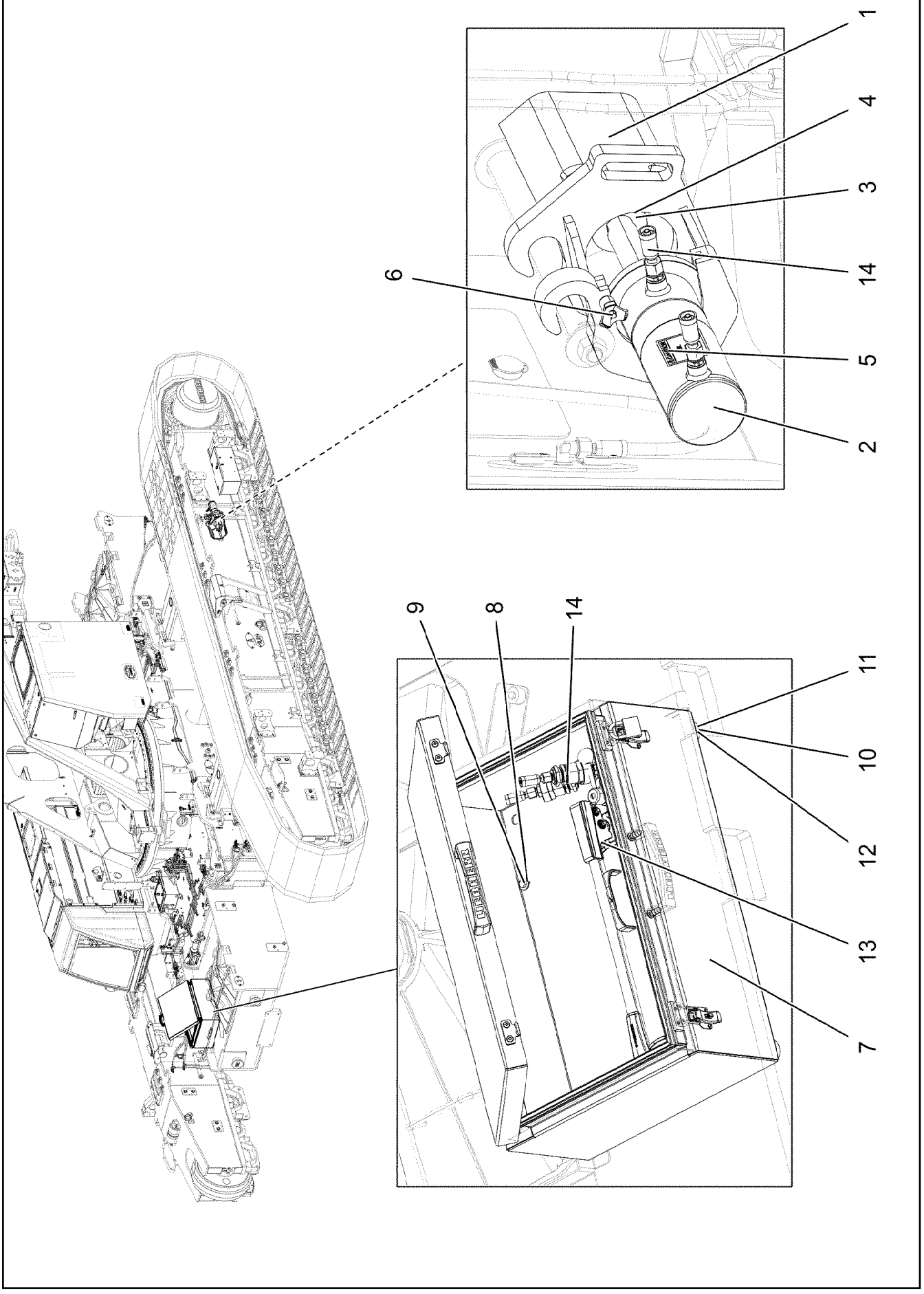
1
4
3
14
6
5
2
9
8
14
11
10
12
13
7

Pos.	Item	Quantity	Description	Bezeichnung
1	96056968	1	BRACKET WELDED CONST.	KONSOLE SCHWK.
2	12106173	1	LOCKING CYLINDER 80/36-150	VERRIEGELUNGSZYLINDER
3	97158093	1	RETAINER 70.0X74 35NICRMOV125 SPF	AUFNAHME
4	432006801	1	DOWEL PIN ISO 8752 6X55 St 480H SPF	SPANNSTIFT
5	97158853	1	INFORMATION SIGN 55X55 KLEBEFOLIE SP	HINWEISSCHILD
6	12102832	1	QUICK RELEASE PIN 8X71,5X30 NIROSTA	KUGELSPERRBOLZEN
7	96063087	1	STORAGE BOX ⇨ ❑ 156	STAUKASTEN
8	11140469	2	WASHER ISO 7093-1 8 200HV 480H SPF	SCHEIBE
9	11651767	2	HEX SCREW ISO 4017 M8X20 8.8 480H SPF	SECHSKANTSCHRAUBE
10	726613008	2	MEGI BUFFER 50X20-M10X28	MEGIPUFFER
11	12102693	2	WASHER ISO 7092 10 200HV ZNNI-480H SP	SCHEIBE
12	12102695	2	HEX NUT ISO 4032 M10 8 ZNNI-480H SPF	SECHSKANTMUTTER
13	12106354	1	HAND PUMP	HANDPUMPE
14	96056969	1	ADDITIONAL HYDRAULICS ⇨ ❑ 158	ZUSATZHYDRAULIK

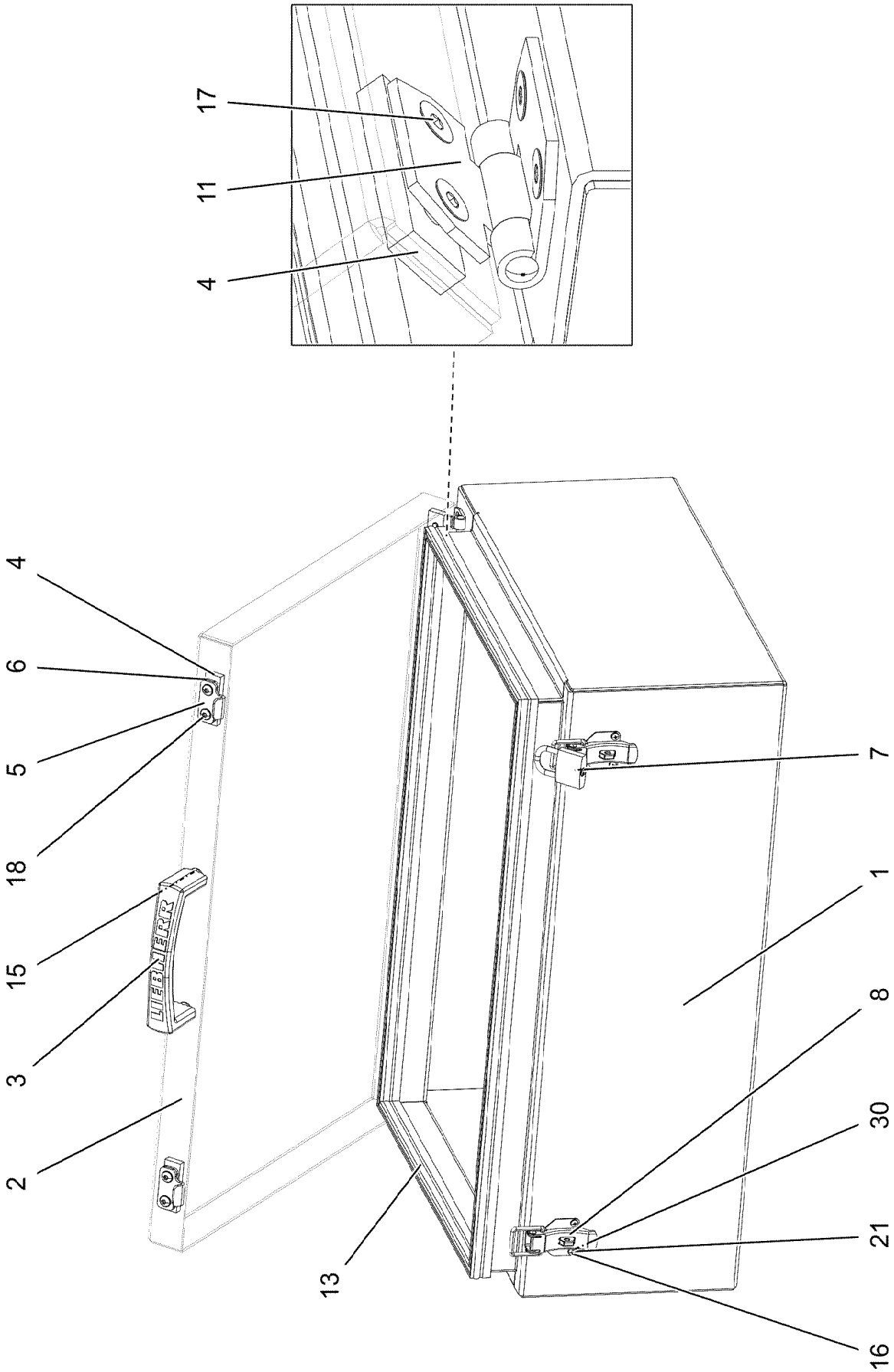
17
11
4
4
6
5
18
15
3
2
13
7
1
8
30
21
16

Pos.	Item	Quantity	Description	Bezeichnung
1	97158863	1	PLATE 3X1360X1190 ALMG3 H111 SPF	BLECH
2	97158864	1	PLATE 3X830X560 ALMG3 H111 SPF	BLECH
3	966435308	1	GRIP PA6-30%GF SPF	GRIFF
4	953695308	6	THREADED PLATE 8.0 X0 S235JR FE//ZNNI8/	GEWINDEPLATTE
5	97062372	2	HOOK 3X50X45 X5CRNI18-10	HAKEN
6	97062373	2	PLATE 3X50X20 X5CRNI18-10	BLECH
7	885251508	1	PADLOCK ABUS-64TI/40 TITALIUM	VORHAENGESCHLOSS
8	704230208	2	LOCK PIECE HAKEN	VERSCHLUSS
11	10294684	2	HINGE 35X35X50/180° NIROSTA ROHBLANK	SCHARNIER
13	262106708	2.11	SEALING PROFILE 1-3X21,5X11 GUMMI	ABDICHTPROFIL
15	408650508	2	BUTTON HEAD SCREW ISO 7380-2 M8X16 A	HALBRUNDKOPFSCHRAUBE
16	12212474	6	PAN-HEAD SCREW ISO 7045 M4X10 4.8 480	FLACHKOPFSCHRAUBE
17	10875551	8	COUNTERSUNK SCREW DIN 7991 M6X16 8	SENKSCHRAUBE
18	10412851	4	BUTTON HEAD SCREW AEHNL.ISO 7380-2	HALBRUNDKOPFSCHRAUBE
21	420200308	12	WASHER DIN 433 4 140HV A2K	SCHEIBE
30	10875619	6	HEX NUT ISO 4032 M4 8 480H SPF	SECHSKANTMUTTER

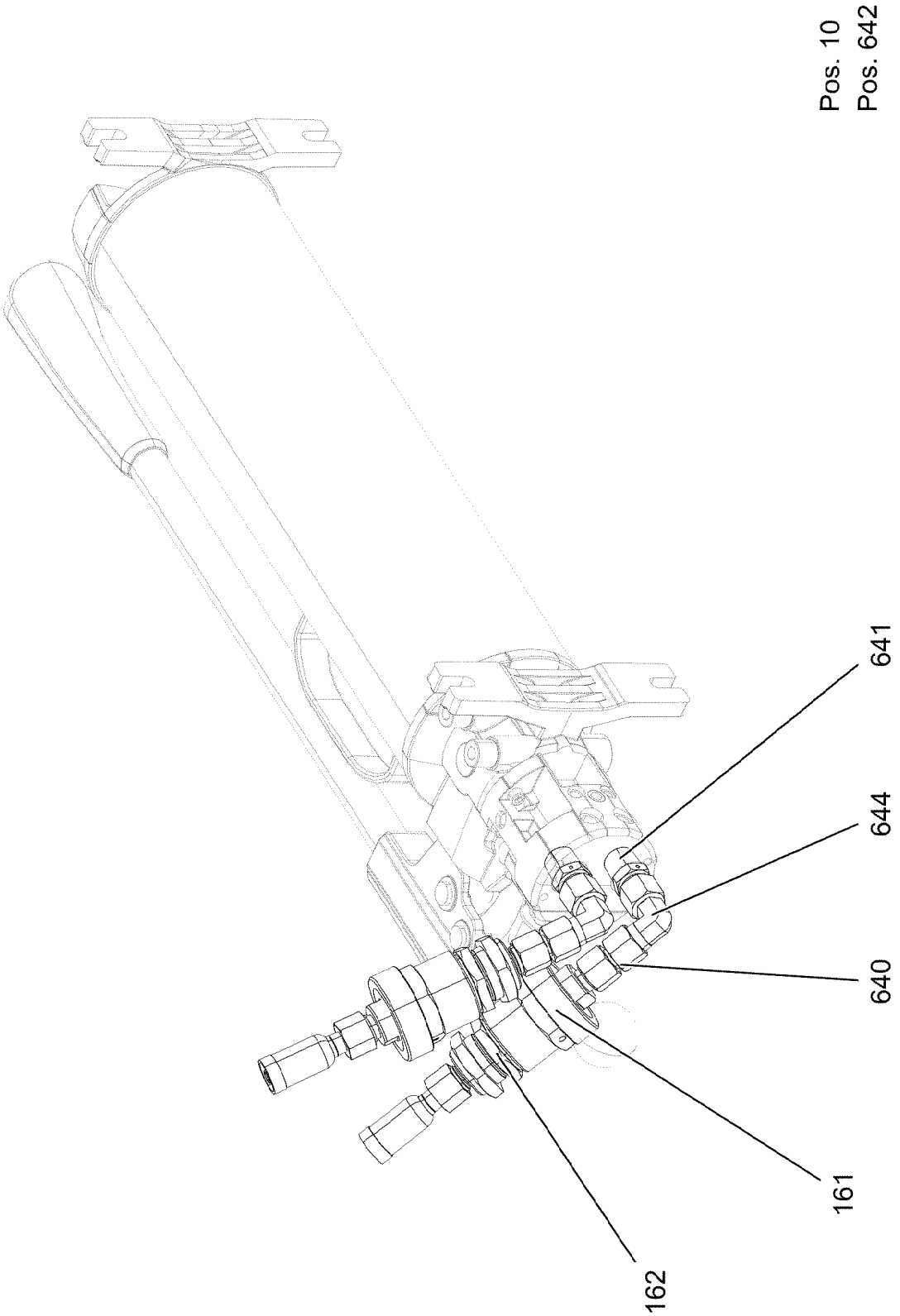
Pos. 10
Pos. 642
641
644
640
161
162

Pos.	Item	Quantity	Description	Bezeichnung
10	96057002	1	HOSE LINES	SCHLAUCHLEITUNGEN
(1)	928013408	2	HOSE CPL. 2SN 8X2500	SCHLAUCH KPL.
161	511508308	2	COUPLING PLUG B2 10-L	KUPPLUNGSSTECKER
162	511508408	2	COUPLING SLEEVE B2 10-L	KUPPLUNGSMUFFE
640	470010108	2	FITTING SNV10-L CR6-FREI	VERSCHRAUBUNG
641	471035208	2	FITTING GE 10L 3/8-18NPT CR6-FREI	VERSCHRAUBUNG
642	471039708	2	FITTING ISO 8434-1 GE 10L M12X1,5 CR6-F	VERSCHRAUBUNG
644	7403569	2	FITTING EW 10L M16X1,5 CR6-FREI	VERSCHRAUBUNG

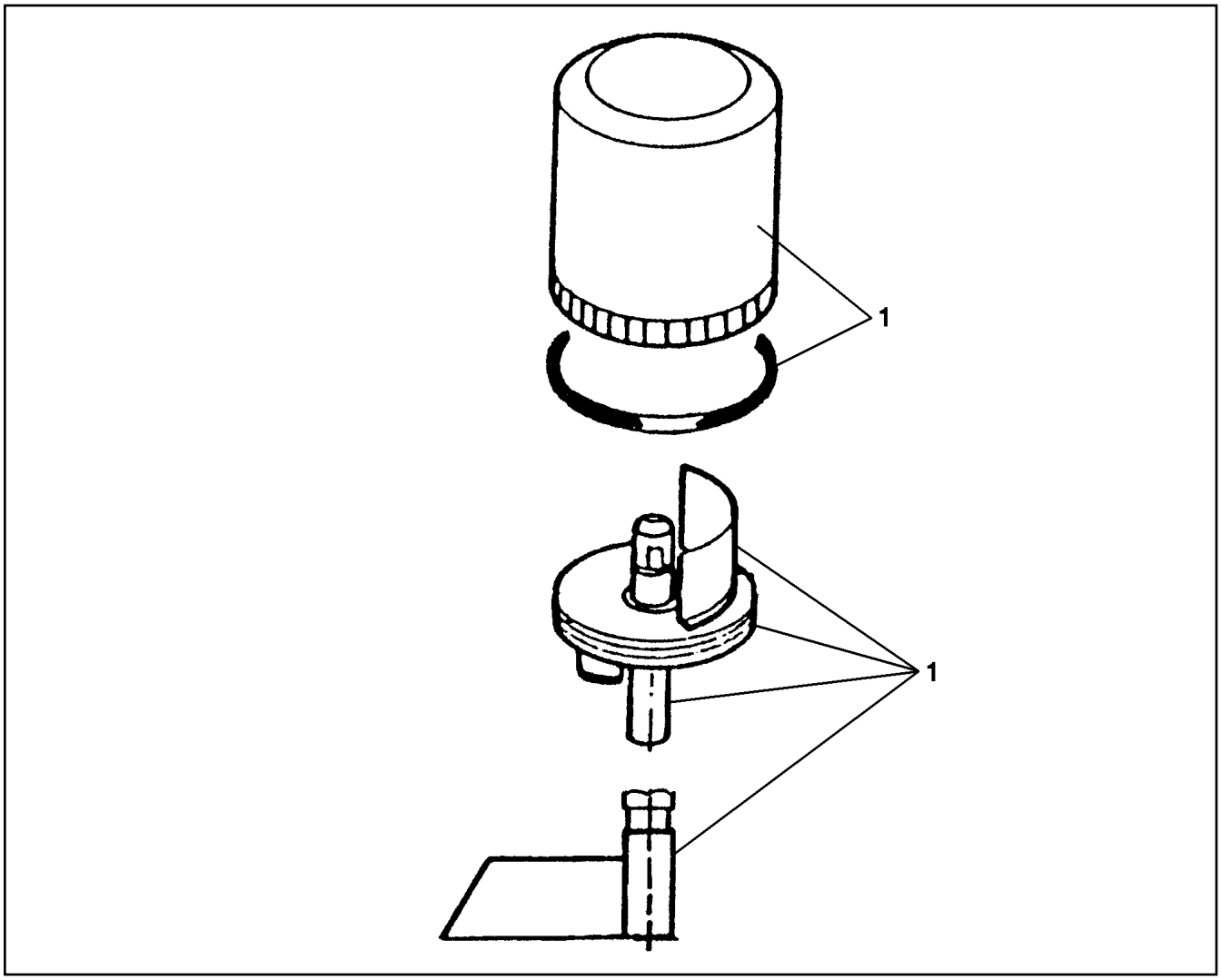

Pos.	Item	Quantity	Description	Bezeichnung
1	10470032	1	ROTATING BEACON 55W 24V	RUNDUMKENNLEUCHTE
(1)	11346616	1	FLASHING LIGHT GLASS	LICHTHAUBE
2	607023708	1	LIGHT BULB DIN 72601 70W 24V	GLUEHLAMPE

Pos.	Item	Quantity	Description	Bezeichnung
1	772624608	1	SIGN 6X107X237 G-ALSI12	SCHILD

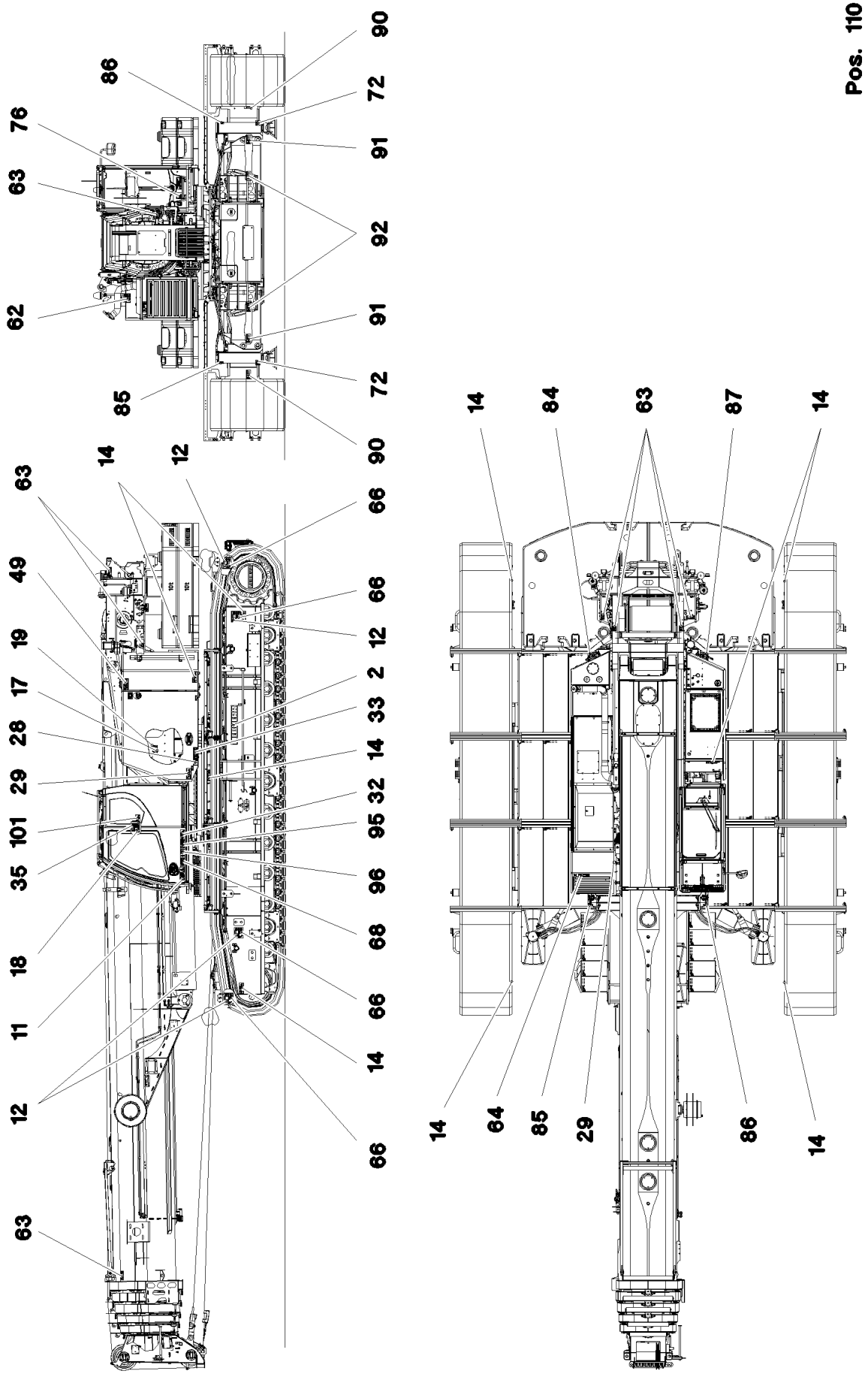
Pos. 110
86
76
63
62
85
90
72
91
92
91
72
90
14
12
63
49
19
17
28
29
101
35
18
11
12
63
66
66
12
2
33
14
32
95
96
68
66
14
66
14
84
63
87
14
14
84
85
29
86
14

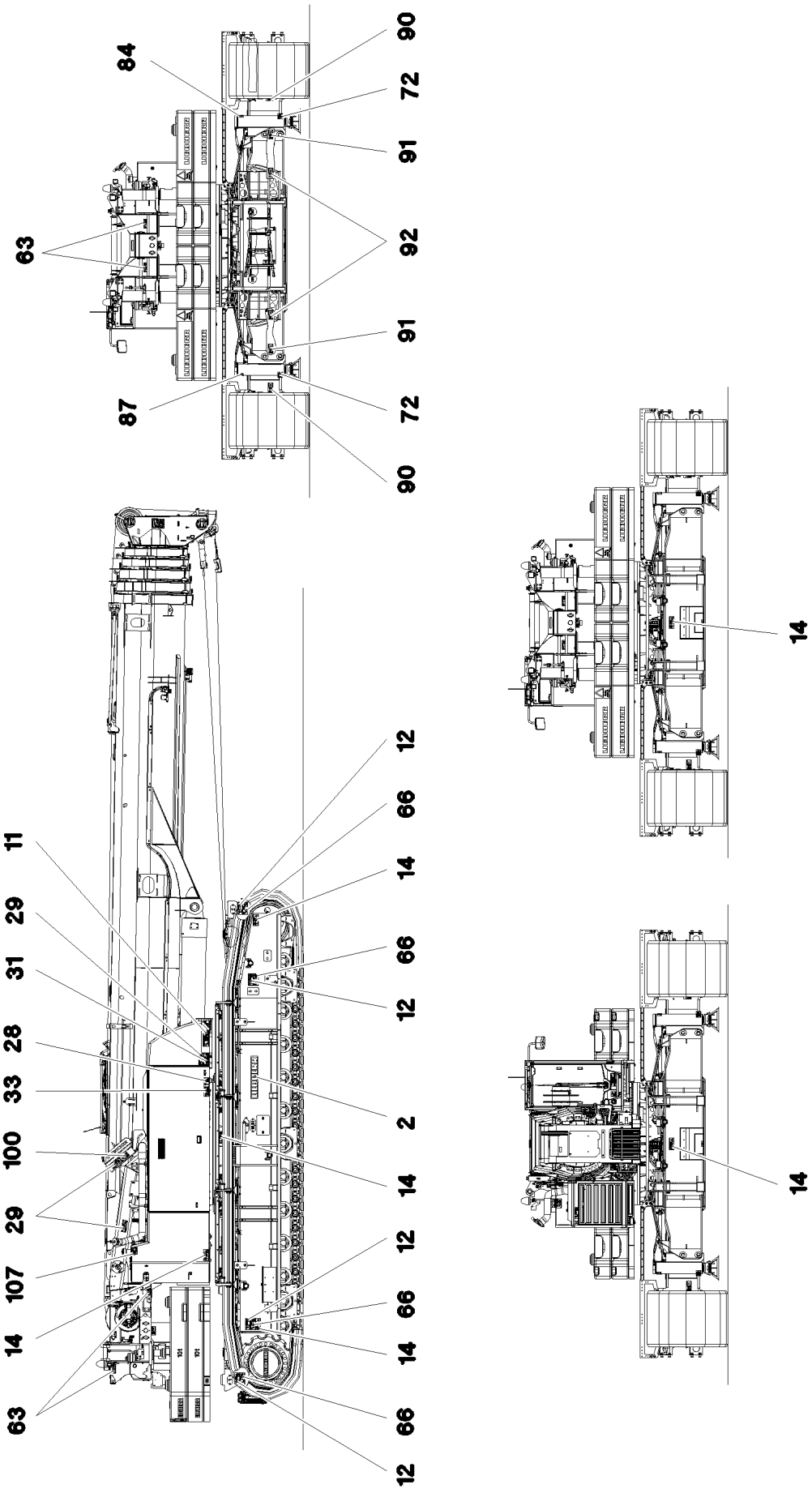
84
90
72
91
63
92
91
87
72
90
14
11
29
31
28
33
100
29
107
14
63
12
66
14
66
12
2
14
12
66
14
66
12
14

Pos.	Item	Quantity	Description	Bezeichnung
2	971749908	2	SIGN	SCHILD
11	978673908	2	SIGN 208X88 KLEBEFOLIE SPF	SCHILD
12	978674008	8	SIGN 208X88 KLEBEFOLIE SPF	SCHILD
14	978674108	15	SIGN 208X88 KLEBEFOLIE SPF	SCHILD
17	97135430	1	INFORMATION SIGN 60X90 KLEBEFOLIE SP	HINWEISSCHILD
18	97037952	1	SIGN 168X88 KLEBEFOLIE SPF	SCHILD
19	97135431	1	INFORMATION SIGN 60X90 KLEBEFOLIE SP	HINWEISSCHILD
28	978674308	2	SIGN 168X88 KLEBEFOLIE SPF	SCHILD
29	978674408	5	SIGN 208X88 KLEBEFOLIE SPF	SCHILD
31	978674508	1	SIGN 208X88 KLEBEFOLIE SPF	SCHILD
32	978674608	1	SIGN 208X88 KLEBEFOLIE SPF	SCHILD
33	978867108	2	SIGN 168X88 KLEBEFOLIE SPF	SCHILD
35	9412158	1	CAUTION DECAL ACCID.PREVENTION 60X	WARNSCHILD UNFALLVERHUET
49	97016304	1	SIGN 208X88 KLEBEFOLIE SPF	SCHILD
62	979383308	1	SIGN 168X88 KLEBEFOLIE SPF	SCHILD
63	978674808	12	SIGN 168X62 KLEBEFOLIE SPF	SCHILD
64	978674908	1	SIGN 208X88 KLEBEFOLIE SPF	SCHILD
66	978675008	8	SIGN 208X88 KLEBEFOLIE SPF	SCHILD
68	97036732	1	SIGN 168X88 KLEBEFOLIE SPF	SCHILD
72	97016392	4	SIGN 208X88 KLEBEFOLIE SPF	SCHILD
76	971693508	1	SIGN 108DBA/100X90 KLEBEFOLIE SPF	SCHILD
84	974150408	2	SIGN 1X80X80 KLEBEFOLIE SPF	SCHILD
85	974150508	2	SIGN 1X80X80 KLEBEFOLIE SPF	SCHILD
86	974150608	2	SIGN 1X80X80 KLEBEFOLIE SPF	SCHILD
87	974150708	2	SIGN 1X80X80 KLEBEFOLIE SPF	SCHILD
90	97043334	4	SIGN 168X88 KLEBEFOLIE SPF	SCHILD
91	97043335	4	SIGN 168X88 KLEBEFOLIE SPF	SCHILD
92	97043336	4	SIGN 168X88 KLEBEFOLIE SPF	SCHILD
95	97011689	1	SIGN 168X88 KLEBEFOLIE SPF	SCHILD
96	97011690	1	SIGN 168X88 KLEBEFOLIE SPF	SCHILD
100	97060689	1	SIGN 168X88 KLEBEFOLIE SPF	SCHILD
101	97009799	1	SIGN 168X88 KLEBEFOLIE SPF	SCHILD
107	97094940	1	INFORMATION SIGN 120X80 KLEBEFOLIE	HINWEISSCHILD
110	97131530	1	INFORMATION SIGN 208X100 KLEBEFOLIE	HINWEISSCHILD
200	704207708	4	MANDRIL RIVET 4X15	DORNNIET

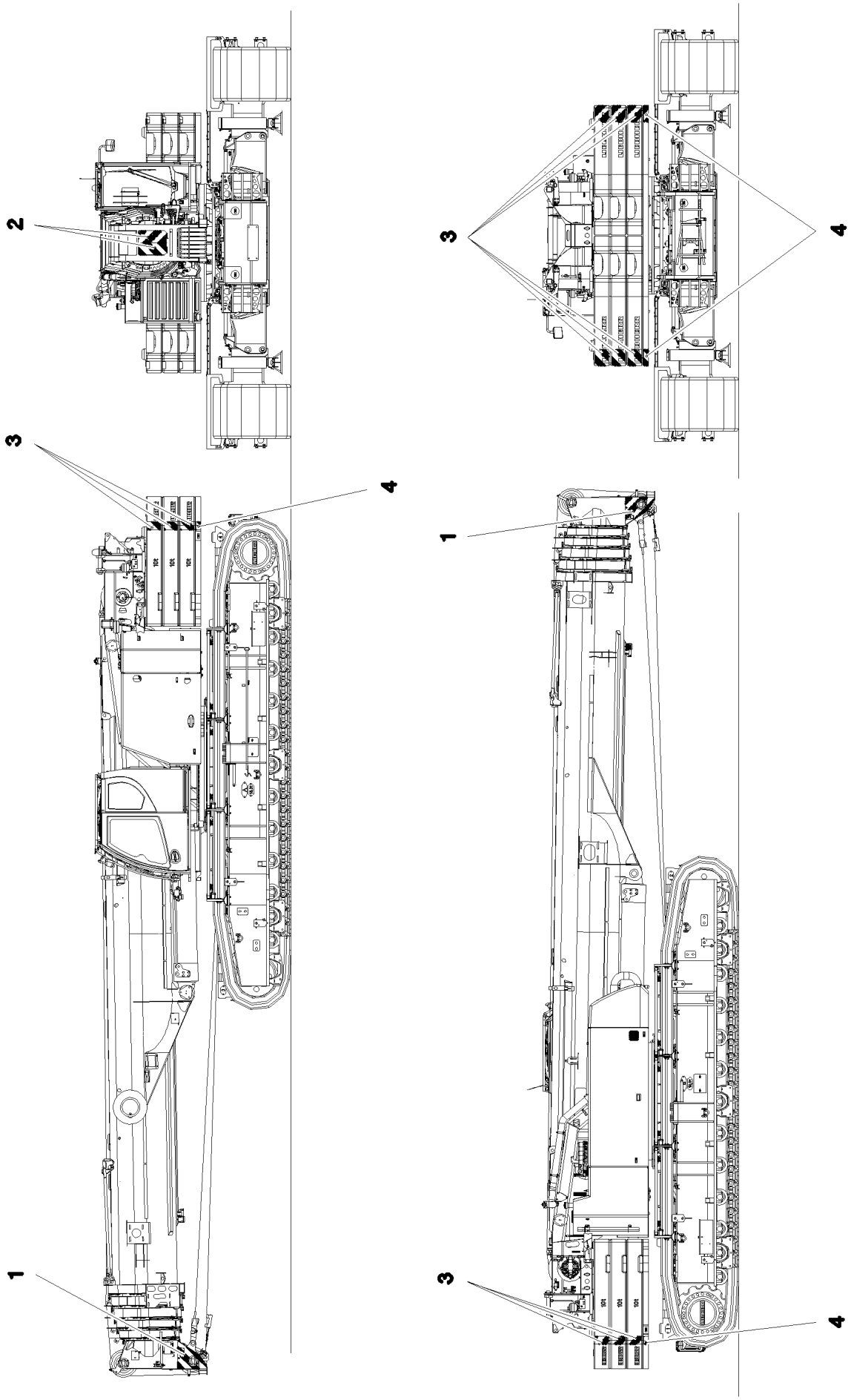
2
3
4
3
4
1
1
3
4

Pos.	Item	Quantity	Description	Bezeichnung
1	11067612	0.54	WARNING DESIGNATION DIN 30710 TYP 1	WARNMARKIERUNG
2	11067611	0.239	WARNING DESIGNATION DIN 48844-01 LAMI	WARNMARKIERUNG
3	11067611	0.689	WARNING DESIGNATION DIN 48844-01 LAMI	WARNMARKIERUNG
4	11067611	0.081	WARNING DESIGNATION DIN 48844-01 LAMI	WARNMARKIERUNG

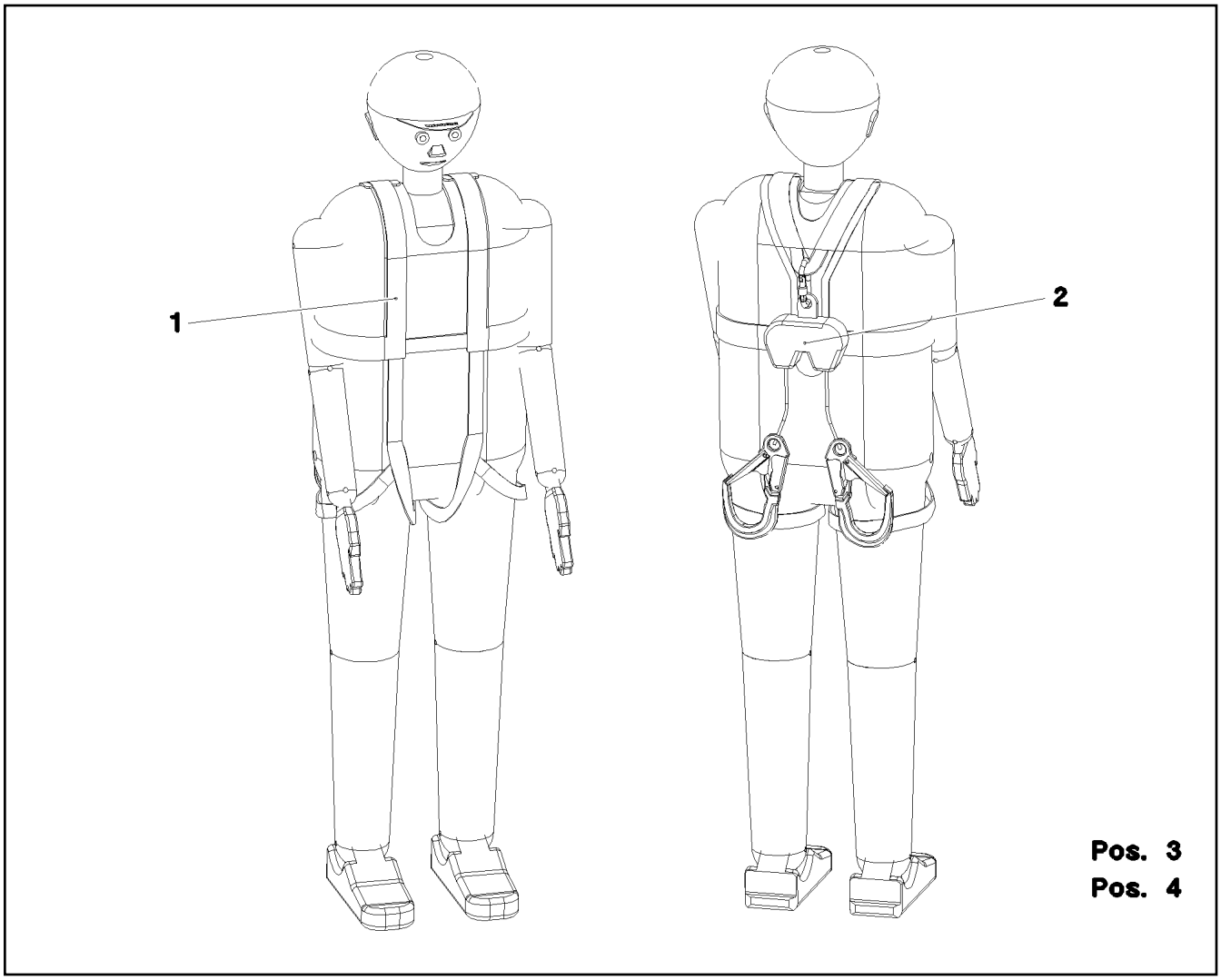

Pos.	Item	Quantity	Description	Bezeichnung
1	11007305	1	SAFETY HARNESS EN 361 IK G 2 BLH	AUFFANGGURT
(1)	11320720	1	BAG	BEUTEL
2	12107776	1	FALL PROTECTION EN 360 HWB 2 R SW LH	HOEHENSICHERUNGSGERAET
3	12102869	1	CONNECTING DEVICE EN 358 45-IK30 B70 A	VERBINDUNGSMITTEL

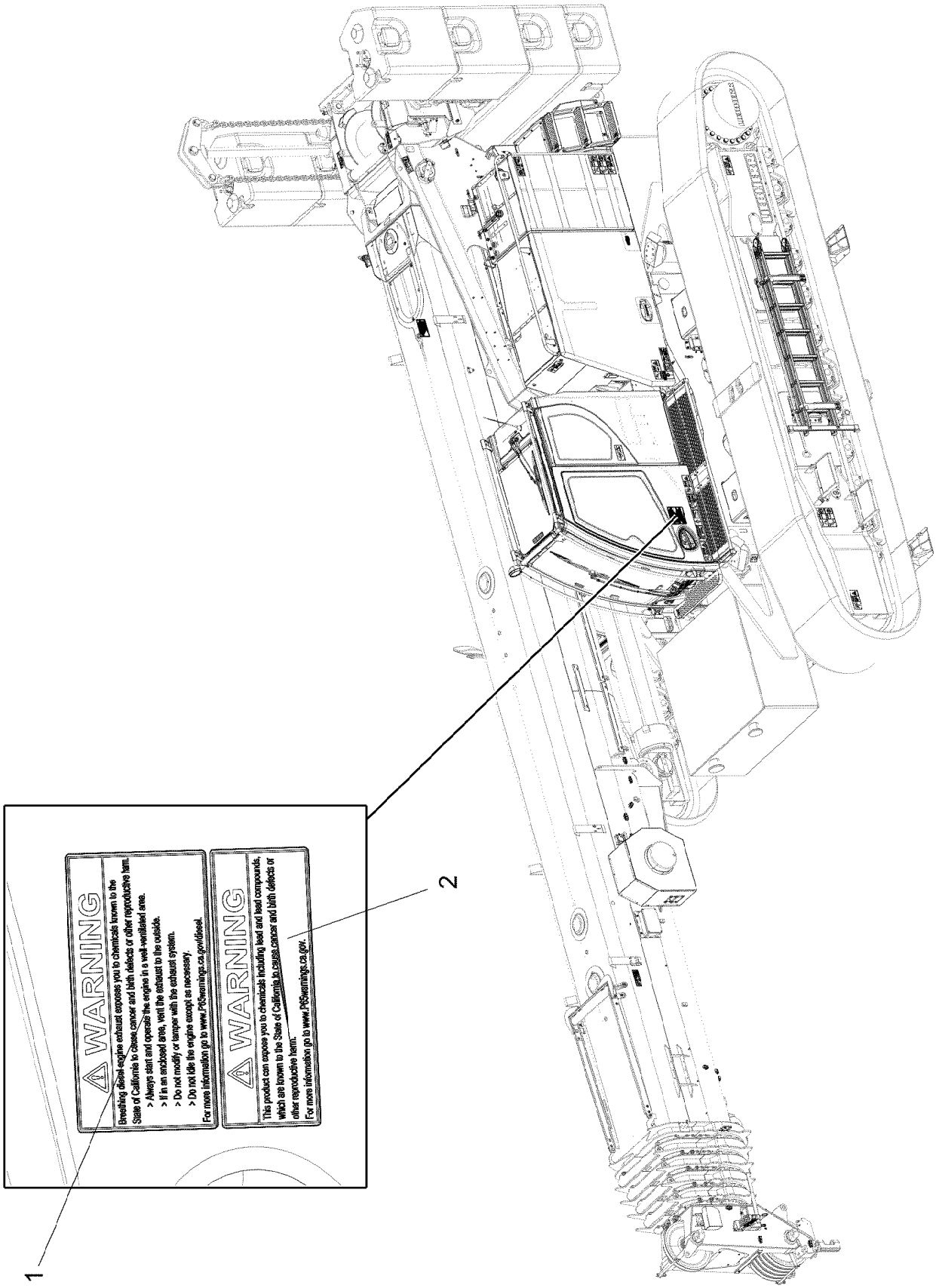
1
2
WARNING
Breathing diesel engine exhaust exposes you to chemicals known to the State of California to cause cancer and birth defects or other reproductive harm.
> Always start and operate the engine in a well-ventilated area.
> If in an enclosed area, vent the exhaust to the outside.
> Do not modify or tamper with the exhaust system.
> Do not idle the engine except as necessary.
For more information go to www.P65warnings.ca.gov/diesel.
WARNING
This product can expose you to chemicals including lead and lead compounds, which are known to the State of California to cause cancer and birth defects or other reproductive harm.
For more information go to www.P65warnings.ca.gov.

Pos.	Item	Quantity	Description	Bezeichnung
1	11952500	2	SIGN 100X184X0,1 KLEBEFOLIE SPF	SCHILD
2	13187353	1	SIGN 70X184X0,1 KLEBEFOLIE	SCHILD

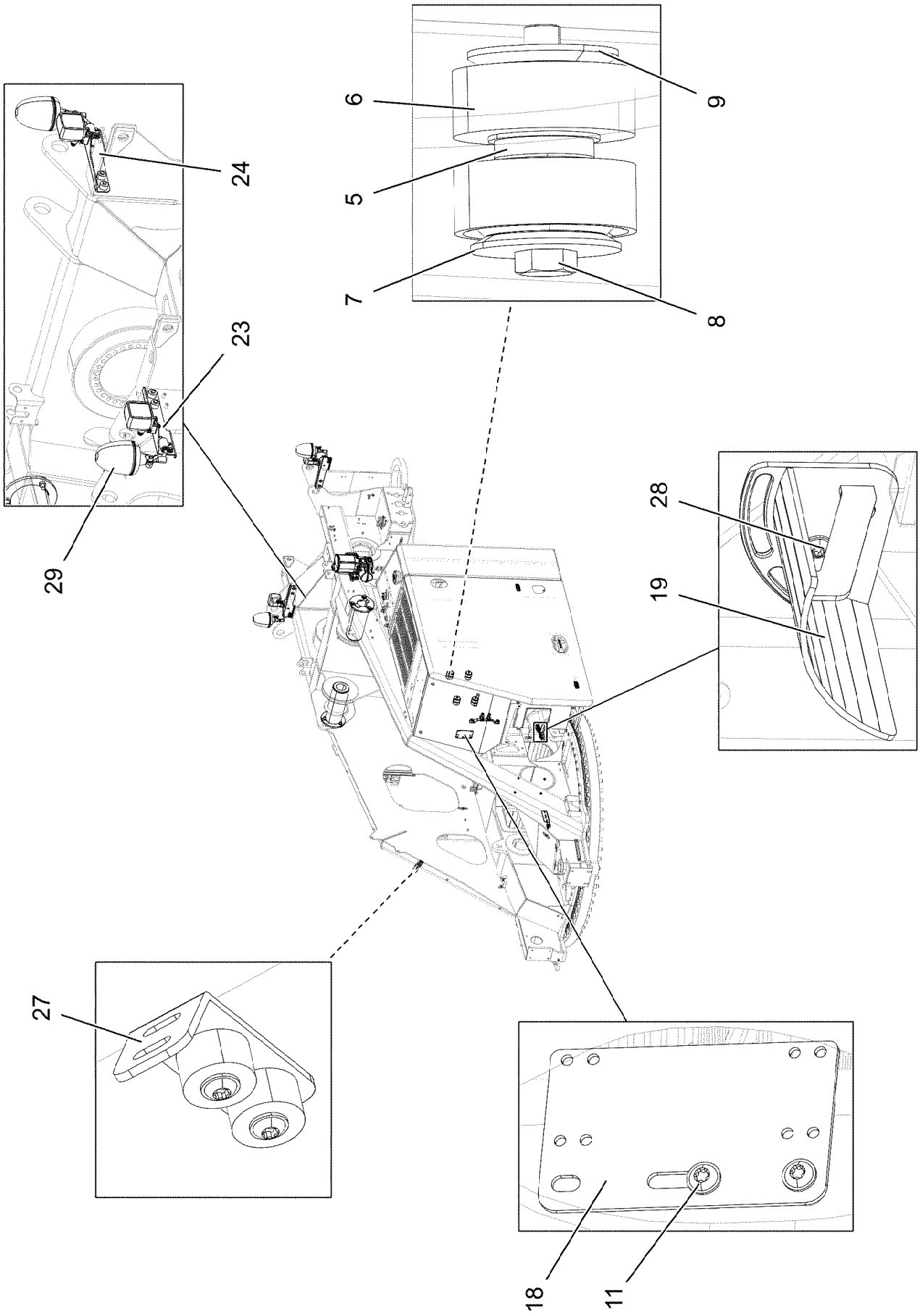
6
9
5
7
8
24
23
29
28
19
27
18
11

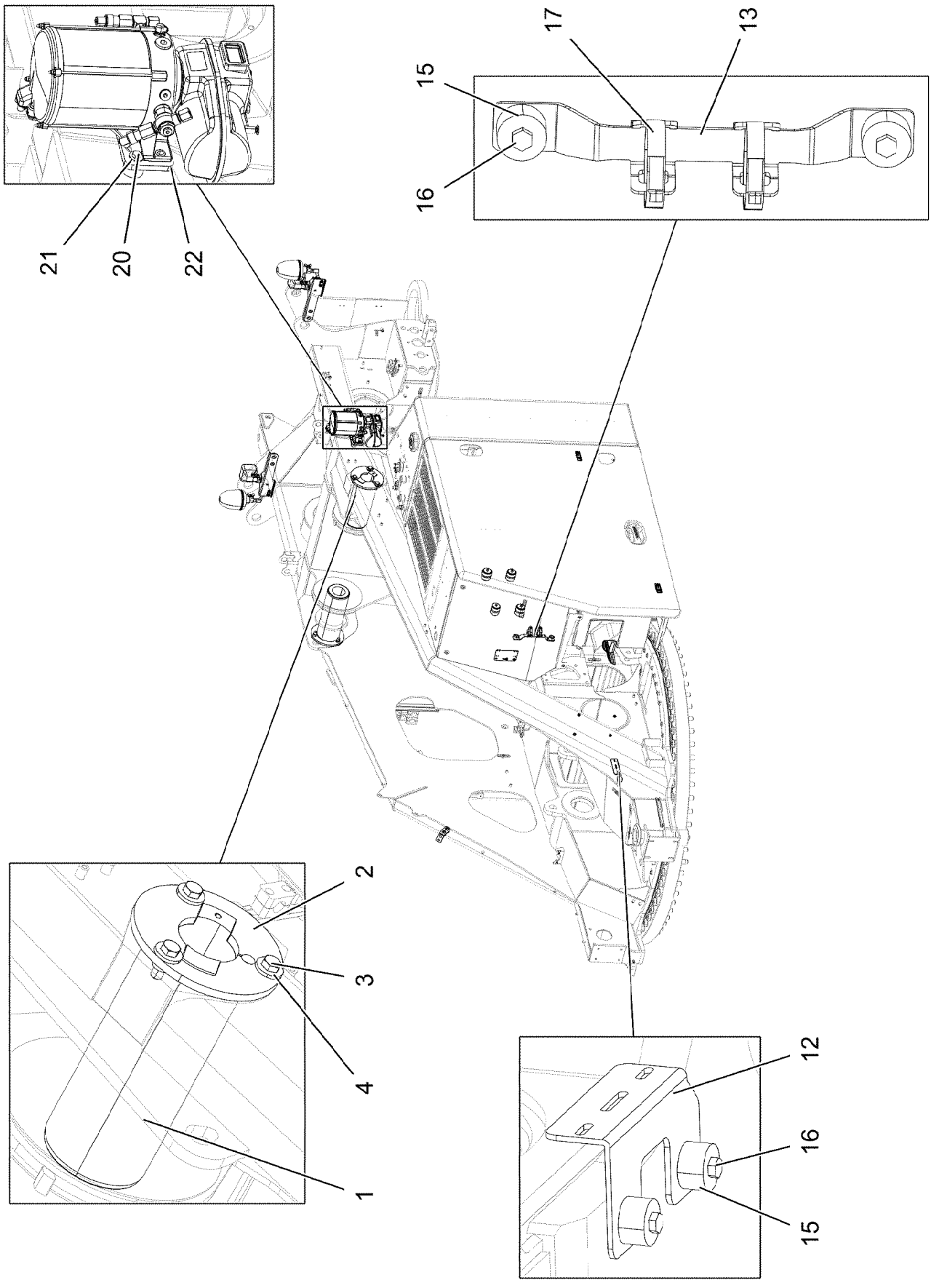
21
20
22
17
13
15
16
2
3
4
1
12
16
15

Pos.	Item	Quantity	Description	Bezeichnung
1	973411808	2	PIN 160.0X394 35NICRMOV125	BOLZEN
2	970591108	2	AXLE HOLDER 12X222X222 S960QL	ACHSHALTER
3	406603108	6	HEX SCREW ISO 4017 M16X45 10.9 FLZN SP	SECHSKANTSCHRAUBE
4	953504308	6	BUSHING RD40X27 35NICRMOV125 GASN.	BUCHSE
5	550640608	4	RUBBER BEARING 13,51/47,75X19,8	GUMMILAGER
6	970689108	8	BUSHING 60.3X24 S355J2H FE//ZNNI8//CN//T	BUCHSE
7	970689208	4	WASHER 50.0x9 S355J2C+C FE//ZNNI8//CN/	SCHEIBE
8	10875507	4	HEX SCREW ISO 4014 M12X75 8.8 FLZN SP	SECHSKANTSCHRAUBE
9	970821508	4	WASHER 50X5 S355J2C+C	SCHEIBE
11	12102696	6	BUTTON HEAD SCREW ISO 7380-2 M8X10 0	HALBRUNDKOPFSCHRAUBE
12	97039694	1	PLATE 4X178X133 S315MC FE//ZNNI8//CN//T	BLECH
13	97037936	1	PLATE 3X300X84 DC01 FE//ZNNI8//CN//T0	BLECH
15	978787708	12	SLEEVE 33.0X19 FE//ZNNI8//CN//T0	HUELSE
16	11651612	8	HEX SCREW ISO 4017 M8X16 8.8 480H SPF	SECHSKANTSCHRAUBE
17	550838008	2	HOSE CLAMP 50/40-60/12 W3	SCHLAUCHSCHELLE
18	979672708	1	PLATE 3X150X90 S355MC FE//ZNNI8//CN//T	BLECH
19	969444008	1	HOSE PROTECTION WELDMENT FE//ZNNI8/	SCHLAUCHSCHUTZ SCHWK.
20	502618908	2	HEX SCREW ISO 4017 M8X22 8.8	SECHSKANTSCHRAUBE
21	11140469	2	WASHER ISO 7093-1 8 200HV 480H SPF	SCHEIBE
22	97053069	1	PLATE 10X170X79 S355MC FE//ZNNI8//CN//T	BLECH
23	97126204	1	BLUB HOLDER LEFT 4X163X370 S315MC FE	LAMPENHALTER LI.
24	97126205	1	LAMP SUPPORT 4X163X370 S315MC FE//ZN	LAMPENHALTER RE.
28	10875485	4	BUTTON HEAD SCREW AEHNL.ISO 7380-2	HALBRUNDKOPFSCHRAUBE
29	591070408	2	HOLDER	HALTER

Pos.	Item	Quantity	Description	Bezeichnung
1	13455297	1	DIESEL ENGINE D944 A7-05 SPF ⇨ ❑ 174	DIESELMOTOR

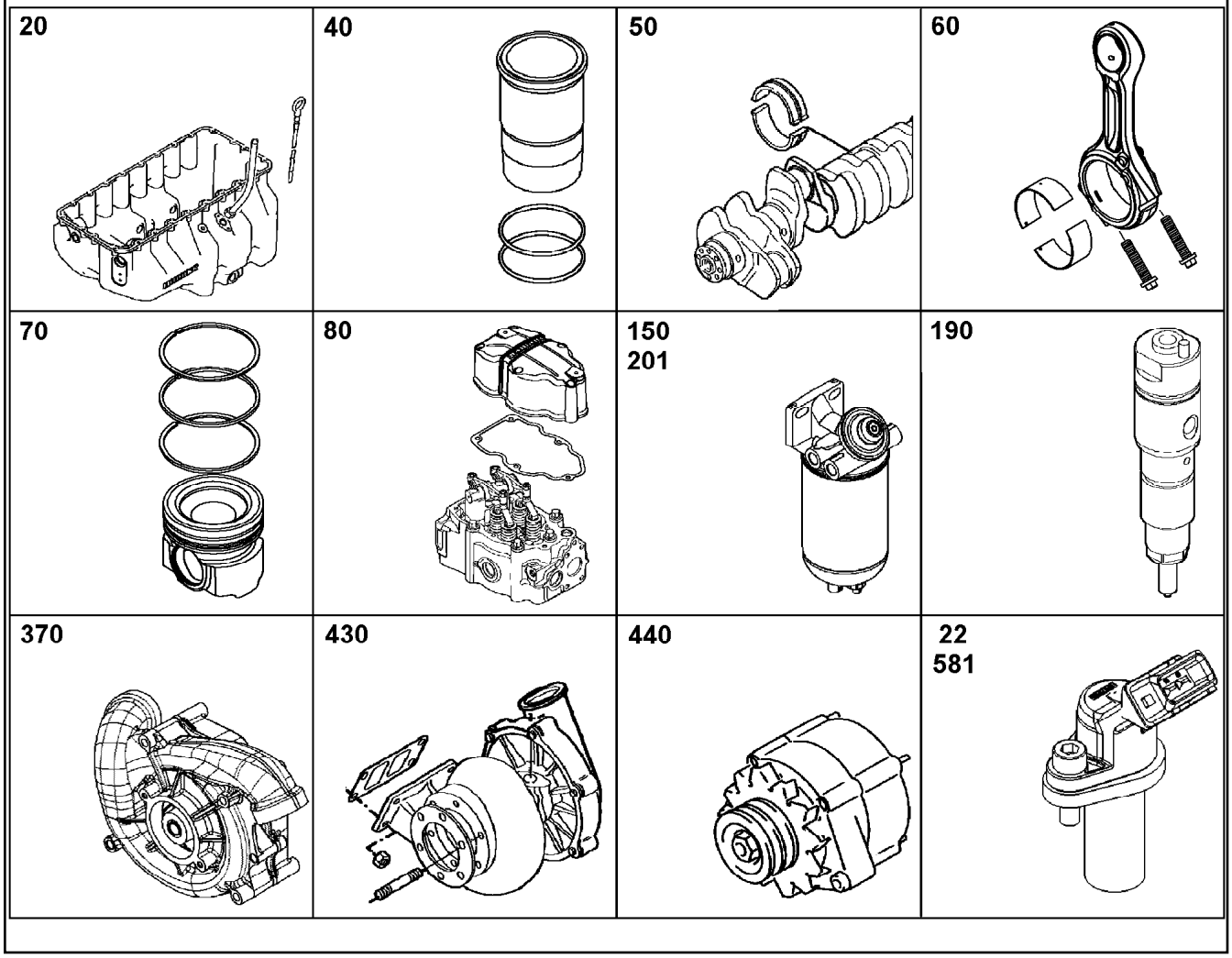

Pos.	Item	Quantity	Description	Bezeichnung
10	11389608	1	CRANKCASE CPL. WITH CYLINDER R-MOT ⇨ ❑ 180	KURBELGEHAEUSE KPL. MIT ZY
12	10147687	1	POWER UNIT SUPPORT ATTACHMENT R-M ⇨ ❑ 183	AGGREGATETRAEGER ANBAU
14	10138450	1	FINAL CONTROL VALVE pmax=4.5BAR ⇨ ❑ 184	ENDREGELVENTIL
15	10142749	4	PISTON COOLING ⇨ ❑ 185	KOLBENKUEHLUNG
16	10126713	1	CRANKCASE BREATHER ASSEMBLY ⇨ ❑ 186	KURBELGEHAEUSEENTLUEFT.
20	10132560	1	OIL SUMP WITH FASTENING R-MOTOR/D93 ⇨ ❑ 187	OELWANNE MIT BEFEST.
21	10150934	1	OIL DIPSTICK CPL. ⇨ ❑ 192	OELMESSSTAB KPL.
22	10130406	1	LEVEL SENSOR L=115 24V ⇨ ❑ 193	NIVEAUGEBER
23	10118881	1	LOCKING PIECES M33X2-FPM VSTI ⇨ ❑ 194	VERSCHLUSSTEILE
25	10139112	1	OIL LINE PRE-ASSEMBLY 10X1 ⇨ ❑ 195	OELLEITUNG VORM.
50	10147438	1	CRANKSHAFT WITH GEAR R-MOTORXD934/ ⇨ ❑ 196	KURBELWELLE MIT ZAHNRAD
51	9076457	1	SET MAIN BEARINGS ⇨ ❑ 197	KURBELWELLENLAGERSATZ
52	10153583	1	CRANKSHAFT SEALING ⇨ ❑ 199	KURBELWELLENDICHTUNG

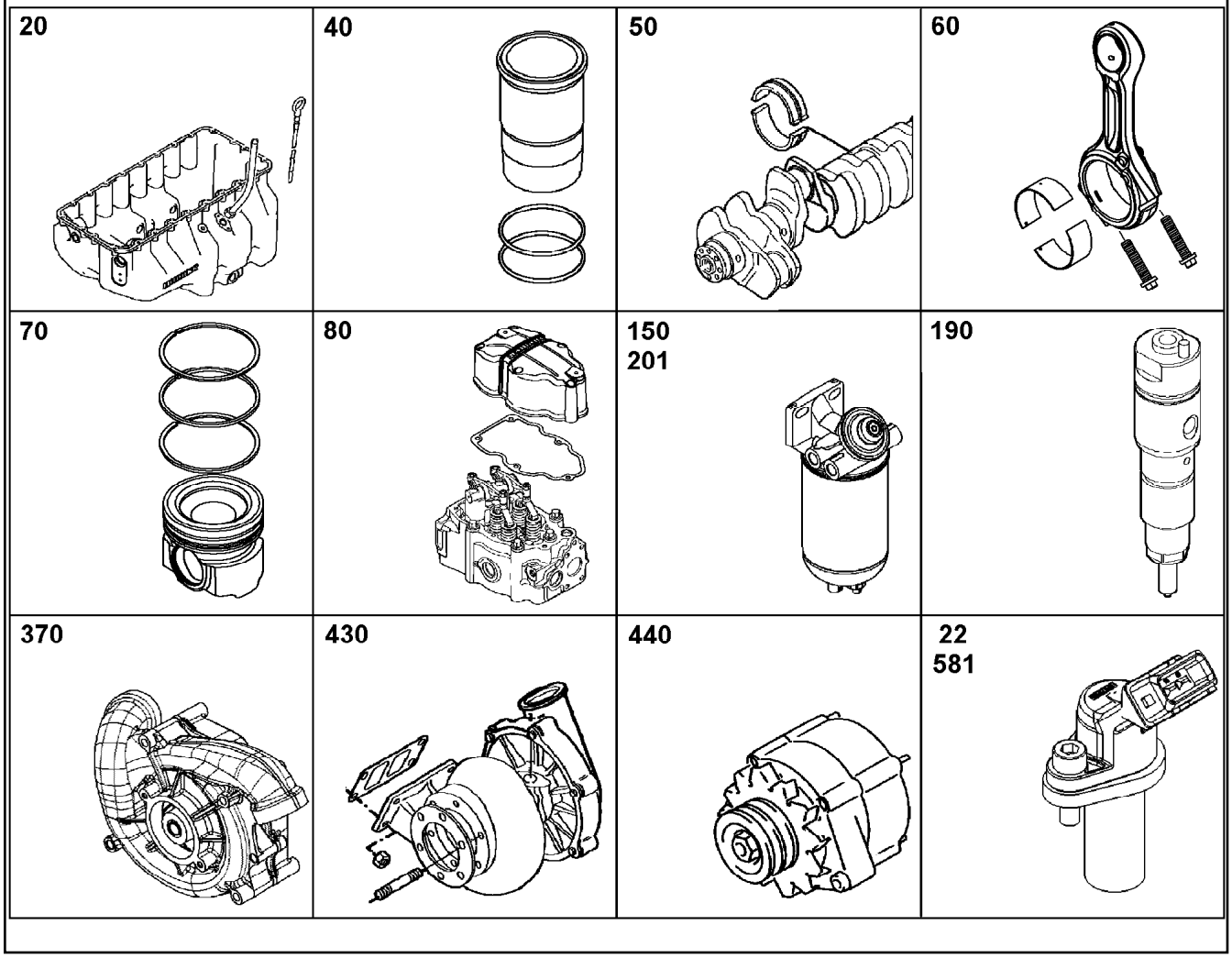

Pos.	Item	Quantity	Description	Bezeichnung
53	10141974	1	CRANKSHAFT ADD-ON PARTS ⇨ ❑ 200	KURBELWELLENANBAUTEILE
60	11348072	4	CONROD R-MOTORX88	PLEUELSTANGE
(2)	9075607	1	CONNECTING ROD BEARING 88/92/38 MIBA	PLEUELLAGER
(2)	10145100	1	CONNECTING ROD BEARING 88/92/38	PLEUELLAGER
(3)	9073699	1	CONNECTING ROD BEARING 88/92/38 Glyco	PLEUELLAGER
(3)	10145101	1	CONNECTING ROD BEARING 88/92/38	PLEUELLAGER
70	10146367	4	PISTON CPL. R-MOTORX130 ⇨ ❑ 201	KOLBEN KPL.
80	10149580	4	CYLINDER HEAD ASSEMBLY R-MOTOR ⇨ ❑ 202	ZYLINDERKOPF ANBAU
81	10148438	4	ROCKER ARM BRACKET CPL. NEIN ⇨ ❑ 206	KIPPHEBELBOCK KPL.
82	11358102	1	CYLINDER HEAD COVER ASSEMBLY ⇨ ❑ 208	ZYLINDERKOPFDECKEL ANBAU
90	10120186	1	BALANCER ASSEMBLY ⇨ ❑ 209	MASSENAUSGLEICH ANBAU
100	10138230	1	CAMSHAFT CPL. R-MOTORXD934 ⇨ ❑ 210	NOCKENWELLE KPL.
110	9079870	4	CONTROL PARTS ⇨ ❑ 211	STEUERUNGSTEILE
130	10129475	1	OIL COOLER ASSEMBLY ⇨ ❑ 212	OELKUEHLER ANBAU
140	10148432	1	LUBE OIL PUMP WITH FASTENING B=50 ⇨ ❑ 216	SCHMIEROELPUMPE MIT BEFE

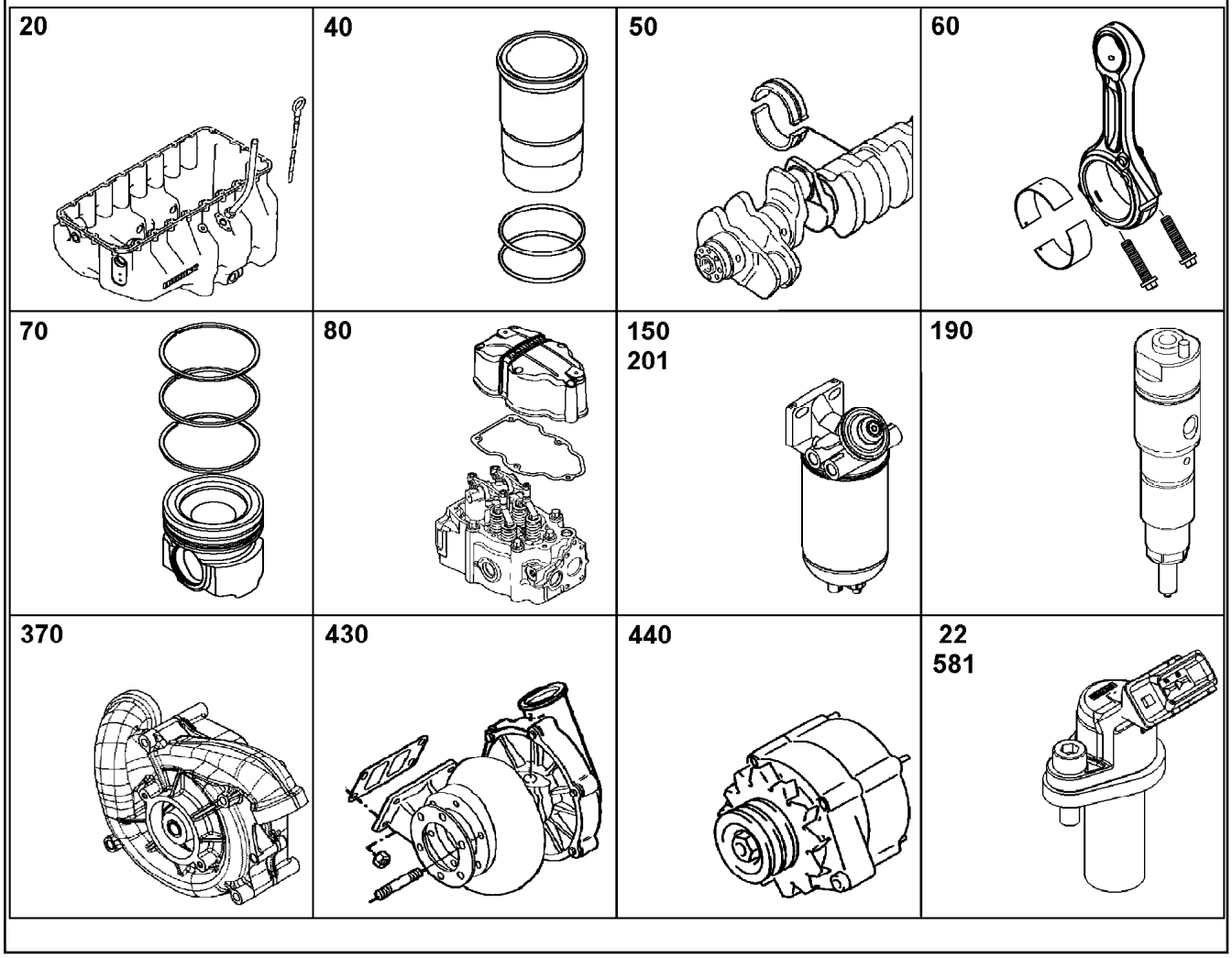

Pos.	Item	Quantity	Description	Bezeichnung
150	10142942	1	LUBE OIL FILTER ASSEMBLY ⇨ ❑ 217	SCHMIEROELFILTER ANBAU
171	10150741	1	HIGH PRESSURE PUMP W.FASTENING R-M ⇨ ❑ 218	HOCHDRUCKPUMPE MIT BEFE
180	11407917	1	DRIVE FOR HIGH PRESSURE PUMP	ANTRIEB FUER HOCHDRUCKPU
190	10152867	4	INJECTOR WITH FASTENING LI2.7-20-SF-95 ⇨ ❑ 221	INJEKTOR MIT BEFEST.
191	10153151	4	HIGH PRESS.CONNECTOR W.FASTEN. ⇨ ❑ 225	DRUCKROHRSTUTZEN MIT BE
201	10146791	1	FUEL FINE-FILTER ASSEMBLY ⇨ ❑ 226	KRAFTSTOFF-FEINFILTERANBA
212	10143341	1	FUEL LINES ⇨ ❑ 228	KRAFTSTOFFLEITUNGEN
214	10143342	1	LEAK OIL RETURN LINE ⇨ ❑ 229	LECKOELRUECKLAUF
215	10143825	1	INJECTION LINES R-MOTORXD934 ⇨ ❑ 230	EINSPRITZLEITUNGEN
220	10147365	1	AIR INTAKE PIPE ASS. R-MOTORXD934/D94 ⇨ ❑ 231	LUFTANSAUGROHR ANBAU
221	10145173	1	INTAKE STACK ASSEMBLY R-MOTORXD93 ⇨ ❑ 232	ANSAUGSTUTZEN ANBAU
224	10147364	1	AIR INTAKE ASSEMBLY R-MOTORXD934/D9 ⇨ ❑ 233	LUFTANSAUGUNG ANBAU
230	10149677	1	CONNECTING LINE ADD-ON R-MOTOR ⇨ ❑ 234	VERBINDUNGSLEITUNG ANBAU

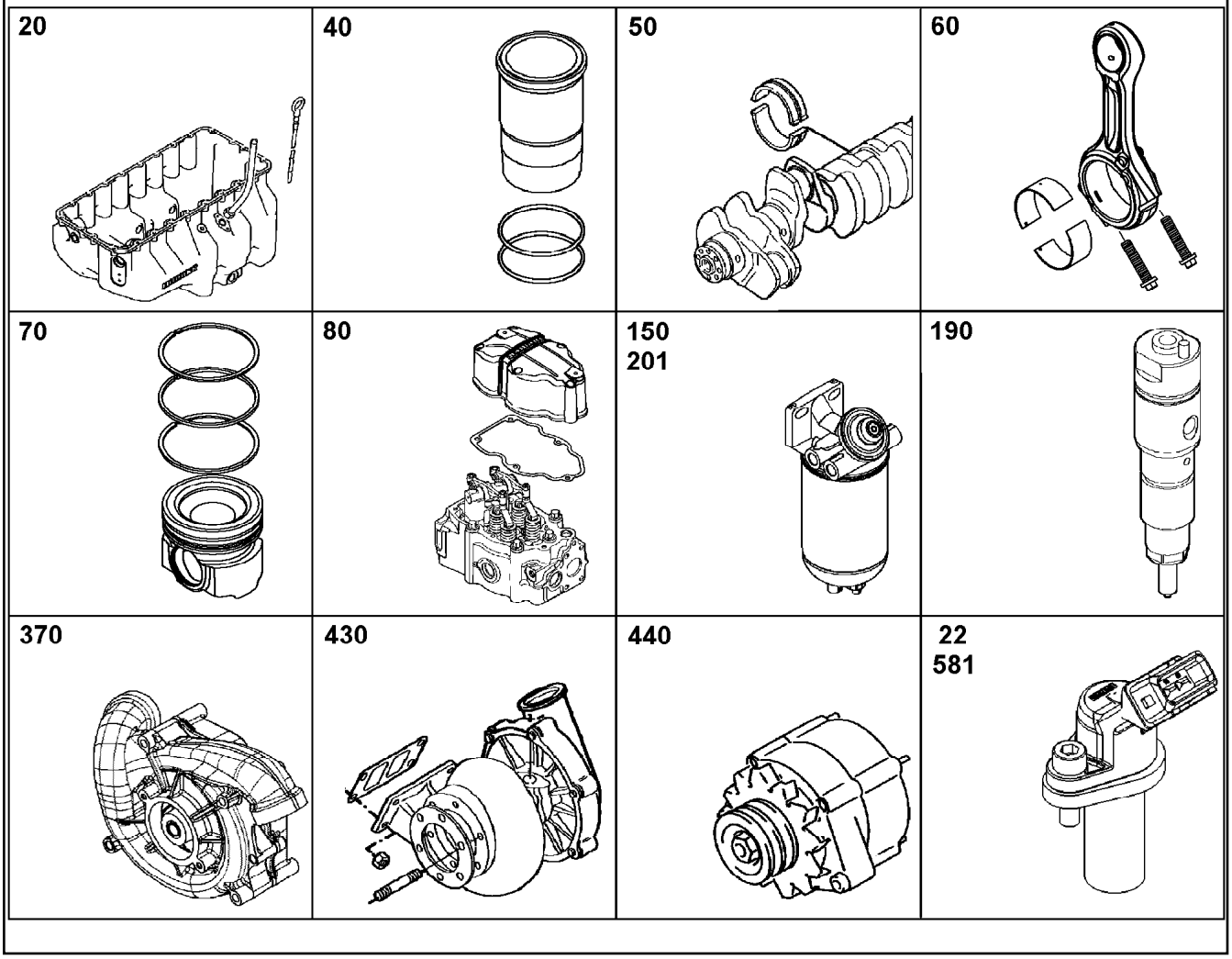

Pos.	Item	Quantity	Description	Bezeichnung
260	9078314	1	HEATING FLANGE ADD-ON ⇨ ❑ 235	HEIZFLANSCH ANBAU
330	10127566	1	INSTALLATION BRAKE COMPRESSOR 293 ⇨ ❑ 237	LUFTPRESSER ANBAU
331	9072906	1	INTERMEDIATE GEAR CPL. ⇨ ❑ 241	ZWISCHENRAD KPL.
333	10145176	1	PIPELINE INSTALLATION ⇨ ❑ 242	ROHRLEITUNG ANBAU
334	10145278	1	ACCESSORIES AIR COMPRESSOR ⇨ ❑ 243	ANBAUTEILE LUFTPRESSER
340	12418347	1	AIR COND. COMPRESSOR ADD-ON ⇨ ❑ 244	KLIMAKOMPRESSOR ANBAU
370	10142733	1	WATER PUMP WITH FASTENING R-MOTOR ⇨ ❑ 245	WASSERPUMPE MIT BEFEST.
380	10148215	1	THERMOSTAT HOUSING ASSEMBLY ⇨ ❑ 246	THERMOSTATGEHAEUSE ANBA
381	10148216	1	PIPELINE INSTALLATION ⇨ ❑ 247	ROHRLEITUNG ANBAU
382	10142742	1	COOLANT PIPE BEND ADD-ON ⇨ ❑ 248	KUEHLMITTELKRUEMMER ANBA
387	10142744	1	COOLING WATER AIR BLEEDING ⇨ ❑ 249	KUEHLWASSERENTLUEFTUNG
410	10140087	1	EXHAUST PIPE ASSEMBLY R-MOTORXD93 ⇨ ❑ 250	ABGASROHR ANBAU
415	10144756	1	HEAT PROTECTION W.FASTENING ⇨ ❑ 251	HITZESCHUTZ MIT BEFESTIGUN

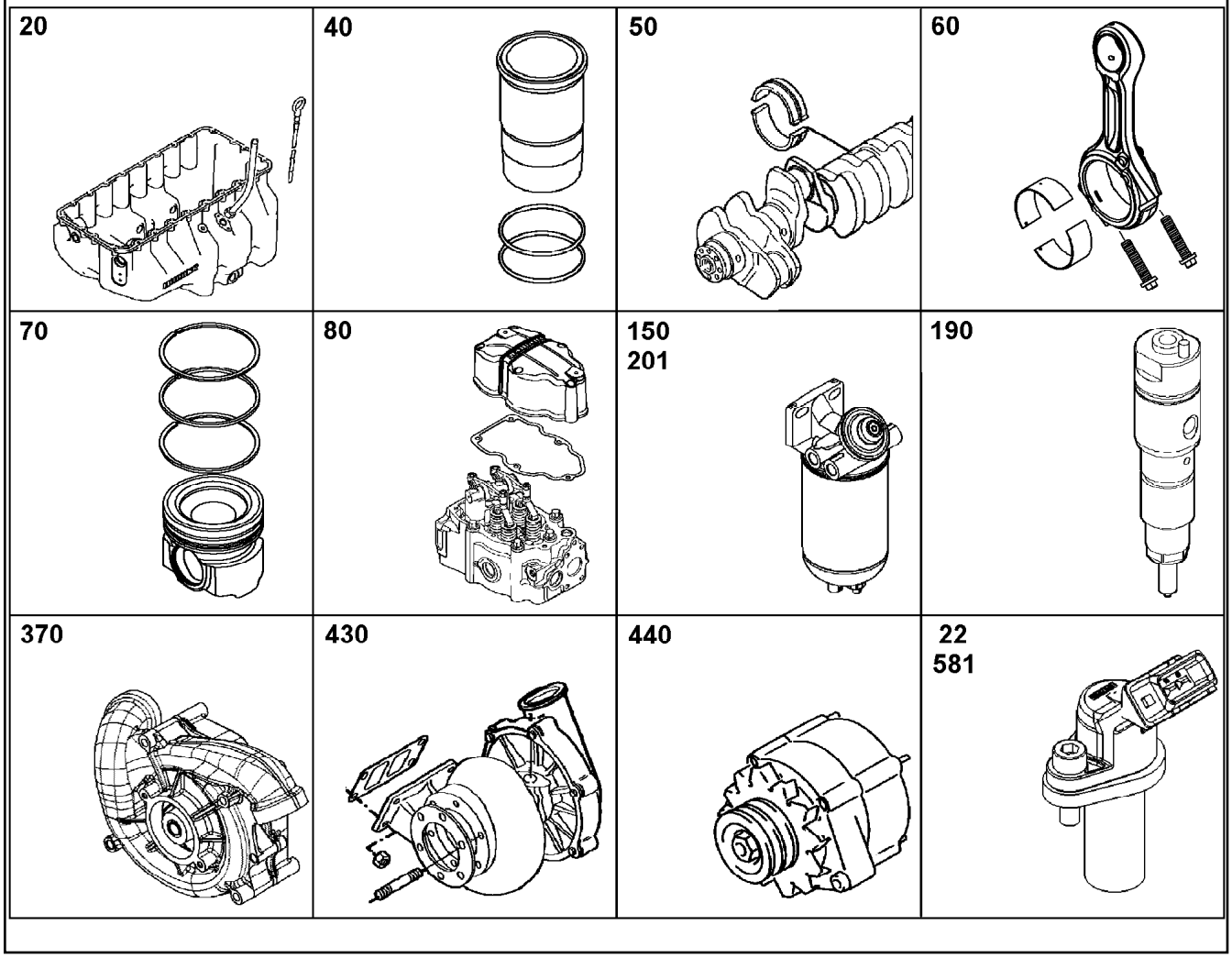

Pos.	Item	Quantity	Description	Bezeichnung
430	10140729	1	EXHAUST TC MOUNTING ⇨ ❑ 252	ATL-ANBAU
432	12512627	1	EXHAUST NOZZLE ATTACHMENT R-MOTOR ⇨ ❑ 253	ABGASSTUTZEN ANBAU
436	11420633	1	CYCLE VALVE 3.4BAR 8L/MIN 6m ⇨ ❑ 254	TAKTVENTIL
440	10142863	1	GENERATOR, PRE-ASSEMBLED 4.32KW 24 ⇨ ❑ 255	GENERATOR VORM.
450	10115539	1	STARTER ASSEMBLY 7.8KW 24V ⇨ ❑ 256	STARTER ANBAU
452	10115664	1	LOCKING PIECES ⇨ ❑ 259	VERSCHLUSSTEILE
480	9079823	1	TRANSPORT DEVICE ATTACHEMENT ⇨ ❑ 260	TRANSPORTVORRICHTUNG AN
481	10142864	1	TRANSPORT DEVICE ATTACHEMENT ⇨ ❑ 261	TRANSPORTVORRICHTUNG AN
483	12934664	1	LABEL 160X80X0,5	ANHAENGE ETIKETTE
520	10115829	1	FLYWHEEL HOUSING MOUNTING SAE 1 ⇨ ❑ 262	SCHWUNGRADGEHAEUSE AN
521	10116110	1	LOCKING PIECES ⇨ ❑ 263	VERSCHLUSSTEILE
524	10128439	1	LOCKING PIECES ⇨ ❑ 264	VERSCHLUSSTEILE
526	10127979	1	LOCKING PIECES ⇨ ❑ 265	VERSCHLUSSTEILE

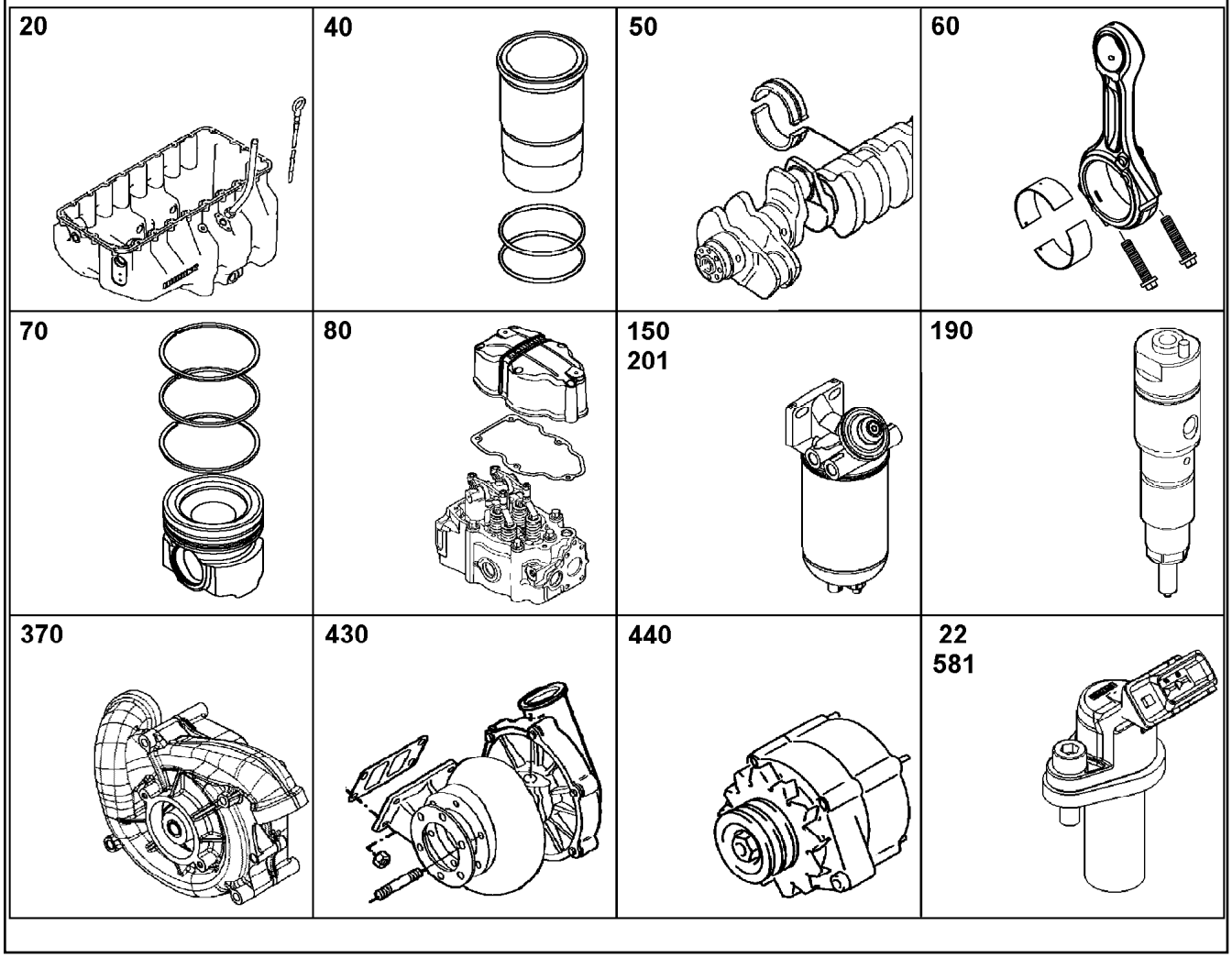

Pos.	Item	Quantity	Description	Bezeichnung
530	9077238	1	FLYWHEEL ASSEMBLY SAE 1X1,68 ⇨ ❑ 266	SCHWUNGRAD ANBAU
570	13470814	1	MOTOR CONTROL DEVICE ECU2	MOTORSTEUERGERAET
571	10144227	1	CONTROL BOX ANNEXE ⇨ ❑ 267	STEUERGERAET ANBAU
580	10151328	1	CABLE HARNESS MOUNTING ⇨ ❑ 269	KABELBAUM ANBAU
581	12583633	1	ENGINE CONTROL SENSORS D936 A7 ⇨ ❑ 273	MOTORREGELUNGSENSORIK
600	10124097	2	COMPANY NAME PLATE	FIRMENSCHILD
630	10142747	1	LOCKING PIECES ⇨ ❑ 274	VERSCHLUSSTEILE
650	10125687	1	POWER TAKE-OFF ADD-ON ⇨ ❑ 275	NEBENABTRIEB ANBAU
652	10144036	1	POWER TAKE-OFF ADD-ON ⇨ ❑ 276	NEBENABTRIEB ANBAU
654	9078301	1	LOCKING PIECES ⇨ ❑ 278	VERSCHLUSSTEILE
728	10128890	1	LABEL 80X80X0,5	ANHAENGE ETIKETTE

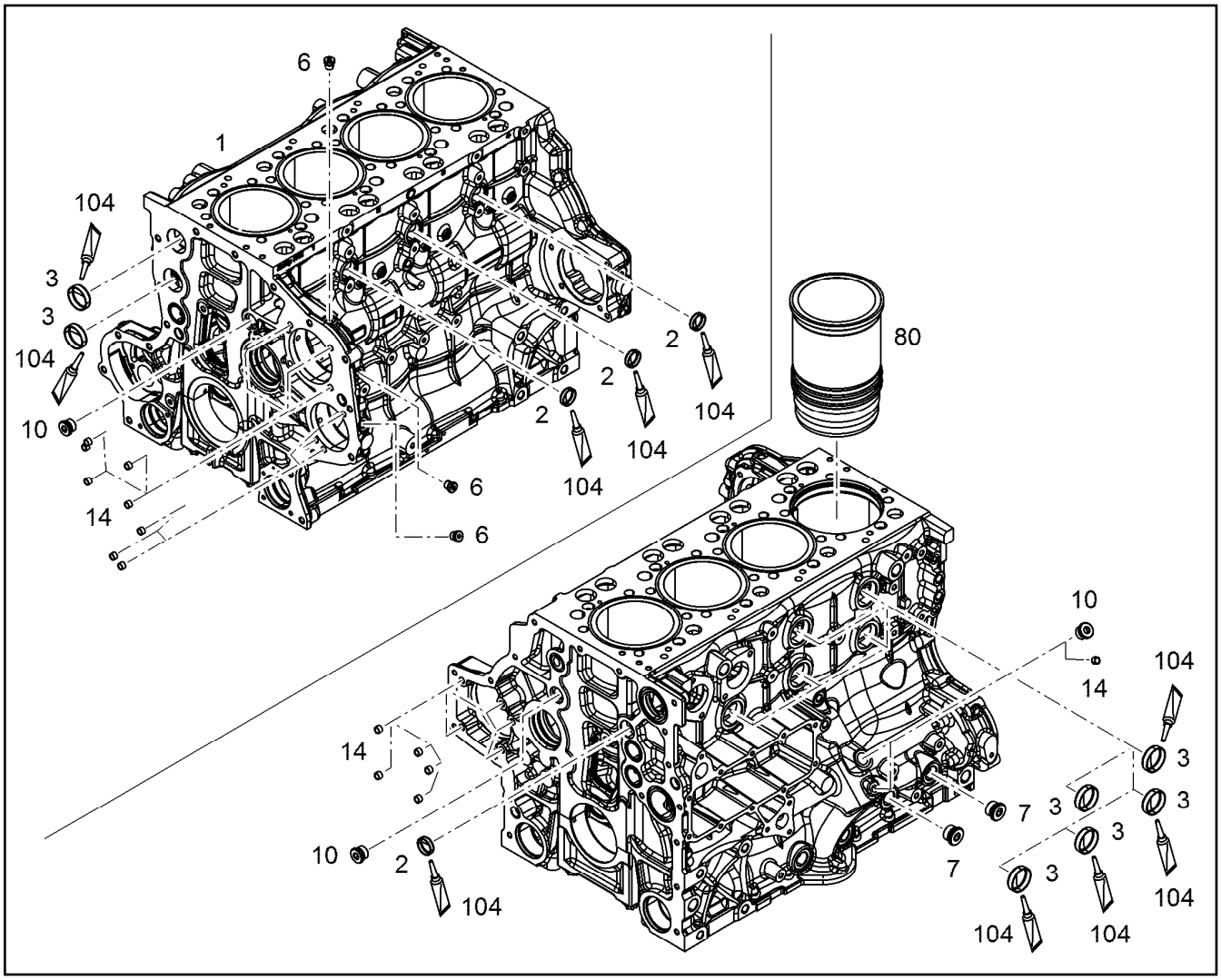

Pos.	Item	Quantity	Description	Bezeichnung
1	10154379	1	CRANKCASE PRE-ASSY. R-MOTORXD944 ⇨ ❑ 181	KURBELGEHAEUSE VORM.
2	12209779	4	END COVER DIN 443 B 480H	VERSCHLUSSDECKEL
3	12209783	7	END COVER DIN 443 B 480H	VERSCHLUSSDECKEL
6	7380566	3	SCREW PLUG VSTI M14X1,5	VERSCHLUSSSCHRAUBE
7	7381457	2	SCREW PLUG VSTI M26X1,5 CR6-FREI	VERSCHLUSSSCHRAUBE
10	7380177	3	SCREW PLUG VSTI M22X1,5 CR6-FREI	VERSCHLUSSSCHRAUBE
14	10030837	14	SEALING PLUG LK 950	DICHTSTOPFEN
80	10154458	4	CYLINDER R-MOTORXD944/D94 ⇨ ❑ 182	ZYLINDER
104	8655032	1	GLUE 10ML FLASCHE -50/+175 °C	KLEBSTOFF

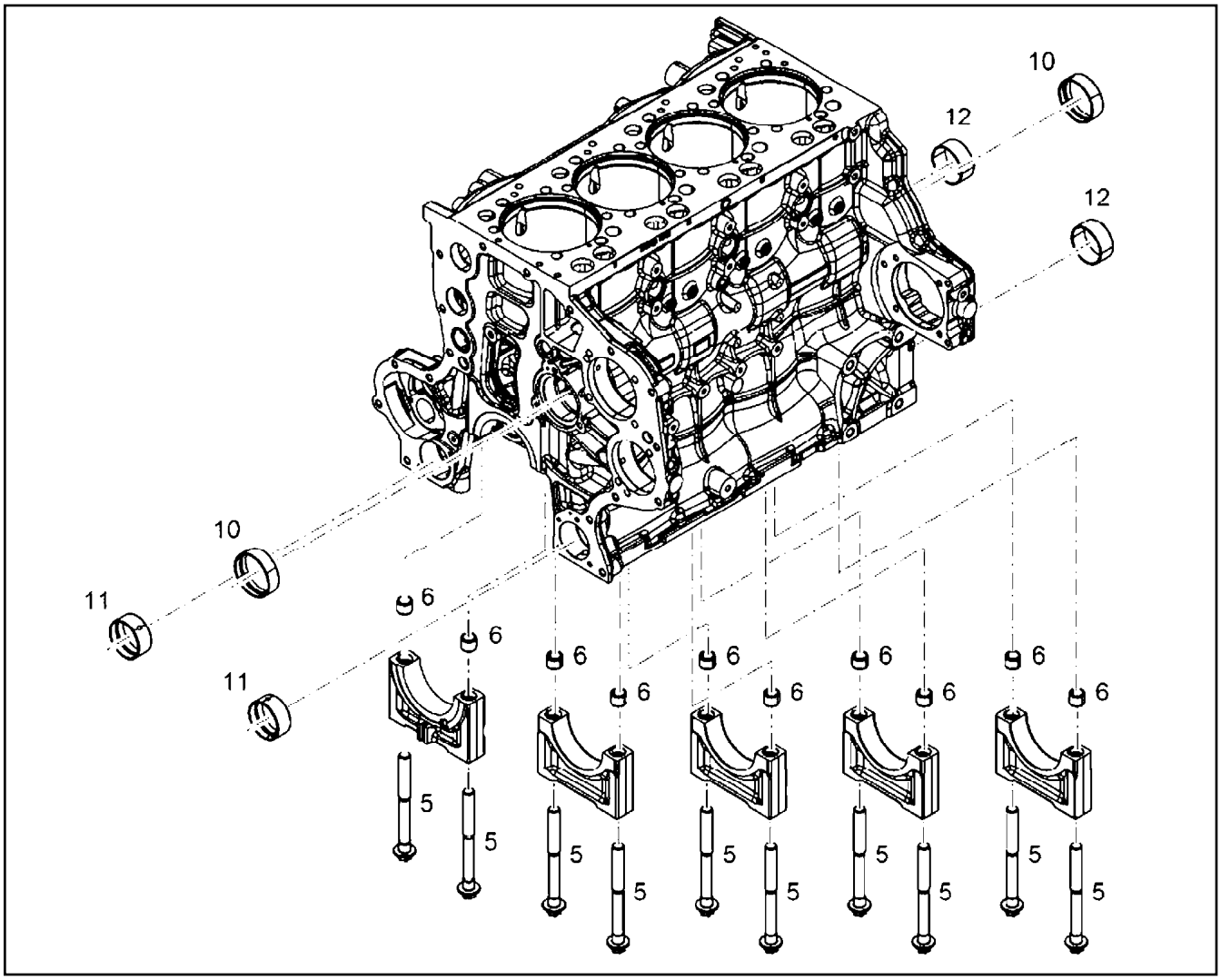

Pos.	Item	Quantity	Description	Bezeichnung
5	10130816	10	HEXALOBULAR HEAD SCREW M18X2X181	SECHSRUNDSCHRAUBE
6	9177636	10	TIGHT FIT SLEEVE 15,5X19,5X24	PASSHUELSE
10	9274859	5	CAMSHAFT BUSHING 70,912X75,112X23	NOCKENWELLENBUCHSE
11	9132281	2	CAMSHAFT BUSHING 60,897X65,097X28	NOCKENWELLENBUCHSE
12	9888259	6	BEARING BUSH 60X65X28 GLYCO 48	LAGERBUCHSE

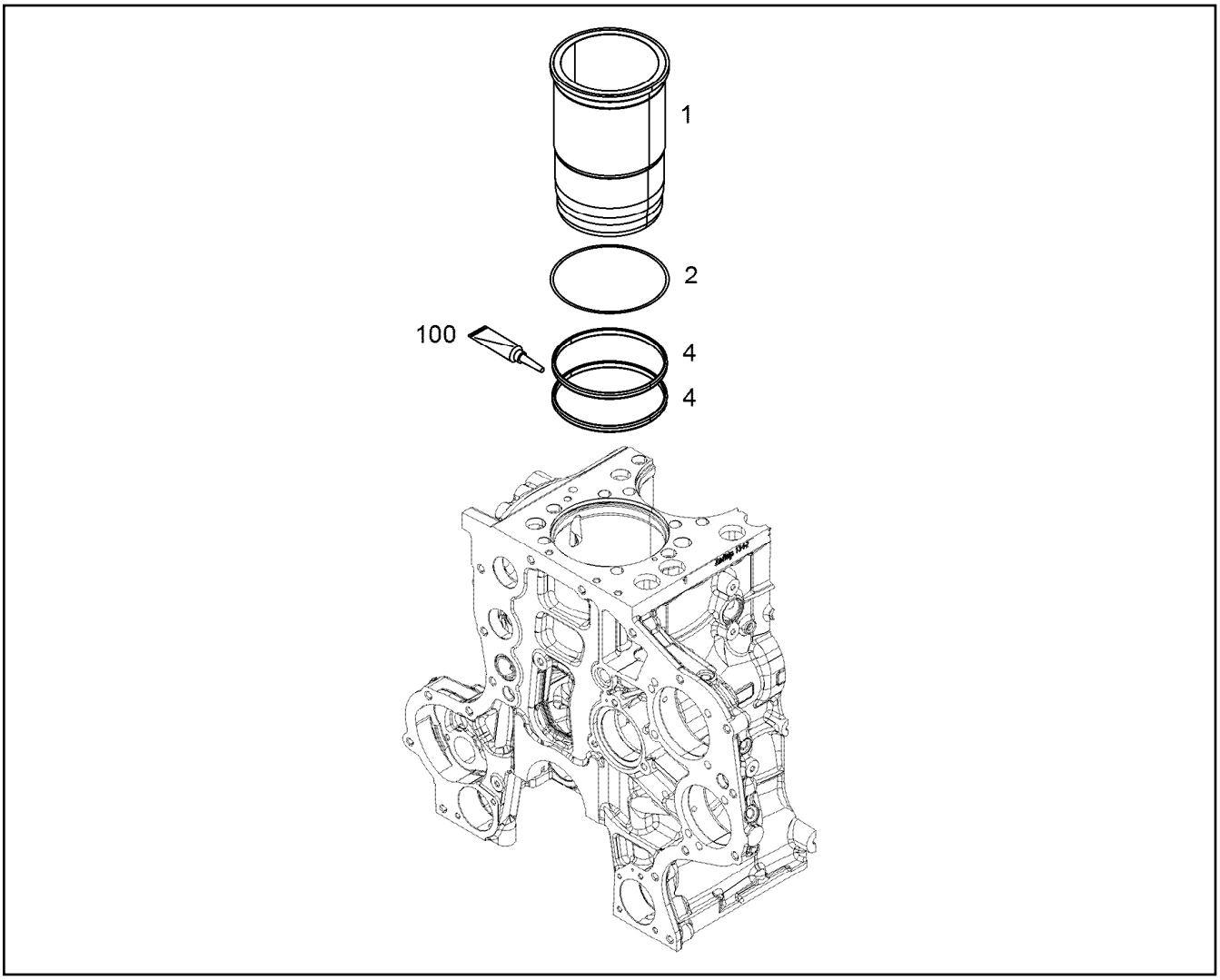

Pos.	Item	Quantity	Description	Bezeichnung
1	10153973	1	CYLINDER BUSHING R-MOTORXD944/D94 E	ZYLINDERBUCHSE
1	12898375	1	CYLINDER BUSHING R-MOTORXD944/D94 E	ZYLINDERBUCHSE
2	10154459	1	SHEET GASKET 150X158X0,10 CuZn30	DICHTSCHEIBE
2	12993450	1	REP-SHEET GASKET 151,6X157,3X0,12 AISI	REP-DICHTSCHEIBE
4	10282774	2	O-RING 145 75 FKM 17939	O-RING
100	10285708	1	GREASE NBU 30 1KG DOSE	FETT
(10)	10282622	1	GREASE STABURAGS NBU 30 0.010KG	FETT

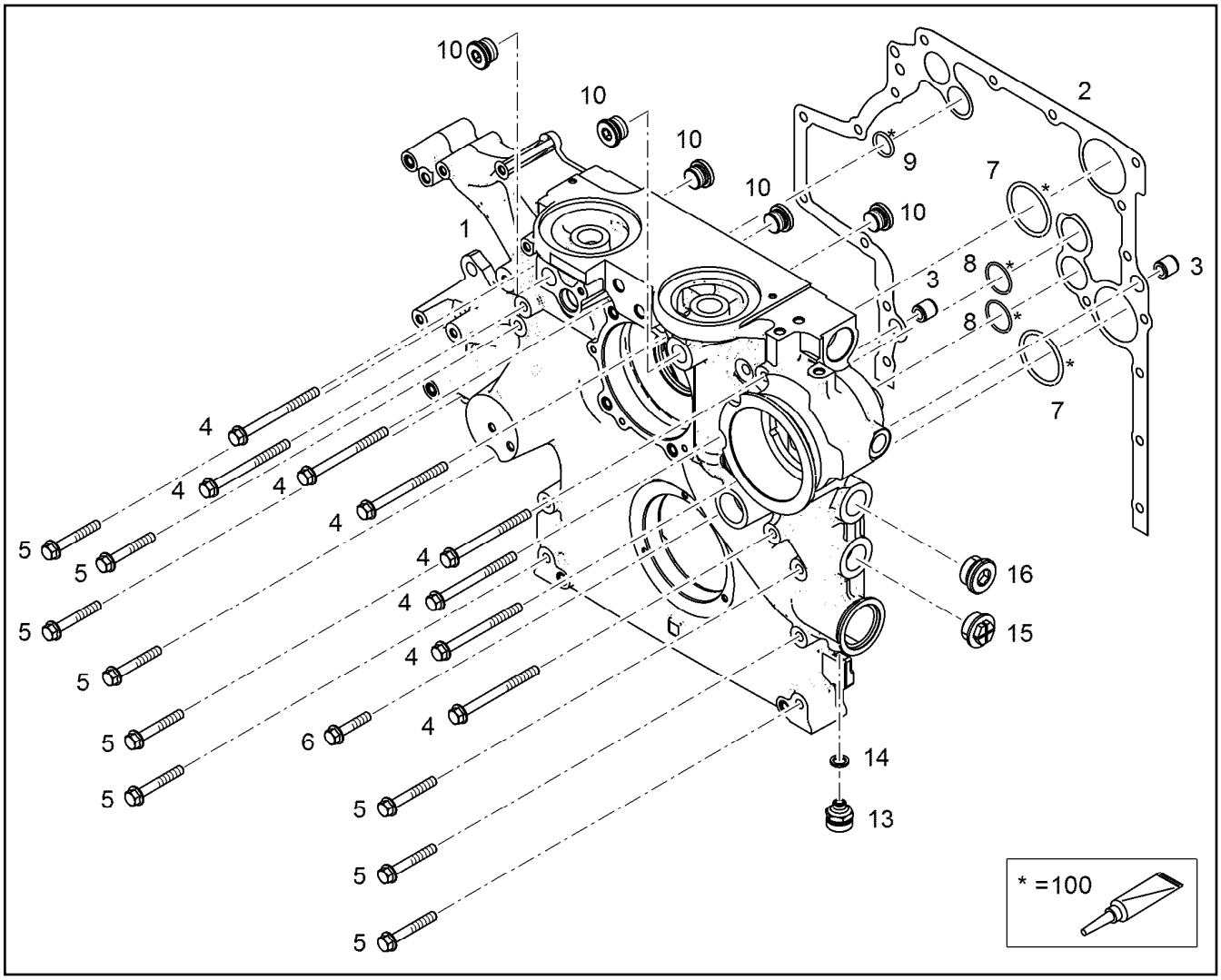

Pos.	Item	Quantity	Description	Bezeichnung
1	11359503	1	RK AGGREGATE SUPPORT PRE-ASS.	RS AGGREGATETRAEGER VO
1	12835708	1	AGGREGATE SUPPORT PRE-ASS. R-MOT	AGGREGATETRAEGER VORM.
2	10126738	1	SEAL 0,33 METALOSEAL 1	DICHTUNG
3	10134348	2	TIGHT FIT SLEEVE 12X20X20 100Cr6	PASSHUELSE
4	12207562	8	HEX SCREW EN 1665 M10X120 10.9 FLZN	SECHSKANTSCHRAUBE
5	10299589	9	HEX SCREW EN 1665 M10X70 10.9 FLZN	SECHSKANTSCHRAUBE
6	10299585	1	HEX SCREW EN 1665 M10X50 10.9 FLZN	SECHSKANTSCHRAUBE
7	7381779	2	O-RING 59,92X3,53 HNBR 70	O-RING
8	7380653	2	O-RING ISO 3601-1 34,59X2,62 FKM 90 A,BK	O-RING
9	10004261	1	O-RING AEHNL.ISO 3601-1 26X3 HNBR 70	O-RING
10	10041903	5	SCREW PLUG VSTI M24X1,5	VERSCHLUSSSCHRAUBE
13	10011832	1	VALVE	VENTIL
14	7381225	1	SEALING RING DIN 7603 A14X20X2,5 Cu	DICHTRING
15	10465711	2	SEALING PLUG GPN 735 M33X2 PA 6	DICHTSTOPFEN
16	10043136	1	SCREW PLUG VSTI M33X2 CR6-FREI	VERSCHLUSSSCHRAUBE
100	10285708	1	GREASE NBU 30 1KG DOSE	FETT

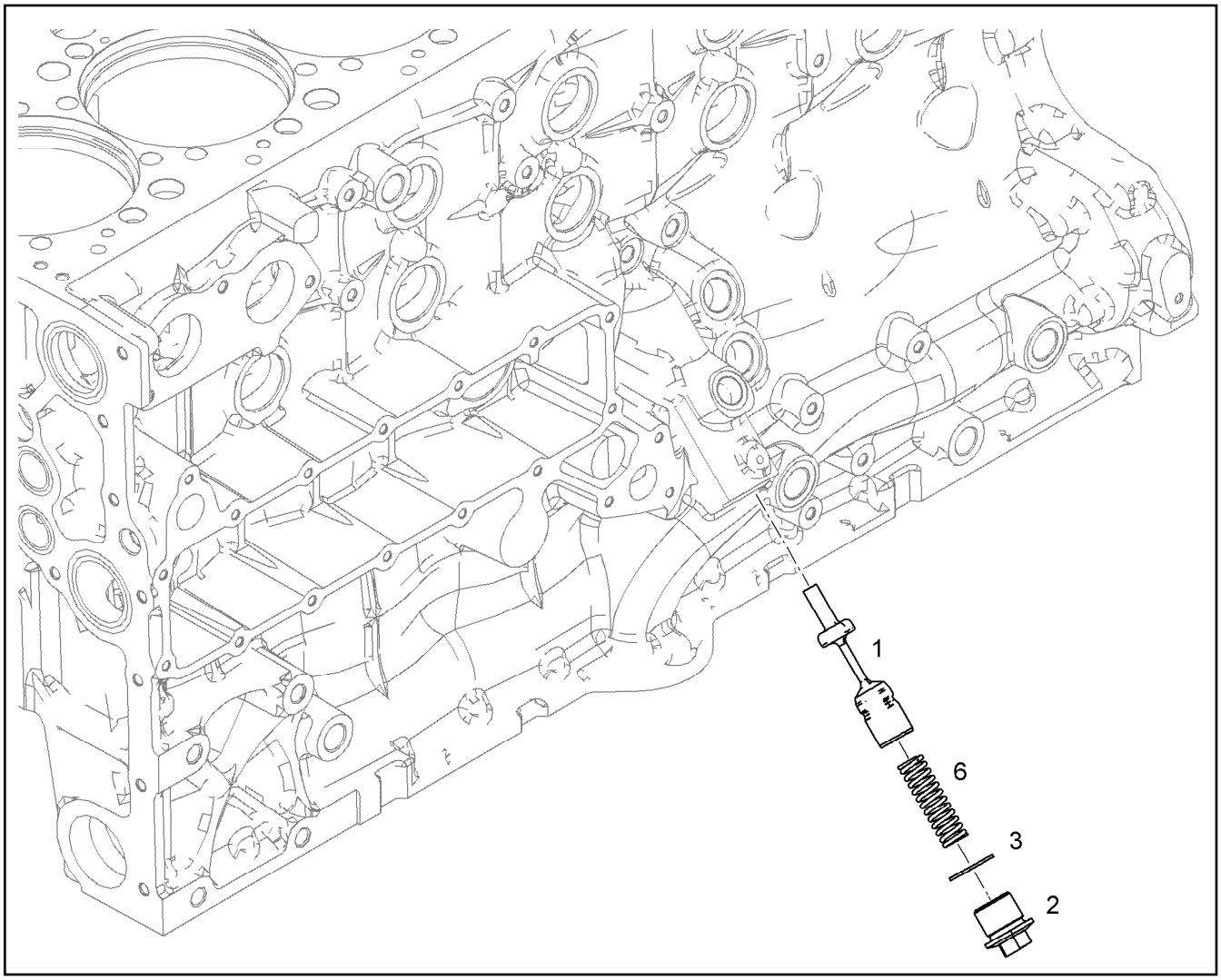

Pos.	Item	Quantity	Description	Bezeichnung
1	10149655	1	PISTON 31CrMoV9	KOLBEN
2	10137918	1	SCREW PLUG M30X1,5 11SMnPb30+C VER	VERSCHLUSSSCHRAUBE
3	710106508	1	SEALING RING DIN 7603 A30X36X2 CU	DICHTRING
6	11118160	1	COMPRESSION SPRING 3X17X74,67 OTEVA	DRUCKFEDER

Pos.	Item	Quantity	Description	Bezeichnung
1	10151634	1	PISTON COOLING PRE-ASS.	KOLBENKUEHLUNG VORM.

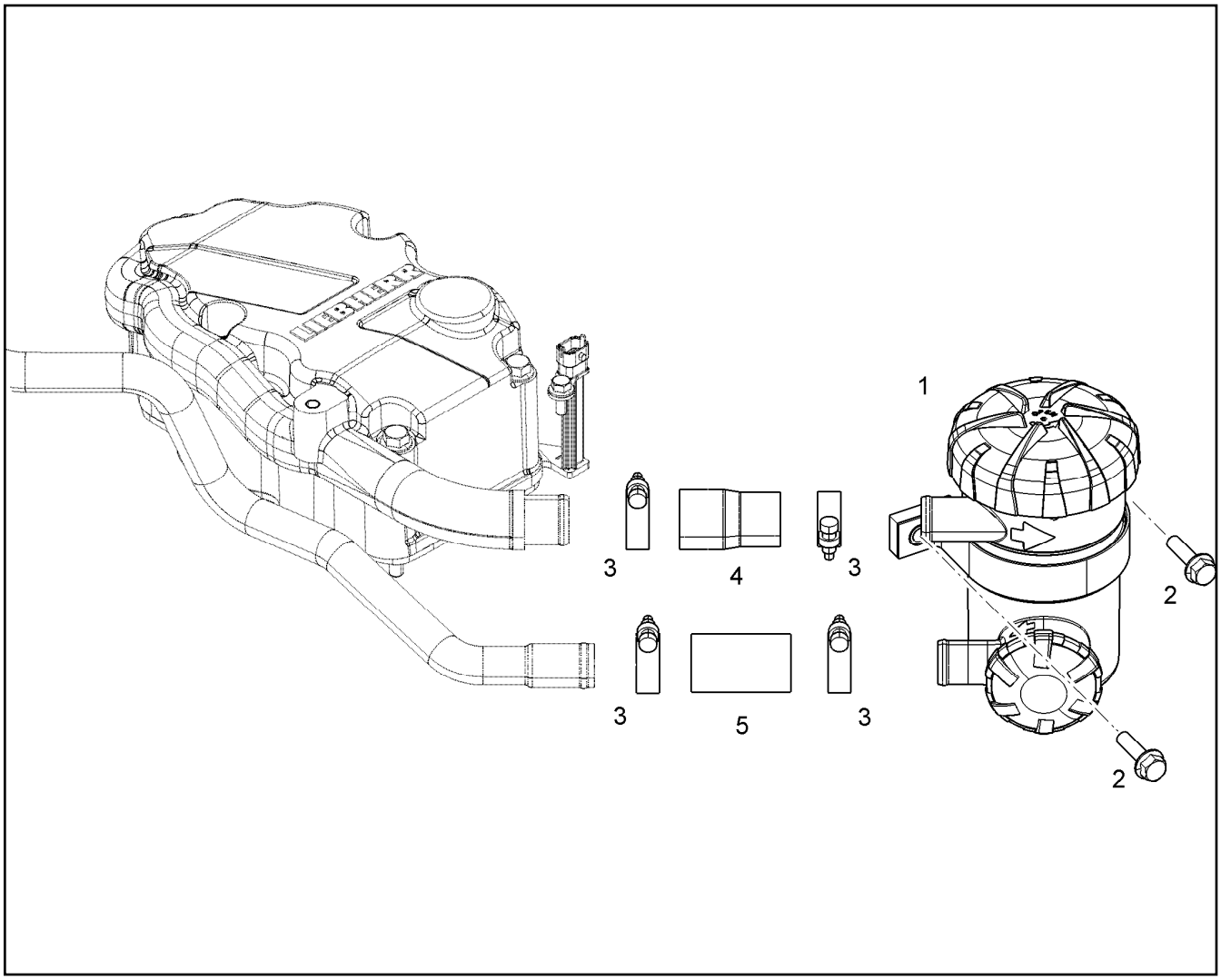

Pos.	Item	Quantity	Description	Bezeichnung
1	12886223	1	CRANKCASE BREATHER	KURBELGEHAEUSEENTLUEFT
(1)	12886224	1	SPARE ELEMENT OEL	ERSATZELEMENT
2	11826563	2	HEX SCREW EN 1665 M8X30 8.8 480H	SECHSKANTSCHRAUBE
3	774215008	1	HOSE CLAMP 26/20-32/12 W3	SCHLAUCHSCHELLE
4	10126417	1	RUBBER CONNECTION Rubber	GUMMIMUFFE
5	9271340	1	RUBBER CONNECTION 25X35/33X56 L.	GUMMIMUFFE

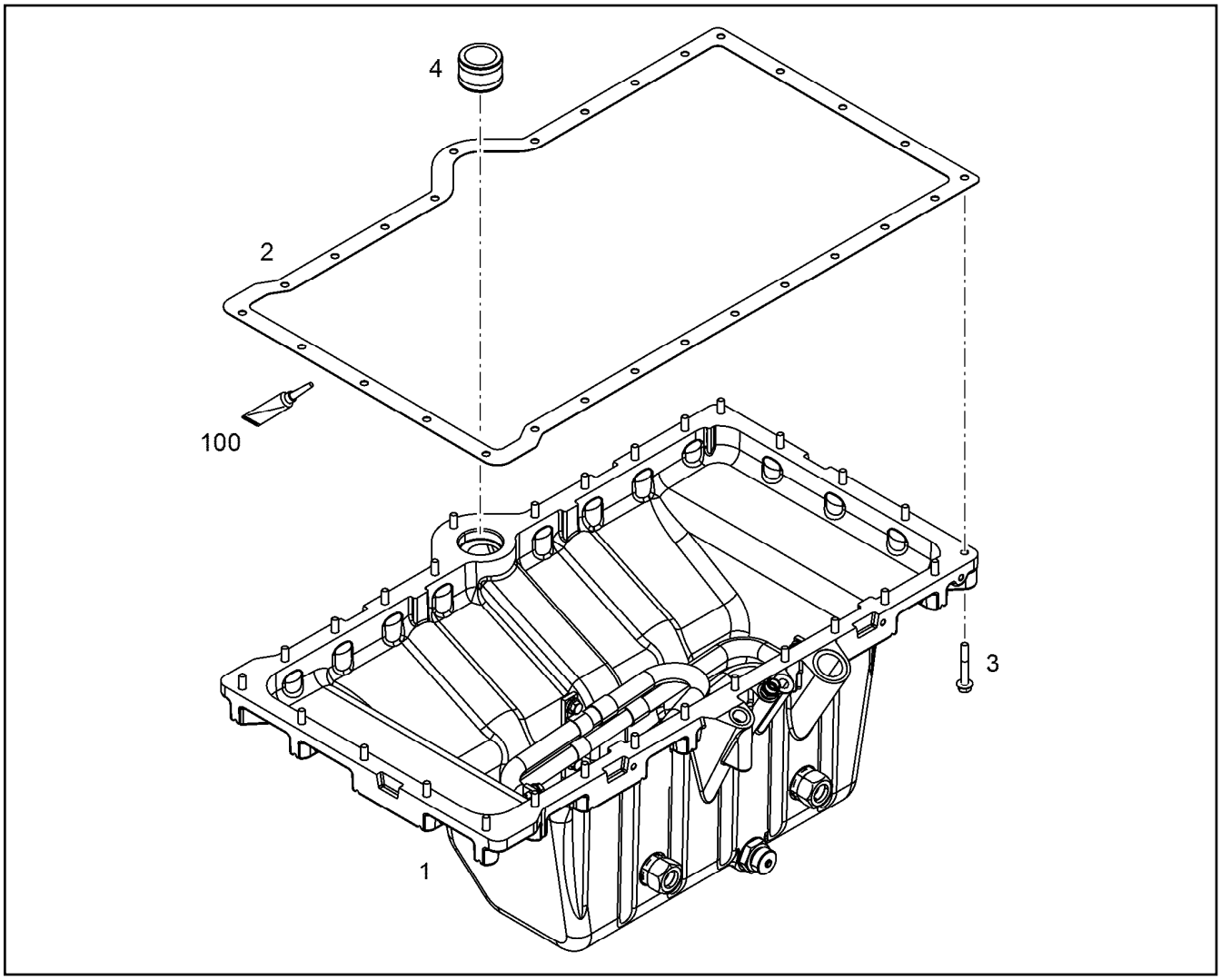

Pos.	Item	Quantity	Description	Bezeichnung
1	10133837	1	OIL SUMP PRE-ASS. R-MOTOR/D934 ⇨ ❑ 188	OELWANNE VORM.
2	10128516	1	SEAL AFM 30	DICHTUNG
3	12210060	28	HEX SCREW EN 1665 M8X55 8.8 480H	SECHSKANTSCHRAUBE
4	10121667	1	CONNECTING PIECE W.O-RING ⇨ ❑ 191	VERBINDUNGSSTUECK M.O-RIN
100	10354595	1	SURFACE SEALING 300ML KARTUSCHE BI	FLAECHENDICHTUNG

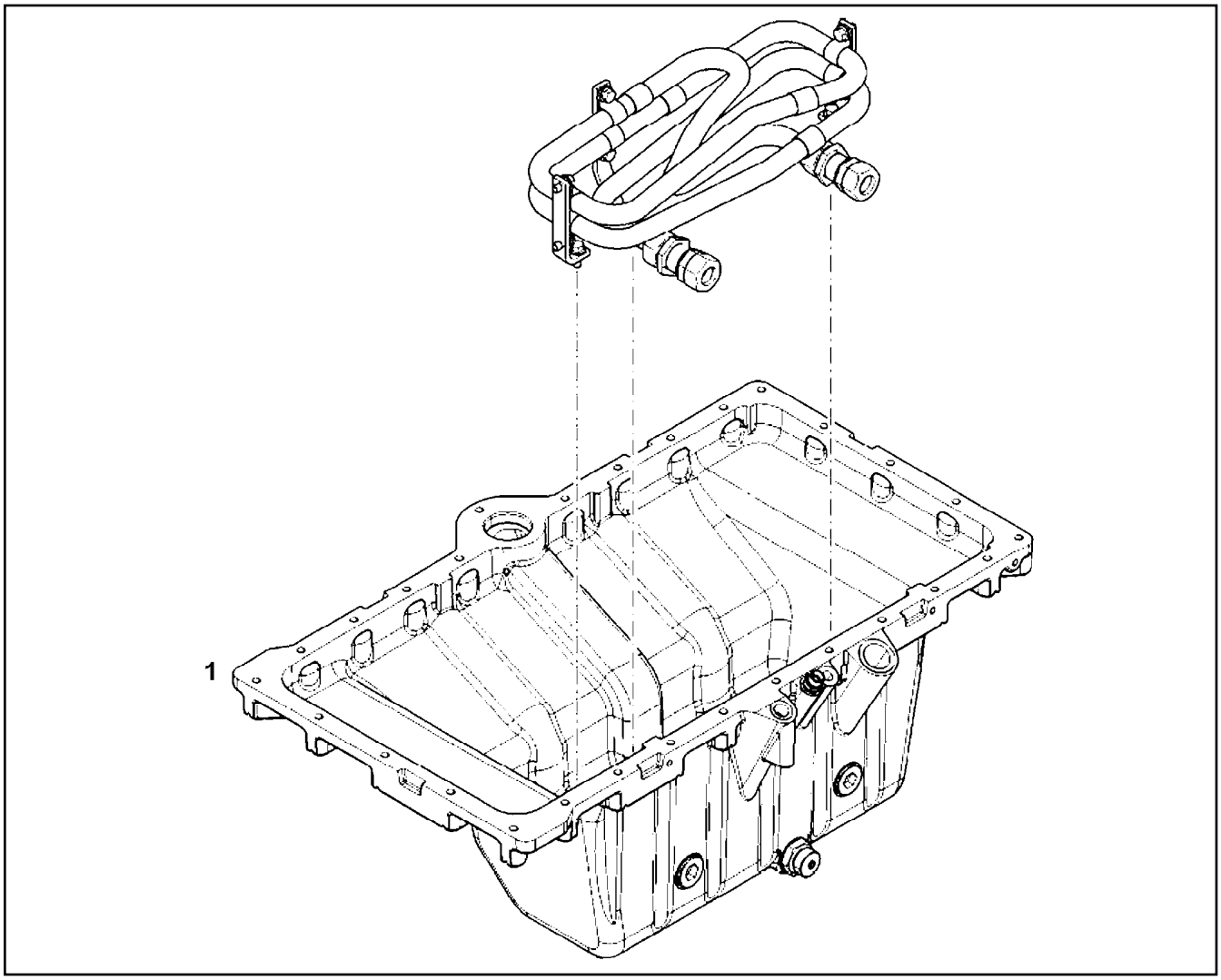

Pos.	Item	Quantity	Description	Bezeichnung
1	10155227	1	OIL SUMP PRE-ASS. R-MOTOR ⇨ ❑ 189	OELWANNE VORM.

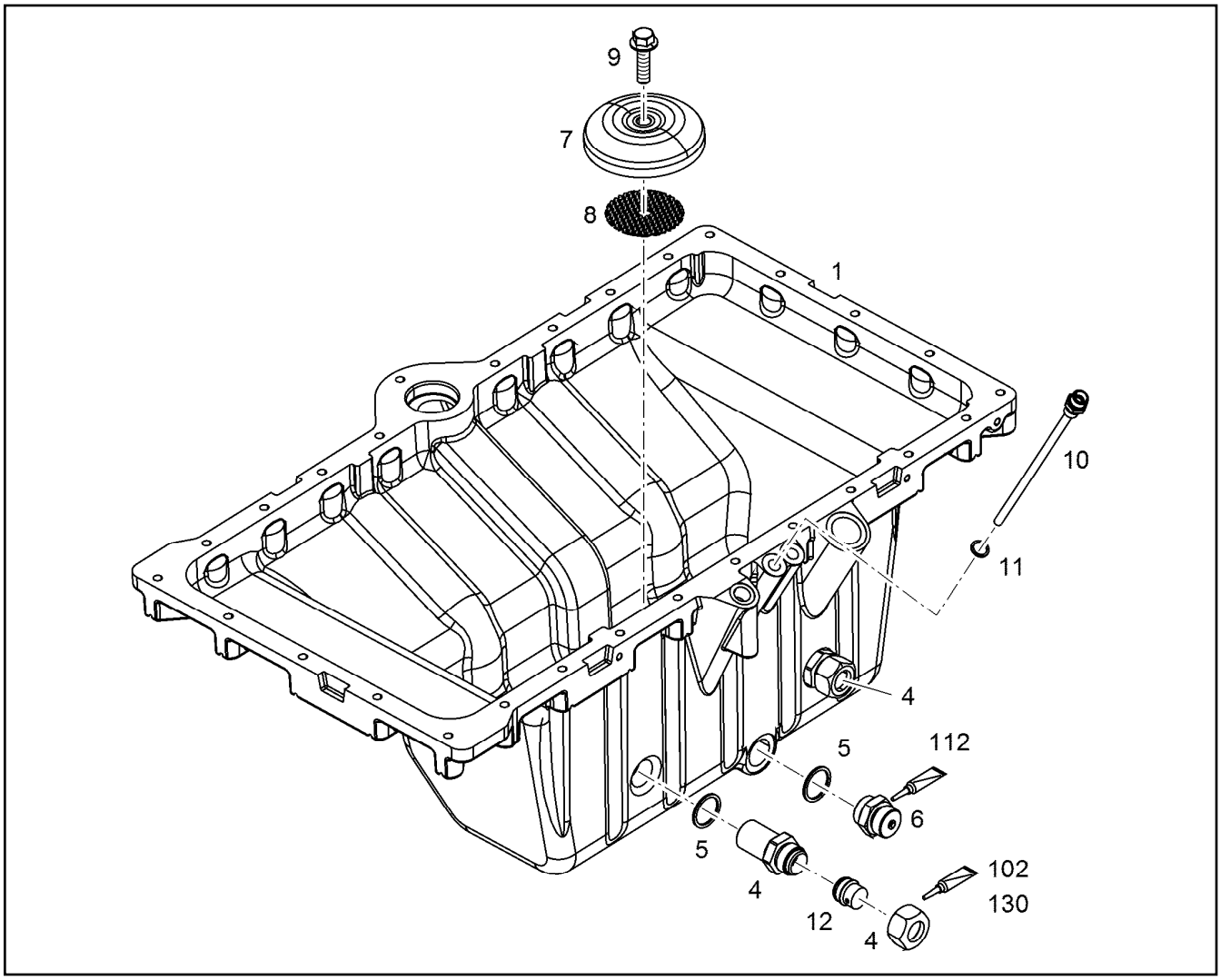

Pos.	Item	Quantity	Description	Bezeichnung
5	710106508	3	SEALING RING DIN 7603 A30X36X2 CU	DICHTRING
6	5004624	1	OIL DRAIN PLUG M 30 1,5 ⇨ ❑ 190	OELABLASSSCHRAUBE
7	10115832	1	COVER LID 112,7 PPA	ABDECKKAPPE
8	9080377	1	PERFORATED PLATE 75X75	LOCHBLECH
9	11656452	1	HEX SCREW EN 1665 M12X45 8.8 FLZN SPF	SECHSKANTSCHRAUBE
10	9080660	1	TUBE	ROHR
11	710102508	1	SEALING RING DIN 7603 A14X18X1,5 CU	DICHTRING
12	4772028	2	TAPER COLLET VKA 22L CR6-FREI	VERSCHLUSSKEGEL
102	811208001	1	THREAD LOCK 50ML FLASCHE	GEWINDESICHERUNG
112	8627609	1	SEALANT 90G TUBE	DICHTUNGSMITTEL

Pos.	Item	Quantity	Description	Bezeichnung
2	7011131	1	SEAL	DICHTUNG
3	7013456	1	PROTECTING CAP M26X1,5	SCHUTZKAPPE

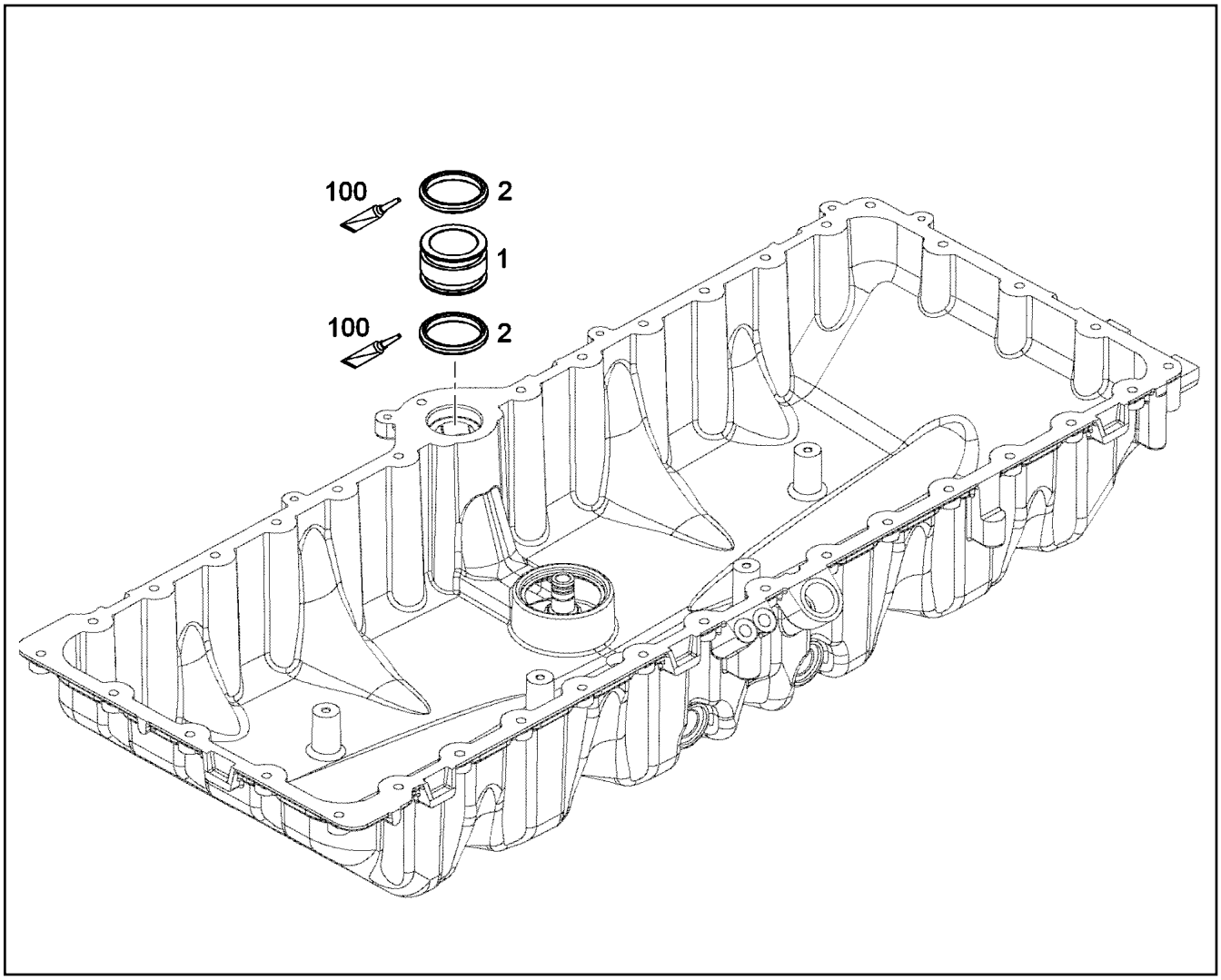

Pos.	Item	Quantity	Description	Bezeichnung
1	10121666	1	CONNECTING PIECE Al Rm>=200MP	VERBINDUNGSSTUECK
2	7381566	2	O-RING 40,64X5,33 FKM 70	O-RING
100	10282622	1	GREASE STABURAGS NBU 30 0.010KG	FETT

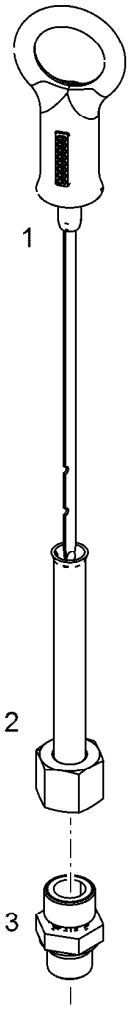

Pos.	Item	Quantity	Description	Bezeichnung
1	10150935	1	OIL DIPSTICK	OELMESSSTAB MIT RING
2	9079532	1	GUIDING PIPE	FUEHRUNGSROHR
3	4981235	1	FITTING ISO 8434-1 GE 10L M14X1,5 CR6-F	VERSCHRAUBUNG

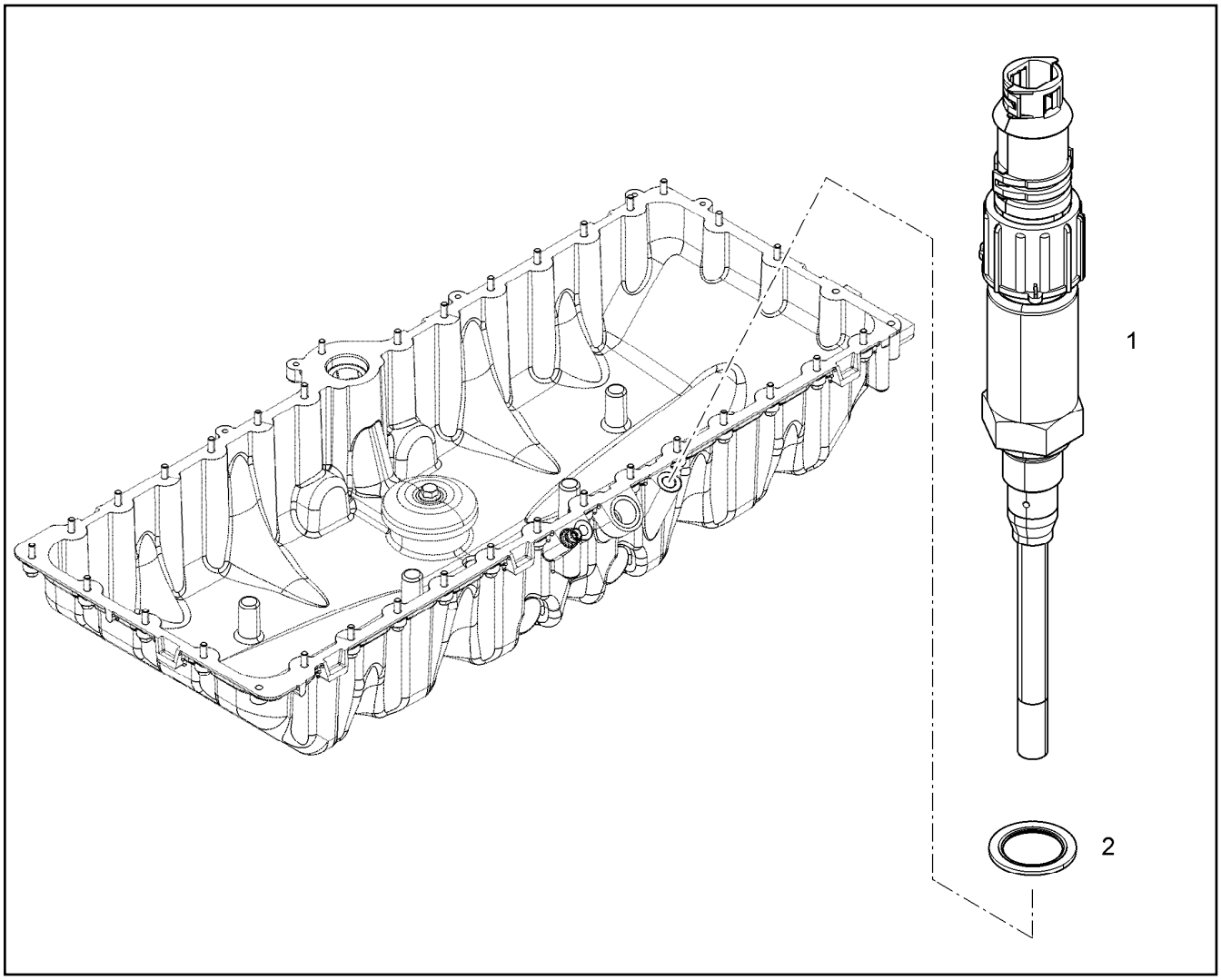

Pos.	Item	Quantity	Description	Bezeichnung
1	10816943	1	LEVEL SENSOR L=115 24V	NIVEAUGEBER
2	10011868	1	SEALING RING 18,7X26X1,5 St/FPM1-80	DICHTRING

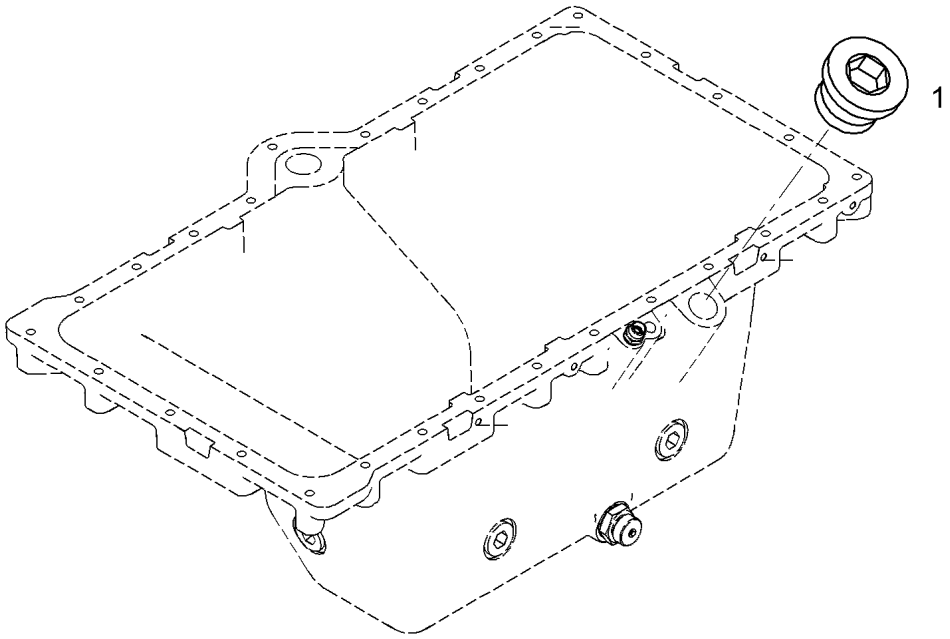

Pos.	Item	Quantity	Description	Bezeichnung
1	10043136	1	SCREW PLUG VSTI M33X2 CR6-FREI	VERSCHLUSSSCHRAUBE

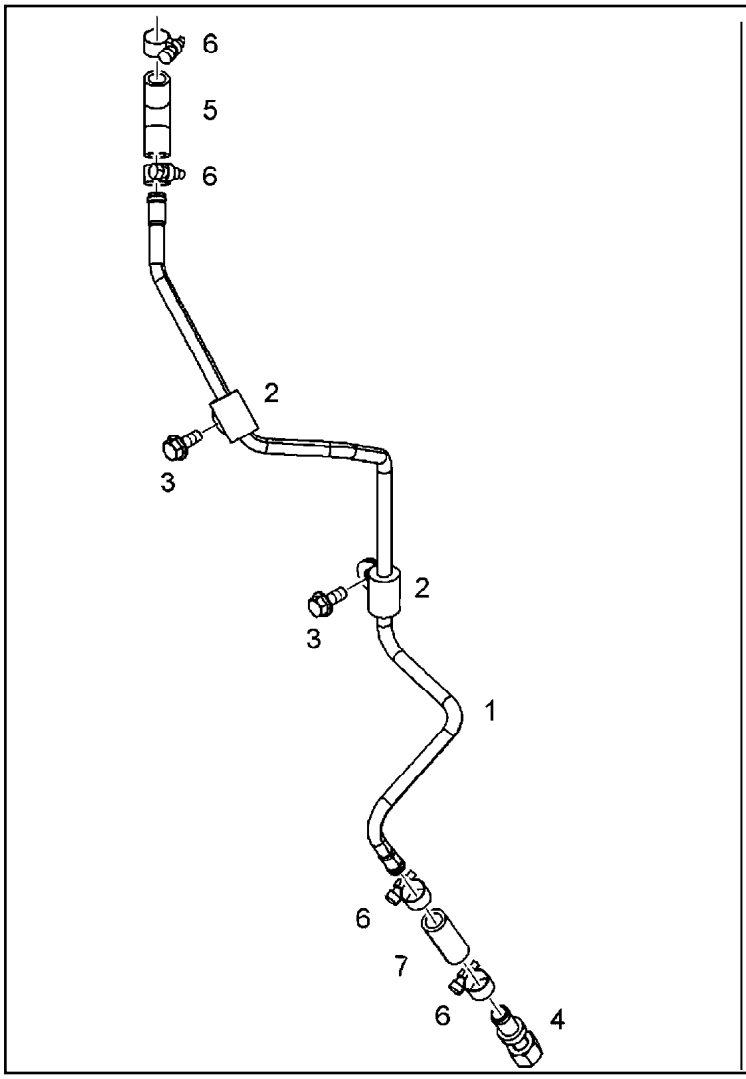

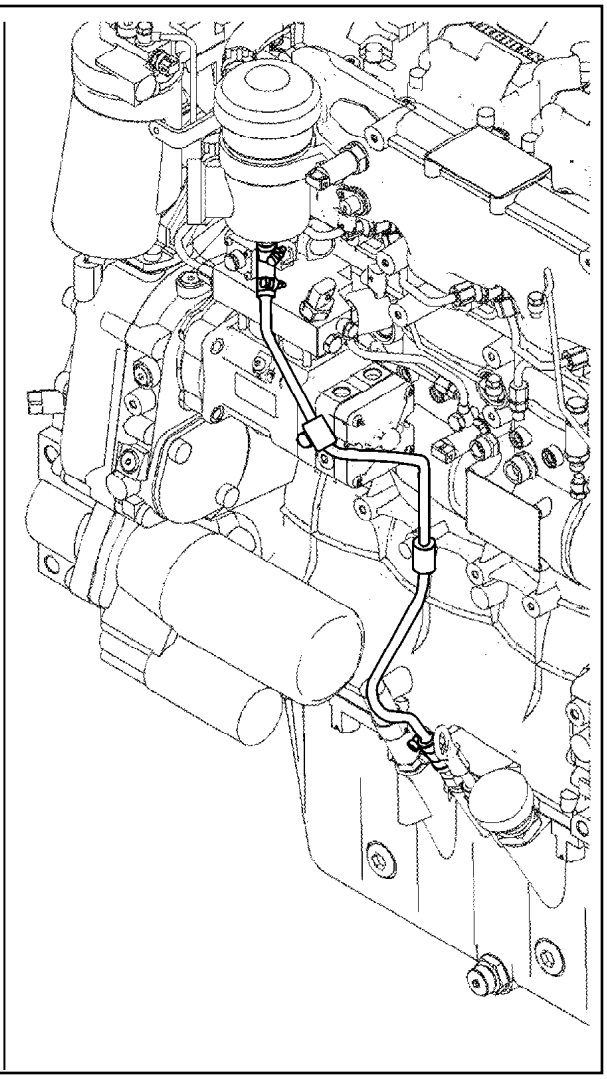

Pos.	Item	Quantity	Description	Bezeichnung
1	10139111	1	OIL RETURN PIPE 10X1	OELRUECKLAUFLEITUNG
2	7382092	2	CLAMP DIN 3016-1 10X25XD1 W1-2-MVQ	SCHELLE
3	11656153	2	HEX SCREW EN 1665 M10X20 8.8 FLZN SPF	SECHSKANTSCHRAUBE
4	10119971	1	NON-RETURN VALVE	RUECKSCHLAGVENTIL
5	10126317	1	RUBBER CONNECTION	GUMMIMUFFE
6	4981029	4	HOSE CLAMP DIN 3017-2 17/16 - 18/12 W1-2	SCHLAUCHSCHELLE
6	4601105	1	CLAMP DIN 3017-1 16/12-20/9 W2-2	SCHELLE
7	9079603	1	RUBBER CONNECTION 12X18X45	GUMMIMUFFE

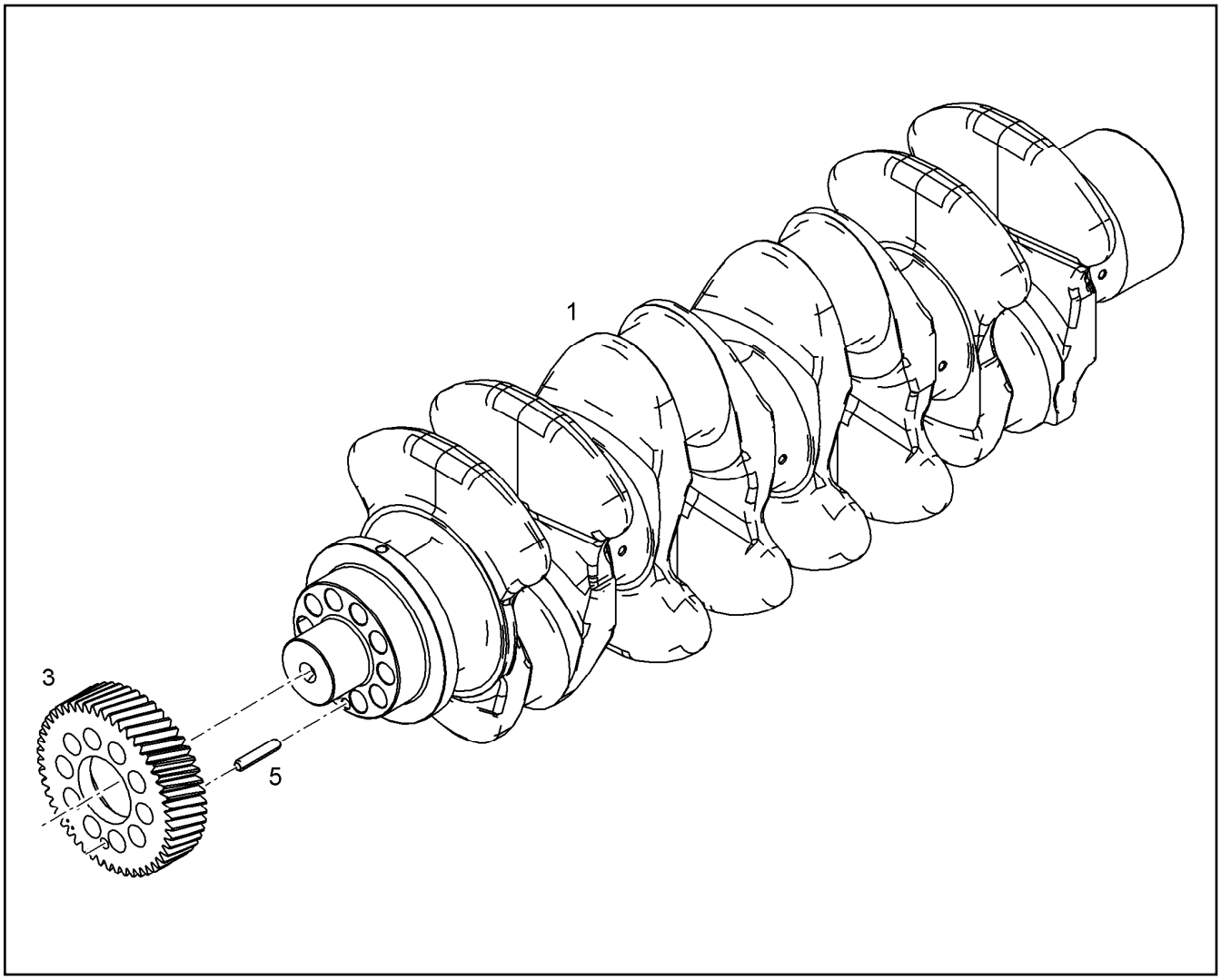

Pos.	Item	Quantity	Description	Bezeichnung
1	10131177	1	CRANKSHAFT R-MOTORXD934 C38 mod BY	KURBELWELLE
3	9072834	1	GEAR WHEEL 2,5	ZAHNRAD
5	4980376	1	DOWEL PIN ISO 8752 8X40 St	SPANNSTIFT

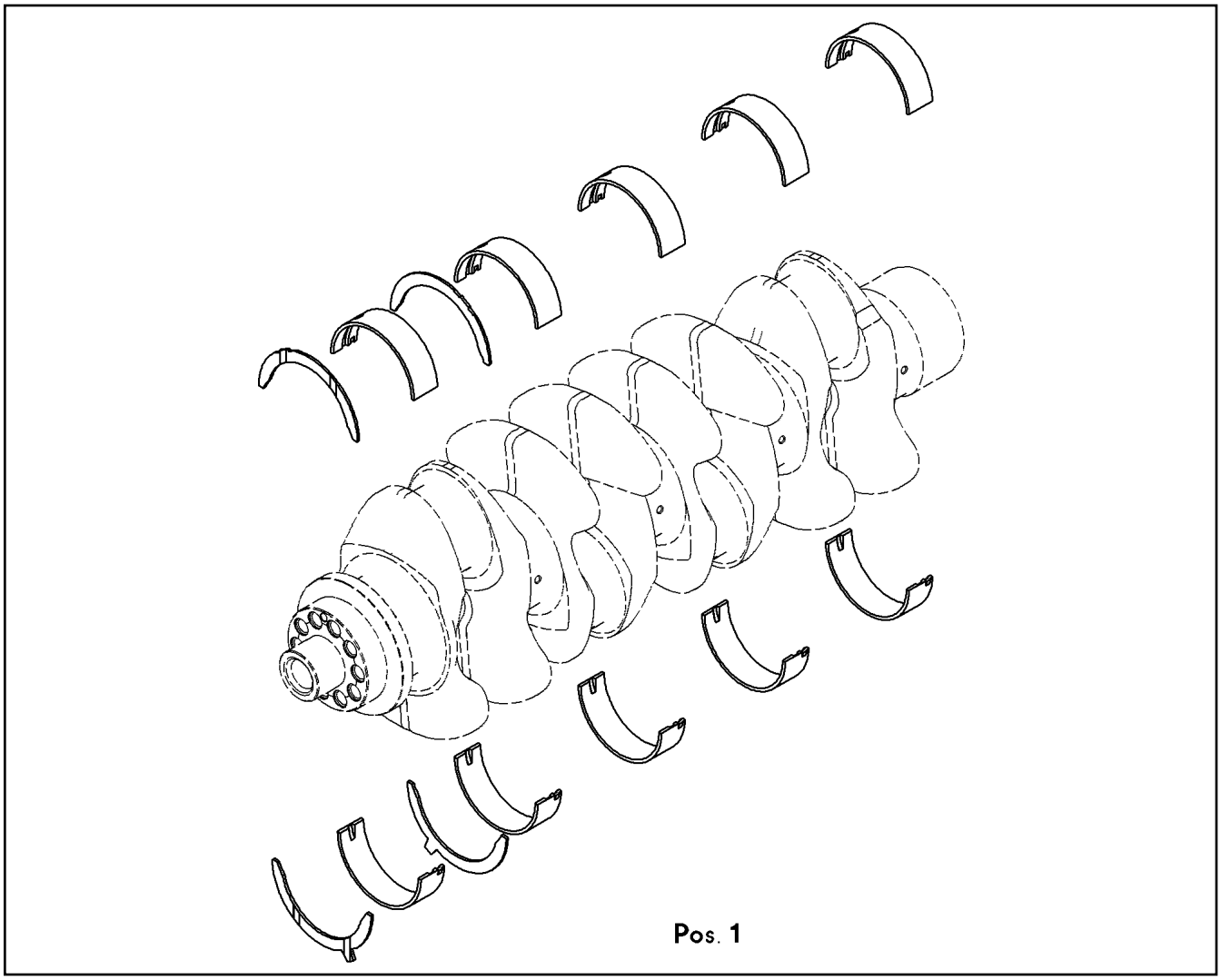

Pos.	Item	Quantity	Description	Bezeichnung
1	10116939	1	RS CRANKSHAFT BEARING KPL. D934 ⇨ ❑ 198	RS KURBELWELLENLAGERUNG

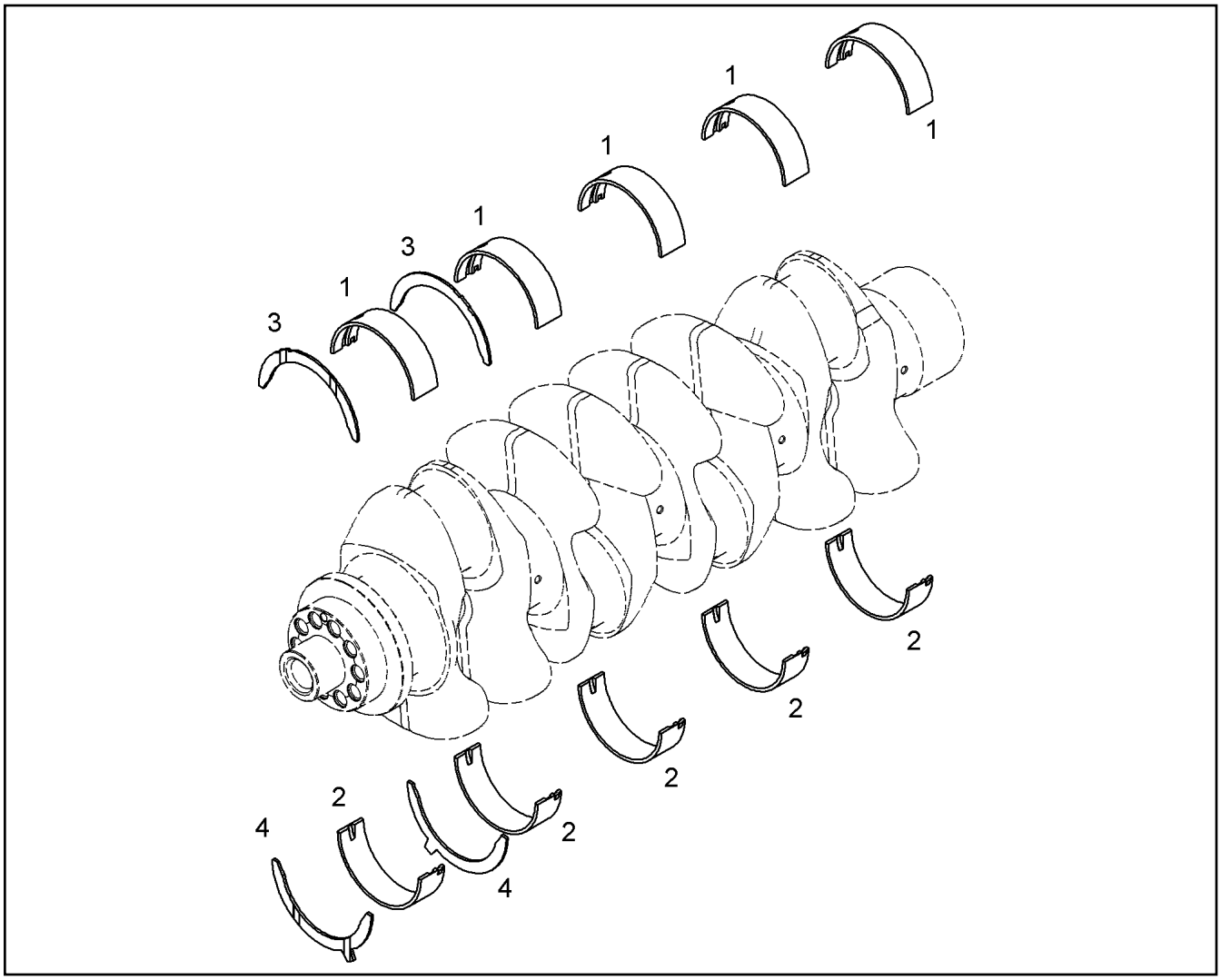

Pos.	Item	Quantity	Description	Bezeichnung
1	9073734	5	MAIN BEARING 104/111/32	HAUPTLAGER
2	9075606	5	MAIN BEARING 104/111/32 MIBA	HAUPTLAGER
3	10119927	2	THRUST WASHER 112X138X3	ANLAUFSCHEIBE
4	10119928	2	THRUST WASHER 112X138X3	ANLAUFSCHEIBE

Pos.	Item	Quantity	Description	Bezeichnung
1	10121952	1	RK CRANKSHAFT SEAL 110 VORNE	RS KURBELWELLENDICHTUNG
2	10121335	1	RK CRANKSHAFT SEAL 115 HINTEN	RS KURBELWELLENDICHTUNG
3	10152974	1	GUARD RING	SCHUTZRING
4	12210040	3	COUNTERSUNK SCREW ISO 14581 M8X20 8	SENKSCHRAUBE
160	12694669	1	ASSEMBLY GEL 1KG DOSE	MONTAGE-GEL

Pos.	Item	Quantity	Description	Bezeichnung
1	10146185	1	BELT PULLEY 31.5X8PKX215	RIEMENSCHEIBE
2	10142170	1	CENTERING FLANGE 42CrMo4+N	ZENTRIERFLANSCH
8	10118526	1	VISCOSE DAMPER D934 L	VISKOSEDAEMPFER
10	10118912	6	HEXALOBULAR HEAD SCREW M16X1,5X88	SECHSRUNDSCHRAUBE
11	10144311	1	WASHER 52,2X107X3 -S355J2G3	SCHEIBE

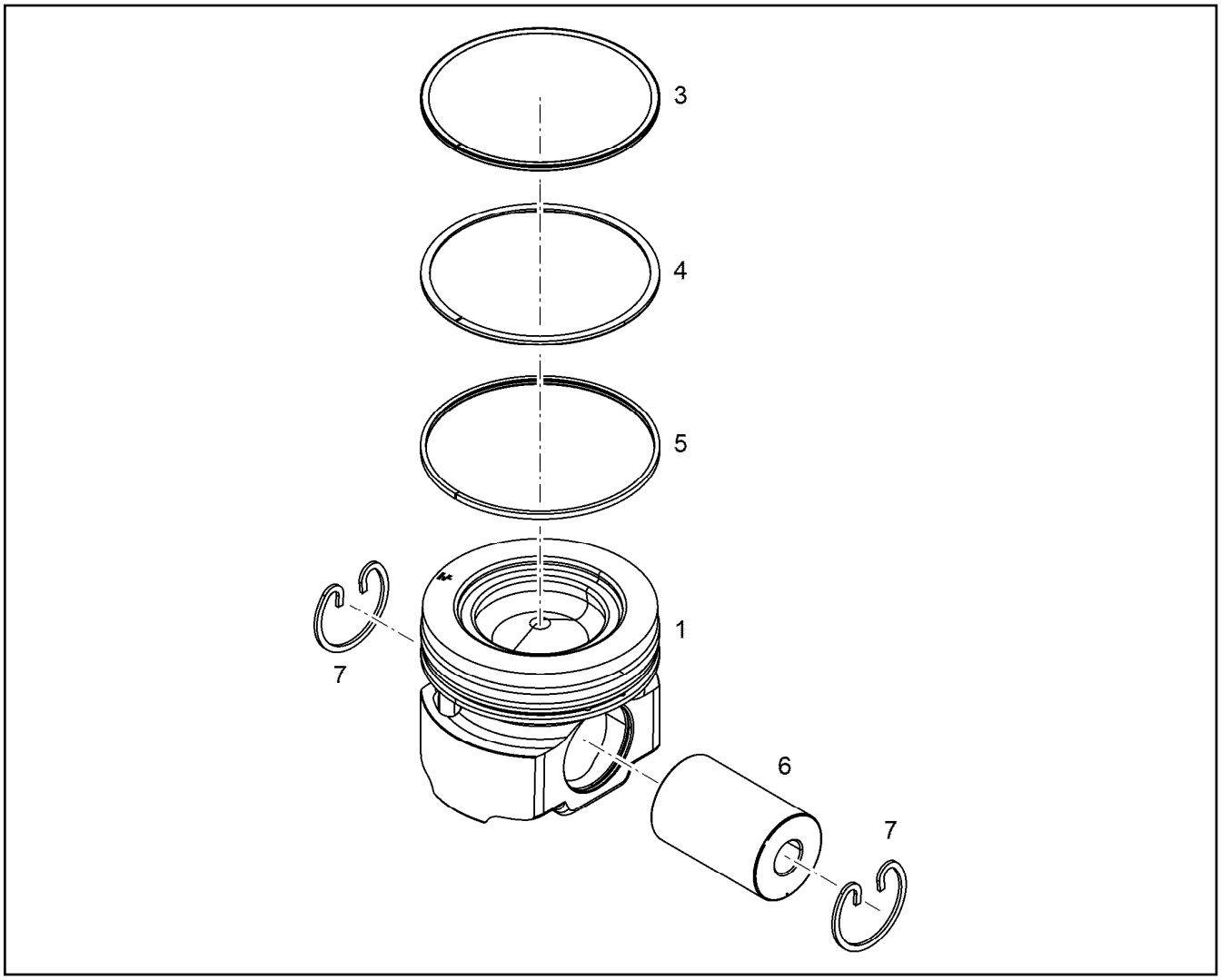

Pos.	Item	Quantity	Description	Bezeichnung
3	11351303	1	KBA-RING 130X121,1X3,5	KBA-RING
4	12476138	1	PISTON RING MG 130X120,5X2,5 F14	M-RING
5	12478647	1	DSF RING 130X121,9X3,5	DSF-RING
7	4980482	2	SNAP RING 52X2 FSt	SPRENGRING

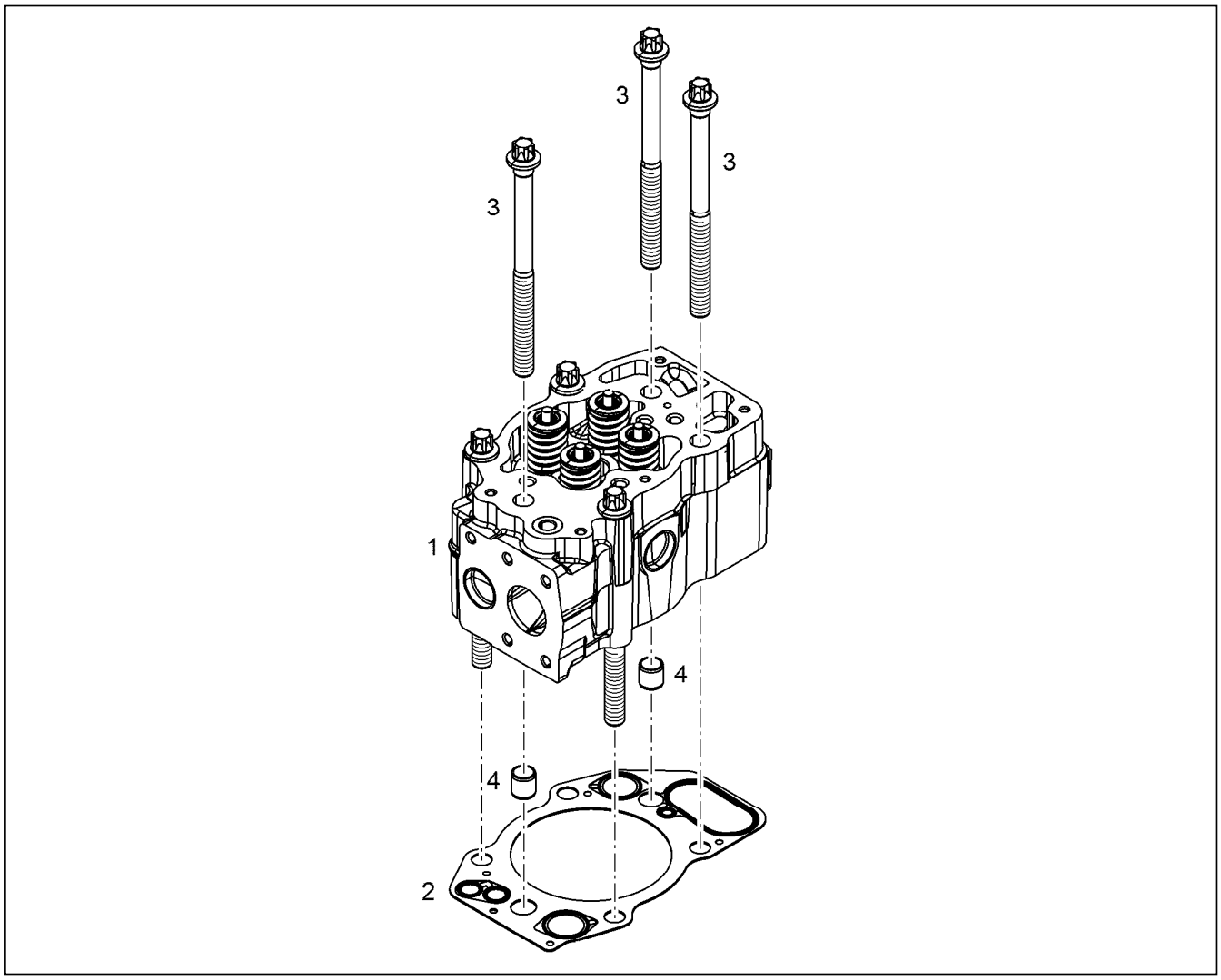

Pos.	Item	Quantity	Description	Bezeichnung
1	10149579	1	CYLINDER HEAD PRE-ASSY. R-MOTOR ⇨ ❑ 203	ZYLINDERKOPF VORM.
1	13476764	1	CYLINDER HEAD PRE-ASSY. R-MOTOR	ZYLINDERKOPF VORM.
(1)	10149578	1	CYLINDER HEAD R-MOTOR ⇨ ❑ 205	ZYLINDERKOPF
(2)	10144556	2	INLET VALVE	EINLASSVENTIL
(4)	10136751	2	OUTLET VALVE	AUSLASSVENTIL
(5)	10120334	4	VALVE STEM SEAL RING	VENTILSCHAFTDICHTRING
(7)	9074480	4	SPRING CUP ABOVE 11,7X23X3,5 41Cr4	FEDERTELLER OBEN
(9)	9074481	4	COMPRESSION SPRING 4,60X28,40X62,70	DRUCKFEDER
(998)	13486106	1	RK CYLINDER HEAD	RS ZYLINDERKOPF
2	10133667	1	CYLINDER HEAD GASKET	ZYLINDERKOPFDICHTUNG
3	10125439	6	HEXALOBULAR HEAD SCREW M16X1,5X210	SECHSRUNDSCHRAUBE
4	9074798	2	TIGHT FIT SLEEVE 16X20X20 S235JR	PASSHUELSE

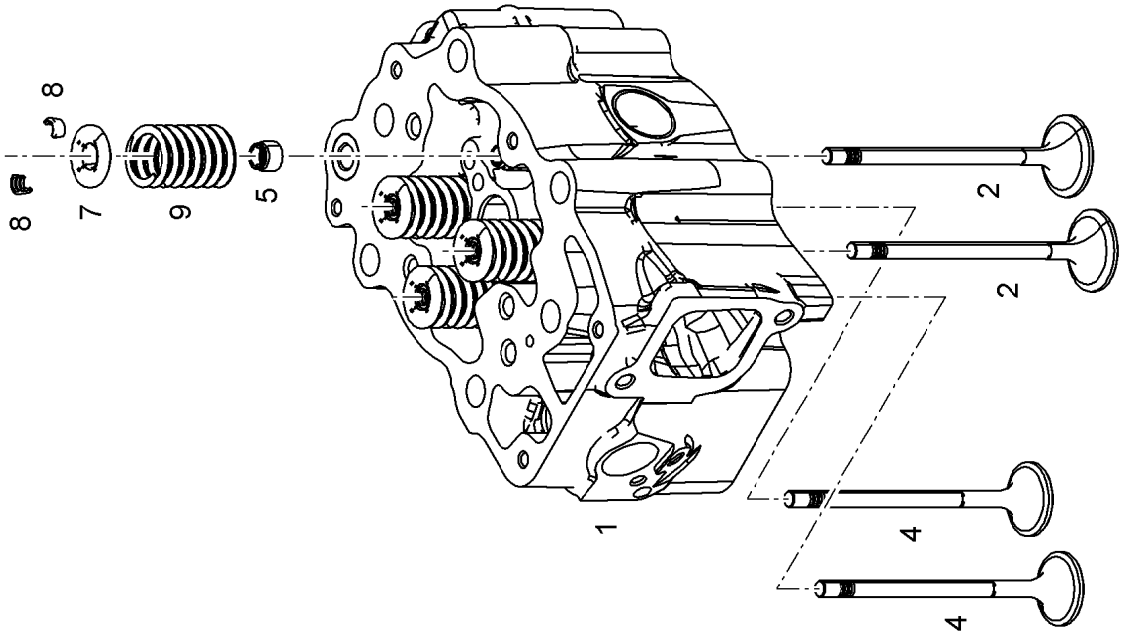
8
8
7
9
5
2
2
1
4
4

Pos.	Item	Quantity	Description	Bezeichnung
1	10149578	1	CYLINDER HEAD R-MOTOR ⇨ ❑ 205	ZYLINDERKOPF
2	10144556	2	INLET VALVE	EINLASSVENTIL
4	10136751	2	OUTLET VALVE	AUSLASSVENTIL
5	10120334	4	VALVE STEM SEAL RING	VENTILSCHAFTDICHTRING
7	9074480	4	SPRING CUP ABOVE 11,7X23X3,5 41Cr4	FEDERTELLER OBEN
8	11357514	8	VALVE COLLET MK9	VENTILKEGELSTUECK
9	9074481	4	COMPRESSION SPRING 4,60X28,40X62,70	DRUCKFEDER

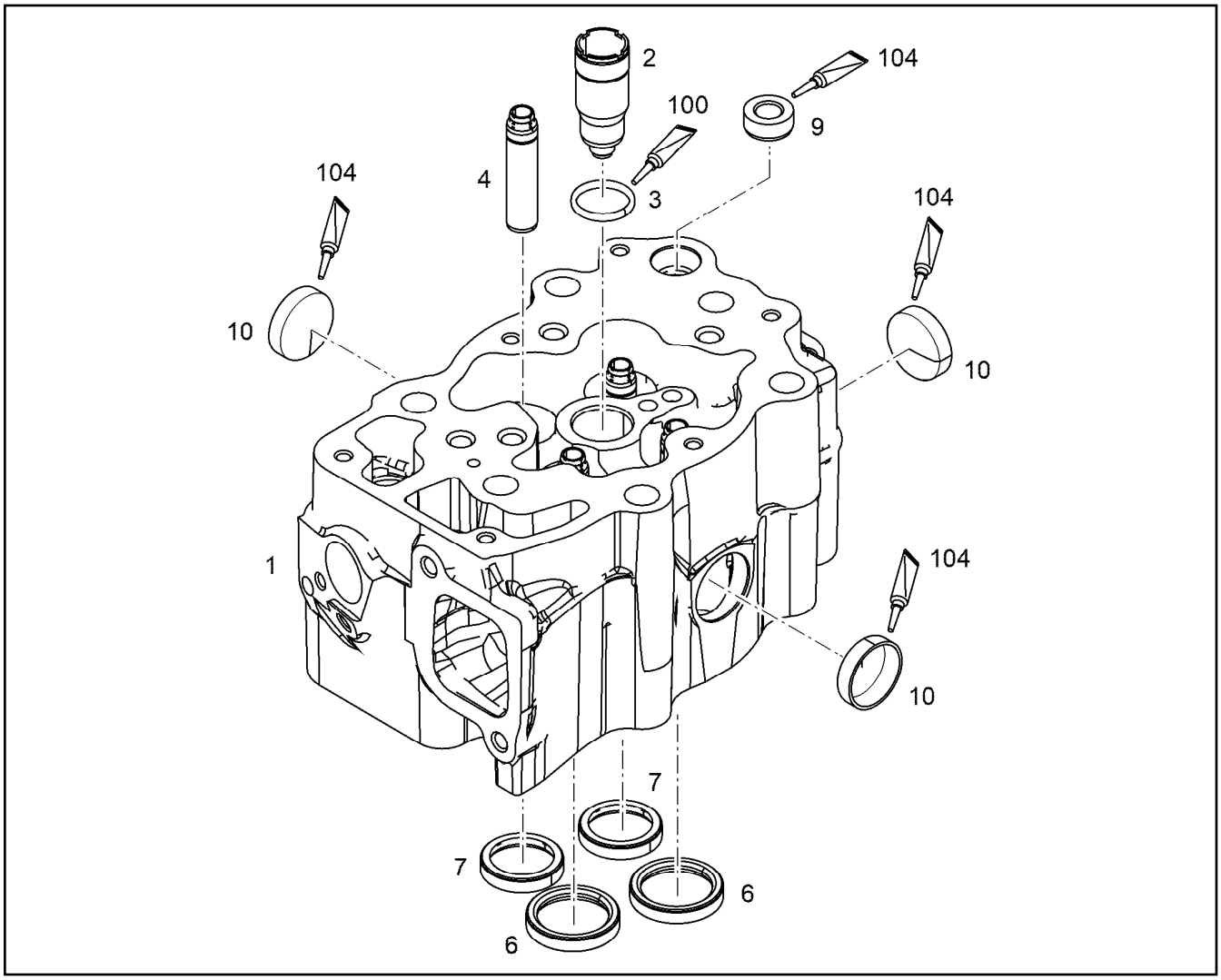

Pos.	Item	Quantity	Description	Bezeichnung
1	10145862	1	CYLINDER HEAD R-MOTOR	ZYLINDERKOPF
2	10152168	1	SLEEVE 8X26X64,5 X46Cr13	HUELSE
3	10342770	1	O-RING AEHNL.ISO 3601-1 25X3 FKM 75	O-RING
4	10150204	4	VALVE STEM GUIDE NOVOFER BLV	VENTILFUEHRUNG
6	10149739	2	INLET VALVE SEAT INSERT PL 510	VENTILSITZRING EINLASS
7	10128680	2	EXHAUST VALVE SEAT INSERT PL 510	VENTILSITZRING AUSLASS
9	9079078	1	THREADED BUSHING 14,5X24X10	GEWINDEBUCHSE
10	12209781	3	END COVER DIN 443 B 480H	VERSCHLUSSDECKEL
100	10285708	1	GREASE NBU 30 1KG DOSE	FETT
104	8655032	1	GLUE 10ML FLASCHE -50/+175 °C	KLEBSTOFF

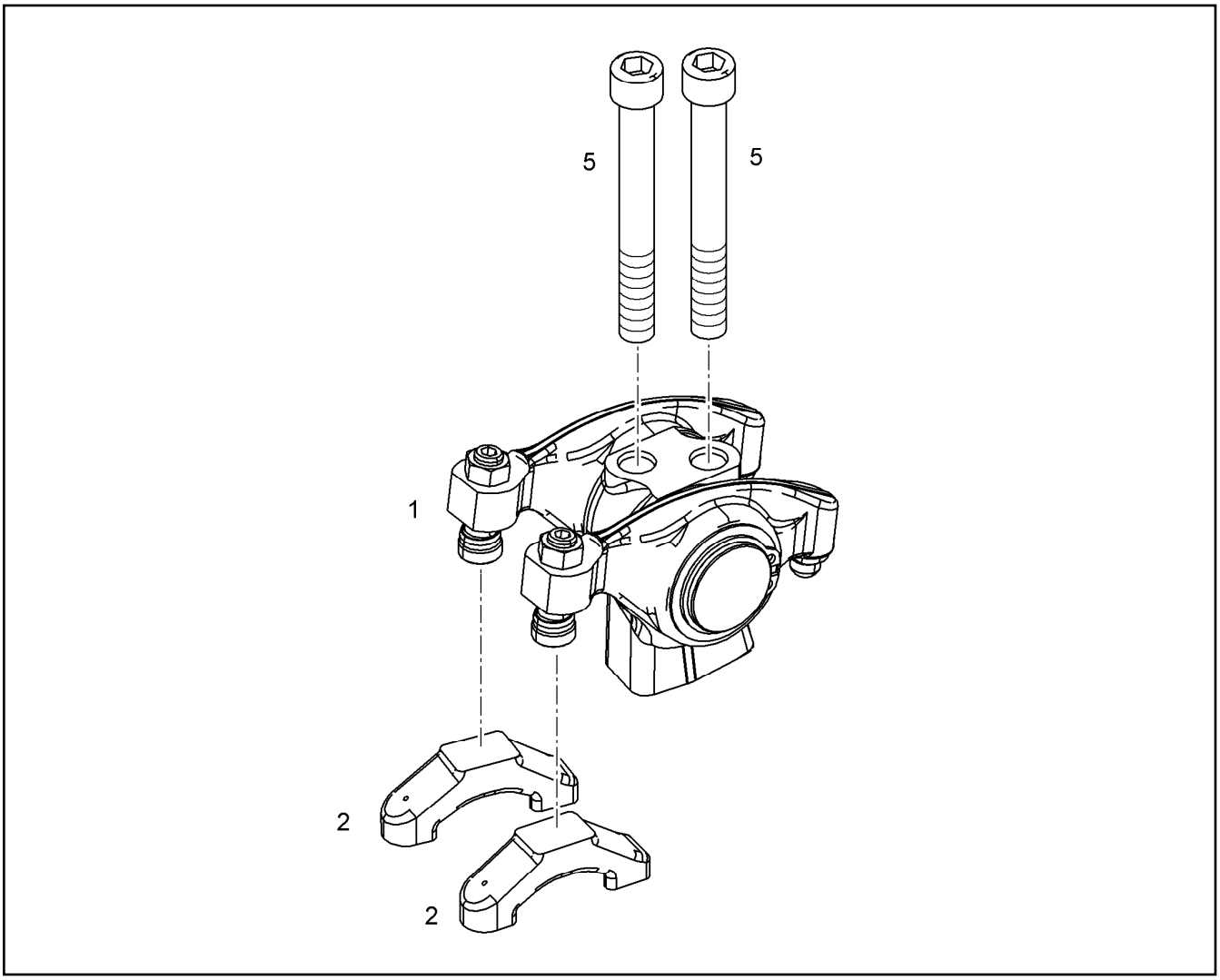

Pos.	Item	Quantity	Description	Bezeichnung
1	11448005	1	ROCKER ARM BRACKET PRE-ASS. ⇨ ❑ 207	KIPPHEBELBOCK VORM.
1	12549825	1	ROCKER ARM BRACKET PRE-ASS.	KIPPHEBELBOCK VORM.
2	10119695	2	VALVE BRIDGE	VENTILBRUECKE
5	4043006	2	SOCKET HEAD SCREW ISO 4762 M12X100 1	ZYLINDERSCHRAUBE

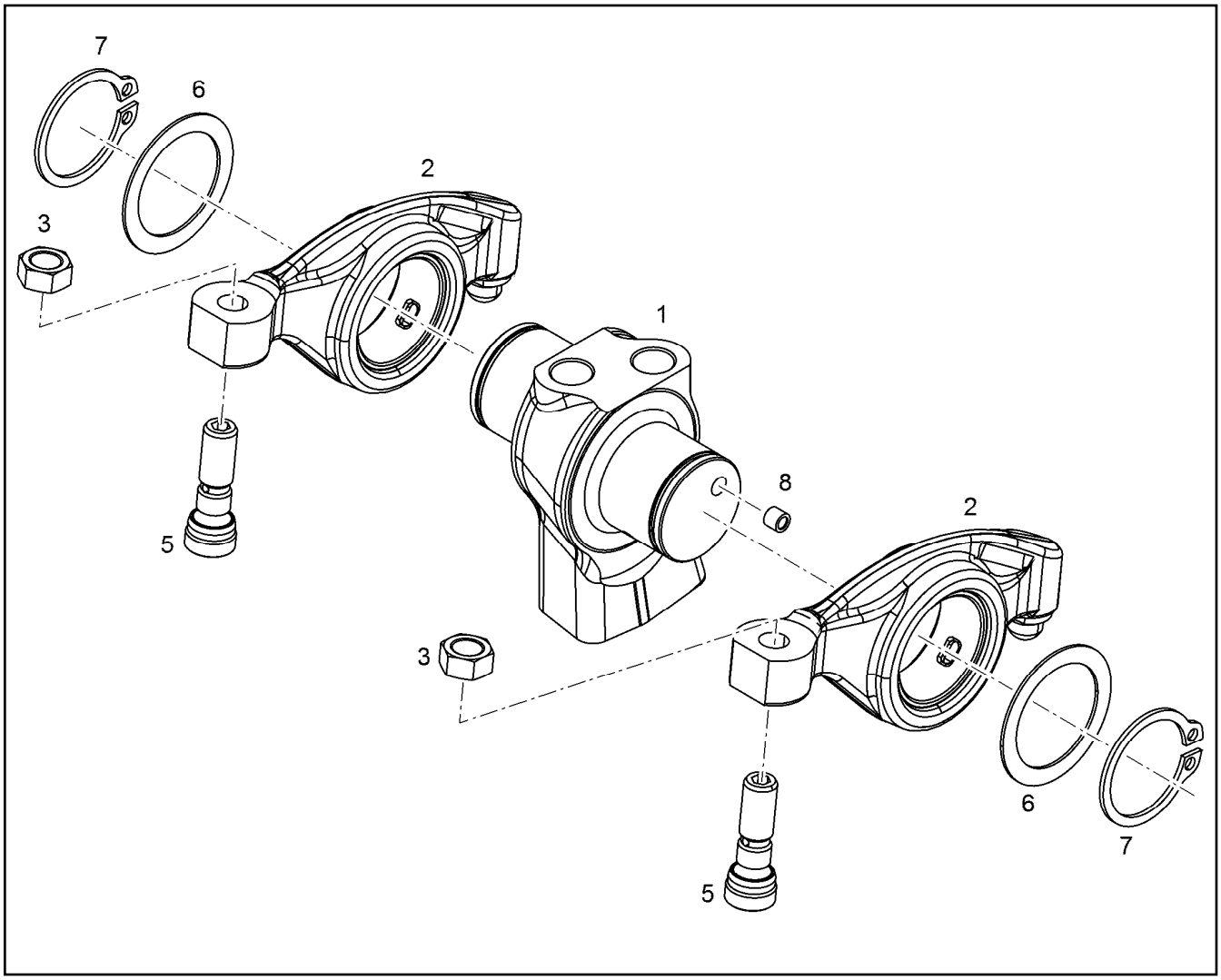

Pos.	Item	Quantity	Description	Bezeichnung
1	11448002	1	ROCKER ARM SUPPORT	KIPPHEBELBOCK
2	11448000	2	ROCKER ARM PRE-ASSY.	KIPPHEBEL VORM.
3	10012557	2	HEX NUT M10X1	SECHSKANTMUTTER
5	10012225	2	ADJUSTING SCREW M10X1	EINSTELLSCHRAUBE
6	9078522	2	WASHER 34X45X1	SCHEIBE
7	428011301	2	LOCKING RING DIN 471 34X1,5	SICHERUNGSRING
8	10036325	1	SEALING PLUG LK 950	DICHTSTOPFEN

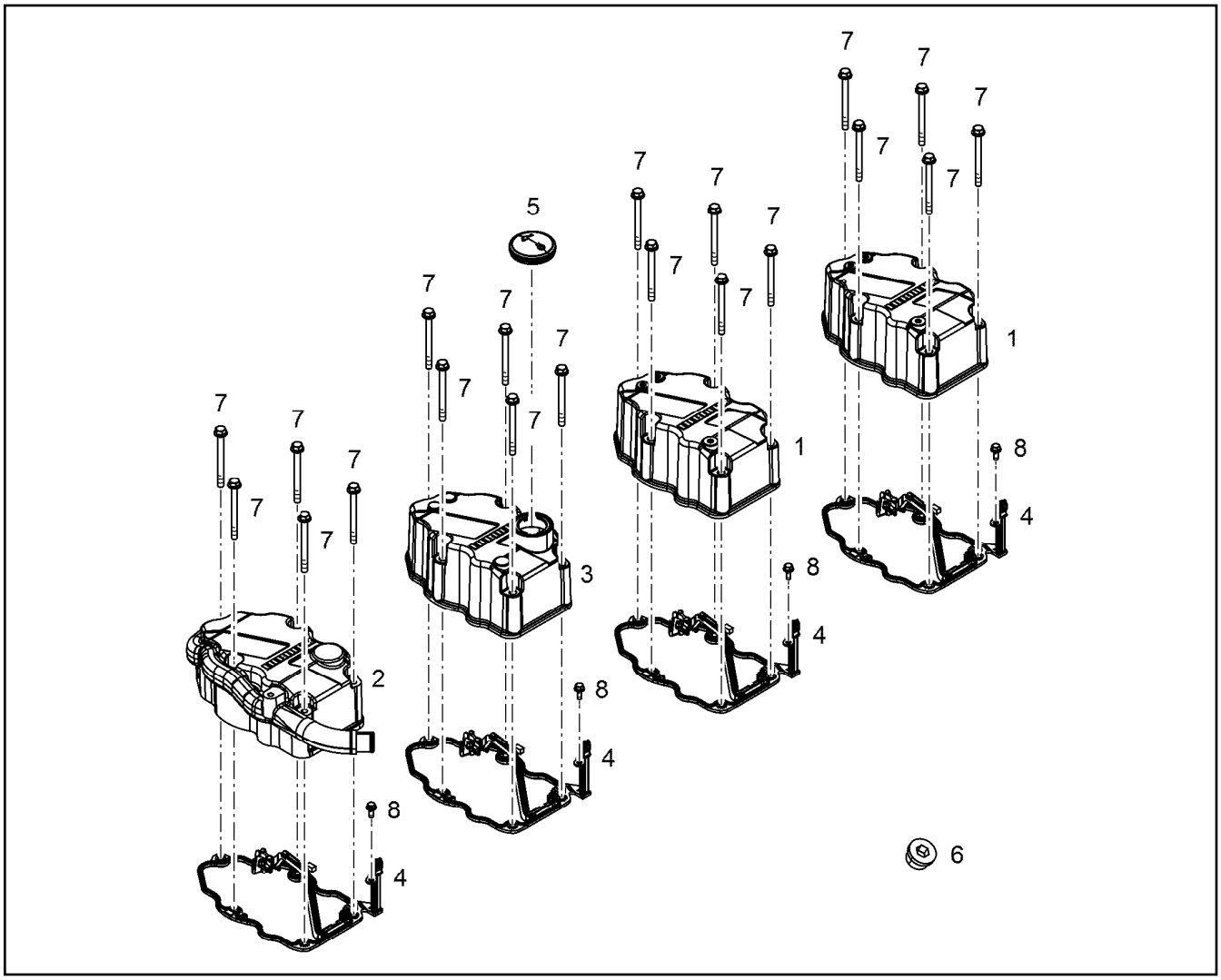

Pos.	Item	Quantity	Description	Bezeichnung
1	10134750	2	CYLINDER HEAD COVER	ZYLINDERKOPFDECKEL
2	12874086	1	CYLINDER HEAD COVER	ZYLINDERKOPFDECKEL
3	10134698	1	CYLINDER HEAD COVER	ZYLINDERKOPFDECKEL
4	12565355	4	SEAL	DICHTUNG
5	9144757	1	END COVER 60	VERSCHLUSSDECKEL
(3)	9144762	1	SEAL	DICHTUNG
6	10043136	1	SCREW PLUG VSTI M33X2 CR6-FREI	VERSCHLUSSSCHRAUBE
7	10876385	20	HEX SCREW EN 1665 M8X90 8.8 480H SPF	SECHSKANTSCHRAUBE
8	11840297	4	HEX SCREW EN 1665 M6X16 8.8 480H SPF	SECHSKANTSCHRAUBE

Pos.	Item	Quantity	Description	Bezeichnung
1	10152441	2	BALANCER SHAFT PRE-ASS.	AUSGLEICHWELLE VORM.
2	12408221	1	FLANGE PRE-ASS.	FLANSCH VORM.
3	12400857	1	FLANGE	FLANSCH
4	10139764	1	GEAR WHEEL 2,5	ZAHNRAD
5	10139765	1	GEAR WHEEL 2,5	ZAHNRAD
6	10139578	2	HEXALOBULAR HEAD SCREW M14X50 32C	SECHSRUNDSCHRAUBE
7	240049702	5	SOCKET HEAD SCREW ISO 4762 M8X25 8.8	ZYLINDERSCHRAUBE
8	7381685	1	O-RING AEHNL.ISO 3601-1 7X1,5 FKM 90 A,B	O-RING
9	4980000	1	PARALLEL PIN ISO 8734 6m6X14 St	ZYLINDERSTIFT
10	243034002	2	DOWEL PIN ISO 8752 6X30 ST	SPANNSTIFT
10	432310501	2	TENSION PIN 6H12X30 51CrV4	SCHWERSPANNSTIFT
100	10285708	1	GREASE NBU 30 1KG DOSE	FETT
105	811205708	1	SCREW LOCKING FLASCHE 50ML 150°C	SCHRAUBENSICHERUNG

Pos.	Item	Quantity	Description	Bezeichnung
1	10125742	1	CAMSHAFT R-MOTORXD934/D94	NOCKENWELLE
3	10138447	1	GEARWHEEL PRE-ASS.	ZAHNRAD VORM.
(1)	10145049	1	GEARWHEEL PRE-ASS.	ZAHNRAD VORM.
(2)	10137602	1	GEAR WHEEL 2,75	ZAHNRAD
(4)	11600960	6	HEX SCREW DIN 6921 M8X40 10.9	SECHSKANTSCHRAUBE
(5)	4980000	1	PARALLEL PIN ISO 8734 6m6X14 St	ZYLINDERSTIFT
4	10133692	1	GEAR WHEEL 2,25	ZAHNRAD
5	4980736	1	PARALLEL PIN ISO 8734 6m6X22 St	ZYLINDERSTIFT
6	10133693	2	WEARING RING AlSn20Cu	ANLAUFRING
6	11348100	2	WEARING RING AlSn20Cu	ANLAUFRING
8	10145815	1	RS FLANGE	RS FLANSCH
8	10152832	1	FLANGE PRE-ASS.	FLANSCH VORM.
8	10145815	1	RS FLANGE	RS FLANSCH
8	10152832	1	FLANGE PRE-ASS.	FLANSCH VORM.
8	11348648	1	FLANGE PRE-ASS.	FLANSCH VORM.
9	4980927	3	SOCKET HEAD SCREW DIN 7984 M10X18 0	ZYLINDERSCHRAUBE
9	240122602	3	SOCKET HEAD SCREW DIN 7984 M10X25 0	ZYLINDERSCHRAUBE
9	4980927	3	SOCKET HEAD SCREW DIN 7984 M10X18 0	ZYLINDERSCHRAUBE
9	240122602	3	SOCKET HEAD SCREW DIN 7984 M10X25 0	ZYLINDERSCHRAUBE
12	4980257	12	SOCKET HEAD SCREW ISO 4762 M12X45 1	ZYLINDERSCHRAUBE
14	7381685	1	O-RING AEHNL.ISO 3601-1 7X1,5 FKM 90 A,B	O-RING
100	10282622	1	GREASE STABURAGS NBU 30 0.010KG	FETT

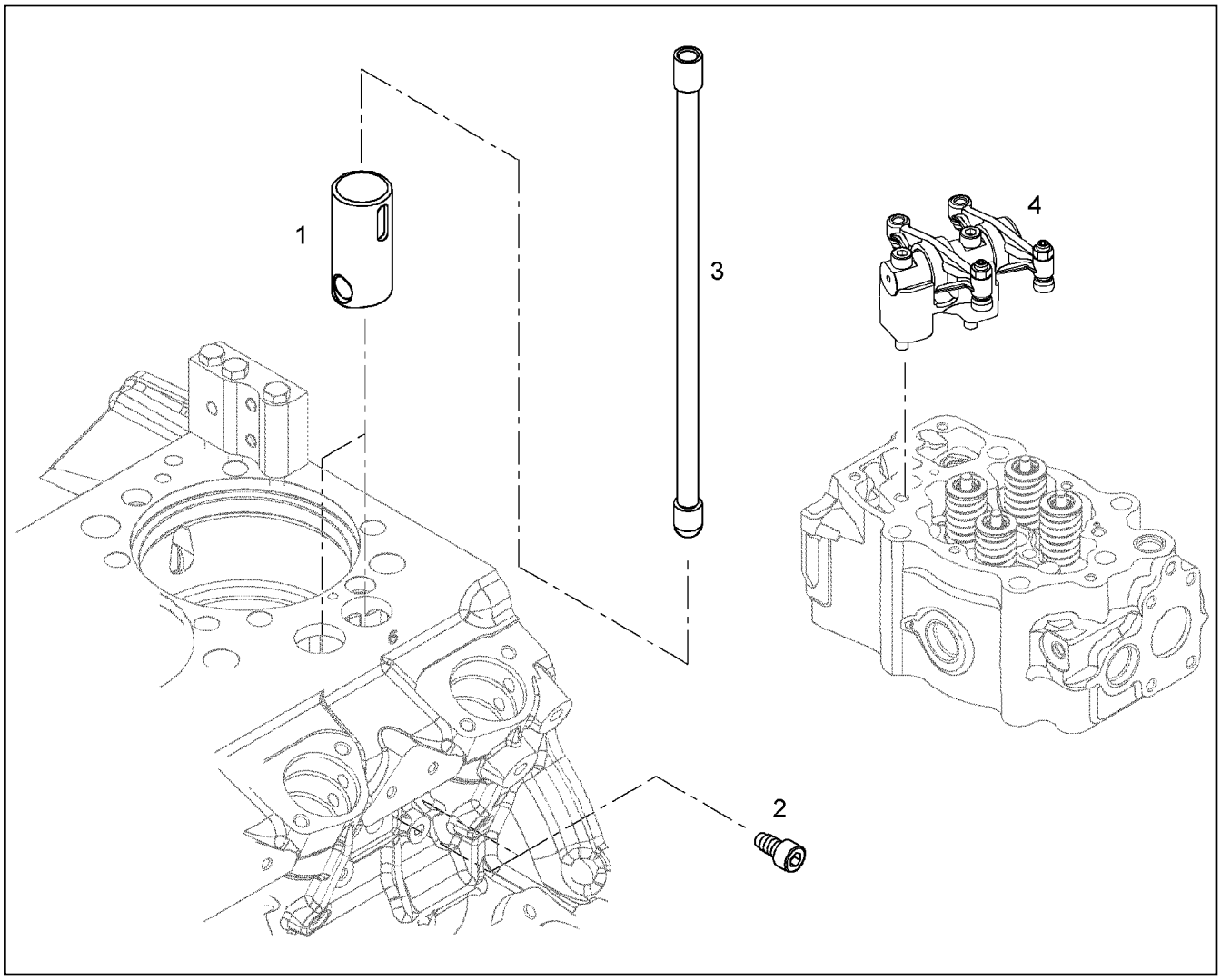

Pos.	Item	Quantity	Description	Bezeichnung
1	10153536	2	ROLLER TAPPET	ROLLENSTOESSEL
2	10153538	2	LOCKING SCREW M10X19 10.9	SICHERUNGSSCHRAUBE
3	9079131	2	TAPPET PUSH ROD	STOESSELSTANGE

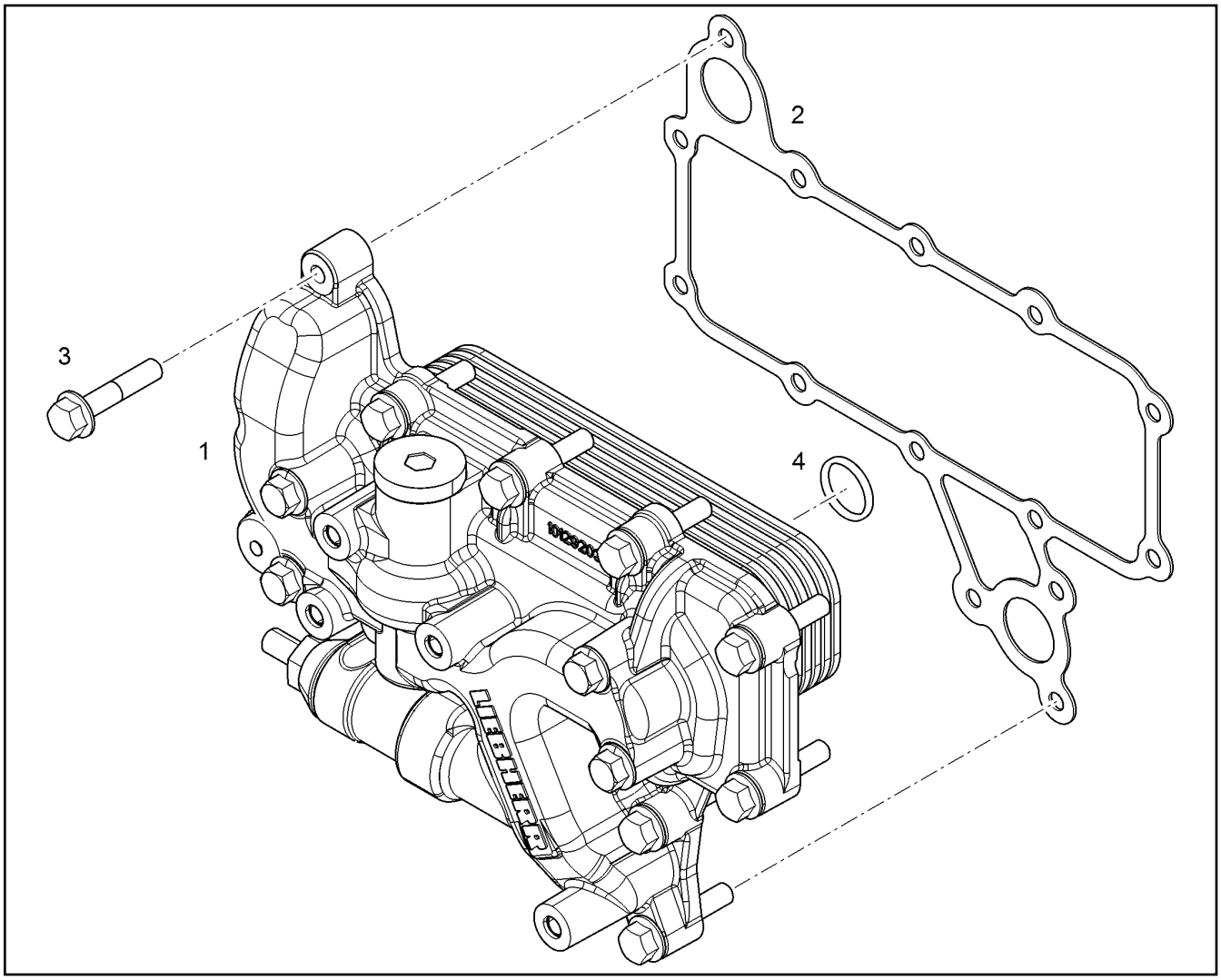

Pos.	Item	Quantity	Description	Bezeichnung
1	10129474	1	OIL COOLER, PRE-ASSEMBLED ⇨ ❑ 213	OELKUEHLER VORM.
2	10117709	1	SEAL AFM 30	DICHTUNG
3	10299604	14	HEX SCREW EN 1665 M8X40 10.9 480H	SECHSKANTSCHRAUBE
4	10004261	1	O-RING AEHNL.ISO 3601-1 26X3 HNBR 70	O-RING

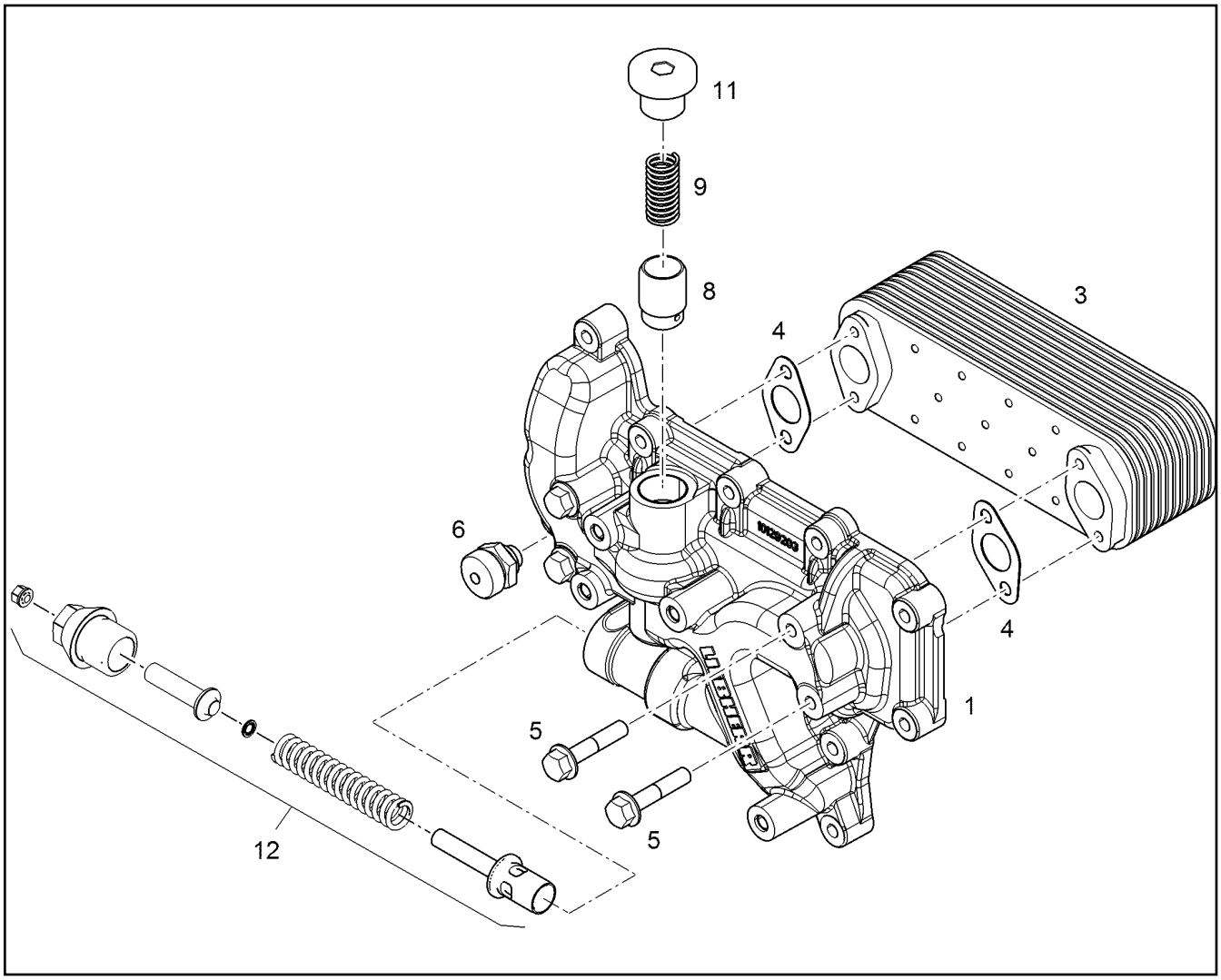

Pos.	Item	Quantity	Description	Bezeichnung
1	10146722	1	OIL COOLER HOUSING	OELKUEHLERGEHAEUSE
3	10325001	1	OIL COOLER	OELKUEHLER
4	4980359	2	SEAL DIN 71511 1,5X25X48 AFM 30	DICHTUNG
5	11691686	4	HEX SCREW EN 1665 M8X50 8.8 480H SPF	SECHSKANTSCHRAUBE
6	9078233	1	VALVE M14X1,5 ⇨ ❑ 214	VENTIL
8	9886591	1	PISTON	KOLBEN
9	9886756	1	COMPRESSION SPRING 2,10X17,80X75,00	DRUCKFEDER
11	7382204	1	SCREW PLUG VSTI M30X1,5 St Rm>=500MP	VERSCHLUSSSCHRAUBE
12	10152592	1	PRESSURE RELIEF VALVE pmax=9BAR ⇨ ❑ 215	UEBERDRUCKVENTIL

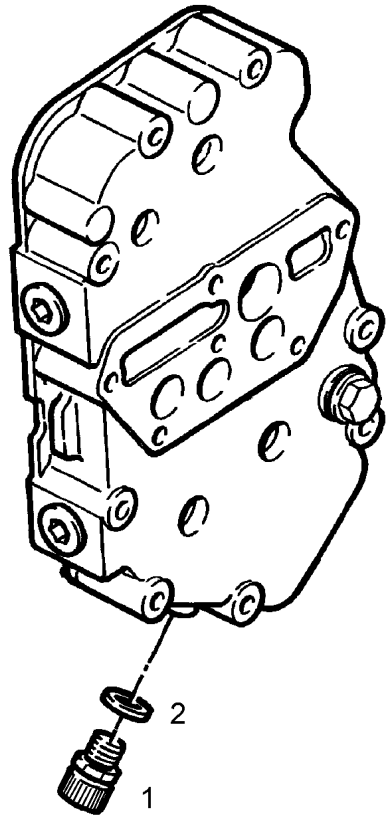

Pos.	Item	Quantity	Description	Bezeichnung
1	10011832	1	VALVE	VENTIL
2	738122523	1	SEALING RING DIN 7603 A14X20X2 CU	DICHTRING

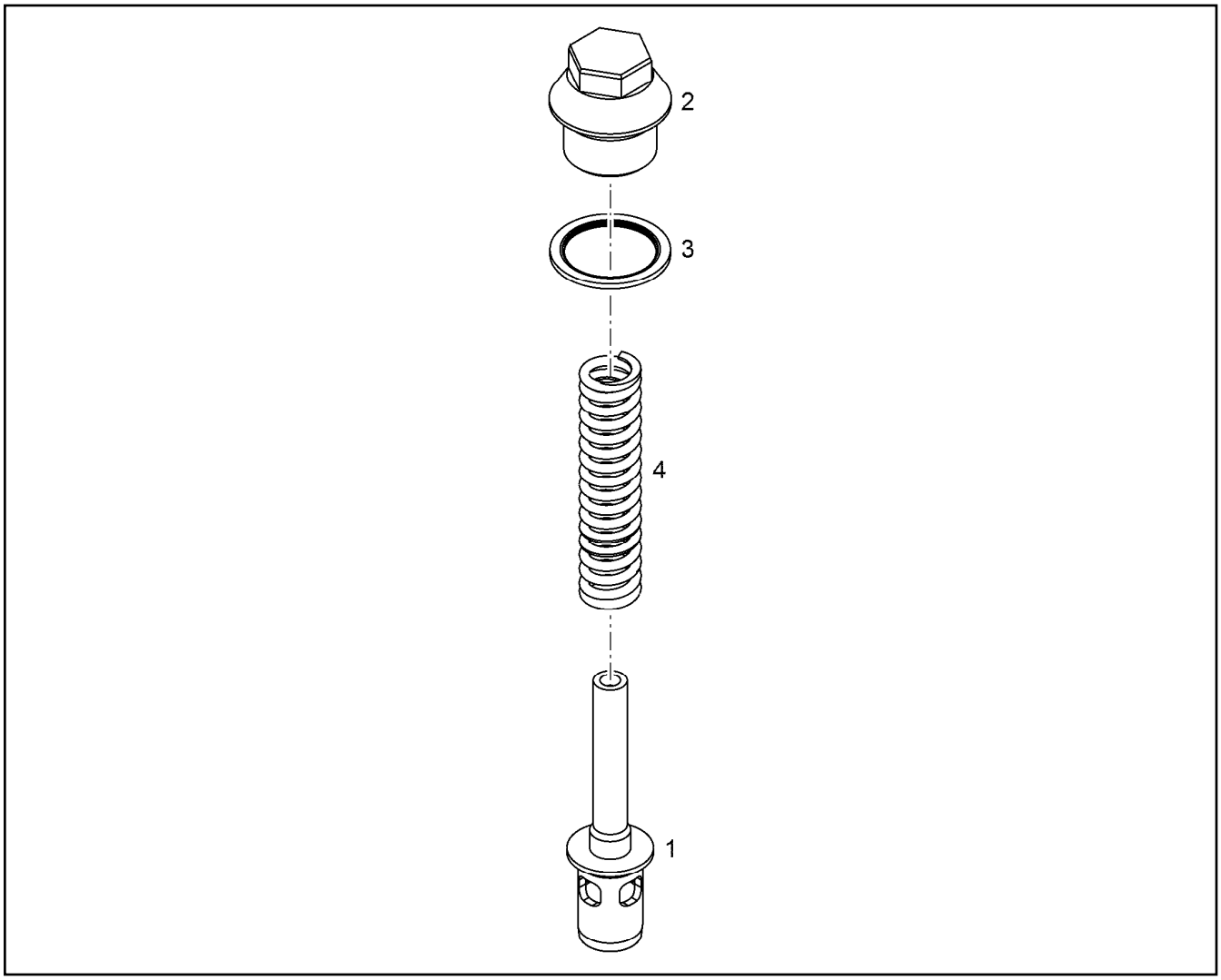

Pos.	Item	Quantity	Description	Bezeichnung
1	10152593	1	PISTON	KOLBEN
2	10152594	1	SCREW PLUG M30X1,5X40 ETG 100	VERSCHLUSSSCHRAUBE
3	10113731	1	SEALING RING 30,7X39X2 St/FPM1-80	DICHTRING
4	10129501	1	COMPRESSION SPRING 3,2X16,8X100,7 O	DRUCKFEDER

Pos.	Item	Quantity	Description	Bezeichnung
1	12438990	1	LUBRICATING OIL PUMP B=41,4	SCHMIEROELPUMPE
2	10005713	1	HEX SCREW DIN 6921 M8X45 8.8	SECHSKANTSCHRAUBE
2	12697335	1	HEX SCREW EN 1665 M8X60 8.8	SECHSKANTSCHRAUBE
3	11645138	2	HEX SCREW DIN 6921 M8X80 8.8	SECHSKANTSCHRAUBE
4	11066168	1	O-RING AEHNL.ISO 3601-1 43X2 FKM 70	O-RING
5	7382059	1	O-RING ISO 3601-1 34,59X2,62 FKM 70 A,GN	O-RING
100	10285708	1	GREASE NBU 30 1KG DOSE	FETT

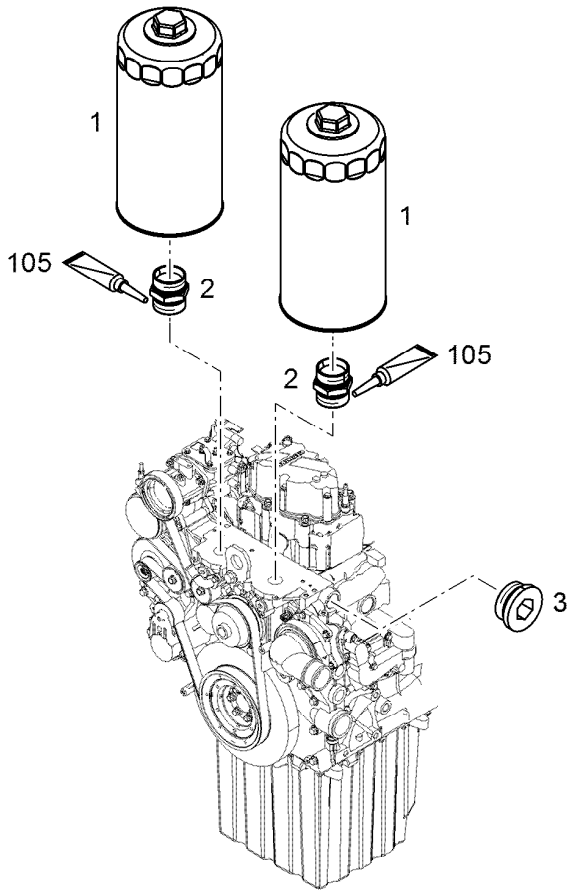

Pos.	Item	Quantity	Description	Bezeichnung
1	10297295	2	EASY-CHANGE FILTER OEL 9µm	WECHSELFILTER
2	9273271	2	FITTING G 24 M30x2 11SMnPb30	VERSCHRAUBUNG
3	10285724	1	SCREW PLUG VSTI M42X2 CR6-FREI	VERSCHLUSSSCHRAUBE
105	8655016	1	SCREW LOCKING 10ML -50/+150 °C	SCHRAUBENSICHERUNG

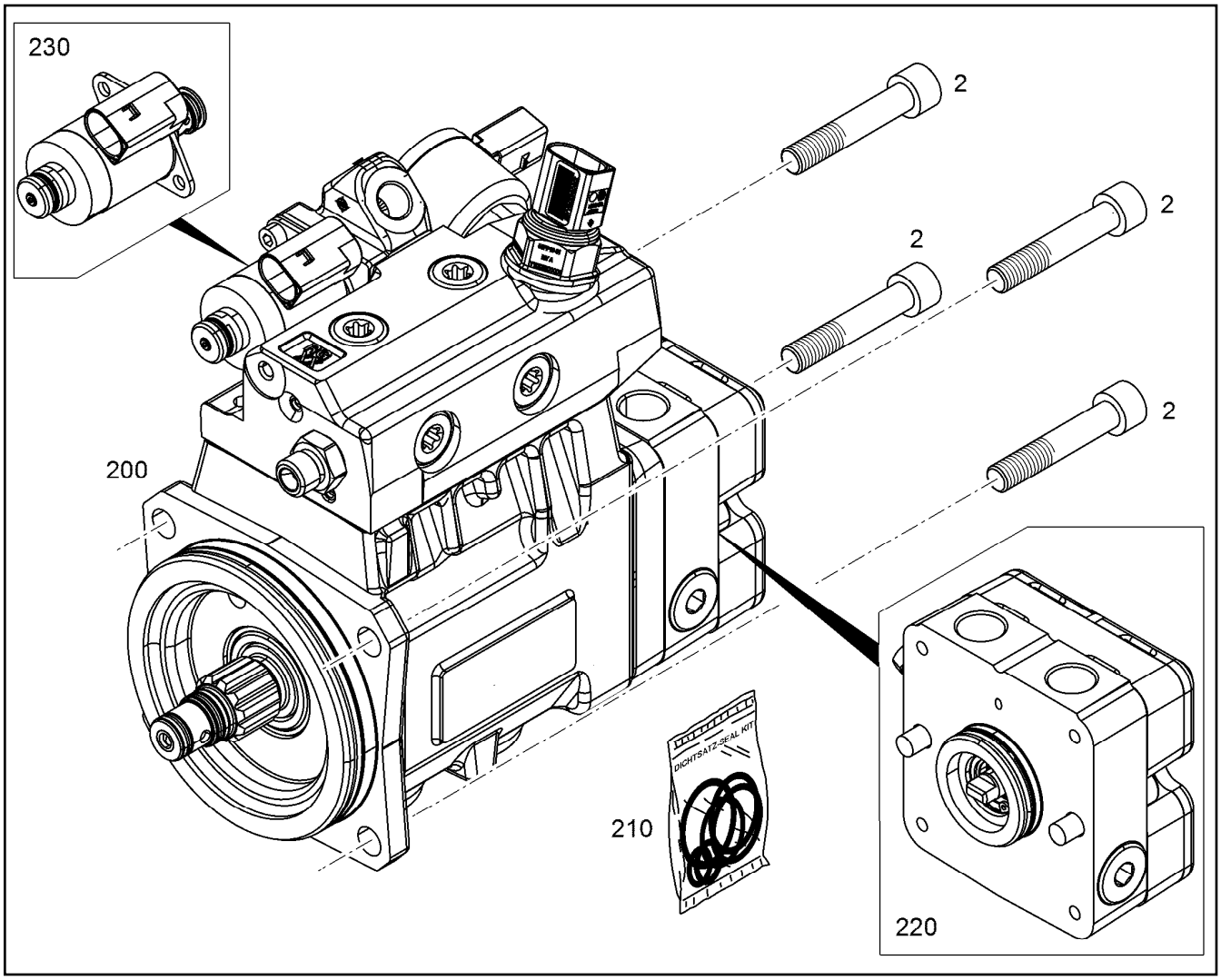

Pos.	Item	Quantity	Description	Bezeichnung
1	10146658	1	HIGH PRESSURE PUMP R-MOTORXD934 A7 ⇨ ❑ 219	HOCHDRUCKPUMPE
2	11008297	4	SOCKET HEAD SCREW ISO 4762 M10X55 10	ZYLINDERSCHRAUBE

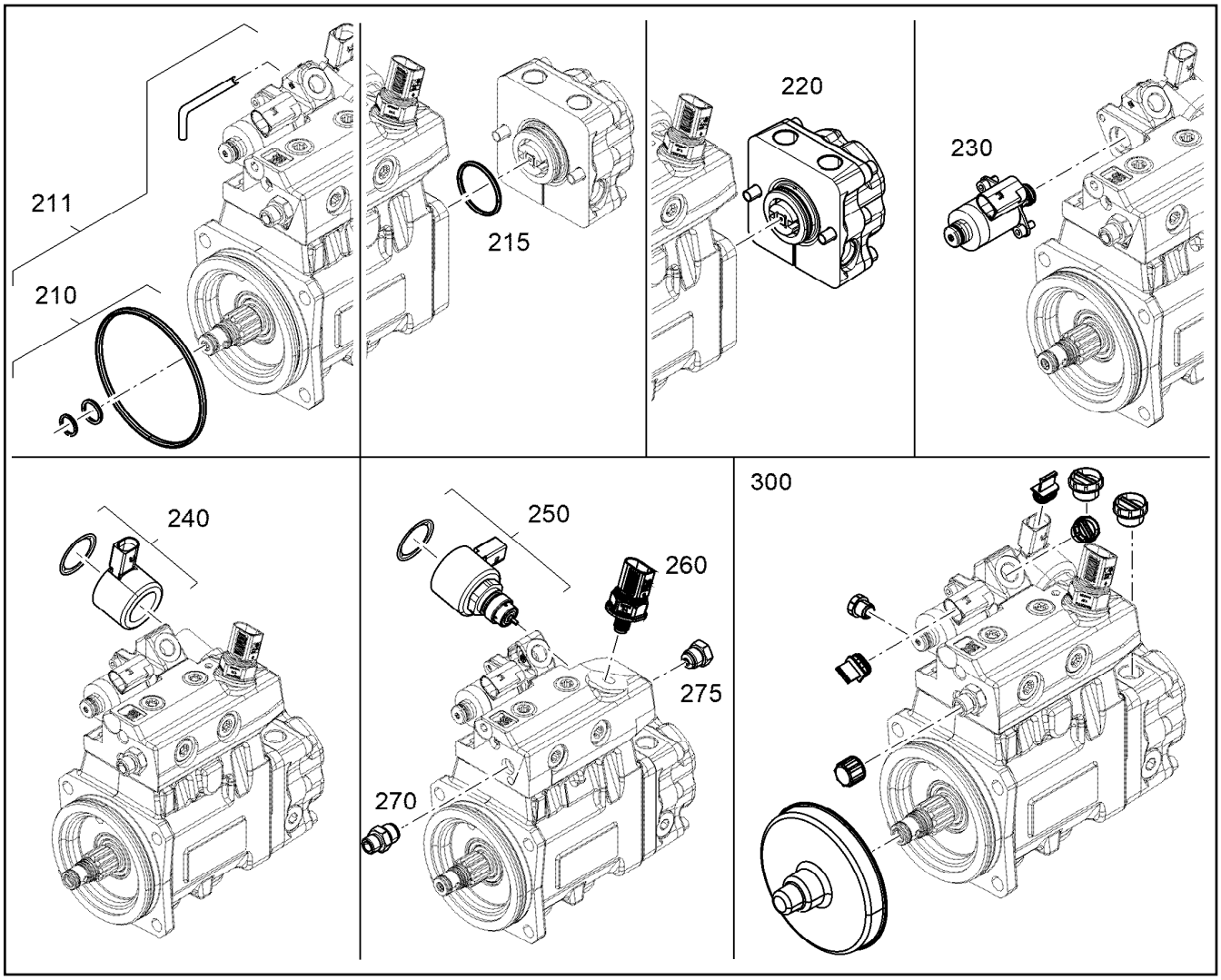

Pos.	Item	Quantity	Description	Bezeichnung
210	12417001	1	SEAL KIT HIGH PRESSURE PUMP	DS HOCHDRUCKPUMPE
211	12937883	1	SEAL KIT HIGH PRESSURE PUMP	DS HOCHDRUCKPUMPE
215	12424993	1	SEAL KIT PREFEEDING PUMP	DS VORFOERDERPUMPE
220	12923599	1	RK PRE-FEED PUMP	RS VORFOERDERPUMPE
230	12490199	1	RK VOLUME CONTROL VALVE	RS SAUGDROSSELVENTIL
240	12966286	1	REPAIR KIT VALVE	RS VENTIL
250	12917604	1	REPAIR KIT VALVE	RS VENTIL
260	12881001	1	RK HIGH PRESSURE SENSOR	RS HOCHDRUCKSENSOR
270	12932487	1	RK HIGH PRESSURE CONNECTING	RS HOCHDRUCKANSCHLUSS
275	12932488	1	REPAIR KIT SCREW PLUG	RS VERSCHLUSSSCHRAUBE
300	12489819	1	COVERING CAPS - KIT	ABDECKKAPPEN-KIT
			⇨ ❑ 220	

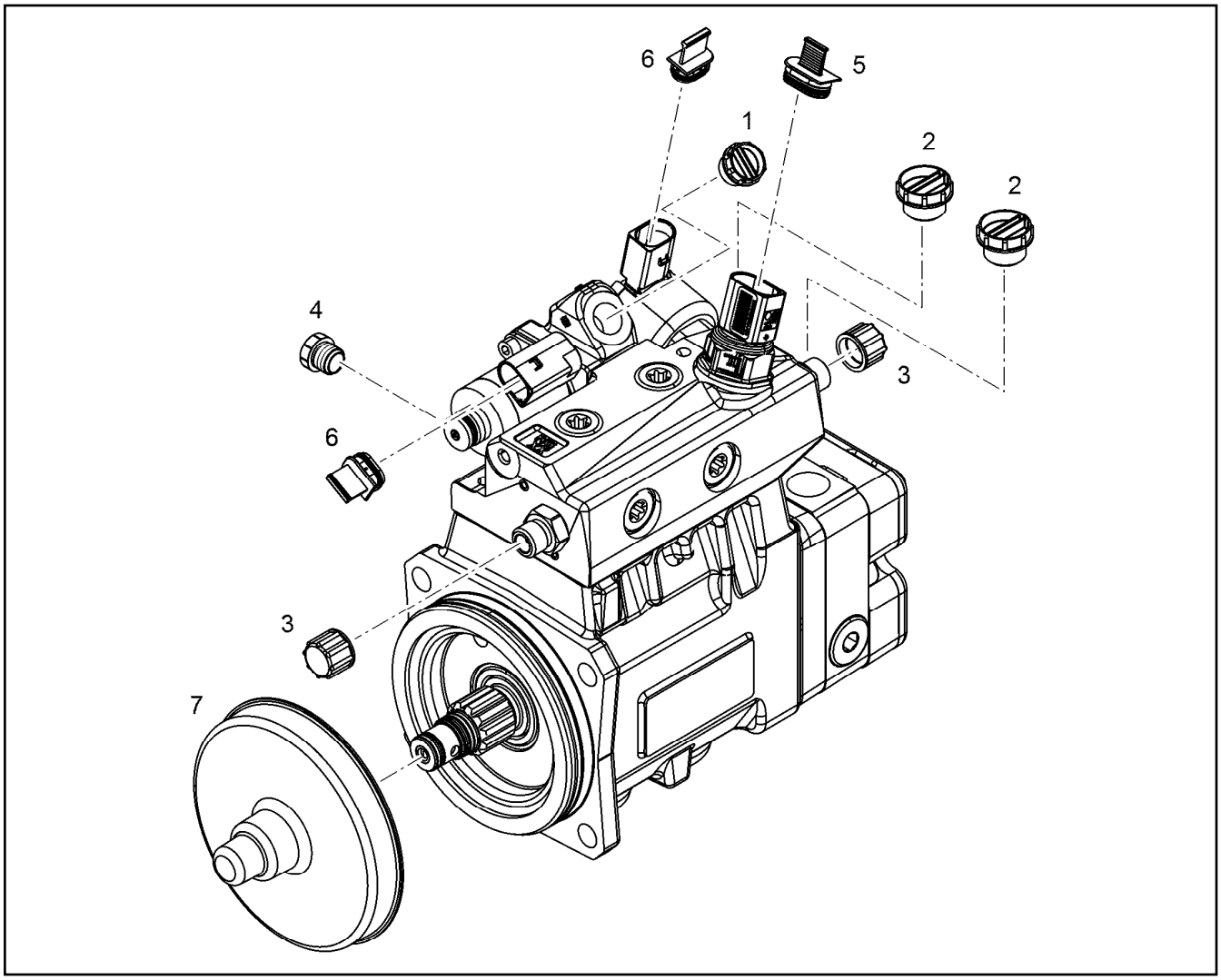

Pos.	Item	Quantity	Description	Bezeichnung
1	7011745	1	SCREW STOPPER GPN 700 M14X1,5 PE-HD	SCHRAUBSTOPFEN
2	10129392	2	COVER LID 700 M18X1,5 PA 6	ABDECKKAPPE
3	10021410	2	SCREW CAP GPN 800 M14X1,5	SCHRAUBKAPPE
4	7003652	1	SCREW STOPPER GPN 700 M12X1,5 PE-HD	SCHRAUBSTOPFEN
5	11698481	1	BLANKING PLUG GPN 360 PE-LLD	VERSCHLUSSSTOPFEN
6	11835061	2	BLANKING PLUG GPN 360 PE-LLD	VERSCHLUSSSTOPFEN
7	10129394	1	COVER LID PP	ABDECKKAPPE

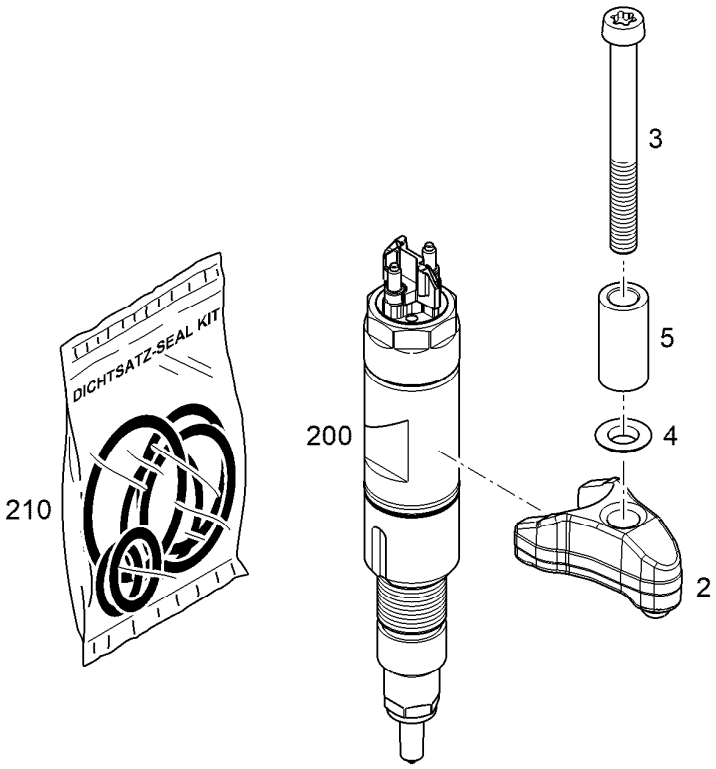

Pos.	Item	Quantity	Description	Bezeichnung
1	10147680	1	INJECTOR LI2.7-20-SF-950	INJEKTOR
2	11403994	1	JAW 42CrMoS4+QT	PRATZE
3	12219491	1	SOCKET HEAD SCREW ISO 14580 M8X80 1	ZYLINDERSCHRAUBE
4	11622278	1	SPHERICAL WASHER DIN 6319 C 8,4X17X3	KUGELSCHEIBE
5	12843150	1	DISTANCE SLEEVE 9X15X30 42CrMo4+N	DISTANZHUELSE
200	10152874	1	RK INJECTOR LI2.7-20-SF-950 ⇨ ❑ 222	RS INJEKTOR
210	10141215	1	SEAL KIT INJECTOR	DS INJEKTOR

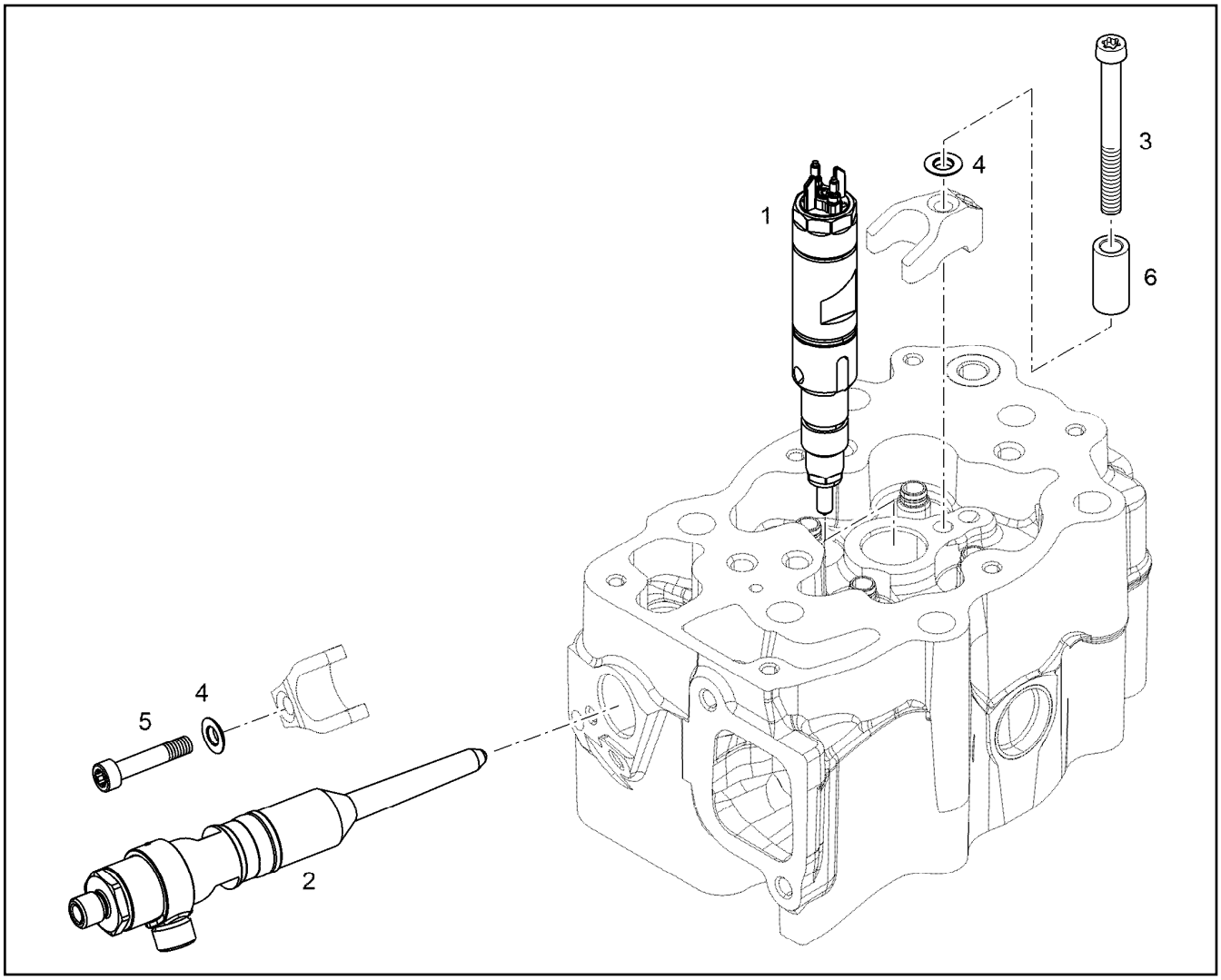

Pos.	Item	Quantity	Description	Bezeichnung
1	13574085	1	INJECTOR LI2.7-20-SF-950	INJEKTOR
2	10141140	1	RK HIGH PRESSURE CONNECTOR ⇨ ❑ 223	RS DRUCKROHRSTUTZEN
3	12219491	1	SOCKET HEAD SCREW ISO 14580 M8X80 1	ZYLINDERSCHRAUBE
4	11622278	2	SPHERICAL WASHER DIN 6319 C 8,4X17X3	KUGELSCHEIBE
5	10135434	1	PRESSURE ADAPTER FASTENING ⇨ ❑ 224	BEFESTIGUNG DRUCKROHRST
6	12843150	1	DISTANCE SLEEVE 9X15X30 42CrMo4+N	DISTANZHUELSE

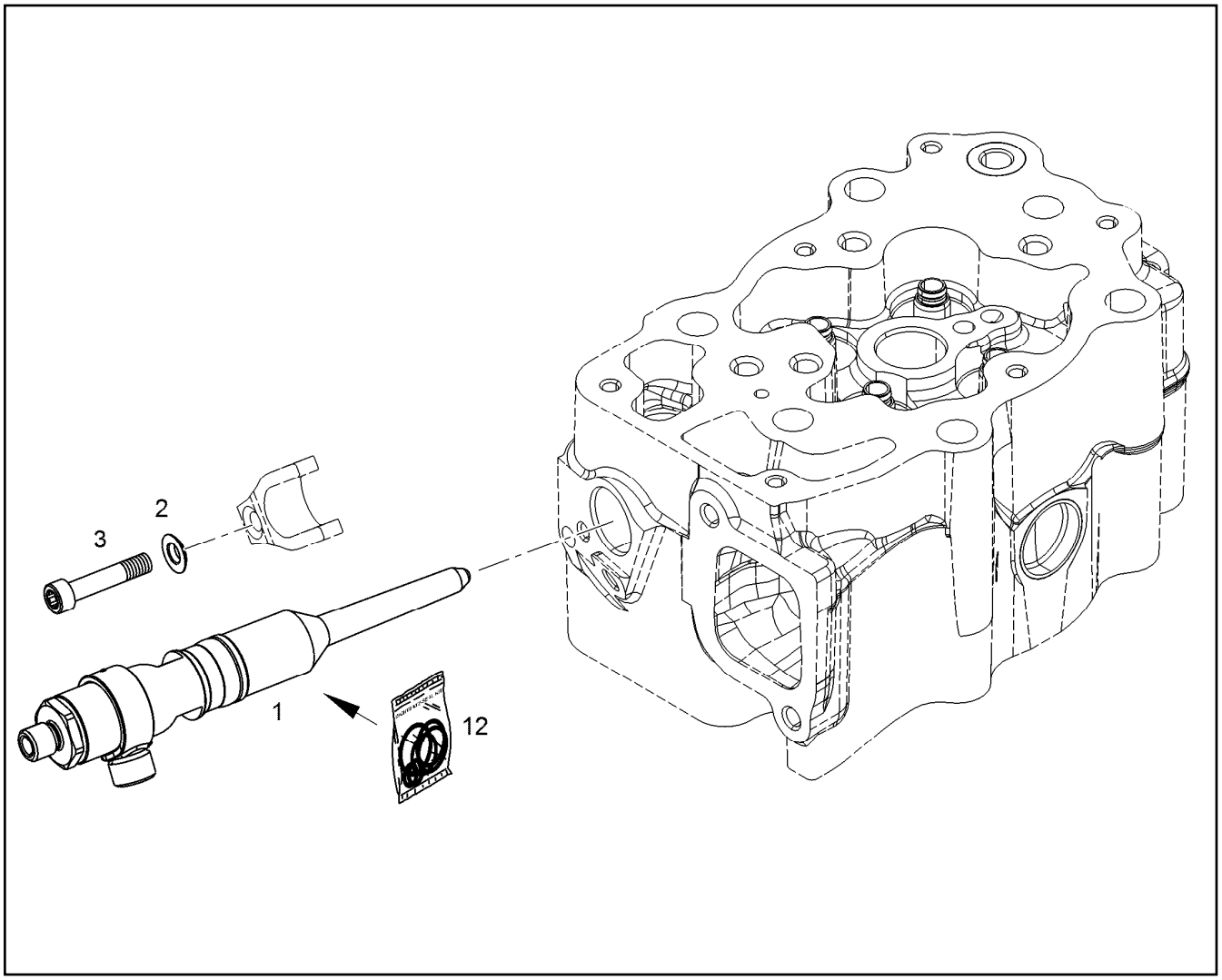

Pos.	Item	Quantity	Description	Bezeichnung
2	11622278	1	SPHERICAL WASHER DIN 6319 C 8,4X17X3	KUGELSCHEIBE
3	10135434	1	PRESSURE ADAPTER FASTENING ⇨ ❑ 224	BEFESTIGUNG DRUCKROHRST
12	10141216	1	SEAL KIT HIGH PRESS.CONNECTOR	DS DRUCKROHRSTUTZEN

Pos.	Item	Quantity	Description	Bezeichnung
1	10150144	1	JAW 42CrMoS4+QT	PRATZE
2	11622278	1	SPHERICAL WASHER DIN 6319 C 8,4X17X3	KUGELSCHEIBE
3	11600879	1	SOCKET HEAD SCREW ISO 14579 M8X40 10	ZYLINDERSCHRAUBE

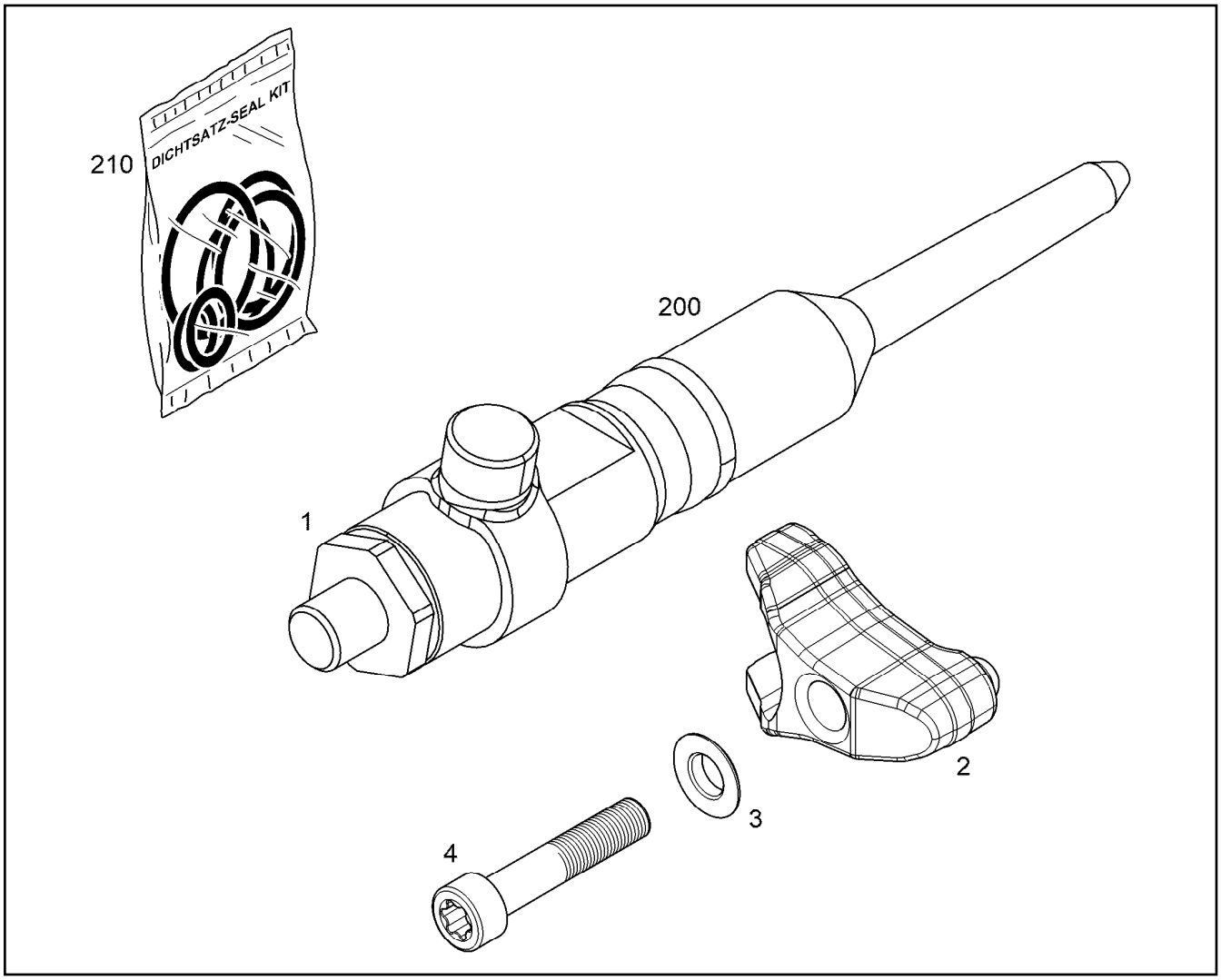

Pos.	Item	Quantity	Description	Bezeichnung
1	10141140	1	RK HIGH PRESSURE CONNECTOR ⇨ ❑ 223	RS DRUCKROHRSTUTZEN
2	10150144	1	JAW 42CrMoS4+QT	PRATZE
3	11622278	1	SPHERICAL WASHER DIN 6319 C 8,4X17X3	KUGELSCHEIBE
4	10135434	1	PRESSURE ADAPTER FASTENING ⇨ ❑ 224	BEFESTIGUNG DRUCKROHRST
200	10141140	1	RK HIGH PRESSURE CONNECTOR ⇨ ❑ 223	RS DRUCKROHRSTUTZEN
210	10141216	1	SEAL KIT HIGH PRESS.CONNECTOR	DS DRUCKROHRSTUTZEN

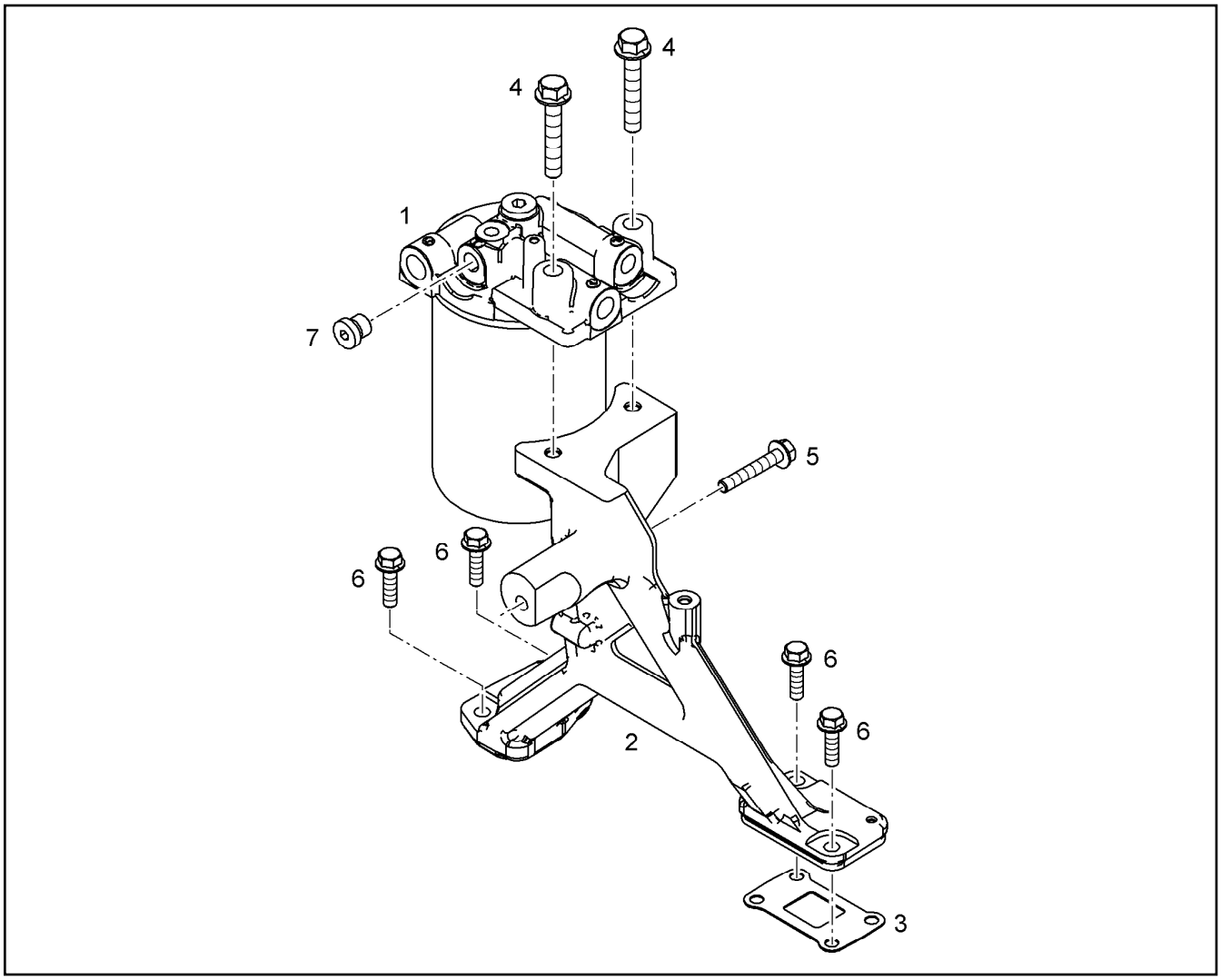

Pos.	Item	Quantity	Description	Bezeichnung
1	13512036	1	CONSOLE FOR FILTER PRE-ASS. ⇨ ❑ 227	FILTERKONSOLE VORM.
2	10146789	1	HOLDER	HALTER
3	9079130	1	SEAL 1	DICHTUNG
4	11656158	2	HEX SCREW EN 1665 M10X60 8.8 FLZN	SECHSKANTSCHRAUBE
5	11691686	1	HEX SCREW EN 1665 M8X50 8.8 480H SPF	SECHSKANTSCHRAUBE
6	11826563	4	HEX SCREW EN 1665 M8X30 8.8 480H	SECHSKANTSCHRAUBE
108	811201314	1	SEALING COMPOUND TUBE 50ML -55/150°	DICHTUNGSMASSE

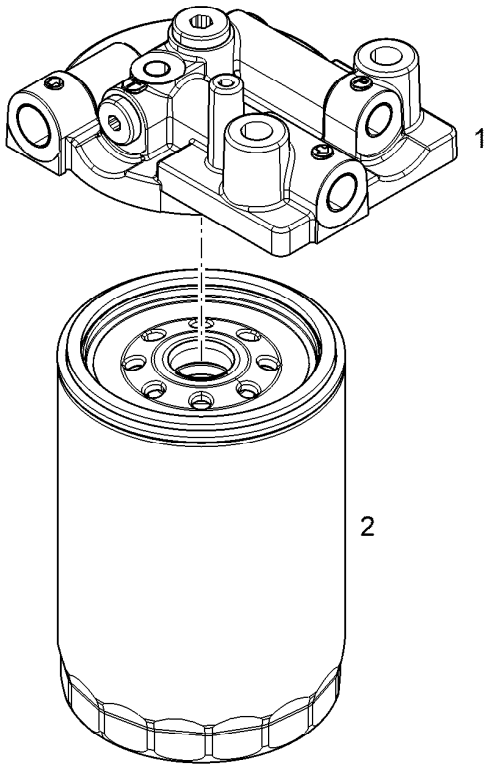

Pos.	Item	Quantity	Description	Bezeichnung
1	13472766	1	FILTER HEAD PRE-ASSY.	FILTERKOPF VORM.
2	12820742	1	FUEL FINE FILTER KRAFTSTOFF 3µm	KRAFTSTOFFFEINFILTER

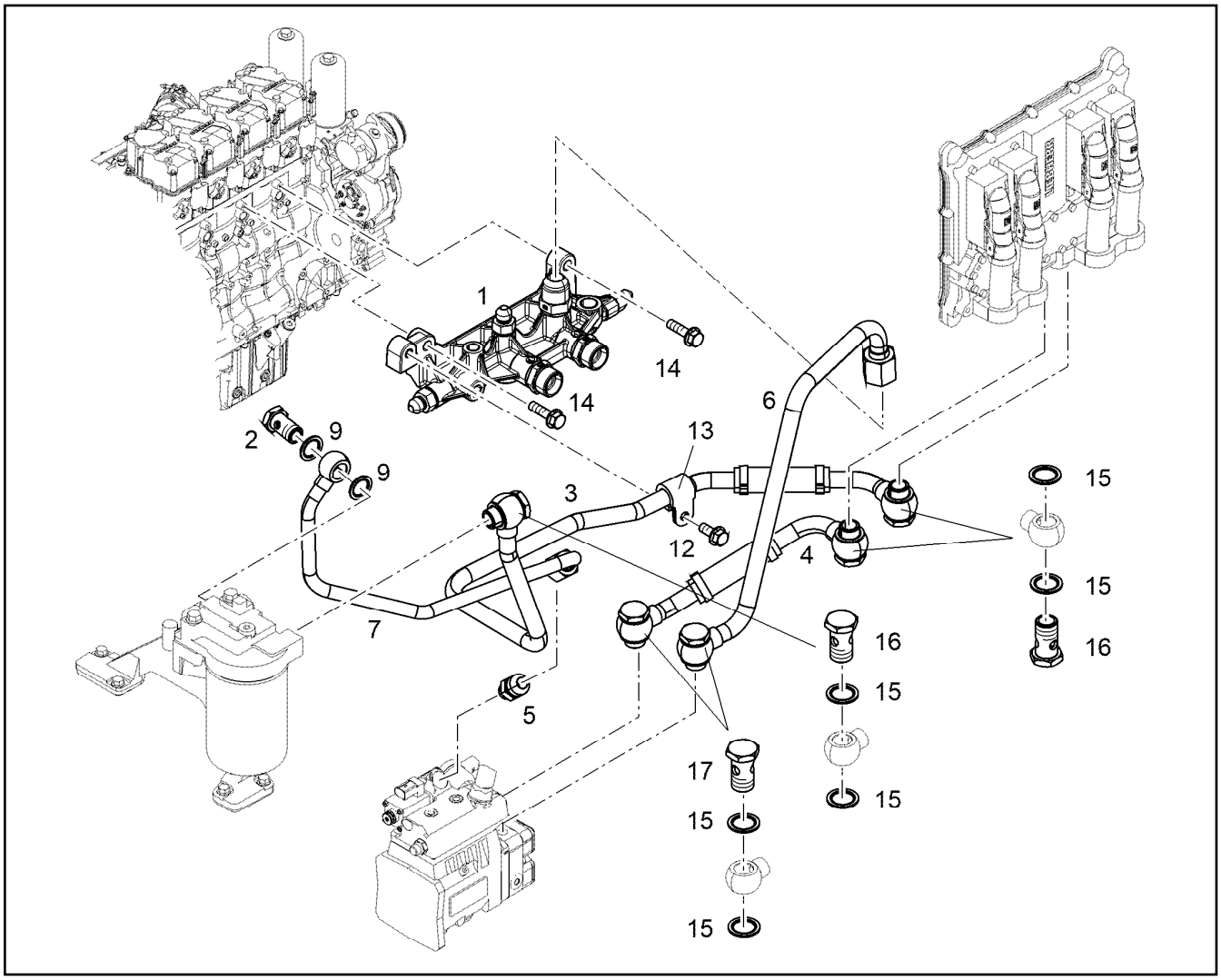

Pos.	Item	Quantity	Description	Bezeichnung
1	12511916	1	DISTRIBUTOR BLOCK	VERTEILERBLOCK
2	11002995	1	HOLLOW SCREW DIN 7643 12-3-M16X1,5 X5	HOHLSCHRAUBE
3	10143543	1	PIPELINE	ROHRLEITUNG
4	10143542	1	PIPELINE	ROHRLEITUNG
5	11002988	1	FITTING GE 12 M14X1,5/3/ INOX	VERSCHRAUBUNG
6	10130104	1	PIPELINE 15X1,5	ROHRLEITUNG
7	10143240	1	FUEL LINE 12X1	KRAFTSTOFFLEITUNG
8	10813942	1	FITTING GE 14,15,16 M18X CR6-FREI	VERSCHRAUBUNG
9	10011867	2	SEALING RING 16,7X24,00X1,5 FKM 80	DICHTRING
12	11657219	1	HEX SCREW EN 1665 M8X20 8.8 480H SPF	SECHSKANTSCHRAUBE
13	7382085	1	CLAMP DIN 3016-1 16X20XD1 W1-2-MVQ	SCHELLE
14	10009007	2	HEX SCREW DIN 6921 M8X25 8.8 A2C	SECHSKANTSCHRAUBE
15	10011868	10	SEALING RING 18,7X26X1,5 St/FPM1-80	DICHTRING
16	4981226	3	HOLLOW SCREW DIN 7643 15--M18X1,5 A3	HOHLSCHRAUBE
17	11443132	2	HOLLOW SCREW 15-3-32	HOHLSCHRAUBE

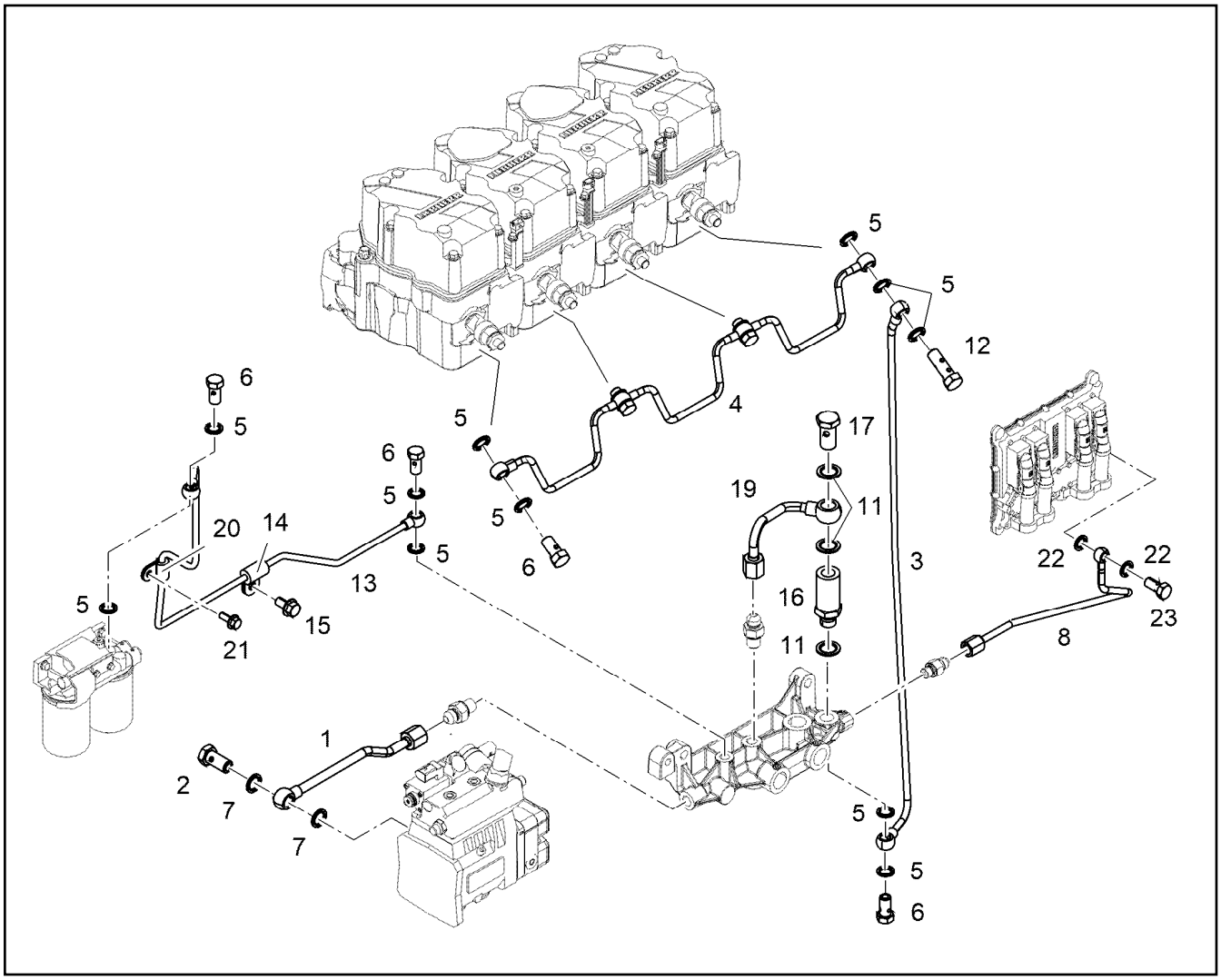

Pos.	Item	Quantity	Description	Bezeichnung
1	10143251	1	PIPELINE 8X2	ROHRLEITUNG
2	12210024	1	HOLLOW SCREW DIN 7643 8-3-M12X1,5 480	HOHLSCHRAUBE
3	10132170	1	PIPELINE 6X1	ROHRLEITUNG
4	9078935	1	FUEL LINE	KRAFTSTOFFLEITUNG
5	10011864	15	SEALING RING 10,7X16X1,5 St/FPM1-80	DICHTRING
6	12210010	6	HOLLOW SCREW DIN 7643 6-3-M10X1 480H	HOHLSCHRAUBE
7	10011865	2	SEALING RING 12,7X18,00X1,5 FKM 80	DICHTRING
8	10141846	1	PIPELINE 6X1	ROHRLEITUNG
11	10011866	3	SEALING RING 14,7X22,00X1,5 FKM 80	DICHTRING
12	12210029	1	DOUBLE BANJO BOLT 6-M10X1 11SMnPb3	DOPPELHOHLSCHRAUBE
13	10133607	1	PIPELINE 6X1	ROHRLEITUNG
14	7382088	1	CLAMP DIN 3016-1 6X20XD1 W1-2-MVQ	SCHELLE
15	11656992	1	HEX SCREW EN 1665 M8X16 8.8 480H SPF	SECHSKANTSCHRAUBE
16	10132935	1	INTERMEDIATE PART 11SMnPb30+C	ZWISCHENSTUECK
17	12210013	1	HOLLOW SCREW DIN 7643 10-3-M14X1,5 4	HOHLSCHRAUBE
19	10132180	1	PIPELINE 8X1	ROHRLEITUNG
20	7381292	1	CLAMP DIN 3016-1 6X15XD1 W1-2-MVQ	SCHELLE
21	11840297	1	HEX SCREW EN 1665 M6X16 8.8 480H SPF	SECHSKANTSCHRAUBE
22	10011871	2	SEALING RING 8,7X14X1 St/FPM1-80	DICHTRING
23	12210009	1	HOLLOW SCREW DIN 7643 4-3-M8X1 480H	HOHLSCHRAUBE

Pos.	Item	Quantity	Description	Bezeichnung
1	10143826	1	INJECTION LINE R-MOTORXD934	EINSPRITZLEITUNG
2	10143827	3	INJECTION LINE R-MOTORXD934	EINSPRITZLEITUNG
3	11389287	1	SEALING PLUG M18X1.5	DICHTSTOPFEN

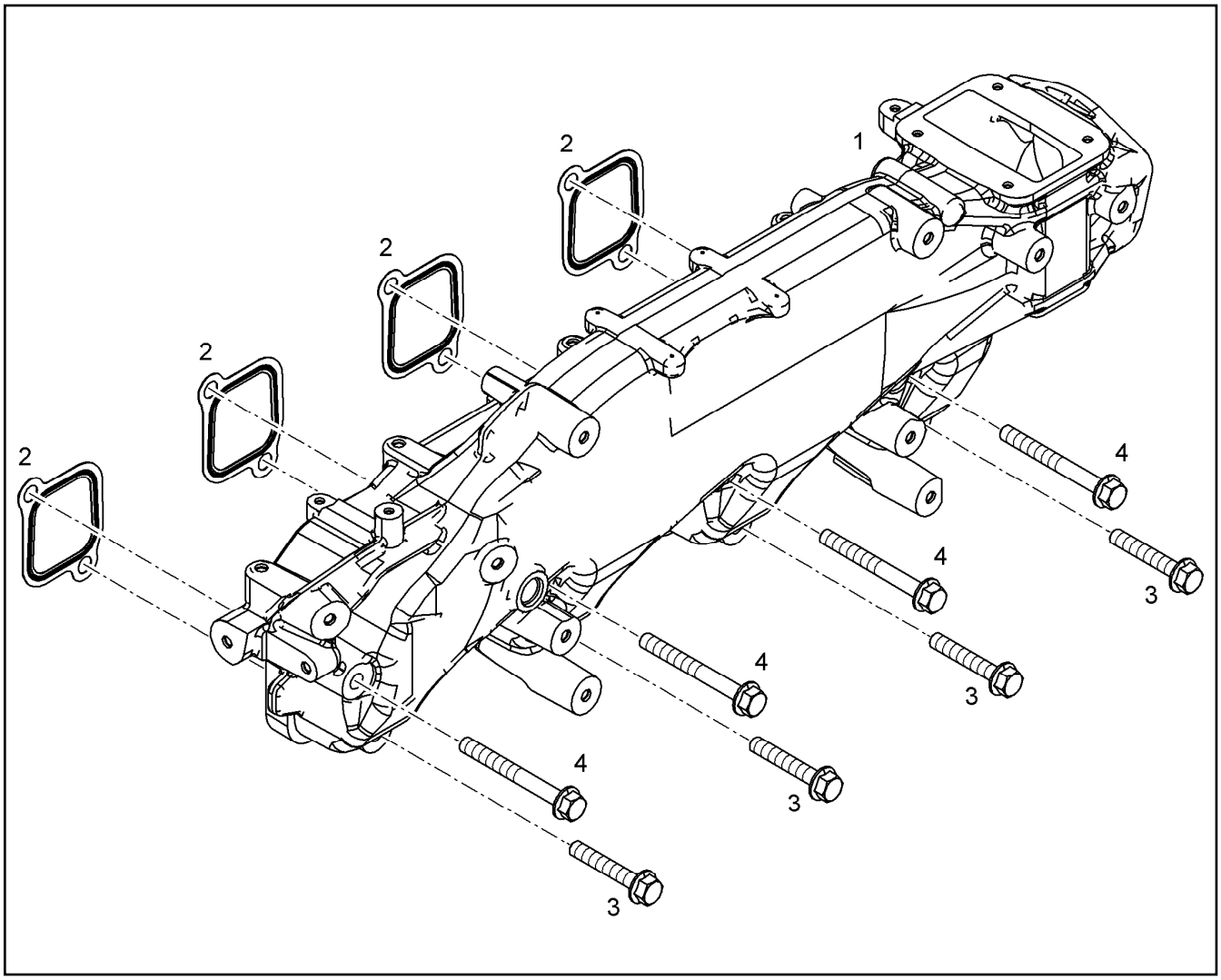

Pos.	Item	Quantity	Description	Bezeichnung
1	11415774	1	AIR SUCTION PIPE R-MOTORXD934/D94	LUFTANSAUGROHR
2	10118556	4	SEAL S235JR	DICHTUNG
3	11656158	4	HEX SCREW EN 1665 M10X60 8.8 FLZN	SECHSKANTSCHRAUBE
4	12208088	4	HEX SCREW EN 1665 M10X90 8.8 FLZN	SECHSKANTSCHRAUBE

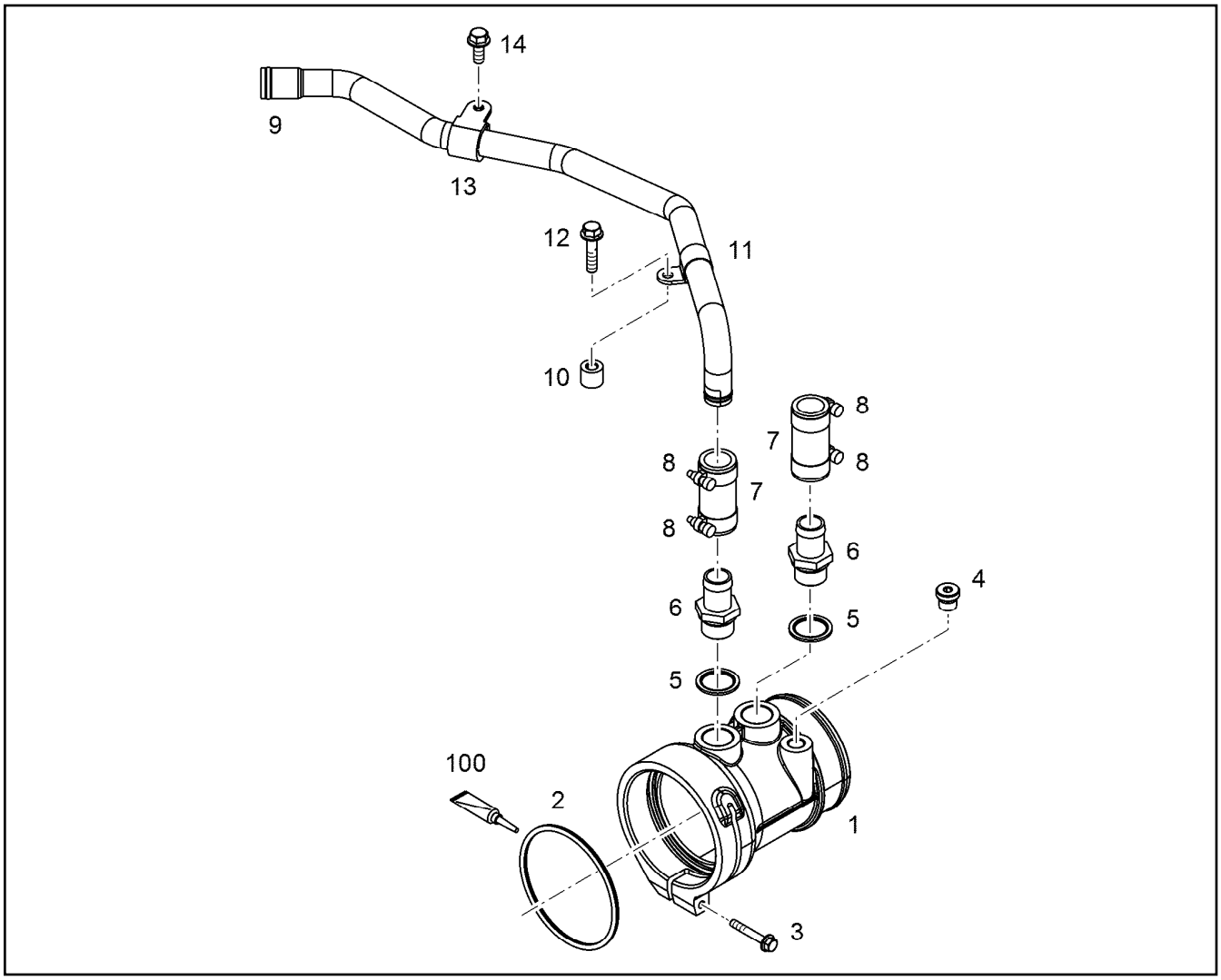

Pos.	Item	Quantity	Description	Bezeichnung
1	11444999	1	INTAKE STACK R-MOTORXD934/D94	ANSAUGSTUTZEN
2	11008055	1	O-RING AEHNL.ISO 3601-1 100X5 FKM 70	O-RING
3	12207587	1	HEX SCREW EN 1665 M6X40 8.8 480H	SECHSKANTSCHRAUBE
4	7380566	1	SCREW PLUG VSTI M14X1,5	VERSCHLUSSSCHRAUBE
5	10011870	2	SEALING RING 26,7X34,93X2 St/FPM1-80	DICHTRING
6	9140351	2	HOSE NIPPLE CE-0, H54	SCHLAUCHNIPPEL
7	9273161	2	RUBBER CONNECTION 22X30X65L.	GUMMIMUFFE
8	774215008	4	HOSE CLAMP 26/20-32/12 W3	SCHLAUCHSCHELLE
9	10140732	1	PIPELINE 22X1,5	ROHRLEITUNG
10	9177776	1	WASHER 8,4X18X15 -	SCHEIBE
11	7381286	1	CLAMP DIN 3016-1 22X20XA1 W1-2	SCHELLE
12	11826563	1	HEX SCREW EN 1665 M8X30 8.8 480H	SECHSKANTSCHRAUBE
13	7381630	1	CLAMP DIN 3016-1 22X20XD1 W1-2-MVQ	SCHELLE
14	11657219	1	HEX SCREW EN 1665 M8X20 8.8 480H SPF	SECHSKANTSCHRAUBE
100	10285708	1	GREASE NBU 30 1KG DOSE	FETT

Pos.	Item	Quantity	Description	Bezeichnung
1	10141549	1	CONNECTING LINE R-MOTORXD936 A7	VERBINDUNGSLEITUNG
2	10127984	1	RETAINER CLIP 122,5/K1 St/Inox	SPANNSCHELLE
3	12210035	3	DOUBLE-ENDED STUD DIN 835 M10X25 8.8	STIFTSCHRAUBE
4	10179265	3	HEX NUT EN 1661 M10 8 FLZN	SECHSKANTMUTTER
5	7380605	1	O-RING ISO 3601-1 101,27X2,62 FKM 70 A,B	O-RING

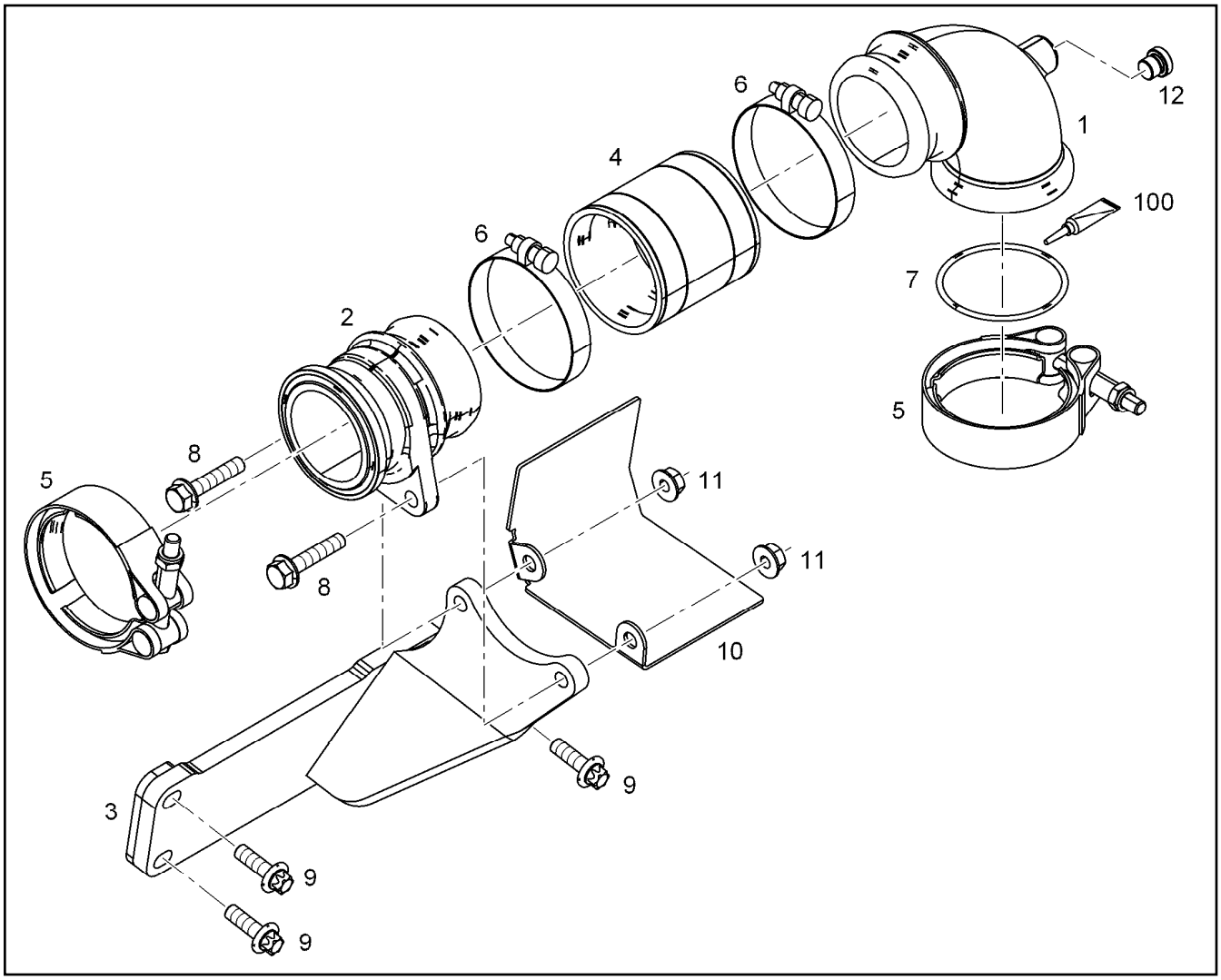

Pos.	Item	Quantity	Description	Bezeichnung
1	10143612	1	CHARGE AIR LINE	LADELUFTLEITUNG
2	10143614	1	CHARGE AIR LINE	LADELUFTLEITUNG
3	10149679	1	CONSOLE X5CrNi18-10	KONSOLE
4	10129904	1	RUBBER CONNECTION	GUMMIMUFFE
5	10124798	2	RETAINER CLIP 77/K1 St/Inox	SPANNSCHELLE
6	5004929	2	HOSE CLAMP DIN 3017-1 70/60-80/13 W2-2	SCHLAUCHSCHELLE
7	7380970	1	O-RING AEHNL.ISO 3601-1 63,17X2,62 FKM	O-RING
8	11658660	2	HEX SCREW EN 1665 M8X40 8.8 480H SPF	SECHSKANTSCHRAUBE
9	10118695	3	HEXALOBULAR HEAD SCREW M8X25 X6NiC	SECHSRUNDSCHRAUBE
10	11382888	1	HEAT PROTECTION SHEET S355JR	HITZESCHUTZBLECH
10	12428325	1	HEAT PROTECTION SHEET S355JR	HITZESCHUTZBLECH
11	11820285	2	HEX NUT EN 1661 M8 8 480H SPF	SECHSKANTMUTTER
12	7381638	1	SCREW PLUG VSTI M10X1	VERSCHLUSSSCHRAUBE
100	10285708	1	GREASE NBU 30 1KG DOSE	FETT

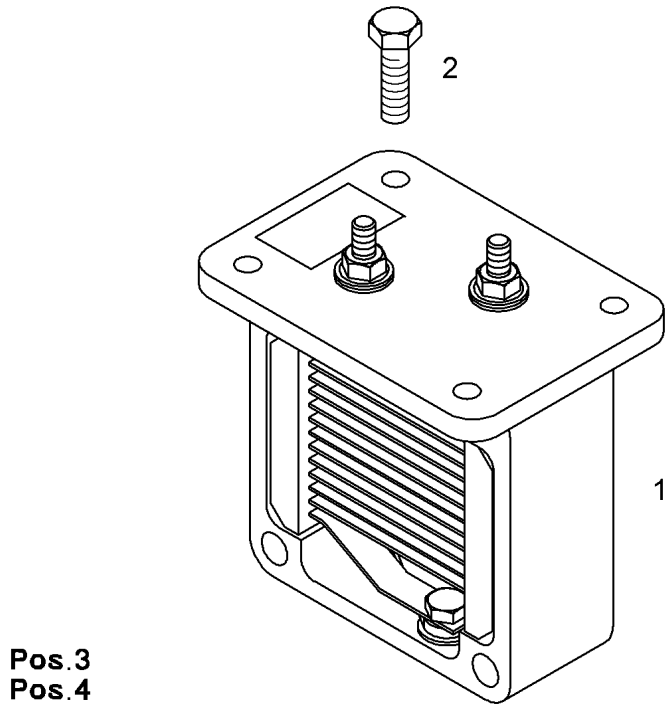

Pos.	Item	Quantity	Description	Bezeichnung
1	13701882	1	HEATING FLANGE COMPLETE 24V 1,9KW ⇨ ❑ 236	HEIZFLANSCH KOMPLETT
2	12207548	4	HEX SCREW EN 1665 M6X20 8.8 480H SPF	SECHSKANTSCHRAUBE
3	10003366	1	RIBBED HEX NUT M6 10	SECHSKANTRIPPENMUTTER
4	12826252	1	EARTH CONNECTION PLATE Cu	MASSEVERBINDUNGSBLECH

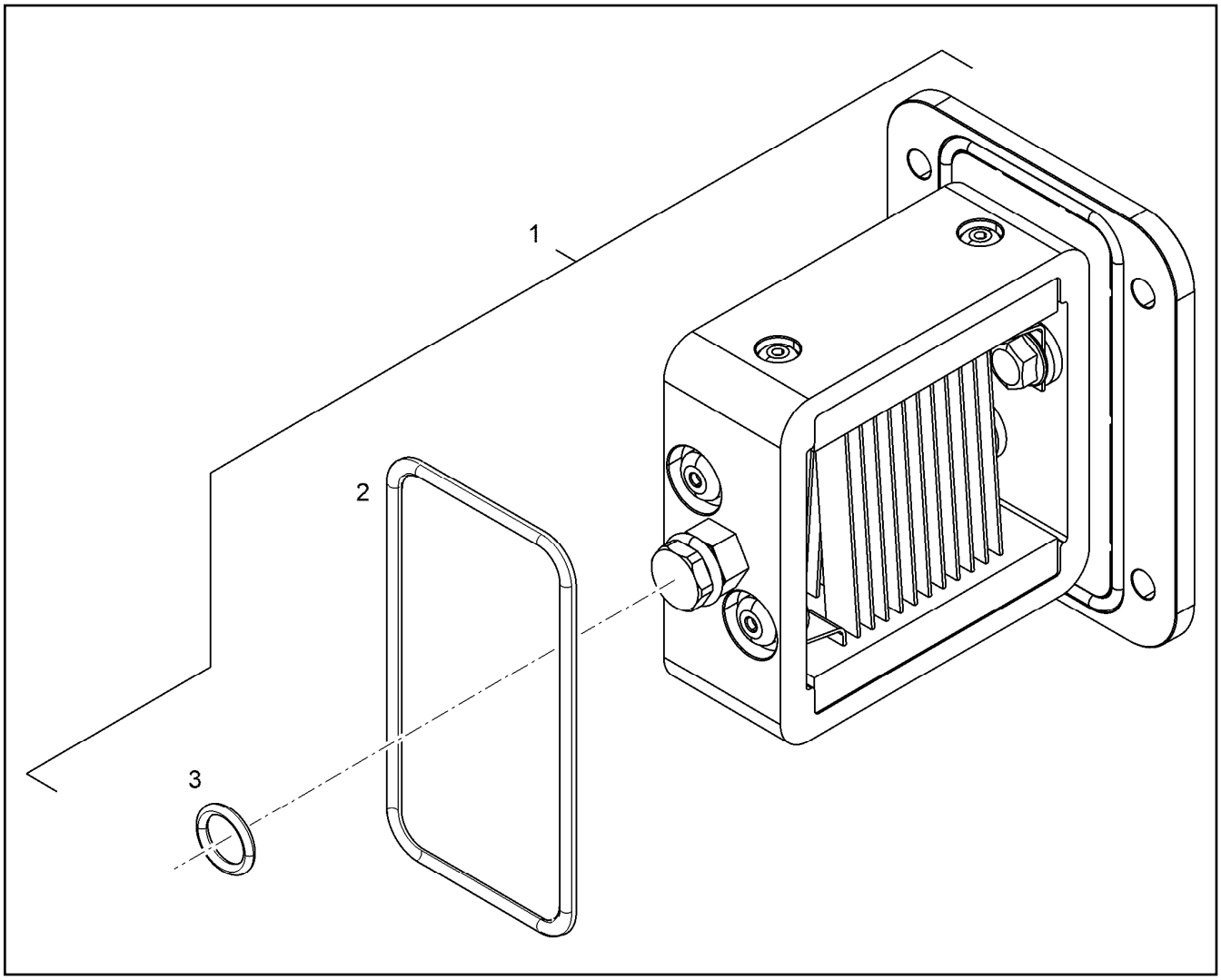

Pos.	Item	Quantity	Description	Bezeichnung
1	12856186	1	HEATING FLANGE 24V 1,9KW	HEIZFLANSCH
2	13711602	1	O-RING 94,5X3 VMQ 70	O-RING
3	7380935	1	O-RING ISO 3601-1 12,37X2,62 FKM 90 A	O-RING

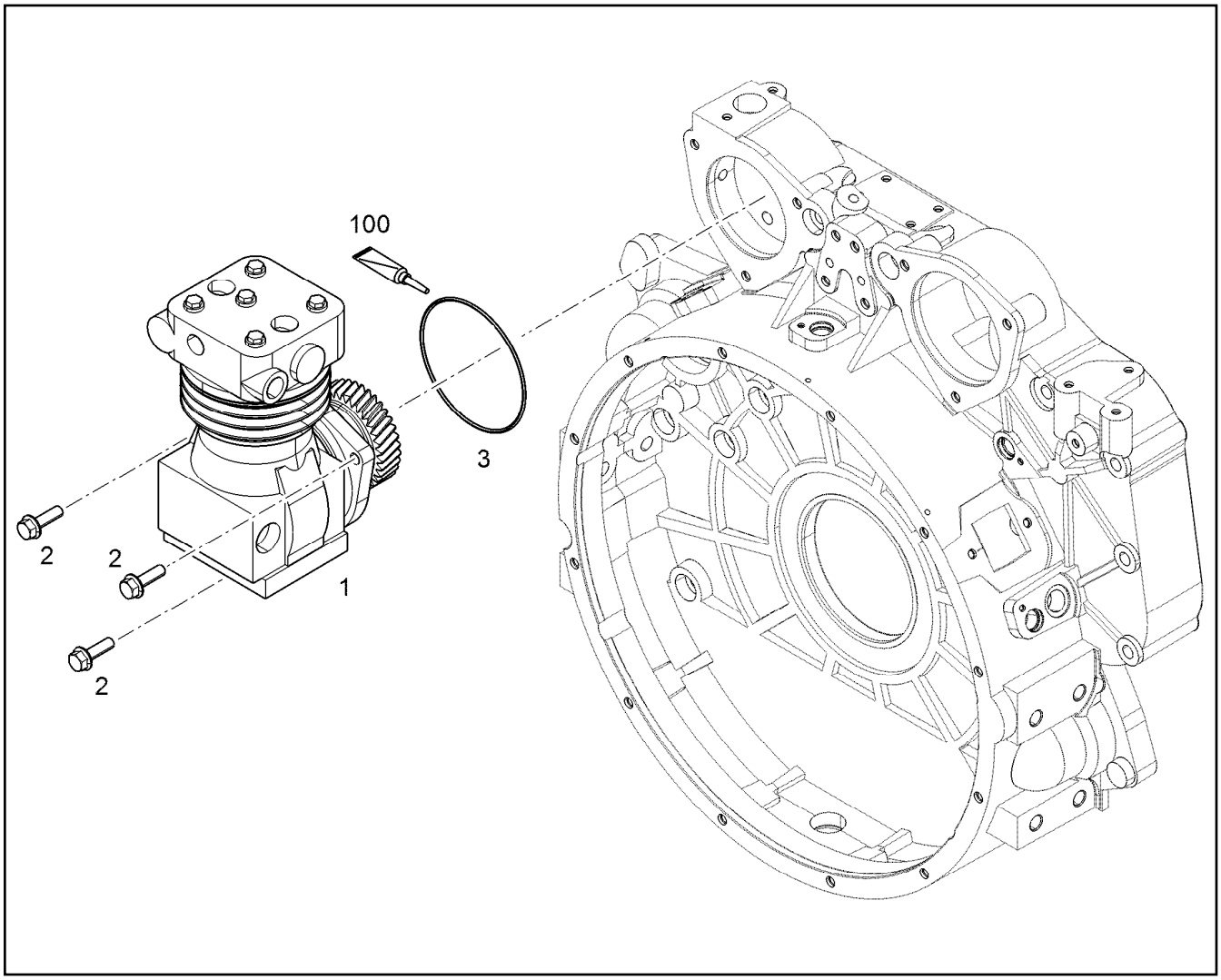

Pos.	Item	Quantity	Description	Bezeichnung
1	9080294	1	AIR COMPRESSOR PRE-ASSY. 293CM3 ⇨ ❑ 238	LUFTPRESSER VORM.
2	11643686	3	HEX SCREW EN 1665 M10X35 8.8 FLZN SPF	SECHSKANTSCHRAUBE
3	10002310	1	O-RING AEHNL.ISO 3601-1 125X2 VMQ 70	O-RING
100	10285708	1	GREASE NBU 30 1KG DOSE	FETT

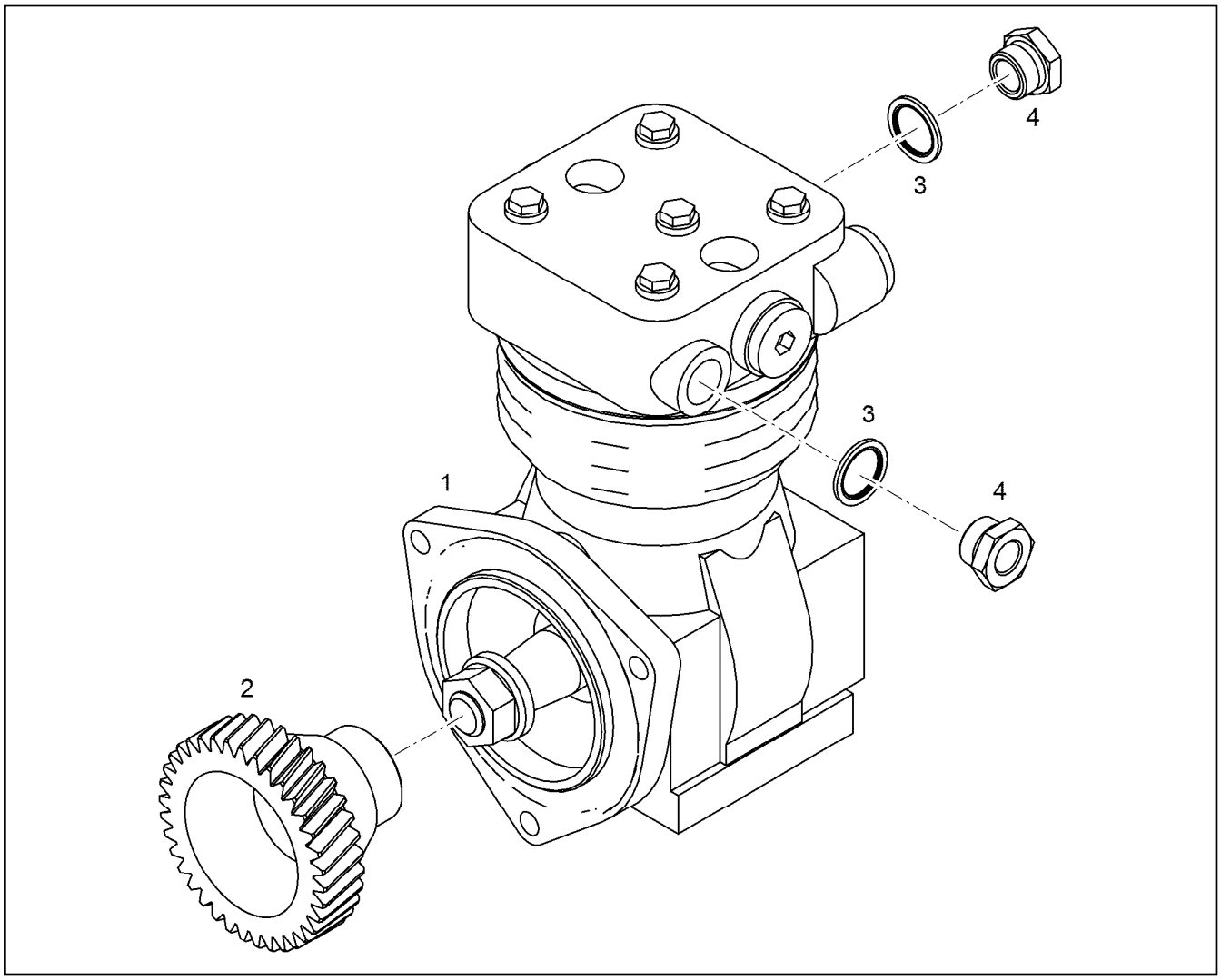

Pos.	Item	Quantity	Description	Bezeichnung
1	5700161	1	AIR COMPRESSOR 293CM3 ⇨ ❑ 239	LUFTPRESSER
2	9073343	1	GEAR WHEEL 2,5	ZAHNRAD
3	10011869	2	SEALING RING 22,7X30X2 St/FPM1-80	DICHTRING
4	7381363	2	FITTING RI M22X1,5/M16X CR6-FREI	VERSCHRAUBUNG

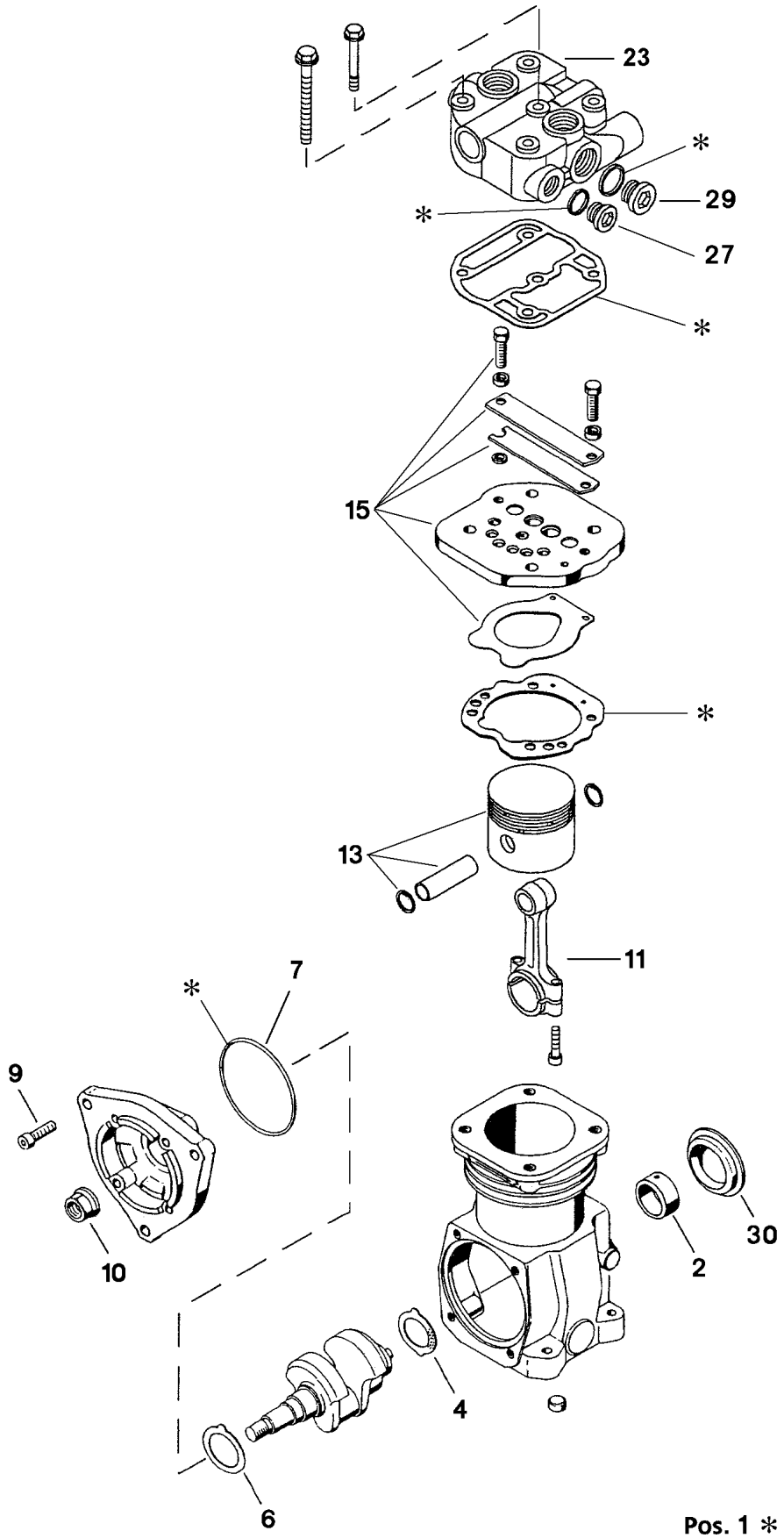
23
*
29
*
27
*
15
*
13
11
7
*
9
10
30
2
4
6
Pos. 1 *

Pos.	Item	Quantity	Description	Bezeichnung
1	571582108	1	REPAIR KIT	REPARATURSATZ
2	571582208	1	BUSHING	BUCHSE
4	571582308	1	THRUST WASHER	ANLAUFSCHEIBE
6	571582408	1	THRUST WASHER	ANLAUFSCHEIBE
7	570979708	1	O-RING 88X3 ACM70	O-RING
9	570613877	4	SCREW DIN 912 M8X25 12.9	SCHRAUBE
10	520303308	1	WHEEL NUT DIN 74361 M20X1,5 8 A2K	RADMUTTER
11	571582508	1	CONROD	PLEUELSTANGE
13	571582608	1	PISTON	KOLBEN
15	571582708	1	REPAIR KIT	REPARATURSATZ
23	7025732	1	CYLINDER HEAD	ZYLINDERKOPF
24	11066521	4	HEX SCREW M8X80 10.9 SCHWARZ VERG	SECHSKANTSCHRAUBE
27	10878578	1	SCREW PLUG DIN 908 M22X1,5X18 ST 480H	VERSCHLUSSSCHRAUBE
29	4600232	3	SCREW PLUG DIN 908 M26X1,5 ST A3C	VERSCHLUSSSCHRAUBE
30	571582808	1	CAP	KAPPE

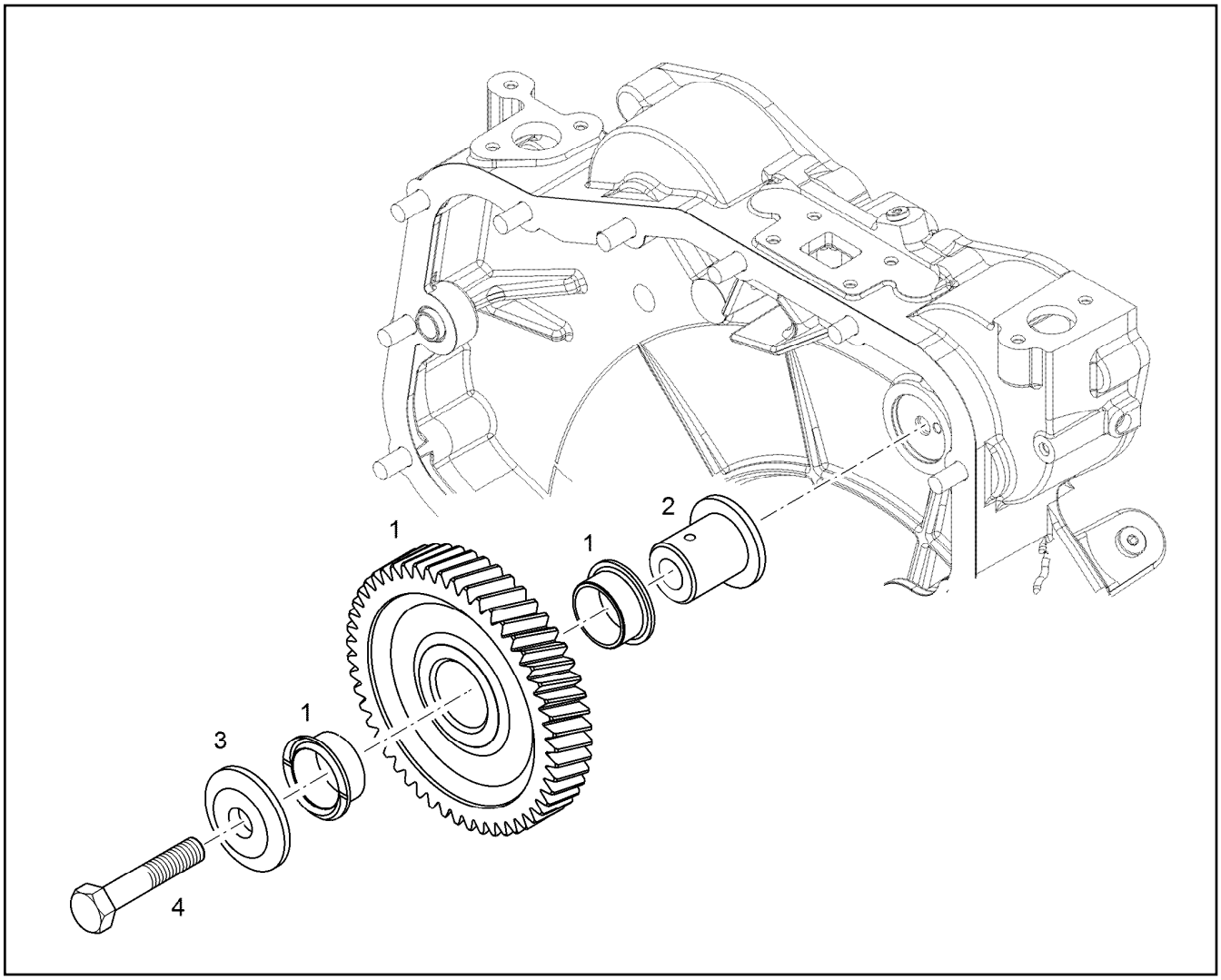

Pos.	Item	Quantity	Description	Bezeichnung
1	9072904	1	INTERMEDIATE GEAR PRE-ASSY.	ZWISCHENRAD VORM.
(2)	9889290	2	PLAIN BEARING BUSHING 30X34X16 G-CuS	GLEITLAGERBUCHSE
2	9072907	1	INTERMEDIATE WHEEL AXLE 42CrMo4+QT	ZWISCHENRADACHSE
3	9072908	1	BEARING COVER 31CrMoV9	LAGERDECKEL
4	11658890	1	HEX SCREW ISO 4014 M12X65 8.8 FLZN SP	SECHSKANTSCHRAUBE

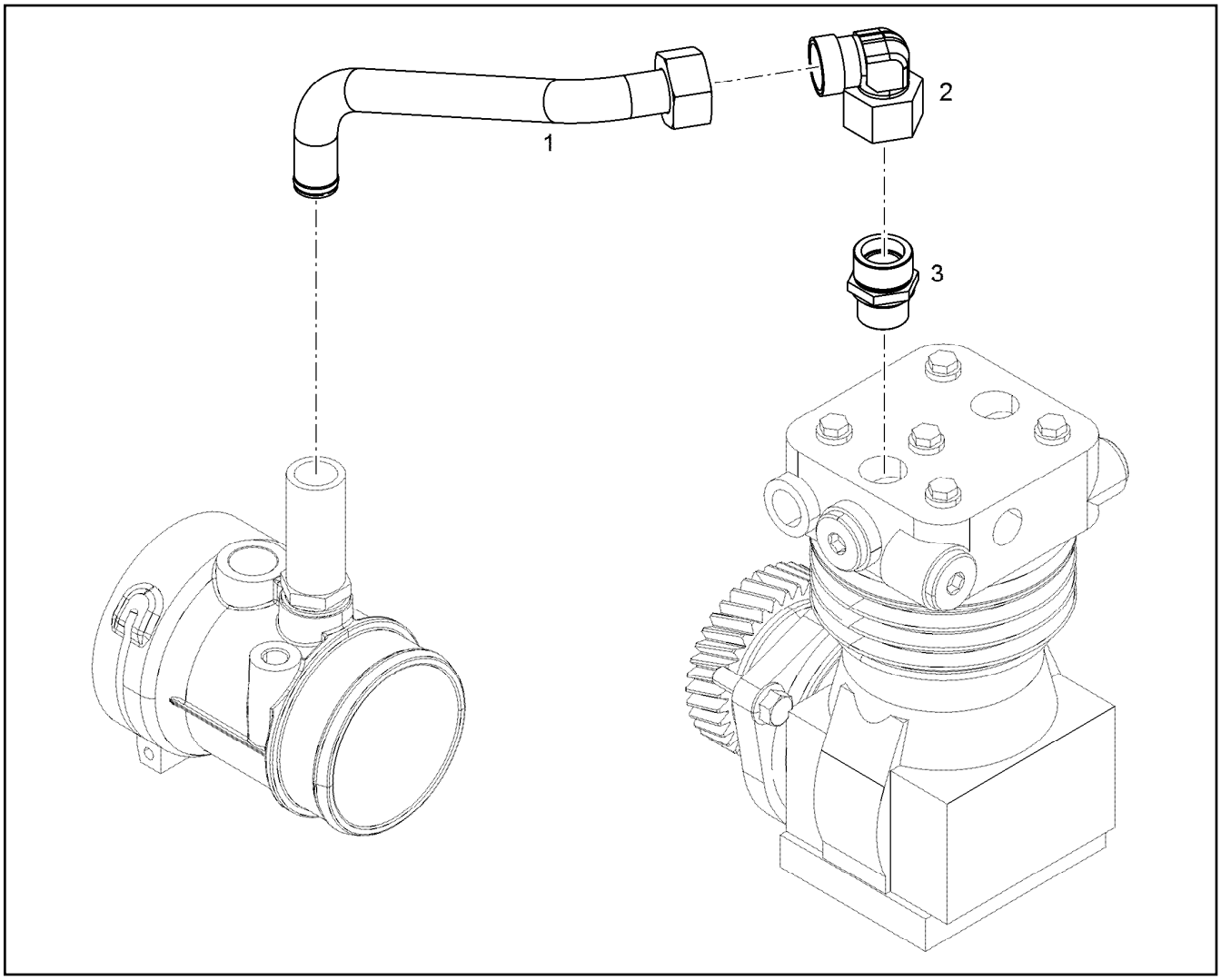

Pos.	Item	Quantity	Description	Bezeichnung
1	10145175	1	PIPELINE 22X1,5	ROHRLEITUNG
2	247126202	1	SWIVEL ELBOW EW 22L CR6-FREI	WINKELSTUTZEN
3	7362515	1	FITTING ISO 8434-1 GE 22L M26X1,5 CR6-F	VERSCHRAUBUNG

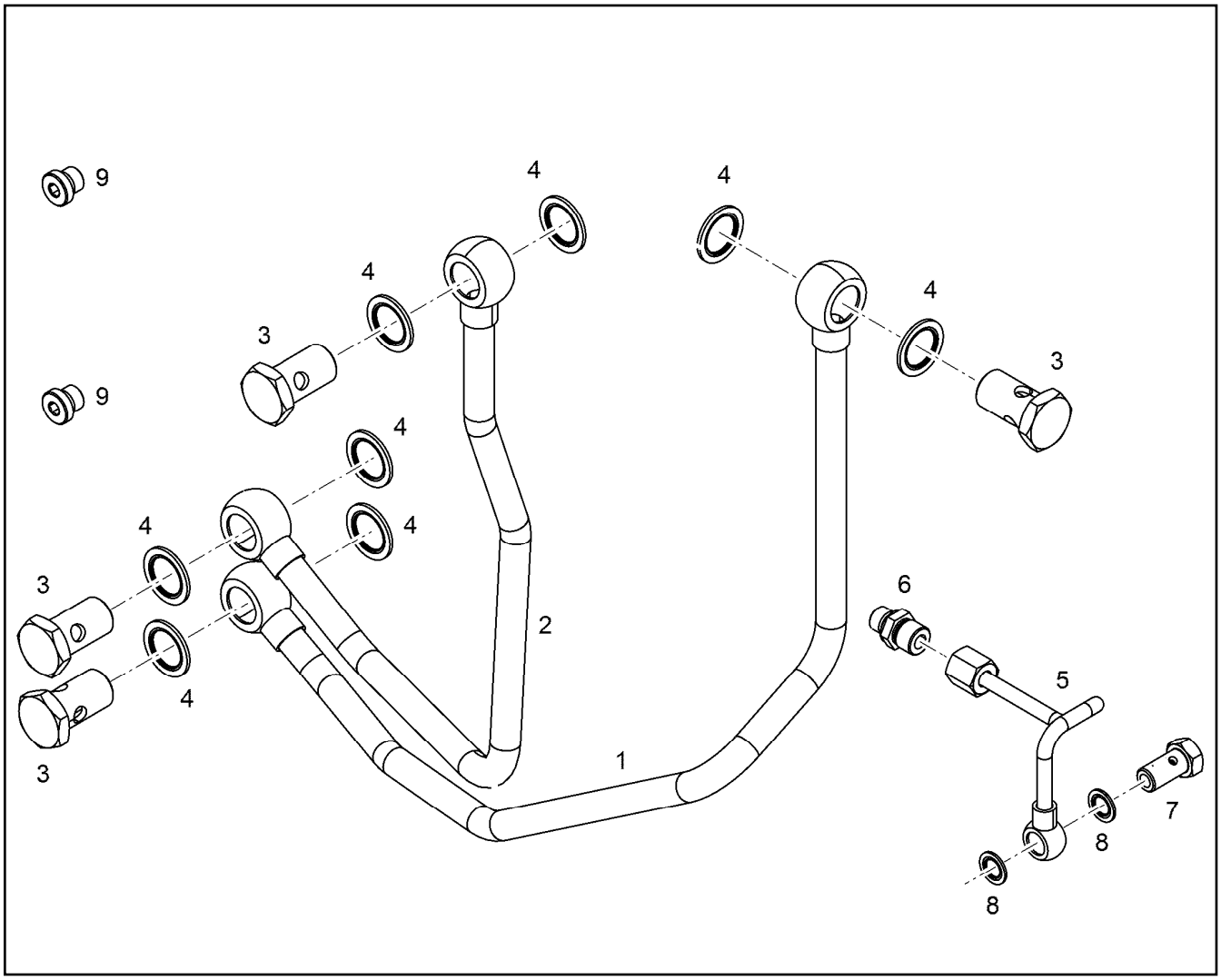

Pos.	Item	Quantity	Description	Bezeichnung
1	10145177	1	COOLING WATER LINE 12X1	KUEHLWASSERLEITUNG
2	10145178	1	COOLING WATER LINE 12X1	KUEHLWASSERLEITUNG
3	12210025	4	HOLLOW SCREW DIN 7643 12-3-M16X1,5 4	HOHLSCHRAUBE
4	10011867	8	SEALING RING 16,7X24,00X1,5 FKM 80	DICHTRING
5	9080310	1	LUBRICATING OIL LINE 6X1	SCHMIEROELLEITUNG
6	4981233	1	FITTING ISO 8434-1 GE 6L M10X1 CR6-FREI	VERSCHRAUBUNG
7	12210010	1	HOLLOW SCREW DIN 7643 6-3-M10X1 480H	HOHLSCHRAUBE
8	10011864	2	SEALING RING 10,7X16X1,5 St/FPM1-80	DICHTRING
9	7381638	2	SCREW PLUG VSTI M10X1	VERSCHLUSSSCHRAUBE

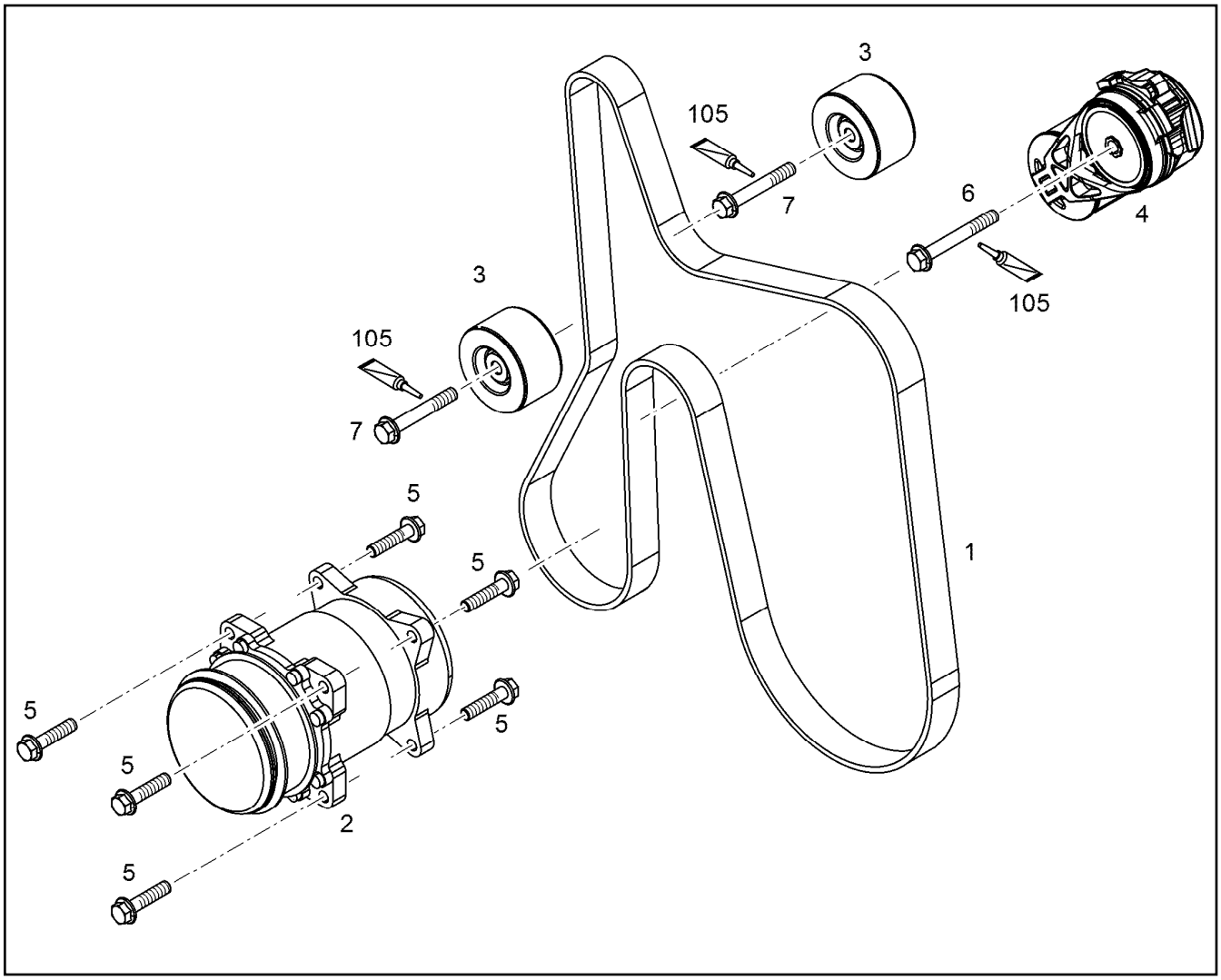

Pos.	Item	Quantity	Description	Bezeichnung
1	11482426	1	V-RIPPED BELT 8XPKX2152 EPDM2	KEILRIPPENRIEMEN
2	12922849	1	AIR CONDITIONING COMPRESSOR	KLIMAKOMPRESSOR
3	10149360	2	GUIDE PULLEY COMPL.	UMLENKROLLE VORM.
4	10153374	1	FASTENING DEVICE	SPANNVORRICHTUNG
5	11626068	6	HEX SCREW EN 1665 M10X40 8.8 FLZN SPF	SECHSKANTSCHRAUBE
6	11656160	1	HEX SCREW EN 1665 M10X80 8.8 FLZN	SECHSKANTSCHRAUBE
7	11656158	2	HEX SCREW EN 1665 M10X60 8.8 FLZN	SECHSKANTSCHRAUBE
105	811205708	1	SCREW LOCKING FLASCHE 50ML 150°C	SCHRAUBENSICHERUNG

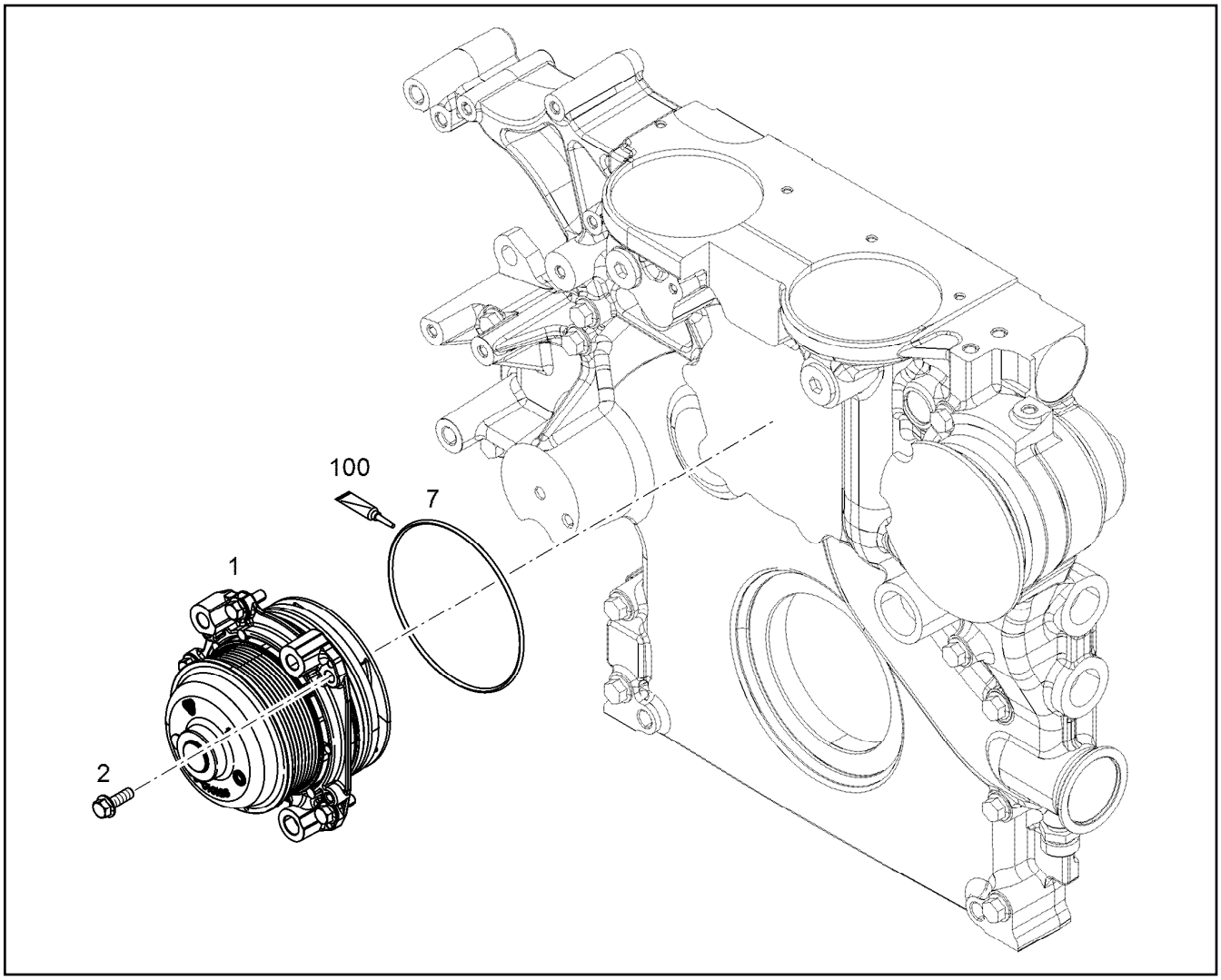

Pos.	Item	Quantity	Description	Bezeichnung
1	10150386	1	WATER PUMP, PRE-ASSEMBLED R-MOTOR	WASSERPUMPE VORM.
1	12863021	1	WATER PUMP, PRE-ASSEMBLED R-MOTOR	WASSERPUMPE VORM.
(1)	7016016	1	O-RING ISO 3601-1 132,94X3,53 FKM 70	O-RING
(7)	7016016	1	O-RING ISO 3601-1 132,94X3,53 FKM 70	O-RING
2	10009007	5	HEX SCREW DIN 6921 M8X25 8.8 A2C	SECHSKANTSCHRAUBE
7	7016016	1	O-RING ISO 3601-1 132,94X3,53 FKM 70	O-RING
100	10285708	1	GREASE NBU 30 1KG DOSE	FETT

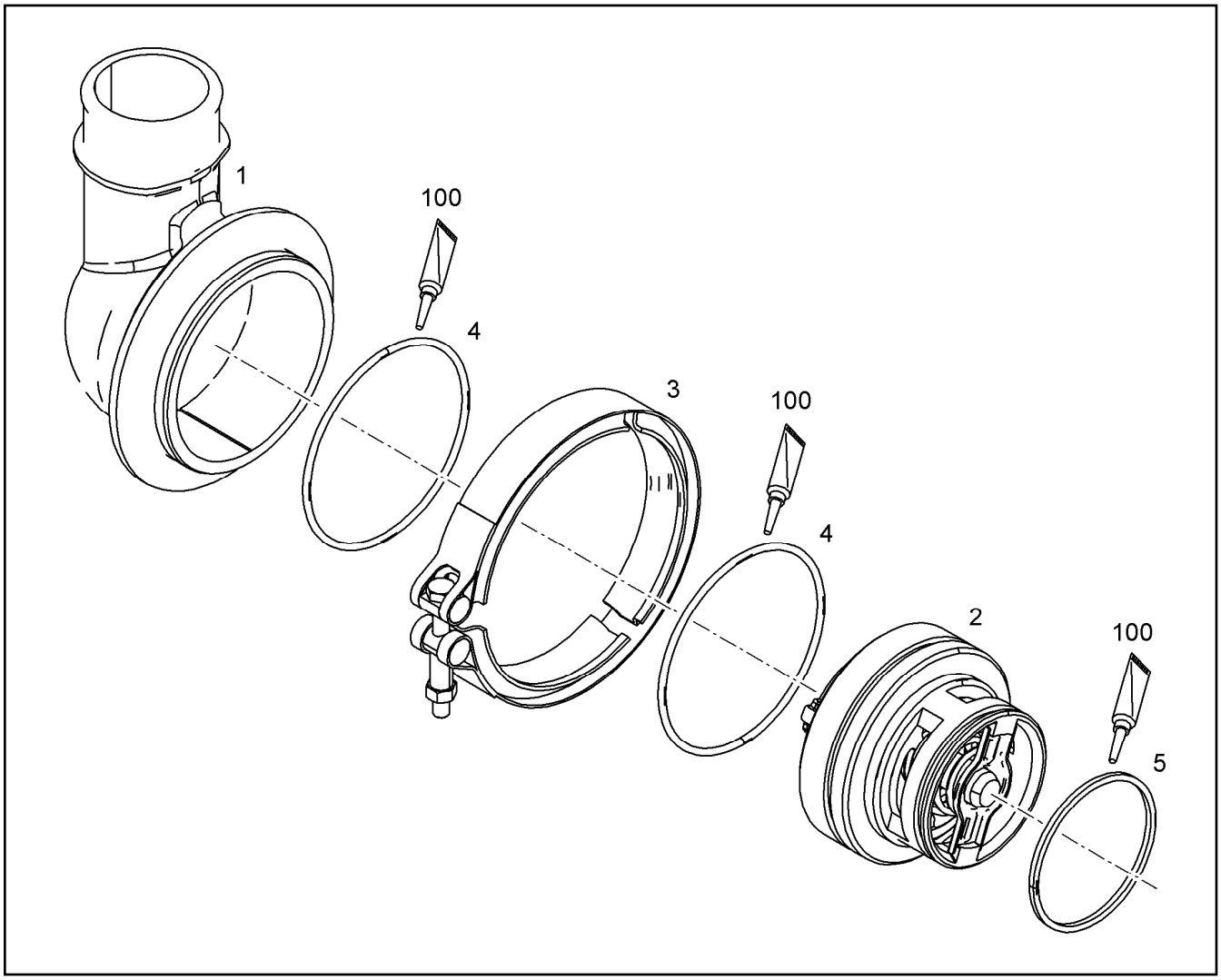

Pos.	Item	Quantity	Description	Bezeichnung
2	10154798	1	THERMOSTAT	THERMOSTAT
3	10138820	1	RETAINER CLIP 150/K1 Inox	SPANNSCHELLE
4	10002167	2	O-RING ISO 3601-1 107,54X3,53 FKM 70	O-RING
5	7009080	1	O-RING ISO 3601-1 75,79X3,53 MVQ,70 SH	O-RING
100	10285708	1	GREASE NBU 30 1KG DOSE	FETT

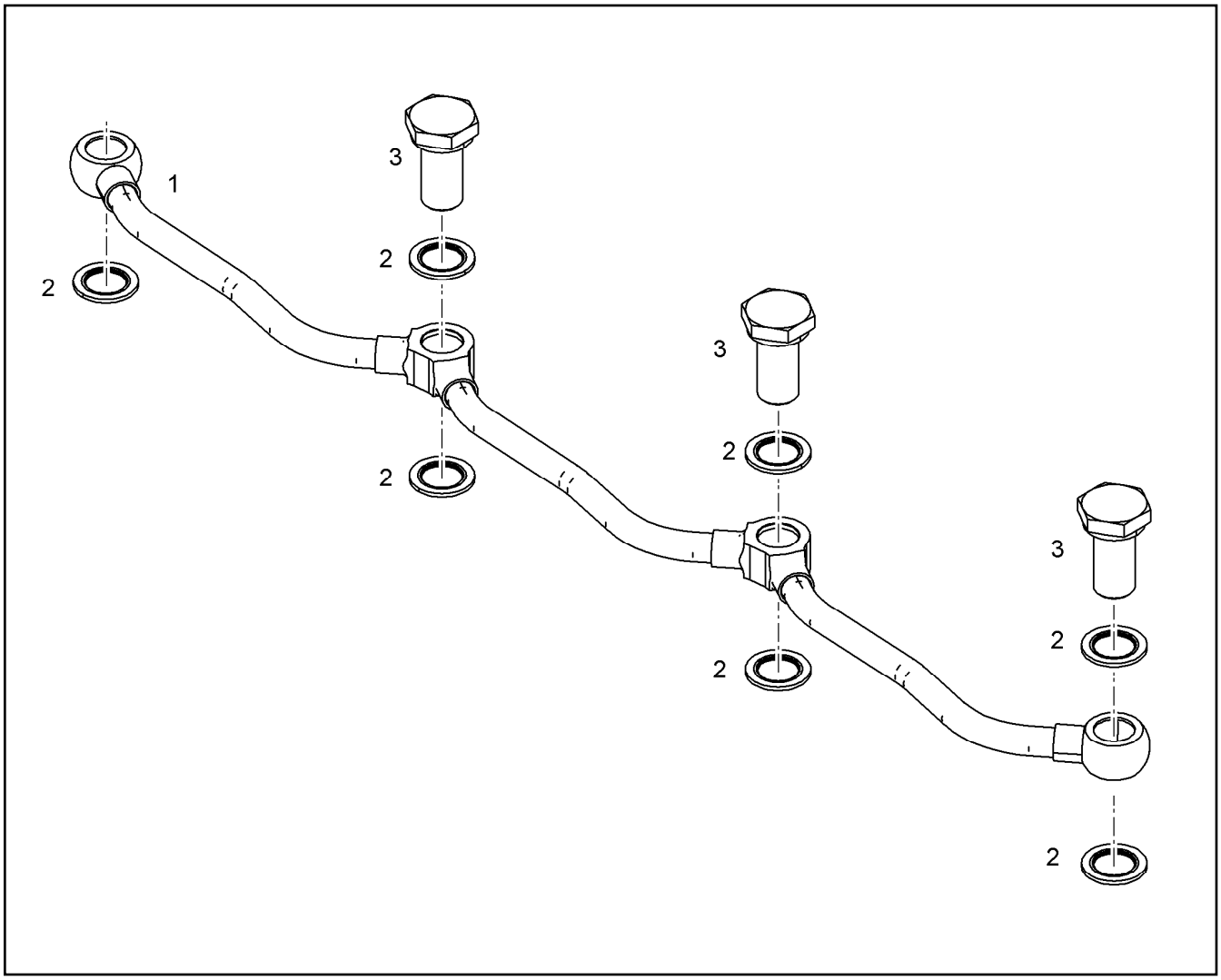

Pos.	Item	Quantity	Description	Bezeichnung
1	12921811	1	PIPELINE 10X1X425	ROHRLEITUNG
2	10011866	7	SEALING RING 14,7X22,00X1,5 FKM 80	DICHTRING
3	9080466	3	HOLLOW SCREW 10X1X27 11SMn30+C FE/	HOHLSCHRAUBE

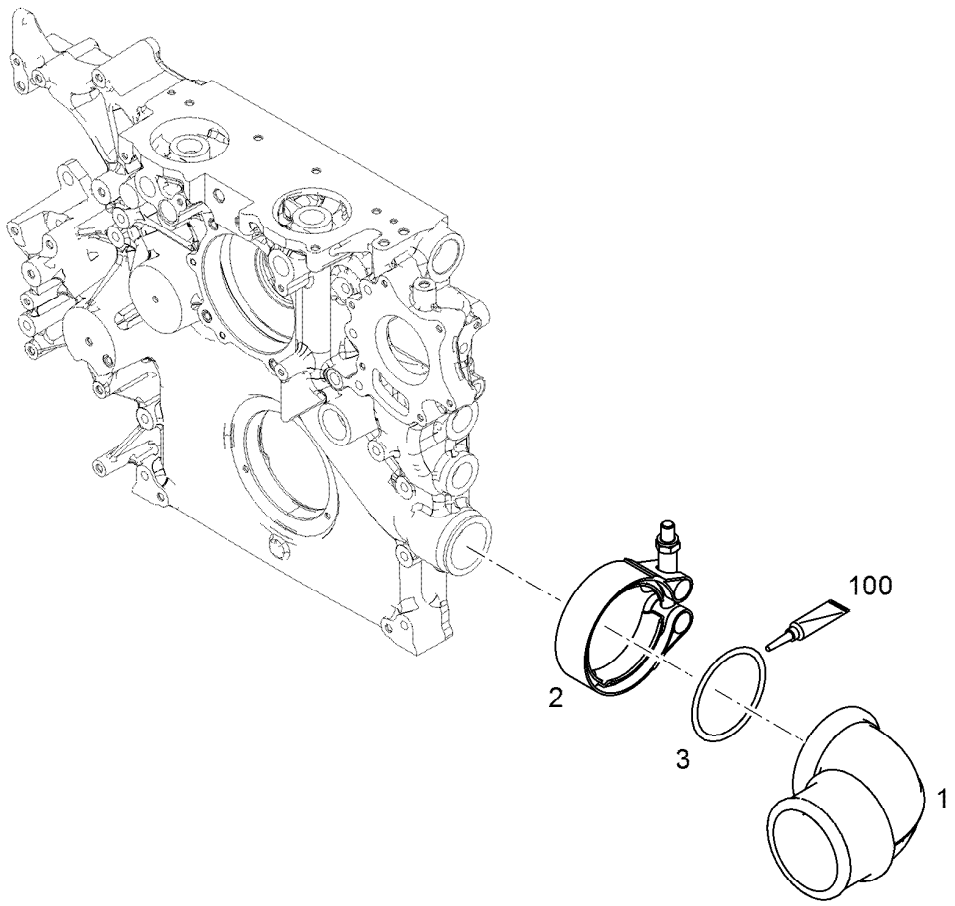

Pos.	Item	Quantity	Description	Bezeichnung
1	10142671	1	ELBOW	KRUEMMER
2	10122841	1	RETAINER CLIP 73/K1 St/Inox	SPANNSCHELLE
3	7380083	1	O-RING ISO 3601-1 55,25X2,62 NBR 70 A,BK	O-RING
100	10285708	1	GREASE NBU 30 1KG DOSE	FETT

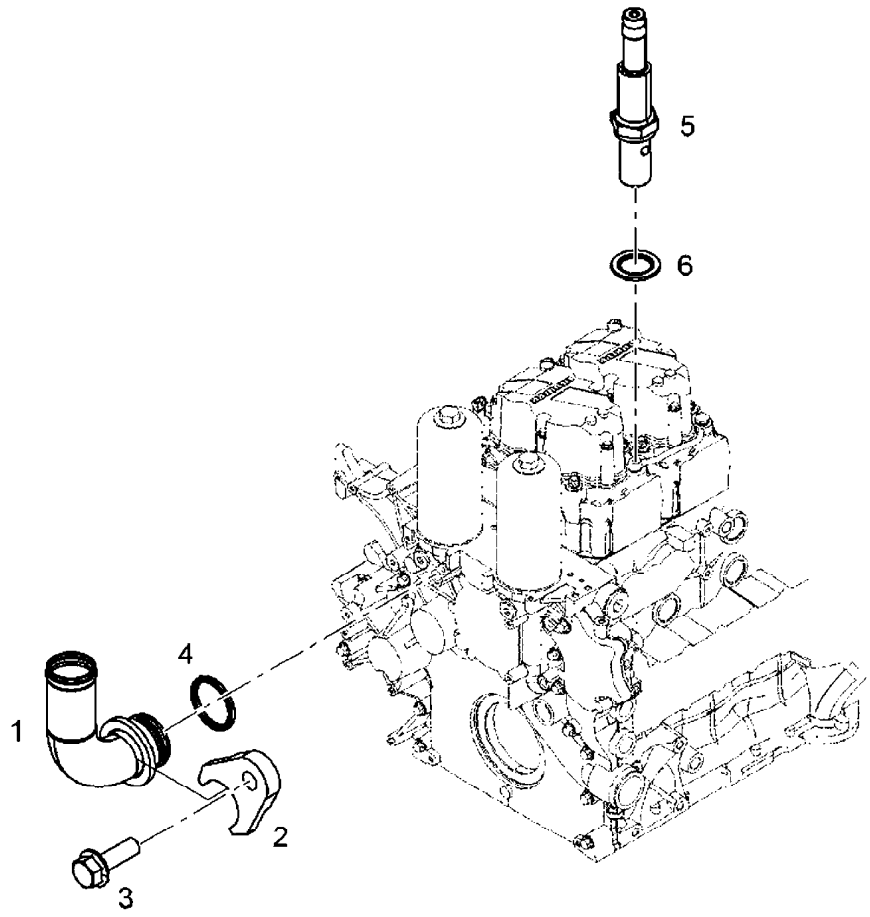

Pos.	Item	Quantity	Description	Bezeichnung
1	10142668	1	HOSE NIPPLE	SCHLAUCHNIPPEL
2	10142763	1	PLATE	BLECH
3	12215999	1	HEX SCREW EN 1665 M8X25 10.9 480H	SECHSKANTSCHRAUBE
4	7381526	1	O-RING AEHNL.ISO 3601-1 21,3X2,4 V70GA	O-RING
5	10140969	1	HOSE NIPPLE 11SMn30+C	SCHLAUCHNIPPEL
6	10011866	1	SEALING RING 14,7X22,00X1,5 FKM 80	DICHTRING

Pos.	Item	Quantity	Description	Bezeichnung
1	10145524	1	EXHAUST PIPE R-MOTORXD934	ABGASROHR
3	10135885	4	SEAL	DICHTUNG
4	10138656	14	HEXALOBULAR HEAD SCREW M10X70 21C	SECHSRUNDSCHRAUBE
7	10138657	14	DISTANCE SLEEVE 11X20X25 42CrMo4	DISTANZHUELSE

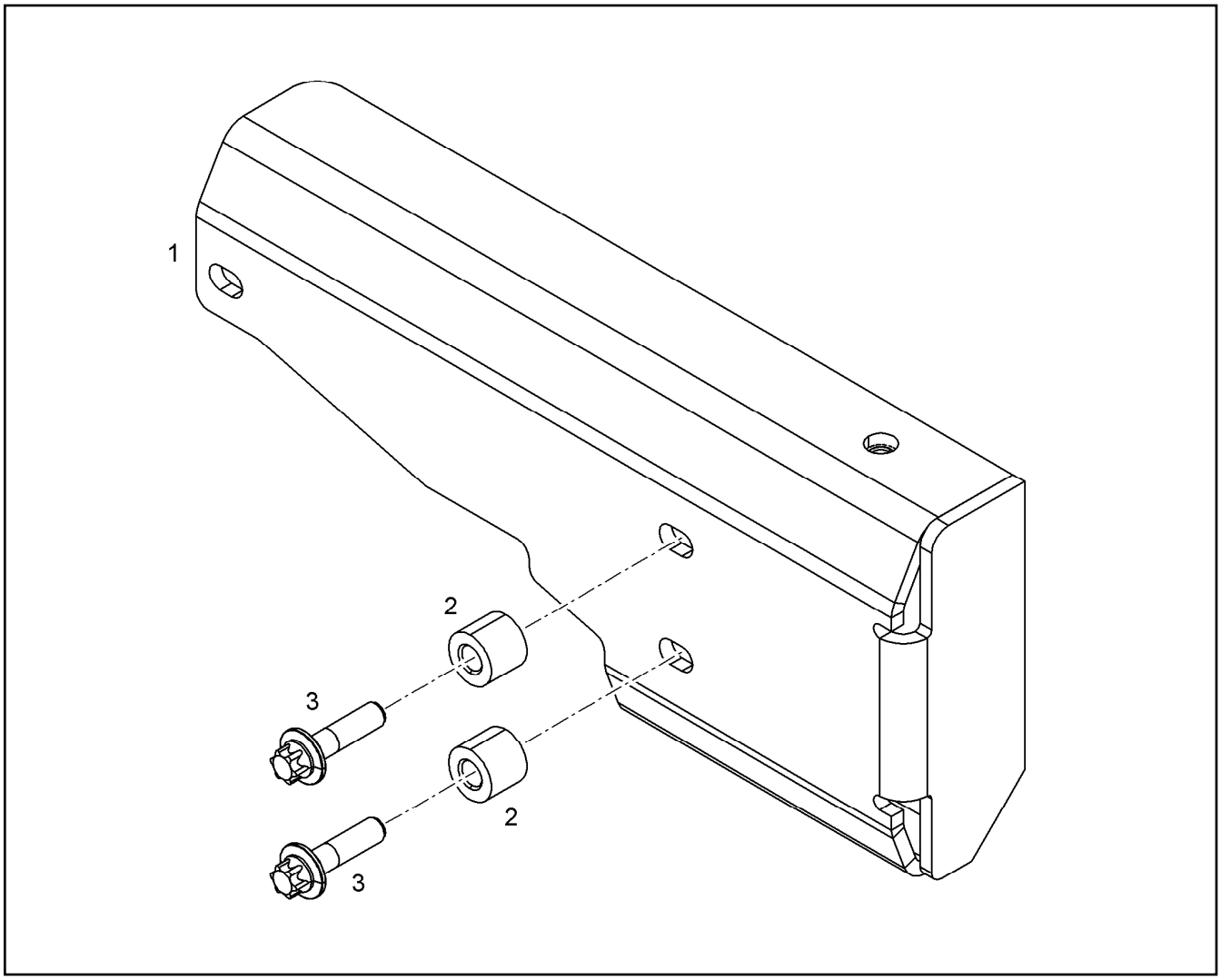

Pos.	Item	Quantity	Description	Bezeichnung
1	10144755	1	HEAT PROTECTION SHEET	HITZESCHUTZBLECH
2	9177776	2	WASHER 8,4X18X15 -	SCHEIBE
3	10125702	2	HEXALOBULAR HEAD SCREW M8X30 21CrM	SECHSRUNDSCHRAUBE

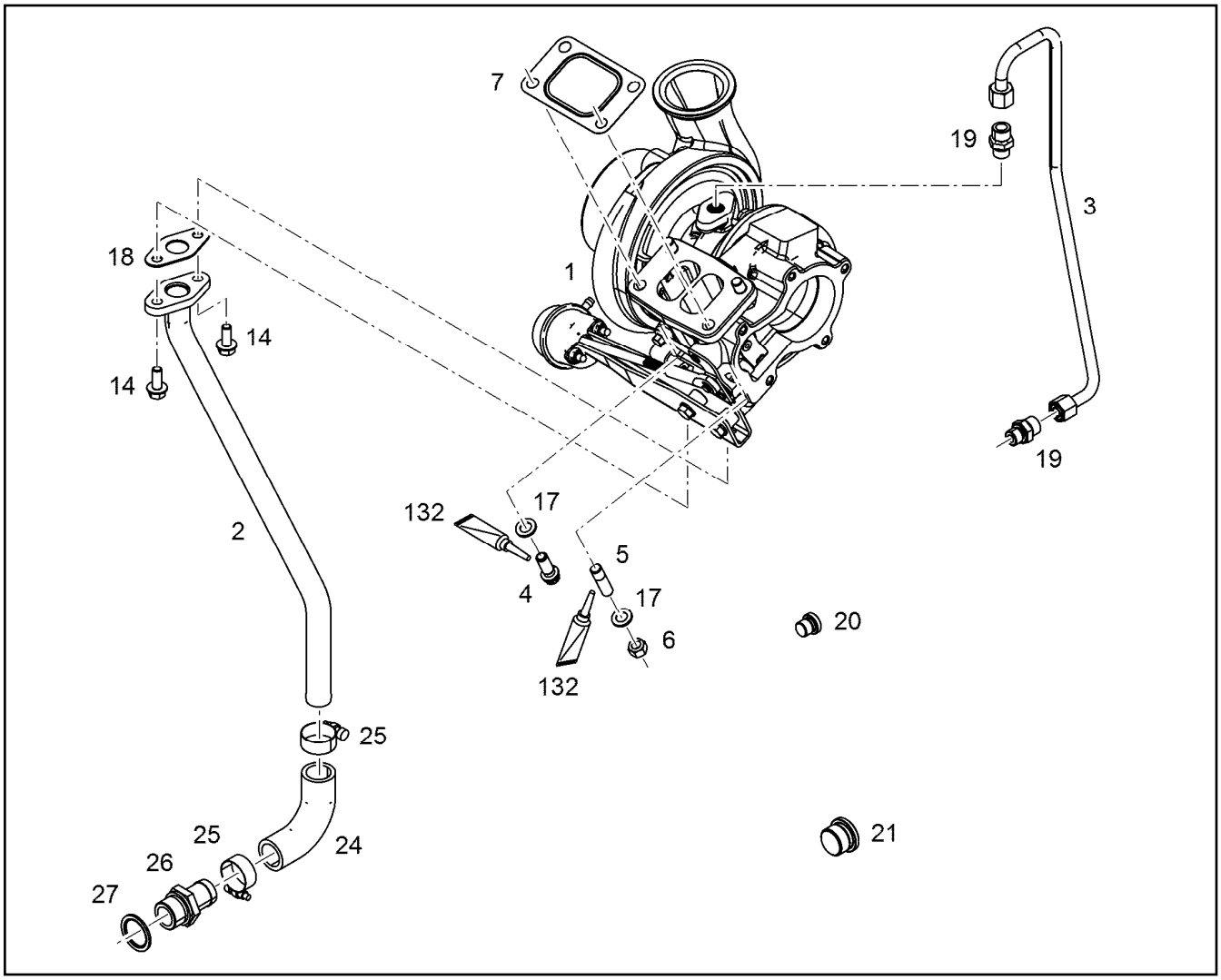

Pos.	Item	Quantity	Description	Bezeichnung
1	10139626	1	TURBOCHARGER HE300	TURBOLADER
2	12847441	1	OIL RETURN PIPE 22X1,5	OELRUECKLAUFLEITUNG
3	10140757	1	LUBRICATING OIL LINE 10X1	SCHMIEROELLEITUNG
4	12475399	1	12-SIDED SCREW M10X25 X5NiCrTi26-1	ZWOELFKANTSCHRAUBE
5	4981172	3	DOUBLE-ENDED STUD DIN 939 M10X25 X6N	STIFTSCHRAUBE
6	10120639	3	NUT M10X1,5 X6NiCrTiMoVB	MUTTER
7	10125739	1	SEAL X15CrNiSi20-	DICHTUNG
14	11657219	2	HEX SCREW EN 1665 M8X20 8.8 480H SPF	SECHSKANTSCHRAUBE
17	9076638	4	WASHER 10,5X18,5X2	SCHEIBE
18	9268131	1	SEAL 1,5 AFM 32/2	DICHTUNG
19	4981235	2	FITTING ISO 8434-1 GE 10L M14X1,5 CR6-F	VERSCHRAUBUNG
20	7380566	1	SCREW PLUG VSTI M14X1,5	VERSCHLUSSSCHRAUBE
21	7381457	1	SCREW PLUG VSTI M26X1,5 CR6-FREI	VERSCHLUSSSCHRAUBE
24	10116310	1	RUBBER CONNECTION	GUMMIMUFFE
25	774215008	2	HOSE CLAMP 26/20-32/12 W3	SCHLAUCHSCHELLE
26	9140351	1	HOSE NIPPLE CE-0, H54	SCHLAUCHNIPPEL
27	10011870	1	SEALING RING 26,7X34,93X2 St/FPM1-80	DICHTRING
132	10002552	1	COPPER PASTE DOSE 850G	KUPFERPASTE

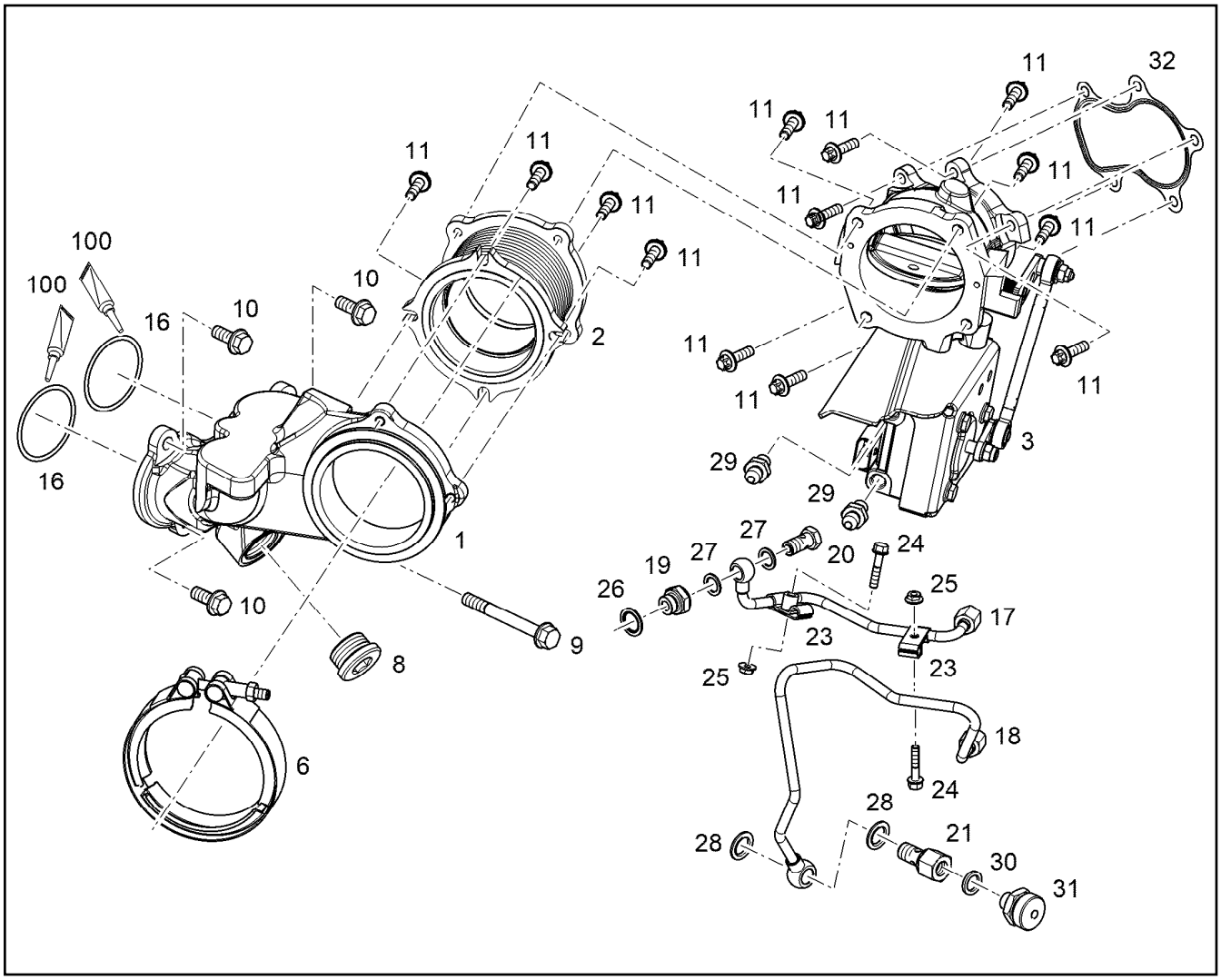

Pos.	Item	Quantity	Description	Bezeichnung
1	10153666	1	EXHAUST NOZZLE R-MOTOR D934	ABGASSTUTZEN
2	10149144	1	COMPENSATOR	KOMPENSATOR
3	10153116	1	EXHAUST FLAP	ABGASKLAPPE
3	12983604	1	EXHAUST FLAP	ABGASKLAPPE
6	10138826	1	RETAINER CLIP 125/K1 Inox	SPANNSCHELLE
8	10043136	1	SCREW PLUG VSTI M33X2 CR6-FREI	VERSCHLUSSSCHRAUBE
9	12208088	1	HEX SCREW EN 1665 M10X90 8.8 FLZN	SECHSKANTSCHRAUBE
10	11656154	3	HEX SCREW EN 1665 M10X25 8.8 FLZN SPF	SECHSKANTSCHRAUBE
11	13569467	13	HEXALOBULAR HEAD SCREW M8X25 21CrM	SECHSRUNDSCHRAUBE
16	12212022	2	O-RING AEHNL.ISO 3601-1 60X3 FKM 80	O-RING
17	10145069	1	PIPELINE 8X1	ROHRLEITUNG
18	10145070	1	PIPELINE 8X1	ROHRLEITUNG
19	10120066	1	REDUCING STUD RI 8 M16x1.5 / M 11SMnP	REDUZIERSTUTZEN
20	12210024	1	HOLLOW SCREW DIN 7643 8-3-M12X1,5 480	HOHLSCHRAUBE
21	10130906	1	FITTINGS 11SMnPb30+C	STUTZEN
23	10127139	2	PIPE CLAMP 8 S235JR	ROHRSCHELLE
24	12207549	2	HEX SCREW EN 1665 M6X30 8.8 480H	SECHSKANTSCHRAUBE
25	10003366	2	RIBBED HEX NUT M6 10	SECHSKANTRIPPENMUTTER
26	10011867	1	SEALING RING 16,7X24,00X1,5 FKM 80	DICHTRING
27	10011865	2	SEALING RING 12,7X18,00X1,5 FKM 80	DICHTRING
28	10011866	2	SEALING RING 14,7X22,00X1,5 FKM 80	DICHTRING
29	10801399	2	FITTING GE 8 M12X1,5/1/2 CR6-FREI	VERSCHRAUBUNG
30	7381225	1	SEALING RING DIN 7603 A14X20X2,5 Cu	DICHTRING
31	10011832	1	VALVE	VENTIL
32	12436701	1	SEAL X5CrNi18-10	DICHTUNG
100	10285708	1	GREASE NBU 30 1KG DOSE	FETT

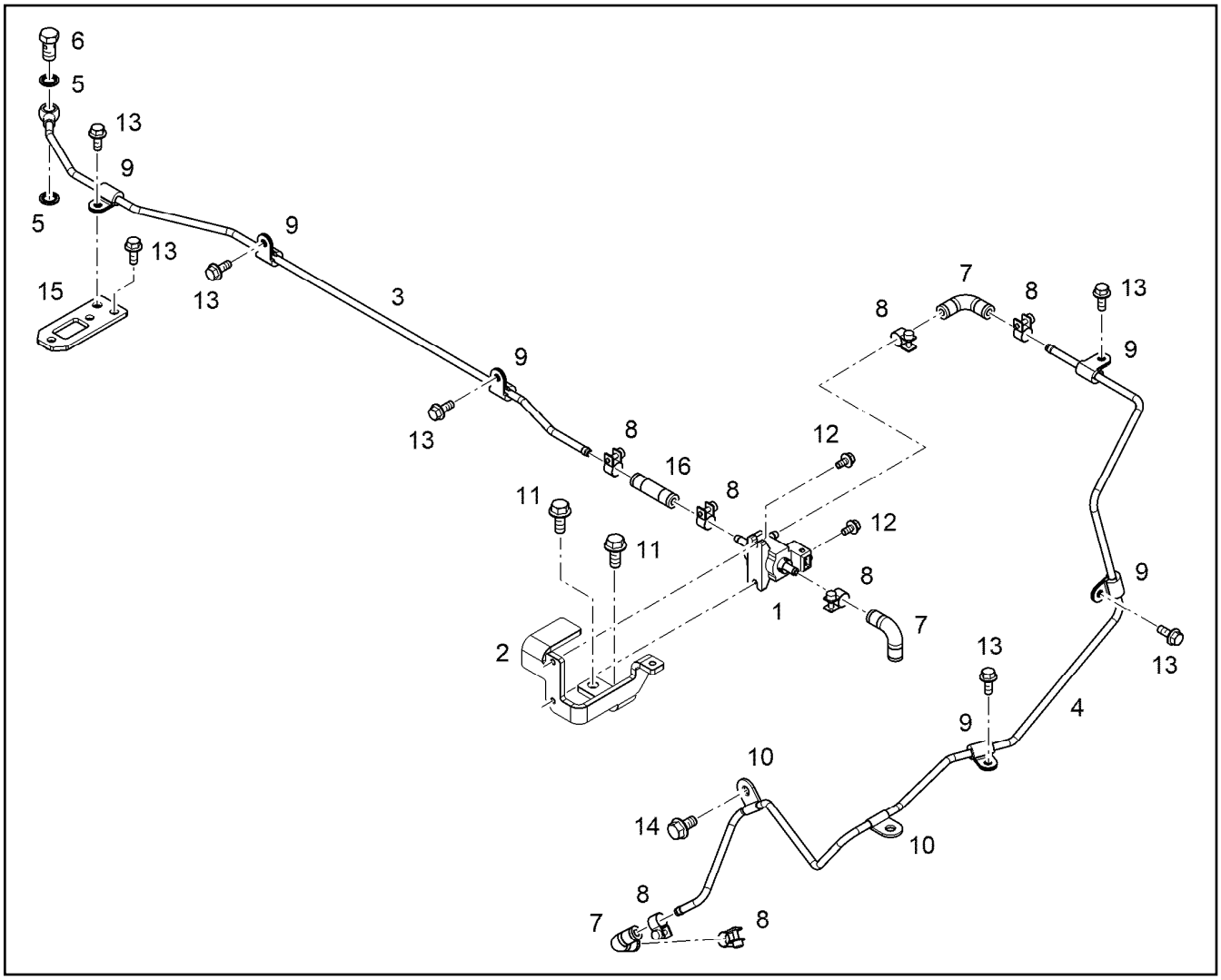

Pos.	Item	Quantity	Description	Bezeichnung
1	10149191	1	CYCLE VALVE 3.4BAR 8L/MIN 6m	TAKTVENTIL
2	12429351	1	HOLDER S235JR	HALTER
3	11420632	1	PIPELINE 6X1	ROHRLEITUNG
4	12429430	1	PIPELINE 6X1	ROHRLEITUNG
5	10011864	2	SEALING RING 10,7X16X1,5 St/FPM1-80	DICHTRING
6	12210010	1	HOLLOW SCREW DIN 7643 6-3-M10X1 480H	HOHLSCHRAUBE
7	10128228	3	RUBBER CONNECTION Silicone	GUMMIMUFFE
8	12696398	7	HOSE CLAMP DIN 3017-2 12/11,5-12,5/9 W1	SCHLAUCHSCHELLE
9	7381292	6	CLAMP DIN 3016-1 6X15XD1 W1-2-MVQ	SCHELLE
10	11000593	2	CLAMP DIN 3016-1 6X20XA1 W4	SCHELLE
11	11657219	2	HEX SCREW EN 1665 M8X20 8.8 480H SPF	SECHSKANTSCHRAUBE
12	12207546	2	HEX SCREW EN 1665 M5X10 8.8 480H	SECHSKANTSCHRAUBE
13	11840297	7	HEX SCREW EN 1665 M6X16 8.8 480H SPF	SECHSKANTSCHRAUBE
14	11656992	1	HEX SCREW EN 1665 M8X16 8.8 480H SPF	SECHSKANTSCHRAUBE
15	10145373	1	HOLDER	HALTER
16	10126119	1	RUBBER CONNECTION 06-12X45 Silicone	GUMMIMUFFE

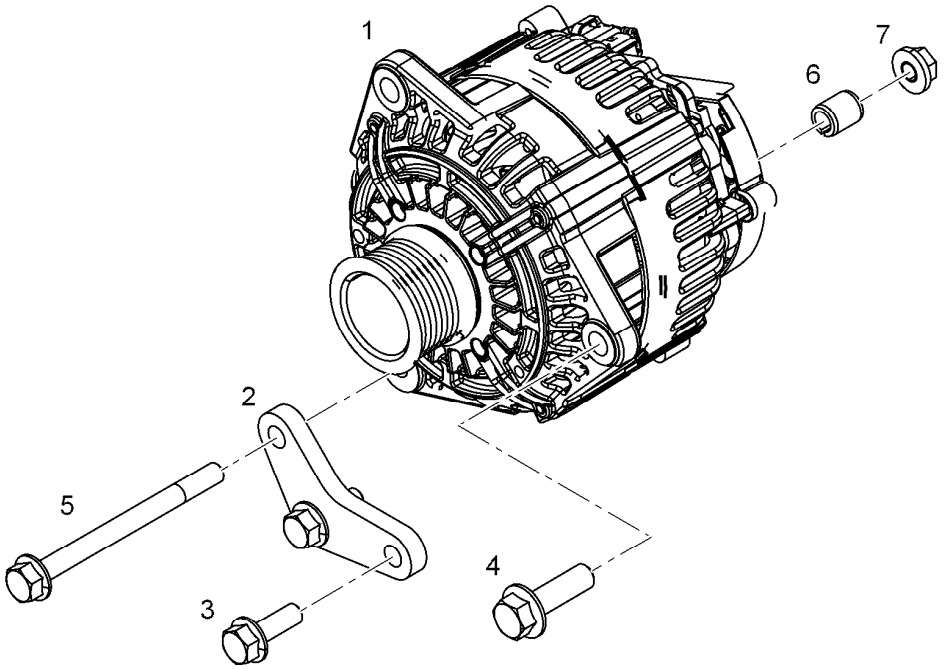

Pos.	Item	Quantity	Description	Bezeichnung
1	10142606	1	THREE PHASE CURRENT GENERATOR 5.0	DREHSTROMGENERATOR
2	10142670	1	MOUNTING SHEET X52,8	BEFESTIGUNGSBLECH
3	10299564	2	HEX SCREW EN 1665 M10X30 10.9 FLZN SP	SECHSKANTSCHRAUBE
4	10299565	1	HEX SCREW EN 1665 M12X40 10.9 FLZN	SECHSKANTSCHRAUBE
5	12207559	1	HEX SCREW EN 1665 M10X120 8.8 FLZN	SECHSKANTSCHRAUBE
6	7380960	1	RIBBED HEX NUT M10 10	SECHSKANTRIPPENMUTTER

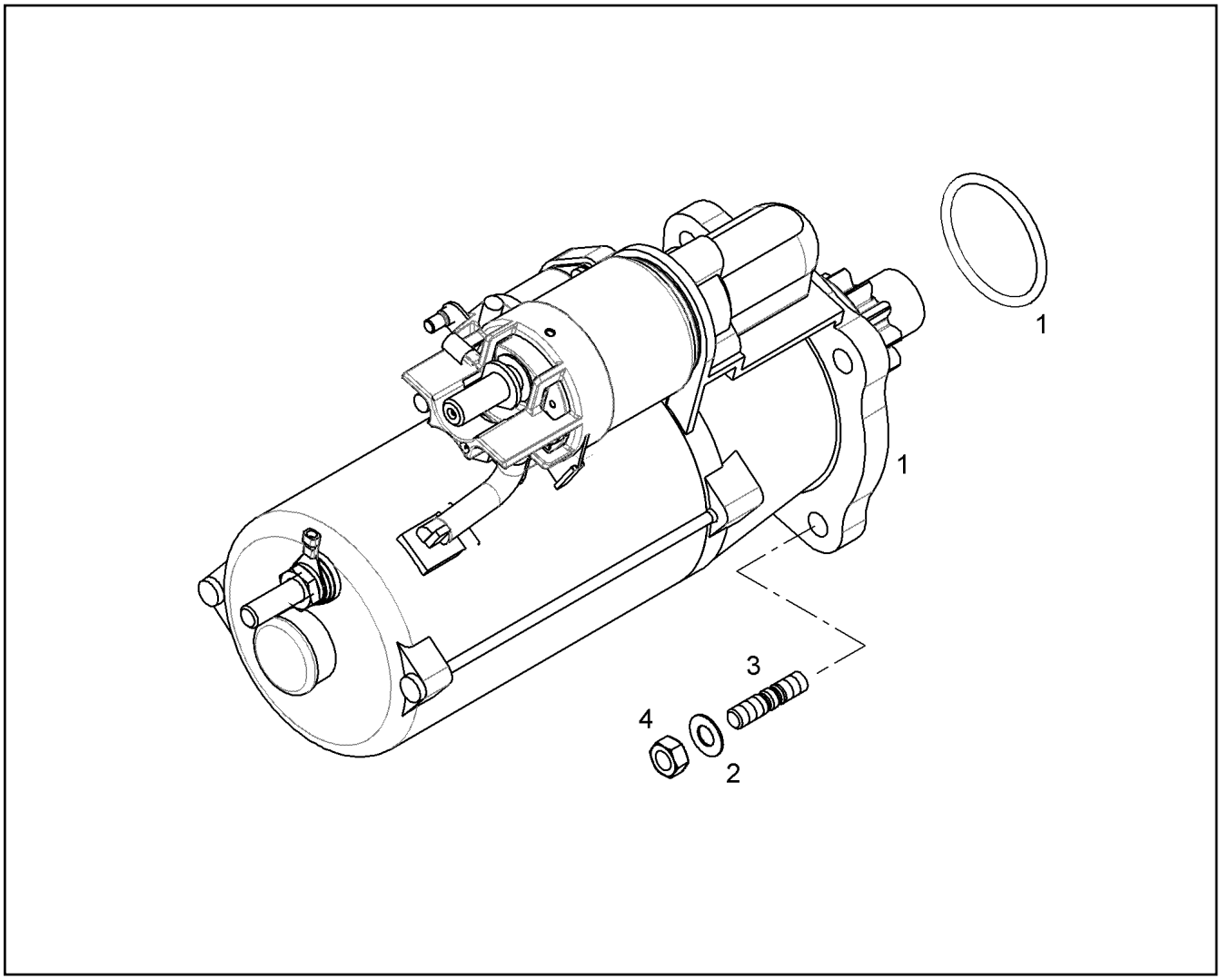

Pos.	Item	Quantity	Description	Bezeichnung
1	11386644	1	STARTER PRE-ASSY. 7.8KW 24V ⇨ ❑ 257	STARTER VORM.
3	10179459	3	DOUBLE-ENDED STUD DIN 835 M10X30 8.8	STIFTSCHRAUBE
4	10179265	3	HEX NUT EN 1661 M10 8 FLZN	SECHSKANTMUTTER

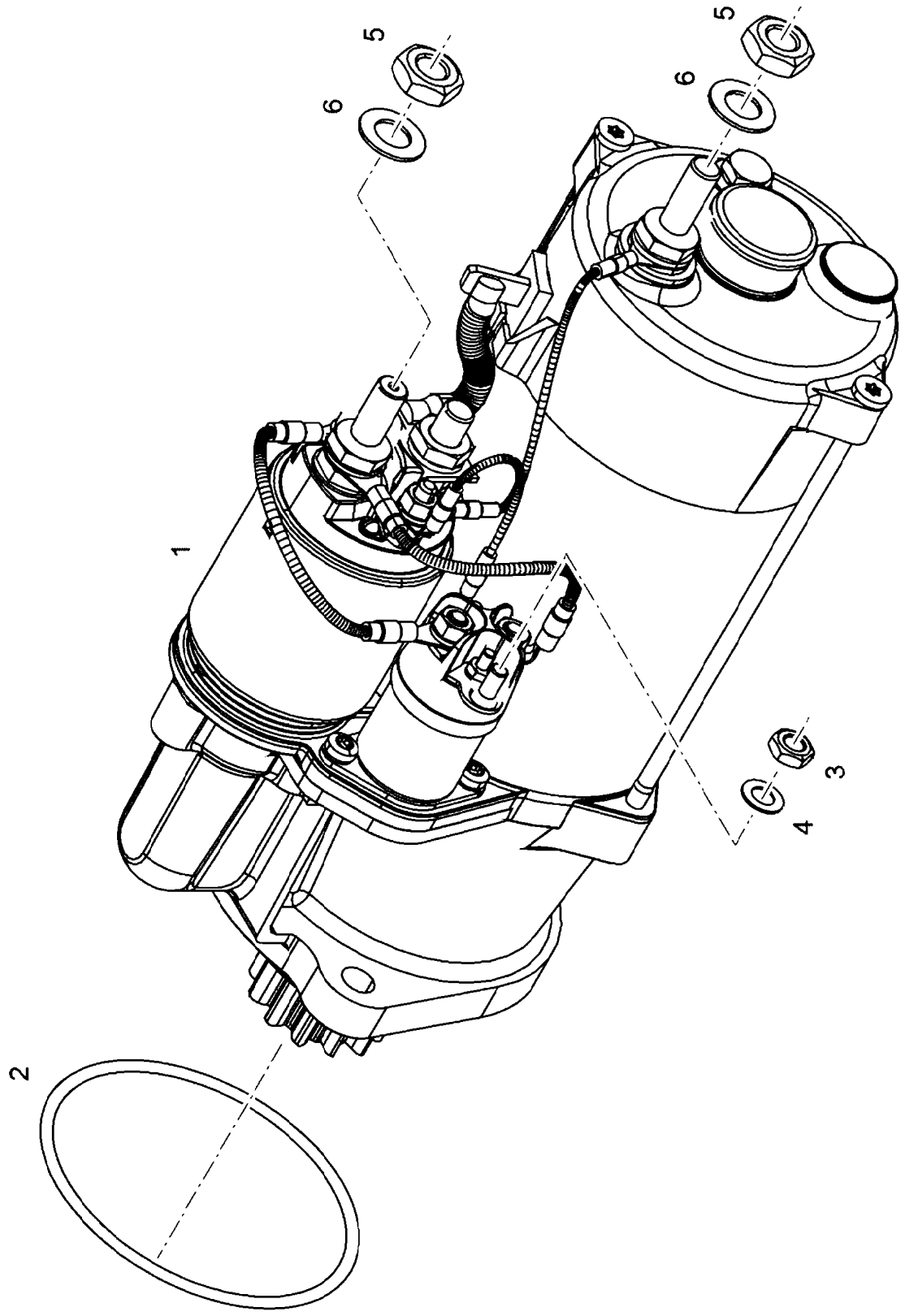
1
2
3
4
5
6
5
6

Pos.	Item	Quantity	Description	Bezeichnung
2	10218370	1	O-RING 85X2 HNBR 70	O-RING
3	10411094	1	HEX NUT M6 8	SECHSKANTMUTTER
4	10411092	1	SPRING WASHER DIN 137 6 X10CrNi18-8	FEDERSCHEIBE
5	10411095	2	HEX NUT ISO 4035 M10X1,5 04 ZnNi	SECHSKANTMUTTER
6	10411093	2	SPRING WASHER DIN 137 10 X10CrNi18-8	FEDERSCHEIBE

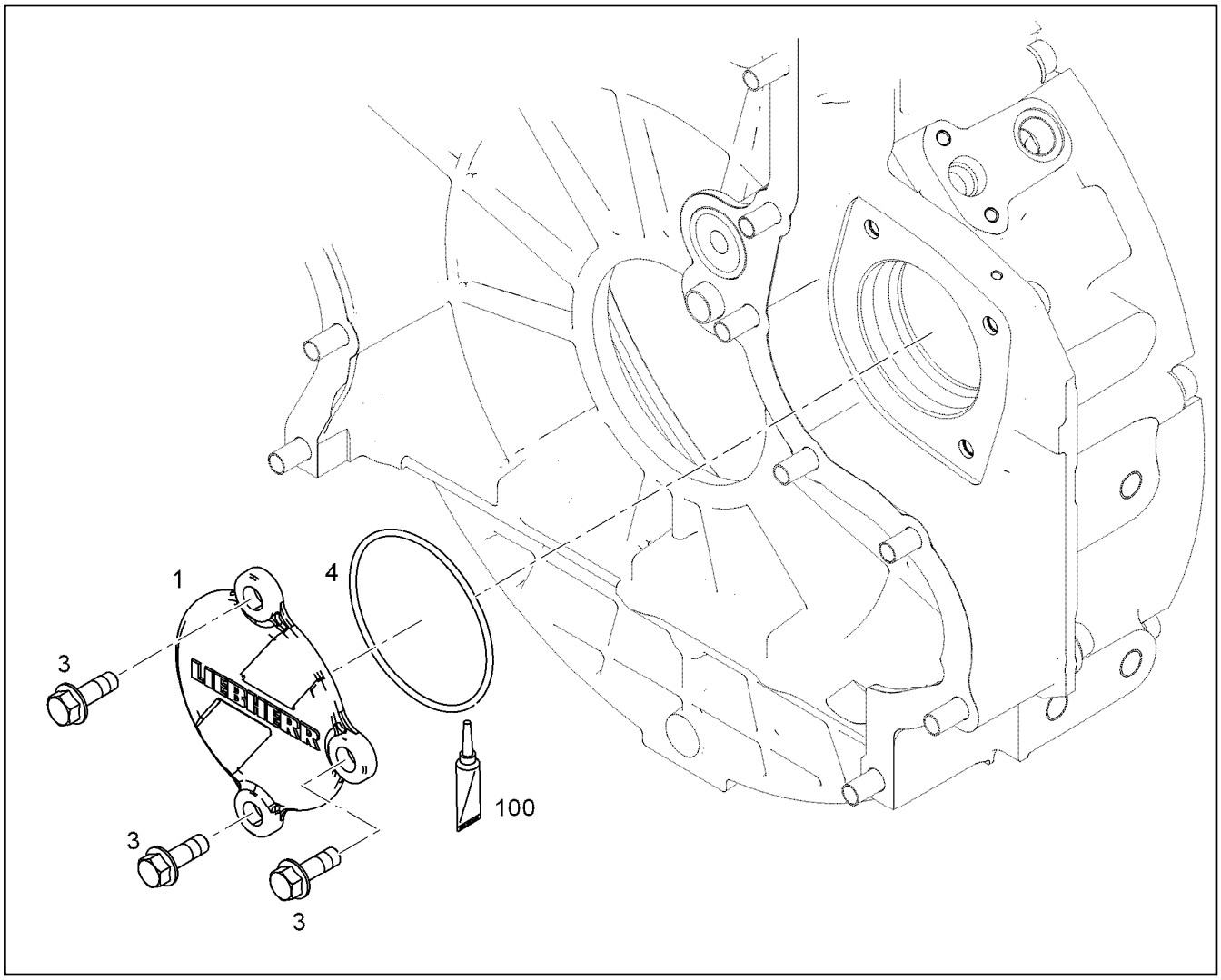

Pos.	Item	Quantity	Description	Bezeichnung
1	10124116	1	COVER EN AC-Al Si8	DECKEL
3	11656155	3	HEX SCREW EN 1665 M10X30 8.8 FLZN SPF	SECHSKANTSCHRAUBE
4	7381995	1	O-RING 98,02X3,53 HNBR 70	O-RING
100	10282622	1	GREASE STABURAGS NBU 30 0.010KG	FETT

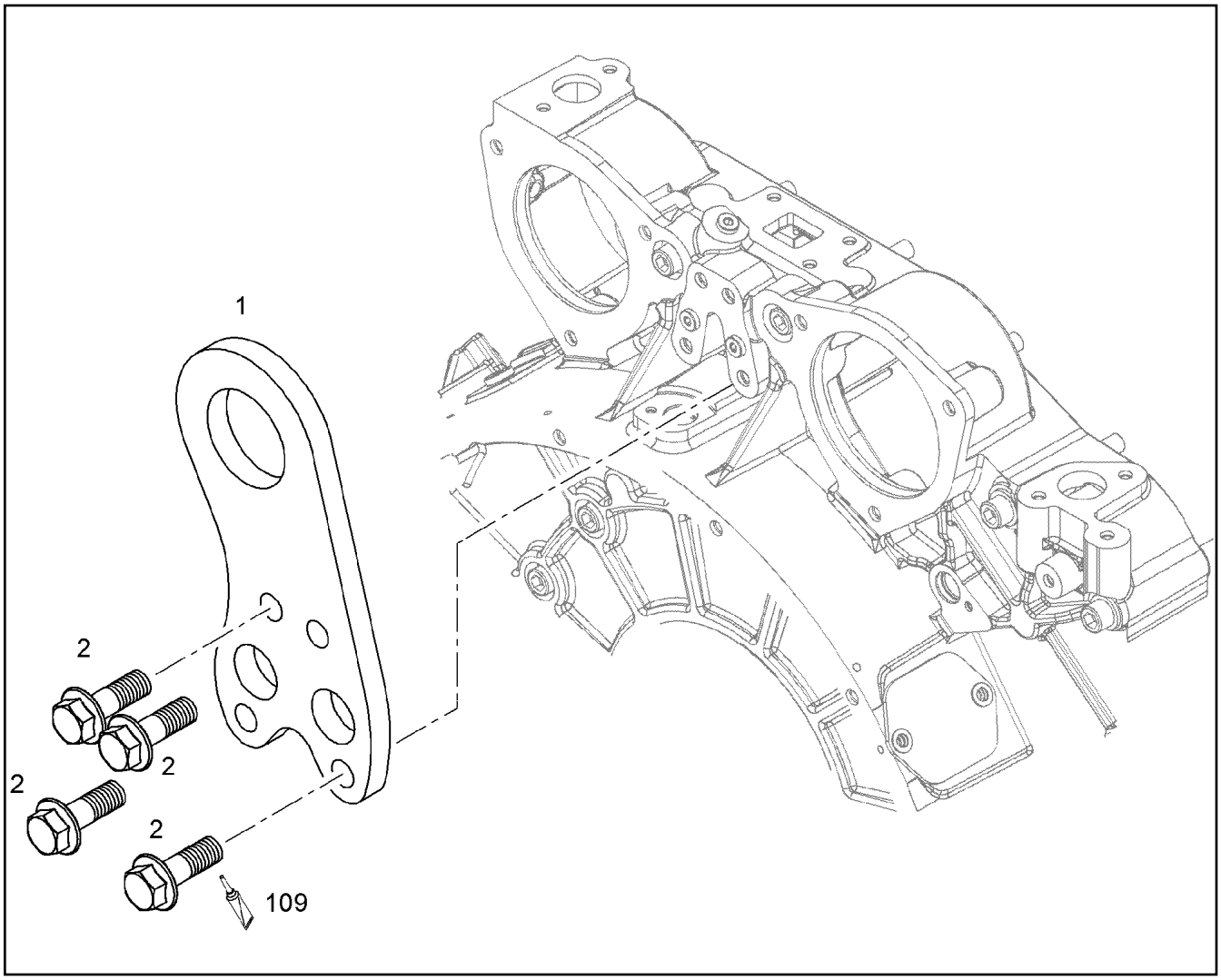

Pos.	Item	Quantity	Description	Bezeichnung
1	9078849	1	TRANSPORTER CONSOLE S355J0	TRANSPORTKONSOLE
2	10299564	4	HEX SCREW EN 1665 M10X30 10.9 FLZN SP	SECHSKANTSCHRAUBE
109	811205708	1	SCREW LOCKING FLASCHE 50ML 150°C	SCHRAUBENSICHERUNG

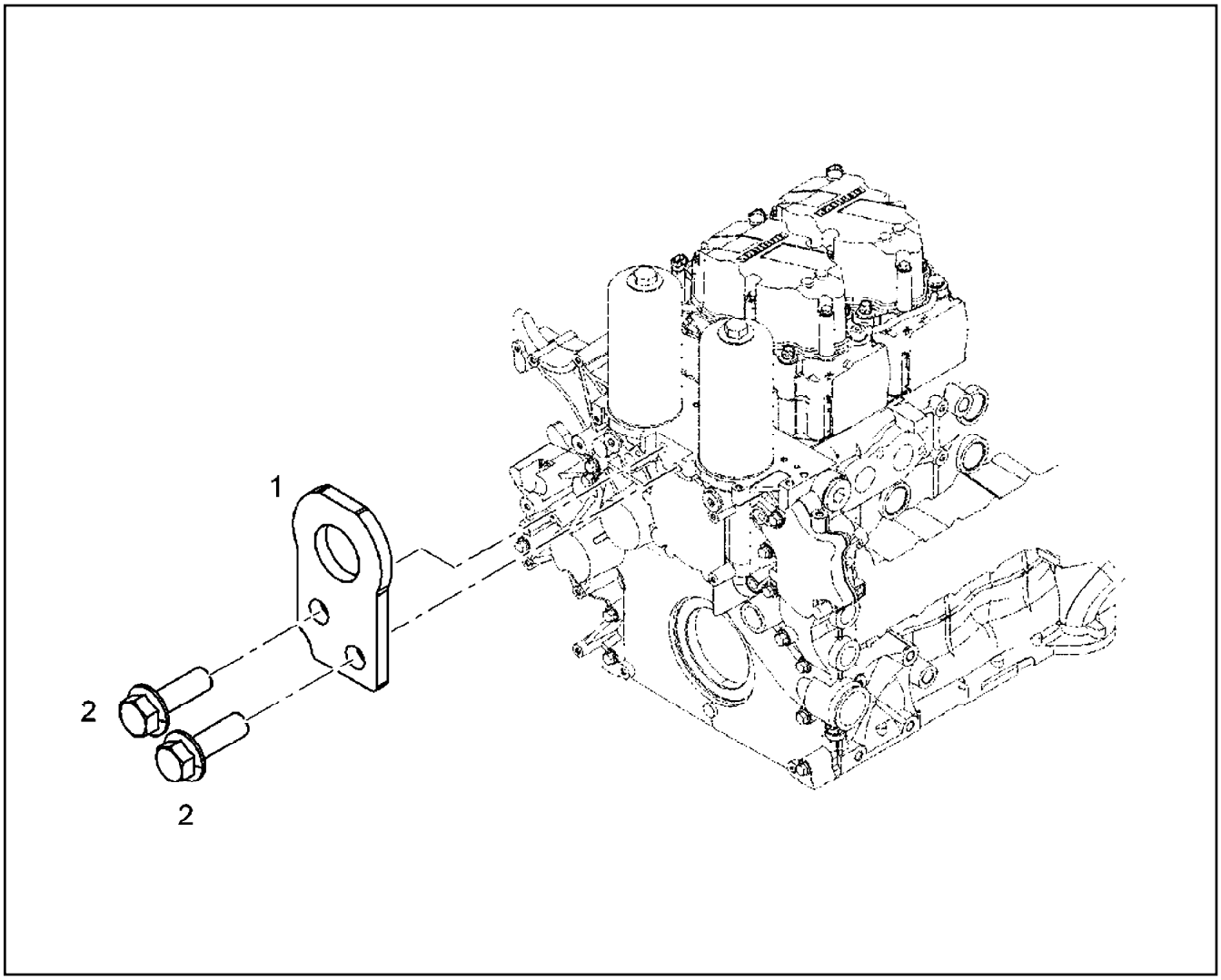

Pos.	Item	Quantity	Description	Bezeichnung
2	12207570	2	HEX SCREW EN 1665 M16X50 8.8 FLZN SPF	SECHSKANTSCHRAUBE

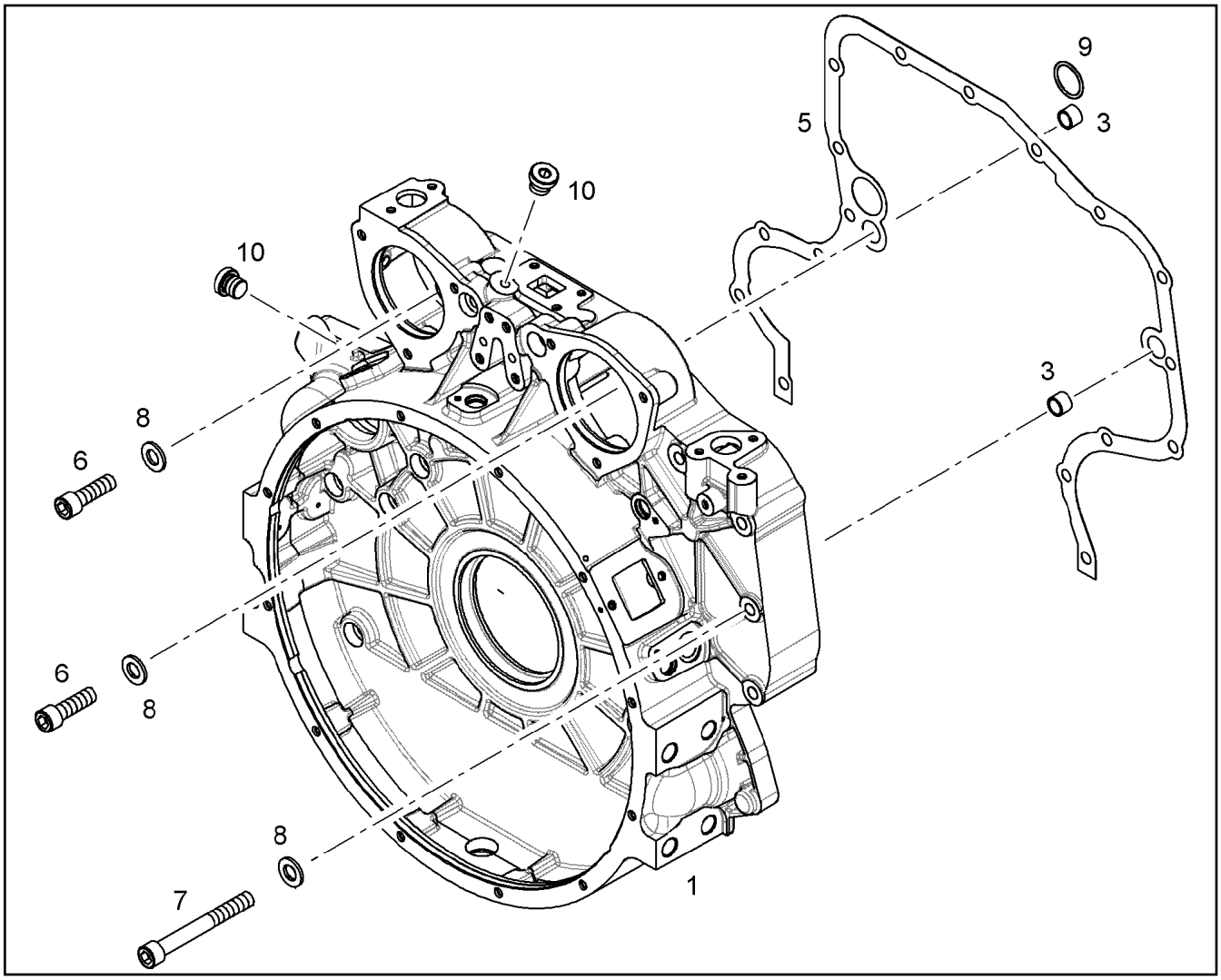

Pos.	Item	Quantity	Description	Bezeichnung
1	10118148	1	FLYWHEEL HOUSING PRE-ASS. SAE 1	SCHWUNGRADGEHAEUSE VO
3	10134348	2	TIGHT FIT SLEEVE 12X20X20 100Cr6	PASSHUELSE
5	10137721	1	SEAL 0,33 METALOSEAL 1	DICHTUNG
6	4980012	2	SOCKET HEAD SCREW ISO 4762 M12X40 1	ZYLINDERSCHRAUBE
7	11321144	15	SOCKET HEAD SCREW ISO 4762 M12X100	ZYLINDERSCHRAUBE
8	10289804	17	WASHER ISO 7089 12 300HV FLZN SPF	SCHEIBE
9	7380653	1	O-RING ISO 3601-1 34,59X2,62 FKM 90 A,BK	O-RING
10	7381638	2	SCREW PLUG VSTI M10X1	VERSCHLUSSSCHRAUBE
100	10285708	1	GREASE NBU 30 1KG DOSE	FETT

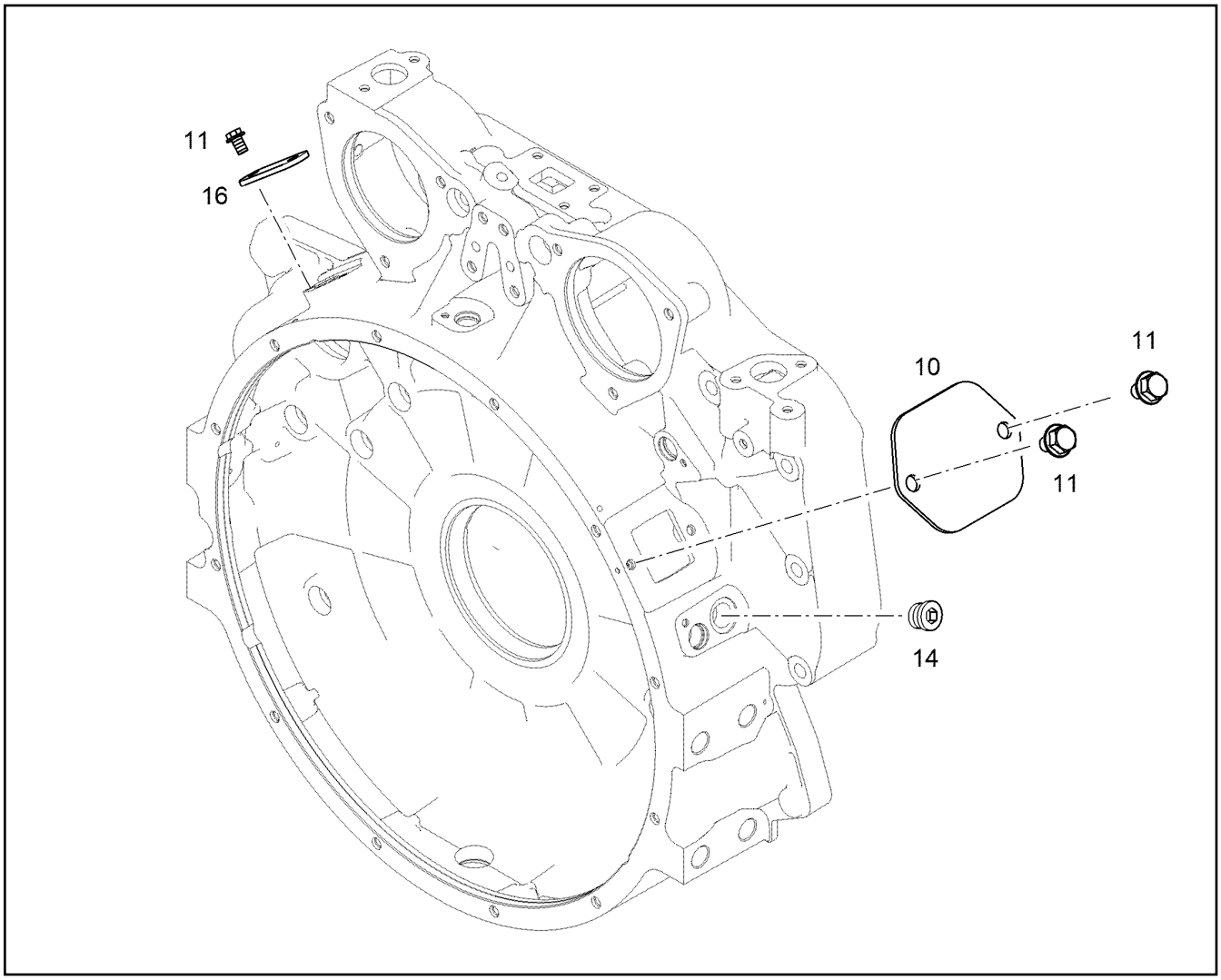

Pos.	Item	Quantity	Description	Bezeichnung
10	10117094	1	COVER S235JR	DECKEL
11	11656992	4	HEX SCREW EN 1665 M8X16 8.8 480H SPF	SECHSKANTSCHRAUBE
14	7380177	1	SCREW PLUG VSTI M22X1,5 CR6-FREI	VERSCHLUSSSCHRAUBE
16	9275826	1	SHEET S235JR	PLATTE

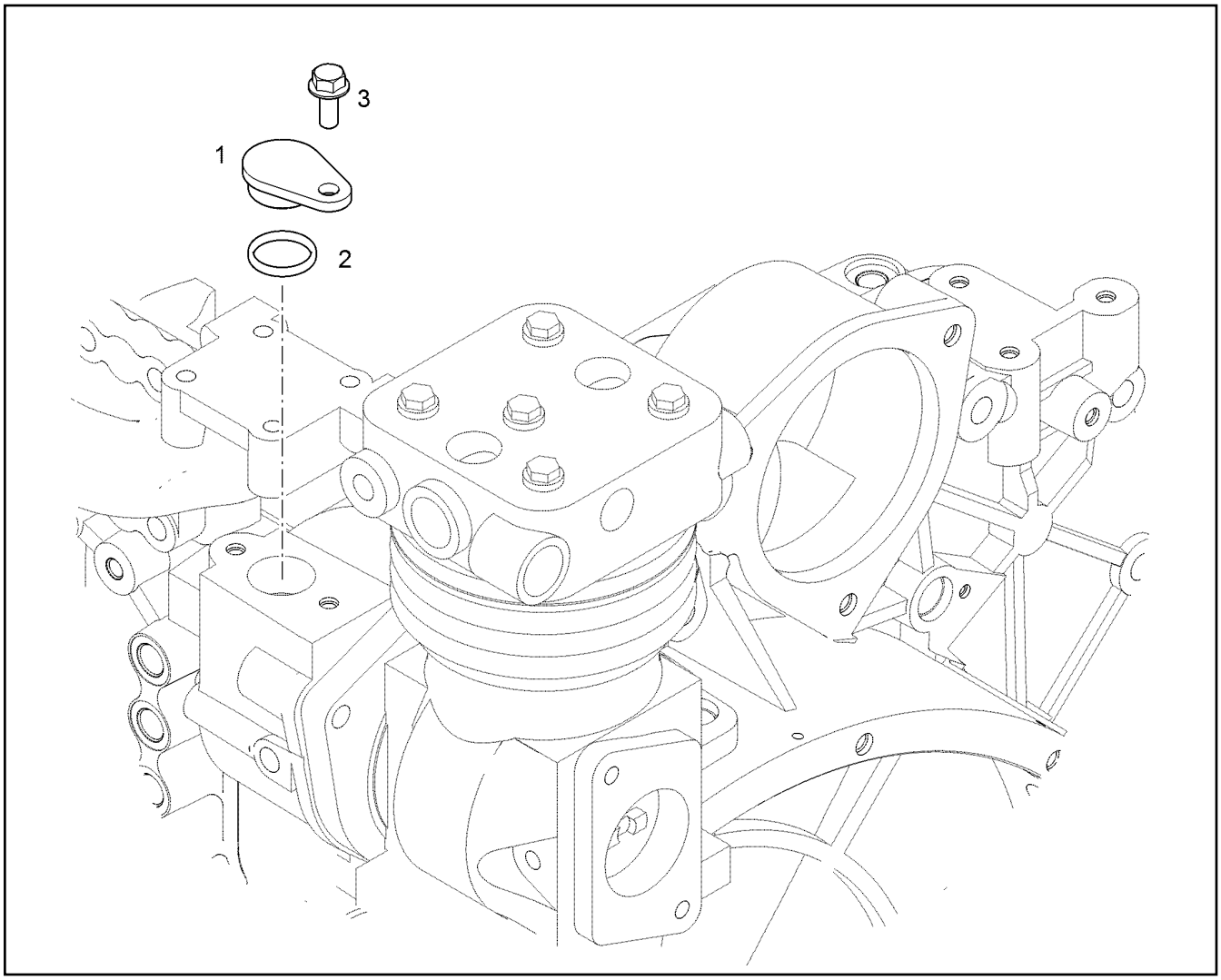

Pos.	Item	Quantity	Description	Bezeichnung
1	10128440	1	LOCKING PIECES Al Rm>150N/m	VERSCHLUSSTEILE
2	10217777	1	O-RING 24X3 FKM 70	O-RING
3	11657219	1	HEX SCREW EN 1665 M8X20 8.8 480H SPF	SECHSKANTSCHRAUBE

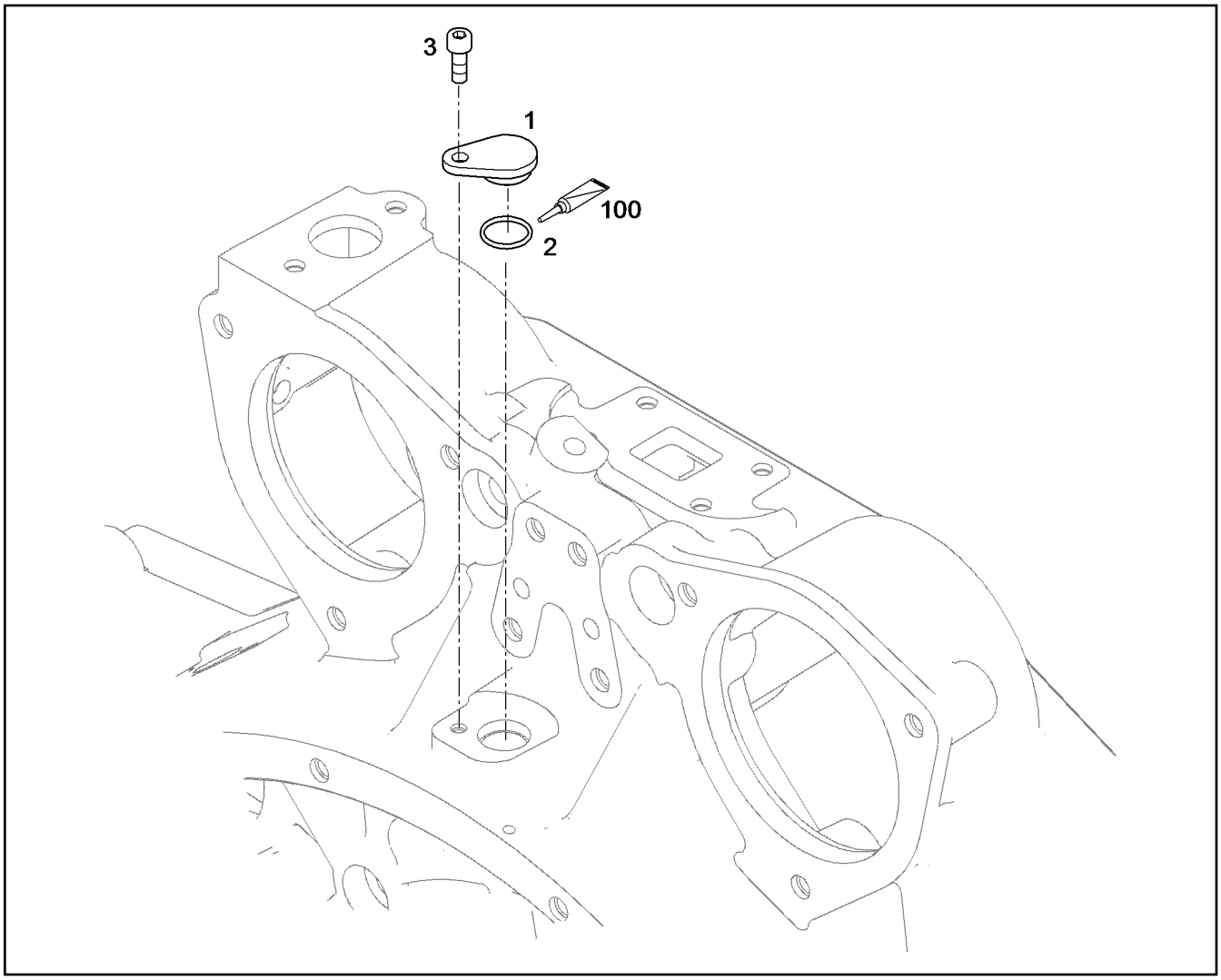

Pos.	Item	Quantity	Description	Bezeichnung
1	10127967	1	COVER Al Rm>200N/m	DECKEL
2	7381103	1	O-RING ISO 3601-1 17,17X1,78 FKM 70 A,GN	O-RING
3	10875586	1	SOCKET HEAD SCREW ISO 4762 M6X16 8.8	ZYLINDERSCHRAUBE
100	10285708	1	GREASE NBU 30 1KG DOSE	FETT

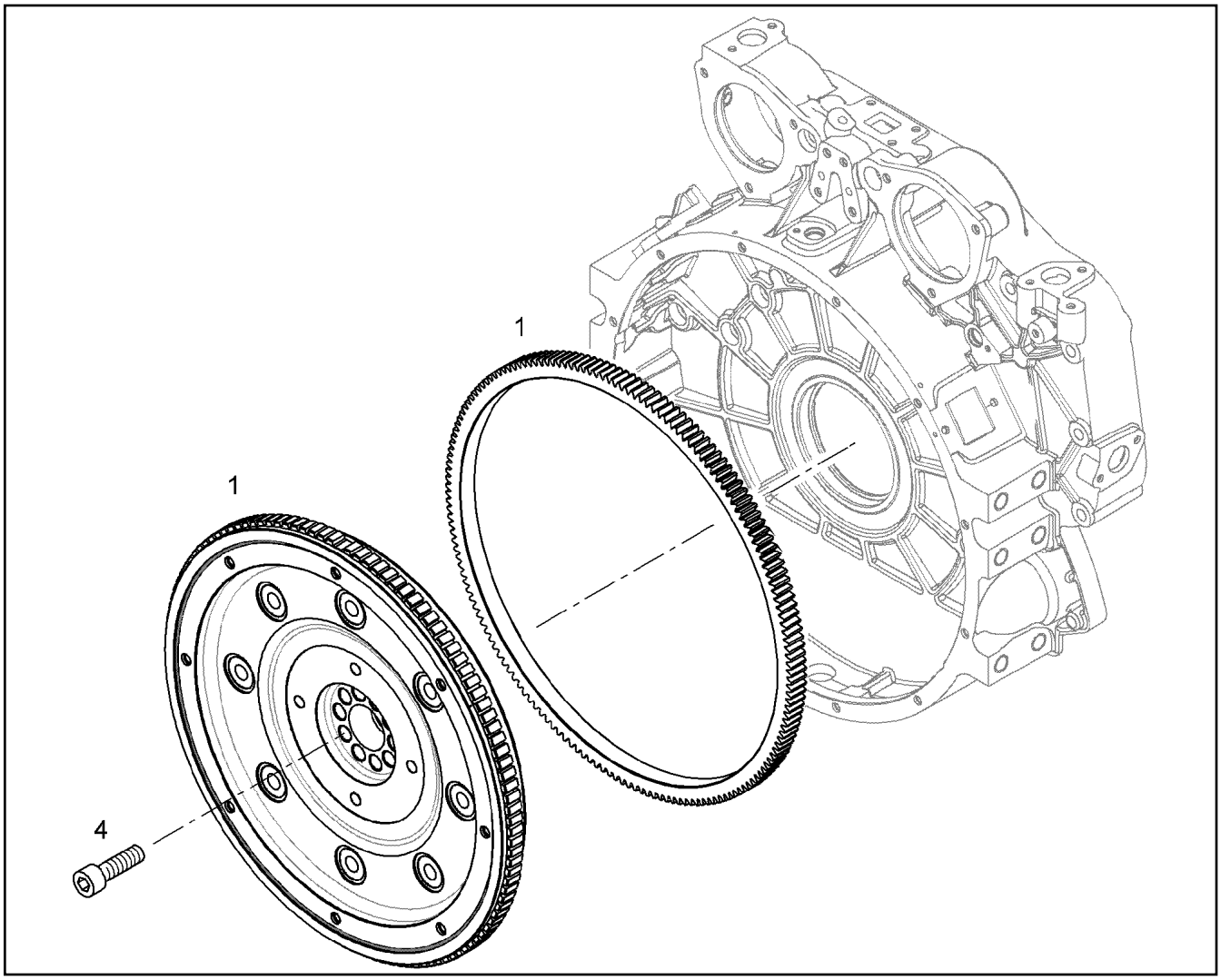

Pos.	Item	Quantity	Description	Bezeichnung
1	12809567	1	FLYWHEEL PRE-ASS. SAE 1X1,67	SCHWUNGRAD VORM.
4	10118910	10	HEXALOBULAR HEAD SCREW M16X1,5X72	SECHSRUNDSCHRAUBE

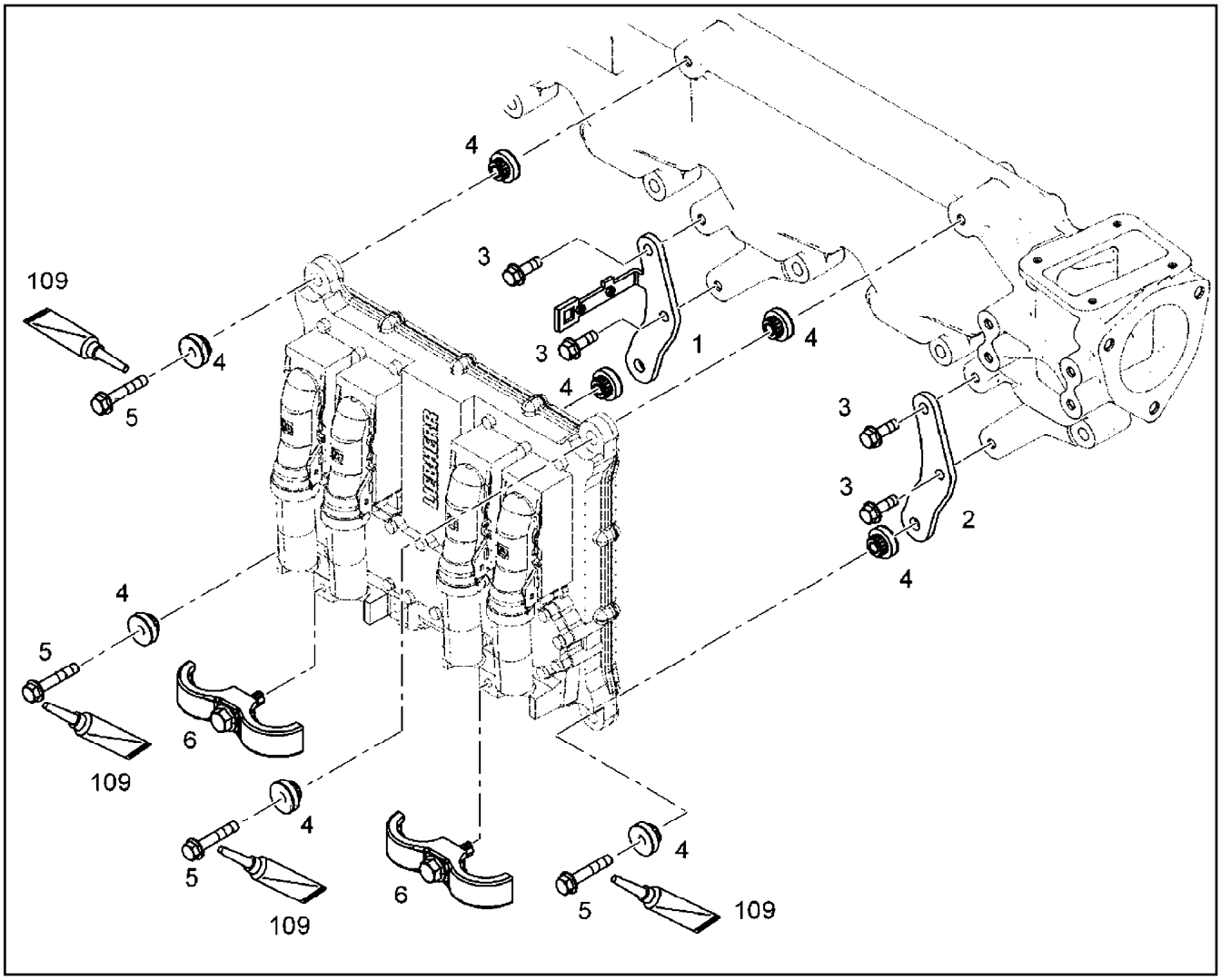

Pos.	Item	Quantity	Description	Bezeichnung
1	10143454	1	RETAINER CPL.	HALTER KPL.
2	10127689	1	RETAINER CPL.	HALTER KPL.
3	10009007	4	HEX SCREW DIN 6921 M8X25 8.8 A2C	SECHSKANTSCHRAUBE
4	10116274	8	RUBBER BUFFER 8,3/26X7,2 30 VMQ 21577	GUMMIPUFFER
5	10016907	4	HEX SCREW DIN 6921 M8X45 8.8 A2C	SECHSKANTSCHRAUBE
6	10144098	2	FASTENING CLAMP 34X34 ⇨ ❑ 268	BEFESTIGUNGSSCHELLE
109	811205708	1	SCREW LOCKING FLASCHE 50ML 150°C	SCHRAUBENSICHERUNG

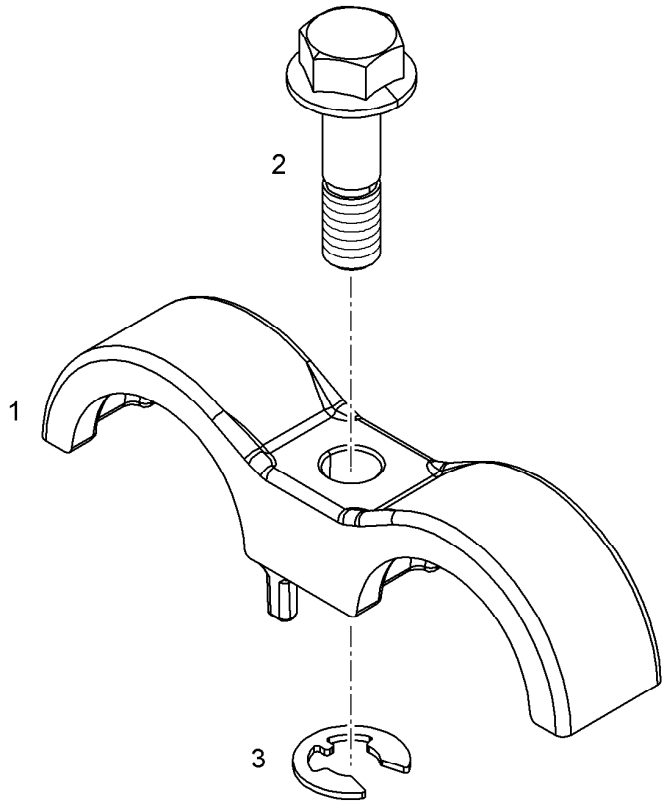

Pos.	Item	Quantity	Description	Bezeichnung
1	10123304	1	FASTENING CLAMP 34 EN AC-AlSi10	BEFESTIGUNGSSCHELLE
2	13541106	1	SCREW M8X30 St Rm>=800MP	SCHRAUBE
3	12210037	1	LOCK WASHER DIN 6799 7X0,9 480H	SICHERUNGSSCHEIBE

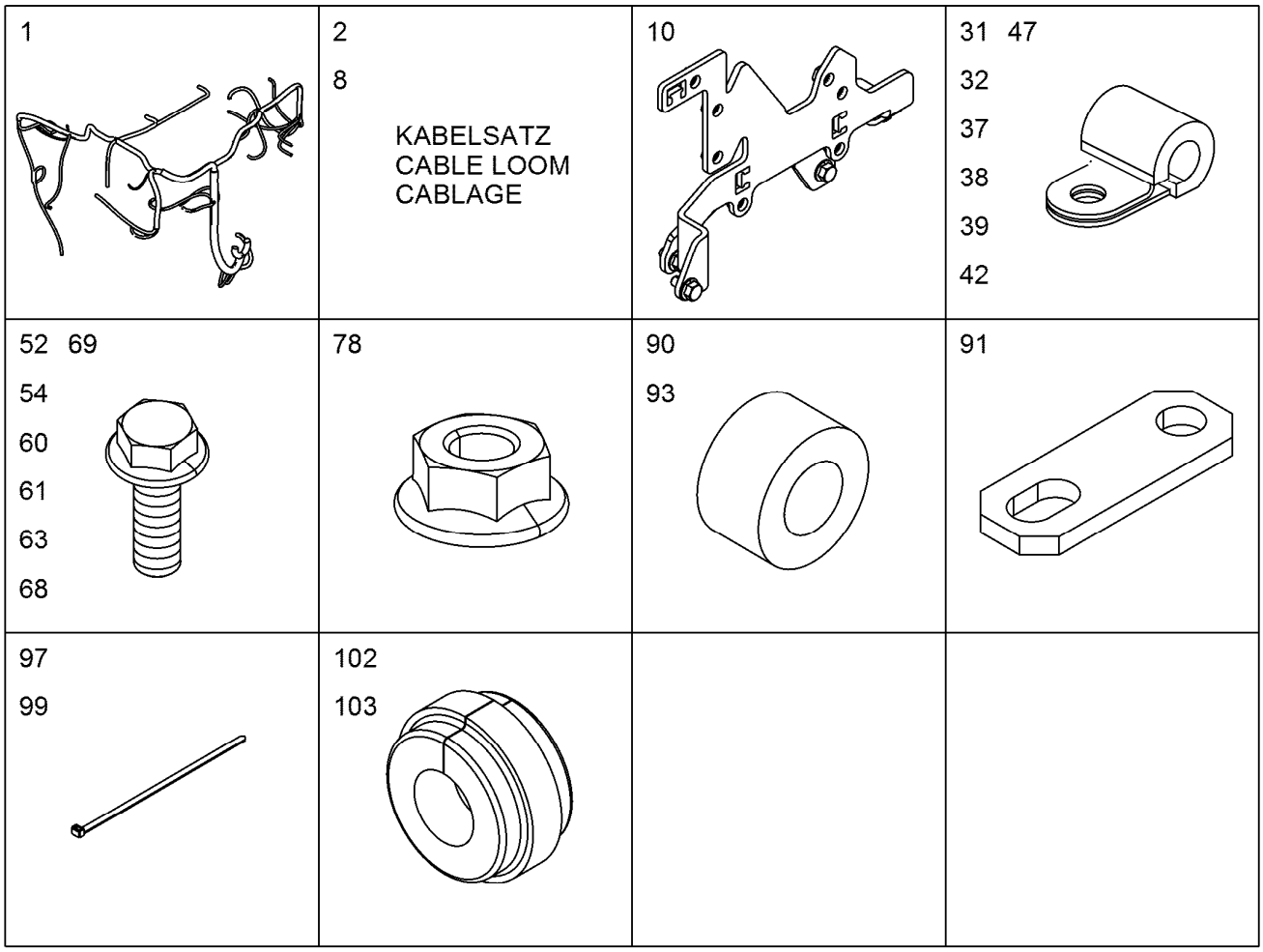

Pos.	Item	Quantity	Description	Bezeichnung
1	10153987	1	CABLE HARNESS W700	KABELBAUM
2	10151329	1	WIRING HARNESS ASSEMBLY ⇨ ❑ 271	KABELSATZ ANBAU
8	10151390	1	WIRING HARNESS ASSEMBLY	KABELSATZ ANBAU
10	10143707	1	CLAMP - ADD-ON UNIT ⇨ ❑ 272	HALTER ANBAU
31	7381771	1	CLAMP DIN 3016-1 8X15XD1 W1-2-MVQ	SCHELLE
32	7381770	6	CLAMP DIN 3016-1 10X15XD1 W1-2-MVQ	SCHELLE
37	7382090	4	CLAMP DIN 3016-1 8X20XD1 W1-2-MVQ	SCHELLE
38	7381628	2	CLAMP DIN 3016-1 10X20XD1 W1-2-MVQ	SCHELLE
39	7381629	5	CLAMP DIN 3016-1 12X20XD1 W1-2-MVQ	SCHELLE
42	7381630	3	CLAMP DIN 3016-1 22X20XD1 W1-2-MVQ	SCHELLE
47	7382092	4	CLAMP DIN 3016-1 10X25XD1 W1-2-MVQ	SCHELLE
52	12207546	1	HEX SCREW EN 1665 M5X10 8.8 480H	SECHSKANTSCHRAUBE
54	11840297	7	HEX SCREW EN 1665 M6X16 8.8 480H SPF	SECHSKANTSCHRAUBE
60	11656992	2	HEX SCREW EN 1665 M8X16 8.8 480H SPF	SECHSKANTSCHRAUBE
61	11657219	14	HEX SCREW EN 1665 M8X20 8.8 480H SPF	SECHSKANTSCHRAUBE
63	11826563	1	HEX SCREW EN 1665 M8X30 8.8 480H	SECHSKANTSCHRAUBE
68	11656153	3	HEX SCREW EN 1665 M10X20 8.8 FLZN SPF	SECHSKANTSCHRAUBE
69	11656155	1	HEX SCREW EN 1665 M10X30 8.8 FLZN SPF	SECHSKANTSCHRAUBE
78	11820285	1	HEX NUT EN 1661 M8 8 480H SPF	SECHSKANTMUTTER
90	9076588	1	DISTANCE SLEEVE 11X24X10,5 St Rm>=50	DISTANZHUELSE
91	9275178	1	HOLDER S235JR	HALTER
93	9132577	1	DISTANCE SLEEVE 8,5X18X10 11SMnPb30	DISTANZHUELSE
97	11691013	2	CABLE TIE 4,6X200-SW/GR PA66HS	KABELBINDER
99	10874588	3	CABLE TIE 4,8X292-SCHWARZ PA66 SPF	KABELBINDER

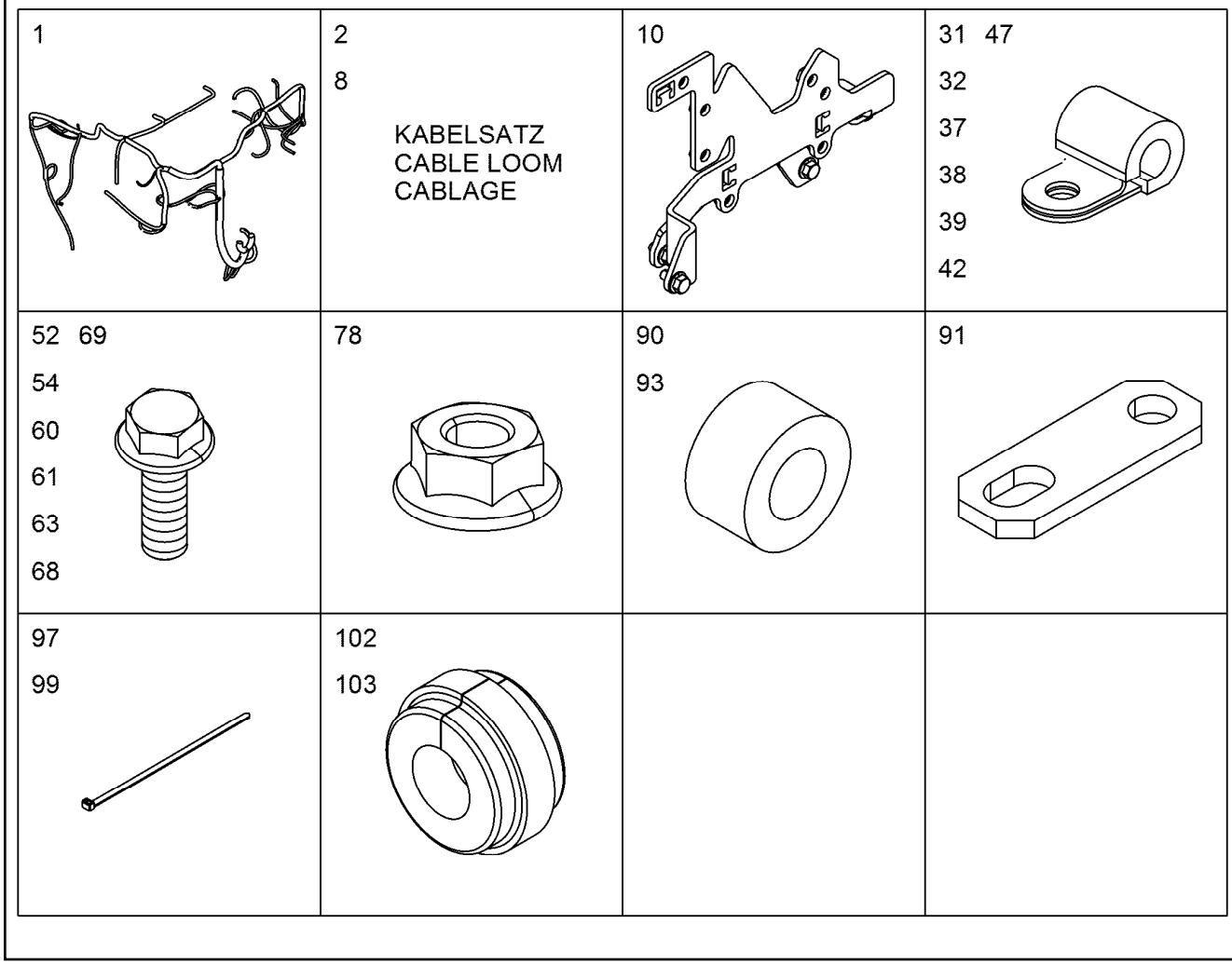

Pos.	Item	Quantity	Description	Bezeichnung
102	10133991	1	RUBBER RING X12	GUMMIRING
103	10123876	1	RUBBER RING X16	GUMMIRING

1 KABELSATZ CABLE LOOM CABLAGE	10 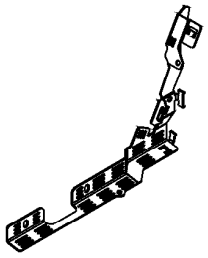	13 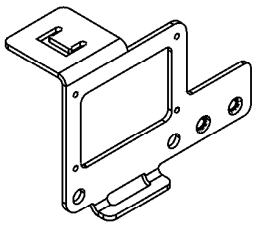	39 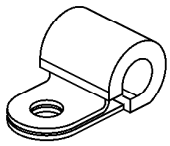
42 51 53 58 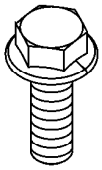	77 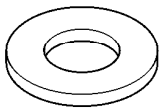	100 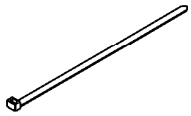	

Pos.	Item	Quantity	Description	Bezeichnung
1	10151164	1	CABLE LOOM WL705	KABELSATZ
(1)	6905877	1	FUSE CARTRIDGE DIN 72581 1A DC32	SICHERUNGSEINSATZ
10	10150252	1	HOLDER S235JR	HALTER
13	10150838	1	HOLDER S235JR	HALTER
39	7382086	1	CLAMP DIN 3016-1 18X25XD1 W1-2-MVQ	SCHELLE
42	12207546	1	HEX SCREW EN 1665 M5X10 8.8 480H	SECHSKANTSCHRAUBE
51	11657219	2	HEX SCREW EN 1665 M8X20 8.8 480H SPF	SECHSKANTSCHRAUBE
53	11826563	2	HEX SCREW EN 1665 M8X30 8.8 480H	SECHSKANTSCHRAUBE
58	11656153	2	HEX SCREW EN 1665 M10X20 8.8 FLZN SPF	SECHSKANTSCHRAUBE
77	11658580	1	WASHER DIN 7349 10,5 200HV-St FLZN SPF	SCHEIBE
100	10874588	8	CABLE TIE 4,8X292-SCHWARZ PA66 SPF	KABELBINDER

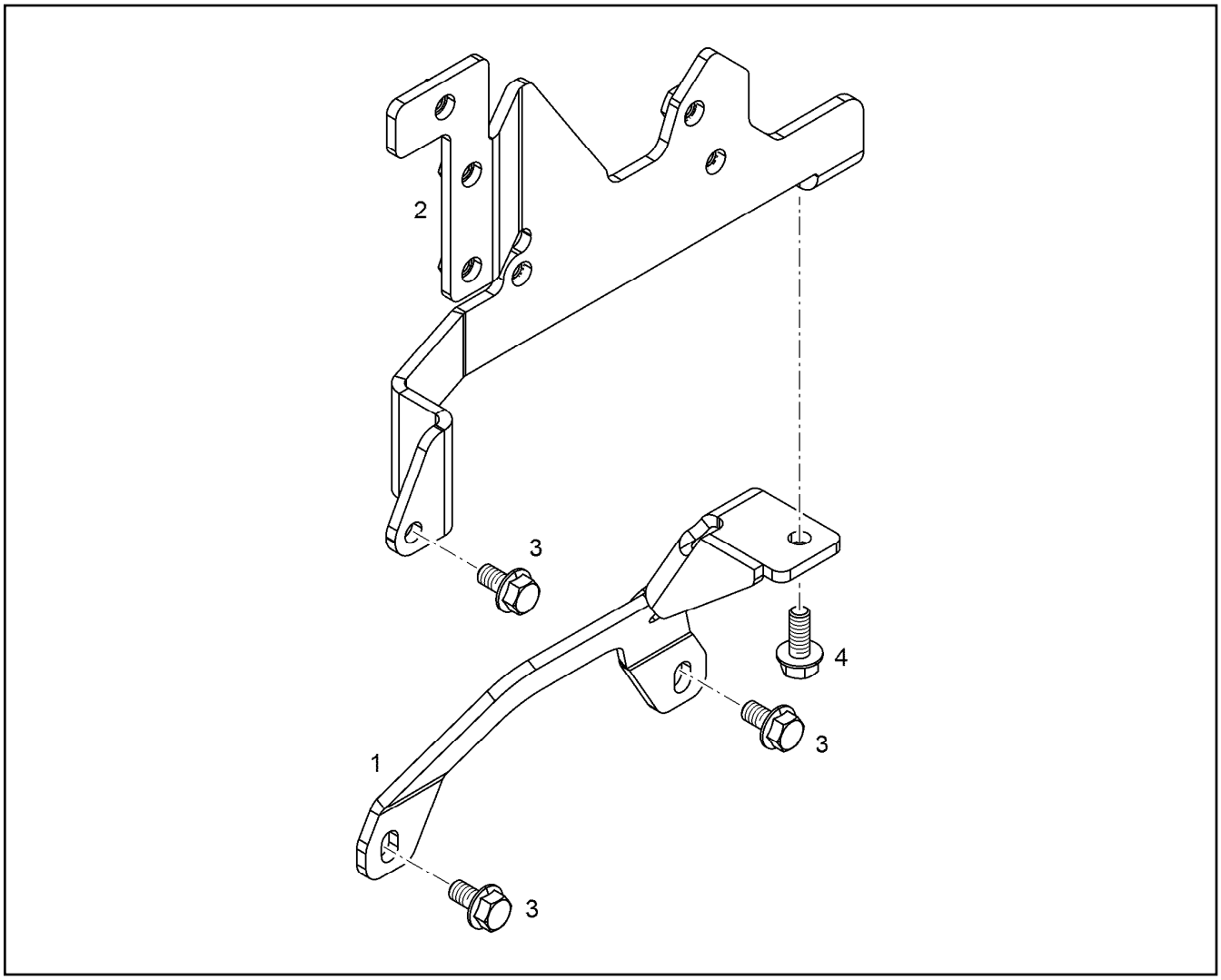

Pos.	Item	Quantity	Description	Bezeichnung
1	12978423	1	RETAINER CPL. S235JR	HALTER KPL.
2	10145371	1	RETAINER CPL. S235JR	HALTER KPL.
3	11656992	3	HEX SCREW EN 1665 M8X16 8.8 480H SPF	SECHSKANTSCHRAUBE
4	11657219	1	HEX SCREW EN 1665 M8X20 8.8 480H SPF	SECHSKANTSCHRAUBE

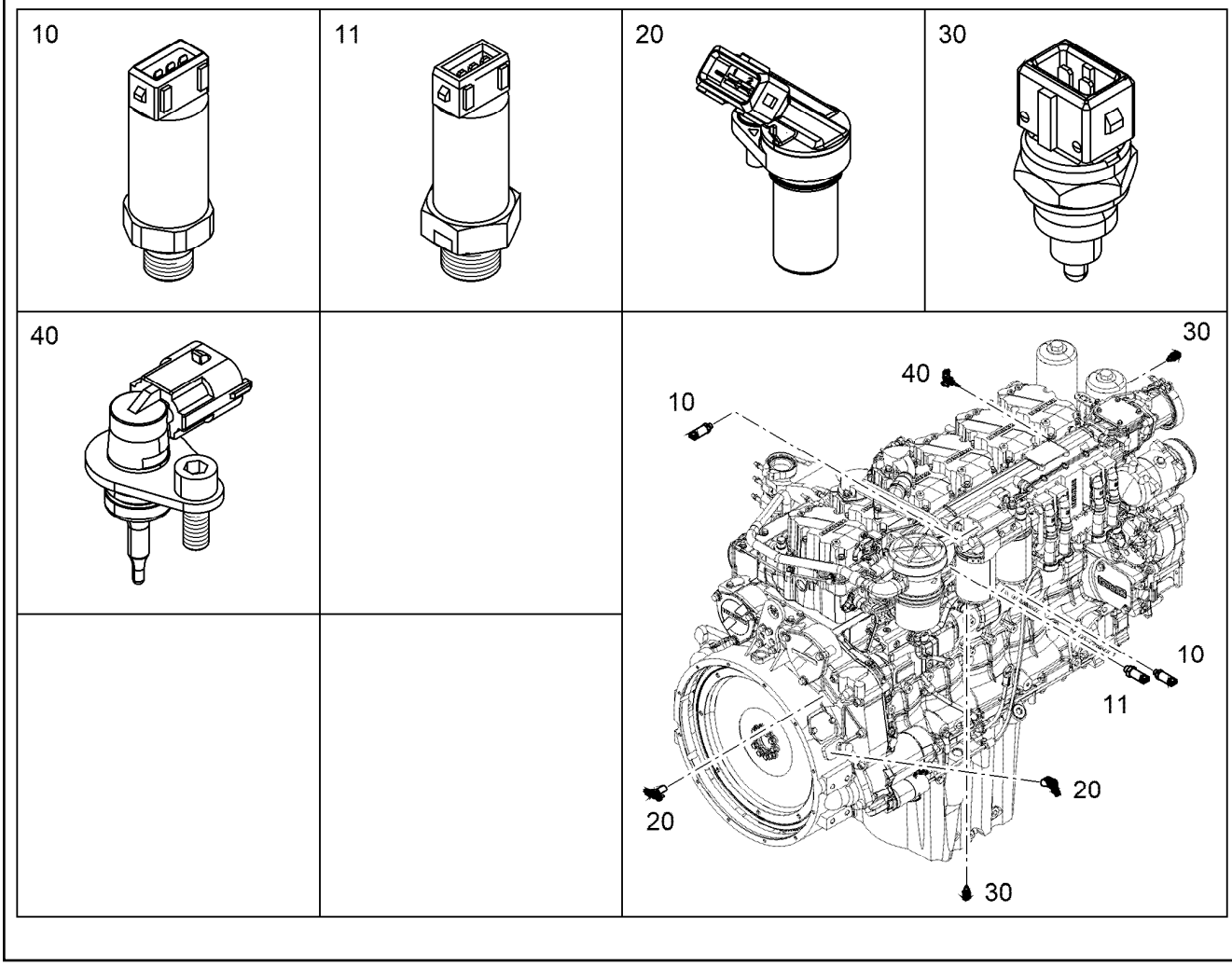

Pos.	Item	Quantity	Description	Bezeichnung
10	9076531	2	PRESSURE TRANSMITTER CPL. 0-10 BAR	DRUCKGEBER KPL.
(1)	12907001	1	PRESSURE TRANSMITTER 0-10 BAR	DRUCKGEBER
(2)	10040984	1	PROFILE PACKING DIN 3869 14X11,6 FKM 8	PROFILDICHTRING
11	9076550	1	PRESSURE TRANSMITTER CPL. 0,5-4,5 BA	DRUCKGEBER KPL.
(1)	12907020	1	PRESSURE TRANSMITTER 0,5-4,5 BAR	DRUCKGEBER
(2)	10113975	1	O-RING AEHNL.ISO 3601-1 15,5X2 FKM 80	O-RING
20	12544505	2	ROTATIONAL SPEED SENSOR CPL. 10-1000	DREHZAHLGEBER KPL.
(1)	12977971	1	ROTATIONAL SPEED SENSOR 10-10000HZ	DREHZAHLGEBER
(2)	7381103	1	O-RING ISO 3601-1 17,17X1,78 FKM 70 A,GN	O-RING
(3)	10875586	1	SOCKET HEAD SCREW ISO 4762 M6X16 8.8	ZYLINDERSCHRAUBE
(100)	10285708	1	GREASE NBU 30 1KG DOSE	FETT
30	13410342	2	TEMPERATURE PROBE CPL. -40°C BIS +15	TEMPERATURFUEHLER KPL.
40	10152036	1	TEMPERATURE PROBE CPL. -40°C BIS +15	TEMPERATURFUEHLER KPL.
(1)	10493625	1	TEMPERATURE SENSOR -40°C BIS +150°C	TEMPERATURFUEHLER
(2)	10875586	1	SOCKET HEAD SCREW ISO 4762 M6X16 8.8	ZYLINDERSCHRAUBE
(100)	10285708	1	GREASE NBU 30 1KG DOSE	FETT

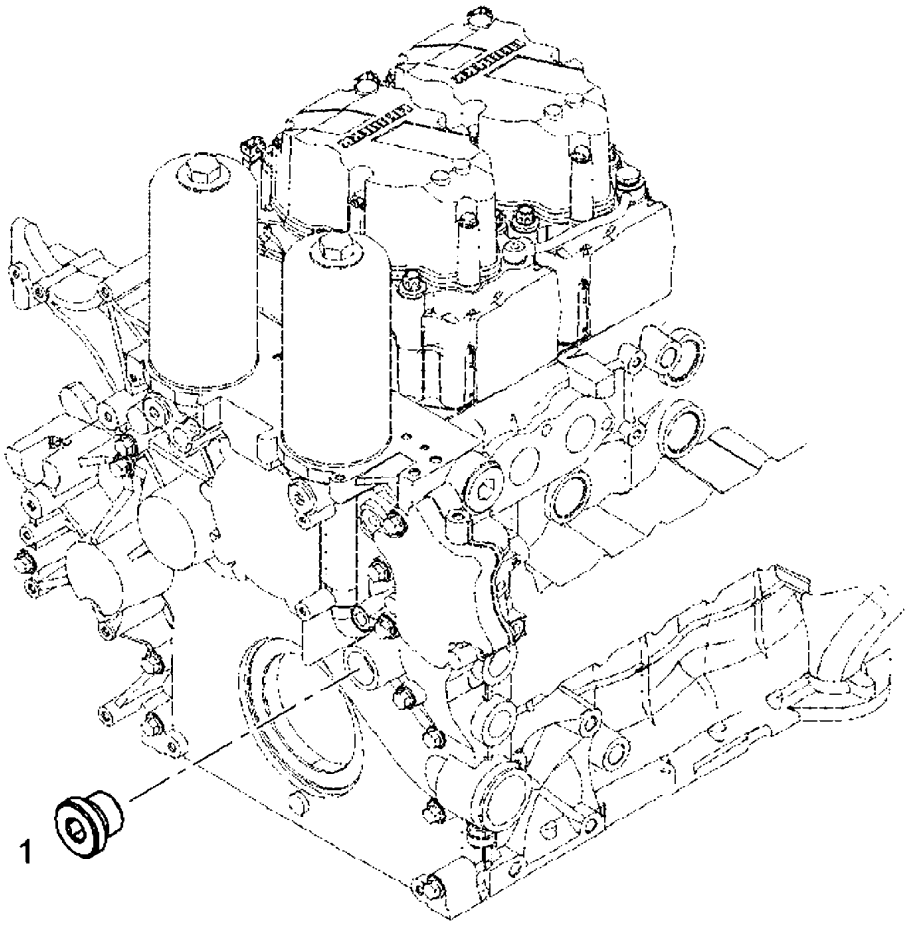

Pos.	Item	Quantity	Description	Bezeichnung
1	7382202	1	SCREW PLUG VSTI M38X1,5	VERSCHLUSSSCHRAUBE

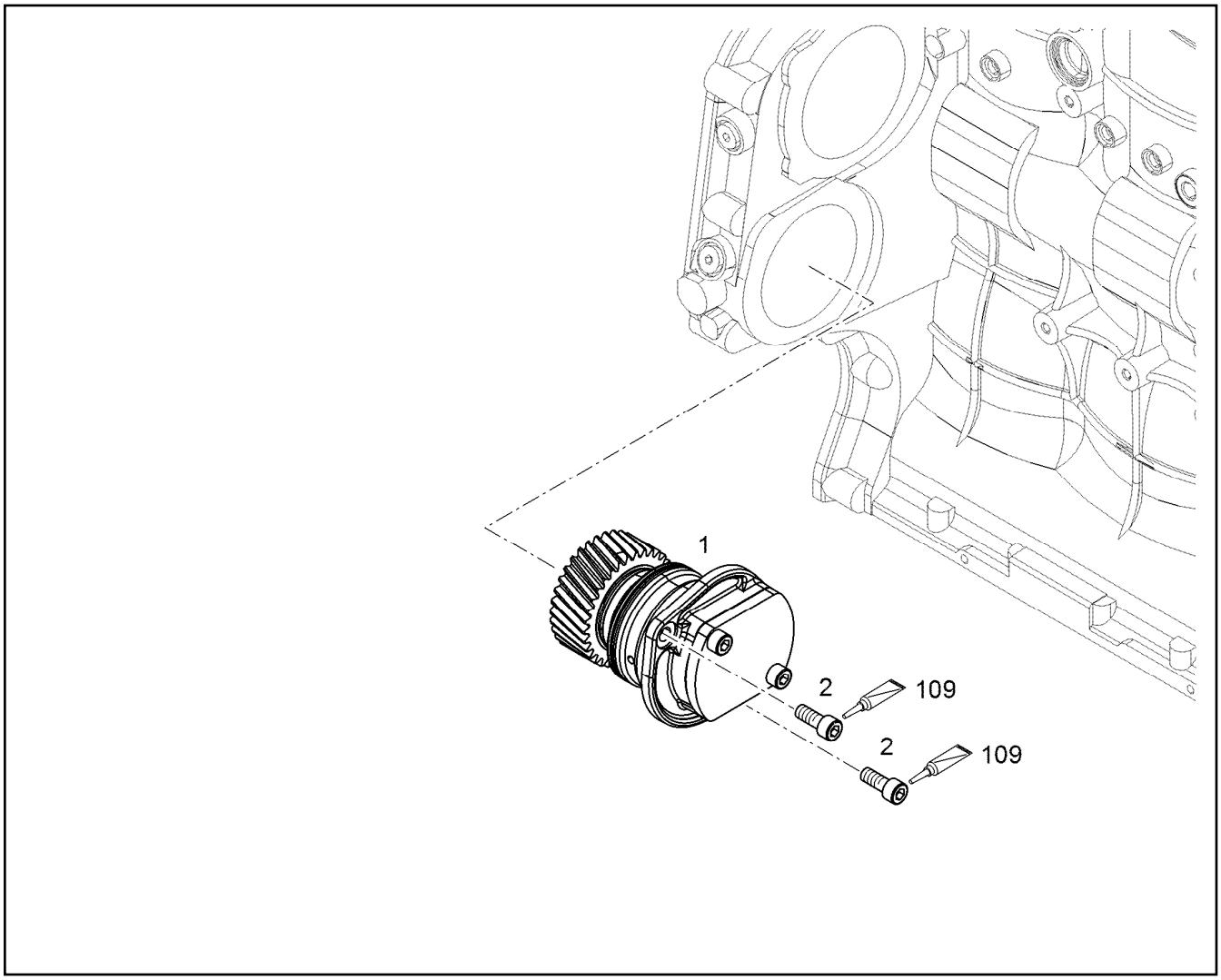

Pos.	Item	Quantity	Description	Bezeichnung
1	10125688	1	AUXILIARY DRIVE PRE-ASS.	NEBENABTRIEB VORM.
(4)	7381361	2	O-RING ISO 3601-1 85,32X3,53 FKM 70 A,GN	O-RING
(5)	9885529	1	SEAL	DICHTUNG
(6)	9178294	1	COVER	DECKEL
(100)	10285708	1	GREASE NBU 30 1KG DOSE	FETT
2	10650720	2	SOCKET HEAD SCREW ISO 4762 M10X25 10	ZYLINDERSCHRAUBE

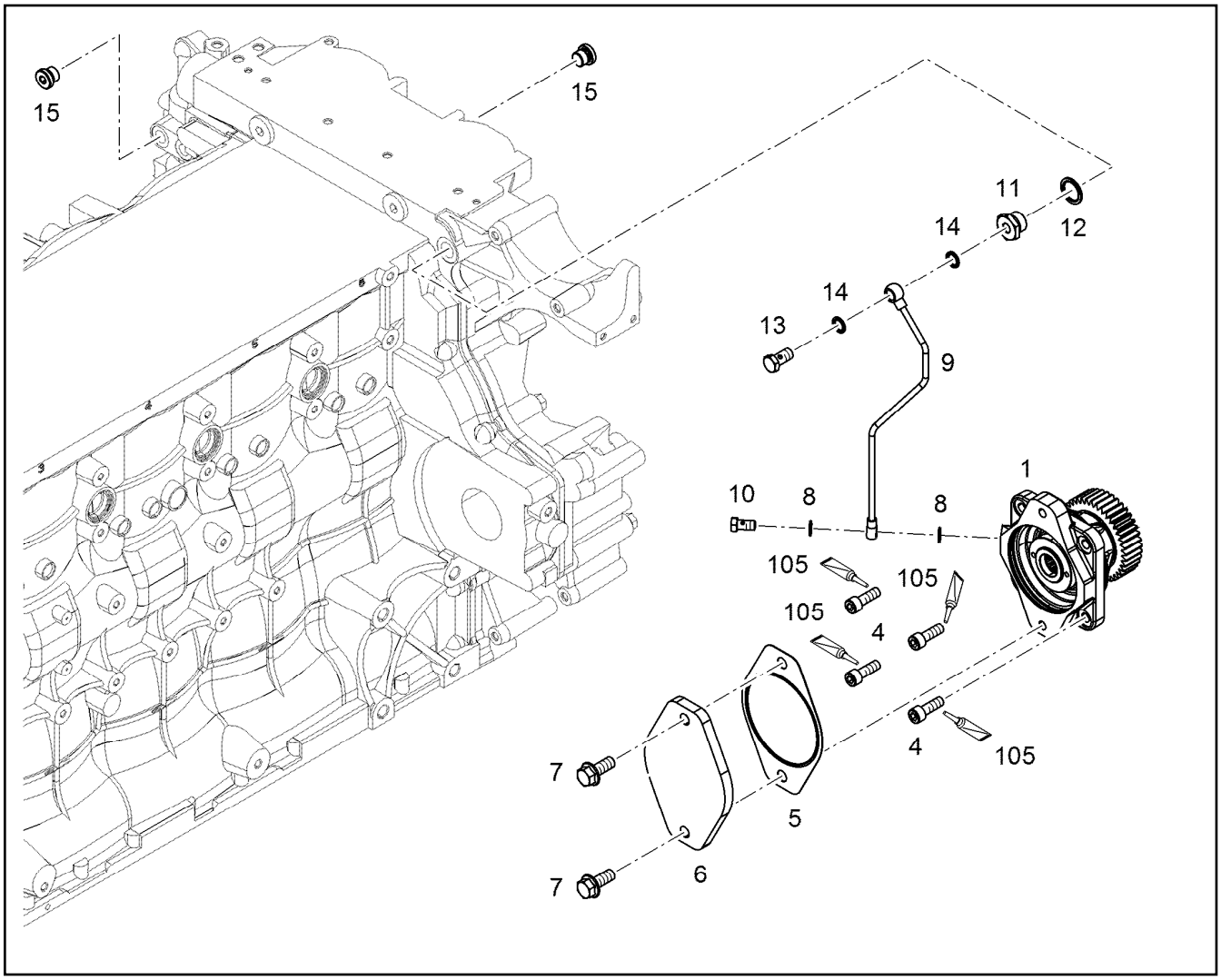

Pos.	Item	Quantity	Description	Bezeichnung
1	9077386	1	AUXILIARY DRIVE PRE-ASS. ⇨ ❑ 277	NEBENABTRIEB VORM.
4	11002743	4	SOCKET HEAD SCREW ISO 4762 M10X30 10	ZYLINDERSCHRAUBE
5	12969638	1	SEAL 0,75X104X146 AFM 30	DICHTUNG
6	9273690	1	COVER	DECKEL
7	11631940	2	HEX SCREW EN 1665 M12X30 8.8 FLZN SPF	SECHSKANTSCHRAUBE
8	10011864	2	SEALING RING 10,7X16X1,5 St/FPM1-80	DICHTRING
9	10145838	1	PIPELINE 6X1	ROHRLEITUNG
10	12210010	1	HOLLOW SCREW DIN 7643 6-3-M10X1 480H	HOHLSCHRAUBE
11	10145589	1	FITTING S235JR	VERSCHRAUBUNG
12	10011869	1	SEALING RING 22,7X30X2 St/FPM1-80	DICHTRING
13	12210024	1	HOLLOW SCREW DIN 7643 8-3-M12X1,5 480	HOHLSCHRAUBE
14	10011865	2	SEALING RING 12,7X18,00X1,5 FKM 80	DICHTRING
15	7382203	2	SCREW PLUG VSTI M16X1,5	VERSCHLUSSSCHRAUBE
105	811205708	1	SCREW LOCKING FLASCHE 50ML 150°C	SCHRAUBENSICHERUNG

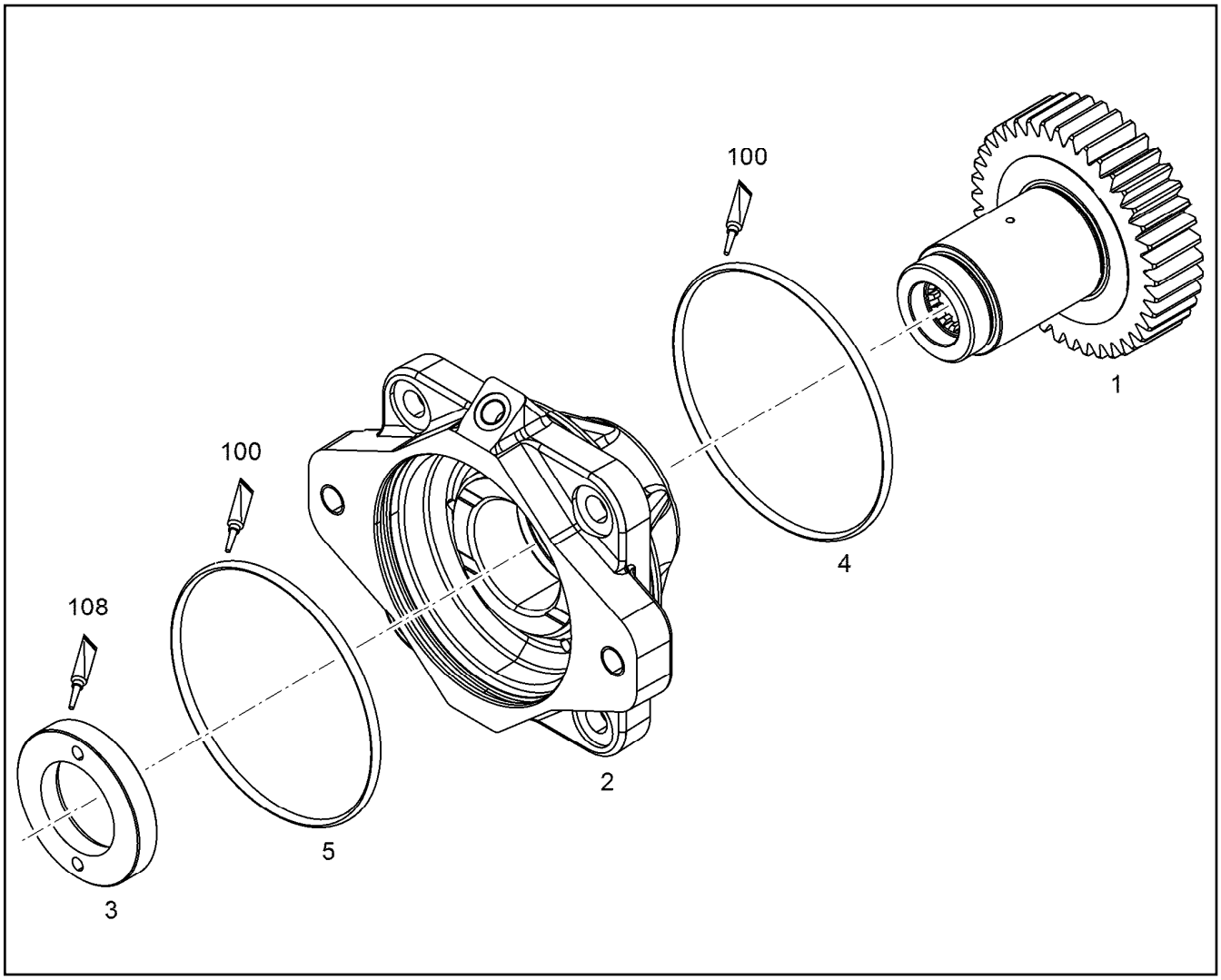

Pos.	Item	Quantity	Description	Bezeichnung
1	9077327	1	PUMP SHAFT Z=40 M=2,25	PUMPENWELLE
2	9077384	1	BEARING HOUSING, PRE-ASSEMBLED	LAGERGEHAEUSE VORM.
(2)	9888448	2	FLANGE SLEEVE 45X50X25	BUNDLAGER
3	9077612	1	WEARING RING M 40X1,5	ANLAUFRING
4	7380520	1	O-RING 104,37X3,53 VMQ 70 A	O-RING
5	7380401	1	O-RING AEHNL.ISO 3601-1 101,2X3,53 NBR	O-RING
100	10285708	1	GREASE NBU 30 1KG DOSE	FETT
108	811201314	1	SEALING COMPOUND TUBE 50ML -55/150°	DICHTUNGSMASSE

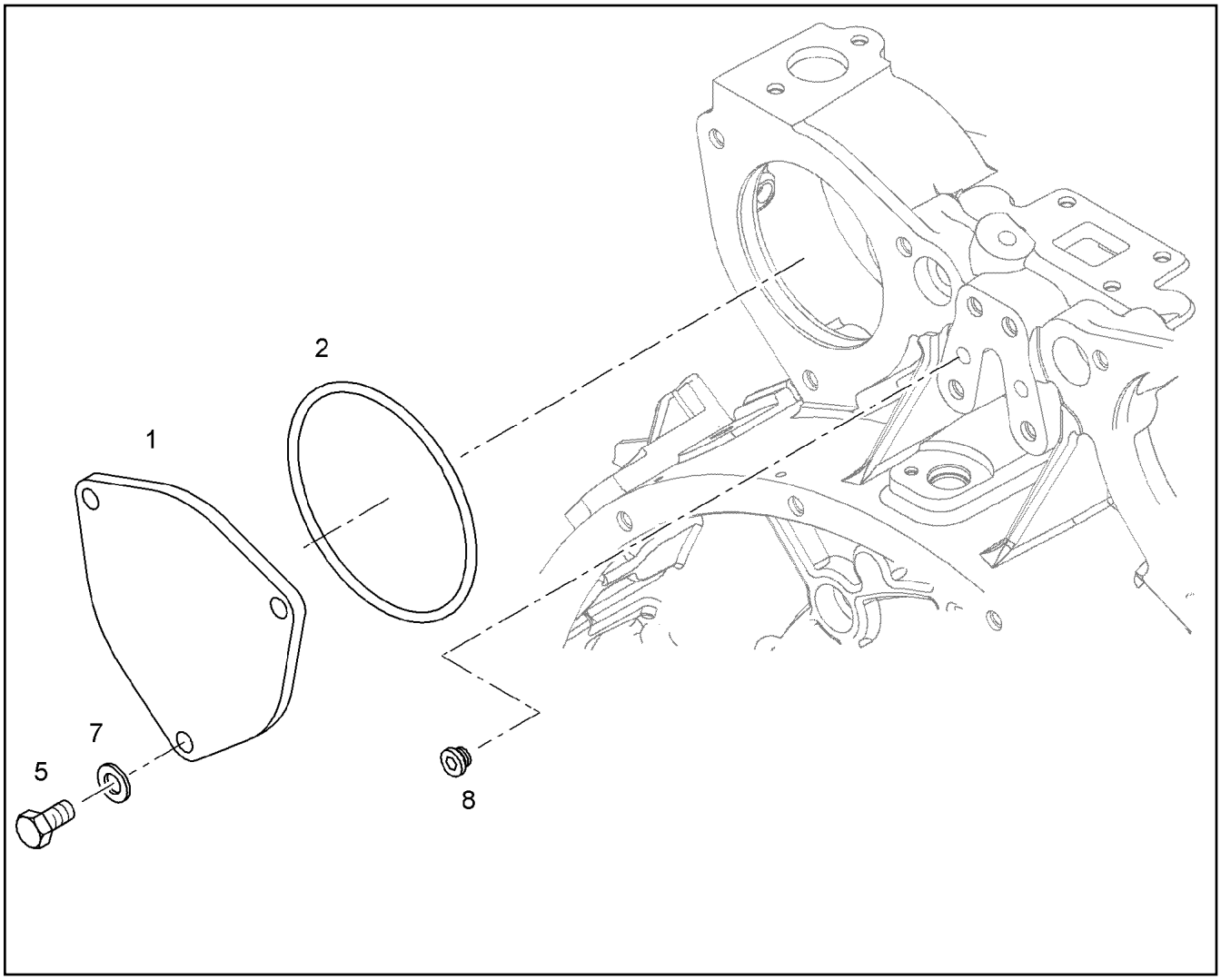

Pos.	Item	Quantity	Description	Bezeichnung
1	10122319	1	COVER	DECKEL
2	9177948	1	O-RING 120X3 VMQ 70 A	O-RING
5	11631816	3	HEX SCREW ISO 4017 M10X25 8.8 FLZN SP	SECHSKANTSCHRAUBE
7	425050908	3	SPRING WASHER DIN 137 B 10 FST A3C	FEDERSCHEIBE
8	7381638	1	SCREW PLUG VSTI M10X1	VERSCHLUSSSCHRAUBE

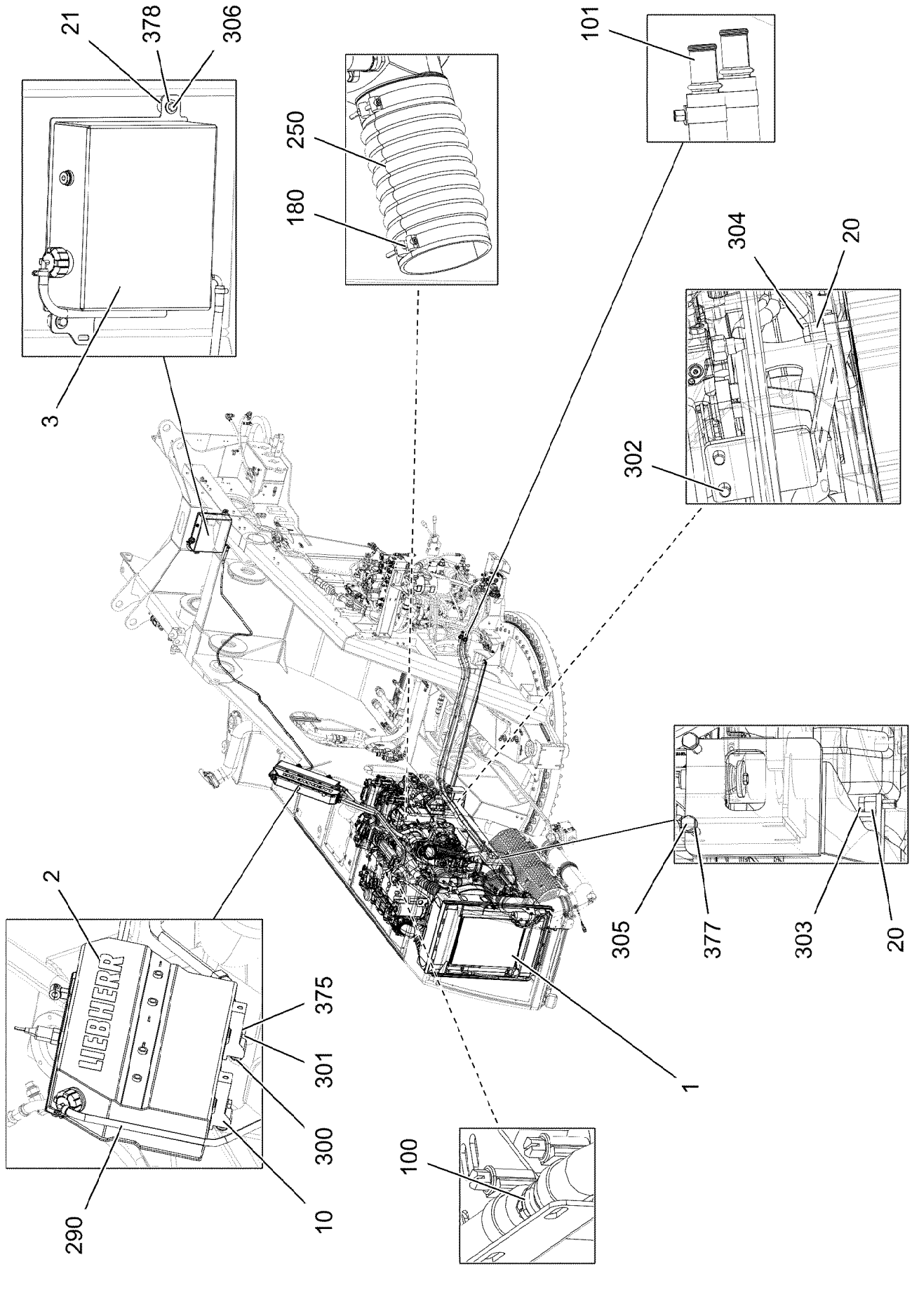

18.7.2022 004811 LIEBHERR	**etk_en_de_047654 LTR 1220** **DRIVE ASSEMBLY CPL.** **ANTRIEBSAGGREGAT KPL.**	❑ 279 (1/2) **918731408**

Pos.	Item	Quantity	Description	Bezeichnung
1	919007708	1	DRIVE ASSEMBLY, PRE-ASSEMBLED ⇨ ❑ 281	ANTRIEBSAGGREGAT VORM.
2	96034515	1	EXPANSION TANK PRE-ASS. ⇨ ❑ 328	AUSGLEICHSBEHAELTER VORM
3	96034522	1	EQUALIZING RESERVOIR ⇨ ❑ 329	AUSGLEICHSBEHAELTER
10	970365108	2	BEARING BLOCK 40x115x42	LAGERBOCK
20	952177008	2	DISTANCE SLEEVE 30.0 X0 42CRMO4+QT	DISTANZHUELSE
21	953873408	2	SLEEVE 25X20 11SMN37 FE//ZNNI8//CN//T0	HUELSE
100	11839607	1	NON-RETURN VALVE 2.5BAR PA 66-GF30	RUECKSCHLAGVENTIL
101	11000700	2	CONNECTING PIPE 0	VERBINDUNGSROHR
180	774227108	2	HOSE CLAMP 169/167-175/25 ST	SCHLAUCHSCHELLE
250	970658608	1	SUCTION HOSE SPF	SAUGSCHLAUCH
290	96034533	1	HOSE LINES DRIVE UNIT ⇨ ❑ 331	SCHLAUCHLEITUNGEN ANTRIE
300	10875448	2	BUTTON HEAD SCREW ISO 7380-2 M10X25	HALBRUNDKOPFSCHRAUBE
301	11626706	2	HEX SCREW ISO 4017 M10X40 8.8 FLZN SP	SECHSKANTSCHRAUBE
302	12214938	2	HEX SCREW ISO 4017 M16X35 8.8 FLZN SP	SECHSKANTSCHRAUBE
303	10875804	1	HEX SCREW ISO 4017 M16X55 8.8 FLZN SP	SECHSKANTSCHRAUBE
304	10875521	1	HEX SCREW ISO 4017 M16X60 8.8 FLZN SP	SECHSKANTSCHRAUBE
305	12223058	2	HEX SCREW ISO 4014 M16X120 8.8 FLZN SP	SECHSKANTSCHRAUBE
306	11651612	2	HEX SCREW ISO 4017 M8X16 8.8 480H SPF	SECHSKANTSCHRAUBE
375	10289795	2	WASHER ISO 7089 10 300HV FLZN SPF	SCHEIBE
377	10289806	4	WASHER ISO 7089 16 300HV FLZN SPF	SCHEIBE
378	11140469	2	WASHER ISO 7093-1 8 200HV 480H SPF	SCHEIBE

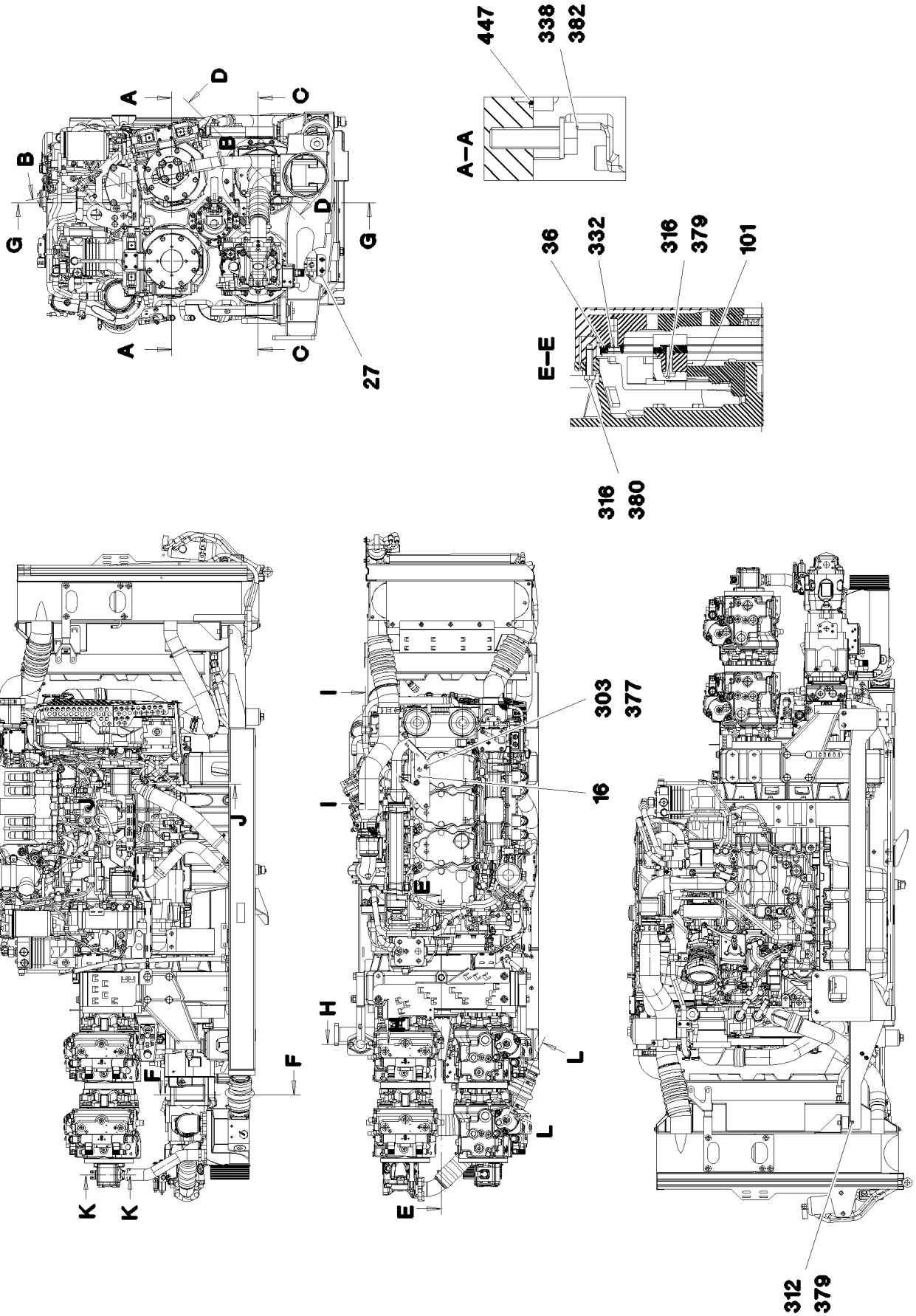
447
338
382
A–A
A
D
C
B
B
G
G
D
A
C
27
36
332
316
379
101
E–E
316
380
303
377
I
I
16
E
H
L
L
K
K
F
F
J
J
E
312
379

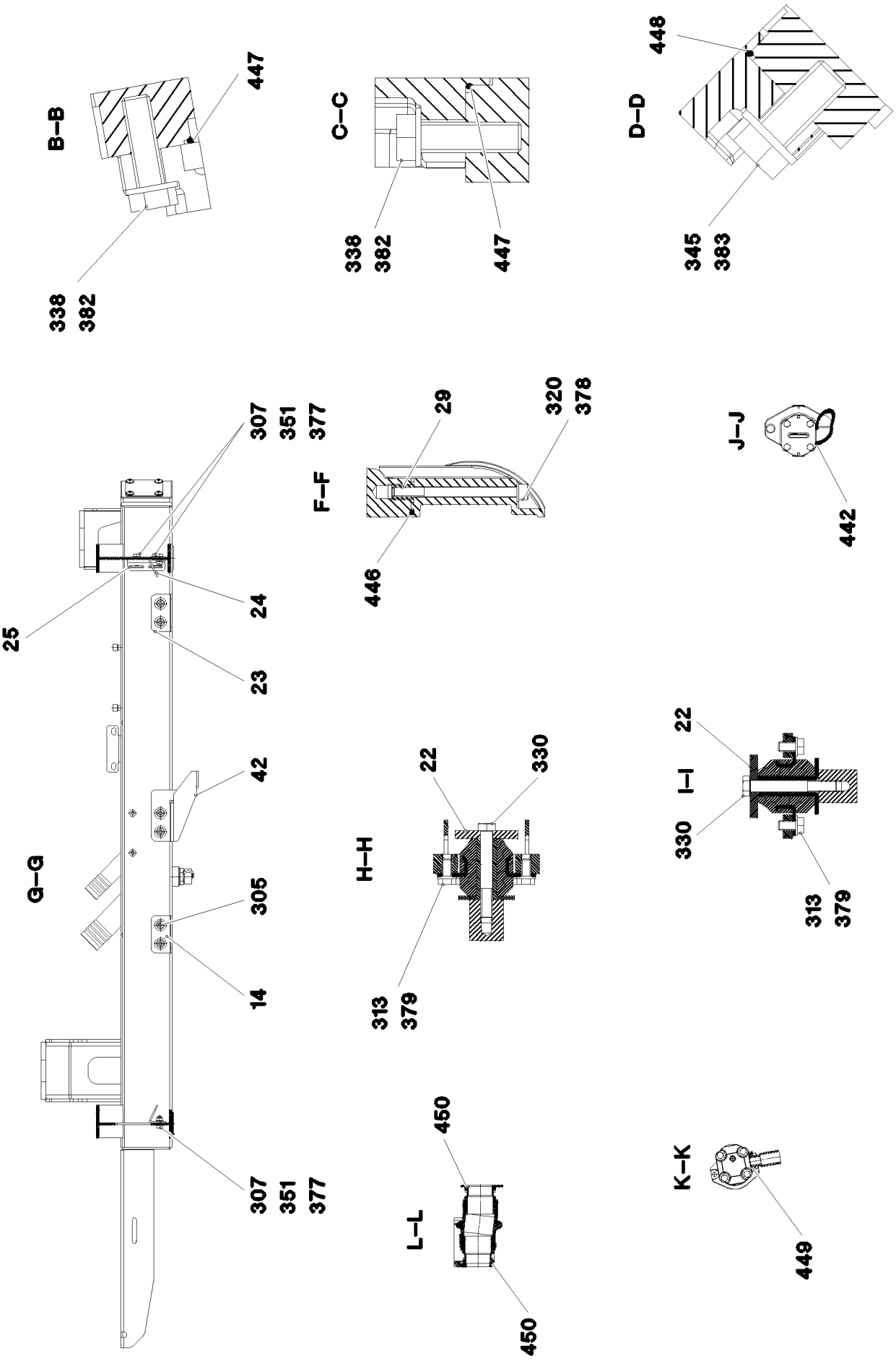
B–B
447
338
382
C–C
338
382
447
D–D
448
345
383
F–F
29
320
378
446
J–J
442
307
351
377
25
24
23
42
305
14
307
351
377
G–G
H–H
22
330
313
379
I–I
22
330
313
379
K–K
449
L–L
450
450

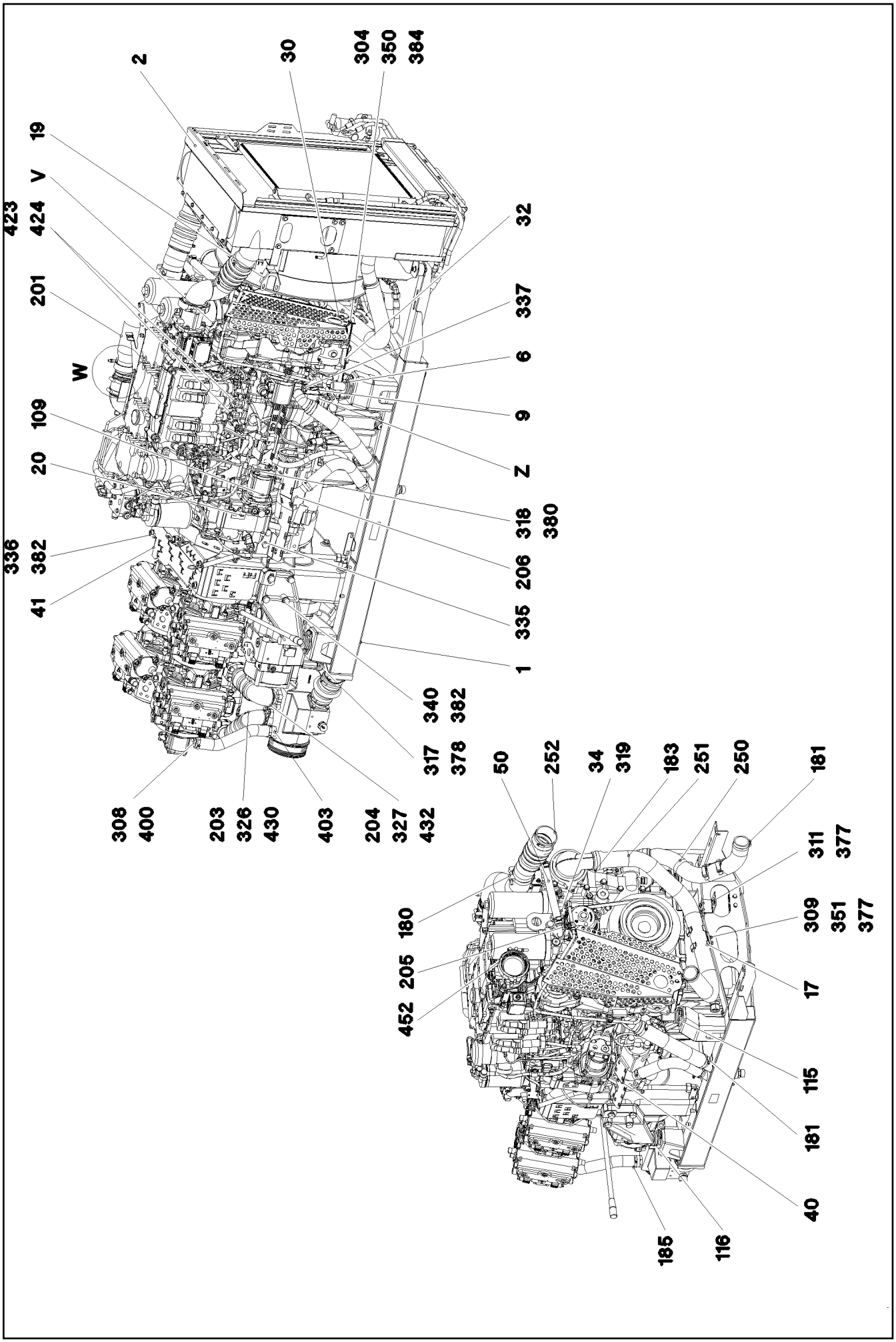

18.7.2022 004808	**etk_en_de_047654 LTR 1220**	283 (3/8)
LIEBHERR	**DRIVE ASSEMBLY, PRE-ASSEMBLED** **ANTRIEBSAGGREGAT VORM.**	**919007708**

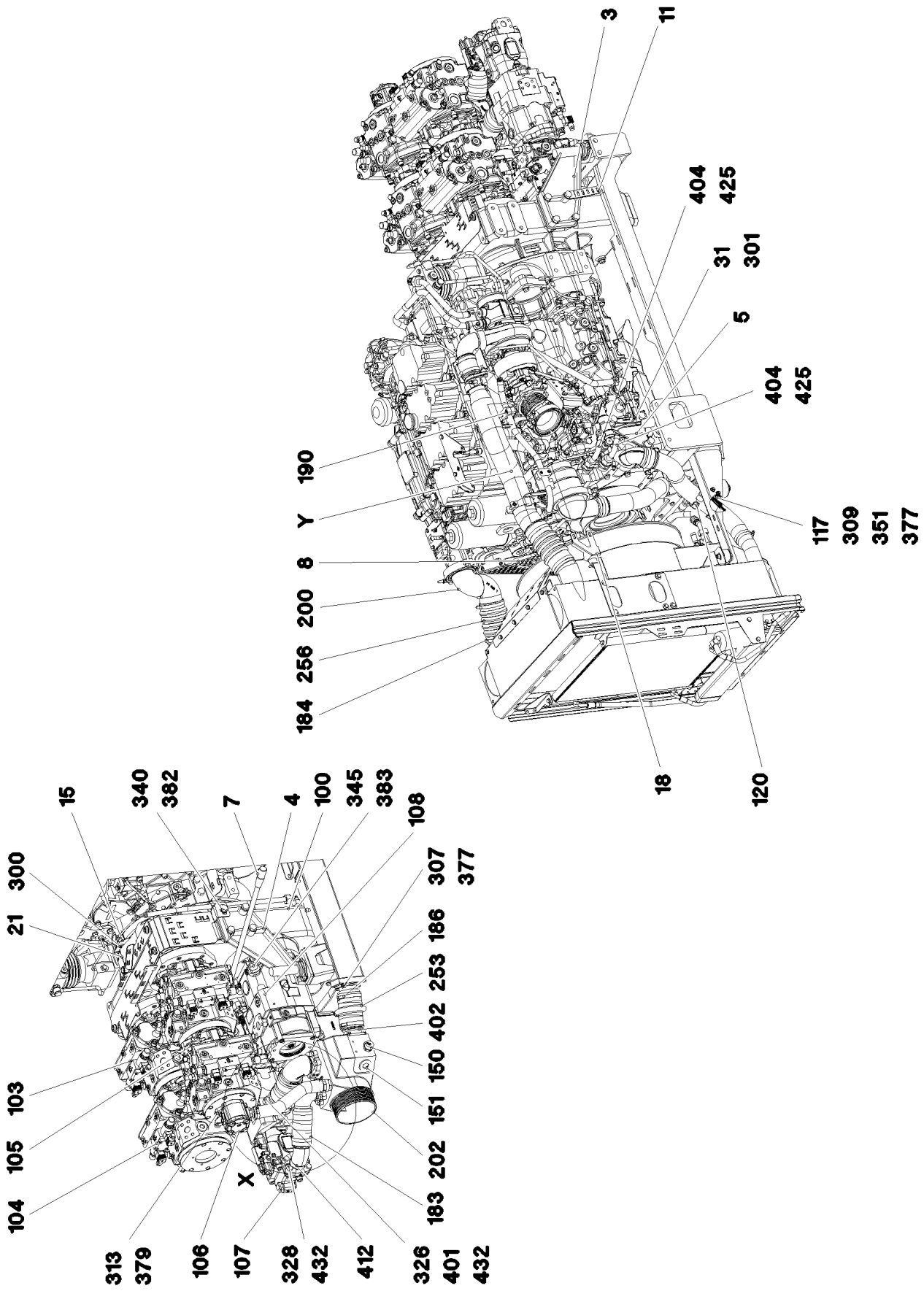

18.7.2022 004809 LIEBHERR	**etk_en_de_047654 LTR 1220** **DRIVE ASSEMBLY, PRE-ASSEMBLED** **ANTRIEBSAGGREGAT VORM.**	❑ 284 (4/8) **919007708**

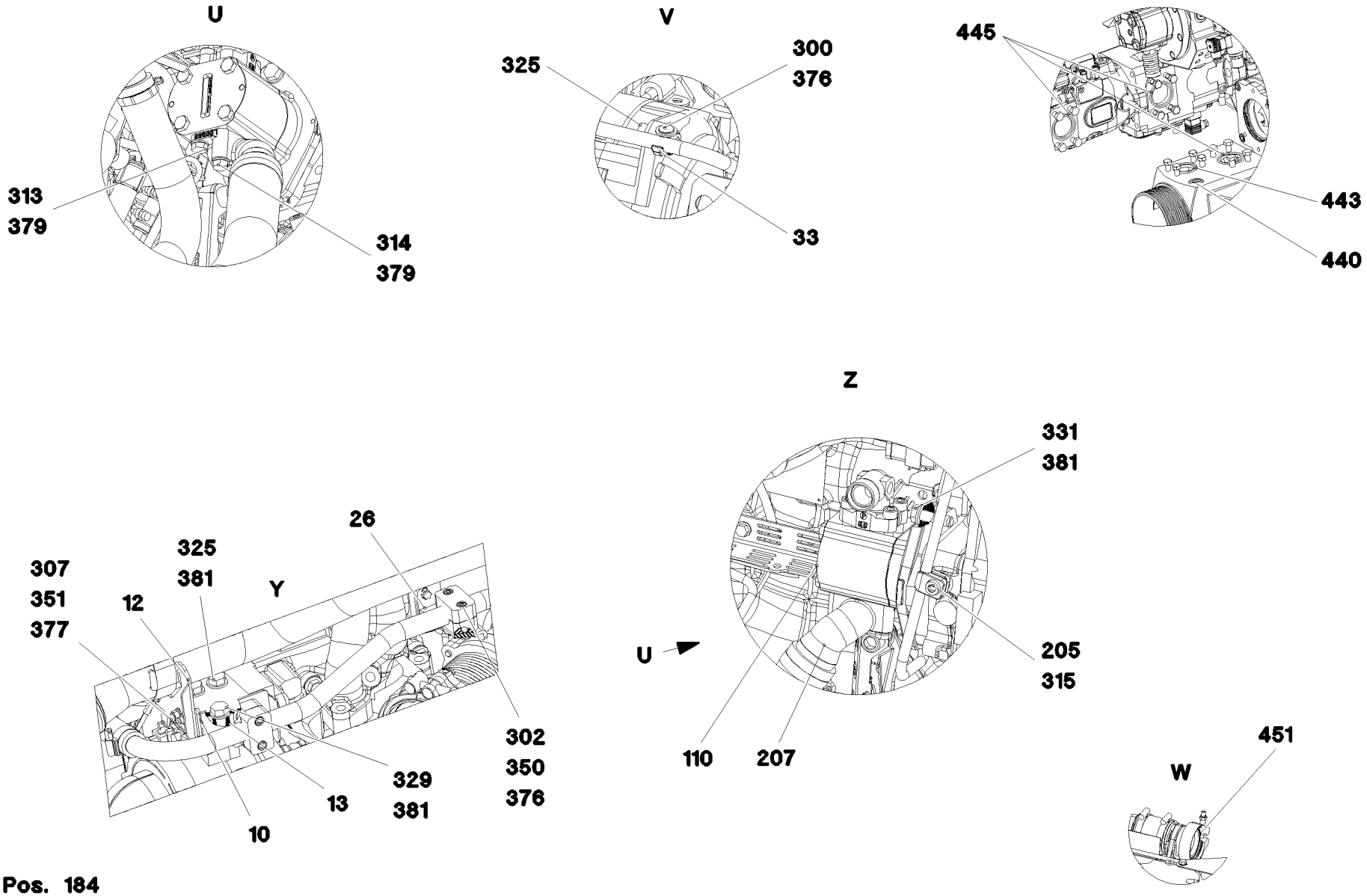
U
313
379
314
379
V
325
300
376
33
X
445
443
440
Z
331
381
205
315
U
110
207
451
W
26
325
381
307
351
377
12
Y
329
381
13
10
302
350
376

Pos. 184

Pos.	Item	Quantity	Description	Bezeichnung
1	968918808	1	EQUIPMENT CARRIER WELDED SPF	AGGREGATETRAEGER SCHWK.
2	96034631	1	RADIATOR, PRE-ASSEMBLED ⇨ ❑ 289	KUEHLER VORM.
3	968025208	1	ENGINE BRACKET WELDED	MOTORKONSOLE SCHWK.
4	968025308	1	ENGINE BRACKET WELDED	MOTORKONSOLE SCHWK.
5	97061150	1	ENGINE BRACKET LEFT G28MN6 +QT1	MOTORKONSOLE LI.
6	97061151	1	ENGINE BRACKET RIGHT G28MN6 +QT1	MOTORKONSOLE RE.
7	968026308	1	CLUTCH ACTUATOR ⇨ ❑ 294	KUPPLUNGSSTELLER
8	968986008	1	PIPELINES DRIVE ASSEMBLY	ROHRLEITUNGEN ANTRIEBSAG
(1)	96045838	1	PIPE COMPL. 22X2,5X -	ROHR KPL.
(2)	96045839	1	PIPE COMPL. 12X1,5X -	ROHR KPL.
9	97061320	1	PLATE 2X158X79 DC01 FE//ZNNI8//CN//T0	BLECH
10	97050881	1	PLATE 3X185X122 DC01 FE//ZNNI8//CN//T0	BLECH
11	97101894	1	PLATE 3X30X156 DC01 FE//ZNNI8//CN//T0	BLECH
12	97050879	1	PLATE 3X120X95 DC01 FE//ZNNI8//CN//T0	BLECH
13	97047984	1	DISTANCE SLEEVE 18.0X26 E235+N	DISTANZHUELSE
14	953873408	6	SLEEVE 25X20 11SMN37 FE//ZNNI8//CN//T0	HUELSE
15	964813808	1	THREADED CARRIER FE//ZNNI8//CN//T0	GEWINDETRAEGER
16	97045050	1	PLATE 2X300X125 DC01 FE//ZNNI8//CN//T0	BLECH
17	97050880	2	PLATE 3X98X74 DC01 FE//ZNNI8//CN//T0	BLECH
18	97032982	1	PLATE 2X173X139 DC01 FE//ZNNI8//CN//T0	BLECH
19	97059337	1	PLATE 2X138X117 DC01 FE//ZNNI8//CN//T0	BLECH
20	975614108	1	PLATE 4X60X50 S315MC FE//ZNNI8//CN//T0	BLECH
21	97033889	1	PLATE 1X252X83 DC01 FE//ZNNI8//CN//T0	BLECH
22	97038431	4	WASHER 8X65X65 S355MC FE//ZNNI8//CN//T	SCHEIBE
23	97038475	2	PLATE 3X190X80 DC01 FE//ZNNI8//CN//T0	BLECH
24	97039936	2	PLATE 3X140X72 DC01 FE//ZNNI8//CN//T0	BLECH
25	973717308	1	PLATE 3X80X68 DC01 FE//ZNNI8//CN//T0	BLECH
26	97041747	1	PLATE 4X132X73 S315MC FE//ZNNI8//CN//T	BLECH
27	973717208	1	PLATE 3X60X80 DC01 FE//ZNNI8//CN//T0	BLECH
29	972698608	4	ADAPTOR M16-M10 ST.60-2K	ADAPTER
30	96004318	1	PROTECTING SHEET CPL.	SCHUTZBLECH KPL.
(1)	97072923	1	PLATE 2X377X579 X5CRNI18-10	BLECH
(2)	97077309	3	HOLDER GX5CRNI19-10	HALTER
(300)	10813359	2	BUTTON HEAD SCREW AEHNL.ISO 7380-2	HALBRUNDKOPFSCHRAUBE
(301)	510762108	3	GRUB SCREW DIN 913 M5X6 45H A2	GEWINDESTIFT
(302)	11642497	1	HEX SCREW ISO 4017 M6X10 8.8 480H SPF	SECHSKANTSCHRAUBE
31	952177008	5	DISTANCE SLEEVE 30.0 X0 42CRMO4+QT	DISTANZHUELSE
32	97072959	1	PLATE 2X361X79 DC01 FE//ZNNI8//CN//T0	BLECH
33	97077297	1	HOLDER GX5CRNI19-10	HALTER
34	946104608	2	TUBE 16X2X70 E235+N VERZ	ROHR
36	97061080	1	PLATE 20X490X490 S690QL FE/FLZN10/NC	BLECH
40	97053103	1	PLATE 3X646X519 S355MC FE//ZNNI8//CN//T	BLECH
41	97053104	1	PLATE 3X926X218 S355MC FE//ZNNI8//CN//T	BLECH
42	97065229	1	CONSOLE 4X179X282 S315MC FE//ZNNI8//C	KONSOLE
50	96034456	1	HOSE LINES ENGINE PREASSEMBLY	SCHLAUCHLEITUNGEN MOTOR
(1612)	96034457	1	HOSE CPL. CONTI KWS 22X280	SCHLAUCH KPL.
100	97029921	1	DISTRIBUTOR GEARBOX SPF ⇨ ❑ 295	VERTEILERGETRIEBE
101	97066819	1	COUPLING	KUPPLUNG
103	11182708	1	VARIABLE PUMP A4VG SPF ⇨ ❑ 297	VERSTELLPUMPE
104	10871017	1	VARIABLE PUMP A4VG SPF ⇨ ❑ 300	VERSTELLPUMPE
105	11182664	1	TWO-STAGE PUMP A4VG+A4VG SPF ⇨ ❑ 301	ZWEIFACHPUMPE
106	11210201	1	GEAR PUMP WP09 SPF ⇨ ❑ 302	ZAHNRADPUMPE

Pos.	Item	Quantity	Description	Bezeichnung
107	10871047	1	TRIPLE PUMP A4VG+A11VO+A10VN SPF ⇨ ❑ 303	DREIFACHPUMPE
108	10871282	1	VARIABLE PUMP A11VLO SPF ⇨ ❑ 318	VERSTELLPUMPE
109	10870964	1	GEAR PUMP WP09 SPF ⇨ ❑ 326	ZAHNRADPUMPE
110	10870965	1	GEAR PUMP FP12 ⇨ ❑ 327	ZAHNRADPUMPE
115	10287382	2	VIBRATION DAMPER 60NR39	SCHWINGUNGSDAEMPFER
116	10875547	2	VIBRATION DAMPER 72NR39	SCHWINGUNGSDAEMPFER
117	10117226	4	DISTANCE SLEEVE 11X18X10 St Rm>350N	DISTANZHUELSE
120	10020520	4	LASHING STRAP 0,75MX18MM	ZURRGURT
150	789011908	2	OIL DRAIN PLUG M26X1,5	OELABLASSSCHRAUBE
151	477704808	1	STOP PLUG VSTIM42X2ED CR6-FREI	STOPFEN
180	774227908	1	HOSE CLAMP 86-91X25 ST	SCHLAUCHSCHELLE
181	774208008	4	HOSE CLAMP 60/50-70/12 W3	SCHLAUCHSCHELLE
183	774214308	4	HOSE CLAMP 70/60-80/12 W3	SCHLAUCHSCHELLE
184	774218808	6	HOSE CLAMP 90/80-100/12 W3	SCHLAUCHSCHELLE
185	550838008	4	HOSE CLAMP 50/40-60/12 W3	SCHLAUCHSCHELLE
186	774206408	2	HOSE CLAMP 80/70-90/12 W3	SCHLAUCHSCHELLE
190	11160668	4	CLAMP-HALF L 3 R 22 AL	KLEMMHAELFTE
200	97055159	1	CHARGE AIR PIPE G-ALST10MG SPF	LADELUFTROHR
201	97050878	1	CHARGE AIR PIPE DN85 STAHL SPF	LADELUFTROHR
202	97053616	1	SUCTION PIPE OIL G-ALSI10MG SPF	SAUGROHR-OEL
203	97032263	1	SUCTION PIPE OIL G-ALSI10MG SPF	SAUGROHR-OEL
204	976388708	1	SUCTION PIPE OIL SPF	SAUGROHR-OEL
205	380057108	6	CLAMPING PIECE 12 G20MN5 FE//ZN20//C	KLEMMSTUECK
206	10871016	1	FLANGE FITTING FLK40-35-40,H78 ST A3C	FLANSCHARMATUR
207	97065544	1	SUCTION PIPE OIL G-ALSI10MG SPF	SAUGROHR-OEL
250	97050893	1	COOLING WATER HOSE 55/65X653 PER-E	KUEHLWASSERSCHLAUCH
251	97050894	1	COOLING WATER HOSE 55/65X1240 PER-E	KUEHLWASSERSCHLAUCH
252	551710608	1	HOSE 85X200 SILIKON	SCHLAUCH
253	973519308	1	SHAPED HOSE-OIL NBR	FORMSCHLAUCH OEL
256	97032592	1	CHARGE AIR CORRUGATED HOSE	LADELUFTWELLSCHLAUCH
300	10875488	3	BUTTON HEAD SCREW ISO 7380-2 M6X12 0	HALBRUNDKOPFSCHRAUBE
301	12226910	5	HEX SCREW ISO 4017 M16X65 8.8 FLZN SP	SECHSKANTSCHRAUBE
302	10875591	4	SOCKET HEAD SCREW ISO 4762 M6X40 8.8	ZYLINDERSCHRAUBE
303	10876067	2	BUTTON HEAD SCREW AEHNL.ISO 7380-2	HALBRUNDKOPFSCHRAUBE
304	11840297	2	HEX SCREW EN 1665 M6X16 8.8 480H SPF	SECHSKANTSCHRAUBE
305	10875485	6	BUTTON HEAD SCREW AEHNL.ISO 7380-2	HALBRUNDKOPFSCHRAUBE
307	11651767	19	HEX SCREW ISO 4017 M8X20 8.8 480H SPF	SECHSKANTSCHRAUBE
308	10875599	4	SOCKET HEAD SCREW ISO 4762 M8X25 8.8	ZYLINDERSCHRAUBE
309	11826527	4	HEX SCREW ISO 4017 M8X30 8.8 480H SPF	SECHSKANTSCHRAUBE
311	10197831	2	HEX SCREW ISO 4017 M8X25 8.8 ZNNI-480	SECHSKANTSCHRAUBE
312	12222407	2	SOCKET HEAD SCREW ISO 4762 M10X16 8	ZYLINDERSCHRAUBE
313	10197730	12	HEX SCREW ISO 4017 M10X20 8.8 ZNNI-480	SECHSKANTSCHRAUBE
314	11631860	2	HEX SCREW ISO 4014 M10X50 8.8 FLZN SP	SECHSKANTSCHRAUBE
315	10415162	1	SOCKET HEAD SCREW ISO 4762 M10X25 8	ZYLINDERSCHRAUBE
316	11626706	24	HEX SCREW ISO 4017 M10X40 8.8 FLZN SP	SECHSKANTSCHRAUBE
317	10562617	2	SOCKET HEAD SCREW ISO 4762 M10X100 8	ZYLINDERSCHRAUBE
318	10875796	2	HEX SCREW ISO 4014 M10X120 8.8 FLZN SP	SECHSKANTSCHRAUBE
319	12208101	2	SOCKET HEAD SCREW ISO 4762 M10X120 8	ZYLINDERSCHRAUBE
320	10876074	2	SOCKET HEAD SCREW ISO 4762 M10X130 8	ZYLINDERSCHRAUBE
325	11658892	3	HEX SCREW ISO 4017 M12X25 8.8 FLZN SP	SECHSKANTSCHRAUBE
326	12100096	8	HEX SCREW ISO 4017 M12X28 8.8 FLZN SP	SECHSKANTSCHRAUBE
327	11631742	4	HEX SCREW ISO 4017 M12X30 8.8 FLZN SP	SECHSKANTSCHRAUBE
328	11642349	4	HEX SCREW ISO 4017 M12X35 8.8 FLZN SP	SECHSKANTSCHRAUBE
329	11840136	1	HEX SCREW ISO 4017 M12X50 8.8 FLZN	SECHSKANTSCHRAUBE
330	11840139	4	HEX SCREW ISO 4014 M12X90 8.8 FLZN SP	SECHSKANTSCHRAUBE
331	11645384	2	HEX SCREW ISO 4017 M12X40 8.8 FLZN SP	SECHSKANTSCHRAUBE

Pos.	Item	Quantity	Description	Bezeichnung
332	10180175	8	SOCKET HEAD SCREW DIN 7984 M12X25 08	ZYLINDERSCHRAUBE
335	4065240	2	HEX SCREW ISO 4017 M16X20 8.8 FLZN SP	SECHSKANTSCHRAUBE
336	540511908	3	SOCKET HEAD SCREW DIN 7984 M16X35 0	ZYLINDERSCHRAUBE
337	12224014	3	SOCKET HEAD SCREW ISO 4762 M16X45 8	ZYLINDERSCHRAUBE
338	406608908	6	HEX SCREW ISO 4017 M16X55 10.9 FLZN SP	SECHSKANTSCHRAUBE
340	11642377	8	HEX SCREW ISO 4014 M16X70 8.8 FLZN SP	SECHSKANTSCHRAUBE
345	10875805	4	HEX SCREW ISO 4017 M20X50 8.8 FLZN SP	SECHSKANTSCHRAUBE
350	10197764	6	HEX NUT ISO 4032 M6 10 ZNNI-480H SPF	SECHSKANTMUTTER
351	11693875	17	HEX NUT ISO 4032 M8 8 480H SPF	SECHSKANTMUTTER
376	10875648	5	WASHER ISO 7093-1 6 200HV 480H SPF	SCHEIBE
377	12103465	44	WASHER ISO 7089 8 300HV ZNNI-480H SPF	SCHEIBE
378	420001114	4	WASHER ISO 7089 10 200HV-A4	SCHEIBE
379	10289795	28	WASHER ISO 7089 10 300HV FLZN SPF	SCHEIBE
380	12214460	14	WASHER DIN 7989-2 A 10 100HV FLZN SPF	SCHEIBE
381	10289804	5	WASHER ISO 7089 12 300HV FLZN SPF	SCHEIBE
382	10289806	18	WASHER ISO 7089 16 300HV FLZN SPF	SCHEIBE
383	4600222	4	WASHER EN 14399-6 20 300-370HV FLZN SP	SCHEIBE
384	10197771	2	WASHER ISO 7089 6 200HV ZNNI-480H SPF	SCHEIBE
400	953661008	1	INTAKE 50.0X78 S355J2C+C FE//ZNNI8//CN/	SAUGSTUTZEN
401	976490008	1	INTAKE 82.5X87 S355J2H FE//ZNNI8//CN//T0	SAUGSTUTZEN
402	97053934	2	FLANGE FITTING 101.6X71 S355J2H FE//ZN	FLANSCHVERSCHRAUBUNG
403	979374708	1	FITTING E335	VERSCHRAUBUNG
404	968661408	2	PIPE COMPL.	ROHR KPL.
412	11491125	1	FLANGE FITTING SFL60-50-45 SPF	FLANSCHARMATUR
423	10222436	1	FITTING EV 15L CR6-FREI	VERSCHRAUBUNG
424	7615379	1	FITTING EW 15L CR6-FREE	VERSCHRAUBUNG
425	471034308	2	FITTING XGE20-SM-ED M33X2 CR6-FREI	VERSCHRAUBUNG
430	511502608	2	SAE FLANGE SAE1 1/2-C61-M12	SAE-FLANSCH
(1)	510587908	1	O-RING ARP 568 47,22X3,53 NBR90	O-RING
432	510598408	6	SAE-FLANGE HALF SAE2-C61-M14 CR6-FRE	SAE-FLANSCHHAELFTE
440	501201708	1	O-RING ARP 568 28,17X3,53 NBR70	O-RING
442	726405908	1	O-RING DIN 3771 44X3 NBR70	O-RING
443	571898008	1	SEALING RING	DICHTRING
445	726421608	3	O-RING ARP 568 56,74X3,53 NBR70	O-RING
446	7381361	1	O-RING ISO 3601-1 85,32X3,53 FKM 70 A,GN	O-RING
447	726426008	3	O-RING 125X3 NBR70	O-RING
448	518578108	1	O-RING 150X3 NBR70	O-RING
449	502933508	1	O-RING 24X2,5 NBR70	O-RING
450	726412308	2	O-RING 65X3 NBR70	O-RING
451	7380970	1	O-RING AEHNL.ISO 3601-1 63,17X2,62 FKM	O-RING
452	7380605	1	O-RING ISO 3601-1 101,27X2,62 FKM 70 A,B	O-RING

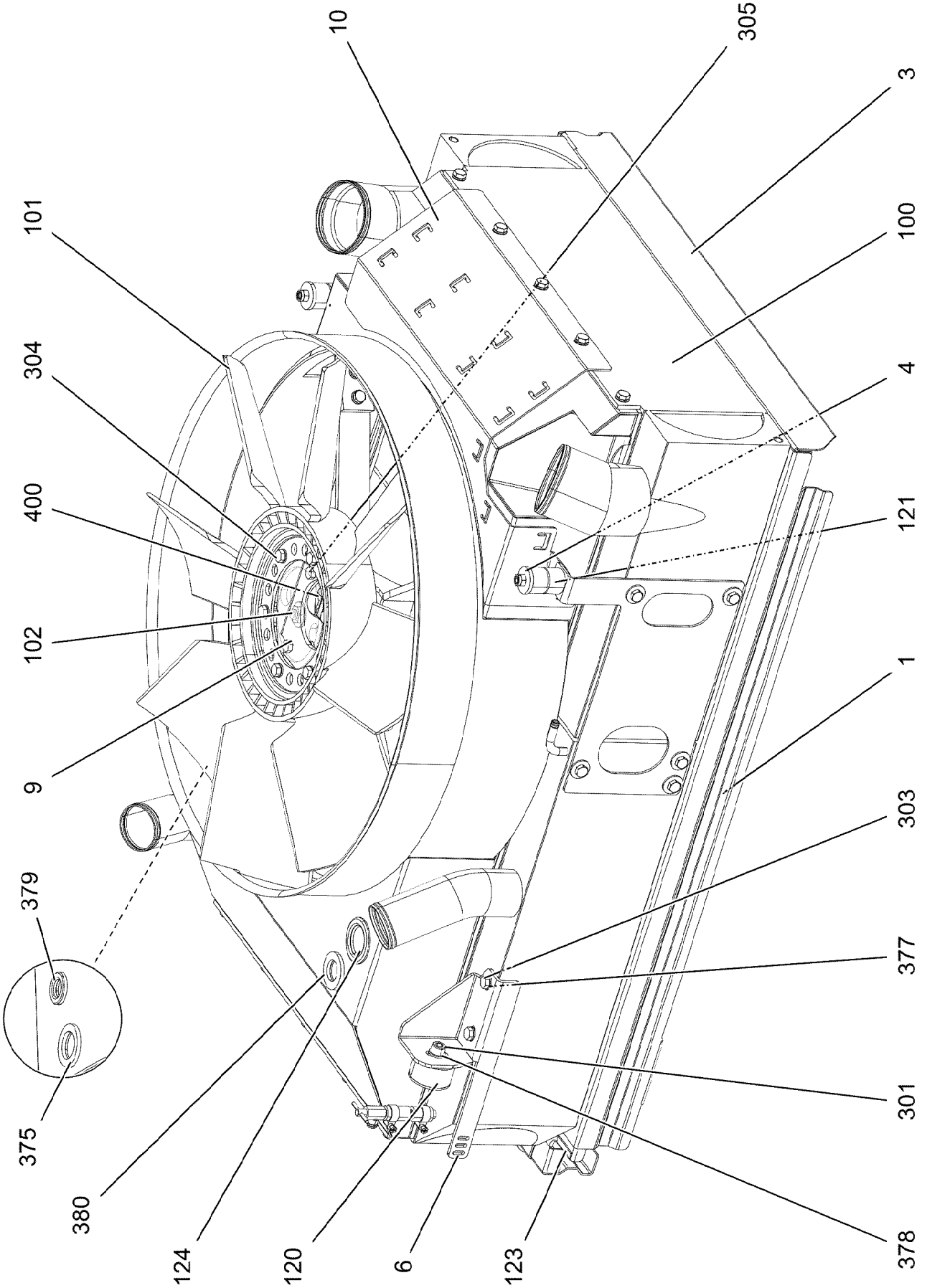
10
305
3
101
100
304
4
400
121
102
1
9
303
379
377
375
301
380
378
124
120
6
123

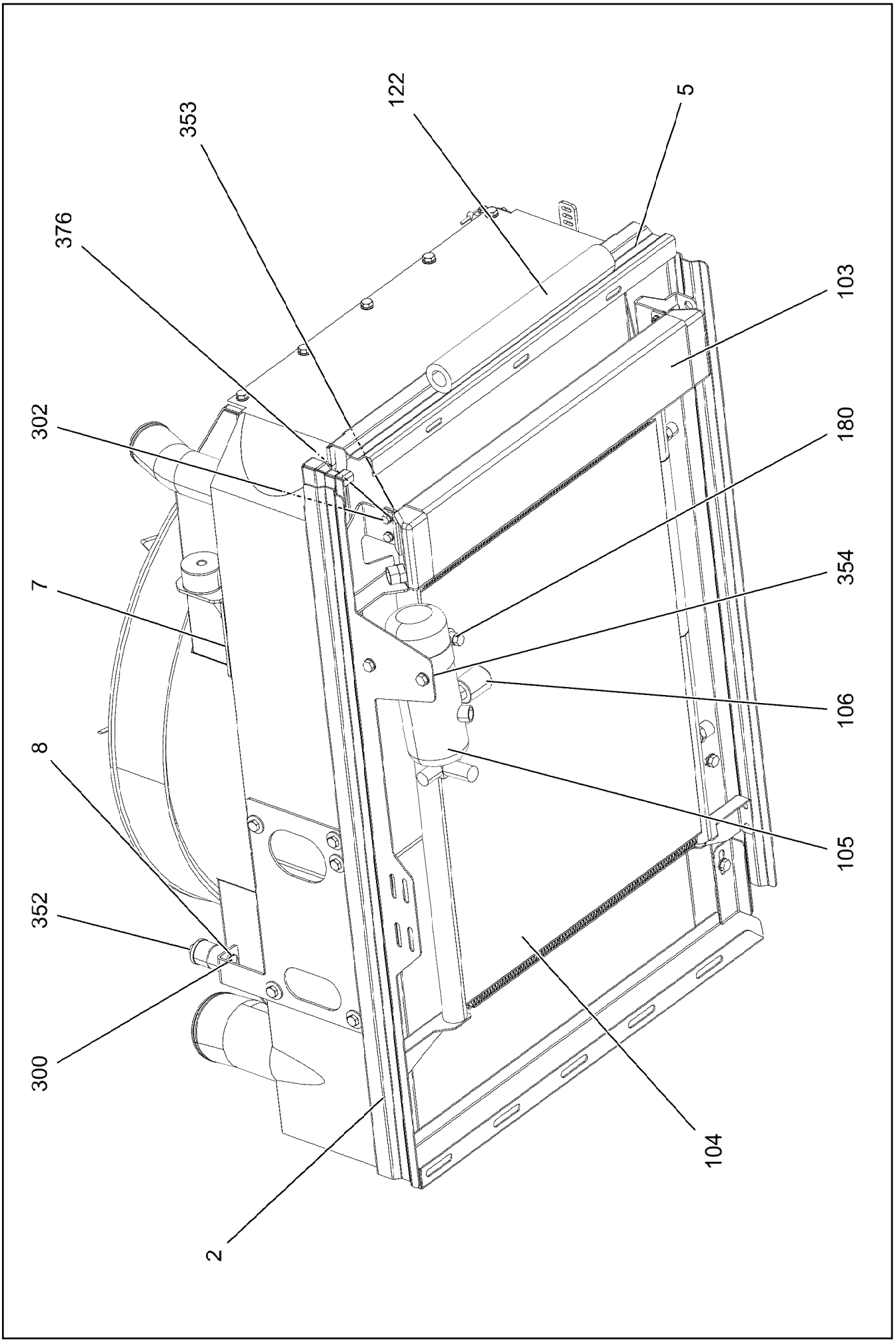
122
5
353
376
103
302
180
354
7
106
8
105
352
300
104
2

Pos.	Item	Quantity	Description	Bezeichnung
1	968981408	1	SIDE PANEL WELDED	SEITENBLECH SCHWK.
2	968981508	1	SIDE PANEL WELDED	SEITENBLECH SCHWK.
3	97059376	1	PLATE 2X779X198 ALMG3 H111 SPF	BLECH
4	972353808	2	PLATE 4X32X32 ALMG3 H111	BLECH
5	97050762	1	PLATE 2X771X357 ALMG3 H111	BLECH
6	97050763	1	PLATE 4X215X208 S315MC FE//ZNNI8//CN//T	BLECH
7	97050764	1	PLATE 4X117X158 S315MC FE//ZNNI8//CN//T	BLECH
8	973618208	2	WASHER 3X21X21 DC01 FE//ZNNI8//CN//T0	SCHEIBE
9	970003708	1	FLANGE 25.0X16 9 42CRMO4+QT	FLANSCH
10	97050960	1	PLATE 2X601X334 ALMG3 H111	BLECH
100	97118133	1	COMBINATED RADIATOR	KOMBIKUEHLER
101	550639508	1	RING FAN D=654	RINGLUEFTER
102	10429930	1	GEAR WHEEL MOTOR AZMF 16CM³/U SPF ⇨ ❑ 292	ZAHNRADMOTOR
103	550628308	1	OIL AIR COOLER	OEL-LUFTKUEHLER
104	10815368	1	CAPACITOR	KONDENSATOR
105	571489008	1	DRYER	TROCKNER
106	571489108	1	PRESSURE SWITCH 1,5-26 BAR	DRUCKSCHALTER
120	726905008	2	CIRCULAR BEARING C50X30XM10	RUNDLAGER
121	97025484	4	BUFFER 30X20 GUMMI 50SH	PUFFER
122	11006584	4	INSULATING HOSE ISO 3302-1 E3 DN40 10 E	ISOLIERSCHLAUCH
123	262103908	0.5	EDGE PROTECTION 1-2X9,5X6,5	KANTENSCHUTZ
124	602717308	1	DIAPHRAGM GROMMET 35,5/47/53 TPE SC	MEMBRAN-DURCHFUEHRUNG
180	774209708	1	RETAINER CLIP 75/25	SPANNSCHELLE
300	10181375	2	CUP HEAD SQUARE NECK BOLT DIN 603 M8	FLACHRUNDSCHRAUBE
301	12222407	2	SOCKET HEAD SCREW ISO 4762 M10X16 8	ZYLINDERSCHRAUBE
302	11657360	4	HEX SCREW ISO 4017 M6X16 8.8 480H SPF	SECHSKANTSCHRAUBE
303	11651767	4	HEX SCREW ISO 4017 M8X20 8.8 480H SPF	SECHSKANTSCHRAUBE
304	11651612	18	HEX SCREW ISO 4017 M8X16 8.8 480H SPF	SECHSKANTSCHRAUBE
305	11826527	4	HEX SCREW ISO 4017 M8X30 8.8 480H SPF	SECHSKANTSCHRAUBE
352	11656731	6	HEX NUT ISO 7040 M8 8 480H SPF	SECHSKANTMUTTER
353	10197764	4	HEX NUT ISO 4032 M6 10 ZNNI-480H SPF	SECHSKANTMUTTER
354	11693875	2	HEX NUT ISO 4032 M8 8 480H SPF	SECHSKANTMUTTER
375	10179376	1	WASHER DIN 1441 26 -St FLZN SPF	SCHEIBE
376	10197771	8	WASHER ISO 7089 6 200HV ZNNI-480H SPF	SCHEIBE
377	12103465	28	WASHER ISO 7089 8 300HV ZNNI-480H SPF	SCHEIBE
378	10289795	2	WASHER ISO 7089 10 300HV FLZN SPF	SCHEIBE
379	10180180	1	WASHER EN 14399-6 16 300-370HV-ST FLZ	SCHEIBE
380	10289810	1	WASHER ISO 7089 24 300HV FLZN SPF	SCHEIBE
400	510146208	1	SUCTION FLANGE CR6-FREI	SAUGFLANSCH
(1)	570322408	1	O-RING ARP 568 23,47x2,62 NBR70	O-RING

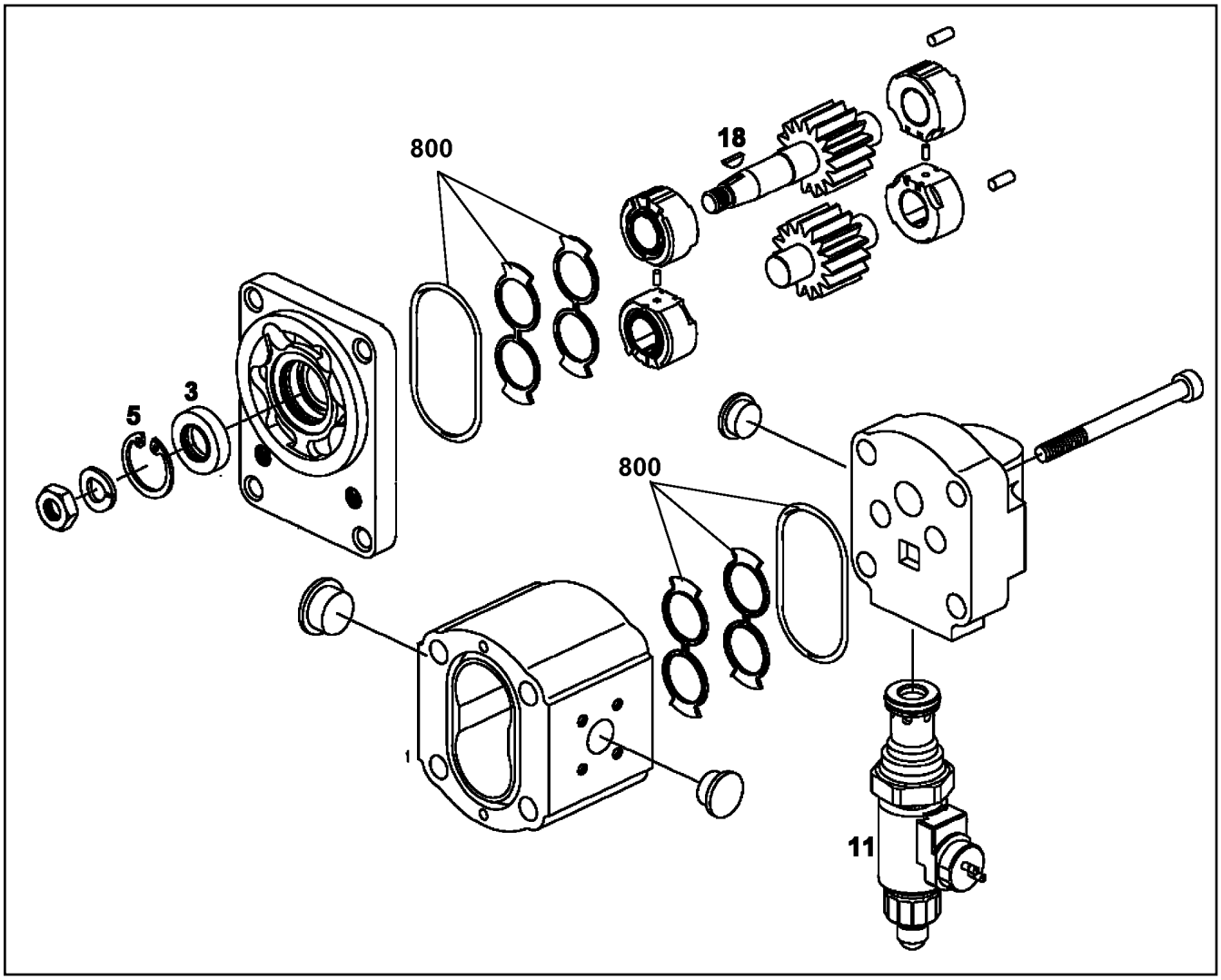

Pos.	Item	Quantity	Description	Bezeichnung
3	10335855	1	SHAFT SEAL	WELLENDICHTRING
5	428100708	1	LOCKING RING DIN 472 30X1,2	SICHERUNGSRING
11	10492431	1	PRESSURE LIMITING VALVE ⇨ ❑ 293	DRUCKBEGRENZUNGSVENTIL
18	570435508	1	WOODRUFF KEY DIN 6888 3X5 ST.60-2K	SCHEIBENFEDER
800	10331947	1	SEAL KIT	DICHTUNGSSATZ

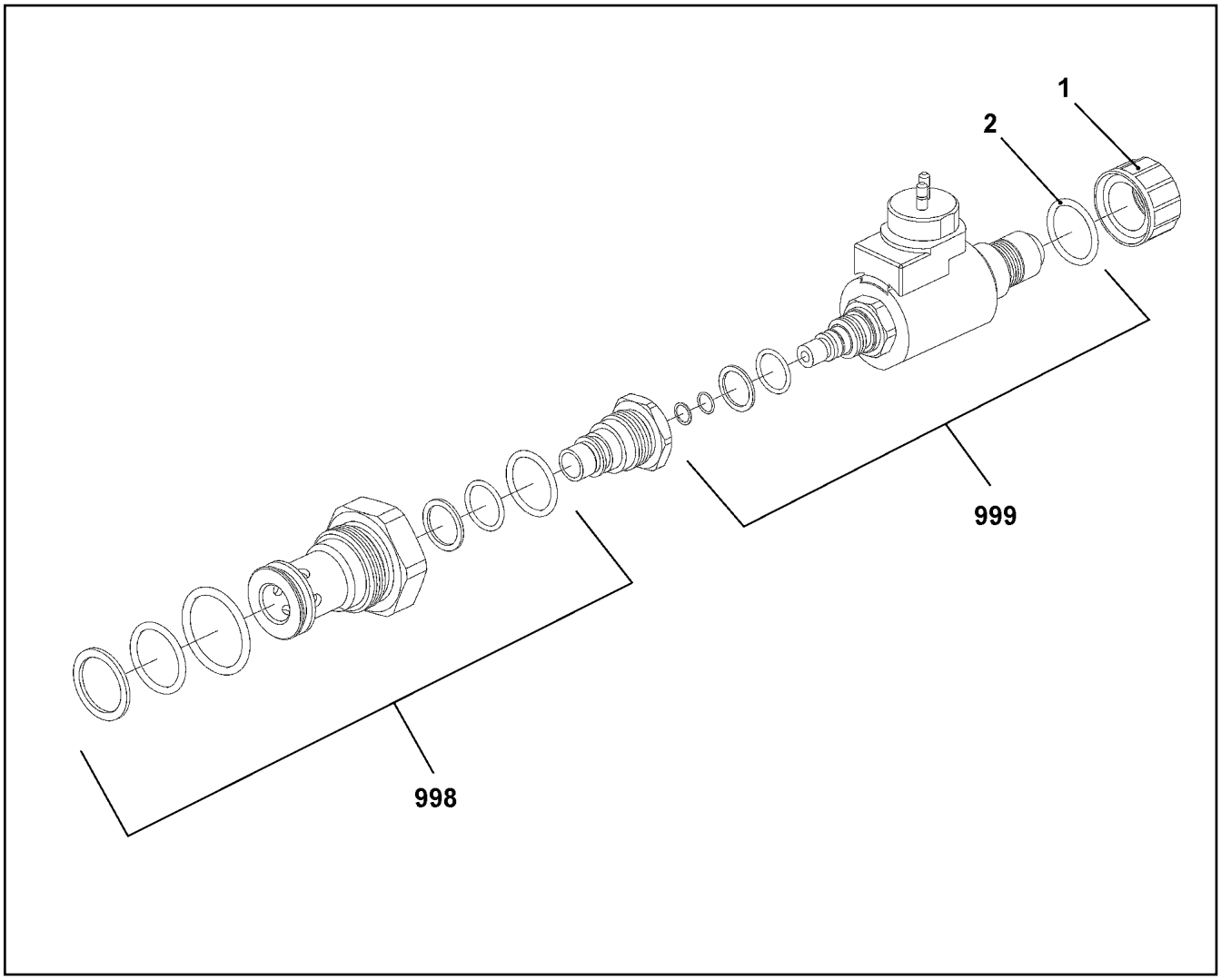

Pos.	Item	Quantity	Description	Bezeichnung
1	10219618	1	NUT	MUTTER
2	10219619	1	O-RING 19X2,5 FKM80	O-RING
998	10331946	1	SEAL KIT	DICHTSATZ
999	10219620	1	SEAL KIT	DICHTSATZ

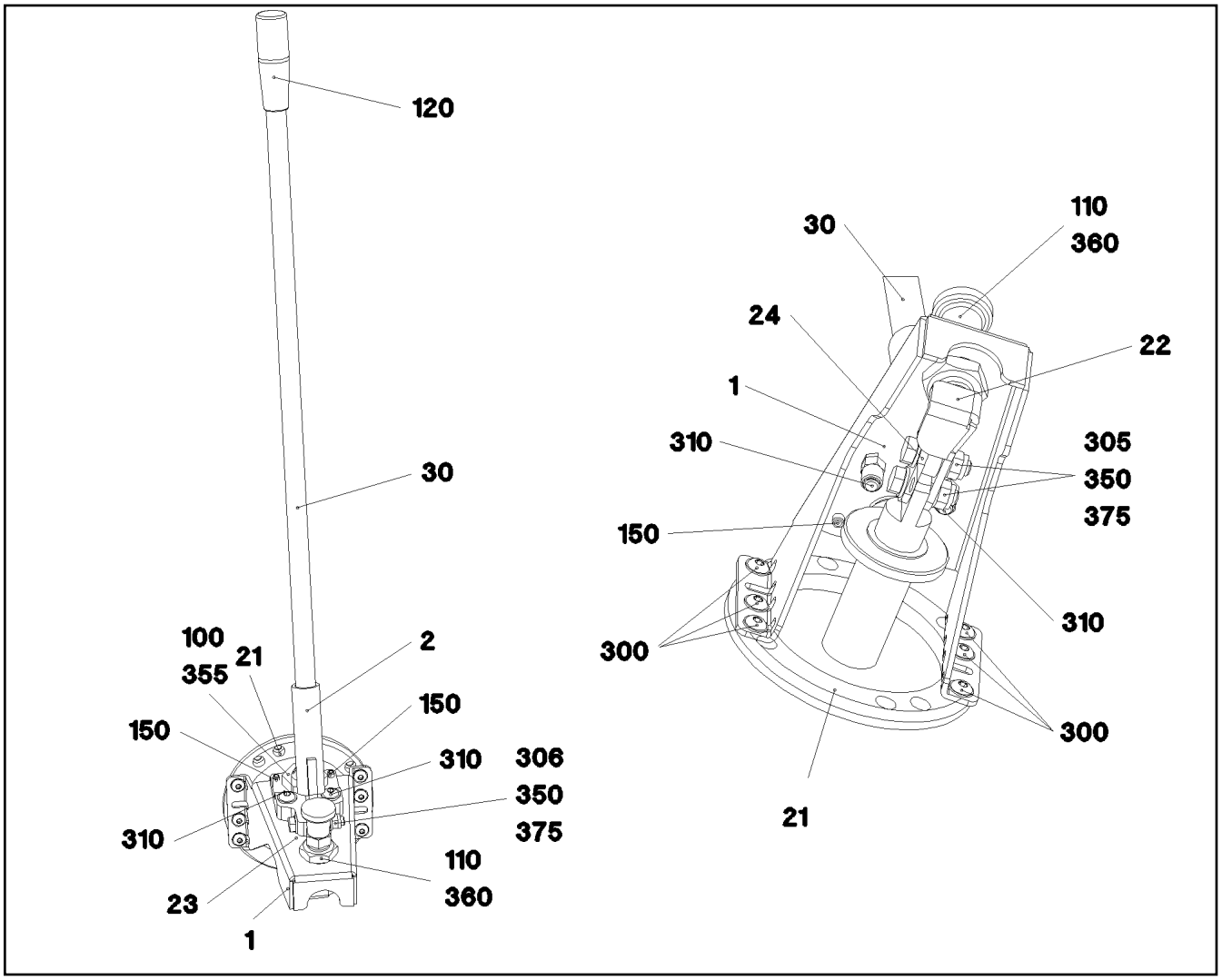

Pos.	Item	Quantity	Description	Bezeichnung
1	965426208	1	CLAMP WELDED CONST. FE//ZNNI8//CN//T0	HALTER SCHWK.
2	965426308	1	LEVER WELDED FE//ZNNI8//CN//T0	HEBEL SCHWK.
21	97032260	1	FLANGE 10X137X137 S355MC FE//ZNNI8//C	FLANSCH
22	978554708	1	BUTT STRAP 4X95X52 S315MC FE//ZNNI8//C	LASCHE
23	978361308	1	PLATE 15X90X60 S355MC FE//ZNNI8//CN//T	BLECH
24	978361008	1	BUTT STRAP 4X40X20 S315MC FE//ZNNI8//C	LASCHE
30	978361608	1	ROD 18.0X700 E235+N	STANGE
100	240191502	1	THRUST PIECE	DRUCKSTUECK
110	11001935	1	STOP BOLT CK12X67X15 NIROSTA	RASTBOLZEN
120	704004608	1	CYLINDER HANDLE	ZYLINDERGRIFF
150	10876162	2	DOWEL PIN ISO 8752 6X20 480H SPF	SPANNSTIFT
300	10875488	6	BUTTON HEAD SCREW ISO 7380-2 M6X12 0	HALBRUNDKOPFSCHRAUBE
305	11826527	2	HEX SCREW ISO 4017 M8X30 8.8 480H SPF	SECHSKANTSCHRAUBE
306	11651580	1	HEX SCREW ISO 4014 M8X45 8.8 480H SPF	SECHSKANTSCHRAUBE
310	10182032	2	BUTTON HEAD SCREW ISO 7380-2 M8X35 0	HALBRUNDKOPFSCHRAUBE
350	10875614	3	HEX NUT DIN 985 M8 8 480H SPF	SECHSKANTMUTTER
355	10179943	1	HEX NUT ISO 4035 M24 05 FLZN SPF	SECHSKANTMUTTER
360	10285016	2	HEX NUT ISO 8675 M20X1,5 A2-035	SECHSKANTMUTTER
375	12103465	6	WASHER ISO 7089 8 300HV ZNNI-480H SPF	SCHEIBE

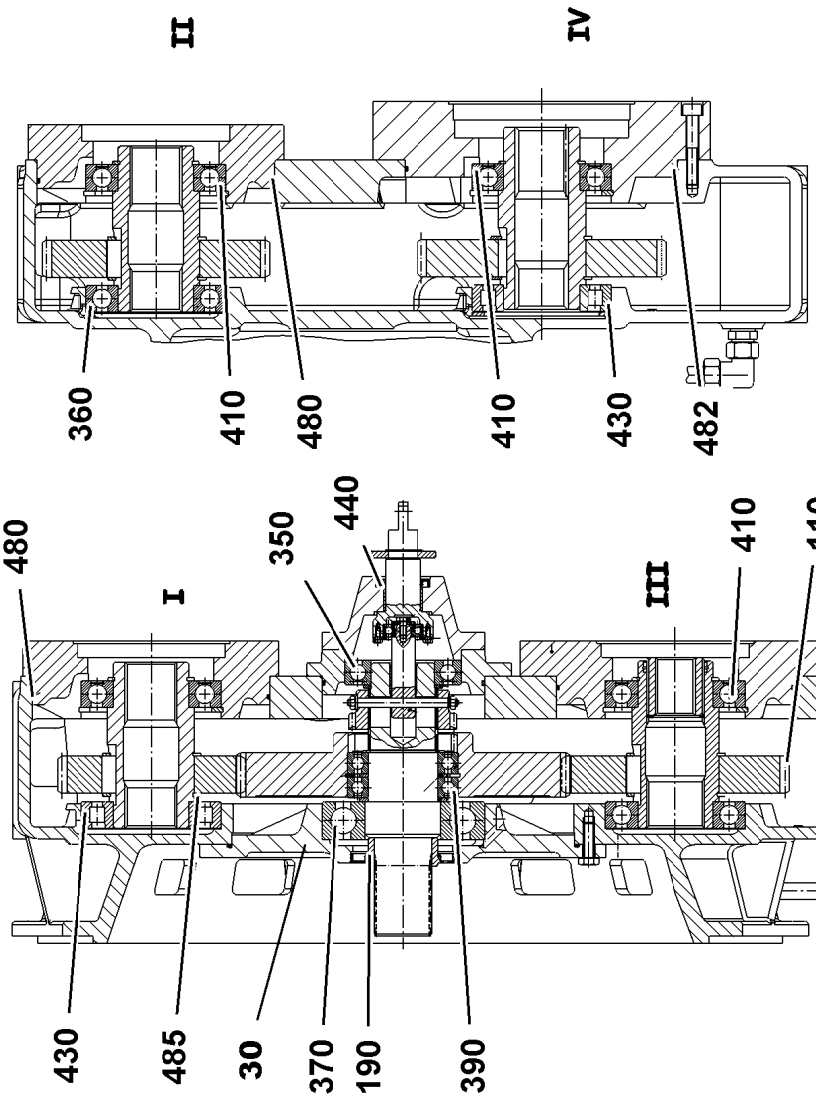
II
IV
360
410
480
410
430
482
480
I
350
440
III
410
110
430
485
30
370
190
390
Schnitt A-A

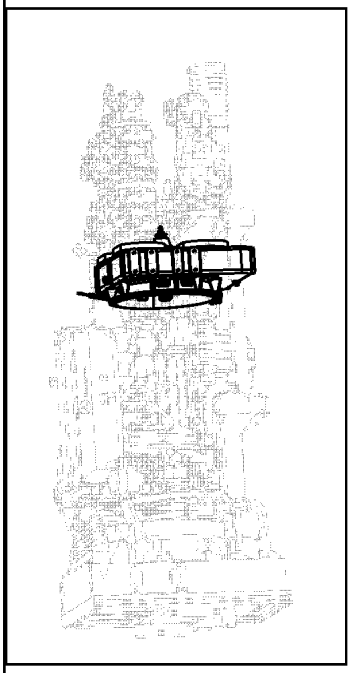

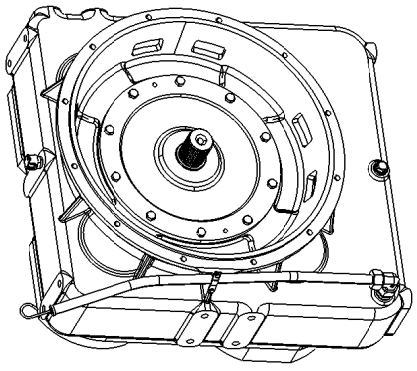

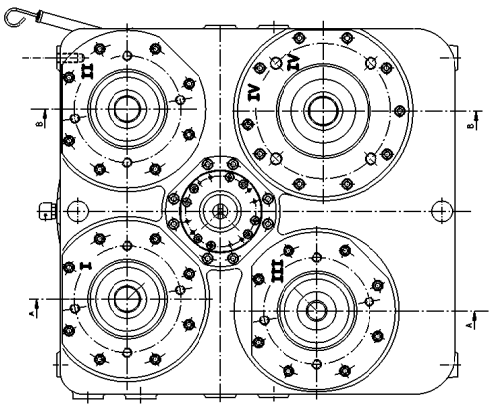
II
IV
IV
I
III
B
B
A
A

Pos.	Item	Quantity	Description	Bezeichnung
30	12106548	1	BEARING CARRIER	LAGERTRAEGER
110	571819108	2	SPUR WHEEL D147/75X32	STIRNRAD
190	571819708	1	SLEEVE D60/50X25	LAUFRING
280	12105369	1	TUBE 18X2X640	ROHR
350	10169236	1	DEEP GROOVE BALL BEARING DIN 625 620	RILLENKUGELLAGER
360	571819808	2	DEEP GROOVE BALL BEARING DIN 625 621	RILLENKUGELLAGER
370	745165608	1	DEEP GROOVE BALL BEARING DIN 625 63	RILLENKUGELLAGER
390	745129508	2	DEEP GROOVE BALL BEARING DIN 625 60	RILLENKUGELLAGER
410	745145308	4	DEEP GROOVE BALL BEARING DIN 625 62	RILLENKUGELLAGER
430	500926208	2	CYLINDRICAL ROLLER BEARING DIN 5412	ZYLINDERROLLENLAGER
440	710035001	1	ROTARY SHAFT LIP SEAL DIN 3760 AS 30X	RADIALWELLENDICHTRING
450	10359142	1	ROTARY SHAFT LIP SEAL DIN 3760 A 60X90	RADIALWELLENDICHTRING
470	7264141	1	O-RING 132X3 NBR 70	O-RING
480	726421501	3	O-RING 200X3 NBR 70	O-RING
482	726429008	1	O-RING 230X3 NBR70	O-RING
485	726417708	1	O-RING 280X3 NBR70	O-RING
840	11989723	1	THREADED ELBOW JOINT G 18 1/2" CR6-F	WINKELVERSCHRAUBUNG

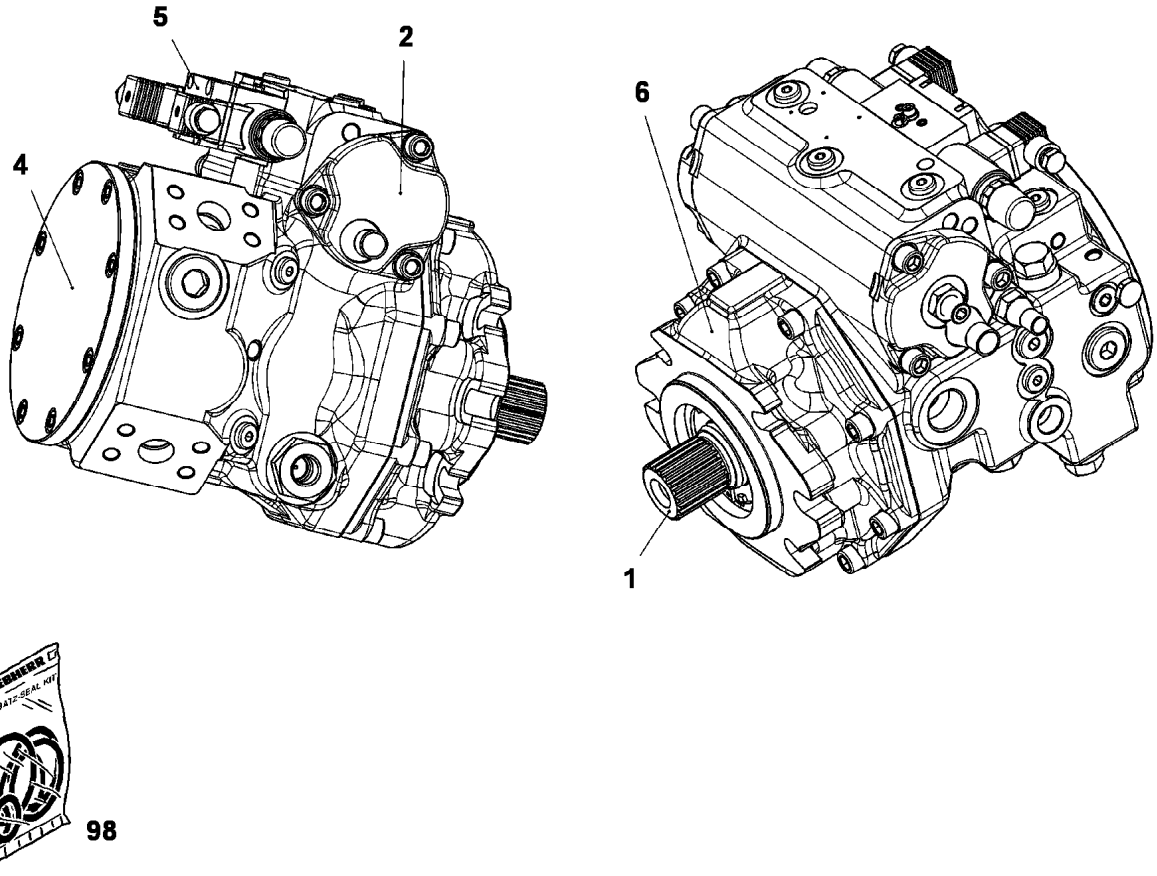

Pos.	Item	Quantity	Description	Bezeichnung
1	11690584	1	DRIVING GEAR	TRIEBWERK
(999)	11600280	1	SEAL KIT	DICHTSATZ
2	11690585	1	ADJUSTMENT	VERSTELLUNG
4	11003121	1	O-RING 127,76X2,62 NBR 70	O-RING
5	11690588	1	CONTROL UNIT ⇨ ❑ 298	ANSTEUERGERAET
6	11631893	1	BEARING FLANGE ⇨ ❑ 299	LAGERFLANSCH
98	11690589	1	SEAL KIT REGULATING VALVE	DS VERSTELLPUMPE

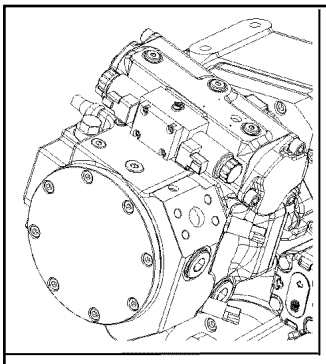

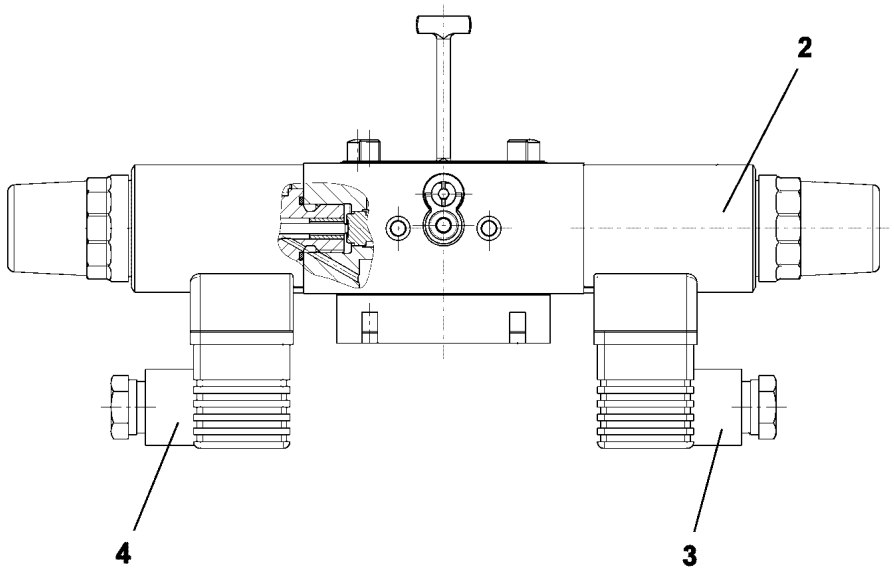

Pos.	Item	Quantity	Description	Bezeichnung
2	10471437	2	PROPORTIONAL MAGNET 24V	PROPORTIONALMAGNET
(1)	10663825	1	RETAINING NUT	BEFESTIGUNGSMUTTER
3	11450030	1	DIE PLUG	LEITUNGSDOSE
4	11450029	1	DIE PLUG	LEITUNGSDOSE

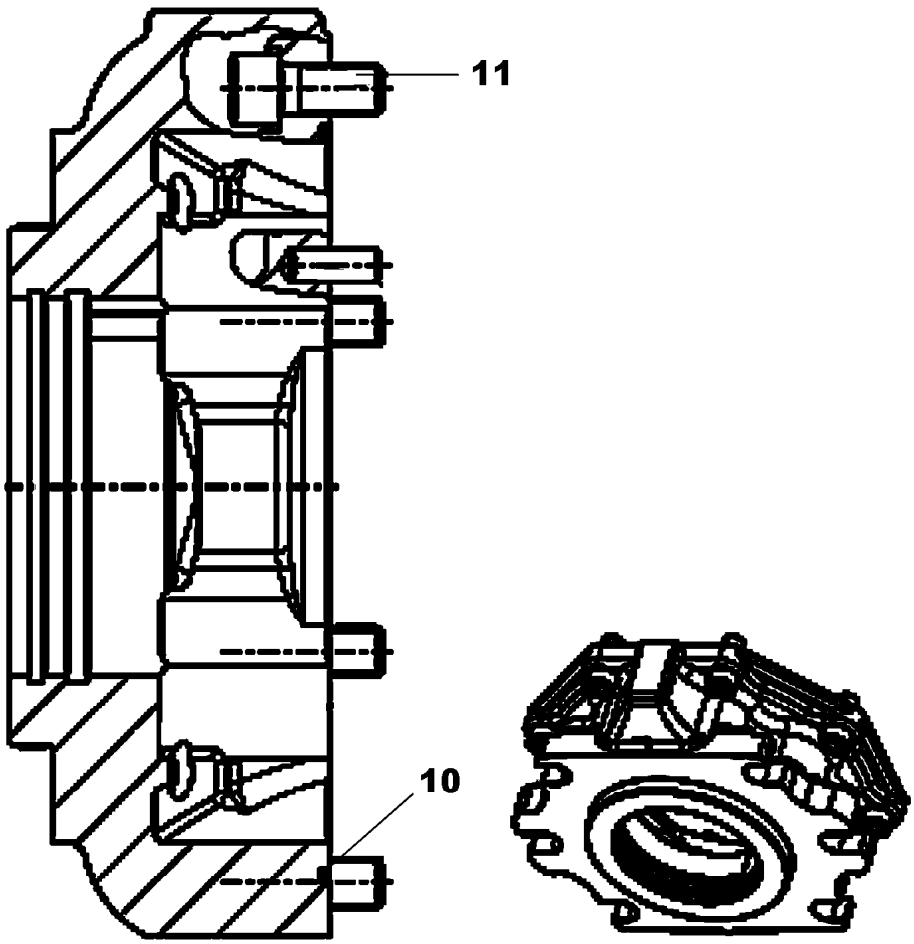

Pos.	Item	Quantity	Description	Bezeichnung
10	571307708	1	O-RING ARP 568 202,79X3,53 NBR70	O-RING
11	11321126	8	SOCKET HEAD SCREW ISO 4762 M12X30 10	ZYLINDERSCHRAUBE

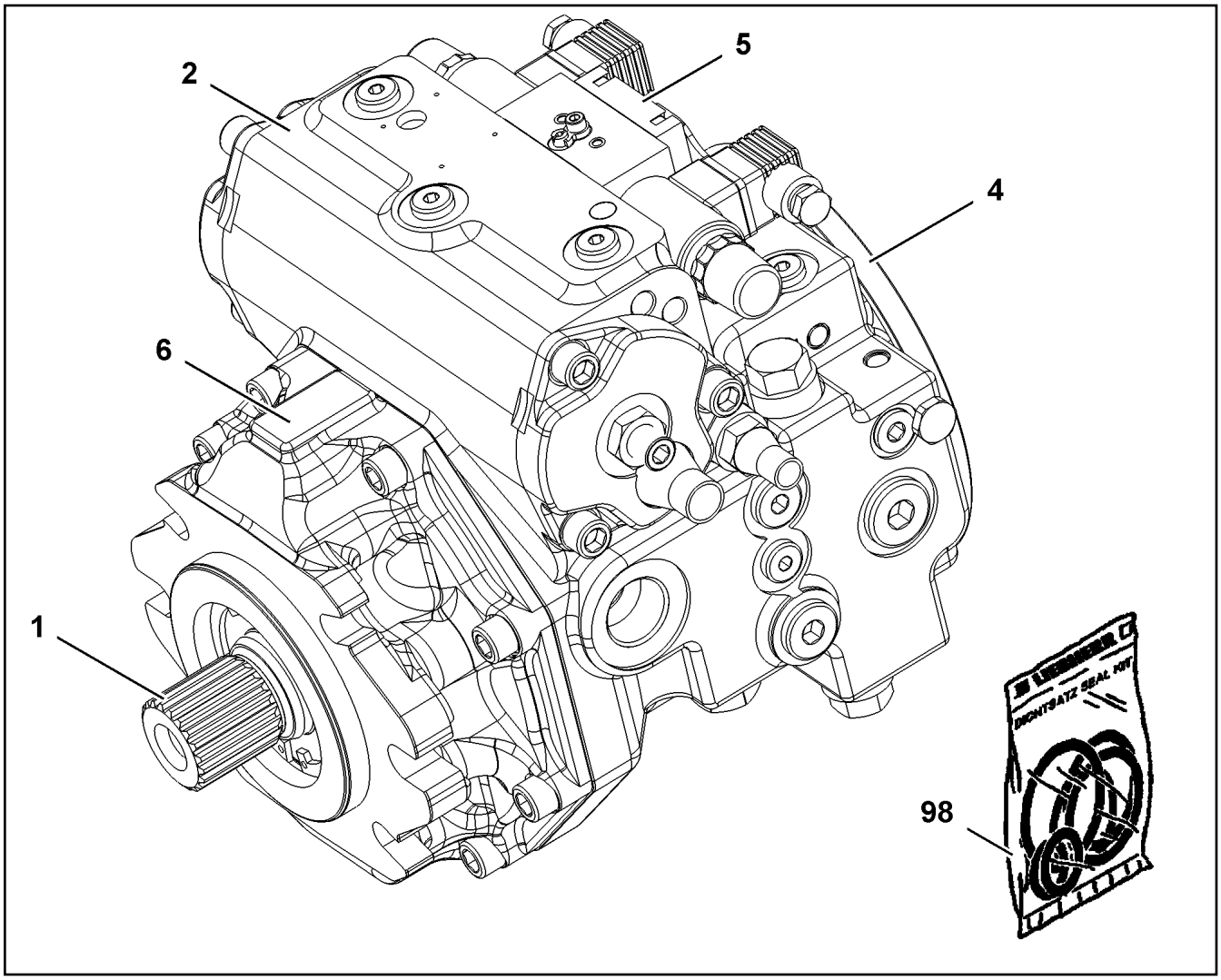

Pos.	Item	Quantity	Description	Bezeichnung
1	11690584	1	DRIVING GEAR	TRIEBWERK
2	11690585	1	ADJUSTMENT	VERSTELLUNG
4	11690587	1	PUMP COVER	PUMPENDECKEL
5	11690588	1	CONTROL UNIT ⇨ ❑ 298	ANSTEUERGERAET
6	11631893	1	BEARING FLANGE ⇨ ❑ 299	LAGERFLANSCH
98	11690589	1	SEAL KIT REGULATING VALVE	DS VERSTELLPUMPE

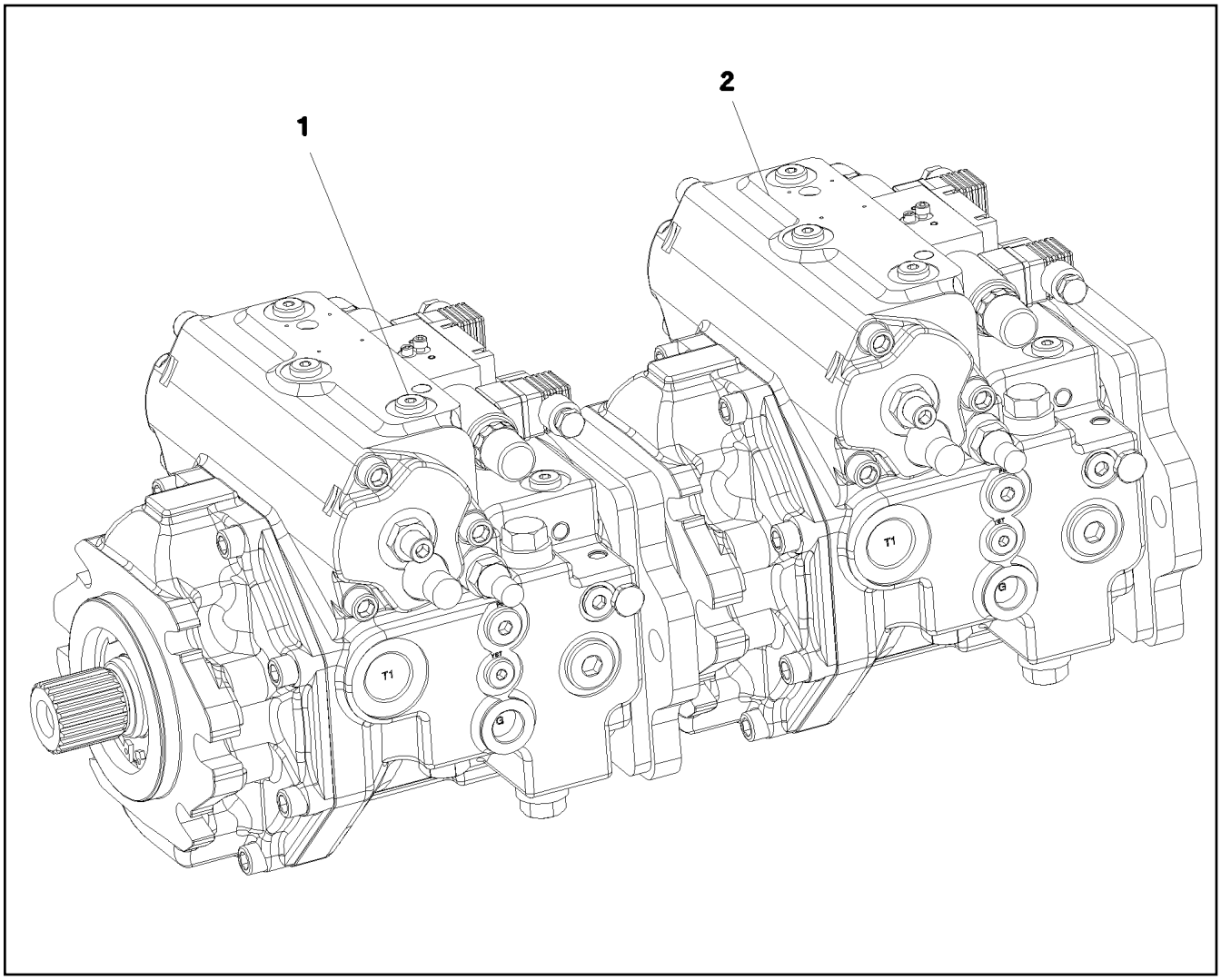

Pos.	Item	Quantity	Description	Bezeichnung
1	11210793	1	VARIABLE PUMP A4VG SPF	VERSTELLPUMPE
(5)	10471437	2	PROPORTIONAL MAGNET 24V	PROPORTIONALMAGNET
2	11210794	1	VARIABLE PUMP A4VG SPF	VERSTELLPUMPE
(5)	10471437	2	PROPORTIONAL MAGNET 24V	PROPORTIONALMAGNET

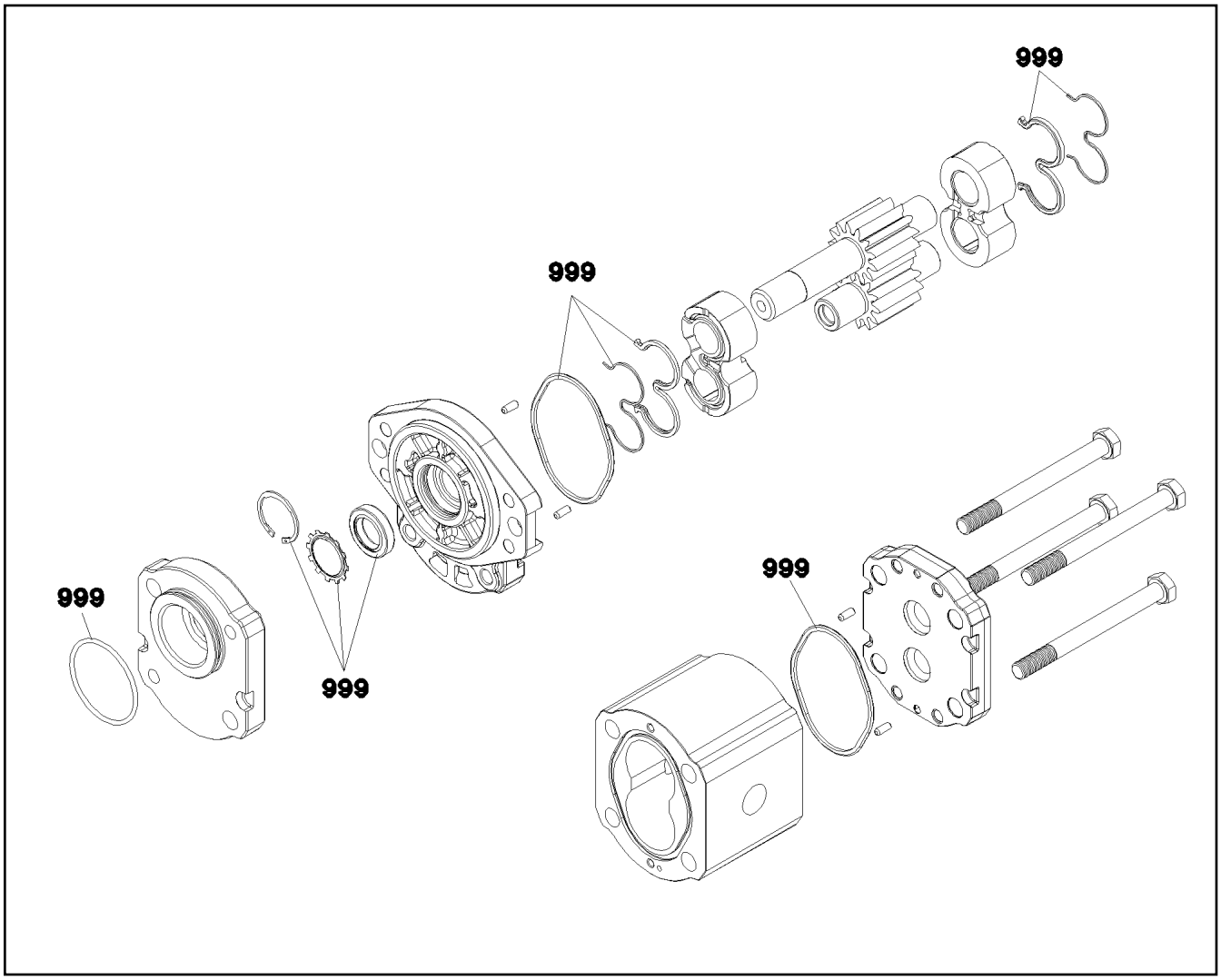

Pos.	Item	Quantity	Description	Bezeichnung
999	10492710	1	SEAL KIT GEAR PUMP	DS ZAHNRADPUMPE

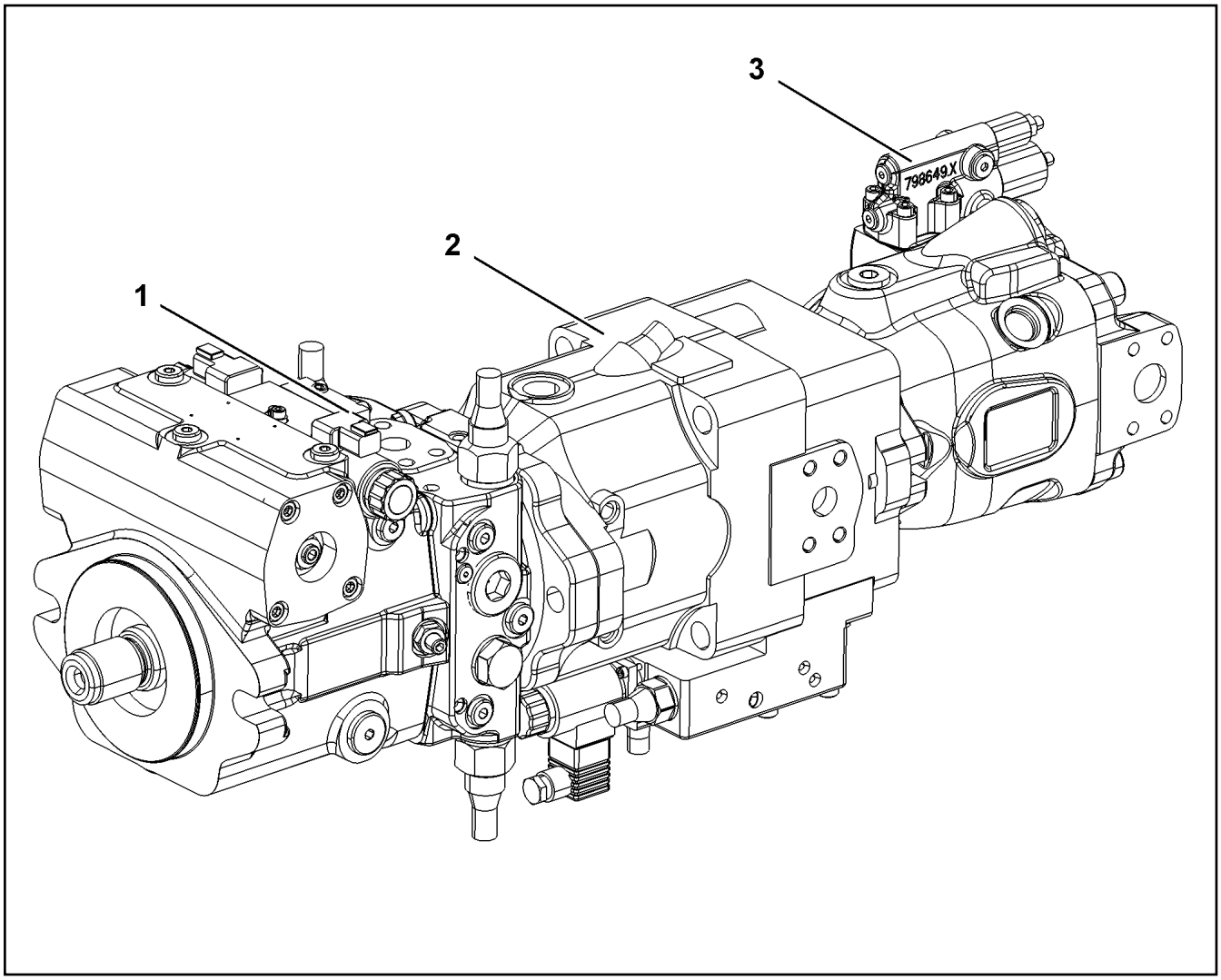

Pos.	Item	Quantity	Description	Bezeichnung
1	11210795	1	VARIABLE PUMP A4VG SPF ⇨ ❑ 304	VERSTELLPUMPE
2	11210798	1	VARIABLE PUMP A11V0 SPF ⇨ ❑ 309	VERSTELLPUMPE
3	10871043	1	VARIABLE PUMP A10VNO SPF ⇨ ❑ 316	VERSTELLPUMPE

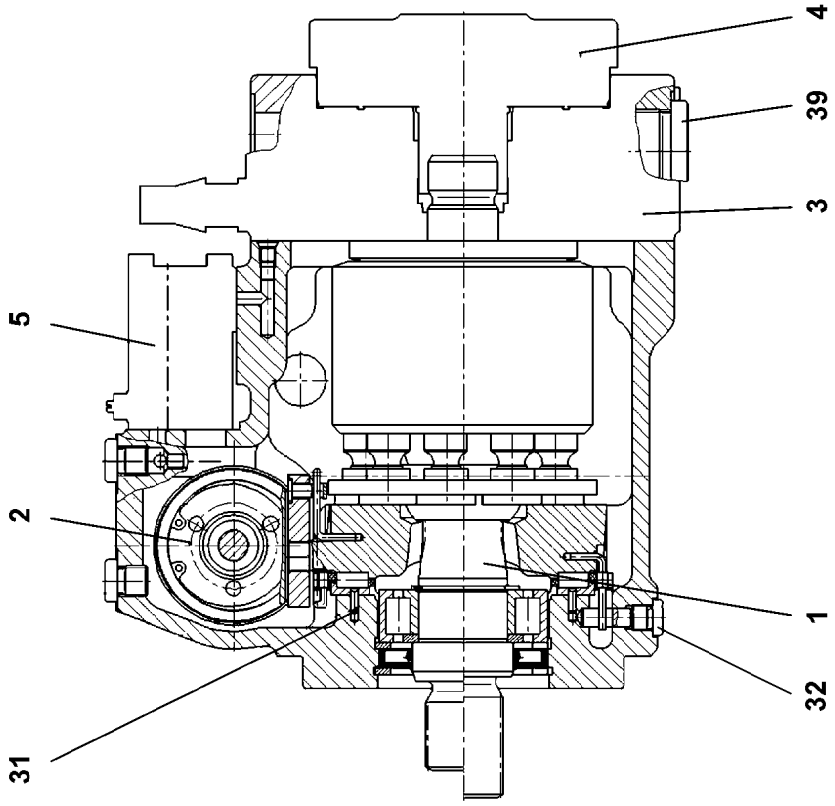
4
39
3
5
2
1
32
31

98

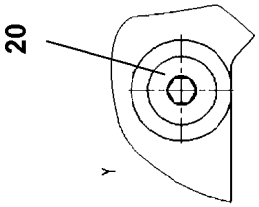
20
Y

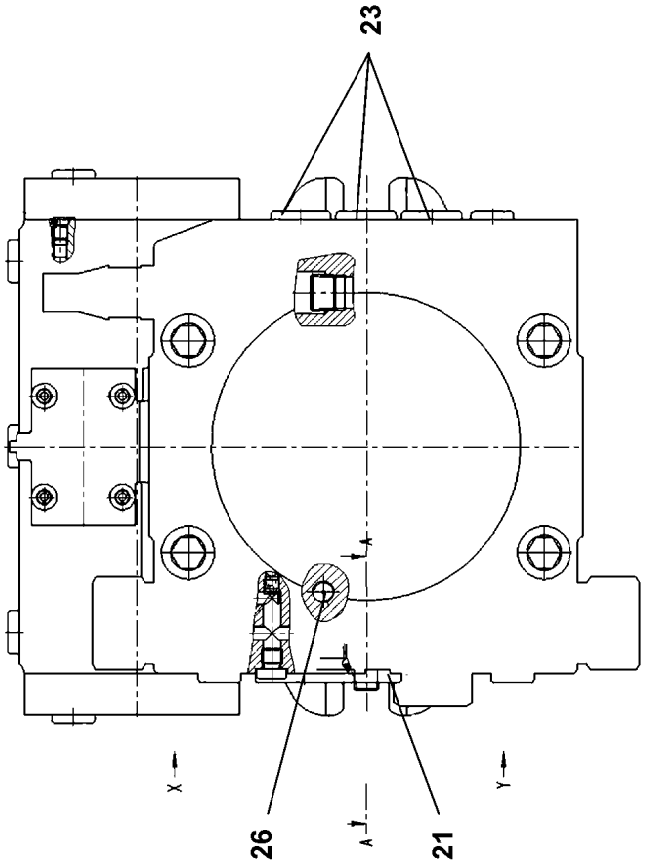
23
X
Y
A
A
26
21

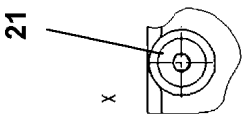
21
X

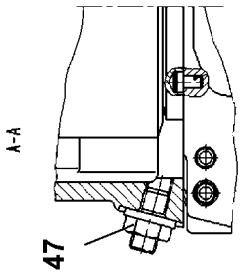
A-A
47

Pos.	Item	Quantity	Description	Bezeichnung
1	10871713	1	DRIVING GEAR	TRIEBWERK
(31)	571899308	1	CYLINDRICAL ROLLER BEARING	ZYLINDERROLLENLAGER
(98)	11494585	1	RADIAL PACKING SET DRIVE SHAFT	DS TRIEBWELLE
2	10326925	1	ADJUSTMENT	VERSTELLUNG
(98)	11494337	1	SEAL KIT	DICHTSATZ
3	10873570	1	CONNECTING PLATE ⇨ ❑ 306	ANSCHLUSSPLATTE
4	10873571	1	PUMP SUPPORT	PUMPENTRAEGER
5	10471384	1	CONTROL UNIT	ANSTEUERGERAET
(2)	10471437	2	PROPORTIONAL MAGNET 24V	PROPORTIONALMAGNET
(98)	10471439	1	SEALING SET CONTROL UNITS	DS ANSTEUERGERAET
20	10000515	1	SCREW PLUG M22X1,5	VERSCHLUSSSCHRAUBE
21	10100429	2	SCREW PLUG M14X1,5	VERSCHLUSSSCHRAUBE
23	10220419	3	SCREW PLUG M18X1,5	VERSCHLUSSSCHRAUBE
26	514584908	1	SCREW PLUG DIN 906 M8X1 5.8	VERSCHLUSSSCHRAUBE
31	10410651	1	DOWEL PIN 3X10	SPANNSTIFT
32	7372626	1	SCREW PLUG M10X1	VERSCHLUSSSCHRAUBE
39	10289931	1	SCREW PLUG M33X2,00	VERSCHLUSSSCHRAUBE
47	7014529	1	SEAL-LOCK-SHOULDER NUT M10X1	SEAL-LOCK-BUNDMUTTER
98	10488696	1	SEAL KIT REGULATING VALVE	DS VERSTELLPUMPE

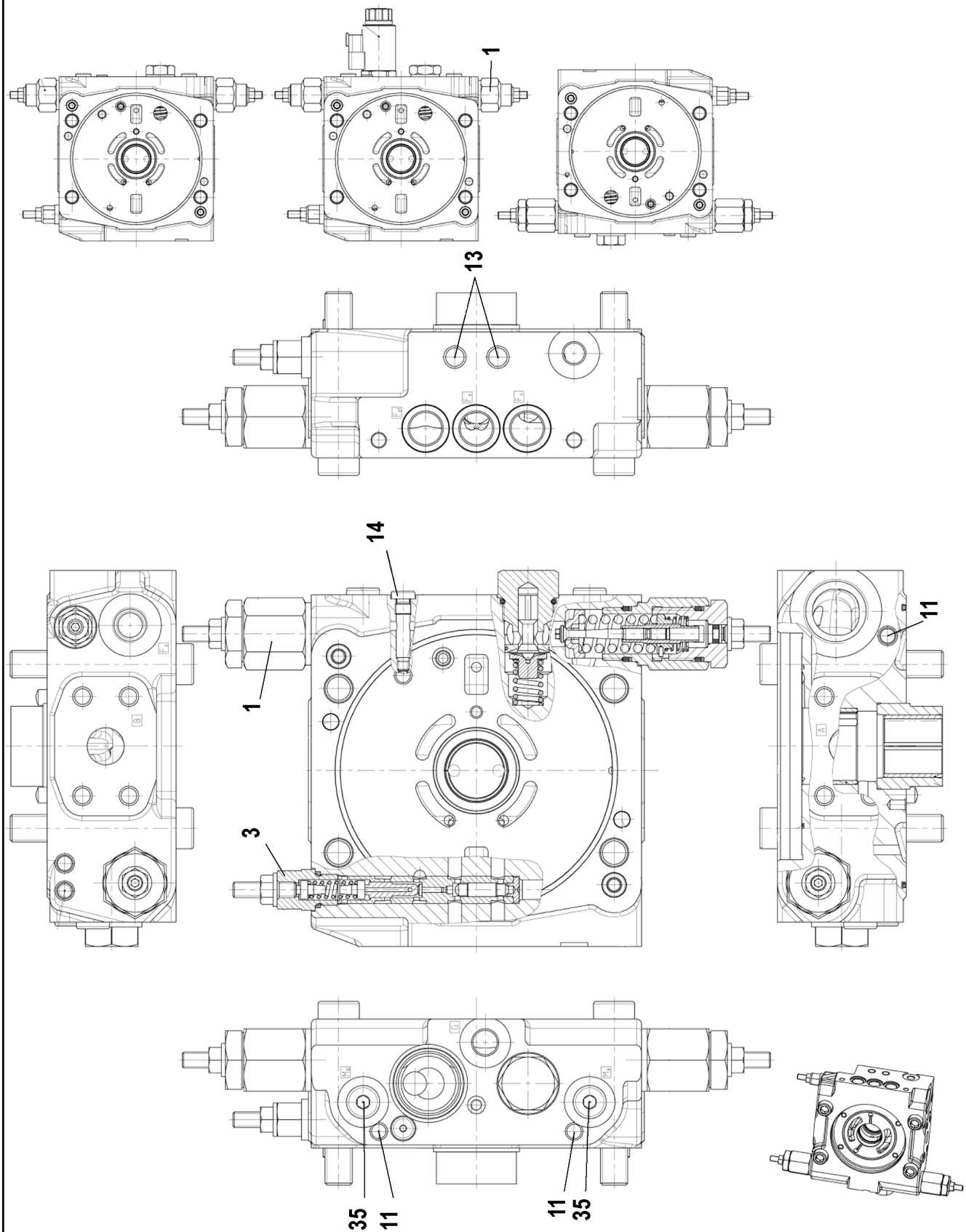

18.7.2022 091925 LIEBHERR	**etk_en_de_047654 LTR 1220** **CONNECTING PLATE** **ANSCHLUSSPLATTE**	❑ 306 (1/2) **10873570**

Pos.	Item	Quantity	Description	Bezeichnung
1	571899408	1	PRESSURE LIMITING VALVE	DRUCKBEGRENZUNGSVENTIL
3	571899508	1	SHUTDOWN VALVE ⇨ ❑ 308	ABSCHALTVENTIL
11	7022127	1	DOUBLE PLUG	DOPPELABREISSSTOPFEN
13	7012971	2	DOUBLE PLUG	DOPPELABREISSSTOPFEN
14	7027497	4	SCREW PLUG M8X1	VERSCHLUSSSCHRAUBE
35	7372624	1	SCREW PLUG M12X1,5	VERSCHLUSSSCHRAUBE

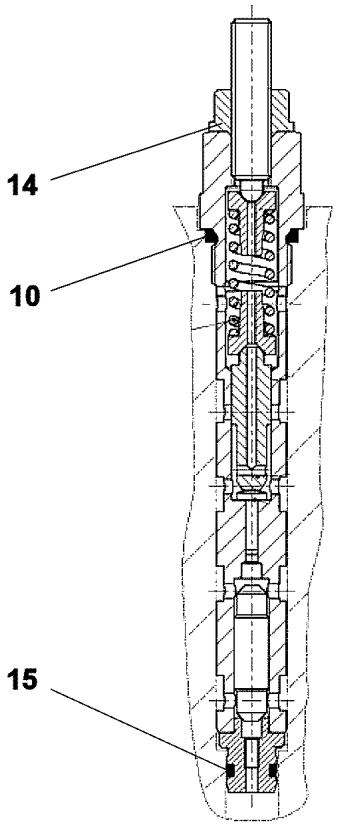

Pos.	Item	Quantity	Description	Bezeichnung
10	510746108	1	O-RING ARP 568 12,37X2,62 NBR90	O-RING
14	7361601	1	GROMMET NUT M8	DICHTUNGSMUTTER
15	510738408	1	O-RING ARP 568 6,07X1,78 NBR90	O-RING

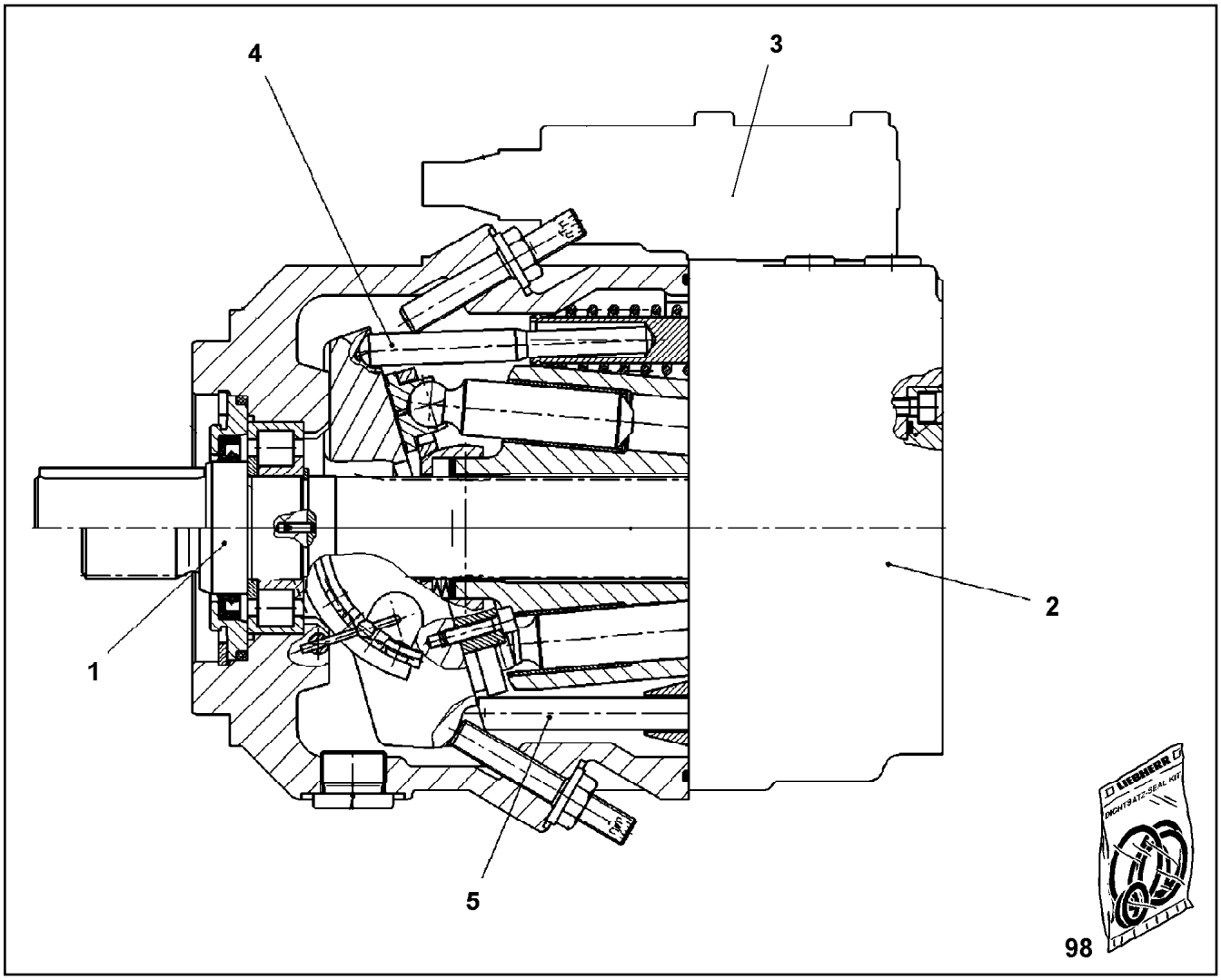

Pos.	Item	Quantity	Description	Bezeichnung
1	10663105	1	DRIVING GEAR ⇨ ❑ 310	TRIEBWERK
2	10008308	1	CONNECTING PLATE ⇨ ❑ 311	ANSCHLUSSPLATTE
3	10472196	1	REGULATOR ⇨ ❑ 312	REGLER
4	10472208	1	ADJUSTMENT ⇨ ❑ 315	VERSTELLUNG
5	7023643	1	REGULATION HYDRAULIC	VERSTELLUNG HYDRAULISCH
98	10663107	1	SEAL KIT REGULATING VALVE	DS VERSTELLPUMPE

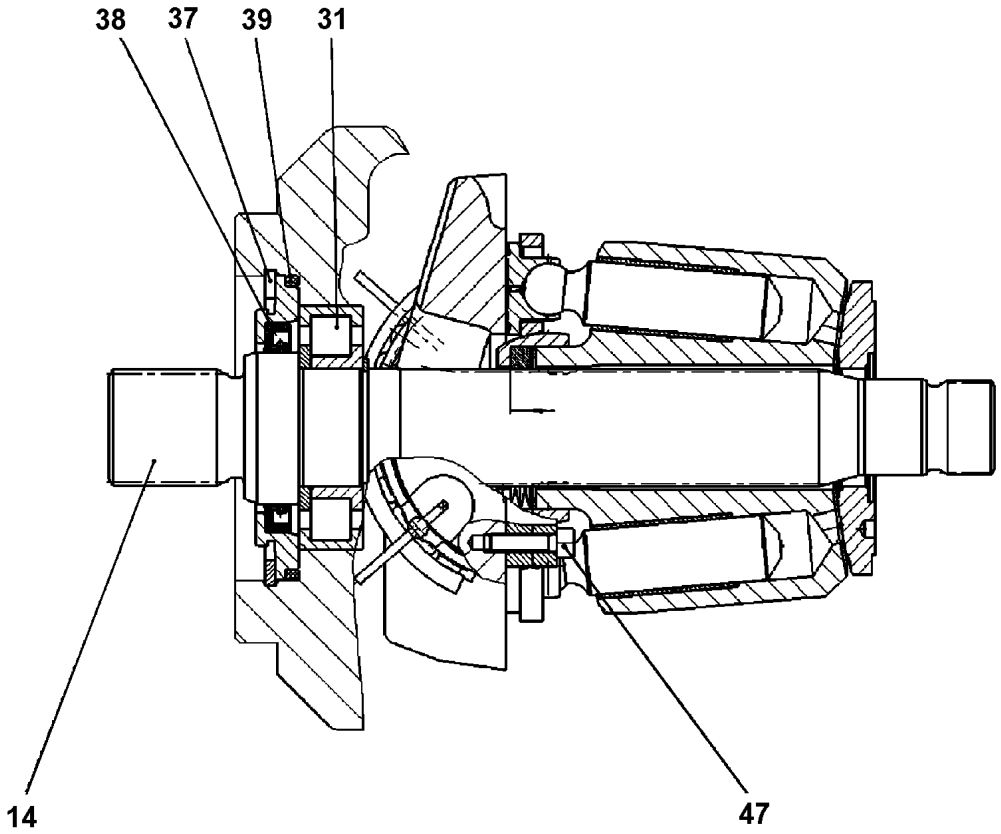

Pos. 999

Pos.	Item	Quantity	Description	Bezeichnung
14	10663120	1	DRIVING SHAFT	TRIEBWELLE
31	7367374	1	CYLINDRICAL ROLLER BEARING	ZYLINDERROLLENLAGER
36	428002908	1	LOCKING RING DIN 471 35X1,5	SICHERUNGSRING
37	12100657	1	LOCKING RING DIN 472 90X3 480H SPF	SICHERUNGSRING
38	7021600	1	SHAFT SEAL BAFSL 45X62X7 FPM	WELLENDICHTRING
39	518623608	1	O-RING ARP 568 82,14X3,53 NBR70	O-RING
47	10875583	4	SOCKET HEAD SCREW ISO 4762 M5X20 8.8	ZYLINDERSCHRAUBE
999	10424726	1	SEAL KIT	DICHTSATZ

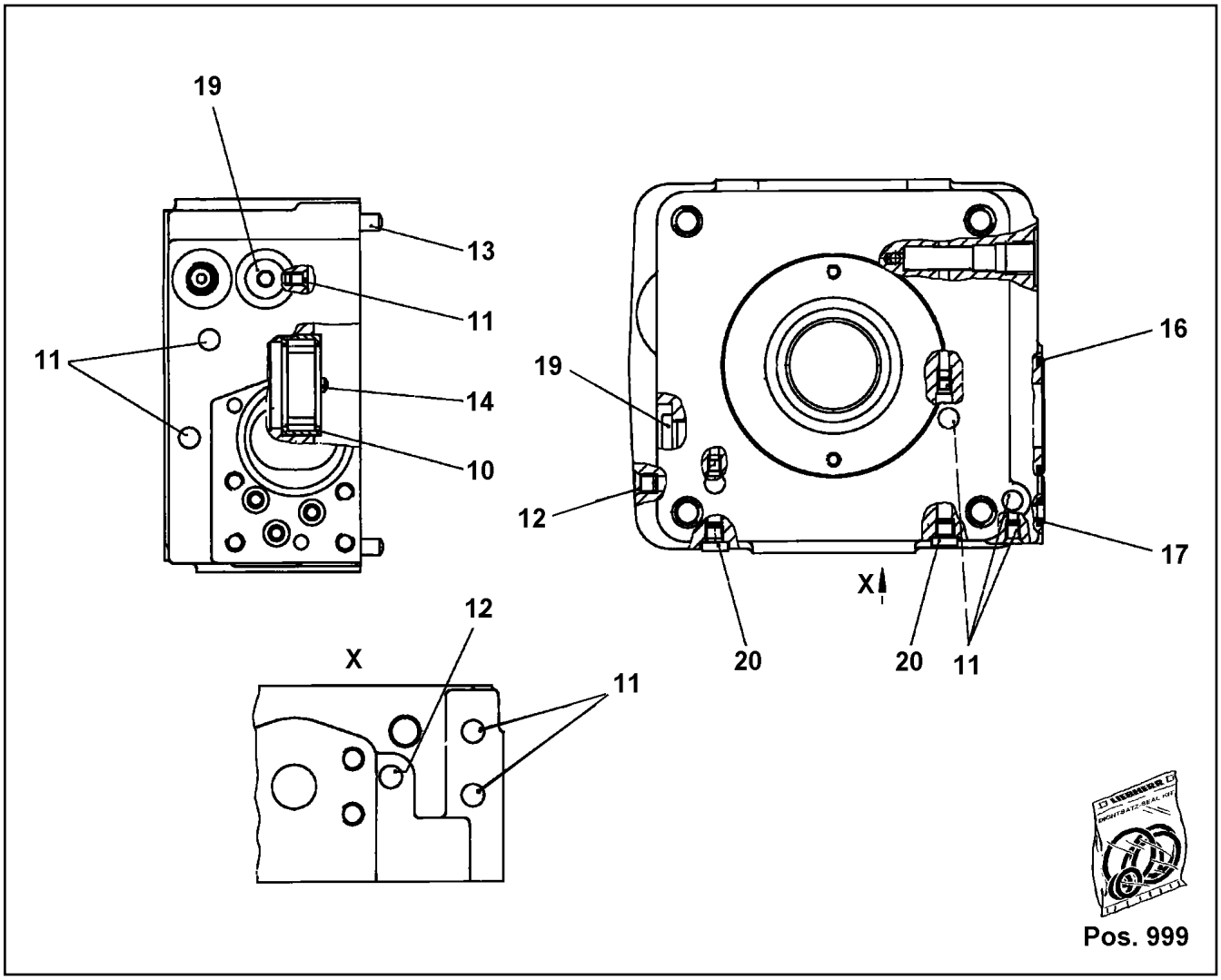

Pos.	Item	Quantity	Description	Bezeichnung
10	7023703	1	CYLINDRICAL ROLLER BEARING	ZYLINDERROLLENLAGER
11	7022127	4	DOUBLE PLUG	DOPPELABREISSSTOPFEN
12	514539308	1	PLUG M8	ABREISSSTOPFEN
13	430704808	2	PARALLEL PIN DIN 6325 8M6X20	ZYLINDERSTIFT
14	514588908	1	PARALLEL PIN ISO 8734 5M6X12 ST	ZYLINDERSTIFT
16	514507808	1	O-RING ARP 568 45,69X2,62 NBR90	O-RING
17	10303270	3	EDGE SEALING RING	DICHTKANTENRING
19	477704308	2	STOP PLUG VSTI M12X1,5 CR6-FREI	STOPFEN
20	7027497	2	SCREW PLUG M8X1	VERSCHLUSSSCHRAUBE
999	10472219	1	GASKET KIT INT.FLANGE	DS ANSCHLUSSPLATTE

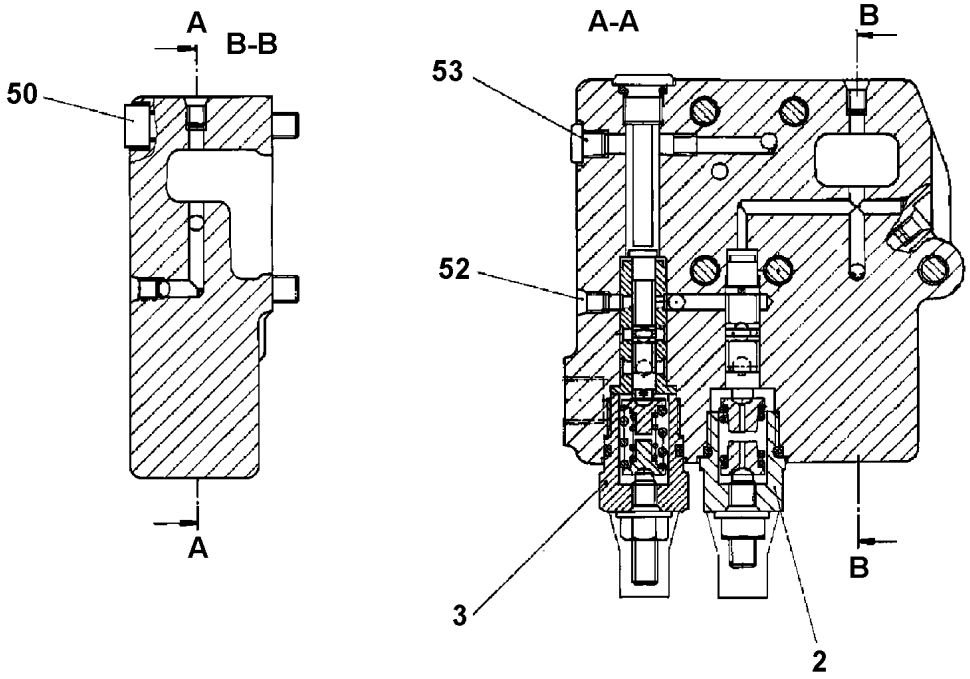

Pos. 999

Pos.	Item	Quantity	Description	Bezeichnung
2	571900808	1	REGULATOR ELEMENT ⇨ ❑ 313	REGLERELEMENT
3	10472202	1	REGULATOR ELEMENT ⇨ ❑ 314	REGLERELEMENT
50	12206699	5	SOCKET HEAD SCREW ISO 4762 M8X45 8.8	ZYLINDERSCHRAUBE
52	7022127	7	DOUBLE PLUG	DOPPELABREISSSTOPFEN
53	7027497	1	SCREW PLUG M8X1	VERSCHLUSSSCHRAUBE
999	10440976	1	SEAL KIT F.REGULATOR	DS REGLER

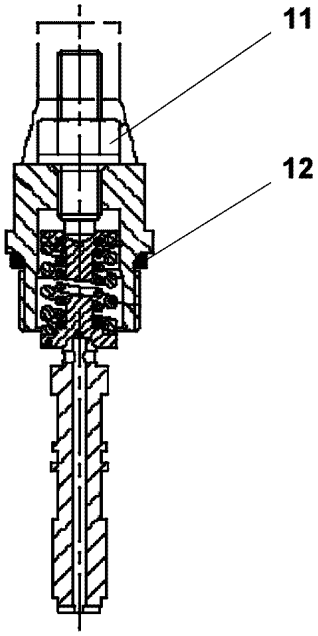

Pos.	Item	Quantity	Description	Bezeichnung
11	7361601	1	GROMMET NUT M8	DICHTUNGSMUTTER
12	510738308	1	O-RING ARP 568 18,72X2,62 NBR90	O-RING

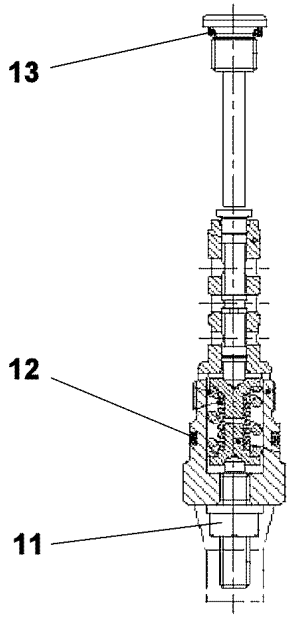

Pos.	Item	Quantity	Description	Bezeichnung
11	7361601	1	GROMMET NUT M8	DICHTUNGSMUTTER
12	510738308	1	O-RING ARP 568 18,72X2,62 NBR90	O-RING
13	514589108	1	O-RING ARP 568 9,19X2,62 NBR90	O-RING

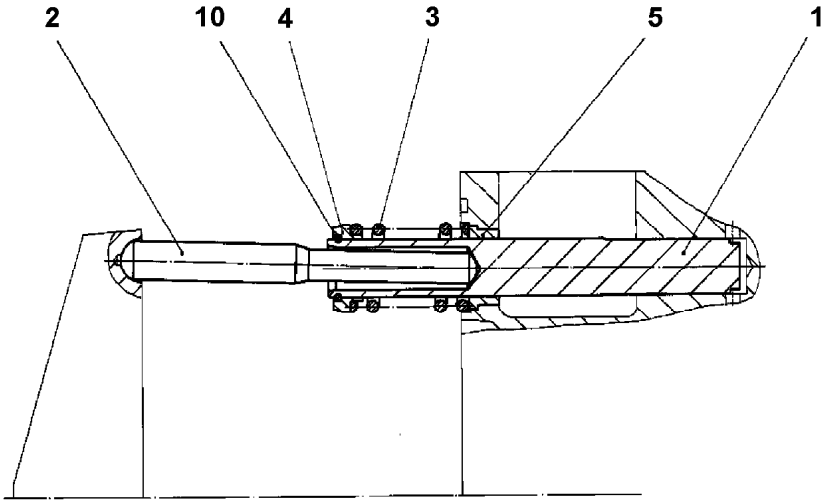

Pos.	Item	Quantity	Description	Bezeichnung
1	10000796	1	SPOOL	STEUERKOLBEN
2	7023664	1	SETTING ROD	STELLSTANGE
3	7023659	1	COMPRESSION SPRING	DRUCKFEDER
4	7023666	1	SPRING SUPPORT	FEDERTELLER
5	10000794	1	BUSHING	BUCHSE
10	11643655	1	SNAP RING DIN 7993 16X1,6	SPRENGRING

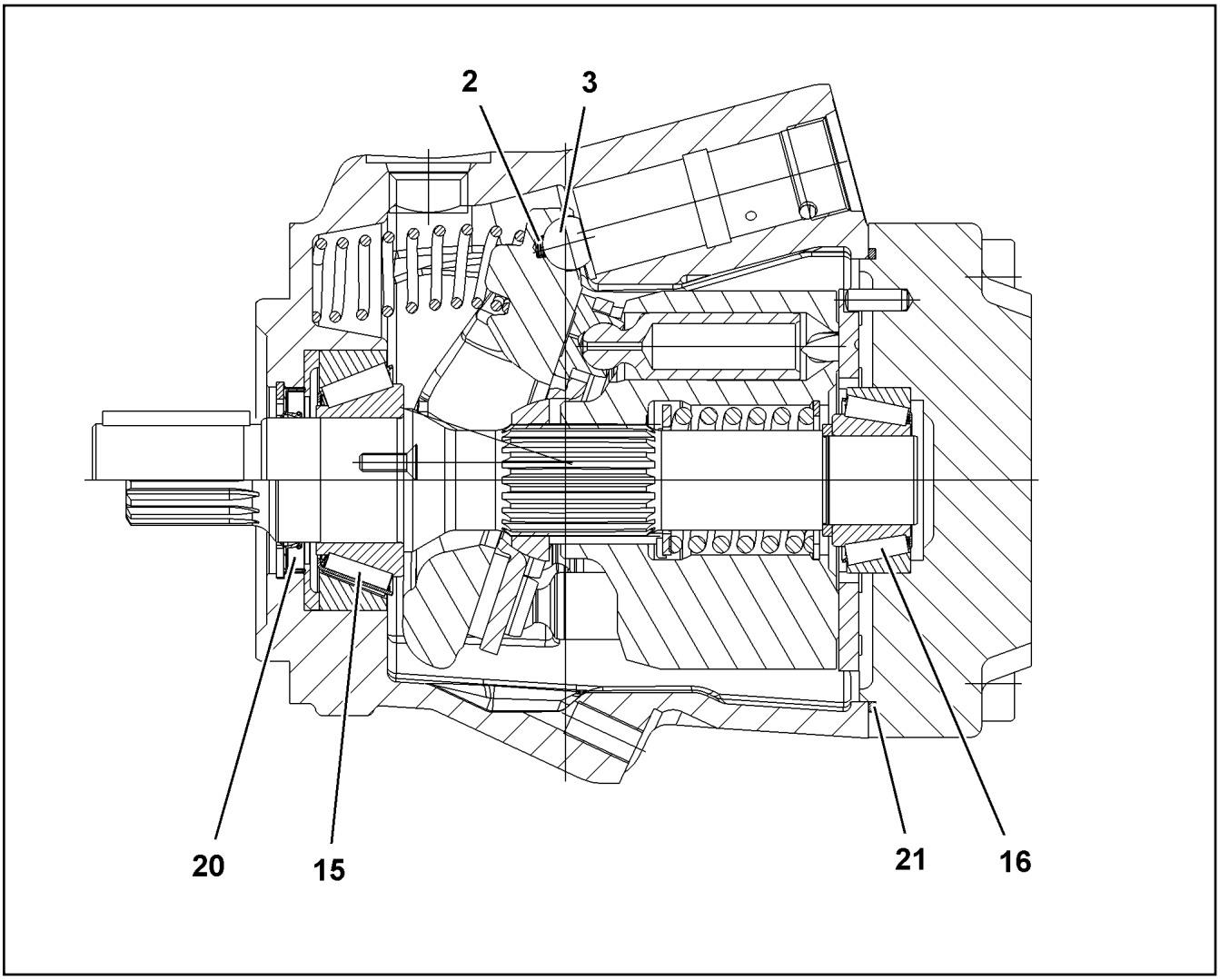

Pos.	Item	Quantity	Description	Bezeichnung
2	11340583	1	COMPRESSION SPRING 0,6X5,1X4	DRUCKFEDER
3	11485426	1	LIMIT STOP	ANSCHLAG
15	570951508	1	TAPERED ROLLER BEARING	KEGELROLLENLAGER
16	10001107	1	TAPERED ROLLER BEARING	KEGELROLLENLAGER
20	7022315	1	SHAFT SEAL 35X52X6/5 FKM	WELLENDICHTRING
21	10001111	1	O-RING	O-RING
50	11692439	1	CONTROL VALVE ⇨ ❑ 317	STEUERVENTIL

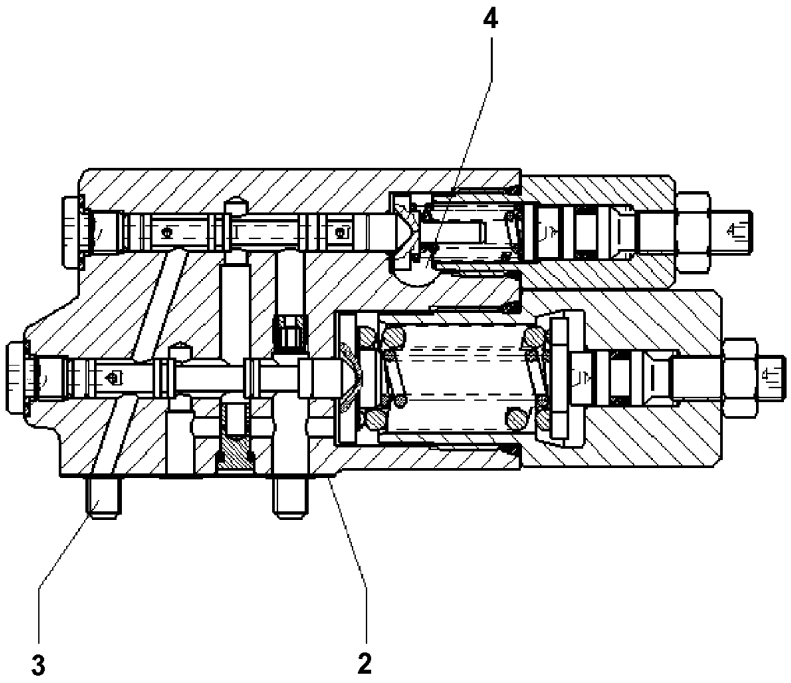

Pos.	Item	Quantity	Description	Bezeichnung
2	10297876	1	SEAL	DICHTUNG
3	4901159	4	SOCKET HEAD SCREW ISO 4762 M6X30 10.	ZYLINDERSCHRAUBE
4	10324900	1	SCREW PLUG	VERSCHLUSSSCHRAUBE

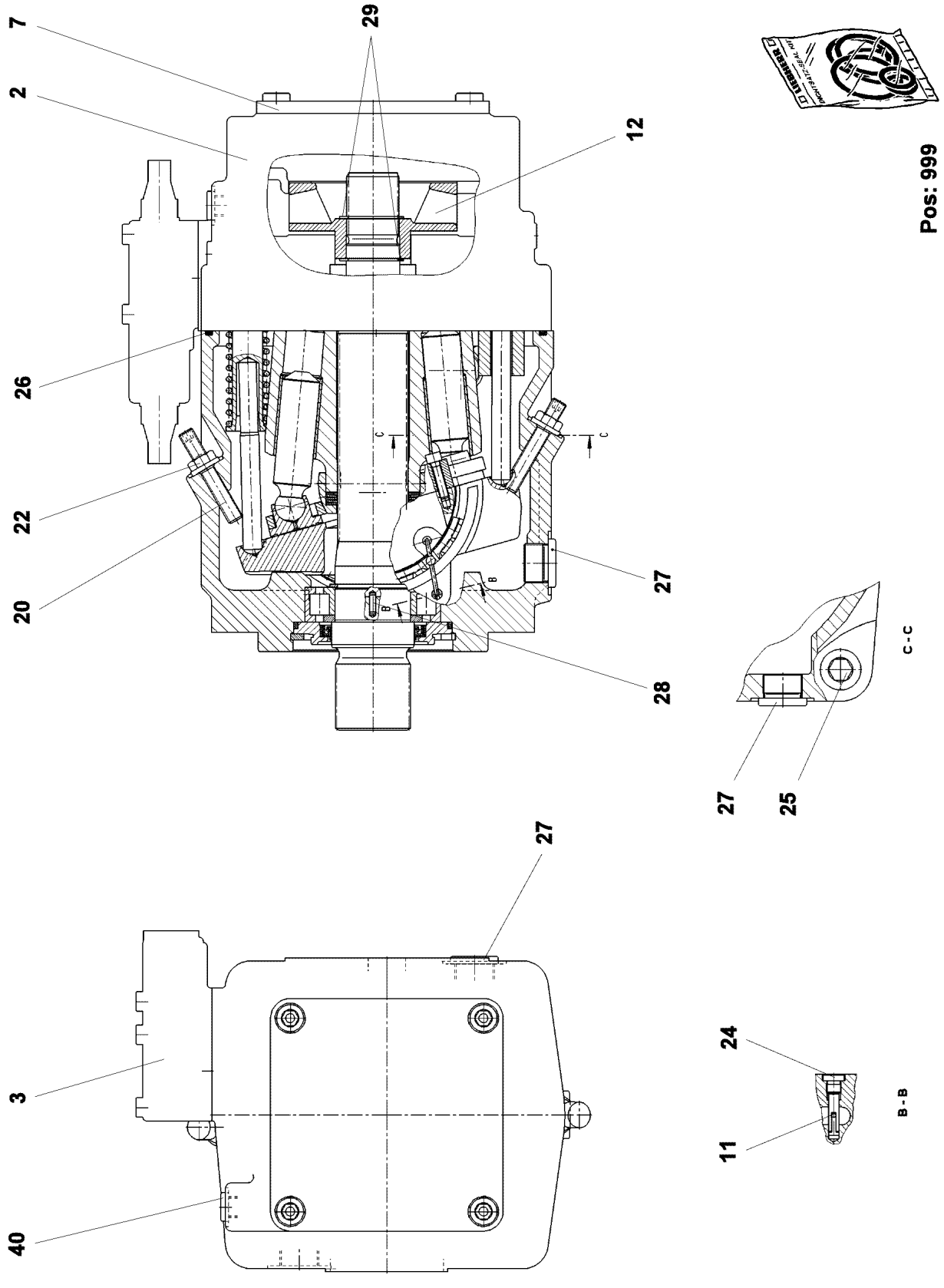

Pos: 999

Pos.	Item	Quantity	Description	Bezeichnung
1	10872488	1	DRIVING GEAR ⇨ ❑ 320	TRIEBWERK
2	571907208	1	CONNECTING PLATE ⇨ ❑ 322	ANSCHLUSSPLATTE
3	10292801	1	REGULATOR ⇨ ❑ 324	REGLER
7	10663059	1	COVER	DECKEL
(3)	12691559	4	SOCKET HEAD SCREW DIN 7984 M12X30 08	ZYLINDERSCHRAUBE
(5)	571233308	1	O-RING ARP 568 107,62X2,62 NBR90	O-RING
11	10475198	4	PIVOT PIN	GELENKSTIFT
12	10342478	1	TRAVEL WHEEL	LAUFRAD
20	7623427	2	GRUB SCREW DIN 913 M10X68	GEWINDESTIFT
22	7361602	2	COLLAR NUT M10X1,5	BUNDMUTTER
24	7372626	4	SCREW PLUG M10X1	VERSCHLUSSSCHRAUBE
25	404319708	4	SOCKET HEAD SCREW DIN 912 M18X75 10.	ZYLINDERSCHRAUBE
26	10342479	1	O-RING 209,14X3,53 NBR70	O-RING
27	560208508	2	SCREW PLUG M26X1,5	VERSCHLUSSSCHRAUBE
28	10410651	2	DOWEL PIN 3X10	SPANNSTIFT
29	10171579	2	LOCKING RING DIN 471 35X1,5 FLZNNC-120	SICHERUNGSRING
40	11691104	1	SHUTTLE VALVE	WECHSELVENTIL
(5)	7373052	1	PROFILE SEALING	PROFILDICHTUNG
999	10342480	1	SEAL KIT	DICHTSATZ

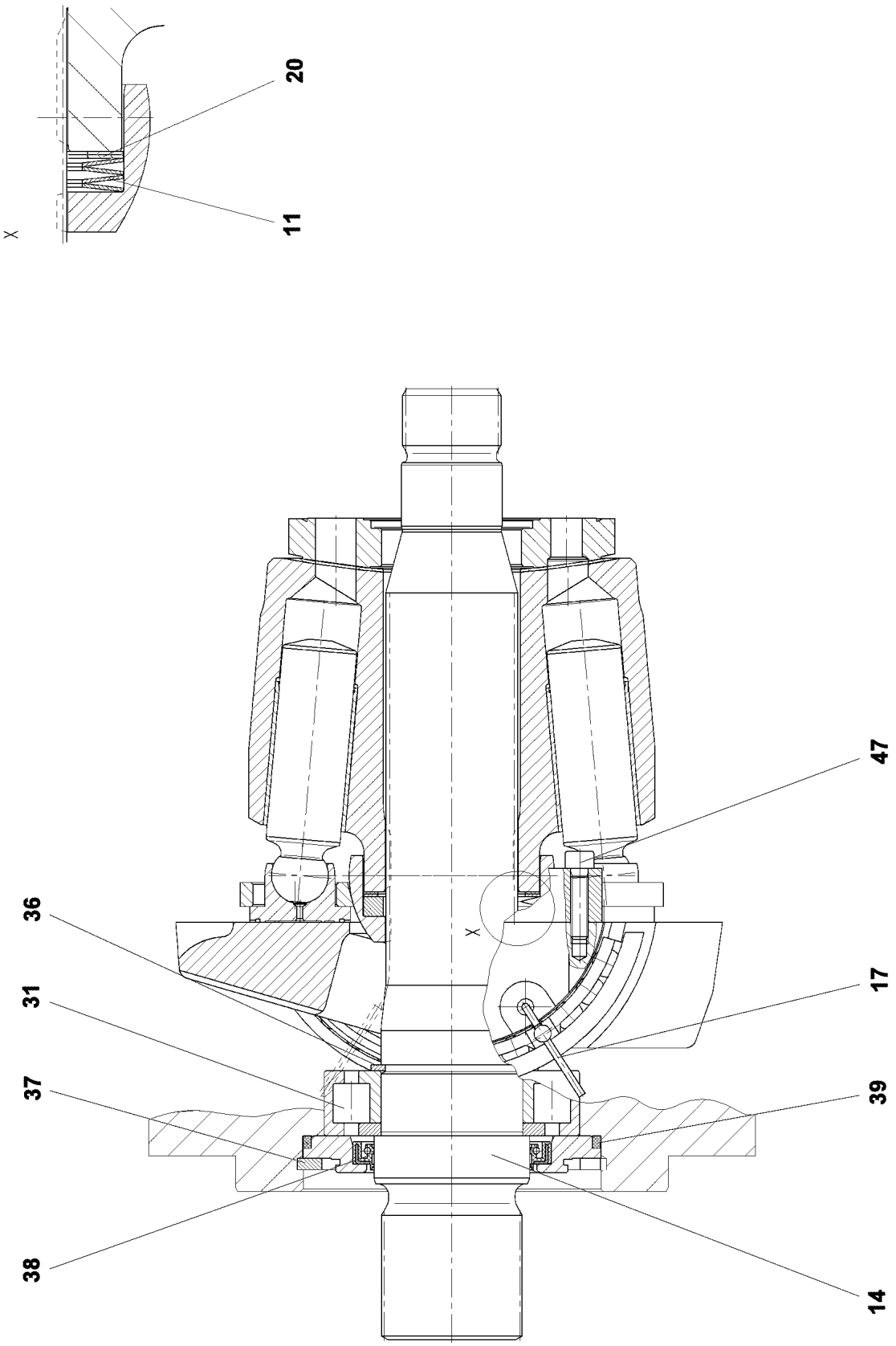
20
11
X
47
36
31
37
38
17
39
14
X

Pos.	Item	Quantity	Description	Bezeichnung
11	570033608	1	CUP SPRING PILLAR	TELLERFEDERSAEULE
14	571907508	1	DRIVING SHAFT	TRIEBWELLE
17	7624238	4	WIRE	DRAHT
20	7369933	1	SHIM RING	PASSSCHEIBE
31	571477908	1	CYLINDRICAL ROLLER BEARING 50X90X23	ZYLINDERROLLENLAGER
36	10875659	1	LOCKING RING DIN 471 50X2 480H SPF	SICHERUNGSRING
37	10356273	1	LOCKING RING	SICHERUNGSRING
38	571907608	1	SHAFT SEAL 55X70X7 FPM	WELLENDICHTRING
39	514613208	1	O-RING ARP 568 98,02X3,53 NBR70	O-RING
47	10875588	4	SOCKET HEAD SCREW ISO 4762 M6X25 8.8	ZYLINDERSCHRAUBE

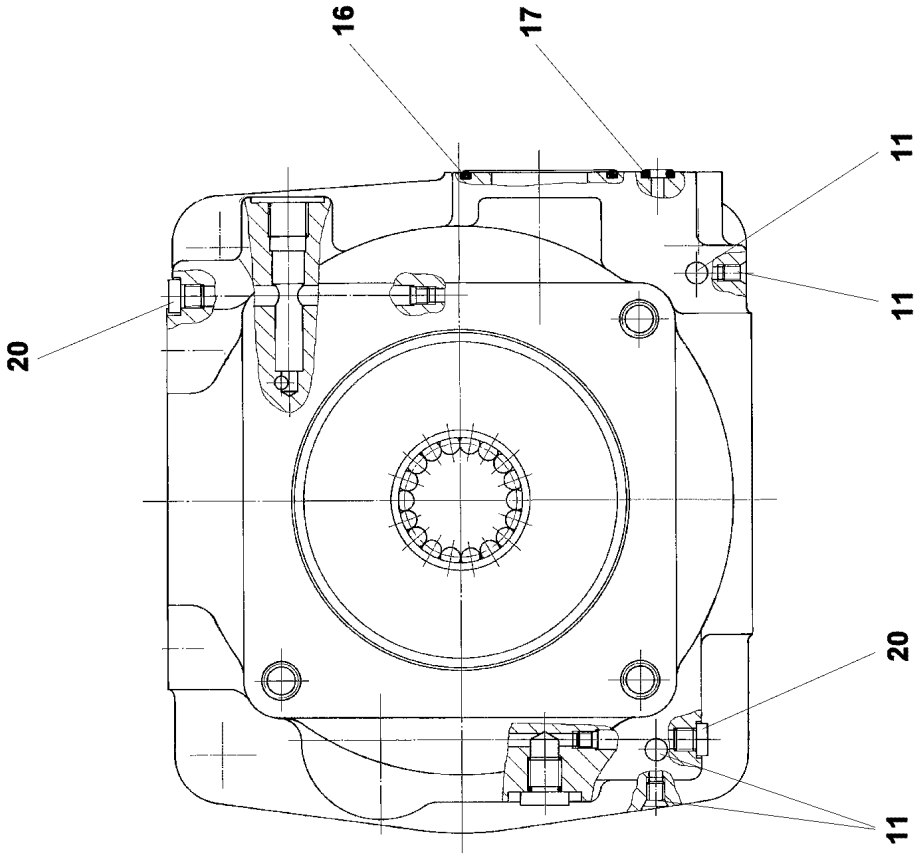

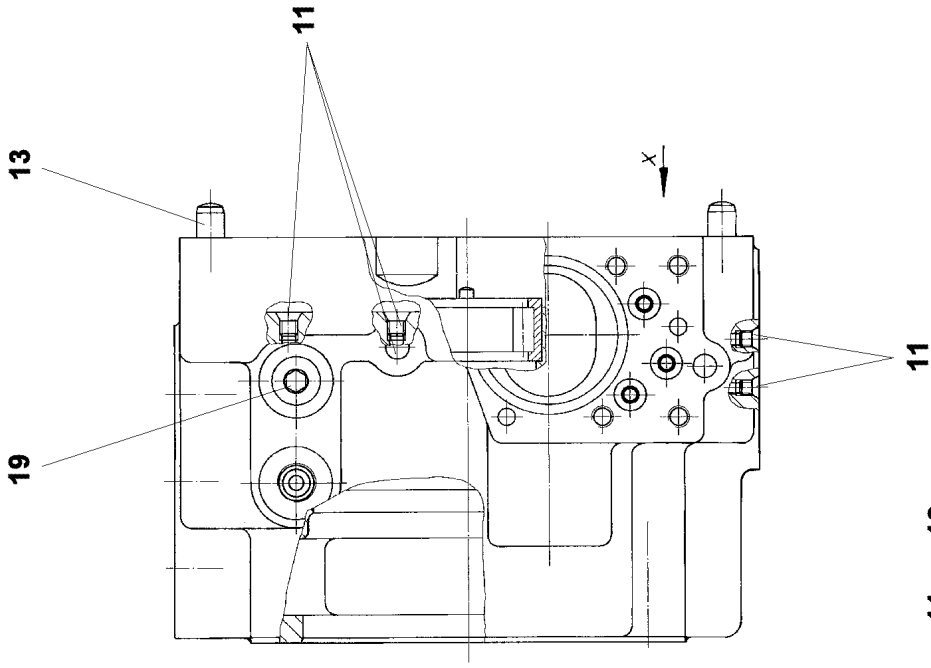

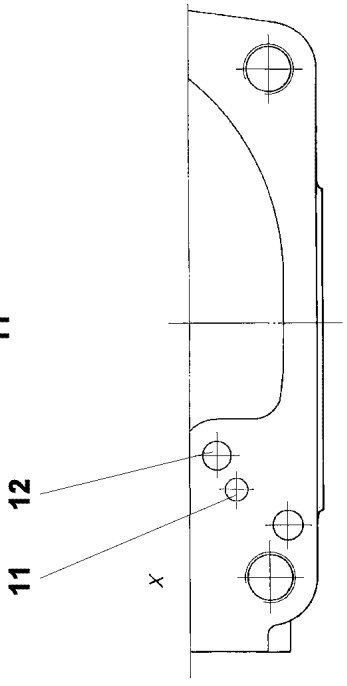

Pos. 999

Pos.	Item	Quantity	Description	Bezeichnung
11	7022127	6	DOUBLE PLUG	DOPPELABREISSSTOPFEN
12	7012971	1	DOUBLE PLUG	DOPPELABREISSSTOPFEN
13	430706808	2	PARALLEL PIN DIN 6325 10M6X24	ZYLINDERSTIFT
16	570054708	1	O-RING ARP 568 50,47X2,62 NBR90	O-RING
17	10303270	3	EDGE SEALING RING	DICHTKANTENRING
19	11626246	2	SCREW PLUG DIN 908 M12X1,5 ST FLZN SP	VERSCHLUSSSCHRAUBE
20	7027497	2	SCREW PLUG M8X1	VERSCHLUSSSCHRAUBE
999	10872487	1	GASKET KIT INT.FLANGE	DS ANSCHLUSSPLATTE

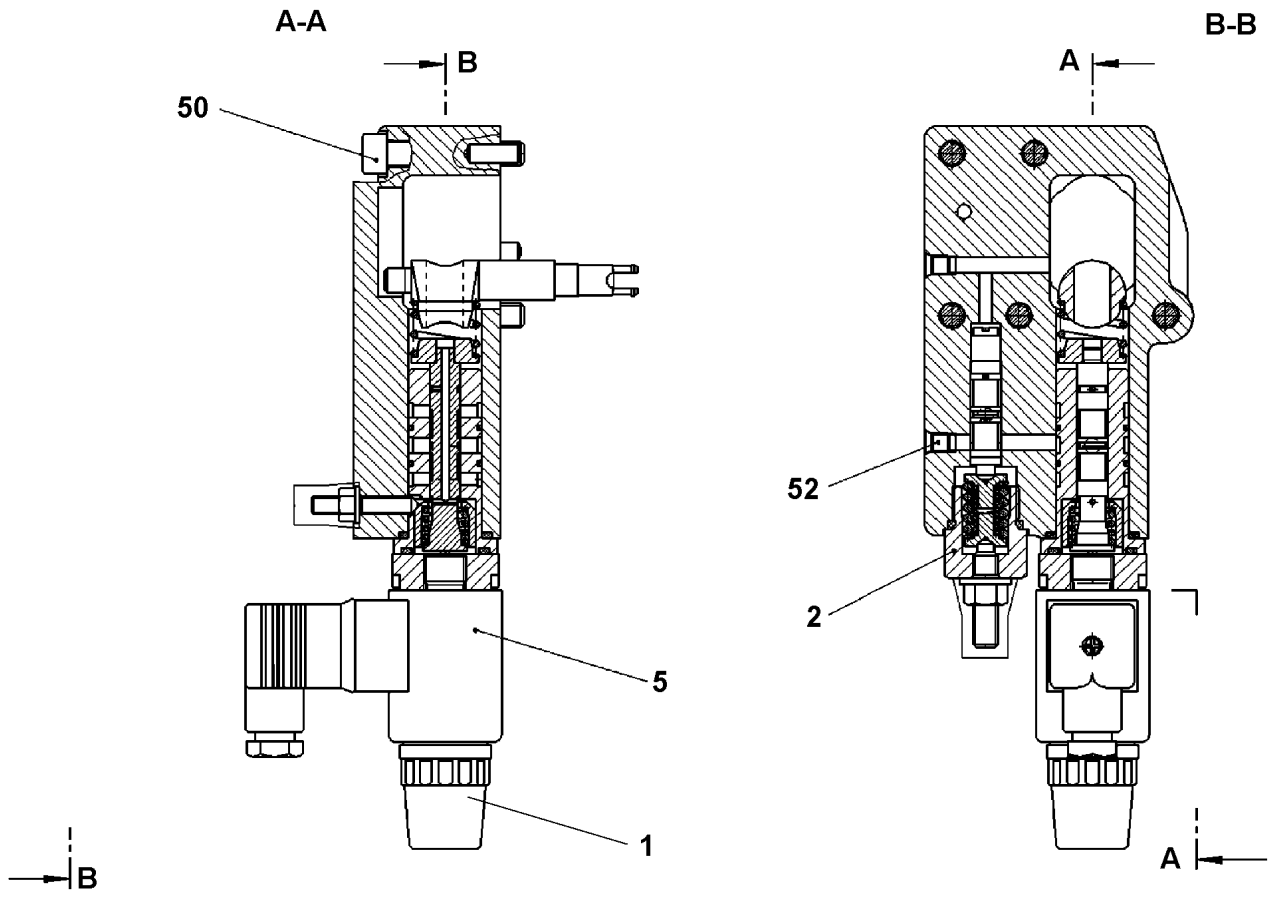

Pos.	Item	Quantity	Description	Bezeichnung
1	10663825	1	RETAINING NUT	BEFESTIGUNGSMUTTER
2	571900808	1	REGULATOR ELEMENT ⇨ ❑ 313	REGLERELEMENT
5	10292815	1	REGULATOR ELEMENT ⇨ ❑ 325	REGLERELEMENT
50	12206699	5	SOCKET HEAD SCREW ISO 4762 M8X45 8.8	ZYLINDERSCHRAUBE
52	7022127	5	DOUBLE PLUG	DOPPELABREISSSTOPFEN
999	10663065	1	SEAL KIT F.REGULATOR	DS REGLER

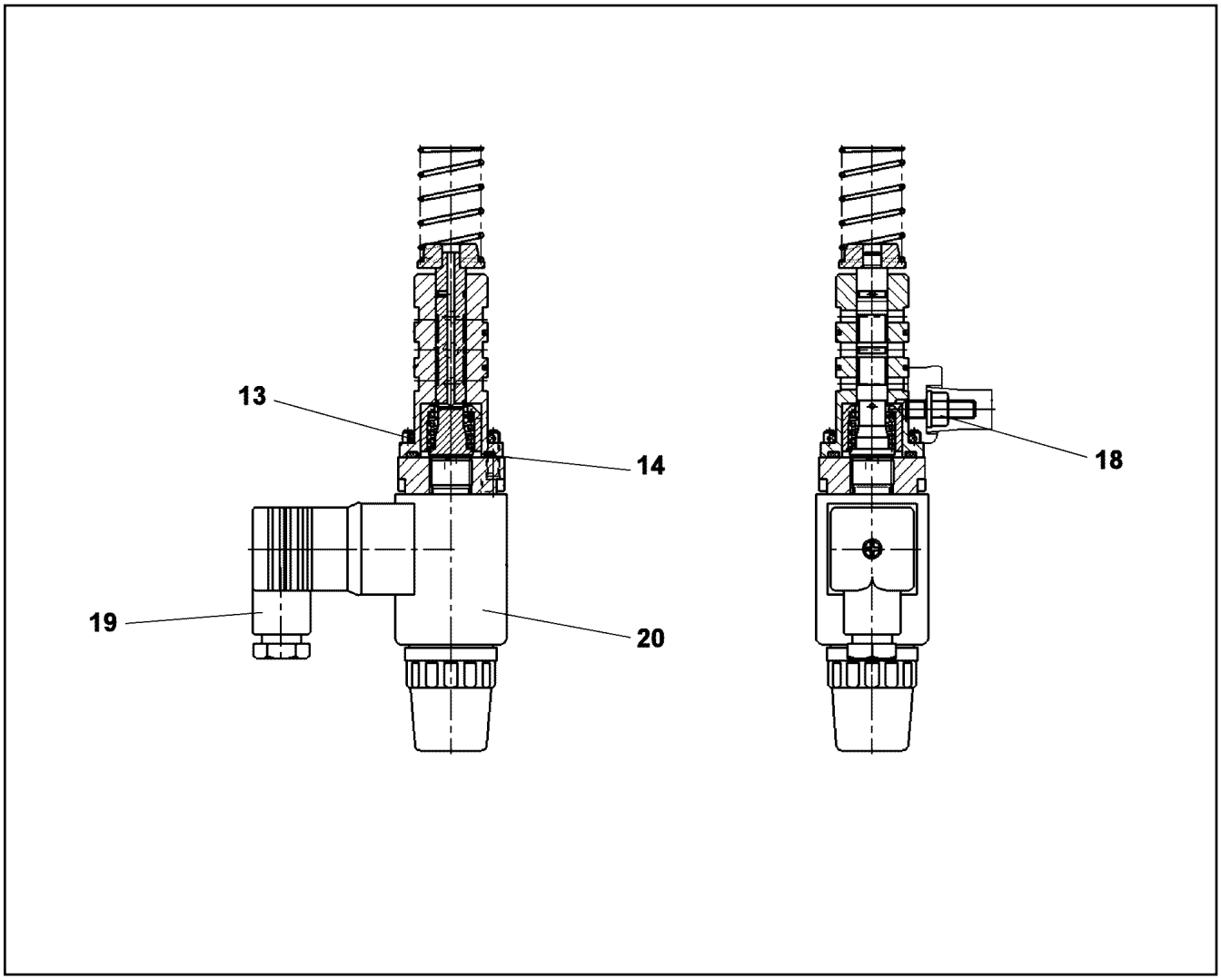

Pos.	Item	Quantity	Description	Bezeichnung
13	571058608	1	O-RING ARP 568 25,07X2,62 NBR90	O-RING
14	510776608	1	O-RING ARP 568 23,47X2,62 NBR90	O-RING
18	7361600	1	GROMMET NUT M6	DICHTUNGSMUTTER
19	11450030	1	DIE PLUG	LEITUNGSDOSE
20	571911708	1	PROPORTIONAL MAGNET 24V	PROPORTIONALMAGNET
(1)	10663825	2	RETAINING NUT	BEFESTIGUNGSMUTTER

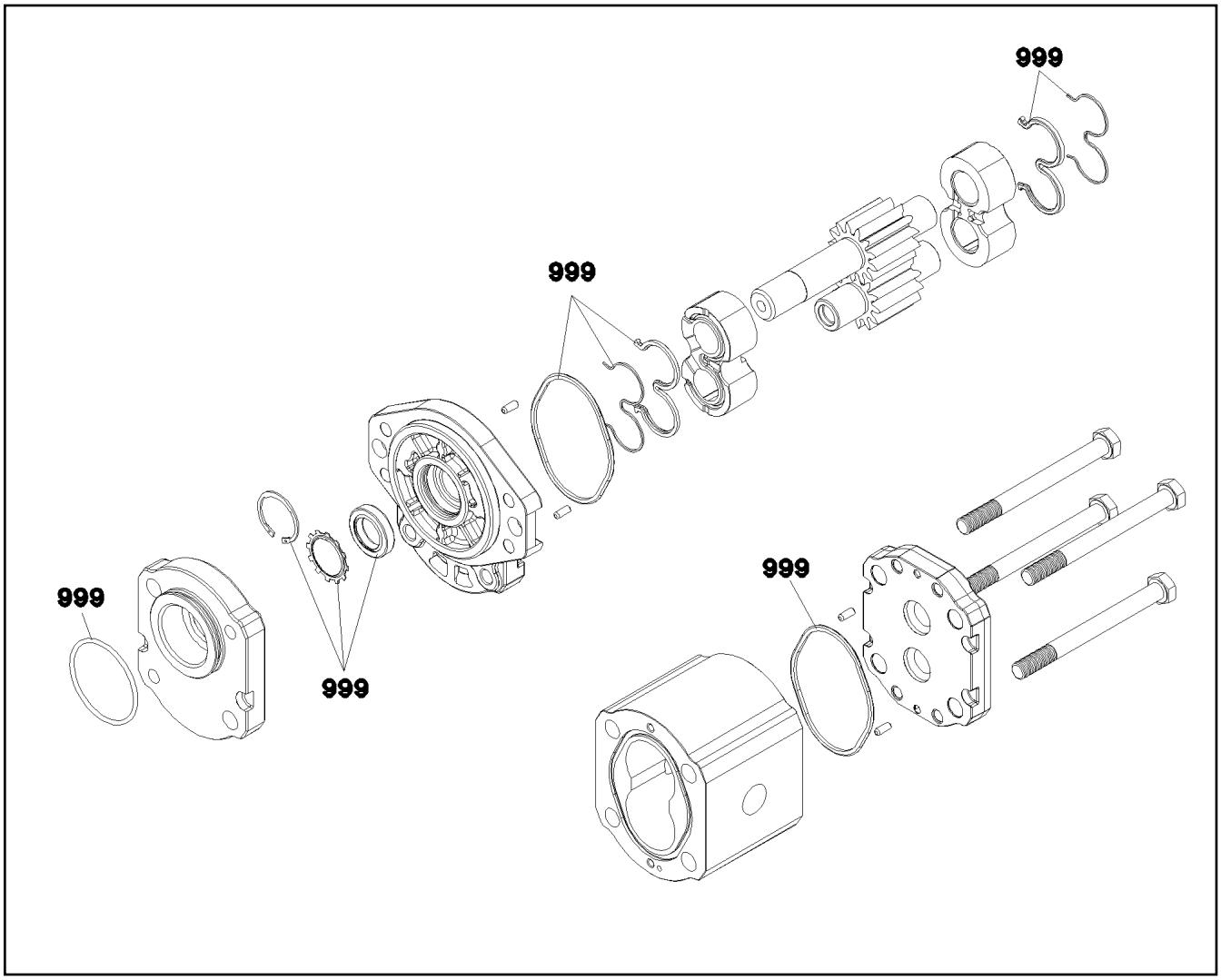

Pos.	Item	Quantity	Description	Bezeichnung
999	10492710	1	SEAL KIT GEAR PUMP	DS ZAHNRADPUMPE

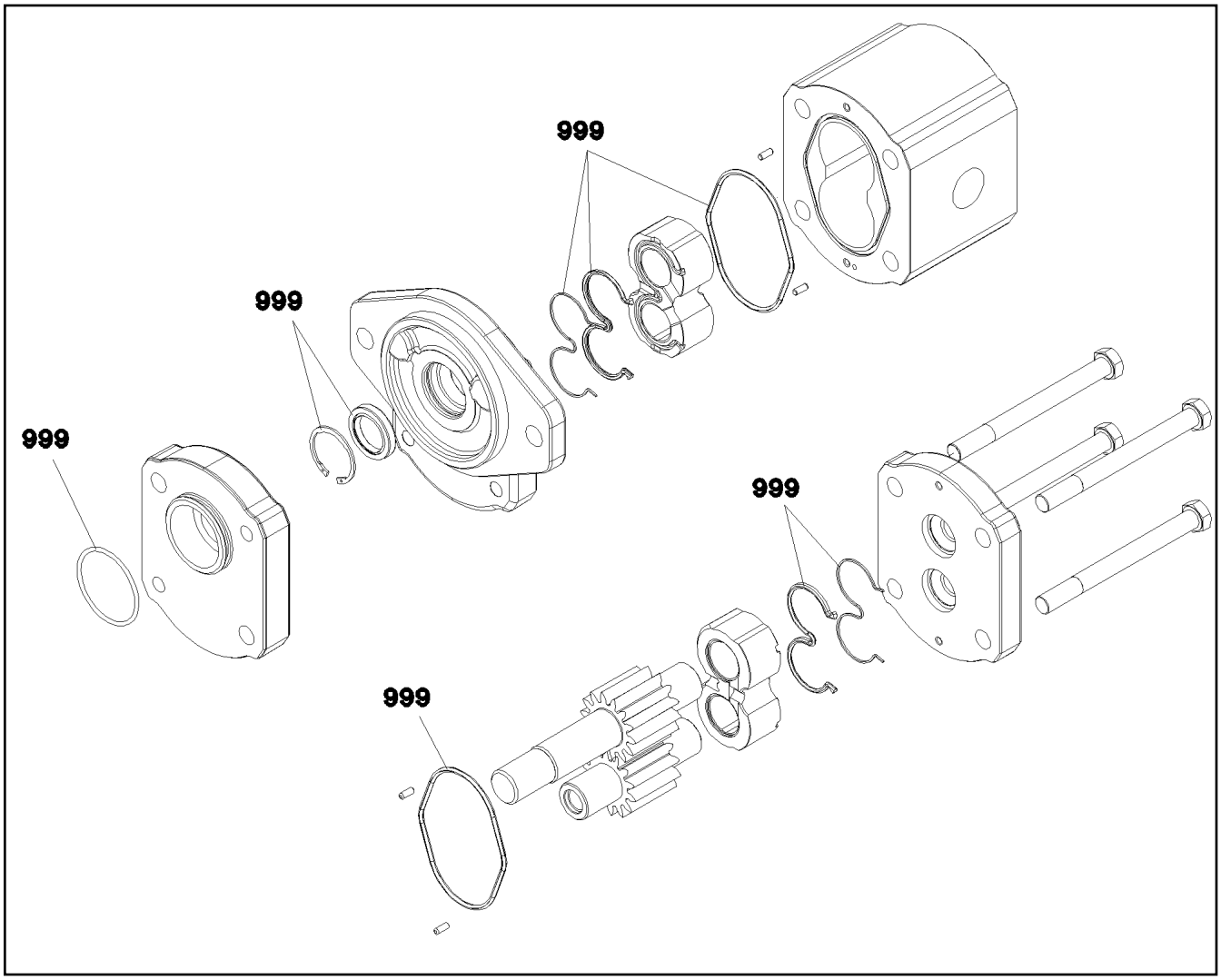

Pos.	Item	Quantity	Description	Bezeichnung
999	11494341	1	SEAL KIT GEAR PUMP	DS ZAHNRADPUMPE

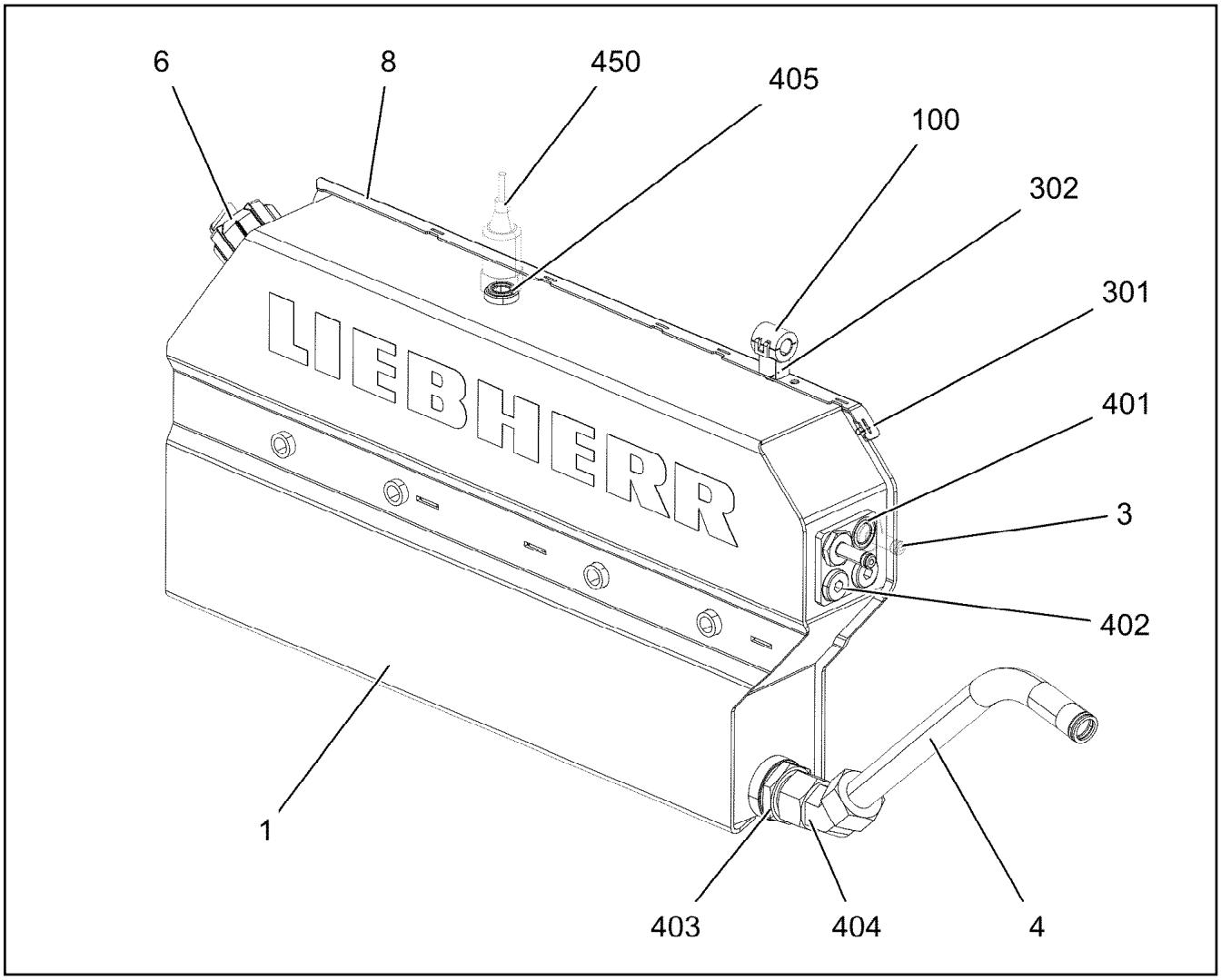

Pos.	Item	Quantity	Description	Bezeichnung
1	96035326	1	EXPANSION TANK WELDED ALMG3	AUSGLEICHSBEHAELTER SCH
3	96035597	2	CONNECTION PIECE	STUTZEN KPL.
4	969939408	1	PIPE COMPL.	ROHR KPL.
(1)	97064857	1	TUBE 22.0X319 X6CRNITI1810	ROHR
(2)	477102808	1	PROFILE RING PR22-L A3P	PROFILRING
(3)	477402608	1	BOX NUT DIN 3870 AL22 A3P	UEBERWURFMUTTER
6	12101064	1	VALVE COVER 45 PA6.6	VENTILDECKEL
8	97091350	1	PLATE 1.5X560X43 DC01 FE//ZNNI8//CN//T0	BLECH
100	6202909	1	CLAMP	KLAMMER
301	11160744	2	BUTTON HEAD SCREW AEHNL.ISO 7380-2	HALBRUNDKOPFSCHRAUBE
302	10875468	1	BUTTON HEAD SCREW AEHNL.ISO 7380-2	HALBRUNDKOPFSCHRAUBE
401	726407908	2	O-RING 16X2 NBR70	O-RING
402	477704408	2	STOP PLUG VSTIM16X1,5ED CR6-FREI	STOPFEN
403	10295188	1	FITTINGS ISO 8434-1 GE 22L M33X2 CR6-F	STUTZEN
404	10410771	1	FITTING EV 22L CR6-FREI	VERSCHRAUBUNG
405	570116908	1	FLAT SEALING RING 14X19,5X1,5	FLACHDICHTRING
450	10335960	1	WATER LEVEL SENSOR L=50 5V CuZnN38	WASSERSTANDSSONDE

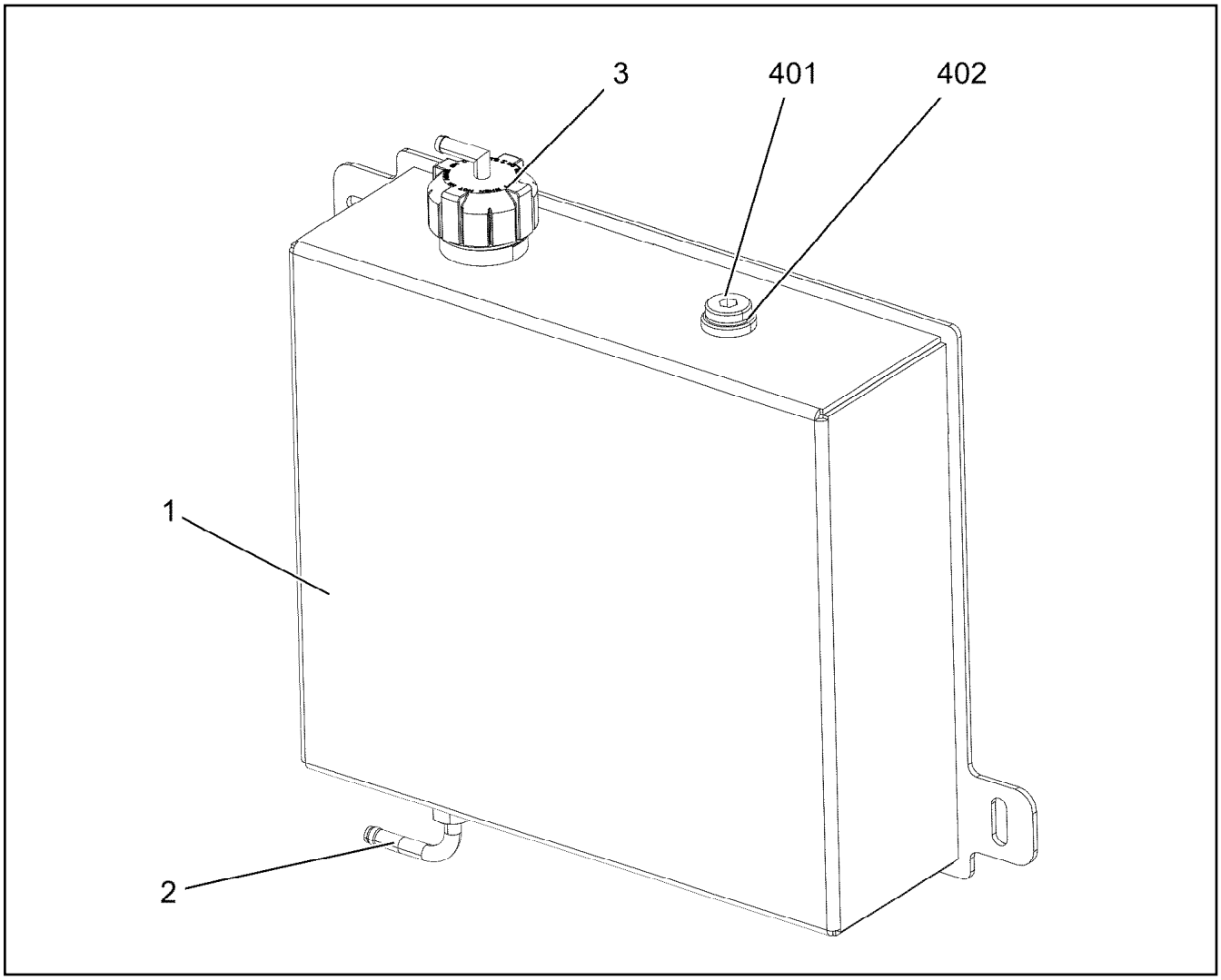

Pos.	Item	Quantity	Description	Bezeichnung
1	96035739	1	EXPANSION TANK WELDED	AUSGLEICHSBEHAELTER SCH
2	96039022	1	CONNECTION PIECE ⇨ ❑ 330	STUTZEN KPL.
3	12101064	1	VALVE COVER 45 PA6.6	VENTILDECKEL
401	477704408	1	STOP PLUG VSTIM16X1,5ED CR6-FREI	STOPFEN
402	710103708	1	SEALING RING DIN 7603 A16X22X1,5 CU	DICHTRING

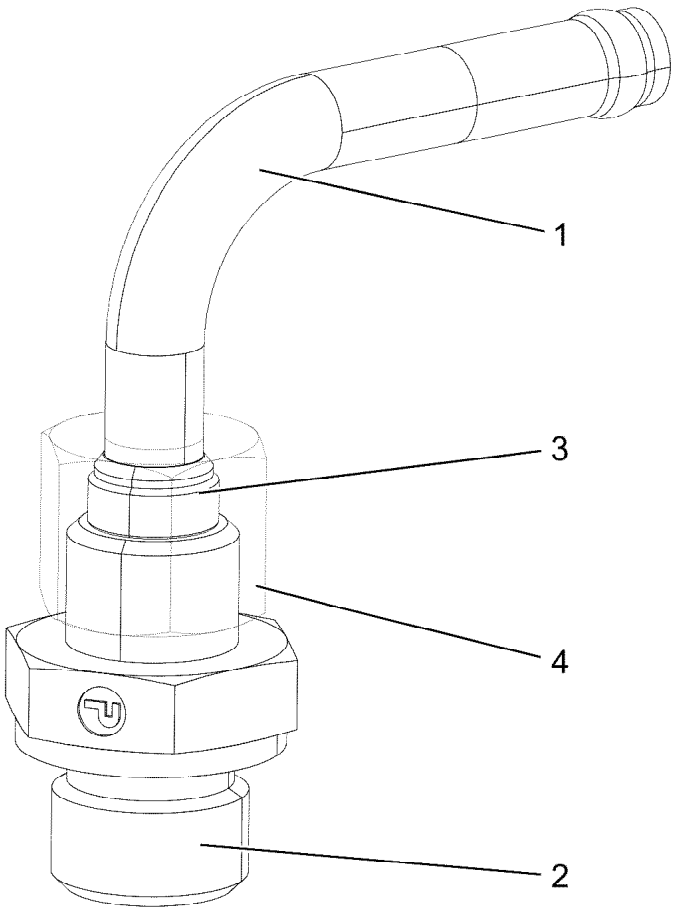

Pos.	Item	Quantity	Description	Bezeichnung
1	97124033	1	TUBE 8.0X80 X5CRNI18-10	ROHR
2	7618383	1	FITTING GE 8L M16X1,5 CR6-FREI	VERSCHRAUBUNG
3	477100208	1	PROFILE RING P-R8-L/S A2GS	PROFILRING
4	477401408	1	BOX NUT AL8 CR6-FREI	UEBERWURFMUTTER

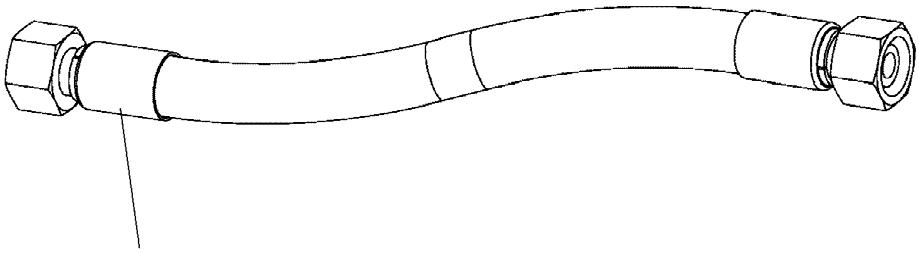

Schlauchnummer
Hose number
Numéro de flexible
Número de flexible
Номера шланга

Die Schlauchnummern auf den Schläuchen entsprechen den Positionen in der Schlauchliste.

The hose numbers from the hoses are in accordance with the items in the hose list.

Les numéros indiqués sur les flexibles correspondent aux repères de la nomenclature des flexibles.

Los números indicados en los flexibles corresponden a las posiciones de la lista de flexibles.

Нанесенные на шлангах номера соответствуют позициям в перечне.

Pos.	Item	Quantity	Description	Bezeichnung
2450	96031888	1	HOSE CPL. CONTI KWS 8X300	SCHLAUCH KPL.
2451	96034535	1	HOSE CPL. CONTI KWS 22X700	SCHLAUCH KPL.
2453	96034540	1	HOSE CPL. CONTI KWS 8X4400	SCHLAUCH KPL.
2455	96023967	1	HOSE CPL. CONTI KWS 10X1450	SCHLAUCH KPL.
2456	96014023	1	HOSE CPL. CONTI KWS 10X1360	SCHLAUCH KPL.
2457	96032358	1	HOSE CPL. CONTI KWS 10X1520	SCHLAUCH KPL.
2463	96014060	1	HOSE CPL. CONTI KWS 20X3000	SCHLAUCH KPL.
2466	96023301	1	HOSE CPL. CONTI KWS 20X2200	SCHLAUCH KPL.

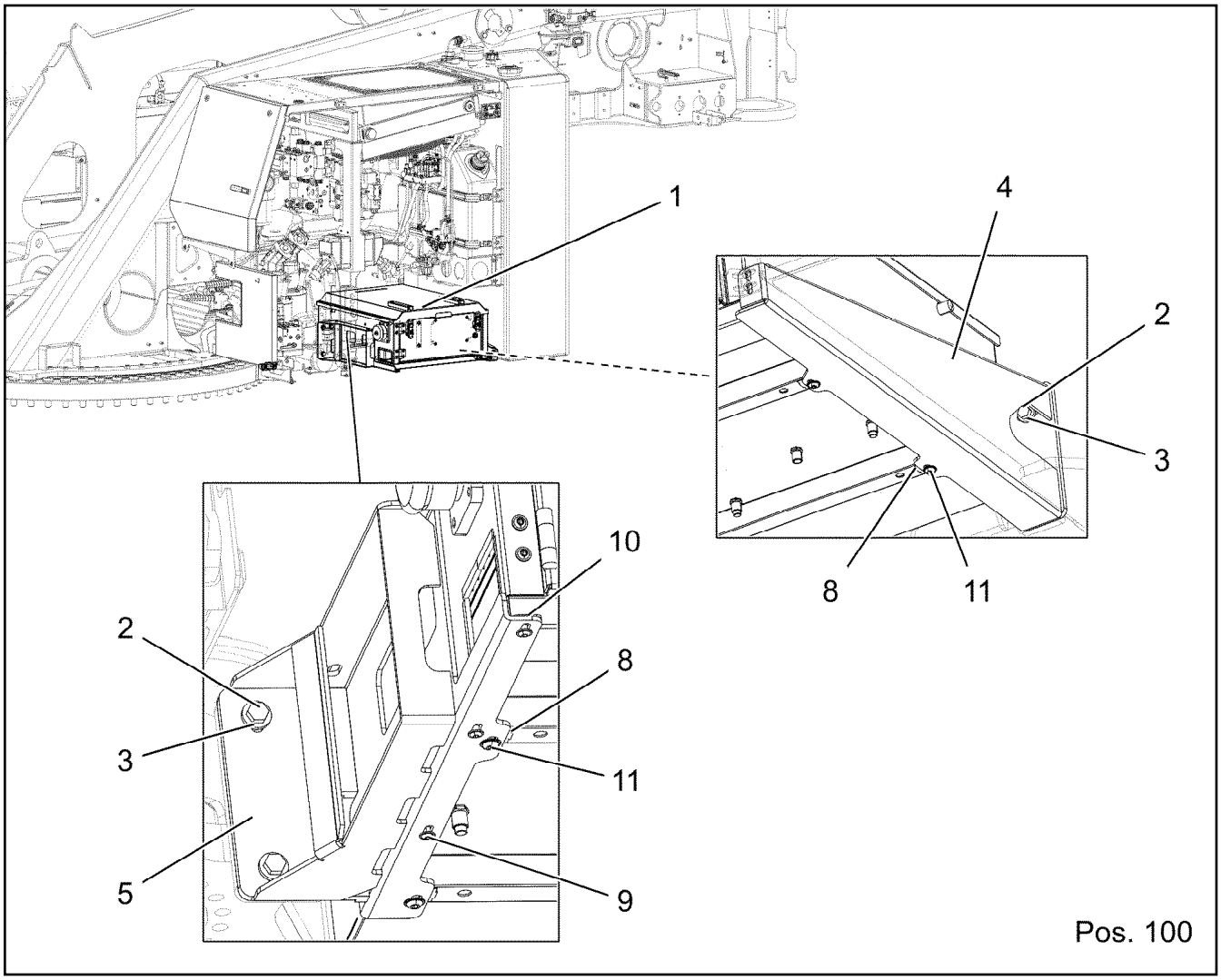

Pos.	Item	Quantity	Description	Bezeichnung
1	96023117	1	BATTERY BOX, PRE-ASSEMBLED ⇨ ❑ 333	BATTERIEKASTEN VORM.
2	11631816	6	HEX SCREW ISO 4017 M10X25 8.8 FLZN SP	SECHSKANTSCHRAUBE
3	11658580	6	WASHER DIN 7349 10,5 200HV-St FLZN SPF	SCHEIBE
4	96036998	1	BRACKET RIGHT FE//ZNNI8//CN//T0	KONSOLE RECHTS
5	96037000	1	BRACKET,LEFT WELDED FE//ZNNI8//CN//T0	KONSOLE SCHWK.LI.
8	12100332	4	SHEET METAL NUT M8 480H SPF	BLECHMUTTER
9	10874884	3	BUTTON HEAD SCREW ISO 7380-2 M6X12 0	HALBRUNDKOPFSCHRAUBE
10	97127026	1	PLATE 2X580X25 DC01	BLECH
11	408650608	4	BUTTON HEAD SCREW ISO 7380-2 M8X20 A	HALBRUNDKOPFSCHRAUBE
100	96023914	1	ELECTRIC FOR BATTERY BOX ⇨ ❑ 335	ELEKTRIK BATTERIEKASTEN

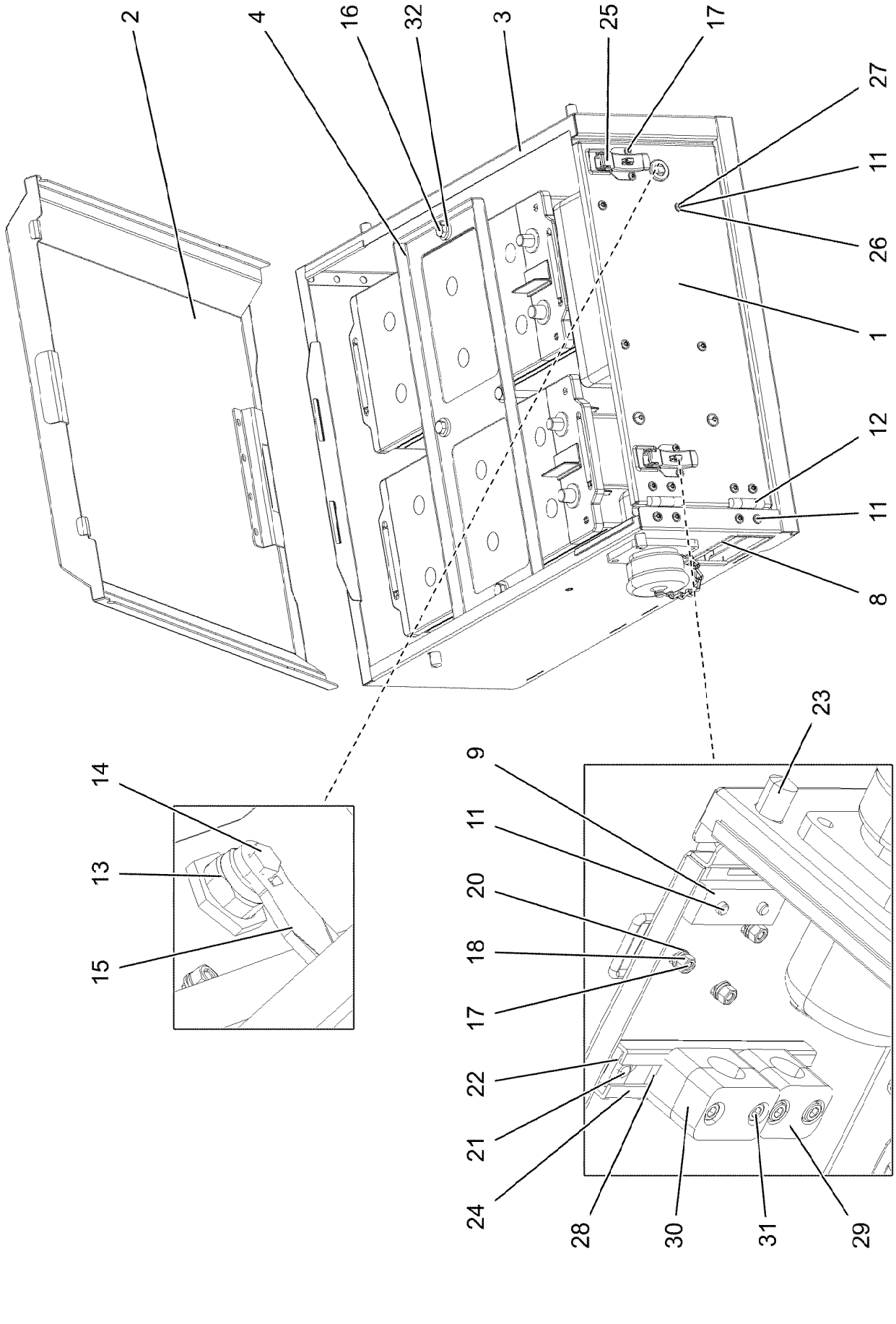

18.7.2022 098809	**etk_en_de_047654 LTR 1220**	333 (1/2)
LIEBHERR	**BATTERY BOX, PRE-ASSEMBLED** **BATTERIEKASTEN VORM.**	**96023117**

Pos.	Item	Quantity	Description	Bezeichnung
1	97100598	1	PLATE 2X550X297 DC01	BLECH
2	96028313	1	SHEET CPL. RAL 7037,SDGL,GT SPF	BLECH KPL.
3	96023028	1	BATTERY BOX ST.CONST. SPF	BATTERIEKASTEN SCHWK.
4	97100731	1	PLATE 2.5X235X575 DC01 FE//ZNNI8//CN//T	BLECH
8	262103908	1.6	EDGE PROTECTION 1-2X9,5X6,5	KANTENSCHUTZ
9	953695308	4	THREADED PLATE 8.0 X0 S235JR FE//ZNNI8/	GEWINDEPLATTE
11	10875468	12	BUTTON HEAD SCREW AEHNL.ISO 7380-2	HALBRUNDKOPFSCHRAUBE
12	704228108	2	HINGE 35X35X50/180° ST FE//ZN12//B	SCHARNIER
13	704253308	1	HOUSING GD-ZN SW GEPULVERT	GEHAEUSE
14	704253408	1	ACTUATION SPIKE GD-ZN SW GEPULVERT	BETAETIGUNGSDORN
15	704259008	1	TONGUE 45X19 STAHL VERZ	ZUNGE
16	10878922	4	HEX SCREW ISO 4014 M10X220 8.8 FLZN SP	SECHSKANTSCHRAUBE
17	10875483	6	BUTTON HEAD SCREW ISO 7380-2 M5X10 0	HALBRUNDKOPFSCHRAUBE
18	10875620	6	HEX NUT ISO 4032 M5 8 480H SPF	SECHSKANTMUTTER
19	12227697	6	WASHER SPRING DIN 128 A 5 FST 480H SP	FEDERRING
20	10197808	6	WASHER ISO 7089 5 200HV ZNNI-480H	SCHEIBE
21	10353737	6	BUTTON HEAD SCREW ISO 7380-2 M8X10 A	HALBRUNDKOPFSCHRAUBE
22	704262608	2	THREADED PLATE M8	GEWINDEPLATTE
23	10412105	4	WELDING SLEEVE M8X17 ST37-3K A3K	SCHWEISSBUCHSE
24	954117308	1	CARRIER RAIL X0	TRAGSCHIENE
25	704230208	2	LOCK PIECE HAKEN	VERSCHLUSS
26	10197771	4	WASHER ISO 7089 6 200HV ZNNI-480H SPF	SCHEIBE
27	10197764	4	HEX NUT ISO 4032 M6 10 ZNNI-480H SPF	SECHSKANTMUTTER
28	602018008	4	CARRIER RAIL NUT DIN 3015-1 L TM M6 W1	TRAGSCHIENENMUTTER
29	602008308	2	CLAMP-HALF DIN 3015-1 L 2 R 18 PP SW	KLEMMHAELFTE
30	602008408	2	CLAMP-HALF DIN 3015-1 L 3 G 20 PP SW	KLEMMHAELFTE
31	10875590	4	SOCKET HEAD SCREW ISO 4762 M6X35 8.8	ZYLINDERSCHRAUBE
32	11658580	4	WASHER DIN 7349 10,5 200HV-St FLZN SPF	SCHEIBE

Pos.	Item	Quantity	Description	Bezeichnung
5	10664204	2	BATTERY 12V 180AH	BATTERIE
10	96023930	1	LEAD W593	LEITUNG
11	96023931	1	LEAD W591	LEITUNG
14	96023932	1	LEAD W592	LEITUNG
19	96023960	1	BATTERY MAIN SWITCH	BATTERIEHAUPTSCHALTER
(10)	10878680	1	HIGH CURRENT DISTRIBUTOR	HOCHSTROMVERTEILER
(20)	10023751	1	FUSE 50A 32V SPF	SICHERUNG
(21)	10878142	1	FUSE CARTRIDGE 80A DC32 MIDI FUSE	SICHERUNGSEINSATZ
(22)	10878143	1	FUSE CARTRIDGE 100A DC32 MIDI FUSE	SICHERUNGSEINSATZ
21	613206608	2	BATTERY TERMINAL CLAMP 15,9MM² VERZI	BATTERIEKLEMME
22	613206508	2	BATTERY TERMINAL CLAMP 17,5MM² VERZI	BATTERIEKLEMME
30	965356108	1	ADDITIONAL KIT	NACHRUESTSATZ

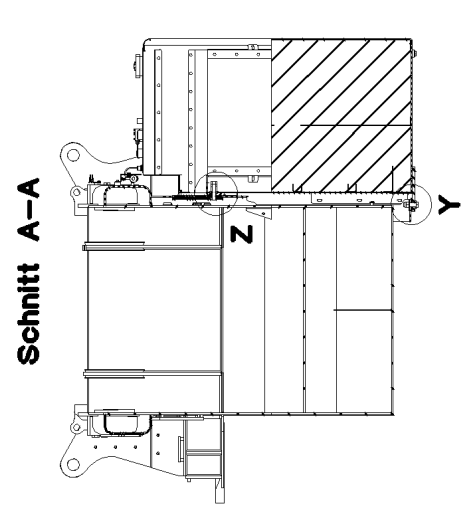
Schnitt A–A
Z
Y

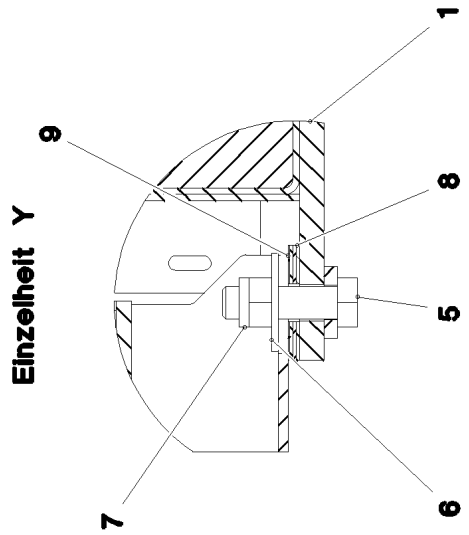
Einzelheit Y
1
9
8
5
7
6

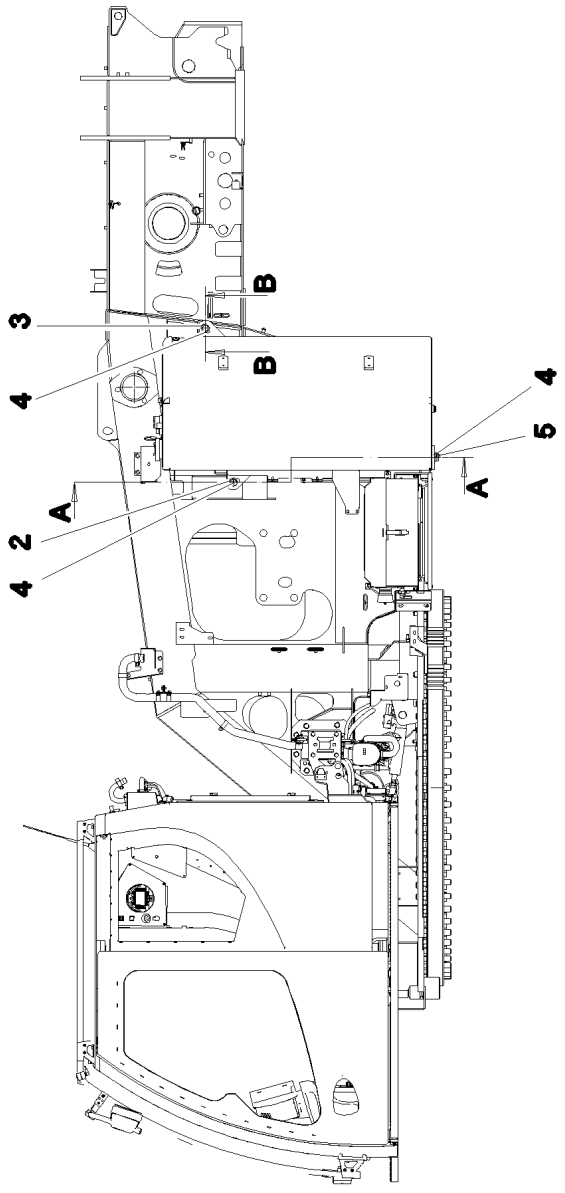
B
B
3
4
4
5
4
A
2
4
A

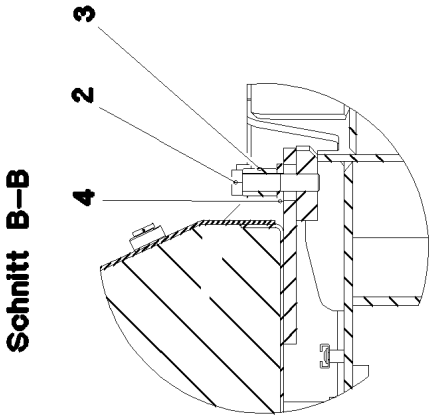
Schnitt B–B
3
2
4

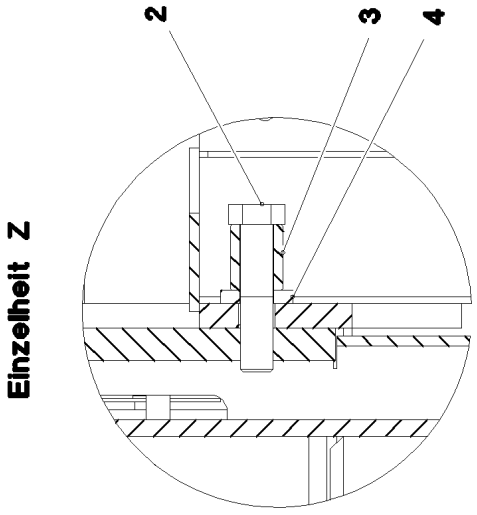
Einzelheit Z
2
3
4

Pos.	Item	Quantity	Description	Bezeichnung
1	968999708	1	FUEL TANK, PRE-ASSEMBLED ⇨ ❑ 338	KRAFTSTOFFBEHAELTER VO
2	12219309	2	HEX SCREW ISO 4014 M20X90 8.8 FLZN SP	SECHSKANTSCHRAUBE
3	970780908	2	DISTANCE SLEEVE 35.0X40 35NICRMOV12	DISTANZHUELSE
4	4600604	3	WASHER DIN 7349 21 100HV FLZN SPF	SCHEIBE
5	10875422	1	HEX SCREW ISO 4017 M20X70 8.8 FLZN SP	SECHSKANTSCHRAUBE
6	4600328	1	WASHER ISO 7093-1 20 300HV FLZN SPF	SCHEIBE
7	10875610	1	HEX NUT DIN 985 M20 10 FLZN SPF	SECHSKANTMUTTER
8	953515408	3	PLATE 2X70X80 DC01	BLECH
9	953515508	1	PLATE 1X70X80 DC01 FE//ZNNI8//CN//T0	BLECH

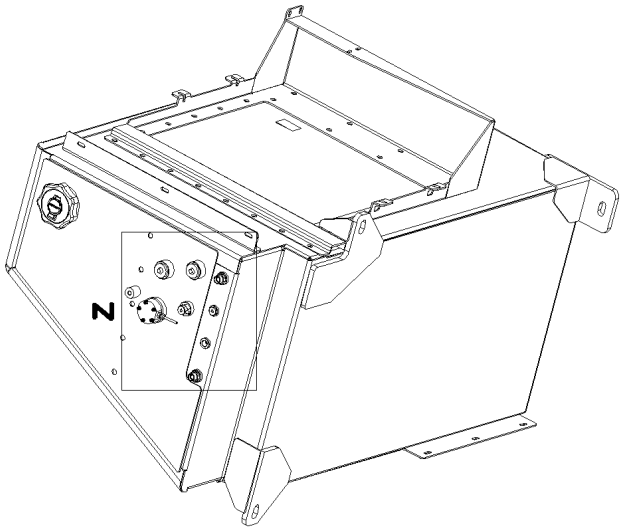
Z

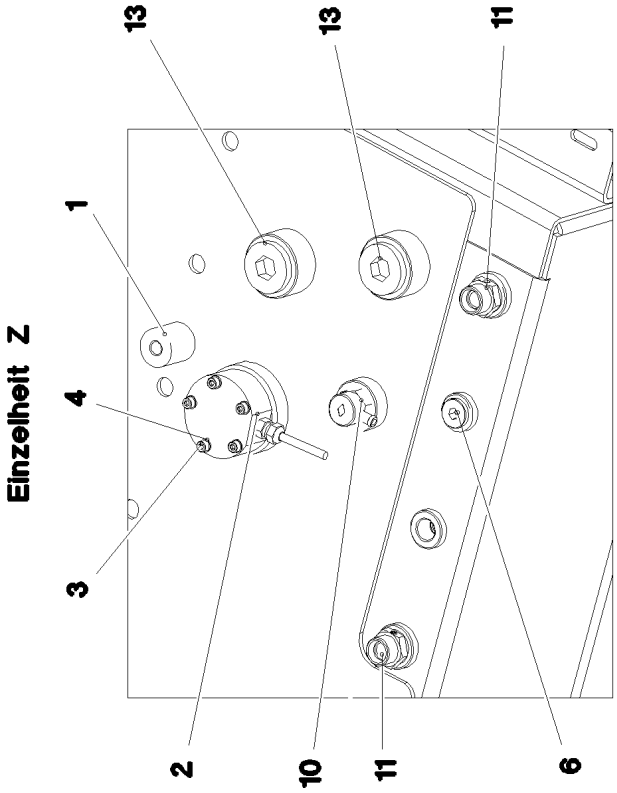
Einzelheit Z
13
13
11
1
4
3
2
10
11
6

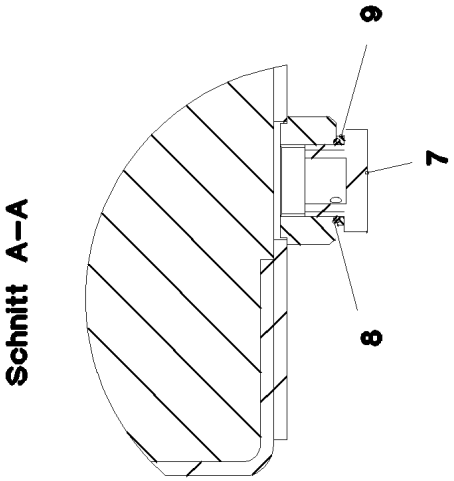
Schnitt A–A
9
7
8

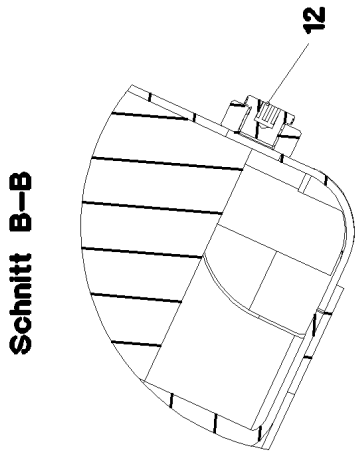
Schnitt B–B
12

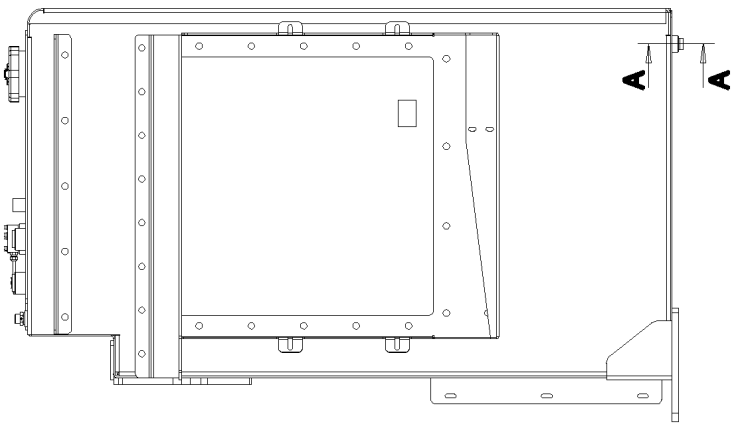
A
A

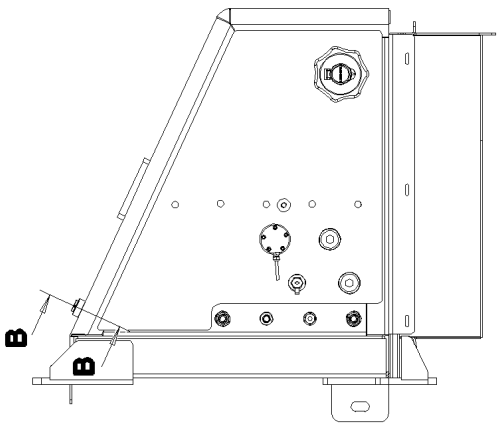
B
B

Pos.	Item	Quantity	Description	Bezeichnung
1	969072608	1	FUEL TANK WELDED CONSTR. 650-680L A	KRAFTSTOFFBEHAELTER SCH
2	10290070	1	TANK SENSOR L=1450 24V SPF	TANKSENSOR
3	12204614	5	SOCKET HEAD SCREW ISO 4762 M5X35 8.8	ZYLINDERSCHRAUBE
4	10197808	5	WASHER ISO 7089 5 200HV ZNNI-480H	SCHEIBE
6	477705108	1	STOP PLUG VSTIM18X1,5ED CR6-FREI	STOPFEN
7	502940108	1	HOLLOW SCREW DIN 74305 22-1-M22X1,5 4	HOHLSCHRAUBE
8	502932908	1	O-RING 20,3X2,4 NBR70	O-RING
9	502932508	1	COMPRESSION RING DR/R22X27	DRUCKRING
10	10097910	1	VENTILATION VALVE	ENTLUEFTUNGSVENTIL
11	471035508	2	FITTING GE 15L M22X1,5 CR6-FREI	VERSCHRAUBUNG
12	477704208	1	STOP PLUG VSTI G1/2A CR6-FREI	STOPFEN
13	477704608	2	STOP PLUG VSTI G1A CR6-FREI	STOPFEN

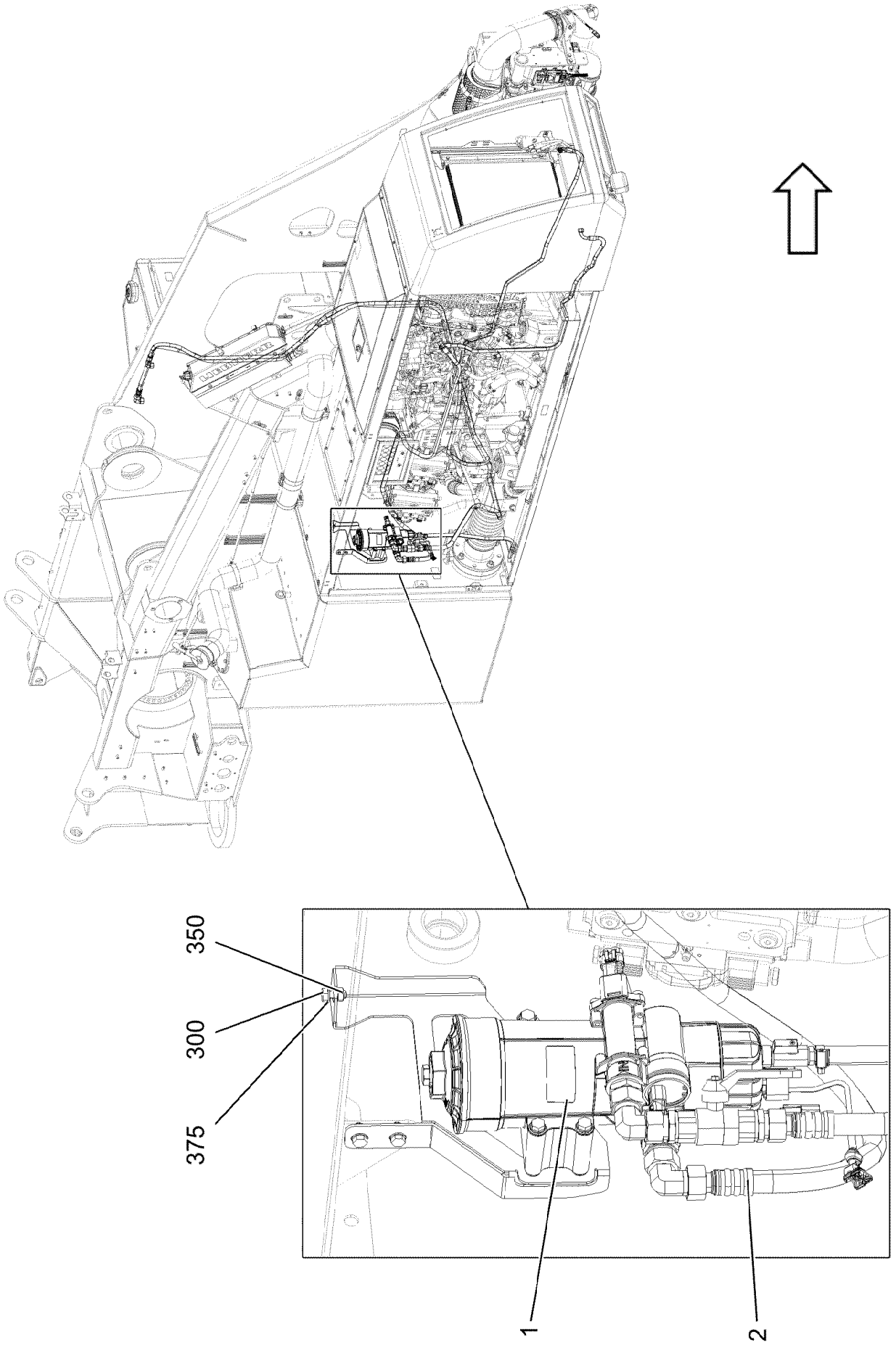
350
300
375
1
2

Pos.	Item	Quantity	Description	Bezeichnung
1	96066379	1	PREMOUNTED FUEL FILTER ⇨ ❑ 342	KRAFTSTOFFFILTER VORM.
2	96034873	1	HOSE LINES FUEL	SCHLAUCHLEITUNGEN KRAFT
(2390)	920978208	1	HOSE CPL. 2TE 16X4700	SCHLAUCH KPL.
(2391)	96034858	1	HOSE CPL. 2TE 16X2800	SCHLAUCH KPL.
(2393)	969034108	1	HOSE CPL. 2TE 12X1900	SCHLAUCH KPL.
(2394)	965946108	1	HOSE CPL. 2TE 12X6400	SCHLAUCH KPL.
(2395)	96033235	1	HOSE CPL. 2TE 12X650	SCHLAUCH KPL.
300	11651767	3	HEX SCREW ISO 4017 M8X20 8.8 480H SPF	SECHSKANTSCHRAUBE
350	11693875	3	HEX NUT ISO 4032 M8 8 480H SPF	SECHSKANTMUTTER
375	12103465	6	WASHER ISO 7089 8 300HV ZNNI-480H SPF	SCHEIBE

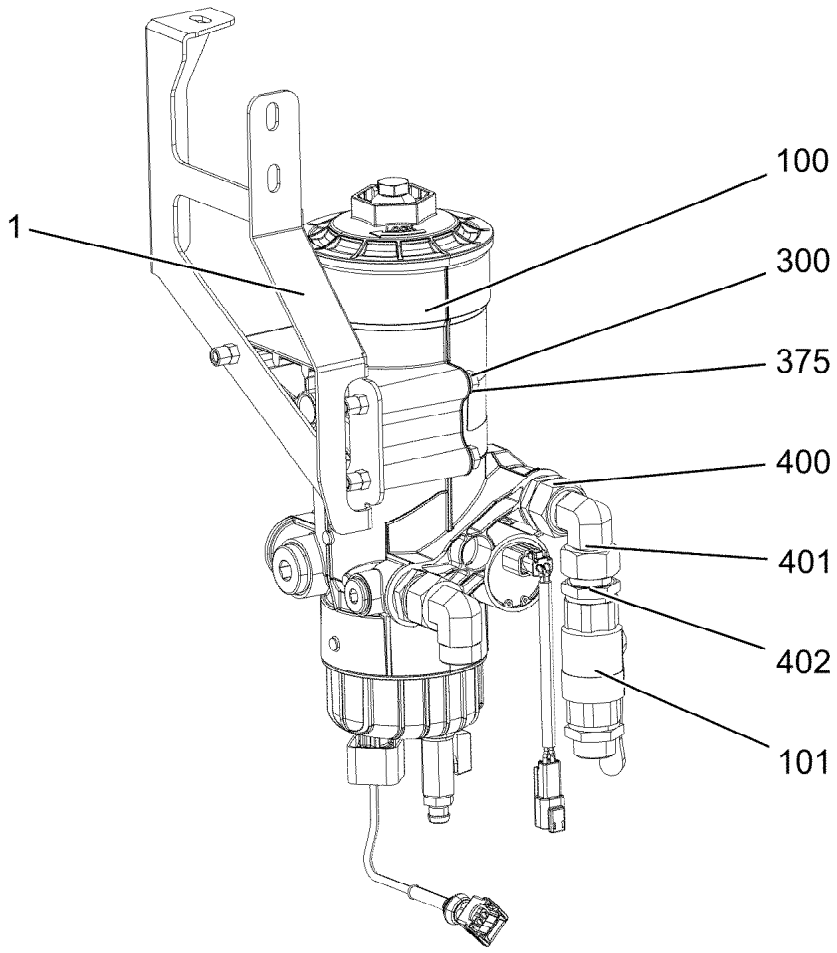

Pos.	Item	Quantity	Description	Bezeichnung
1	96034872	1	RETAINER CPL. FE//ZNNI8//CN//T0 ⇨ ❑ 343	HALTER KPL.
100	12106874	1	FUEL FILTER	KRAFTSTOFFFILTER
101	10044661	1	BALL VALVE DN20-G 3/4	KUGELHAHN
300	12216195	3	HEX SCREW ISO 4014 M8X90 8.8 480H SPF	SECHSKANTSCHRAUBE
375	12103465	3	WASHER ISO 7089 8 300HV ZNNI-480H SPF	SCHEIBE
400	10878394	1	FITTING EGE 18L G3/4 CR6-FREI	VERSCHRAUBUNG
401	247108302	2	SWIVEL ELBOW EW 18L M26X1,5 CR6-FREI	WINKELSTUTZEN
402	471037508	3	FITTING XGE18-LR-ED3/4" CR6-FREI	VERSCHRAUBUNG
(1)	726407908	1	O-RING 16X2 NBR70	O-RING

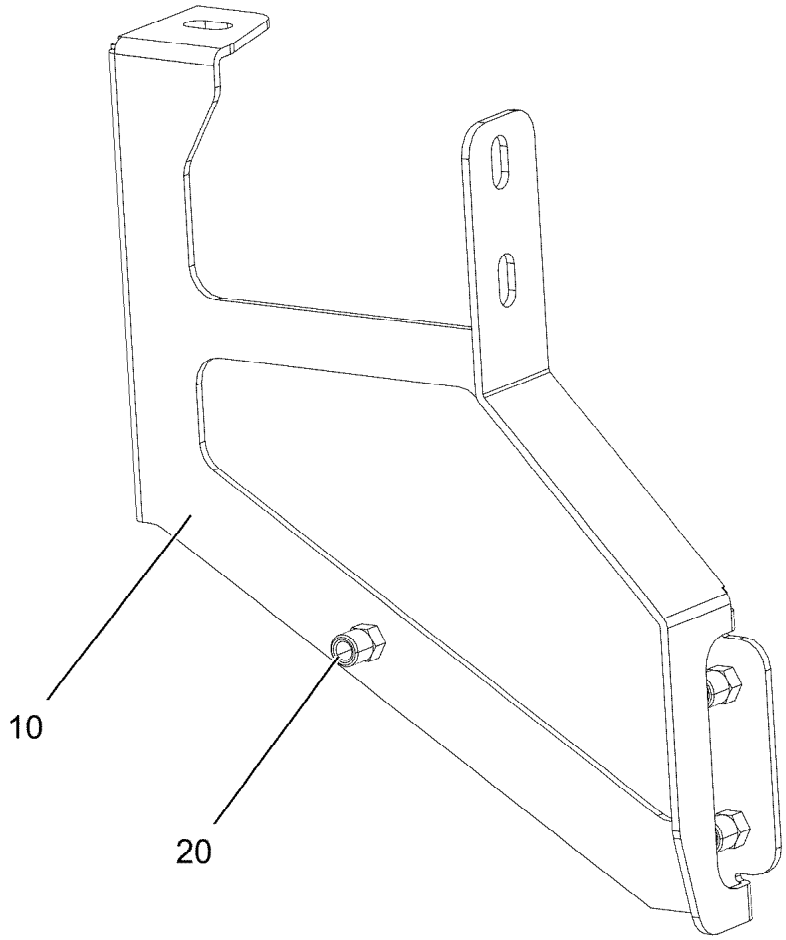

Pos.	Item	Quantity	Description	Bezeichnung
10	97118534	1	PLATE 3X324X319 DC01	BLECH
20	12100289	3	BLIND RIVET NUT M8 K=1,8-5 480H SPF	BLINDNIETMUTTER

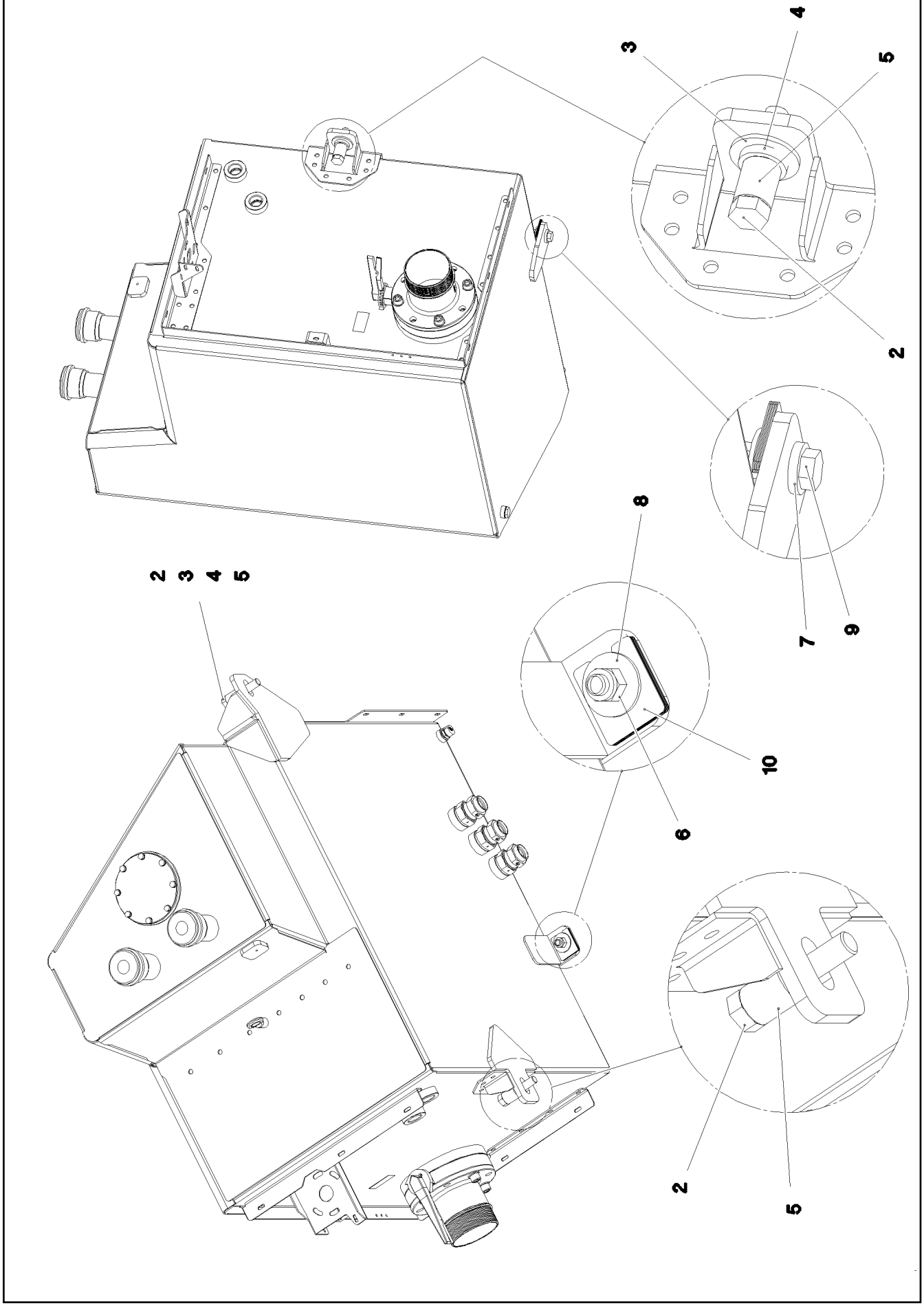

18.7.2022 083905 LIEBHERR	**etk_en_de_047654 LTR 1220** **OIL RESERVOIR, EXTENSION** **OELBEHAELTER ANBAU**	❑ 344 (1/2) **917825508**

Pos.	Item	Quantity	Description	Bezeichnung
1	969050308	1	OIL TANK PRE-ASS. ⇨ ❑ 346	OELBEHAELTER VORM.
2	10876069	2	HEX SCREW ISO 4014 M24X120 8.8 FLZN SP	SECHSKANTSCHRAUBE
3	10179463	2	WASHER ISO 7093-1 24 300HV FLZN SPF	SCHEIBE
4	12220085	2	WASHER DIN 7349 25 FLZN SPF	SCHEIBE
5	956078908	2	SLEEVE RD40X50 42CRMO4+QT GASN. SP	HUELSE
6	10875610	1	HEX NUT DIN 985 M20 10 FLZN SPF	SECHSKANTMUTTER
7	4600604	1	WASHER DIN 7349 21 100HV FLZN SPF	SCHEIBE
8	4600328	1	WASHER ISO 7093-1 20 300HV FLZN SPF	SCHEIBE
9	10875422	1	HEX SCREW ISO 4017 M20X70 8.8 FLZN SP	SECHSKANTSCHRAUBE
10	953515508	8	PLATE 1X70X80 DC01 FE//ZNNI8//CN//T0	BLECH

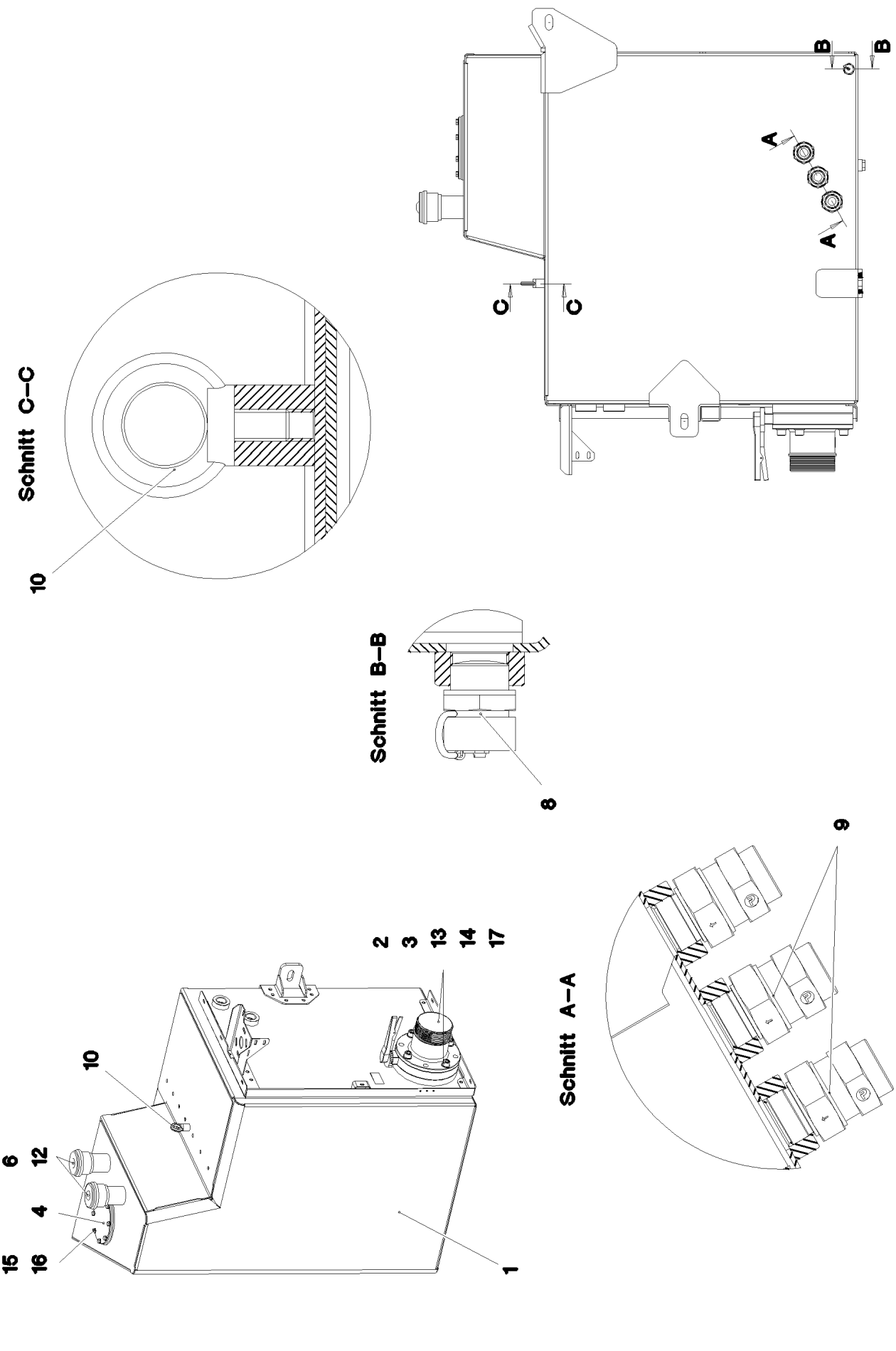

18.7.2022 083516	**etk_en_de_047654 LTR 1220**	346 (1/3)
LIEBHERR	**OIL TANK PRE-ASS.** **OELBEHAELTER VORM.**	**969050308**

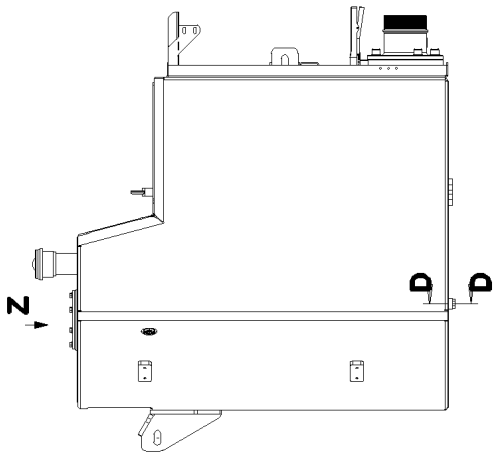
Z
D
D

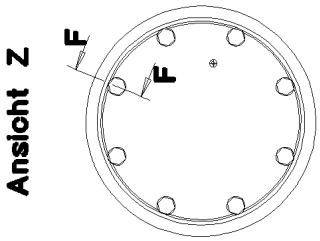
Ansicht Z
F
F

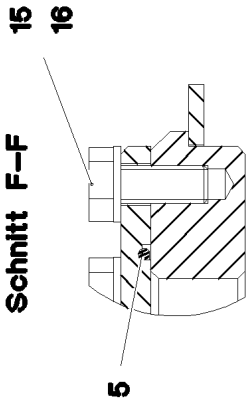
15
16
Schnitt F–F
5

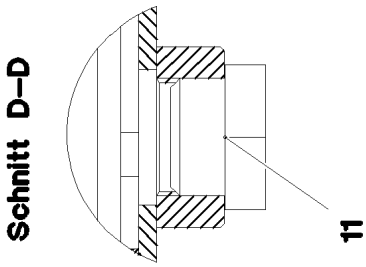
Schnitt D–D
11

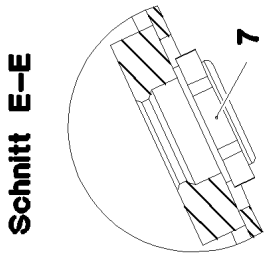
Schnitt E–E
7

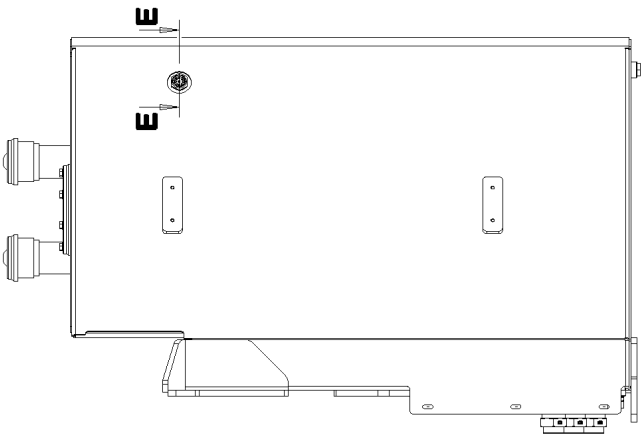
E
E

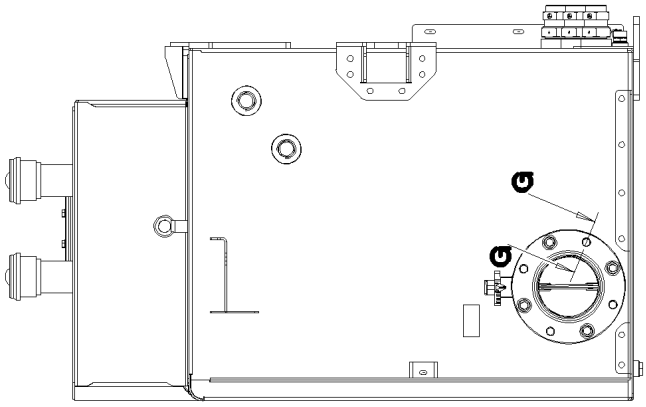
G
G

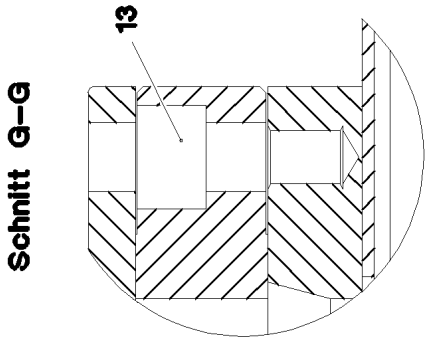
Schnitt G–G
13

Pos.	Item	Quantity	Description	Bezeichnung
1	969050408	1	OIL TANK ST.CONST. ALMG3 SPF	OELBEHAELTER SCHWK.
2	11212467	1	SHUT OFF DEVICE DN150-FLANSCH SPF	ABSPERRORGAN
(8)	704274808	2	O-RING 12X2 NBR70	O-RING
(9)	726407908	2	O-RING 16X2 NBR70	O-RING
3	97032261	1	SUCTION PIPE OIL G-ALSI10MG SPF	SAUGROHR-OEL
4	972272908	1	COVER 10X220X220 ALMG3 F23	DECKEL
5	726204008	1	O-RING 160X3 NBR70	O-RING
6	510667308	2	AERATION FILTER	BELUEFTUNGSFILTER
(1)	510671808	1	FILTER INSERT 1m³/min 10µm	FILTEREINSATZ
7	774320108	1	OIL SIGHT GLASS G1" ALU	OELSTANDSAUGE
8	789011908	1	OIL DRAIN PLUG M26X1,5	OELABLASSSCHRAUBE
9	511457808	3	NON-RETURN VALVE 250BAR 2.5BAR CR6-F	RUECKSCHLAGVENTIL
10	10179932	1	RING BOLT DIN 580 M12 C15E FLZN	RINGSCHRAUBE
11	477705808	1	STOP PLUG VSTIM26X1,5ED CR6-FREI	STOPFEN
12	12216233	12	COUNTERSUNK SCREW ISO 7047 M5X16 4	SENKSCHRAUBE
13	10878829	4	SOCKET HEAD SCREW ISO 4762 M20X35 8	ZYLINDERSCHRAUBE
14	12691987	4	SOCKET HEAD SCREW ISO 4762 M20X80 8	ZYLINDERSCHRAUBE
15	11631816	8	HEX SCREW ISO 4017 M10X25 8.8 FLZN SP	SECHSKANTSCHRAUBE
16	10289795	8	WASHER ISO 7089 10 300HV FLZN SPF	SCHEIBE
17	10353689	4	WASHER ISO 7089 20 200HV-A2	SCHEIBE

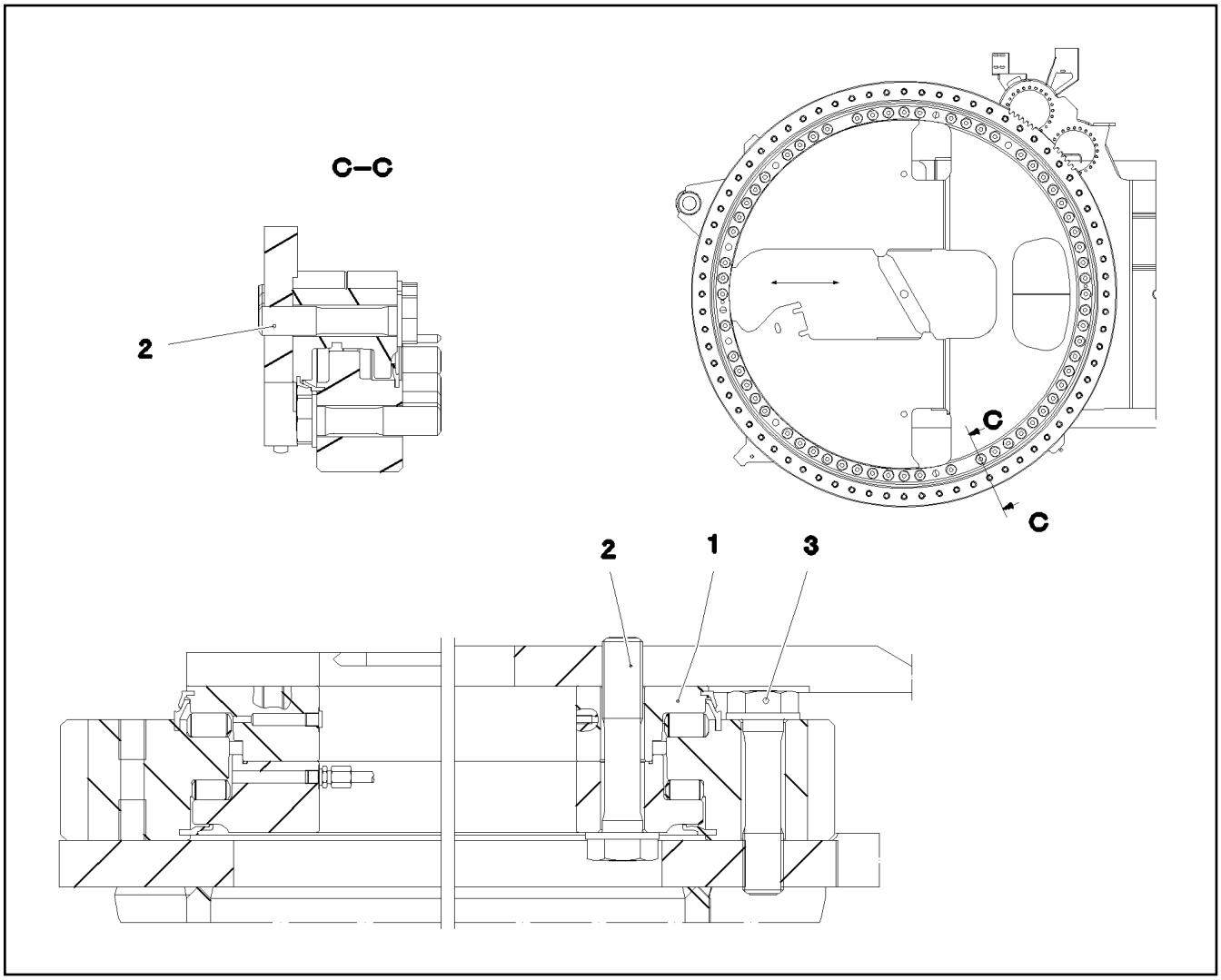

Pos.	Item	Quantity	Description	Bezeichnung
1	90025640	1	ROLLER SLEWING RING 1792-115 42CrMo4 ⇨ ❑ 350	ROLLENDREHVERBINDUNG
2	970447008	62	EXPANSION BOLT M30X145 10.9 SPF	DEHNSCHRAUBE
3	970611208	72	EXPANSION BOLT 55.0X152 35NICRMOV12	DEHNSCHRAUBE

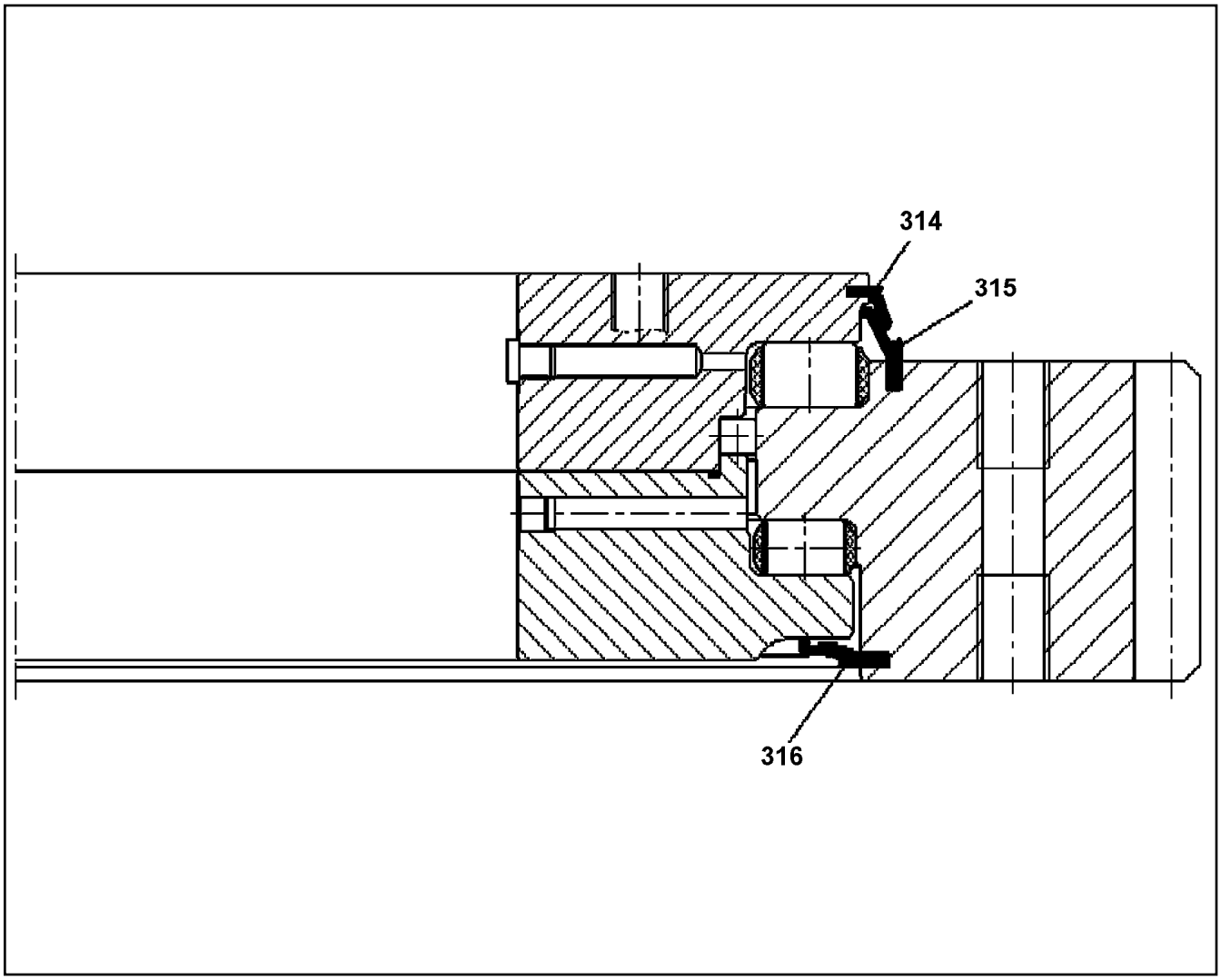

Pos.	Item	Quantity	Description	Bezeichnung
314	262183501	6.26	SEALING PROFILE	DICHTPROFIL
315	262181001	6.29	SEALING PROFILE NBR 70-4833	DICHTPROFIL
316	262181001	6.24	SEALING PROFILE NBR 70-4833	DICHTPROFIL

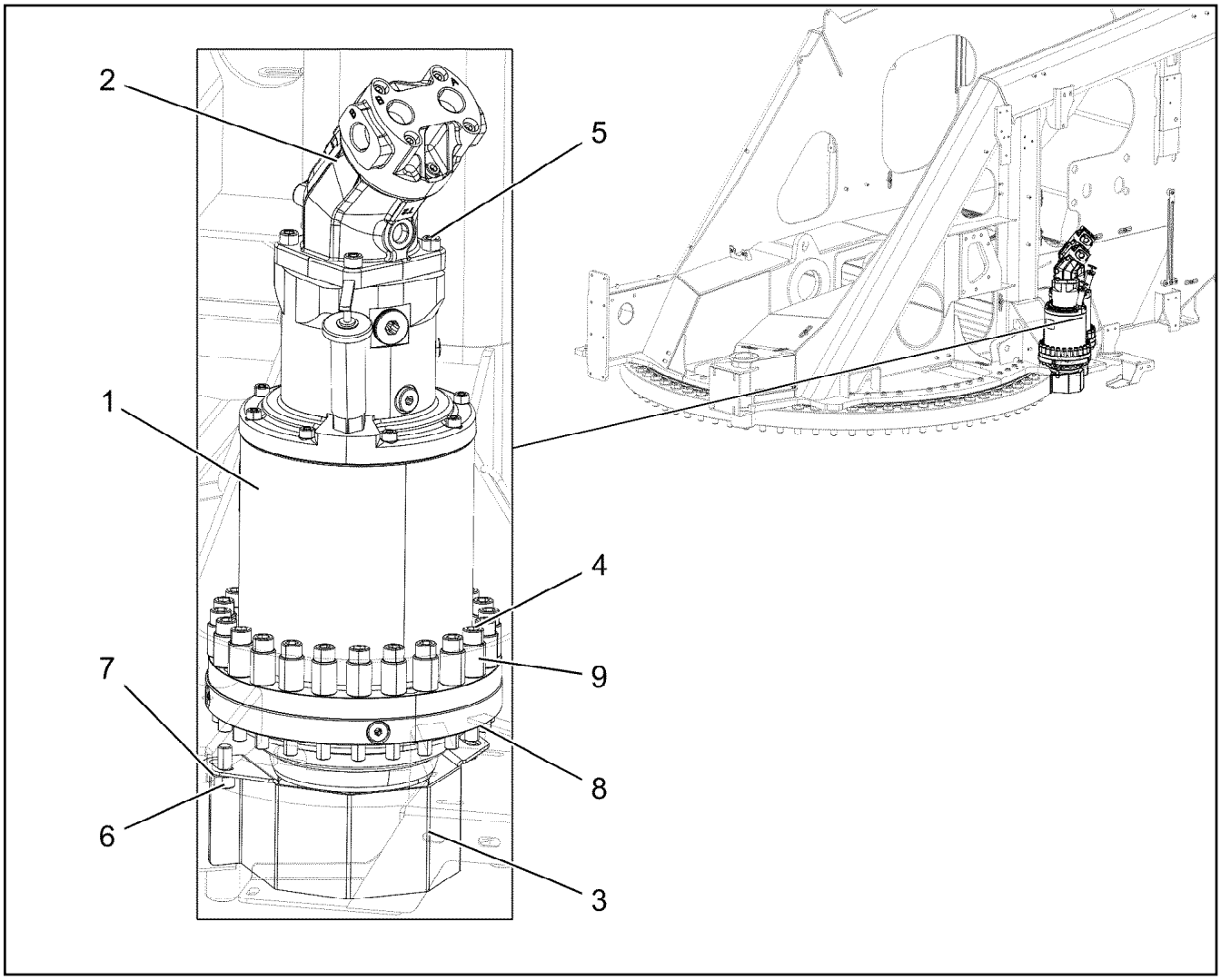

Pos.	Item	Quantity	Description	Bezeichnung
1	90008901	2	SLEWING GEAR DRIVE DAT 225/1462 LIEB ⇨ ❑ 352	DREHWERKANTRIEB
2	510229408	2	HYDRO MOTOR A2FM 23CM³/U ⇨ ❑ 359	HYDROMOTOR
3	97032687	2	PROTECTION GUARD 3X140X437 DC01 FE//	SCHUTZBLECH
4	10663388	48	SOCKET HEAD SCREW ISO 4762 M12X90 10	ZYLINDERSCHRAUBE
5	10875572	8	SOCKET HEAD SCREW ISO 4762 M10X35 8	ZYLINDERSCHRAUBE
6	12223057	4	SOCKET HEAD SCREW ISO 4762 M12X25 8	ZYLINDERSCHRAUBE
7	10289804	4	WASHER ISO 7089 12 300HV FLZN SPF	SCHEIBE
8	97116895	6	FRICTION PLATE 3M TYP35	REIBPLATTE
9	97114100	48	SLEEVE 25.0X30 35NICRMOV125 SCHWAR	HUELSE

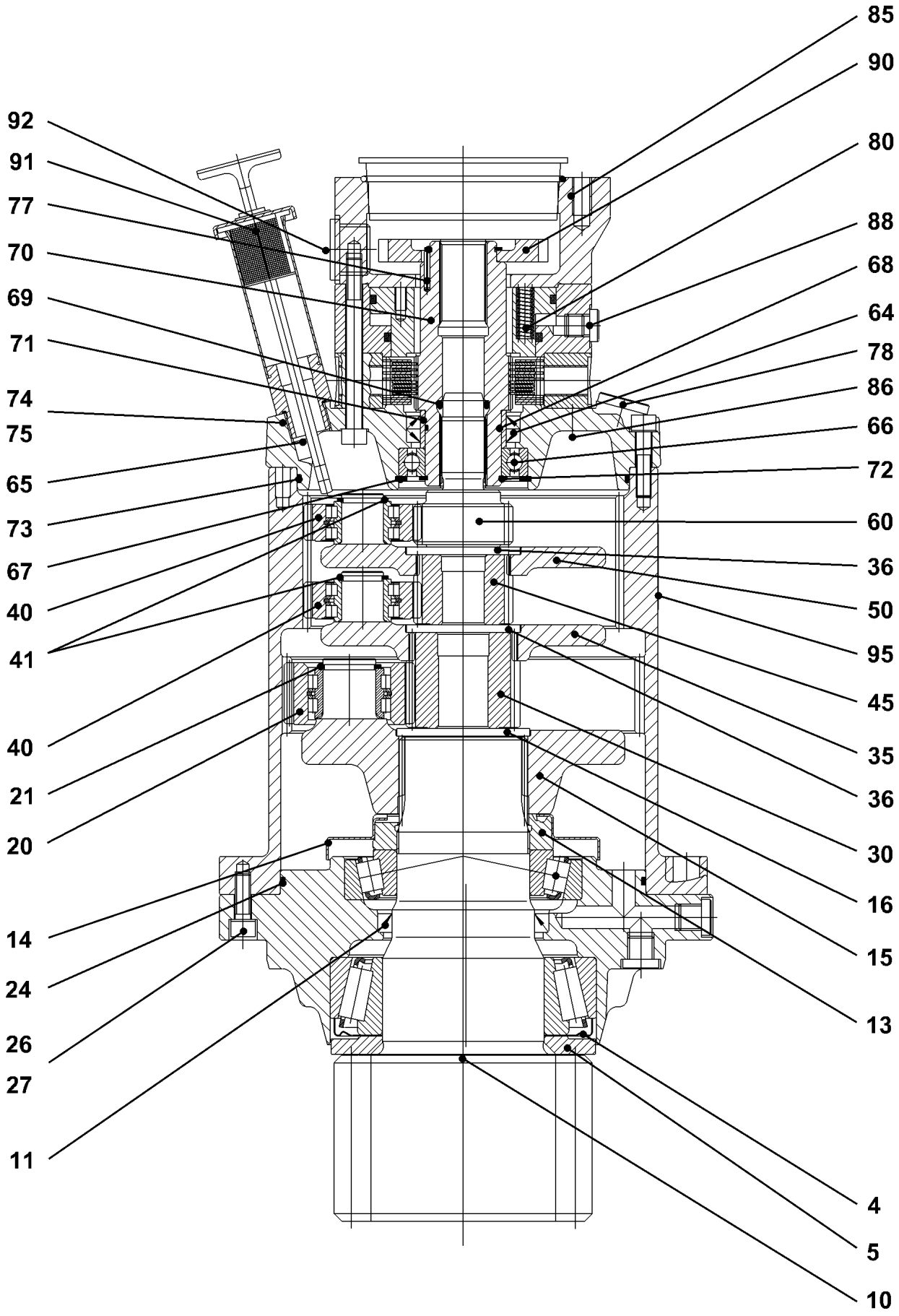
85
90
92
80
91
88
77
68
70
64
69
78
71
86
74
66
75
72
65
60
73
36
67
50
40
95
41
45
40
35
21
36
20
30
16
14
15
24
13
26
27
4
11
5
10

Pos.	Item	Quantity	Description	Bezeichnung
4	747258401	1	BEARING COVER RING 33117 AV	LAGERABDECKRING
5	931807501	1	WASHER 85,2X139X9,5	SCHEIBE
10	90010683	1	OUTPUT SHAFT 135,9 18CrNiMo7-6	ABTRIEBSWELLE
11	710059301	1	ROTARY SHAFT LIP SEAL DIN 3760 A 75X9	RADIALWELLENDICHTRING
13	927530201	1	SLOTTED NUT M70X2X19 C45	NUTMUTTER
14	927530301	1	PLATE DC01	BLECH
15	939250301	1	PLANETARY CARRIER 170 42CrMo4	PLANETENTRAEGER
16	927531901	1	RETAINING DISK 4X70X4	HALTESCHEIBE
20	939251101	5	PLANET WHEEL Z=28	PLANETENRAD
21	463000103	5	LOCKING RING DIN 471 28X2	SICHERUNGSRING
24	726453601	1	O-RING 175X3 NBR 70	O-RING
26	10875599	8	SOCKET HEAD SCREW ISO 4762 M8X25 8.8	ZYLINDERSCHRAUBE
27	423910801	8	LOCK WASHER VS 8 ZN8M+PASSIVIERUNG	SICHERUNGSSCHEIBE
30	939251401	1	SUN WHEEL Z=24 18CrNiMo7-6	SONNENRAD
35	939251501	1	PLANETARY CARRIER 150 42CrMo4+QT	PLANETENTRAEGER
36	944134103	1	RETAINING DISK 4X60X4	HALTESCHEIBE
40	927530801	3	PLANET WHEEL	PLANETENRAD
41	463000003	3	LOCKING RING DIN 471 22X1,75	SICHERUNGSRING
45	939251601	1	SUN WHEEL Z=24 18CrNiMo7-6	SONNENRAD
50	939257301	1	PLANETARY CARRIER 150 42CrMo4+QT	PLANETENTRAEGER
60	939251701	1	SUN WHEEL Z=24 18CrNiMo7-6	SONNENRAD
64	10167462	2	ROTARY SHAFT LIP SEAL DIN 3760 A 45X60	RADIALWELLENDICHTRING
65	939251801	1	GEARBOX COVER	GETRIEBEDECKEL
66	745139101	1	DEEP GROOVE BALL BEARING DIN 625 60	RILLENKUGELLAGER
67	10171626	1	LOCKING RING DIN 472 68X2,5 FLZNNC-120	SICHERUNGSRING
69	726414901	1	O-RING 20X4 NBR 70	O-RING
70	927716701	1	MULTI-DISC CARRIER 51,6 42CrMo4+QT	LAMELLENTRAEGER
71	747404001	1	INNER RING 40X45X20	INNENRING
73	726440001	1	O-RING 165X3 FKM 70	O-RING
74	11691424	8	SOCKET HEAD SCREW ISO 4762 M8X35 8.8	ZYLINDERSCHRAUBE
75	423910801	8	LOCK WASHER VS 8 ZN8M+PASSIVIERUNG	SICHERUNGSSCHEIBE
77	927554301	1	VENTILATION CONNECTING PIECE ⇨ ❑ 354	ENTLUEFTUNGSSTUTZEN
80	10176328	1	SPRING LOADED MULTI-DISC BRAKE	FEDERDRUCKLAMELLENBREMS
(1)	10175221	8	OUTER MULTI-DISC	AUSSENLAMELLE
(2)	10175222	7	INTERNAL MULTI-DISC	INNENLAMELLE
(3)	12107367	10	COMPRESSION SPRING	DRUCKFEDER
(4)	12107368	10	COMPRESSION SPRING	DRUCKFEDER
(5)	11170868	1	SEAL KIT	DICHTSATZ
(6)	11170869	1	SEAL KIT	DICHTSATZ
85	938996401	1	MOTOR FLANGE EN-GJL-250	MOTORFLANSCH
86	12213825	10	SOCKET HEAD SCREW ISO 4762 M8X90 8.8	ZYLINDERSCHRAUBE
88	779016201	1	BLANKING PLUG GPN 300 F LD-PE	VERSCHLUSSSTOPFEN
90	938996501	1	TOOTH LOCK WASHER 12X99/17RD S355J	ZAHNSCHEIBE
91	431200501	3	CORE PIN ISO 8740 3X20	KERBSTIFT
92	10171579	1	LOCKING RING DIN 471 35X1,5 FLZNNC-120	SICHERUNGSRING
960	90025781	1	BRAKE MULTI-DISC SET ⇨ ❑ 355	BREMSLAMELLENSATZ
970	90025782	1	BRAKE SPRING SET ⇨ ❑ 357	BREMSFEDERSATZ

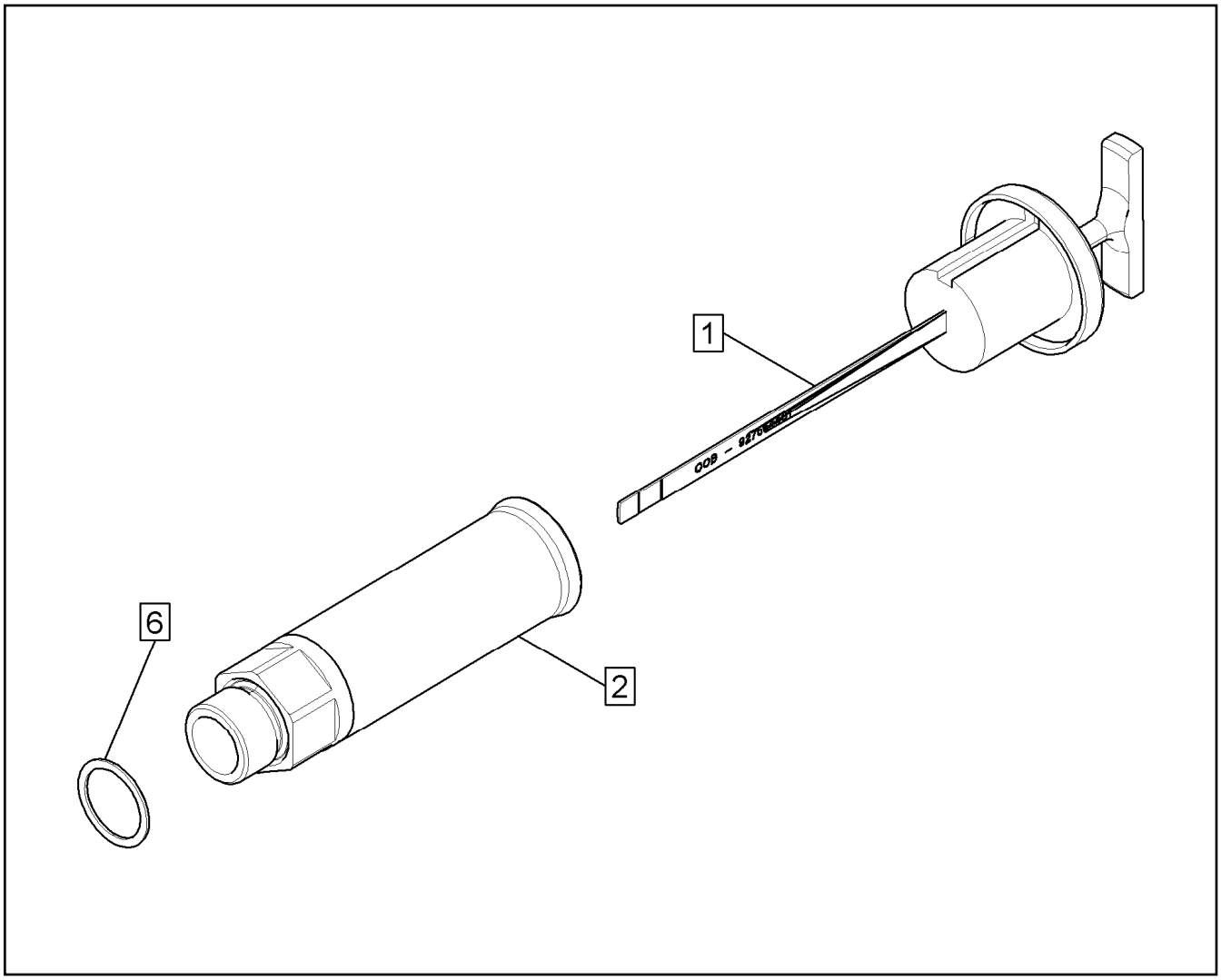

Pos.	Item	Quantity	Description	Bezeichnung
1	927554401	1	OIL DIPSTICK 1 1/8"	OELMESSSTAB
2	927501901	1	VENTILATION CONNECTING PIECE	ENTLUEFTUNGSSTUTZEN
6	761022503	1	SEALING RING 19,6X24,3X1,5 NBR 85 Shore	DICHTRING

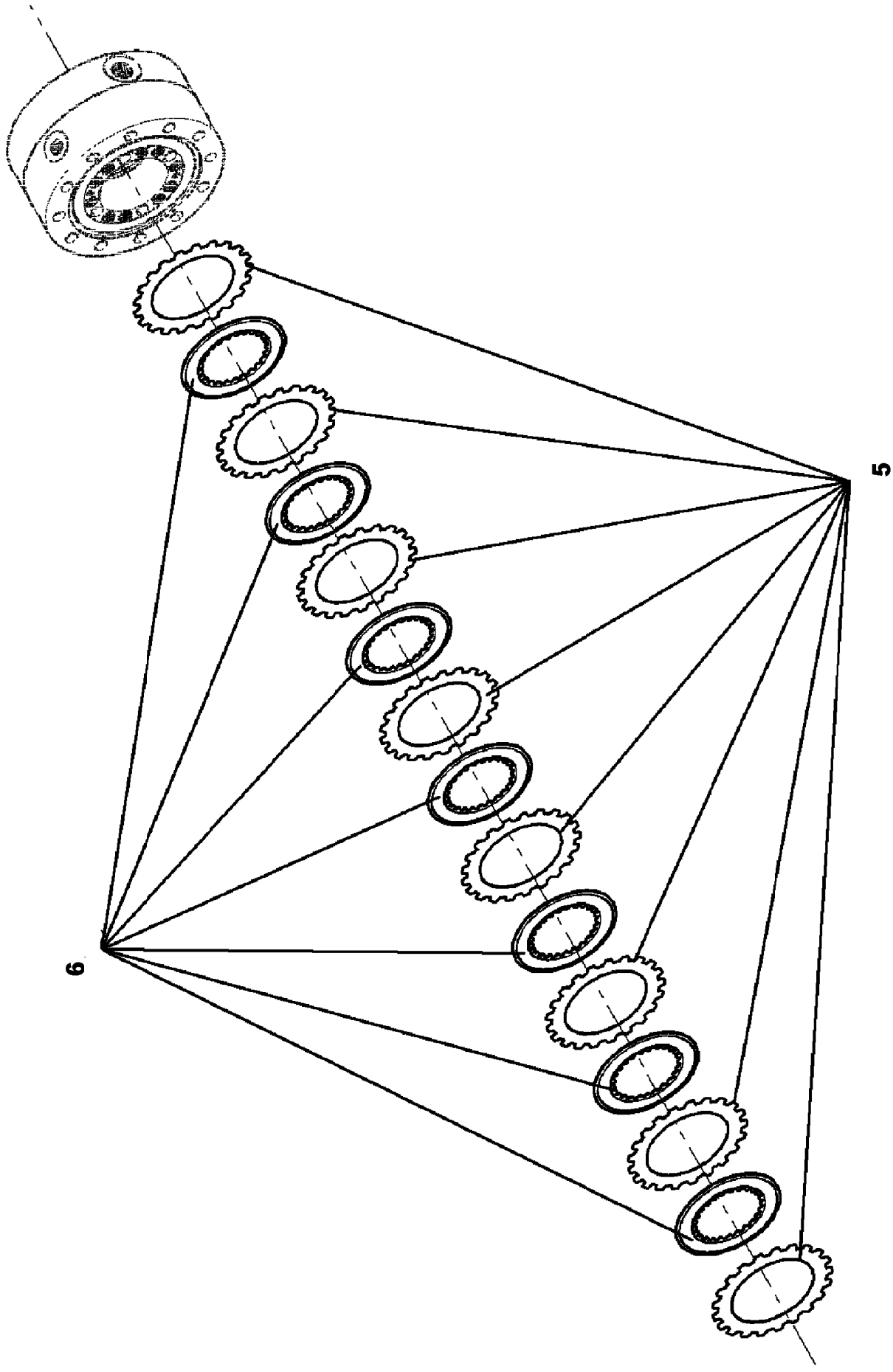
5
6

Pos.	Item	Quantity	Description	Bezeichnung
5	10175221	8	OUTER MULTI-DISC	AUSSENLAMELLE
6	10175222	7	INTERNAL MULTI-DISC	INNENLAMELLE

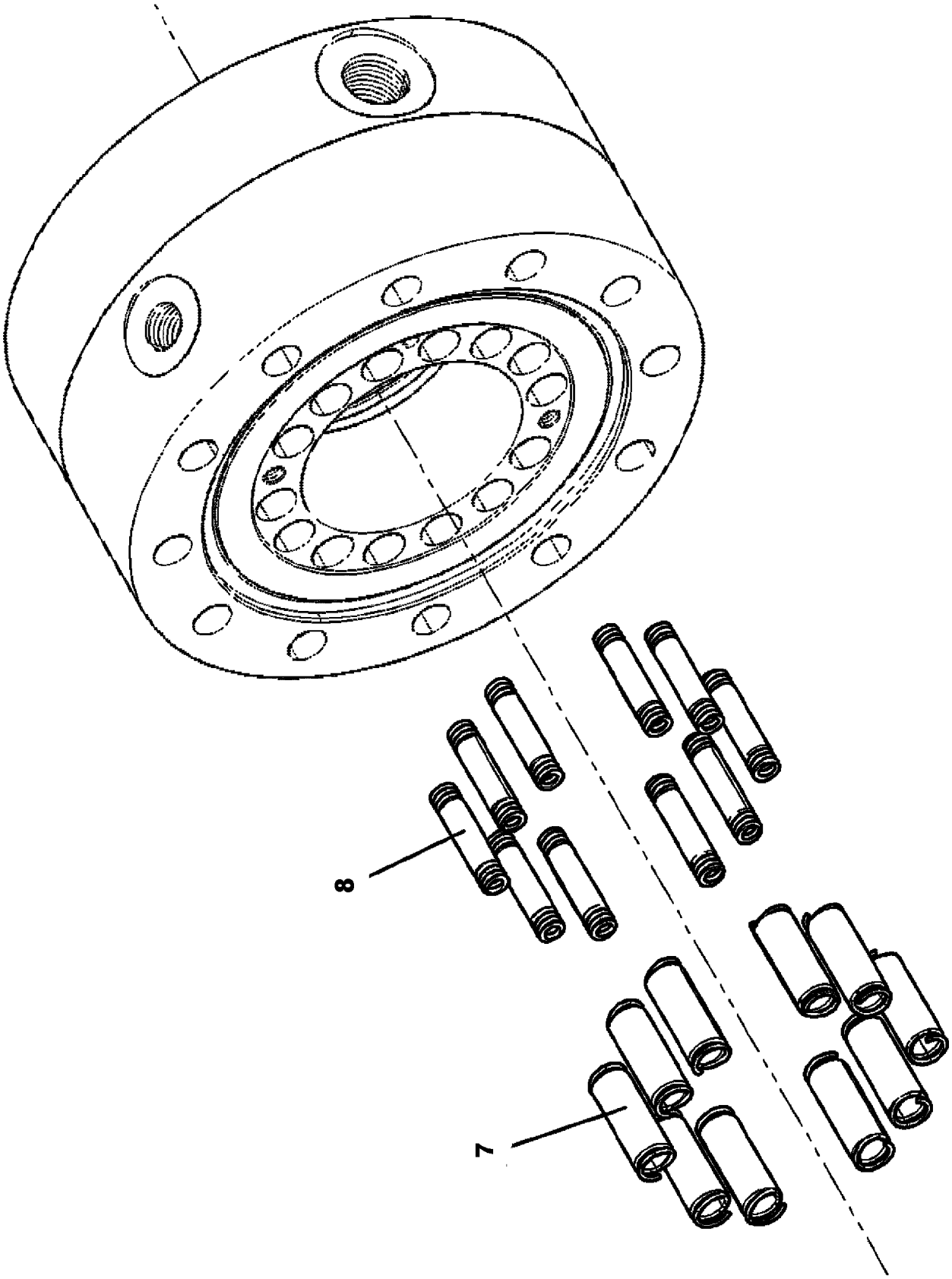
8
7

Pos.	Item	Quantity	Description	Bezeichnung
7	10176329	10	COMPRESSION SPRING 1,8X7,3X40,5	DRUCKFEDER
8	10176330	10	COMPRESSION SPRING 1X4,1X41,3	DRUCKFEDER

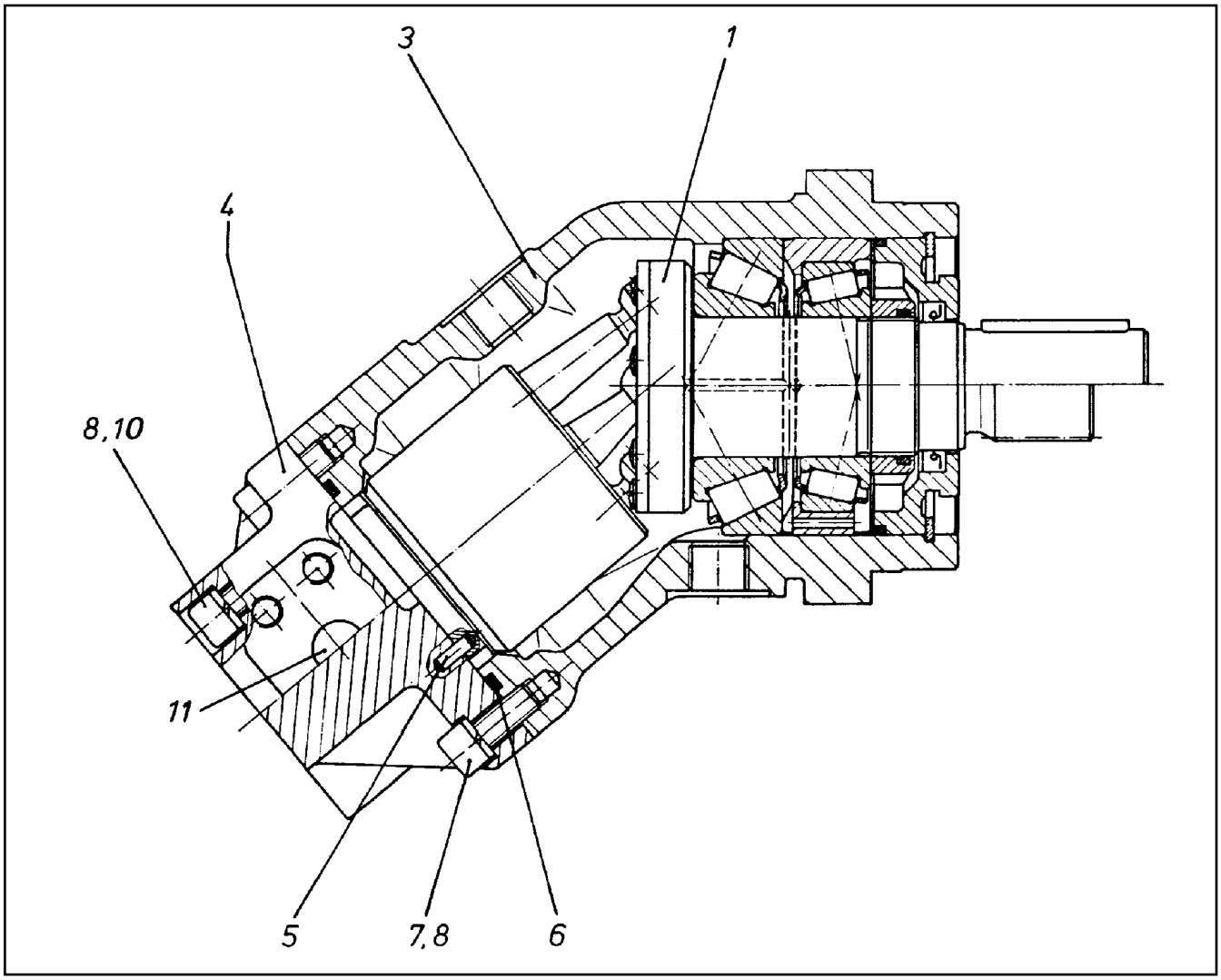

Pos.	Item	Quantity	Description	Bezeichnung
1	570109008	1	DRIVING GEAR ⇨ ❑ 360	TRIEBWERK
3	570109108	1	HOUSING	GEHAEUSE
4	570109208	1	CONNECTING PLATE	ANSCHLUSSPLATTE
5	570109308	1	PARALLEL PIN ISO 2338 4M6X10 ST	ZYLINDERSTIFT
6	518648508	1	O-RING ARP 568 66,27X3,53 NBR70	O-RING
7	10875598	2	SOCKET HEAD SCREW ISO 4762 M8X20 8.8	ZYLINDERSCHRAUBE
8	424100708	6	WASHER SPRING DIN 7980 8 FST VERZ	FEDERRING
10	10875601	4	SOCKET HEAD SCREW ISO 4762 M8X50 8.8	ZYLINDERSCHRAUBE
11	570109408	2	SCREW PLUG M27X2	VERSCHLUSSSCHRAUBE
14	10803065	1	CLOSING RING	VERSCHLUSSRING
(14)	7022315	1	SHAFT SEAL 35X52X6/5 FKM	WELLENDICHTRING

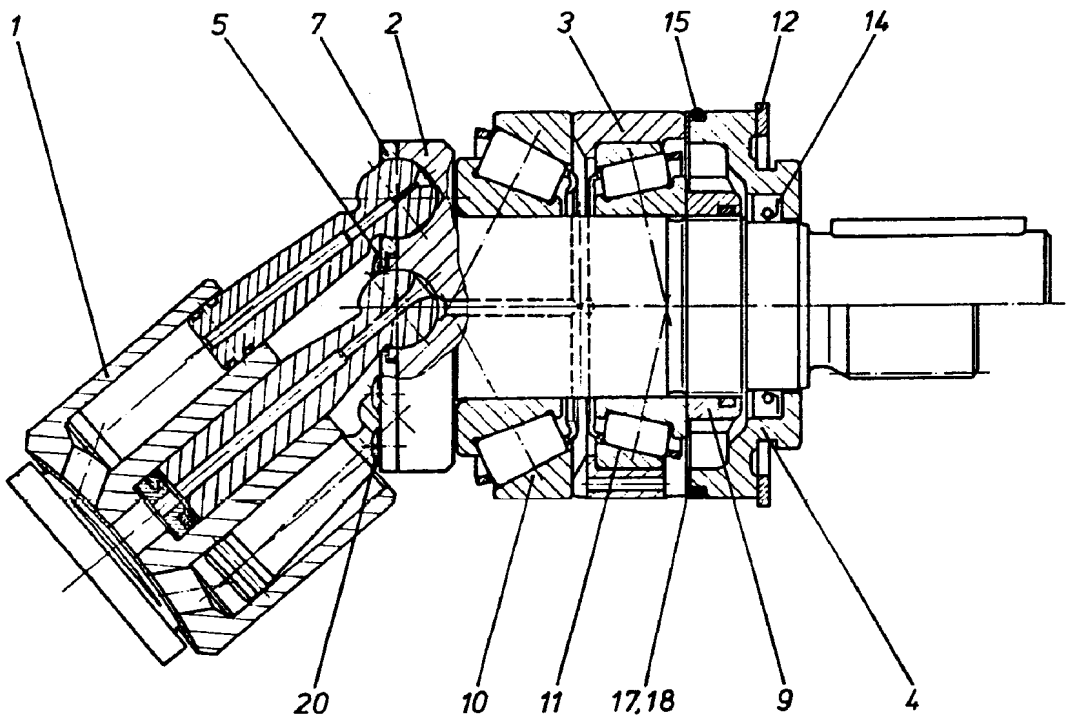

Pos.	Item	Quantity	Description	Bezeichnung
1	570109508	1	DRIVING GEAR ⇨ ❑ 361	TRIEBWERK
2	570109608	1	DRIVING SHAFT	TRIEBWELLE
3	570109708	1	BEARING RING	LAGERRING
4	570109808	1	CLOSING RING	VERSCHLUSSRING
5	10293786	1	SHIM WASHER	UNTERLEGSCHEIBE
7	570110008	1	PULL-BACK PLATE	RUECKZUGPLATTE
9	570110108	1	SLOTTED NUT M38X1,5	NUTMUTTER
10	10293775	1	TAPERED ROLLER BEARING	KEGELROLLENLAGER
11	746221908	1	TAPERED ROLLER BEARING DIN 720 32008	KEGELROLLENLAGER
12	428102508	1	LOCKING RING DIN 472 80X2,5	SICHERUNGSRING
14	7022315	1	SHAFT SEAL 35X52X6/5 FKM	WELLENDICHTRING
15	514530408	1	O-RING ARP 568 75,87X2,62 NBR90	O-RING
17	421000408	2	SHIM RING DIN 988 63X80X0,1	PASSSCHEIBE
18	421000508	1	SHIM RING DIN 988 63X80X0,3	PASSSCHEIBE
20	514525208	7	OVAL SCREW M4X12 10.9	LINSENSCHRAUBE

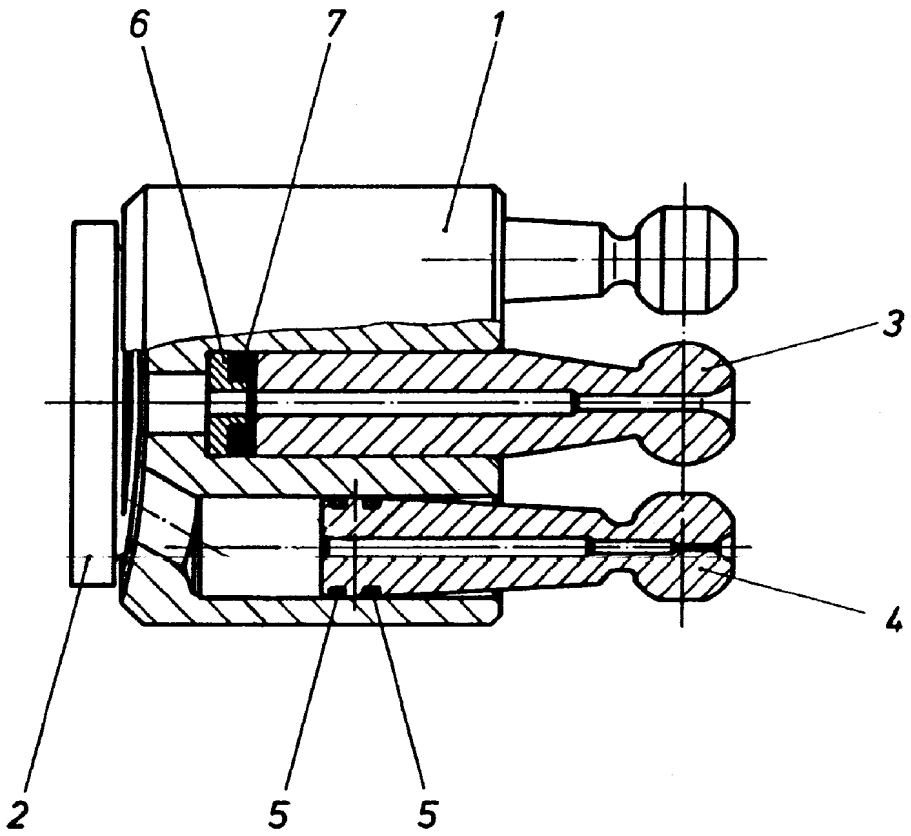

Pos.	Item	Quantity	Description	Bezeichnung
1	570110308	1	CYLINDER	ZYLINDER
2	570110408	1	CONTROL PLATE	STEUERPLATTE
3	570110508	1	CENTER STUD	MITTELZAPFEN
4	570110608	7	PISTON	KOLBEN
5	570110708	14	RING	RING
6	570110808	1	SPRING SUPPORT	FEDERTELLER
7	570110908	4	DISC SPRING	TELLERFEDER

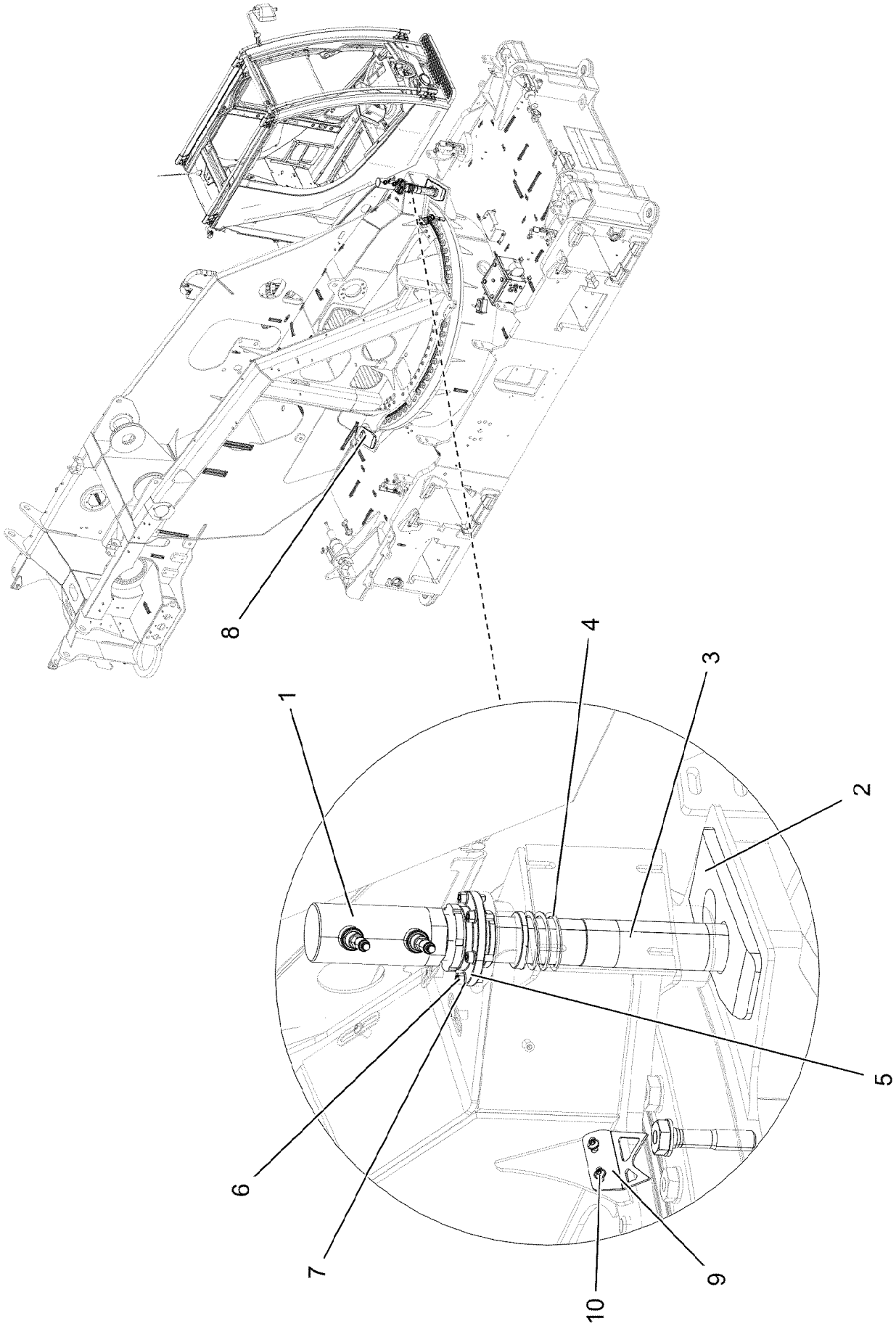
8
4
3
1
2
5
6
7
9
10

Pos.	Item	Quantity	Description	Bezeichnung
1	10443748	1	HYDRO CYLINDER 70/45-50 SPF	HYDROZYLINDER
(999)	10490901	1	DS HYDRO CYLINDER	DS HYDROZYLINDER
2	97032051	1	PLATE 20X375X135 S960QL	BLECH
3	97034096	1	PIN 85.0X350 35NICRMOV125 SPF	BOLZEN
4	720011408	1	COMPRESSION SPRING 6,3X80X145	DRUCKFEDER
5	972140108	1	SLEEVE 140.0X25 35NICRMOV125	MUFFE
6	10875571	6	SOCKET HEAD SCREW ISO 4762 M10X30 8	ZYLINDERSCHRAUBE
7	10289795	6	WASHER ISO 7089 10 300HV FLZN SPF	SCHEIBE
8	97034837	1	PLATE 20X375X135 S960QL	BLECH
9	97033038	1	POINTER 3X146X110 DC01 FE//ZNNI8//CN//T	ZEIGER
10	12102696	2	BUTTON HEAD SCREW ISO 7380-2 M8X10 0	HALBRUNDKOPFSCHRAUBE

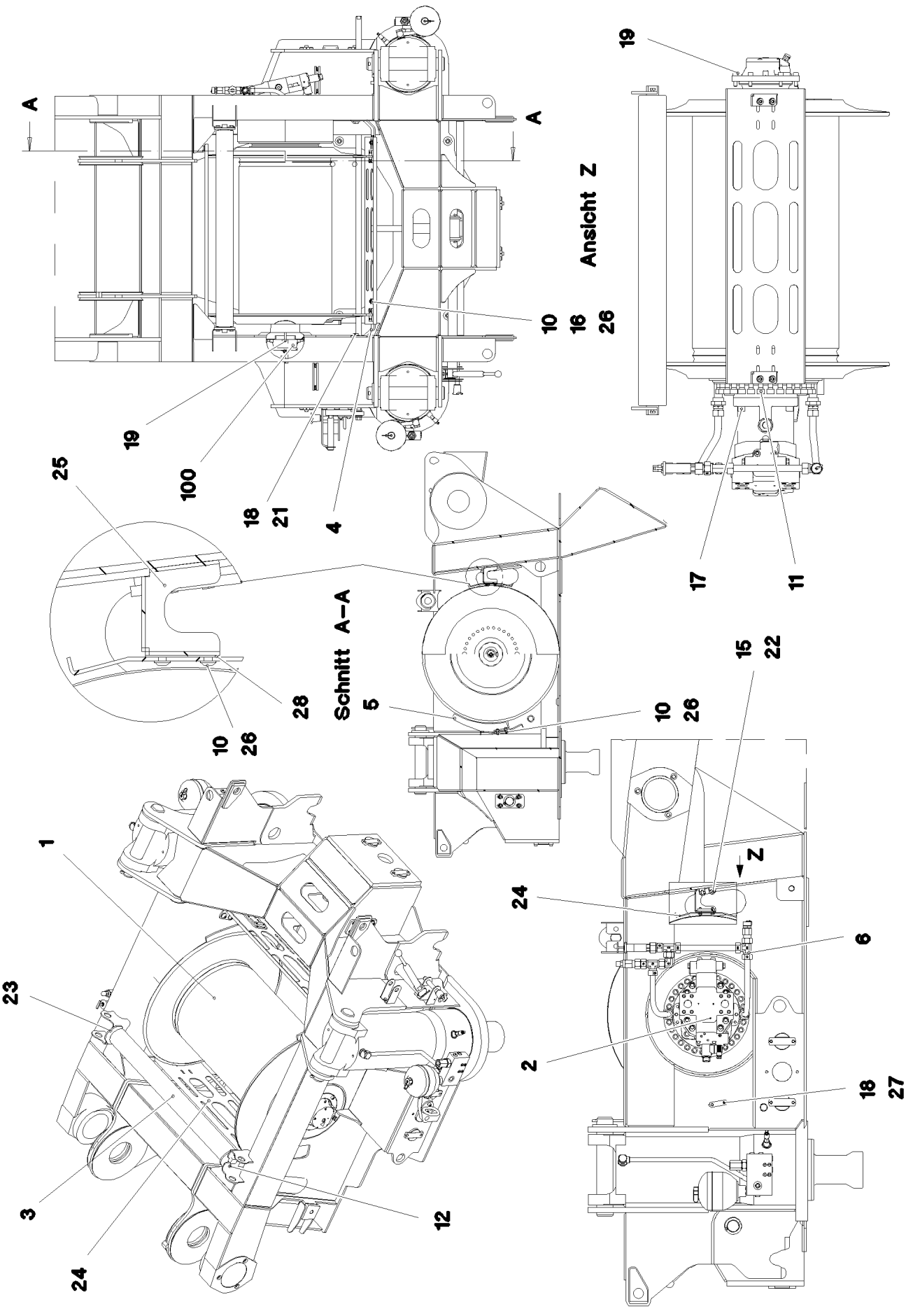
A
A
19
10
16
26
100
18
21
4
25
Ansicht Z
19
17
11
Schnitt A–A
28
10
26
5
10
26
15
22
Z
24
6
2
18
27
1
23
3
24
12

Pos.	Item	Quantity	Description	Bezeichnung
1	90208882	1	COMPACT ROPE WINCH KSW 400/2719 LIEB ⇨ ❑ 366	KOMPAKTSEILWINDE
2	11182597	1	VARIABLE DISPLACEMENT MOTOR A6VM 1 ⇨ ❑ 373	VERSTELLMOTOR
3	749014908	1	CARRYING ROLLER 90/7/40X1015 GASN. SP	TRAGROLLE
4	97033021	2	PLATE 6X312X90 S355MC FE//ZNNI8//CN//T	BLECH
5	968054808	2	PLATE FE//ZNNI8//CN//T0	SICHELBLECH SCHWK.
6	90200104	1	OIL-GAUGING INSTRUMENT ⇨ ❑ 374	OELMESSEINRICHTUNG
10	10875486	12	BUTTON HEAD SCREW AEHNL.ISO 7380-2	HALBRUNDKOPFSCHRAUBE
11	404317008	28	SOCKET HEAD SCREW ISO 4762 M16X45 10	ZYLINDERSCHRAUBE
12	12222989	4	HEX SCREW ISO 4017 M10X12 8.8 FLZN SP	SECHSKANTSCHRAUBE
15	11651612	4	HEX SCREW ISO 4017 M8X16 8.8 480H SPF	SECHSKANTSCHRAUBE
16	11140469	4	WASHER ISO 7093-1 8 200HV 480H SPF	SCHEIBE
17	12224014	4	SOCKET HEAD SCREW ISO 4762 M16X45 8	ZYLINDERSCHRAUBE
18	10875571	4	SOCKET HEAD SCREW ISO 4762 M10X30 8	ZYLINDERSCHRAUBE
19	10468820	6	SOCKET HEAD SCREW ISO 4762 M10X35 10	ZYLINDERSCHRAUBE
21	11491889	4	WASHER ISO 7093-1 10 300HV FLZN SPF	SCHEIBE
22	953873408	4	SLEEVE 25X20 11SMN37 FE//ZNNI8//CN//T0	HUELSE
23	956474508	2	PLATE 8X84X108 S355MC FE//ZNNI8//CN//T	BLECH
24	972357608	2	PLATE 4X965X279 ALMG3 H111 SPF	BLECH
25	97047272	2	PLATE 4X159X133 S315MC FE//ZNNI8//CN//T	BLECH
26	97045387	6	THREADED PLATE 8X70X20 S355MC	GEWINDEPLATTE
27	97045388	2	THREADED PLATE 10X70X20 S355MC FE//	GEWINDEPLATTE
28	97047274	2	PLATE 2X25X80 DC01 FE//ZNNI8//CN//T0	BLECH
100	966631008	1	ELECTRIC FOR WINCH 1 ⇨ ❑ 375	ELEKTRIK WINDE 1

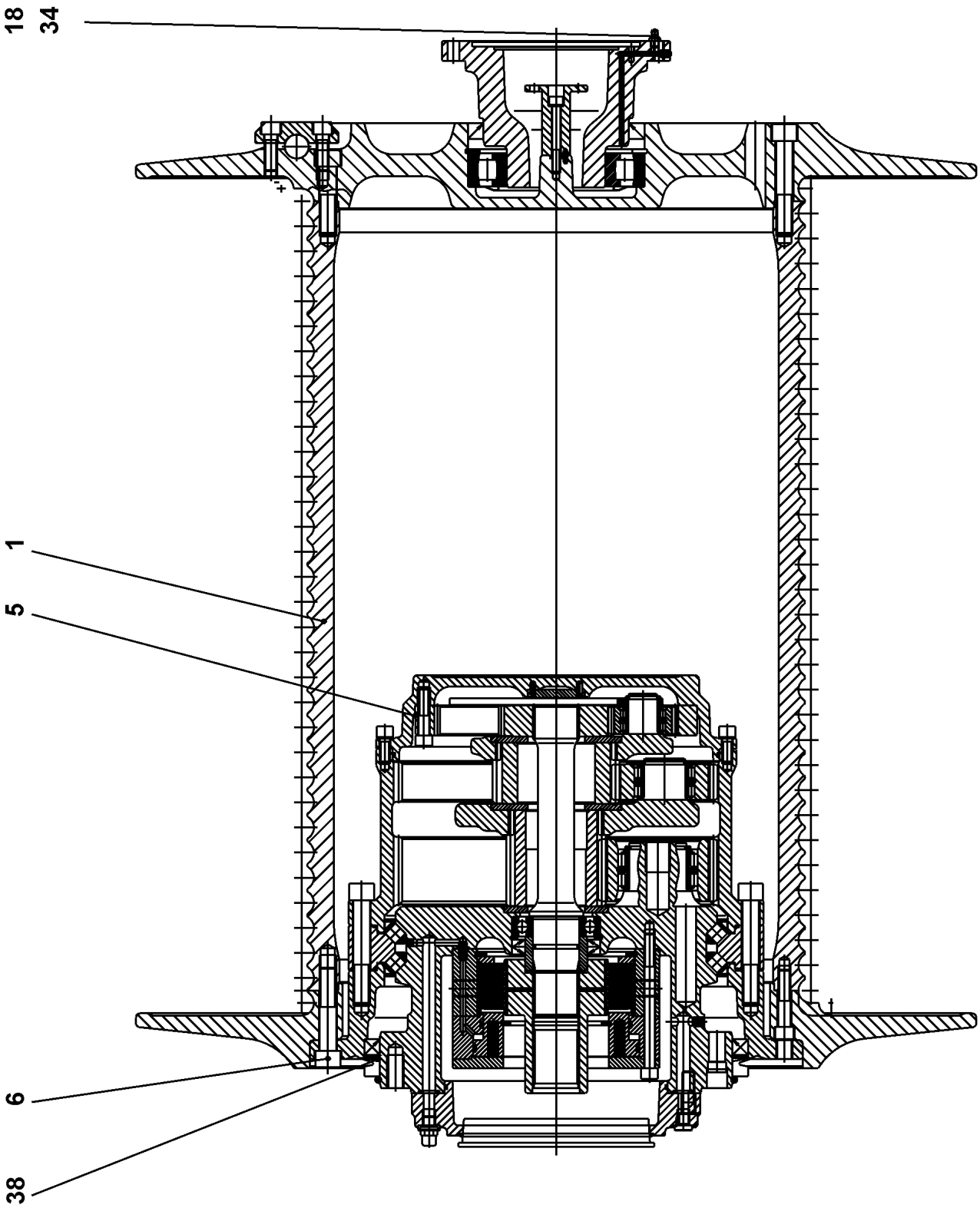
18
34
1
5
6
38

Pos.	Item	Quantity	Description	Bezeichnung
1	932916901	1	ROPE DRUM D=490 SEIL=23 ⇨ ❑ 368	SEILTROMMEL
5	939292201	1	PLANETARY GEARBOX ⇨ ❑ 369	PLANETENGETRIEBE
6	4000521	24	SOCKET HEAD SCREW ISO 4762 M16X80 10	ZYLINDERSCHRAUBE
18	774301101	1	HYDRAULIC-TYPE LUBRICAT.NIPPLE DIN 7	KEGELSCHMIERNIPPEL
34	789000701	1	PROTECTING CAP LLD-PE	SCHUTZKAPPE
38	861303501	0.1	GREASE CTK 668190 50KG	FETT
50	90208884	1	OIL-GAUGING INSTRUMENT	OELMESSEINRICHTUNG

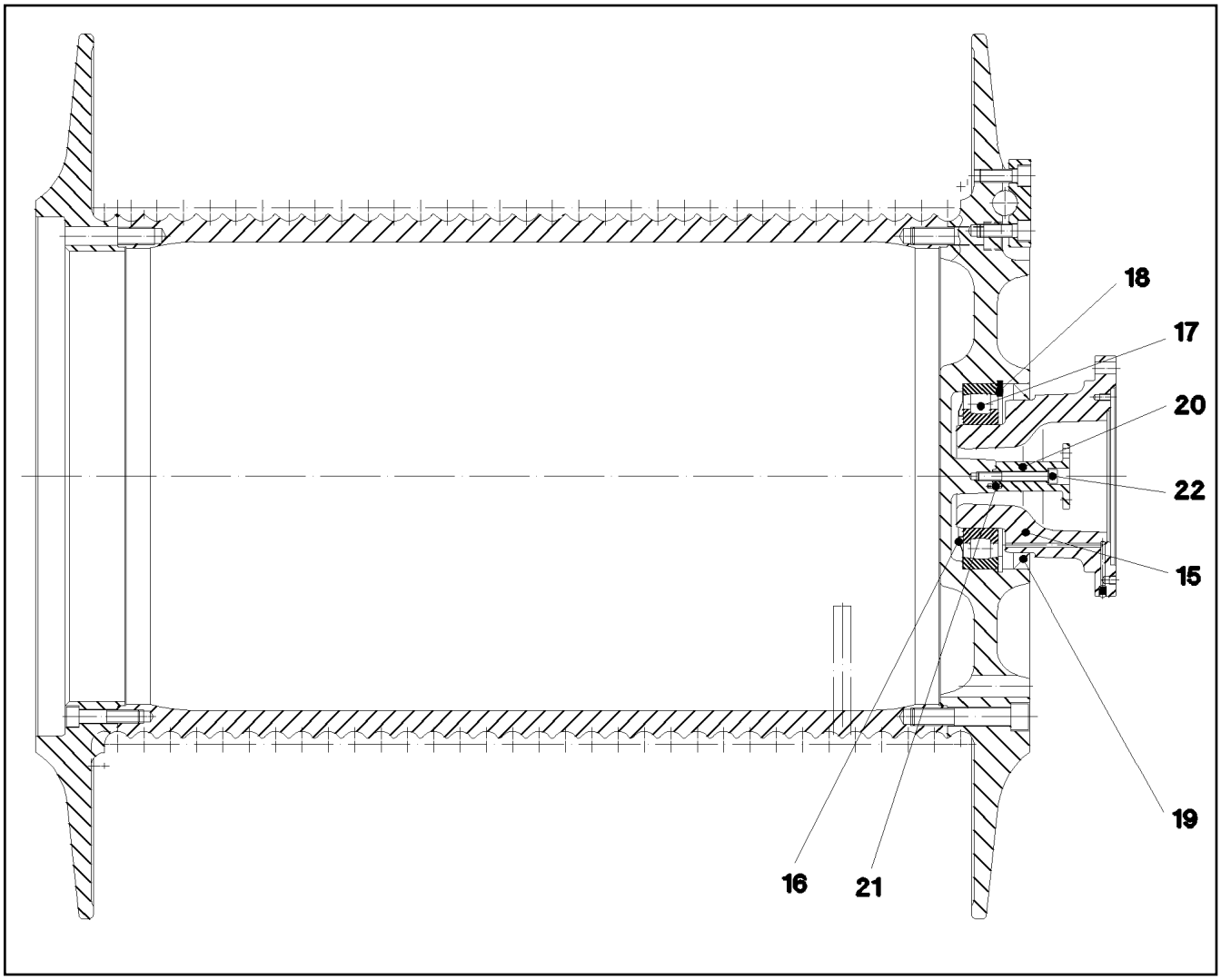

Pos.	Item	Quantity	Description	Bezeichnung
15	939637901	1	BEARING FLANGE EN-GJS-400-1	LAGERFLANSCH
16	747272501	1	BEARING COVER RING 6219 JV	LAGERABDECKRING
17	746001601	1	SELF-ALIGNING ROLLER BEARING DIN 635	PENDELROLLENLAGER
18	428105908	1	LOCKING RING DIN 472 170X4	SICHERUNGSRING
19	710032508	1	ROTARY SHAFT LIP SEAL DIN 3760 A 140X1	RADIALWELLENDICHTRING
20	931549101	1	DRIVER	MITNEHMER
21	431100201	1	CORE PIN DIN 1472 4X12	KERBSTIFT
22	12203451	1	SOCKET HEAD SCREW ISO 4762 M8X65 8.8	ZYLINDERSCHRAUBE

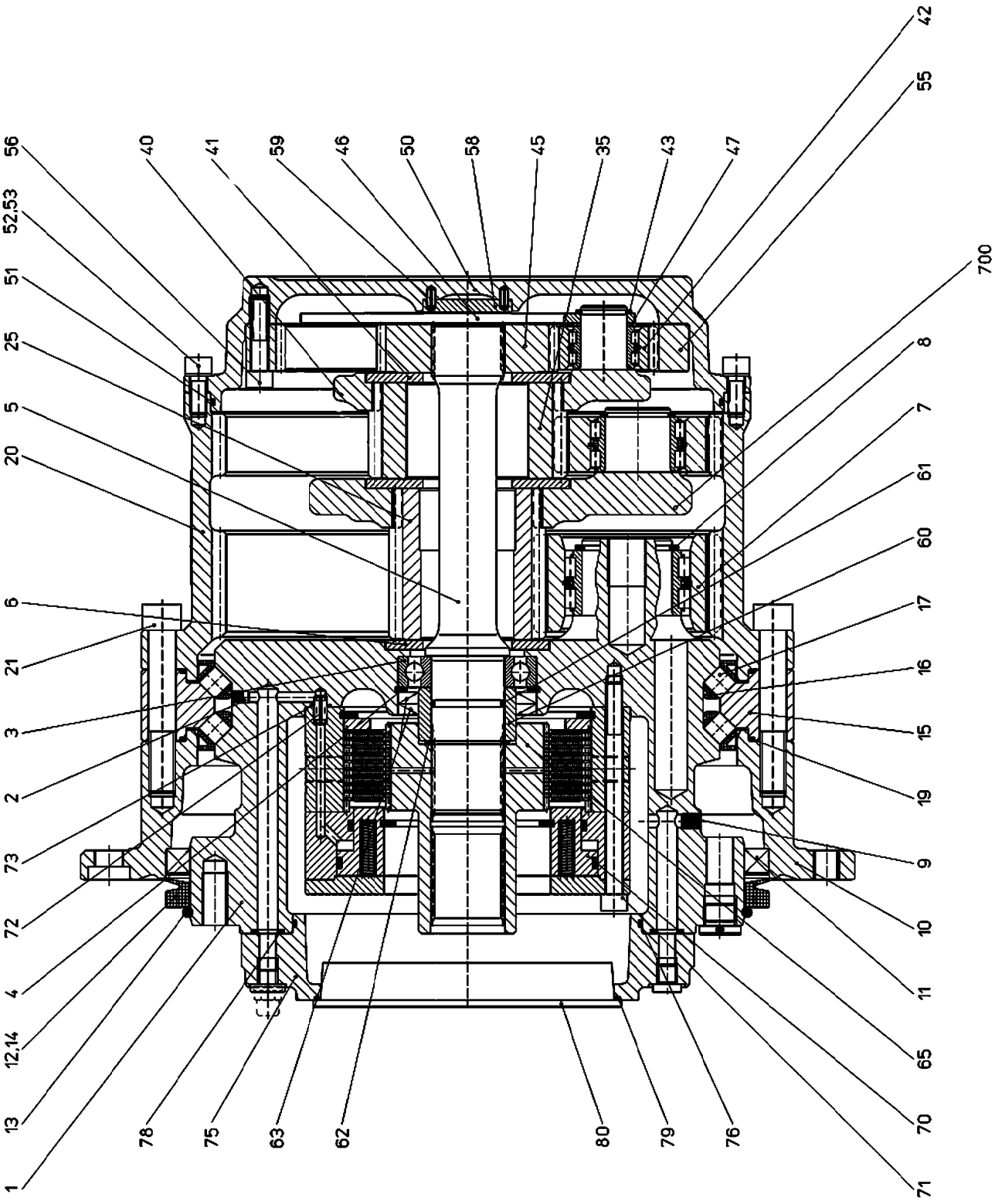
56
52,53
51
25
5
20
6
21
3
2
73
72
4
12,14
13
1
40
41
59
46
50
58
45
35
43
47
42
55
700
8
7
61
60
17
16
15
19
9
10
11
65
70
71
78
75
63
62
80
79
76

Pos.	Item	Quantity	Description	Bezeichnung
1	927745001	1	CONNECTION CARRIER 42CrMo4+QT	ANSCHLUSSTRAEGER
2	738048003	1	SEALING PLUG	DICHTSTOPFEN
3	745159301	1	DEEP GROOVE BALL BEARING DIN 625 62	RILLENKUGELLAGER
4	10171631	1	LOCKING RING DIN 472 85X3 FLZNNC-120H	SICHERUNGSRING
5	927745101	1	DRIVE SHAFT	ANTRIEBSWELLE
6	927601301	1	RETAINING DISK 100X55X6	HALTESCHEIBE
7	927601401	5	PLANET WHEEL	PLANETENRAD
8	400093303	5	LOCKING RING DIN 471 55X3	SICHERUNGSRING
9	761081903	3	SEALING PLUG 9	DICHTSTOPFEN
10	939292301	1	POWER TAKE-OFF FLANGE	ABTRIEBSFLANSCH
11	710054601	1	ROTARY SHAFT LIP SEAL DIN 3760 AS 340X	RADIALWELLENDICHTRING
12	710908701	1	V-RING 350 NBR,60 SHORE	V-RING
13	726458401	1	O-RING 300X6 EPDM 70	O-RING
15	927745301	1	BEARING RING	LAGERRING
16	927514301	38	ROLLER CAGE	ROLLENKAEFIG
17	747006101	114	CYL.ROLLER 14X14	ZYLINDERROLLE
19	726429901	2	O-RING 330X3 NBR 70	O-RING
20	927745401	1	INNER WHEEL Z=74	INNENRAD
21	10001080	24	SOCKET HEAD SCREW ISO 4762 M16X100	ZYLINDERSCHRAUBE
25	927601901	1	SUN WHEEL Z=21 18CrNiMo7-6	SONNENRAD
35	927602901	1	SUN WHEEL Z=28 18CrNiMo7-6	SONNENRAD
40	927608501	1	PLANETARY CARRIER 225 42CrMo4	PLANETENTRAEGER
41	927602801	1	RETAINING DISK 55X125X6	HALTESCHEIBE
42	927608601	3	PLANET WHEEL	PLANETENRAD
43	463000103	3	LOCKING RING DIN 471 28X2	SICHERUNGSRING
45	927608801	1	SUN WHEEL Z=42 18CrNiMo7-6	SONNENRAD
46	927602301	1	THRUST WASHER	ANLAUFSCHEIBE
47	422001001	3	SUPPORTING WASHER DIN 988 S 28X40X2	STUETZSCHEIBE
50	927745901	1	SUPPORT FLANGE	STUETZFLANSCH
51	502319101	1	O-RING 300X3 NBR 70	O-RING
52	10415162	12	SOCKET HEAD SCREW ISO 4762 M10X25 8	ZYLINDERSCHRAUBE
53	4229913	12	LOCK WASHER VS 10 ZN8M+PASSIVIERUN	SICHERUNGSSCHEIBE
55	927746101	1	INNER WHEEL Z=-90 42CrMo4	INNENRAD
56	11657000	12	SOCKET HEAD SCREW ISO 4762 M10X45 8	ZYLINDERSCHRAUBE
58	927742801	1	WASHER	SCHEIBE
59	10875879	2	DOWEL PIN ISO 8752 5X12 480H SPF	SPANNSTIFT
60	927602501	1	SLEEVE 45X60X32,8 -16MnCr5	LAUFRING
61	726455301	1	O-RING 38X3 NBR 70	O-RING
62	429606201	1	SNAP RING 45X1,75	SPRENGRING
63	710062601	2	ROTARY SHAFT LIP SEAL BAB 60X85X7 N	RADIALWELLENDICHTRING
65	927602601	1	MULTI-DISC CARRIER 100	LAMELLENTRAEGER
70	502037201	1	SPRING LOADED MULTI-DISC BRAKE	FEDERDRUCKLAMELLENBREMS
(1)	502807501	1	BRAKE ACTUATING UNIT	BREMSBETAETIGUNGSEINHEIT
(997)	939589501	1	BRAKE MULTI-DISC SET	BREMSLAMELLENSATZ
(998)	939589601	1	BRAKE PACKING SET	BREMSE-DICHTUNGSSATZ
(999)	939589701	1	BRAKE SPRING SET	BREMSFEDERSATZ
71	11320344	12	SOCKET HEAD SCREW ISO 4762 M10X130	ZYLINDERSCHRAUBE
72	432008001	1	DOWEL PIN ISO 8752 8X16 St 480H	SPANNSTIFT
73	10166157	1	O-RING 8X2 NBR90	O-RING
75	927746301	1	MOTOR FLANGE	MOTORFLANSCH
76	761021703	1	O-RING 195X3 NBR 70	O-RING
77	10875565	8	SOCKET HEAD SCREW ISO 4762 M12X40 8	ZYLINDERSCHRAUBE
78	726403401	6	O-RING 15X3 NBR 70	O-RING
79	726453601	1	O-RING 175X3 NBR 70	O-RING
80	779010901	1	CONICAL PLUG	KEGELSTOPFEN
81	7363178	1	SCREW PLUG VSTI M12X1,5 CR6-FREI	VERSCHLUSSSCHRAUBE
82	477510501	3	SCREW PLUG VSTI M10X1 CR6-FREI	VERSCHLUSSSCHRAUBE
83	721114701	1	VENTILATION VALVE	ENTLUEFTUNGSVENTIL
84	779012201	1	BLANKING PLUG	VERSCHLUSSSTOPFEN
86	477511401	2	SCREW PLUG VSTI M20X1,5 CR6-FREI	VERSCHLUSSSCHRAUBE

Pos.	Item	Quantity	Description	Bezeichnung
87	7101030	1	SEALING RING DIN 7603 A12X15,5 Cu	DICHTRING
700	90017588	1	PLANETARY CARRIER ⇨ ❑ 372	PLANETENTRAEGER

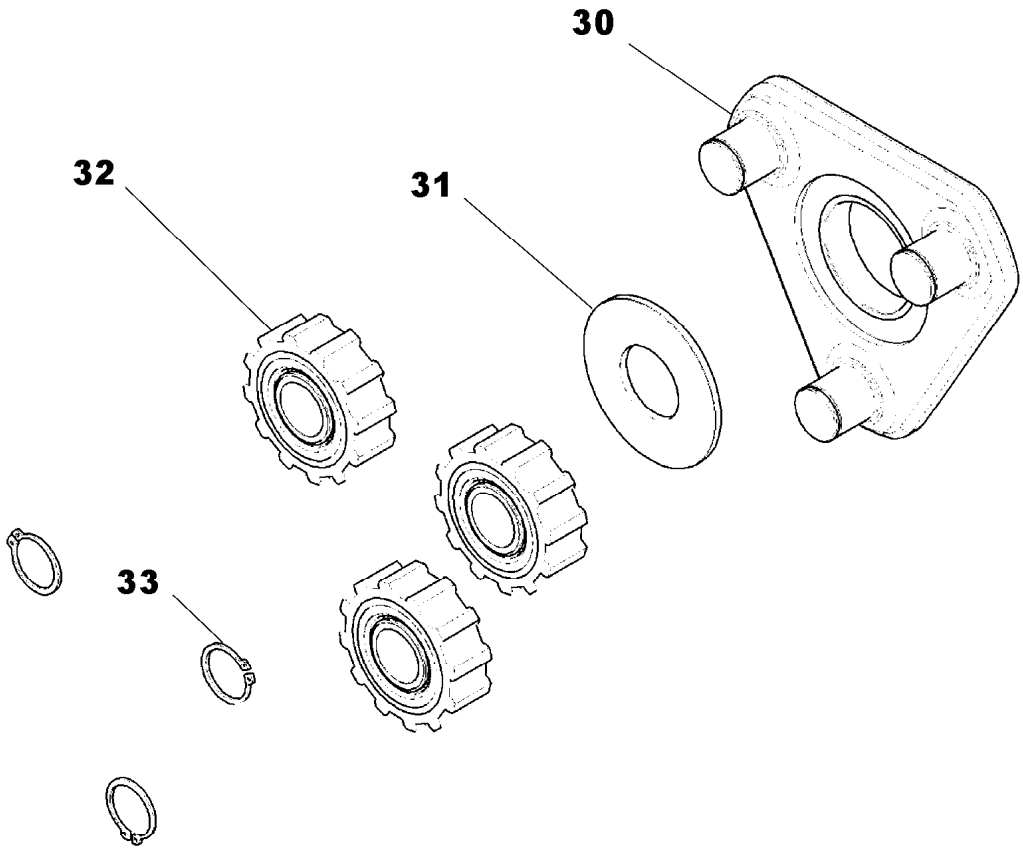

Pos.	Item	Quantity	Description	Bezeichnung
30	927602001	1	PLANETARY CARRIER 275 42CrMo4+QT	PLANETENTRAEGER
31	927602801	1	RETAINING DISK 55X125X6	HALTESCHEIBE
32	927602101	3	PLANET WHEEL	PLANETENRAD
33	400208003	3	LOCKING RING DIN 471 40X2,5	SICHERUNGSRING

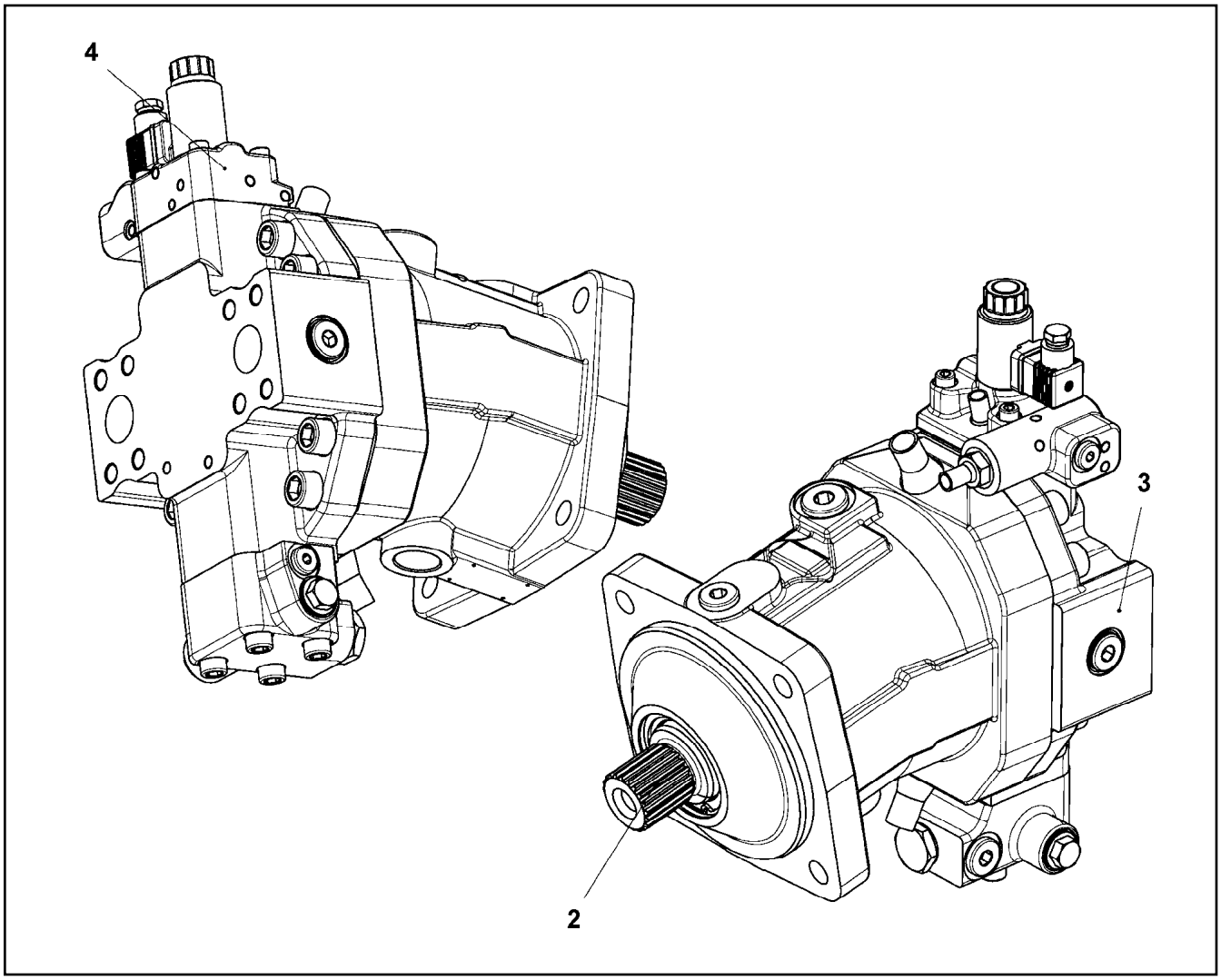

Pos.	Item	Quantity	Description	Bezeichnung
2	11643393	1	DRIVING GEAR	TRIEBWERK
(999)	11643397	1	SEAL KIT	DICHTSATZ
3	11643394	1	CLOSING PLATE	ABSCHLUSSPLATTE
4	11161917	1	CONTROL ELEMENT ⇨ ❑ 80	STEUERTEIL

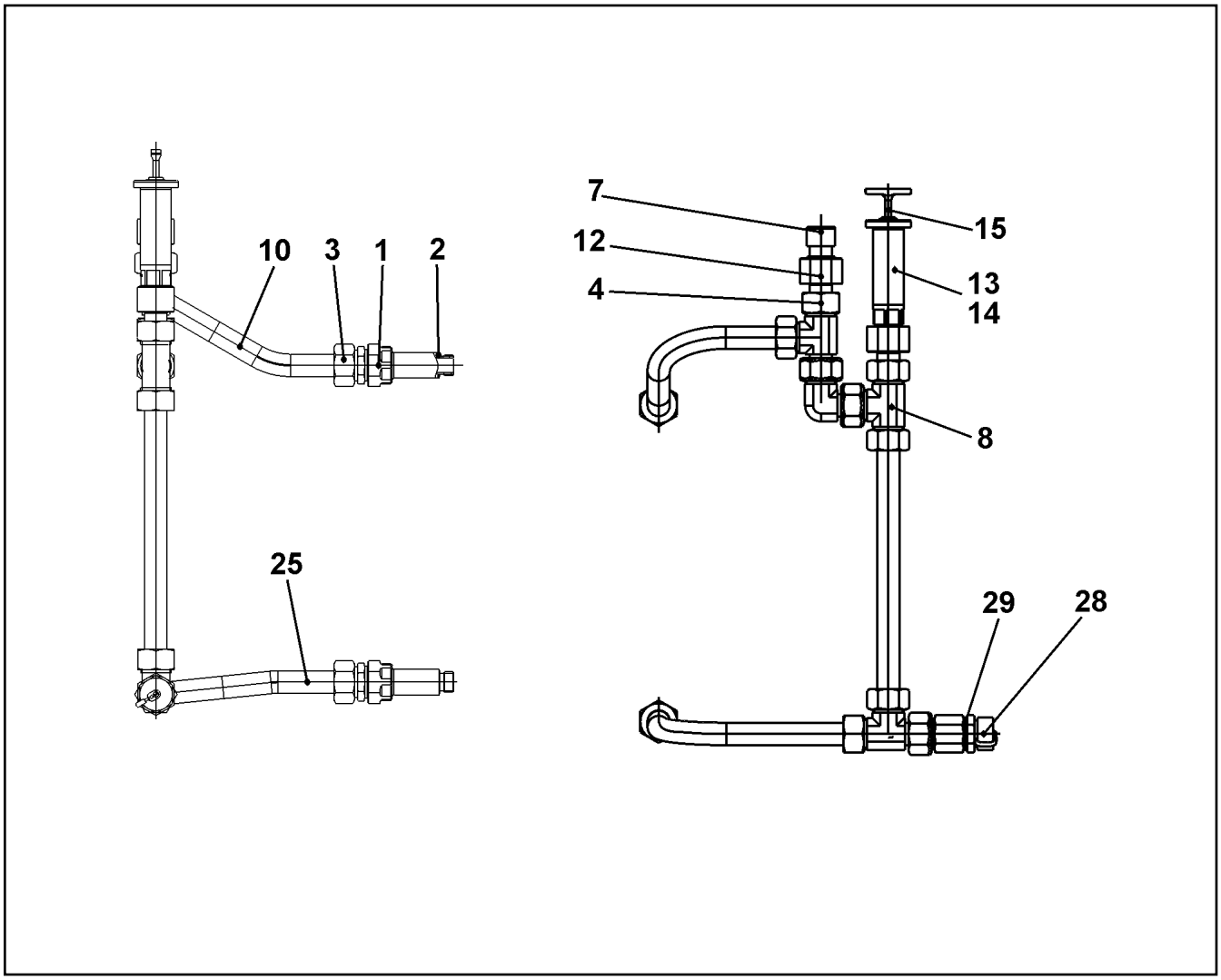

Pos.	Item	Quantity	Description	Bezeichnung
1	939599301	2	THREADED CONNECTION PIECE	GEWINDEANSCHLUSSSTUTZE
2	761022903	2	SEALING RING DIN 3869 20X17,8 NBR	DICHTRING
3	471001308	2	FITTING GE 22L M26X1,5	VERSCHRAUBUNG
4	472004008	2	FITTING EVL16-SR3/4"	VERSCHRAUBUNG
7	7002458	1	VENTILATION UNIT CR6-FREI	BE- UND ENTLUEFTUNGSFILTE
8	470400708	1	FITTING T 22L	VERSCHRAUBUNG
10	968021508	1	PIPE COMPL. 22X2,5X357 AL22 - AL22	ROHR KPL.
12	927586201	2	CONNECTION STUB 11SMnPb30+C	ANSCHLUSSSTUTZEN
13	927501901	1	VENTILATION CONNECTING PIECE	ENTLUEFTUNGSSTUTZEN
14	761022503	1	SEALING RING 19,6X24,3X1,5 NBR 85 Shore	DICHTRING
15	927610201	1	OIL DIPSTICK 1 1/8"	OELMESSSTAB
25	968021608	1	PIPE COMPL. 22X2,5X407 AL22 - AL22	ROHR KPL.
28	477705808	1	STOP PLUG VSTIM26X1,5ED CR6-FREI	STOPFEN
29	710105908	1	SEALING RING DIN 7603 A27X32X2 CU	DICHTRING

Pos.	Item	Quantity	Description	Bezeichnung
5	10802061	1	WINCH REVOLUTION TRANSDUCER 655360 ⇨ ❑ 376	WINDENDREHGEBER
6	606012608	1	DRIVE FLANGE EDELSTAHL	ANTRIEBSFLANSCH
10	11690044	3	SOCKET HEAD SCREW ISO 4762 M6X12 8.8	ZYLINDERSCHRAUBE

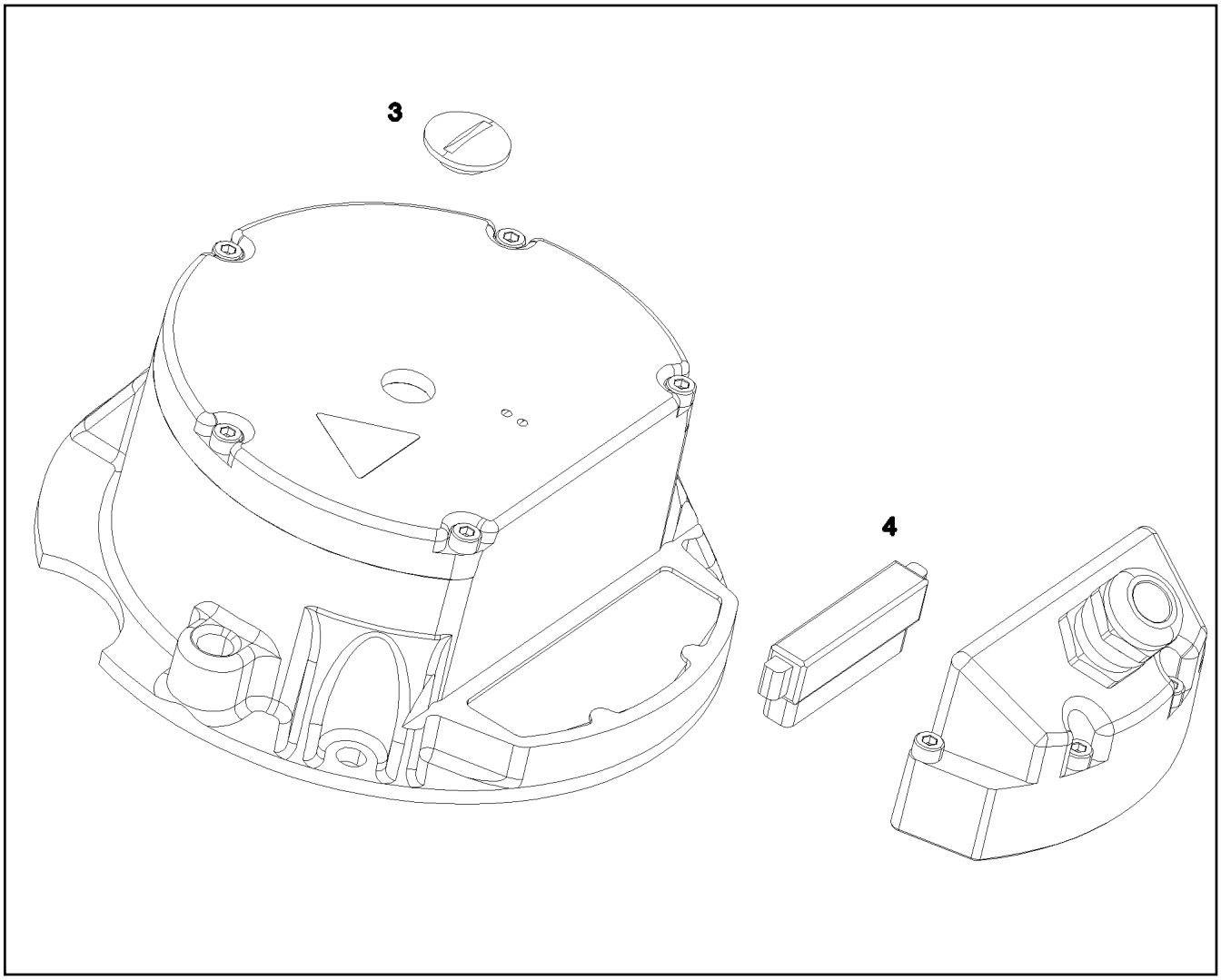

Pos.	Item	Quantity	Description	Bezeichnung
3	11690057	1	SCREW PLUG	VERSCHLUSSSCHRAUBE
4	11690056	1	PLUG 10-POLIG	STECKER
5	434000208	1	FITTING KEY DIN 6885 A 4X4X10	PASSFEDER

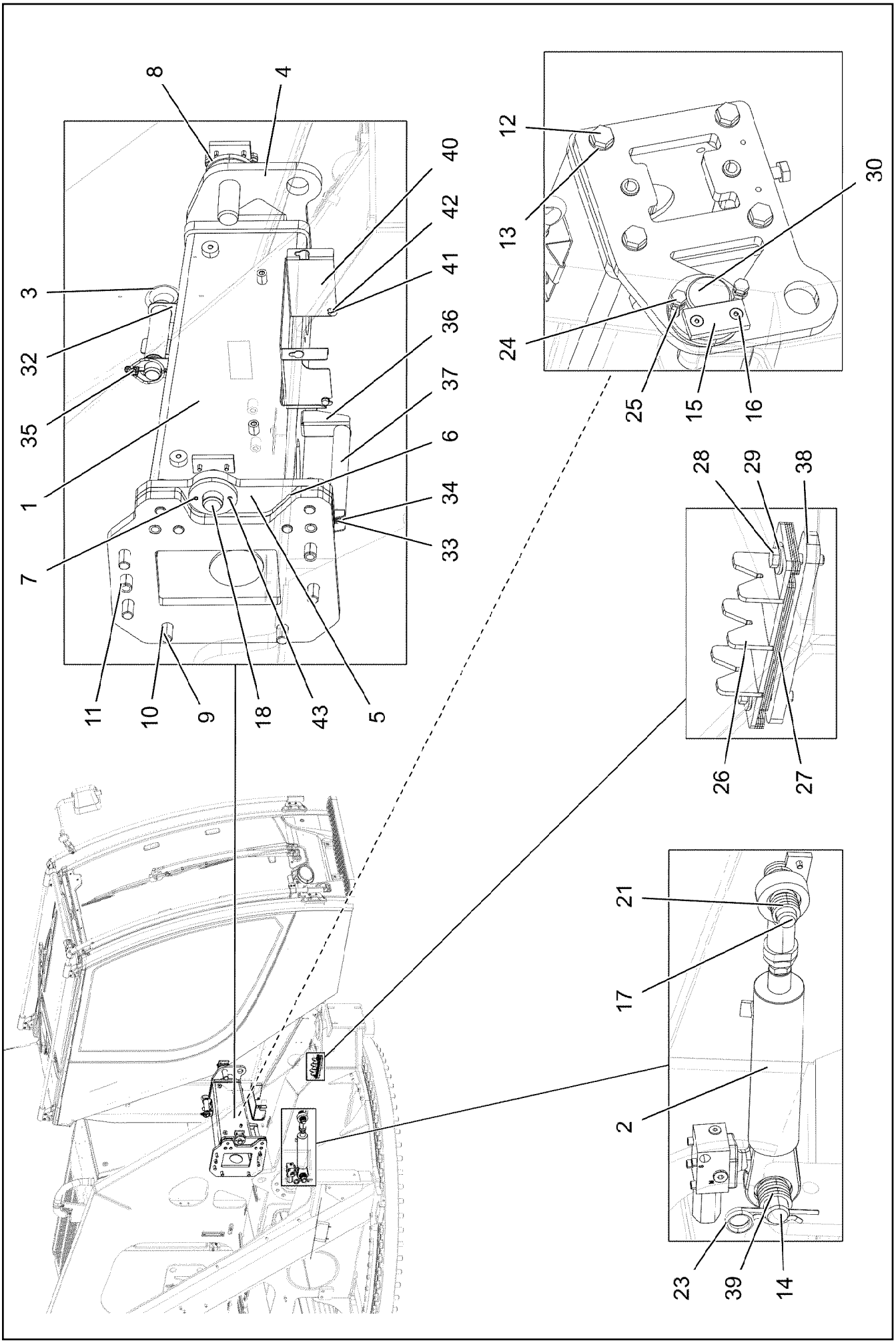

18.7.2022 078257	**etk_en_de_047654 LTR 1220**	❑ 377 (1/2)
LIEBHERR	**CRANE DRIVER CAB ADDITION** **KRANFUEHRERKABINE ANBAU**	**917259908**

Pos.	Item	Quantity	Description	Bezeichnung
1	967985808	1	ARM WELDED RAL 7016 LACKIERT SPF	KABINENARM SCHWK.
2	11214363	1	TILT CYLINDER 50/28-135 SPF ⇨ ❑ 379	KIPPZYLINDER
3	967850808	1	PIN W. HANDLE RAL 3020,SDGL,GT SPF	BOLZEN MIT GRIFF
4	97031535	1	PLATE 15X260X203 S355MC FE//ZNNI8//CN/	BLECH
5	97031536	1	PLATE 15X105X290 S355MC FE//ZNNI8//CN/	BLECH
6	97031537	1	PLATE 8X82X290 S355MC FE//ZNNI8//CN//T	BLECH
7	97028395	2	THRUST WASHER 8X70X70 PA6G	ANLAUFSCHEIBE
8	97028396	1	ADJUSTING DISK 8X74X74 S355MC FE//ZN	EINSTELLSCHEIBE
9	406603108	9	HEX SCREW ISO 4017 M16X45 10.9 FLZN SP	SECHSKANTSCHRAUBE
10	10180180	9	WASHER EN 14399-6 16 300-370HV-ST FLZ	SCHEIBE
11	10876421	6	DOWEL PIN ISO 8752 18X45 480H SPF	SPANNSTIFT
12	11002727	5	HEX SCREW ISO 4017 M12X40 10.9 FLZN SP	SECHSKANTSCHRAUBE
13	10289804	4	WASHER ISO 7089 12 300HV FLZN SPF	SCHEIBE
14	453032708	1	PIN ISO 2341 B30X95X85 35NICRMOV125	BOLZEN
15	931185608	3	AXLE HOLDER 8X30X60 S235JR	ACHSHALTER
16	10875551	6	COUNTERSUNK SCREW DIN 7991 M6X16 8	SENKSCHRAUBE
17	97032162	1	PIN 35.0X92 35NICRMOV125 SPF	BOLZEN
18	97008063	1	PIN 35.0X65 35NICRMOV125 GASN. SPF	BOLZEN
21	97040355	8	WASHER 5X35X35 S355MC FE//ZNNI8//CN//T	SCHEIBE
23	433206408	1	SPRING PLUG 6 ZINC COATED	FEDERSTECKER
24	11826527	2	HEX SCREW ISO 4017 M8X30 8.8 480H SPF	SECHSKANTSCHRAUBE
25	11693875	2	HEX NUT ISO 4032 M8 8 480H SPF	SECHSKANTMUTTER
26	965255408	1	SUPPORT TRESTLE FE//ZNNI8//CN//T0	AUFLAGEBOCK
27	976673908	4	PLATE 1.5X170X50 DC01 FE//ZNNI8//CN//T0	BLECH
28	11692827	2	HEX SCREW ISO 4017 M8X35 8.8 480H SPF	SECHSKANTSCHRAUBE
29	11140469	2	WASHER ISO 7093-1 8 200HV 480H SPF	SCHEIBE
30	97031434	1	PIN 45.0X121 35NICRMOV125 SPF	BOLZEN
32	97031454	1	PLATE 1.5X219X129 DC01 FE//ZNNI8//CN//T	BLECH
33	11690044	6	SOCKET HEAD SCREW ISO 4762 M6X12 8.8	ZYLINDERSCHRAUBE
34	10875648	6	WASHER ISO 7093-1 6 200HV 480H SPF	SCHEIBE
35	10875870	1	SAFETY PLUG W HINGE-LID 6X42X5,5X32 4	SICHERHEITSKLAPPSTECKER
36	97031462	2	PLATE 2X77X96 DC01 FE//ZNNI8//CN//T0	BLECH
37	97031463	1	ROLLER 25X180 ALCUMGPB	ROLLE
38	97051989	1	THREADED PLATE 10X180X30 S355MC FE//	GEWINDEPLATTE
39	97040356	6	WASHER 5X40X40 S355MC FE//ZNNI8//CN//T	SCHEIBE
40	97033190	1	PLATE 1.5X322X156 DC01 RAL 7016,SDGL,G	BLECH
41	11642497	2	HEX SCREW ISO 4017 M6X10 8.8 480H SPF	SECHSKANTSCHRAUBE
42	10197771	2	WASHER ISO 7089 6 200HV ZNNI-480H SPF	SCHEIBE
43	10876162	2	DOWEL PIN ISO 8752 6X20 480H SPF	SPANNSTIFT

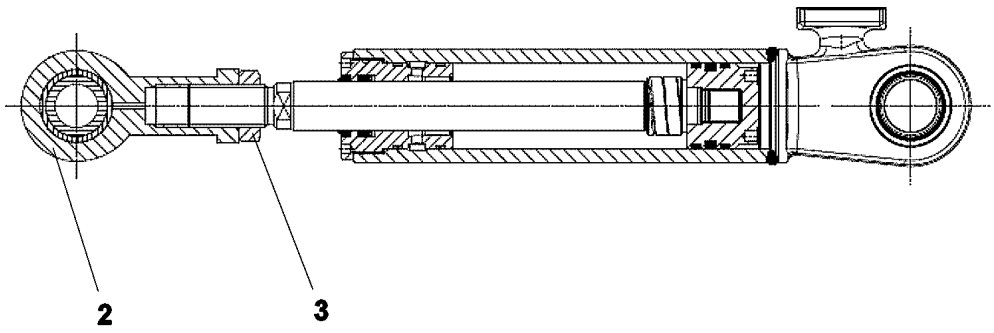

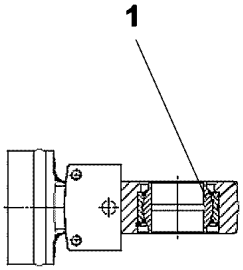

Pos. 999

Pos.	Item	Quantity	Description	Bezeichnung
1	11691375	1	SPHERICAL BEARING	GELENKLAGER
2	11691377	1	PIVOT HEAD	GELENKKOPF
3	411703308	1	HEX NUT ISO 8675 M24X2 05 A3C	SECHSKANTMUTTER
999	10491695	1	DS HYDRO CYLINDER	DS HYDROZYLINDER

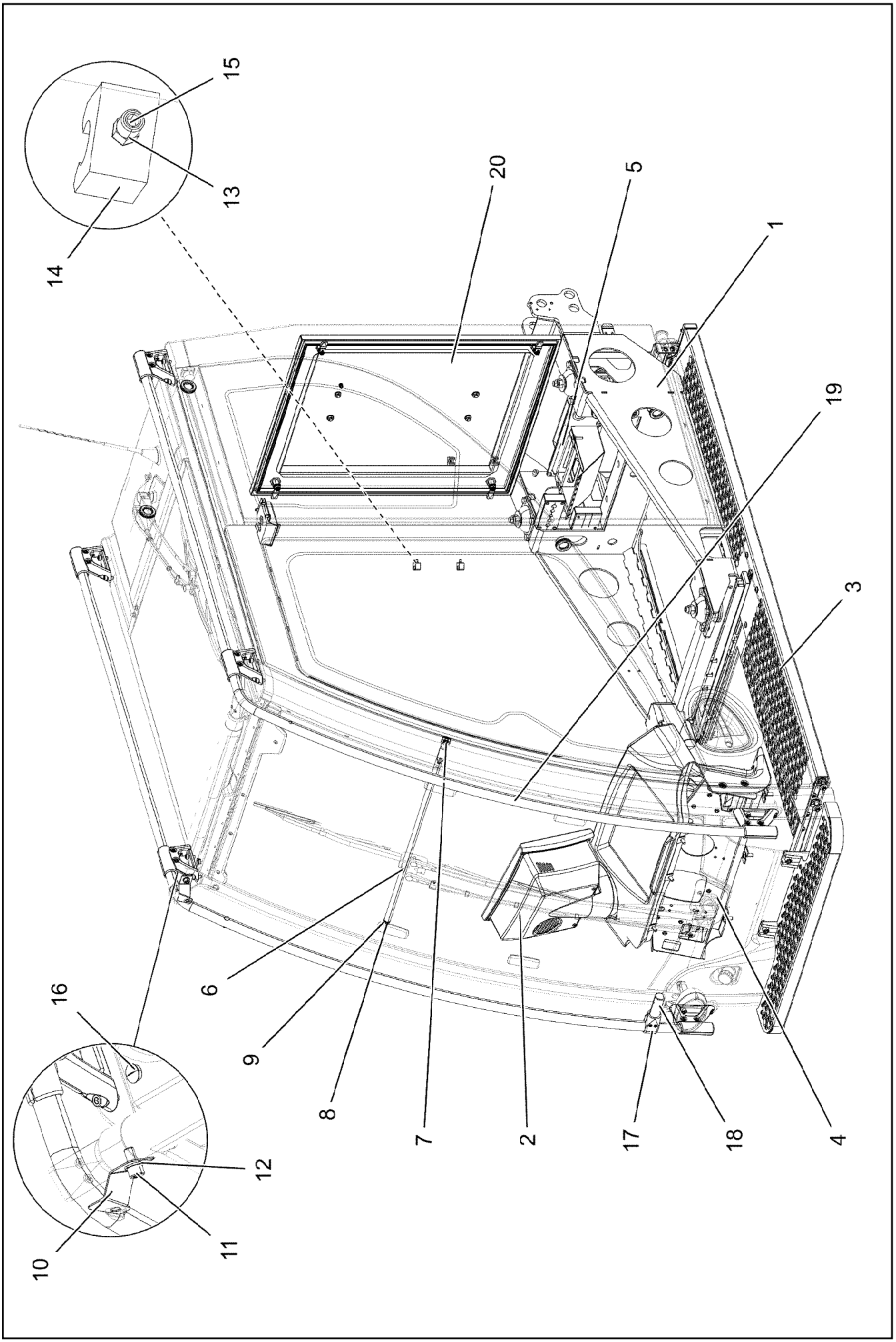
15
13
14
20
5
1
19
3
6
9
8
7
2
17
18
4
16
12
10
11

Pos.	Item	Quantity	Description	Bezeichnung
1	967986308	1	BEARING INSTALLATION ⇨ ❑ 382	LAGERUNG EINBAU
2	96015921	1	OPERATING ELEMENT INSTALLATION ⇨ ❑ 383	BEDIENELEMENTE EINBAU
3	916177508	1	STEP CPL. ⇨ ❑ 386	TRITT KPL.
4	96025887	1	PEDAL CANTILEVER INSTALLATION ⇨ ❑ 388	PEDALTRAEGER EINBAU
5	916170808	1	CABLE INLET ⇨ ❑ 389	KABELEINFUEHRUNG
6	966662508	1	PIPE WELDED SCHWARZ PULVERB.	ROHR SCHWK.
7	10429635	1	BUTTON HEAD SCREW ISO 7380-2 M8X16	HALBRUNDKOPFSCHRAUBE
8	11690048	1	HEX SCREW ISO 4017 M8X12 8.8 480H SPF	SECHSKANTSCHRAUBE
9	12103465	1	WASHER ISO 7089 8 300HV ZNNI-480H SPF	SCHEIBE
10	97015722	1	PLATE 1.5X44X97 X5CRNI18-10	BLECH
11	404293213	1	SOCKET HEAD SCREW ISO 4762 M10X20 A2	ZYLINDERSCHRAUBE
12	420001114	1	WASHER ISO 7089 10 200HV-A4	SCHEIBE
13	413006208	4	BLIND RIVET NUT M4 K=1,0-3,0	BLINDNIETMUTTER
14	602116008	4	LATCH CLAMP	RIEGELKLEMME
15	11691539	4	SOCKET HEAD SCREW ISO 4762 M4X10 8.8	ZYLINDERSCHRAUBE
16	602424908	2	SCREW PLUG M16X1,5 MS	VERSCHLUSSSCHRAUBE
17	10285701	1	TEE 30 G-ALMG TROWALPOLIERT	T-STUECK
(1)	10875588	2	SOCKET HEAD SCREW ISO 4762 M6X25 8.8	ZYLINDERSCHRAUBE
18	97011246	1	AXLE 30.0X95 S355J2C+C FE//ZNNI8//CN//T	ACHSE
19	916162808	1	RELING ⇨ ❑ 391	RELING
20	968514508	1	INSTALLATION SWITCH CAB. COVER ⇨ ❑ 393	SCHALTSCHRANKDECKEL EIN

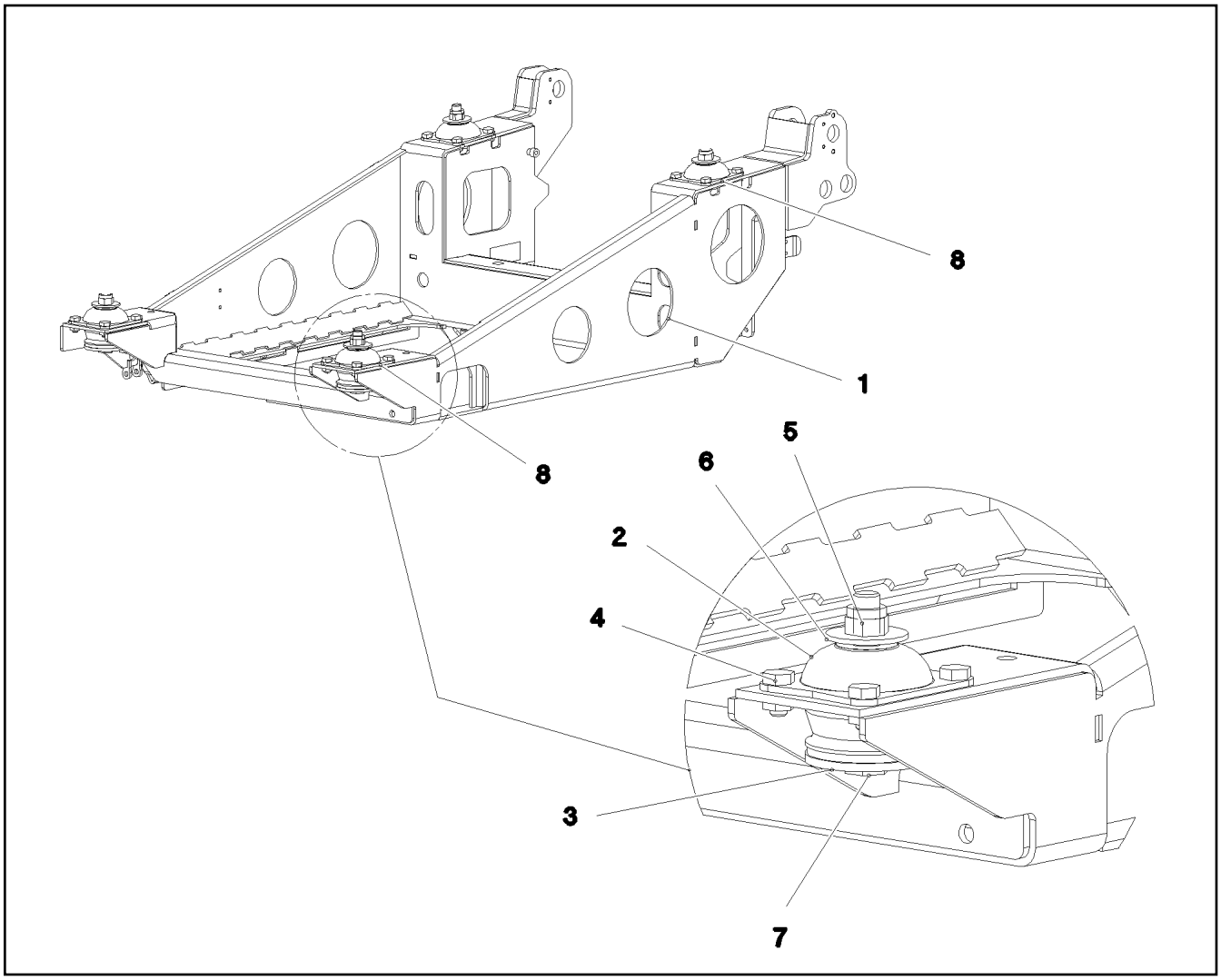

Pos.	Item	Quantity	Description	Bezeichnung
1	967986408	1	SUPPORT FRAME RAL 7016 LACKIERT SPF	TRAGRAHMEN
2	10291989	4	CONICAL MOUNT 70NR11	KONUSLAGER
3	10875905	4	LIMIT STOP RING 16,5X75X5 ST FLZN SPF	ANSCHLAGSCHEIBE
4	10197730	16	HEX SCREW ISO 4017 M10X20 8.8 ZNNI-480	SECHSKANTSCHRAUBE
5	10875609	4	HEX NUT DIN 985 M16 8 FLZN SPF	SECHSKANTMUTTER
6	4000809	4	WASHER ISO 7093-1 16 300HV FLZN	SCHEIBE
7	10875797	4	HEX SCREW ISO 4014 M16X100 8.8 FLZN SP	SECHSKANTSCHRAUBE
8	97081505	2	PLATE 3X105X91 X5CRNI18-10	BLECH

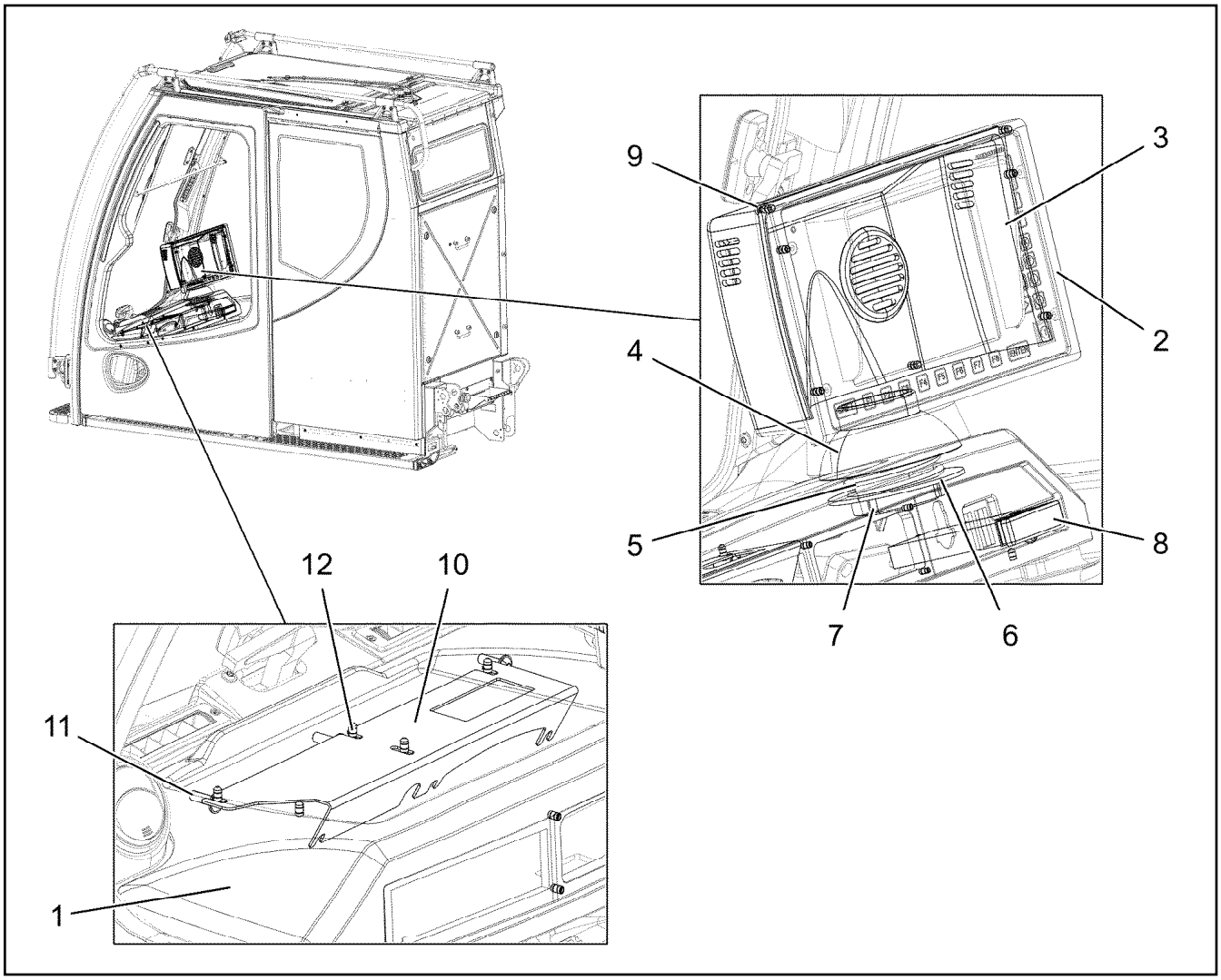

Pos.	Item	Quantity	Description	Bezeichnung
1	96015926	1	MONITOR SUPPORT 162X765X328 PUR SP	MONITORTRAEGER
2	963257908	1	MONITOR HOUSING GLUED SPF	MONITORGEHAEUSE GEKLEBT
3	979207008	1	PANELLING MONITOR HOUSING ABS SPF	VERKLEIDUNG MONITORGEHAE
4	975040308	1	BALL ELEMENT PUR SPF	KUGELELEMENT
5	10297691	1	COMPRESSION SPRING 8X92X50 FEDERST	DRUCKFEDER
6	975208408	1	PLATE 4X138X138 S315MC FE//ZNNI8//CN//T	BLECH
7	241047802	1	SLOTTED NUT DIN 1804 M80X2 H	NUTMUTTER
8	96057226	1	CUP HOLDER INSTALLATION ⇨ ❑ 384	BECHERHALTER EINBAU
9	11658059	4	PAN-HEAD SCREW ISO 7045 M5X12 4.8 480	FLACHKOPFSCHRAUBE
10	97003805	1	PLATE 2X381X148 DC01 FE//ZNNI8//CN//T0	BLECH
11	10301319	5	BUTTON HEAD SCREW ISO 7380-2 M8X25 A	HALBRUNDKOPFSCHRAUBE
12	11697855	4	BUTTON HEAD SCREW ISO 7380-2 M5X8 0	HALBRUNDKOPFSCHRAUBE

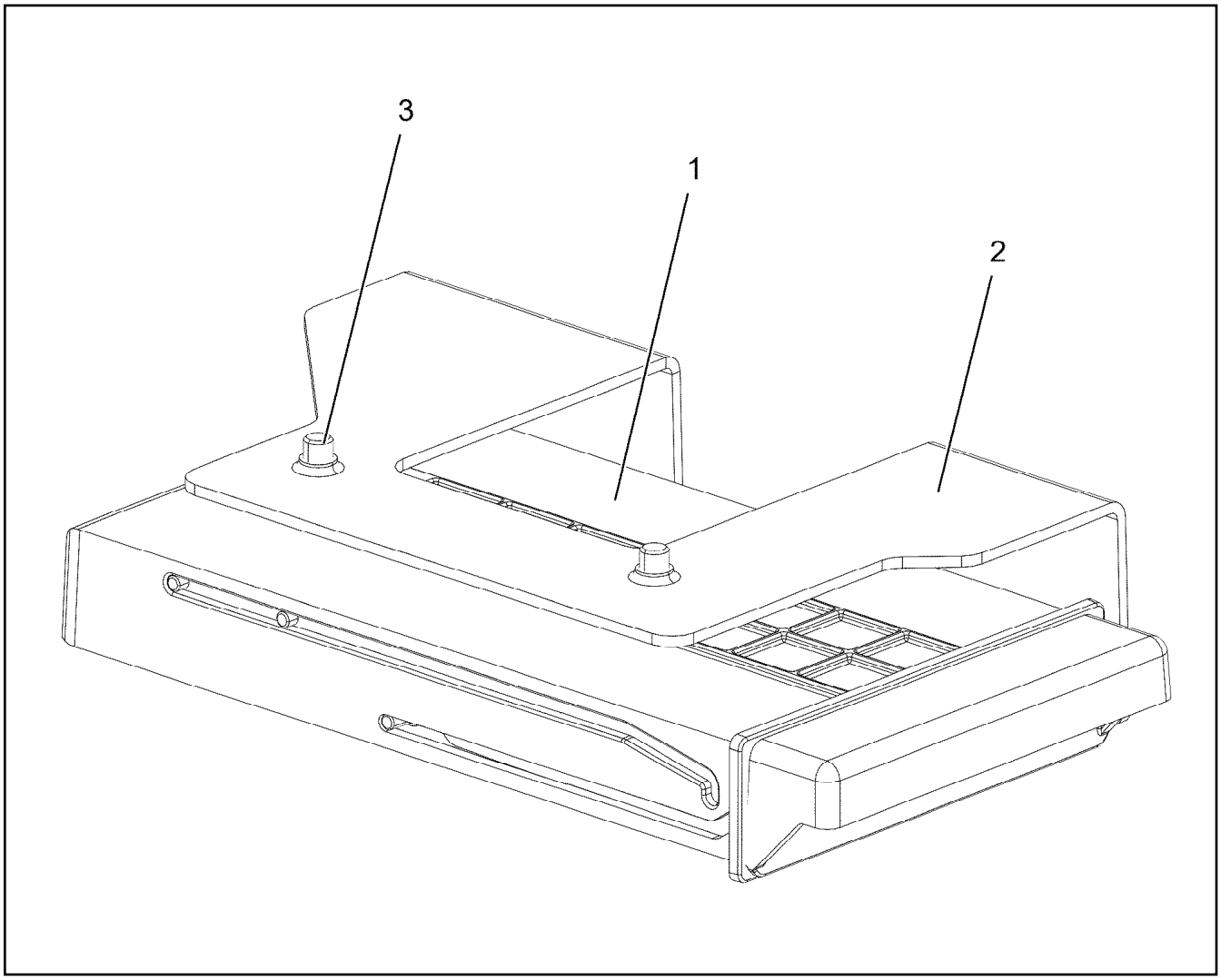

Pos.	Item	Quantity	Description	Bezeichnung
1	96048757	1	CUP HOLDER ⇨ ❑ 385	BECHERHALTER
2	97134822	1	HOLDER 2X163X140 DC01 FE//ZNNI8//CN//T	HALTER
3	10875483	2	BUTTON HEAD SCREW ISO 7380-2 M5X10 0	HALBRUNDKOPFSCHRAUBE

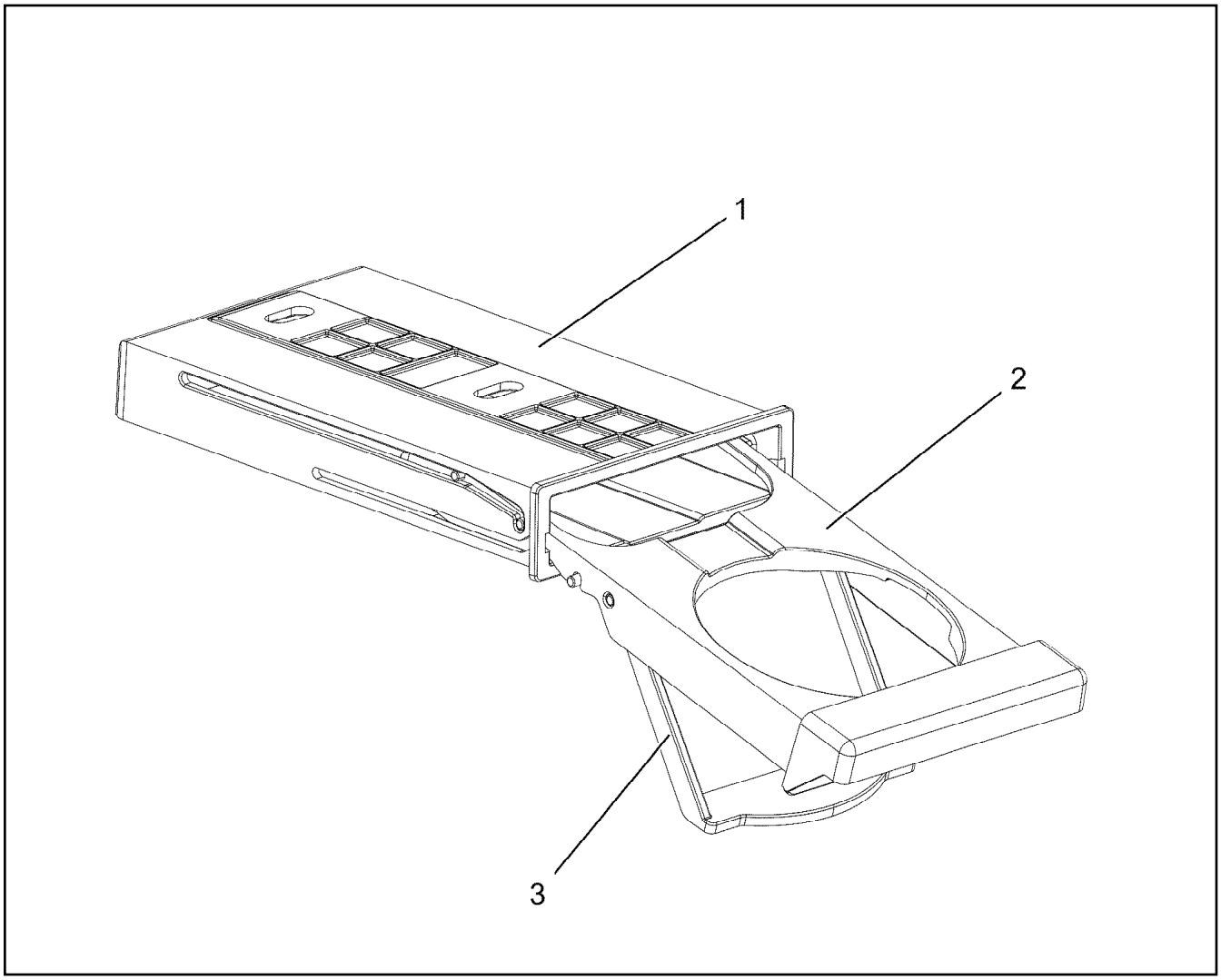

Pos.	Item	Quantity	Description	Bezeichnung
1	97136698	1	HOUSING RAL 9005 SPF	GEHAEUSE
2	97136699	1	FRAME RAL 9005 SPF	SCHIEBERAHMEN
3	97136700	1	HOLDING BRACKET RAL 9005 SPF	HALTEBUEGEL

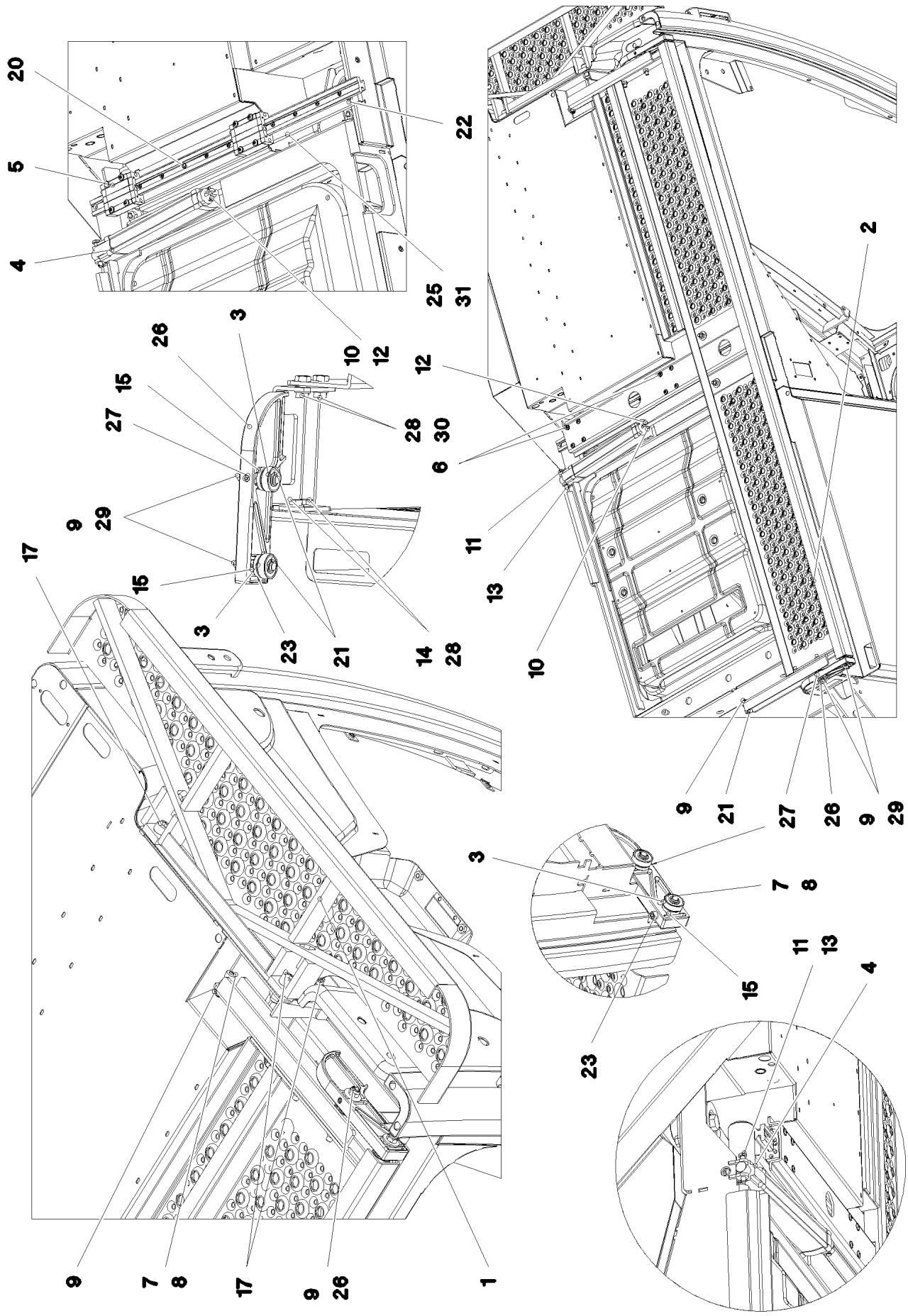

18.7.2022 068847 LIEBHERR	**etk_en_de_047654 LTR 1220** **STEP CPL.** **TRITT KPL.**	❑ 386 (1/2) **916177508**

Pos.	Item	Quantity	Description	Bezeichnung
1	966270808	1	TREAD IN FRONT SPF	TRITT VORN
2	966269808	1	SIDE STEP	TRITT SEITLICH
(1)	966270208	1	TREAD 1818X290X43 ALMG3 SPF	TRITT
(2)	97001318	1	PLATE 4X712X218 X5CRNI18-10	BLECH
(3)	975685808	1	PLATE 5X380X79 X5CRNI18-10	BLECH
(4)	975683808	1	PLATE 5X380X79 X5CRNI18-10	BLECH
(5)	11140469	4	WASHER ISO 7093-1 8 200HV 480H SPF	SCHEIBE
(6)	10875486	11	BUTTON HEAD SCREW AEHNL.ISO 7380-2	HALBRUNDKOPFSCHRAUBE
(7)	10875614	11	HEX NUT DIN 985 M8 8 480H SPF	SECHSKANTMUTTER
3	10294494	4	DEEP GROOVE BALL BEARING DIN 625 S6	RILLENKUGELLAGER
4	10292008	1	ELECTRIC CYLINDER 24V	ELEKTROZYLINDER
5	11007589	1	LINEAR SLIDEWAY SYSTEM	LINEARGLEITFUEHRUNGSSYS
6	10412853	8	BUTTON HEAD SCREW AEHNL.ISO 7380-2	HALBRUNDKOPFSCHRAUBE
7	510737408	2	HEX NUT ISO 4032 M8 A2-70	SECHSKANTMUTTER
8	404230208	2	SOCKET HEAD SCREW ISO 4762 M8X30 A2	ZYLINDERSCHRAUBE
9	411903108	6	HEX NUT DIN 985 M8 A2-70	SECHSKANTMUTTER
10	10875678	1	PIN ISO 2341 B6X25X22 ST 480H SPF	BOLZEN
11	451210308	1	PIN DIN 1435 8X50X47 ST.50 FE//ZN20//C	BOLZEN
12	10875872	1	SPLIT PIN ISO 1234 1X14 ST 480H SPF	SPLINT
13	10180340	1	SPLIT PIN ISO 1234 1,6X14 A2	SPLINT
14	11690048	2	HEX SCREW ISO 4017 M8X12 8.8 480H SPF	SECHSKANTSCHRAUBE
15	974922808	4	PIN 25.0X50 42CRMO4+QT	BOLZEN
17	404294613	4	SOCKET HEAD SCREW ISO 4762 M12X30 A2	ZYLINDERSCHRAUBE
20	10875583	11	SOCKET HEAD SCREW ISO 4762 M5X20 8.8	ZYLINDERSCHRAUBE
21	12100338	4	LOCKING RING DIN 471 9X1 480H SPF	SICHERUNGSRING
22	10875598	5	SOCKET HEAD SCREW ISO 4762 M8X20 8.8	ZYLINDERSCHRAUBE
23	11820284	2	SOCKET HEAD SCREW ISO 4762 M6X30 8.8	ZYLINDERSCHRAUBE
25	97001317	1	PROFILE 667X50X12 ALMGSI0.5	PROFIL
26	967307008	1	PLATFORM HOLDING REAR RAL 7016,SDGL	PODESTHALTERUNG HINTEN
27	12106077	2	GRUB SCREW ISO 4026 M6X35 45H 480H SP	GEWINDESTIFT
28	12103465	4	WASHER ISO 7089 8 300HV ZNNI-480H SPF	SCHEIBE
29	421861405	4	WASHER ISO 7093-1 8 200HV-A2	SCHEIBE
30	11651612	2	HEX SCREW ISO 4017 M8X16 8.8 480H SPF	SECHSKANTSCHRAUBE
31	97016752	1	PLATE 2X50X559 X5CRNI18-10	BLECH

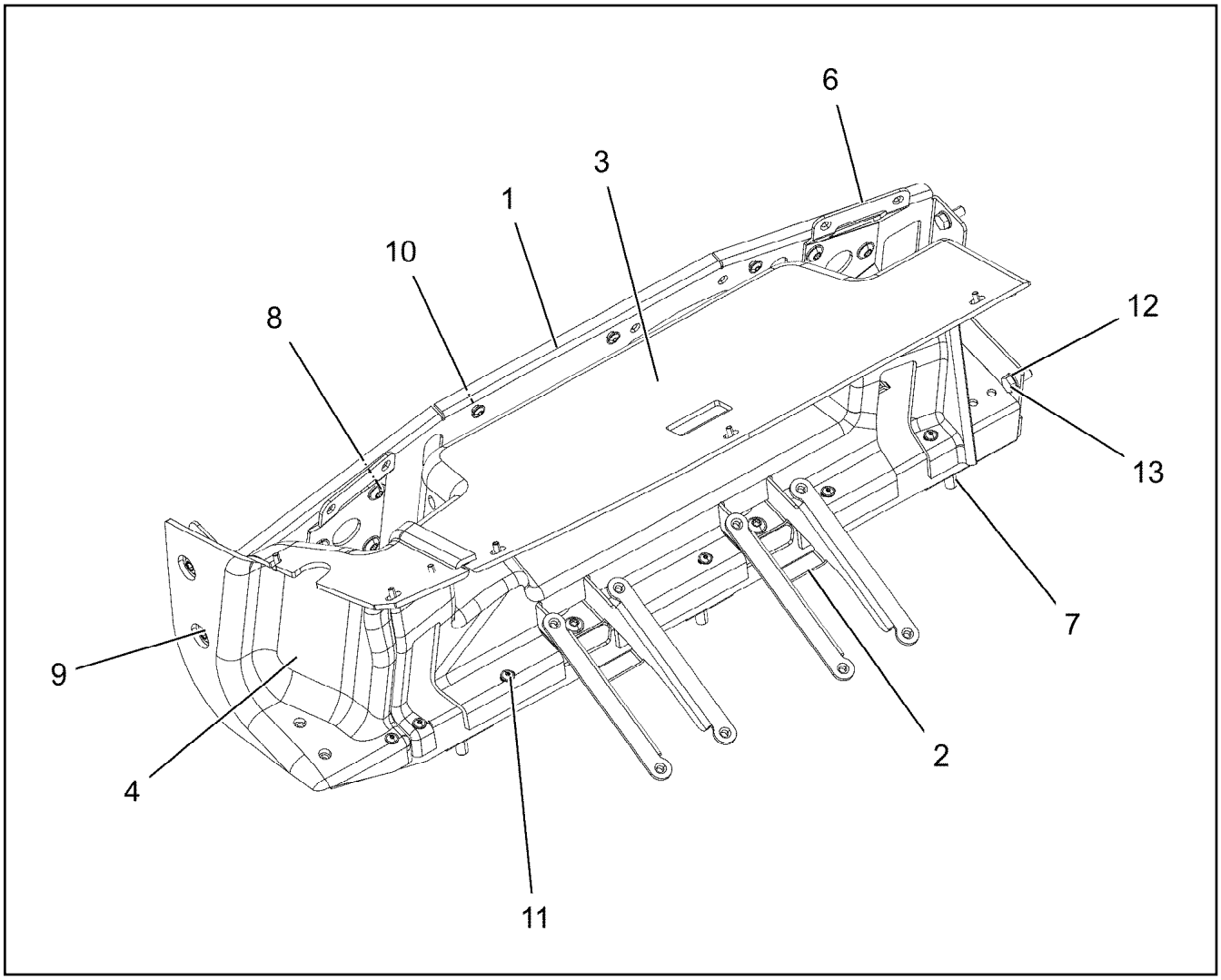

Pos.	Item	Quantity	Description	Bezeichnung
1	966629308	1	PLATE WELDED FE//ZNNI8//CN//T0	BLECH SCHWK.
2	974680008	2	PLATE 3X295X159 S355MC FE//ZNNI8//CN//T	BLECH
3	97105652	1	PANELLING PEDAL 258X599X279 ABS SPF	VERKLEIDUNG PEDALE
4	97089358	1	PANELLING PEDAL 315X118X279 ABS SPF	VERKLEIDUNG PEDALE
6	97081862	2	PLATE 3X193X93 S355MC FE//ZNNI8//CN//T	BLECH
7	10875448	3	BUTTON HEAD SCREW ISO 7380-2 M10X25	HALBRUNDKOPFSCHRAUBE
8	12102696	10	BUTTON HEAD SCREW ISO 7380-2 M8X10 0	HALBRUNDKOPFSCHRAUBE
9	10875475	2	BUTTON HEAD SCREW AEHNL.ISO 7380-2	HALBRUNDKOPFSCHRAUBE
10	10875468	3	BUTTON HEAD SCREW AEHNL.ISO 7380-2	HALBRUNDKOPFSCHRAUBE
11	12229337	14	BUTTON HEAD SCREW ISO 7380-2 M5X12	HALBRUNDKOPFSCHRAUBE
12	12103465	3	WASHER ISO 7089 8 300HV ZNNI-480H SPF	SCHEIBE
13	11651767	3	HEX SCREW ISO 4017 M8X20 8.8 480H SPF	SECHSKANTSCHRAUBE

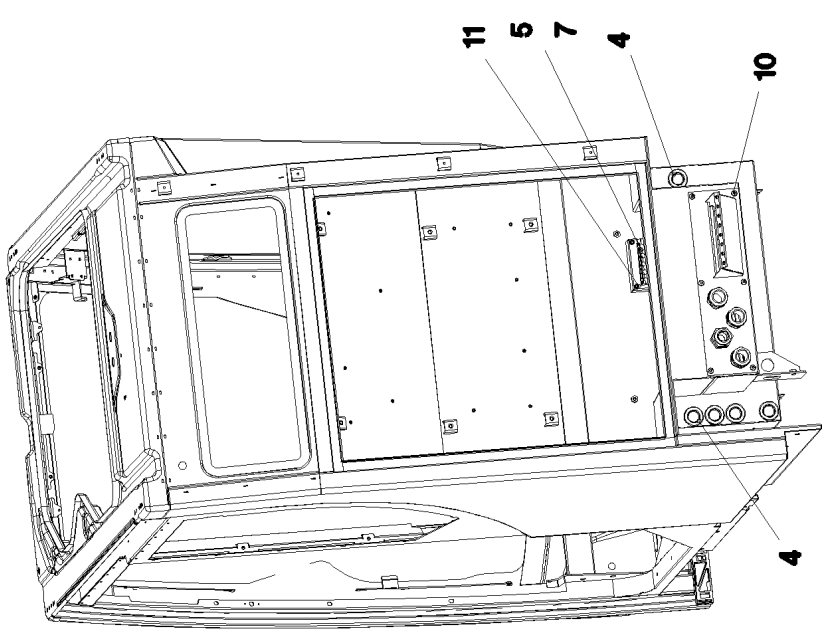
11
5
7
4
10
4

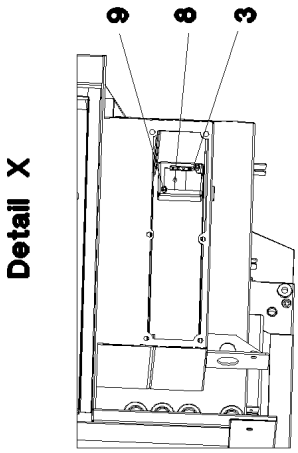
Detail X
9
8
3

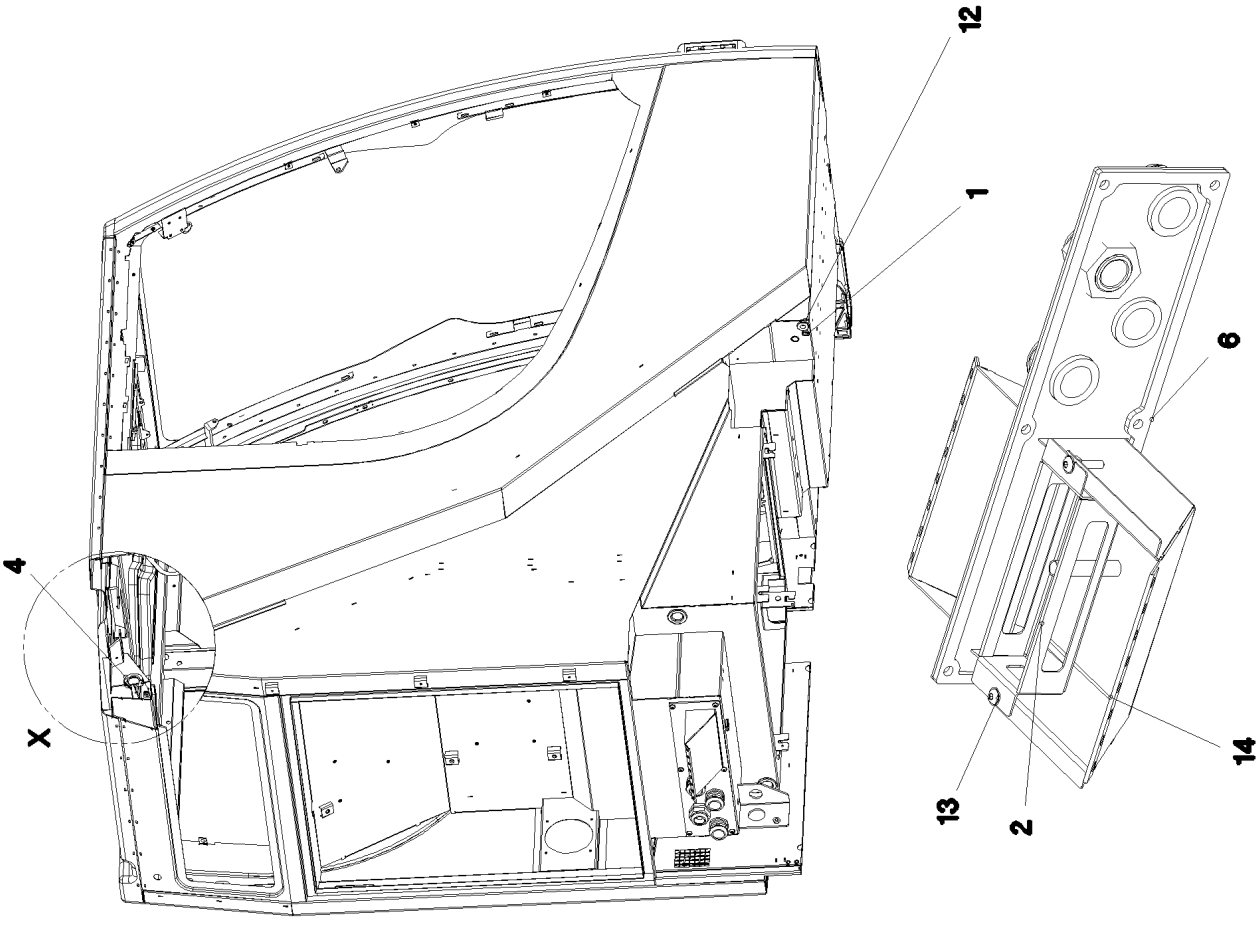
12
1
6
4
X
14
13
2

Pos.	Item	Quantity	Description	Bezeichnung
1	602701308	1	GROMMET 10/12/17,5 PVC BK	DURCHFUEHRUNGSTUELLE
2	97000735	1	PLATE 1.5X290X162 DC01 FE//ZNNI8//CN//T	BLECH
3	97002645	1	PLATE 1.5X131X117 DC01 FE//ZNNI8//CN//T	BLECH
4	553027808	7	DIAPHRAGM SOCKET 29/37/44	MEMBRANTUELLE
5	976094108	1	PLATE 1.5X174X114 DC01 RAL 7037 SPF	BLECH
6	97012288	1	SEAL 439X120X5 POLYALEFIN	DICHTUNG
7	976094308	1	SEAL 120X60X 30 SCHWARZ	DICHTUNG
8	976193208	1	SEAL 78X64 30	DICHTUNG
9	10875590	2	SOCKET HEAD SCREW ISO 4762 M6X35 8.8	ZYLINDERSCHRAUBE
10	10412851	6	BUTTON HEAD SCREW AEHNL.ISO 7380-2	HALBRUNDKOPFSCHRAUBE
11	11820284	4	SOCKET HEAD SCREW ISO 4762 M6X30 8.8	ZYLINDERSCHRAUBE
12	602600808	2	CABLE COUPLING BOX 12/21/25 EDPM 60	KABELMUFFE
13	10410198	2	BUTTON HEAD SCREW ISO 7380-2 M6X30 A	HALBRUNDKOPFSCHRAUBE
14	966241008	1	TRAY RAL 7016 SPF	WANNE SCHWK.
15	97071962	1	PLATE 2X156X137 DC01 RAL 7037 SPF	BLECH
16	97071963	1	SEAL 85.5X89X30 ZP-30 S	DICHTUNG
17	10875488	3	BUTTON HEAD SCREW ISO 7380-2 M6X12 0	HALBRUNDKOPFSCHRAUBE

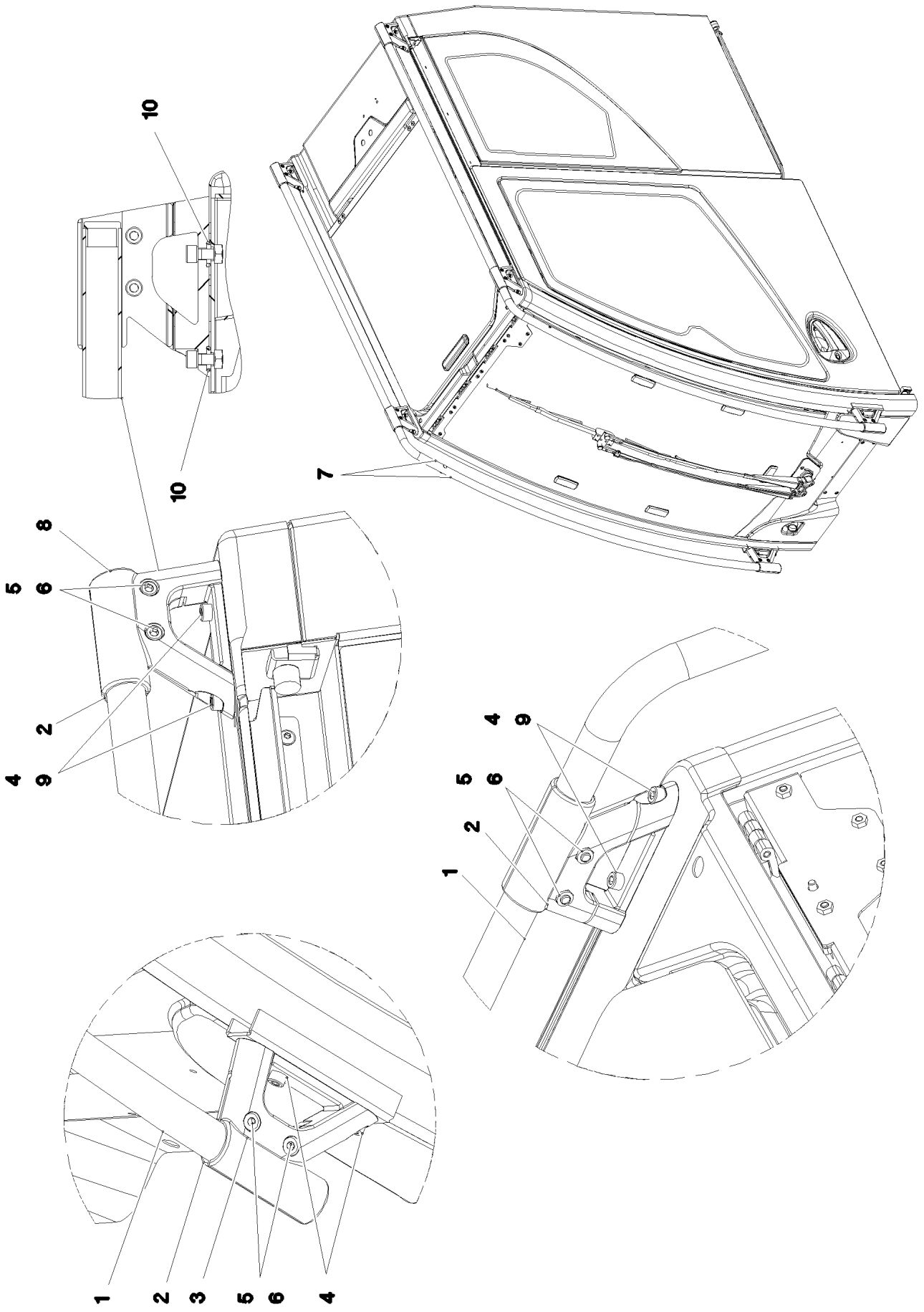

18.7.2022 068856 LIEBHERR	**etk_en_de_047654 LTR 1220** **RELING** **RELING**	❑ 391 (1/2) **916162808**

Pos.	Item	Quantity	Description	Bezeichnung
1	975218508	2	TUBE 1959X1553X30 X5CRNI18-10	ROHR
2	975218608	6	HOLDER 1.4308	HALTER
3	975384508	6	HOLDER 1.4308	HALTER
4	10007677	12	SOCKET HEAD SCREW ISO 4762 M8X20 A2	ZYLINDERSCHRAUBE
5	10007205	12	SOCKET HEAD SCREW ISO 4762 M8X25 A2	ZYLINDERSCHRAUBE
6	411903108	12	HEX NUT DIN 985 M8 A2-70	SECHSKANTMUTTER
7	10678375	2	STOP PLUG D10,7 LD-PE	STOPFEN
8	10678377	2	MULTI-PLATE PLUG 28MM PE-LLD	LAMELLENSTOPFEN
9	710100708	8	SEALING RING DIN 7603 A8X12X1 CU	DICHTRING
10	726405608	12	O-RING 14X3 NBR70	O-RING

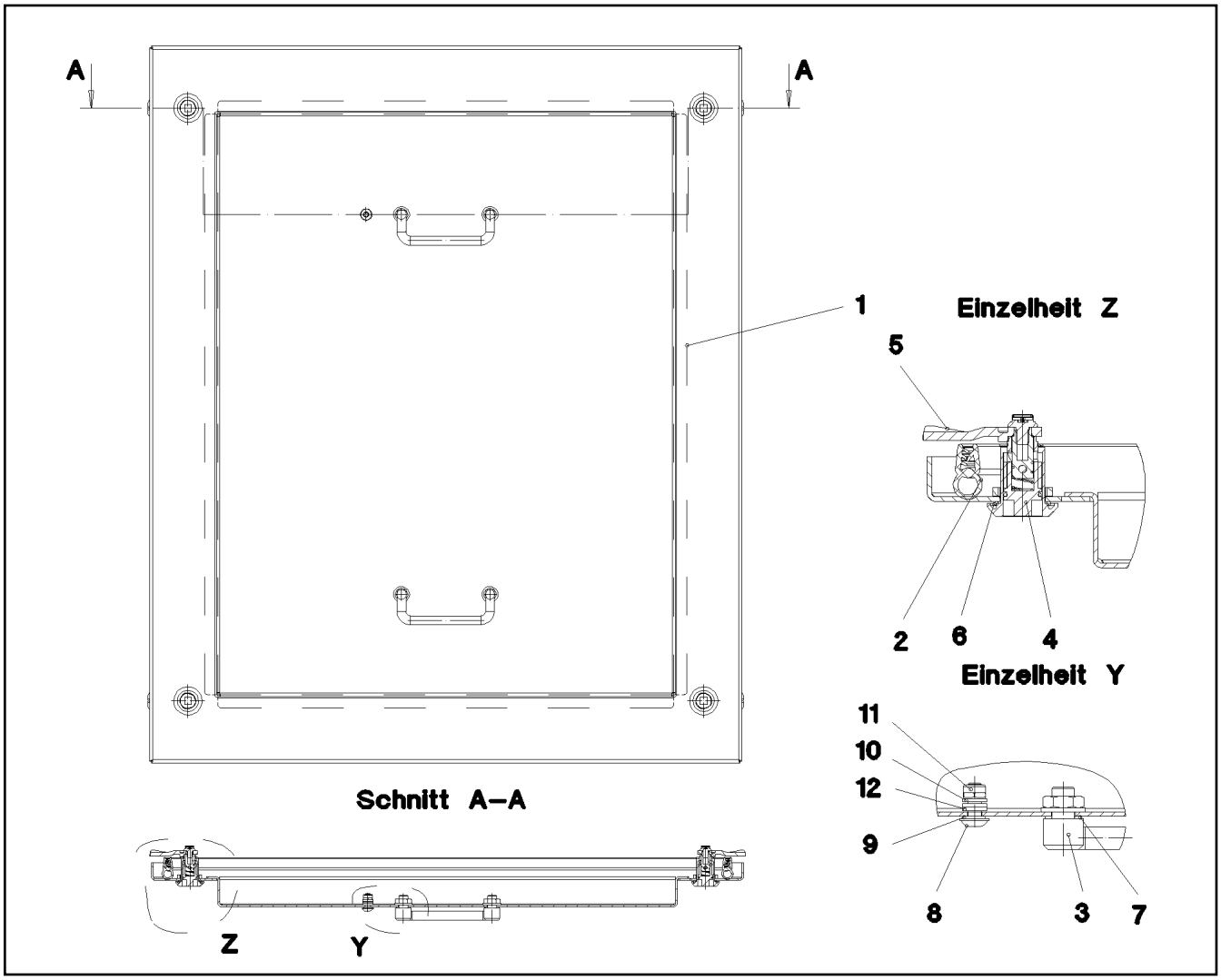

Pos.	Item	Quantity	Description	Bezeichnung
1	968075708	1	COVER WELDED RAL 7016,SDGL,GT SPF	DECKEL SCHWK.
2	97007649	1	SEAL 645X786 EPDM	DICHTUNG
3	10870376	2	POIGNEE 118X18X43	KLAPPGRIFF
4	10650295	4	SASH LOCK	VORREIBER
5	570340077	4	TONGUE	ZUNGE
7	710101408	4	SEALING RING DIN 7603 A10X16X1 CU	DICHTRING
8	10412851	1	BUTTON HEAD SCREW AEHNL.ISO 7380-2	HALBRUNDKOPFSCHRAUBE
9	710100408	1	SEALING RING DIN 7603 A6,5X9,5X1 CU	DICHTRING
10	10035694	2	WASHER ISO 7092 6 200HV-A2	SCHEIBE
11	411903008	1	HEX NUT DIN 985 M6 A2-70	SECHSKANTMUTTER
12	12102694	1	SERRATED LOCK WASHER DIN 6798 A 6.4	FAECHERSCHEIBE

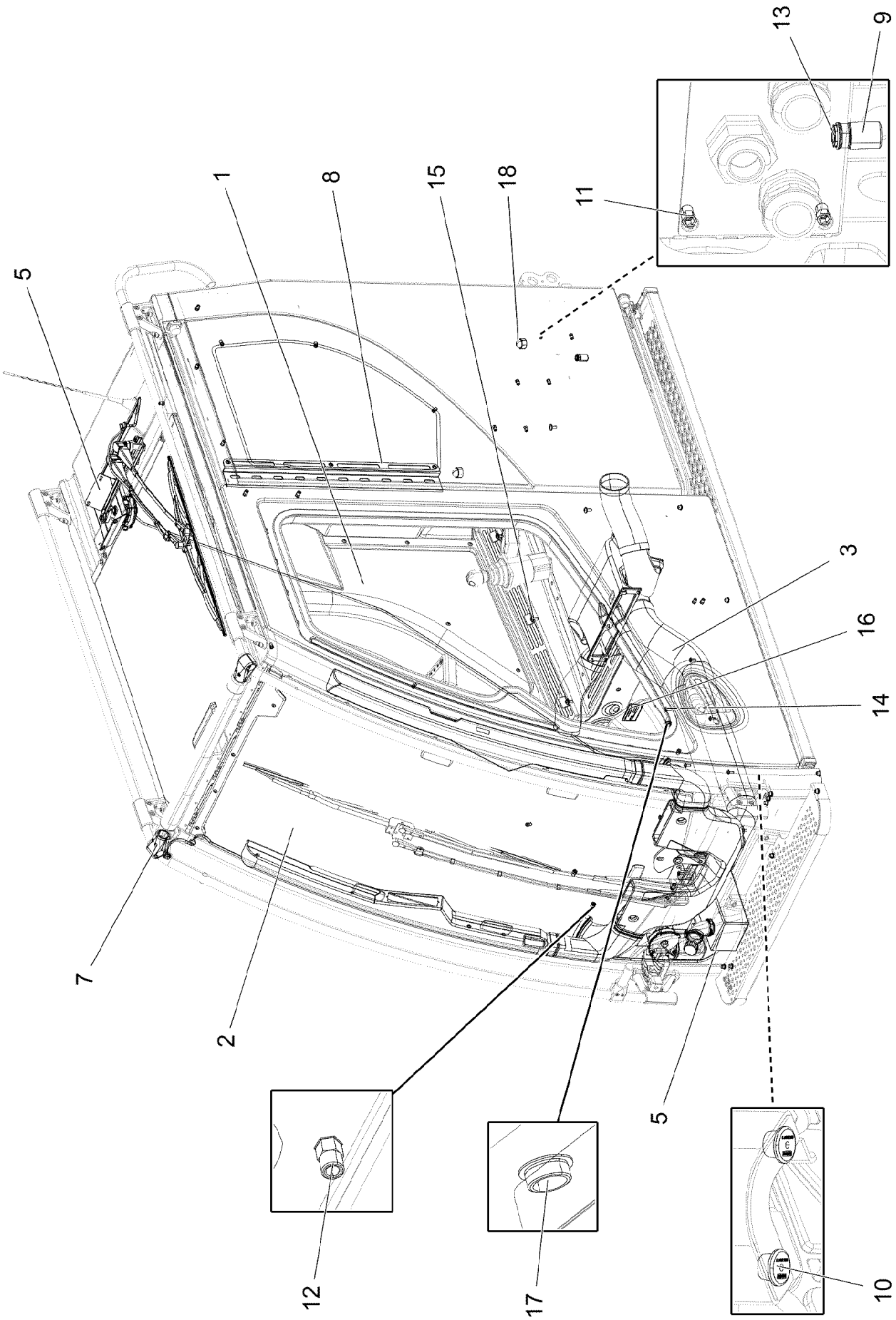
13
9
1
8
15
18
11
5
3
16
14
7
2
5
12
17
10

Pos.	Item	Quantity	Description	Bezeichnung
1	917305408	1	INTERNAL PANELLING INSTALLATIO ⇨ ❑ 396	INNENVERKLEIDUNG EINBAU
2	916162508	1	WINDOW ASSEMBLY SPF ⇨ ❑ 404	SCHEIBEN EINBAU
3	916168308	1	AIR DUCT ⇨ ❑ 411	LUFTFUEHRUNG
5	916163008	1	WIPERS INSTALLATION ⇨ ❑ 413	WISCHANLAGE EINBAU
7	97009160	2	HOLDER 44X88.5X40 G-ALSIMG	HALTER
8	97025690	1	PLATE 2X700X109 DC01 FE//ZNNI8//CN//T0	BLECH
9	971565208	1	SPOUT	TUELLE
10	7361205	10	BLANKING PLUG PE-LD	VERSCHLUSSSTOPFEN
11	10042593	19	BLIND RIVET NUT M6 K=1,5-3,5 ST CR6-FRE	BLINDNIETMUTTER
12	12100289	9	BLIND RIVET NUT M8 K=1,8-5 480H SPF	BLINDNIETMUTTER
13	12100265	1	BLIND RIVET NUT M10 K=1,5-5,5 480H SPF	BLINDNIETMUTTER
14	10875468	12	BUTTON HEAD SCREW AEHNL.ISO 7380-2	HALBRUNDKOPFSCHRAUBE
15	10875485	6	BUTTON HEAD SCREW AEHNL.ISO 7380-2	HALBRUNDKOPFSCHRAUBE
16	97038433	1	SIGN 1X75X45 ALUMINIUM	SCHILD
17	602424908	1	SCREW PLUG M16X1,5 MS	VERSCHLUSSSCHRAUBE
18	779040801	2	PROTECTING CAP SW 24	SCHUTZKAPPE

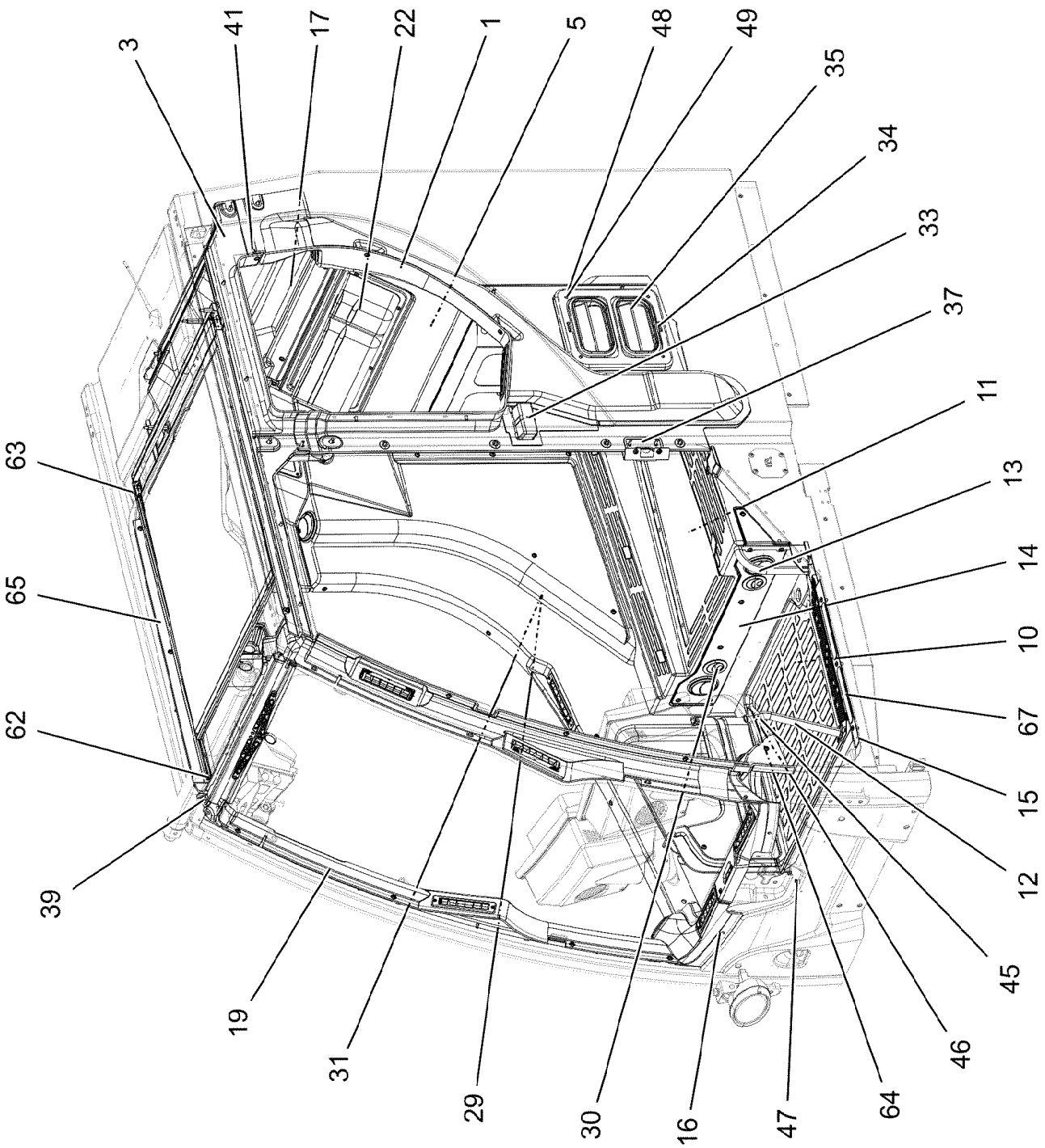
3
41
17
22
1
5
48
49
35
34
33
37
11
13
14
10
67
15
12
45
46
64
47
16
30
29
31
19
39
62
65
63

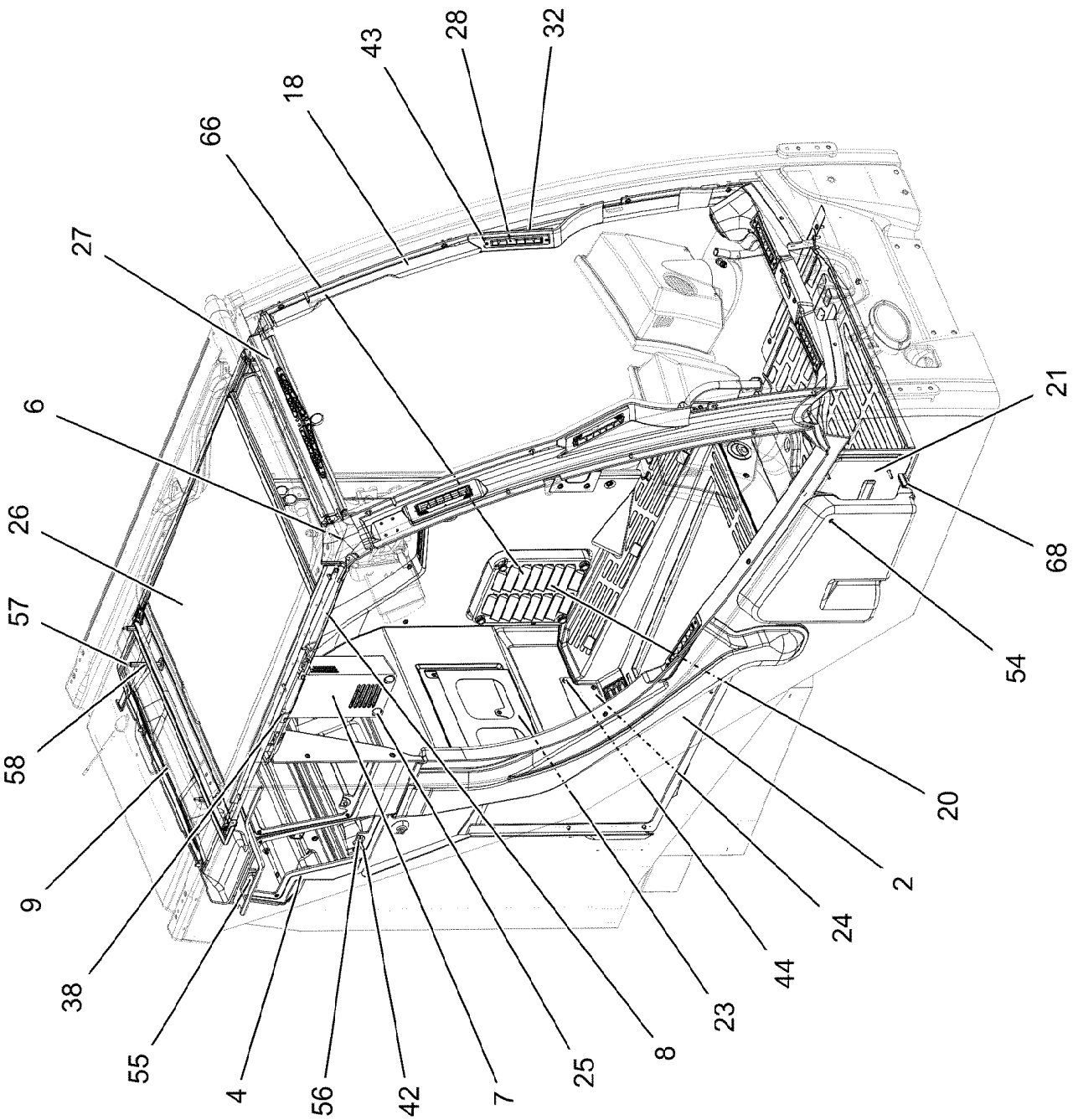
32
28
43
18
66
27
6
26
57
58
9
38
55
4
56
42
7
25
8
23
44
24
2
20
54
68
21

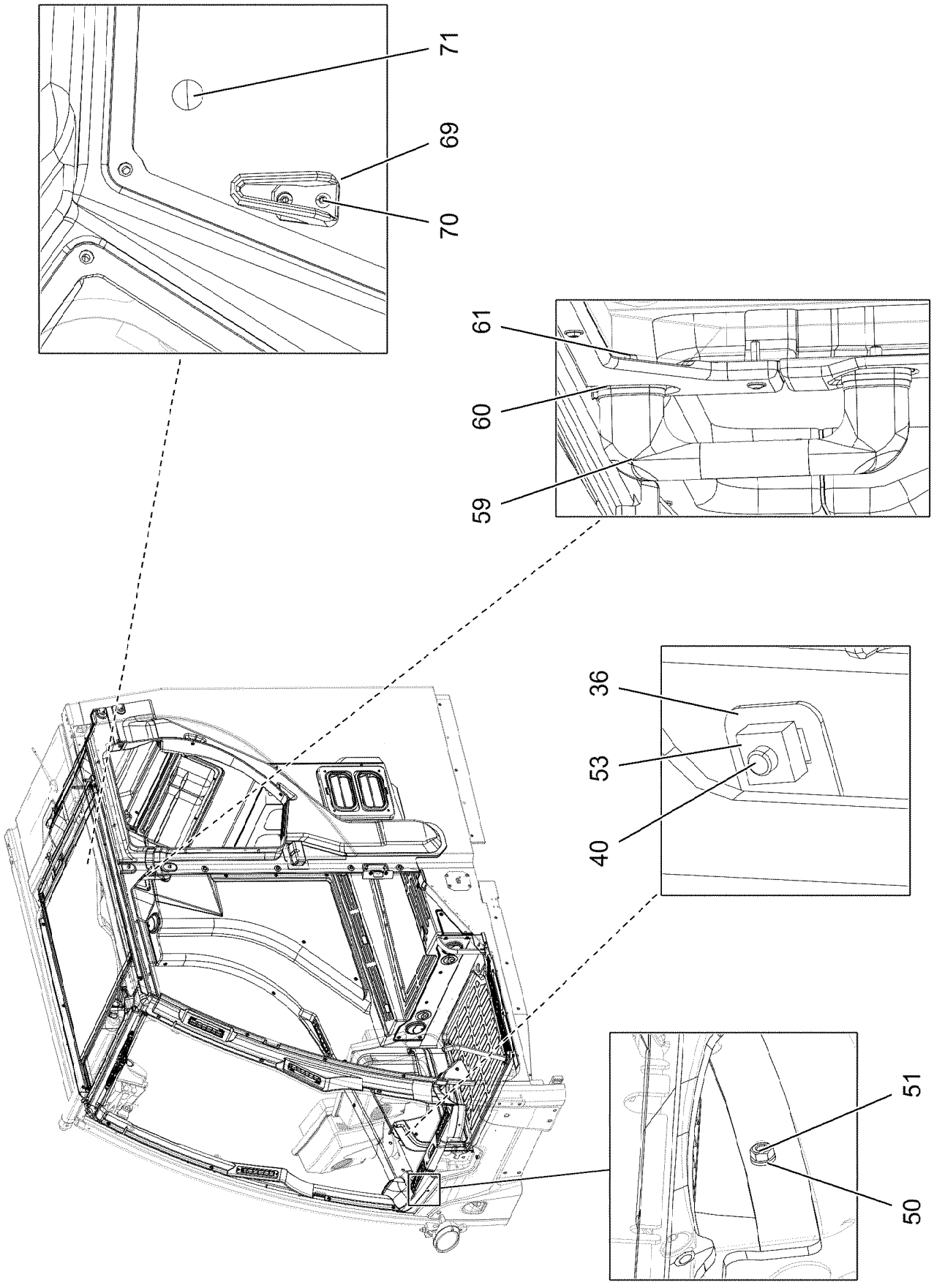
71
69
70
61
60
59
36
53
40
51
50

Pos.	Item	Quantity	Description	Bezeichnung
1	966282308	1	PANELLING,LEFT ⇨ ❑ 401	VERKLEIDUNG LI.
2	966282408	1	PANELLING ⇨ ❑ 402	VERKLEIDUNG RE.
3	97001015	1	PANELLING,STRUT LEFT 84X1361X160 ABS	VERKLEIDUNG HOLM LI.
4	97001589	1	PANELLING ABOVE RIGHT 188X647X441 AB	VERKLEIDUNG OBEN RECHTS
5	97001404	1	CLADDING REAR PANEL 193X729X817 PP/G	VERKLEIDUNG RUECKWAND
6	97001048	1	PANELLING ROLLER BLIND 96X818X144 AB	VERKLEIDUNG ROLLO
7	975850708	1	HOUSING PUR SPF	GEHAEUSE
8	979206708	1	SMALL HILL COVERING 65X292X46 ABS SP	VERKLEIDUNG HOLM RE.
9	965763608	1	ROOF COVERING COMPL.	DACHVERKLEIDUNG KPL.
10	97000466	1	FLOOR MAT 61X753X552 PU-SCHAUM SPF	BODENMATTE
11	97000467	1	FLOOR MAT 227X798X849 PU-SCHAUM SP	BODENMATTE
12	966621108	1	PIPE WELDED RAL 9005,M,GT SPF	ROHR SCHWK.
13	966620008	1	PIPE WELDED RAL 9005,M,GT, SPF	ROHR SCHWK.
14	97000470	1	PLATE 2X810X132 DC01 RAL 7016,SDGL,GT	BLECH
15	97000469	1	PLATE 1.5X72X538 X5CRNI18-10	BLECH
16	97006863	1	PANELLING 201X846X165 ABS SPF	VERKLEIDUNG VORN
17	97001553	1	PANELLING REST 82X599X144 ABS SPF	VERKLEIDUNG ABLAGE
18	97002207	1	A COLUMN CLADDING LEFT 117X508X1174	VERKLEIDUNG A-SAEULE LI.
19	97002209	1	A COLUMN CLADDING RIGHT 134X494X115	VERKLEIDUNG A-SAEULE RE.
20	979206908	1	PANELLING FORCED AERATION 45.2X225X	VERKLEIDUNG ZWANGSENTL
21	97138958	1	PANELLING 120X526X308 ABS SPF	VERKLEIDUNG RE.
22	740300008	1	POCKET KUNSTSTOFF	TASCHE
23	97002609	1	PLATE 1.5X551X299 DC01 RAL 9005,M,GT	BLECH
24	97003298	1	PLATE 1.5X436X90 DC01 RAL 7016,SDGL,G	BLECH
25	10354670	2	RUBBER BUFFER 19X9,6 PU SCHWARZ	GUMMIPUFFER
26	11002447	1	BLIND ⇨ ❑ 403	ROLLO
27	11002446	1	BLIND	ROLLO
28	10292013	8	ROLLING NOZZLE	WALZENDUESE
29	553193208	6	OUTLET JET D=82 T=5 PA	AUSSTROEMDUESE
30	10301409	2	OUTLET JET D=63 ABS	AUSSTROEMDUESE
31	518629608	2	O-RING ARP 568 72,62X3,53 NBR70	O-RING
32	97006874	6	SEAL 7X182X51 POLYOLEFIN	DICHTUNG
33	10291997	1	ASH TRAY KUNSTSTOFF	ASCHENBECHER
34	967775308	1	PLATE WELDED FE//ZNNI8//CN//T0	BLECH SCHWK.
35	10292000	2	VENTILATION	ENTLUEFTUNG
36	97006875	1	PLATE 1.5X25X47 DC01 RAL 7016 SPF	BLECH
37	97006876	1	PLATE 1.5X107X120 DC01 RAL 9005,M,GT	BLECH
38	10875474	16	BUTTON HEAD SCREW ISO 7380-2 M5X16 0	HALBRUNDKOPFSCHRAUBE
39	10874884	13	BUTTON HEAD SCREW ISO 7380-2 M6X12 0	HALBRUNDKOPFSCHRAUBE
40	10875468	73	BUTTON HEAD SCREW AEHNL.ISO 7380-2	HALBRUNDKOPFSCHRAUBE
41	10875469	10	BUTTON HEAD SCREW ISO 7380-2 M6X30 0	HALBRUNDKOPFSCHRAUBE
42	10875470	2	BUTTON HEAD SCREW ISO 7380-2 M6X40 0	HALBRUNDKOPFSCHRAUBE
43	10876382	16	SHEET-METAL SCREW ISO 7050 ST3,5X16 4	BLECHSCHRAUBE
44	10875538	2	HEX SCREW ISO 4017 M8X50 8.8 480H SPF	SECHSKANTSCHRAUBE
45	11826527	1	HEX SCREW ISO 4017 M8X30 8.8 480H SPF	SECHSKANTSCHRAUBE
46	10875614	1	HEX NUT DIN 985 M8 8 480H SPF	SECHSKANTMUTTER
47	10678375	1	STOP PLUG D10,7 LD-PE	STOPFEN
48	97028159	4	DISTANCE STUD M5X30 11SMN30+C FE//ZN	ABSTANDSBOLZEN
49	10800916	4	KNURLED BUTTON PA	RAENDELKNOPF
50	10197771	3	WASHER ISO 7089 6 200HV ZNNI-480H SPF	SCHEIBE
51	10197764	2	HEX NUT ISO 4032 M6 10 ZNNI-480H SPF	SECHSKANTMUTTER
53	413002808	1	CAGE NUT M6	KAEFIGMUTTER
54	11642497	1	HEX SCREW ISO 4017 M6X10 8.8 480H SPF	SECHSKANTSCHRAUBE
55	10441664	1	DISTANCE SLEEVE 15X6,3X25 PA66	DISTANZHUELSE
56	10354375	1	DISTANCE SLEEVE 10X6,2X10 PA66	DISTANZHUELSE
57	11001955	3	DISTANCE STUD M6X30 ST VERZ	ABSTANDSBOLZEN
58	10875447	2	DISTANCE STUD M6X50 STAHL 480H SPF	ABSTANDSBOLZEN

Pos.	Item	Quantity	Description	Bezeichnung
59	10443309	1	HANDGRIP 215X25X59,2X169	HALTEGRIFF
60	97007597	4	PLATE 4X48X29 S315MC RAL 9005,M,GT SP	BLECH
61	10875570	2	SOCKET HEAD SCREW ISO 4762 M8X55 8.8	ZYLINDERSCHRAUBE
62	10875582	2	SOCKET HEAD SCREW ISO 4762 M5X18 8.8	ZYLINDERSCHRAUBE
63	10875584	1	SOCKET HEAD SCREW ISO 4762 M5X25 8.8	ZYLINDERSCHRAUBE
64	12103465	4	WASHER ISO 7089 8 300HV ZNNI-480H SPF	SCHEIBE
65	97027494	1	PLATE 1.5X832X41 DC01 RAL 7016,SDGL,G	BLECH
66	11182242	1	FILTER SYNFASAN	FILTER
67	97037477	2	ANTI-SLIP SURFACE 1.6X25X170 3M TYP4	ANTIRUTSCHBELAG
68	262101308	0.04	CLAMP FITTING 1-3X21X9,3 ZELLGUMMI	KLEMMBAND
69	12106136	1	COAT HOOK SCHWARZ	GARDEROBENHAKEN
70	10875017	2	BUTTON HEAD SCREW ISO 7380-1 M4X10 0	HALBRUNDKOPFSCHRAUBE
71	591064708	1	COVER LID 9,5X11 POLYACETAL	ABDECKKAPPE

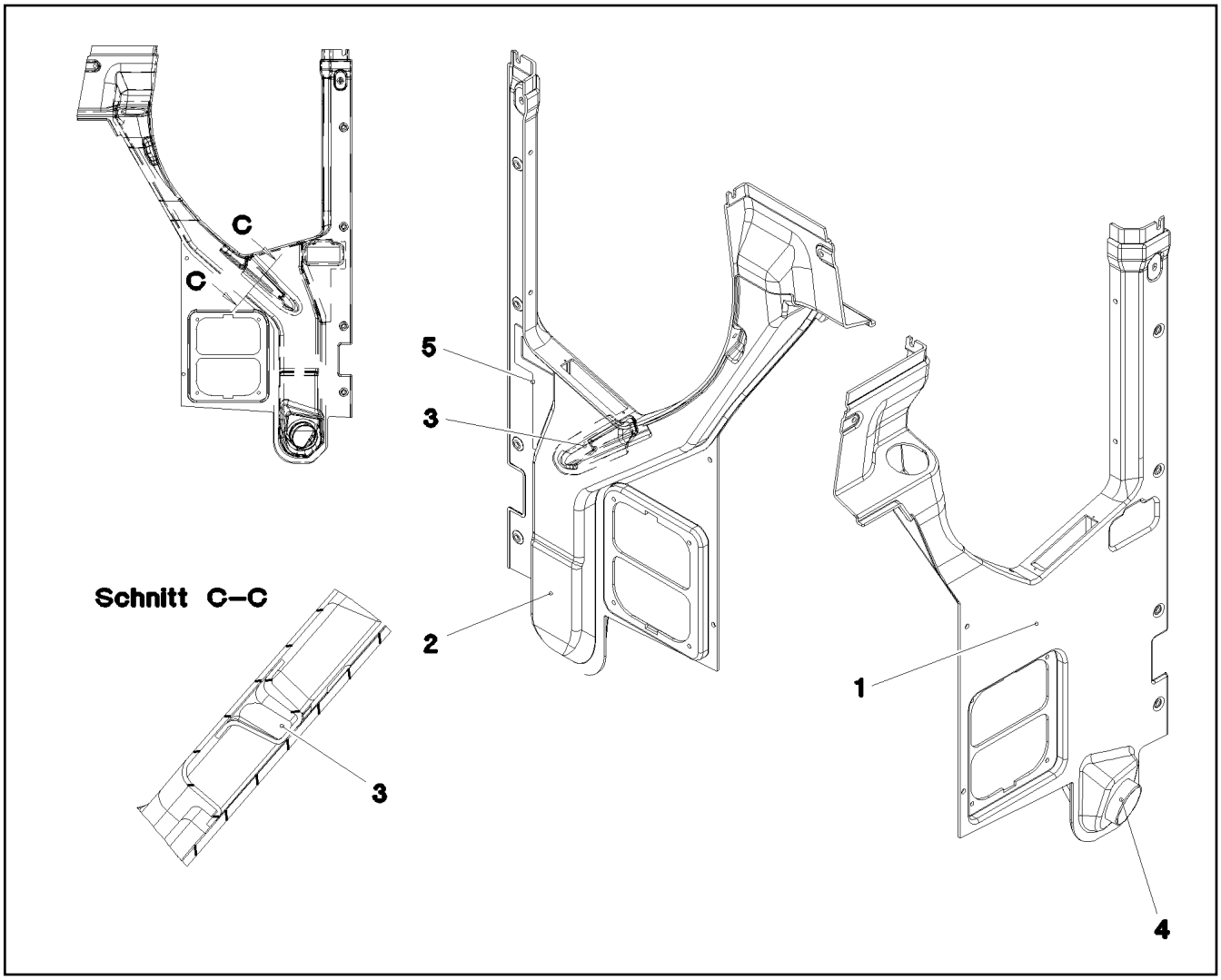

Pos.	Item	Quantity	Description	Bezeichnung
1	97001013	1	PANELLING,LEFT 130X832X1260 ABS SPF	VERKLEIDUNG LI.
2	97001699	1	AIR GUIDE L 113X705X1091 ABS SPF	LUFTFUEHRUNG LI.
3	97004696	1	AIR GUIDE CHANNEL 39X75X227 ABS SPF	LUFTLEITKANAL
4	97005143	1	TUBE 100X33 ABS	ROHR
5	97045292	1	PLATE 3X135X251 ALMG3 H111 ELOXIERT	BLECH

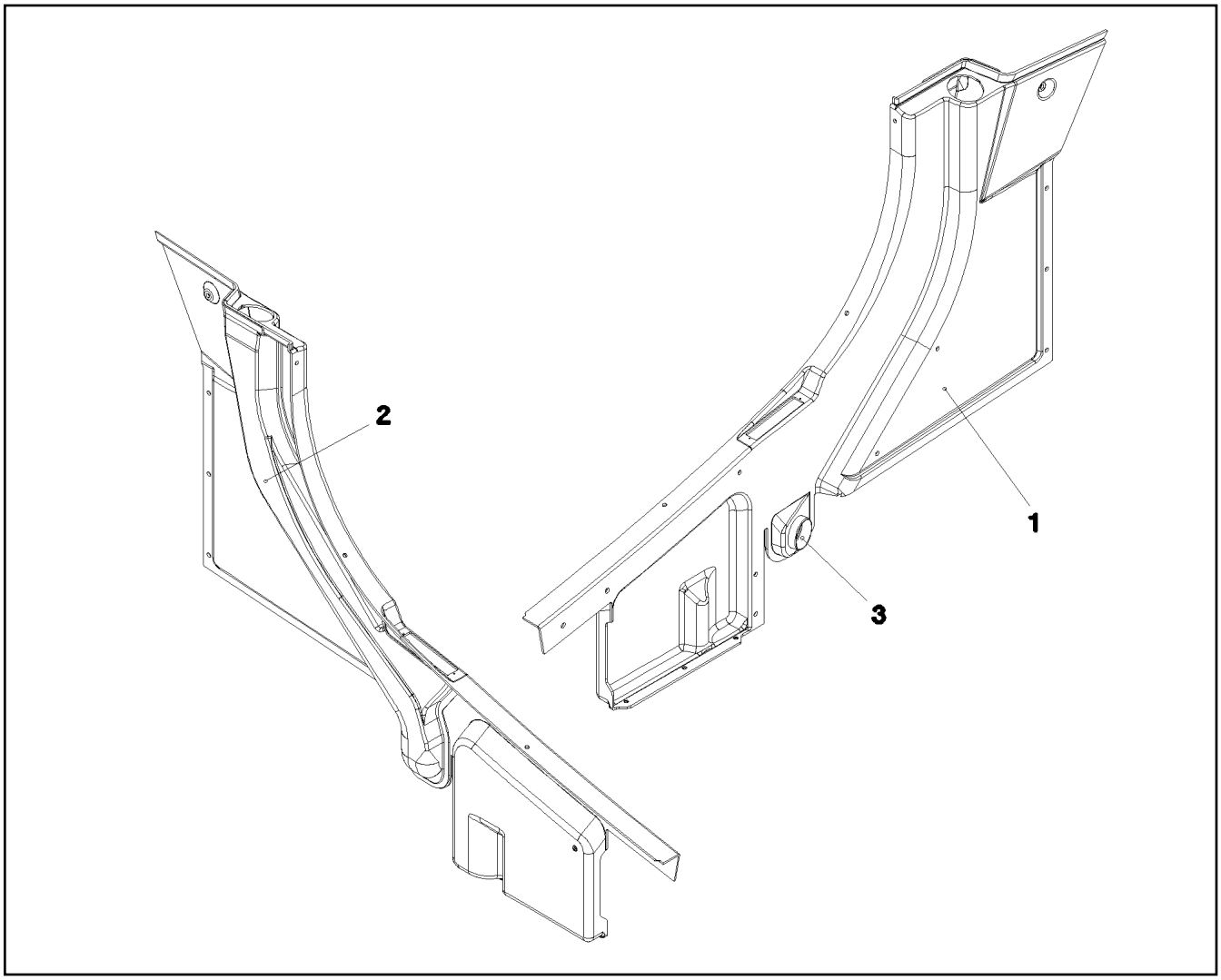

Pos.	Item	Quantity	Description	Bezeichnung
1	97001014	1	PANELLING 127X1598X1088 ABS SPF	VERKLEIDUNG RE.
2	97001700	1	AIR GUIDE R 100X714X953 ABS SPF	LUFTFUEHRUNG RE.
3	97005144	1	TUBE 85X27 ABS	ROHR

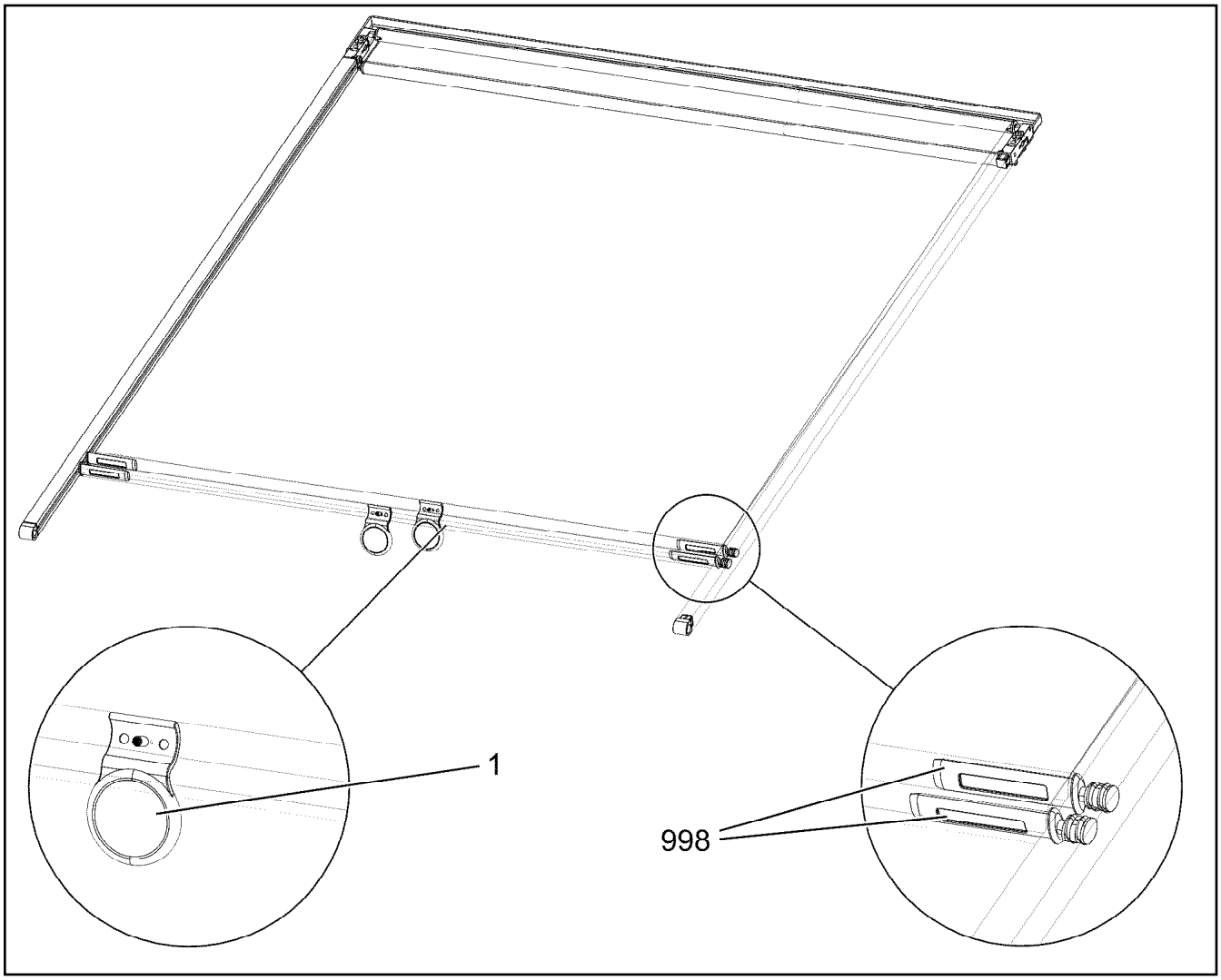

Pos.	Item	Quantity	Description	Bezeichnung
1	12100622	1	REPAIR KIT HANDLE	RS GRIFF
998	10872672	1	REGULATION REPAIR KIT	RS VERSTELLUNG

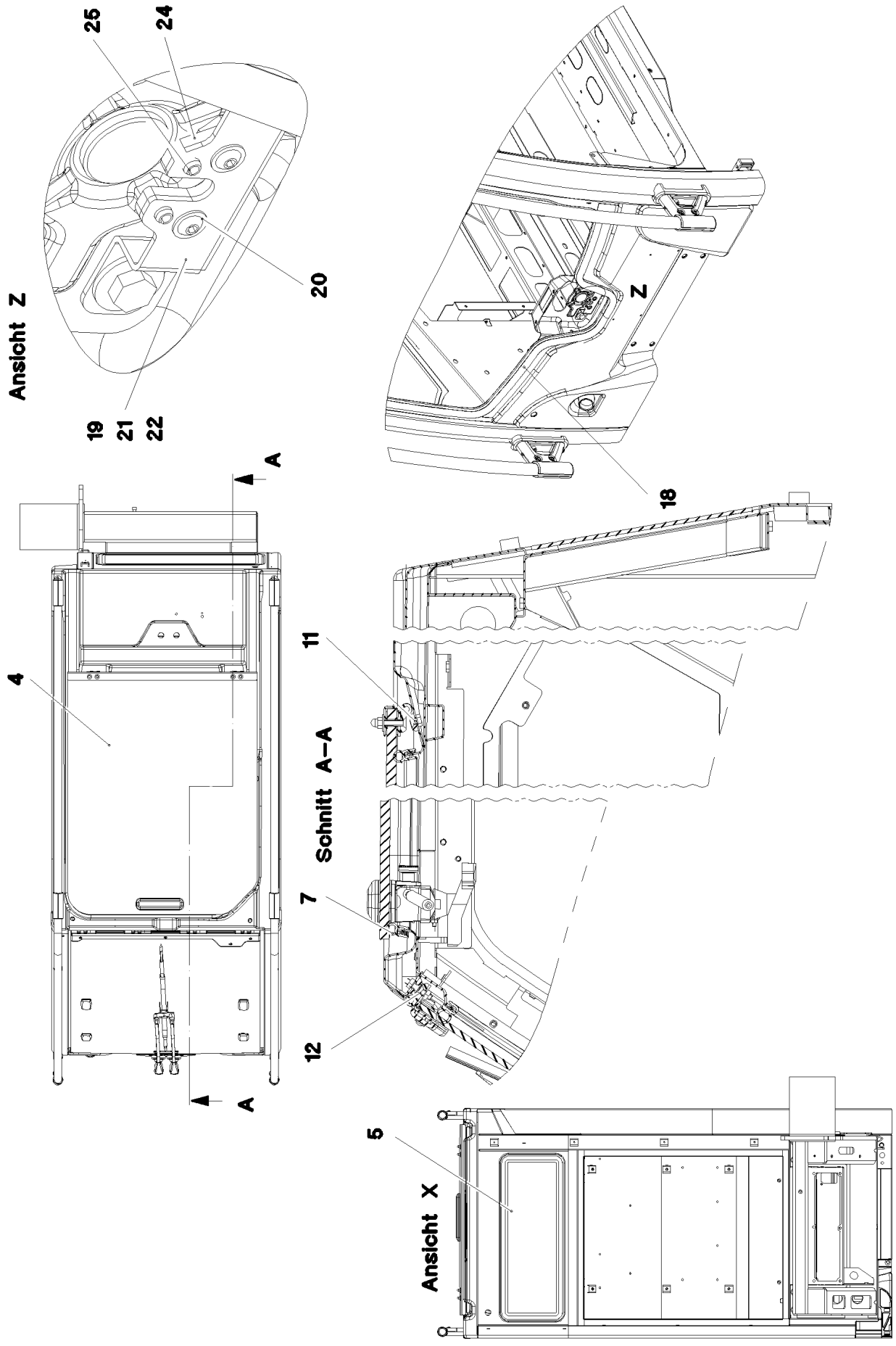
25
24
20
Ansicht Z
19
21
22
Z
18
A
4
11
Schnitt A–A
7
12
A
5
Ansicht X

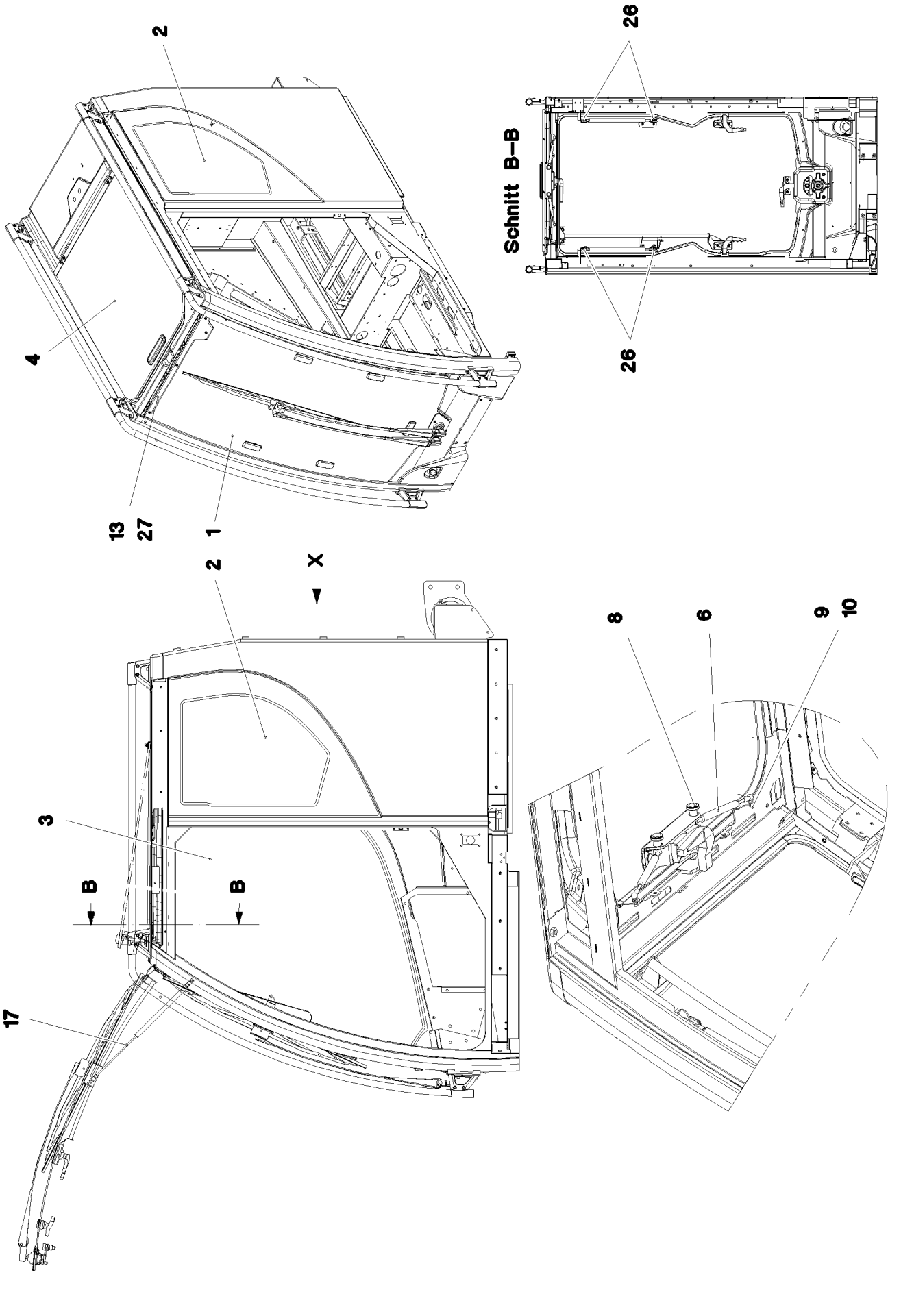

18.7.2022 083026 LIEBHERR	**etk_en_de_047654 LTR 1220** **WINDOW ASSEMBLY** **SCHEIBEN EINBAU**	❑ 405 (2/3) **916162508**

Pos.	Item	Quantity	Description	Bezeichnung
1	966497908	1	FRONT WINDOW CPL. ⇨ ❑ 407	FRONTSCHEIBE KPL.
2	97003560	1	SIDE WINDOW LEFT 646.2X94X4 ESG SPF	SEITENSCHEIBE LI.
3	97003561	1	SIDE WINDOW RIGHT 1252X125X4 ESG SP	SEITENSCHEIBE RE.
4	965784408	1	ROOF WINDOW PRE-ASS. ⇨ ❑ 410	DACHSCHEIBE VORM.
5	97000279	1	REAR WINDOW ESG SPF	HECKSCHEIBE
6	10476211	2	GAS SPRING 12X80-100N ST	GASFEDER
7	97033487	1	SEAL 25X892X720 EPDM	DICHTUNG
8	10652206	2	KNURLED BUTTON 21-M4 PA	RAENDELKNOPF
9	10875645	2	WASHER ISO 7089 4 200HV 480H SPF	SCHEIBE
10	10875619	2	HEX NUT ISO 4032 M4 8 480H SPF	SECHSKANTMUTTER
11	10875809	4	COUNTERSUNK SCREW DIN 7991 M6X12 8	SENKSCHRAUBE
12	10875551	8	COUNTERSUNK SCREW DIN 7991 M6X16 8	SENKSCHRAUBE
13	97008572	1	COVER 8X735X83 PE SCHWARZ	ABDECKUNG
14	10815283	1	ACTIVATOR 250ML DOSE	AKTIVATOR
15	811203308	1	ADHESIVE 600ML FC-BEUTEL	KLEBER
16	811203108	1	TOOLING AGENT KANISTER-5L 5/35°C	ABGLAETTMITTEL
17	11003837	2	GAS SPRING 23X251-550N ST	GASFEDER
18	97046043	1	SEAL 25X14X4080 EPDM	DICHTUNG
19	97024781	1	PLATE 2X170X51 DC01 FE//ZNNI8//CN//T0	BLECH
21	11651612	2	HEX SCREW ISO 4017 M8X16 8.8 480H SPF	SECHSKANTSCHRAUBE
22	11140469	2	WASHER ISO 7093-1 8 200HV 480H SPF	SCHEIBE
23	870004108	1	ACTIVATOR 1000ML	AKTIVATOR
24	97024783	1	PLATE 4X52X32 S315MC FE//ZNNI8//CN//T0	BLECH
25	10875881	2	DOWEL PIN ISO 8752 6X10 ST 480H SPF	SPANNSTIFT
26	97072035	4	BUSHING RD20X7.5 X5CRNI18-10	BUCHSE
27	11697855	7	BUTTON HEAD SCREW ISO 7380-2 M5X8 0	HALBRUNDKOPFSCHRAUBE

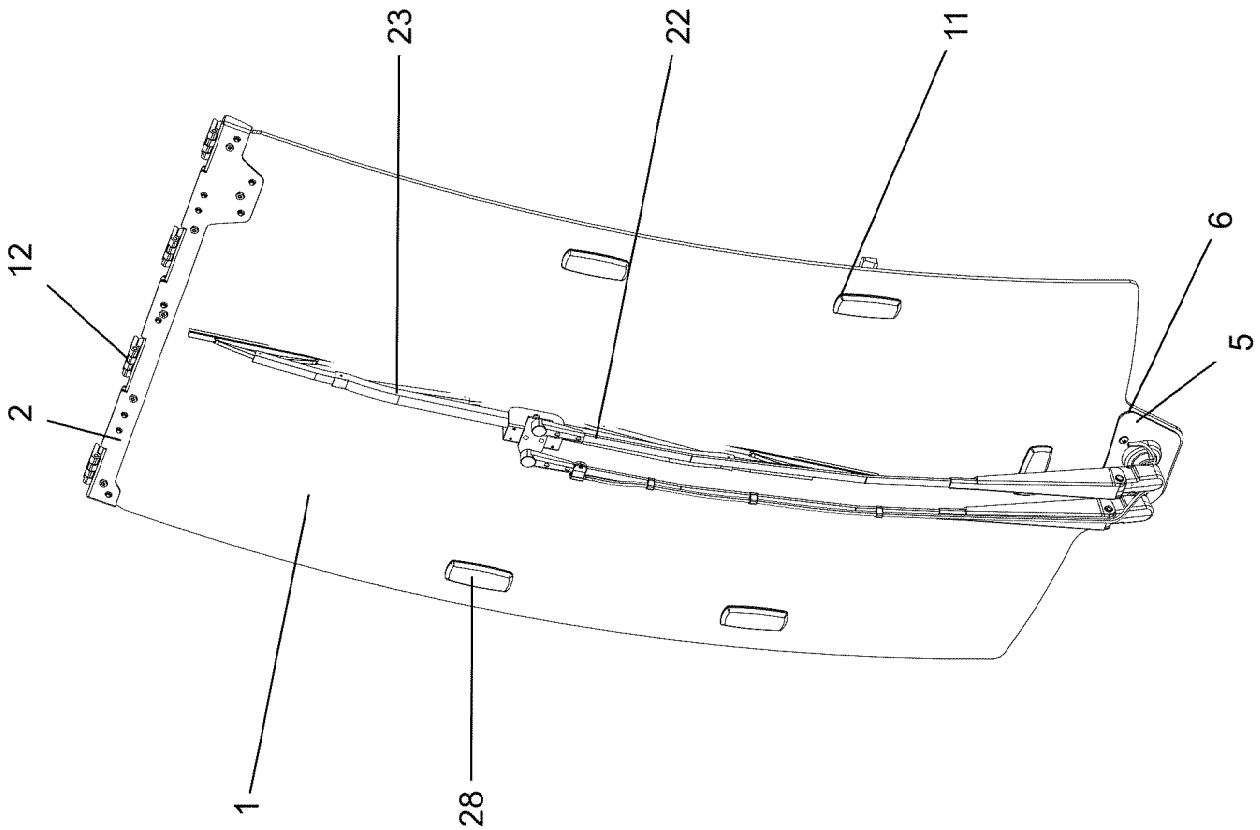
23
22
11
12
6
5
2
1
28

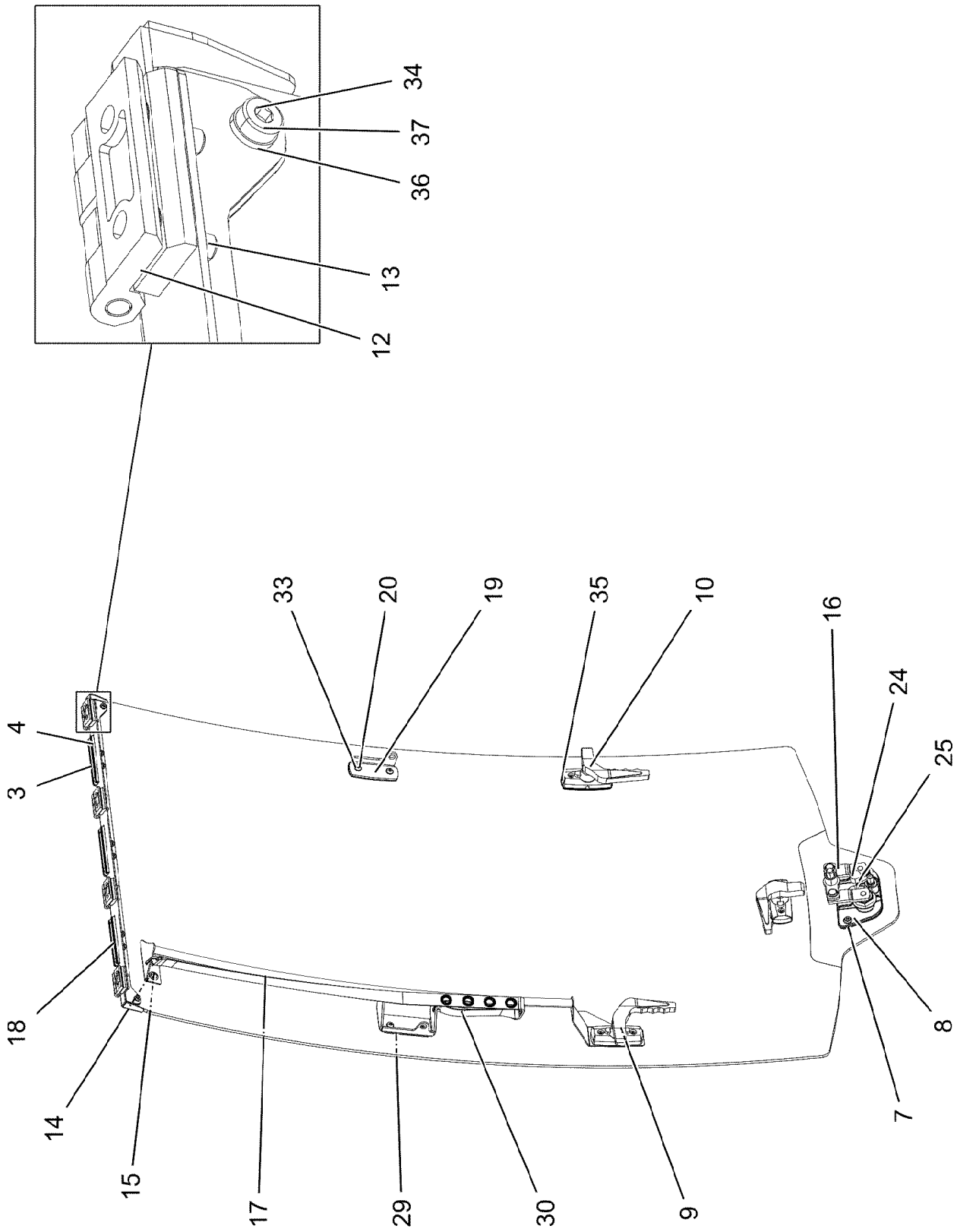
34
37
36
13
12
33
20
19
35
10
16
24
25
4
3
18
14
15
17
29
30
9
8
7

Pos.	Item	Quantity	Description	Bezeichnung
1	97003558	1	FRONT WINDOW 6X735X1506 ESG SPF	FRONTSCHEIBE
2	966497808	1	PLATE WELDED FE//ZNNI8//FN//T2	BLECH SCHWK.
3	97005272	1	SEAL 1.5X721X86 EPDM	DICHTUNG
4	97005273	1	PLATE 2X719X40 DC01 FE//ZNNI8//FN//T2	BLECH
5	97005289	1	PLATE 2X227X109 DC01 FE//ZNNI8//CN//T0	BLECH
6	97005290	1	SEAL 2X225X107 EPDM	DICHTUNG
7	97005291	1	SEAL 2X148X84 EPDM	DICHTUNG
8	97052119	1	BEARING WIPERS UNIT 50X146X82	LAGER FRONTWISCHANLAGE
9	704232208	1	HAND GRIP CPL. DREH KUNSTSTOFF	HANDGRIFF KPL.
10	591066808	2	HANDLE	HANDGRIFF
11	97005309	9	SEAL 2X94X39 EPDM	DICHTUNG
12	10871177	4	SCREW-ON HINGE 25X25X50/180° AISI 316	ANSCHRAUBSCHARNIER
13	10875551	8	COUNTERSUNK SCREW DIN 7991 M6X16 8	SENKSCHRAUBE
14	421801708	2	WASHER ISO 7093-1 6 200HV-A2	SCHEIBE
15	10412852	6	BUTTON HEAD SCREW AEHNL.ISO 7380-2	HALBRUNDKOPFSCHRAUBE
16	11001115	1	WIPER BEARING ST	WISCHLAGER
17	966513708	1	PIPE WELDED SCHWARZ PULVERB.	ROHR SCHWK.
18	97006055	1	SEAL 721X43X 1.5 EPDM	DICHTUNG
19	97006057	1	PLATE 4X93X68 S315MC RAL 9005,M,GT SP	BLECH
20	97094637	10	BUSHING 14X14X5 PA6 SCHWARZ	BUCHSE
22	10292015	1	WIPER ARM 900MM	WISCHERARM
23	10292017	1	WIPER BLADE 1000	WISCHERBLATT
24	726617408	1	MEGI BUFFER	MEGIPUFFER
25	10450694	1	GRUB SCREW M6X50 A2-70	GEWINDESTIFT
28	11004117	2	THREADED PLATE M6 PA6GF30	GEWINDEPLATTE
29	97012017	2	SEAL 2X86X28 EPDM	DICHTUNG
30	591063808	1	RETAINING STRAP 25X795 POLYESTER	HALTEGURT
31	10300552	2	SHACKLE 0,08T NG4 STAINLESS ST	SCHAEKEL
33	10875488	4	BUTTON HEAD SCREW ISO 7380-2 M6X12 0	HALBRUNDKOPFSCHRAUBE
34	10876084	14	SOCKET HEAD SCREW DIN 7984 M6X18 08	ZYLINDERSCHRAUBE
35	97025127	3	PLATE 1.5X95X40 DC01 RAL 9005,M,GT SPF	BLECH
36	10035694	8	WASHER ISO 7092 6 200HV-A2	SCHEIBE
37	97155801	10	BUSHING 8X6 PA6	BUCHSE

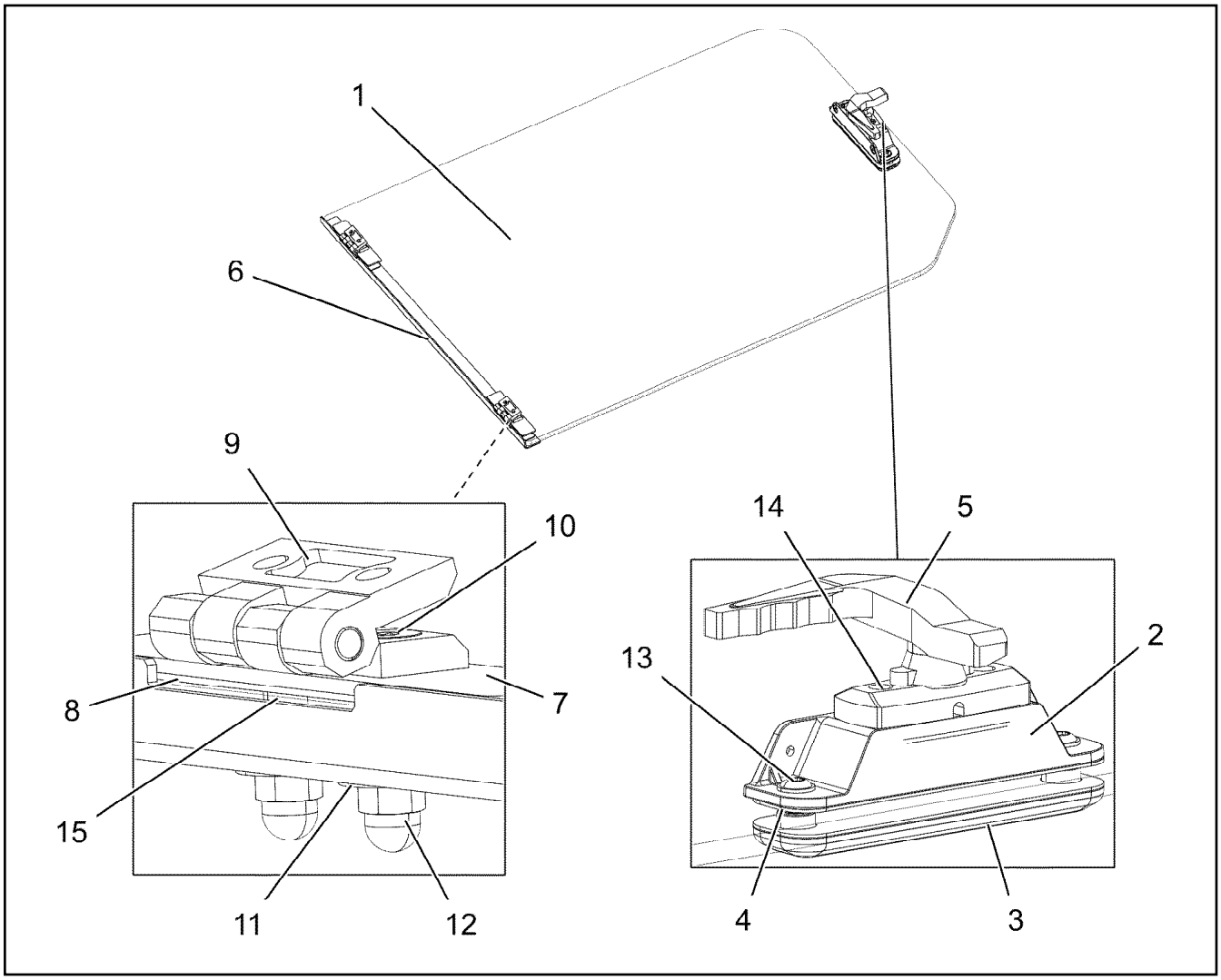

Pos.	Item	Quantity	Description	Bezeichnung
1	979240608	1	ROOF WINDOW 10.28X941X740 VSG SPF	DACHSCHEIBE
2	979243408	1	ADAPTOR 32X185X45 PAGF30 SPF	ADAPTER
3	979243508	1	THREADED PLATE 20X185X45 PAGF30 SPF	GEWINDEPLATTE
4	979243608	2	RUBBER PLATE 1.5X185X45 EPDM	GUMMIPLATTE
5	591066808	1	HANDLE	HANDGRIFF
6	979022508	1	PLATE 2X737X46 DC01 RAL 9005,M,GT SPF	BLECH
7	979022608	2	PLATE 2.5X130X28 DC01 RAL 9005,M,GT SP	BLECH
8	979142208	4	SHEET 126X24X1.5 EPDM 80	PLATTE
9	10871177	2	SCREW-ON HINGE 25X25X50/180° AISI 316	ANSCHRAUBSCHARNIER
10	12100279	4	COUNTERSUNK SCREW ISO 10642 M6X30	SENKSCHRAUBE
11	10875648	4	WASHER ISO 7093-1 6 200HV 480H SPF	SCHEIBE
12	10219361	4	CAP NUT DIN 1587 M6 A2-70	HUTMUTTER
13	10875471	2	BUTTON HEAD SCREW AEHNL.ISO 7380-2	HALBRUNDKOPFSCHRAUBE
14	10875586	2	SOCKET HEAD SCREW ISO 4762 M6X16 8.8	ZYLINDERSCHRAUBE
15	11082602	0.04	INSULATING HOSE DN6X0,5 PUR SPF	ISOLIERSCHLAUCH

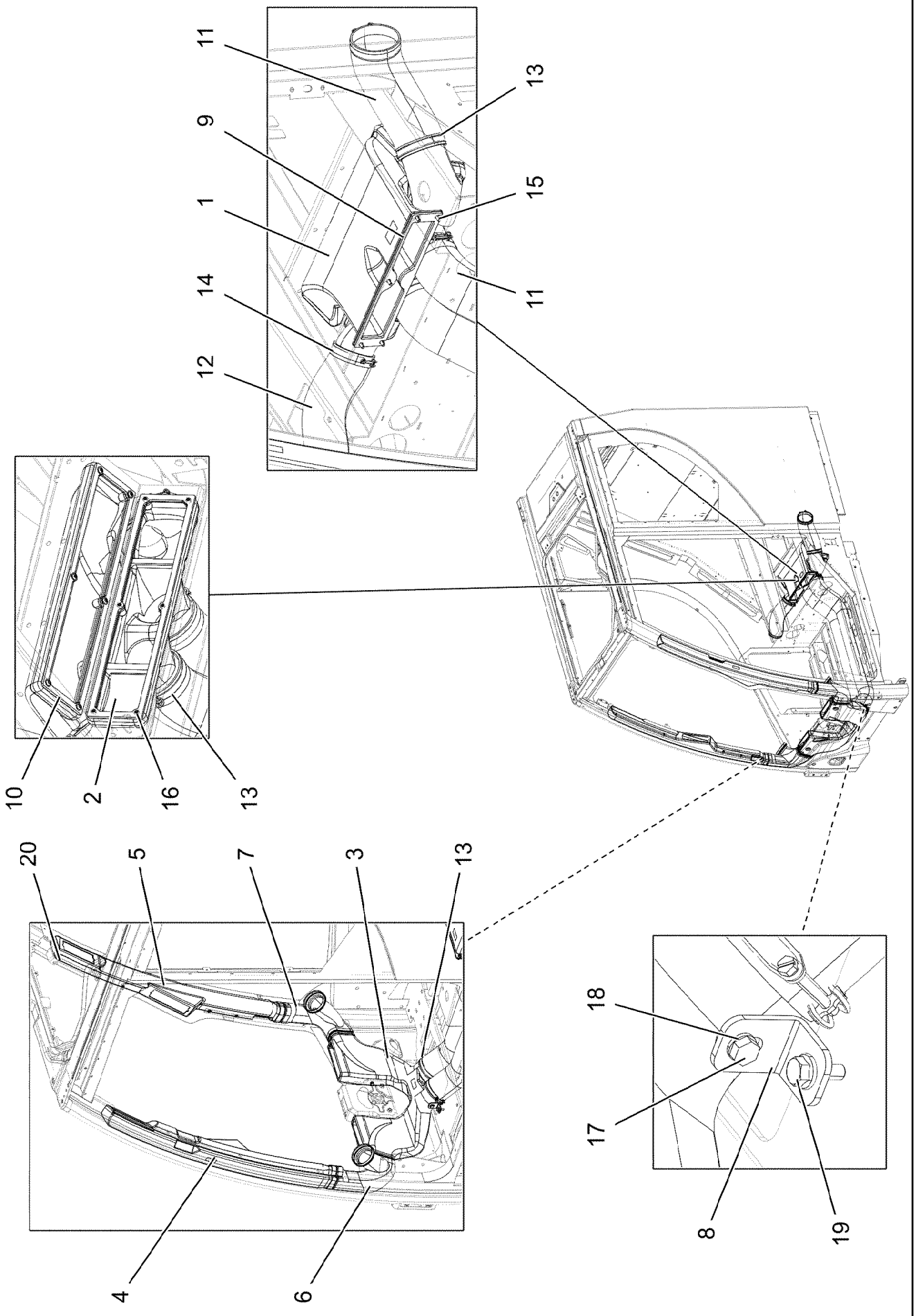

18.7.2022 067368 LIEBHERR	**etk_en_de_047654 LTR 1220** **AIR DUCT** **LUFTFUEHRUNG**	❑ 411 (1/2) **916168308**

Pos.	Item	Quantity	Description	Bezeichnung
1	97000436	1	AIR DUCT 81X233X419 PP SPF	LUFTFUEHRUNG
2	97000437	1	AIR DUCT 128X523X170 PP SPF	LUFTFUEHRUNG
3	97000438	1	AIR DUCT 152X627X339 PP SPF	LUFTFUEHRUNG
4	97000440	1	AIR GUIDE L 107X394X947 PP SPF	LUFTFUEHRUNG LI.
5	97000442	1	AIR GUIDE R 109X391X941 PP SPF	LUFTFUEHRUNG RE.
6	97001248	1	AIR GUIDE L 144X143X275 PVC SPF	LUFTFUEHRUNG LI.
7	97001249	1	AIR GUIDE R 143X150X273 PVC SPF	LUFTFUEHRUNG RE.
8	97001250	2	PLATE 3X60X25 DC01 FE//ZNNI8//CN//T0	BLECH
9	97005040	1	SEAL 4X322X62 EPDM 20SHORE	DICHTUNG
10	97005042	2	SEAL 4X407X85 EPDM 20SHORE	DICHTUNG
11	11000901	2.15	HOSE DN82-UNIE13 SCHWARZ	SCHLAUCH
12	553181208	0.25	HEATING HOSE 70/PRIMAFLEX	HEIZUNGSSCHLAUCH
13	11000903	6	WIRE HOSE CLAMP 79-85	DRAHTSCHLAUCHKLEMME
14	11000902	2	WIRE HOSE CLAMP 70-75	DRAHTSCHLAUCHKLEMME
15	10875474	5	BUTTON HEAD SCREW ISO 7380-2 M5X16 0	HALBRUNDKOPFSCHRAUBE
16	10875483	14	BUTTON HEAD SCREW ISO 7380-2 M5X10 0	HALBRUNDKOPFSCHRAUBE
17	11692824	4	HEX SCREW ISO 4017 M6X12 8.8 480H SPF	SECHSKANTSCHRAUBE
18	10197771	4	WASHER ISO 7089 6 200HV ZNNI-480H SPF	SCHEIBE
19	11840297	2	HEX SCREW EN 1665 M6X16 8.8 480H SPF	SECHSKANTSCHRAUBE
20	10875549	2	COUNTERSUNK SCREW DIN 7991 M5X10 8	SENKSCHRAUBE

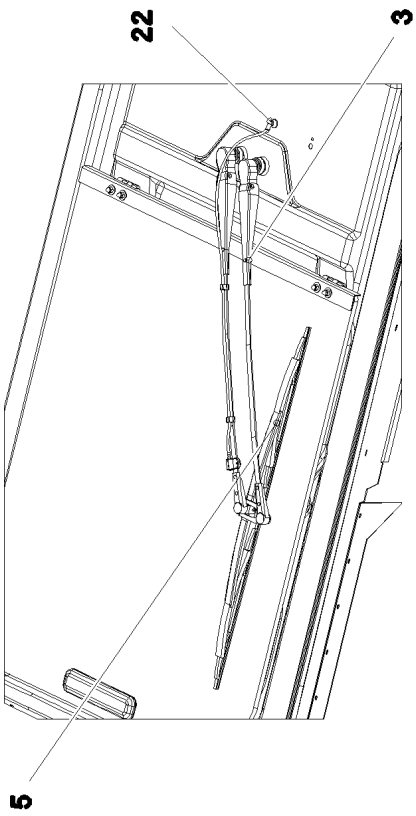

Einzelheit A

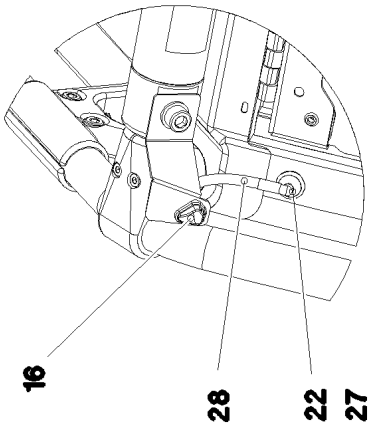

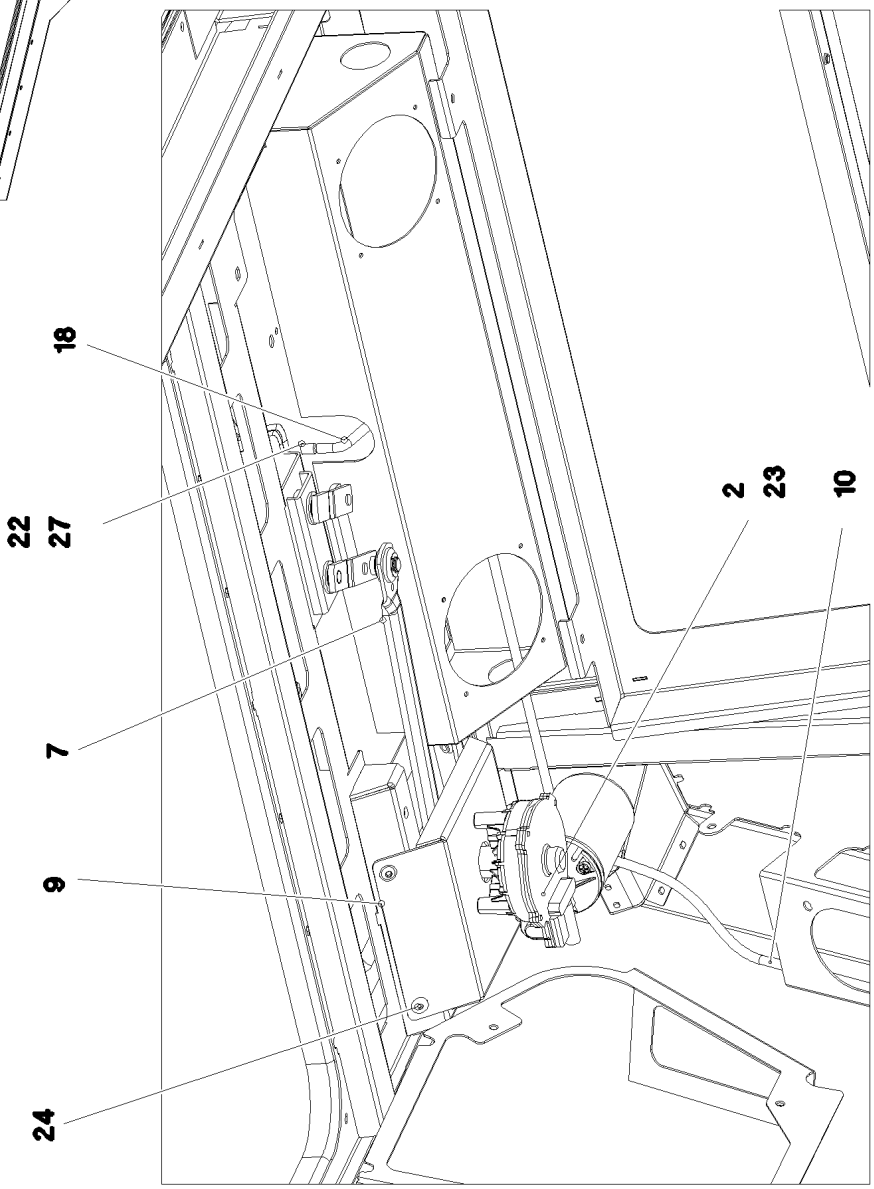

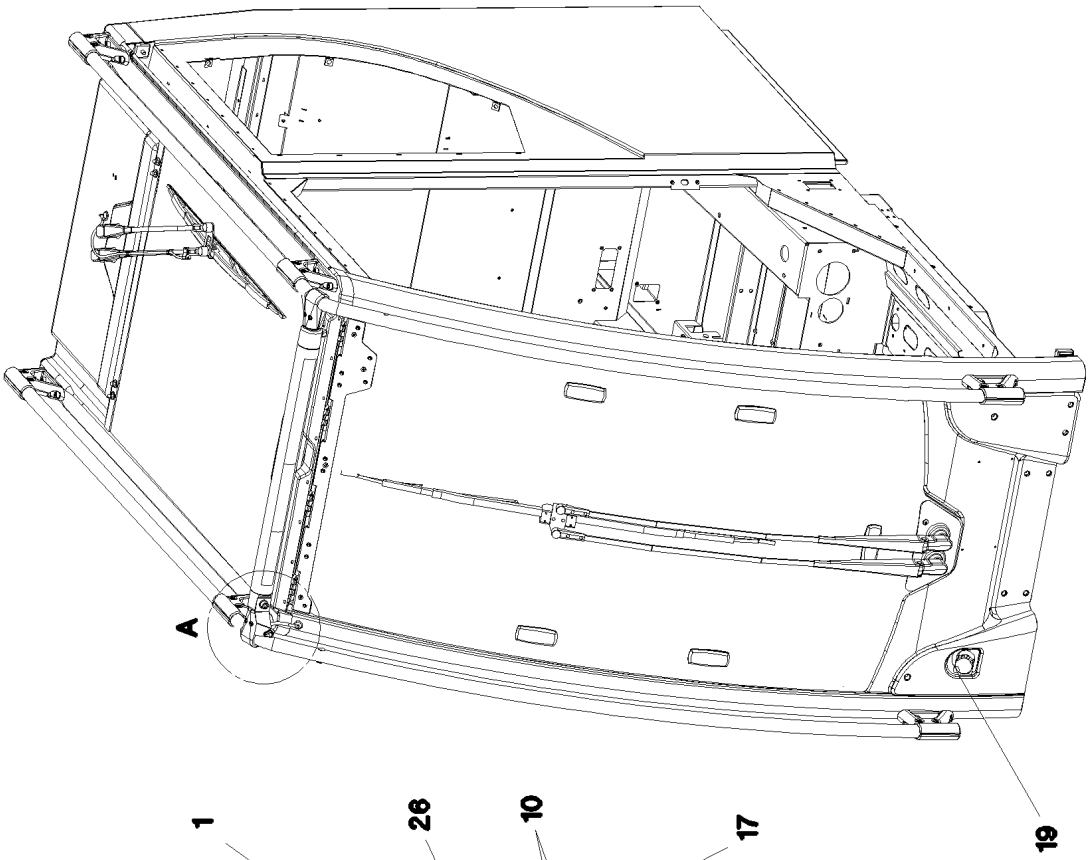
A
19

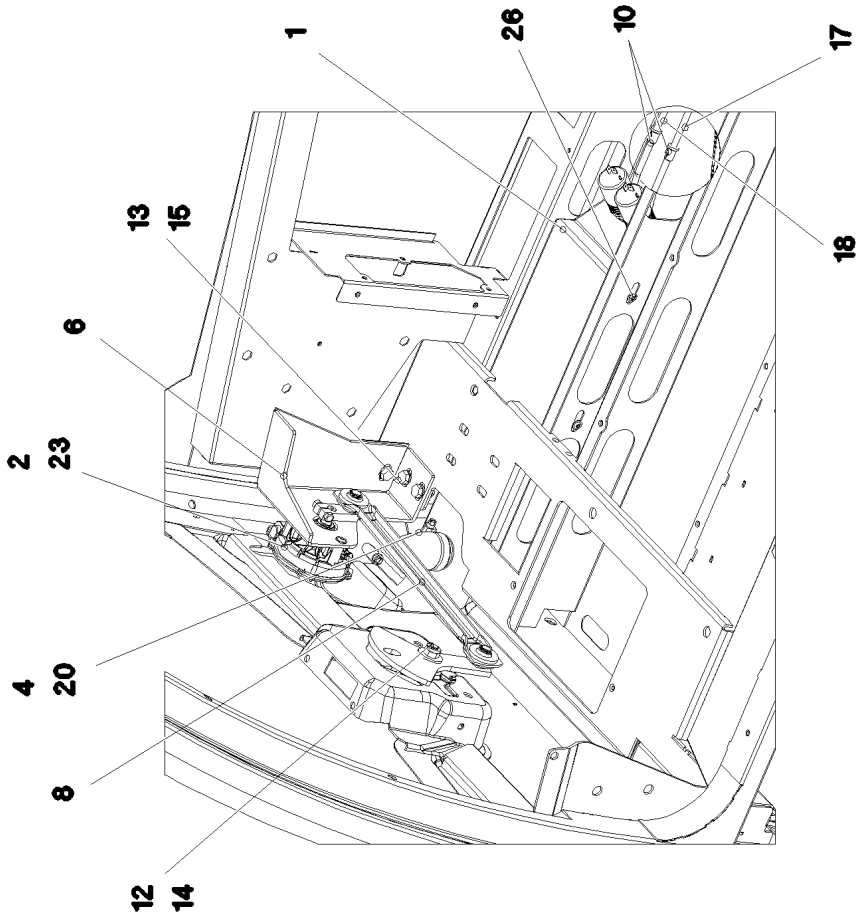
1
26
10
17
18
13
15
6
2
23
4
20
8
12
14

Pos.	Item	Quantity	Description	Bezeichnung
1	966408908	1	WATER CONTAINER CPL ⇨ ❑ 416	WASSERBEHAELTER KPL.
2	10292021	2	WIPER MOTOR 55NM 24V SPF	WISCHERMOTOR
3	10292014	1	WIPER ARM 650MM	WISCHERARM
4	97006624	1	TUBE 49X68X78 EPDM	ROHR
5	10292016	1	WIPER BLADE 700	WISCHERBLATT
6	97000389	1	PLATE 4X347X222 S315MC FE//ZNNI8//CN//T	BLECH
7	10292018	1	WIPER FRAME	WISCHERGESTAENGE
8	10870968	1	WIPER FRAME	WISCHERGESTAENGE
9	97006461	1	PLATE 2X177X240 DC01 FE//ZNNI8//CN//T0	BLECH
10	591055608	2	NON-RETURN VALVE	RUECKSCHLAGVENTIL
12	10197769	1	HEX NUT DIN 985 M10 8 ZNNI-480H SPF	SECHSKANTMUTTER
13	12103465	4	WASHER ISO 7089 8 300HV ZNNI-480H SPF	SCHEIBE
14	421802108	1	WASHER ISO 7093-1 10 A2	SCHEIBE
15	11651767	4	HEX SCREW ISO 4017 M8X20 8.8 480H SPF	SECHSKANTSCHRAUBE
16	10815496	1	NOZZLE SET PA	DUESENSATZ
17	11000710	1.3	WATER HOSE DN4-RAUCLAIR-E PVC TRAN	WASSERSCHLAUCH
18	11000710	2.8	WATER HOSE DN4-RAUCLAIR-E PVC TRAN	WASSERSCHLAUCH
19	10815416	1	FILLER CAP 42 PA	EINFUELLDECKEL
20	10878445	2	HOSE CLAMP 45/30-45/9 W3	SCHLAUCHSCHELLE
22	591051008	2	SWIVEL ELBOW	WINKELSTUTZEN
23	10875468	6	BUTTON HEAD SCREW AEHNL.ISO 7380-2	HALBRUNDKOPFSCHRAUBE
24	11840297	4	HEX SCREW EN 1665 M6X16 8.8 480H SPF	SECHSKANTSCHRAUBE
26	10875483	2	BUTTON HEAD SCREW ISO 7380-2 M5X10 0	HALBRUNDKOPFSCHRAUBE
27	11693875	2	HEX NUT ISO 4032 M8 8 480H SPF	SECHSKANTMUTTER
28	591080608	0.25	HOSE DN3,5-GU23725 GUMMI	SCHLAUCH

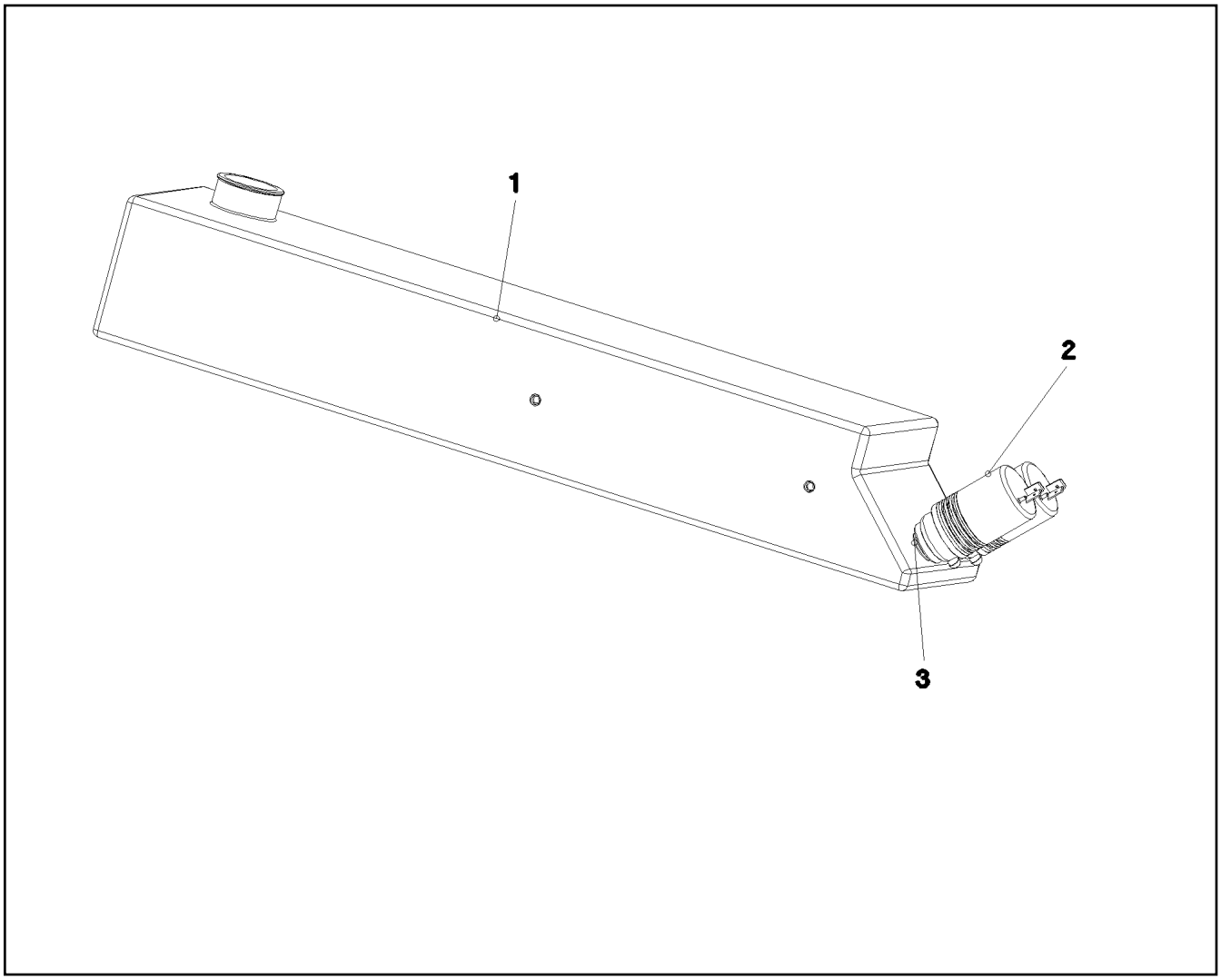

Pos.	Item	Quantity	Description	Bezeichnung
1	97003164	1	WATER BASIN 505X126X100 PE SPF	WASSERBEHAELTER
2	591055408	2	PUMP MP41 SPF	PUMPE
3	591055508	2	SPOUT 6,5/6,5/2 GUMMI	TUELLE

Pos.	Item	Quantity	Description	Bezeichnung
1	916165808	1	CRANE DRIVER'S CABIN PUR.PARTS RAL 7	KRANFUEHRERKABINE KAUFT

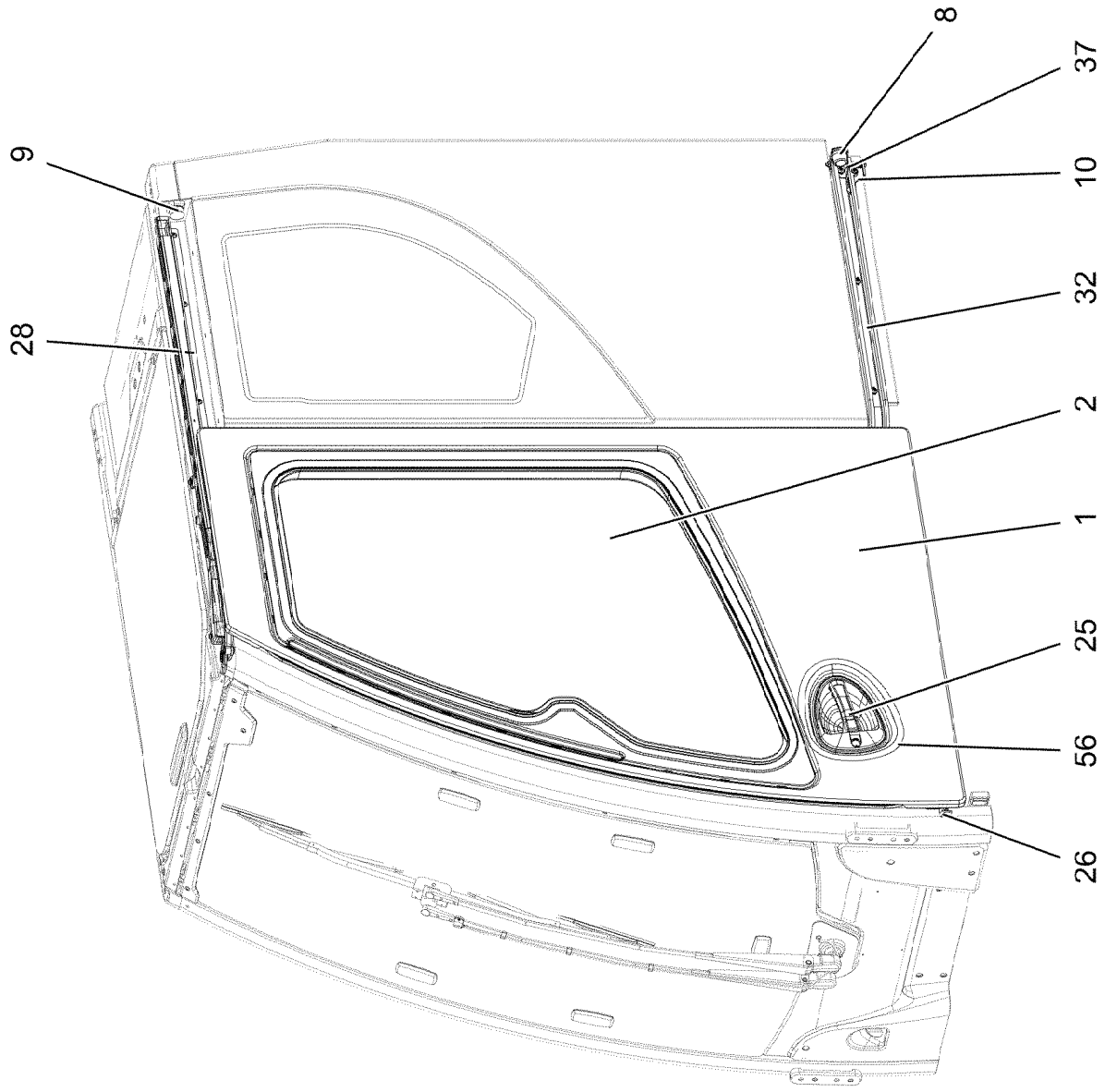
Pos. 47
Pos. 48
Pos. 49
8
37
9
10
32
28
2
1
25
56
26

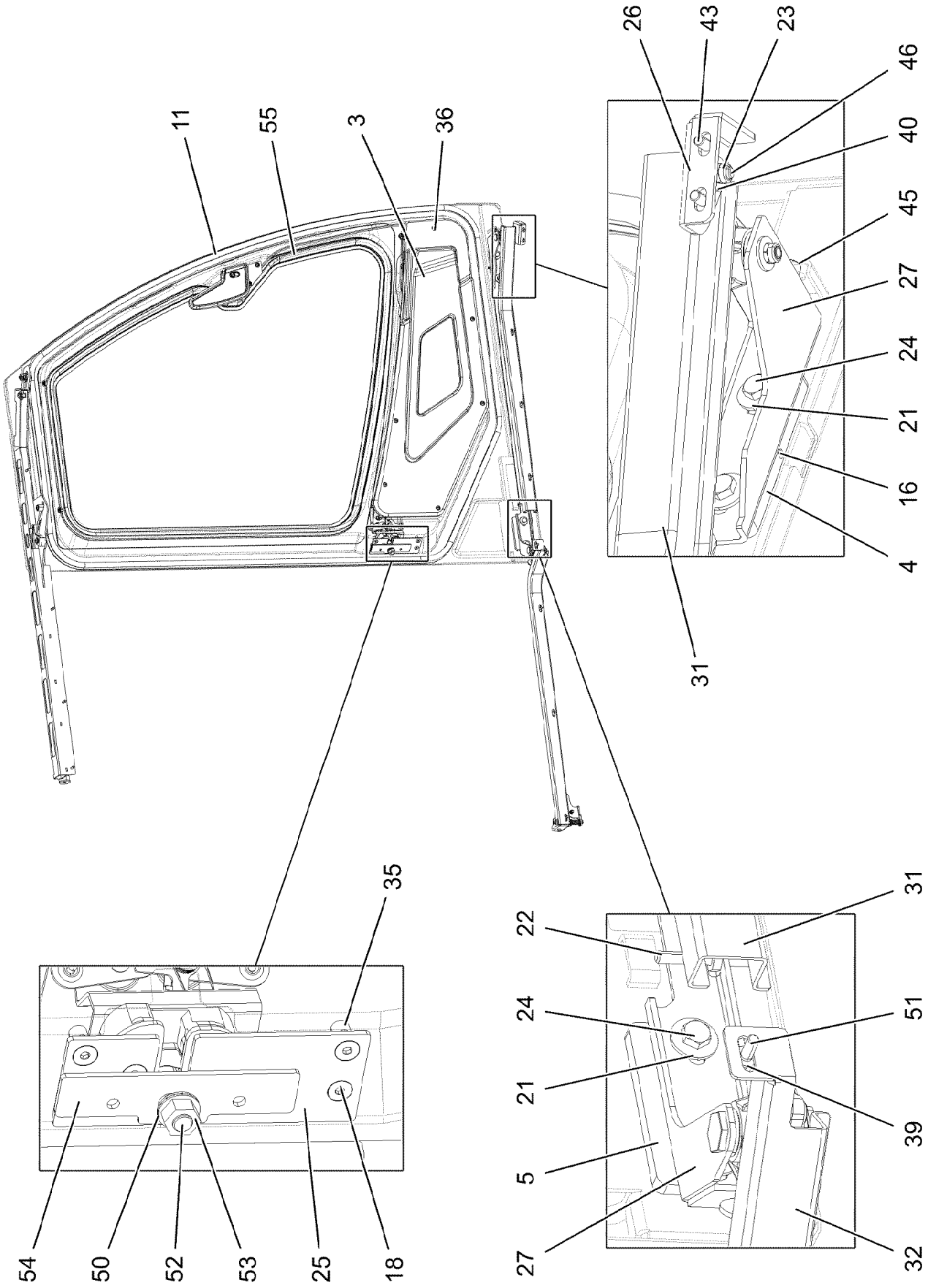
11
55
3
36
26
43
23
46
40
45
27
24
21
16
4
31
35
54
50
52
53
25
18
22
24
21
5
27
31
51
39
32

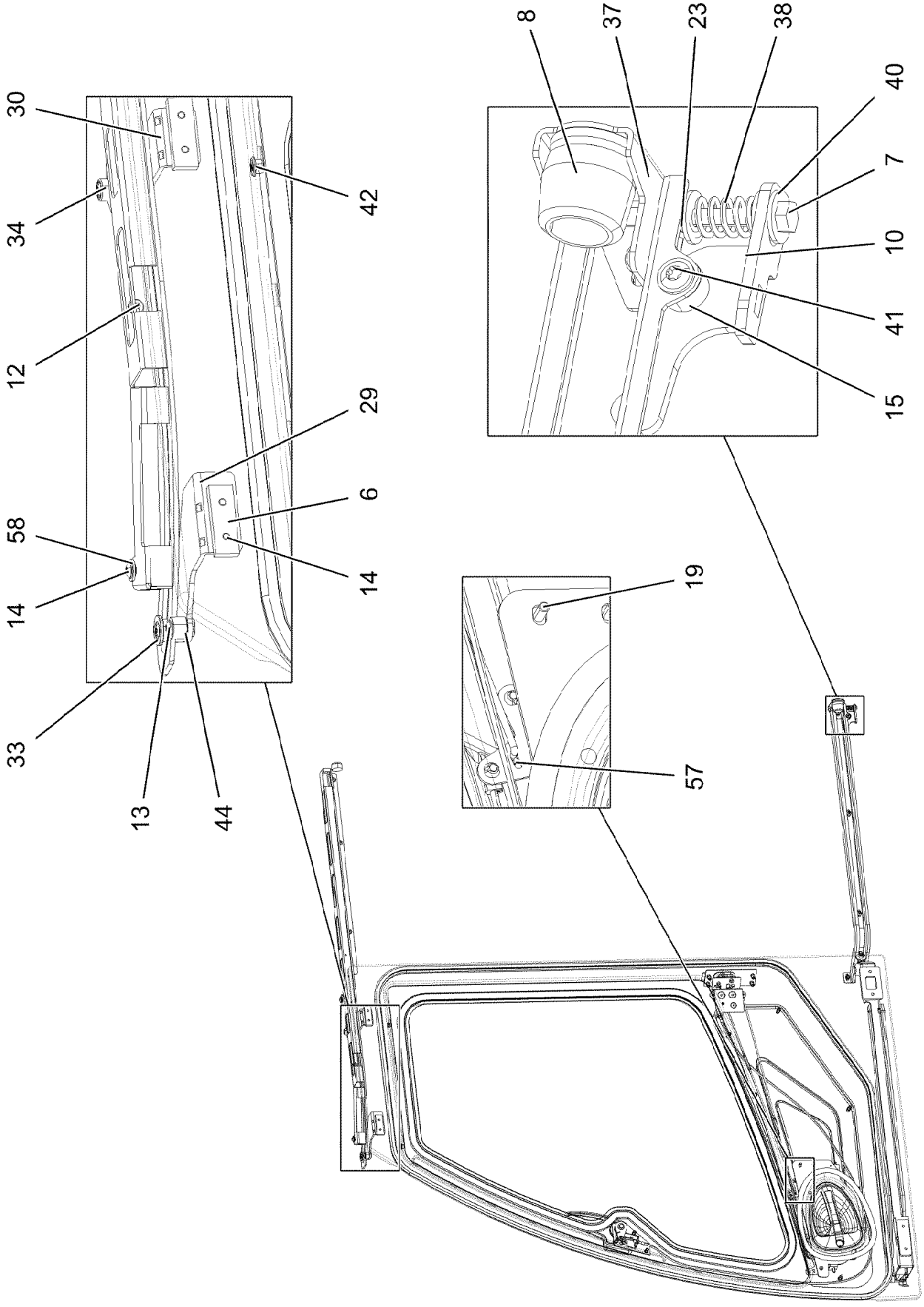
30
34
12
58
14
33
13
44
42
29
6
14
8
37
23
38
40
7
10
41
15
19
57

Pos.	Item	Quantity	Description	Bezeichnung
2	97000274	1	DOOR PANE 4X1161X 950 ESG SPF	TUERSCHEIBE
3	97000275	1	DOOR COVERING 880X390X28 ABS SPF	TUERVERKLEIDUNG
4	97000276	1	THREADED PLATE 8X110X35 S355MC FE//	GEWINDEPLATTE
5	97000277	1	THREADED PLATE 8X98X60 S355MC FE//ZN	GEWINDEPLATTE
6	953695308	2	THREADED PLATE 8.0 X0 S235JR FE//ZNNI8/	GEWINDEPLATTE
7	11007009	1	HEX SCREW ISO 4017 M6X85 A2-70	SECHSKANTSCHRAUBE
8	10472890	1	RUBBER BUFFER 32X32XM6 ELASTOMER	GUMMIPUFFER
9	10030440	1	MEGI BUFFER 30X17 M8 75°SHORE	MEGIPUFFER
10	966825408	1	LOCKING BAR WELDMENT	RIEGEL SCHWK.
11	10300600	4.2	CLAMPING PROFILE 2X13,5X20 EPDM/MOO	KLEMMPROFIL
12	10412851	4	BUTTON HEAD SCREW AEHNL.ISO 7380-2	HALBRUNDKOPFSCHRAUBE
13	11160744	3	BUTTON HEAD SCREW AEHNL.ISO 7380-2	HALBRUNDKOPFSCHRAUBE
14	10475893	10	BUTTON HEAD SCREW AEHNL.ISO 7380-2	HALBRUNDKOPFSCHRAUBE
15	97002990	1	BUSHING 16X12 1.4301	BUCHSE
16	404400508	1	GRUB SCREW DIN 913 M6X25 45H VERZ	GEWINDESTIFT
18	10875551	4	COUNTERSUNK SCREW DIN 7991 M6X16 8	SENKSCHRAUBE
19	10875468	5	BUTTON HEAD SCREW AEHNL.ISO 7380-2	HALBRUNDKOPFSCHRAUBE
21	10540510	4	WASHER ISO 7093-1 8 200HV-A4	SCHEIBE
22	10450694	1	GRUB SCREW M6X50 A2-70	GEWINDESTIFT
23	411903008	4	HEX NUT DIN 985 M6 A2-70	SECHSKANTMUTTER
24	406527808	4	HEX SCREW ISO 4017 M8X16 A2-70	SECHSKANTSCHRAUBE
25	966230408	1	CLOSING DEVICE ⇨ ❑ 422	SCHLIESSANLAGE
26	97000492	1	PLATE 3X75X61 X5CRNI18-10	BLECH
27	966230508	1	GUIDE PRE-ASS. ⇨ ❑ 423	FUEHRUNG VORM.
28	966230608	1	GUIDE WELDED GLASPERLENGESTRAHLT	FUEHRUNG SCHWK.
29	966230708	1	CLAMP WELDED CONST.	HALTER SCHWK.
30	966230808	1	CLAMP WELDED CONST.	HALTER SCHWK.
31	97000516	1	FRONT PROFILE 803X122X44 1.4305	PROFIL VORN
32	97000517	1	REAR PROFILE 820X125X72.6 1.4305	PROFIL HINTEN
33	97001711	1	SLEEVE 25X15 PA 12	HUELSE
34	97001760	1	SLEEVE 18X24 PA12	HUELSE
35	10042593	13	BLIND RIVET NUT M6 K=1,5-3,5 ST CR6-FRE	BLINDNIETMUTTER
36	10875469	7	BUTTON HEAD SCREW ISO 7380-2 M6X30 0	HALBRUNDKOPFSCHRAUBE
37	966363808	1	PLATE WELDED	BLECH SCHWK.
38	11067867	1	COMPRESSION SPRING 2X12X41,73 EN10	DRUCKFEDER
39	420060201	2	WASHER ISO 7089 6 200HV-A2	SCHEIBE
40	10540500	4	WASHER ISO 7093-1 6 200HV-A4	SCHEIBE
41	10412853	1	BUTTON HEAD SCREW AEHNL.ISO 7380-2	HALBRUNDKOPFSCHRAUBE
42	7361205	2	BLANKING PLUG PE-LD	VERSCHLUSSSTOPFEN
43	10813359	7	BUTTON HEAD SCREW AEHNL.ISO 7380-2	HALBRUNDKOPFSCHRAUBE
44	97012184	1	SLEEVE 18X12 PA 12	HUELSE
45	404230308	1	SOCKET HEAD SCREW ISO 4762 M6X40 A2	ZYLINDERSCHRAUBE
46	10001739	1	HEX SCREW ISO 4017 M6X16 A2-70	SECHSKANTSCHRAUBE
47	811205108	1	ADHESIVE CLEANER 250ML	HAFTREINIGER
48	811203308	1	ADHESIVE 600ML FC-BEUTEL	KLEBER
49	811203108	1	TOOLING AGENT KANISTER-5L 5/35°C	ABGLAETTMITTEL
50	7015814	2	WEDGE LOCK WASHER NORD-LOCK 10SP	KEILSICHERUNGSSCHEIBE
51	404250914	1	SOCKET HEAD SCREW ISO 4762 M6X16 A4	ZYLINDERSCHRAUBE
52	97019129	1	CLOSING PIN 1.4305	SCHLIESSBOLZEN
53	10179115	1	HEX NUT ISO 8673 M10X1 8 FLZN SPF	SECHSKANTMUTTER
54	97026779	1	PLATE 3X30X119 X5CRNI18-10	BLECH
55	10876056	3.4	CLAMPING PROFILE 25,7X21,5 EPDM	KLEMMPROFIL
56	97088496	1	ADHESIVE FOIL OUTSIDE HANDLE 240X319	KLEBEFOLIE AUSSENGRIFF
57	704259608	1	RAPID FIXING	SCHNELLBEFESTIGER
58	421801708	2	WASHER ISO 7093-1 6 200HV-A2	SCHEIBE

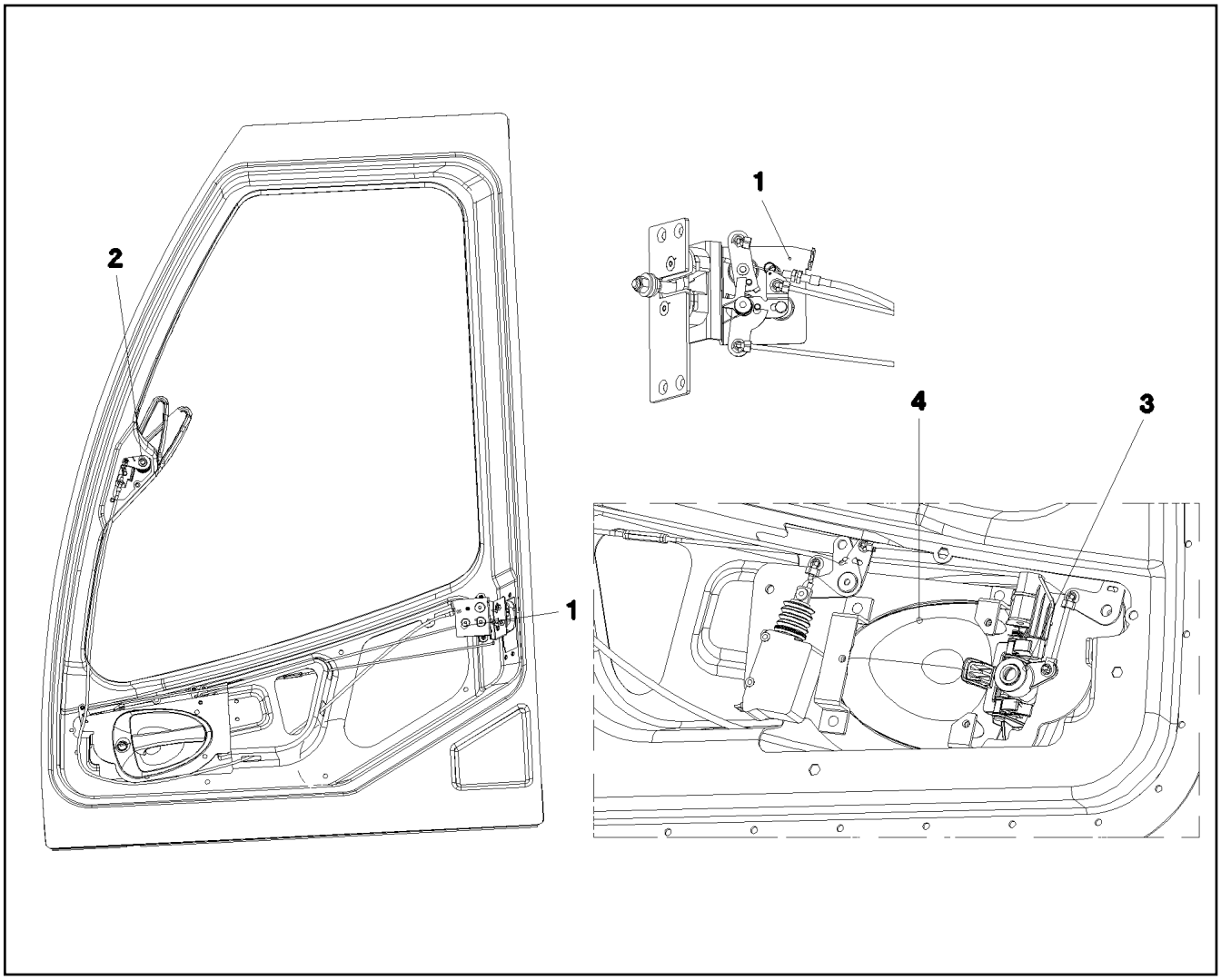

Pos.	Item	Quantity	Description	Bezeichnung
1	11005985	1	LOCK WITH FALLING LATCH LINKS	DREHFALLENSCHLOSS
2	11005984	1	INSIDE HANDLE ZUG	INNENGRIFF
3	11005983	1	HANDLEADAPTER	GRIFFADAPTION
4	11005987	1	OUTSIDE HANDLE ZUG	AUSSENGRIFF

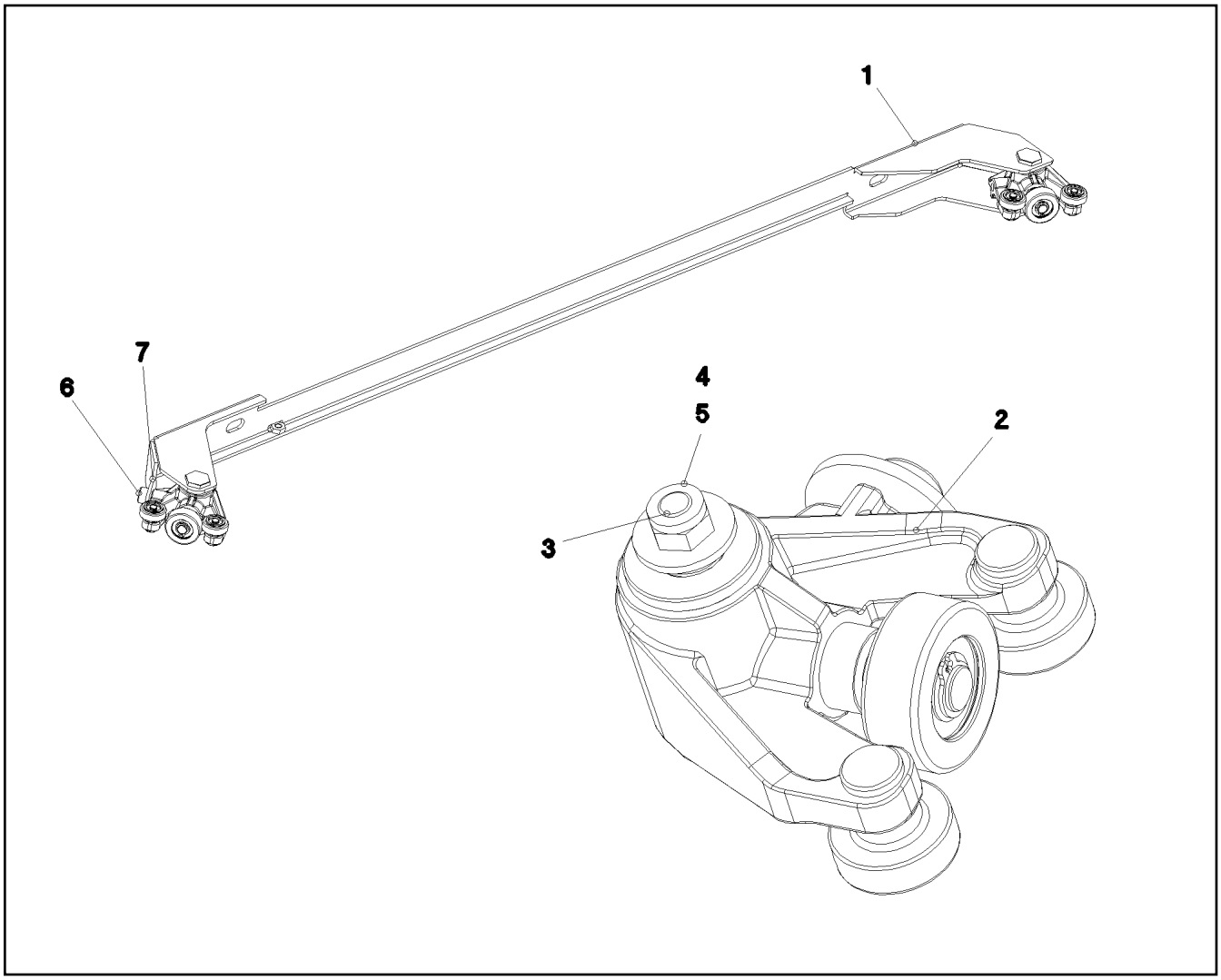

Pos.	Item	Quantity	Description	Bezeichnung
1	966253708	1	HOLDER	HALTER
2	966253908	2	WAGON ⇨ ❑ 424	WAGEN
3	97001095	2	PIN 22X57 1.4305	BOLZEN
4	421801708	2	WASHER ISO 7093-1 6 200HV-A2	SCHEIBE
5	411903008	2	HEX NUT DIN 985 M6 A2-70	SECHSKANTMUTTER
6	10875593	1	SOCKET HEAD SCREW ISO 4762 M8X10 8.8	ZYLINDERSCHRAUBE
7	421802108	1	WASHER ISO 7093-1 10 A2	SCHEIBE

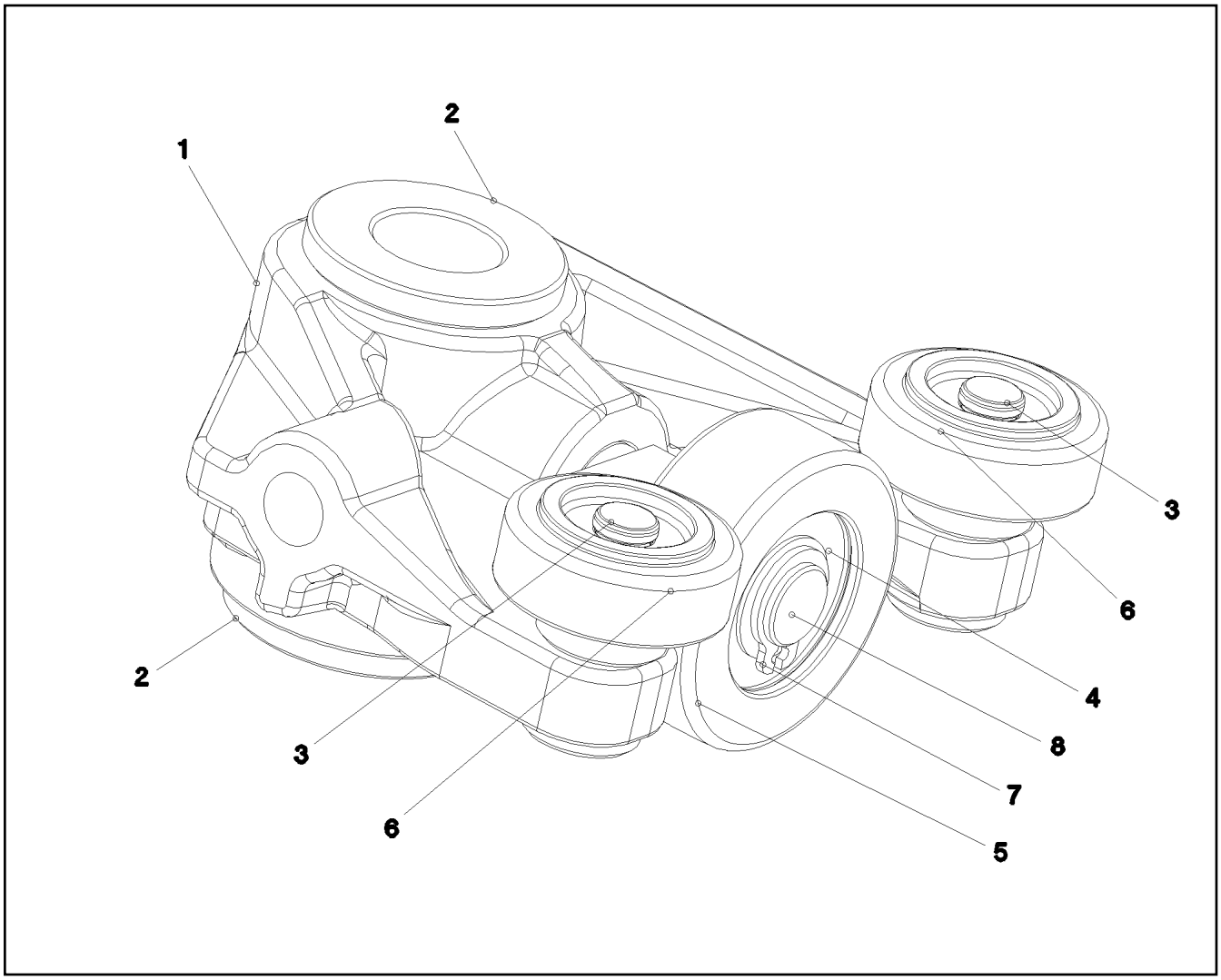

Pos.	Item	Quantity	Description	Bezeichnung
1	97001102	1	WAGON 68X64.5X33 G-ALSI7MG WA	WAGEN
2	10424489	2	FLANGE SLEEVE 18X12X12 SINT A50	BUNDLAGER
3	97001103	2	PIN 22X11 1.4301	BOLZEN
4	745129501	1	DEEP GROOVE BALL BEARING DIN 625 S6	RILLENKUGELLAGER
5	97008171	1	ROLLER 30X11 PA 12	ROLLE
6	97001109	2	ROLLER 22X13 PA 12	ROLLE
7	10450160	1	LOCKING RING DIN 471 8X0,8 EDELSTAHL	SICHERUNGSRING
8	97007043	1	PIN 39X18 1.4301	BOLZEN

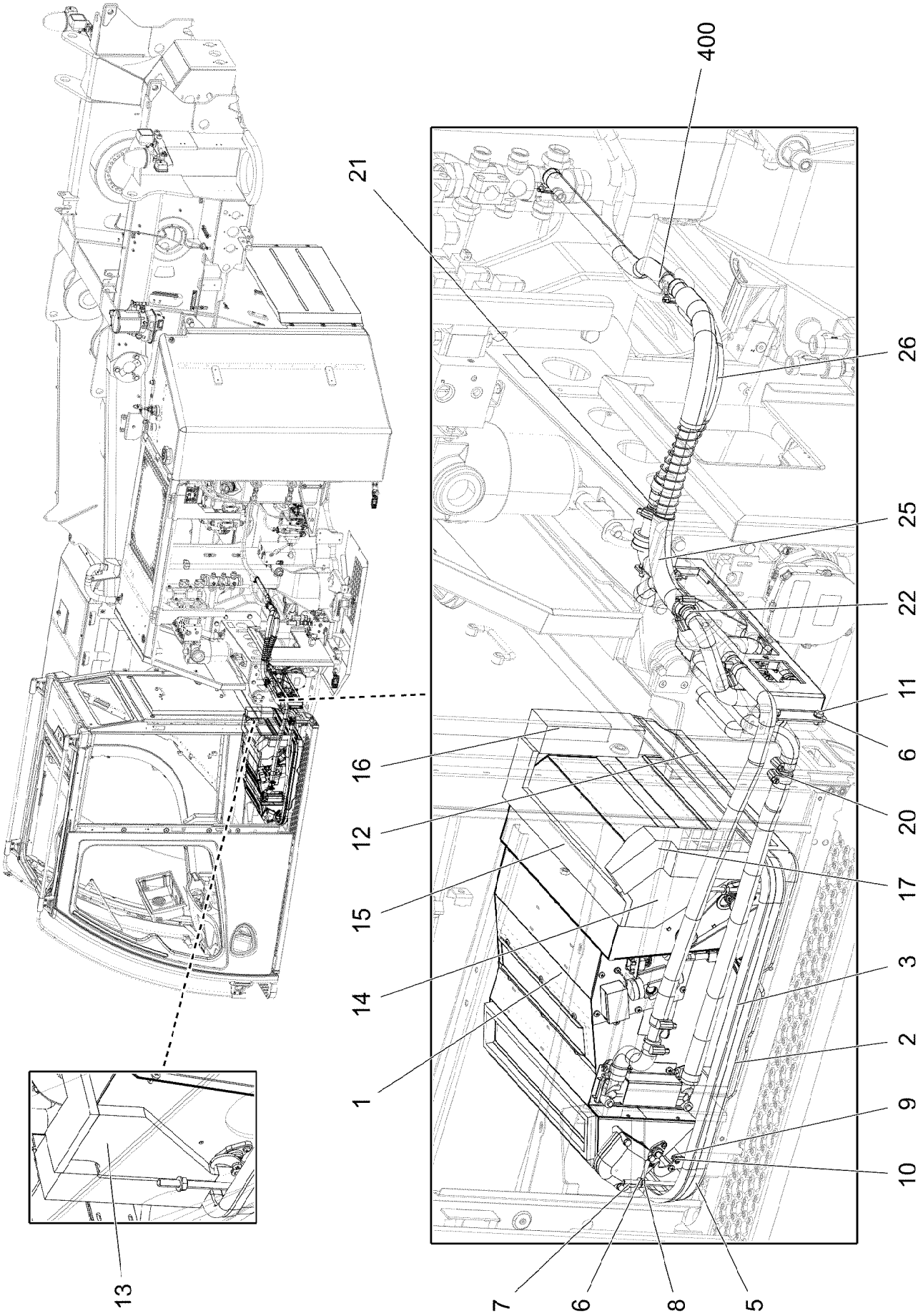

18.7.2022 083531	**etk_en_de_047654 LTR 1220**	425 (1/2)
LIEBHERR	**HEATING CRANE DRIVER'S CABIN** **HEIZUNG KRANFUEHRERKABINE**	**917676208**

Pos.	Item	Quantity	Description	Bezeichnung
1	11083498	1	AIR CONDITIONING UNIT ⇨ ❑ 427	HEIZKLIMAGERAET
2	97007030	1	COVER 635X575X95 ABS	DECKEL
3	11002218	2.22	CLAMPING PROFILE 1,5-4X25X13 EPDM	KLEMMPROFIL
5	10875614	4	HEX NUT DIN 985 M8 8 480H SPF	SECHSKANTMUTTER
6	12103465	12	WASHER ISO 7089 8 300HV ZNNI-480H SPF	SCHEIBE
7	10332987	4	THREADED PIN DIN 976 M8X140 4.6 A2K	GEWINDEBOLZEN
8	11693875	4	HEX NUT ISO 4032 M8 8 480H SPF	SECHSKANTMUTTER
9	511001708	2	HEX NUT ISO 4035 M5 04	SECHSKANTMUTTER
10	11690042	2	SOCKET HEAD SCREW ISO 4762 M5X12 8.8	ZYLINDERSCHRAUBE
11	11651612	4	HEX SCREW ISO 4017 M8X16 8.8 480H SPF	SECHSKANTSCHRAUBE
12	97038833	1	INSULATING MAT 40X422X93 E30F/MH/D78	DAEMMMATTE
13	97038834	1	INSULATING MAT 13X115X179 ZP30S	DAEMMMATTE
14	97038835	1	INSULATING MAT 20X115X199 ZP30S	DAEMMMATTE
15	97038836	1	INSULATING MAT 10X455X110 E30F/MH/D78	DAEMMMATTE
16	97038837	1	INSULATING MAT 50X60X182 E30F/MH/D78	DAEMMMATTE
17	97038838	1	INSULATING MAT 50X78X235 E30F/MH/D78	DAEMMMATTE
20	969085208	1	HEATING, PRE-ASSEMBLED ⇨ ❑ 429	HEIZUNG VORM.
21	11000700	2	CONNECTING PIPE 0	VERBINDUNGSROHR
22	11118077	2	HOSE CLAMP 21/16-27/12 W3	SCHLAUCHSCHELLE
25	10870633	0.75	HOSE GUARD SPIRAL DN30,5 ST VERZ	SCHLAUCHSCHUTZSPIRALE
26	10870633	0.5	HOSE GUARD SPIRAL DN30,5 ST VERZ	SCHLAUCHSCHUTZSPIRALE
400	96050638	1	HOSE LINE	SCHLAUCHLEITUNG
(2823)	96024886	1	HOSE CPL. CONTI KWS 20X750	SCHLAUCH KPL.
(2824)	96020259	1	HOSE CPL. CONTI KWS 20X1100	SCHLAUCH KPL.

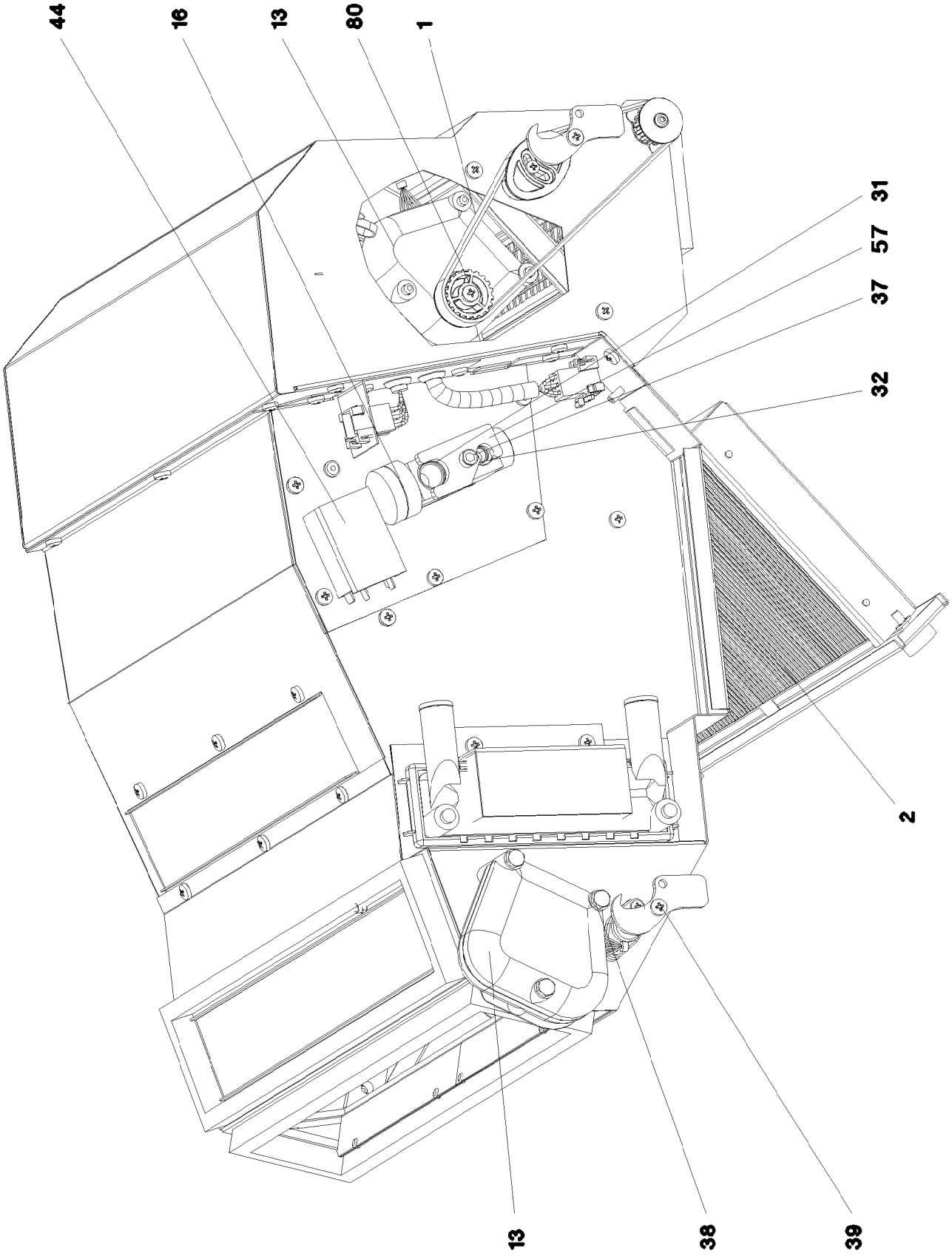

18.7.2022 079608 LIEBHERR	**etk_en_de_047654 LTR 1220** **AIR CONDITIONING UNIT** **HEIZKLIMAGERAET**	❑ 427 (1/2) **11083498**

Pos.	Item	Quantity	Description	Bezeichnung
1	11083453	1	TOOTHED BELT	ZAHNRIEMEN
2	11083438	1	FILTER	FILTER
7	11083215	1	PLATE STAHLBLECH	BLECH
13	10287301	2	SERVOMOTOR 0,0024KW24V SPF	STELLMOTOR
14	10801858	1	HEAT EXCHANGER ALU	WAERMETAUSCHER
15	10874825	1	EVAPORATOR	VERDAMPFER
16	7622478	1	VALVE	VENTIL
31	515710608	1	O-RING ARP 568 14X1,78 NBR90	O-RING
32	510760408	1	O-RING ARP 568 10,82X1,78 NBR90	O-RING
37	12203070	2	SOCKET HEAD SCREW ISO 4762 M5X40 8.8	ZYLINDERSCHRAUBE
38	12203634	3	SOCKET HEAD SCREW ISO 4762 M6X50 8.8	ZYLINDERSCHRAUBE
39	12219804	4	PAN-HEAD SCREW ISO 7045 M4X10 4.8 480	FLACHKOPFSCHRAUBE
44	571867708	1	THERMOSTAT	THERMOSTAT
45	11083445	1	RADIAL FAN	RADIALGEBLAESE
50	261101108	0.3	SEALING TAPE	DICHTBAND
57	10009700	1	CONTROL PANEL SUPPORT	ARMATURENHALTER
80	10872521	1	GEAR WHEEL	ZAHNRAD

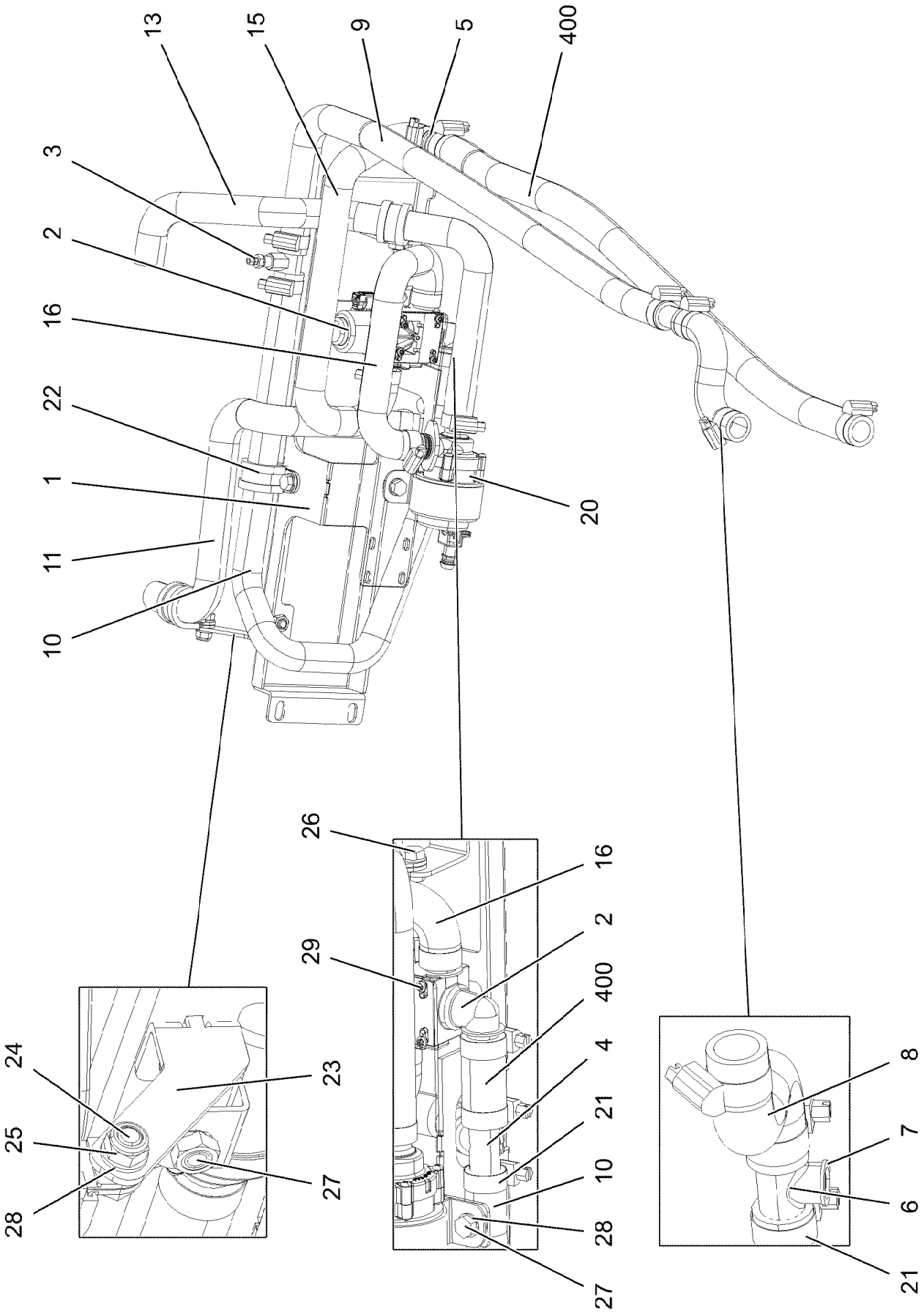

18.7.2022 083533	**etk_en_de_047654 LTR 1220**	429 (1/2)
LIEBHERR	**HEATING, PRE-ASSEMBLED** **HEIZUNG VORM.**	**969085208**

Pos.	Item	Quantity	Description	Bezeichnung
1	969101808	1	BRACKET WELDED CONST. RAL 7016,SDGL	KONSOLE SCHWK.
2	10343003	1	SOLENOID VALVE	MAGNETVENTIL
3	11622218	1	VENTILATION VALVE	ENTLUEFTUNGSVENTIL
4	10872612	1	TEE 20X20 L=90	T-STUECK
5	11000700	1	CONNECTING PIPE 0	VERBINDUNGSROHR
6	97042155	1	PIPE SOCKET GSCK45	ROHRSTUTZEN
7	710103008	1	SEALING RING DIN 7603 A14X20X1,5 CU	DICHTRING
8	97042069	1	FORM HOSE DN20 X3.5 B SPF	FORMSCHLAUCH
9	97042071	1	FORM HOSE DN20 X3.5 B SPF	FORMSCHLAUCH
10	97046324	1	FORM HOSE DN20 X3.5 B SPF	FORMSCHLAUCH
11	97050857	1	FORM HOSE DN20 X3.5 B SPF	FORMSCHLAUCH
13	97046326	1	FORM HOSE DN20 X3.5 B SPF	FORMSCHLAUCH
15	97046327	1	FORM HOSE DN20 X3.5 B SPF	FORMSCHLAUCH
16	97046328	1	FORM HOSE DN20 X3.5 B SPF	FORMSCHLAUCH
20	11622224	1	CIRCULATING PUMP	UMWAELZPUMPE
21	11118077	12	HOSE CLAMP 21/16-27/12 W3	SCHLAUCHSCHELLE
22	11481080	3	CLAMP DIN 3016-1 28X20XD1 W5-CR	SCHELLE
23	97033348	1	PLATE 3X63X94 DC01 FE//ZNNI8//CN//T0	BLECH
24	11651767	1	HEX SCREW ISO 4017 M8X20 8.8 480H SPF	SECHSKANTSCHRAUBE
25	10875614	1	HEX NUT DIN 985 M8 8 480H SPF	SECHSKANTMUTTER
26	11651612	3	HEX SCREW ISO 4017 M8X16 8.8 480H SPF	SECHSKANTSCHRAUBE
27	11690048	2	HEX SCREW ISO 4017 M8X12 8.8 480H SPF	SECHSKANTSCHRAUBE
28	12103465	7	WASHER ISO 7089 8 300HV ZNNI-480H SPF	SCHEIBE
29	10875795	4	TALLOW-DROP SCREW 4X10 10.9 P3E	LINSENKOPFSCHRAUBE
400	96069293	1	HOSE LINES	SCHLAUCHLEITUNGEN
(2800)	96068483	1	HOSE CPL. CONTI-KWS 20X700	SCHLAUCH KPL.
(2802)	96032574	1	HOSE CPL. CONTI KWS 20X60	SCHLAUCH KPL.

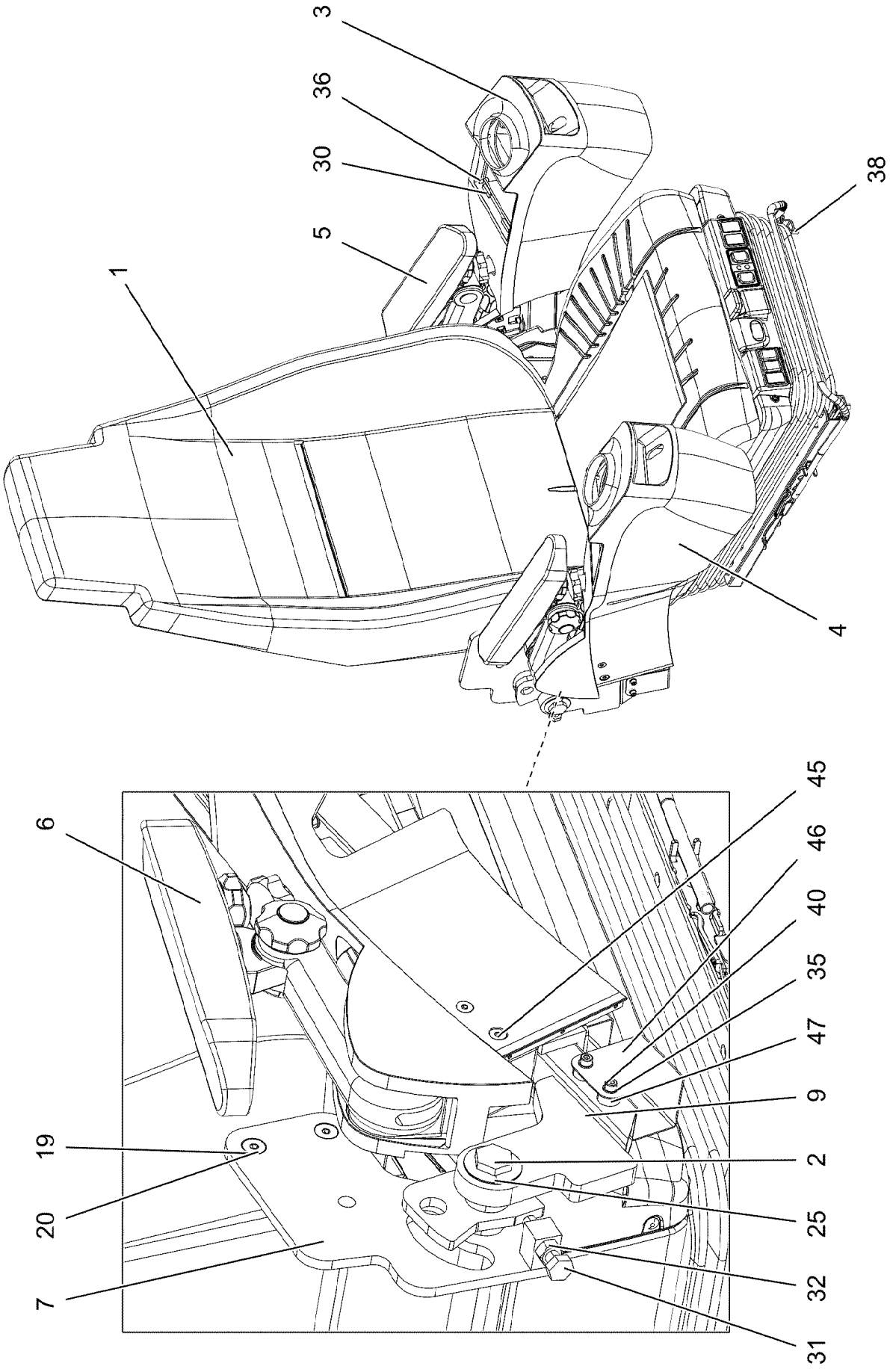
3
36
30
5
1
38
4
6
45
46
40
35
47
9
19
2
20
25
7
32
31

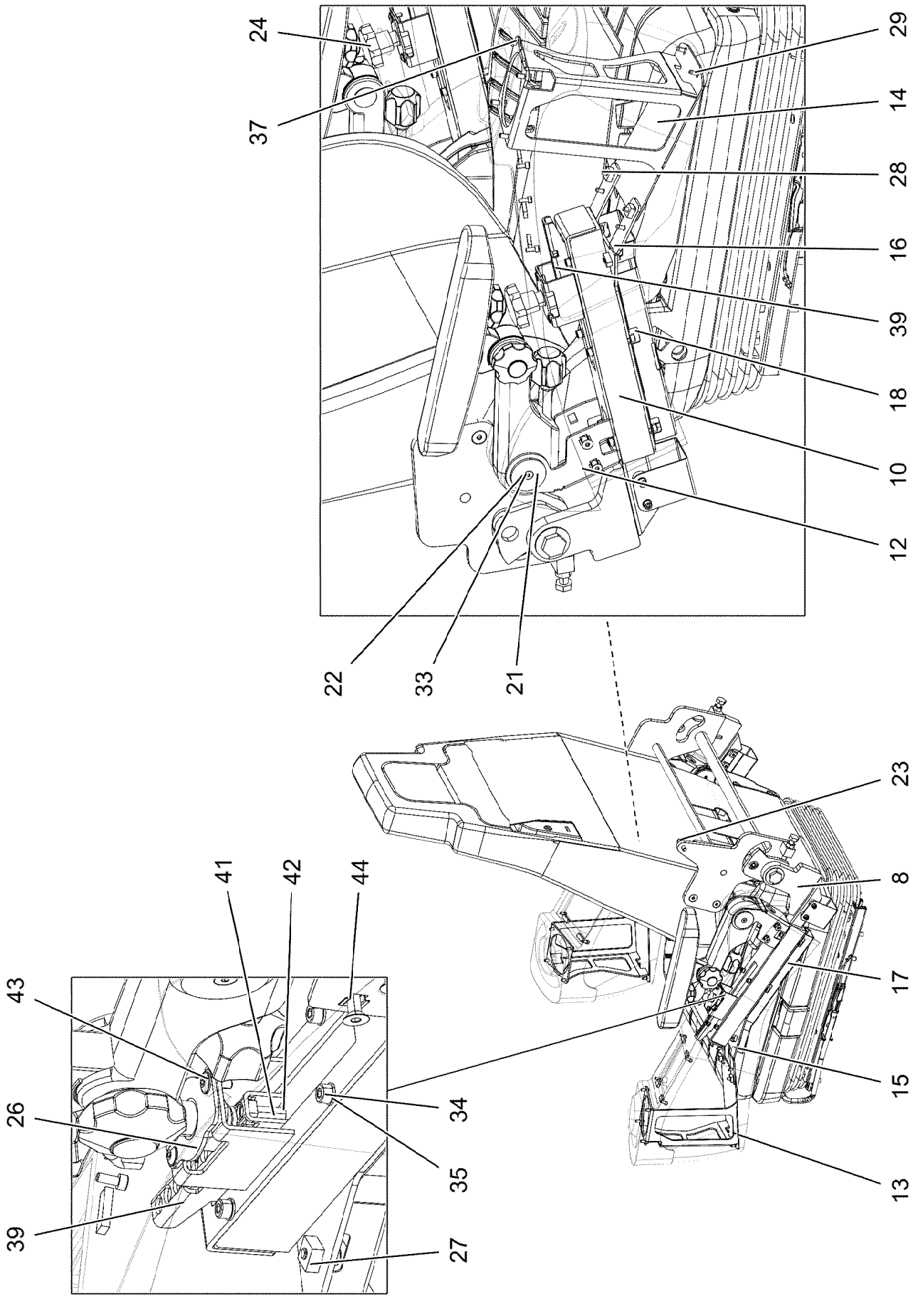
24
37
29
14
28
16
39
18
10
12
22
33
21
23
8
17
15
13
41
42
44
43
26
39
34
35
27

Pos.	Item	Quantity	Description	Bezeichnung
1	10877138	1	OPERATOR SEAT 1030/880NTS ⇨ ❑ 434	FAHRERSITZ
2	97096918	2	THREADED PIN 20X53X78 C45 FE//ZNNI8//C	GEWINDEBOLZEN
3	967588308	1	BRACKET LEFT SPF	KONSOLE LINKS
4	967588408	1	BRACKET RIGHT SPF	KONSOLE RECHTS
5	96032222	1	REWORK ARMREST LEFT ⇨ ❑ 436	NACHARBEIT ARMLEHNE LI.
6	96032223	1	REWORK ARMREST RIGHT ⇨ ❑ 438	NACHARBEIT ARMLEHNE RE.
7	96021362	1	BRACKET WELDED CONST. FE//ZNNI8//CN/	KONSOLE SCHWK.
8	96021363	1	BRACKET,LEFT WELDED FE//ZNNI8//CN//T0	KONSOLE SCHWK.LI.
9	96021365	1	BRACKET,RIGHT WELDED FE//ZNNI8//CN//T	KONSOLE SCHWK.RE.
10	977430408	2	GUIDE 306X48X37 ENAW6060-T66	FUEHRUNG
12	964843708	2	BRACKET WELDED CONST. RAL 9005 SPF	KONSOLE SCHWK.
13	964843808	1	BRACKET,LEFT WELDED RAL 9005 SPF	KONSOLE SCHWK.LI.
14	964843908	1	BRACKET,RIGHT WELDED RAL 9005 SPF	KONSOLE SCHWK.RE.
15	977444008	1	PLATE 3X366X104 DC01 RAL 9005 SPF	BLECH
16	977444108	1	PLATE 3X366X104 DC01 RAL 9005 SPF	BLECH
17	977444308	1	PLATE 1X285X126 DC01 RAL 9005 SPF	BLECH
18	977444408	1	PLATE 1X285X126 DC01 RAL 9005 SPF	BLECH
19	971805708	4	TUBE 15.0 X24 S355J2C+C FE//ZNNI8//CN//T	ROHR
20	12102051	4	THREAD FORM SCREW DIN 7500 M8X45 A2	GEWINDEFORMSCHRAUBE
21	971974108	4	PLATE 3X40X40 DC01 FE//ZNNI8//CN//T0	BLECH
22	971974208	2	PLATE 3X26X26 DC01 FE//ZNNI8//CN//T0	BLECH
23	591067008	1	GAS SPRING 19X60-550N	GASFEDER
24	10443625	2	STAR HANDLE SCREW	STERNGRIFFSCHRAUBE
25	720801908	4	DISC SPRING DIN 2093 40X20,4X1	TELLERFEDER
26	964984108	2	SHIM FE//ZNNI8//CN//T0	AUSGLEICHSBLECH
27	10455281	6	CAGE NUT M5 ST	KAEFIGMUTTER
28	10875474	6	BUTTON HEAD SCREW ISO 7380-2 M5X16 0	HALBRUNDKOPFSCHRAUBE
29	10019040	8	TALLOW-DROP SCREW K4X12 ST A3K	LINSENKOPFSCHRAUBE
30	262103108	0.064	SPONGE RUBBER 20X4 MOOSGUMMI	MOOSGUMMI
31	11642355	2	HEX SCREW ISO 4017 M10X50 8.8 FLZN SP	SECHSKANTSCHRAUBE
32	12102695	2	HEX NUT ISO 4032 M10 8 ZNNI-480H SPF	SECHSKANTMUTTER
33	408603508	4	COUNTERSUNK SCREW DIN 7991 M5,0X10,	SENKSCHRAUBE
34	11690042	24	SOCKET HEAD SCREW ISO 4762 M5X12 8.8	ZYLINDERSCHRAUBE
35	10197808	28	WASHER ISO 7089 5 200HV ZNNI-480H	SCHEIBE
36	11691539	8	SOCKET HEAD SCREW ISO 4762 M4X10 8.8	ZYLINDERSCHRAUBE
37	11140402	8	HEX SCREW ISO 4017 M5X12 8.8 480H SPF	SECHSKANTSCHRAUBE
38	10875559	6	SOCKET HEAD SCREW DIN 6912 M8X16 08	ZYLINDERSCHRAUBE
39	967257808	2	PLATE WELDED FE//ZNNI8//CN//T0	BLECH SCHWK.
40	12216217	4	SOCKET HEAD SCREW ISO 4762 M5X50 8.8	ZYLINDERSCHRAUBE
41	12225935	4	SOCKET HEAD SCREW ISO 4762 M6X22 10	ZYLINDERSCHRAUBE
42	10197771	4	WASHER ISO 7089 6 200HV ZNNI-480H SPF	SCHEIBE
43	11835043	2	BUTTON HEAD SCREW ISO 7380-2 M4X12 0	HALBRUNDKOPFSCHRAUBE
44	413002708	4	CAGE NUT M6	KAEFIGMUTTER
45	12100589	4	COUNTERSUNK SCREW AEHNL.ISO 10642	SENKSCHRAUBE
46	965021508	2	COVER PLATE PRE-ASS.	ABDECKBLECH VORM.
47	97002990	4	BUSHING 16X12 1.4301	BUCHSE

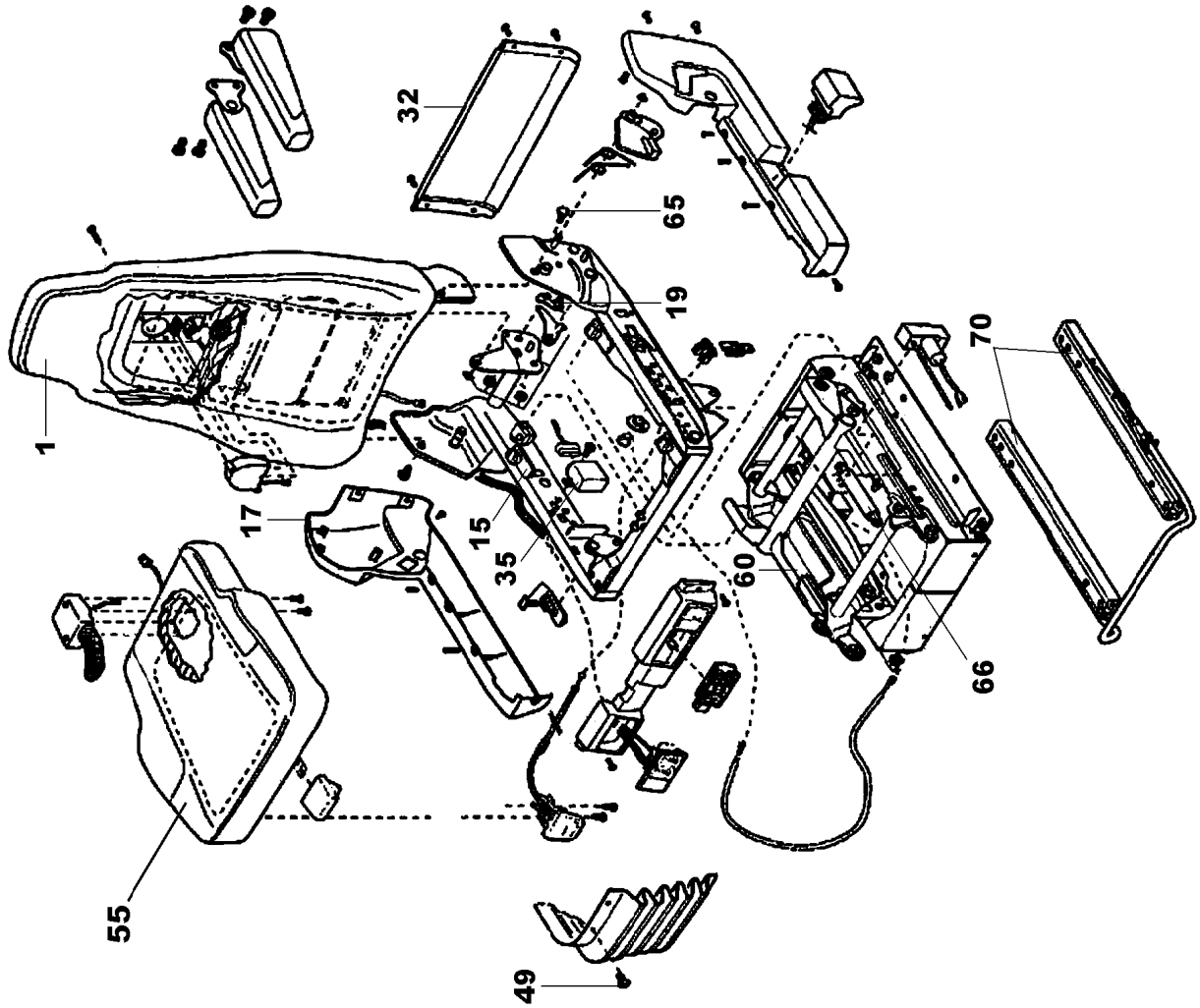
32
65
19
70
1
17
15
35
60
66
55
49

Pos.	Item	Quantity	Description	Bezeichnung
1	10663466	1	BACK PART	RUECKENTEIL
(1)	12100617	1	COVERING	BEZUG
(11)	10650386	1	FAN	LUEFTER
(13)	10650387	1	HEATING ELEMENT	HEIZELEMENT
15	10455144	1	SLIDE BLOCK CPL.	GLEITKLOTZ KPL.
17	11005170	1	COVER	ABDECKUNG
19	10492347	1	LOCKING PIECE	RASTE
24	11979975	1	SWITCH	SCHALTER
28	12102116	1	FIXED BOOM RAISING DEVICE	HOEHENVERSTELLUNG
29	11979976	1	VALVE	VENTIL
32	11171270	1	COVER	ABDECKUNG
33	11171271	1	PUSH BUTTON	DRUCKTASTER
35	10650399	1	ELECTRONICS UNIT	ELEKTRONIKEINHEIT
49	10650403	1	MOUNTING PARTS	BEFESTIGUNGSMATERIAL
55	12100570	1	SEAT CPL.	SITZTEIL KPL.
(1)	12100619	1	COVERING	BEZUG
(2)	12103434	1	GRIP	GRIFF
(59)	12100177	1	FAN	LUEFTER
60	11171274	1	SUBSTRUCTURE	UNTERBAU
65	11171275	1	MOUNTING PARTS	BEFESTIGUNGSMATERIAL
66	10650488	1	ABSORBER	DAEMPFER
70	10650489	1	RAIL PAIR	SCHIENENPAAR
(71)	11171276	1	BRACKET	BUEGEL
85	10650490	1	AIR COMPRESSOR	LUFTPRESSER

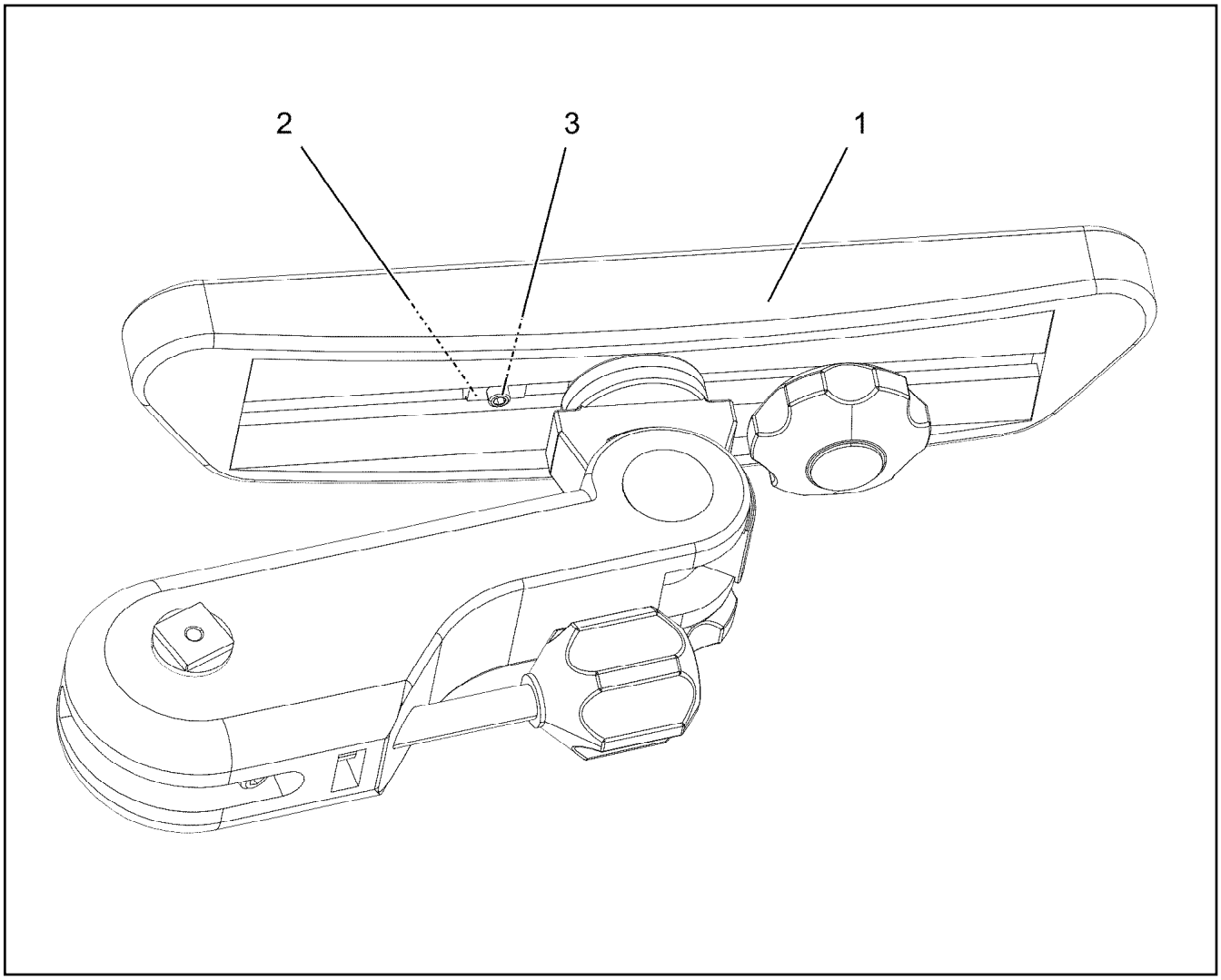

Pos.	Item	Quantity	Description	Bezeichnung
1	962282208	1	ARM REST LEFT ⇨ ❑ 437	ARMLEHNE LINKS
2	10878951	1	NUT M6X8	MUTTER
3	12100613	1	GRUB SCREW ISO 4026 M6X10 45H 480H SP	GEWINDESTIFT

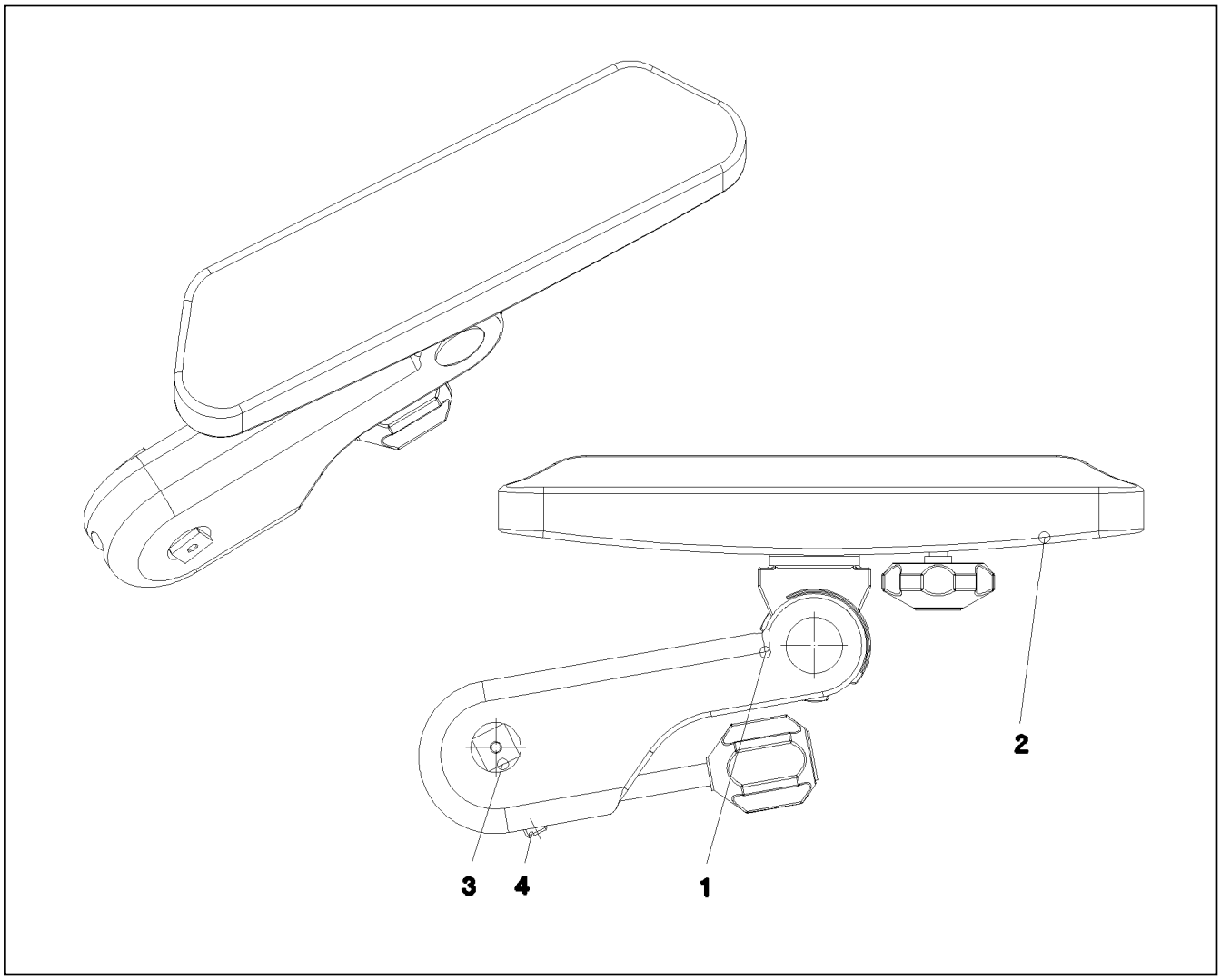

Pos.	Item	Quantity	Description	Bezeichnung
1	774119708	1	ARM REST 310ERGO	ARMLEHNE
2	971636608	1	ARM REST SUPPORT	ARMLEHNENAUFLAGE
3	971973608	1	PIN 25.0X52 S355J2G3C+C FE//ZNNI8//CN//T	BOLZEN
4	10179470	1	GRUB SCREW ISO 4026 M10X40 45H FLZN	GEWINDESTIFT

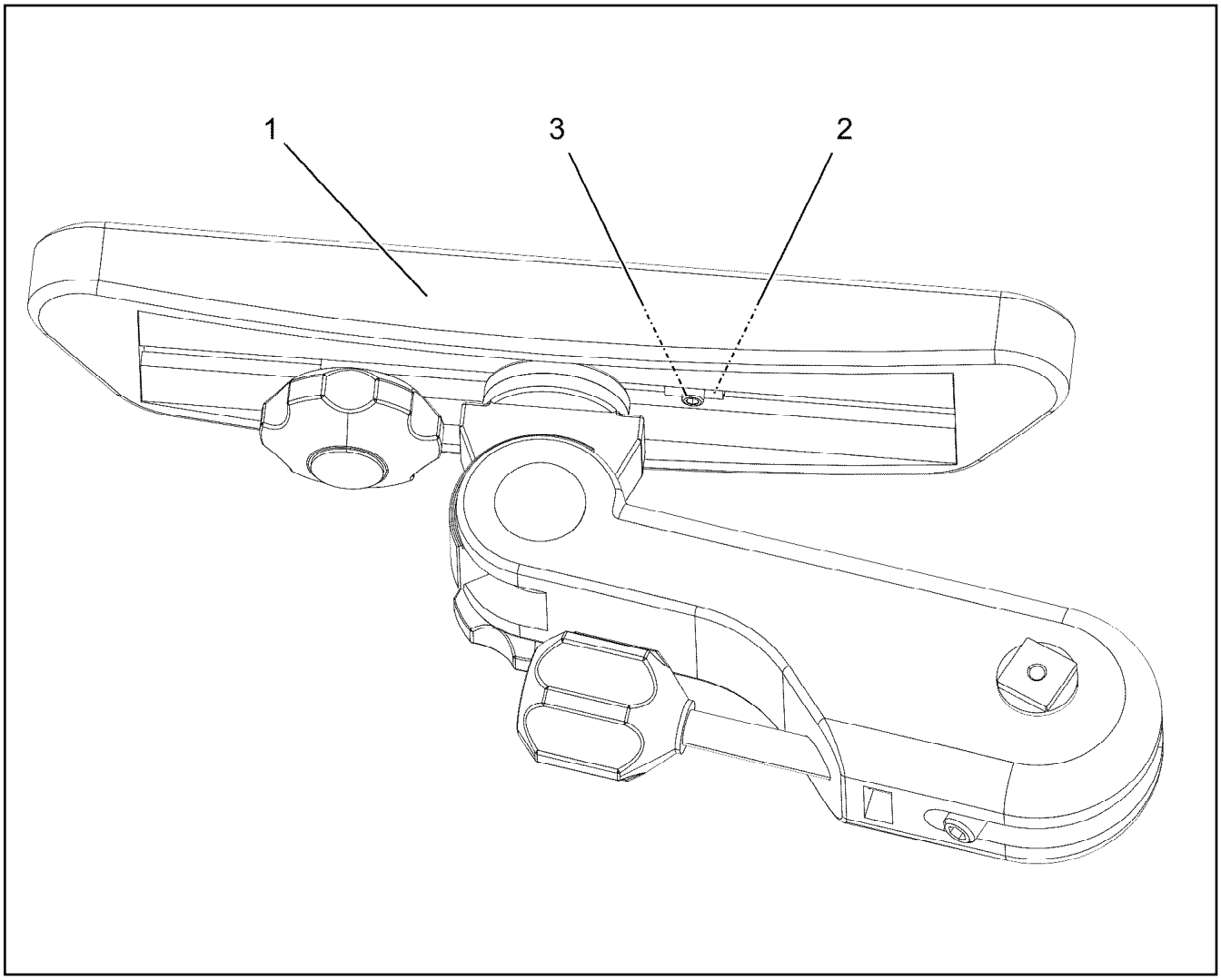

Pos.	Item	Quantity	Description	Bezeichnung
1	962282308	1	ARM REST RIGHT ⇨ ❑ 439	ARMLEHNE RECHTS
2	10878951	1	NUT M6X8	MUTTER
3	12100613	1	GRUB SCREW ISO 4026 M6X10 45H 480H SP	GEWINDESTIFT

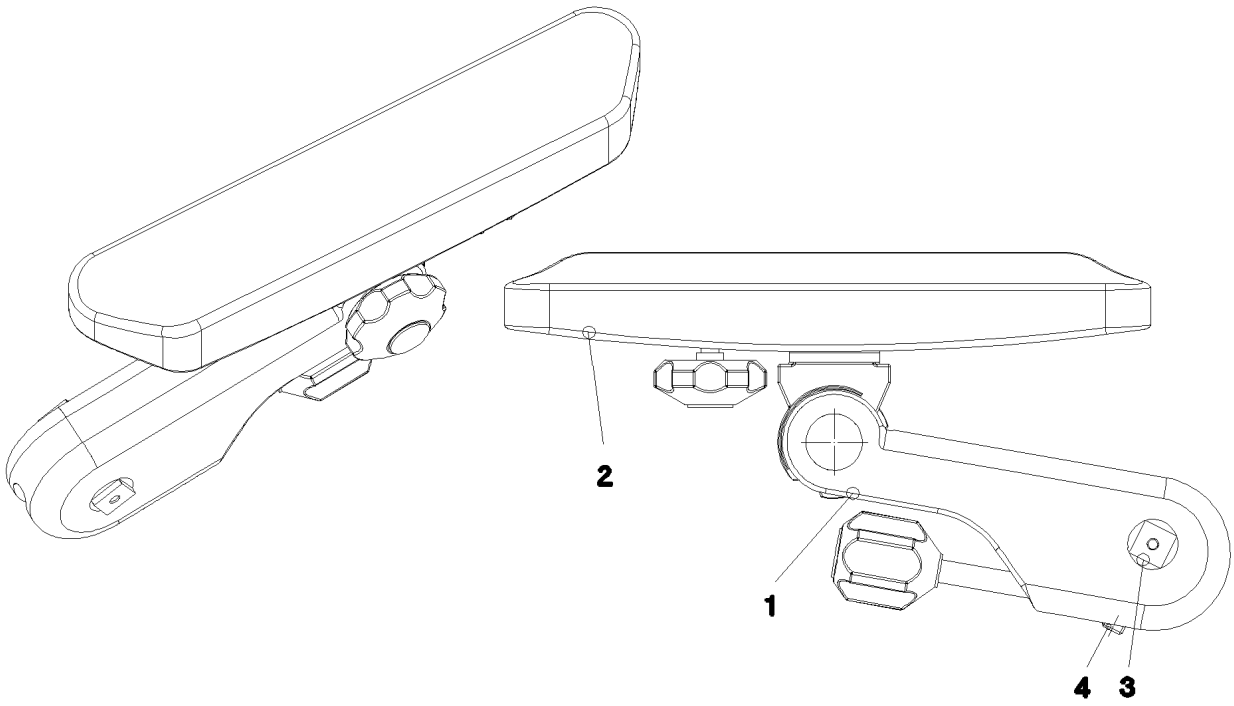

Pos.	Item	Quantity	Description	Bezeichnung
1	774119808	1	ARM REST 310ERGO	ARMLEHNE
2	971636608	1	ARM REST SUPPORT	ARMLEHNENAUFLAGE
3	971973608	1	PIN 25.0X52 S355J2G3C+C FE//ZNNI8//CN//T	BOLZEN
4	10179470	1	GRUB SCREW ISO 4026 M10X40 45H FLZN	GEWINDESTIFT
100	12100707	1	NUT	RAENDELMUTTER

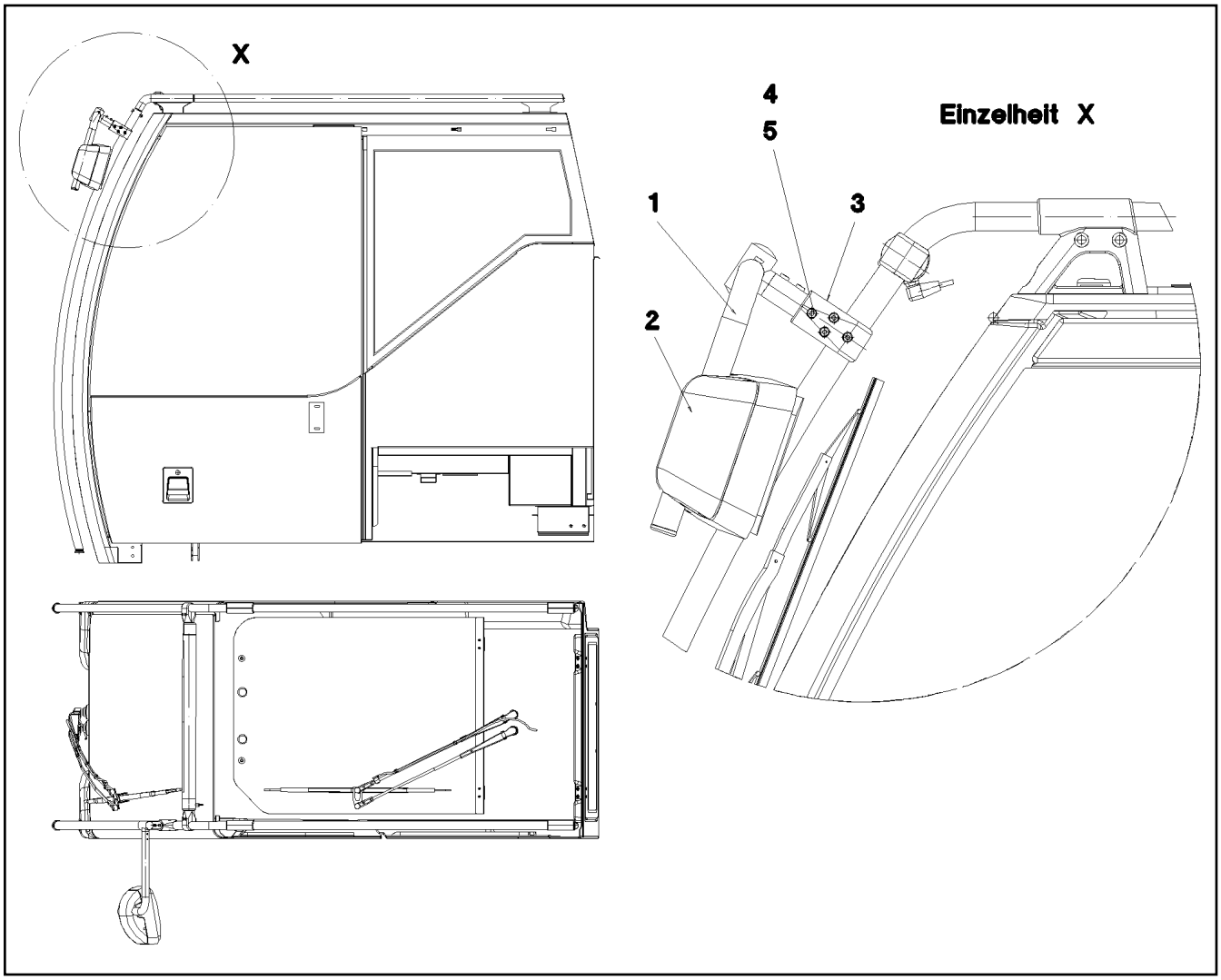

Pos.	Item	Quantity	Description	Bezeichnung
1	979320608	1	MIRROR SUPPORT 28X2 ST.37.4 KTL-BES	SPIEGELHALTER
2	591069508	1	WIDE ANGLE MIRROR 219X170	WEITWINKELSPIEGEL
(1)	10286840	1	REAR VISION MIRROR UNIT 203X154	GLASEINHEIT
(2)	10650507	1	COVER	ABDECKUNG
3	979489508	1	HOLDER 40X80X40 G-ALMG3	HALTER
4	10875601	1	SOCKET HEAD SCREW ISO 4762 M8X50 8.8	ZYLINDERSCHRAUBE
5	10875614	1	HEX NUT DIN 985 M8 8 480H SPF	SECHSKANTMUTTER

Pos.	Item	Quantity	Description	Bezeichnung
1	96036790	1	SLEWING PLATFORM PANELLING RIG ⇨ ❑ 442	DREHBUEHNENVERKLEIDUNG
2	969015908	1	SLEWING PLATFORM PANELLING LEF ⇨ ❑ 452	DREHBUEHNENVERKLEIDUNG

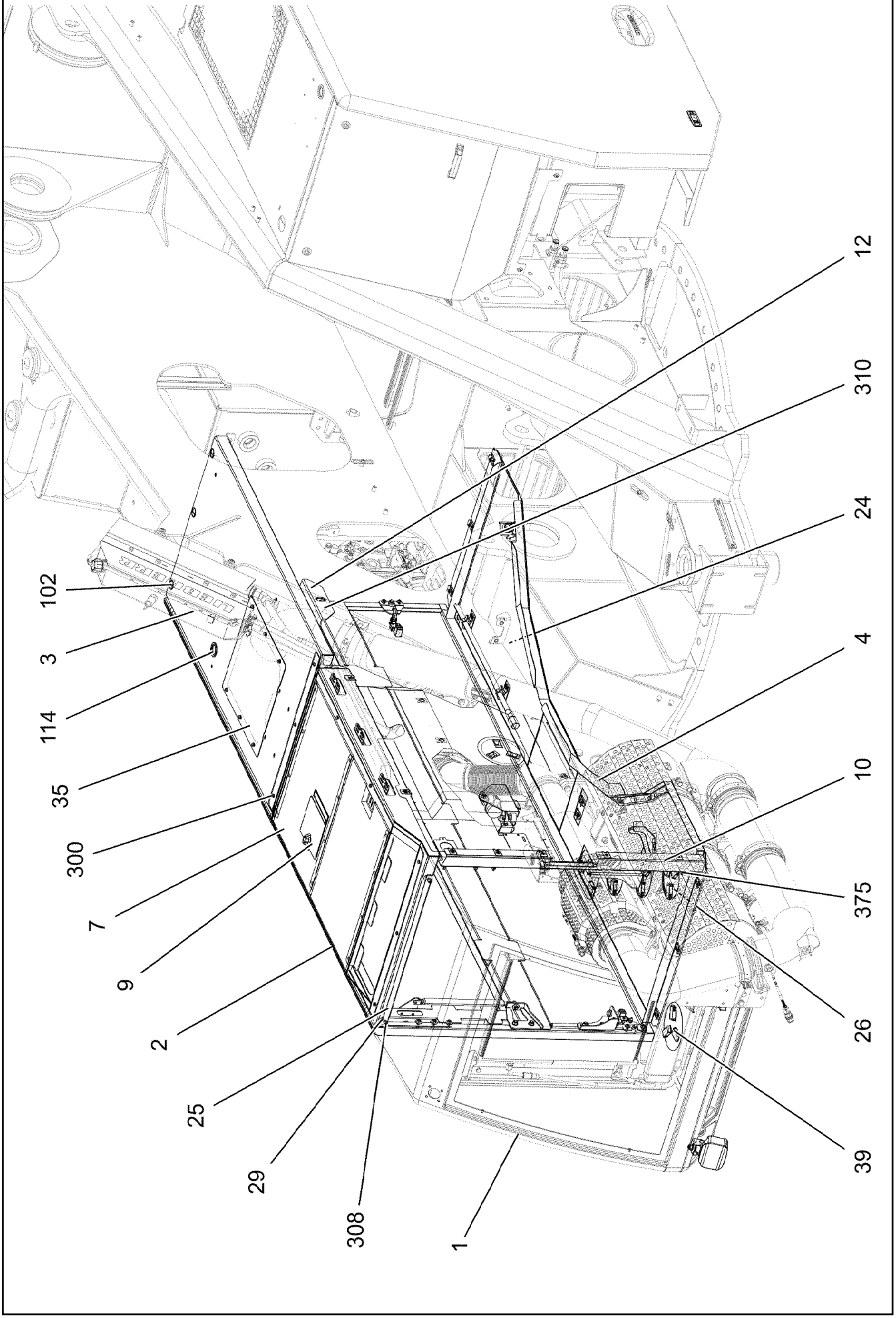

18.7.2022 004802	**etk_en_de_047654 LTR 1220**	❑ 442 (1/5)
LIEBHERR	**SLEWING PLATFORM PANELLING RIG** **DREHBUEHNENVERKLEIDUNG RE.**	**96036790**

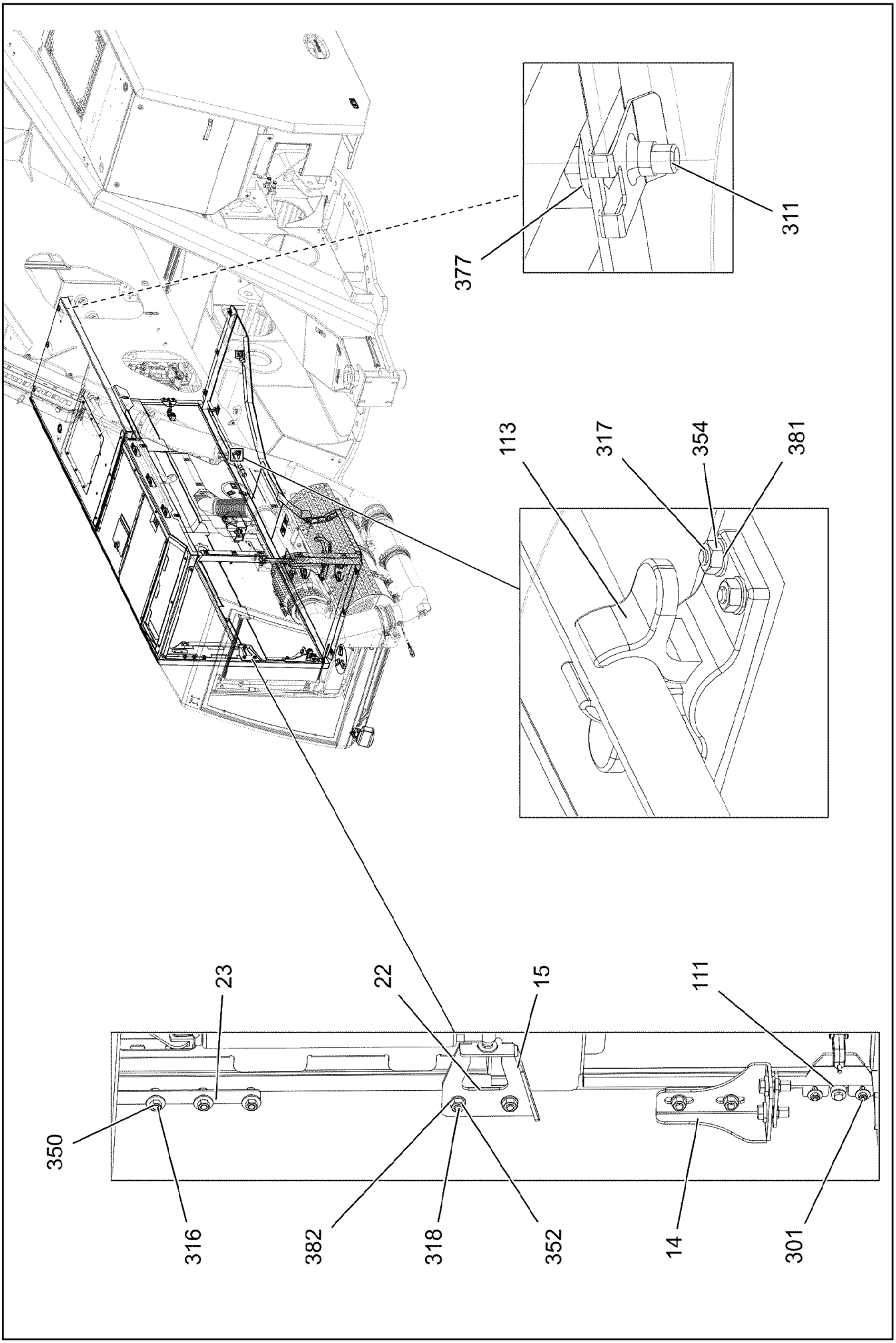
377
311
113
317
354
381
23
22
15
111
350
316
382
318
352
14
301

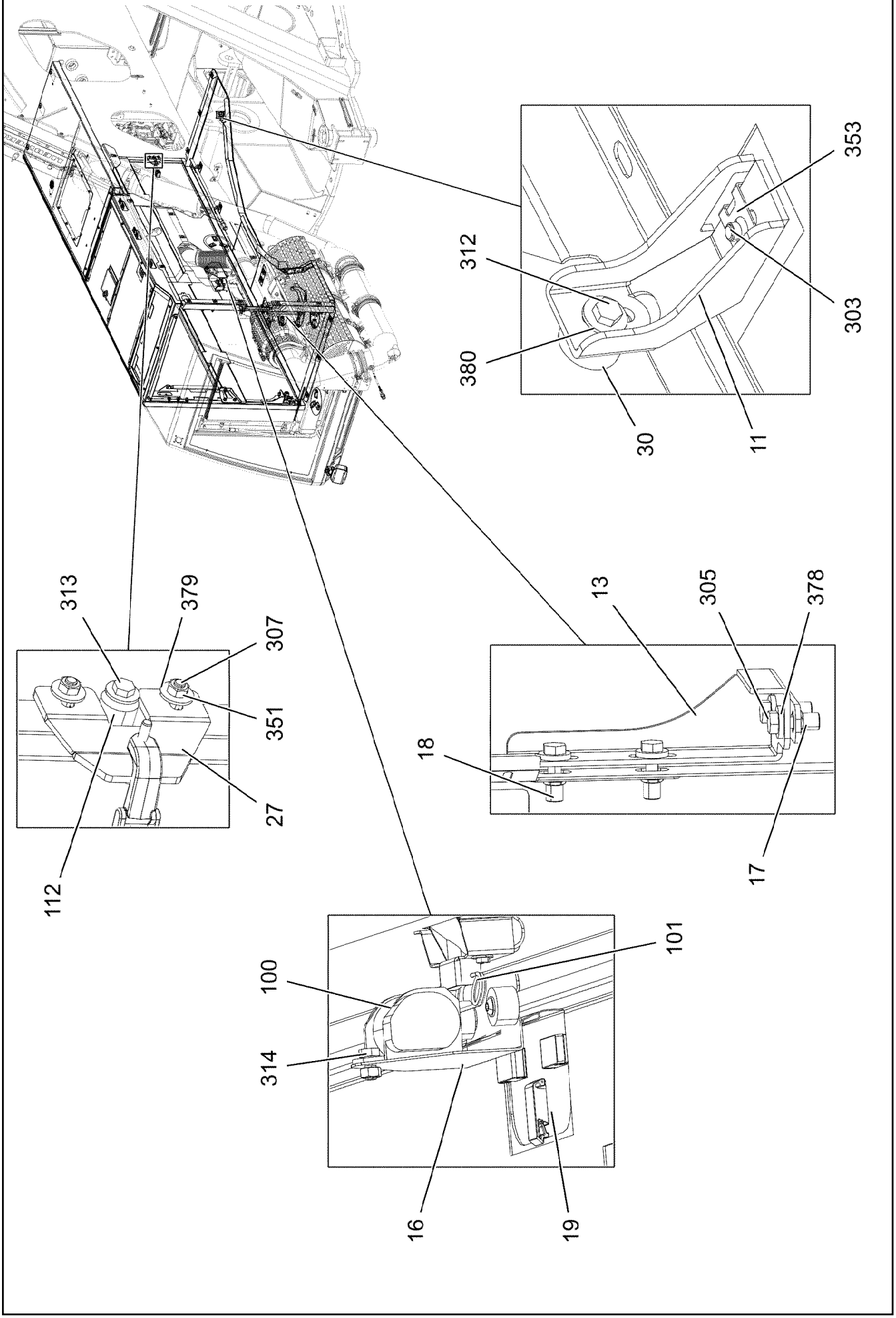

18.7.2022 004804 LIEBHERR	**etk_en_de_047654 LTR 1220** **SLEWING PLATFORM PANELLING RIG** **DREHBUEHNENVERKLEIDUNG RE.**	❑ 444 (3/5) **96036790**

Pos.	Item	Quantity	Description	Bezeichnung
1	96017704	1	RADIATOR HOOD CPL. ⇨ ❑ 447	KUEHLERHAUBE KPL.
2	968923508	1	FLAP RIGHT PRE-ASS. SPF ⇨ ❑ 448	KLAPPE VORM.RECHTS
3	968928808	1	COVER PLATE ST.CONST. SPF	DECKBLECH SCHWK.
4	968933608	1	FLOOR SHEET WELDED SPF	BODENBLECH SCHWK.
7	969002508	1	COVER WELDED SPF	DECKEL SCHWK.
9	964093408	1	COVER COMPL. ⇨ ❑ 450	DECKEL KPL.
10	97049819	1	PLATE 2X297X1030 DC01 FE//ZNNI8//CN//T0	BLECH
11	97058382	2	CONSOLE 4X163X242 S315MC FE//ZNNI8//C	KONSOLE
12	97034296	1	PLATE 4X240X188 S315MC FE//ZNNI8//CN//T	BLECH
13	97049782	1	PLATE 4X288X139 S315MC FE//ZNNI8//CN//T	BLECH
14	97049833	1	PLATE 4X134X188 S315MC FE//ZNNI8//CN//T	BLECH
15	97049834	1	PLATE 4X130X144 S315MC FE//ZNNI8//CN//T	BLECH
16	97034301	1	PLATE 2X160X196 DC01 FE//ZNNI8//CN//T0	BLECH
17	964307108	2	THREADED CARRIER FE//ZNNI8//CN//T0	GEWINDETRAEGER
18	968655508	1	THREADED CARRIER FE//ZNNI8//CN//T0	GEWINDETRAEGER
19	969493508	1	COVER COMPL.	DECKEL KPL.
(1)	97058414	1	PLATE 1X196X130 X5CRNI18-10	BLECH
(2)	10296157	3	SNAP LOCK ABS	SCHNAPPVERSCHLUSS
(3)	262103908	0.4	EDGE PROTECTION 1-2X9,5X6,5	KANTENSCHUTZ
22	979718908	2	PLATE 2X99X24 DC01 FE//ZNNI8//CN//T0	BLECH
23	979724708	1	PLATE 2X290X22 DC01 FE//ZNNI8//CN//T0	BLECH
24	968977308	1	SOUND PROOFING/SOUND INSULAT. ⇨ ❑ 451	SCHALLDAEMMUNG
25	963062208	1	THREADED CARRIER FE//ZNNI8//CN//T0	GEWINDETRAEGER
26	963544508	3	COVER COMPL.	DECKEL KPL.
(1)	974792608	1	PLATE 1X176X176 X5CRNI18-10	BLECH
(2)	10296157	3	SNAP LOCK ABS	SCHNAPPVERSCHLUSS
(3)	262103908	0.6	EDGE PROTECTION 1-2X9,5X6,5	KANTENSCHUTZ
27	954113708	2	PLATE 4X90X67 S315MC FE//ZNNI8//CN//T0	BLECH
29	975529708	2	FRICTION DISK	REIBSCHEIBE
30	978787708	5	SLEEVE 33.0X19 FE//ZNNI8//CN//T0	HUELSE
35	97049712	1	PLATE 2X431X420 ALMG3 H111 SPF	BLECH
39	963949708	1	COVER COMPL.	DECKEL KPL.
(1)	974792608	1	PLATE 1X176X176 X5CRNI18-10	BLECH
(2)	10296157	3	SNAP LOCK ABS	SCHNAPPVERSCHLUSS
100	10334488	1	TENSION FLANGE 47X2220	ZUGGURT
101	433102808	1	RETAINING SPRING 3X55 VERZ	SICHERUNGSFEDER
102	591570908	3	COVER LID POLYSTIC27-33 ABS	ABDECKKAPPE
111	726907308	1	MEGI BUFFER 20X15-M6 NR 55SHORE A	MEGIPUFFER
112	726617408	1	MEGI BUFFER	MEGIPUFFER
113	704277508	2	DOOR STOPPER	TUERFESTSTELLER
114	602717308	1	DIAPHRAGM GROMMET 35,5/47/53 TPE SC	MEMBRAN-DURCHFUEHRUNG
300	10412851	10	BUTTON HEAD SCREW AEHNL.ISO 7380-2	HALBRUNDKOPFSCHRAUBE
301	12207548	2	HEX SCREW EN 1665 M6X20 8.8 480H SPF	SECHSKANTSCHRAUBE
303	10875485	13	BUTTON HEAD SCREW AEHNL.ISO 7380-2	HALBRUNDKOPFSCHRAUBE
305	11642358	6	HEX SCREW ISO 4017 M10X30 8.8 FLZN SP	SECHSKANTSCHRAUBE
307	11840297	8	HEX SCREW EN 1665 M6X16 8.8 480H SPF	SECHSKANTSCHRAUBE
308	11690637	2	HEX SCREW EN 1665 M8X25 8.8 480H SPF	SECHSKANTSCHRAUBE
310	11651767	2	HEX SCREW ISO 4017 M8X20 8.8 480H SPF	SECHSKANTSCHRAUBE
311	10197831	7	HEX SCREW ISO 4017 M8X25 8.8 ZNNI-480	SECHSKANTSCHRAUBE
312	11651612	2	HEX SCREW ISO 4017 M8X16 8.8 480H SPF	SECHSKANTSCHRAUBE
313	11692824	2	HEX SCREW ISO 4017 M6X12 8.8 480H SPF	SECHSKANTSCHRAUBE
314	10197730	1	HEX SCREW ISO 4017 M10X20 8.8 ZNNI-480	SECHSKANTSCHRAUBE
316	11657219	4	HEX SCREW EN 1665 M8X20 8.8 480H SPF	SECHSKANTSCHRAUBE
317	11835043	8	BUTTON HEAD SCREW ISO 7380-2 M4X12 0	HALBRUNDKOPFSCHRAUBE
318	11631816	4	HEX SCREW ISO 4017 M10X25 8.8 FLZN SP	SECHSKANTSCHRAUBE
350	10197760	7	HEX NUT ISO 4032 M8 10 ZNNI-480H SPF	SECHSKANTMUTTER

Pos.	Item	Quantity	Description	Bezeichnung
351	10197764	4	HEX NUT ISO 4032 M6 10 ZNNI-480H SPF	SECHSKANTMUTTER
352	12102695	5	HEX NUT ISO 4032 M10 8 ZNNI-480H SPF	SECHSKANTMUTTER
353	12100332	22	SHEET METAL NUT M8 480H SPF	BLECHMUTTER
354	10875619	8	HEX NUT ISO 4032 M4 8 480H SPF	SECHSKANTMUTTER
375	12103465	8	WASHER ISO 7089 8 300HV ZNNI-480H SPF	SCHEIBE
377	11840501	3	WASHER DIN 7349 8,4 200HV 480H SPF	SCHEIBE
378	11658580	6	WASHER DIN 7349 10,5 200HV-St FLZN SPF	SCHEIBE
379	10875648	6	WASHER ISO 7093-1 6 200HV 480H SPF	SCHEIBE
380	11140469	7	WASHER ISO 7093-1 8 200HV 480H SPF	SCHEIBE
381	10875645	8	WASHER ISO 7089 4 200HV 480H SPF	SCHEIBE
382	10289795	4	WASHER ISO 7089 10 300HV FLZN SPF	SCHEIBE

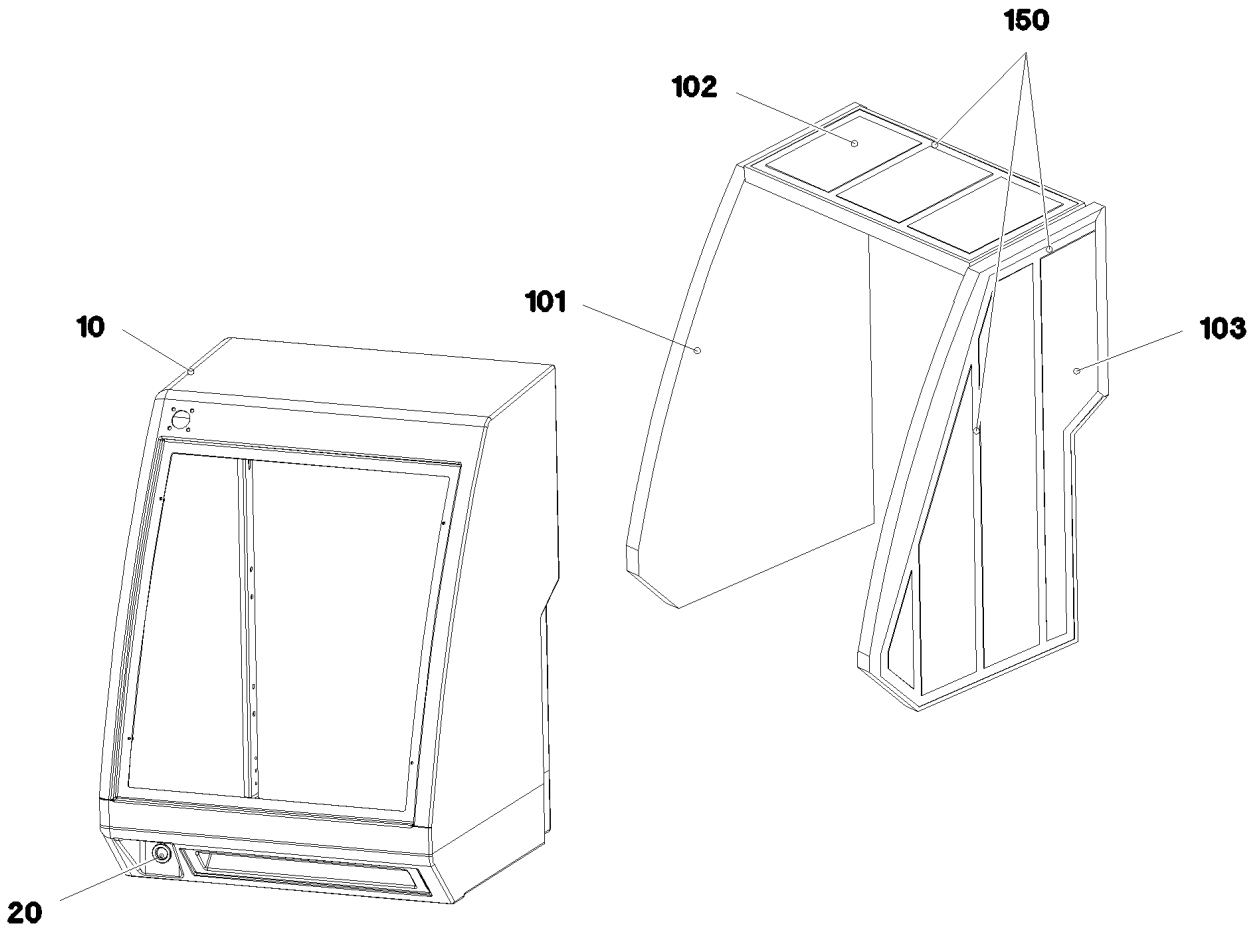

Pos.	Item	Quantity	Description	Bezeichnung
10	968100408	1	RADIATOR HOOD	KUEHLERHAUBE
20	553027808	1	DIAPHRAGM SOCKET 29/37/44	MEMBRANTUELLE
101	97034281	1	INSULATING MAT 40X1055X750 PUR-SCHAU	DAEMMMATTE
102	973767608	1	INSULATING MAT 40X740X370 PUR-SCHAU	DAEMMMATTE
103	97034282	1	INSULATING MAT 40X775X1064 PUR-SCHAU	DAEMMMATTE
150	802102008	14	ADHESIVE INSULATING STRIP 25MM PS18	PILZKOPFBAND

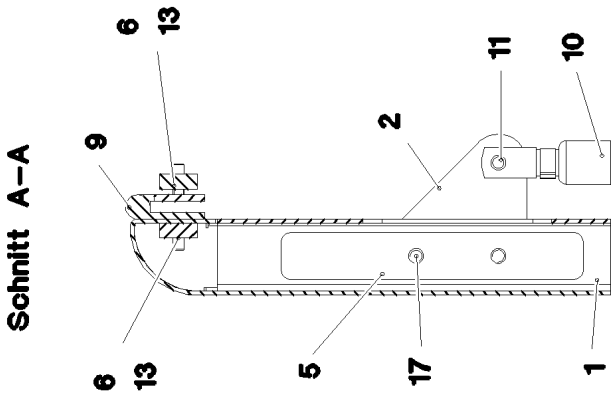

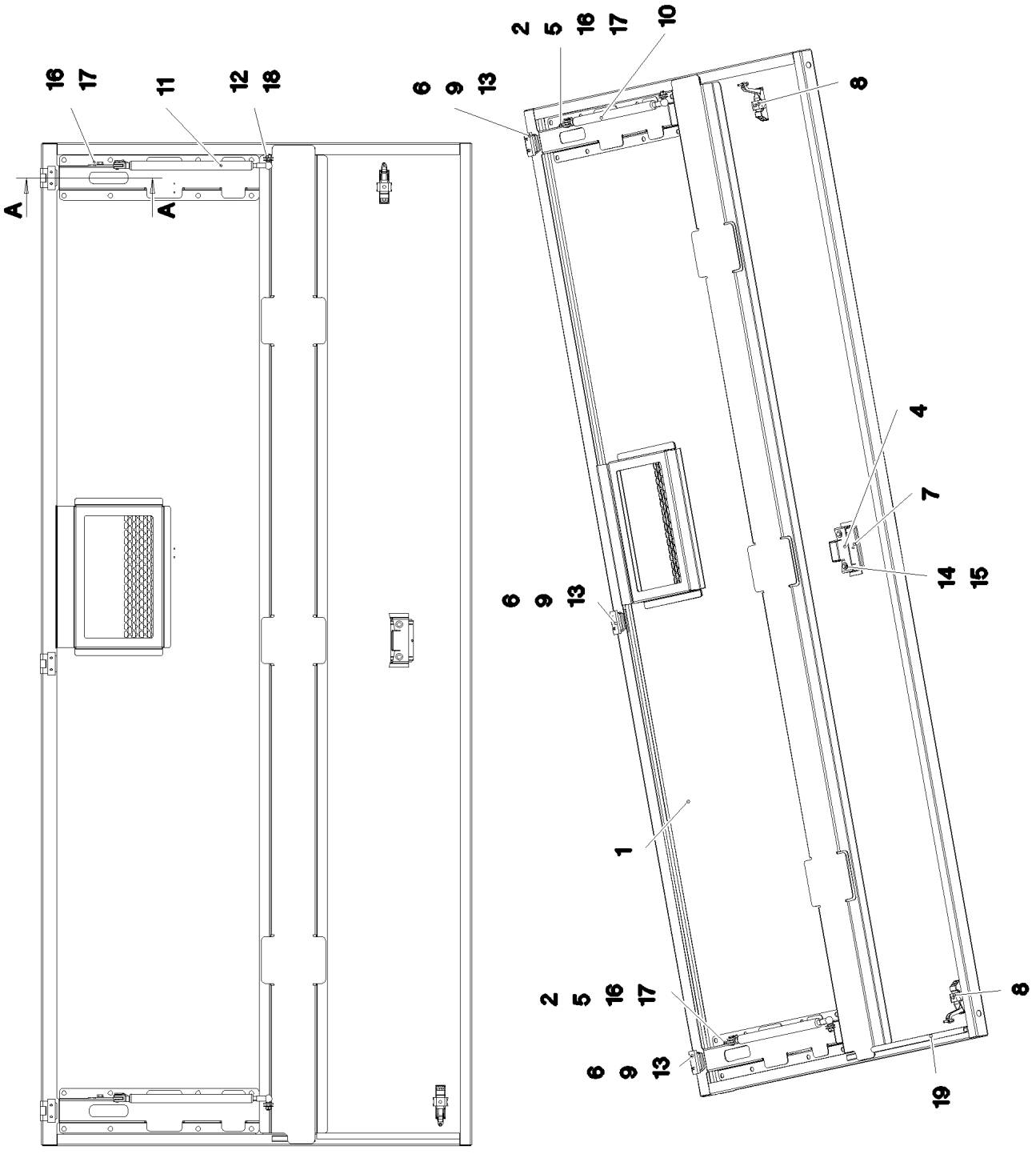

18.7.2022 083536	**etk_en_de_047654 LTR 1220**	448 (1/2)
LIEBHERR	**FLAP RIGHT PRE-ASS.** **KLAPPE VORM.RECHTS**	**968923508**

Pos.	Item	Quantity	Description	Bezeichnung
1	969007208	1	FLAP GLUED SPF	KLAPPE GEKLEBT
2	979717908	2	PLATE 4X110X77 S315MC FE//ZNNI8//CN//T	BLECH
4	974742308	1	PLATE 2X195X66 X5CRNI18-10	BLECH
5	952940908	2	PLATE 8X25X160 S355MC FE//ZNNI8//CN//T	BLECH
6	953695308	6	THREADED PLATE 8.0 X0 S235JR FE//ZNNI8/	GEWINDEPLATTE
7	955500008	1	FINGER-HOLD X0 KUNSTSTOFF	GRIFFMULDE
8	11450420	2	LEVER FASTENER	HEBELVERSCHLUSS
9	704228108	3	HINGE 35X35X50/180° ST FE//ZN12//B	SCHARNIER
10	591061908	2	GAS SPRING 23X265-500N	GASFEDER
11	725111808	2	ES PIN 8X16 FE/ZN8/CN/T2	ES BOLZEN
12	11693875	2	HEX NUT ISO 4032 M8 8 480H SPF	SECHSKANTMUTTER
13	12100589	12	COUNTERSUNK SCREW AEHNL.ISO 10642	SENKSCHRAUBE
14	11692824	2	HEX SCREW ISO 4017 M6X12 8.8 480H SPF	SECHSKANTSCHRAUBE
15	10875648	2	WASHER ISO 7093-1 6 200HV 480H SPF	SCHEIBE
16	12103465	4	WASHER ISO 7089 8 300HV ZNNI-480H SPF	SCHEIBE
17	11651767	4	HEX SCREW ISO 4017 M8X20 8.8 480H SPF	SECHSKANTSCHRAUBE
18	11140469	4	WASHER ISO 7093-1 8 200HV 480H SPF	SCHEIBE
19	262106508	0.37	SEALING PROFILE 1,5-3X14,6X10,7	ABDICHTPROFIL

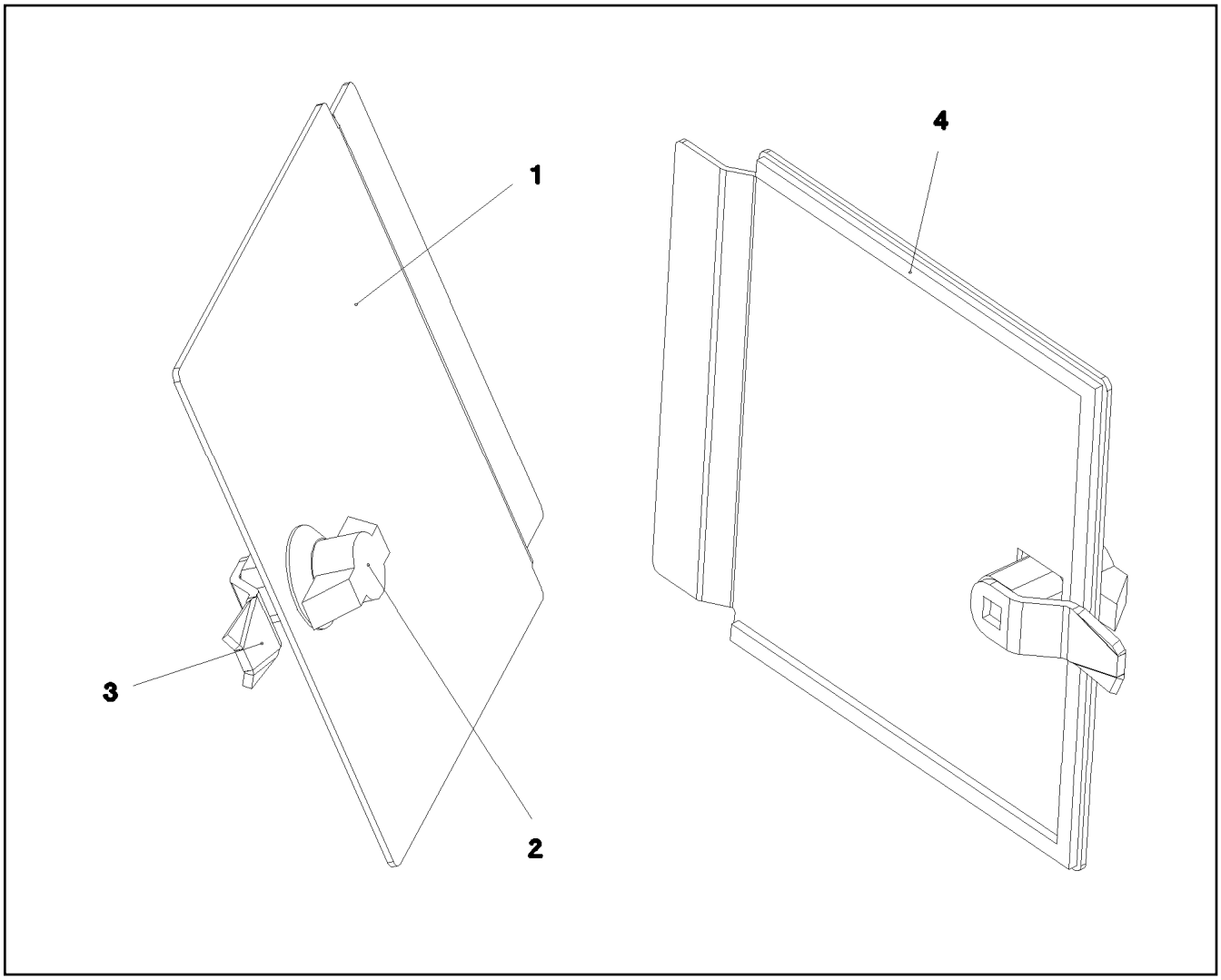

Pos.	Item	Quantity	Description	Bezeichnung
1	975842108	1	PLATE 2X180X191 ALMG3 H111 SPF	BLECH
2	704255508	1	TOGGLE GD-ZN	KNEBEL
3	704259308	1	TONGUE	ZUNGE
4	262108908	0.5	CELL RUBBER 6X3X10000 CELL.RUBBER	ZELLGUMMI

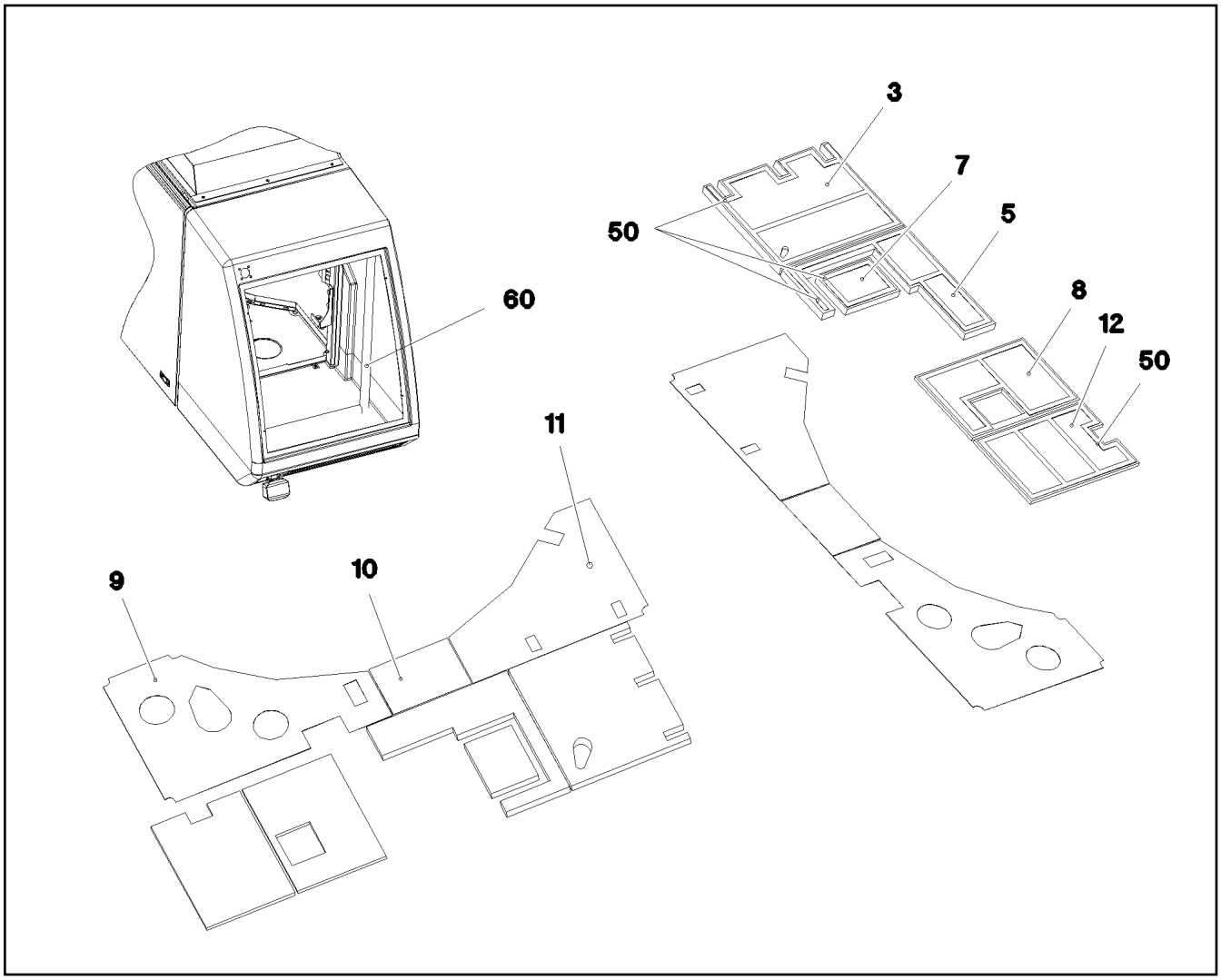

Pos.	Item	Quantity	Description	Bezeichnung
3	97034322	1	INSULATING MAT 40X720X590 PUR-SCHAU	DAEMMMATTE
5	97050669	1	INSULATING MAT 40X720X695 PUR-SCHAU	DAEMMMATTE
7	97050671	1	INSULATING MAT 40X310X235 PUR-SCHAU	DAEMMMATTE
8	97055971	1	INSULATING MAT 20X630X440 ME-SCHAUM	DAEMMMATTE
9	97051749	1	HEAVY FOIL MATTING 2X1115X765 SB-KA	SCHWERFOLIENMATTE
10	97058386	1	HEAVY FOIL MATTING 2X390X280 SB-KAUT	SCHWERFOLIENMATTE
11	97058387	1	HEAVY FOIL MATTING 2X885X700 SB-KAUT	SCHWERFOLIENMATTE
12	97050672	1	INSULATING MAT 20X630X440 ME-SCHAUM	DAEMMMATTE
50	802102008	33.22	ADHESIVE INSULATING STRIP 25MM PS18	PILZKOPFBAND
60	11006584	3.5	INSULATING HOSE ISO 3302-1 E3 DN40 10 E	ISOLIERSCHLAUCH

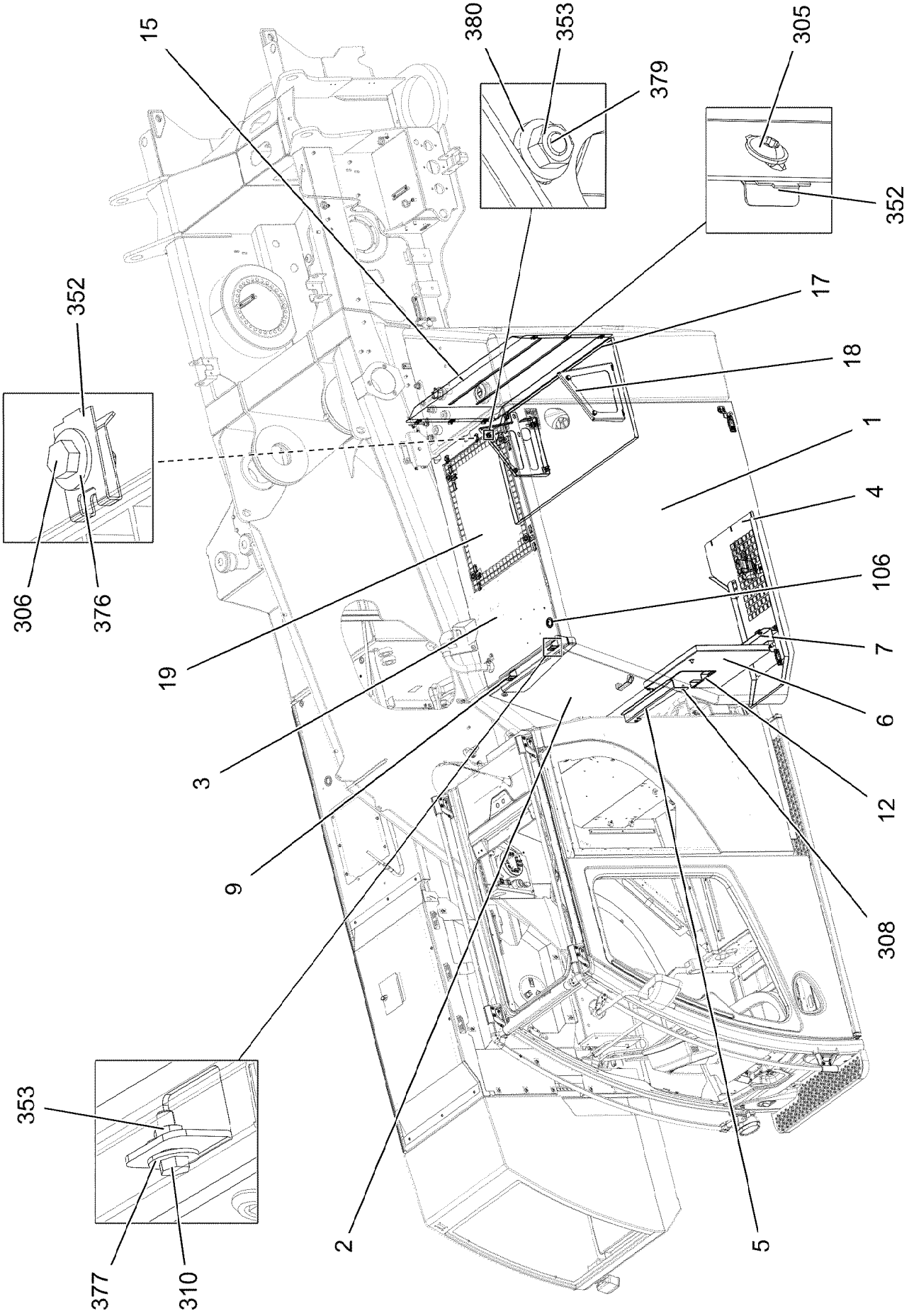

18.7.2022 083539	**etk_en_de_047654 LTR 1220**	452 (1/4)
LIEBHERR	**SLEWING PLATFORM PANELLING LEF** **DREHBUEHNENVERKLEIDUNG LI.**	**969015908**

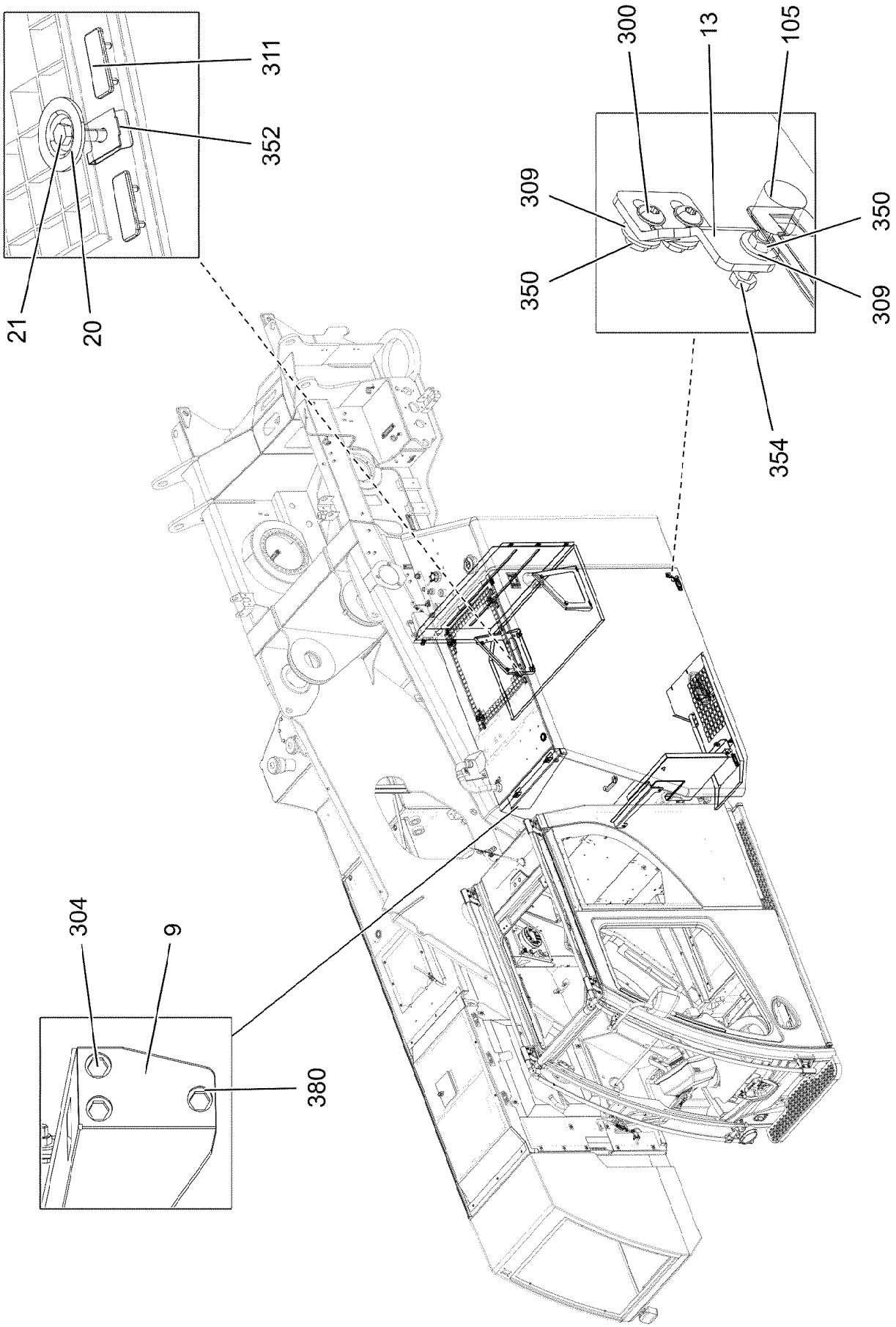

18.7.2022 083540	**etk_en_de_047654 LTR 1220**	❑ 453 (2/4)
LIEBHERR	**SLEWING PLATFORM PANELLING LEF** **DREHBUEHNENVERKLEIDUNG LI.**	**969015908**

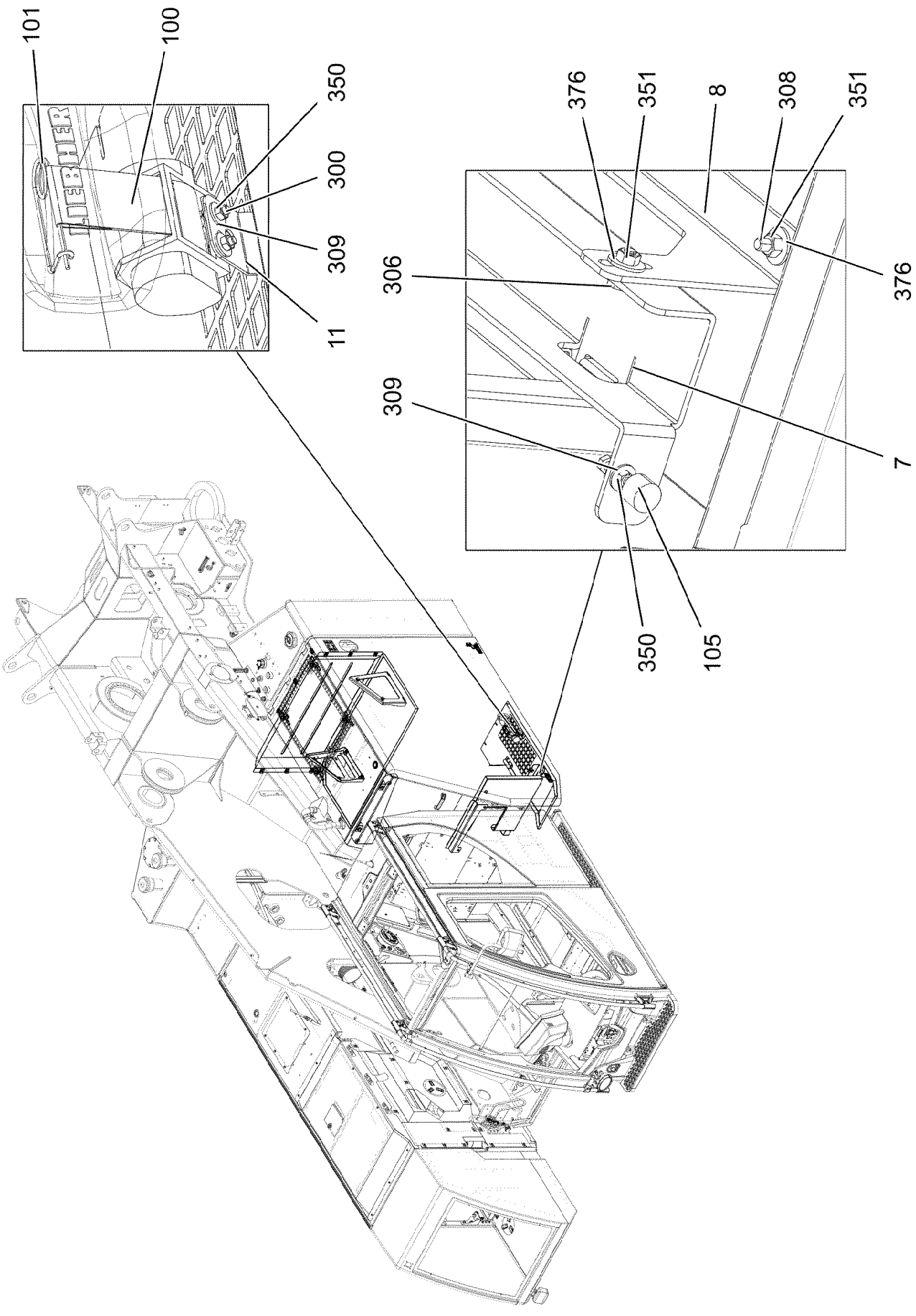
101
100
350
300
309
11
376
351
8
308
351
306
376
309
7
350
105

Pos.	Item	Quantity	Description	Bezeichnung
1	969016008	1	FLAP LEFT FRONT PRE-ASS. ⇨ ❑ 456	KLAPPE VORM.VORN LINKS
2	967982708	1	FRONT LEFT-HAND HOOD	FRONTHAUBE LI.
3	969016108	1	COVER PLATE ST.CONST.	DECKBLECH SCHWK.
4	969132208	1	FLOOR SHEET WELDED	BODENBLECH SCHWK.
5	97031538	1	DIAPHRAGM 4X480X167 S315MC FE//ZNNI8/	SCHOTTBLECH
6	97031539	1	PLATE 2X639X612 DC01	BLECH
7	97031540	1	PLATE 4X751X167 S315MC FE//ZNNI8//CN//T	BLECH
8	97031570	1	PLATE 4X260X173 S315MC FE//ZNNI8//CN//T	BLECH
9	97031571	1	PLATE 4X784X220 S315MC FE//ZNNI8//CN//T	BLECH
11	974657908	1	PLATE 2X50X115 X5CRNI18-10	BLECH
12	262103908	0.66	EDGE PROTECTION 1-2X9,5X6,5	KANTENSCHUTZ
13	97053350	1	PLATE 4X81X40 S315MC FE//ZNNI8//CN//T0	BLECH
15	97033140	1	PLATE 2X1225X659 ALMG3 H111	BLECH
17	97033142	1	PLATE 4X401X406 S315MC FE//ZNNI8//CN//T	BLECH
18	97033143	1	PLATE 4X386X404 S315MC FE//ZNNI8//CN//T	BLECH
19	97053346	1	GRIDIRON T725X564X30/3 S235JR T ZN K	GITTERROST-P
20	10100621	4	DISH MOUNTING	TELLERBEFESTIGUNG
21	11651580	4	HEX SCREW ISO 4014 M8X45 8.8 480H SPF	SECHSKANTSCHRAUBE
100	10334488	1	TENSION FLANGE 47X2220	ZUGGURT
101	433102808	1	RETAINING SPRING 3X55 VERZ	SICHERUNGSFEDER
105	726907308	2	MEGI BUFFER 20X15-M6 NR 55SHORE A	MEGIPUFFER
106	602717308	1	DIAPHRAGM GROMMET 35,5/47/53 TPE SC	MEMBRAN-DURCHFUEHRUNG
300	10412851	6	BUTTON HEAD SCREW AEHNL.ISO 7380-2	HALBRUNDKOPFSCHRAUBE
304	12222996	7	HEX SCREW ISO 4017 M10X22 8.8 FLZN SP	SECHSKANTSCHRAUBE
305	10875485	10	BUTTON HEAD SCREW AEHNL.ISO 7380-2	HALBRUNDKOPFSCHRAUBE
306	11651767	5	HEX SCREW ISO 4017 M8X20 8.8 480H SPF	SECHSKANTSCHRAUBE
308	10875486	4	BUTTON HEAD SCREW AEHNL.ISO 7380-2	HALBRUNDKOPFSCHRAUBE
309	10875648	10	WASHER ISO 7093-1 6 200HV 480H SPF	SCHEIBE
310	11642358	2	HEX SCREW ISO 4017 M10X30 8.8 FLZN SP	SECHSKANTSCHRAUBE
311	704229908	10	HOOD SUPPORT	HAUBENAUFLAGE
350	10197764	11	HEX NUT ISO 4032 M6 10 ZNNI-480H SPF	SECHSKANTMUTTER
351	10197760	4	HEX NUT ISO 4032 M8 10 ZNNI-480H SPF	SECHSKANTMUTTER
352	12100332	17	SHEET METAL NUT M8 480H SPF	BLECHMUTTER
353	12102695	6	HEX NUT ISO 4032 M10 8 ZNNI-480H SPF	SECHSKANTMUTTER
354	12216201	2	HEX SCREW ISO 4017 M6X45 8.8 480H SPF	SECHSKANTSCHRAUBE
376	11140469	11	WASHER ISO 7093-1 8 200HV 480H SPF	SCHEIBE
377	11491889	4	WASHER ISO 7093-1 10 300HV FLZN SPF	SCHEIBE
379	11631816	4	HEX SCREW ISO 4017 M10X25 8.8 FLZN SP	SECHSKANTSCHRAUBE
380	11658580	15	WASHER DIN 7349 10,5 200HV-St FLZN SPF	SCHEIBE

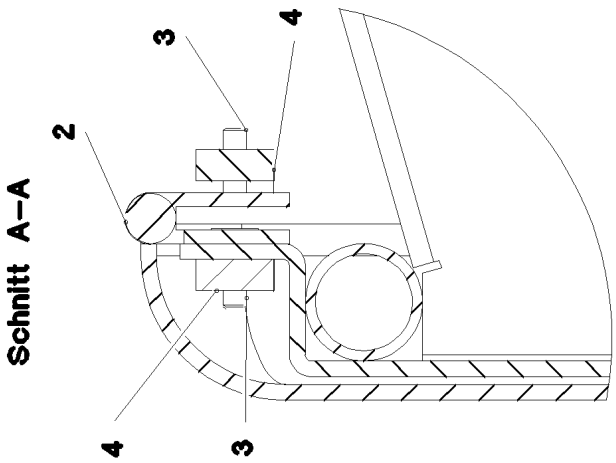

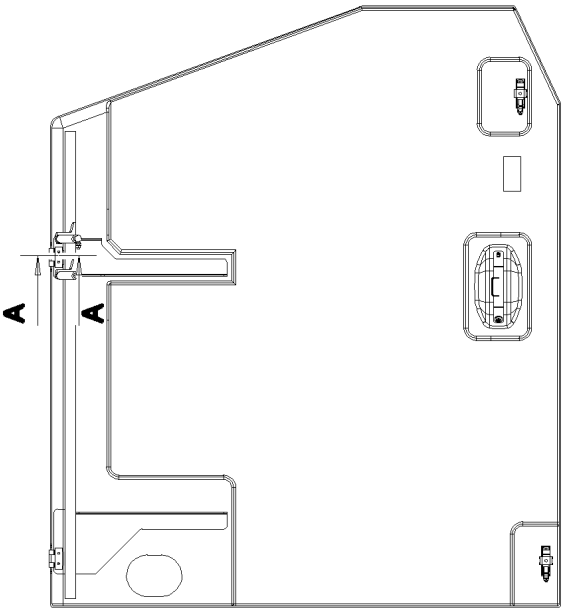

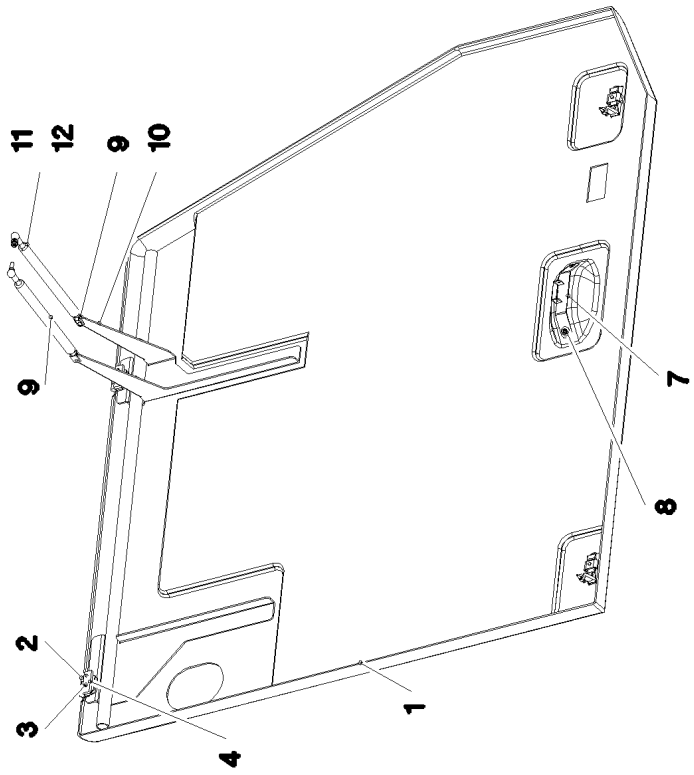

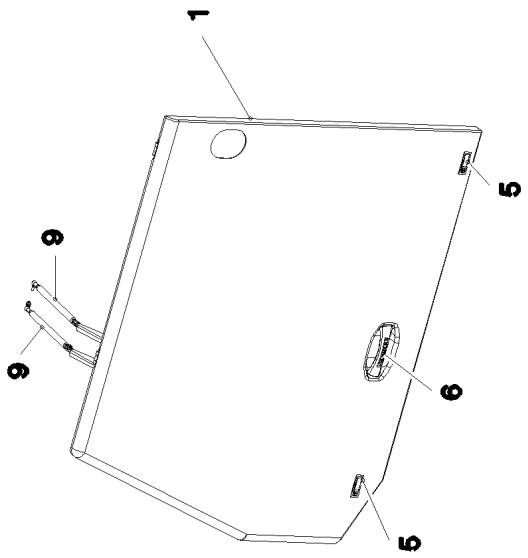

18.7.2022 083542 LIEBHERR	**etk_en_de_047654 LTR 1220** **FLAP LEFT FRONT PRE-ASS.** **KLAPPE VORM.VORN LINKS**	456 (1/2) **969016008**

Pos.	Item	Quantity	Description	Bezeichnung
1	969017908	1	FLAP COMPL.	KLAPPE KPL.
2	704228108	2	HINGE 35X35X50/180° ST FE//ZN12//B	SCHARNIER
3	12100589	8	COUNTERSUNK SCREW AEHNL.ISO 10642	SENKSCHRAUBE
4	953695308	4	THREADED PLATE 8.0 X0 S235JR FE//ZNNI8/	GEWINDEPLATTE
5	11450420	2	LEVER FASTENER	HEBELVERSCHLUSS
6	12554272	1	HANDLE 212X53	HANDGRIFF
7	974656608	1	PLATE 2X236X50 X5CRNI18-10	BLECH
8	10875448	2	BUTTON HEAD SCREW ISO 7380-2 M10X25	HALBRUNDKOPFSCHRAUBE
9	591065008	2	GAS SPRING 23X265-750N	GASFEDER
10	725111808	2	ES PIN 8X16 FE/ZN8/CN/T2	ES BOLZEN
11	11693875	2	HEX NUT ISO 4032 M8 8 480H SPF	SECHSKANTMUTTER
12	12103465	4	WASHER ISO 7089 8 300HV ZNNI-480H SPF	SCHEIBE

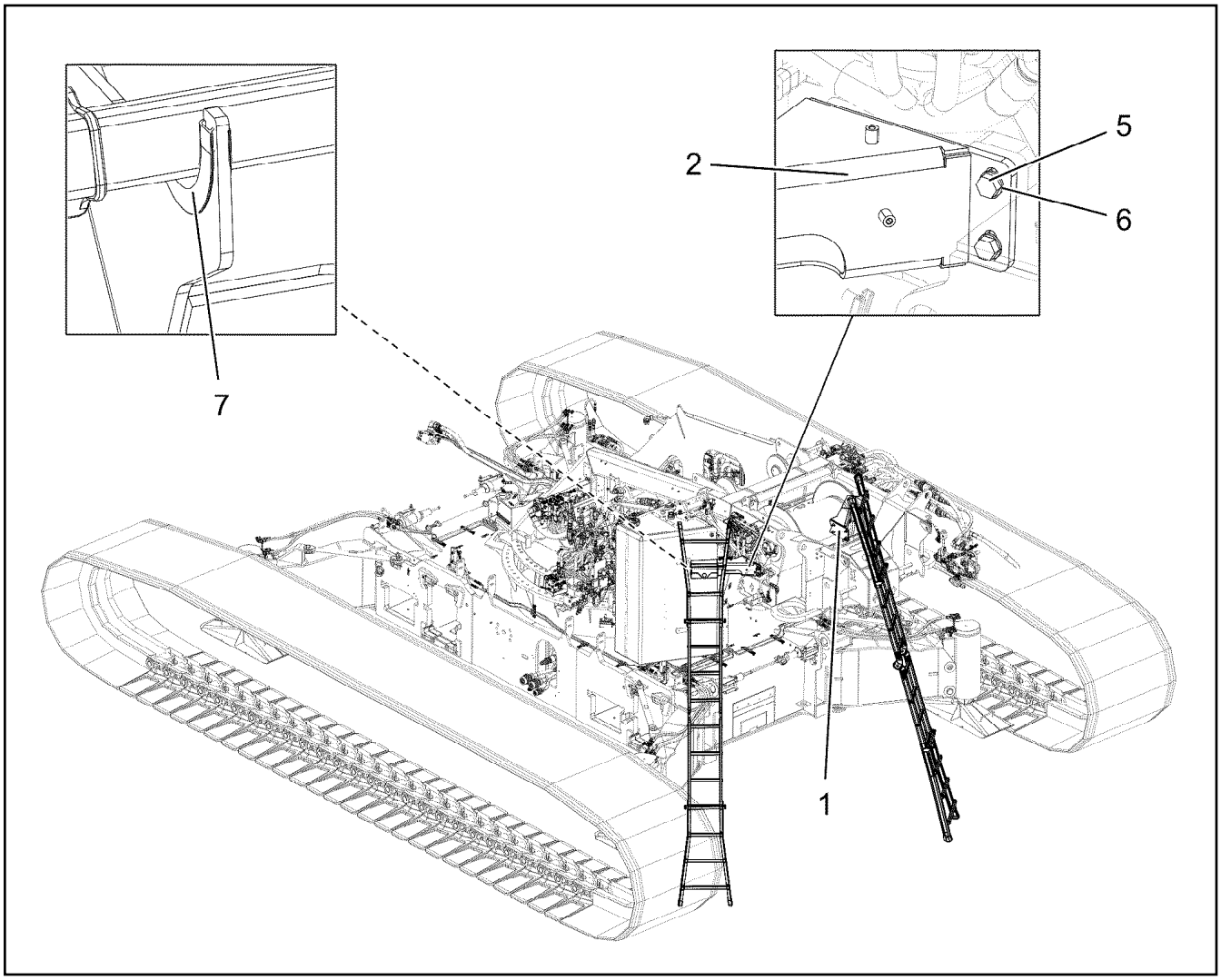

Pos.	Item	Quantity	Description	Bezeichnung
1	968072808	1	BRACKET RIGHT	KONSOLE RECHTS
2	968073008	1	BRACKET LEFT	KONSOLE LINKS
5	12214938	8	HEX SCREW ISO 4017 M16X35 8.8 FLZN SP	SECHSKANTSCHRAUBE
6	10289806	8	WASHER ISO 7089 16 300HV FLZN SPF	SCHEIBE
7	262106608	0.54	EDGE PROTECTION 4-6X15,8X11	KANTENSCHUTZ

Pos.	Item	Quantity	Description	Bezeichnung
1	97033141	1	PLATE 2X1248X623 ALMG3 H111	BLECH

Pos.	Item	Quantity	Description	Bezeichnung
5	96036954	1	CABLE LIST DRIVER'S CABIN ⇨ ❑ 461	KABELLISTE KRANFUEHRERK
6	96053500	1	ELECTRIC ADD-ON PARTS CABIN ⇨ ❑ 465	ELEKTRIK ANBAUTEILE KABINE

Pos.	Item	Quantity	Description	Bezeichnung
2	96036955	1	WIRING HARNESS W300 ⇨ ❑ 462	KABELSTRANG
3	967541908	1	WIRING HARNESS W301	KABELSTRANG
4	967542008	1	WIRING HARNESS W302	KABELSTRANG
6	10219462	2	PATCH CABLE 4X2 AWG 26/7-5M	PATCHKABEL
7	96036956	1	WIRING HARNESS W310 ⇨ ❑ 464	KABELSTRANG
10	553186908	1	CABLE HARNESS 3300MM	KABELBAUM
(1)	10492113	1	PLUG 2	STECKER
(2)	10491808	1	PLUG 12-POL	STECKER

Pos.	Item	Quantity	Description	Bezeichnung
5	680000708	1	COUPLING SOCKET 4-POL 90° SPF	KUPPLUNGSDOSE
6	680000008	1	COUPLING SOCKET 4-POLE SPF	KUPPLUNGSDOSE
7	10428545	4.375	LEAD 25 X 0,34 TPE-U	LEITUNG
9	11620017	3	LEAD 2 X 1	LEITUNG
10	10428544	4.367	LEAD 15 X 0,34 TPE-U	LEITUNG
11	10428544	4.367	LEAD 15 X 0,34 TPE-U	LEITUNG
12	10877798	1	CONNECTION CABLE 2X0,75-1,5M	ANSCHLUSSKABEL
13	11620017	0.4	LEAD 2 X 1	LEITUNG
15	11840113	4.46	BUS LINE 2 X 0,5	BUSLEITUNG
16	11840113	4.38	BUS LINE 2 X 0,5	BUSLEITUNG
17	11840113	4.38	BUS LINE 2 X 0,5	BUSLEITUNG
18	11840113	0.17	BUS LINE 2 X 0,5	BUSLEITUNG
19	10875121	1	DOUBLE SOCKET 2-POL	DOPPELSTECKDOSE
34	602217908	1	CABLE LUG DIN 46237 M6/1-2,5mm²	KABELSCHUH
72	602203408	3	RECEPTACLE 6,3X1-2,5 MESSING VERZINN	STECKHUELSE
75	602203908	2	FLAT PLUG 6,3X1-2,5 SN	FLACHSTECKER
121	602300108	13	CONTACT 1-2,5MM2	KONTAKT
124	602323508	6	FLAT PLUG 2,8X0,5-1 SN	FLACHSTECKER
125	602300308	110	CONTACT 0,5-1MM2	KONTAKT
134	602303308	2	RECEPTACLE FOR TABS 6,3X0,5-1,5	FLACHSTECKHUELSE
143	602208408	2	RECEPTACLE 9,5X1-2,5 CUSN4	STECKHUELSE
202	11082602	7.44	INSULATING HOSE DN6X0,5 PUR SPF	ISOLIERSCHLAUCH
203	11082603	2.2	INSULATING HOSE DN8X0,65 PUR SPF	ISOLIERSCHLAUCH
204	11082604	4.43	INSULATING HOSE DN10X0,65 PUR SPF	ISOLIERSCHLAUCH
205	11082605	1.63	INSULATING HOSE DN12X0,65 PUR SPF	ISOLIERSCHLAUCH
224	11124207	0.83	CABLE CONDUIT DN20X0,6 PUR SPF	KABELSCHLAUCH
225	11124208	0.33	CABLE CONDUIT DN25X0,6 PUR SPF	KABELSCHLAUCH
227	11124210	2.26	CABLE CONDUIT DN35X0,6 PUR SPF	KABELSCHLAUCH
261	12104809	1	CABLE TIE 3,6X142-SCHWARZ PA66 SPF	KABELBINDER
298	10441166	0.1	HEATSHRINK SLEEVING 11,6/2,5X2,29 POLY	SCHRUMPFSCHLAUCH
305	10870540	319.78	ELECTR.CABLE 1,0	KFZ-LEITUNG
309	10870542	30.5	ELECTR.CABLE 2,5	KFZ-LEITUNG
344	10870538	18.2	ELECTR.CABLE 0,5	KFZ-LEITUNG
345	10870539	8.16	ELECTR.CABLE 0,75	KFZ-LEITUNG
500	923512208	53	CABLE MARKER	KABELMARKER
501	602300208	9	PLUG SHELL 18-POL	STECKERGEHAEUSE
502	10024744	2	FEMALE PLUG 15-POLE	BUCHSENSTECKER
503	10355182	4	PLUG SHELL D-SUB METALL	STECKERGEHAEUSE
504	602322708	1	FEMALE PLUG 25-POLE	BUCHSENSTECKER
505	10355170	2	PLUG SHELL D-SUB METALL	STECKERGEHAEUSE
506	602325508	3	HOUSING 6-POL	GEHAEUSE
507	602331308	4	HOUSING 4-POL	GEHAEUSE
508	602209708	4	ATTACHABLE SLEEVE HOUSING 2-POL	STECKHUELSENGEHAEUSE
509	10342517	2	PLUG SHELL 2 13A TH.PLAST SW	STECKERGEHAEUSE
510	10342519	2	CONTACT LOCK DT 2 POLIG	KONTAKTVERRIEGELUNG
511	602336008	4	PLUG SHELL 14-POL	STECKERGEHAEUSE
512	10424622	2	BUSHING HOUSING 2-POL 5A	BUCHSENGEHAEUSE
513	10875280	1	BUSHING HOUSING 8-POL 5A	BUCHSENGEHAEUSE
514	602300508	1	HOUSING 8-POL	GEHAEUSE
515	602335908	4	PLUG SHELL 4-POL	STECKERGEHAEUSE
516	602300608	1	HOUSING 8-POL	GEHAEUSE
517	5603876	1	LINE CONNECTOR	LEITUNGSVERBINDER
518	602225508	1	MASTER PLUG 4-POL	ZENTRALSTECKER
519	602225608	1	MASTER PLUG 6-POL	ZENTRALSTECKER
520	10301148	1	PLUG 9-POL PVC	STECKER
521	602319808	1	ATTACHABLE SLEEVE HOUSING VALEO	STECKHUELSENGEHAEUSE
522	11822050	1	PLUG SHELL	STECKERGEHAEUSE
523	602305908	1	FLAT PLUG HOUSING FASTIN-FASTON	FLACHSTECKERGEHAEUSE
524	6001790	1	SOCKET HOUSING 2-POL	STECKDOSENGEHAEUSE
525	10342518	1	SOCKET 2-POL	STECKDOSE

Pos.	Item	Quantity	Description	Bezeichnung
526	7368241	1	CONTACT LOCK 2-POL	KONTAKTVERRIEGELUNG
527	11008024	4	COVER MOLERIT T59	ABDECKUNG
528	617000608	1	FERRITE KLAPPBAR	FERRIT
529	10874331	1	PROTECTING CAP JPT	SCHUTZKAPPE
615	602322808	55	CRIMPING CONTACT 0,2-0,56MM2 SPF	CRIMPKONTAKT
669	10100062	2	CONNECTOR PIN 0,75-2,0MM2 Cu Ni	STECKERSTIFT
670	10100063	4	PLUG BUSHING 0,75-2,0MM2 Cu	STECKERBUCHSE
689	10335819	4	PIN CONTACT 0,2-0,5MM2	STIFTKONTAKT
690	10335820	52	SLEEVE CONTACT 0,2-0,5MM2	BUCHSENKONTAKT
700	10873194	4	SLEEVE CONTACT 0,5-0,75MM2	BUCHSENKONTAKT
708	10473048	2	CABLE SLEEVE 2,4-3,0/2,4/0,6 SILIKON	KABELTUELLE
715	10300944	2	PIN CONTACT 0,5-1MM2MM2 Cu	STIFTKONTAKT
758	11080881	18	RECEPTACLE 6,3X0,5-1,0 VERZINNT	STECKHUELSE
761	7624353	2	PLUG BUSHING 0,5-1,0MM2	STECKERBUCHSE
802	602330808	2	SINGLE STRAND SEALING 1,2-2,1MM BLAU	EINZELADERABDICHTUNG
823	7368253	5	STOPPER PLUG DEUTSCH GROESSE	BLINDSTOPFEN
828	10424625	4	SINGLE STRAND SEALING 1,4-2,1MM VMQ	EINZELADERABDICHTUNG
995	965617208	6	SHIELDING TIED BACK	ABSCHIRMUNG ZURUECKGEB
996	965622108	8	LETTERING WIRE	BESCHRIFTUNG ADER
998	965622208	1	LETTERING WIRING HARNESS	BESCHRIFTUNG KABELBAUM
2238	10875281	6	SLEEVE CONTACT 0,5MM2	BUCHSENKONTAKT
2258	10877343	25	SLEEVE CONTACT 0,5-1MM2	BUCHSENKONTAKT
2259	10877344	5	CONTACT 1,0-2,5MM2	KONTAKT
2998	96014807	2	MACHINING CAN- STUETZP	BEARBEITUNG

Pos.	Item	Quantity	Description	Bezeichnung
5	680000008	1	COUPLING SOCKET 4-POLE SPF	KUPPLUNGSDOSE
6	680000308	1	COUPLING SOCKET 4-POLE 90° SPF	KUPPLUNGSDOSE
7	680000008	1	COUPLING SOCKET 4-POLE SPF	KUPPLUNGSDOSE
9	12100217	3	DATA LINE 2 X 1 FEP SPF	DATENLEITUNG
10	12100217	3	DATA LINE 2 X 1 FEP SPF	DATENLEITUNG
62	602320508	13	RECEPTACLE FOR TABS 0,5-1,5MM2	FLACHSTECKHUELSE
67	602203108	2	RECEPTACLE 2,8X0,3-1,5 VERZ	STECKHUELSE
72	602203408	4	RECEPTACLE 6,3X1-2,5 MESSING VERZINN	STECKHUELSE
121	602300108	27	CONTACT 1-2,5MM2	KONTAKT
125	602300308	118	CONTACT 0,5-1MM2	KONTAKT
134	602303308	2	RECEPTACLE FOR TABS 6,3X0,5-1,5	FLACHSTECKHUELSE
140	602207608	1	RECEPTACLE 6,3X0,5-1,5 SN	STECKHUELSE
202	11082602	5.94	INSULATING HOSE DN6X0,5 PUR SPF	ISOLIERSCHLAUCH
203	11082603	2.77	INSULATING HOSE DN8X0,65 PUR SPF	ISOLIERSCHLAUCH
204	11082604	0.73	INSULATING HOSE DN10X0,65 PUR SPF	ISOLIERSCHLAUCH
224	11124207	0.53	CABLE CONDUIT DN20X0,6 PUR SPF	KABELSCHLAUCH
225	11124208	0.43	CABLE CONDUIT DN25X0,6 PUR SPF	KABELSCHLAUCH
227	11124210	0.88	CABLE CONDUIT DN35X0,6 PUR SPF	KABELSCHLAUCH
261	12104809	20	CABLE TIE 3,6X142-SCHWARZ PA66 SPF	KABELBINDER
305	10870540	160.31	ELECTR.CABLE 1,0	KFZ-LEITUNG
309	10870542	18.45	ELECTR.CABLE 2,5	KFZ-LEITUNG
345	10870539	7.7	ELECTR.CABLE 0,75	KFZ-LEITUNG
500	923512208	29	CABLE MARKER	KABELMARKER
501	602300208	6	PLUG SHELL 18-POL	STECKERGEHAEUSE
502	10099864	3	HOUSING 18-POL	GEHAEUSE
503	602338208	3	SECURING PIN FOR JPT PLUG	SICHERUNGSSTIFT
504	11118242	1	BUSHING HOUSING 1-POL	BUCHSENGEHAEUSE
505	602331308	2	HOUSING 4-POL	GEHAEUSE
506	602209708	2	ATTACHABLE SLEEVE HOUSING 2-POL	STECKHUELSENGEHAEUSE
507	5603876	1	LINE CONNECTOR	LEITUNGSVERBINDER
508	602337008	3	CONNECTOR PLUG A AX	ANSCHLUSSSTECKER
509	602331808	2	PLUG SHELL 2-POLE 9,5A	STECKERGEHAEUSE
510	602325508	1	HOUSING 6-POL	GEHAEUSE
511	602335908	1	PLUG SHELL 4-POL	STECKERGEHAEUSE
512	617000608	1	FERRITE KLAPPBAR	FERRIT
611	602332108	4	SLEEVE CONTACT 0,3-0,89MM2	BUCHSENKONTAKT
689	10335819	4	PIN CONTACT 0,2-0,5MM2	STIFTKONTAKT
690	10335820	6	SLEEVE CONTACT 0,2-0,5MM2	BUCHSENKONTAKT
703	602225914	2	RECEPTACLE 4,8X1,5	STECKHUELSE
708	10473048	1	CABLE SLEEVE 2,4-3,0/2,4/0,6 SILIKON	KABELTUELLE
758	11080881	4	RECEPTACLE 6,3X0,5-1,0 VERZINNT	STECKHUELSE
996	965622108	8	LETTERING WIRE	BESCHRIFTUNG ADER
998	965622208	1	LETTERING WIRING HARNESS	BESCHRIFTUNG KABELBAUM

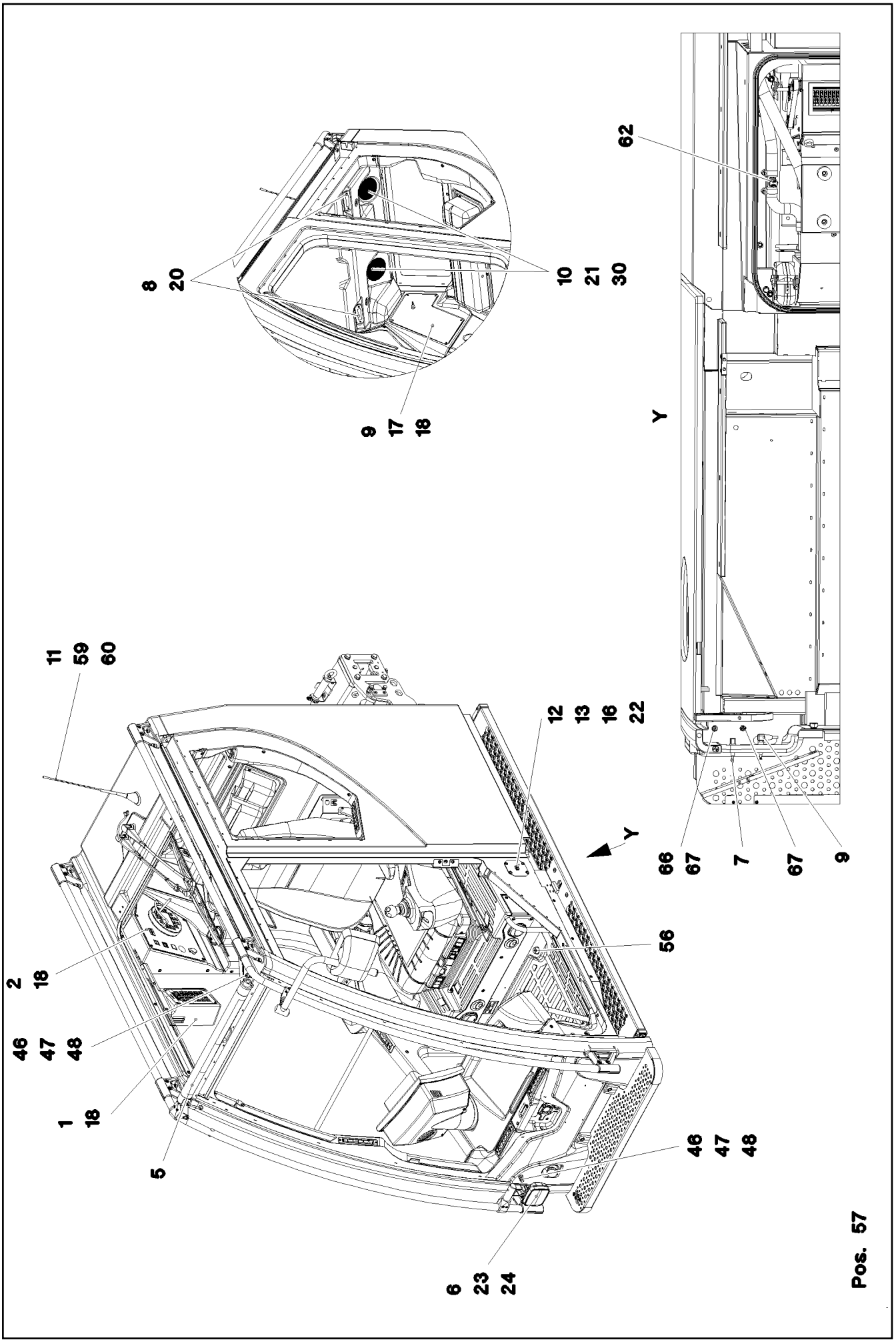
8
20
10
21
30
62
9
17
18
Y
11
59
60
12
13
16
22
Y
66
67
7
67
9
2
18
56
46
47
48
1
18
5
46
47
48
6
23
24
Pos. 57

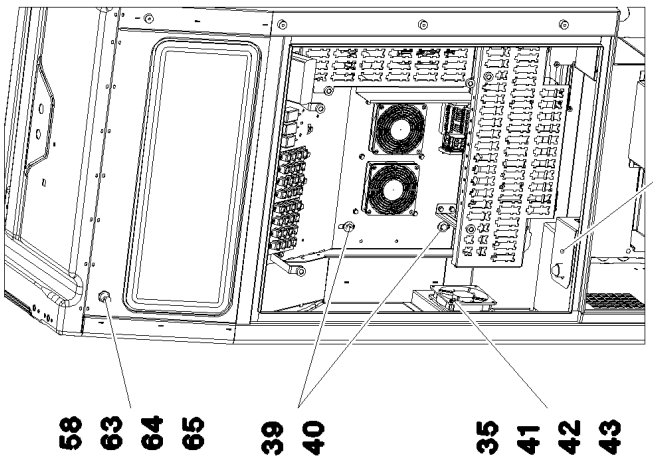
36
37
38
58
63
64
65
39
40
35
41
42
43

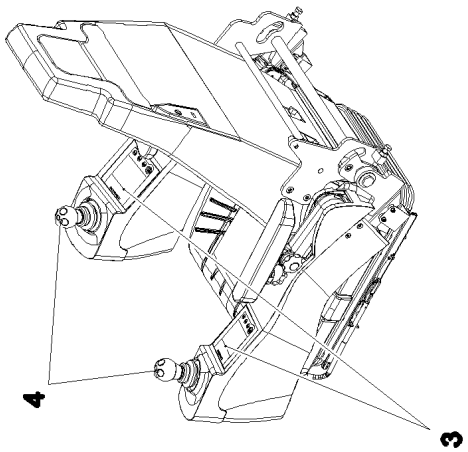
4
3

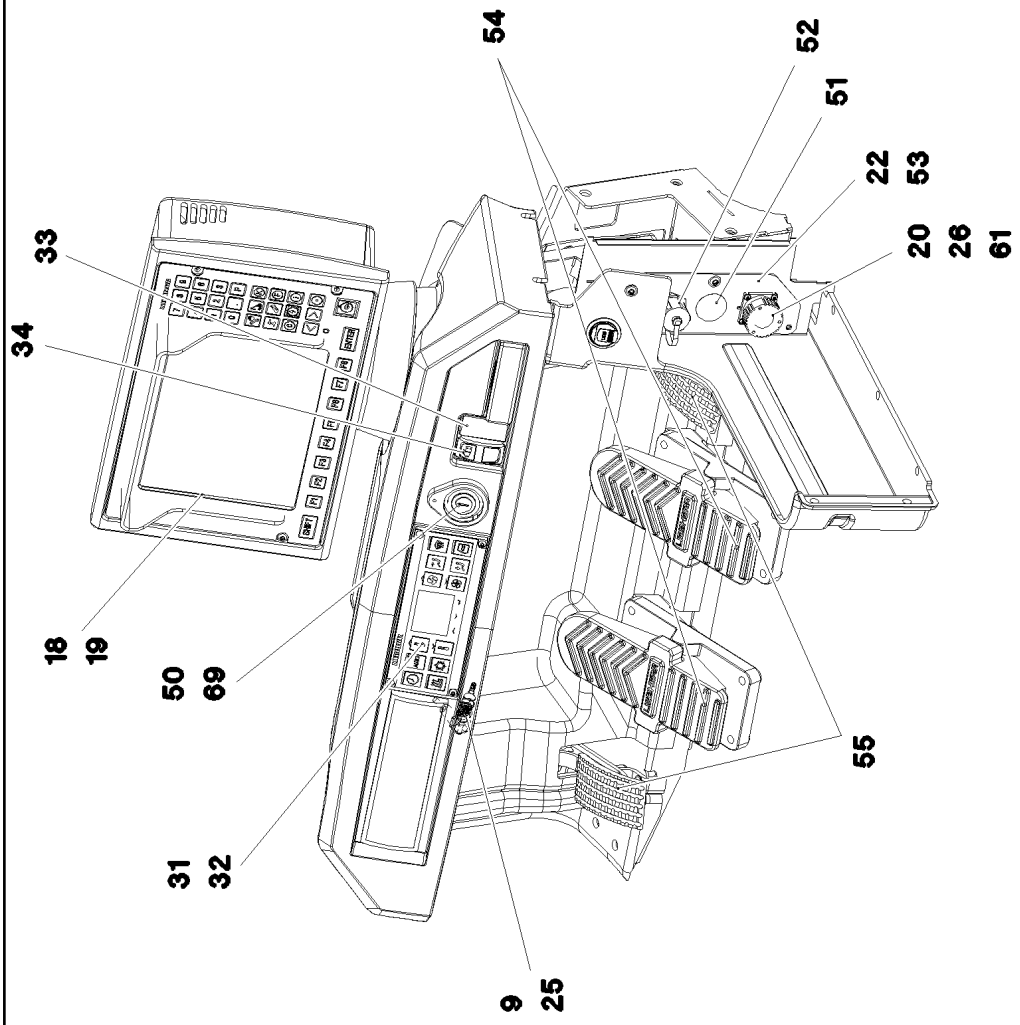
54
52
51
22
53
33
20
26
61
34
18
19
50
69
55
31
32
9
25

Pos.	Item	Quantity	Description	Bezeichnung
1	96030724	1	INSTRUMENT CLUSTER ELECTRICS LSB-BK ⇨ ❑ 469	ELEKTRIK ARMATURENKONSOL
2	96022872	1	CONTROL PANEL ROOF ⇨ ❑ 471	ARMATURENBRETT DACH
3	96052297	2	KEYBOARD UNIT LSB-TE PROG.	TASTATUREINHEIT
(80)	12101942	1	KEYBOARD UNIT LSB-TE-B SPF	TASTATUREINHEIT
(980)	10288121	1	NAME PLATE 70X40 POLYESTER SPF	BEZEICHNUNGSSCHILD
4	10343693	2	JOYSTICK LSB-AMS SPF ⇨ ❑ 472	MEISTERSCHALTER
5	10340105	1	WARNING LIGHT 14W 13-36V SPF ⇨ ❑ 473	WARNLEUCHTE
6	10877828	1	WORK LIGHT 20W 12-24V ALUMINIUM	ARBEITSSCHEINWERFER
7	10424276	1	TEMPERATURE SENSOR -30°C BIS +130°C	TEMPERATURFUEHLER
8	10342854	2	INTERNAL LIGHT 6W 24V WEISS SPF	INNENLEUCHTE
9	10449516	3	PRECISION RESISTOR -40/+125°C SPF	MESSWIDERSTAND
10	10489011	2	LOUDSPEAKER 2,77V 86DBA	LAUTSPRECHER
11	12102817	1	ANTENNA AKTIV	ANTENNE
12	606020708	1	DOOR CONTACT SWITCH	TUERKONTAKTSCHALTER
13	978172508	1	SEAL 90X97X5 POLYALEFIN	DICHTUNG
16	976167908	1	PLATE 1.5X90X96 DC01 RAL 9005,M,GT SPF	BLECH
17	965417108	1	PLATE WELDED RAL 9005,M,GT SPF	BLECH SCHWK.
18	10875474	18	BUTTON HEAD SCREW ISO 7380-2 M5X16 0	HALBRUNDKOPFSCHRAUBE
19	96033140	1	LICCON CONSOLE LSB-BSE LCD5C-A PROG	LICCON MONITOR LSB-BSE
(80)	10886525	1	LICCON CONSOLE LCD5C-A LSB-BSE	LICCON MONITOR LCD5C-A
(980)	10288121	1	NAME PLATE 70X40 POLYESTER SPF	BEZEICHNUNGSSCHILD
20	10875482	8	BUTTON HEAD SCREW ISO 7380-2 M3X10 0	HALBRUNDKOPFSCHRAUBE
21	10875483	8	BUTTON HEAD SCREW ISO 7380-2 M5X10 0	HALBRUNDKOPFSCHRAUBE
22	10875468	7	BUTTON HEAD SCREW AEHNL.ISO 7380-2	HALBRUNDKOPFSCHRAUBE
23	10197730	1	HEX SCREW ISO 4017 M10X20 8.8 ZNNI-480	SECHSKANTSCHRAUBE
24	10011658	1	WASHER A 10X20X2 200HV-St MAN183-B1	SCHEIBE
25	10875633	1	HEX NUT ISO 8675 M12X1,0 04 480H SPF	SECHSKANTMUTTER
26	10876399	4	HEX NUT DIN 985 M3 8 480H SPF	SECHSKANTMUTTER
30	10197808	8	WASHER ISO 7089 5 200HV ZNNI-480H	SCHEIBE
31	10874785	1	KEYBOARD UNIT SPF	TASTATUREINHEIT
32	10875017	4	BUTTON HEAD SCREW ISO 7380-1 M4X10 0	HALBRUNDKOPFSCHRAUBE
33	11822051	1	BLANK COVER	BLINDABDECKUNG
34	10876030	1	PILOT LAMP 24V	MELDELEUCHTE
35	963398008	1	PREMOUNT.AXIAL FLOW FAN UPPER ⇨ ❑ 474	AXIALLUEFTER VORM.OBEN
36	966980708	2	SCREENING	ABSCHIRMUNG
(1)	97013718	1	PLATE 1.5X110X178 DC01 FE//ZNNI8//CN//T	BLECH
(2)	10875645	4	WASHER ISO 7089 4 200HV 480H SPF	SCHEIBE
(3)	11690047	2	HEX SCREW ISO 4017 M4X10 8.8 480H SPF	SECHSKANTSCHRAUBE
37	10424210	2	CLAMP EMVFSK 1 FEDERSTAHL	KLAMMER
38	602042808	2	CLAMP EMVSK 12	KLAMMER
39	11656991	6	HEX SCREW EN 1665 M8X12 8.8 480H SPF	SECHSKANTSCHRAUBE
40	11140469	6	WASHER ISO 7093-1 8 200HV 480H SPF	SCHEIBE
41	408401901	4	PAN-HEAD SCREW ISO 7045 M4X40 4.8 A2	FLACHKOPFSCHRAUBE
42	10875645	4	WASHER ISO 7089 4 200HV 480H SPF	SCHEIBE
43	425220708	4	SERRATED LOCK WASHER DIN 6798 J 4.3	FAECHERSCHEIBE
46	502923708	2	COMPRESSION RING	DRUCKRING
47	726411508	2	O-RING 14X2 NBR70	O-RING
48	10428532	2	CABLE GLAND M16X1,5X4-11 MS VERNICK	KABELVERSCHRAUBUNG
50	10335557	1	IGNITION STARTER SWITCH 3S SPF	ZUENDSTARTSCHALTER
51	591570908	1	COVER LID POLYSTIC27-33 ABS	ABDECKKAPPE
52	966979108	1	SOCKET ETHERNET ⇨ ❑ 475	STECKDOSE
53	97022452	1	PLATE 2.5X71X196 DC01 RAL 9005,M,GT SP	BLECH
54	10297310	2	FOOT ROCKER SPF	FUSSWIPPE
55	10343484	2	PEDAL TRANSDUCER 20° SPF	PEDALGEBER

Pos.	Item	Quantity	Description	Bezeichnung
56	96023875	1	FOOT SWITCH CPL.	FUSSTASTER KPL.
(10)	96023876	1	WIRING HARNESS W346	KABELSTRANG
57	11060128	2	TRANSPONDER SPF	TRANSPONDER
58	10354584	1	INDUCTIVE SENSOR BERUEHRUNGSLOS	INDUKTIVSENSOR
59	11114971	1	ANTENNA CABLE 1-5M	ANTENNENKABEL
60	10876819	1	ANTENNA CABLE 1,27-2M SEIDENMATT	ANTENNENKABEL
61	10331026	1	COVER	DECKEL
62	11080088	1	THERMAL SWITCH BERUEHRUNGSLOS	THERMOSCHALTER
63	591063508	1	WASHER	SCHEIBE
64	710207408	1	WASHER 20,2X25X3XA GUMMI	SCHEIBE
65	530609208	1	WASHER DIN 433 19 140HV A3C	SCHEIBE
66	97051324	1	ADAPTOR 19.0X17 S235JRC+C FE//ZNNI8//C	ADAPTER
67	602424008	2	CABLE GLAND M12X1,5X2-8 MS	KABELVERSCHRAUBUNG
69	10870472	1	ORIFICE	BLENDE

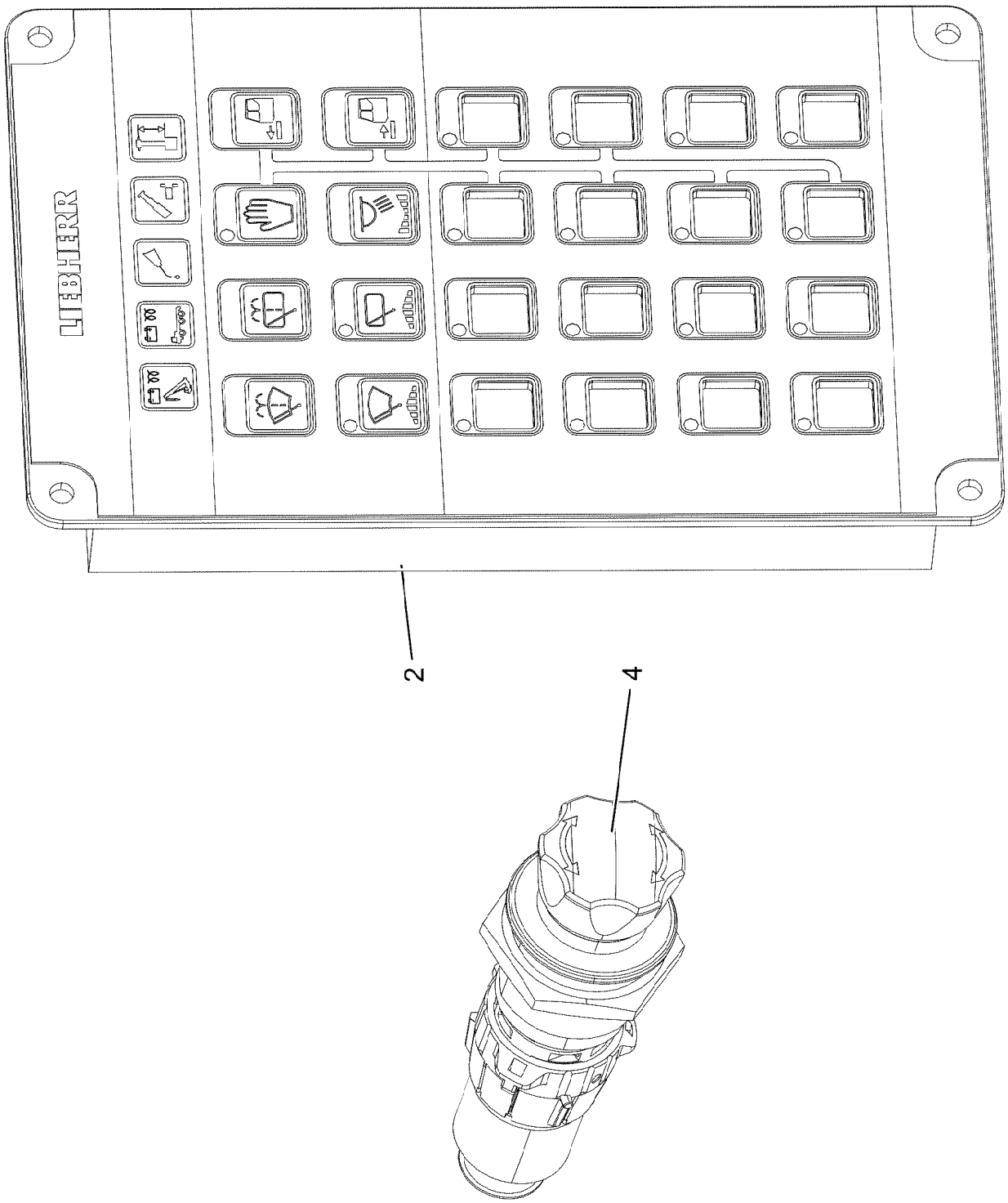
LIEBHERR
2
4

Pos.	Item	Quantity	Description	Bezeichnung
2	10816196	1	KEYBOARD UNIT SPF	TASTATUREINHEIT
4	967260908	1	EMERGENCY CUT-OFF CRANE DRIVER	NOTAUS KRANFUEHRERKABIN
(2)	606144108	1	EMERGENCY STOP BUTTON	NOT-AUS TASTE
(3)	11100197	1	TOUCH CONTACT TRANSMITTER 1OE+1S	TASTKONTAKTGEBER

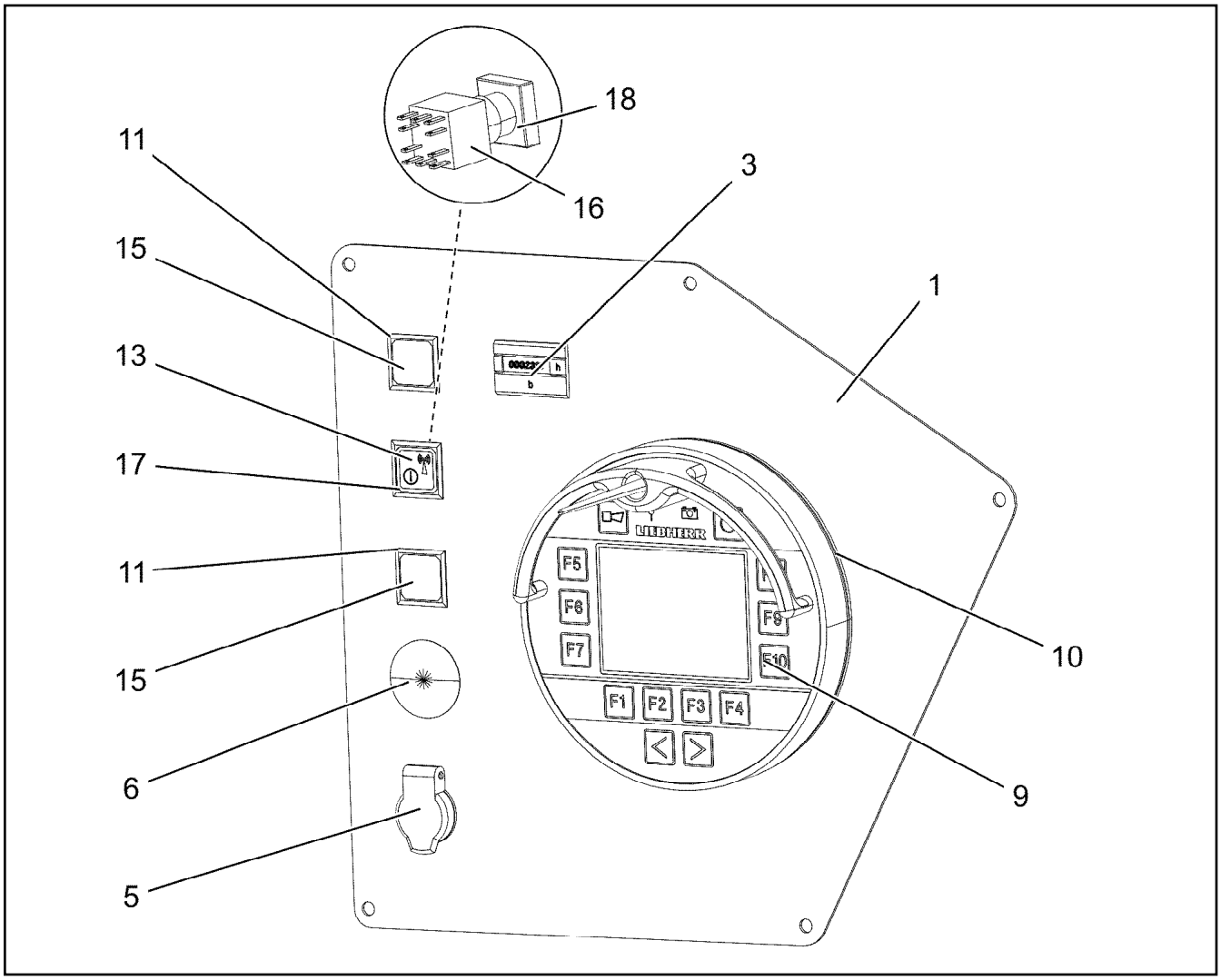

Pos.	Item	Quantity	Description	Bezeichnung
1	96022873	1	PLATE WELDED RAL 9005,M,GT SPF	BLECH SCHWK.
3	691798508	1	OPERATING HOURS COUNTER STUNDEN	BETRIEBSSTUNDENZAEHLER
5	605203908	1	BUILT-IN SOCKET 2-POL	EINBAUSTECKDOSE
6	591570908	1	COVER LID POLYSTIC27-33 ABS	ABDECKKAPPE
9	96033227	1	BTT PROGRAMMED BTTC	BTT PROGRAMMIERT
(1)	11160970	1	REMOTE CONTROL TRANSMITTER SPF	FERNSTEUERSENDER
(2)	10288121	1	NAME PLATE 70X40 POLYESTER SPF	BEZEICHNUNGSSCHILD
(3)	11007853	1	LABELS 10X90 POLYESTER	ETIKETTEN
10	10412777	1	CHARGING UNIT BTT SPF	LADEEINHEIT
11	606143508	2	INDICATOR LAMP	LEUCHTMELDER
13	607008708	1	LIGHT BULB 1,2W 30V	GLUEHLAMPE
15	606144008	2	KEYPAD BUTTON	TASTE
16	606143208	1	TOUCH CONTACT TRANSMITTER 1OE+1S	TASTKONTAKTGEBER
17	606144408	1	PUSH-BUTTON CAP FLACH KLAR	TASTERKAPPE
18	606143008	1	PUSH BUTTON	DRUCKTASTE

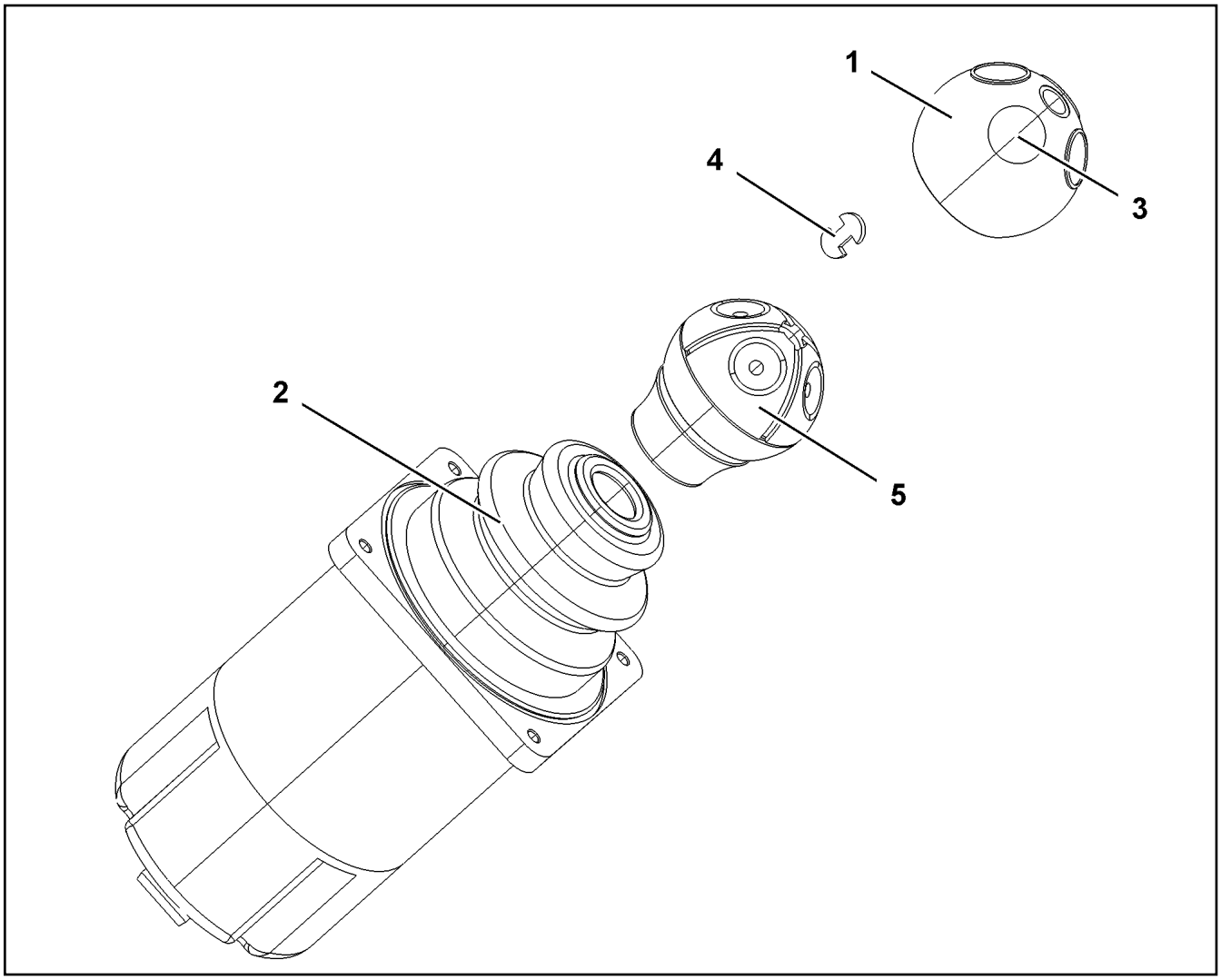

Pos.	Item	Quantity	Description	Bezeichnung
1	571824708	1	HANDLE CAP	GRIFFKAPPE
2	571912308	1	RUBBER BELLOWS	FALTENBALG
3	10335596	4	MICRO SWITCH	MIKROSCHALTER
4	10678848	2	CIRCLIP FUER GRIFFKAPPE	SICHERUNGSCLIP
5	10873517	1	SPARE PARTS SET GRIFF	ERSATZTEILSATZ

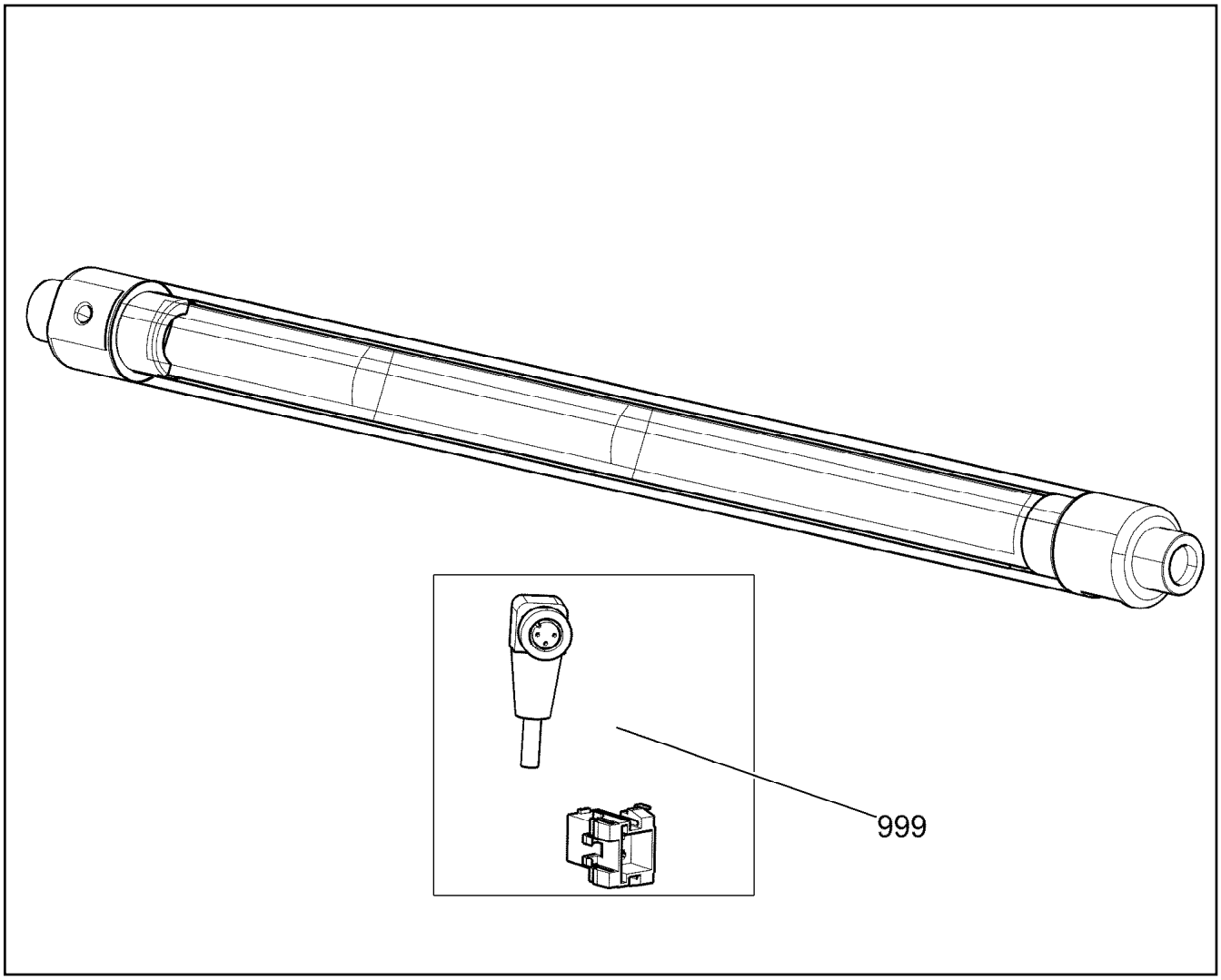

Pos.	Item	Quantity	Description	Bezeichnung
999	967363808	1	RK CABLE LOOM	RS KABELSATZ

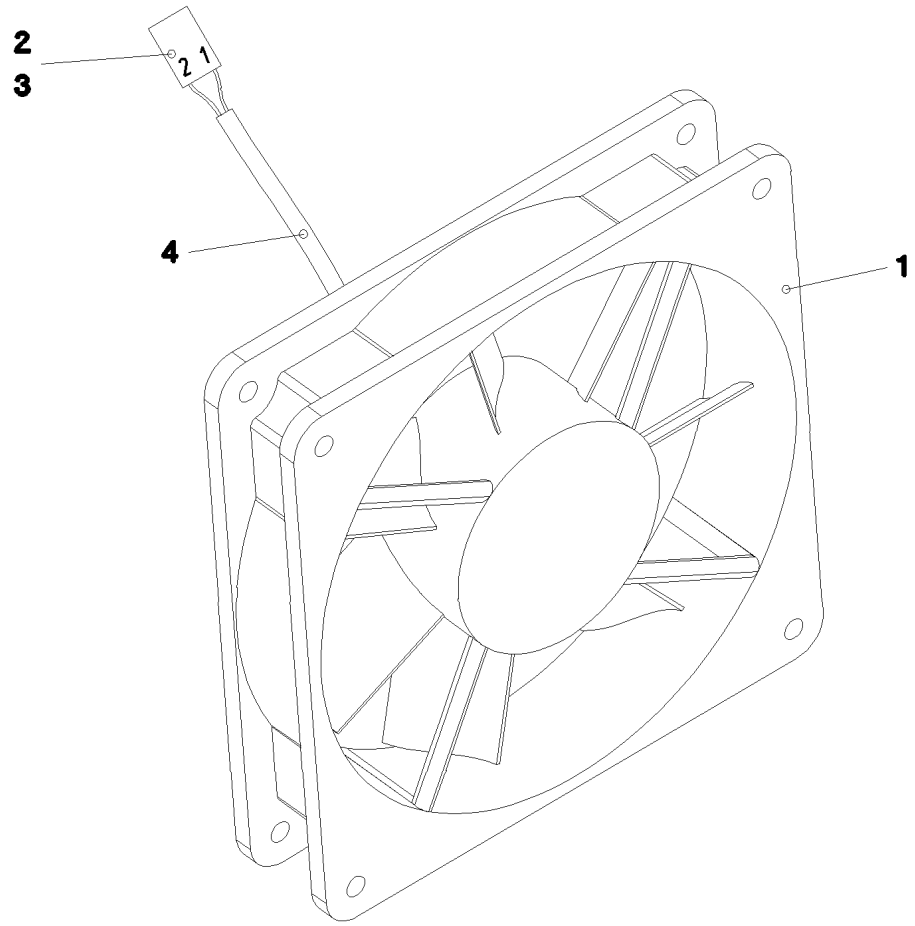

Pos.	Item	Quantity	Description	Bezeichnung
1	10222682	1	AXIAL FAN 24V	AXIALLUEFTER
2	602304808	2	FLAT PLUG	FLACHSTECKER
3	602305908	1	FLAT PLUG HOUSING FASTIN-FASTON	FLACHSTECKERGEHAEUSE
4	11082601	0.28	INSULATING HOSE DN4X0,5 PUR SPF	ISOLIERSCHLAUCH

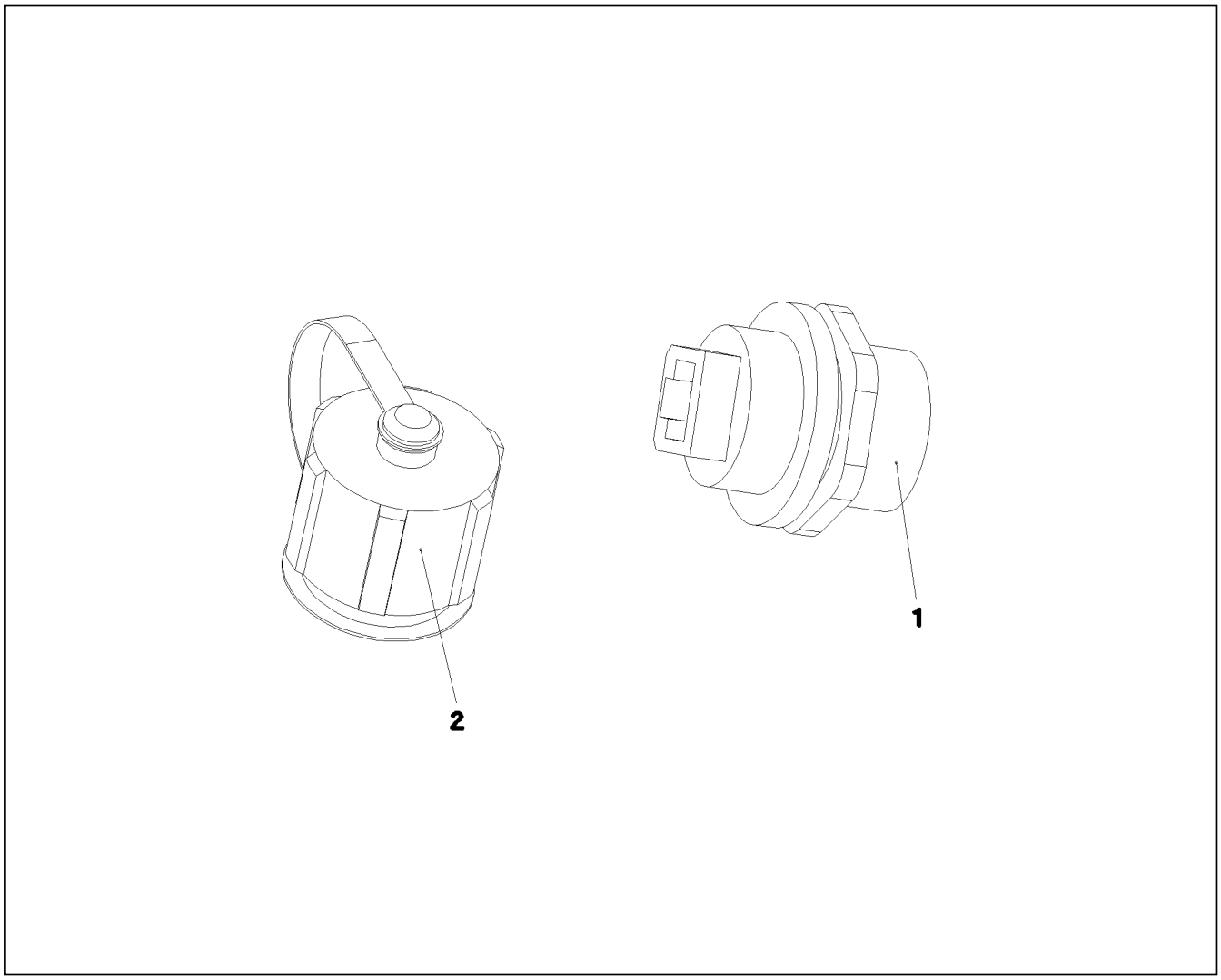

Pos.	Item	Quantity	Description	Bezeichnung
1	11008529	1	SOCKET 8-POL	STECKDOSE
2	11008530	1	PROTECTING CAP NETZW. RJ45/USB	SCHUTZKAPPE

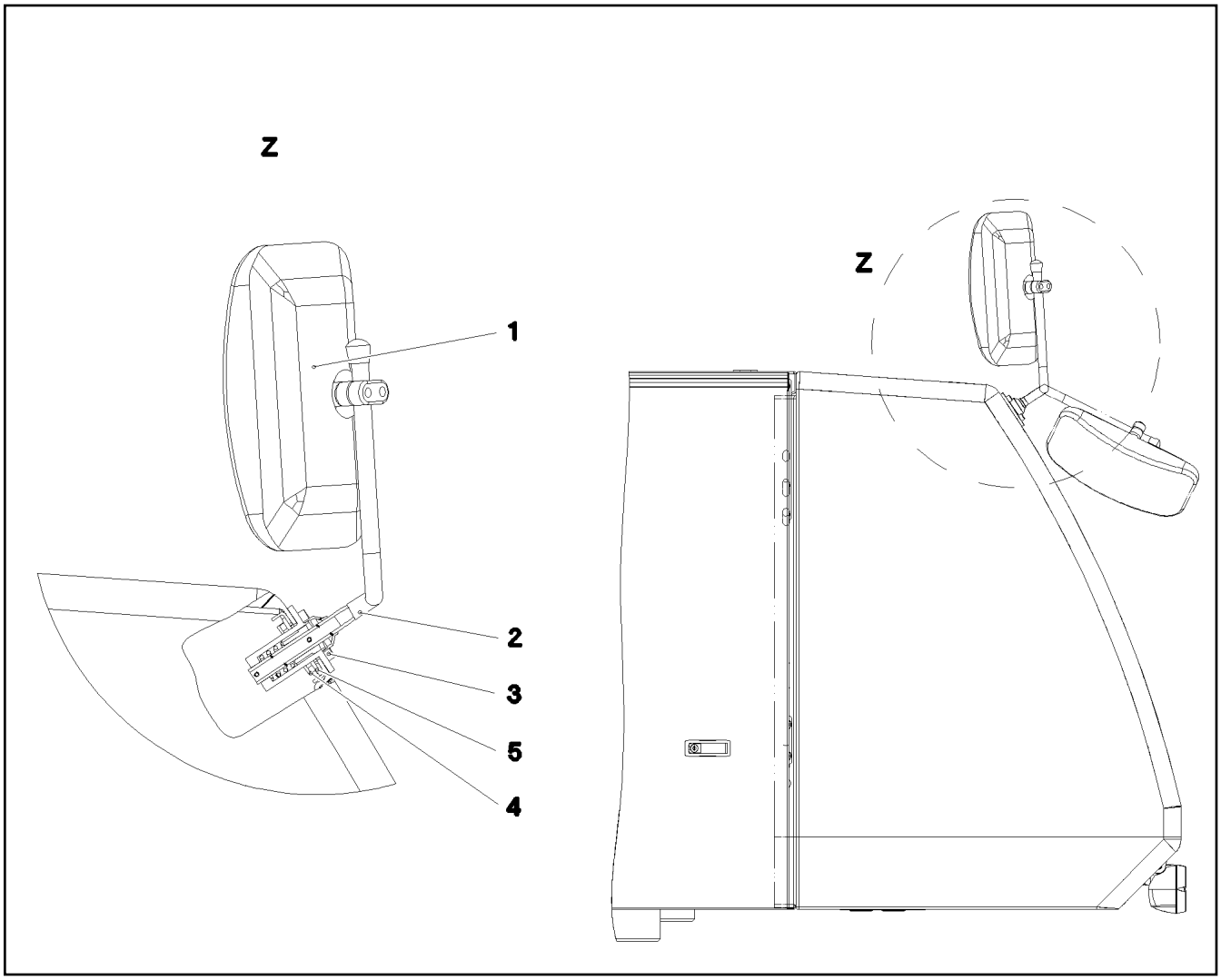

Pos.	Item	Quantity	Description	Bezeichnung
1	591070908	1	WIDE ANGLE MIRROR 316X178	WEITWINKELSPIEGEL
(1)	10675116	1	PLATE GLAS 315X178	SPIEGELGLAS
2	966707708	1	MIRROR RETAINER PRE-ASS. ⇨ ❑ 477	SPIEGELHALTER VORM.
3	10875599	4	SOCKET HEAD SCREW ISO 4762 M8X25 8.8	ZYLINDERSCHRAUBE
4	10875614	4	HEX NUT DIN 985 M8 8 480H SPF	SECHSKANTMUTTER
5	11840501	4	WASHER DIN 7349 8,4 200HV 480H SPF	SCHEIBE

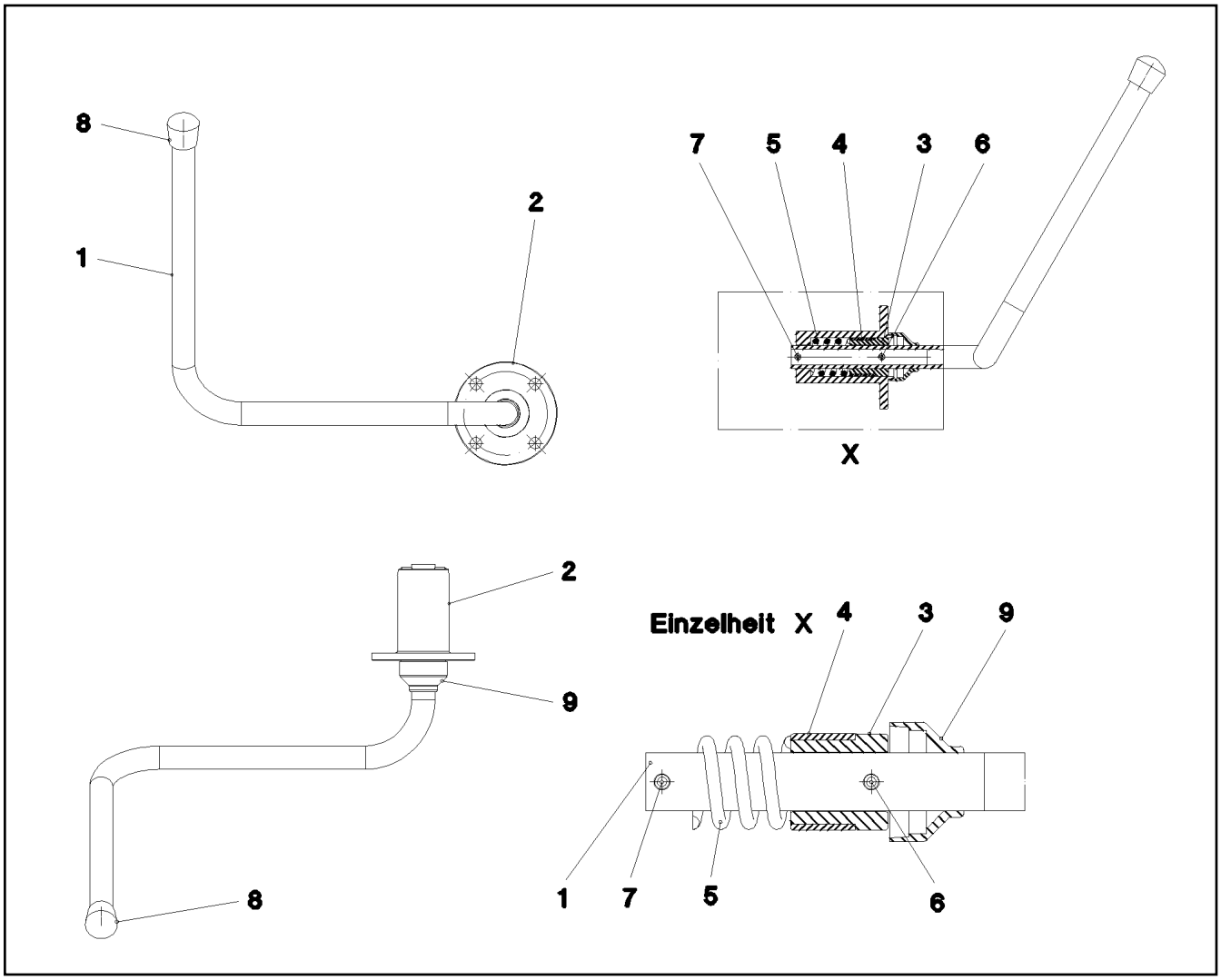

Pos.	Item	Quantity	Description	Bezeichnung
1	97008549	1	TUBE 18.0X622 X5CRNI18-10	ROHR
2	97008548	1	GUIDE 80.0X76 35NICRMOV125 SPF	FUEHRUNG
3	973998708	1	BUSHING 35.0X30 42CRMO4+QT SPF	BUCHSE
4	10215893	1	FRICTION BEARING 30X20 KUNSTSTOFF W	GLEITLAGER
5	11003426	1	COMPRESSION SPRING 4X25X41 EN 10270-	DRUCKFEDER
6	12100669	1	DOWEL PIN ISO 8752 5X28 480H SPF	SPANNSTIFT
7	12102738	1	DOWEL PIN ISO 8752 5X36 A2	SPANNSTIFT
8	591064408	1	CAP	KAPPE
9	10215892	1	COVER LID 36X22 PVC-SW	ABDECKKAPPE

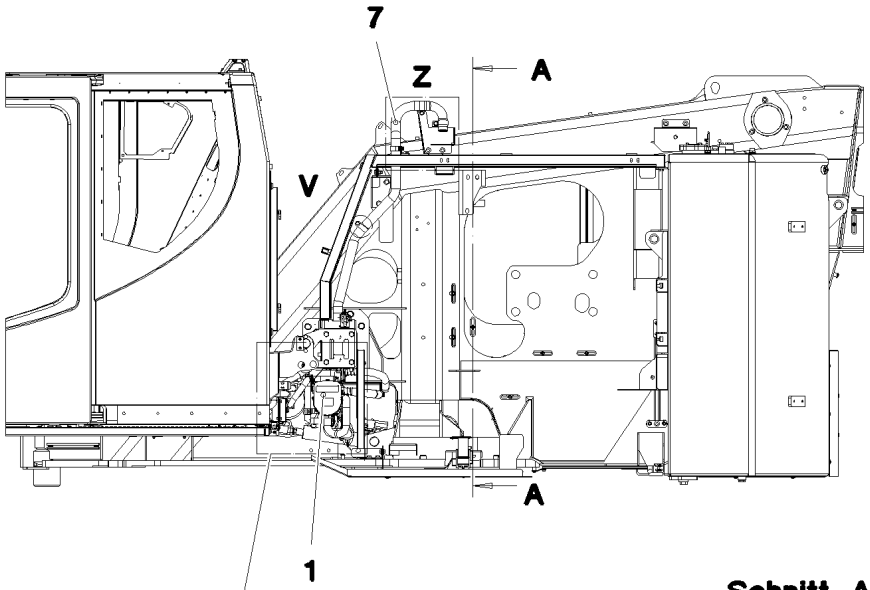

Einzelheit Z

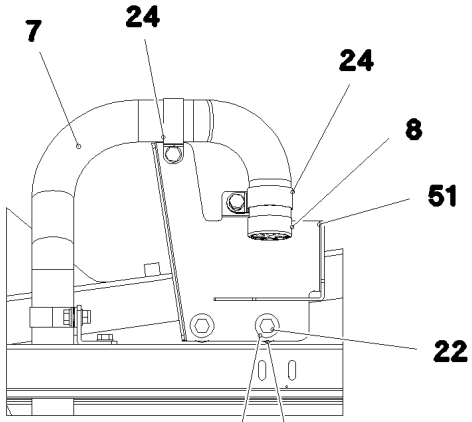

Einzelheit V

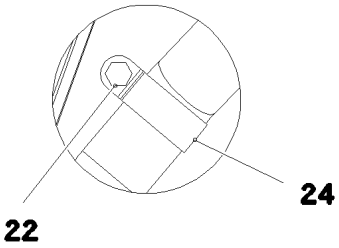

Einzelheit X

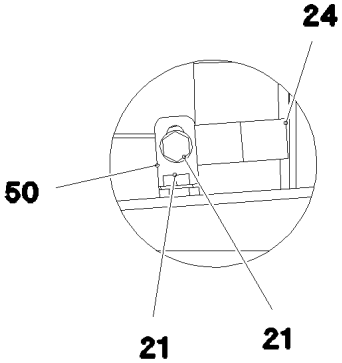

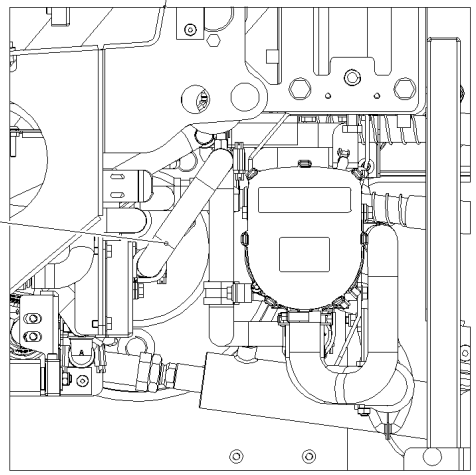

Schnitt A–A

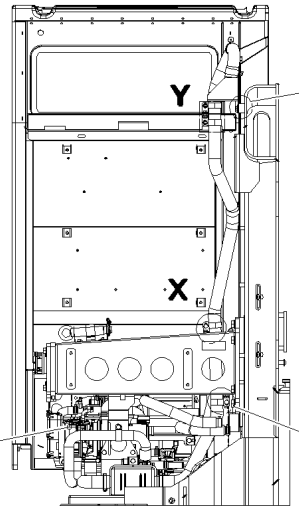

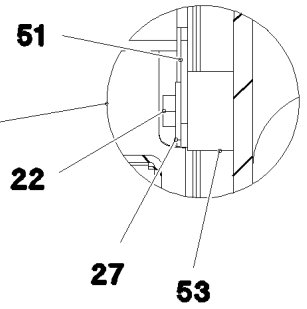

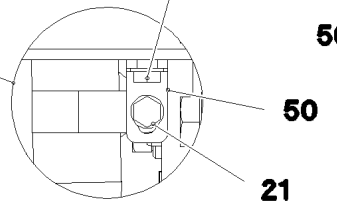

Einzelheit Y

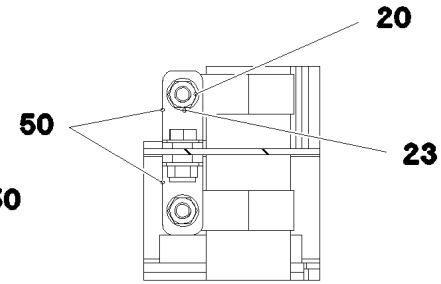

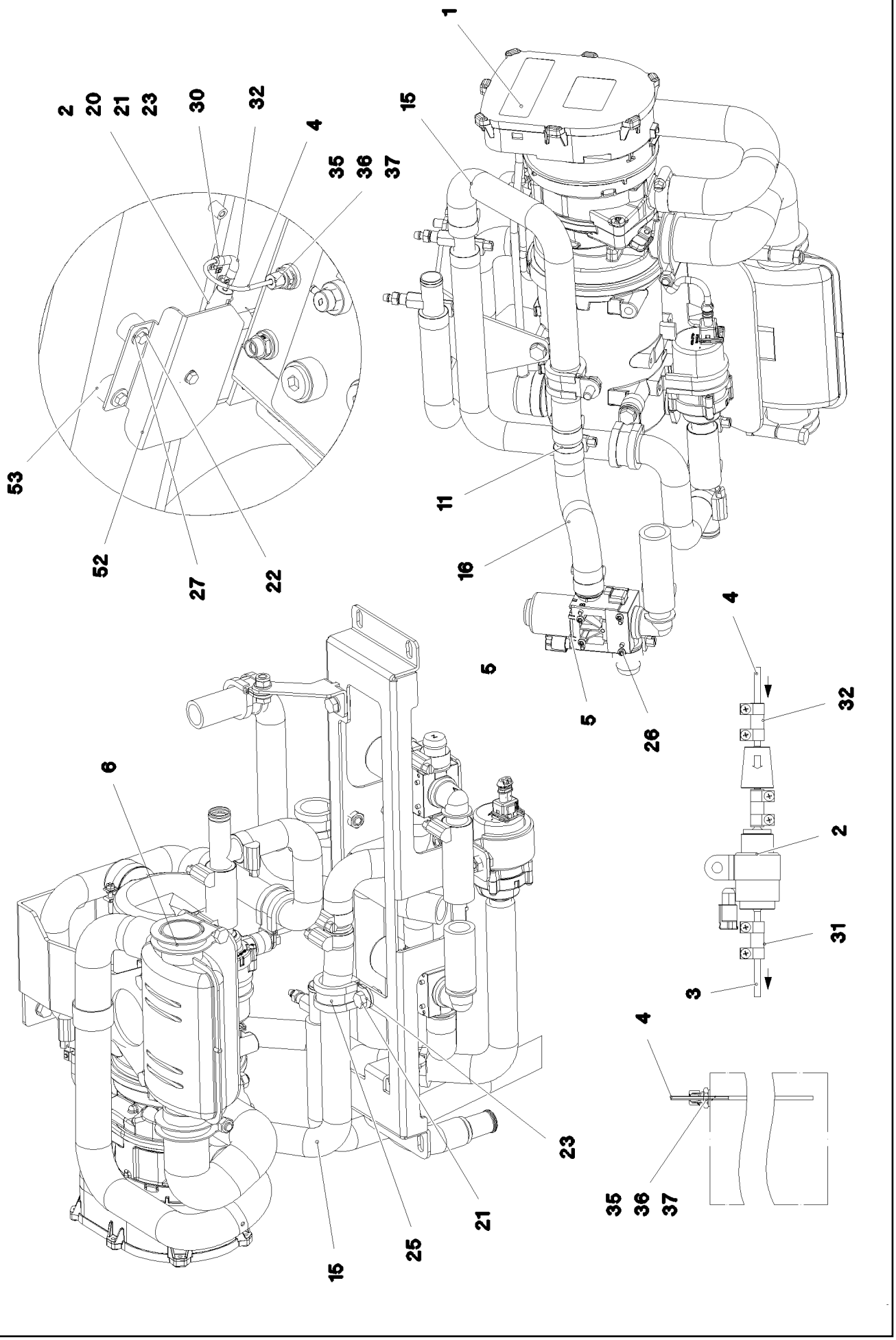
1
2
20
21
23
30
32
4
35
36
37
15
53
52
27
22
11
16
5
5
26
4
32
2
31
3
6
23
21
25
15
4
35
36
37

Pos.	Item	Quantity	Description	Bezeichnung
1	96020359	1	ADDNL.HEATING, PRE-ASSEMBLED ⇨ ❑ 481	ZUSATZHEIZUNG VORM.
2	11110051	1	DOSING PUMP DP42.4 HD ⇨ ❑ 485	DOSIERPUMPE
3	11626108	5	FUEL PIPING 5X1 PA12 ETFP	BRENNSTOFFLEITUNG
4	11626108	1.65	FUEL PIPING 5X1 PA12 ETFP	BRENNSTOFFLEITUNG
5	10343003	1	SOLENOID VALVE	MAGNETVENTIL
6	553054208	1	TERMINAL CLIP 40,5/39-42	KLEMMSCHELLE
7	553054108	1.995	EXHAUST PIPE 38/FLEXIBEL	ABGASROHR
8	553174108	1	END CAP 42,3	ENDKAPPE
11	11000700	1	CONNECTING PIPE 0	VERBINDUNGSROHR
14	11621770	0.1	COOLING WATER HOSE DN20-CONTI-KWS	KUEHLWASSERSCHLAUCH
15	97050852	1	FORM HOSE DN20 X3.5 B SPF	FORMSCHLAUCH
16	97042069	1	FORM HOSE DN20 X3.5 B SPF	FORMSCHLAUCH
19	11118077	6	HOSE CLAMP 21/16-27/12 W3	SCHLAUCHSCHELLE
20	10875614	8	HEX NUT DIN 985 M8 8 480H SPF	SECHSKANTMUTTER
21	11651767	13	HEX SCREW ISO 4017 M8X20 8.8 480H SPF	SECHSKANTSCHRAUBE
22	11651612	5	HEX SCREW ISO 4017 M8X16 8.8 480H SPF	SECHSKANTSCHRAUBE
23	12103465	21	WASHER ISO 7089 8 300HV ZNNI-480H SPF	SCHEIBE
24	774221708	7	PIPE CLAMP 43/20	ROHRSCHELLE
25	11481080	1	CLAMP DIN 3016-1 28X20XD1 W5-CR	SCHELLE
26	10875795	4	TALLOW-DROP SCREW 4X10 10.9 P3E	LINSENKOPFSCHRAUBE
27	11140469	4	WASHER ISO 7093-1 8 200HV 480H SPF	SCHEIBE
30	553102308	5	HOSE CLAMP 10/9,5-10,5/9 EDELSTAHL	SCHLAUCHSCHELLE
31	553191108	0.06	FUEL HOSE DN4,5-NBR NBR/CR RAL 8022	KRAFTSTOFFSCHLAUCH
32	10815777	1	FUEL HOSE DN4,5	KRAFTSTOFFSCHLAUCH
35	288182508	1	CLAMPING RING RD10X12 PA6G	KLEMMRING
36	471039308	1	FITTING GE 8L M18X1,5 CR6-FREI	VERSCHRAUBUNG
37	477401408	1	BOX NUT AL8 CR6-FREI	UEBERWURFMUTTER
50	97033103	4	PLATE 4X73X20 S315MC FE//ZNNI8//CN//T0	BLECH
51	97033925	1	PLATE 3X283X263 DC01 FE//ZNNI8//CN//T0	BLECH
52	97034243	1	PLATE 3X195X183 DC01 FE//ZNNI8//CN//T0	BLECH
53	978787708	4	SLEEVE 33.0X19 FE//ZNNI8//CN//T0	HUELSE

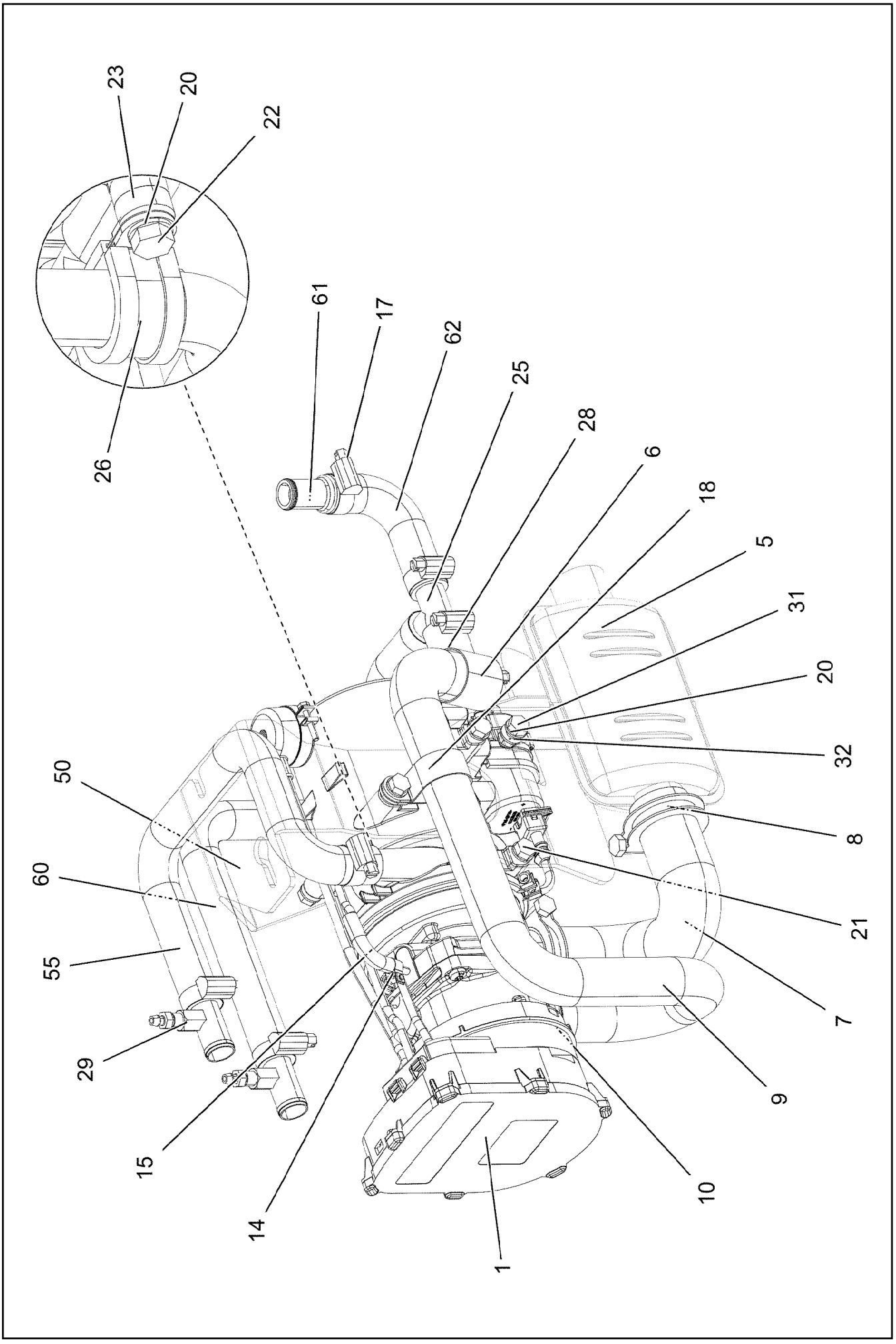

18.7.2022 094587	**etk_en_de_047654 LTR 1220**	481 (1/2)
LIEBHERR	**ADDNL.HEATING, PRE-ASSEMBLED** **ZUSATZHEIZUNG VORM.**	**96020359**

Pos.	Item	Quantity	Description	Bezeichnung
1	10876576	1	WATER HEATING SYSTEM 24V ⇨ ❑ 483	WASSERHEIZGERAET
5	553187208	1	EXHAUST MUFFLER 116/55X150	ABGASSCHALLDAEMPFER
6	553181108	1	END CAP 34	ENDKAPPE
7	553054108	0.25	EXHAUST PIPE 38/FLEXIBEL	ABGASROHR
8	553054208	2	TERMINAL CLIP 40,5/39-42	KLEMMSCHELLE
9	553159408	0.62	TUBE 30/FLEXIBEL PAK	ROHR
10	774208508	1	HOSE CLAMP 32/25-40/12 W3	SCHLAUCHSCHELLE
14	553102308	1	HOSE CLAMP 10/9,5-10,5/9 EDELSTAHL	SCHLAUCHSCHELLE
15	10815777	1	FUEL HOSE DN4,5	KRAFTSTOFFSCHLAUCH
17	11118077	8	HOSE CLAMP 21/16-27/12 W3	SCHLAUCHSCHELLE
18	774225008	1	PIPE CLAMP 33/20	ROHRSCHELLE
20	12103465	7	WASHER ISO 7089 8 300HV ZNNI-480H SPF	SCHEIBE
21	11651612	4	HEX SCREW ISO 4017 M8X16 8.8 480H SPF	SECHSKANTSCHRAUBE
22	11692827	1	HEX SCREW ISO 4017 M8X35 8.8 480H SPF	SECHSKANTSCHRAUBE
23	12214460	2	WASHER DIN 7989-2 A 10 100HV FLZN SPF	SCHEIBE
25	10872612	1	TEE 20X20 L=90	T-STUECK
26	11481080	1	CLAMP DIN 3016-1 28X20XD1 W5-CR	SCHELLE
28	11621770	0.07	COOLING WATER HOSE DN20-CONTI-KWS	KUEHLWASSERSCHLAUCH
29	11622218	2	VENTILATION VALVE	ENTLUEFTUNGSVENTIL
31	11651767	1	HEX SCREW ISO 4017 M8X20 8.8 480H SPF	SECHSKANTSCHRAUBE
32	10875614	1	HEX NUT DIN 985 M8 8 480H SPF	SECHSKANTMUTTER
50	97029040	1	PLATE 4X519X204 S315MC FE//ZNNI8//CN//T	BLECH
55	97060786	1	FORM HOSE DN20 X3.5 B SPF	FORMSCHLAUCH
60	97060781	1	FORM HOSE DN20 X3.5 B SPF	FORMSCHLAUCH
61	11000700	1	CONNECTING PIPE 0	VERBINDUNGSROHR
62	97042067	1	FORM HOSE DN20 X3.5 B SPF	FORMSCHLAUCH

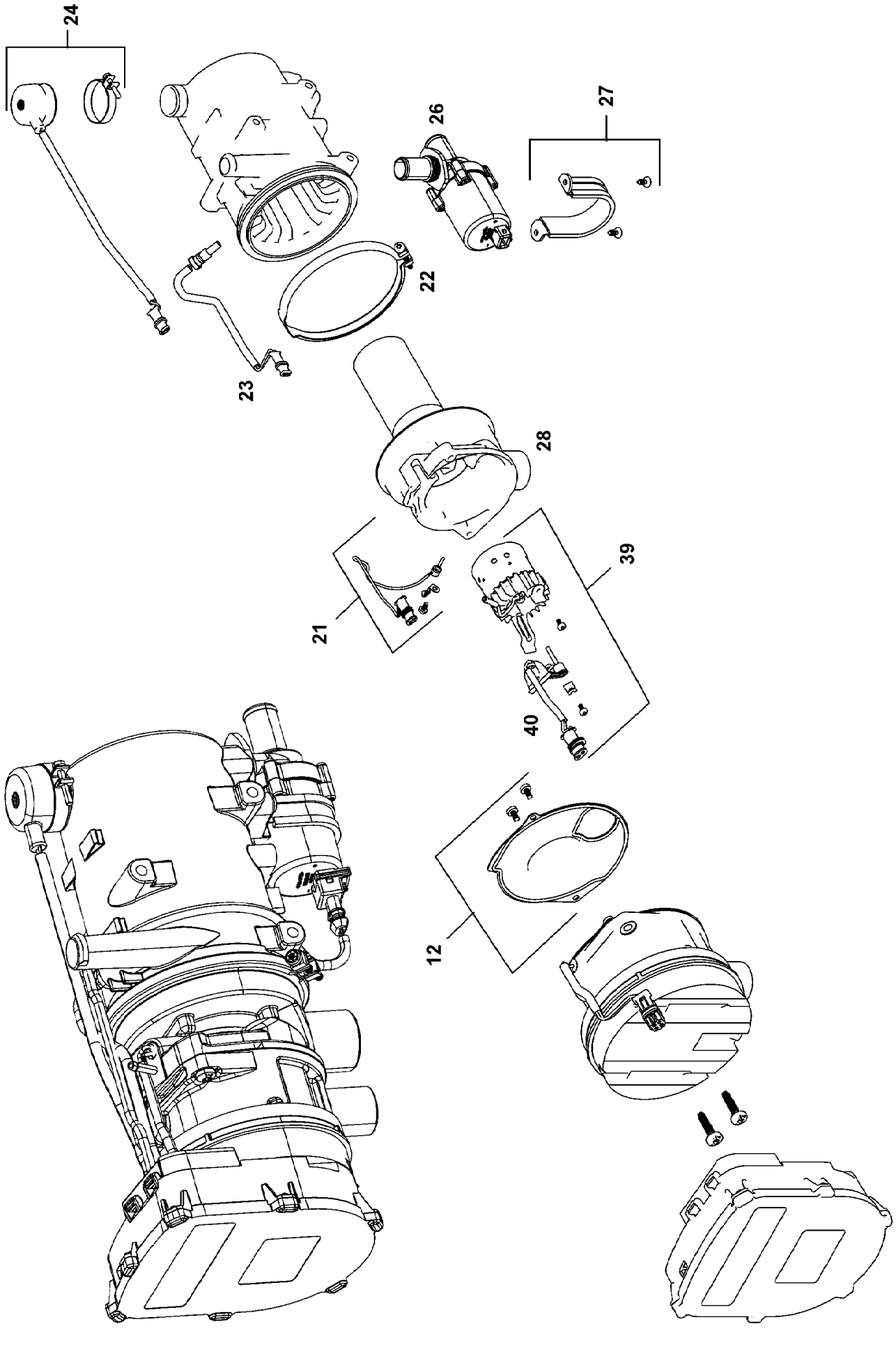
24
26
27
22
23
28
39
21
40
12

Pos.	Item	Quantity	Description	Bezeichnung
12	11826653	1	SEAL	DICHTUNG
21	11826650	1	TEMPERATURE SENSOR	TEMPERATURSENSOR
22	12222896	1	RETAINER CLIP 129	SPANNSCHELLE
23	10290126	1	TEMPERATURE SENSOR	TEMPERATURFUEHLER
24	10290127	1	OVERHEAT PROTECTION	UEBERHITZUNGSSCHUTZ
26	11622224	1	CIRCULATING PUMP	UMWAELZPUMPE
27	11826654	1	MOUNTING PARTS	MONTAGETEILE
28	11826647	1	TORCH TIP	BRENNERKOPF
39	11826648	1	BURNER 24V	BRENNER
40	11826649	1	PENCIL-TYPE GLOW PLUG	GLUEHSTIFT
999	96004475	1	REPAIR KIT WATER HEATING DEV	RS WASSERHEIZGERAET
(3)	11826653	1	SEAL	DICHTUNG
(4)	11826650	1	TEMPERATURE SENSOR	TEMPERATURSENSOR
(5)	10290126	1	TEMPERATURE SENSOR	TEMPERATURFUEHLER
(6)	10290127	1	OVERHEAT PROTECTION	UEBERHITZUNGSSCHUTZ
(7)	11622224	1	CIRCULATING PUMP	UMWAELZPUMPE
(8)	11826647	1	TORCH TIP	BRENNERKOPF
(9)	11826648	1	BURNER 24V	BRENNER
(10)	11826649	1	PENCIL-TYPE GLOW PLUG	GLUEHSTIFT

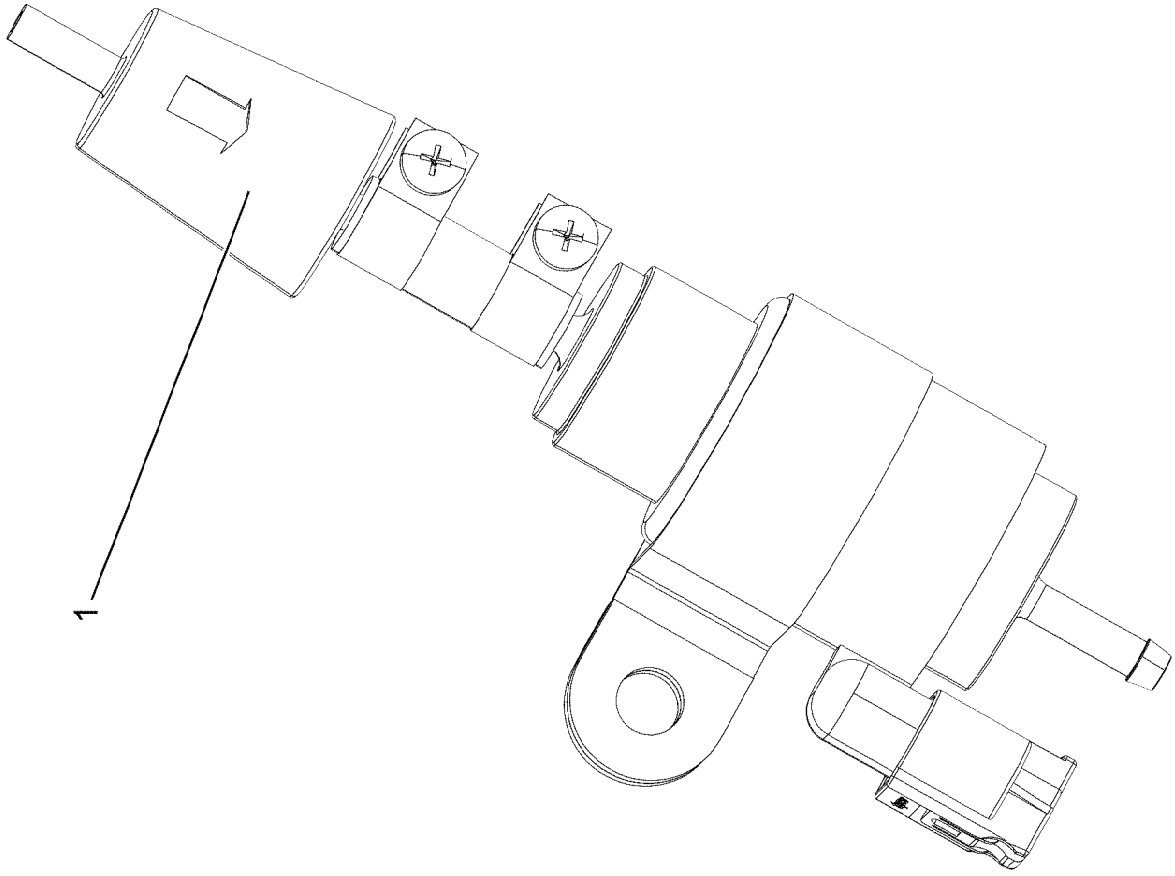
1

Pos.	Item	Quantity	Description	Bezeichnung
1	553174008	1	FUEL FILTER	KRAFTSTOFFFILTER

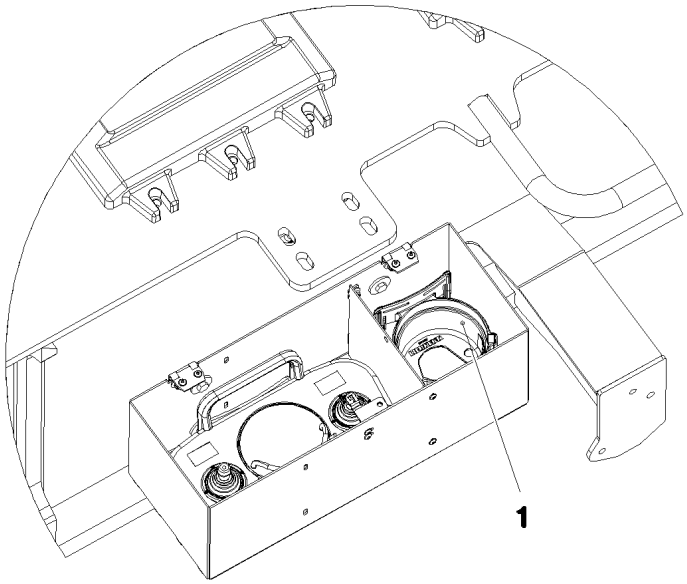

Pos.	Item	Quantity	Description	Bezeichnung
1	11212257	1	BELT CARRIER SYSTEM LSB-BTT ⇨ ❑ 488	GURTTRAGESYSTEM

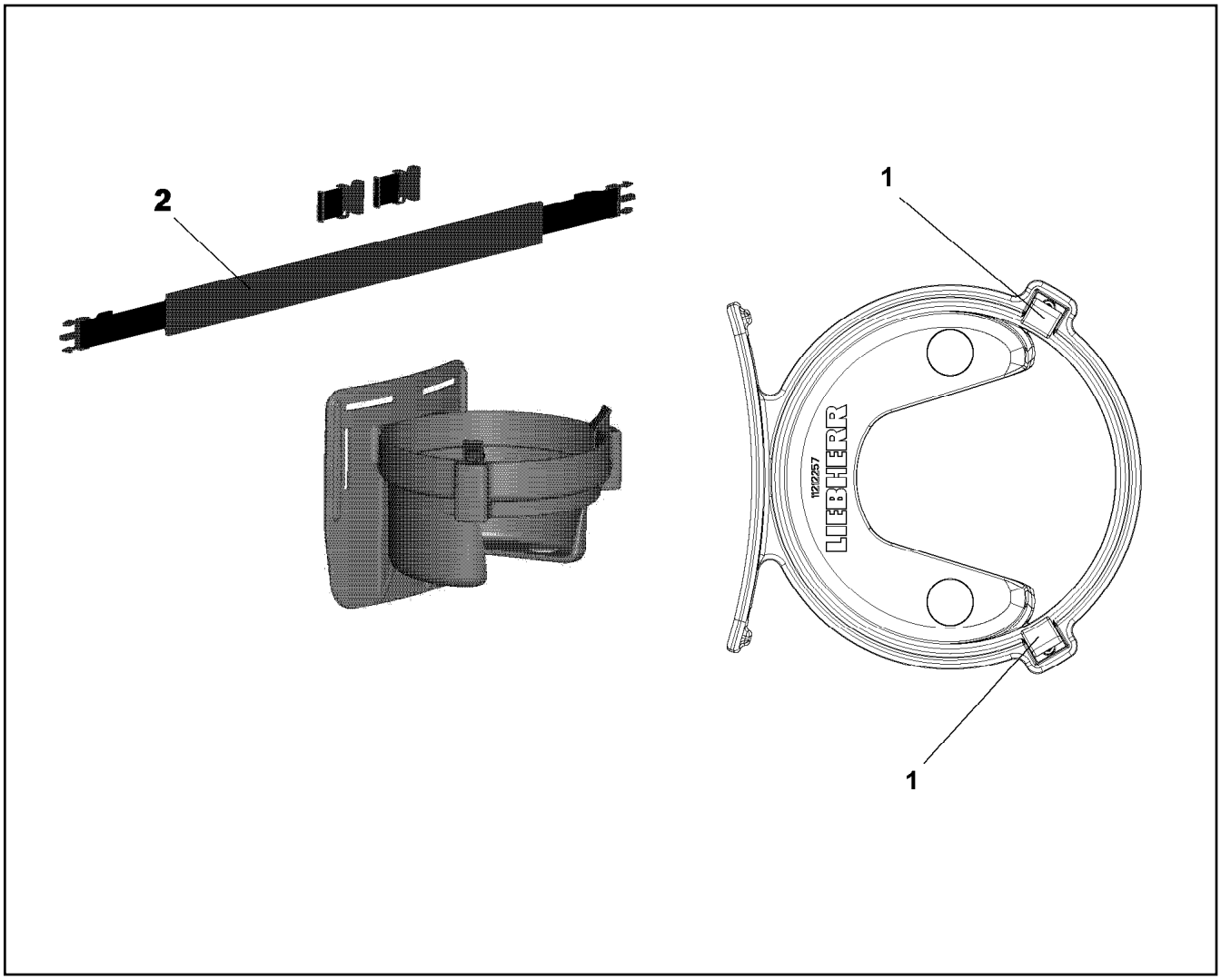

Pos.	Item	Quantity	Description	Bezeichnung
1	11002524	2	CIRCLIP	SICHERUNGSCLIP
2	12100293	1	FLANGE STRAP	GURT

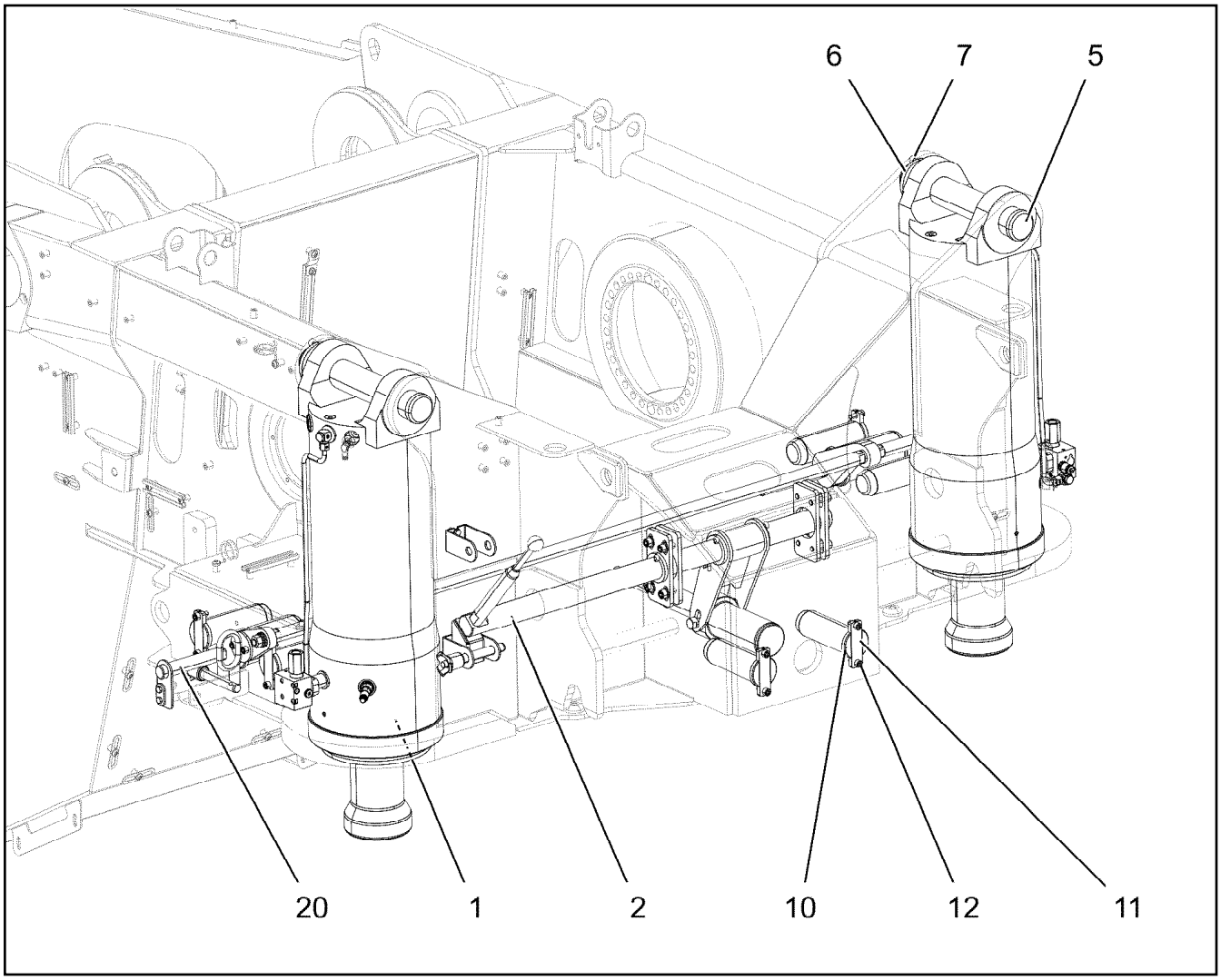

Pos.	Item	Quantity	Description	Bezeichnung
1	10877810	2	BALLAST EXTENSION RAM 240/150-440 SP ⇨ ❑ 490	BALLASTIERZYLINDER
2	967928508	1	LOCKING ⇨ ❑ 491	VERRIEGELUNG
5	97030038	2	PIN 70.0X405 35NICRMOV125 GASN. SPF	BOLZEN
6	97042598	2	WASHER 10X100X100 S355MC FE//ZNNI8//C	SCHEIBE
7	10180377	2	SPLIT PIN ISO 1234 10X100 St 480H SPF	SPLINT
10	97030039	6	PIN 70.0X190 35NICRMOV125 GASN. SPF	BOLZEN
11	973178808	6	AXLE HOLDER 10X109X30 S355MC FE//ZNNI	ACHSHALTER
12	10415162	12	SOCKET HEAD SCREW ISO 4762 M10X25 8	ZYLINDERSCHRAUBE
20	967978908	1	INTERLOCKING ⇨ ❑ 493	VERRIEGELUNG VORM.

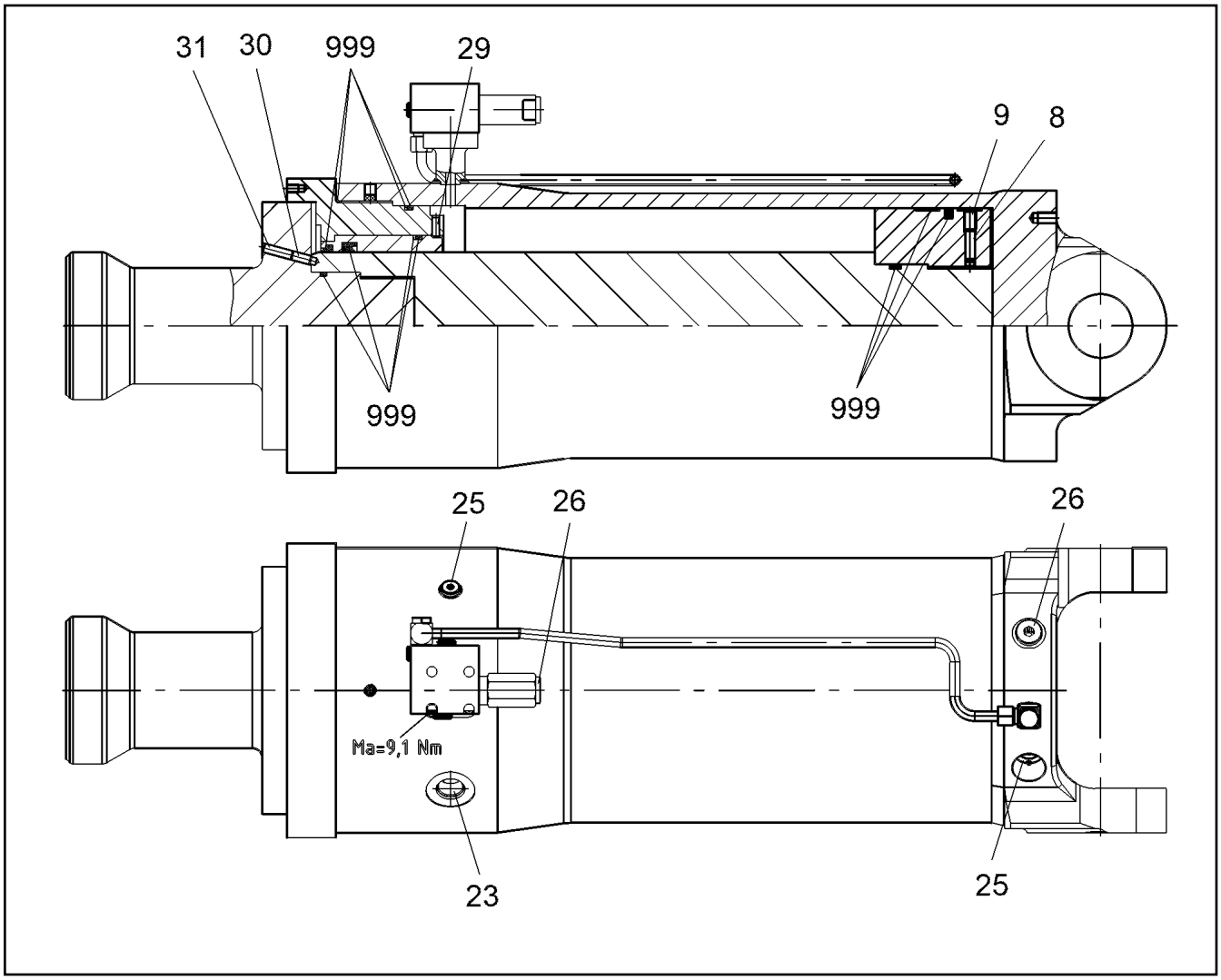

Pos.	Item	Quantity	Description	Bezeichnung
8	430707208	2	PARALLEL PIN DIN 6325 10M6X32	ZYLINDERSTIFT
9	404403608	2	GRUB SCREW DIN 913 M12X20 45H A3C	GEWINDESTIFT
23	570579808	1	SCREW PLUG	VERSCHLUSSSCHRAUBE
25	477704077	2	STOP PLUG VSTI1/4"ED A3P	STOPFEN
26	477704208	2	STOP PLUG VSTI G1/2A CR6-FREI	STOPFEN
29	4901247	1	GRUB SCREW ISO 4028 M8X20 45H	GEWINDESTIFT
30	404402708	1	GRUB SCREW DIN 913 M10X25 45H VERZ	GEWINDESTIFT
31	404402908	1	GRUB SCREW DIN 913 M10X30 45H VERZ	GEWINDESTIFT
999	12104276	1	SEAL KIT BALLASTING CYLINDER	DS BALLASTIERZYLINDER

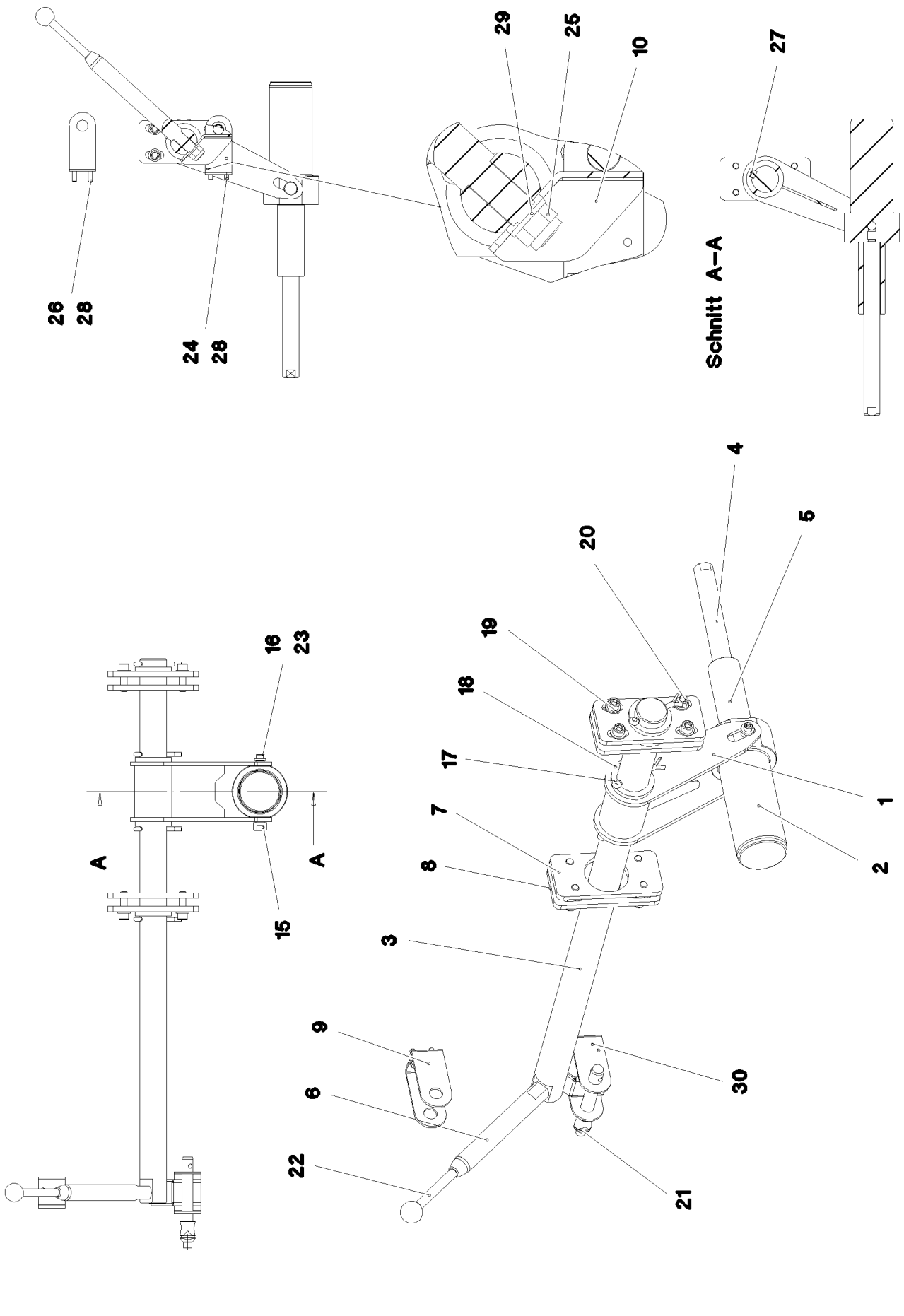

18.7.2022 077876 LIEBHERR	**etk_en_de_047654 LTR 1220** **LOCKING** **VERRIEGELUNG**	❑ 491 (1/2) **967928508**

Pos.	Item	Quantity	Description	Bezeichnung
1	967978808	1	OPERATION	BETAETIGUNG
2	97030027	1	PIN 105.0X230 35NICRMOV125 GASN. SPF	BOLZEN
3	97030028	1	SHAFT 50.0X1020 S355J2C+C FE//ZNNI8//C	WELLE
4	97030029	1	GUIDE 30.0X345 S355J2C+C FE//ZNNI8//CN/	FUEHRUNG
5	97030030	1	SLEEVE PA6G	HUELSE
6	97030031	1	LEVER 30.0X285 S355J2C+C FE//ZNNI8//CN/	HEBEL
7	97030032	2	THREADED PLATE 10X80X170 S355MC FE//	GEWINDEPLATTE
8	97030033	2	PLATE 10X170X80 S355MC FE//ZNNI8//CN//T	BLECH
9	97030037	1	PLATE 4X263X50 S315MC FE//ZNNI8//CN//T	BLECH
10	97031342	1	PLATE 4X116X148 S315MC FE//ZNNI8//CN//T	BLECH
15	978844908	1	PIN 25.0X131 35NICRMOV125 GASN. SPF	BOLZEN
16	10875597	1	SOCKET HEAD SCREW ISO 4762 M8X16 8.8	ZYLINDERSCHRAUBE
17	10180371	4	SPLIT PIN ISO 1234 8X80 St 480H SPF	SPLINT
18	10179408	4	WASHER ISO 8738 50 160HV-St FLZN SPF	SCHEIBE
19	10289804	8	WASHER ISO 7089 12 300HV FLZN SPF	SCHEIBE
20	10875565	8	SOCKET HEAD SCREW ISO 4762 M12X40 8	ZYLINDERSCHRAUBE
21	11320194	1	QUICK RELEASE PIN 20X171,2X100 NIROST	KUGELSPERRBOLZEN
22	10297396	1	HAND RAIL NIROSTA	GRIFFSTANGE
23	11840501	1	WASHER DIN 7349 8,4 200HV 480H SPF	SCHEIBE
24	10299649	2	HEX SCREW ISO 4017 M8X16 10.9 480H SP	SECHSKANTSCHRAUBE
25	10875609	1	HEX NUT DIN 985 M16 8 FLZN SPF	SECHSKANTMUTTER
26	10197831	2	HEX SCREW ISO 4017 M8X25 8.8 ZNNI-480	SECHSKANTSCHRAUBE
27	434018708	1	FITTING KEY DIN 6885 A 14X9X50	PASSFEDER
28	12103465	4	WASHER ISO 7089 8 300HV ZNNI-480H SPF	SCHEIBE
29	10289806	2	WASHER ISO 7089 16 300HV FLZN SPF	SCHEIBE
30	97042636	1	PLATE 4X283X50 S315MC FE//ZNNI8//CN//T	BLECH

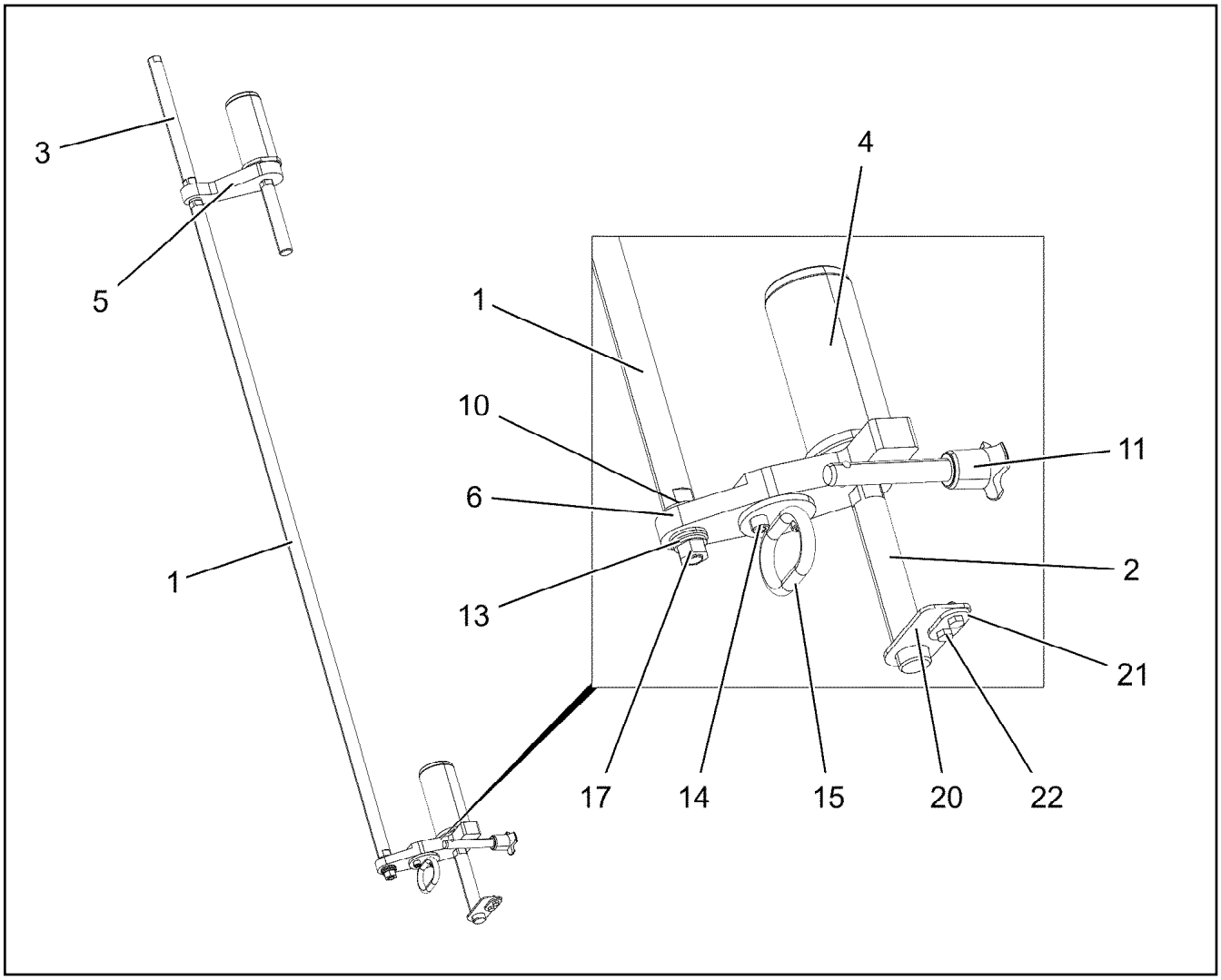

Pos.	Item	Quantity	Description	Bezeichnung
1	97033302	1	ROD 30.0X1724 S355J2C+C FE//ZNNI8//CN//T	STANGE
2	97033304	2	GUIDE 30.0X235 S355J2C+C FE//ZNNI8//CN/	FUEHRUNG
3	97033305	1	GUIDE 30.0X388 S355J2C+C FE//ZNNI8//CN/	FUEHRUNG
4	97033306	2	PIN 100.0X178 35NICRMOV125 SPF	BOLZEN
5	97033307	1	PLATE 30X210X140 S355J2+N FE//ZNNI8//C	BLECH
6	97033309	1	PLATE 30X246X99 S355J2+N FE//ZNNI8//CN/	BLECH
10	11691327	4	WASHER ISO 7092 20 300HV FLZN SPF	SCHEIBE
11	11320194	1	QUICK RELEASE PIN 20X171,2X100 NIROST	KUGELSPERRBOLZEN
13	10289806	1	WASHER ISO 7089 16 300HV FLZN SPF	SCHEIBE
14	10875571	2	SOCKET HEAD SCREW ISO 4762 M10X30 8	ZYLINDERSCHRAUBE
15	962963808	1	HANDLE WELD.CONST. FE//ZNNI8//CN//T0	GRIFF SCHWK.
17	10875617	1	HEX NUT ISO 4032 M16 8 FLZN SPF	SECHSKANTMUTTER
20	97048340	1	PLATE 4X110X50 S315MC FE//ZNNI8//CN//T	BLECH
21	97048341	1	BASE 4X53X28 S315MC FE//ZNNI8//CN//T0	UNTERLAGE
22	11651612	2	HEX SCREW ISO 4017 M8X16 8.8 480H SPF	SECHSKANTSCHRAUBE

Pos.	Item	Quantity	Description	Bezeichnung
4	969763408	1	PIPEWORK AIR INSTALLATION ⇨ ❑ 495	VERROHRUNG DRUCKLUFTANL

LIEBHERR

etk_en_de_047654 LTR 1220

PIPEWORK AIR INSTALLATION
VERROHRUNG DRUCKLUFTANLAGE

969763408

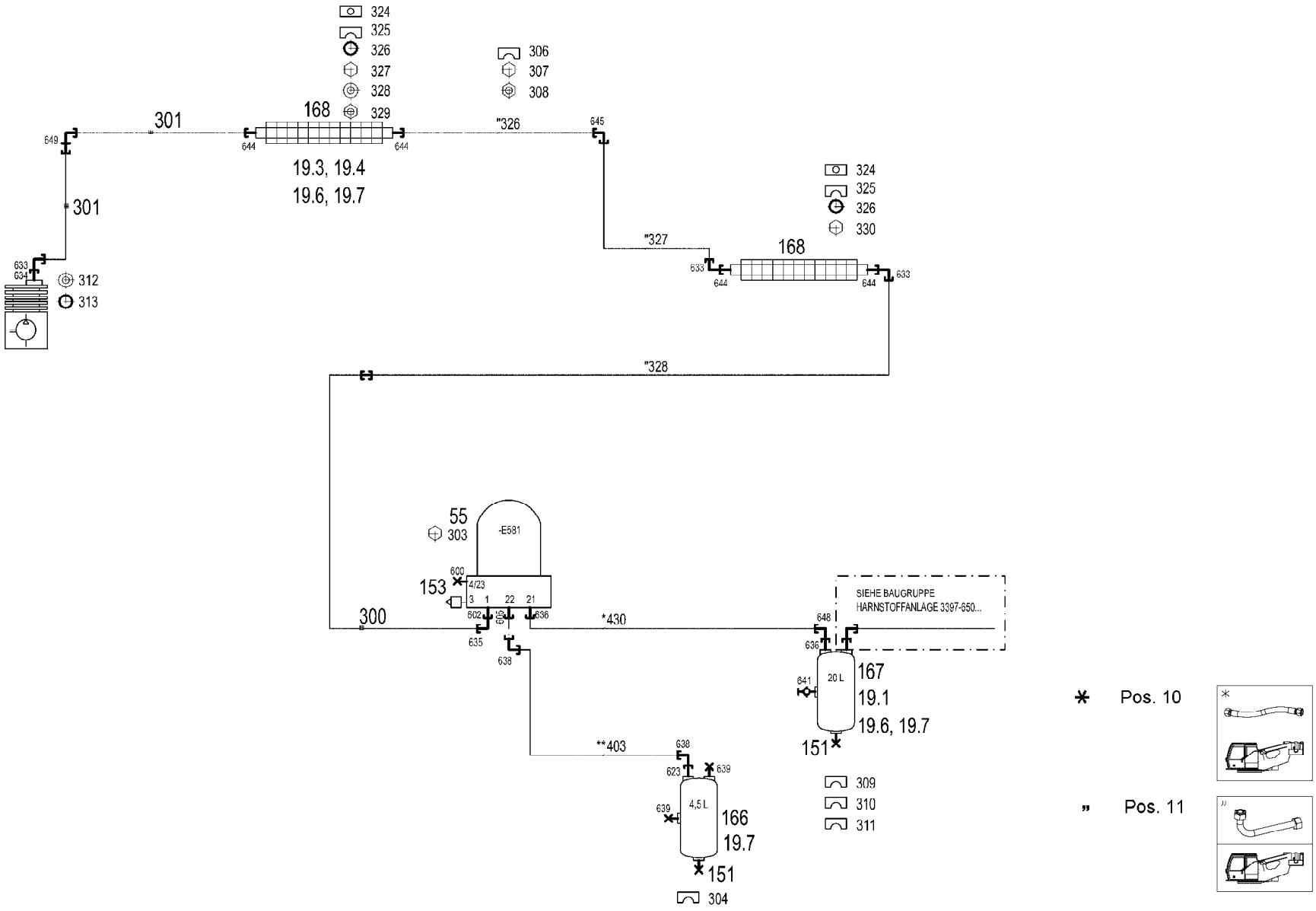

Pos.	Item	Quantity	Description	Bezeichnung
10	969842608	1	HOSE LINES DRUCKLUFT OW	SCHLAUCHLEITUNGEN
(430)	928456608	1	HOSE CPL. 2TE 12X4100	SCHLAUCH KPL.
11	969842808	1	PIPELINES DRUCKLUFT OW	ROHRLEITUNGEN
(326)	969979608	1	PIPE COMPL. 18X1,5X1474 18L - 18L	ROHR KPL.
(327)	968544708	1	PIPE COMPL. 18X1,5X -	ROHR KPL.
(328)	969978408	1	PIPE COMPL. 18X1,5X662 18L - G18L	ROHR KPL.
12	969763608	1	PNEUMATIC LINES UPPER CARRIAGE STUF	PNEUMATIKLEITUNGEN OW
19	969763908	1	MECHANICAL AUXILIARIES	MECH.BEFESTIGUNGSTEILE
(1)	97038364	1	PLATE 3X349X278 DC01 FE//ZNNI8//CN//T0	BLECH
(3)	975427508	1	PLATE 4X115X122 S315MC FE//ZNNI8//CN//T	BLECH
(4)	97077348	1	PLATE 4X110X180 S315MC FE//ZNNI8//CN//T	BLECH
(6)	978787708	6	SLEEVE 33.0X19 FE//ZNNI8//CN//T0	HUELSE
(7)	10875485	6	BUTTON HEAD SCREW AEHNL.ISO 7380-2	HALBRUNDKOPFSCHRAUBE
55	502657308	1	AIR DRYER ⇨ ❑ 497	LUFTTROCKNER
151	502921908	2	WATER DRAIN VALVE 22BAR M22X1,5	ENTWAESSERUNGSVENTIL
153	502661608	1	SILENCER	GERAEUSCHDAEMPFER
166	502987108	1	AIR TANK DIN 74281 4,5L 15,5BAR ST RAL 9	LUFTBEHAELTER
167	502657708	1	AIR TANK EN 286-2 20L 15.5BAR ALMG2.7 R	LUFTBEHAELTER
168	10493045	2	RIBBED TUBE ALU	RIPPENROHR
300	510500508	1	TEFLON HOSE DN16 750 CR6-FREI	TEFLONSCHLAUCH
301	510501008	2	HOSE DN16 500	SCHLAUCH
303	12216237	3	HEX SCREW ISO 8676 M12X1,5X25 8.8 FLZ	SECHSKANTSCHRAUBE
304	774211308	1	TIGHTENING STRAP 206/206/30 ST	SPANNBAND
306	602002208	6	CLAMP-HALF DIN 3015-1 L 2 R 18 AL	KLEMMHAELFTE
307	11820284	6	SOCKET HEAD SCREW ISO 4762 M6X30 8.8	ZYLINDERSCHRAUBE
308	602018008	6	CARRIER RAIL NUT DIN 3015-1 L TM M6 W1	TRAGSCHIENENMUTTER
309	774210508	1	TIGHTENING STRAP 240-280/260/30 ST	SPANNBAND
310	774227708	1	TIGHTENING STRAP 260X735X30XSP/GT ED	SPANNBAND
311	774215508	1	PIPE SUPPORT	ROHRUNTERLAGE
312	502932808	1	COMPRESSION RING DR/R26X31	DRUCKRING
313	726422308	1	O-RING DIN 3770 25X2,5 FPM70	O-RING
324	5005525	4	LID PLATE DIN 3015-2 S-DP-A 4 W1-ZN P2E	DECKPLATTE
325	10492888	8	CLAMP-HALF S 4 E 64 PP	KLEMMHAELFTE
326	7363897	4	ELASTOMER INSERT DIN 3015 51X64X45XS	ELASTOMEREINSATZ
327	11656183	4	HEX SCREW ISO 4014 M12X120 8.8 FLZN SP	SECHSKANTSCHRAUBE
328	10289804	4	WASHER ISO 7089 12 300HV FLZN SPF	SCHEIBE
329	10875607	4	HEX NUT DIN 985 M12 8 FLZN SPF	SECHSKANTMUTTER
330	10875504	4	HEX SCREW ISO 4014 M12X100 8.8 FLZN SP	SECHSKANTSCHRAUBE
600	477704308	1	STOP PLUG VSTI M12X1,5 CR6-FREI	STOPFEN
602	471031108	1	FITTING GE 18L M22X1,5 CR6-FREI	VERSCHRAUBUNG
605	471039708	1	FITTING ISO 8434-1 GE 10L M12X1,5 CR6-F	VERSCHRAUBUNG
623	471039808	1	FITTING GE 10L M22X1,5 CR6-FREI	VERSCHRAUBUNG
633	10815664	3	FITTING EW 18L ST CR6-FREI	VERSCHRAUBUNG
634	476607608	1	FITTING XGE18-LM M26X1,5 CR6-FREI	VERSCHRAUBUNG
635	247108302	1	SWIVEL ELBOW EW 18L M26X1,5 CR6-FREI	WINKELSTUTZEN
636	471035508	2	FITTING GE 15L M22X1,5 CR6-FREI	VERSCHRAUBUNG
638	7403569	2	FITTING EW 10L M16X1,5 CR6-FREI	VERSCHRAUBUNG
639	477704508	2	STOP PLUG VSTIM22X1,5ED CR6-FREI	STOPFEN
641	502921408	1	TEST CONNECTION M22X1,5 A3P	PRUEFANSCHLUSS
644	10815662	4	FITTING GE 18L M22X1,5 ST CR6-FREI	VERSCHRAUBUNG
645	470230608	1	FITTING XW18-L CR6-FREI	VERSCHRAUBUNG
648	7615379	1	FITTING EW 15L CR6-FREE	VERSCHRAUBUNG
649	474231508	1	FITTING XWSV18-L CR6-FREI	VERSCHRAUBUNG

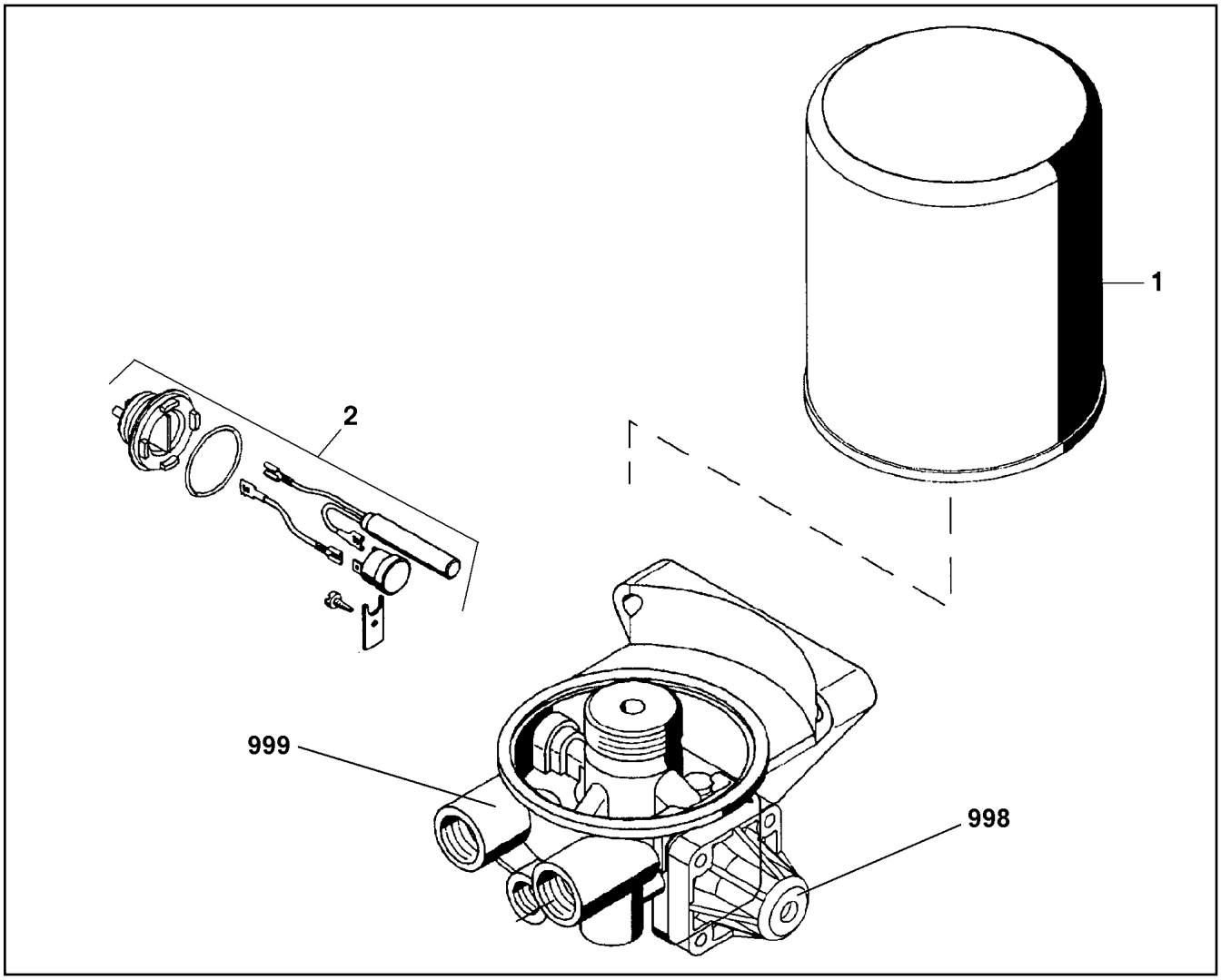

Pos.	Item	Quantity	Description	Bezeichnung
1	571352308	1	CARTRIDGE	KARTUSCHE
2	502651408	1	HEATING	HEIZUNG
998	11003089	1	REPAIR SET PRESSURE GOVERNOR	RS DRUCKREGLER
999	11003094	1	REPAIR KIT	REPARATURSATZ

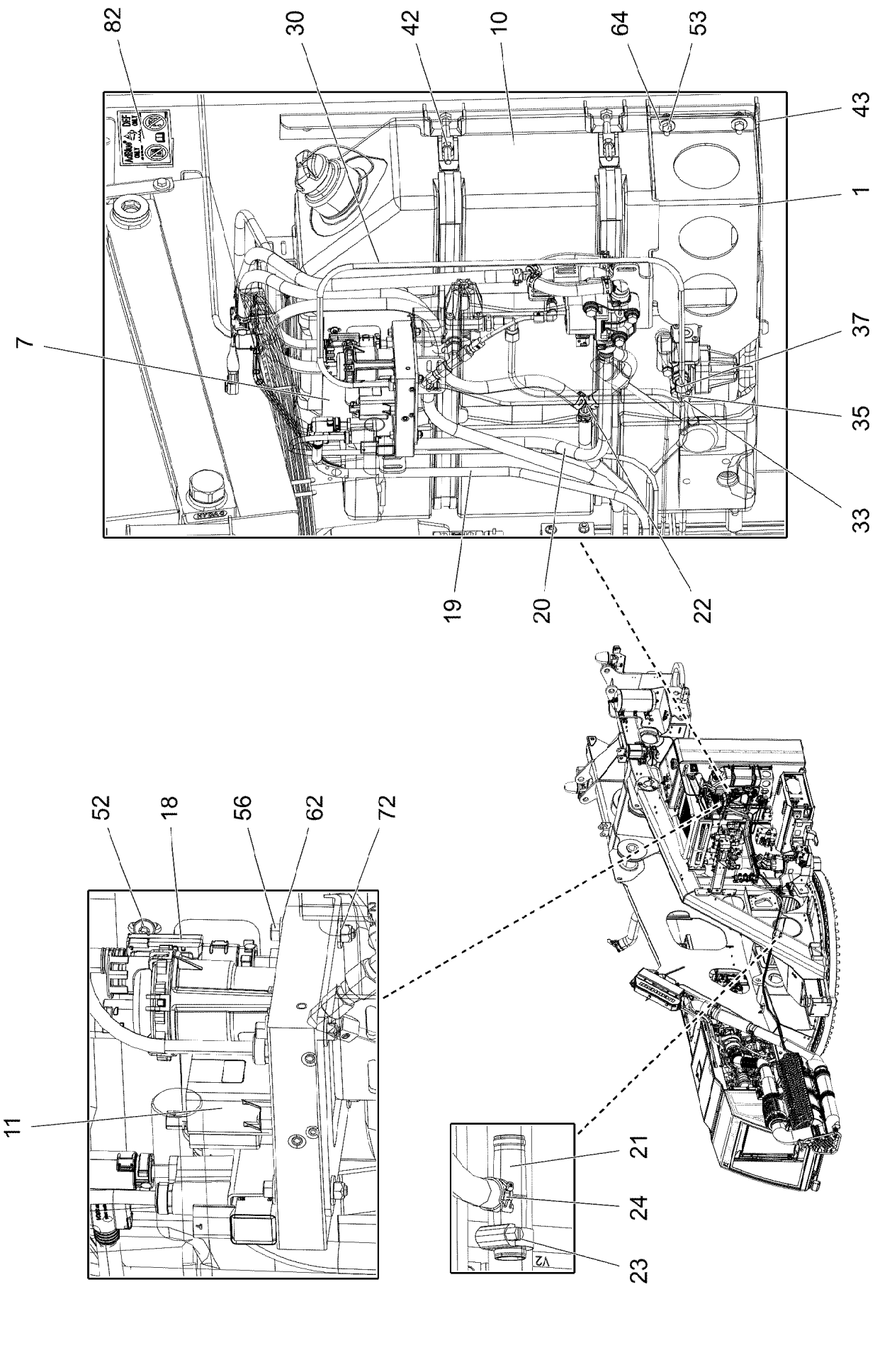
82
30
42
10
64
53
43
1
37
35
33
7
19
20
22
52
18
56
62
72
11
21
24
23
V2

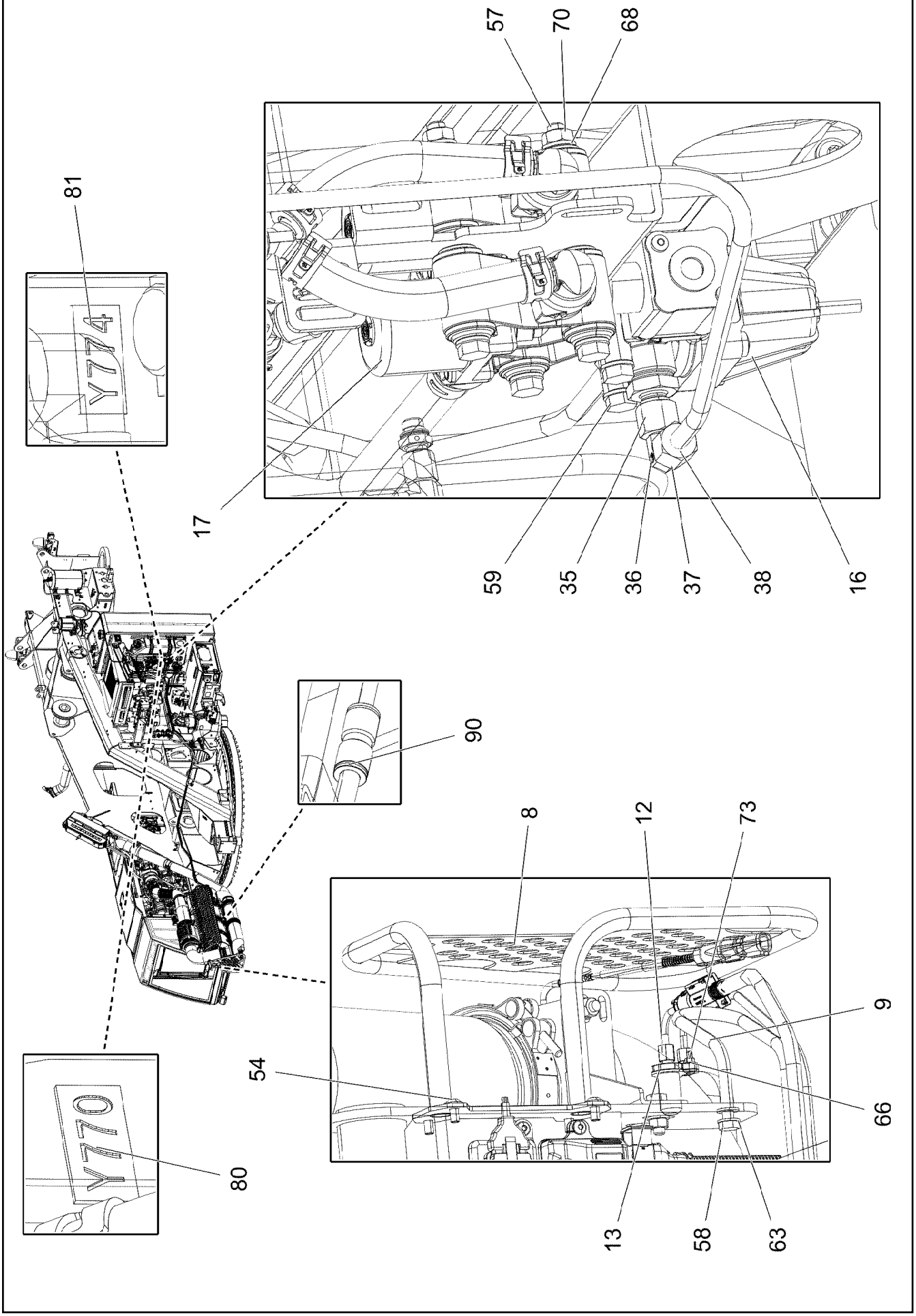
57
70
68
81
17
59
35
36
37
38
16
90
8
12
73
9
54
66
80
13
58
63

Pos.	Item	Quantity	Description	Bezeichnung
1	97084641	1	PLATE 4X518X425 S315MC RAL 9005,HGL,G	BLECH
7	97084642	1	PLATE 4X461X547 S315MC RAL 9005,HGL,G	BLECH
8	96037033	1	PROTECTION WELDED STRUCTURE	SCHUTZ SCHWK.
9	97121634	1	TUBE 12.0X1189 X5CRNI18-10	ROHR
10	968570808	1	UREA TANK 73L/65L SPF ⇨ ❑ 501	HARNSTOFFTANK
11	11373478	1	DEF PUMP ADBLUE STUFE 4 ⇨ ❑ 502	REDUKTIONSMITTELPUMPE
12	12445245	1	DEF INJECTOR SCR ONLY	REDUKTIONSMITTELINJEKTOR
13	10144861	1	SEAL	DICHTUNG
16	969904608	1	PRESSURE RELIEF VALVE PRE-ASS. ⇨ ❑ 503	DRUCKBEGRENZUNGSVENTIL
17	11082158	2	WATER VALVE NW12X2,5 NICHT LACKIERE	WASSERVENTIL
18	10144270	1	DEF SUCTION LINE 4X600 EPDM	REDUKTIONSMITTEL-SAUGLEIT
19	10144303	1	DEF PRESSURE LINE 2X7000 PA	REDUKTIONSMITTEL-DRUCKLE
20	96011801	1	HOSE LINES OW STUFE 4 ⇨ ❑ 504	SCHLAUCHLEITUNGEN HARNST
21	11626529	2	TEE REDUCER 20X10 L=80	T-REDUZIERSTUECK
22	10801609	2	HOSE CONNECTION SOCKET YS PA66-GF3	SCHLAUCHVERBINDUNGSSTUT
23	11118077	2	HOSE CLAMP 21/16-27/12 W3	SCHLAUCHSCHELLE
24	11162002	8	HOSE CLAMP 19/17,8-20,2/12 51CrV4 CR6-F	SCHLAUCHSCHELLE
30	96037028	1	UREA SYSTEM AIR LINE STUFE 5 OW	LUFTLEITUNGEN HARNSTOFFA
(2331)	969383908	1	PLASTIC PIPE COMPLETE	KUNSTSTOFFROHR KPL.
(2335)	96035593	1	PNEUMATIC TUBE CPL.	PNEUMATIKROHR KPL.
31	772002708	1	PLUG-IN SLEEVE E10-7	EINSTECKHUELSE
32	477100308	1	PROFILE RING PR10-S/L A3P	PROFILRING
33	477401508	1	BOX NUT DIN 3870 AL10 A3P	UEBERWURFMUTTER
35	247021802	1	SWIVEL ELBOW EW 8L CR6-FREI	WINKELSTUTZEN
36	10871759	1	PLUG-IN SLEEVE E8-6 EDELSTAHL	EINSTECKHUELSE
37	477401408	1	BOX NUT AL8 CR6-FREI	UEBERWURFMUTTER
38	477100208	1	PROFILE RING P-R8-L/S A2GS	PROFILRING
42	11600236	2	SWIVEL BOLT CLAMPING BAND 346X877X2	GELENKBOLZENSPANNBAND
43	11114455	4	SEALING STRIP 40X4 NBR/SBR 65	DICHTSTREIFEN
52	10813359	1	BUTTON HEAD SCREW AEHNL.ISO 7380-2	HALBRUNDKOPFSCHRAUBE
53	10197831	2	HEX SCREW ISO 4017 M8X25 8.8 ZNNI-480	SECHSKANTSCHRAUBE
54	10875485	4	BUTTON HEAD SCREW AEHNL.ISO 7380-2	HALBRUNDKOPFSCHRAUBE
56	10875592	4	SOCKET HEAD SCREW ISO 4762 M6X45 8.8	ZYLINDERSCHRAUBE
57	12217239	3	HEX SCREW ISO 4014 M8X110 8.8 480H SP	SECHSKANTSCHRAUBE
58	11642358	1	HEX SCREW ISO 4017 M10X30 8.8 FLZN SP	SECHSKANTSCHRAUBE
59	12216193	2	HEX SCREW ISO 4014 M8X75 8.8 480H SPF	SECHSKANTSCHRAUBE
62	10875648	8	WASHER ISO 7093-1 6 200HV 480H SPF	SCHEIBE
63	500917508	2	WASHER ISO 7089 10 200HV-A2	SCHEIBE
64	11140469	4	WASHER ISO 7093-1 8 200HV 480H SPF	SCHEIBE
66	10410193	2	WASHER ISO 7089 5 -A2	SCHEIBE
68	420001014	10	WASHER ISO 7089 8 200HV-A4	SCHEIBE
70	11693875	7	HEX NUT ISO 4032 M8 8 480H SPF	SECHSKANTMUTTER
72	12102692	4	HEX NUT DIN 985 M6 8 ZNNI-480H SPF	SECHSKANTMUTTER
73	10878117	2	HEX NUT ISO 4032 M5 TI2-WS8	SECHSKANTMUTTER
80	97064219	1	SIGN 20X10 KLEBEFOLIE SPF	SCHILD
81	97064220	1	SIGN 20X10 KLEBEFOLIE SPF	SCHILD
82	97037383	1	SIGN 120X80 KLEBEFOLIE SPF	SCHILD
90	12001446	1	PLUG-TYPE SCREW COUPLING 8	STECKVERSCHRAUBUNG

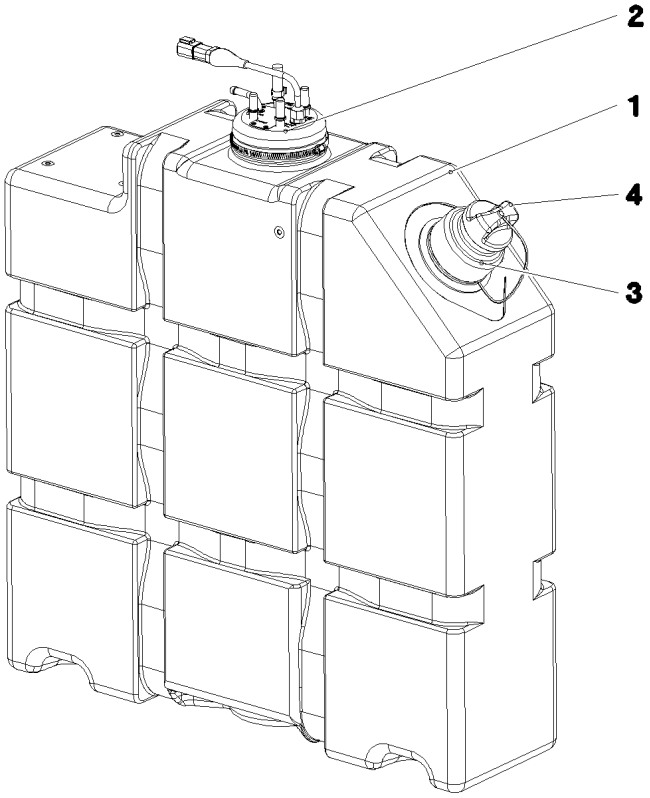

Pos.	Item	Quantity	Description	Bezeichnung
1	11481413	1	UREA CONTAINER 65L PE SPF	HARNSTOFFBEHAELTER
2	12503120	1	SUCTION MODUL L=682,5 24V NICHT LACK	ENTNAHMEMODUL
3	12211232	1	SCREW SOCKET	SCHRAUBSTUTZEN
(1)	12211223	1	FILTER	FILTER
4	10870226	1	LOCKABLE TANK CAP 40	TANKVERSCHLUSS

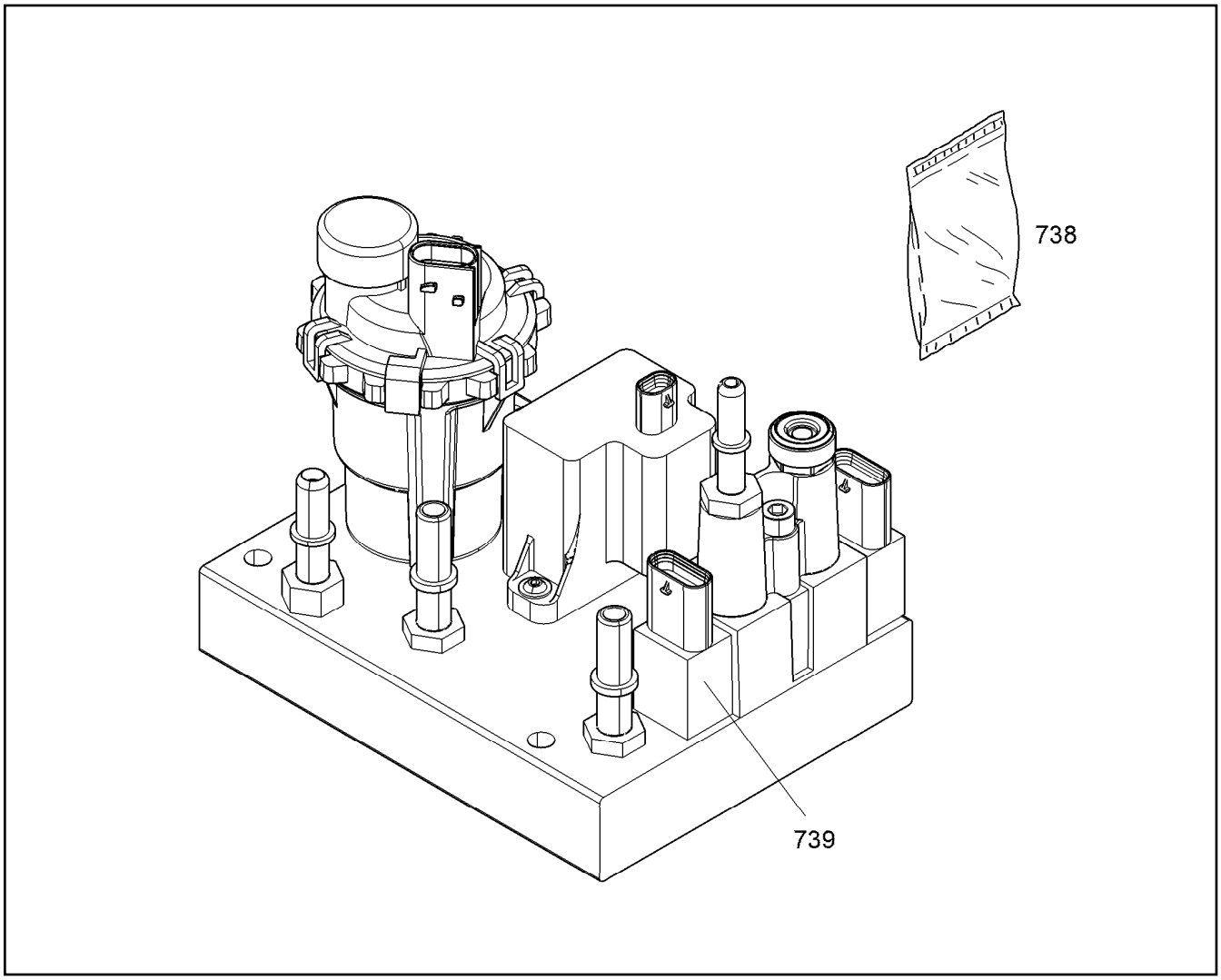

Pos.	Item	Quantity	Description	Bezeichnung
738	12466377	1	PROTECTIVE COVER NICHT LACKIEREN	SCHUTZDECKEL
739	12414685	1	PRESSURE/TEMPERATURE SENSOR NICH	DRUCK-/TEMPERATUR SENSO

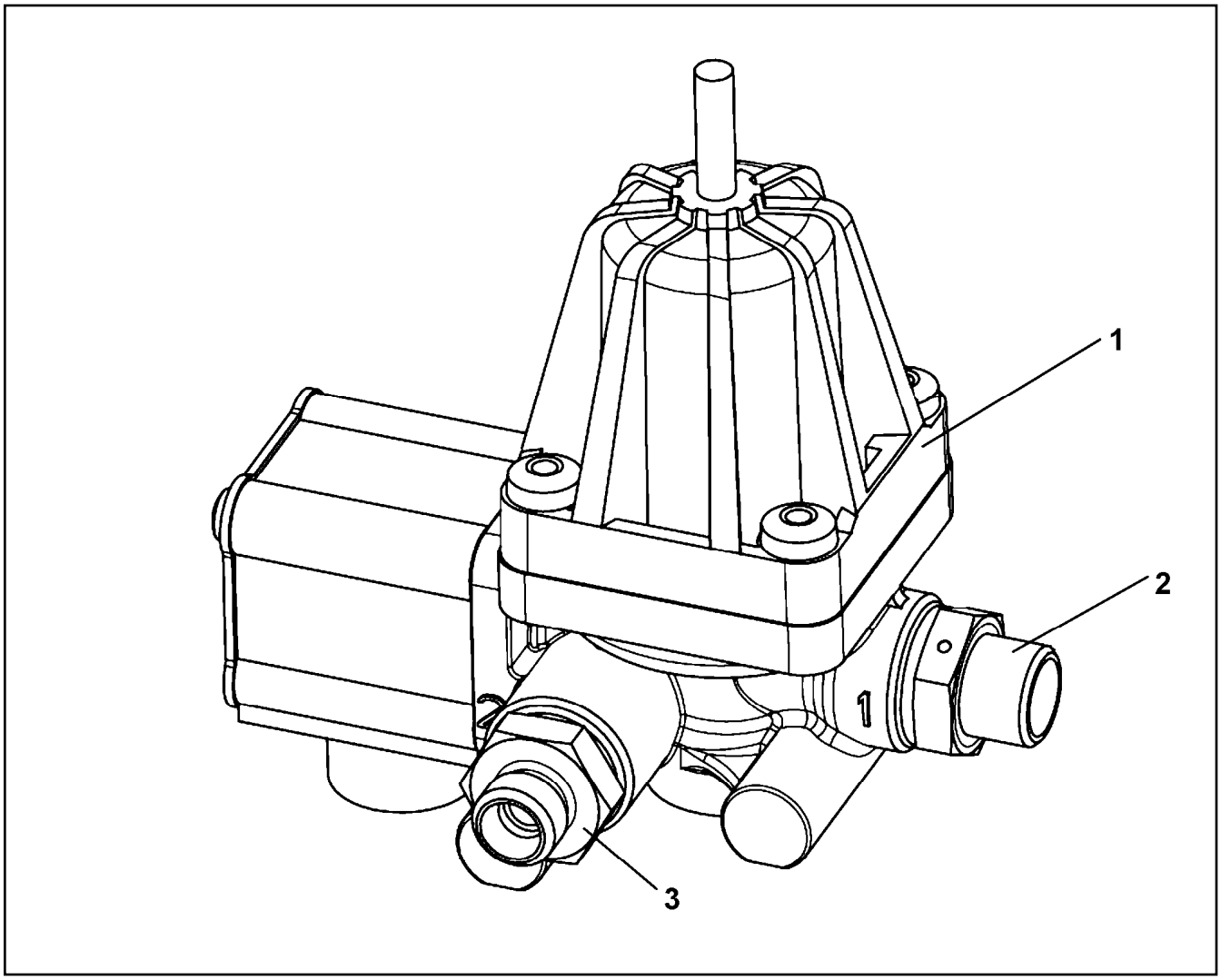

Pos.	Item	Quantity	Description	Bezeichnung
1	10872307	1	PRESSURE LIMITING VALVE 13BAR M16X1,	DRUCKBEGRENZUNGSVENTIL
2	7021521	1	FITTING GE 10L M16X1,5 CR6-FREI	VERSCHRAUBUNG
3	10872598	1	FITTING GEO 8L M16X1,5 CR6-FREI	VERSCHRAUBUNG

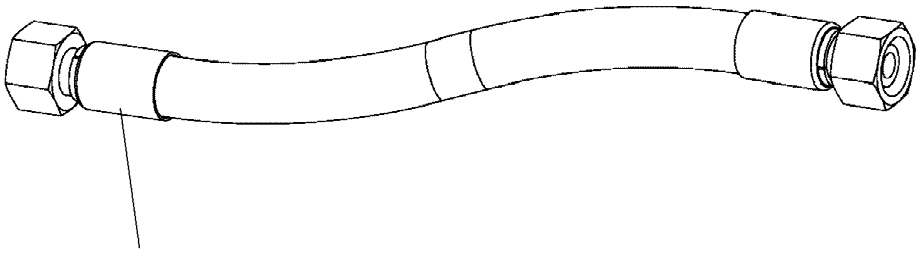

Schlauchnummer
Hose number
Numéro de flexible
Número de flexible
Номера шланга

Die Schlauchnummern auf den Schläuchen entsprechen den Positionen in der Schlauchliste.

The hose numbers from the hoses are in accordance with the items in the hose list.

Les numéros indiqués sur les flexibles correspondent aux repères de la nomenclature des flexibles.

Los números indicados en los flexibles corresponden a las posiciones de la lista de flexibles.

Нанесенные на шлангах номера соответствуют позициям в перечне.

Pos.	Item	Quantity	Description	Bezeichnung
2310	969574508	1	HOSE CPL. CONTI KWS 10X2600	SCHLAUCH KPL.
2311	96014733	1	HOSE CPL. CONTI KWS 10X620	SCHLAUCH KPL.
2312	969452108	2	HOSE CPL. CONTI KWS 10X130	SCHLAUCH KPL.
2313	96014732	1	HOSE CPL. CONTI KWS 10X700	SCHLAUCH KPL.
2314	969384408	1	HOSE CPL. CONTI KWS 10X240	SCHLAUCH KPL.
2315	96014734	1	HOSE CPL. CONTI KWS 10X880	SCHLAUCH KPL.
2316	96024954	1	HOSE CPL. CONTI KWS 10X2400	SCHLAUCH KPL.
2333	96013988	1	HOSE CPL. KUNSTSTOFF 8X600	SCHLAUCH KPL.

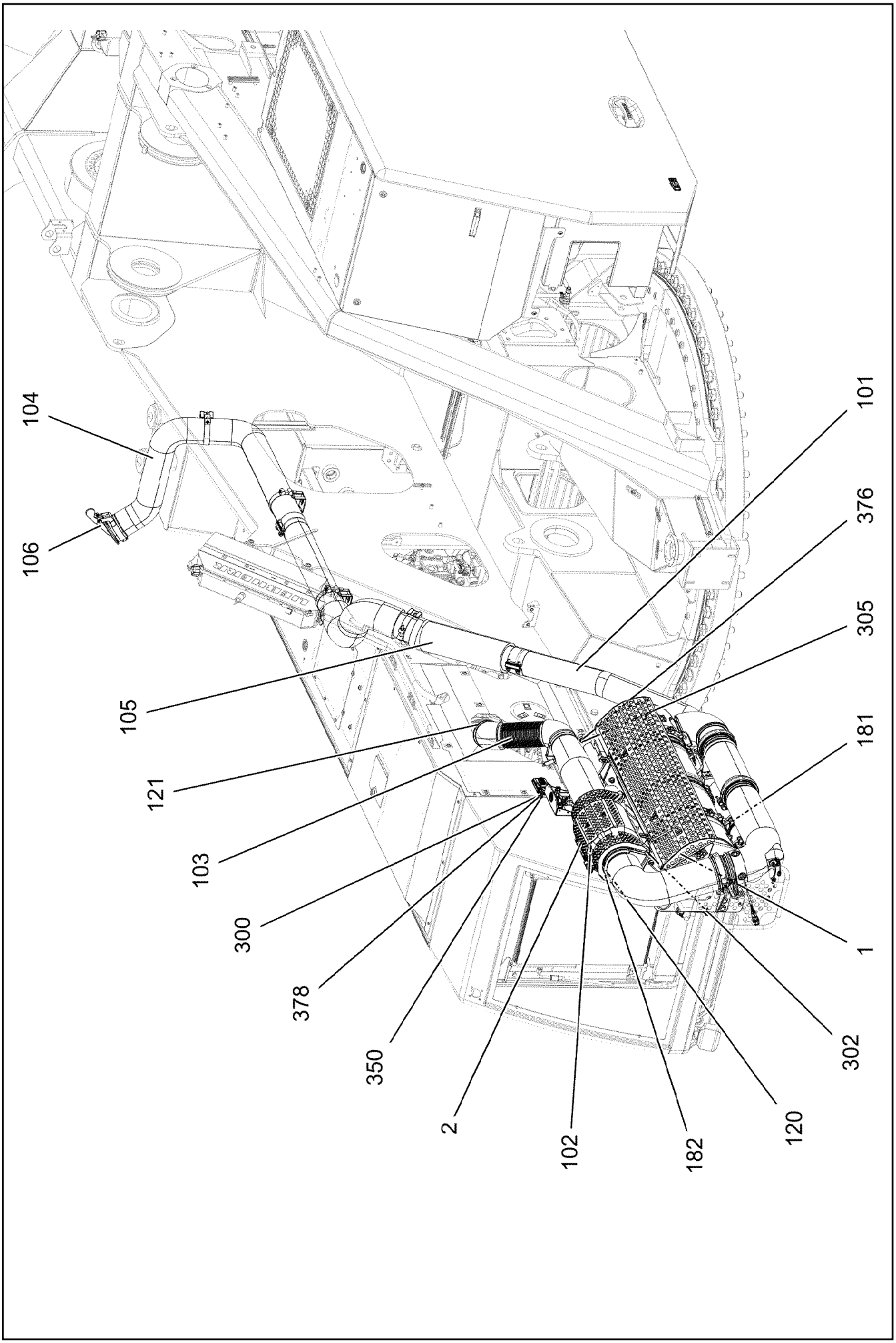
104
106
105
121
103
300
378
350
2
102
182
120
302
1
181
305
376
101

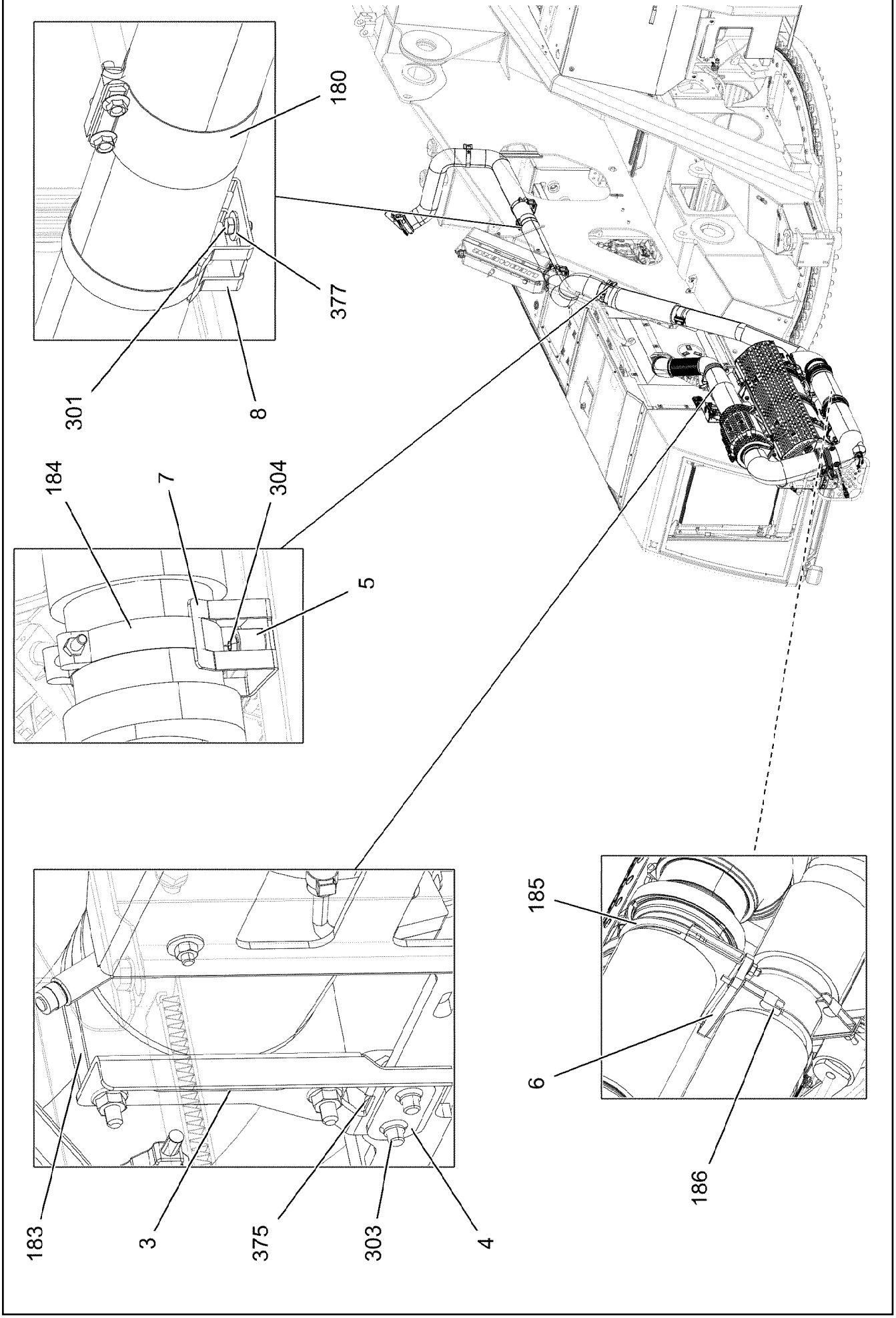
180
377
301
8
184
7
304
5
185
6
186
183
3
375
303
4

Pos.	Item	Quantity	Description	Bezeichnung
1	96051842	1	EXHAUST SYSTEM PRE-ASSEMBLED ⇨ ❑ 508	ABGASANLAGE VORM.
2	96035171	1	PROTECTION PLATE WELDED	SCHUTZBLECH SCHWK.
3	97134813	1	PLATE 3X182X77 X5CRNI18-10	BLECH
4	97118726	1	THREADED PLATE 3X54X25 S355MC FE//ZN	GEWINDEPLATTE
5	953873408	1	SLEEVE 25X20 11SMN37 FE//ZNNI8//CN//T0	HUELSE
6	97118864	1	PLATE 12X164X58 S355MC FE//ZNNI8//CN//T	BLECH
7	97031901	1	PLATE 3X191X55 X5CRNI18-10	BLECH
8	97059489	3	PLATE 3X191X55 X5CRNI18-10	BLECH
101	97118888	1	EXHAUST PIPE	ABGASROHR
102	12888563	1	DIESEL OXIDATION CATALYST	DIESELOXIDATIONSKATALYSA
103	97118889	1	FLEXIBLE WASHER	FLEXROHR
104	969759208	1	END PIPE X5CRNI18-10	ENDROHR
105	97049723	1	EXHAUST PIPE 1.4301	ABGASROHR
106	12100105	1	WHEATHER CAP 114,3 EDELSTAHL	WETTERKAPPE
120	10802682	2	SEALING RING 140X155X13	DICHTRING
121	10125148	1	SEAL XTREME PLUS	DICHTUNG
180	10296644	2	FLAT CLIP 114,3 EDELSTAHL	FLACHSCHELLE
181	10494115	1	PROFIL CLAMP 137,6/K1	PROFILSCHELLE
182	10494116	2	PROFIL CLAMP 163,0/K1	PROFILSCHELLE
183	12103076	1	BOW-TYPE CLAMP 102 X5CRNI18-10	BUEGELSCHELLE
184	12102528	4	HOSE CLAMP 115/113-121/25 A2	SCHLAUCHSCHELLE
185	11963742	2	BOW-TYPE CLAMP 132 X5CRNI18-10	BUEGELSCHELLE
186	552101308	2	BOW-TYPE CLAMP A 114 EDELSTAHL	BUEGELSCHELLE
300	10412851	2	BUTTON HEAD SCREW AEHNL.ISO 7380-2	HALBRUNDKOPFSCHRAUBE
301	406527808	3	HEX SCREW ISO 4017 M8X16 A2-70	SECHSKANTSCHRAUBE
302	4901881	4	SOCKET HEAD SCREW ISO 4762 M8X16 A4	ZYLINDERSCHRAUBE
303	10197831	2	HEX SCREW ISO 4017 M8X25 8.8 ZNNI-480	SECHSKANTSCHRAUBE
304	10875485	1	BUTTON HEAD SCREW AEHNL.ISO 7380-2	HALBRUNDKOPFSCHRAUBE
305	11631742	4	HEX SCREW ISO 4017 M12X30 8.8 FLZN SP	SECHSKANTSCHRAUBE
350	411517114	2	HEX NUT ISO 4032 M6 A4-70	SECHSKANTMUTTER
375	11140469	2	WASHER ISO 7093-1 8 200HV 480H SPF	SCHEIBE
376	10289804	4	WASHER ISO 7089 12 300HV FLZN SPF	SCHEIBE
377	421861405	3	WASHER ISO 7093-1 8 200HV-A2	SCHEIBE
378	421801708	2	WASHER ISO 7093-1 6 200HV-A2	SCHEIBE

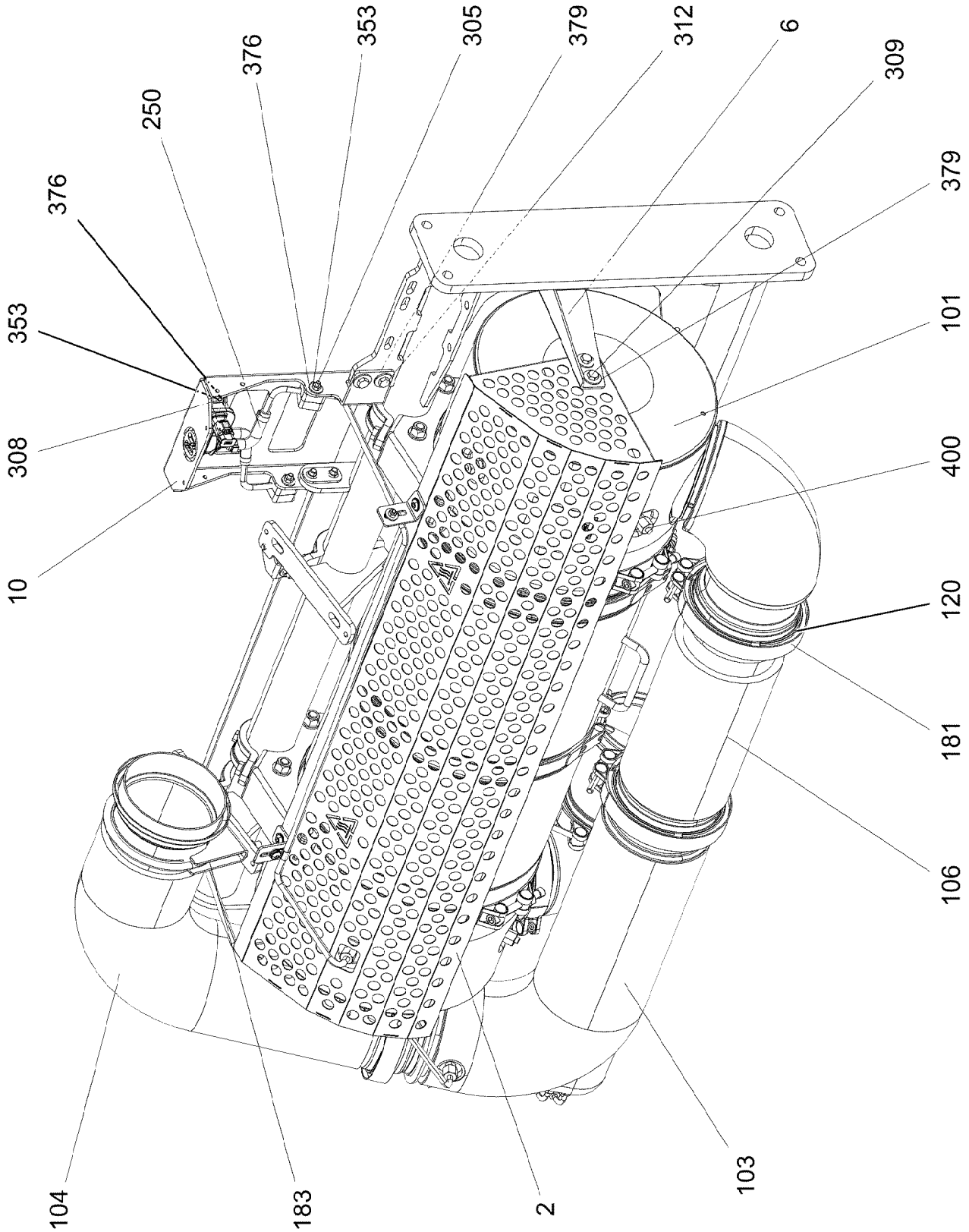
376
250
353
305
379
312
6
309
379
376
353
101
308
400
10
120
181
106
104
183
2
103

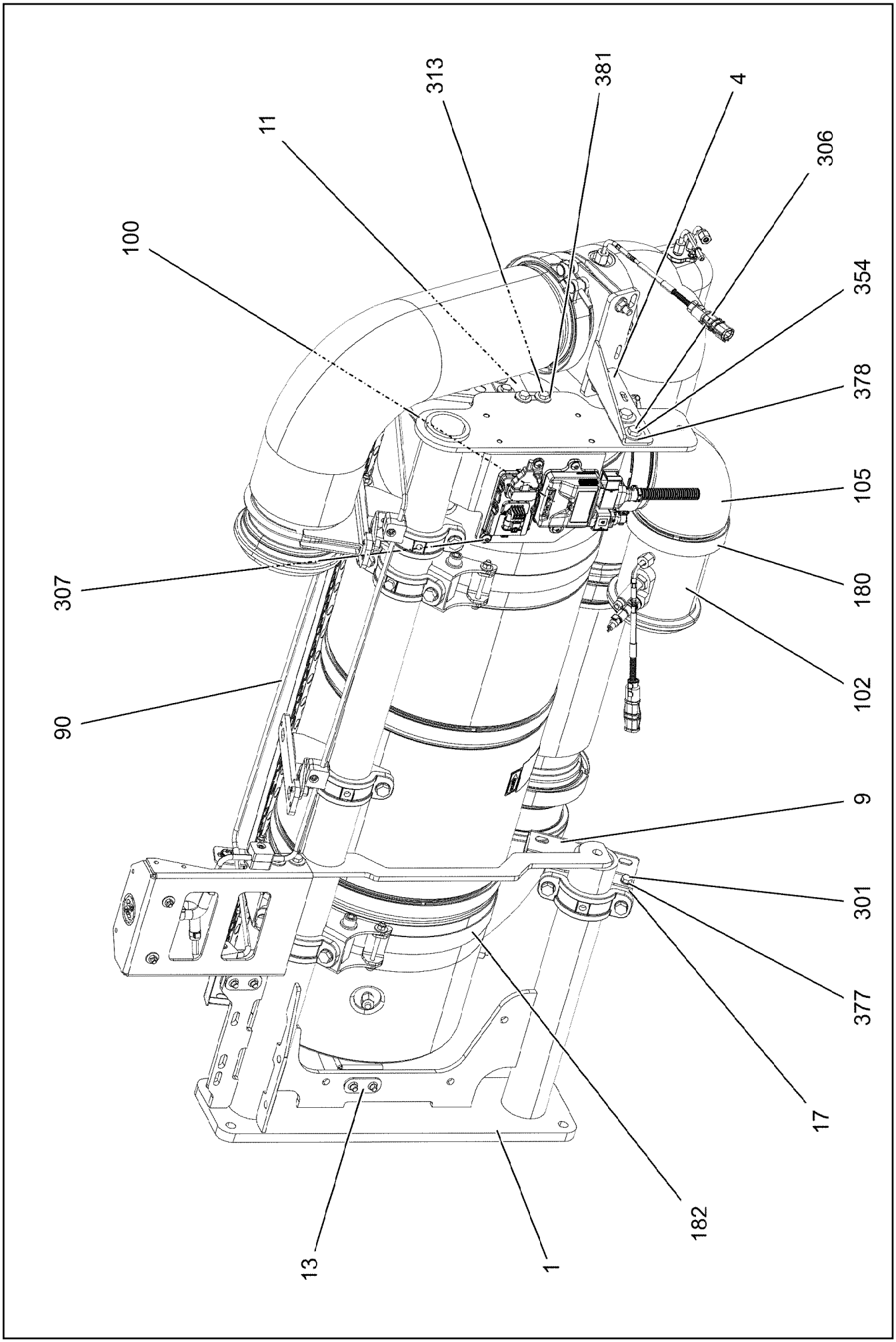
313
381
4
11
306
100
354
378
105
307
180
102
90
9
301
377
17
182
13
1

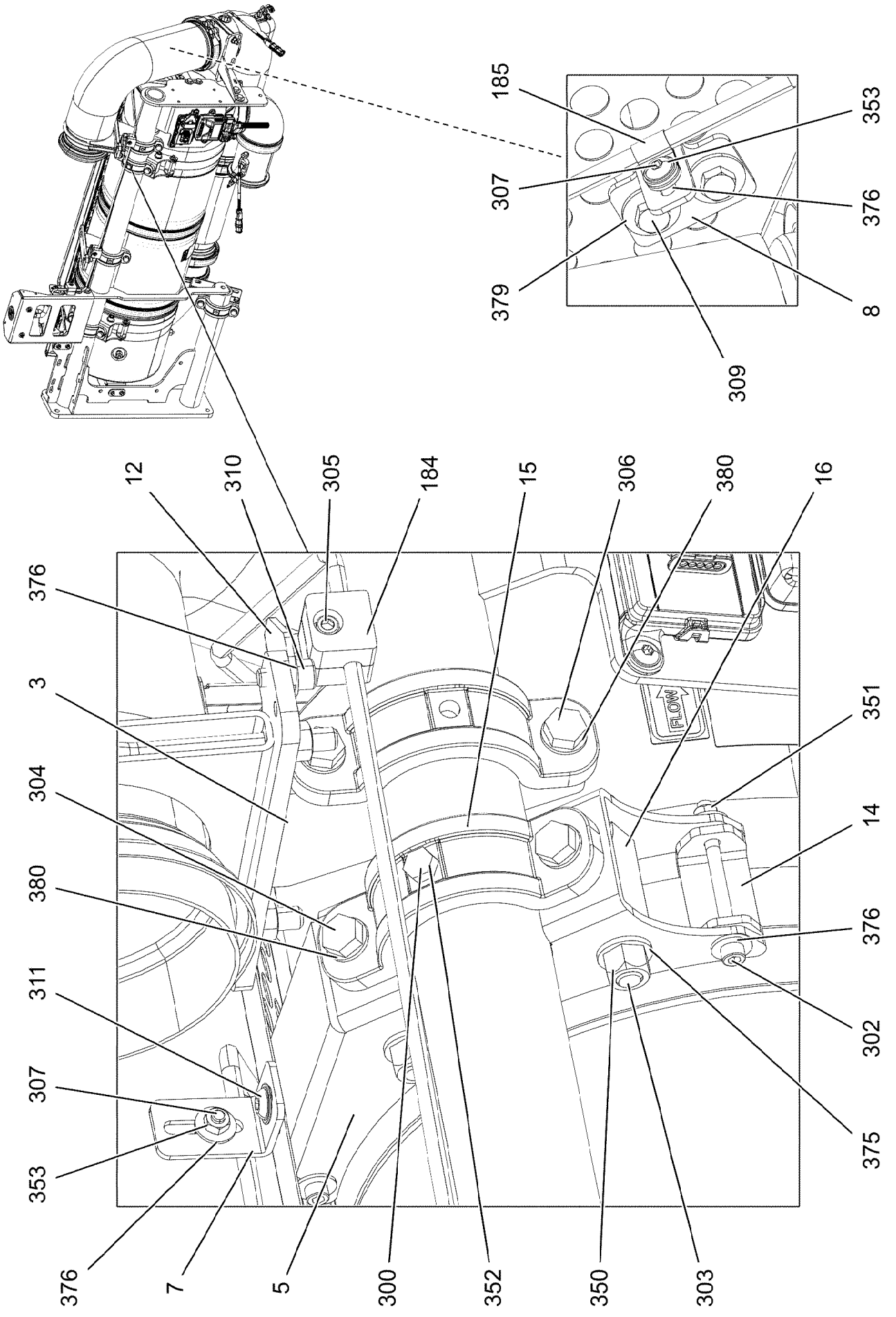
185
353
307
376
379
8
309
12
310
305
184
15
306
380
16
376
3
304
380
311
307
353
376
7
5
300
352
350
303
351
14
376
302
375
FLOW

Pos.	Item	Quantity	Description	Bezeichnung
1	96035067	1	SUPPORTING ARM T ZN O	TRAGARM SCHWK.
2	96035068	1	PROTECTION PLATE WELDED	SCHUTZBLECH SCHWK.
3	96035070	2	CLAMP WELDED CONST. FE//ZNNI8//CN//T0	HALTER SCHWK.
4	96035071	1	CLAMP WELDED CONST. FE//ZNNI8//CN//T0	HALTER SCHWK.
5	96035073	2	RETAINER CPL. ⇨ ❑ 513	HALTER KPL.
6	97126014	1	PLATE 3X214X101 X5CRNI18-10	BLECH
7	97141550	2	PLATE 3X29X79 X5CRNI18-10	BLECH
8	97141617	1	PLATE 3X55X81 X5CRNI18-10	BLECH
9	97118867	1	PLATE 3X190X60 DC01 FE//ZNNI8//CN//T0	BLECH
10	97118723	1	PLATE 4X307X332 X5CRNI18-10	BLECH
11	97118724	1	PLATE 3X152X46 X5CRNI18-10	BLECH
12	97118725	2	PLATE 3X78X46 X5CRNI18-10	BLECH
13	97118726	7	THREADED PLATE 3X54X25 S355MC FE//ZN	GEWINDEPLATTE
14	97093827	4	PLATE 4X30X82 X5CRNI18-10	BLECH
15	97039859	5	CLAMP G-ST-52 FE//ZN20//C	SCHELLE
16	979620608	4	TRAVERSE 20X61X37 S355J2+N FE//ZNNI8//	TRAVERSE
17	97118866	1	PLATE 20X126X40 S355J2+N FE//ZNNI8//CN/	BLECH
90	96051843	1	EXHAUST SYSTEM PIPELINES	ROHRLEITUNGEN ABGASANL
(1)	96051845	1	PIPE COMPL.	ROHR KPL.
(2)	96051844	1	PIPE COMPL.	ROHR KPL.
100	96041566	1	ELECTRIC ADD-ON PARTS ⇨ ❑ 514	ELEKTRIK ANBAUTEILE
101	11429728	1	SCRFILTER ASSEMBLY SCRFILTER GEN 2 ⇨ ❑ 515	SCRFILTER-BAUGRUPPE
102	12898856	1	SENSOR PIPE	SENSORROHR
103	12999384	1	EXHAUST MIXING PIPE SCRFILTER GEN 2	ABGASMISCHROHR
104	97118733	1	EXHAUST PIPE X5CRNI18-10 SPF	ABGASROHR
105	97118731	1	EXHAUST PIPE X5CRNI18-10 SPF	ABGASROHR
106	97124264	1	EXHAUST PIPE X5CRNI18-10 SPF	ABGASROHR
120	10802682	3	SEALING RING 140X155X13	DICHTRING
180	10494115	2	PROFIL CLAMP 137,6/K1	PROFILSCHELLE
181	10494116	3	PROFIL CLAMP 163,0/K1	PROFILSCHELLE
182	12102925	2	HINGE PIN CLAMP 332X1022X30/A2 EDELS	GELENKBOLZENSCHELLE
183	11963742	2	BOW-TYPE CLAMP 132 X5CRNI18-10	BUEGELSCHELLE
184	10875557	8	CLAMP-HALF DIN 3015-1 L 0 R 8 AL	KLEMMHAELFTE
185	10876636	3	PIPE CLAMP DIN3016 8X15XRS1-A1 W5 ROS	ROHRSCHELLE
250	96046407	2	FORM HOSE	FORMSCHLAUCH
300	10021245	2	HEX SCREW ISO 4014 M8X80 10.9 FLZN SP	SECHSKANTSCHRAUBE
301	11651767	2	HEX SCREW ISO 4017 M8X20 8.8 480H SPF	SECHSKANTSCHRAUBE
302	10539468	4	SOCKET HEAD SCREW ISO 4762 M6X75 A4	ZYLINDERSCHRAUBE
303	10353713	4	SOCKET HEAD SCREW ISO 4762 M12X80 A2	ZYLINDERSCHRAUBE
304	11626706	4	HEX SCREW ISO 4017 M10X40 8.8 FLZN SP	SECHSKANTSCHRAUBE
305	10022183	4	SOCKET HEAD SCREW ISO 4762 M6X35 A2	ZYLINDERSCHRAUBE
306	11642358	8	HEX SCREW ISO 4017 M10X30 8.8 FLZN SP	SECHSKANTSCHRAUBE
307	10412851	7	BUTTON HEAD SCREW AEHNL.ISO 7380-2	HALBRUNDKOPFSCHRAUBE
308	10412852	2	BUTTON HEAD SCREW AEHNL.ISO 7380-2	HALBRUNDKOPFSCHRAUBE
309	406527808	6	HEX SCREW ISO 4017 M8X16 A2-70	SECHSKANTSCHRAUBE
310	4901881	2	SOCKET HEAD SCREW ISO 4762 M8X16 A4	ZYLINDERSCHRAUBE
311	408650608	2	BUTTON HEAD SCREW ISO 7380-2 M8X20 A	HALBRUNDKOPFSCHRAUBE
312	406590105	6	HEX SCREW ISO 4017 M8X25 A2-70	SECHSKANTSCHRAUBE
313	10197831	2	HEX SCREW ISO 4017 M8X25 8.8 ZNNI-480	SECHSKANTSCHRAUBE
350	11626393	4	HEX NUT AEHNL.ISO 7042 M12 A4	SECHSKANTMUTTER
351	11113917	4	HEX NUT AEHNL.ISO 7042 M6 A4 VERZINNT	SECHSKANTMUTTER
352	10814800	2	HEX NUT ISO 7042 M8 10 480H SPF	SECHSKANTMUTTER
353	411517114	9	HEX NUT ISO 4032 M6 A4-70	SECHSKANTMUTTER
354	12102695	2	HEX NUT ISO 4032 M10 8 ZNNI-480H SPF	SECHSKANTMUTTER
375	10410178	8	WASHER ISO 7089 12 200HV-A2	SCHEIBE
376	421801708	19	WASHER ISO 7093-1 6 200HV-A2	SCHEIBE
377	12103465	2	WASHER ISO 7089 8 300HV ZNNI-480H SPF	SCHEIBE

Pos.	Item	Quantity	Description	Bezeichnung
378	11491889	4	WASHER ISO 7093-1 10 300HV FLZN SPF	SCHEIBE
379	421861405	12	WASHER ISO 7093-1 8 200HV-A2	SCHEIBE
380	10289795	10	WASHER ISO 7089 10 300HV FLZN SPF	SCHEIBE
381	11140469	2	WASHER ISO 7093-1 8 200HV 480H SPF	SCHEIBE
400	10816958	8	FITTING BUZ 8 M14X1,5 INOX	VERSCHRAUBUNG

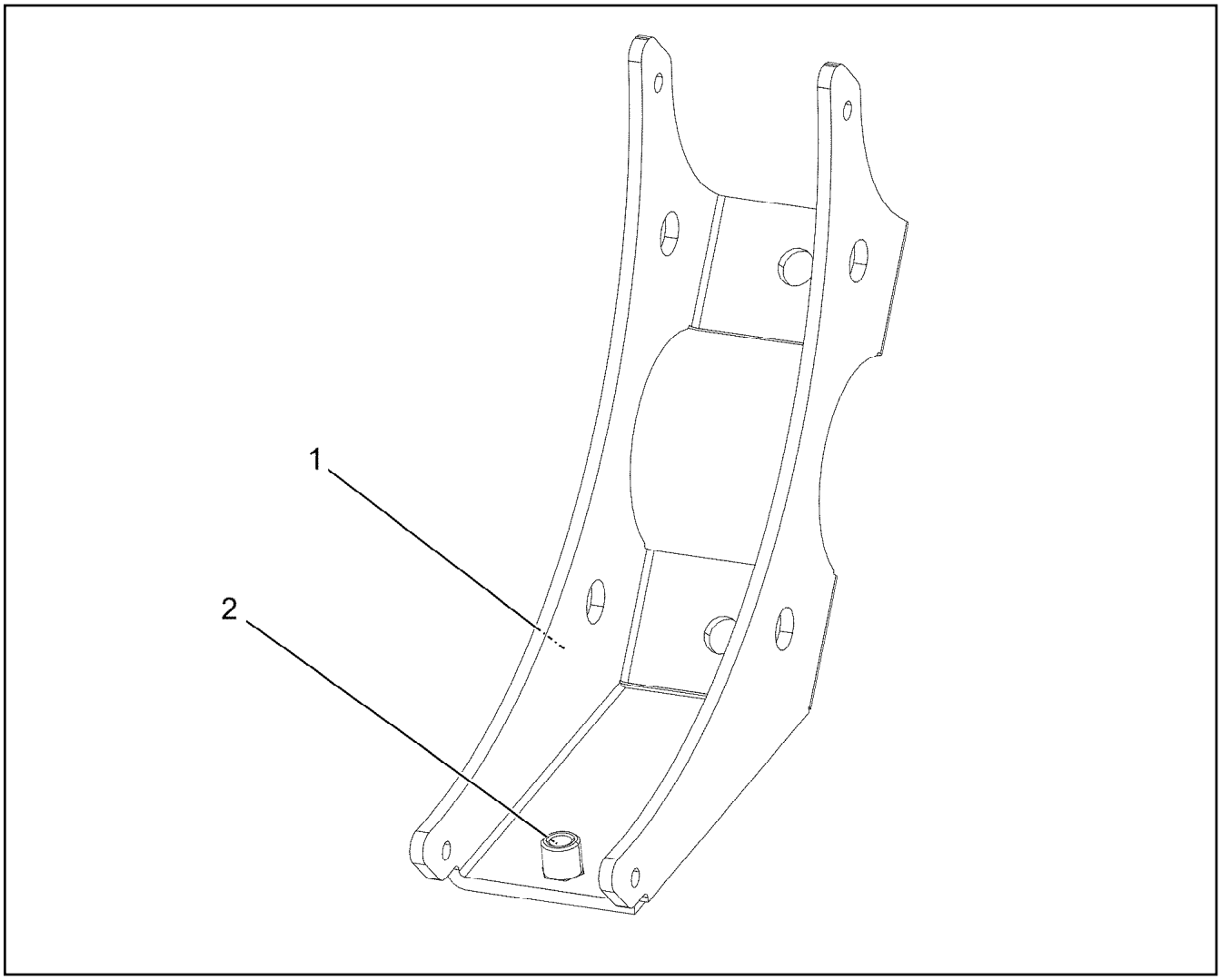

Pos.	Item	Quantity	Description	Bezeichnung
1	97118752	1	PLATE 4X287X288 X5CRNI18-10	BLECH
2	10455153	1	BLIND RIVET NUT M8 K=1,0-3,0 EDELSTAHL	BLINDNIETMUTTER

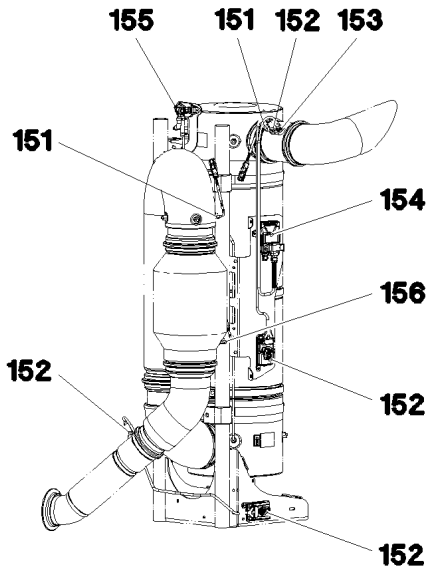

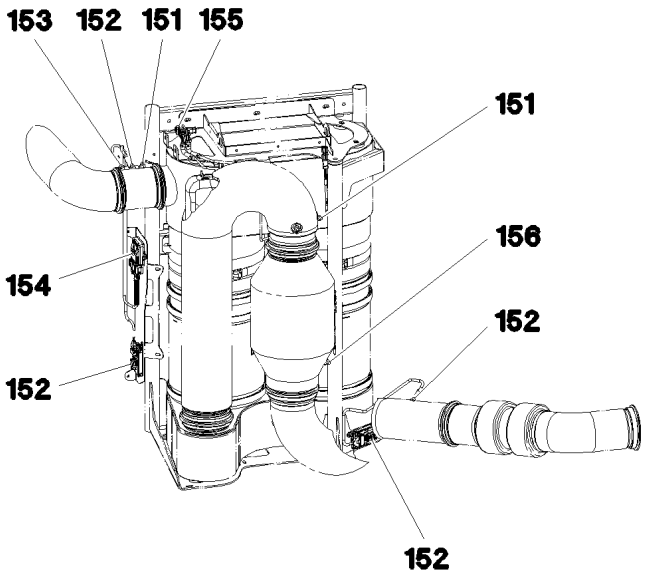

Pos.	Item	Quantity	Description	Bezeichnung
151	11349182	2	TEMPERATURE SENSOR -40°C BIS+800°C	TEMPERATURSENSOR
152	12412141	2	GAS SENSOR NICHT LACKIEREN	GASSENSOR
153	10144038	1	GAS SENSOR NICHT LACKIEREN	GASSENSOR
154	10144039	1	SENSOR CONTROL DEVICE NICHT LACKIE	SENSORSTEUERGERAET
155	10127114	1	DIFFERENTIAL PRESSURE SENSOR 0-0,3	DIFFERENZDRUCKSENSOR
156	12889334	1	TEMPERATURE SENSOR -40°C BIS +600°C	TEMPERATURSENSOR

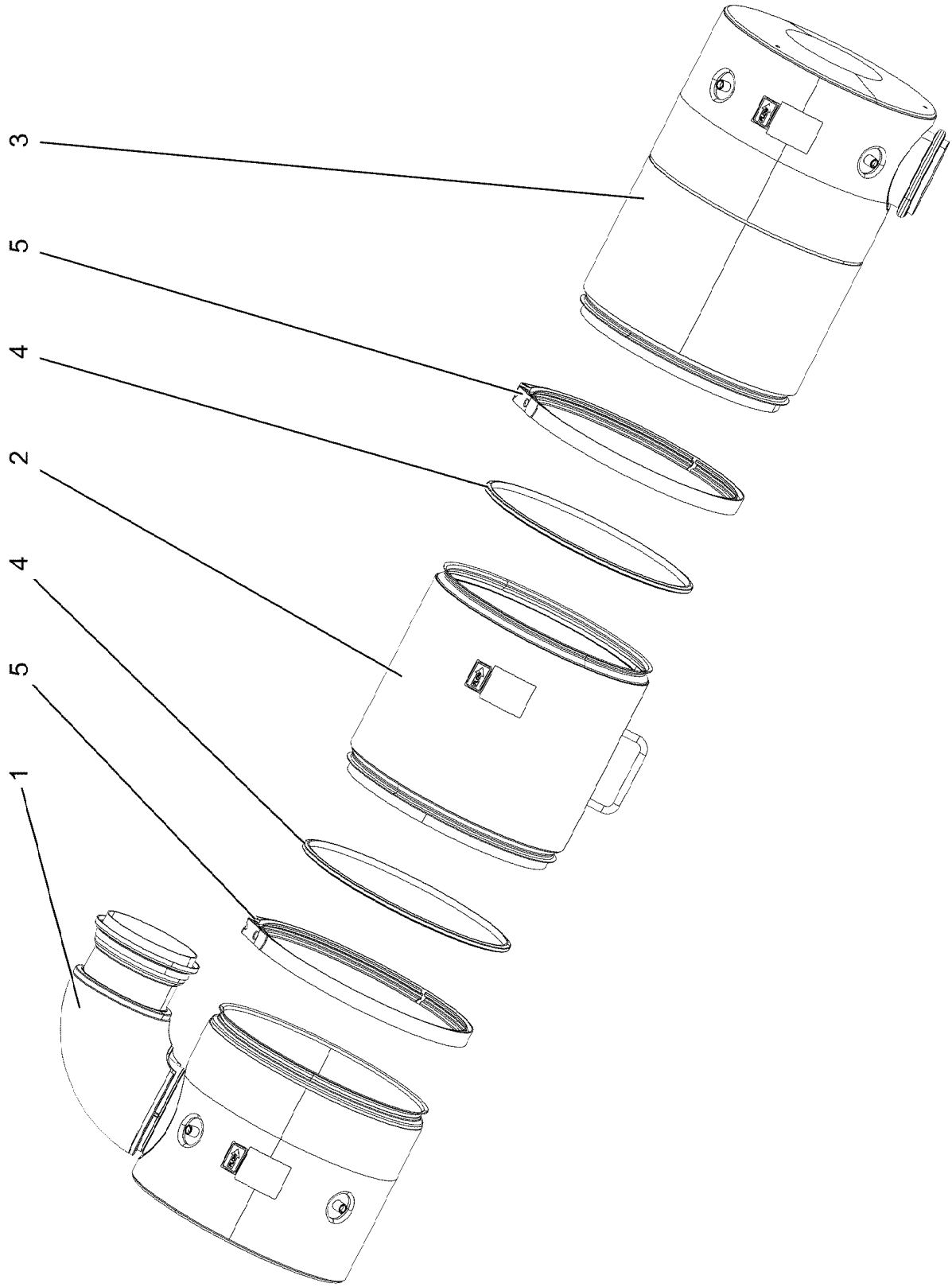
3
5
4
2
4
5
1

Pos.	Item	Quantity	Description	Bezeichnung
1	11428887	1	INLET MODULE SCRFILTER GEN 2	EINLASSMODUL
2	11429849	1	FILTER MODULE SCRFILTER GEN 2X	FILTERMODUL
3	11429873	1	OUTLET MODULE SCRFILTER GEN 2	AUSLASSMODUL
4	12462476	2	SEAL	DICHTUNG
5	12560584	2	PROFIL CLAMP 312/K1	PROFILSCHELLE

Pos.	Item	Quantity	Description	Bezeichnung
1	96039752	1	ADDITIONAL PARTS CLADDING ⇨ ❑ 518	ZUSATZTEILE VERKLEIDUNG

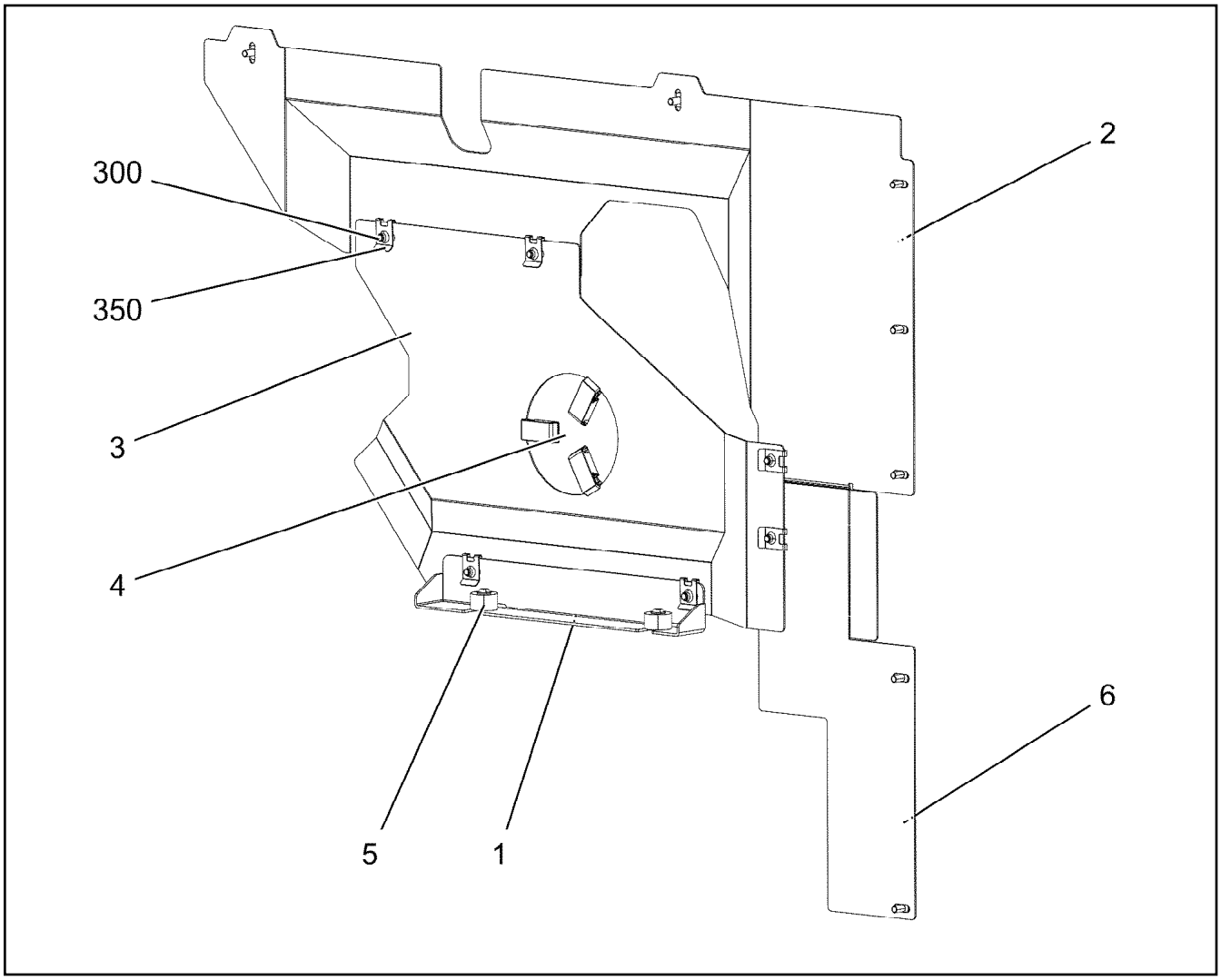

Pos.	Item	Quantity	Description	Bezeichnung
1	97121228	1	PLATE 3X487X107 ALMG3 H111 SPF	BLECH
2	97121229	1	PLATE 2X1160X520 ALMG3 H111 SPF	BLECH
3	97121306	1	PLATE 2X768X448 ALMG3 H111 SPF	BLECH
4	963544508	1	COVER COMPL.	DECKEL KPL.
5	978787708	2	SLEEVE 33.0X19 FE//ZNNI8//CN//T0	HUELSE
6	97126286	1	PLATE 2X520X250 ALMG3 H111 SPF	BLECH
300	10875485	15	BUTTON HEAD SCREW AEHNL.ISO 7380-2	HALBRUNDKOPFSCHRAUBE
350	12100332	6	SHEET METAL NUT M8 480H SPF	BLECHMUTTER

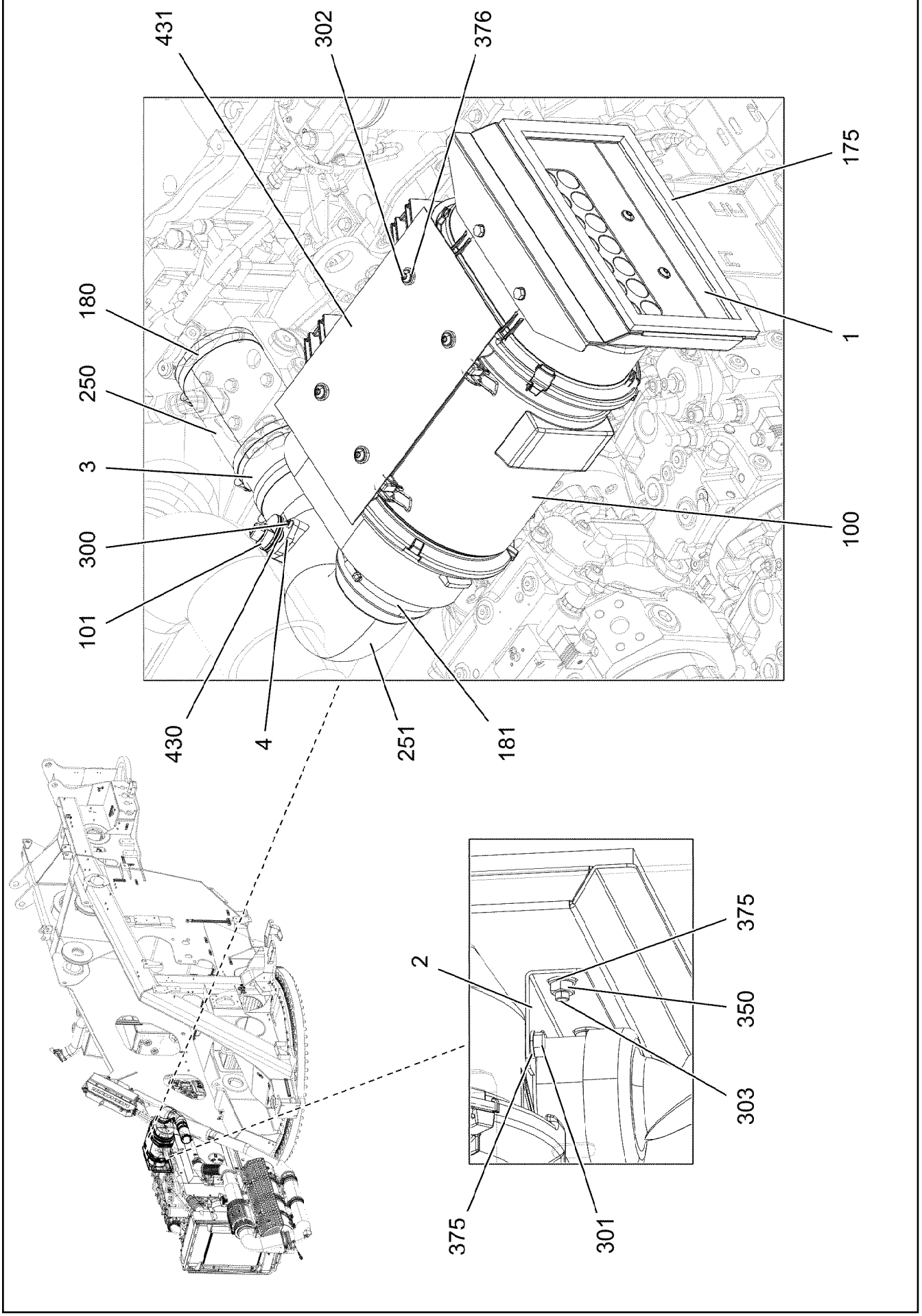
431
302
376
175
180
1
250
3
100
300
101
430
4
251
181
2
375
350
303
375
301

Pos.	Item	Quantity	Description	Bezeichnung
1	969089708	1	SCOOP WELDED	LUFTHUTZE SCHWK.
2	97052638	1	PLATE 2X130X89 ALMG3 H111	BLECH
3	97087964	1	TUBE ST12 SPF	ROHR
4	97057024	1	FLANGE 10X65X37 ALMG3 H111	FLANSCH
100	10871700	1	AIR FILTER 18M³/MIN PP ⇨ ❑ 521	LUFTFILTER
101	11101017	1	MAINTENANCE SWITCH 0,05 BAR	WARTUNGSSCHALTER
175	10425409	1	INSULATING MATERIAL 20X20X2000 PUR	DAEMMSTOFF
180	774217608	3	HOSE CLAMP 120/110-130/12 W3	SCHLAUCHSCHELLE
181	774209908	1	HOSE CLAMP 140/130-150/12 W3	SCHLAUCHSCHELLE
250	10872213	1	HOSE 100X180 EPDM	SCHLAUCH
251	97050548	1	AIR GUIDING HOSE 100/130 X 298 ELASTO	LUFTFUEHRUNGSSCHLAUCH
300	11690044	2	SOCKET HEAD SCREW ISO 4762 M6X12 8.8	ZYLINDERSCHRAUBE
301	11651767	4	HEX SCREW ISO 4017 M8X20 8.8 480H SPF	SECHSKANTSCHRAUBE
302	10875471	4	BUTTON HEAD SCREW AEHNL.ISO 7380-2	HALBRUNDKOPFSCHRAUBE
303	10875485	2	BUTTON HEAD SCREW AEHNL.ISO 7380-2	HALBRUNDKOPFSCHRAUBE
350	11693875	2	HEX NUT ISO 4032 M8 8 480H SPF	SECHSKANTMUTTER
375	12103465	6	WASHER ISO 7089 8 300HV ZNNI-480H SPF	SCHEIBE
376	429900608	4	SHEET GASKET 8X22X4 -A2	DICHTSCHEIBE
430	502933208	1	O-RING 10X2,2 NBR70	O-RING
431	97083604	1	SEAL 1.5X210X360 GUMMI	DICHTUNG

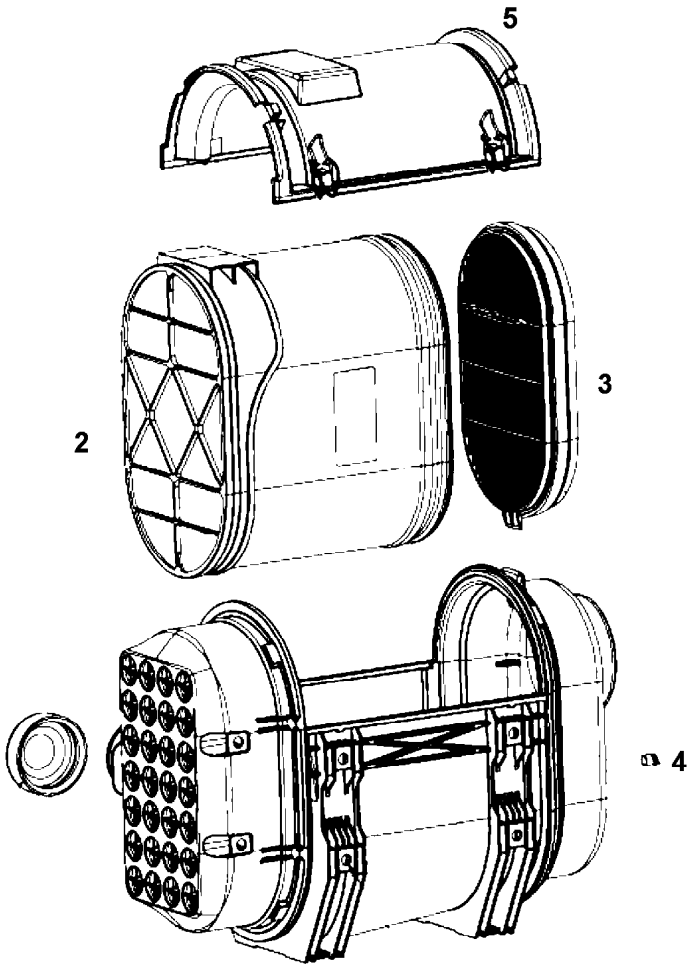

Pos.	Item	Quantity	Description	Bezeichnung
2	10294938	1	MAIN FILTER ELEMENT	HAUPTFILTERELEMENT
3	10294939	1	SAFETY ELEMENT	SICHERHEITSELEMENT
4	7619068	1	SEALING PLUG	VERSCHLUSSKAPPE
5	10297241	1	COVER	DECKEL

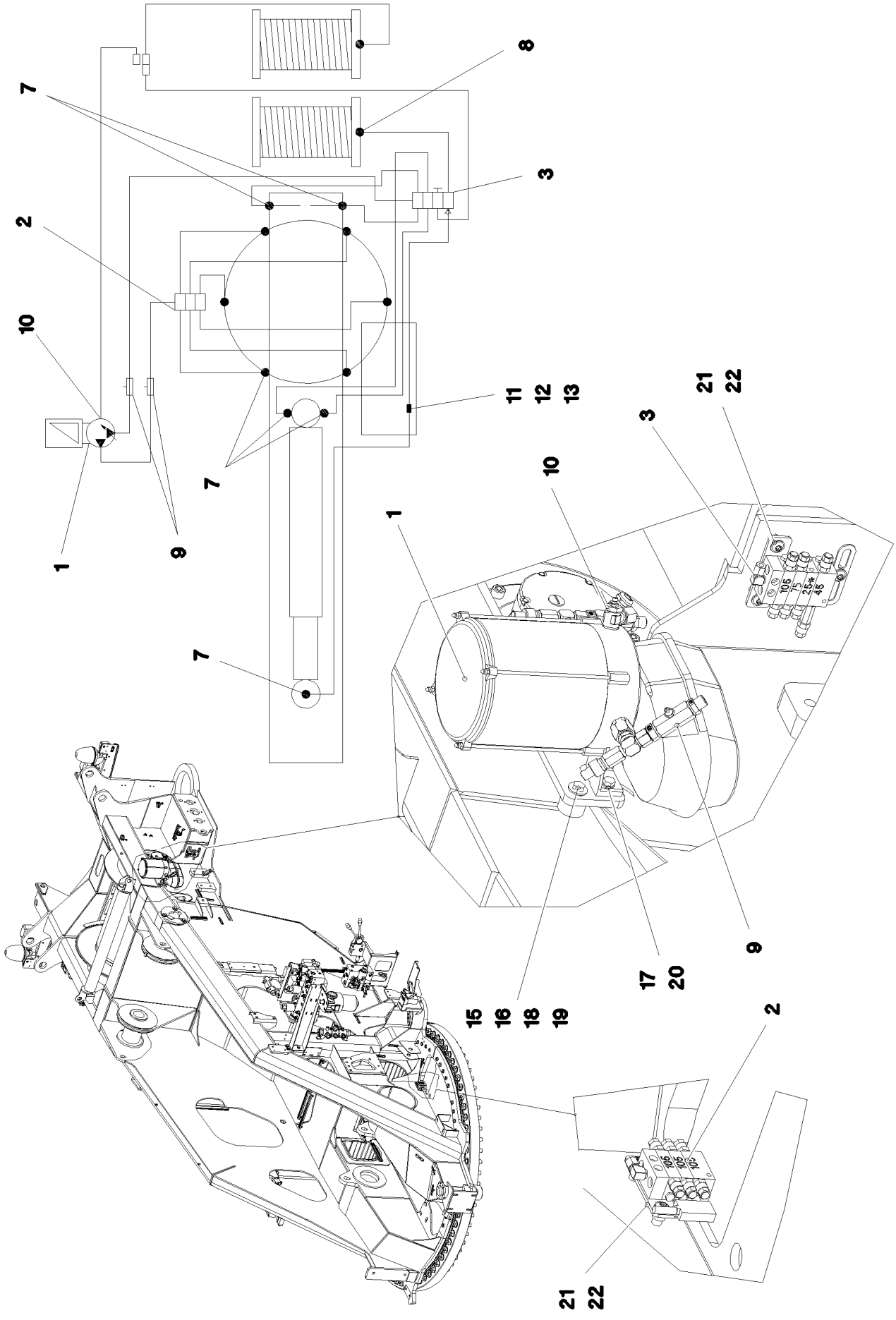

18.7.2022 077863 LIEBHERR	**etk_en_de_047654 LTR 1220** **CENT. LUBRIC. SYSTEM SUPERST.** **ZENTRALSCHMIERANLAGE OW**	❑ 522 (1/2) **917261208**

Pos.	Item	Quantity	Description	Bezeichnung
1	10327065	1	ELECTRIC PUMP ⇨ ❑ 524	ELEKTROPUMPE
2	11002916	1	DISTRIBUTION BLOCK 3/6 ⇨ ❑ 526	VERTEILERKOMBINATION
3	774387208	1	DISTRIBUTION BLOCK 4/7	VERTEILERKOMBINATION
(1)	774378108	1	NON-RETURN VALVE	RUECKSCHLAGVENTIL
4	12204614	4	SOCKET HEAD SCREW ISO 4762 M5X35 8.8	ZYLINDERSCHRAUBE
5	10875620	4	HEX NUT ISO 4032 M5 8 480H SPF	SECHSKANTMUTTER
6	10197808	4	WASHER ISO 7089 5 200HV ZNNI-480H	SCHEIBE
7	12101832	11	MALE CONNECTOR WSV 6 M10X1K MS	STECKANSCHLUSS
8	12101847	1	PLUG-IN CONNECTOR GE M8X1K MESSING	STECKVERBINDER
9	774375108	2	PASSAGE NIPPLE BLOCK ⇨ ❑ 139	DURCHGANGSNIPPELBLOCK
10	774372808	1	PUMP RETURN FLOW	PUMPENRUECKLAUF
11	774372608	1	COUPLING SLEEVE	KUPPLUNGSMUFFE
12	774372708	1	COUPLING PLUG	KUPPLUNGSSTECKER
13	471030008	2	FITTING XGE6-LR-ED CR6-FREI	VERSCHRAUBUNG
14	10873149	50	POLYAMID PIPE DIN 73378 6X1,5 PA 12-HL	POLYAMIDROHR
17	12103465	2	WASHER ISO 7089 8 300HV ZNNI-480H SPF	SCHEIBE
20	10197831	2	HEX SCREW ISO 4017 M8X25 8.8 ZNNI-480	SECHSKANTSCHRAUBE
21	12102696	4	BUTTON HEAD SCREW ISO 7380-2 M8X10 0	HALBRUNDKOPFSCHRAUBE
22	953696908	2	PLATE S315MC FE//ZNNI8//CN//T0	BLECH

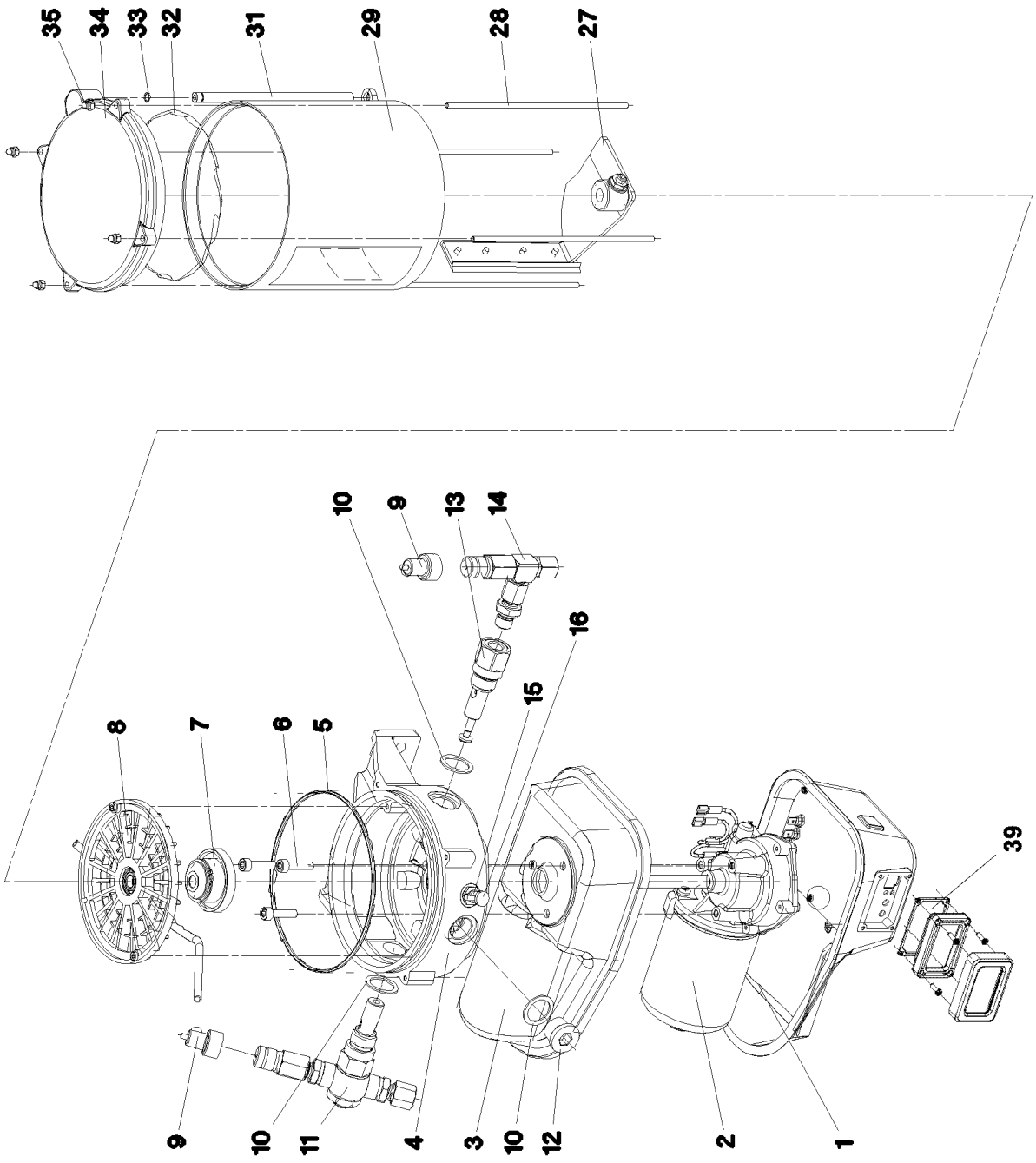
35
34
33
32
31
29
28
27
10
9
13
14
16
15
8
7
6
5
39
9
10
11
4
3
10
12
2
1

Pos.	Item	Quantity	Description	Bezeichnung
1	10493920	1	MOTOR HOUSING	MOTORGEHAEUSE
2	10355140	1	TRANSMISSION MOTOR 24V	GLEICHSTROMGETRIEBEMOTO
3	10014692	1	MOTOR HOUSING	MOTORGEHAEUSE
4	10014693	1	PUMP HOUSING	PUMPENGEHAEUSE
5	570163708	1	O-RING 140X3 NBR70	O-RING
6	10875588	3	SOCKET HEAD SCREW ISO 4762 M6X25 8.8	ZYLINDERSCHRAUBE
7	10014729	1	DRIVER	MITNEHMER
8	10014730	1	INTERMEDIATE RING	ZWISCHENRING
9	10429952	1	FAULT INDICATOR	STOERANZEIGE
10	10014697	3	SEALING RING 27X20X1,5 CU	DICHTRING
11	774387508	1	PUMP ELEMENT	PUMPENELEMENT
12	12218194	1	SCREW PLUG DIN 908 M20X1,5 St FLZN SP	VERSCHLUSSSCHRAUBE
13	10216340	1	PUMP ELEMENT	PUMPENELEMENT
14	571328408	1	PRESSURE RELIEF VALVE	UEBERDRUCKVENTIL
15	11080392	1	HYDRAULIC-TYPE LUBRICAT.NIPPLE	KEGELSCHMIERNIPPEL
16	10014701	1	GREASE NIPPLE CAP	SCHMIERNIPPELKAPPE
25	4002886	4	CAP NUT DIN 986 M4 A2-70	HUTMUTTER
27	10014712	1	AGITATOR PADDLE	RUEHRFLUEGEL
28	10099209	4	PULL ROD	ZUGSTANGE
29	10038271	1	CONTAINER	BEHAELTER
30	967421808	1	STICKER BEHAELTER 2,5KG	AUFKLEBER
32	10099208	1	O-RING 133,07X1,78 NBR 70	O-RING
33	570690608	1	O-RING 6X1 NBR90	O-RING
34	12102477	1	COVER	BEHAELTERDECKEL
39	11110060	1	WINDOW	SICHTFENSTER
99	10447539	1	SEALING COMPOUND	DICHTUNGSMASSE

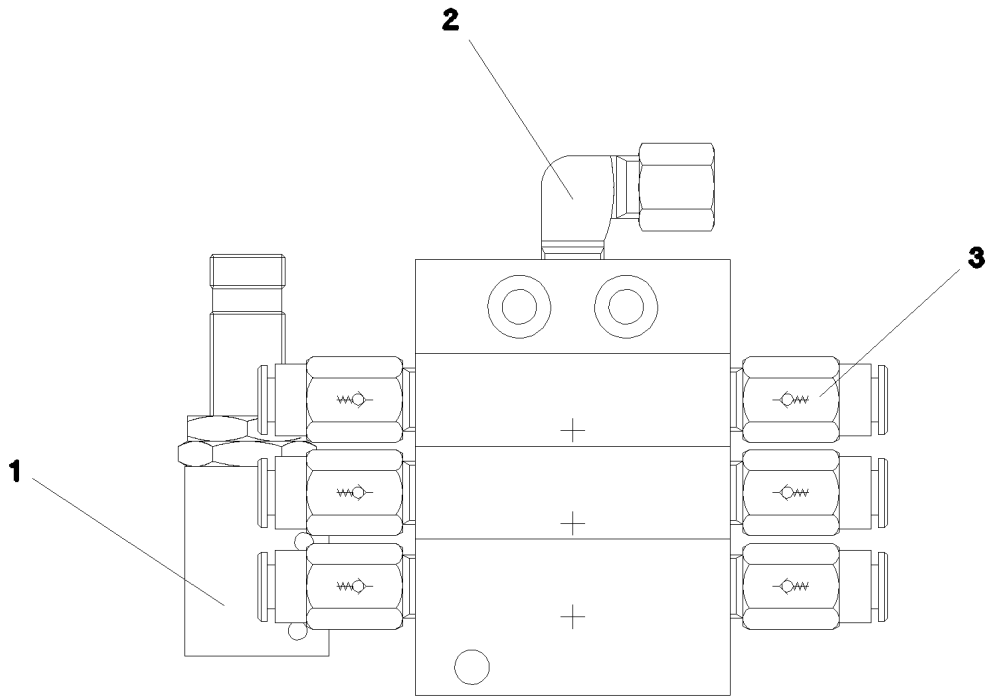

Pos.	Item	Quantity	Description	Bezeichnung
1	10097613	1	PROXIMITY SWITCH BERUEHRUNGSLOS	NAEHERUNGSSCHALTER
2	774373808	1	FITTING WE 6LL M10x1	VERSCHRAUBUNG
3	11007219	6	NON-RETURN VALVE	RUECKSCHLAGVENTIL

Pos.	Item	Quantity	Description	Bezeichnung
8	966181208	1	TEMPERATURE SENSOR	TEMPERATURFUEHLER
(150)	10800266	1	TEMPERATURE SENSOR -50/+125°C SPF	TEMPERATURFUEHLER
10	965281408	1	LIMIT SWITCH ADD-ON AUSLEGER-STEIL ⇨ ❑ 528	ENDSCHALTER ANBAU
11	968128908	1	EL.ADD-ON SET-LIMIT SWITCHES + ⇨ ❑ 529	EL.GEBER U.ENDSCHALTER
12	96045384	1	CABLE LIST SLEWING PLATFORM ⇨ ❑ 531	KABELLISTE DREHBUEHNE
21	607226808	2	SLIP-ON TUBE	AUFSTECKROHR
30	968693208	1	MOUNTING MATERIAL	MONTAGEMATERIAL
(10)	10874588	50	CABLE TIE 4,8X292-SCHWARZ PA66 SPF	KABELBINDER
(20)	10874587	50	CABLE TIE 7,6X368-SCHWARZ PA66 SPF	KABELBINDER
(30)	10870333	100	CABLE TIE 7,6X380-SCHWARZ PA66HIRHS	KABELBINDER
(40)	11691035	10	CABLE TIE 4,6X200-SCHWARZ PA66HS SPF	KABELBINDER
32	614003108	1	HORN 24V	HORN
33	10123878	2	RUBBER RING X22	GUMMIRING

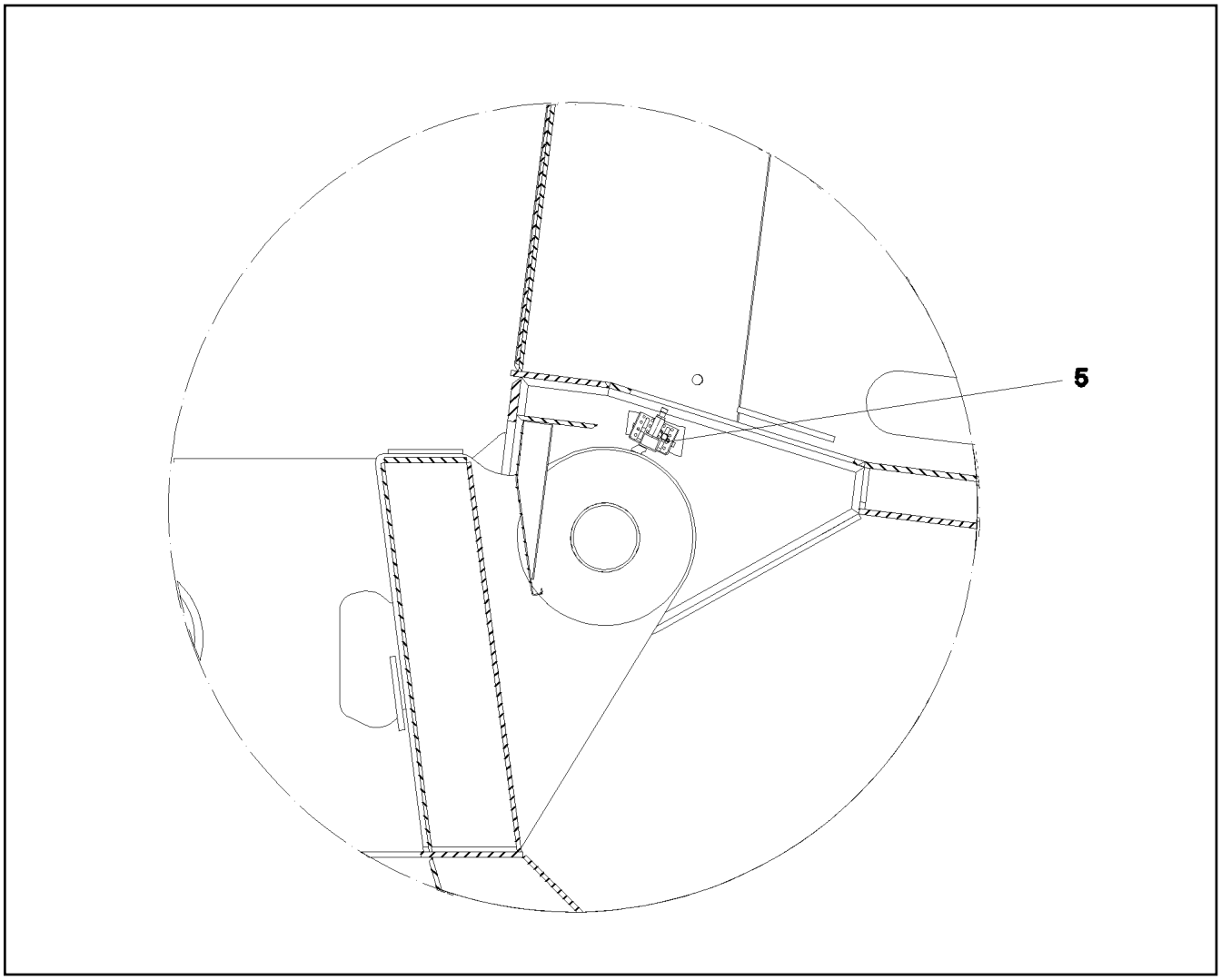

Pos.	Item	Quantity	Description	Bezeichnung
5	12100674	2	DOWEL PIN ISO 8752 6X40 480H SPF	SPANNSTIFT

Pos.	Item	Quantity	Description	Bezeichnung
17	966633408	1	ELECTRIC BALLASTING ENDSCHALTER	ELEKTRIK BALLASTIERUNG
(11)	606053108	2	LIMIT SWITCH TASTEND SPF	ENDSCHALTER
18	966633508	1	EL.SUPERSTRUCTURE INTERLOCK ENDS	EL.DREHBUEHNENARRETIERUN
(11)	606053108	2	LIMIT SWITCH TASTEND SPF	ENDSCHALTER
30	966633308	1	ELECTRIC SLEWING SENSOR BUSGEBER-3	ELEKTRIK DREHWERTGEBER
(11)	10802060	1	ROTARY ENCODER 360° LSB PL:E SPF	DREHGEBER
50	966720708	1	ELECTR.FOR SLEWING GEAR ⇨ ❑ 530	ELEKTRIK DREHWERK

Pos.	Item	Quantity	Description	Bezeichnung
10	11003193	2	PROXIMITY SWITCH BERUEHRUNGSLOS 12	NAEHERUNGSSCHALTER
(1)	571817308	1	O-RING DIN 3771 23,6X2,9 NBR90SHORE	O-RING

Pos.	Item	Quantity	Description	Bezeichnung
50	96045385	1	WIRING HARNESS W500 ⇨ ❑ 532	KABELSTRANG
51	96037136	1	WIRING HARNESS W501 ⇨ ❑ 534	KABELSTRANG
52	96037137	1	WIRING HARNESS W555 ⇨ ❑ 536	KABELSTRANG
57	968401508	1	LEAD W571	LEITUNG
58	96006879	1	LEAD W510	LEITUNG
62	96037138	1	LEAD W587	LEITUNG
63	96022970	1	LEAD W588	LEITUNG
68	10025227	1	CABLE 2X0,25-7M	KABEL
69	10870643	1	CABLE 2X0,14+2X0,22-9M	KABEL
70	96037133	1	LEAD W562 ⇨ ❑ 538	LEITUNG
71	10870635	1.5	PROTECTIVE HOSE DN20 NORMAL PP	SCHUTZSCHLAUCH

Pos.	Item	Quantity	Description	Bezeichnung
5	600460808	6.6	CONTROL LEAD 12 X 0,75 SPF	STEUERLEITUNG
7	680001408	1	COUPLING SOCKET 4-POL SPF	KUPPLUNGSDOSE
8	680001408	1	COUPLING SOCKET 4-POL SPF	KUPPLUNGSDOSE
9	680001408	1	COUPLING SOCKET 4-POL SPF	KUPPLUNGSDOSE
10	10678494	1	COUPLING SOCKET 4-POL SPF	KUPPLUNGSDOSE
11	680000808	1	COUPLING SOCKET 4-POLE 90° SPF	KUPPLUNGSDOSE
12	680001708	1	COUPLING SOCKET 4-POL GERADE PVC SP	KUPPLUNGSDOSE
13	10678491	1	COUPLING SOCKET 4-POL SPF	KUPPLUNGSDOSE
14	680001408	1	COUPLING SOCKET 4-POL SPF	KUPPLUNGSDOSE
15	680001408	1	COUPLING SOCKET 4-POL SPF	KUPPLUNGSDOSE
16	680001408	1	COUPLING SOCKET 4-POL SPF	KUPPLUNGSDOSE
18	11341599	5.83	LEAD 2 X 1,5	LEITUNG
19	10877801	1	CONNECTION CABLE 2X0,75-10M	ANSCHLUSSKABEL
85	602307908	10	WIRED END FERRULE DIN 46228-1 A0,75X5	ADERENDHUELSE
86	602307708	74	WIRED END FERRULE DIN 46228-1 A1X5 V	ADERENDHUELSE
95	6202444	1	PIN CONTACT 0,75-1,5MM2	STIFTKONTAKT
96	6202434	2	SLEEVE CONTACT 0,75-1,5MM2	BUCHSENKONTAKT
114	602307808	4	WIRED END FERRULE DIN 46228-1 A0,5X5 E	ADERENDHUELSE
121	602300108	13	CONTACT 1-2,5MM2	KONTAKT
125	602300308	96	CONTACT 0,5-1MM2	KONTAKT
134	602303308	6	RECEPTACLE FOR TABS 6,3X0,5-1,5	FLACHSTECKHUELSE
202	11082602	24.41	INSULATING HOSE DN6X0,5 PUR SPF	ISOLIERSCHLAUCH
203	11082603	2.14	INSULATING HOSE DN8X0,65 PUR SPF	ISOLIERSCHLAUCH
205	11082605	0.86	INSULATING HOSE DN12X0,65 PUR SPF	ISOLIERSCHLAUCH
223	11124205	8.35	CABLE CONDUIT DN16X0,6 PUR SPF	KABELSCHLAUCH
224	11124207	0.93	CABLE CONDUIT DN20X0,6 PUR SPF	KABELSCHLAUCH
225	11124208	2.91	CABLE CONDUIT DN25X0,6 PUR SPF	KABELSCHLAUCH
226	11124209	0.93	CABLE CONDUIT DN30X0,6 PUR SPF	KABELSCHLAUCH
227	11124210	2.86	CABLE CONDUIT DN35X0,6 PUR SPF	KABELSCHLAUCH
229	11124212	1.2	CABLE CONDUIT DN50X0,6 PUR SPF	KABELSCHLAUCH
305	10870540	395.03	ELECTR.CABLE 1,0	KFZ-LEITUNG
345	10870539	11.4	ELECTR.CABLE 0,75	KFZ-LEITUNG
371	10877800	1	CONNECTION CABLE 2X0,75-5M	ANSCHLUSSKABEL
372	10877801	1	CONNECTION CABLE 2X0,75-10M	ANSCHLUSSKABEL
375	10871126	1	COUPLING SOCKET 4-POL SPF	KUPPLUNGSDOSE
376	10871127	1	COUPLING SOCKET 4-POL SPF	KUPPLUNGSDOSE
377	10871126	1	COUPLING SOCKET 4-POL SPF	KUPPLUNGSDOSE
378	10871127	1	COUPLING SOCKET 4-POL SPF	KUPPLUNGSDOSE
500	923512208	76	CABLE MARKER	KABELMARKER
501	602300208	10	PLUG SHELL 18-POL	STECKERGEHAEUSE
502	605007908	34	APPLIANCE SOCKET 3-POL	GERAETESTECKDOSE
503	605006608	3	DEVICE PLUG DIN 43650 4-POLE	GERAETESTECKER
504	602325508	1	HOUSING 6-POL	GEHAEUSE
505	692406308	1	PLUG DIN 72585 4-POL POLYBUTOLEN SPF	STECKER
506	605251608	1	PLUG SOCKET BODY 4-POLE AL	STECKDOSENKOERPER
507	692406708	1	PLUG DIN 72585 7-POL POLYBUTOLEN SPF	STECKER
508	927996308	1	PLUG	STECKER
509	10424622	1	BUSHING HOUSING 2-POL 5A	BUCHSENGEHAEUSE
510	604526508	1	BUSHING SUPPORT 6-POL 16A	BUCHSENTRAEGER
511	10324830	1	CABLE PLUG 4-POL 90°	KABELSTECKER
512	692406008	2	TERMINAL HOUSING DIN 72585 APD POLY	ENDGEHAEUSE
513	11494567	3	DUST CAP	STAUBKAPPE
514	605212808	1	MOULDING 317-1397-000 SUR	FORMTEIL
515	605215508	1	CLAMP SURE-SEAL	KLAMMER
516	604508708	1	CABLE SLEEVE 6-8	KABELTUELLE
517	604512108	1	SEALING PLUG M1-D	VERSCHLUSSKAPPE
518	604505508	1	CABLE SOCKET M11-Z	KABELDOSE
636	604518808	2	SLEEVE CONTACT 1,5MM2	BUCHSENKONTAKT
643	602339408	3	SLEEVE CONTACT DIN 72585 0,5-1MM2 SP	BUCHSENKONTAKT
647	602339508	4	SLEEVE CONTACT DIN 72585 0,5-1,5MM2	BUCHSENKONTAKT

Pos.	Item	Quantity	Description	Bezeichnung
690	10335820	29	SLEEVE CONTACT 0,2-0,5MM2	BUCHSENKONTAKT
700	10873194	2	SLEEVE CONTACT 0,5-0,75MM2	BUCHSENKONTAKT
811	692404908	1	STOPPER PLUG	BLINDSTOPFEN
812	604518908	5	STOPPER PLUG BAUREIHE_M1	BLINDSTOPFEN
813	605619708	37	SINGLE STRAND SEALING 2	EINZELADERABDICHTUNG
816	605619808	3	SINGLE STRAND SEALING DIN 72585 15BL	EINZELADERABDICHTUNG
817	692405808	1	STOPPER PLUG DIN 72585 4 SPF	BLINDSTOPFEN
821	605619908	4	SINGLE STRAND SEALING DIN 72585 10YE	EINZELADERABDICHTUNG
822	692405708	3	STOPPER PLUG DIN 72585 7 SPF	BLINDSTOPFEN
828	10424625	2	SINGLE STRAND SEALING 1,4-2,1MM VMQ	EINZELADERABDICHTUNG
995	965617208	2	SHIELDING TIED BACK	ABSCHIRMUNG ZURUECKGEB
996	965622108	62	LETTERING WIRE	BESCHRIFTUNG ADER
998	965622208	1	LETTERING WIRING HARNESS	BESCHRIFTUNG KABELBAUM
2267	6001703	6	DOUBLE SPRING CONTACT 0,5-1,0MM2	DOPPELFEDERKONTAKT

Pos.	Item	Quantity	Description	Bezeichnung
5	10678491	1	COUPLING SOCKET 4-POL SPF	KUPPLUNGSDOSE
6	10678491	1	COUPLING SOCKET 4-POL SPF	KUPPLUNGSDOSE
7	10678491	1	COUPLING SOCKET 4-POL SPF	KUPPLUNGSDOSE
8	10678491	1	COUPLING SOCKET 4-POL SPF	KUPPLUNGSDOSE
9	10678491	1	COUPLING SOCKET 4-POL SPF	KUPPLUNGSDOSE
10	12100215	4.32	DATA LINE 3 X 1 FEP SPF	DATENLEITUNG
12	12100215	6.27	DATA LINE 3 X 1 FEP SPF	DATENLEITUNG
13	12100215	6.27	DATA LINE 3 X 1 FEP SPF	DATENLEITUNG
14	12100215	6.27	DATA LINE 3 X 1 FEP SPF	DATENLEITUNG
15	12100217	6.27	DATA LINE 2 X 1 FEP SPF	DATENLEITUNG
16	12100217	7.72	DATA LINE 2 X 1 FEP SPF	DATENLEITUNG
17	12100217	4.27	DATA LINE 2 X 1 FEP SPF	DATENLEITUNG
18	12100217	2.02	DATA LINE 2 X 1 FEP SPF	DATENLEITUNG
19	12100217	1.3	DATA LINE 2 X 1 FEP SPF	DATENLEITUNG
49	602217008	1	CABLE LUG M6/16MM²	KABELSCHUH
50	602217308	1	CABLE LUG DIN 46234 M12/16mm²	KABELSCHUH
55	602311508	1	CABLE LUG DIN 46234 M6/10mm²	KABELSCHUH
57	602311408	2	CABLE LUG DIN 46234 M8/16mm² TIN-PLATE	KABELSCHUH
58	602205708	4	CABLE LUG DIN 46234 M6/16mm²	KABELSCHUH
75	602203908	3	FLAT PLUG 6,3X1-2,5 SN	FLACHSTECKER
86	602307708	26	WIRED END FERRULE DIN 46228-1 A1X5 V	ADERENDHUELSE
95	6202444	3	PIN CONTACT 0,75-1,5MM2	STIFTKONTAKT
96	6202434	2	SLEEVE CONTACT 0,75-1,5MM2	BUCHSENKONTAKT
98	10872032	8	CABLE SLEEVE 12,0-3,0/12/1,4	KABELTUELLE
106	602301708	1	CABLE LUG DIN 46234 M8/16-25MM² VERZI	KABELSCHUH
111	602205808	1	CABLE LUG M6/16,8-26,7MM²	KABELSCHUH
121	602300108	21	CONTACT 1-2,5MM2	KONTAKT
125	602300308	92	CONTACT 0,5-1MM2	KONTAKT
202	11082602	14.02	INSULATING HOSE DN6X0,5 PUR SPF	ISOLIERSCHLAUCH
203	11082603	9.43	INSULATING HOSE DN8X0,65 PUR SPF	ISOLIERSCHLAUCH
204	11082604	7.12	INSULATING HOSE DN10X0,65 PUR SPF	ISOLIERSCHLAUCH
205	11082605	1.33	INSULATING HOSE DN12X0,65 PUR SPF	ISOLIERSCHLAUCH
206	11082606	1.18	INSULATING HOSE DN14X0,65 PUR SPF	ISOLIERSCHLAUCH
208	11082608	0.28	INSULATING HOSE DN18X0,85 PUR SPF	ISOLIERSCHLAUCH
223	11124205	3.89	CABLE CONDUIT DN16X0,6 PUR SPF	KABELSCHLAUCH
225	11124208	1.46	CABLE CONDUIT DN25X0,6 PUR SPF	KABELSCHLAUCH
226	11124209	2.91	CABLE CONDUIT DN30X0,6 PUR SPF	KABELSCHLAUCH
228	11124211	1.23	CABLE CONDUIT DN40X0,6 PUR SPF	KABELSCHLAUCH
229	11124212	3.71	CABLE CONDUIT DN50X0,6 PUR SPF	KABELSCHLAUCH
261	12104809	8	CABLE TIE 3,6X142-SCHWARZ PA66 SPF	KABELBINDER
305	10870540	427.54	ELECTR.CABLE 1,0	KFZ-LEITUNG
307	10870541	37.14	ELECTR.CABLE 1,5	KFZ-LEITUNG
309	10870542	23.3	ELECTR.CABLE 2,5	KFZ-LEITUNG
322	12102630	5.1	ELECTR.CABLE 10	KFZ-LEITUNG
326	12102632	5.1	ELECTR.CABLE 16	KFZ-LEITUNG
328	12102634	8.85	ELECTR.CABLE 16	KFZ-LEITUNG
330	12102635	7.55	ELECTR.CABLE 25	KFZ-LEITUNG
371	12100214	6.27	DATA LINE 2 X 2,5 FEP SPF	DATENLEITUNG
372	12100214	6.27	DATA LINE 2 X 2,5 FEP SPF	DATENLEITUNG
373	12100214	6.27	DATA LINE 2 X 2,5 FEP SPF	DATENLEITUNG
374	11840113	6.27	BUS LINE 2 X 0,5	BUSLEITUNG
375	11840113	6.27	BUS LINE 2 X 0,5	BUSLEITUNG
376	11840113	6.27	BUS LINE 2 X 0,5	BUSLEITUNG
377	600345208	6.27	BUS LINE 4 X 1 SPF	BUSLEITUNG
378	12100216	6.27	DATA LINE 2 X 1,5 FEP SPF	DATENLEITUNG
379	12100217	6.27	DATA LINE 2 X 1 FEP SPF	DATENLEITUNG
380	12100217	6.27	DATA LINE 2 X 1 FEP SPF	DATENLEITUNG
381	12100217	6.27	DATA LINE 2 X 1 FEP SPF	DATENLEITUNG
383	12100217	6.27	DATA LINE 2 X 1 FEP SPF	DATENLEITUNG
384	12100215	6.27	DATA LINE 3 X 1 FEP SPF	DATENLEITUNG

Pos.	Item	Quantity	Description	Bezeichnung
386	12100215	6.27	DATA LINE 3 X 1 FEP SPF	DATENLEITUNG
388	10877801	1	CONNECTION CABLE 2X0,75-10M	ANSCHLUSSKABEL
389	10877801	1	CONNECTION CABLE 2X0,75-10M	ANSCHLUSSKABEL
500	923512208	58	CABLE MARKER	KABELMARKER
501	602300208	11	PLUG SHELL 18-POL	STECKERGEHAEUSE
502	605007908	13	APPLIANCE SOCKET 3-POL	GERAETESTECKDOSE
503	10678453	1	PLUG SHELL 62-POL PBT-GF20 GRAU	STECKERGEHAEUSE
504	10678458	2	PROTECTING CAP MCP BUCHSENGEHAE	SCHUTZKAPPE
505	6001790	4	SOCKET HOUSING 2-POL	STECKDOSENGEHAEUSE
506	10099861	1	HOUSING 12-POL	GEHAEUSE
507	10099866	1	CONTACT RETAINING PIN JPT 12 POL	KONTAKTSICHERUNGSSTIFT
508	602209708	1	ATTACHABLE SLEEVE HOUSING 2-POL	STECKHUELSENGEHAEUSE
509	10342517	3	PLUG SHELL 2 13A TH.PLAST SW	STECKERGEHAEUSE
510	605613908	1	PLUG BODY 4-POL	STECKERKOERPER
511	602208908	1	FLAT PLUG HOUSING FASTIN-FASTON	FLACHSTECKERGEHAEUSE
512	10412433	1	PLUG SHELL 12-POL 13A TH.PLAST SW	STECKERGEHAEUSE
513	10216772	1	CONTACT LOCK DT 12 POLIG TH.PLAST G	KONTAKTVERRIEGELUNG
514	10678452	1	PLUG SHELL 62-POL PBT-GF20 SCH	STECKERGEHAEUSE
515	962196208	1	CONNECTOR FOR FUEL HEATING	STECKER FUER DIESELHEIZUN
516	602208608	1	ATTACHABLE SLEEVE HOUSING FASTIN-F	STECKHUELSENGEHAEUSE
517	927996308	1	PLUG	STECKER
518	10342518	3	SOCKET 2-POL	STECKDOSE
519	605212708	1	PLUG SOCKET BODY 3-POL	STECKDOSENKOERPER
520	6004195	2	PLUG SHELL 2-POL	STECKERGEHAEUSE
521	10874331	4	PROTECTING CAP JPT	SCHUTZKAPPE
522	11647373	2	PROTECTING CAP JPT 2 POL	SCHUTZKAPPE
523	605212808	2	MOULDING 317-1397-000 SUR	FORMTEIL
524	605215508	2	CLAMP SURE-SEAL	KLAMMER
525	610701108	1	PROTECTING CAP	SCHUTZKAPPE
526	10342519	3	CONTACT LOCK DT 2 POLIG	KONTAKTVERRIEGELUNG
527	7368241	2	CONTACT LOCK 2-POL	KONTAKTVERRIEGELUNG
528	10041876	2	HOLDER DT/DTM	HALTER
529	10353004	1	DUMMY PLUG DT 2 POLIG PA GRAU	BLINDSTECKER
530	10429638	1	PLUG SHELL 2-POL 13A TH.PLAST SW	STECKERGEHAEUSE
531	11494567	1	DUST CAP	STAUBKAPPE
617	602329108	8	CONTACT 0,5-1MM2	KONTAKT
669	10100062	4	CONNECTOR PIN 0,75-2,0MM2 Cu Ni	STECKERSTIFT
670	10100063	11	PLUG BUSHING 0,75-2,0MM2 Cu	STECKERBUCHSE
671	10097470	2	FLAT PLUG 0,8X0,5-1 CuSn4	FLACHSTECKER
690	10335820	20	SLEEVE CONTACT 0,2-0,5MM2	BUCHSENKONTAKT
709	10872033	2	CABLE SLEEVE 16,0-4,0/16/1,78	KABELTUELLE
724	10493493	6	SLEEVE CONTACT 1,0-2,5MM2 CuNiSi	BUCHSENKONTAKT
726	10493495	65	SLEEVE CONTACT 0,5-1,0MM2 CuNiSi	BUCHSENKONTAKT
727	10493496	4	SLEEVE CONTACT 1,0-1,5MM2 CuNiSi	BUCHSENKONTAKT
753	10800631	4	SLEEVE CONTACT 0,5-1,0MM2 CuNiSi	BUCHSENKONTAKT
758	11080881	4	RECEPTACLE 6,3X0,5-1,0 VERZINNT	STECKHUELSE
766	602305605	1	CABLE LUG AEHNL.DIN 46237 6,5/6-10MM² V	KABELSCHUH
801	602330508	6	SINGLE STRAND SEALING 2,2-3,0MM	EINZELADERABDICHTUNG
802	602330808	14	SINGLE STRAND SEALING 1,2-2,1MM BLAU	EINZELADERABDICHTUNG
806	602331108	43	STOPPER PLUG 3,6MM SILIKON WEIS	BLINDSTOPFEN
807	602329208	4	STOPPER PLUG AMP JPT-SERIE NA	BLINDSTOPFEN
811	692404908	2	STOPPER PLUG	BLINDSTOPFEN
813	605619708	13	SINGLE STRAND SEALING 2	EINZELADERABDICHTUNG
823	7368253	3	STOPPER PLUG DEUTSCH GROESSE	BLINDSTOPFEN
830	10014387	69	SINGEL SEAL 1,0-1,5MM2	EINZELDICHTUNG
842	10800046	6	STOPPER PLUG DEUTSCH-STECKER	BLINDSTOPFEN
996	965622108	124	LETTERING WIRE	BESCHRIFTUNG ADER
998	965622208	1	LETTERING WIRING HARNESS	BESCHRIFTUNG KABELBAUM

Pos.	Item	Quantity	Description	Bezeichnung
5	11840113	5.68	BUS LINE 2 X 0,5	BUSLEITUNG
6	11840113	0.17	BUS LINE 2 X 0,5	BUSLEITUNG
7	11840113	8.81	BUS LINE 2 X 0,5	BUSLEITUNG
8	11840113	0.17	BUS LINE 2 X 0,5	BUSLEITUNG
9	11840113	3.16	BUS LINE 2 X 0,5	BUSLEITUNG
10	11840113	0.17	BUS LINE 2 X 0,5	BUSLEITUNG
11	11840113	3.16	BUS LINE 2 X 0,5	BUSLEITUNG
12	11840113	0.17	BUS LINE 2 X 0,5	BUSLEITUNG
13	11840113	8.06	BUS LINE 2 X 0,5	BUSLEITUNG
14	11840113	0.17	BUS LINE 2 X 0,5	BUSLEITUNG
15	11840113	0.18	BUS LINE 2 X 0,5	BUSLEITUNG
16	12100216	4.8	DATA LINE 2 X 1,5 FEP SPF	DATENLEITUNG
17	12100217	4.8	DATA LINE 2 X 1 FEP SPF	DATENLEITUNG
18	12100215	4.8	DATA LINE 3 X 1 FEP SPF	DATENLEITUNG
19	12100217	4.7	DATA LINE 2 X 1 FEP SPF	DATENLEITUNG
121	602300108	9	CONTACT 1-2,5MM2	KONTAKT
125	602300308	27	CONTACT 0,5-1MM2	KONTAKT
202	11082602	8.82	INSULATING HOSE DN6X0,5 PUR SPF	ISOLIERSCHLAUCH
203	11082603	5.23	INSULATING HOSE DN8X0,65 PUR SPF	ISOLIERSCHLAUCH
205	11082605	5.21	INSULATING HOSE DN12X0,65 PUR SPF	ISOLIERSCHLAUCH
211	11118396	3.8	PROTECTIVE HOSE 30MM AL-PET FOLIE	SCHUTZSCHLAUCH
225	11124208	2.53	CABLE CONDUIT DN25X0,6 PUR SPF	KABELSCHLAUCH
226	11124209	4.53	CABLE CONDUIT DN30X0,6 PUR SPF	KABELSCHLAUCH
261	12104809	1	CABLE TIE 3,6X142-SCHWARZ PA66 SPF	KABELBINDER
284	11005151	5.59	INSULATING HOSE DN12X0,8 GLASSEIDE SI	ISOLIERSCHLAUCH
298	10441166	0.5	HEATSHRINK SLEEVING 11,6/2,5X2,29 POLY	SCHRUMPFSCHLAUCH
305	10870540	82.2	ELECTR.CABLE 1,0	KFZ-LEITUNG
345	10870539	34.5	ELECTR.CABLE 0,75	KFZ-LEITUNG
371	12100217	4.7	DATA LINE 2 X 1 FEP SPF	DATENLEITUNG
372	12100217	6.4	DATA LINE 2 X 1 FEP SPF	DATENLEITUNG
373	12100217	6.4	DATA LINE 2 X 1 FEP SPF	DATENLEITUNG
374	12100217	6.4	DATA LINE 2 X 1 FEP SPF	DATENLEITUNG
375	12100215	6.6	DATA LINE 3 X 1 FEP SPF	DATENLEITUNG
500	923512208	21	CABLE MARKER	KABELMARKER
501	602300208	2	PLUG SHELL 18-POL	STECKERGEHAEUSE
502	10342517	2	PLUG SHELL 2 13A TH.PLAST SW	STECKERGEHAEUSE
503	6003248	1	PLUG 4-POL 13A	STECKER
504	7368246	1	CONTACT LOCK DT-STECKDOSE 4-P	KONTAKTVERRIEGELUNG
505	10874178	1	PLUG CONTACT CPL. 4 POL PA66	STECKER KPL.
506	11060619	2	BUSHING HOUSING 2-POL 20A	BUCHSENGEHAEUSE
507	10813633	2	PLUG SHELL MCON MCP1,2 PA 66, GF30	STECKERGEHAEUSE
508	692406308	1	PLUG DIN 72585 4-POL POLYBUTOLEN SPF	STECKER
509	11341840	1	BUSHING HOUSING 4-POL PBT SCHWARZ	BUCHSENGEHAEUSE
510	11342208	1	BUSHING HOUSING 2-POL BL	BUCHSENGEHAEUSE
511	11342255	1	PLUG 2-POL SW	STECKER
512	10342518	3	SOCKET 2-POL	STECKDOSE
513	11342257	1	PLUG 4-POL SW	STECKER
514	11342259	1	PLUG 4-POL VIOLETT	STECKER
515	11000394	1	PLUG SHELL HP PBT-GF15	STECKERGEHAEUSE
516	6003168	1	PLUG 3-POL	STECKER
517	692406008	1	TERMINAL HOUSING DIN 72585 APD POLY	ENDGEHAEUSE
518	10342519	2	CONTACT LOCK DT 2 POLIG	KONTAKTVERRIEGELUNG
519	11060618	3	PROTECTING CAP 180°	SCHUTZKAPPE
520	6205239	1	SOCKET 3-POL	STECKDOSE
521	6205242	1	CONTACT LOCK DT-STECKER 3-POL	KONTAKTVERRIEGELUNG
522	11491349	1	PROTECTING CAP 180°	SCHUTZKAPPE
523	7368241	2	CONTACT LOCK 2-POL	KONTAKTVERRIEGELUNG
524	12693951	1	CONTACT LOCK 2-POL PBT GF30	KONTAKTVERRIEGELUNG
643	602339408	2	SLEEVE CONTACT DIN 72585 0,5-1MM2 SP	BUCHSENKONTAKT
670	10100063	6	PLUG BUSHING 0,75-2,0MM2 Cu	STECKERBUCHSE

Pos.	Item	Quantity	Description	Bezeichnung
717	10300946	4	SLEEVE CONTACT 0,50-1MM2MM2 Cu	BUCHSENKONTAKT
726	10493495	4	SLEEVE CONTACT 0,5-1,0MM2 CuNiSi	BUCHSENKONTAKT
727	10493496	2	SLEEVE CONTACT 1,0-1,5MM2 CuNiSi	BUCHSENKONTAKT
740	7369458	6	PIN CONTACT 0,5-1,0MM2 CU	STIFTKONTAKT
754	10813644	9	SLEEVE CONTACT 0,5-0,75MM2 CuNiSi	BUCHSENKONTAKT
788	11342253	9	SLEEVE CONTACT 0,75-1,0MM2 SILBER	BUCHSENKONTAKT
789	11622989	4	SLEEVE CONTACT 0,5-1,0MM2 CuNiSi	BUCHSENKONTAKT
802	602330808	4	SINGLE STRAND SEALING 1,2-2,1MM BLAU	EINZELADERABDICHTUNG
804	602331508	9	SINGLE STRAND SEALING	EINZELADERABDICHTUNG
816	605619808	2	SINGLE STRAND SEALING DIN 72585 15BL	EINZELADERABDICHTUNG
817	692405808	2	STOPPER PLUG DIN 72585 4 SPF	BLINDSTOPFEN
823	7368253	1	STOPPER PLUG DEUTSCH GROESSE	BLINDSTOPFEN
828	10424625	9	SINGLE STRAND SEALING 1,4-2,1MM VMQ	EINZELADERABDICHTUNG
830	10014387	6	SINGEL SEAL 1,0-1,5MM2	EINZELDICHTUNG
836	10813642	1	STOPPER PLUG MCON 1,23,55MM VMQ 60	BLINDSTOPFEN
844	10870403	1	STOPPER PLUG 3,9-4,1MM SILIKON-KAUT	BLINDSTOPFEN
996	965622108	52	LETTERING WIRE	BESCHRIFTUNG ADER
998	965622208	1	LETTERING WIRING HARNESS	BESCHRIFTUNG KABELBAUM
2253	11000401	3	PLUG BUSHING 0,75-1,0MM2 CuNuSi	STECKERBUCHSE
2998	96014807	10	MACHINING CAN- STUETZP	BEARBEITUNG

Pos.	Item	Quantity	Description	Bezeichnung
5	11620017	9.93	LEAD 2 X 1	LEITUNG
6	10877798	1	CONNECTION CABLE 2X0,75-1,5M	ANSCHLUSSKABEL
125	602300308	2	CONTACT 0,5-1MM2	KONTAKT
500	923512208	4	CABLE MARKER	KABELMARKER
501	602331308	1	HOUSING 4-POL	GEHAEUSE
502	604526508	1	BUSHING SUPPORT 6-POL 16A	BUCHSENTRAEGER
503	604526608	1	PIN CARRIER 6-POL 16A	STIFTTRAEGER
504	602704808	2	CABLE SLEEVE 4-6	KABELTUELLE
505	604512108	1	SEALING PLUG M1-D	VERSCHLUSSKAPPE
506	604505508	1	CABLE SOCKET M11-Z	KABELDOSE
507	604508508	1	SEALING PLUG M 1-K	VERSCHLUSSKAPPE
508	604508608	1	PLUG 6-POL	STECKER
628	604519208	2	PIN CONTACT 0,75-1MM2	STIFTKONTAKT
629	604519308	2	SLEEVE CONTACT 0,75-1,0MM2	BUCHSENKONTAKT
812	604518908	10	STOPPER PLUG BAUREIHE_M1	BLINDSTOPFEN
998	965622208	3	LETTERING WIRING HARNESS	BESCHRIFTUNG KABELBAUM

Pos. 30

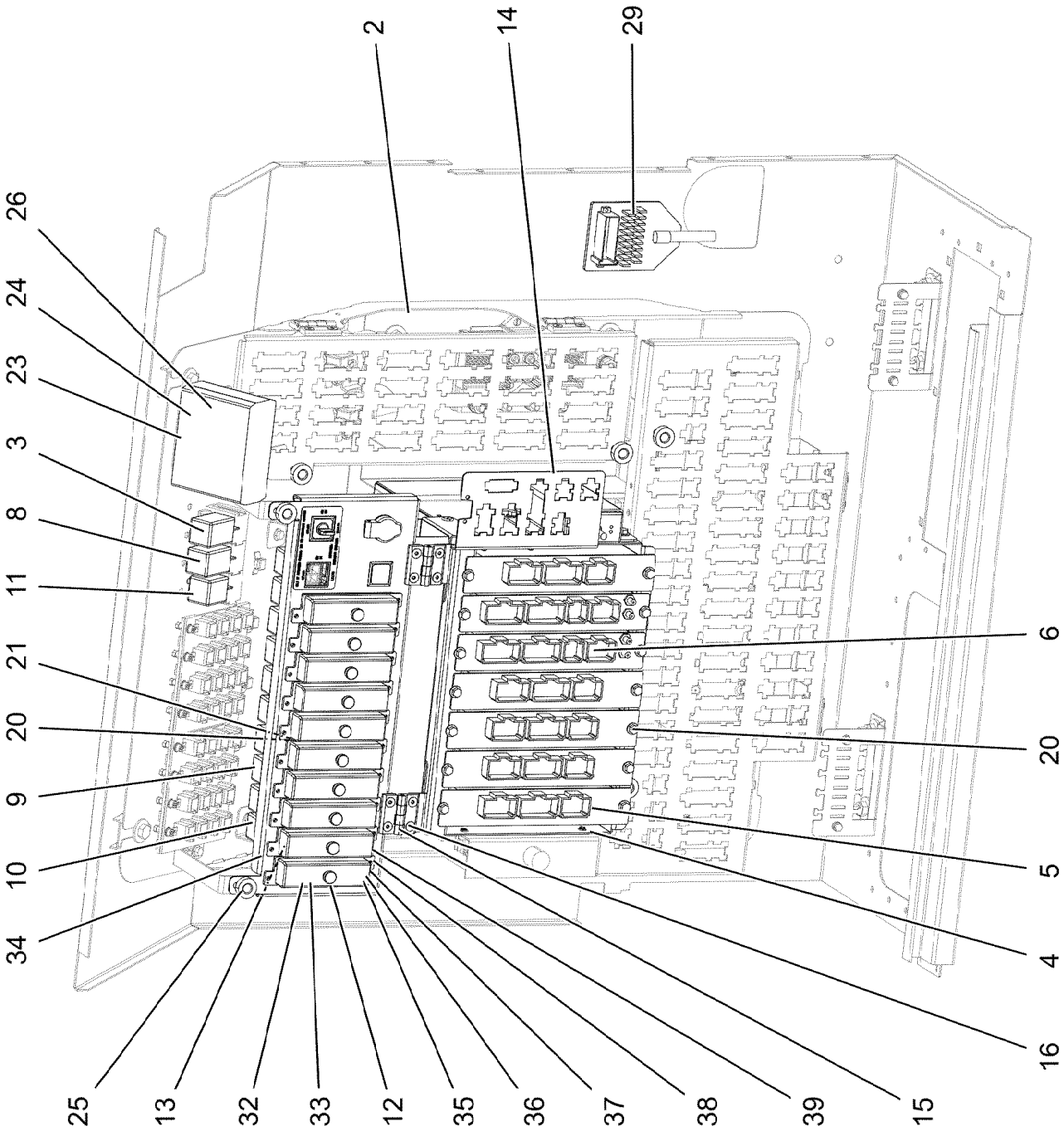

18.7.2022 171997 LIEBHERR	**etk_en_de_047654 LTR 1220** **SWITCHBOX MOUNTING PARTS** **EINBAUTEILE SCHALTSCHRANK**	539 (1/2) **91000922**

Pos.	Item	Quantity	Description	Bezeichnung
2	96045386	1	BASE ASSEMBLY CPL. ⇨ ❑ 541	GRUNDAUFBAU KPL.
3	10877999	1	TIME RELAY 60S 24V	ZEITRELAIS
4	968063108	1	PRE-ASSEMBLY MOUNTING UNIT ⇨ ❑ 548	MONTAGEEINHEIT VORM.
5	968253608	5	UNIVERSAL INPUT-OUTPUT MODULE LSB- ⇨ ❑ 549	UNIVERSAL EIN-AUSGANGSMO
6	96061724	2	BTB PROGRAMMED LSB-BTB-A0	BTB PROGRAMMIERT
(100)	12105988	1	REMOTE CONTROL APPARATUS LSB-BTB-A	FERNSTEUEREMPFAENGER
(300)	10288121	1	NAME PLATE 70X40 POLYESTER SPF	BEZEICHNUNGSSCHILD
(301)	11007853	1	LABELS 10X90 POLYESTER	ETIKETTEN
8	10876716	1	TIME RELAY 10 H 24V	ZEITRELAIS
9	630121508	19	CENTER-ZERO RELAY 24V 10A SPF	WECHSLERRELAIS
10	630105408	1	RELAY 24V/1W 26X26X24MM SPF	RELAIS
11	10440553	1	DIODE SUBASSEMBLY PBTP-GF20 SPF	DIODENBAUSTEIN
12	969061708	1	CARRIER PLATE, PRE-ASSEMBLED ⇨ ❑ 551	TRAEGERBLECH SICHERUNG
13	97017074	1	PLATE 1.5X399X35 DC01 FE//ZNNI8//CN//T0	BLECH
14	97024733	1	PLATE 1.5X156X117 DC01 FE//ZNNI8//CN//T	BLECH
15	704258208	2	HINGE 20X20X40/180° GD-ZN SW GEPULV	SCHARNIER
16	10875550	8	COUNTERSUNK SCREW DIN 7991 M5X12 8	SENKSCHRAUBE
20	10875503	28	HEX SCREW EN 1665 M5X10 10.9 480H SPF	SECHSKANTSCHRAUBE
21	511001708	5	HEX NUT ISO 4035 M5 04	SECHSKANTMUTTER
23	408311208	4	PAN-HEAD SCREW ISO 7045 M2,5X12 4.8 A2	FLACHKOPFSCHRAUBE
24	425100408	4	TOOTH LOCK WASHER DIN 6797 A 2,7	ZAHNSCHEIBE
25	10449664	8	KNURLED SCREW M5X10 PA6	RAENDELSCHRAUBE
26	10873838	1	GSM MODULE MC-MRLQ	GSM-MODUL
29	660024508	1	ADAPTOR 18-POL SPF	ADAPTER
30	10472995	1	CONNECTING LINE 7X0,25-10,068M PUR	VERBINDUNGSLEITUNG
32	604007708	8	FLAT FUSE LINK 3A	FLACHSICHERUNGSEINSATZ
33	604006908	8	FLAT FUSE LINK 5A 32	FLACHSICHERUNGSEINSATZ
34	604007008	12	FLAT FUSE LINK 7,5A	FLACHSICHERUNGSEINSATZ
35	604007108	12	FLAT FUSE LINK 10A 32	FLACHSICHERUNGSEINSATZ
36	604007208	10	FLAT FUSE LINK 15A	FLACHSICHERUNGSEINSATZ
37	604007308	7	FLAT FUSE LINK 20A	FLACHSICHERUNGSEINSATZ
38	604007608	1	FLAT FUSE LINK 25A	FLACHSICHERUNGSEINSATZ
39	602735508	47	INSERTION BRIDGE	EINLEGEBRUECKE

Pos.	Item	Quantity	Description	Bezeichnung
1	96045387	1	CABLES, BASIC CONSTRUCTION CPL S400 ⇨ ❑ 542	DRAEHTE GRUNDAUFBAU KPL.
2	969256608	1	BASE ASSEMBLY ⇨ ❑ 543	GRUNDAUFBAU

Pos.	Item	Quantity	Description	Bezeichnung
2	96045388	1	BASIC WIRING CONST.PRE-ASSEMB. S400	DRAEHTE GRUNDAUFBAU VO
228	11124211	1.32	CABLE CONDUIT DN40X0,6 PUR SPF	KABELSCHLAUCH
229	11124212	0.65	CABLE CONDUIT DN50X0,6 PUR SPF	KABELSCHLAUCH
261	12104809	30	CABLE TIE 3,6X142-SCHWARZ PA66 SPF	KABELBINDER
268	12104811	30	CABLE TIE 2,5X99-SCHWARZ PA66 SPF	KABELBINDER
269	12104810	30	CABLE TIE 3,6X203-SCHWARZ PA66 SPF	KABELBINDER
501	602209708	5	ATTACHABLE SLEEVE HOUSING 2-POL	STECKHUELSENGEHAEUSE
502	602761608	2	TERMINAL MARKER 0,2-2,5MM²	MESSERTRENNKLEMME
503	602305908	1	FLAT PLUG HOUSING FASTIN-FASTON	FLACHSTECKERGEHAEUSE
504	602331308	32	HOUSING 4-POL	GEHAEUSE
505	602323308	53	FLAT PLUG HOUSING 18-POL	FLACHSTECKERGEHAEUSE
506	602336008	6	PLUG SHELL 14-POL	STECKERGEHAEUSE
507	602301408	2	HOUSING 8-POL	GEHAEUSE
508	10046999	10	PLUG 8-POL	STECKER
509	602338608	1	FEMALE PLUG 9-POLE	BUCHSENSTECKER
510	10099863	7	HOUSING 15-POLE	GEHAEUSE
511	10099867	7	CONTACT RETAINING PIN JPT 15 POLE	KONTAKTSICHERUNGSSTIFT
512	630122908	23	PLUG BASE 9-POLE	RELAISSTECKSOCKEL
513	10047001	10	PLUG 8-POL	STECKER
514	602337608	1	RETAINER HOUSING 4-POL 19A	AUFNAHMEGEHAEUSE
515	10047000	10	PLUG 8-POL	STECKER
516	602335908	4	PLUG SHELL 4-POL	STECKERGEHAEUSE
517	5603876	1	LINE CONNECTOR	LEITUNGSVERBINDER
518	602337008	1	CONNECTOR PLUG A AX	ANSCHLUSSSTECKER
519	10099864	5	HOUSING 18-POL	GEHAEUSE
520	602338208	5	SECURING PIN FOR JPT PLUG	SICHERUNGSSTIFT
521	10099856	9	HOUSING 21-POLE	GEHAEUSE
522	10099868	9	CONTACT RETAINING PIN JPT 21 POL	KONTAKTSICHERUNGSSTIFT
523	602300208	1	PLUG SHELL 18-POL	STECKERGEHAEUSE
524	602325608	2	FLAT PLUG HOUSING JPT	FLACHSTECKERGEHAEUSE
525	11067932	14	FLAT PLUG HOUSING 18-POL	FLACHSTECKERGEHAEUSE
526	602325508	2	HOUSING 6-POL	GEHAEUSE
527	10099860	2	HOUSING 9-POL	GEHAEUSE
528	10045101	2	CONTACT RETAINING PIN 9POL GELB	KONTAKTSICHERUNGSSTIFT
529	636107901	1	TERMINAL/CLAMP	KLEMME

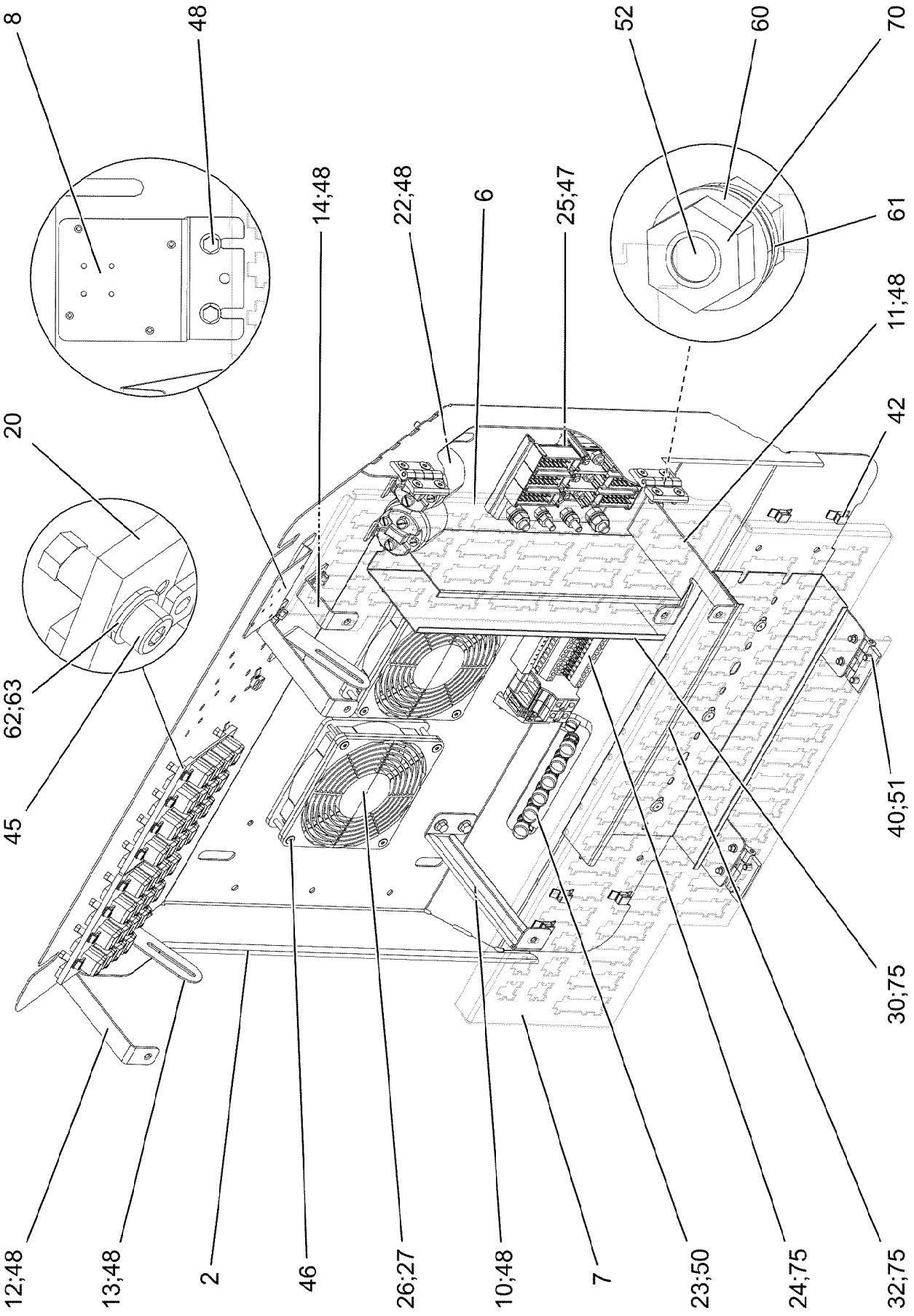

18.7.2022 095994 LIEBHERR	**etk_en_de_047654 LTR 1220** **BASE ASSEMBLY** **GRUNDAUFBAU**	❑ 543 (1/2) **969256608**

Pos.	Item	Quantity	Description	Bezeichnung
2	965461108	1	ASSEMBLY PLATE PRE-ASS.	MONTAGEBLECH VORM.
(1)	978610208	1	MOUNTING PLATE 1.5X753X899 DC01	MONTAGEBLECH
(3)	413006208	16	BLIND RIVET NUT M4 K=1,0-3,0	BLINDNIETMUTTER
6	97010811	1	PLUG PLATE 1.5X449X175 DC01	STECKERBLECH
7	97010812	1	PLUG PLATE 1.5X594X283 DC01	STECKERBLECH
8	97025882	1	PLATE 1.5X114X70 DC01 FE//ZNNI8//CN//T0	BLECH
10	978608608	1	HOLDER 1.5X198X59 DC01 FE//ZNNI8//CN//T	HALTER
11	97010814	1	RETAINER PLATE 2X192X41 DC01 FE//ZNNI	HALTERBLECH
12	979294808	2	PLATE 2X190X18 DC01 FE//ZNNI8//CN//T0	BLECH
13	972940008	2	PLATE 1.5X112X30 DC01 FE//ZNNI8//CN//T0	BLECH
14	97010815	1	RETAINER PLATE 2X121X18 DC01	HALTERBLECH
20	10027448	2	CURRENT SOURCE LSB SPF	STROMQUELLE
22	11160723	2	PERFORMANCE RELAY 75A	LEISTUNGSRELAIS
23	922648308	1	TERMINAL BOARD PRE-ASS. ⇨ ❑ 545	KLEMMBRETT VORM.
24	967589508	1	TERMINAL STRIP ⇨ ❑ 546	KLEMMENLEISTE
25	926891108	1	GROUND RAIL ⇨ ❑ 547	VERTEILER MASSE
26	963398008	2	PREMOUNT.AXIAL FLOW FAN UPPER ⇨ ❑ 474	AXIALLUEFTER VORM.OBEN
27	10222686	2	GUARD PA	SCHUTZGITTER
30	638109101	0.28	WIRING DUCT 80X40/2000 HARD-PVC	VERDRAHTUNGSKANAL
32	601407008	0.29	CABLE CHANNEL 40X120/2000	KABELKANAL
40	704258208	4	HINGE 20X20X40/180° GD-ZN SW GEPULV	SCHARNIER
42	11492315	11	CABLE CLIP HOLDER 8,1X-SCHWARZ PA66	KABELBINDERHALTER
45	10876395	16	SOCKET HEAD SCREW ISO 4762 M4X12 8.8	ZYLINDERSCHRAUBE
46	10876388	8	COUNTERSUNK SCREW DIN 7991 M4X35 8	SENKSCHRAUBE
47	10875564	2	SOCKET HEAD SCREW ISO 1207 M4X10 4.8	ZYLINDERSCHRAUBE
48	10875503	18	HEX SCREW EN 1665 M5X10 10.9 480H SPF	SECHSKANTSCHRAUBE
50	10876384	2	PAN-HEAD SCREW ISO 7045 M5X16 4.8 480	FLACHKOPFSCHRAUBE
51	10875550	16	COUNTERSUNK SCREW DIN 7991 M5X12 8	SENKSCHRAUBE
52	11651767	1	HEX SCREW ISO 4017 M8X20 8.8 480H SPF	SECHSKANTSCHRAUBE
60	425221108	1	SERRATED LOCK WASHER DIN 6798 J 8.4	FAECHERSCHEIBE
61	12103465	2	WASHER ISO 7089 8 300HV ZNNI-480H SPF	SCHEIBE
62	10875645	16	WASHER ISO 7089 4 200HV 480H SPF	SCHEIBE
63	425220708	16	SERRATED LOCK WASHER DIN 6798 J 4.3	FAECHERSCHEIBE
70	11693875	2	HEX NUT ISO 4032 M8 8 480H SPF	SECHSKANTMUTTER
75	704232308	12	BLIND RIVET 4,0X10,5	BLINDNIET

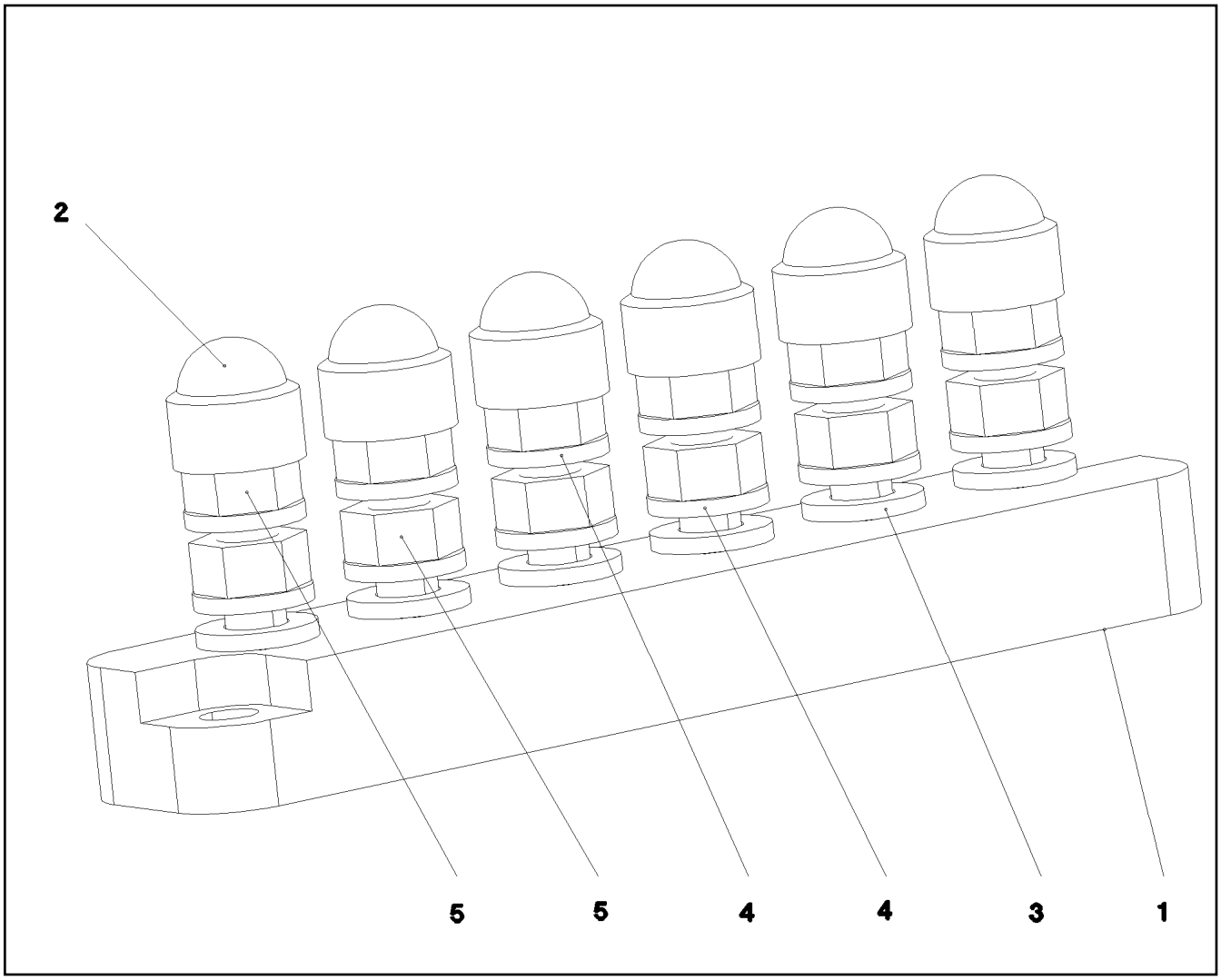

Pos.	Item	Quantity	Description	Bezeichnung
1	604412408	1	CLAMPING BOARD 6XM6	KLEMMBRETT
2	779020108	6	PROTECTING CAP SW10	SCHUTZKAPPE
3	10197771	6	WASHER ISO 7089 6 200HV ZNNI-480H SPF	SCHEIBE
4	12102694	12	SERRATED LOCK WASHER DIN 6798 A 6.4	FAECHERSCHEIBE
5	10197764	12	HEX NUT ISO 4032 M6 10 ZNNI-480H SPF	SECHSKANTMUTTER

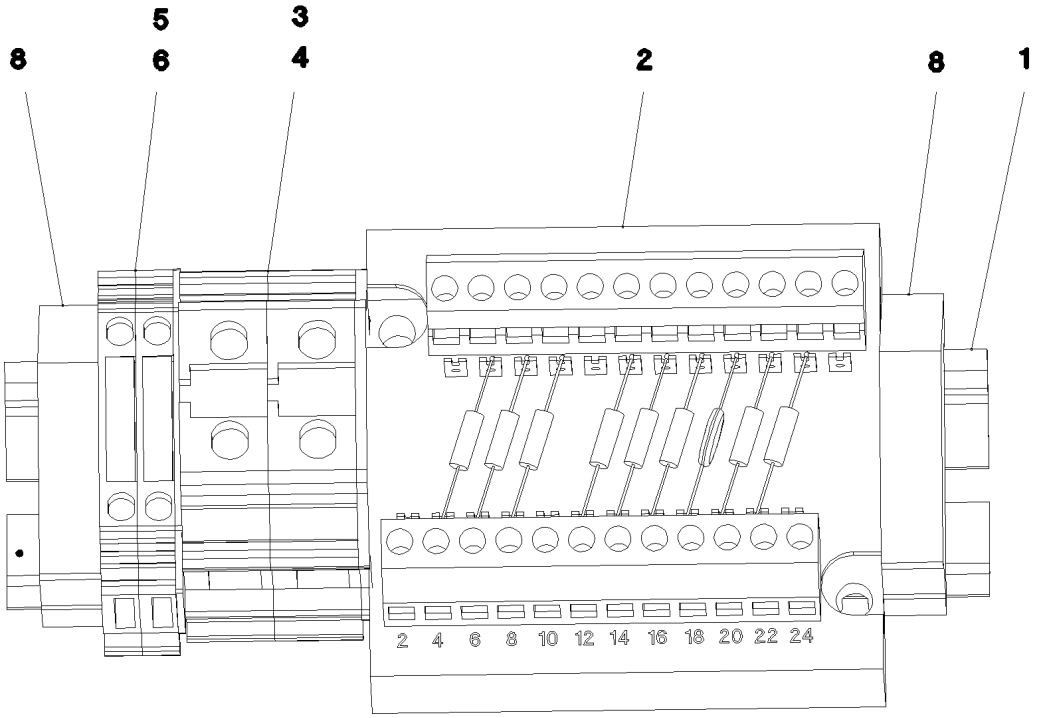

Pos.	Item	Quantity	Description	Bezeichnung
1	602106708	0.135	TOP HAT RAIL 35X27X7,3X1	HUTSCHIENE
2	965547208	1	INSERTION MODULE 12POLIG	BESTUECKUNGSMODUL
3	636107901	2	TERMINAL/CLAMP	KLEMME
4	636109301	1	COVER	DECKEL
5	602761608	2	TERMINAL MARKER 0,2-2,5MM²	MESSERTRENNKLEMME
6	602761708	1	COVER	DECKEL
7	602762908	1	IDENTIFICATION STRIPS	BEZEICHNUNGSSTREIFEN
8	602794608	2	END ANGLE	ENDWINKEL

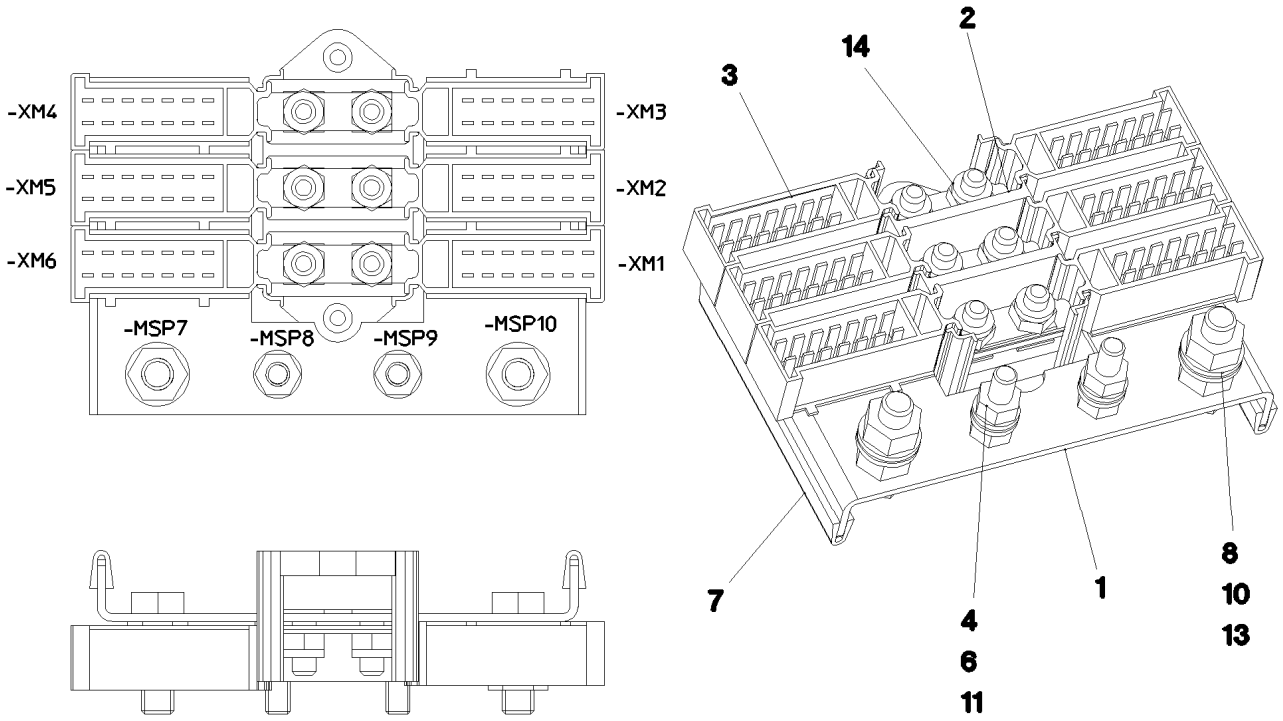

Pos. 12

Pos.	Item	Quantity	Description	Bezeichnung
1	97083880	1	PLATE 2X143X88 DC01 FE//ZNNI8//CN//T0	BLECH
2	602336408	1	CABLE CONNECTOR	KABELVERBINDER
3	602336508	6	PLUG SHELL 14-POL	STECKERGEHAEUSE
4	10197771	4	WASHER ISO 7089 6 200HV ZNNI-480H SPF	SCHEIBE
6	10197764	4	HEX NUT ISO 4032 M6 10 ZNNI-480H SPF	SECHSKANTMUTTER
7	262103908	0.16	EDGE PROTECTION 1-2X9,5X6,5	KANTENSCHUTZ
8	10197831	2	HEX SCREW ISO 4017 M8X25 8.8 ZNNI-480	SECHSKANTSCHRAUBE
10	10197760	4	HEX NUT ISO 4032 M8 10 ZNNI-480H SPF	SECHSKANTMUTTER
11	10197836	2	HEX SCREW ISO 4017 M6X25 8.8 ZNNI-480	SECHSKANTSCHRAUBE
12	602761408	10	NAME PLATE 20X8	BEZEICHNUNGSSCHILD
13	12103465	4	WASHER ISO 7089 8 300HV ZNNI-480H SPF	SCHEIBE
14	12102692	6	HEX NUT DIN 985 M6 8 ZNNI-480H SPF	SECHSKANTMUTTER

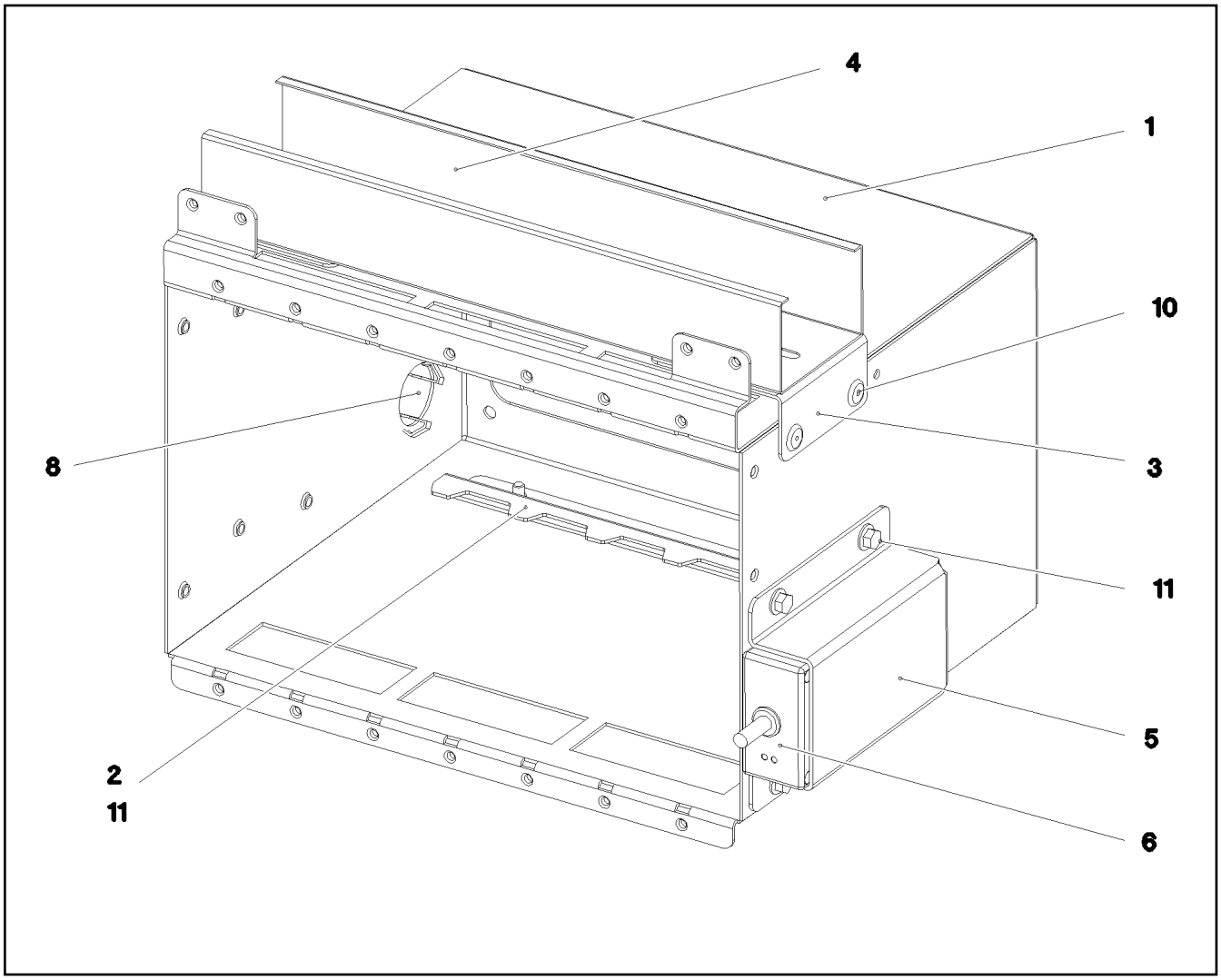

Pos.	Item	Quantity	Description	Bezeichnung
1	978606708	1	PLATE 1.5X779X733 DC01 FE//ZNNI8//CN//T	BLECH
2	979294908	1	PLATE 1.5X256X53 DC01 FE//ZNNI8//CN//T0	BLECH
3	978842708	2	PLATE 1.5X70X100 DC01 FE//ZNNI8//CN//T0	BLECH
4	601406408	0.3	CABLE CHANNEL 40X60/2000	KABELKANAL
5	976536208	1	PLATE 2X162X142 ALMG3 H111	BLECH
6	10340438	1	DATALOGGER LDL2 DIGITAL SPF	DATENLOGGER
8	591570908	1	COVER LID POLYSTIC27-33 ABS	ABDECKKAPPE
10	704232308	6	BLIND RIVET 4,0X10,5	BLINDNIET
11	10875503	6	HEX SCREW EN 1665 M5X10 10.9 480H SPF	SECHSKANTSCHRAUBE

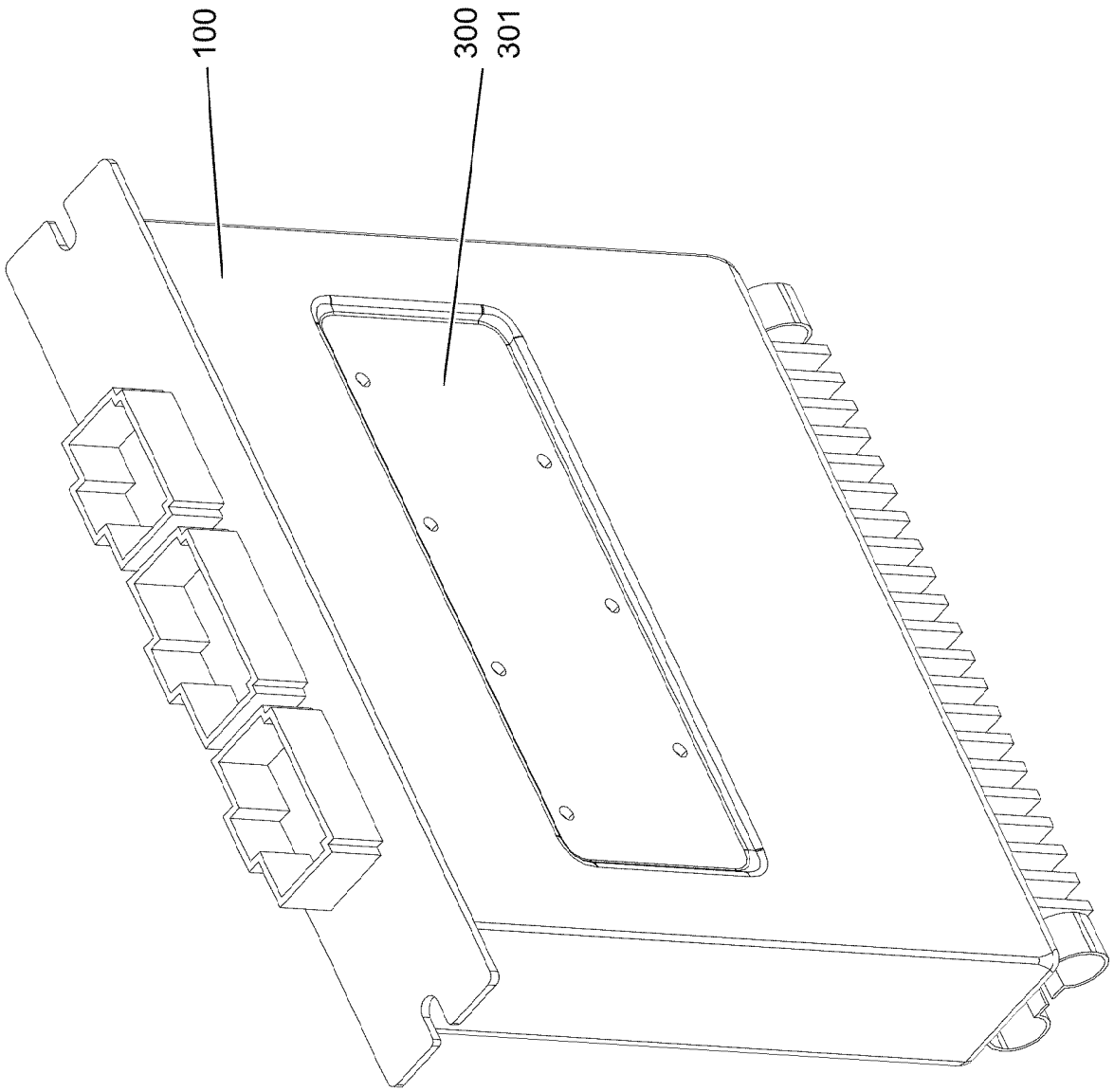
100
300
301

Pos.	Item	Quantity	Description	Bezeichnung
100	11213706	1	INPUT/OUTPUT MODULE LSB-UEA-A SPF	EIN-/AUSGANGSMODUL
300	10288121	1	NAME PLATE 70X40 POLYESTER SPF	BEZEICHNUNGSSCHILD
301	11007853	1	LABELS 10X90 POLYESTER	ETIKETTEN

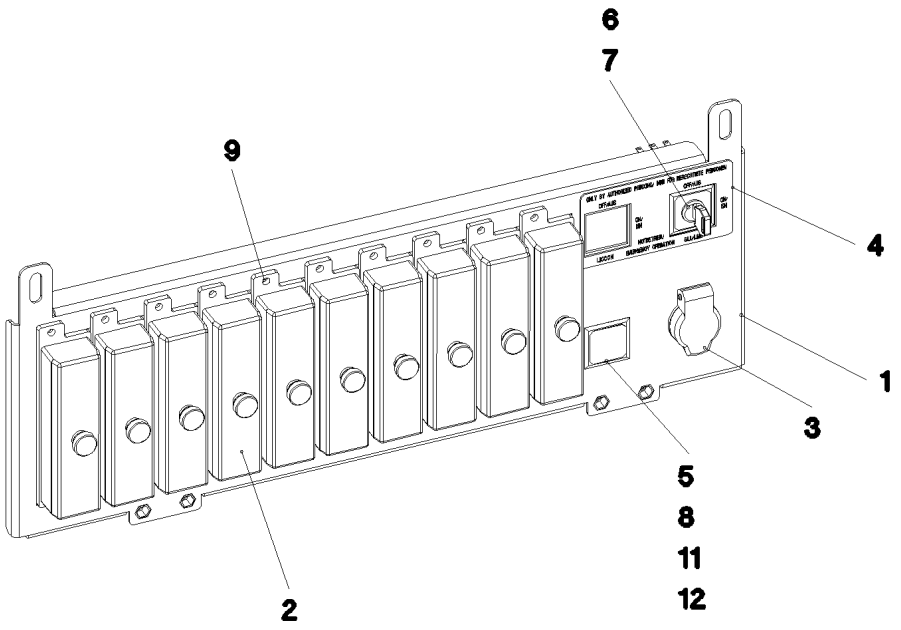

Pos.	Item	Quantity	Description	Bezeichnung
1	965807808	1	CARRIER PLATE, PRE-ASSEMBLED	TRAEGERBLECH VORM.
(1)	979295008	1	SUPPORT PLATE 1.5X442X181 DC01 FE//ZN	TRAEGERBLECH
(2)	10042592	4	BLIND RIVET NUT M5 K=1,0-3,5 ST A2C	BLINDNIETMUTTER
2	604501608	10	FUSE BOX SMALL 6-POL, LEER	SICHERUNGSDOSE
3	605203908	1	BUILT-IN SOCKET 2-POL	EINBAUSTECKDOSE
4	976540908	1	SIGN	SCHILD
5	606143408	1	TOUCH CONTACT TRANSMITTER 1OE+1S	TASTKONTAKTGEBER
6	606144608	1	TOUCH CONTACT TRANSMITTER 2OE+2S	TASTKONTAKTGEBER
7	606144908	1	TURNLOCK ACTUATOR 1W	DREHSCHLOSSBETAETIGER
(1)	10873434	1	KEY	SCHLUESSEL
8	606143008	1	PUSH BUTTON	DRUCKTASTE
9	704207608	20	MANDRIL RIVET 4X10,3	DORNNIET
11	606145108	1	PUSH-BUTTON CAP FLACH GRUEN	TASTERKAPPE
12	602042208	1	RETAINING NUT M16X1	BEFESTIGUNGSMUTTER

Pos.	Item	Quantity	Description	Bezeichnung
4	96045351	1	HYDRAULICS UPPER CARRIAGE ⇨ ❑ 553	HYDRAULIK OBERWAGEN
10	969347008	1	HOSE LINES ADDITIONAL PARTS DREH- B ⇨ ❑ 590	SCHLAUCHLEITUNGEN ZUSATZ

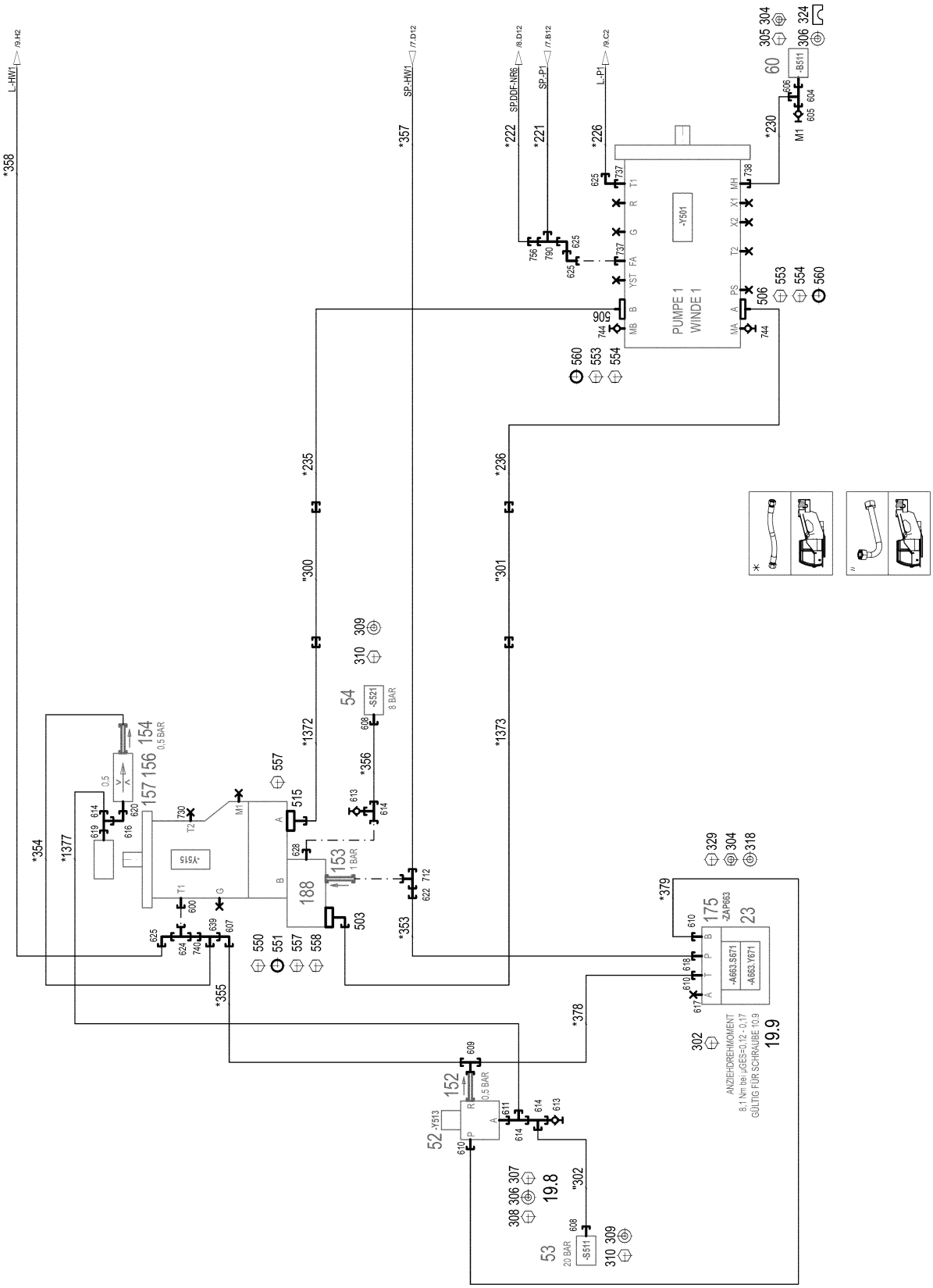

18.7.2022 077254 LIEBHERR	**etk_en_de_047654 LTR 1220** **HYDRAULICS UPPER CARRIAGE** **HYDRAULIK OBERWAGEN**	❑ 553 (1/13) **96045351**

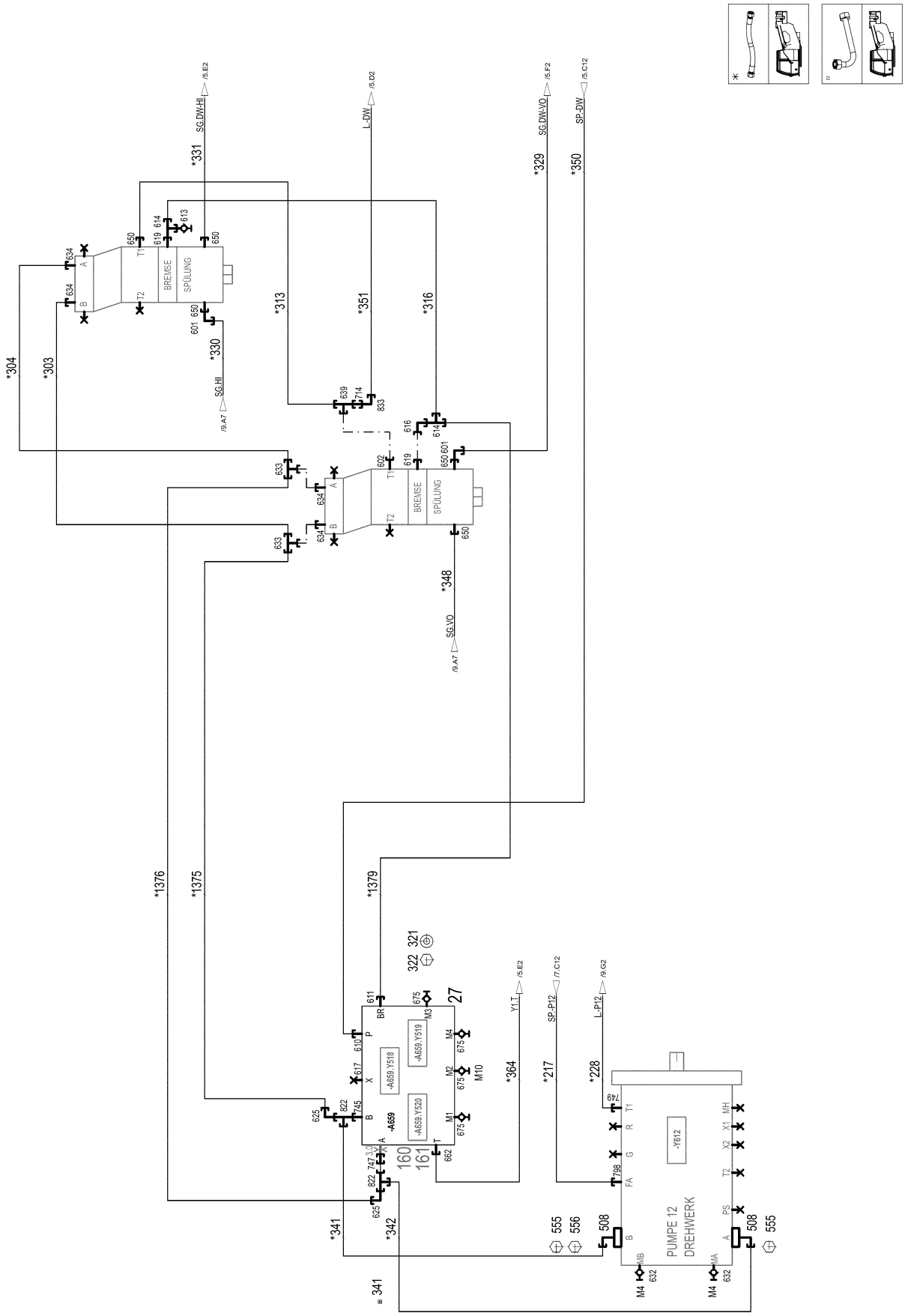
SG.DW-HI
L-DW
SG.DW-VO
SP-DW
SG.HI
SG.VO
BREMSE
SPÜLUNG
-A659.Y518
-A659.Y519
-A659.Y520
-A659
-Y612
PUMPE 12
DREHWERK
SP-P12
L-P12

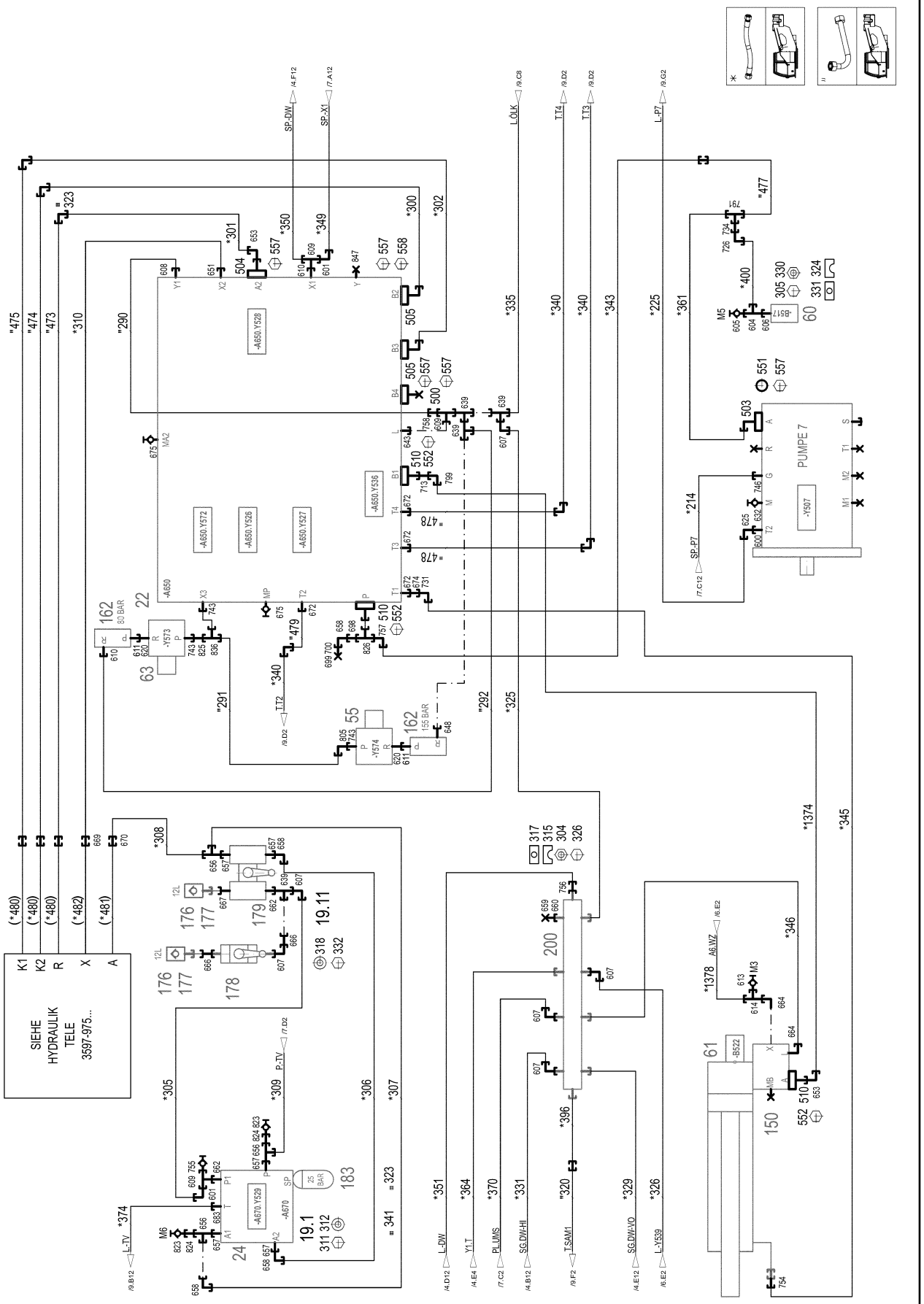

18.7.2022 077408	**etk_en_de_047654 LTR 1220**	555 (3/13)
LIEBHERR	**HYDRAULICS UPPER CARRIAGE** **HYDRAULIK OBERWAGEN**	**96045351**

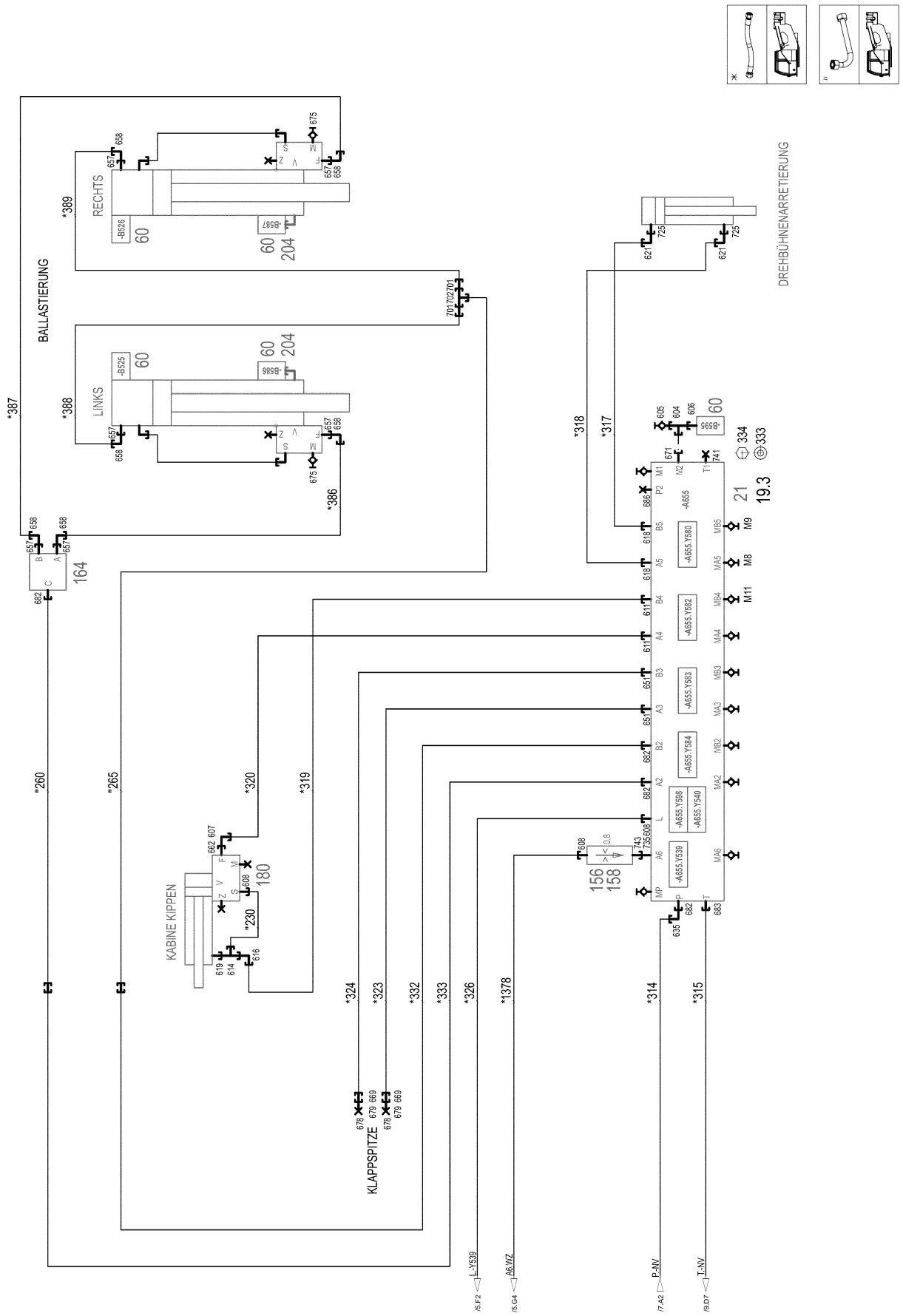
BALLASTIERUNG
RECHTS
LINKS
KABINE KIPPEN
KLAPPSPITZE
DREHBÜHNENARRETIERUNG
-A655.Y580
-A655.Y582
-A655.Y583
-A655.Y584
-A655.Y598
-A655.Y540
-A655.Y539
L-Y539
A6.WZ
P-NV
T-NV

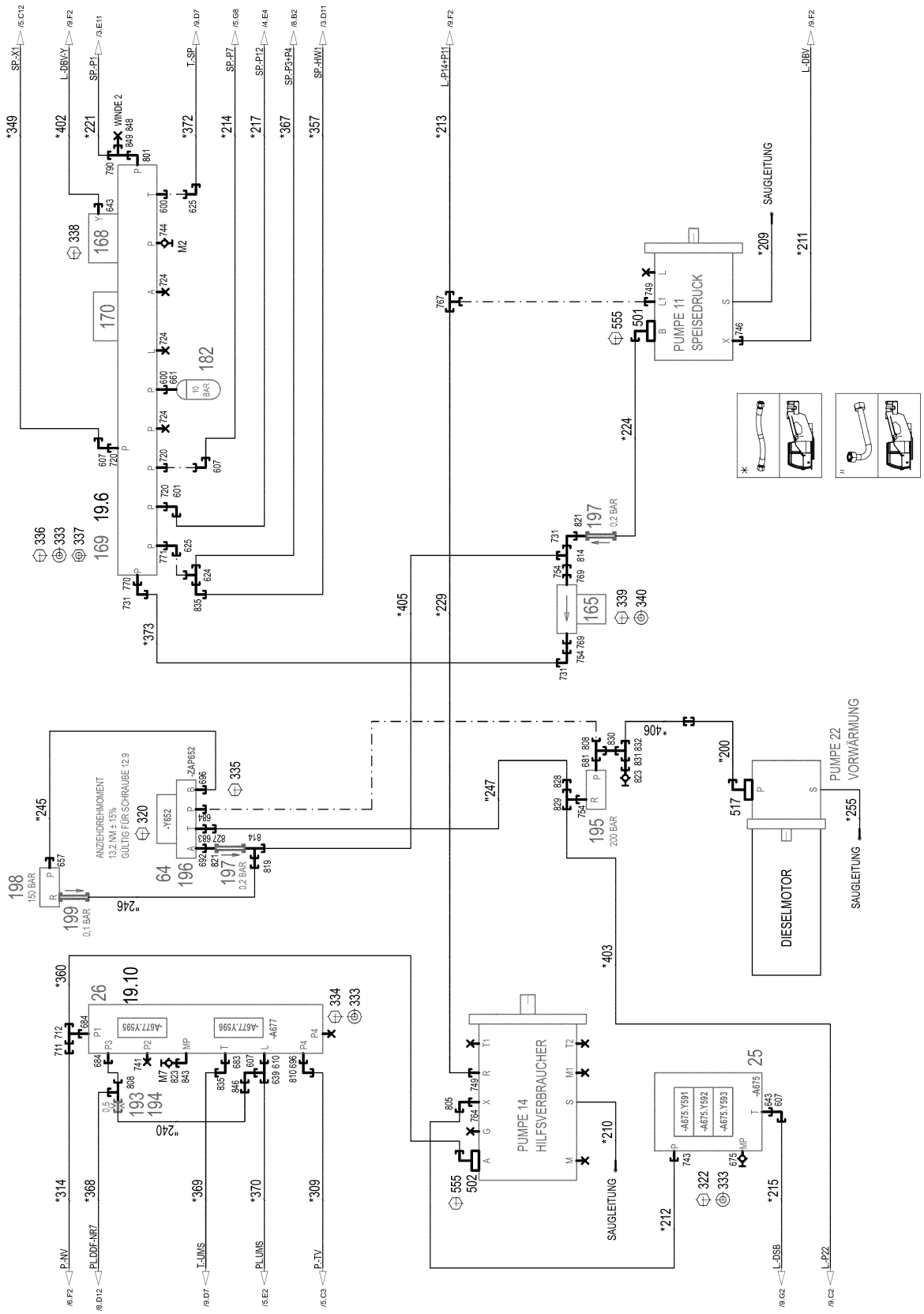

18.7.2022 077410	**etk_en_de_047654 LTR 1220**	557 (5/13)
LIEBHERR	**HYDRAULICS UPPER CARRIAGE** **HYDRAULIK OBERWAGEN**	**96045351**

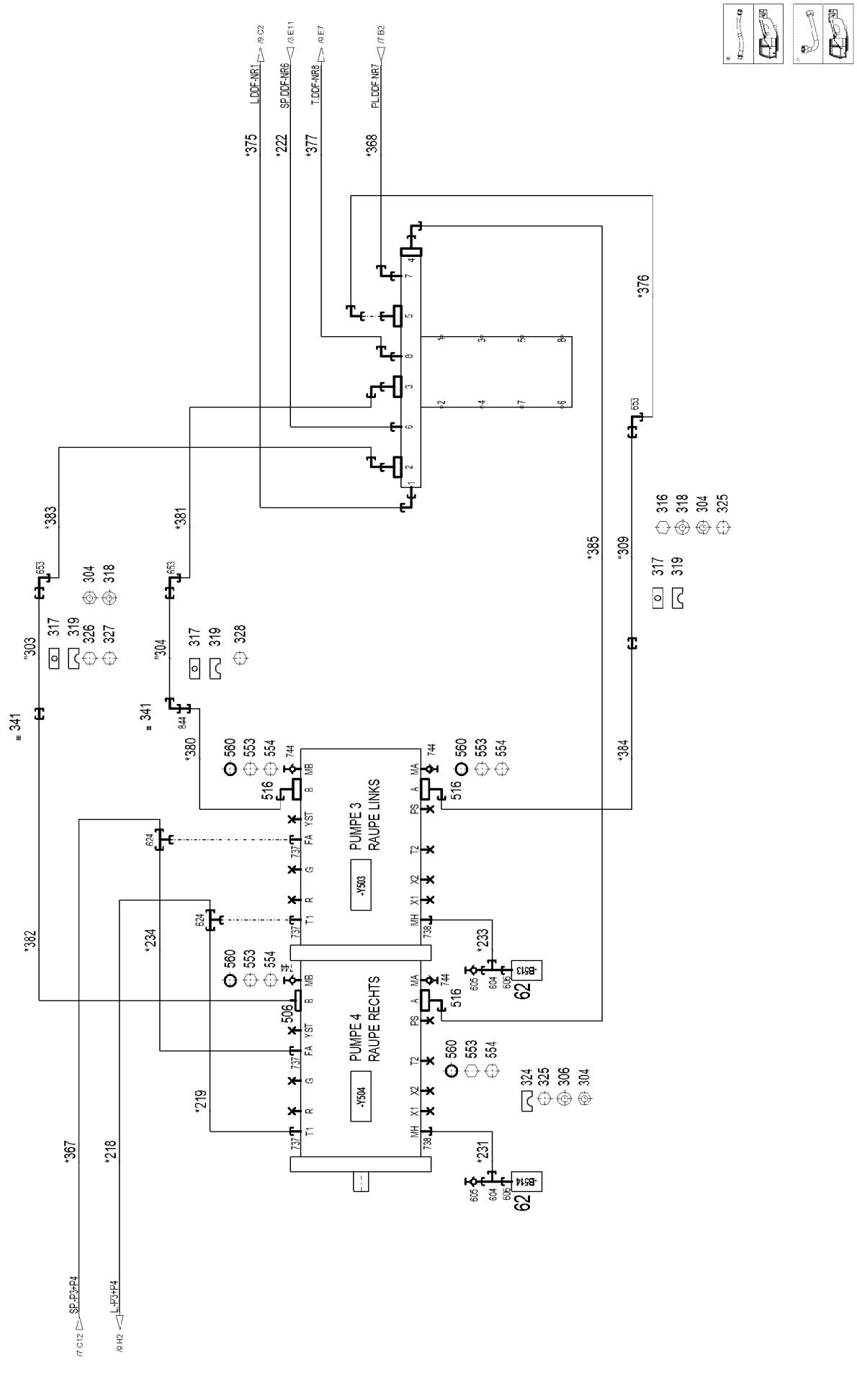
L DDF-NR1
SP DDF-NR6
T DDF-NR8
PL DDF-NR7
PUMPE 3
RAUPE LINKS
-Y503
PUMPE 4
RAUPE RECHTS
-Y504
SP-P3+P4
L-P3+P4

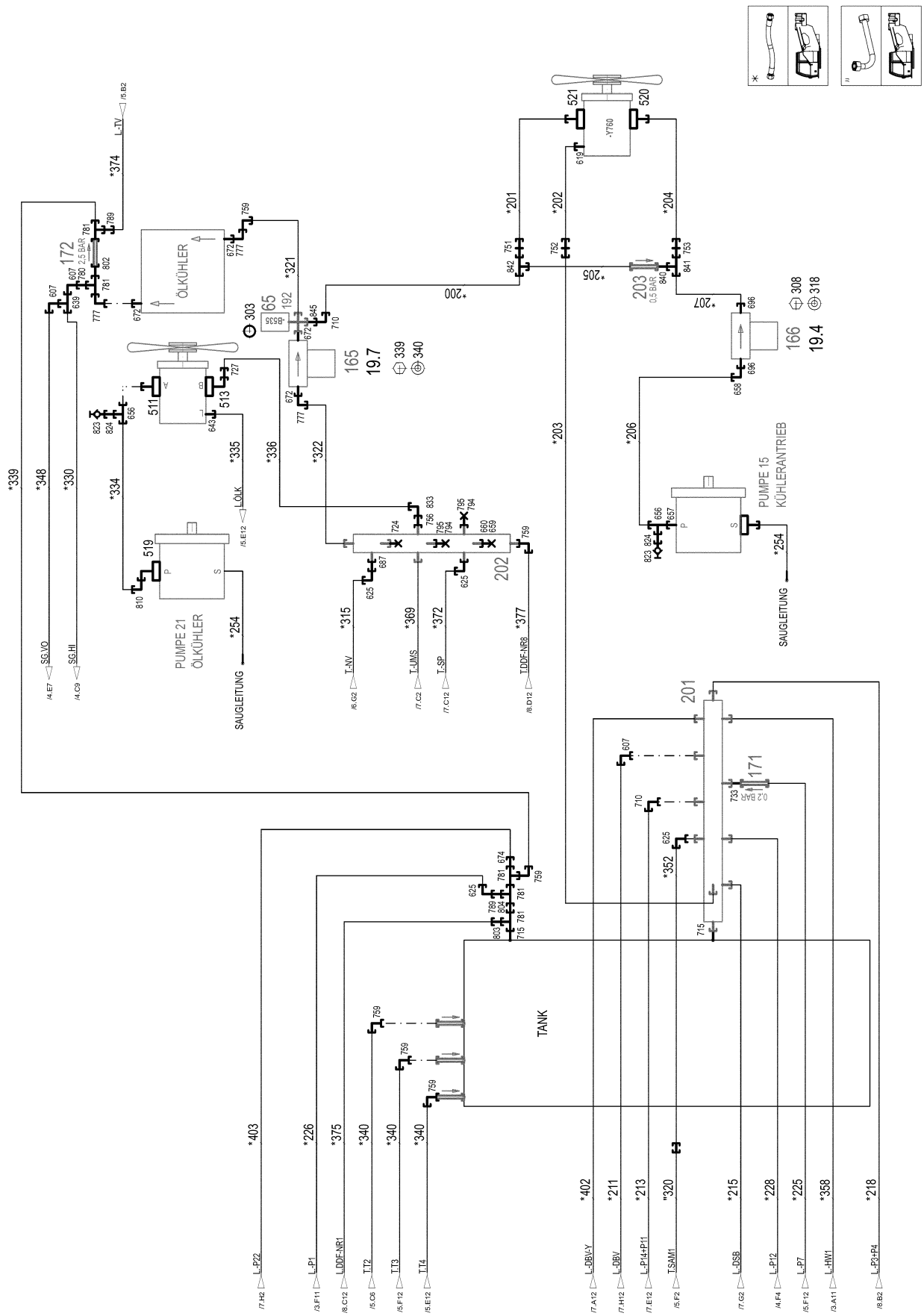

18.7.2022 077412	**etk_en_de_047654 LTR 1220**	559 (7/13)
LIEBHERR	**HYDRAULICS UPPER CARRIAGE** **HYDRAULIK OBERWAGEN**	**96045351**

Pos.	Item	Quantity	Description	Bezeichnung
19	96035117	1	MECHANICAL AUXILIARIES ⇨ ❑ 566	MECH.BEFESTIGUNGSTEILE
21	11211756	1	CONTROL BLOCK 320BAR SPF ⇨ ❑ 568	STEUERBLOCK
22	10413106	1	CONTROL BLOCK 365BAR SPF ⇨ ❑ 571	STEUERBLOCK
23	10652724	1	DIRECTIONAL CONTROL VALVE 4/2 NG6-3	WEGEVENTIL
(1)	10564740	1	MAGNET COIL	MAGNETSPULE
(2)	7027459	1	NUT	MUTTER
(999)	571840008	1	SEAL KIT	DICHTSATZ
24	10332882	1	CONTROL BLOCK 330BAR SPF ⇨ ❑ 574	STEUERBLOCK
25	10877433	1	VALVE BLOCK 420BAR ZNNI SPF	VENTILBLOCK
(4)	12104171	3	MAGNET COIL	MAGNETSPULE
(999)	96050083	1	SEAL KIT VALVE BLOCK	DS VENTILBLOCK
26	12100860	1	CONTROL BLOCK 315BAR SPF ⇨ ❑ 576	STEUERBLOCK
27	11341035	1	CONTROL BLOCK 380BAR SPF ⇨ ❑ 581	STEUERBLOCK
52	511444408	1	DIRECTIONAL CONTROL VALVE 3/2 350BA ⇨ ❑ 67	WEGEVENTIL
53	10289536	1	PRESSURE SWITCH 0-20/300BAR SPF	DRUCKSCHALTER
54	10220933	1	PRESSURE SWITCH 0-8/300 BAR SPF	DRUCKSCHALTER
55	511464108	1	DIRECTIONAL CONTROL VALVE 2/2 350BA	WEGEVENTIL
(1)	570633808	1	MAGNET 24V	MAGNET
60	10813738	7	PRESSURE SENSOR 0-400/400 BAR LSB PL:	DRUCKAUFNEHMER
61	10816185	1	PRESSURE SENSOR 0-400/400 BAR LSB PL:	DRUCKAUFNEHMER
62	10813739	2	PRESSURE SENSOR 0-750/750 BAR LSB PL:	DRUCKAUFNEHMER
63	511320108	1	DIRECTIONAL CONTROL VALVE 2/2 350BA	WEGEVENTIL
(1)	570633808	1	MAGNET 24V	MAGNET
(999)	10802253	1	SEAL KIT DIRECTIONAL VALVE	DS WEGEVENTIL
64	10449853	1	DIRECTIONAL CONTROL VALVE 3/2 NG10-3 ⇨ ❑ 584	WEGEVENTIL
65	691183108	1	TEMPERATURE SENSOR -30/+130°C SPF	TEMPERATURGEBER
150	10038474	1	LOWERING BRAKE VALVE SPF	SENKBREMSVENTIL
(1)	10346599	1	STRAINER FILTER	SIEBFILTER
(2)	511040408	3	STOP PLUG	STOPFEN
(999)	10664166	1	DS LOWERING BRAKE VALVE	DS SENKBREMSVENTIL
152	511460608	1	NON-RETURN VALVE 400BAR 0.5BAR CR6-F	RUECKSCHLAGVENTIL
153	510408708	1	NON-RETURN VALVE 420BAR 1BAR CR6-F	RUECKSCHLAGVENTIL
154	511311808	1	NON-RETURN VALVE 400BAR 0.5BAR CR6-F	RUECKSCHLAGVENTIL
156	510671108	2	FILTER CARTRIDGE 0,005m³/min 25µm	FILTERPATRONE
157	511062708	1	NOZZLE 0,5 M5X9 MS	DUESE
158	510754008	1	NOZZLE 0,8 M5X9 MS	DUESE
160	971581108	1	FITTING	VERSCHRAUBUNG
161	511059408	1	NOZZLE 3,0 M10X10 MS	DUESE
162	511433908	2	PRESSURE LIMITING VALVE pmax=700BAR ⇨ ❑ 585	DRUCKBEGRENZUNGSVENTIL
164	511485408	1	FLOW DIVIDER VALVE 120L/MIN	STROMTEILVENTIL
165	510671508	2	PRESSURE FILTER	DRUCKFILTER
(1)	10037623	1	FILTER INSERT OEL 10µm	FILTEREINSATZ
(3)	10101384	1	RS PRESSURE FILTER DF...330FG 1.0	RS DRUCKFILTER
(4)	571356108	1	CLOGGING INDICATOR	VERSCHMUTZUNGSANZEIGE
166	510674508	1	LINE FILTER	LEITUNGSFILTER
(1)	10037616	1	FILTER INSERT OEL 10µm	FILTEREINSATZ
(2)	10035534	1	REPAIR KIT -E DF/LF	REPARATURSATZ
168	11161570	1	PRESSURE LIMITING VALVE pmax=350BAR	DRUCKBEGRENZUNGSVENTIL
(999)	10684170	1	SEAL KIT GRUNDBLOCK	DICHTSATZ
169	511055908	1	CONNECTION BLOCK	ANSCHLUSSBLOCK
170	511497514	1	BLANKING PLATE	BLINDPLATTE

Pos.	Item	Quantity	Description	Bezeichnung
171	511316708	1	NON-RETURN VALVE 250BAR 0.2BAR CR6-F	RUECKSCHLAGVENTIL
172	511435108	1	NON-RETURN VALVE 250BAR 2.5BAR CR6-F	RUECKSCHLAGVENTIL
175	510629508	1	CONNECTING PLATE	ANSCHLUSSPLATTE
176	511505808	2	COUPLING SLEEVE B2 12-L	KUPPLUNGSMUFFE
(1)	571082508	1	SHEET GASKET 7,6X15,8X1 VITON	DICHTSCHEIBE
(2)	571082608	1	O-RING 17X2 FPM70	O-RING
(3)	571082708	1	O-RING 22X1,5 FPM70	O-RING
(4)	571082808	1	SUPPORTING RING 17,5X20,9X1 PTFE	STUETZRING
177	10466914	2	HEX CAP NUT RD32X3 SPF	VERSCHLUSSMUTTER
178	510697608	1	BALL VALVE BKH12-L-10 A3C ⇨ ❑ 586	KUGELHAHN
179	510697708	1	BALL VALVE COMBINATION DN13 STAHL	KUGELHAHNKOMBINATION
(10)	10112569	1	GRIP ZN-DRUCKGUSS	GRIFF
180	10218310	1	LOAD HOLDING VALVE 400BAR SPF ⇨ ❑ 587	LASTHALTEVENTIL
182	510642508	1	DIAPHRAGM ACCUMULATOR 2L 10BAR	MEMBRANSPEICHER
(998)	10650501	1	REPAIR KIT	REPARATURSATZ
183	510644608	1	DIAPHRAGM ACCUMULATOR 0,7L 25BAR	MEMBRANSPEICHER
(1)	7371651	1	SEALING RING DIN 3869 21X18,5 NBR	DICHTRING
(998)	10650501	1	REPAIR KIT	REPARATURSATZ
188	511057608	1	CONNECTION FLANGE	ANSCHLUSSFLANSCH
192	472332008	1	FITTING EL 42L CR6-FREI SPF	VERSCHRAUBUNG
193	511044108	1	NOZZLE 0,5 M5X5	DUESE
194	971774408	1	UNION PIECE RETOUCH	VERSCHRAUBUNG NACHARBEI
195	511456808	1	PRESSURE LIMITING VALVE pmax=400BAR	DRUCKBEGRENZUNGSVENTIL
196	511058308	1	CONNECTING PLATE DP1-10/32-2	ANSCHLUSSPLATTE
197	511476908	2	NON-RETURN VALVE 250BAR 0.2BAR CR6-F	RUECKSCHLAGVENTIL
198	511419608	1	PRESSURE LIMITING VALVE pmax=700BAR ⇨ ❑ 588	DRUCKBEGRENZUNGSVENTIL
199	511431514	1	NON-RETURN VALVE 400BAR CR6-FREI	RUECKSCHLAGVENTIL
200	10871151	1	COLLECTING PIPE 22L/10 A3CR6F+V SPF	SAMMELROHR
201	10871595	1	COLLECTING PIPE 42L/11 SPF	SAMMELROHR
202	10412850	1	COLLECTING PIPE 42L/10 A3CR6FREI SPF	SAMMELROHR
203	510413508	1	NON-RETURN VALVE 400BAR 0.5BAR CR6-F	RUECKSCHLAGVENTIL
204	12433377	2	THREADED ELBOW JOINT	WINKELVERSCHRAUBUNG
302	10181382	4	SOCKET HEAD SCREW ISO 4762 M5X50 10	ZYLINDERSCHRAUBE
303	570116908	1	FLAT SEALING RING 14X19,5X1,5	FLACHDICHTRING
304	12102692	14	HEX NUT DIN 985 M6 8 ZNNI-480H SPF	SECHSKANTMUTTER
305	12203634	4	SOCKET HEAD SCREW ISO 4762 M6X50 8.8	ZYLINDERSCHRAUBE
306	10875648	6	WASHER ISO 7093-1 6 200HV 480H SPF	SCHEIBE
307	12102696	2	BUTTON HEAD SCREW ISO 7380-2 M8X10 0	HALBRUNDKOPFSCHRAUBE
308	11692824	6	HEX SCREW ISO 4017 M6X12 8.8 480H SPF	SECHSKANTSCHRAUBE
309	10875643	4	WASHER ISO 7093-1 5 200HV 480H SPF	SCHEIBE
310	11140402	4	HEX SCREW ISO 4017 M5X12 8.8 480H SPF	SECHSKANTSCHRAUBE
311	10197730	4	HEX SCREW ISO 4017 M10X20 8.8 ZNNI-480	SECHSKANTSCHRAUBE
312	11491889	4	WASHER ISO 7093-1 10 300HV FLZN SPF	SCHEIBE
315	602009108	4	CLAMP-HALF DIN 3015-1 L 5 R 35 PP SW	KLEMMHAELFTE
316	12224196	2	SOCKET HEAD SCREW ISO 4762 M6X160 8	ZYLINDERSCHRAUBE
317	5005219	7	LID PLATE DIN 3015-1 L-DP 5 W1-ZN	DECKPLATTE
318	10197771	14	WASHER ISO 7089 6 200HV ZNNI-480H SPF	SCHEIBE
319	602009208	14	CLAMP-HALF DIN 3015-1 L 5 R 38 PP SW	KLEMMHAELFTE
320	10876394	4	SOCKET HEAD SCREW DIN 912 M6X40 12.9	ZYLINDERSCHRAUBE
321	11140469	4	WASHER ISO 7093-1 8 200HV 480H SPF	SCHEIBE
322	11651612	6	HEX SCREW ISO 4017 M8X16 8.8 480H SPF	SECHSKANTSCHRAUBE
323	973731008	2	RUBBER PLATE SBR M.GEWEBE	GUMMIPLATTE
324	602008908	8	CLAMP-HALF DIN 3015-1 L 4 R 30 PP SW	KLEMMHAELFTE
325	10539471	4	SOCKET HEAD SCREW ISO 4762 M6X90 A4	ZYLINDERSCHRAUBE
326	12215338	6	SOCKET HEAD SCREW ISO 4762 M6X75 8.8	ZYLINDERSCHRAUBE
327	10876361	2	SOCKET HEAD SCREW ISO 4762 M6X70 8.8	ZYLINDERSCHRAUBE
328	12202784	2	SOCKET HEAD SCREW ISO 4762 M6X60 8.8	ZYLINDERSCHRAUBE

Pos.	Item	Quantity	Description	Bezeichnung
329	10875588	2	SOCKET HEAD SCREW ISO 4762 M6X25 8.8	ZYLINDERSCHRAUBE
330	602018008	2	CARRIER RAIL NUT DIN 3015-1 L TM M6 W1	TRAGSCHIENENMUTTER
331	7008583	1	LID PLATE DIN 3015-1 L-DP 4 W1-ZN	DECKPLATTE
332	11140465	4	SOCKET HEAD SCREW ISO 4762 M6X20 8.8	ZYLINDERSCHRAUBE
333	421100608	14	WASHER DIN 1440 8 ST VERZ	SCHEIBE
334	11651767	10	HEX SCREW ISO 4017 M8X20 8.8 480H SPF	SECHSKANTSCHRAUBE
335	11657000	2	SOCKET HEAD SCREW ISO 4762 M10X45 8	ZYLINDERSCHRAUBE
336	12203167	2	SOCKET HEAD SCREW ISO 4762 M8X80 8.8	ZYLINDERSCHRAUBE
337	11693875	2	HEX NUT ISO 4032 M8 8 480H SPF	SECHSKANTMUTTER
338	404312108	4	SOCKET HEAD SCREW ISO 4762 M12X45 10	ZYLINDERSCHRAUBE
339	11651006	8	HEX SCREW ISO 4017 M12X20 8.8 FLZN SP	SECHSKANTSCHRAUBE
340	10289804	8	WASHER ISO 7089 12 300HV FLZN SPF	SCHEIBE
341	97056998	5	HOSE	SCHLAUCH GESCHLITZT
500	511510008	1	SAE SEALING FLANGE SAE1 1/4-C62-M14 C	SAE-VERSCHLUSSFLANSCH
501	474907608	1	SAE FLANGE CONNECTION WFS 28L 1 CR6	SAE-FLANSCHVERBINDUNG
(1)	510587008	1	O-RING ARP 568 32,92X3,53 NBR90	O-RING
502	474907508	1	SAE FLANGE CONNECTION WFS63/25-S C	SAE-FLANSCHVERBINDUNG
503	474906608	2	SAE FLANGE CONNECTION WFS65/30-S C	SAE-FLANSCHVERBINDUNG
504	510702408	1	SAE FLANGE CONNECTION GFS65/38-PS C	SAE-FLANSCHVERBINDUNG
(1)	510586708	1	O-RING ARP 568 37,69X3,53 NBR90	O-RING
505	474906708	2	SAE FLANGE CONNECTION WFS 38S 1 1/4	SAE-FLANSCHVERBINDUNG
506	510586908	6	FLANGE HALF SAE1-C62-M12 CR6-FREI	FLANSCHHAELFTE
508	474908108	2	SAE FLANGE CONNECTION WFS 20S SAE3	SAE-FLANSCHVERBINDUNG
(1)	511035108	1	O-RING ARP 568 25X3,53 NBR70	O-RING
510	511517808	3	FLANGE STUB PIPE AFG 38S G1 1/4 CR6-F	FLANSCHSTUTZEN
511	10030904	1	FLANGE FITTING BFG 16S CR6-FREI	FLANSCHVERSCHRAUBUNG
513	510037408	1	FLANGE FITTING CR6-FREI	FLANSCHVERSCHRAUBUNG
(1)	570322408	1	O-RING ARP 568 23,47x2,62 NBR70	O-RING
515	474901708	1	SAE FLANGE CONNECTION GFS 30S 1 1/4 C	SAE-FLANSCHVERBINDUNG
516	474906908	3	SAE FLANGE CONNECTION WFS64/30-S C	SAE-FLANSCHVERBINDUNG
(1)	510587008	1	O-RING ARP 568 32,92X3,53 NBR90	O-RING
517	474909008	1	SAE FLANGE CONNECTION WFG 25S 10X30	SAE-FLANSCHVERBINDUNG
519	510133208	1	FLANGE FITTING CR6-FREI	FLANSCHVERSCHRAUBUNG
(1)	726406908	1	O-RING 18X2,5 NBR70	O-RING
520	511518808	1	FLANGE FITTING CR6-FREI	FLANSCHVERSCHRAUBUNG
521	510146208	1	SUCTION FLANGE CR6-FREI	SAUGFLANSCH
550	10878785	4	HEX SCREW ISO 4014 M14X90 8.8 FLZN SP	SECHSKANTSCHRAUBE
551	510586708	2	O-RING ARP 568 37,69X3,53 NBR90	O-RING
552	10876373	12	SOCKET HEAD SCREW ISO 4762 M14X45 8	ZYLINDERSCHRAUBE
553	10875565	12	SOCKET HEAD SCREW ISO 4762 M12X40 8	ZYLINDERSCHRAUBE
554	11645384	12	HEX SCREW ISO 4017 M12X40 8.8 FLZN SP	SECHSKANTSCHRAUBE
555	10875571	14	SOCKET HEAD SCREW ISO 4762 M10X30 8	ZYLINDERSCHRAUBE
556	11642358	2	HEX SCREW ISO 4017 M10X30 8.8 FLZN SP	SECHSKANTSCHRAUBE
557	10878821	25	SOCKET HEAD SCREW ISO 4762 M14X50 8	ZYLINDERSCHRAUBE
558	12213406	3	HEX SCREW ISO 4017 M14X50 8.8 FLZN SP	SECHSKANTSCHRAUBE
560	510587008	6	O-RING ARP 568 32,92X3,53 NBR90	O-RING
600	471031308	4	FITTING XGE22-LM-ED M26X1,5 CR6-FREI	VERSCHRAUBUNG
601	10410305	5	FITTING EV 12L M18X1,5 CR6-FREI	VERSCHRAUBUNG
602	471902208	1	FITTING EGESD12-LM-WD CR6-FREI	VERSCHRAUBUNG
604	472331208	5	FITTING EL 6S CR6-FREI	VERSCHRAUBUNG
605	475601508	5	TEST POINT FITTING BMA3 6S CR6-FREI	MESSANSCHLUSS
606	470700208	5	FITTING XGAI6-SR CR6-FREI	VERSCHRAUBUNG
607	247117702	15	SWIVEL ELBOW EW 12L M18X1,5 CR6-FREI	WINKELSTUTZEN
608	7362091	6	FITTING ISO 8434-1 GE 10L G1/4A CR6-FREI	VERSCHRAUBUNG
609	247105602	4	T CONNECTION PIECE ET 12L CR6-FREI	T-STUTZEN
610	471030808	7	FITTING XGE12-LR-ED CR6-FREI	VERSCHRAUBUNG
611	471039608	6	FITTING XGE10-LR-ED3/8" CR6-FREI	VERSCHRAUBUNG
613	510629008	4	TEST POINT FITTING VKA3 10LM16X1,5 CR6	MESSANSCHLUSS
614	472330208	8	FITTING EL 10L CR6-FREI	VERSCHRAUBUNG
616	7403569	3	FITTING EW 10L M16X1,5 CR6-FREI	VERSCHRAUBUNG

Pos.	Item	Quantity	Description	Bezeichnung
617	477704108	2	STOP PLUG VSTI3/8"ED CR6-FREI	STOPFEN
618	471032708	3	FITTING GE 12S G3/8A CR6-FREI	VERSCHRAUBUNG
619	471039708	5	FITTING ISO 8434-1 GE 10L M12X1,5 CR6-F	VERSCHRAUBUNG
620	471901108	3	FITTING EGESD10-LR-WD CR6-FREI	VERSCHRAUBUNG
621	7617354	2	FITTING EW 12S CR6-FREI	VERSCHRAUBUNG
622	475433608	1	FITTING REDSDN25/12-S CR6-FREI	VERSCHRAUBUNG
624	482430614	4	FITTING ISO 8434 ET 22L CR6-FREI	VERSCHRAUBUNG
625	472530608	13	FITTING EWSD22-L CR6-FREI	VERSCHRAUBUNG
628	471030508	1	FITTING GE 10L M14X1,5 CR6-FREI	VERSCHRAUBUNG
632	475603208	3	TEST POINT FITTING EMA3 M12X1,5 CR6-F	MESSANSCHLUSS
633	482431614	2	FITTING ISO 8434 ET 20S CR6-FREI	VERSCHRAUBUNG
634	471033308	4	FITTING XGE20-SM-ED CR6-FREI	VERSCHRAUBUNG
635	7407108	1	FITTING EW 20S M30X2 CR6-FREI	VERSCHRAUBUNG
639	247128602	8	L NECK EL 12L M18X1,5 CR6-FREI	L-STUTZEN
643	471035308	4	FITTING XGE12-LR-ED1/4" CR6-FREI	VERSCHRAUBUNG
648	471901208	1	FITTING EGESD12-LR-WD CR6-FREI	VERSCHRAUBUNG
650	471030708	5	FITTING ISO 8434-1 GE 12L M16X1,5 CR6-F ⇨ ❑ 589	VERSCHRAUBUNG
651	471032808	3	FITTING ISO 8434-1 GE 10S G3/8A CR6-FRE	VERSCHRAUBUNG
653	472531808	5	FITTING EWSD38-S CR6-FREI	VERSCHRAUBUNG
656	7407098	5	FITTING EL 16S CR6-FREI	VERSCHRAUBUNG
657	471033208	13	FITTING XGE16-SR-ED CR6-FREI	VERSCHRAUBUNG
658	7617460	11	FITTING EW 16S CR6-FREI	VERSCHRAUBUNG
659	477700508	2	BLANKING PLUG ISO 8434-1 PL 12L/S CR6-F	VERSCHLUSSSTOPFEN
660	477401608	2	BOX NUT DIN 3870 AL12 A3C	UEBERWURFMUTTER
661	471901408	1	FITTING EGE 22L G3/4 CR6-FREI	VERSCHRAUBUNG
662	471034808	4	FITTING GE 12L G1/2 CR6-FREI	VERSCHRAUBUNG
664	473230508	2	FITTING RSWS10-LR-WD CR6-FREI	VERSCHRAUBUNG
666	470011308	2	FITTING SNV12-L CR6-FREI	VERSCHRAUBUNG
667	471903808	1	FITTING EGE 12L G1/2 CR6-FREI	VERSCHRAUBUNG
669	470032408	3	FITTING XG10-S CR6-FREI	VERSCHRAUBUNG
670	470032708	1	FITTING XG16-S CR6-FREI	VERSCHRAUBUNG
671	471900308	1	FITTING EGESD6-SR-WD CR6-FREI	VERSCHRAUBUNG
672	471034708	8	FITTING GE 42L G1 1/2 CR6-FREI	VERSCHRAUBUNG
674	475431308	2	FITTING RED 42/28L CR6-FREI	VERSCHRAUBUNG
675	475602608	9	TEST POINT FITTING EMA3 G1/4 CR6-FREI	MESSANSCHLUSS
678	477700408	2	BLANKING PLUG ISO 8434-1 PL 10L/S CR6-F	VERSCHLUSSSTOPFEN
679	477400308	2	BOX NUT DIN 3870 AS10 A3P	UEBERWURFMUTTER
681	471900808	1	FITTING EGESD25-SR-WD CR6-FREI	VERSCHRAUBUNG
682	471033408	4	FITTING XGE20-SR-ED CR6-FREI	VERSCHRAUBUNG
683	471031408	4	FITTING XGE22-LR-ED CR6-FREI	VERSCHRAUBUNG
684	7018842	3	SCREW-ON CONNECTION ISO 8434 GE 25S	EINSCHRAUBSTUTZEN
686	477704208	1	STOP PLUG VSTI G1/2A CR6-FREI	STOPFEN
687	475430508	1	FITTING REDSD28/22-L CR6-FREI	VERSCHRAUBUNG
692	7410441	1	FITTING GE 28L G3/4A CR6-FREI	VERSCHRAUBUNG
696	471033108	4	FITTING XGE16-SR-ED3/4" CR6-FREI	VERSCHRAUBUNG
698	475434208	1	FITTING REDSD38/16-S CR6-FREI	VERSCHRAUBUNG
699	477701108	1	FITTING BUZ 16S CR6-FREI	VERSCHRAUBUNG
700	477400608	1	BOX NUT DIN 3870 AS16 A3P	UEBERWURFMUTTER
701	475432108	2	FITTING REDSDN20/16-S CR6-FREI	VERSCHRAUBUNG
702	470432608	1	FITTING XT20-S CR6-FREI	VERSCHRAUBUNG
710	247108302	2	SWIVEL ELBOW EW 18L M26X1,5 CR6-FREI	WINKELSTUTZEN
711	475432308	1	FITTING REDSDN25/20-S CR6-FREI	VERSCHRAUBUNG
712	7367774	2	FITTING ET 25S CR6-FREI	VERSCHRAUBUNG
713	470010708	1	FITTING SNV38-S CR6-FREI	VERSCHRAUBUNG
714	475031708	1	FITTING XGR15/12-L CR6-FREI	VERSCHRAUBUNG
715	471903608	2	FITTING EGE 42L G1 1/2 CR6-FREI	VERSCHRAUBUNG
720	471039908	3	FITTING GE 12L M22X1,5 CR6-FREI	VERSCHRAUBUNG
724	477704908	4	STOP PLUG VSTIM14X1,5ED CR6-FREI	STOPFEN
725	471032908	2	FITTING GE 12S M18X1,5 CR6-FREI	VERSCHRAUBUNG

Pos.	Item	Quantity	Description	Bezeichnung
726	472531508	1	FITTING EW 6S M14X1,5 CR6-FREI	VERSCHRAUBUNG
727	475435608	1	FITTING RED 18/15L CR6-FREI SPF	VERSCHRAUBUNG
730	477705208	1	STOP PLUG VSTIM33X2ED CR6-FREI	STOPFEN
731	7617494	4	FITTING EW 28L CR6-FREI	VERSCHRAUBUNG
733	470010908	1	FITTING SNV22-L CR6-FREI	VERSCHRAUBUNG
734	475408108	1	FITTING REDSD38/6-S CR6-FREI	VERSCHRAUBUNG
735	471900408	1	FITTING EGE 10S G3/8 CR6-FREI	VERSCHRAUBUNG
737	10295188	6	FITTINGS ISO 8434-1 GE 22L M33X2 CR6-F	STUTZEN
738	471032208	3	FITTING XGE8-SM-ED CR6-FREI	VERSCHRAUBUNG
740	475436108	1	FITTING REDSD22/12-L CR6-FREI	VERSCHRAUBUNG
741	477704708	2	STOP PLUG VSTI G3/4A CR6-FREI	STOPFEN
743	471004514	5	FITTING ISO 8434 GE 10S G1/4 CR6-FREI	VERSCHRAUBUNG
744	7406865	7	SCREW COUPLING EMA3 M14X1,5 CR6-FRE	SCHRAUBKUPPLUNG
745	7410451	1	FITTING GE 20S G1/2A CR6-FREI	VERSCHRAUBUNG
746	7405399	2	FITTING GE 12L M14X1,5 CR6-FREI	VERSCHRAUBUNG
747	475004108	1	FITTING GR 20/12S CR6-FREI	VERSCHRAUBUNG
749	471031108	3	FITTING GE 18L M22X1,5 CR6-FREI	VERSCHRAUBUNG
751	474030708	1	FITTING SV 18L CR6-FREI	VERSCHRAUBUNG
752	474030308	1	FITTING XSV10-L CR6-FREI	VERSCHRAUBUNG
753	474030508	1	FITTING XSV15-L CR6-FREI	VERSCHRAUBUNG
754	471031608	4	FITTING GE 28L G1 CR6-FREI	VERSCHRAUBUNG
755	7409918	1	GAUGE CONNECTION 12L CR6-FREI	MESSSTUTZEN
756	475435508	3	FITTING REDSD22/15-L CR6-FREI	VERSCHRAUBUNG
757	10467292	1	FITTING EV38S M52X2 CR6-FREI	VERSCHRAUBUNG
758	475431408	1	FITTING REDSD12/10-L CR6-FREI	VERSCHRAUBUNG
759	10651363	6	FITTING EV 42L M52X2 CR6-FREI	VERSCHRAUBUNG
764	471008214	1	FITTING ISO 8434 GE 10S M14X1,5 CR6-FRE	VERSCHRAUBUNG
767	247108402	1	T CONNECTION PIECE ET 18L CR6-FREI	T-STUTZEN
769	475502408	2	ADAPTOR RI11/2-EDX1 CR6-FREI	ADAPTER
770	7403925	1	FITTING GE 28L M26X1,5 CR6-FREI	VERSCHRAUBUNG
771	10036896	1	FITTING GE 22L M22X1,5 CR6-FREI	VERSCHRAUBUNG
777	482530814	3	FITTING ISO 8434 EW 42L CR6-FREI	VERSCHRAUBUNG
780	475407208	1	FITTING REDSDN42/12-L CR6-FREI	VERSCHRAUBUNG
781	7367986	5	FITTING EL 42L CR6-FREI	VERSCHRAUBUNG
789	475431608	2	FITTING RED 42/22L CR6-FREI	VERSCHRAUBUNG
790	247138602	2	L NECK EL 22L CR6-FREI	L-STUTZEN
791	470433008	1	FITTING XT38-S CR6-FREI	VERSCHRAUBUNG
794	477700808	2	STOPPER BUZ 28L CR6-FREI	BUTZEN
795	477401708	2	BOX NUT DIN 3870 AL28 A3P	UEBERWURFMUTTER
798	471039408	1	FITTING XGE12-LM-ED M18X1,5 CR6-FREI	VERSCHRAUBUNG
(1)	501243708	1	O-RING ARP 568 10,52X1,83 NBR90	O-RING
799	470233408	1	FITTING XW38-S CR6-FREI	VERSCHRAUBUNG
801	473331308	1	FITTING RSWS22-LM-WD CR6-FREI	VERSCHRAUBUNG
802	470011408	1	FITTING SNV42-L CR6-FREI	VERSCHRAUBUNG
803	475436708	1	FITTING RED 42/35L CR6-FREI	VERSCHRAUBUNG
804	470030908	1	FITTING XG42-L CR6-FREI	VERSCHRAUBUNG
805	7617268	2	FITTING EW 10S CR6-FREI	VERSCHRAUBUNG
808	7407118	2	FITTING EL 25S CR6-FREI	VERSCHRAUBUNG
810	10410770	2	FITTING EV16S CR6-FREI	VERSCHRAUBUNG
814	7407120	2	FITTING EL 28L CR6-FREI	VERSCHRAUBUNG
819	475430908	1	FITTING REDSD28/18-L CR6-FREI	VERSCHRAUBUNG
821	470010608	2	FITTING SNV28-L CR6-FREI	VERSCHRAUBUNG
822	7407107	2	FITTING EL 20S CR6-FREI	VERSCHRAUBUNG
823	5607617	6	GAUGE CONNECTION DKO 10S M18X1,5 C	MESSSTUTZEN
824	475433508	4	FITTING REDSD16/10-S CR6-FREI	VERSCHRAUBUNG
825	470010208	1	FITTING SNV10-S CR6-FREI	VERSCHRAUBUNG
826	482431814	1	FITTING ISO 8434 ET 38S CR6-FREI	VERSCHRAUBUNG
827	475430808	1	FITTING REDSD22/10-L CR6-FREI	VERSCHRAUBUNG
828	475435408	1	FITTING REDSDN28/10-L CR6-FREI	VERSCHRAUBUNG
829	7407122	1	FITTING ET 28L M36X2 CR6-FREI	VERSCHRAUBUNG

Pos.	Item	Quantity	Description	Bezeichnung
830	470011008	1	FITTING SNV25-S CR6-FREI	VERSCHRAUBUNG
831	475432208	1	FITTING RED 25/10S CR6-FREI	VERSCHRAUBUNG
832	470432708	1	FITTING XT25-S CR6-FREI	VERSCHRAUBUNG
833	7615379	2	FITTING EW 15L CR6-FREE	VERSCHRAUBUNG
835	10410771	2	FITTING EV 22L CR6-FREI	VERSCHRAUBUNG
836	482431314	1	FITTING ISO 8434 ET 10S CR6-FREI	VERSCHRAUBUNG
840	470011208	1	FITTING GZ 15L CR6-FREI	VERSCHRAUBUNG
841	472300414	1	FITTING EL 15L CR6-FREI	VERSCHRAUBUNG
842	247128502	1	L NECK EL 18L CR6-FREI	L-STUTZEN
843	473231008	1	FITTING RSWS10-SR-WD CR6-FREI	VERSCHRAUBUNG
844	475435308	1	FITTING REDSDN38/30-S CR6-FREI	VERSCHRAUBUNG
845	475431708	1	FITTING RED 42/18L CR6-FREI	VERSCHRAUBUNG
846	475430208	1	FITTING REDSDN12/6-L CR6-FREI	VERSCHRAUBUNG
847	477704008	1	STOPPER PLUG VSTI1/4"ED CR6-FREI	BLINDSTOPFEN
848	477700208	1	FITTING BUZ 22L CR6-FREI	VERSCHRAUBUNG
849	477402608	1	BOX NUT DIN 3870 AL22 A3P	UEBERWURFMUTTER

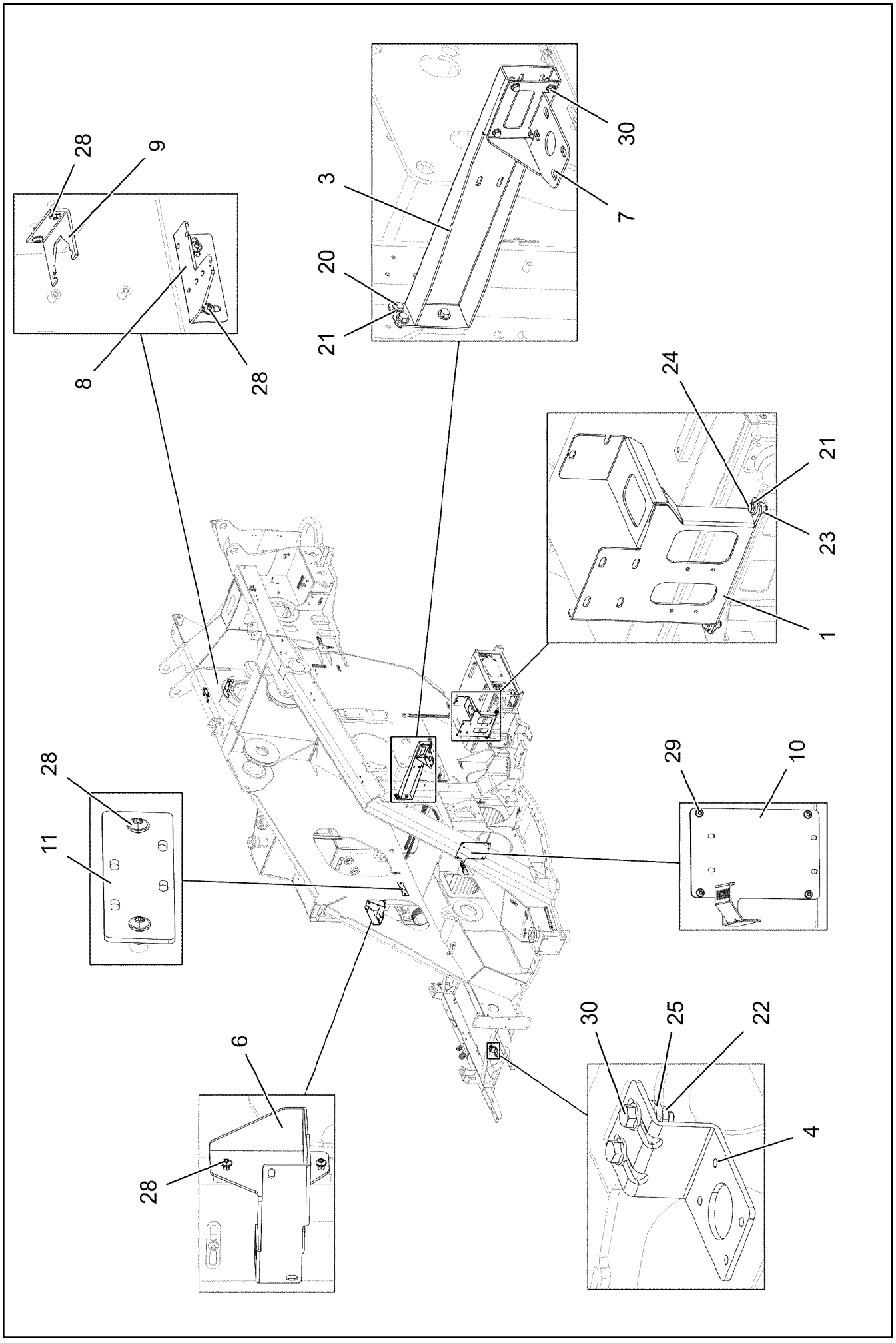
28
9
8
28
3
30
7
20
21
24
21
23
1
28
11
29
10
6
28
30
25
22
4

Pos.	Item	Quantity	Description	Bezeichnung
1	97124562	1	PLATE 4X429X566 S315MC	BLECH
3	969431008	1	CONSOLE PRE-ASS.	KONSOLE VORM.
4	97045111	1	PLATE 4X60X163 S315MC FE//ZNNI8//CN//T	BLECH
6	97056389	1	CONSOLE 4X470X340 S315MC FE//ZNNI8//C	KONSOLE
7	97056391	1	CONSOLE 4X257X253 S315MC FE//ZNNI8//C	KONSOLE
8	975418208	1	PLATE 4X140X178 S315MC FE//ZNNI8//CN//T	BLECH
9	970762808	1	PLATE S315MC FE//ZNNI8//CN//T0	BLECH
10	97119732	1	PLATE 3X325X398 S355MC FE//ZNNI8//CN//T	BLECH
11	954313608	1	PLATE 4X55X180 S315MC FE//ZNNI8//CN//T	BLECH
20	12222996	3	HEX SCREW ISO 4017 M10X22 8.8 FLZN SP	SECHSKANTSCHRAUBE
21	11658580	3	WASHER DIN 7349 10,5 200HV-St FLZN SPF	SCHEIBE
22	11693875	2	HEX NUT ISO 4032 M8 8 480H SPF	SECHSKANTMUTTER
23	12102695	2	HEX NUT ISO 4032 M10 8 ZNNI-480H SPF	SECHSKANTMUTTER
24	4635031	2	HEX SCREW ISO 4017 M10X28 8.8 FLZN	SECHSKANTSCHRAUBE
25	11840501	2	WASHER DIN 7349 8,4 200HV 480H SPF	SCHEIBE
28	10875485	7	BUTTON HEAD SCREW AEHNL.ISO 7380-2	HALBRUNDKOPFSCHRAUBE
29	12102696	4	BUTTON HEAD SCREW ISO 7380-2 M8X10 0	HALBRUNDKOPFSCHRAUBE
30	11690637	4	HEX SCREW EN 1665 M8X25 8.8 480H SPF	SECHSKANTSCHRAUBE

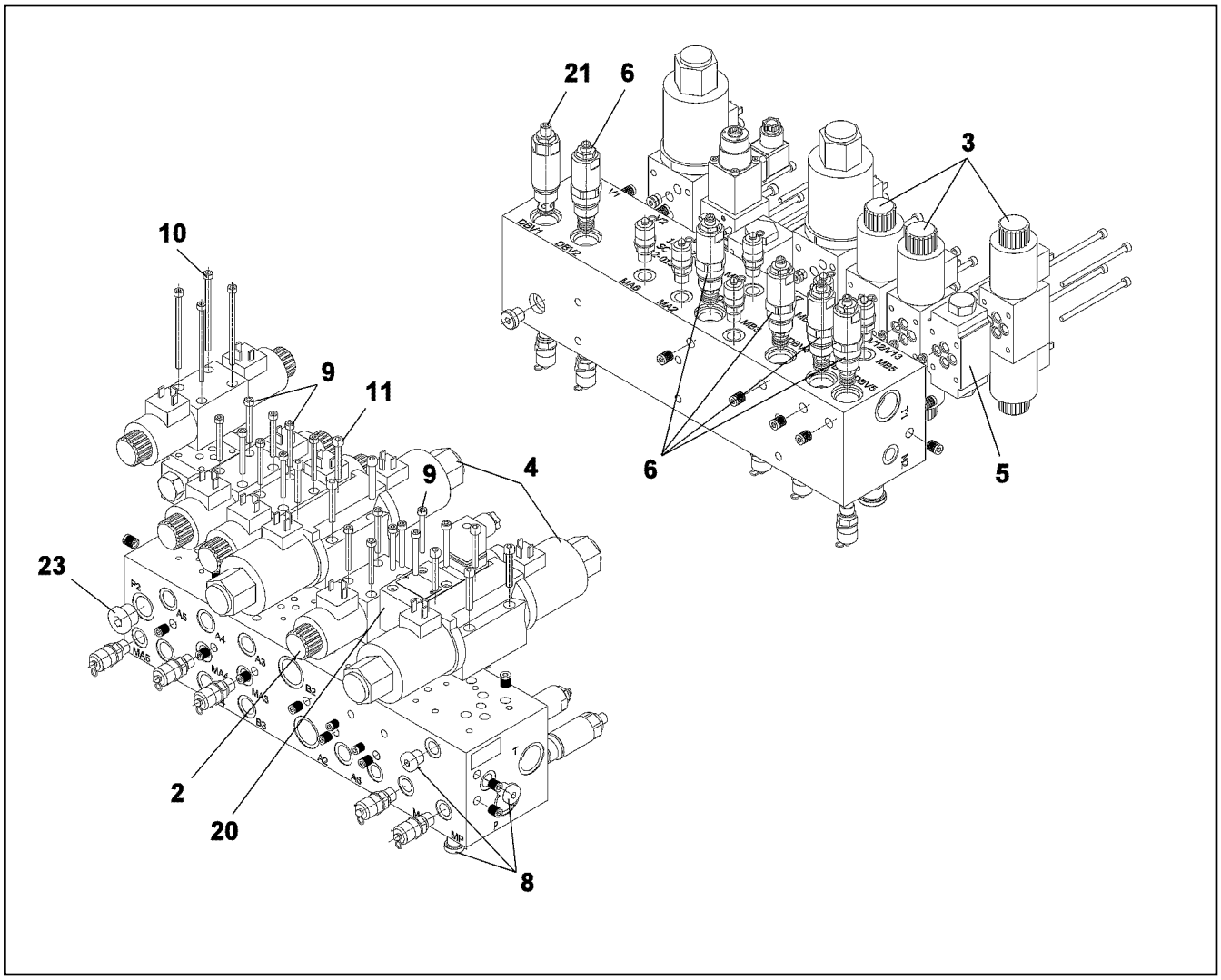

Pos.	Item	Quantity	Description	Bezeichnung
2	11482347	1	DIRECTIONAL SOLENOID ⇨ ❑ 569	WEGEMAGNETVENTIL
3	10875074	3	DIRECTIONAL CONTROL VALVE 4/3	WEGEVENTIL
4	10874849	2	DIRECTIONAL CONTROL VALVE 4/3	WEGEVENTIL
(1)	10423992	2	RETAINING NUT	BEFESTIGUNGSMUTTER
(3)	510787908	4	O-RING 30X2 NBR70	O-RING
(999)	10423993	1	SEAL KIT	DICHTSATZ
5	10875075	1	NON-RETURN VALVE	RUECKSCHLAGVENTIL
6	10875076	1	PRESSURE VALVE	DRUCKVENTIL
8	7361553	3	FITTING VSTI G1/4 CR6-FREI	VERSCHRAUBUNG
9	404361208	16	SOCKET HEAD SCREW ISO 4762 M5X45 12.	ZYLINDERSCHRAUBE
10	404364108	4	SOCKET HEAD SCREW ISO 4762 M5X85 12.	ZYLINDERSCHRAUBE
11	10876394	8	SOCKET HEAD SCREW DIN 912 M6X40 12.9	ZYLINDERSCHRAUBE
20	10342823	1	PRESSURE CONTROL VALVE SPF ⇨ ❑ 570	DRUCKREGELVENTIL
21	10875077	1	PRESSURE VALVE	DRUCKVENTIL
23	477704208	1	STOP PLUG VSTI G1/2A CR6-FREI	STOPFEN

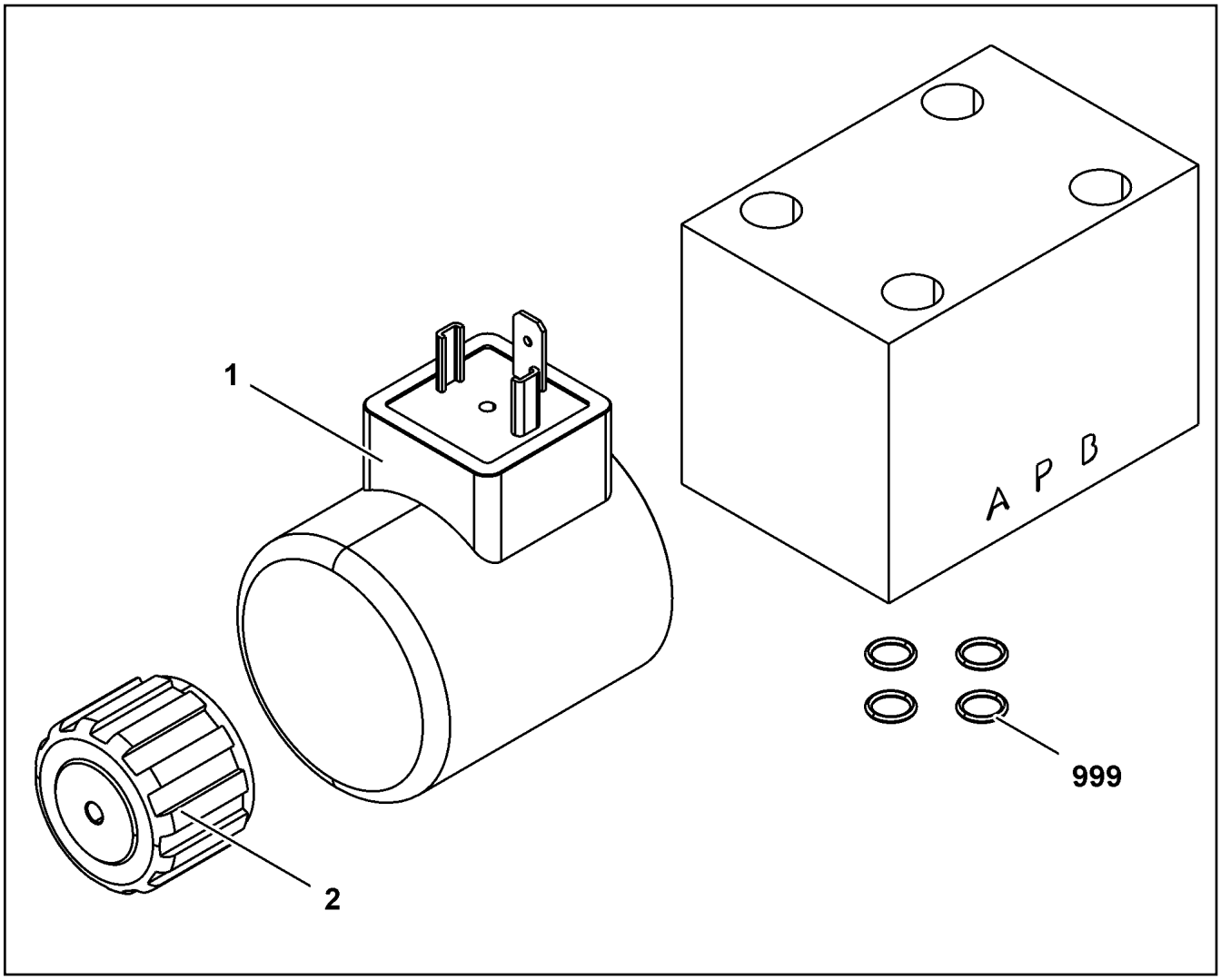

Pos.	Item	Quantity	Description	Bezeichnung
1	10874134	1	MAGNET COIL 27V	MAGNETSPULE
2	11342417	1	NUT	RAENDELMUTTER
999	10285695	1	SEAL KIT	DICHTSATZ

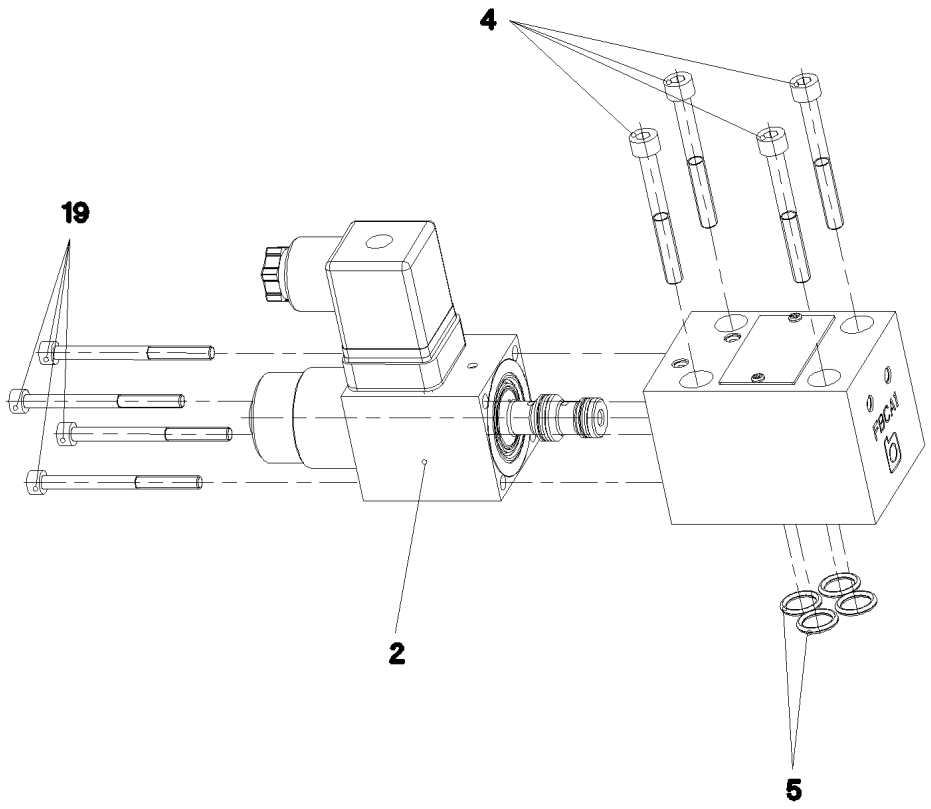

Pos.	Item	Quantity	Description	Bezeichnung
2	10650092	1	MAGNET 24V	MAGNET
4	404361208	4	SOCKET HEAD SCREW ISO 4762 M5X45 12.	ZYLINDERSCHRAUBE
5	7380574	4	O-RING ISO 3601-1 9,25X1,78 FKM 90 A	O-RING
19	4901531	4	SOCKET HEAD SCREW ISO 4762 M4X50 8.8	ZYLINDERSCHRAUBE

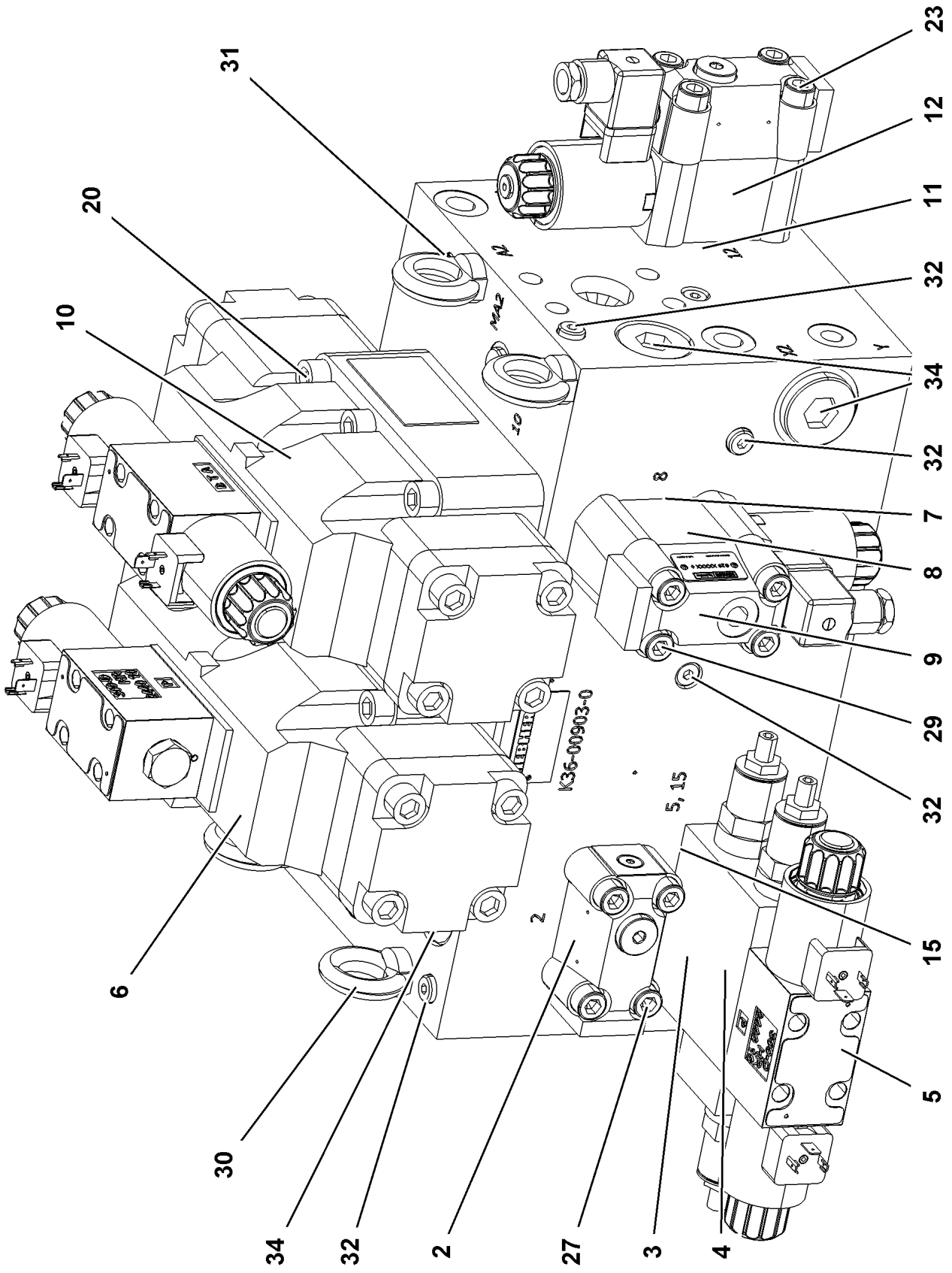

18.7.2022 059958	**etk_en_de_047654 LTR 1220**	❑ 571 (1/2)
LIEBHERR	**CONTROL BLOCK** **STEUERBLOCK**	**10413106**

Pos.	Item	Quantity	Description	Bezeichnung
2	571415208	1	BUILT-IN VALVE	EINBAUVENTIL
3	571414608	1	INTERMED.PLATE VALVE	ZWISCHENPLATTENVENTIL
(1)	510738608	4	O-RING ARP 568 9,25X1,78 NBR90	O-RING
4	571562408	1	INTERMED.PLATE VALVE	ZWISCHENPLATTENVENTIL
(1)	510738608	4	O-RING ARP 568 9,25X1,78 NBR90	O-RING
5	10801532	1	DIRECTIONAL CONTROL VALVE	WEGEVENTIL
(1)	10291306	1	MAGNET 28V	MAGNET
(1)	10872859	1	MAGNET COIL 28V	MAGNETSPULE
(18)	12103903	2	NUT	RAENDELMUTTER
(999)	10663097	1	SEALING SET VALVE	DS VENTIL
6	10801533	1	DIRECTIONAL CONTROL VALVE	WEGEVENTIL
(1)	10872796	1	DIRECTIONAL CONTROL VALVE	WEGEVENTIL
(999)	11004122	1	SEAL KIT	DICHTSATZ
7	10801534	1	BUILT-IN VALVE	EINBAUVENTIL
8	571415008	2	DIRECTIONAL CONTROL VALVE ⇨ ❑ 573	WEGEVENTIL
9	10801549	1	DIRECTIONAL CONTROL VALVE	WEGEVENTIL
10	10801551	1	DIRECTIONAL CONTROL VALVE	WEGEVENTIL
(1)	10874213	1	DIRECTIONAL CONTROL VALVE	WEGEVENTIL
(999)	10663092	1	SEALING SET VALVE	DS VENTIL
11	571415208	1	BUILT-IN VALVE	EINBAUVENTIL
12	11004126	1	DIRECTIONAL CONTROL VALVE	WEGEVENTIL
(1)	10291306	1	MAGNET 28V	MAGNET
(1)	10872859	1	MAGNET COIL 28V	MAGNETSPULE
15	4980712	1	SCREW PLUG DIN 906 M6X1 St PHR	VERSCHLUSSSCHRAUBE
20	12100905	12	SOCKET HEAD SCREW ISO 4762 M12X75 1	ZYLINDERSCHRAUBE
23	240186402	4	SOCKET HEAD SCREW ISO 4762 M10X90 1	ZYLINDERSCHRAUBE
27	404360408	4	SOCKET HEAD SCREW DIN 912 M10X45 12.	ZYLINDERSCHRAUBE
29	240186402	4	SOCKET HEAD SCREW ISO 4762 M10X90 1	ZYLINDERSCHRAUBE
30	402600208	4	RING BOLT DIN 580 M10X17 C15E A2K	RINGSCHRAUBE
31	477705408	1	STOP PLUG VSTI11/4"ED CR6-FREI	STOPFEN
32	510741508	1	STOP PLUG VSTI1/8"ED ST CR6-FREI	STOPFEN
34	477704608	1	STOP PLUG VSTI G1A CR6-FREI	STOPFEN

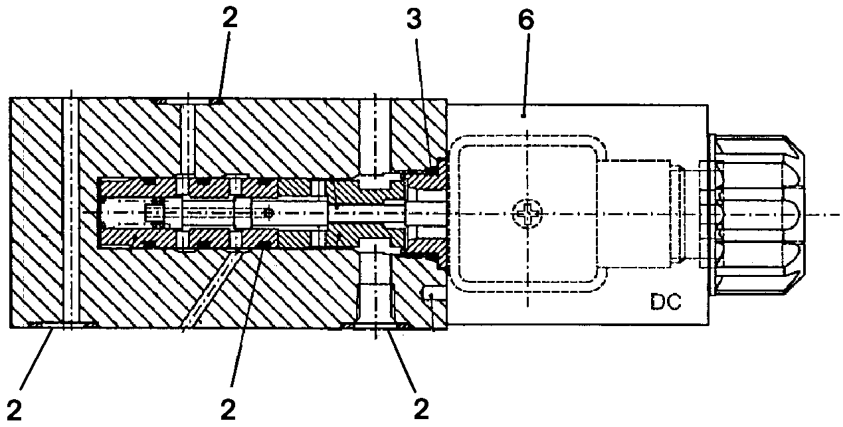

Pos.	Item	Quantity	Description	Bezeichnung
2	510760408	6	O-RING ARP 568 10,82X1,78 NBR90	O-RING
3	571141177	1	O-RING 15,4X2,1 NBR90	O-RING
6	10291306	1	MAGNET 28V	MAGNET
6	10872859	1	MAGNET COIL 28V	MAGNETSPULE

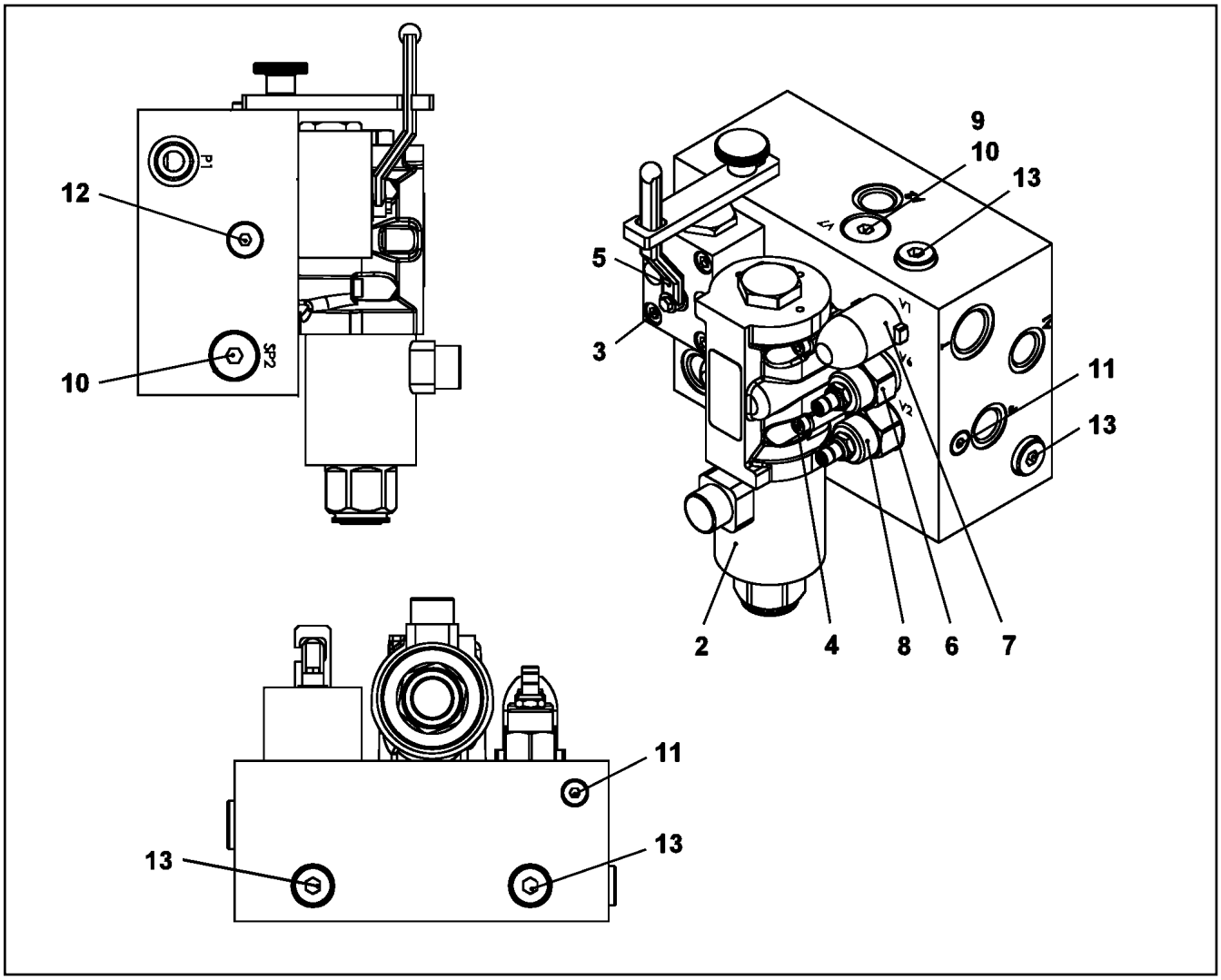

Pos.	Item	Quantity	Description	Bezeichnung
2	571737808	1	DIRECTIONAL CONTROL VALVE 4/2 NG10-3 ⇨ ❑ 575	WEGEVENTIL
3	12206699	4	SOCKET HEAD SCREW ISO 4762 M8X45 8.8	ZYLINDERSCHRAUBE
4	10875591	4	SOCKET HEAD SCREW ISO 4762 M6X40 8.8	ZYLINDERSCHRAUBE
5	571723608	1	BALL VALVE BKHU DN 10	KUGELHAHN
(1)	10337381	2	O-RING 10,00X2,5 NBR90	O-RING
6	571723708	1	PRESSURE LIMITING VALVE	DRUCKBEGRENZUNGSVENTIL
(999)	10470385	1	SEAL KIT LIMIT VALVE	DS DRUCKBEGRENZUNGSVEN
7	570427408	1	PRESSURE LIMITING VALVE	DRUCKBEGRENZUNGSVENTIL
(999)	511043308	1	SEAL KIT	DICHTSATZ
8	571723808	1	PRESSURE LIMITING VALVE	DRUCKBEGRENZUNGSVENTIL
(999)	571187408	1	SEAL KIT VITON	DICHTSATZ
9	10430042	1	NON-RETURN VALVE	RUECKSCHLAGVENTIL
10	477704208	2	STOP PLUG VSTI G1/2A CR6-FREI	STOPFEN
11	510741508	2	STOP PLUG VSTI1/8"ED ST CR6-FREI	STOPFEN
12	477704008	1	STOPPER PLUG VSTI1/4"ED CR6-FREI	BLINDSTOPFEN
13	477704108	4	STOP PLUG VSTI3/8"ED CR6-FREI	STOPFEN

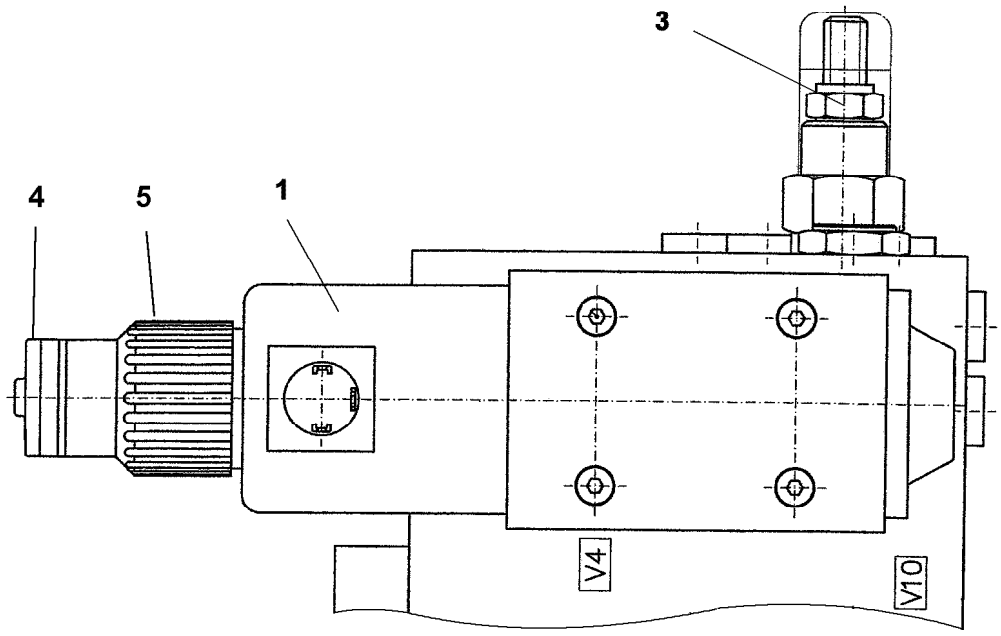

Pos. 999

Pos.	Item	Quantity	Description	Bezeichnung
1	12102117	1	MAGNET COIL 27V	MAGNETSPULE
4	11007817	1	EMERGENCY HAND OPERATION	NOTHANDBETAETIGUNG
5	10872448	1	NUT	RAENDELMUTTER
999	11006275	1	SEAL KIT DIRECTIONAL VALVE	DS WEGEVENTIL

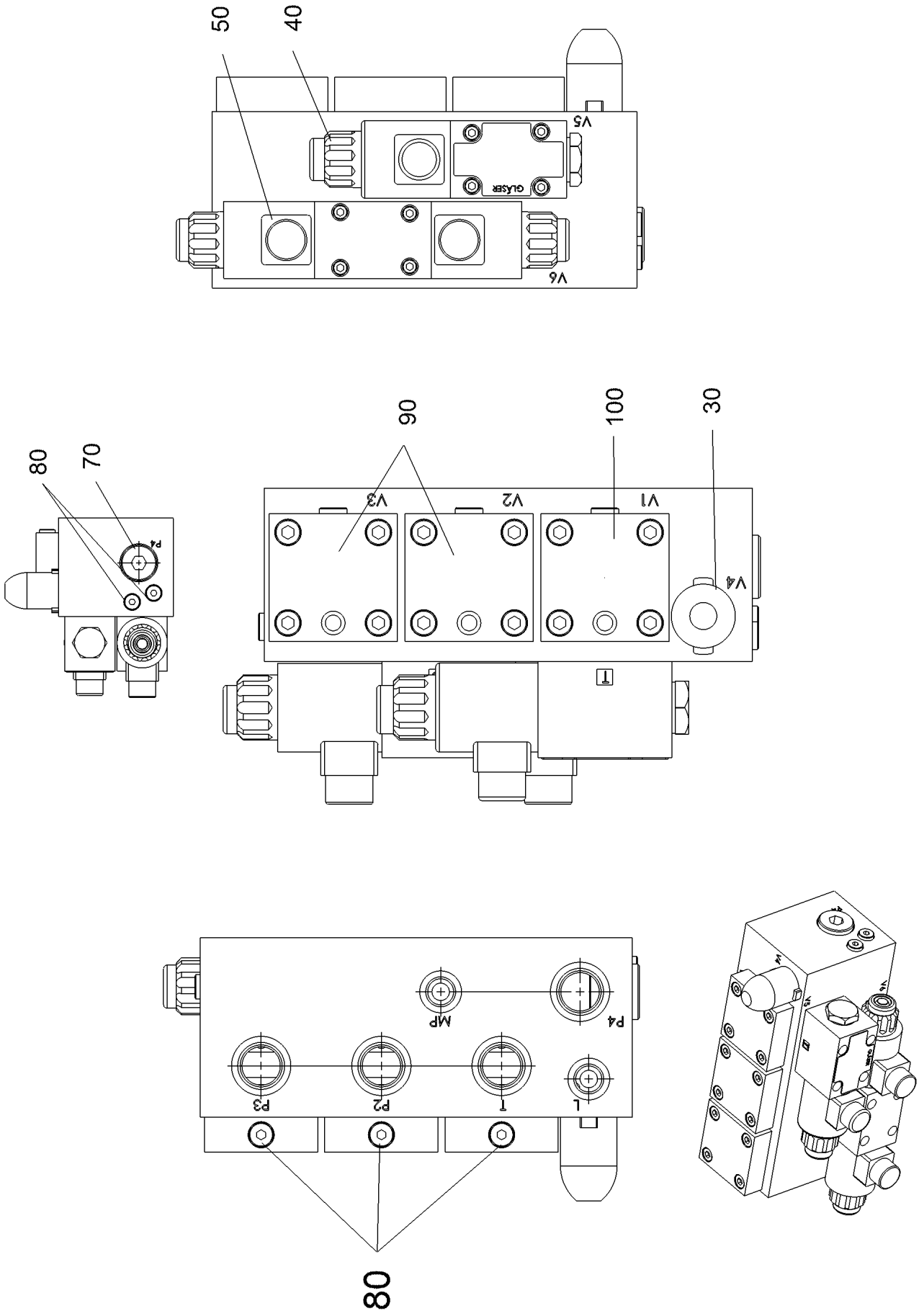

18.7.2022 129606 LIEBHERR	**etk_en_de_047654 LTR 1220** **CONTROL BLOCK** **STEUERBLOCK**	576 (1/2) **12100860**

Pos.	Item	Quantity	Description	Bezeichnung
30	10332395	1	PRESSURE LIMITING VALVE 315BAR	DRUCKBEGRENZUNGSVENTIL
40	571634708	1	DIRECTIONAL CONTROL VALVE 4/2 NG6-3 ⇨ ❑ 578	WEGEVENTIL
50	10332397	1	DIRECTIONAL CONTROL VALVE NG6 ⇨ ❑ 580	WEGEVENTIL
70	477704777	1	STOP PLUG VSTI3/4"ED A3P	STOPFEN
80	510741508	8	STOP PLUG VSTI1/8"ED ST CR6-FREI	STOPFEN
90	12106776	2	DIRECTIONAL CONTROL VALVE	WEGEVENTIL
100	571303008	1	DIRECTIONAL CONTROL VALVE	WEGEVENTIL
(999)	571407208	1	SEAL KIT	DICHTSATZ

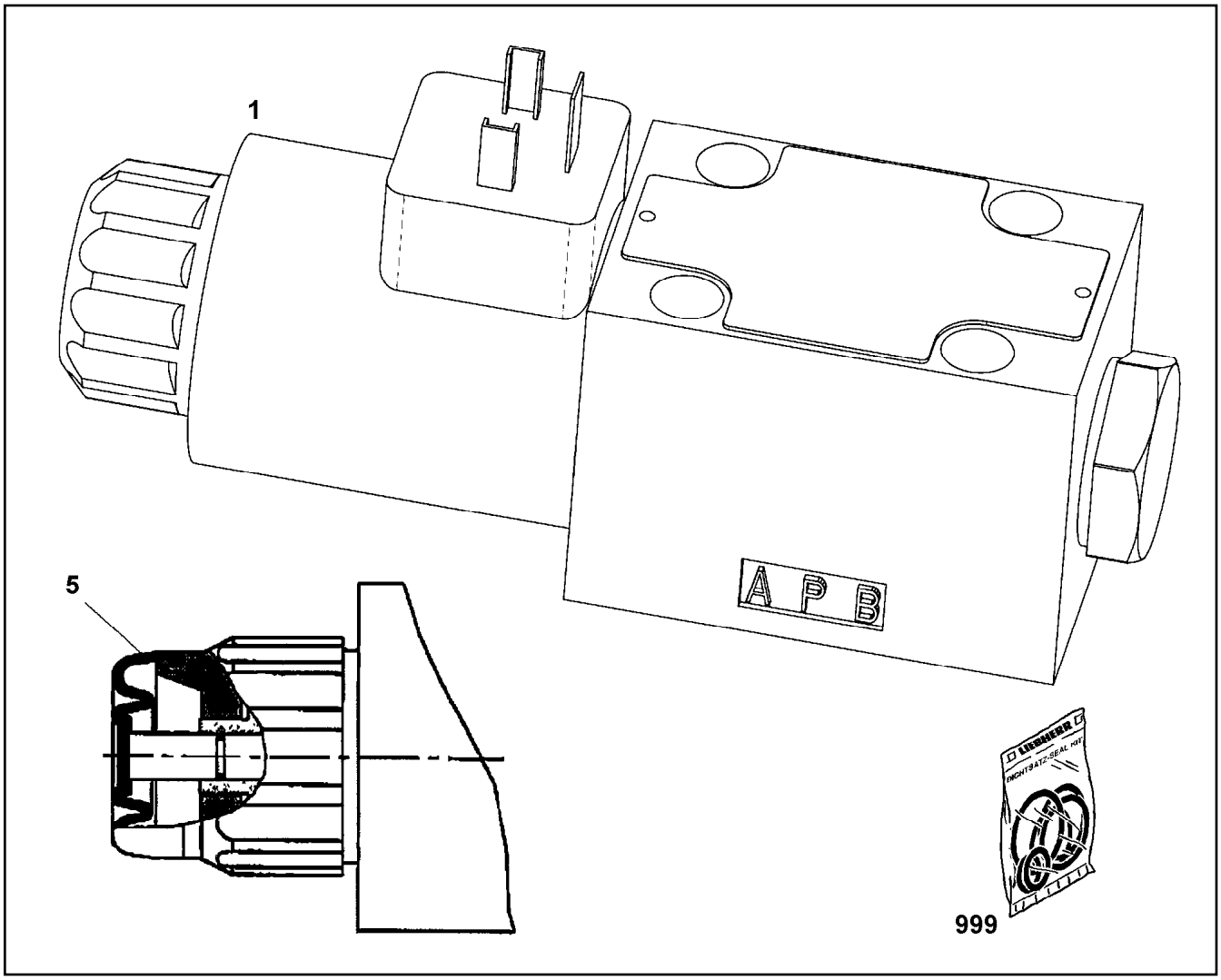

Pos.	Item	Quantity	Description	Bezeichnung
1	571818908	1	MAGNET COIL 24V	MAGNETSPULE
5	10878075	1	EMERGENCY HAND OPERATION RPE3-06 ⇨ ❑ 579	NOTHANDBETAETIGUNG
999	10285695	1	SEAL KIT	DICHTSATZ

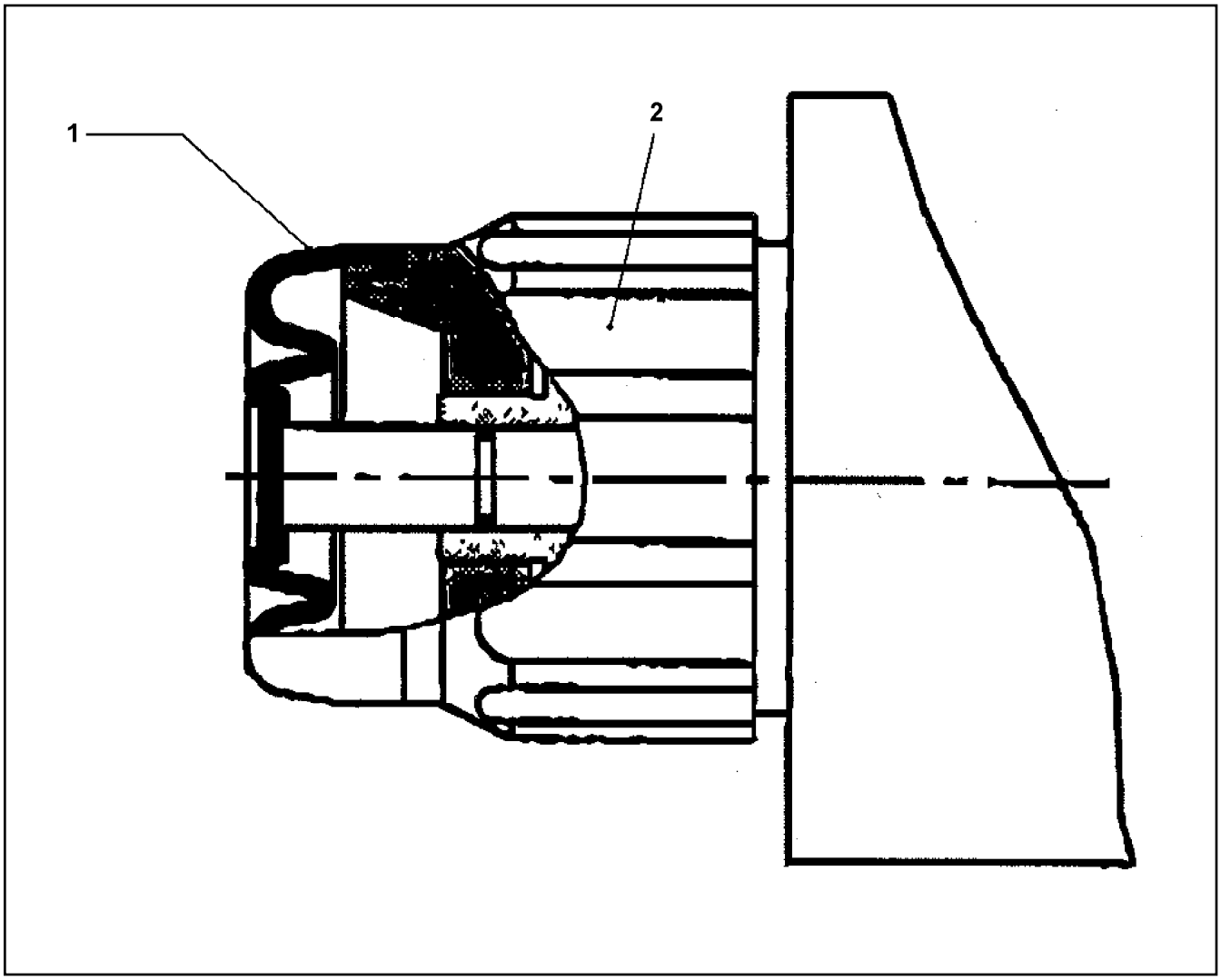

Pos.	Item	Quantity	Description	Bezeichnung
1	10040136	1	RUBBER PROTECTION CAP	GUMMISCHUTZKAPPE
2	10040137	1	NUT	MUTTER

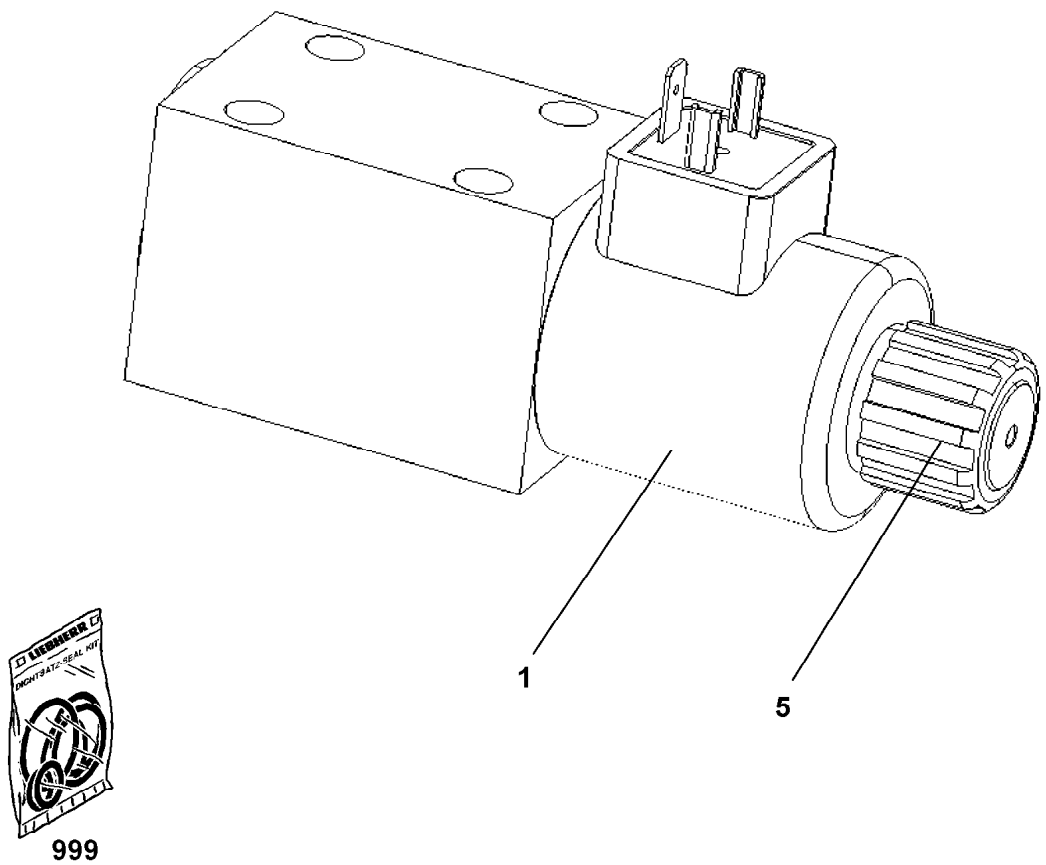

Pos.	Item	Quantity	Description	Bezeichnung
1	571818908	2	MAGNET COIL 24V	MAGNETSPULE
5	10878075	2	EMERGENCY HAND OPERATION RPE3-06 ⇨ ❑ 579	NOTHANDBETAETIGUNG
999	10285695	1	SEAL KIT	DICHTSATZ

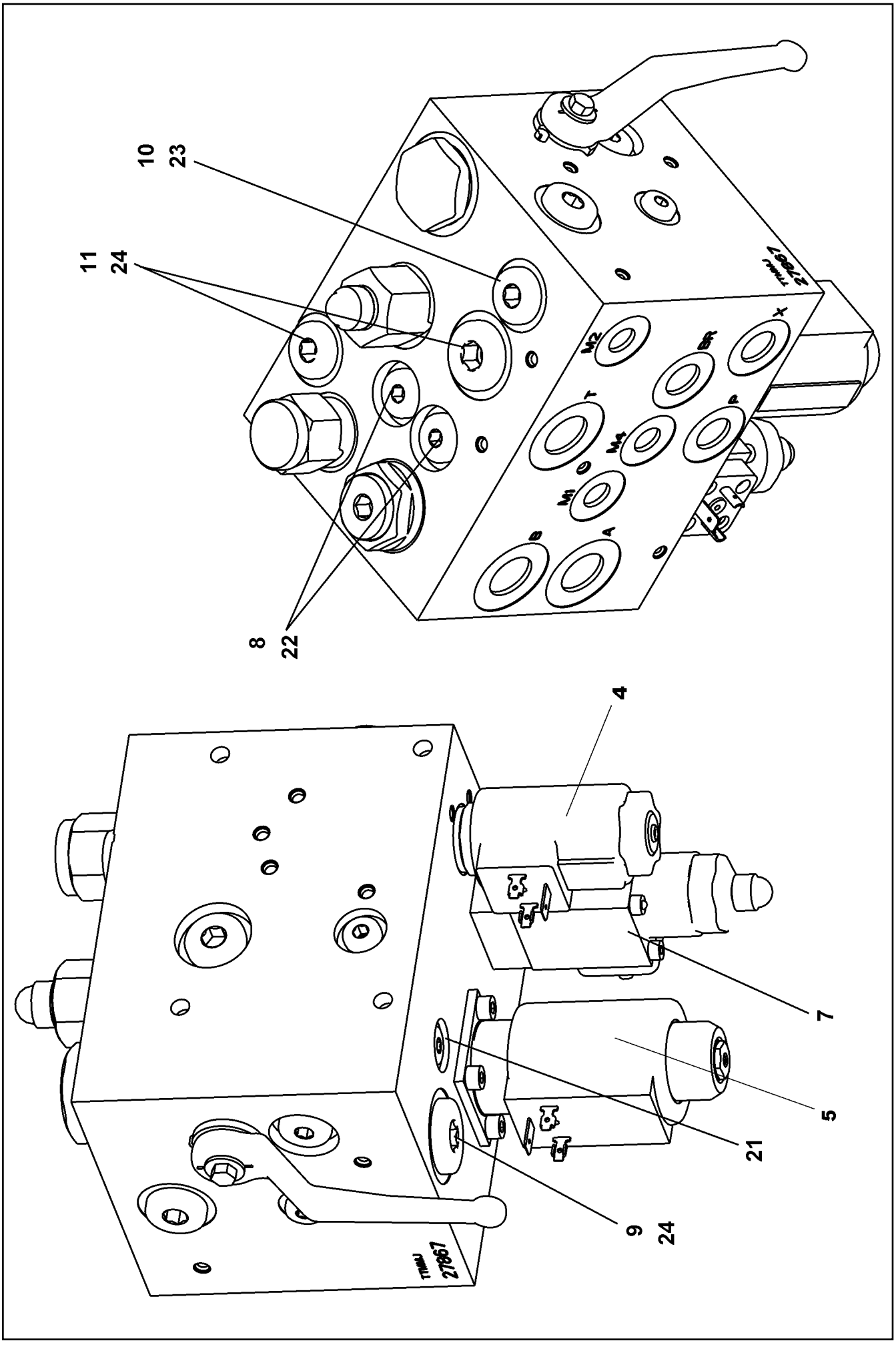

18.7.2022 009157	**etk_en_de_047654 LTR 1220**	581 (1/2)
LIEBHERR	**CONTROL BLOCK** **STEUERBLOCK**	**11341035**

Pos.	Item	Quantity	Description	Bezeichnung
4	10876704	1	SOLENOID VALVE	MAGNETVENTIL
5	10876705	1	SOLENOID VALVE	MAGNETVENTIL
7	10489734	1	PRESSURE LIMITING VALVE ⇨ ❑ 583	DRUCKBEGRENZUNGSVENTIL
8	571529508	2	SHUTTLE VALVE 350BAR	WECHSELVENTIL
9	571535008	1	SHUTTLE VALVE	WECHSELVENTIL
10	570818008	1	NON-RETURN VALVE	RUECKSCHLAGVENTIL
11	570531308	1	NON-RETURN VALVE	RUECKSCHLAGVENTIL
21	510741508	5	STOP PLUG VSTI1/8"ED ST CR6-FREI	STOPFEN
22	477704008	4	STOPPER PLUG VSTI1/4"ED CR6-FREI	BLINDSTOPFEN
23	477704108	4	STOP PLUG VSTI3/8"ED CR6-FREI	STOPFEN
24	477704208	2	STOP PLUG VSTI G1/2A CR6-FREI	STOPFEN

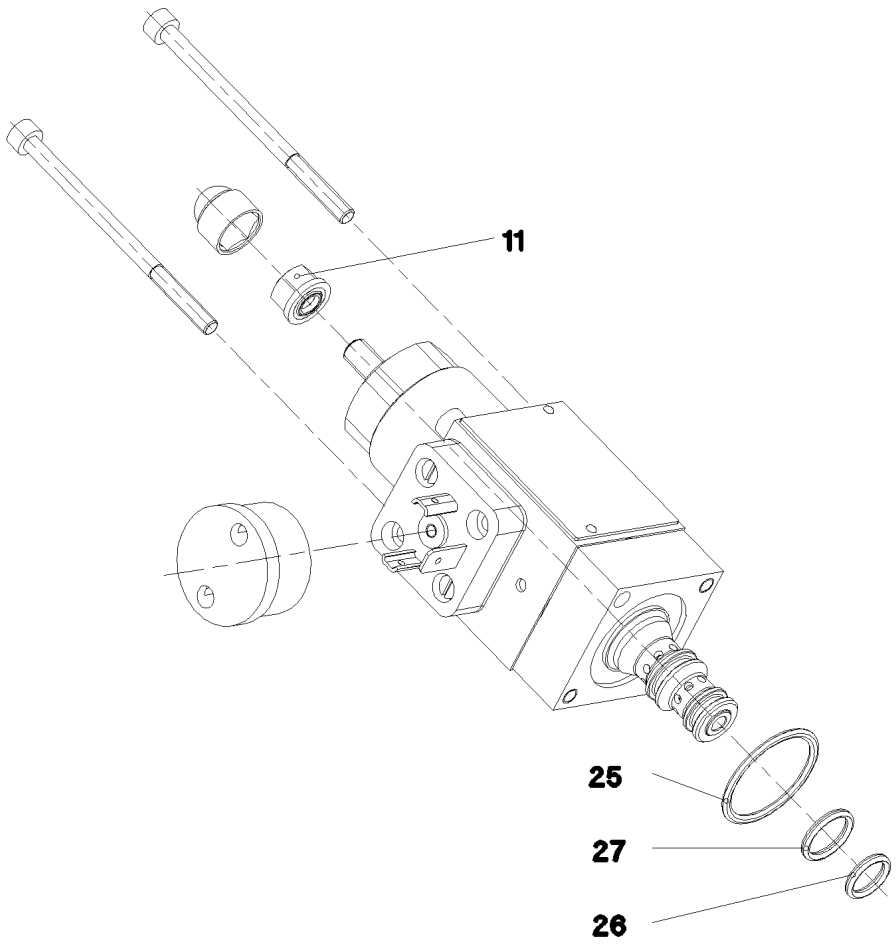

Pos.	Item	Quantity	Description	Bezeichnung
11	510753408	1	SEALING NUT M6	DICHTMUTTER
25	570652308	1	O-RING ARP 568 23,52X1,78 N903890SHOR	O-RING
26	510719008	1	O-RING ARP 568 9,25X1,78 NBR75	O-RING
27	510718108	1	O-RING ARP 568 10,82X1,78 NBR75	O-RING

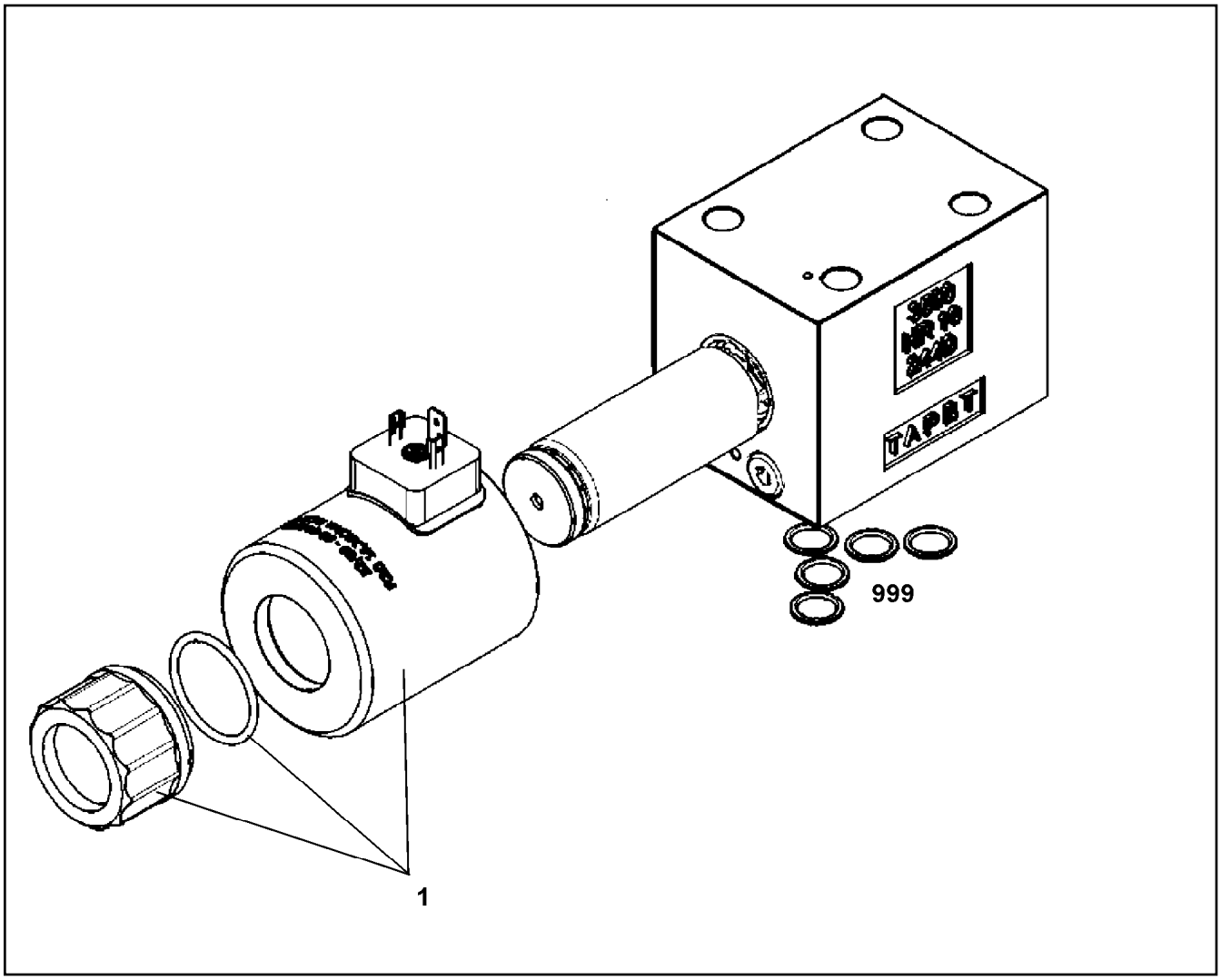

Pos.	Item	Quantity	Description	Bezeichnung
1	11005244	1	MAGNET COIL	MAGNETSPULE
999	10491129	1	SEAL KIT CONTROL BLOCK	DS STEUERBLOCK

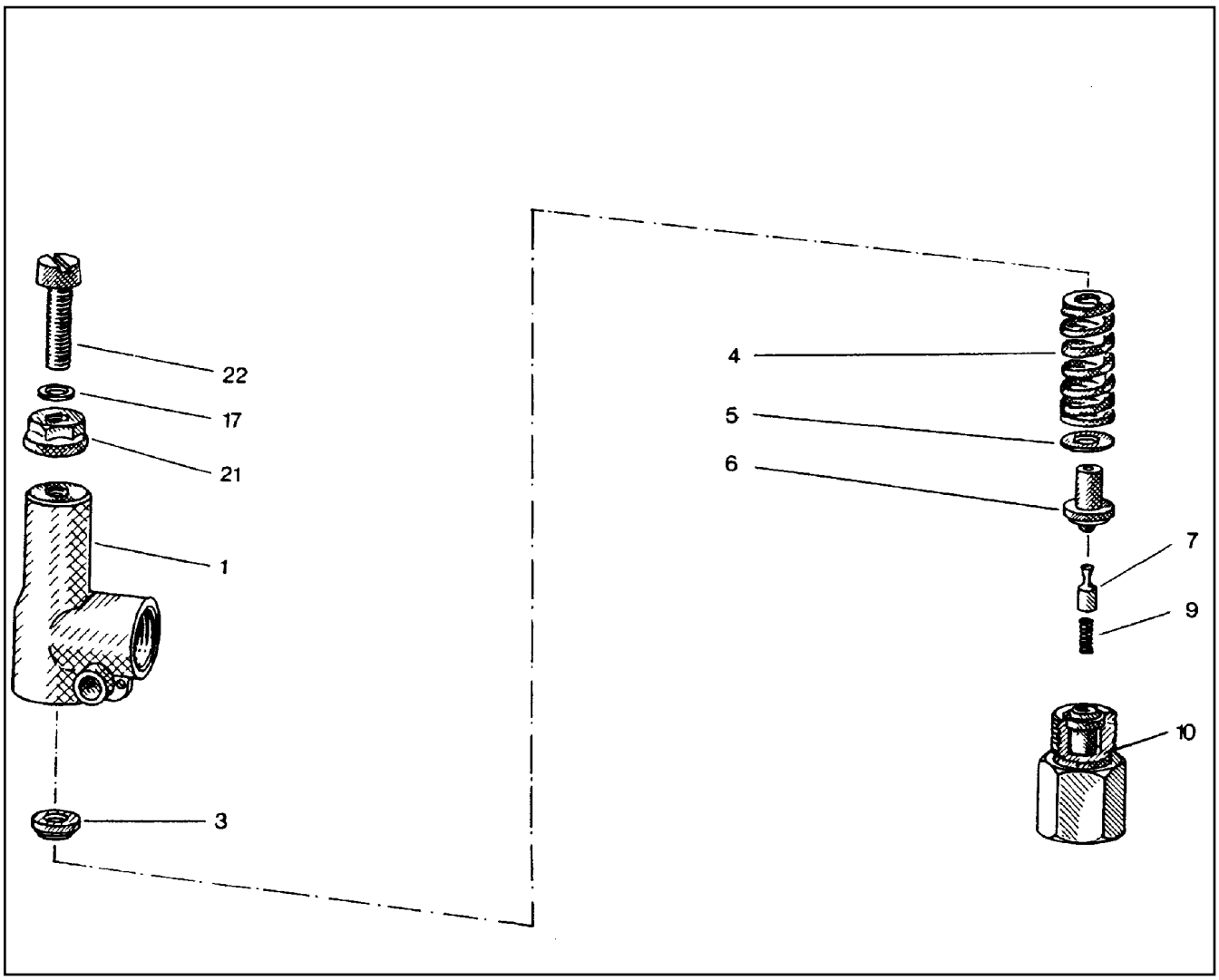

Pos.	Item	Quantity	Description	Bezeichnung
1	570063108	1	HOUSING	GEHAEUSE
3	510797008	1	SPRING SUPPORT	FEDERTELLER
4	511015108	1	COMPRESSION SPRING	DRUCKFEDER
5	510797208	1	WASHER	SCHEIBE
6	510797308	1	SPRING-LOADED PIN	FEDERBOLZEN
7	510797408	1	DAMPING PISTON	DAEMPFUNGSKOLBEN
9	510797508	1	COMPRESSION SPRING	DRUCKFEDER
10	570063208	1	VALVE SEAT	VENTILSITZ
17	511015508	2	SHIM	AUSGLEICHSCHEIBE
21	510741708	1	SEALING NUT M8	DICHTMUTTER
22	510797708	1	SOCKET HEAD SCREW DIN 84 M8X35 5.8	ZYLINDERSCHRAUBE

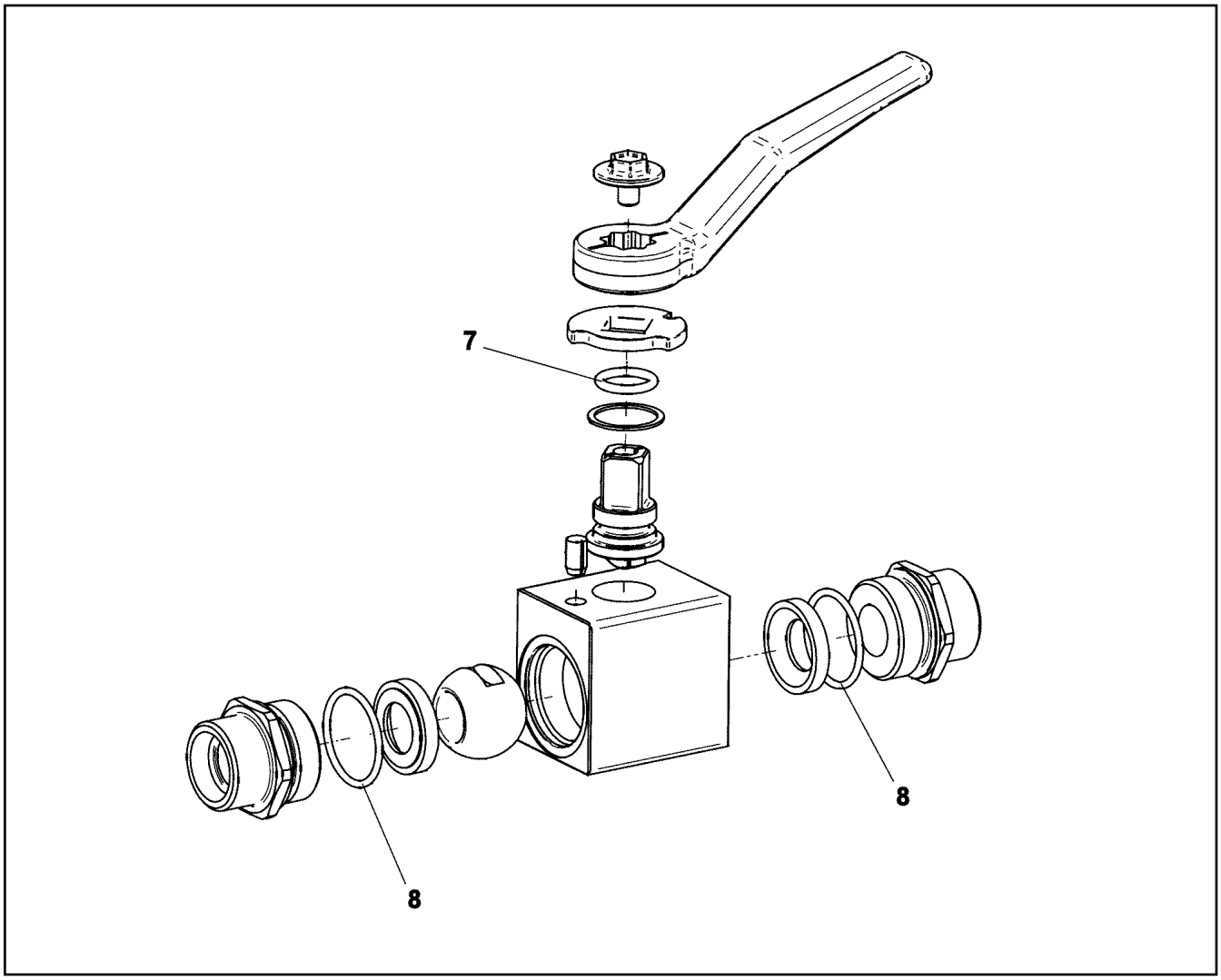

Pos.	Item	Quantity	Description	Bezeichnung
7	10337381	1	O-RING 10,00X2,5 NBR90	O-RING
8	510792708	2	O-RING 20X2 NBR90	O-RING

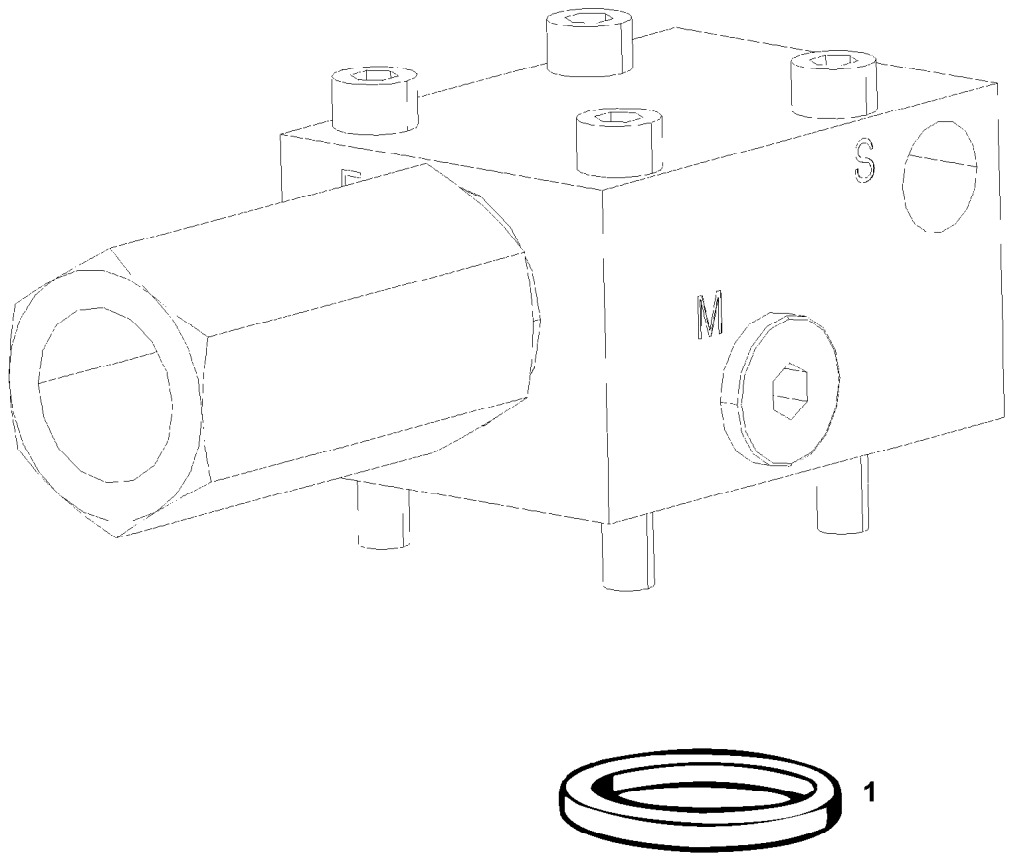

Pos.	Item	Quantity	Description	Bezeichnung
1	510746108	1	O-RING ARP 568 12,37X2,62 NBR90	O-RING

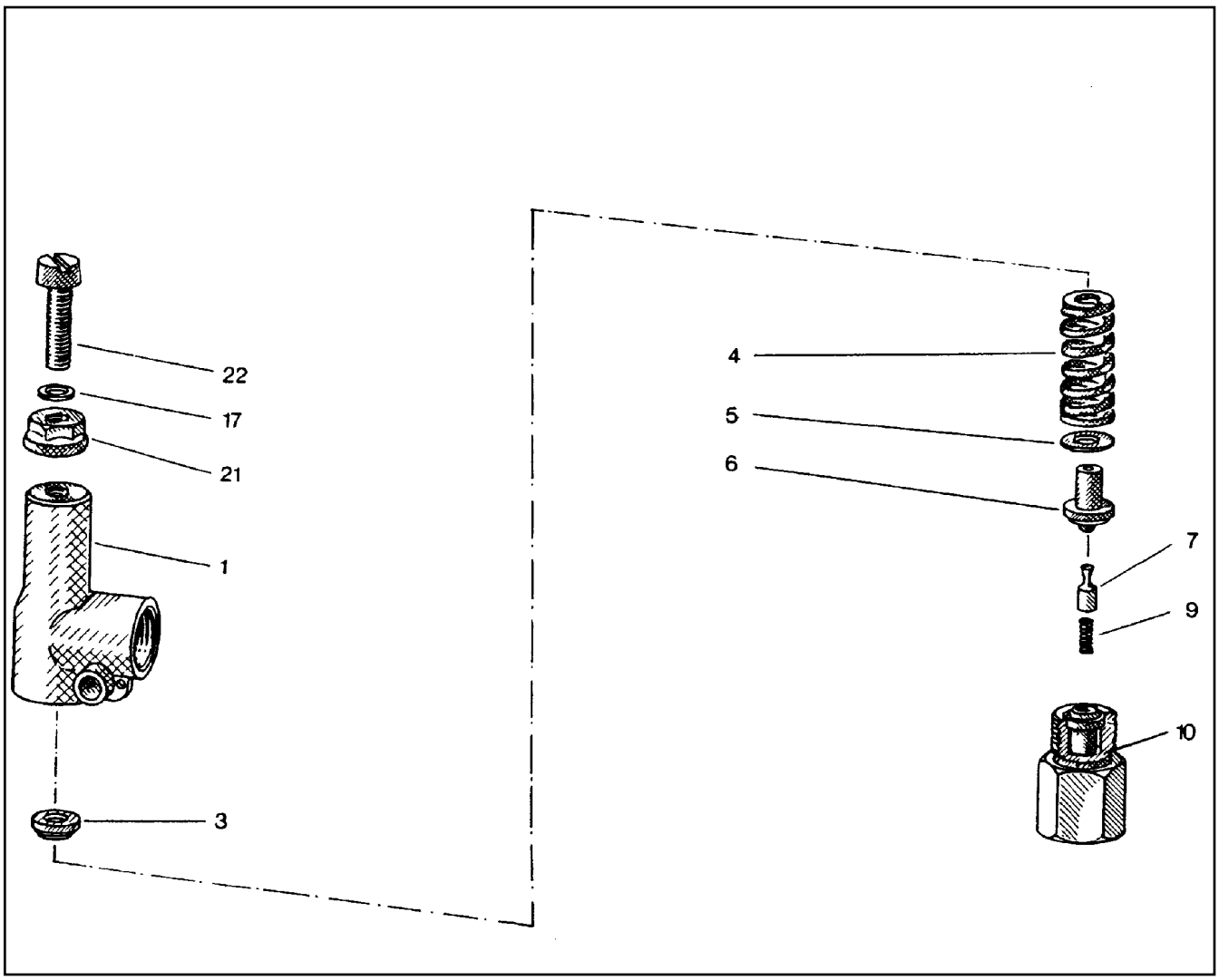

Pos.	Item	Quantity	Description	Bezeichnung
1	511015208	1	HOUSING	GEHAEUSE
3	510782508	1	SPRING SUPPORT	FEDERTELLER
4	511015308	1	COMPRESSION SPRING	DRUCKFEDER
5	510782708	1	WASHER	SCHEIBE
6	510782808	1	SPRING-LOADED PIN	FEDERBOLZEN
7	510782908	1	DAMPING PISTON	DAEMPFUNGSKOLBEN
9	510783008	1	COMPRESSION SPRING	DRUCKFEDER
10	511015408	1	VALVE SEAT	VENTILSITZ
17	511015508	1	SHIM	AUSGLEICHSCHEIBE
21	510741708	1	SEALING NUT M8	DICHTMUTTER
22	510797708	1	SOCKET HEAD SCREW DIN 84 M8X35 5.8	ZYLINDERSCHRAUBE

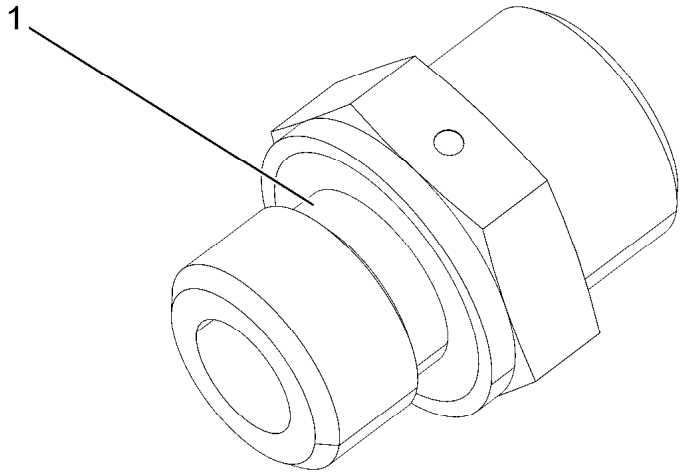

Pos.	Item	Quantity	Description	Bezeichnung
1	501243708	1	O-RING ARP 568 10,52X1,83 NBR90	O-RING

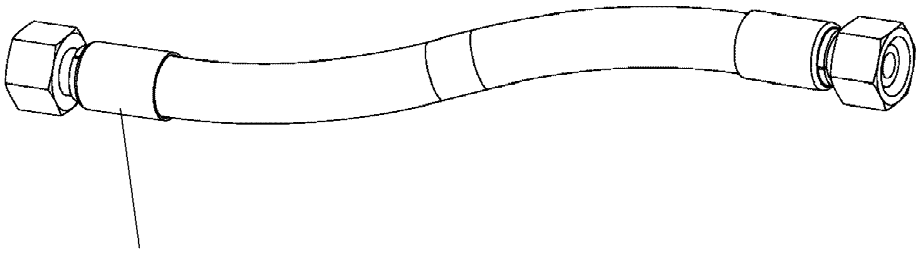

Schlauchnummer
Hose number
Numéro de flexible
Número de flexible
Номера шланга

Die Schlauchnummern auf den Schläuchen entsprechen den Positionen in der Schlauchliste.

The hose numbers from the hoses are in accordance with the items in the hose list.

Les numéros indiqués sur les flexibles correspondent aux repères de la nomenclature des flexibles.

Los números indicados en los flexibles corresponden a las posiciones de la lista de flexibles.

Нанесенные на шлангах номера соответствуют позициям в перечне.

Pos.	Item	Quantity	Description	Bezeichnung
1372	963337608	1	HOSE CPL. GH506-16 25X720	SCHLAUCH KPL.
1373	963171408	1	HOSE CPL. GH506-16 25X800	SCHLAUCH KPL.
1374	968349808	1	HOSE CPL. 4ST+ 31X3600	SCHLAUCH KPL.
1375	969633008	1	HOSE CPL. GH425-10 16X450	SCHLAUCH KPL.
1376	925686208	1	HOSE CPL. GH425-10 16X470	SCHLAUCH KPL.
1377	926098108	1	HOSE CPL. 1SC 8X500	SCHLAUCH KPL.
1378	927232508	1	HOSE CPL. 1SC 8X3700	SCHLAUCH KPL.
1379	929312908	1	HOSE CPL. 2SN 8X660	SCHLAUCH KPL.

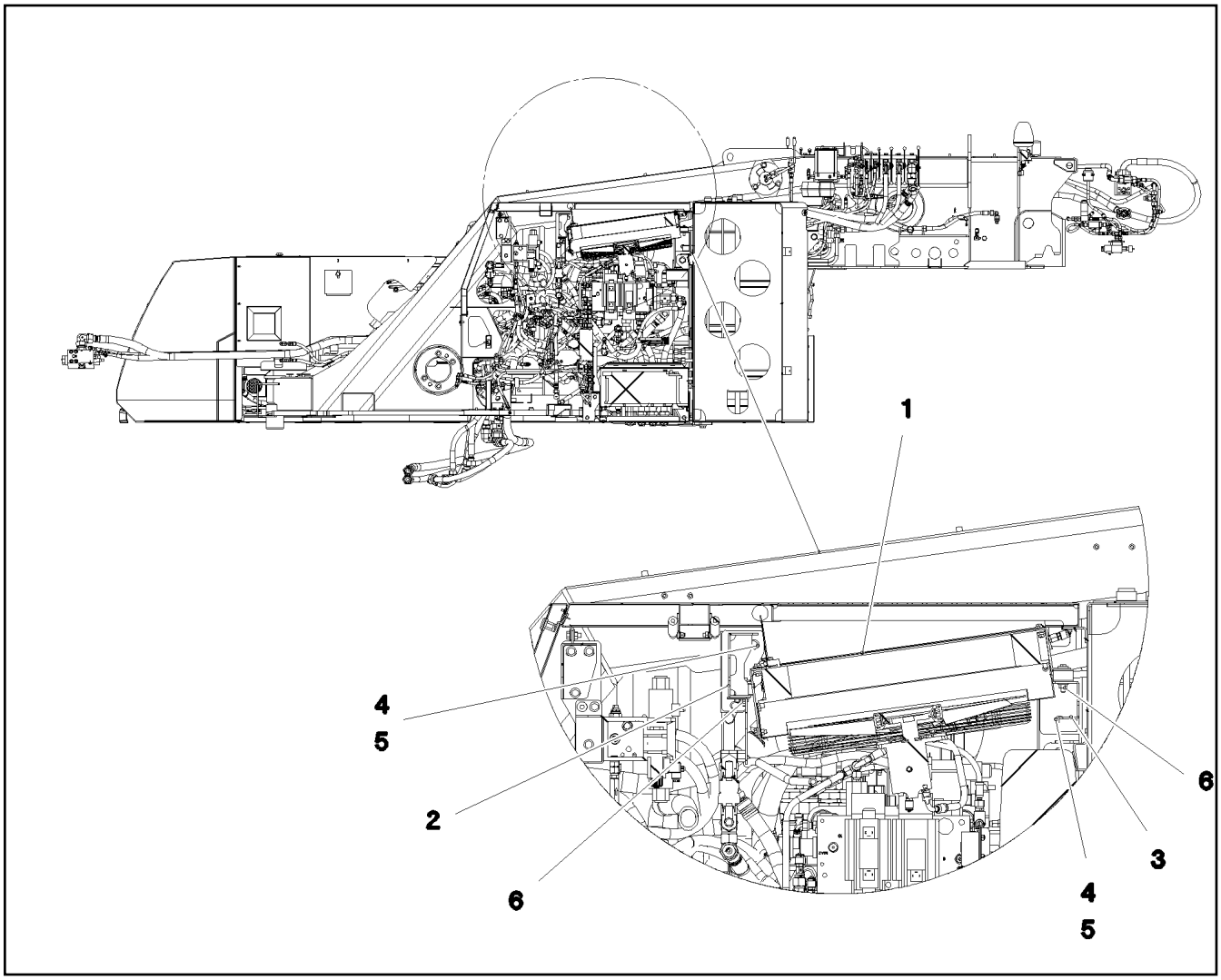

Pos.	Item	Quantity	Description	Bezeichnung
1	967980508	1	OIL COOLER, PRE-ASSEMBLED ⇨ ❑ 592	OELKUEHLER VORM.
2	967977708	1	HOLDER LEFT	HALTER LINKS
3	969185608	1	HOLDER RIGHT	HALTER RECHTS
4	11658580	6	WASHER DIN 7349 10,5 200HV-St FLZN SPF	SCHEIBE
5	11642358	6	HEX SCREW ISO 4017 M10X30 8.8 FLZN SP	SECHSKANTSCHRAUBE
6	12102695	7	HEX NUT ISO 4032 M10 8 ZNNI-480H SPF	SECHSKANTMUTTER

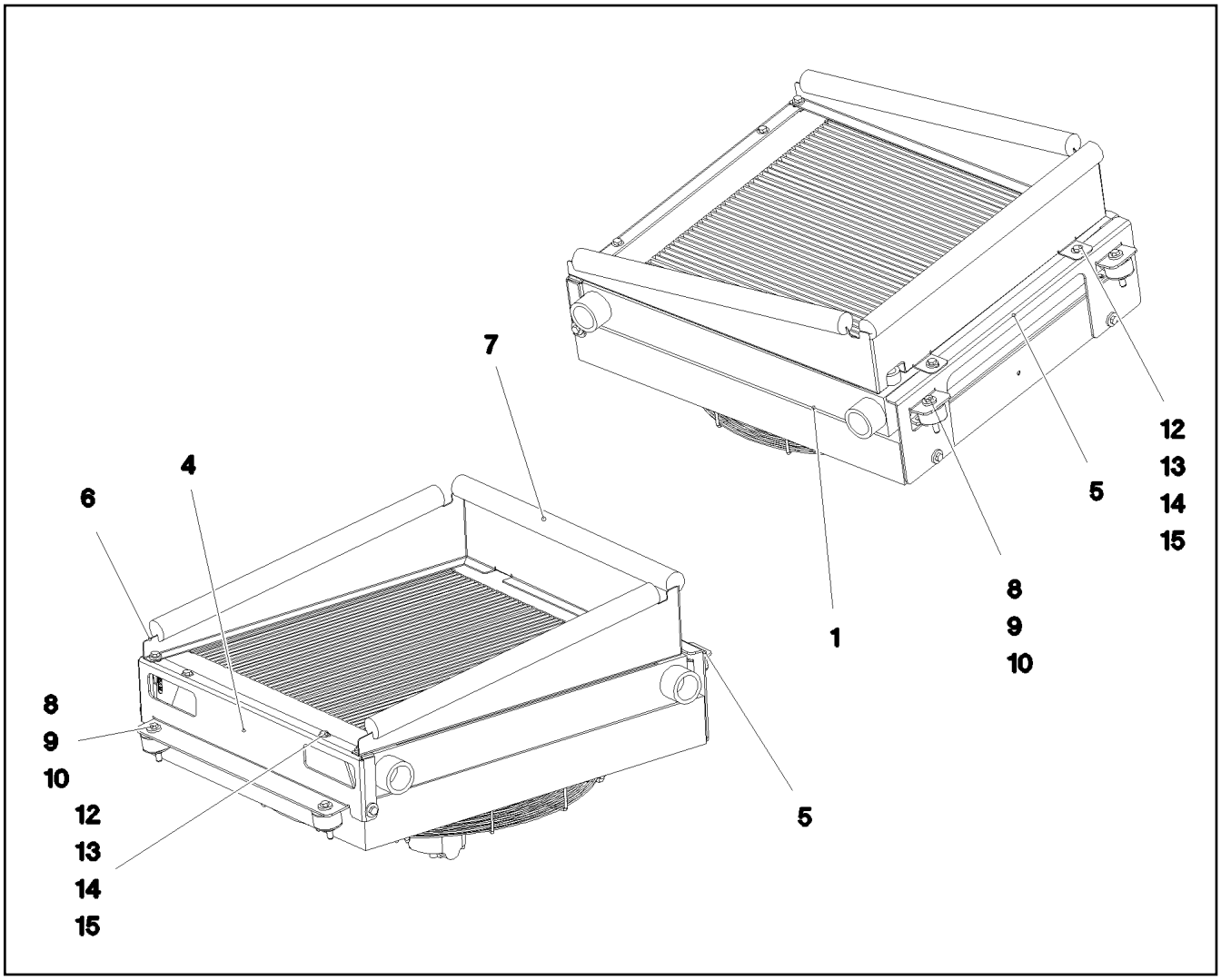

Pos.	Item	Quantity	Description	Bezeichnung
1	11622561	1	OIL AIR COOLER SPF ⇨ ❑ 593	OEL-LUFTKUEHLER
4	97031351	1	PLATE 4X701X174 S315MC FE//ZNNI8//CN//T	BLECH
5	97031349	1	PLATE 4X644X199 S315MC FE//ZNNI8//CN//T	BLECH
6	97031350	1	PLATE 2X2038X172 DC01 FE//ZNNI8//CN//T0	BLECH
7	7014524	3	CLAMPING PROFILE 40X1M PUR-HAUT	KLEMMPROFIL
8	726905008	4	CIRCULAR BEARING C50X30XM10	RUNDLAGER
9	12216205	4	HEX SCREW ISO 4017 M8X18 8.8 480H SPF	SECHSKANTSCHRAUBE
10	11658580	12	WASHER DIN 7349 10,5 200HV-St FLZN SPF	SCHEIBE
12	12103465	4	WASHER ISO 7089 8 300HV ZNNI-480H SPF	SCHEIBE
13	10197760	6	HEX NUT ISO 4032 M8 10 ZNNI-480H SPF	SECHSKANTMUTTER
14	11840501	8	WASHER DIN 7349 8,4 200HV 480H SPF	SCHEIBE
15	10197831	10	HEX SCREW ISO 4017 M8X25 8.8 ZNNI-480	SECHSKANTSCHRAUBE

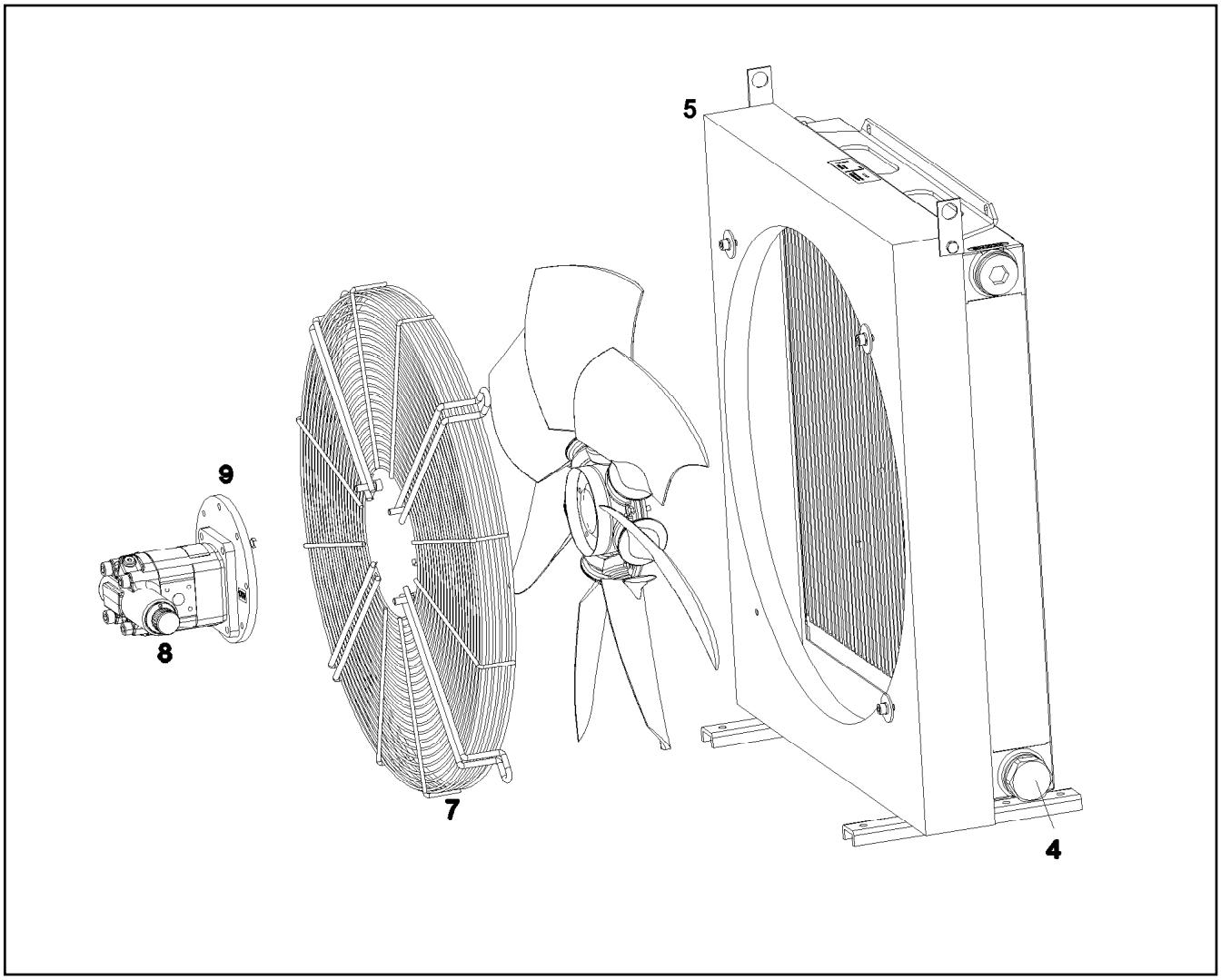

Pos.	Item	Quantity	Description	Bezeichnung
4	11490271	1	THERMO-VALVE pv=2BAR	THERMOVENTIL
5	10875930	1	FRAME RAL 9005 MATT	RAHMEN
7	10872389	1	GUARD	SCHUTZGITTER
8	10872388	1	HYDRO MOTOR ⇨ ❑ 594	HYDROMOTOR
9	10874902	1	MOTOR SEAT	MOTORAUFNAHME
10	10874640	1	FAN BLADE	LUEFTERFLUEGEL

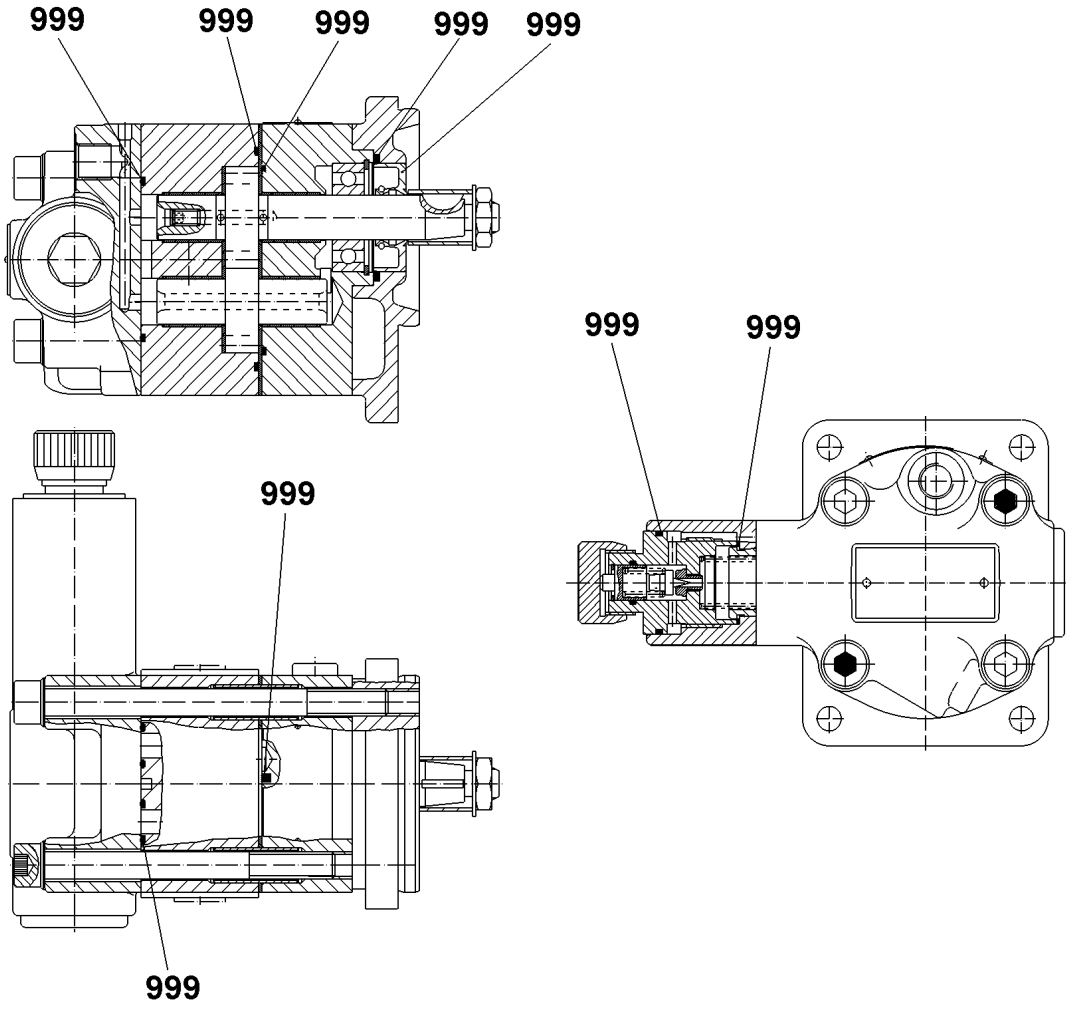

Pos.	Item	Quantity	Description	Bezeichnung
999	10872714	1	SEAL KIT F. OIL MOTOR	DS HYDROMOTOR

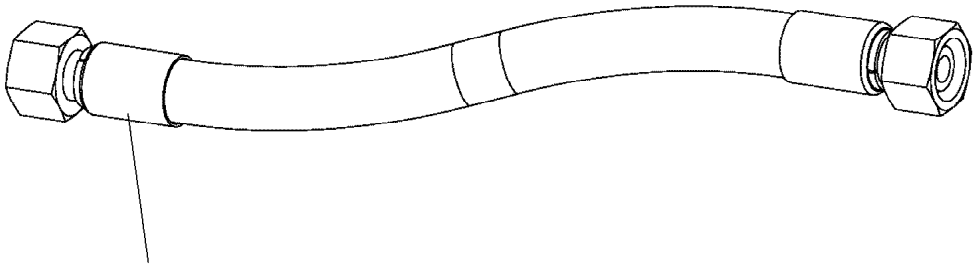

Schlauchnummer
Hose number
Numéro de flexible
Número de flexible
Номера шланга

Die Schlauchnummern auf den Schläuchen entsprechen den Positionen in der Schlauchliste.

The hose numbers from the hoses are in accordance with the items in the hose list.

Les numéros indiqués sur les flexibles correspondent aux repères de la nomenclature des flexibles.

Los números indicados en los flexibles corresponden a las posiciones de la lista de flexibles.

Нанесенные на шлангах номера соответствуют позициям в перечне.

Pos.	Item	Quantity	Description	Bezeichnung
200	962440508	1	HOSE CPL. 2SN 16X4600	SCHLAUCH KPL.
201	96034411	1	HOSE CPL. 2SN 16X420	SCHLAUCH KPL.
202	926130108	1	HOSE CPL. 1SC 8X360	SCHLAUCH KPL.
203	96035632	1	HOSE CPL. 1SC 8X3600	SCHLAUCH KPL.
204	96035633	1	HOSE CPL. 2SN 12X420	SCHLAUCH KPL.
205	96035634	1	HOSE CPL. 2TE 16X180	SCHLAUCH KPL.
206	927613508	1	HOSE CPL. 2SN 12X1300	SCHLAUCH KPL.
207	96035635	1	HOSE CPL. 2SN 12X370	SCHLAUCH KPL.
209	96040433	1	HOSE CPL. 304 60X140	SCHLAUCH KPL.
210	96040435	1	HOSE CPL. 75X150	SCHLAUCH KPL.
211	928024908	1	HOSE CPL. 2TE 10X660	SCHLAUCH KPL.
212	969633808	1	HOSE CPL. 2SN 8X2550	SCHLAUCH KPL.
213	968350608	1	HOSE CPL. 2TE 16X760	SCHLAUCH KPL.
214	926606608	1	HOSE CPL. 2TE 10X800	SCHLAUCH KPL.
215	967355108	1	HOSE CPL. 2TE 10X2150	SCHLAUCH KPL.
217	964273708	1	HOSE CPL. 2TE 10X740	SCHLAUCH KPL.
218	927295708	1	HOSE CPL. 2TE 20X440	SCHLAUCH KPL.
219	968150708	1	HOSE CPL. 2TE 20X200	SCHLAUCH KPL.
221	969634108	1	HOSE CPL. 2SN 20X280	SCHLAUCH KPL.
222	926561708	1	HOSE CPL. 2TE 12X3100	SCHLAUCH KPL.
224	927032108	1	HOSE CPL. 1SN 25X640	SCHLAUCH KPL.
225	968537008	1	HOSE CPL. 2TE 20X1100	SCHLAUCH KPL.
226	968350708	1	HOSE CPL. 2TE 20X760	SCHLAUCH KPL.
228	926041308	1	HOSE CPL. 2TE 16X1200	SCHLAUCH KPL.
229	969633908	1	HOSE CPL. 2SN 16X250	SCHLAUCH KPL.
230	969634308	1	HOSE CPL. 2SN 6X640	SCHLAUCH KPL.
231	968350908	1	HOSE CPL. 2SN 6X500	SCHLAUCH KPL.
233	968351008	1	HOSE CPL. 2SN 6X300	SCHLAUCH KPL.
234	968150708	1	HOSE CPL. 2TE 20X200	SCHLAUCH KPL.
235	969634008	1	HOSE CPL. GH506-16 25X1550	SCHLAUCH KPL.
236	965155808	1	HOSE CPL. GH506-16 25X1400	SCHLAUCH KPL.
254	96040432	2	HOSE CPL. 304 35X330	SCHLAUCH KPL.
255	96040434	1	HOSE CPL. CARBURITE10 50X390	SCHLAUCH KPL.
300	967623008	1	HOSE CPL. 4ST+ 31X880	SCHLAUCH KPL.
301	968151108	1	HOSE CPL. 4ST+ 31X940	SCHLAUCH KPL.
302	968151208	1	HOSE CPL. 4ST+ 31X260	SCHLAUCH KPL.
303	924741208	1	HOSE CPL. GH425-10 16X480	SCHLAUCH KPL.
304	924741208	1	HOSE CPL. GH425-10 16X480	SCHLAUCH KPL.
305	968151308	1	HOSE CPL. 2SN 10X1900	SCHLAUCH KPL.
306	966142408	1	HOSE CPL. GH425-8 12X1800	SCHLAUCH KPL.
307	966350208	1	HOSE CPL. GH425-8 12X2400	SCHLAUCH KPL.
308	963170408	1	HOSE CPL. GH425-8 12X1140	SCHLAUCH KPL.
309	923343608	1	HOSE CPL. GH425-8 12X1600	SCHLAUCH KPL.
310	968151408	1	HOSE CPL. 2SN 6X880	SCHLAUCH KPL.
313	928046908	1	HOSE CPL. 2TE 10X360	SCHLAUCH KPL.
314	923853008	1	HOSE CPL. GH425-10 16X1400	SCHLAUCH KPL.
315	969386508	1	HOSE CPL. 2SN 20X540	SCHLAUCH KPL.
316	928005808	1	HOSE CPL. 2SN 8X600	SCHLAUCH KPL.
317	928762308	1	HOSE CPL. 2SN 10X3000	SCHLAUCH KPL.
318	929391108	1	HOSE CPL. 2SN 10X2900	SCHLAUCH KPL.
319	968599208	1	HOSE CPL. 2SN 8X1180	SCHLAUCH KPL.
320	968351208	1	HOSE CPL. 2SN 8X1140	SCHLAUCH KPL.
321	968151808	1	HOSE CPL. FLEXIT-1T24 38X700	SCHLAUCH KPL.
322	968151908	1	HOSE CPL. FLEXIT-1T24 38X820	SCHLAUCH KPL.
323	968152008	1	HOSE CPL. 2SN 8X2350	SCHLAUCH KPL.
324	968152008	1	HOSE CPL. 2SN 8X2350	SCHLAUCH KPL.
325	926362908	1	HOSE CPL. 2TE 10X1950	SCHLAUCH KPL.
326	969452208	1	HOSE CPL. 1SC 8X1400	SCHLAUCH KPL.
329	969634408	1	HOSE CPL. 1SC 8X340	SCHLAUCH KPL.
330	926028808	1	HOSE CPL. 2TE 10X2150	SCHLAUCH KPL.

Pos.	Item	Quantity	Description	Bezeichnung
331	966861108	1	HOSE CPL. 1SC 8X720	SCHLAUCH KPL.
332	924134808	1	HOSE CPL. GH425-10 16X1650	SCHLAUCH KPL.
333	923342808	1	HOSE CPL. GH425-10 16X1700	SCHLAUCH KPL.
334	963457808	1	HOSE CPL. 2SN 12X3700	SCHLAUCH KPL.
335	926610108	1	HOSE CPL. 2TE 10X520	SCHLAUCH KPL.
336	965159708	1	HOSE CPL. 2TE 12X820	SCHLAUCH KPL.
339	966051108	1	HOSE CPL. FLEXIT-1T24 38X2000	SCHLAUCH KPL.
340	965861108	3	HOSE CPL. FLEXIT-1T24 38X1300	SCHLAUCH KPL.
341	969935008	1	HOSE CPL. GH425-10 16X2000	SCHLAUCH KPL.
342	921990108	1	HOSE CPL. GH425-10 16X2000	SCHLAUCH KPL.
343	968351408	1	HOSE CPL. 4ST+ 31X630	SCHLAUCH KPL.
345	968351508	1	HOSE CPL. 1SN 25X3900	SCHLAUCH KPL.
346	962956708	1	HOSE CPL. 1SC 8X4100	SCHLAUCH KPL.
348	968139808	1	HOSE CPL. 2TE 10X1900	SCHLAUCH KPL.
349	923016308	1	HOSE CPL. 2TE 10X2800	SCHLAUCH KPL.
350	926711908	1	HOSE CPL. 2TE 10X1200	SCHLAUCH KPL.
351	926289108	1	HOSE CPL. 2TE 12X1000	SCHLAUCH KPL.
352	965434608	1	HOSE CPL. 2TE 20X800	SCHLAUCH KPL.
353	965945408	1	HOSE CPL. 2TE 10X490	SCHLAUCH KPL.
354	965198708	1	HOSE CPL. 1SC 8X330	SCHLAUCH KPL.
355	968152508	1	HOSE CPL. 2TE 10X190	SCHLAUCH KPL.
356	928006008	1	HOSE CPL. 2SN 8X400	SCHLAUCH KPL.
357	968007308	1	HOSE CPL. 2TE 20X3100	SCHLAUCH KPL.
358	928876208	1	HOSE CPL. 2TE 20X3600	SCHLAUCH KPL.
360	925352308	1	HOSE CPL. GH425-12 19X680	SCHLAUCH KPL.
361	969572608	1	HOSE CPL. 4ST+ 31X920	SCHLAUCH KPL.
364	928022908	1	HOSE CPL. 2TE 10X1220	SCHLAUCH KPL.
367	966860408	1	HOSE CPL. 2TE 20X960	SCHLAUCH KPL.
368	922068108	1	HOSE CPL. GH425-12 19X700	SCHLAUCH KPL.
369	928042908	1	HOSE CPL. 2TE 20X1000	SCHLAUCH KPL.
370	96040431	1	HOSE CPL. 2TE 10X1240	SCHLAUCH KPL.
372	926757108	1	HOSE CPL. 2TE 20X2500	SCHLAUCH KPL.
373	967219908	1	HOSE CPL. 1SN 25X1240	SCHLAUCH KPL.
374	929631408	1	HOSE CPL. 2TE 20X800	SCHLAUCH KPL.
375	969634508	1	HOSE CPL. 1SN 32X2200	SCHLAUCH KPL.
376	96040847	1	HOSE CPL. GH506-16 25X1200	SCHLAUCH KPL.
377	968352108	1	HOSE CPL. FLEXIT-1T24 38X3000	SCHLAUCH KPL.
378	962641808	1	HOSE CPL. 2TE 10X260	SCHLAUCH KPL.
379	927294708	1	HOSE CPL. 2TE 10X220	SCHLAUCH KPL.
380	969634608	1	HOSE CPL. GH506-16 25X1020	SCHLAUCH KPL.
381	968351808	1	HOSE CPL. GH506-16 25X1400	SCHLAUCH KPL.
382	969634708	1	HOSE CPL. GH506-16 25X600	SCHLAUCH KPL.
383	963926708	1	HOSE CPL. GH506-16 25X1300	SCHLAUCH KPL.
384	968352008	1	HOSE CPL. GH506-16 25X940	SCHLAUCH KPL.
385	967618508	1	HOSE CPL. GH506-16 25X1750	SCHLAUCH KPL.
386	962255708	1	HOSE CPL. 2SN 12X1700	SCHLAUCH KPL.
387	962255708	1	HOSE CPL. 2SN 12X1700	SCHLAUCH KPL.
388	962969208	1	HOSE CPL. 2SN 12X2150	SCHLAUCH KPL.
389	962969208	1	HOSE CPL. 2SN 12X2150	SCHLAUCH KPL.
396	969386708	1	HOSE CPL. 2SN 20X480	SCHLAUCH KPL.
400	966184308	1	HOSE CPL. 2SN 6X220	SCHLAUCH KPL.
402	926990808	1	HOSE CPL.	SCHLAUCH KPL.
403	969634908	1	HOSE CPL. 1SN 25X960	SCHLAUCH KPL.
405	928720408	1	HOSE CPL. 1SN 25X1800	SCHLAUCH KPL.
406	928037208	1	HOSE CPL. 2SN 20X480	SCHLAUCH KPL.
410	922628908	1	HOSE CPL. HPC 4X3800	SCHLAUCH KPL.
411	963560708	1	HOSE CPL. HPC 4X1000	SCHLAUCH KPL.

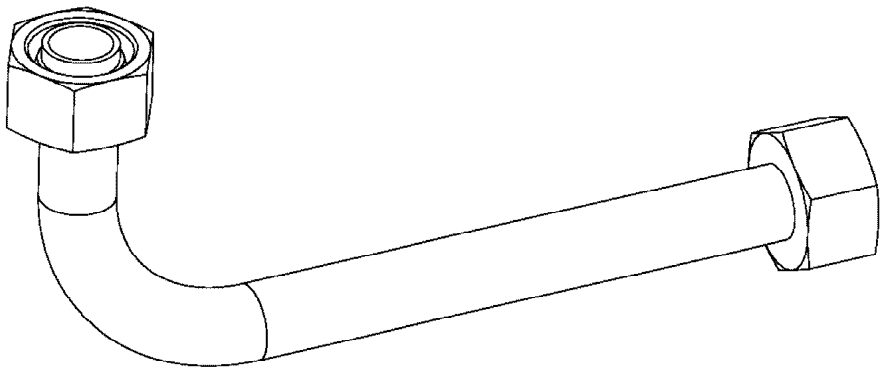

Die Positionsnummern der Rohre auf den Bildtafeln entsprechen den Positionen in der Rohrliste.

The pipe numbers from the illustrations are in accordance with the items in the pipe list.

Les numéros des tuyaux sur les illustrations correspondent aux repères de la nomenclature des tuyaux.

Los números de tubos en las ilustraciones corresponden a las posiciones de la lista de tubos.

Номера позиций труб на изображениях соответствуют позициям в перечне труб.

Pos.	Item	Quantity	Description	Bezeichnung
200	969344508	1	PIPE COMPL. 25X3X1705 30 BO./G25S - 25S	ROHR KPL.
230	969438308	1	PIPE COMPL. 10X1,5X348 10L - 10L	ROHR KPL.
240	96035646	1	PIPE COMPL. 6X1X406,6 AS6 PR6-S/L - PR6-	ROHR KPL.
245	969324808	1	PIPE COMPL. 16X2X206 16S - 16S	ROHR KPL.
246	969324908	1	PIPE COMPL. 18X1,5X268 18L - 18L	ROHR KPL.
247	969325008	1	PIPE COMPL. 10X1,5X175 10L - 50MM ABS./	ROHR KPL.
260	968158208	1	PIPE COMPL. 20X2,5X2529 20S - G20S	ROHR KPL.
265	968158508	1	PIPE COMPL. 20X2,5X2536 20S - G20S	ROHR KPL.
290	969325108	1	PIPE COMPL. 10X1,5X687 10L - 10L	ROHR KPL.
291	969325208	1	PIPE COMPL. 10X1,5X600 10S - 10S	ROHR KPL.
292	969325308	1	PIPE COMPL. 12X1,5X480 12L - 12L	ROHR KPL.
300	968154808	1	PIPE COMPL. 38X5X -	ROHR KPL.
301	968154908	1	PIPE COMPL. 38X5X -	ROHR KPL.
302	968155008	1	PIPE COMPL. 10X1,5X200 10L - 10L	ROHR KPL.
303	968155108	1	PIPE COMPL. 38X5X -	ROHR KPL.
304	96035929	1	PIPE COMPL. 38X5X1058 AS38 38X1,5 XG38	ROHR KPL.
309	969438208	1	PIPE COMPL. 38X5X1078 MU.38S/STA./XG3	ROHR KPL.
320	968156108	1	PIPE COMPL. 22X2,5X1415 G22L - G22L	ROHR KPL.
473	968158908	1	PIPE COMPL. 38X5X548 MU.38S/STA./XG38	ROHR KPL.
474	968159008	1	PIPE COMPL. 38X5X463 MU.38S/STA./XG38	ROHR KPL.
475	968159108	1	PIPE COMPL. 38X5X360 MU.38S/STA./XG38	ROHR KPL.
477	968159308	1	PIPE COMPL. 38X5X -	ROHR KPL.
478	968159408	2	PIPE COMPL. 42X3X688 42L - W42L	ROHR KPL.
479	968159508	1	PIPE COMPL. 42X3X990 42L - W42L	ROHR KPL.

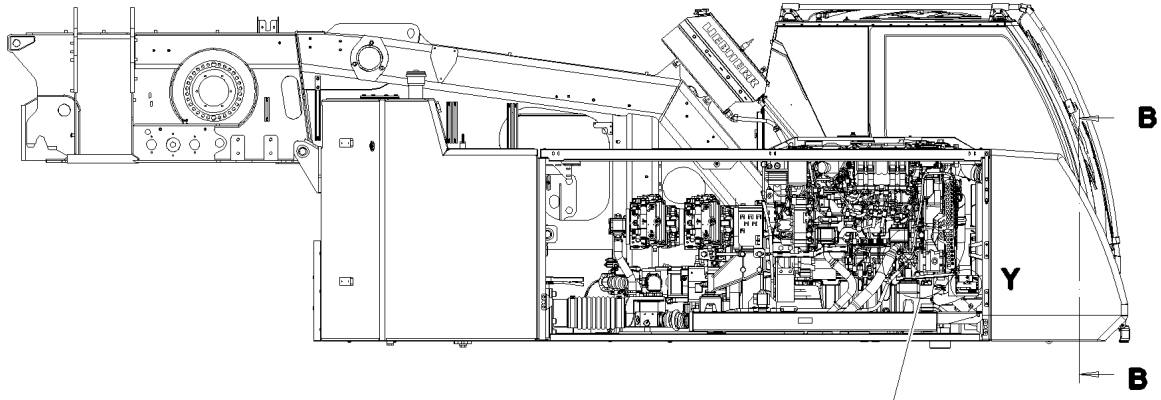

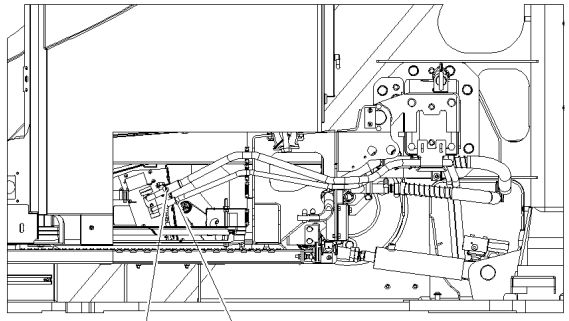

Schnitt B–B

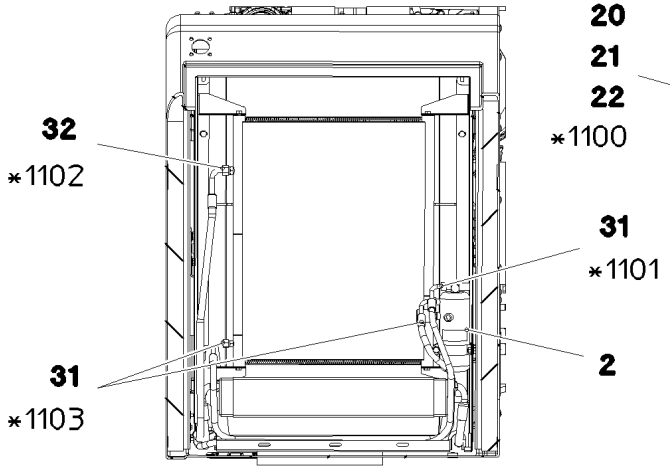

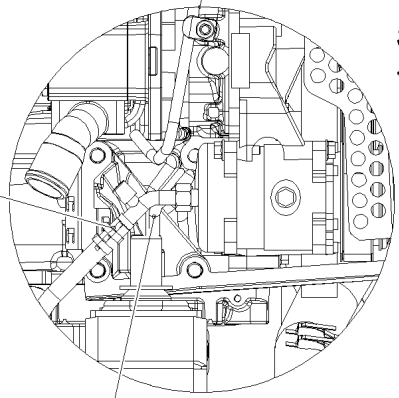

Einzelheit Y

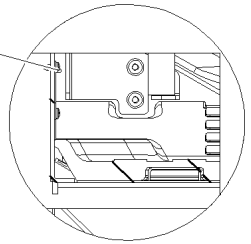

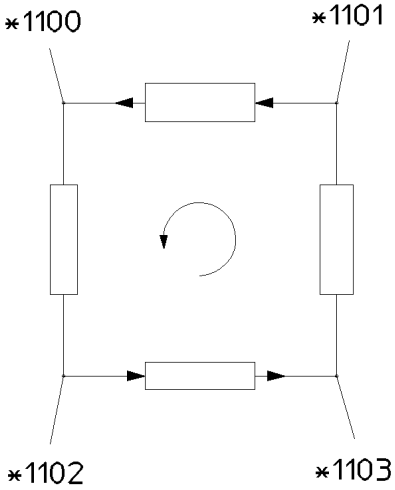

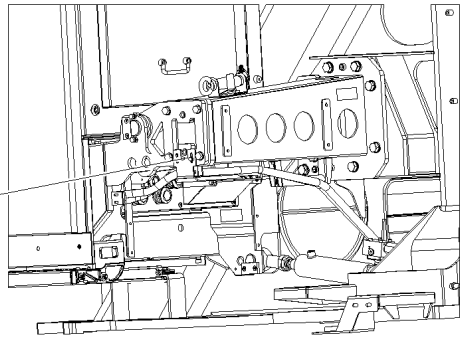

*** Pos. 500**

Pos.	Item	Quantity	Description	Bezeichnung
1	97044721	1	PLATE 4X95X262 S315MC FE//ZNNI8//CN//T	BLECH
2	553031008	1	SIGN	SCHILD
3	976955508	1	SIGN 75X45 ALUMINIUM	SCHILD
10	10875793	2	SHEET-METAL SCREW ISO 7049 ST4,2X9,5	BLECHSCHRAUBE
11	11657360	2	HEX SCREW ISO 4017 M6X16 8.8 480H SPF	SECHSKANTSCHRAUBE
12	10197771	2	WASHER ISO 7089 6 200HV ZNNI-480H SPF	SCHEIBE
20	97057512	1	NIPPLE GA10-45,H32	NIPPEL
21	10216529	1	BRACKET 10 ST	BUEGEL
22	10216534	2	CLIP 23 ST	CLIP
30	7411823	1	O-RING NEOPRENE (W)	O-RING
31	10216678	4	O-RING 7,6X1,78 NEOPREN	O-RING
32	5610999	2	O-RING 10,8X1, 78 NEOPREN	O-RING
100	7020440	1.6	REFRIGERANT 12KG FLASCHE R134A	KAELTEMITTEL
101	11211803	0.18	COLD MACHINE OIL WAECO PAG 46 0,25L D	KAELTEMASCHINENOEL
500	96018575	1	HOSE LINES AIR CONDITIONING	SCHLAUCHLEITUNGEN KLIMA O
(1100)	964476008	1	HOSE CPL. GH001 13X5200	SCHLAUCH KPL.
(1101)	969452608	1	HOSE CPL. GH001 8X6700	SCHLAUCH KPL.
(1102)	969041408	1	HOSE CPL. GH001 10X1800	SCHLAUCH KPL.
(1103)	969637808	1	HOSE CPL. GH001 8X1160	SCHLAUCH KPL.

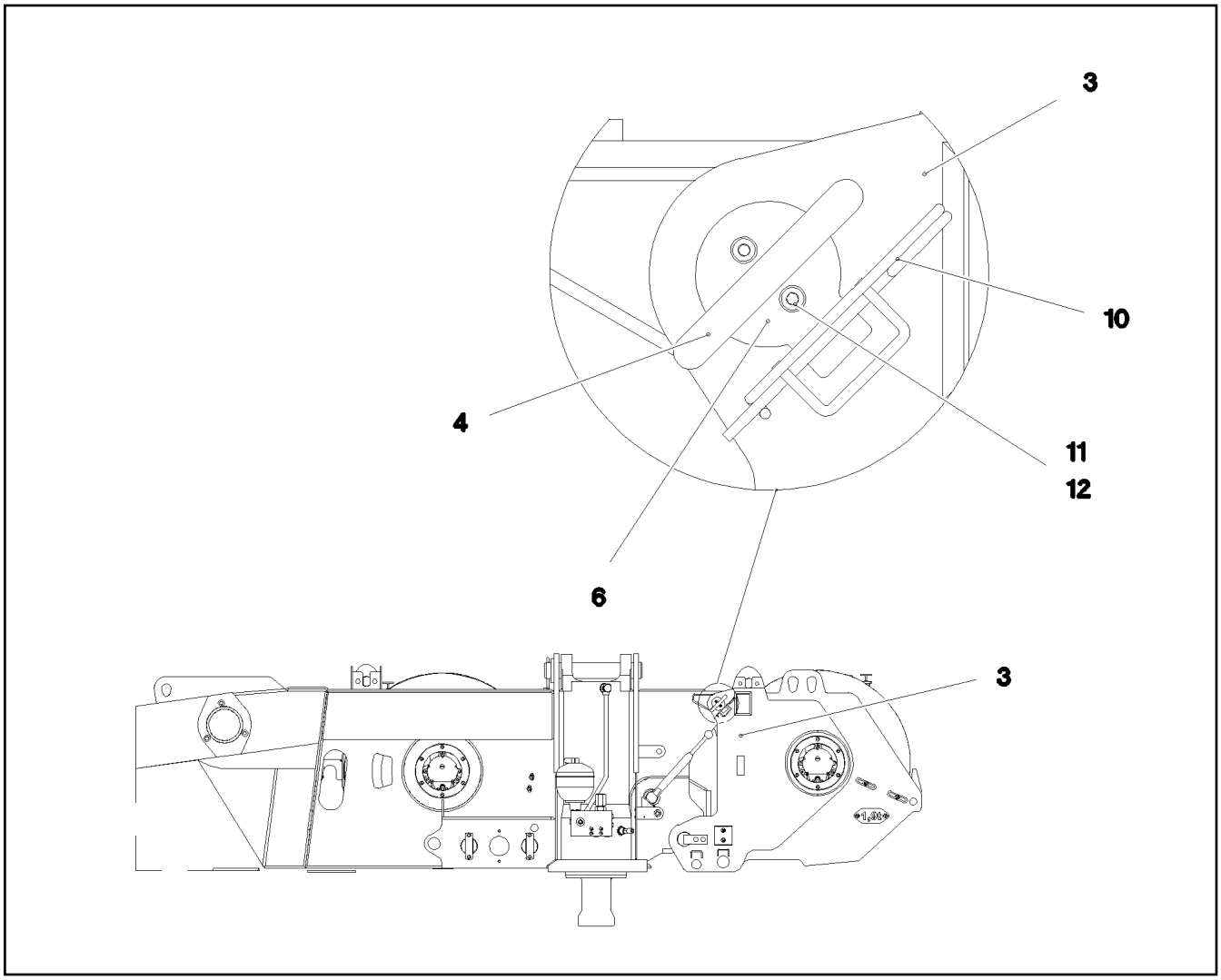

Pos.	Item	Quantity	Description	Bezeichnung
3	967969608	1	AUXILIARY HOISTING GEAR 2 PR.A ⇨ ❑ 603	HILFSHUBWERK WINDE 2 VORM
4	967969708	2	HANDLE WELD.CONST. FE//ZNNI8//CN//T0	GRIFF SCHWK.
6	97031197	2	PIN 45.0X100 35NICRMOV125 SPF	BOLZEN
10	433101208	2	RETAINING SPRING 4X68 ISO 2081 FE/ZN8/	SICHERUNGSFEDER
11	10197808	4	WASHER ISO 7089 5 200HV ZNNI-480H	SCHEIBE
12	11690042	4	SOCKET HEAD SCREW ISO 4762 M5X12 8.8	ZYLINDERSCHRAUBE

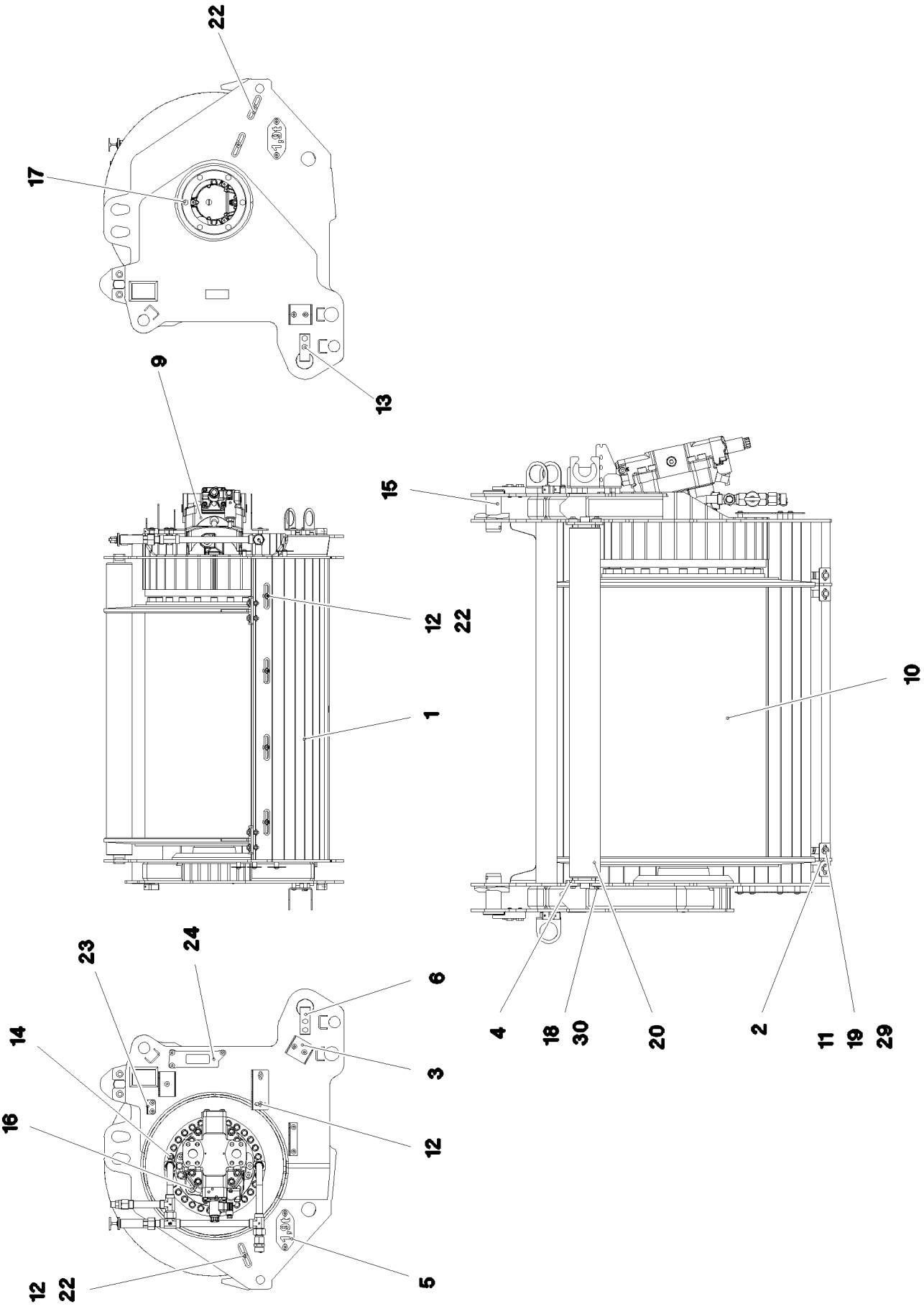

18.7.2022 077872 LIEBHERR	**etk_en_de_047654 LTR 1220** **AUXILIARY HOISTING GEAR 2 PR.A** **HILFSHUBWERK WINDE 2 VORM.**	603 (1/2) **967969608**

Pos.	Item	Quantity	Description	Bezeichnung
1	967969908	1	AUXILIARY HOISTING GEAR 2 WD	HILFSHUBWERK WINDE 2 SCH
2	967970008	2	PLATE	SICHELBLECH SCHWK.
3	97031203	2	PLATE 3X70X222 DC01 FE//ZNNI8//CN//T0	BLECH
4	956474508	2	PLATE 8X84X108 S355MC FE//ZNNI8//CN//T	BLECH
5	97031205	2	PLATE 2X145X62 DC01 FE//ZNNI8//CN//T0	BLECH
6	97031206	2	PLATE 35X96X20 S690QL	BLECH
9	11211058	1	VARIABLE DISPLACEMENT MOTOR A6VM 1 ⇨ ❑ 605	VERSTELLMOTOR
10	90028852	1	COMPACT ROPE WINCH KSW 400/1786 ⇨ ❑ 606	KOMPAKTSEILWINDE
11	10876076	4	HEX NUT DIN 985 M8 10 480H SPF	SECHSKANTMUTTER
12	12102696	25	BUTTON HEAD SCREW ISO 7380-2 M8X10 0	HALBRUNDKOPFSCHRAUBE
13	11642358	4	HEX SCREW ISO 4017 M10X30 8.8 FLZN SP	SECHSKANTSCHRAUBE
14	404317008	28	SOCKET HEAD SCREW ISO 4762 M16X45 10	ZYLINDERSCHRAUBE
15	453040908	2	PIN ISO 2341 B45X110X98 35NICRMOV125	BOLZEN
16	10875803	4	HEX SCREW ISO 4017 M16X45 8.8 FLZN SP	SECHSKANTSCHRAUBE
17	406601008	6	HEX SCREW ISO 4017 M10X35 10.9 FLZN SP	SECHSKANTSCHRAUBE
18	10197730	4	HEX SCREW ISO 4017 M10X20 8.8 ZNNI-480	SECHSKANTSCHRAUBE
19	11692827	4	HEX SCREW ISO 4017 M8X35 8.8 480H SPF	SECHSKANTSCHRAUBE
20	749014908	1	CARRYING ROLLER 90/7/40X1015 GASN. SP	TRAGROLLE
22	953650008	7	CABLE CLAMP DC01 FE//ZNNI8//CN//T0	KABELHALTER
23	953756608	1	PLATE 3X50X65 DC01 FE//ZNNI8//CN//T0	BLECH
24	955668108	1	PLATE 196X63 S315MC FE//ZNNI8//CN//T0	BLECH
29	11840501	12	WASHER DIN 7349 8,4 200HV 480H SPF	SCHEIBE
30	11491889	4	WASHER ISO 7093-1 10 300HV FLZN SPF	SCHEIBE
100	966298308	1	ELECTRIC FOR WINCH 2	ELEKTRIK WINDE 2
(5)	10802061	1	WINCH REVOLUTION TRANSDUCER 655360 ⇨ ❑ 376	WINDENDREHGEBER
(6)	606012608	1	DRIVE FLANGE EDELSTAHL	ANTRIEBSFLANSCH
(8)	966298408	1	WIRING HARNESS W522	KABELSTRANG
(9)	955668108	1	PLATE 196X63 S315MC FE//ZNNI8//CN//T0	BLECH
(10)	11657360	3	HEX SCREW ISO 4017 M6X16 8.8 480H SPF	SECHSKANTSCHRAUBE
(12)	424000508	3	WASHER SPRING DIN 127 A 6 FST A2C	FEDERRING
(15)	720014408	1	CABLE CLAMP	KABELHALTER
200	921444108	1	CENTRAL LUBRICATING SYSTEM ⇨ ❑ 613	ZENTRALSCHMIERANLAGE

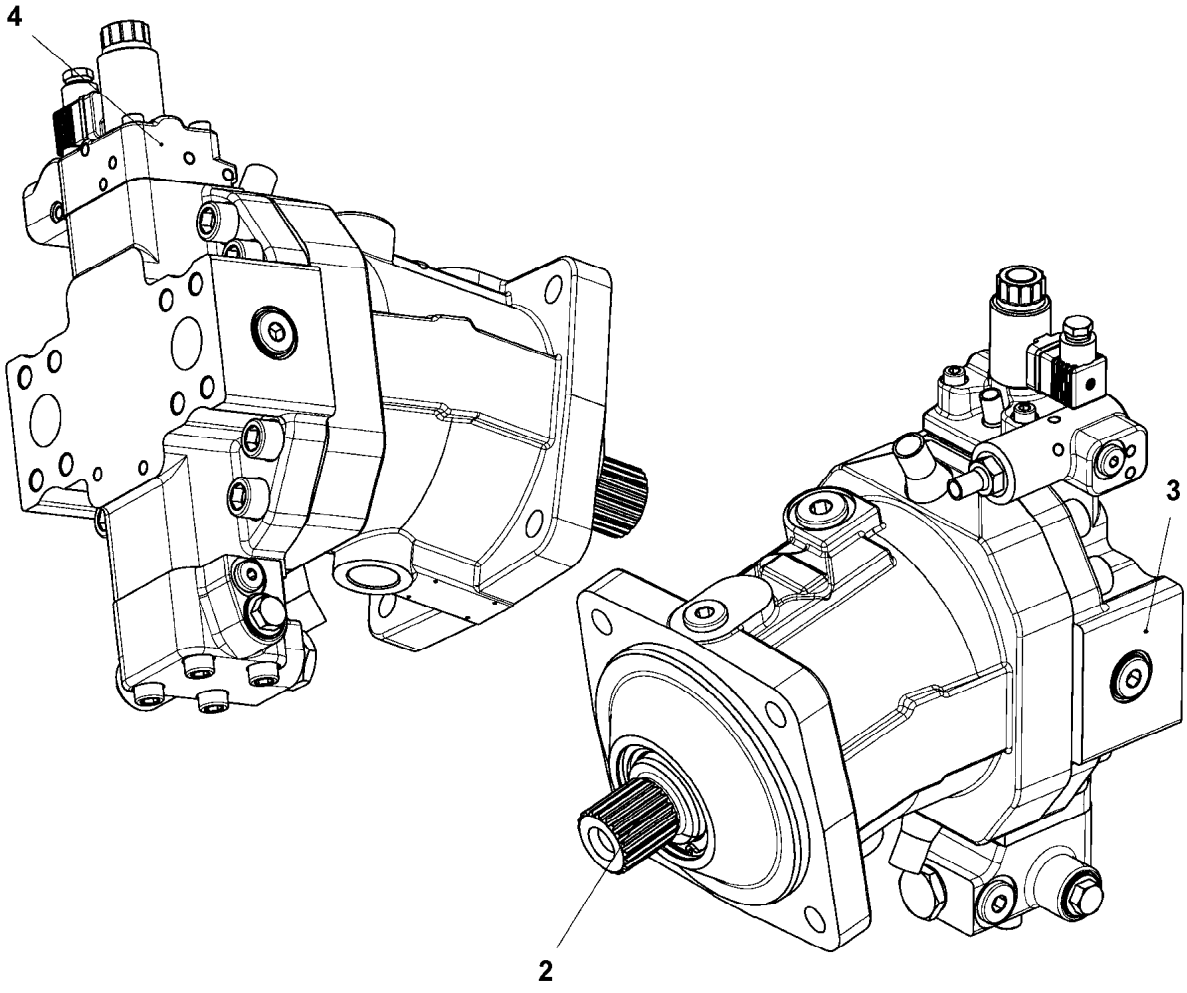

Pos.	Item	Quantity	Description	Bezeichnung
2	11643393	1	DRIVING GEAR	TRIEBWERK
3	11643394	1	CLOSING PLATE	ABSCHLUSSPLATTE
4	11161917	1	CONTROL ELEMENT ⇨ ❑ 80	STEUERTEIL

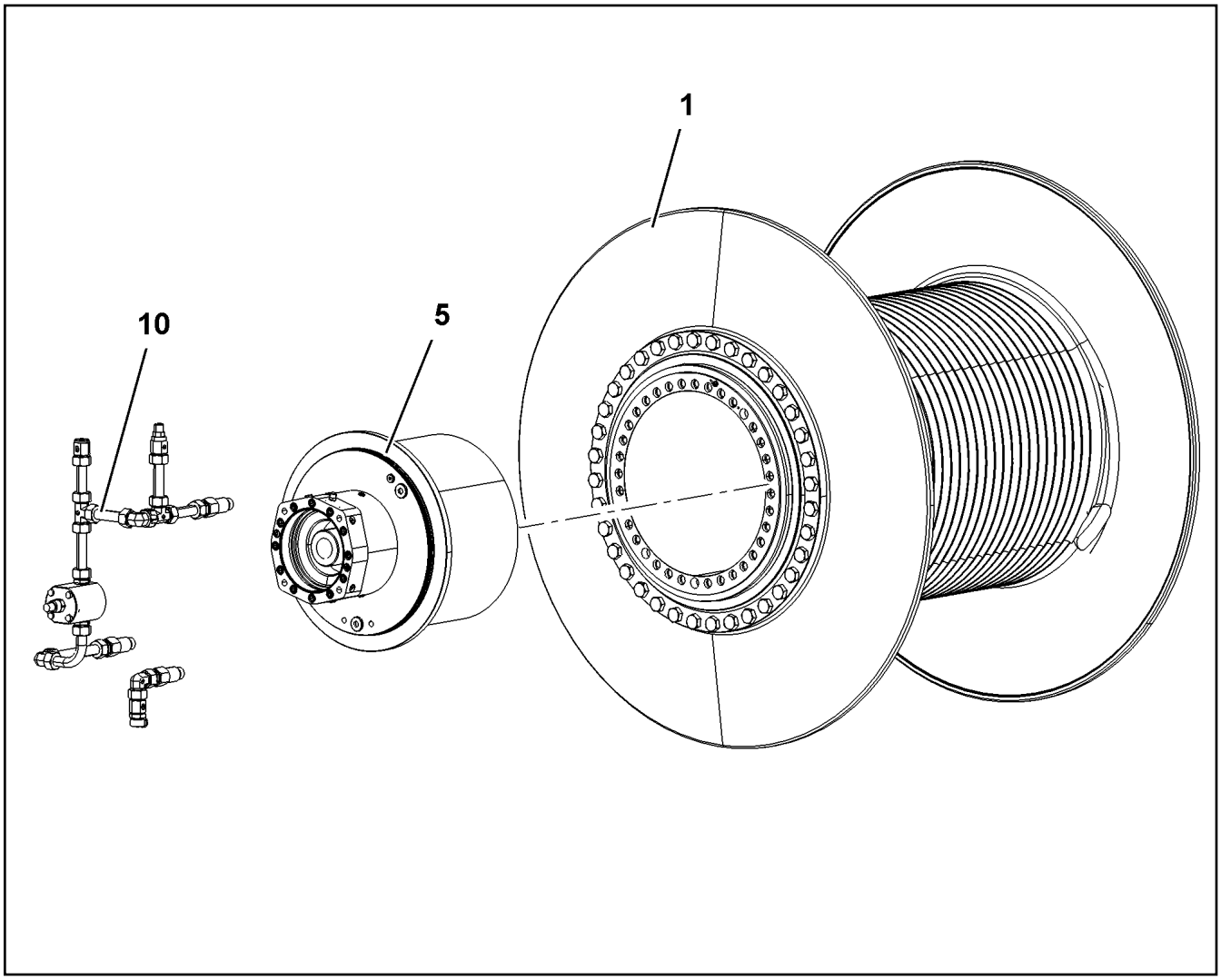

Pos.	Item	Quantity	Description	Bezeichnung
1	939294001	1	ROPE DRUM ⇨ ❑ 607	SEILTROMMEL
5	939294201	1	PLANETARY GEARBOX ⇨ ❑ 609	PLANETENGETRIEBE
10	90200103	1	OIL-GAUGING INSTRUMENT ⇨ ❑ 611	OELMESSEINRICHTUNG

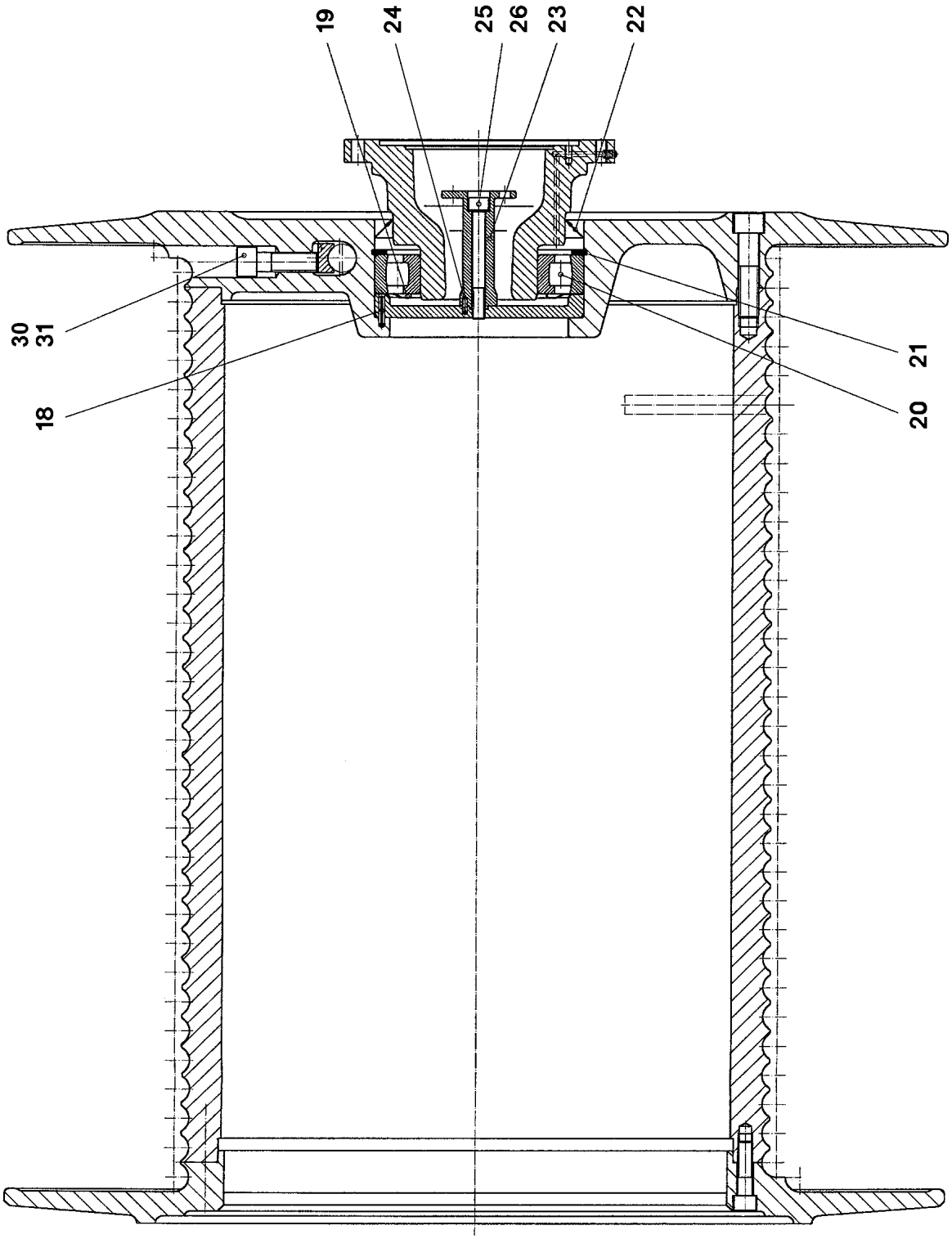
19
24
25
26
23
22
30
31
18
21
20

Pos.	Item	Quantity	Description	Bezeichnung
18	431204301	1	CORE PIN DIN 1473 5X24	KERBSTIFT
19	747272501	1	BEARING COVER RING 6219 JV	LAGERABDECKRING
20	746001601	1	SELF-ALIGNING ROLLER BEARING DIN 635	PENDELROLLENLAGER
21	428105908	1	LOCKING RING DIN 472 170X4	SICHERUNGSRING
22	710032508	1	ROTARY SHAFT LIP SEAL DIN 3760 A 140X1	RADIALWELLENDICHTRING
23	927504701	1	FLANGE	FLANSCH
24	431100201	1	CORE PIN DIN 1472 4X12	KERBSTIFT
25	12223034	1	SOCKET HEAD SCREW ISO 4762 M10X90 8	ZYLINDERSCHRAUBE
26	423901508	1	LOCK WASHER VS 10	SICHERUNGSSCHEIBE
30	927606901	1	CLAMPING PIECE 24	KLEMMSTUECK
31	10001077	4	SOCKET HEAD SCREW ISO 4762 M16X50 10	ZYLINDERSCHRAUBE

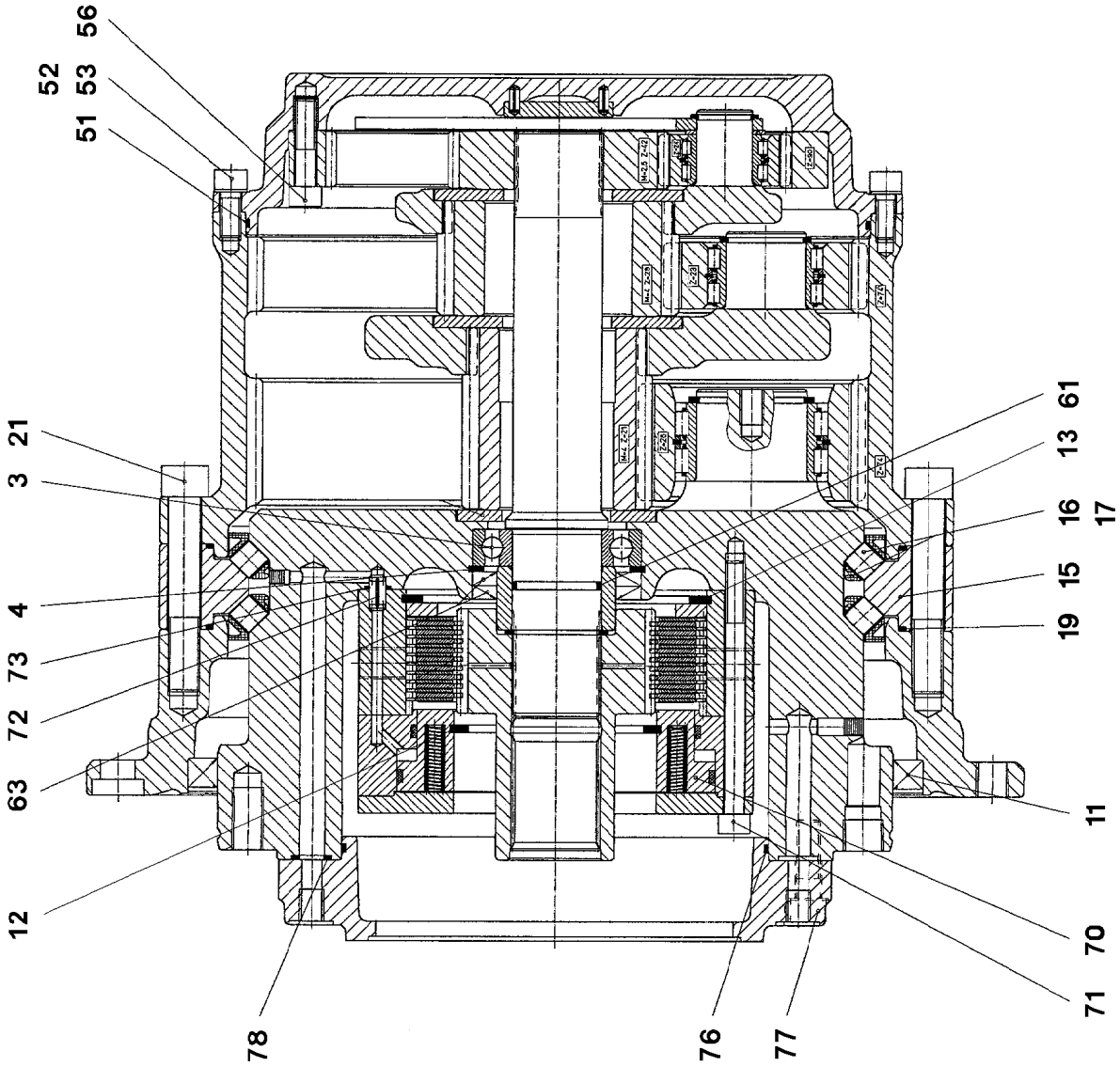
56
52
53
51
21
3
4
73
72
63
12
61
13
16
17
15
19
11
70
71
78
76
77

Pos.	Item	Quantity	Description	Bezeichnung
3	745159301	1	DEEP GROOVE BALL BEARING DIN 625 62	RILLENKUGELLAGER
4	428102708	1	LOCKING RING DIN 472 85X3	SICHERUNGSRING
11	710054601	1	ROTARY SHAFT LIP SEAL DIN 3760 AS 340X	RADIALWELLENDICHTRING
12	4281019	1	LOCKING RING DIN 472 102X4 ZNPH R	SICHERUNGSRING
13	4281048	1	LOCKING RING DIN 472 155X4 ZNPH R	SICHERUNGSRING
15	927745301	1	BEARING RING	LAGERRING
16	927514301	38	ROLLER CAGE	ROLLENKAEFIG
17	747006101	114	CYL.ROLLER 14X14	ZYLINDERROLLE
19	726429901	2	O-RING 330X3 NBR 70	O-RING
21	404318008	24	SOCKET HEAD SCREW ISO 4762 M16X100	ZYLINDERSCHRAUBE
51	530032508	1	O-RING 300X3 NBR70	O-RING
52	10415162	12	SOCKET HEAD SCREW ISO 4762 M10X25 8	ZYLINDERSCHRAUBE
53	423901508	12	LOCK WASHER VS 10	SICHERUNGSSCHEIBE
56	11657000	12	SOCKET HEAD SCREW ISO 4762 M10X45 8	ZYLINDERSCHRAUBE
61	726421108	1	O-RING 38X3 NBR90	O-RING
63	710062601	2	ROTARY SHAFT LIP SEAL BAB 60X85X7 N	RADIALWELLENDICHTRING
70	502037201	1	SPRING LOADED MULTI-DISC BRAKE	FEDERDRUCKLAMELLENBREMS
71	11320344	12	SOCKET HEAD SCREW ISO 4762 M10X130	ZYLINDERSCHRAUBE
72	432007908	1	DOWEL PIN ISO 8752 A 8X16	SPANNSTIFT
73	502652908	1	O-RING 8X2 NBR70	O-RING
76	761021703	1	O-RING 195X3 NBR 70	O-RING
77	10875565	8	SOCKET HEAD SCREW ISO 4762 M12X40 8	ZYLINDERSCHRAUBE
78	726405608	6	O-RING 14X3 NBR70	O-RING

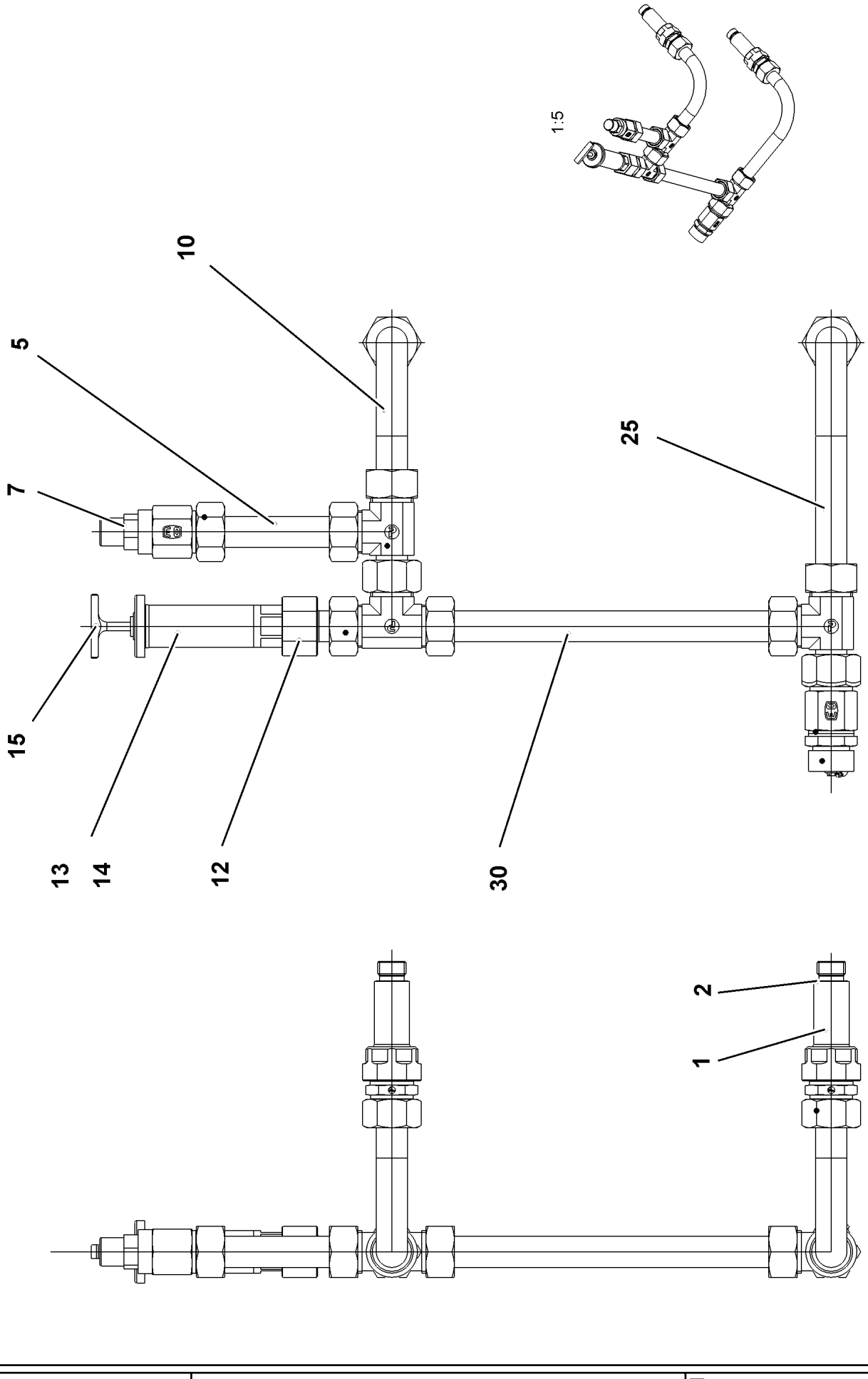
1:5
10
5
7
25
15
13
14
12
30
2
1

Pos.	Item	Quantity	Description	Bezeichnung
1	939599301	2	THREADED CONNECTION PIECE	GEWINDEANSCHLUSSSTUTZE
2	761022903	2	SEALING RING DIN 3869 20X17,8 NBR	DICHTRING
5	10190120	1	TUBE EN 10305-4 22X1,5X107 E235+N FE/ZN	ROHR
7	721108801	1	VENTILATION UNIT Steel CR6-FREI	BE- UND ENTLUEFTUNGSFILTE
10	968021308	1	PIPE COMPL. 22X2,5X229 AL22 - AL22	ROHR KPL.
12	927586201	1	CONNECTION STUB 11SMnPb30+C	ANSCHLUSSSTUTZEN
13	927501901	1	VENTILATION CONNECTING PIECE	ENTLUEFTUNGSSTUTZEN
14	761022503	1	SEALING RING 19,6X24,3X1,5 NBR 85 Shore	DICHTRING
15	927610201	1	OIL DIPSTICK 1 1/8"	OELMESSSTAB
25	968021408	1	PIPE COMPL. 22X2,5X245 AL22 - AL22	ROHR KPL.
30	979323301	1	TUBE LN 80 401 22X1.5X255 E235+N	ROHR

Pos.	Item	Quantity	Description	Bezeichnung
1	774372608	1	COUPLING SLEEVE	KUPPLUNGSMUFFE
2	774372708	2	COUPLING PLUG	KUPPLUNGSSTECKER
3	471032108	3	FITTING GE 6S G1/4A CR6-FREI	VERSCHRAUBUNG
4	12101847	1	PLUG-IN CONNECTOR GE M8X1K MESSING	STECKVERBINDER
5	10873149	5	POLYAMID PIPE DIN 73378 6X1,5 PA 12-HL	POLYAMIDROHR

Pos.	Item	Quantity	Description	Bezeichnung
4	967784808	1	HYDR.AUXILIARY HOISTING ⇨ ❑ 615	HYDRAULIK HILFSHUBWERK

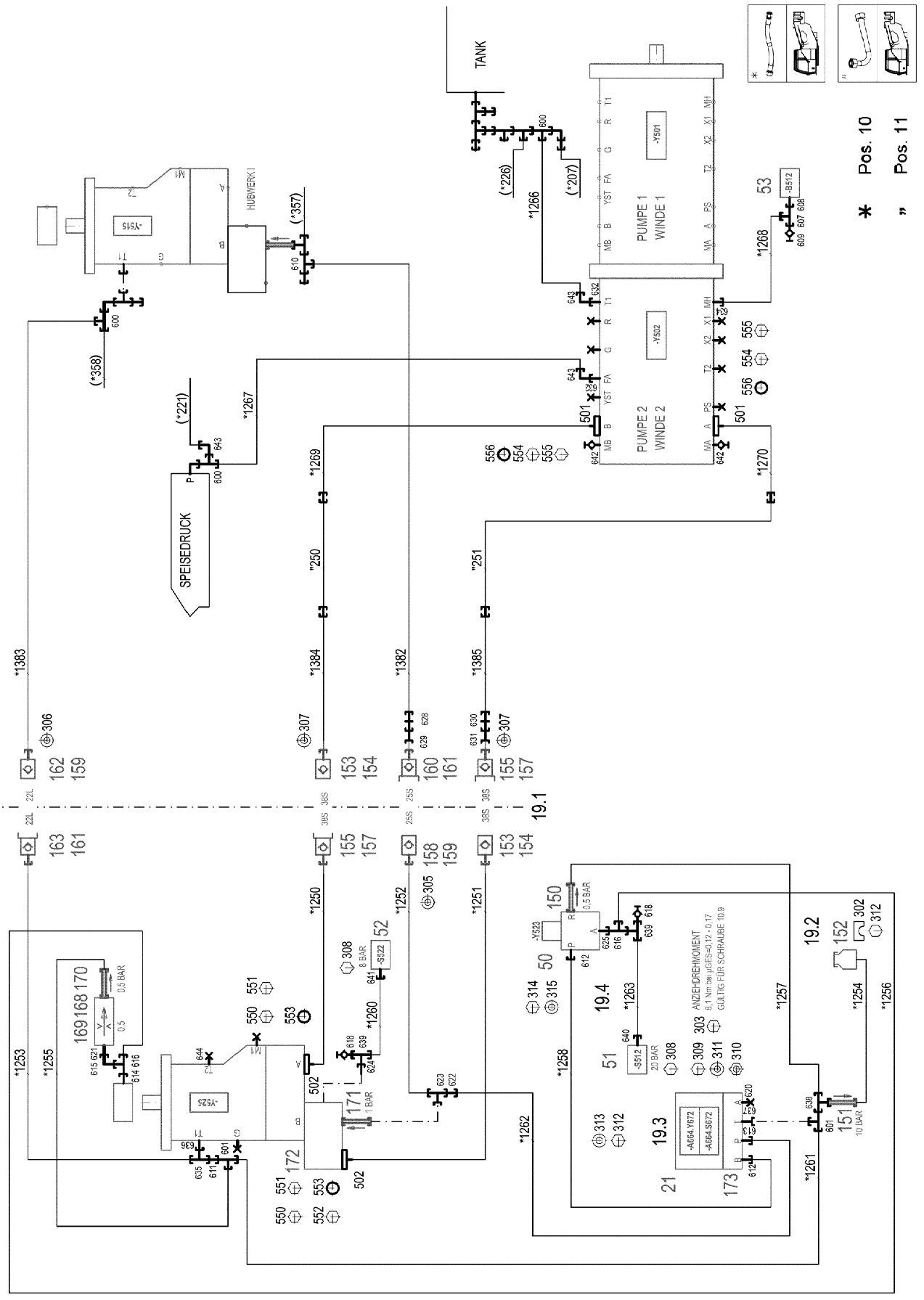

18.7.2022 077847	**etk_en_de_047654 LTR 1220**	615 (1/3)
LIEBHERR	**HYDR.AUXILIARY HOISTING** **HYDRAULIK HILFSHUBWERK**	**967784808**

Pos.	Item	Quantity	Description	Bezeichnung
10	968083708	1	HOSE LINES HOISTING GEAR ⇨ ❑ 618	SCHLAUCHLEITUNGEN HUBW
11	968083808	1	PIPE LINES WINCH 2	ROHRLEITUNGEN WINDE 2
(250)	968162308	1	PIPE COMPL. 38X5X1808 MU.38S/STA./GR38	ROHR KPL.
(251)	968162408	1	PIPE COMPL. 38X5X1916 MU.38S/STA./GR38	ROHR KPL.
18	968315808	1	ELECTRIC FOR WINCH 2	ELEKTRIK VORBEREITUNG WI
(1)	968314308	1	LEAD W512	LEITUNG
19	968083608	1	MECHANICAL AUXILIARIES	MECH.BEFESTIGUNGSTEILE
(1)	97035511	1	DIAPHRAGM 4X553X352 S315MC	SCHOTTBLECH
(2)	97037694	1	PLATE 192X126 DC01 FE//ZNNI8//CN//T0	BLECH
(3)	970762808	1	PLATE S315MC FE//ZNNI8//CN//T0	BLECH
(4)	975418208	1	PLATE 4X140X178 S315MC FE//ZNNI8//CN//T	BLECH
21	10652724	1	DIRECTIONAL CONTROL VALVE 4/2 NG6-3	WEGEVENTIL
50	511444408	1	DIRECTIONAL CONTROL VALVE 3/2 350BA ⇨ ❑ 67	WEGEVENTIL
51	10289536	1	PRESSURE SWITCH 0-20/300BAR SPF	DRUCKSCHALTER
52	10220933	1	PRESSURE SWITCH 0-8/300 BAR SPF	DRUCKSCHALTER
53	10813738	1	PRESSURE SENSOR 0-400/400 BAR LSB PL:	DRUCKAUFNEHMER
150	511460608	1	NON-RETURN VALVE 400BAR 0.5BAR CR6-F	RUECKSCHLAGVENTIL
151	511481508	1	NON-RETURN VALVE 250BAR 10BAR CR6-F	RUECKSCHLAGVENTIL
152	96028331	1	EXPANSION TANK CPL.	AUSGLEICHSBEHAELTER KPL.
(1)	502807308	1	EQUALIZING RESERVOIR 0,2L POLYETHY	AUSGLEICHSBEHAELTER
(2)	10878281	1	CONTAINER SCREW JOINT	BEHAELTERVERSCHRAUBUNG
153	511512208	2	COUPLING SLEEVE B8 38-S	KUPPLUNGSMUFFE
154	10466917	2	HEX CAP NUT RD79X4 SPF	VERSCHLUSSMUTTER
155	511512308	2	COUPLING PLUG B8 38-S	KUPPLUNGSSTECKER
157	10466913	2	SCREW PLUG RD79X4 SPF	VERSCHLUSSSCHRAUBE
158	510599608	1	COUPLING SLEEVE B6 25-S	KUPPLUNGSMUFFE
(2)	571076908	1	O-RING 32X3 FPM70	O-RING
(3)	571077008	1	SUPPORTING RING 32X37,2X1 PTFE	STUETZRING
(4)	571077108	1	O-RING 40X3 FPM70	O-RING
(5)	571077208	1	NUT M54 CR6-FREI	MUTTER
159	10466916	2	HEX CAP NUT RD54X4 SPF	VERSCHLUSSMUTTER
160	510599708	1	COUPLING PLUG B6 25-S	KUPPLUNGSSTECKER
161	10466912	2	SCREW PLUG RD54X4 SPF	VERSCHLUSSSCHRAUBE
162	511508208	1	COUPLING SLEEVE B6 22-L	KUPPLUNGSMUFFE
163	511508108	1	COUPLING PLUG B6 22-L	KUPPLUNGSSTECKER
168	510671108	1	FILTER CARTRIDGE 0,005m³/min 25µm	FILTERPATRONE
169	511062708	1	NOZZLE 0,5 M5X9 MS	DUESE
170	511311808	1	NON-RETURN VALVE 400BAR 0.5BAR CR6-F	RUECKSCHLAGVENTIL
171	510408708	1	NON-RETURN VALVE 420BAR 1BAR CR6-F	RUECKSCHLAGVENTIL
172	511057608	1	CONNECTION FLANGE	ANSCHLUSSFLANSCH
173	510629508	1	CONNECTING PLATE	ANSCHLUSSPLATTE
302	10872024	1	HOSE CLAMP DIN 3017-1 12/8-16/9 W3	SCHLAUCHSCHELLE
303	10181382	4	SOCKET HEAD SCREW ISO 4762 M5X50 10	ZYLINDERSCHRAUBE
305	710107208	2	SEALING RING DIN 7603 A38X44X2 CU	DICHTRING
306	7101022	2	SEALING RING DIN 7603 A33X39X2 CU	DICHTRING
307	710107708	4	SEALING RING DIN 7603 A52X60X2,5 CU	DICHTRING
308	10028237	4	BUTTON HEAD SCREW AEHNL.ISO 7380-2	HALBRUNDKOPFSCHRAUBE
309	10875588	2	SOCKET HEAD SCREW ISO 4762 M6X25 8.8	ZYLINDERSCHRAUBE
310	10197764	2	HEX NUT ISO 4032 M6 10 ZNNI-480H SPF	SECHSKANTMUTTER
311	10197771	2	WASHER ISO 7089 6 200HV ZNNI-480H SPF	SCHEIBE
312	10875485	5	BUTTON HEAD SCREW AEHNL.ISO 7380-2	HALBRUNDKOPFSCHRAUBE
313	953873408	4	SLEEVE 25X20 11SMN37 FE//ZNNI8//CN//T0	HUELSE
314	11692824	2	HEX SCREW ISO 4017 M6X12 8.8 480H SPF	SECHSKANTSCHRAUBE
315	10875648	2	WASHER ISO 7093-1 6 200HV 480H SPF	SCHEIBE
501	510586908	4	FLANGE HALF SAE1-C62-M12 CR6-FREI	FLANSCHHAELFTE
502	510586608	4	FLANGE HALF SAE1 1/4-C62-M14 CR6-FREI	FLANSCHHAELFTE
550	10876373	4	SOCKET HEAD SCREW ISO 4762 M14X45 8	ZYLINDERSCHRAUBE
551	10878799	4	HEX SCREW ISO 4017 M14X45 8.8 FLZN SP	SECHSKANTSCHRAUBE

Pos.	Item	Quantity	Description	Bezeichnung
552	10878785	4	HEX SCREW ISO 4014 M14X90 8.8 FLZN SP	SECHSKANTSCHRAUBE
553	510586708	3	O-RING ARP 568 37,69X3,53 NBR90	O-RING
554	11645384	4	HEX SCREW ISO 4017 M12X40 8.8 FLZN SP	SECHSKANTSCHRAUBE
555	10875565	4	SOCKET HEAD SCREW ISO 4762 M12X40 8	ZYLINDERSCHRAUBE
556	510587008	2	O-RING ARP 568 32,92X3,53 NBR90	O-RING
600	247138602	3	L NECK EL 22L CR6-FREI	L-STUTZEN
601	247128602	2	L NECK EL 12L M18X1,5 CR6-FREI	L-STUTZEN
607	472331208	1	FITTING EL 6S CR6-FREI	VERSCHRAUBUNG
608	470700208	1	FITTING XGAI6-SR CR6-FREI	VERSCHRAUBUNG
609	475601508	1	TEST POINT FITTING BMA3 6S CR6-FREI	MESSANSCHLUSS
610	7407118	1	FITTING EL 25S CR6-FREI	VERSCHRAUBUNG
611	475436108	1	FITTING REDSD22/12-L CR6-FREI	VERSCHRAUBUNG
612	471030808	2	FITTING XGE12-LR-ED CR6-FREI	VERSCHRAUBUNG
613	471032708	1	FITTING GE 12S G3/8A CR6-FREI	VERSCHRAUBUNG
614	471039708	1	FITTING ISO 8434-1 GE 10L M12X1,5 CR6-F	VERSCHRAUBUNG
615	7403569	1	FITTING EW 10L M16X1,5 CR6-FREI	VERSCHRAUBUNG
616	472330208	2	FITTING EL 10L CR6-FREI	VERSCHRAUBUNG
618	510629008	2	TEST POINT FITTING VKA3 10LM16X1,5 CR6	MESSANSCHLUSS
620	477704108	1	STOP PLUG VSTI3/8"ED CR6-FREI	STOPFEN
621	471901108	1	FITTING EGESD10-LR-WD CR6-FREI	VERSCHRAUBUNG
622	475433608	1	FITTING REDSDN25/12-S CR6-FREI	VERSCHRAUBUNG
623	7367774	1	FITTING ET 25S CR6-FREI	VERSCHRAUBUNG
624	471030508	1	FITTING GE 10L M14X1,5 CR6-FREI	VERSCHRAUBUNG
625	471039608	1	FITTING XGE10-LR-ED3/8" CR6-FREI	VERSCHRAUBUNG
628	474032808	1	FITTING SV 25S CR6-FREI	VERSCHRAUBUNG
629	470011008	1	FITTING SNV25-S CR6-FREI	VERSCHRAUBUNG
630	474033008	1	FITTING XSV38-S CR6-FREI	VERSCHRAUBUNG
631	470010708	1	FITTING SNV38-S CR6-FREI	VERSCHRAUBUNG
632	10295188	2	FITTINGS ISO 8434-1 GE 22L M33X2 CR6-F	STUTZEN
634	471032208	1	FITTING XGE8-SM-ED CR6-FREI	VERSCHRAUBUNG
635	482430614	1	FITTING ISO 8434 ET 22L CR6-FREI	VERSCHRAUBUNG
636	471031308	1	FITTING XGE22-LM-ED M26X1,5 CR6-FREI	VERSCHRAUBUNG
637	471901208	1	FITTING EGESD12-LR-WD CR6-FREI	VERSCHRAUBUNG
638	247105602	1	T CONNECTION PIECE ET 12L CR6-FREI	T-STUTZEN
639	482430314	2	FITTING ISO 8434 ET 10L M16X1,5 CR6-FRE	VERSCHRAUBUNG
640	471032108	1	FITTING GE 6S G1/4A CR6-FREI	VERSCHRAUBUNG
641	7362091	1	FITTING ISO 8434-1 GE 10L G1/4A CR6-FREI	VERSCHRAUBUNG
642	7406865	2	SCREW COUPLING EMA3 M14X1,5 CR6-FRE	SCHRAUBKUPPLUNG
643	472530608	3	FITTING EWSD22-L CR6-FREI	VERSCHRAUBUNG
644	477705208	1	STOP PLUG VSTIM33X2ED CR6-FREI	STOPFEN

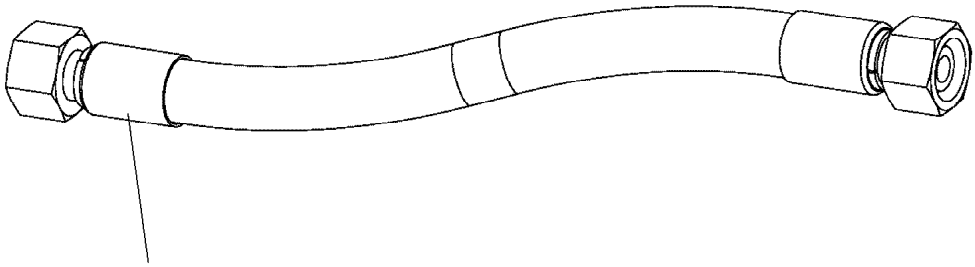

Schlauchnummer
Hose number
Numéro de flexible
Número de flexible
Номера шланга

Die Schlauchnummern auf den Schläuchen entsprechen den Positionen in der Schlauchliste.

The hose numbers from the hoses are in accordance with the items in the hose list.

Les numéros indiqués sur les flexibles correspondent aux repères de la nomenclature des flexibles.

Los números indicados en los flexibles corresponden a las posiciones de la lista de flexibles.

Нанесенные на шлангах номера соответствуют позициям в перечне.

Pos.	Item	Quantity	Description	Bezeichnung
1250	968149608	1	HOSE CPL. GH506-16 25X960	SCHLAUCH KPL.
1251	968349908	1	HOSE CPL. GH506-16 25X1620	SCHLAUCH KPL.
1252	968350008	1	HOSE CPL. 2TE 20X1020	SCHLAUCH KPL.
1253	966860008	1	HOSE CPL. 2TE 20X1460	SCHLAUCH KPL.
1254	923016208	1	HOSE CPL. 2TE 10X400	SCHLAUCH KPL.
1255	927637908	1	HOSE CPL. 1SC 8X300	SCHLAUCH KPL.
1256	926379108	1	HOSE CPL. 1SC 8X960	SCHLAUCH KPL.
1257	928046908	1	HOSE CPL. 2TE 10X360	SCHLAUCH KPL.
1258	963703908	1	HOSE CPL. 2TE 10X260	SCHLAUCH KPL.
1260	968141708	1	HOSE CPL. 2SN 6X780	SCHLAUCH KPL.
1261	920896108	1	HOSE CPL. 2TE 10X380	SCHLAUCH KPL.
1262	928025108	1	HOSE CPL. 2TE 10X700	SCHLAUCH KPL.
1263	963562308	1	HOSE CPL. 2SN 6X250	SCHLAUCH KPL.
1266	927295708	1	HOSE CPL. 2TE 20X440	SCHLAUCH KPL.
1267	967354708	1	HOSE CPL. 2TE 20X540	SCHLAUCH KPL.
1268	968149808	1	HOSE CPL. 2SN 6X500	SCHLAUCH KPL.
1269	968149908	1	HOSE CPL. GH506-16 25X1100	SCHLAUCH KPL.
1270	966145808	1	HOSE CPL. GH506-16 25X1060	SCHLAUCH KPL.
1382	968350108	1	HOSE CPL. 2TE 20X680	SCHLAUCH KPL.
1383	929742608	1	HOSE CPL. 2TE 20X420	SCHLAUCH KPL.
1384	968150008	1	HOSE CPL. GH506-16 25X1080	SCHLAUCH KPL.
1385	968150108	1	HOSE CPL. GH506-16 25X1020	SCHLAUCH KPL.

Pos.	Item	Quantity	Description	Bezeichnung
4	969426308	1	AUX. HYDR. FOLDING JIB SP ⇨ ❑ 621	ZUSATZHYDRAULIK KLAPPSPI

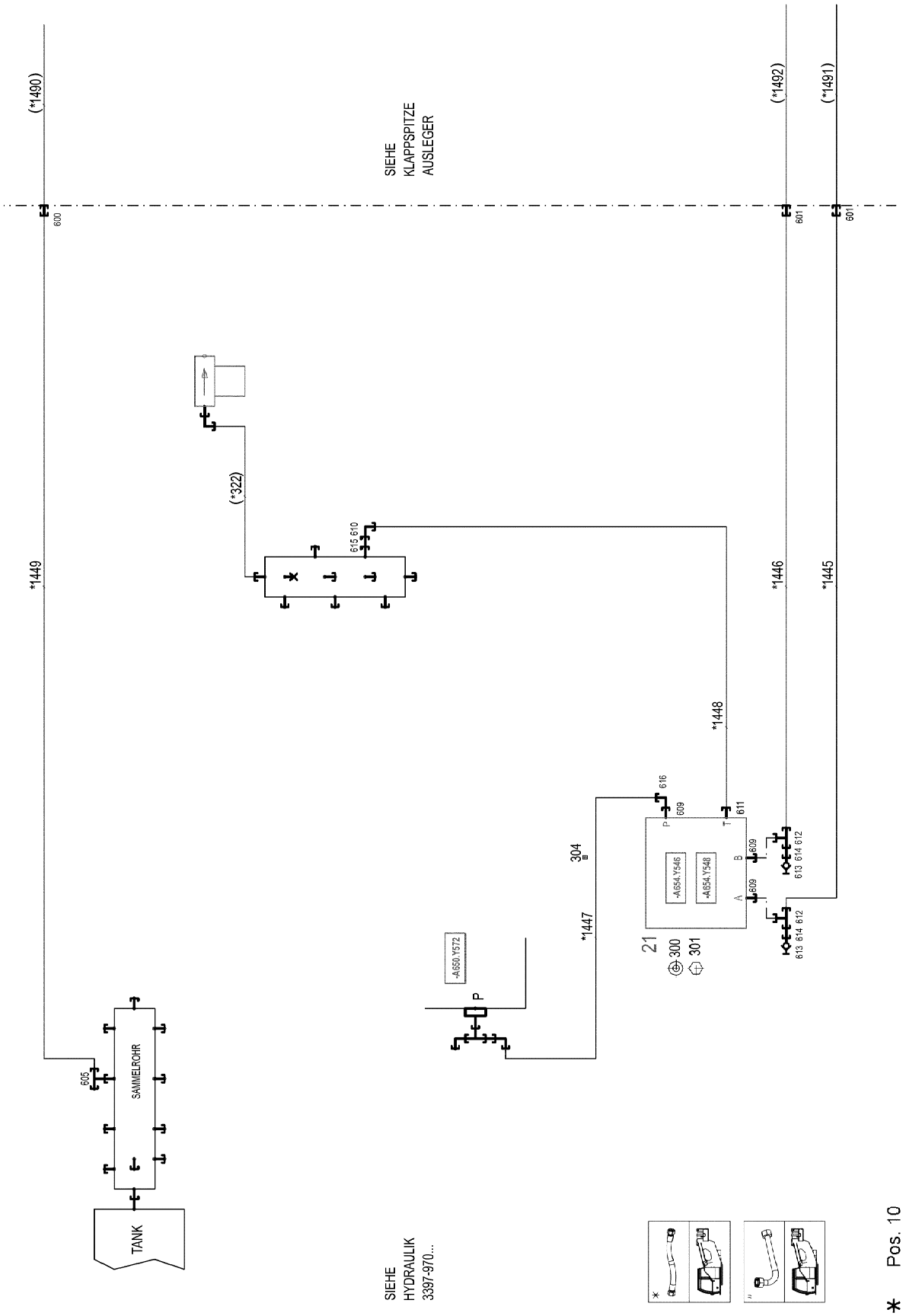

18.7.2022 085551	**etk_en_de_047654 LTR 1220**	621 (1/2)
LIEBHERR	**AUX. HYDR. FOLDING JIB SP** **ZUSATZHYDRAULIK KLAPPSPITZE DB**	**969426308**

Pos.	Item	Quantity	Description	Bezeichnung
10	969426408	1	HOSE LINES FOLDING JIB WIPPBAR STUFE	SCHLAUCHLEITUNGEN KLAPPS
(1445)	924567508	1	HOSE CPL. GH425-8 12X2050	SCHLAUCH KPL.
(1446)	923087208	1	HOSE CPL. GH425-8 12X2100	SCHLAUCH KPL.
(1447)	923343408	1	HOSE CPL. GH425-8 12X1650	SCHLAUCH KPL.
(1448)	968148708	1	HOSE CPL. 2TE 16X600	SCHLAUCH KPL.
(1449)	968148808	1	HOSE CPL.	SCHLAUCH KPL.
21	10038509	1	CONTROL BLOCK SPF ⇨ ❑ 623	STEUERBLOCK
300	11840501	2	WASHER DIN 7349 8,4 200HV 480H SPF	SCHEIBE
301	11651767	2	HEX SCREW ISO 4017 M8X20 8.8 480H SPF	SECHSKANTSCHRAUBE
304	97056998	1	HOSE	SCHLAUCH GESCHLITZT
600	470030408	1	FITTING XG12-L CR6-FREI	VERSCHRAUBUNG
601	470032708	2	FITTING XG16-S CR6-FREI	VERSCHRAUBUNG
605	247105602	1	T CONNECTION PIECE ET 12L CR6-FREI	T-STUTZEN
609	471033208	3	FITTING XGE16-SR-ED CR6-FREI	VERSCHRAUBUNG
610	247108302	1	SWIVEL ELBOW EW 18L M26X1,5 CR6-FREI	WINKELSTUTZEN
611	471031208	1	FITTING XGE18-LR-ED CR6-FREI	VERSCHRAUBUNG
612	482431514	2	FITTING ISO 8434 ET 16S CR6-FREI	VERSCHRAUBUNG
613	5607617	2	GAUGE CONNECTION DKO 10S M18X1,5 C	MESSSTUTZEN
614	475433508	2	FITTING REDSD16/10-S CR6-FREI	VERSCHRAUBUNG
615	475430908	1	FITTING REDSD28/18-L CR6-FREI	VERSCHRAUBUNG
616	10410770	1	FITTING EV16S CR6-FREI	VERSCHRAUBUNG

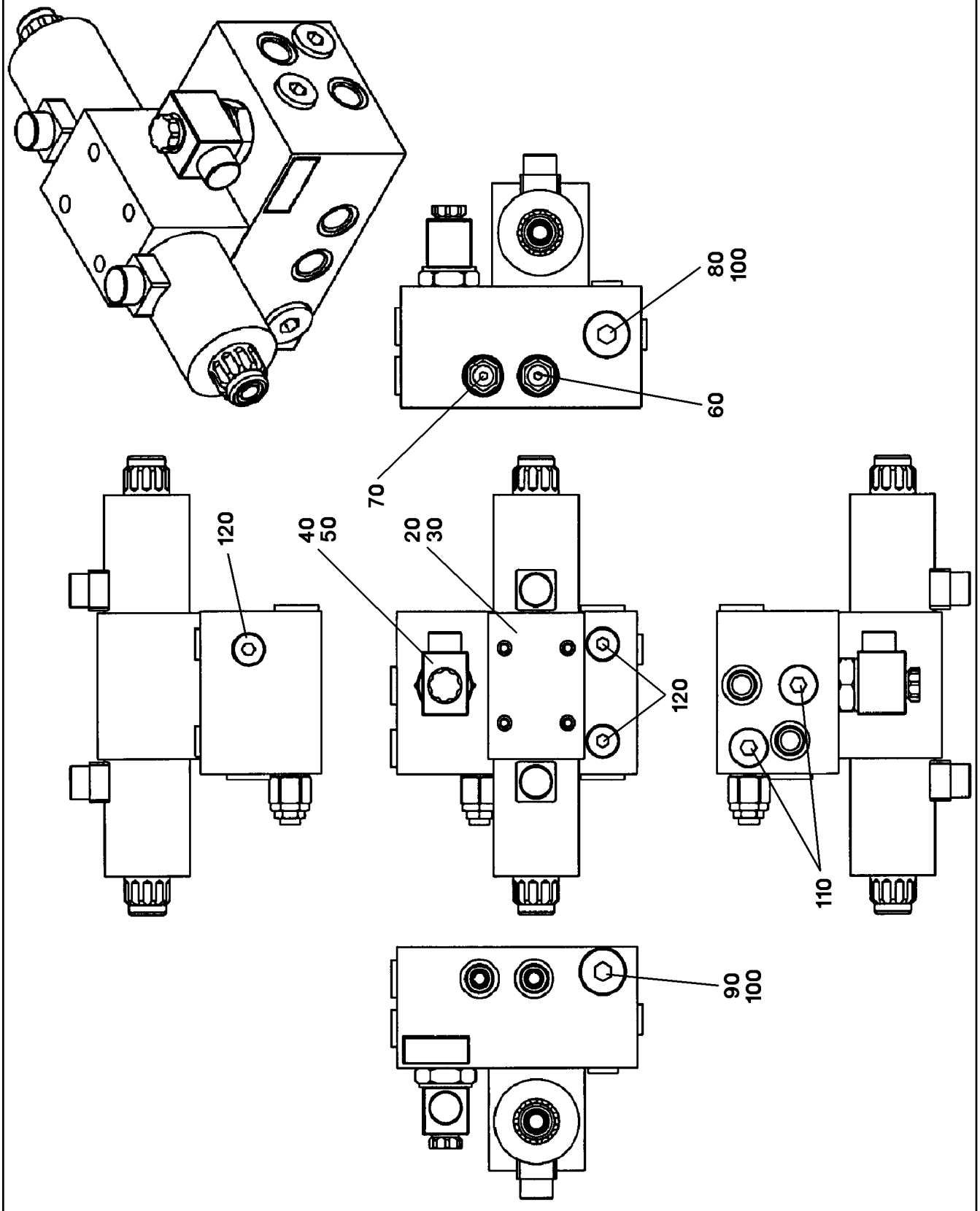
80
100
60
70
120
40
50
20
30
120
110
90
100

Pos.	Item	Quantity	Description	Bezeichnung
20	10280210	1	DIRECTIONAL CONTROL VALVE	WEGEVENTIL
30	12223035	4	SOCKET HEAD SCREW ISO 4762 M6X40 10	ZYLINDERSCHRAUBE
40	10280211	1	DIRECTIONAL SEAT VALVE 2/2	WEGESITZVENTIL
(999)	10871959	1	SEAL KIT DIRECTIONAL VALVE	DS WEGEVENTIL
50	10280212	1	MAGNET	MAGNET
60	10280213	1	PRESSURE LIMITING VALVE	DRUCKBEGRENZUNGSVENTIL
(999)	10872098	1	SEAL KIT LIMIT VALVE	DS DRUCKBEGRENZUNGSVEN
70	10280214	1	PRESSURE LIMITING VALVE	DRUCKBEGRENZUNGSVENTIL
(999)	10872098	1	SEAL KIT LIMIT VALVE	DS DRUCKBEGRENZUNGSVEN
80	10280215	1	NON-RETURN VALVE	RUECKSCHLAGVENTIL
90	10280216	1	NON-RETURN VALVE	RUECKSCHLAGVENTIL
100	477704708	2	STOP PLUG VSTI G3/4A CR6-FREI	STOPFEN
110	477704208	2	STOP PLUG VSTI G1/2A CR6-FREI	STOPFEN
120	477704108	3	STOP PLUG VSTI3/8"ED CR6-FREI	STOPFEN

Pos.	Item	Quantity	Description	Bezeichnung
1	605215708	1	SOCKET COMBINATION 3-POL	STECKDOSENKOMBINATION
4	10875582	4	SOCKET HEAD SCREW ISO 4762 M5X18 8.8	ZYLINDERSCHRAUBE
5	10875503	1	HEX SCREW EN 1665 M5X10 10.9 480H SPF	SECHSKANTSCHRAUBE
7	605012708	1	COUPLING SOCKET 3-POL GERADE	KUPPLUNGSDOSE
8	602422108	1	CABLE GLAND PG16/9	KABELVERSCHRAUBUNG
9	602419608	1	COUNTER NUT PG16 KUNSTSTOFF	GEGENMUTTER
11	602441701	2	CABLE GLAND M16X1,5X4,5-10 POLYAMID	KABELVERSCHRAUBUNG
12	10044648	2	REDUCER M25X1,5 M16X1,5 POLYAMID	REDUZIERUNG
13	10042696	2	COUNTER NUT M25X1,5 POLYAMIDE	GEGENMUTTER
15	965751108	1	LEAD W693	LEITUNG

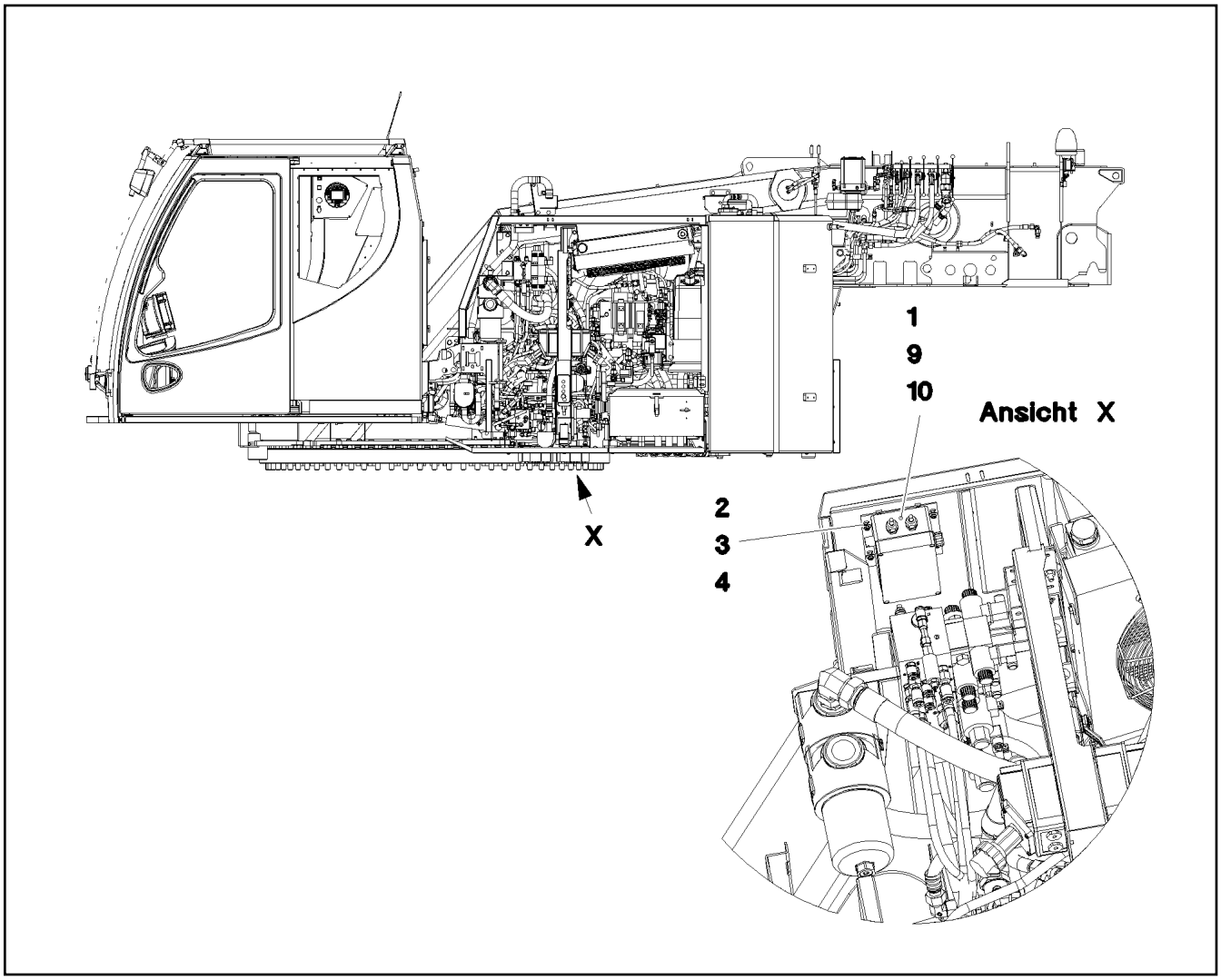

Pos.	Item	Quantity	Description	Bezeichnung
1	613301908	1	CHARGER 110V 24V8A SPF	LADEGERAET
(1)	10299987	1	TEMPERATURE SENSOR	TEMPERATURFUEHLER
2	10412851	4	BUTTON HEAD SCREW AEHNL.ISO 7380-2	HALBRUNDKOPFSCHRAUBE
3	421801708	4	WASHER ISO 7093-1 6 200HV-A2	SCHEIBE
4	411903008	4	HEX NUT DIN 985 M6 A2-70	SECHSKANTMUTTER
9	968648408	1	LEAD W621	LEITUNG
10	968648508	1	LEAD W620	LEITUNG

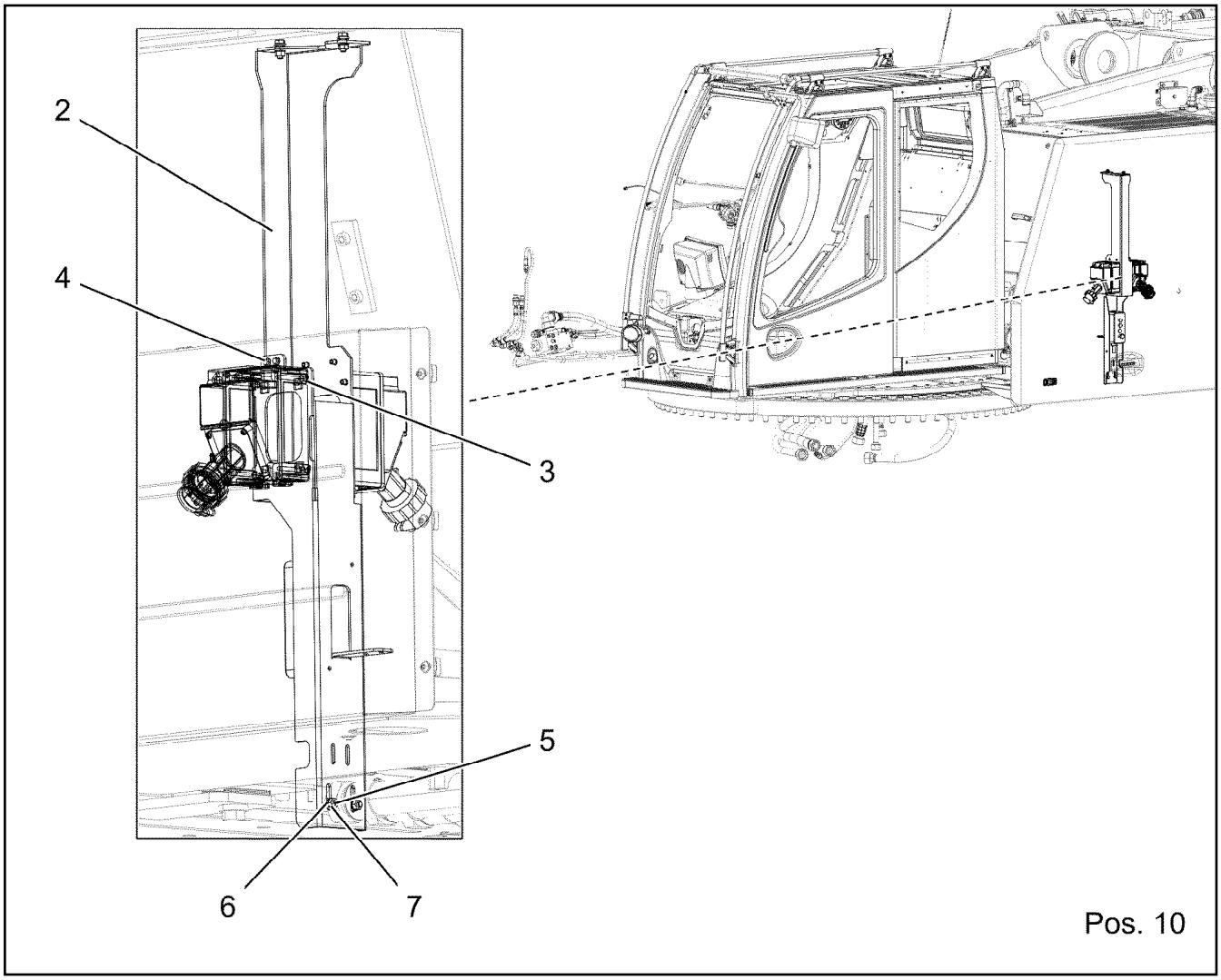

Pos.	Item	Quantity	Description	Bezeichnung
2	968646408	1	CONSOLE PRE-ASS.	KONSOLE VORM.
3	10875582	4	SOCKET HEAD SCREW ISO 4762 M5X18 8.8	ZYLINDERSCHRAUBE
4	10875582	2	SOCKET HEAD SCREW ISO 4762 M5X18 8.8	ZYLINDERSCHRAUBE
5	11657219	4	HEX SCREW EN 1665 M8X20 8.8 480H SPF	SECHSKANTSCHRAUBE
6	12103465	4	WASHER ISO 7089 8 300HV ZNNI-480H SPF	SCHEIBE
7	11693875	4	HEX NUT ISO 4032 M8 8 480H SPF	SECHSKANTMUTTER
10	965991908	1	LEAD W694	LEITUNG

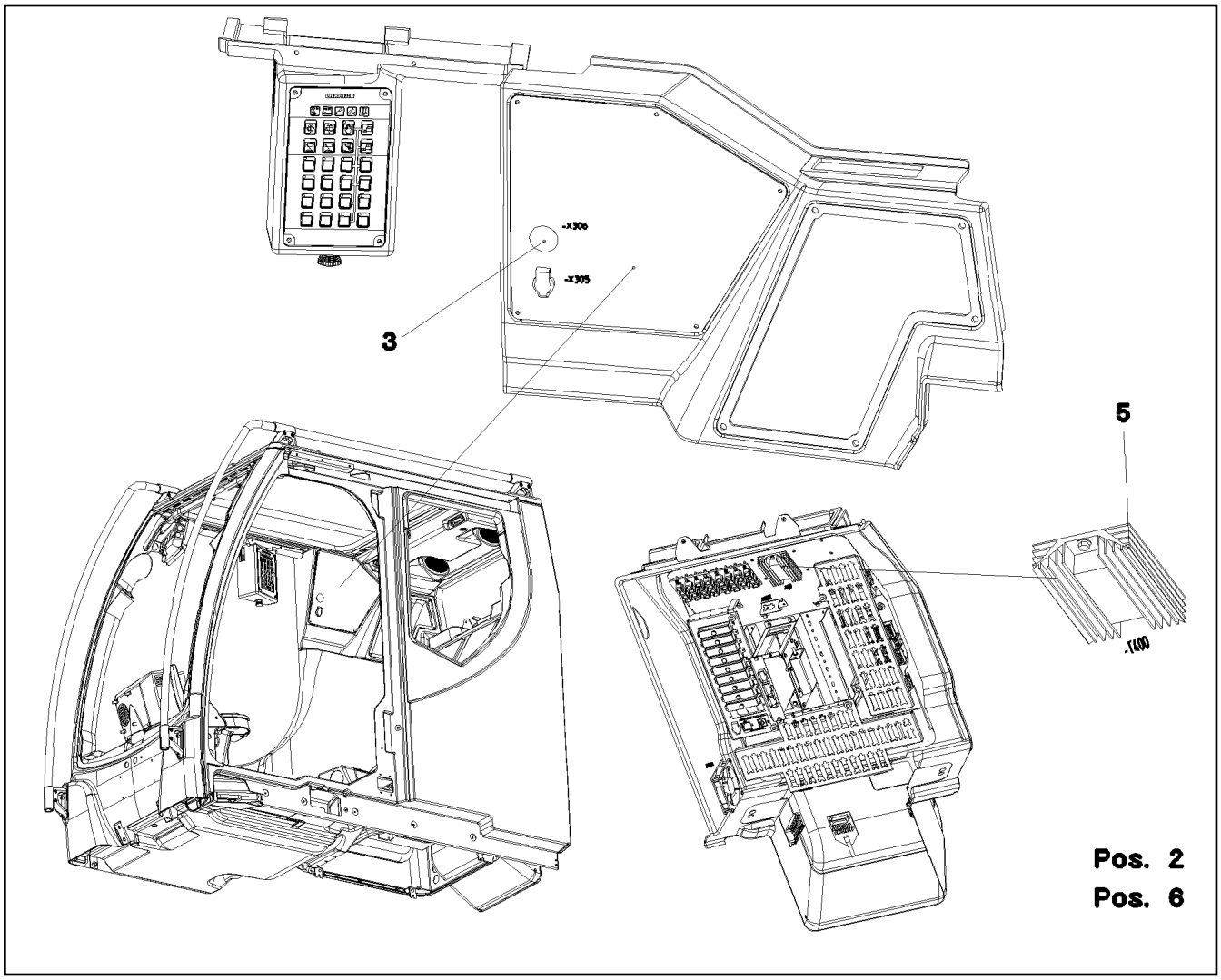

Pos.	Item	Quantity	Description	Bezeichnung
3	10429057	1	SOCKET	STECKDOSE
5	614020508	1	VOLTAGE REGULATOR 24V 12V 320W 24A	SPANNUNGSREGLER
6	10875503	4	HEX SCREW EN 1665 M5X10 10.9 480H SPF	SECHSKANTSCHRAUBE

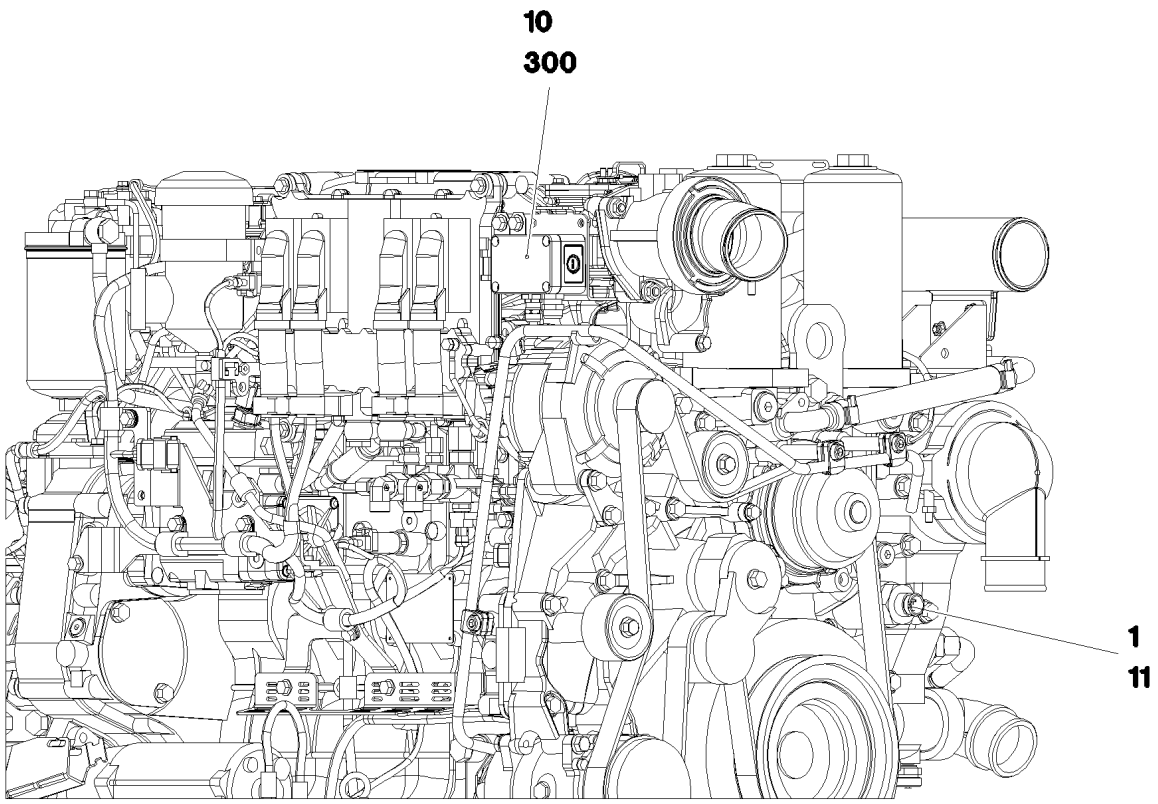

Pos.	Item	Quantity	Description	Bezeichnung
1	10025057	1	IMMERSION HEATER 120V 1KW	TAUCHHEIZER
10	917368108	1	EL.COOLANT PREHEAT ⇨ ❑ 630	EL.KUEHLWASSERVORWAERM
11	603012608	1.5	INSULATING HOSE DN14X0,8 -60°C+250°C	ISOLIERSCHLAUCH
300	10875564	4	SOCKET HEAD SCREW ISO 1207 M4X10 4.8	ZYLINDERSCHRAUBE

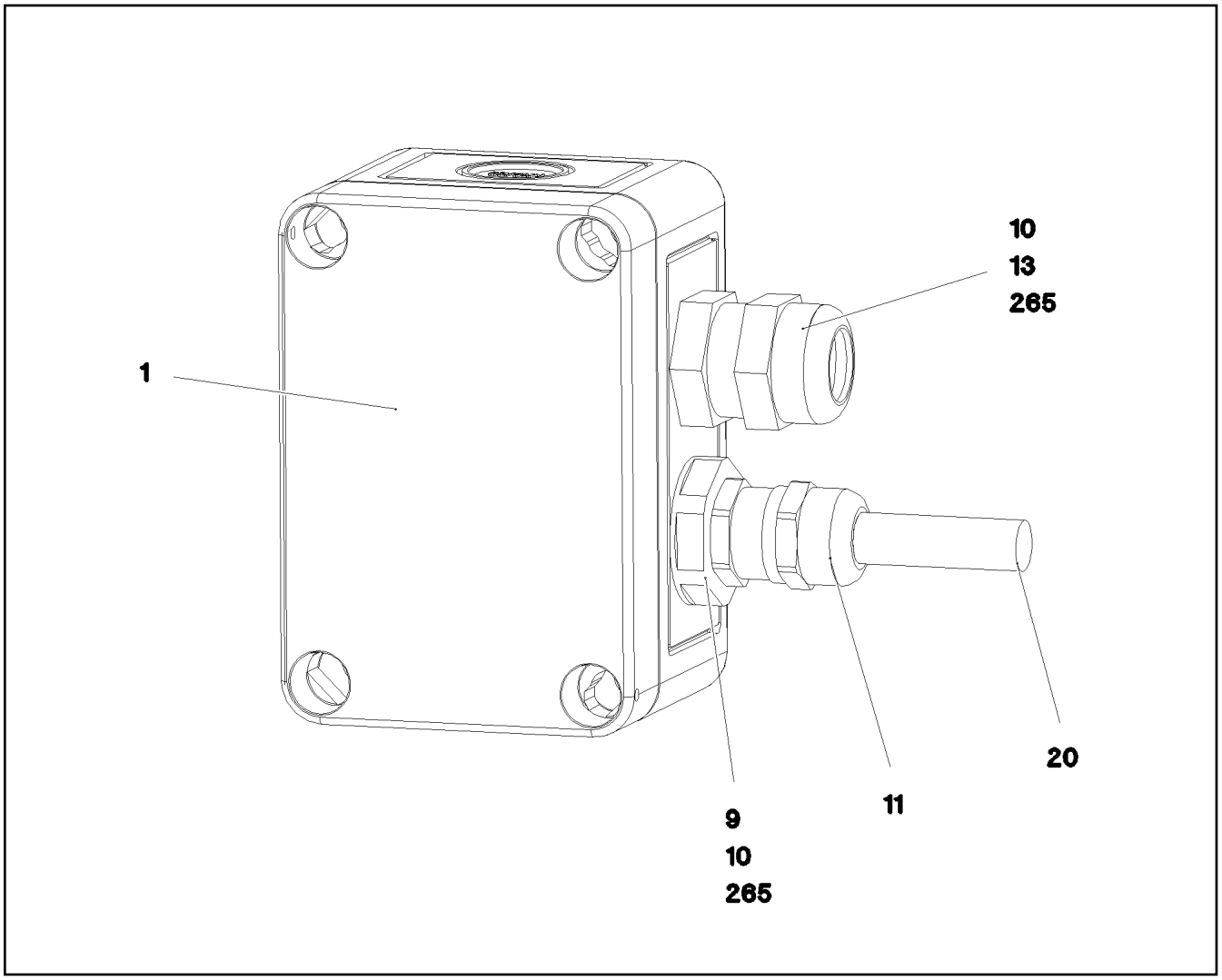

Pos.	Item	Quantity	Description	Bezeichnung
1	11114556	1	DISTRIBUTION BOX 65X94X57 POLYCARBO	VERTEILERKASTEN
9	10475314	1	REDUCER M20X1,5-M16X1,5 POLYAMID	REDUZIERUNG
10	10036629	2	COUNTER NUT M20x1,5 PA6	GEGENMUTTER
11	602441701	1	CABLE GLAND M16X1,5X4,5-10 POLYAMID	KABELVERSCHRAUBUNG
13	10216578	1	CABLE GLAND M20X1,5/13X3X12 PA6	KABELVERSCHRAUBUNG
20	967921908	1	LEAD W682	LEITUNG

Pos.	Item	Quantity	Description	Bezeichnung
10	96037229	1	ADD-ON PARTS WORK FLOODLIGHT ⇨ ❑ 632	ANBAUTEILE ARBEITSSCHEIN
20	96028878	4	ELECTR. FOR WORK AREA LIGHT	ELEKTRIK ARBEITSSCHEINWER
(10)	10877828	1	WORK LIGHT 20W 12-24V ALUMINIUM	ARBEITSSCHEINWERFER

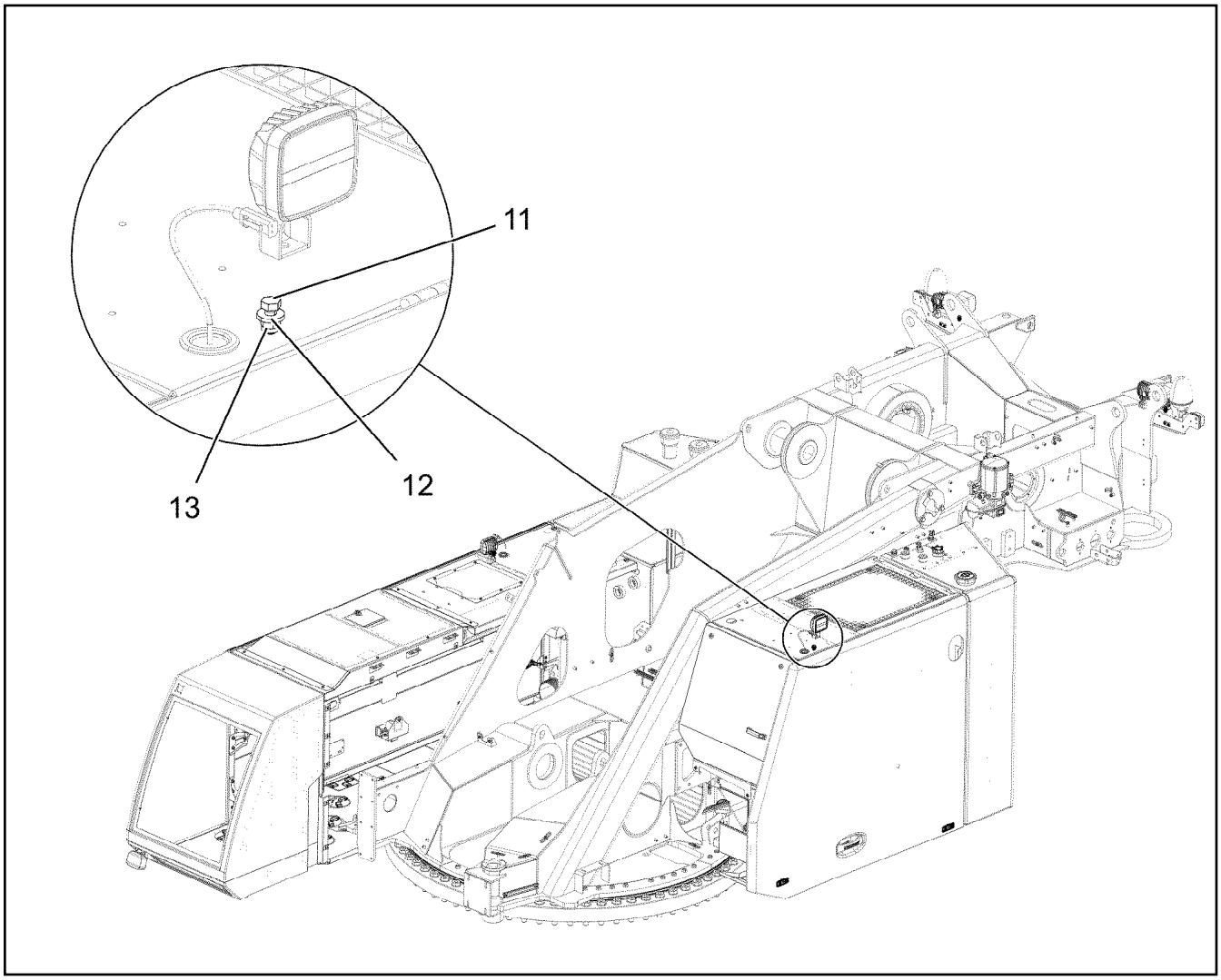

Pos.	Item	Quantity	Description	Bezeichnung
11	11631816	4	HEX SCREW ISO 4017 M10X25 8.8 FLZN SP	SECHSKANTSCHRAUBE
12	11658580	4	WASHER DIN 7349 10,5 200HV-St FLZN SPF	SCHEIBE
13	10875629	4	HEX NUT ISO 7040 M10 8 FLZN SPF	SECHSKANTMUTTER

Pos.	Item	Quantity	Description	Bezeichnung
1	968210808	1	ADD-ON PARTS CAMERA DB-HECK ⇨ ❑ 634	ANBAUTEILE KAMERA
2	968267108	1	ADD-ON PARTS CAMERA DB-WINDEIU.II ⇨ ❑ 638	ANBAUTEILE KAMERA
3	96045237	1	EQUIPMENT CAMERA CAB ⇨ ❑ 641	AUSRUESTUNG KAMERA KABIN
4	96037130	1	EQUIPMENT CAMERA SLEW COLUMN ⇨ ❑ 643	AUSRUESTUNG KAMERA DRE
5	96037131	1	EQUIPMENT CAMERA WINCHES ⇨ ❑ 645	AUSRUESTUNG KAMERA WIN

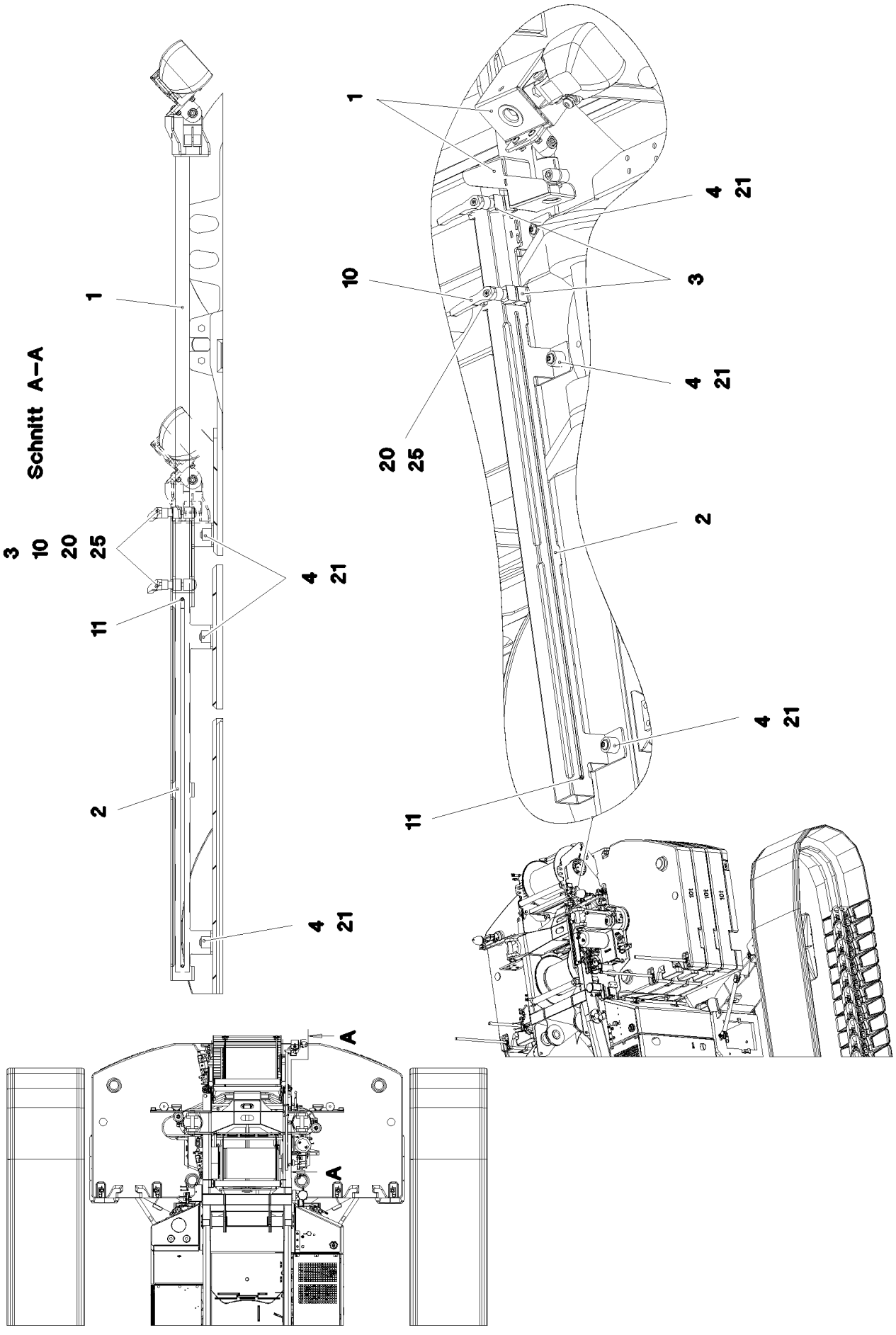

18.7.2022 077870 LIEBHERR	**etk_en_de_047654 LTR 1220** **ADD-ON PARTS CAMERA** **ANBAUTEILE KAMERA**	❑ 634 (1/2) **968210808**

Pos.	Item	Quantity	Description	Bezeichnung
1	968994408	1	CAMERA HOLDER, PREMOUNTING ⇨ ❑ 636	KAMERAHALTER VORM.
2	978787708	3	SLEEVE 33.0X19 FE//ZNNI8//CN//T0	HUELSE
3	10875485	3	BUTTON HEAD SCREW AEHNL.ISO 7380-2	HALBRUNDKOPFSCHRAUBE

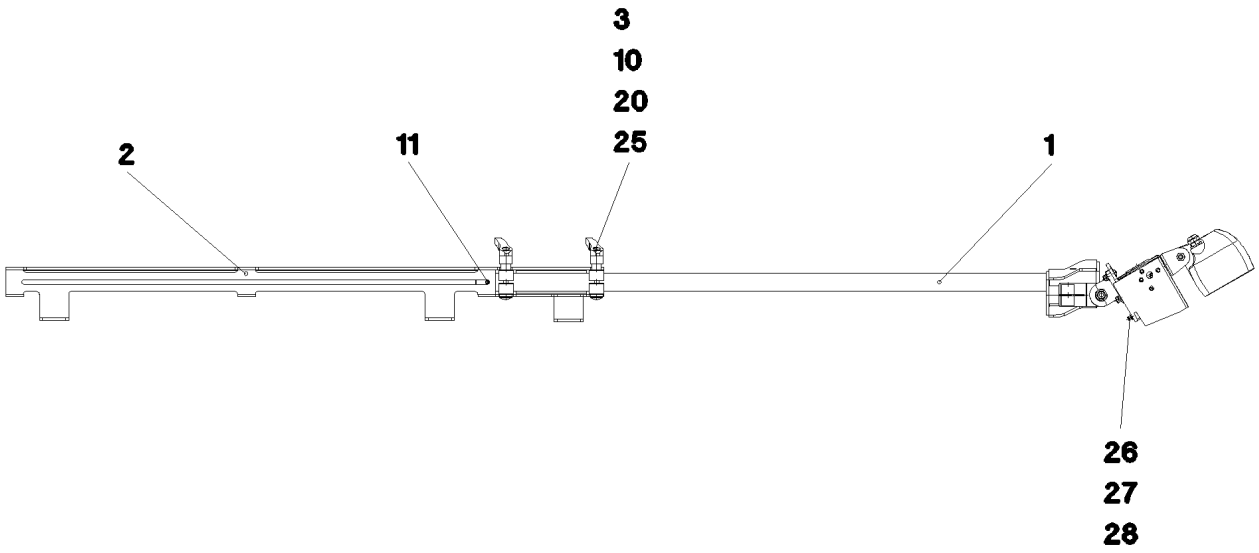

Pos.	Item	Quantity	Description	Bezeichnung
1	968290608	1	STAND ⇨ ❑ 637	STATIV
2	968290908	1	CLAMP	STATIVFUSS SCHWK.
3	976873708	2	CLAMPING PIECE PA6G+OEL	KLEMMSTUECK
10	11642508	2	CLAMPING LEVER M8 X10CRNIS189	KLEMMHEBEL
11	432006708	1	DOWEL PIN ISO 8752 6X50 A2	SPANNSTIFT
20	10181375	4	CUP HEAD SQUARE NECK BOLT DIN 603 M8	FLACHRUNDSCHRAUBE
25	10875614	2	HEX NUT DIN 985 M8 8 480H SPF	SECHSKANTMUTTER
26	10412852	2	BUTTON HEAD SCREW AEHNL.ISO 7380-2	HALBRUNDKOPFSCHRAUBE
27	411903008	2	HEX NUT DIN 985 M6 A2-70	SECHSKANTMUTTER
28	10197771	2	WASHER ISO 7089 6 200HV ZNNI-480H SPF	SCHEIBE

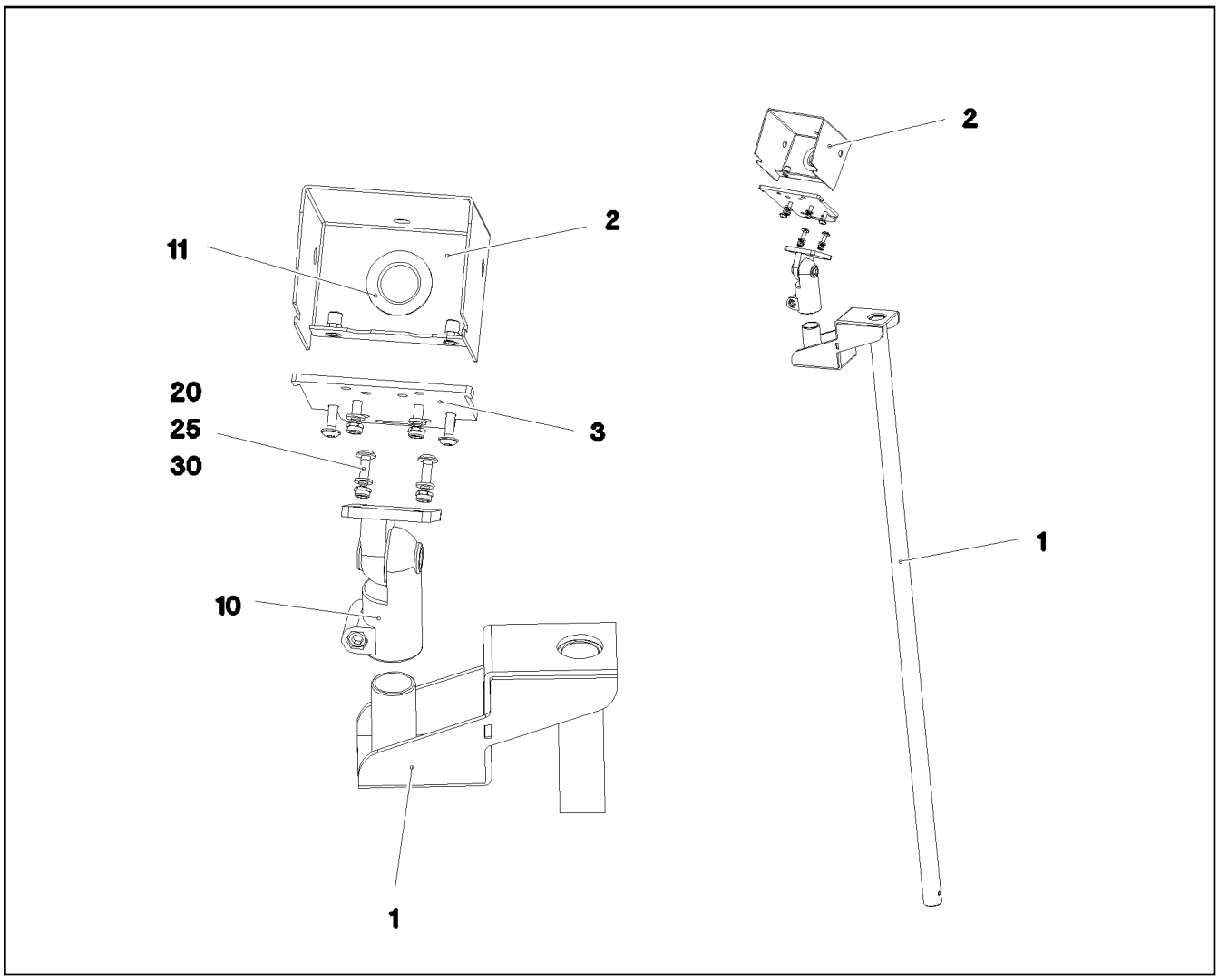

Pos.	Item	Quantity	Description	Bezeichnung
1	968290708	1	CLAMP	STATIV SCHWK.
2	97008317	1	PLATE 2X291X200 X5CRNI18-10	BLECH
3	97008318	1	PLATE 5X110X122 X5CRNI18-10	BLECH
10	11002980	1	JOINER AL	VERBINDER
11	262103908	0.2	EDGE PROTECTION 1-2X9,5X6,5	KANTENSCHUTZ
20	10412852	6	BUTTON HEAD SCREW AEHNL.ISO 7380-2	HALBRUNDKOPFSCHRAUBE
25	411903008	4	HEX NUT DIN 985 M6 A2-70	SECHSKANTMUTTER
30	10197771	4	WASHER ISO 7089 6 200HV ZNNI-480H SPF	SCHEIBE

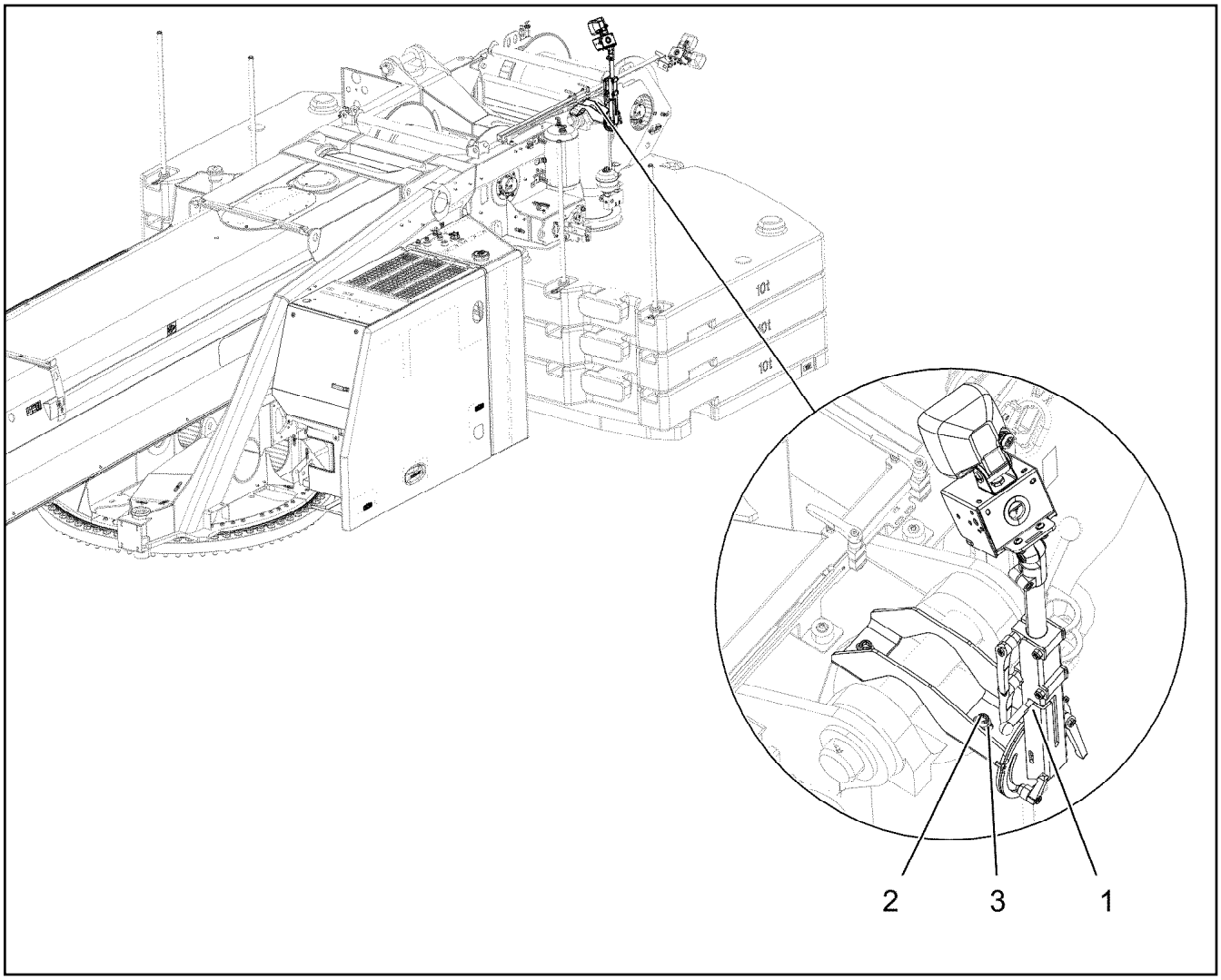

Pos.	Item	Quantity	Description	Bezeichnung
1	968993508	1	CAMERA HOLDER, PREMOUNTING ⇨ ❑ 639	KAMERAHALTER VORM.
2	12223057	2	SOCKET HEAD SCREW ISO 4762 M12X25 8	ZYLINDERSCHRAUBE
3	10289804	2	WASHER ISO 7089 12 300HV FLZN SPF	SCHEIBE

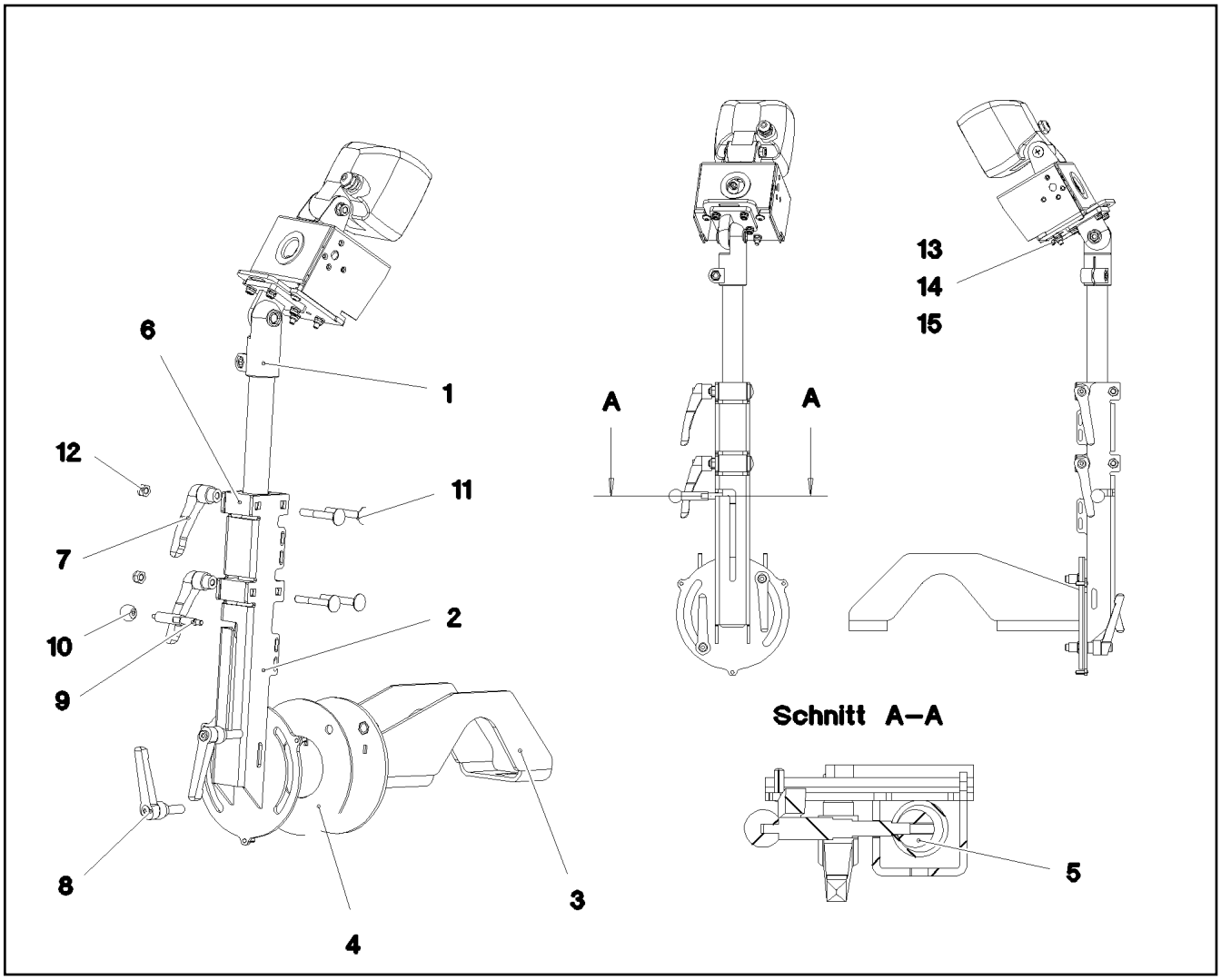

Pos.	Item	Quantity	Description	Bezeichnung
1	968267208	1	STAND ⇨ ❑ 640	STATIV
2	968267308	1	CLAMP	STATIV SCHWK.
3	968267408	1	CLAMP	STATIVFUSS SCHWK.
4	97037959	1	DISTANCE WASHER RD.164X3 PA6G	DISTANZSCHEIBE
5	97037948	1	THREADED ELEMENT EDELSTAHL	GEWINDETEIL
6	976873708	2	CLAMPING PIECE PA6G+OEL	KLEMMSTUECK
7	11642508	2	CLAMPING LEVER M8 X10CRNIS189	KLEMMHEBEL
8	11320604	2	CLAMPING LEVER M10X32 EDELSTAHL	KLEMMHEBEL
9	97038268	1	THREADED ROD 5X0X0 X5CRNI18-10	GEWINDESTANGE
10	704006308	1	SPHERICAL KNOB DIN 319 C20XM5 FS	KUGELKNOPF
11	10181375	4	CUP HEAD SQUARE NECK BOLT DIN 603 M8	FLACHRUNDSCHRAUBE
12	10875614	2	HEX NUT DIN 985 M8 8 480H SPF	SECHSKANTMUTTER
13	10412852	2	BUTTON HEAD SCREW AEHNL.ISO 7380-2	HALBRUNDKOPFSCHRAUBE
14	411903008	2	HEX NUT DIN 985 M6 A2-70	SECHSKANTMUTTER
15	10197771	2	WASHER ISO 7089 6 200HV ZNNI-480H SPF	SCHEIBE

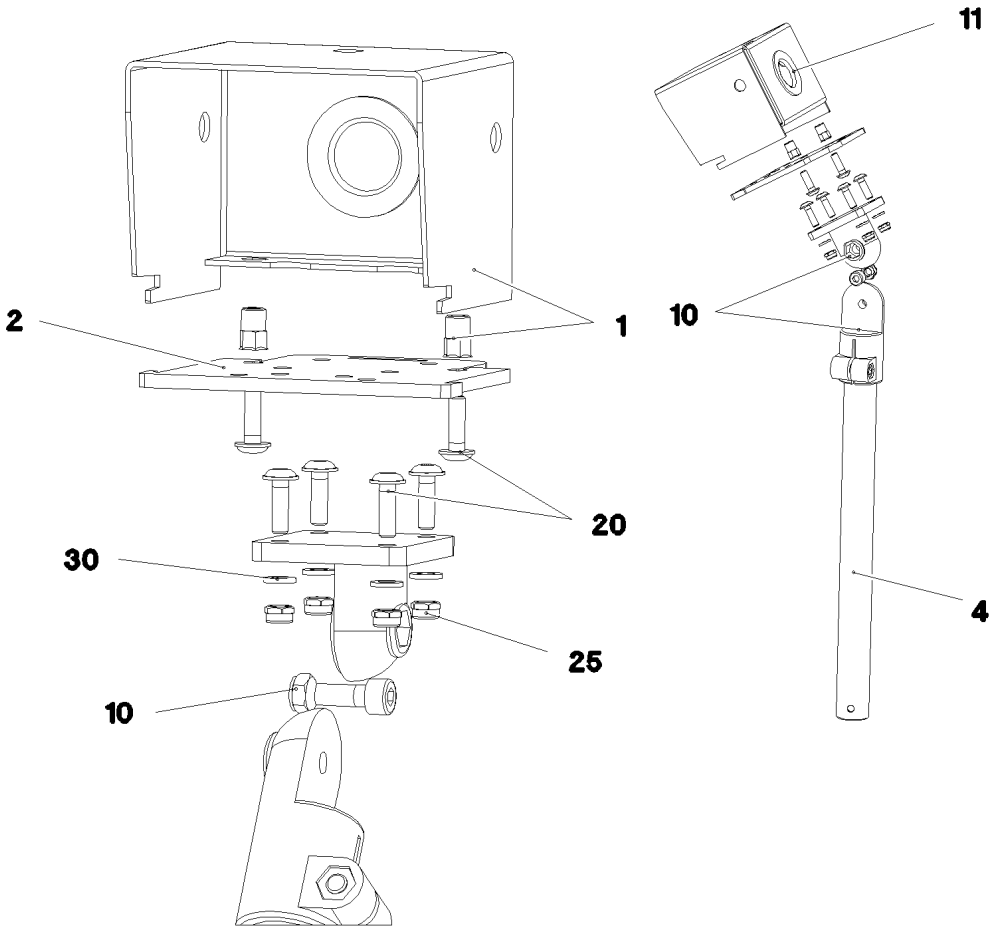

Pos.	Item	Quantity	Description	Bezeichnung
1	97008317	1	PLATE 2X291X200 X5CRNI18-10	BLECH
2	97008318	1	PLATE 5X110X122 X5CRNI18-10	BLECH
4	97037947	1	TUBE 3X0X0 X5CRNI18-10	ROHR
10	11002980	1	JOINER AL	VERBINDER
11	262103908	0.2	EDGE PROTECTION 1-2X9,5X6,5	KANTENSCHUTZ
20	10412852	6	BUTTON HEAD SCREW AEHNL.ISO 7380-2	HALBRUNDKOPFSCHRAUBE
25	411903008	4	HEX NUT DIN 985 M6 A2-70	SECHSKANTMUTTER
30	10197771	4	WASHER ISO 7089 6 200HV ZNNI-480H SPF	SCHEIBE

Pos.	Item	Quantity	Description	Bezeichnung
5	96043733	1	WIRING HARNESS W321 ⇨ ❑ 642	KABELSTRANG
10	10876638	1	MONITOR TFT 7 800X480	MONITOR
15	10097087	2	CABLE	KABEL
20	10874763	1	HOLDER MONITOR	HALTER MONITOR
21	10875640	1	WASHER DIN 440 6,6 -ST 480H SPF	SCHEIBE
22	10415159	1	HEX NUT ISO 7040 M6 10 480H SPF	SECHSKANTMUTTER
24	97025080	1	PLATE 2X231X192 DC01 RAL 9005,M,GT SP	BLECH
25	10875474	4	BUTTON HEAD SCREW ISO 7380-2 M5X16 0	HALBRUNDKOPFSCHRAUBE

Pos.	Item	Quantity	Description	Bezeichnung
125	602300308	6	CONTACT 0,5-1MM2	KONTAKT
202	11082602	2.1	INSULATING HOSE DN6X0,5 PUR SPF	ISOLIERSCHLAUCH
305	10870540	6.6	ELECTR.CABLE 1,0	KFZ-LEITUNG
500	923512208	2	CABLE MARKER	KABELMARKER
501	602331308	1	HOUSING 4-POL	GEHAEUSE
502	602301408	1	HOUSING 8-POL	GEHAEUSE
998	965622208	2	LETTERING WIRING HARNESS	BESCHRIFTUNG KABELBAUM

Pos.	Item	Quantity	Description	Bezeichnung
10	10097079	1	CAMERA SPF	KAMERA
12	10097085	1	CABLE 2X0,34+1X0,14-4M	KABEL
13	10870635	1.7	PROTECTIVE HOSE DN20 NORMAL PP	SCHUTZSCHLAUCH
17	11631816	1	HEX SCREW ISO 4017 M10X25 8.8 FLZN SP	SECHSKANTSCHRAUBE
18	10289795	2	WASHER ISO 7089 10 300HV FLZN SPF	SCHEIBE
19	12102695	1	HEX NUT ISO 4032 M10 8 ZNNI-480H SPF	SECHSKANTMUTTER
20	10877828	1	WORK LIGHT 20W 12-24V ALUMINIUM	ARBEITSSCHEINWERFER
23	96037132	1	LEAD W563	LEITUNG
			⇨ ❑ 644	

Pos.	Item	Quantity	Description	Bezeichnung
5	11620017	4.06	LEAD 2 X 1	LEITUNG
6	10877798	1	CONNECTION CABLE 2X0,75-1,5M	ANSCHLUSSKABEL
500	923512208	4	CABLE MARKER	KABELMARKER
501	604526608	2	PIN CARRIER 6-POL 16A	STIFTTRAEGER
502	604526508	1	BUSHING SUPPORT 6-POL 16A	BUCHSENTRAEGER
503	604508508	2	SEALING PLUG M 1-K	VERSCHLUSSKAPPE
504	604512108	1	SEALING PLUG M1-D	VERSCHLUSSKAPPE
505	602704808	3	CABLE SLEEVE 4-6	KABELTUELLE
506	604508608	2	PLUG 6-POL	STECKER
507	604505508	1	CABLE SOCKET M11-Z	KABELDOSE
628	604519208	4	PIN CONTACT 0,75-1MM2	STIFTKONTAKT
629	604519308	2	SLEEVE CONTACT 0,75-1,0MM2	BUCHSENKONTAKT
812	604518908	15	STOPPER PLUG BAUREIHE_M1	BLINDSTOPFEN
998	965622208	3	LETTERING WIRING HARNESS	BESCHRIFTUNG KABELBAUM

Pos.	Item	Quantity	Description	Bezeichnung
10	10024012	1	CAMERA SPF	KAMERA
(1)	10025278	1	CABLE PLUG 7-POL	KABELSTECKER
13	10870635	1.5	PROTECTIVE HOSE DN20 NORMAL PP	SCHUTZSCHLAUCH
17	11631816	1	HEX SCREW ISO 4017 M10X25 8.8 FLZN SP	SECHSKANTSCHRAUBE
18	10289795	2	WASHER ISO 7089 10 300HV FLZN SPF	SCHEIBE
19	10875629	1	HEX NUT ISO 7040 M10 8 FLZN SPF	SECHSKANTMUTTER
20	10877828	1	WORK LIGHT 20W 12-24V ALUMINIUM	ARBEITSSCHEINWERFER

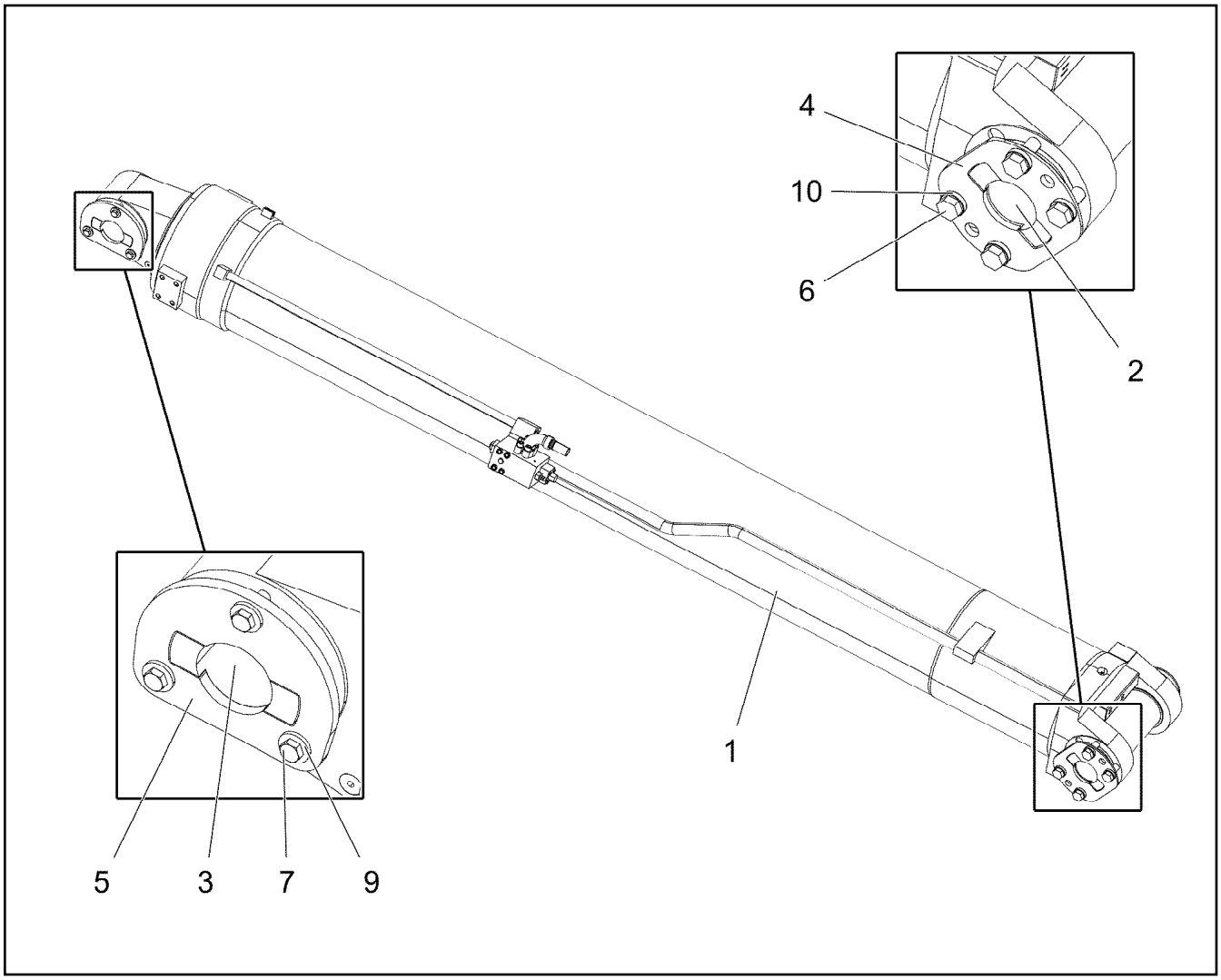

Pos.	Item	Quantity	Description	Bezeichnung
1	12102921	1	LUFFING CYLINDER 400/370-3305 SPF ⇨ ❑ 647	WIPPZYLINDER
2	97032978	1	PIN 170.0X555 35NICRMOV125 SPF	BOLZEN
3	97032979	1	PIN 170.0X255 35NICRMOV125 SPF	BOLZEN
4	974925508	1	AXLE HOLDER 12X270X220 S960QL	ACHSHALTER
5	970598608	1	AXLE HOLDER 15X260X217 S960QL	ACHSHALTER
6	406605808	4	HEX SCREW ISO 4017 M24X60 10.9 FLZN SP	SECHSKANTSCHRAUBE
7	406603108	3	HEX SCREW ISO 4017 M16X45 10.9 FLZN SP	SECHSKANTSCHRAUBE
9	972203808	3	BUSHING 45.0X30 35NICRMOV125 GASN.	BUCHSE
10	974925608	4	BUSHING 45.0X25 35NICRMOV125 SPF	BUCHSE

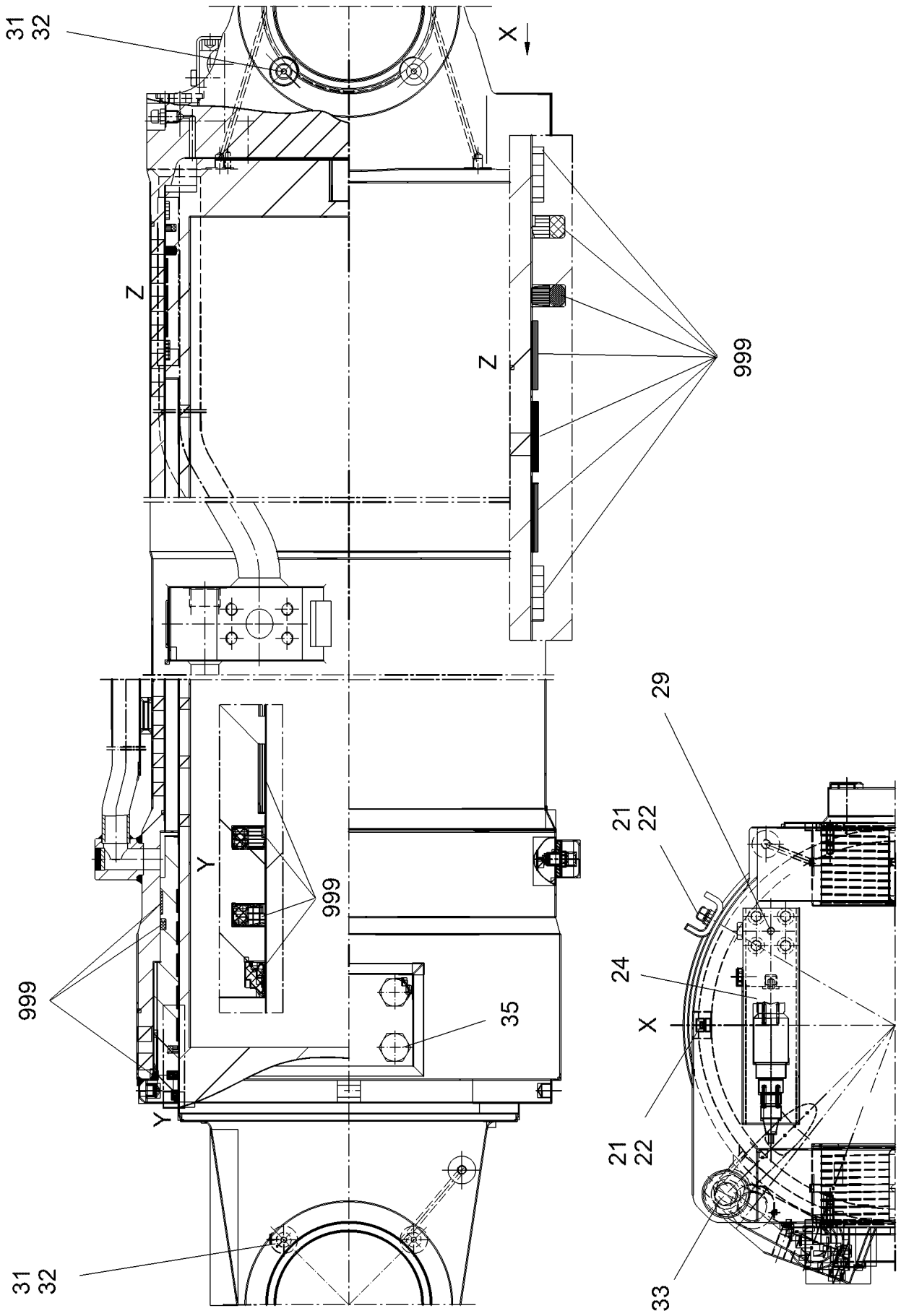
31
32
X
Z
Z
999
Y
999
999
35
Y
31
32
29
21
22
24
X
21
22
33

Pos.	Item	Quantity	Description	Bezeichnung
21	10424983	2	VENTILATION VALVE	ENTLUEFTUNGSVENTIL
22	747000277	2	BALL DIN 5401 6	KUGEL
24	12104031	1	NON-RETURN VALVE	RUECKSCHLAGVENTIL
29	12100620	1	GRUB SCREW DIN 914 M8X10 45H 480H SP	GEWINDESTIFT
31	10877340	6	WASHER 30X8	SCHEIBE
32	10875553	6	COUNTERSUNK SCREW DIN 7991 M8X25 8	SENKSCHRAUBE
33	726426408	1	O-RING ARP 568 28,17X3,53 NBR90	O-RING
35	10878791	8	HEX SCREW ISO 4017 M20X20 8.8 FLZN SP	SECHSKANTSCHRAUBE
999	12104385	1	SEAL KIT TOGGLE CYLINDER	DS WIPPZYLINDER

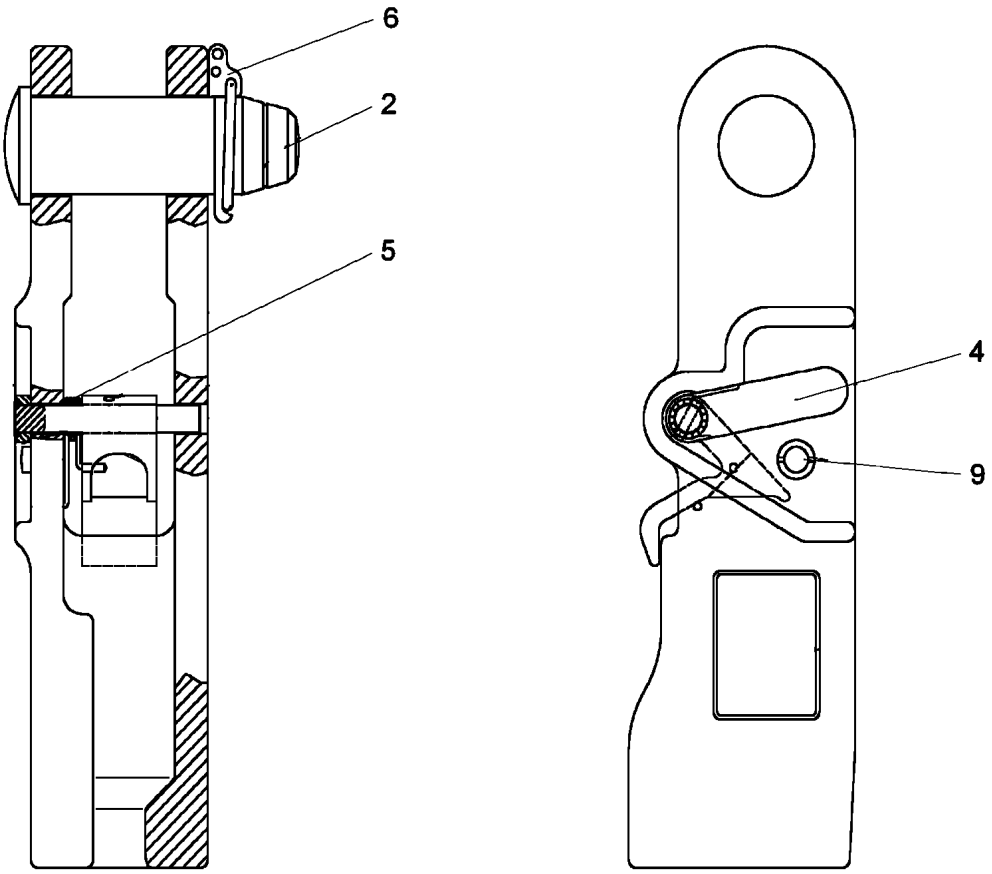

Pos.	Item	Quantity	Description	Bezeichnung
2	571430208	1	COLLER BOLT	BUNDBOLZEN
4	571430708	1	LEVER	HEBEL
5	571430508	1	LEG SPRING	SCHENKELFEDER
6	571817208	1	SAFETY PLUG W HINGE-LID	SICHERHEITSKLAPPSTECKER
9	10470667	1	SAFETY BUTTON	SICHERUNGSKNOPF
10	12102104	1	BLOCKING BAR 23-26	BLOCKIERBUEGEL

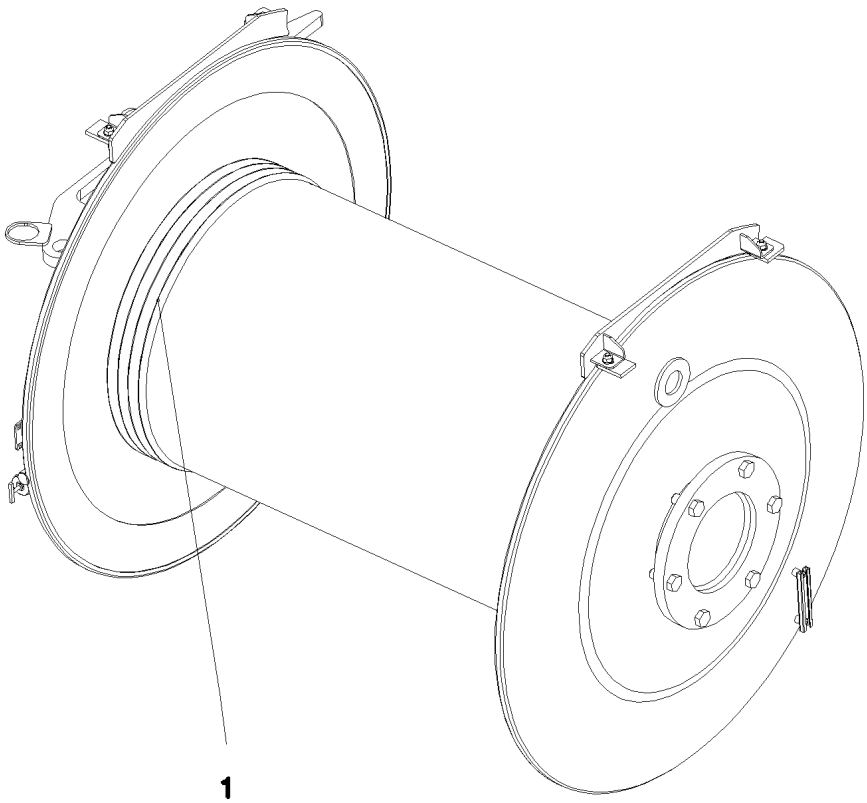

Pos.	Item	Quantity	Description	Bezeichnung
1	10115128	1	HOIST ROPE 23X350M -40°C SPF	HUBSEIL

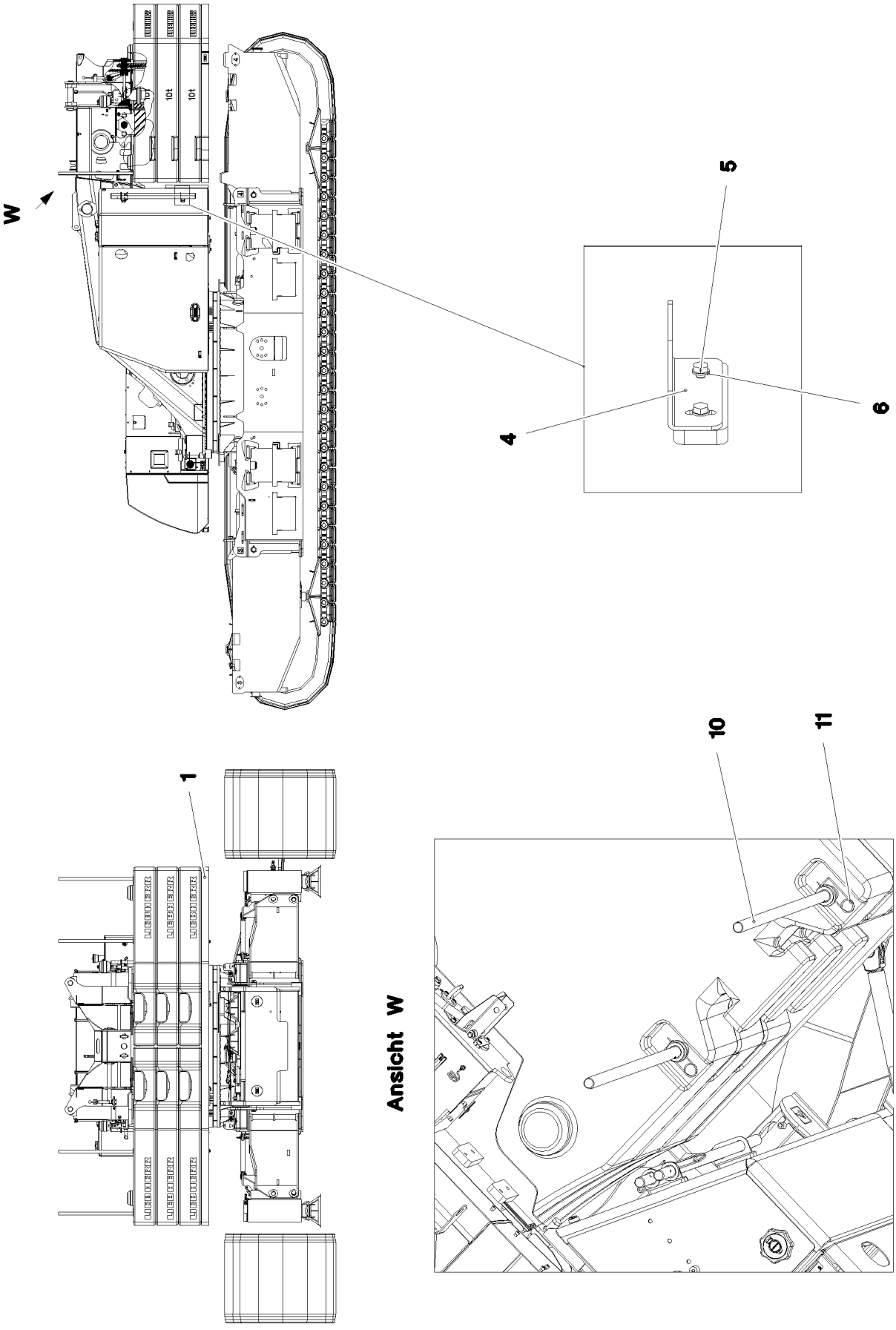
W
5
4
6
1
10
11
Ansicht W

Pos.	Item	Quantity	Description	Bezeichnung
1	967936908	1	COUNTERWEIGHT CPL. ⇨ ❑ 653	GEGENGEWICHT KPL.
4	97031752	4	ANGLE 4X150X118 S315MC FE//ZNNI8//CN//T	WINKEL
5	11690048	8	HEX SCREW ISO 4017 M8X12 8.8 480H SPF	SECHSKANTSCHRAUBE
6	420060705	8	WASHER ISO 7089 8 200HV-A2	SCHEIBE
10	96004280	4	POST	PFOSTEN
11	433100908	4	RETAINING SPRING 4,5X98 ISO 2081 FE/ZN	SICHERUNGSFEDER
15	968992508	1	SIGNAGE COUNTERWEIGHT	BESCHILDERUNG GEGENGEWI
(1)	97051193	1	SIGN 100X80 KLEBEFOLIE SPF	SCHILD
(2)	97020380	3	SIGN 158X68 KLEBEFOLIE SPF	SCHILD
(3)	978674808	2	SIGN 168X62 KLEBEFOLIE SPF	SCHILD

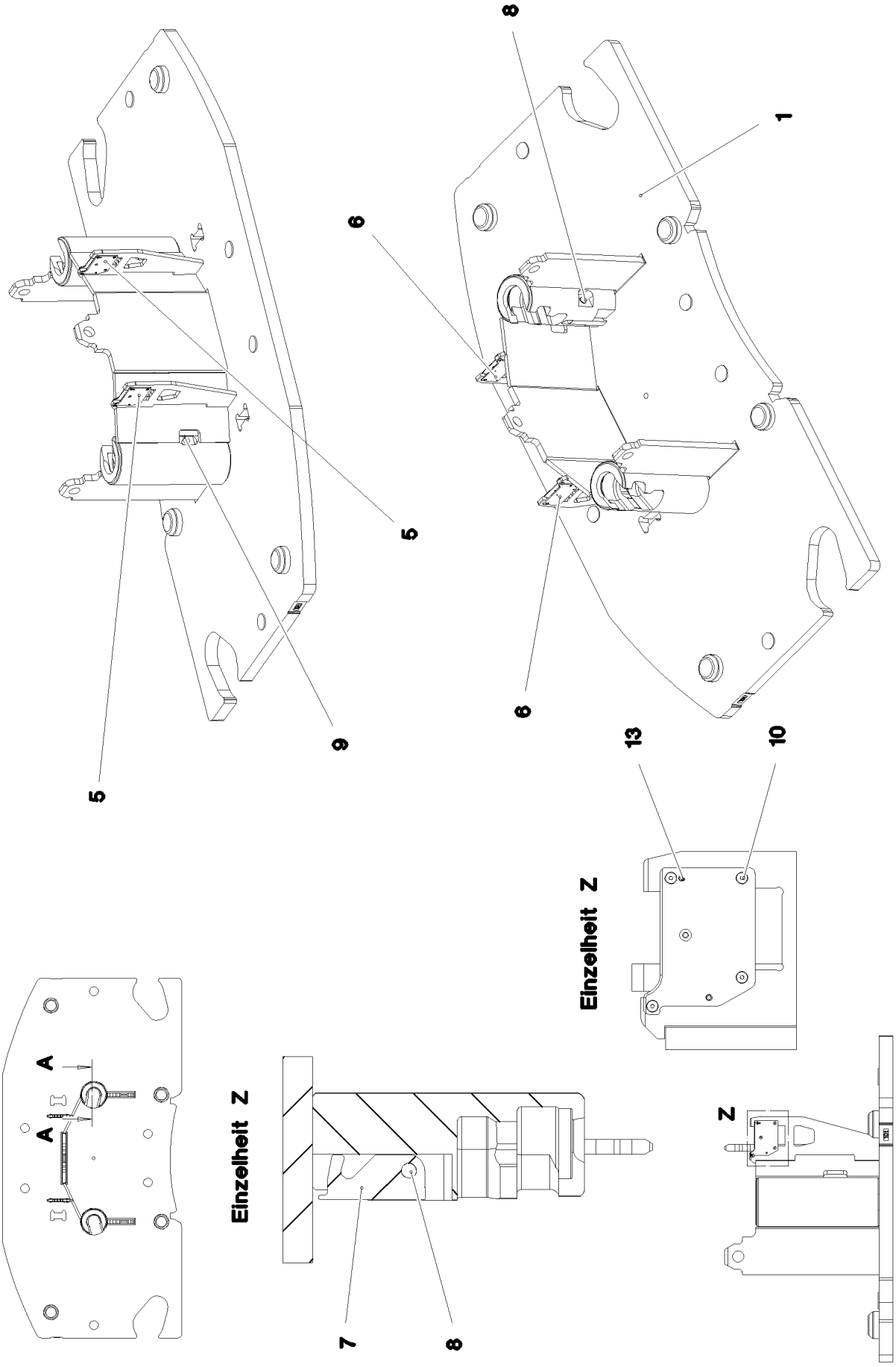

18.7.2022 077603 LIEBHERR	**etk_en_de_047654 LTR 1220** **COUNTERWEIGHT CPL.** **GEGENGEWICHT KPL.**	653 (1/2) **967936908**

Pos.	Item	Quantity	Description	Bezeichnung
1	967937508	1	COUNTERWEIGHT WELDED SPF	GEGENGEWICHT SCHWK.
5	97030303	2	PLATE 8X270X205 S700MC	BLECH
6	97030304	2	PLATE 8X270X205 S700MC	BLECH
7	97030305	2	HOOK 50X358X150 S960QL+Z25	HAKEN
8	971252308	2	PIN 55.0X280 35NICRMOV125 GASN. SPF	BOLZEN
9	10180371	2	SPLIT PIN ISO 1234 8X80 St 480H SPF	SPLINT
10	12100586	8	COUNTERSUNK SCREW ISO 10642 M10X50	SENKSCHRAUBE
13	432011808	4	DOWEL PIN ISO 8752 12X50	SPANNSTIFT

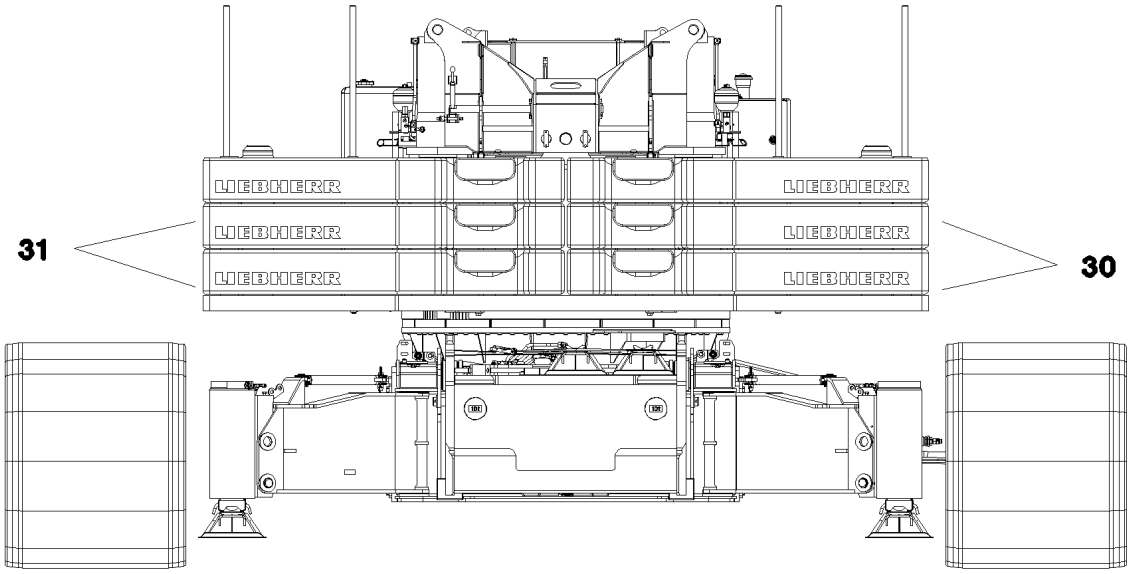

Pos.	Item	Quantity	Description	Bezeichnung
30	967916808	2	COUNTERWEIGHT CPL. 2400X 2400X375 SP	GEGENGEWICHT KPL.
31	967916508	2	COUNTERWEIGHT CPL. 2400X 2400X375 SP	GEGENGEWICHT KPL.

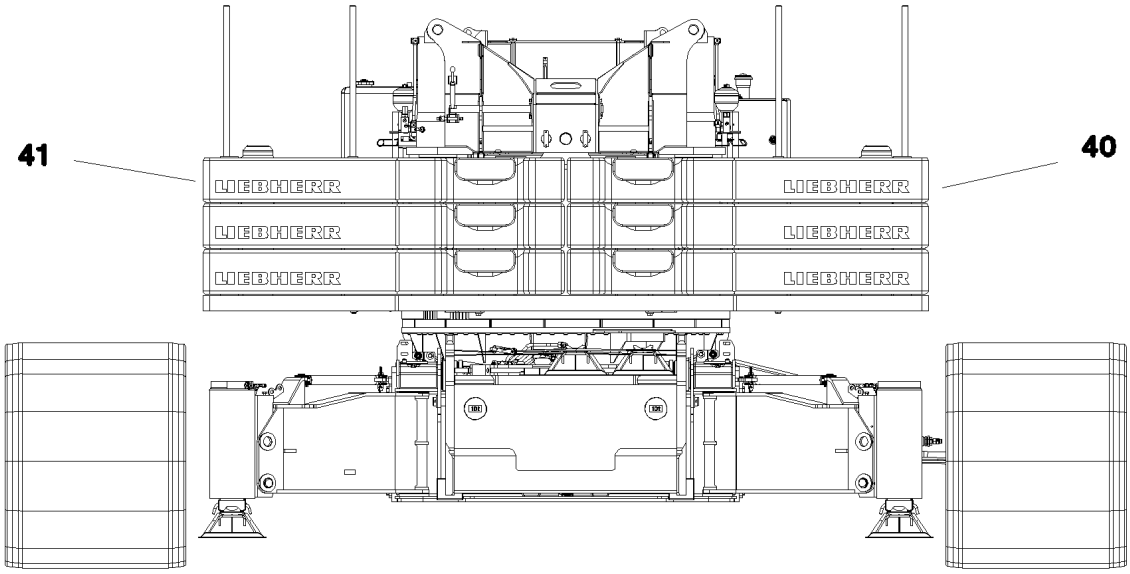

Pos.	Item	Quantity	Description	Bezeichnung
40	967916808	1	COUNTERWEIGHT CPL. 2400X 2400X375 SP	GEGENGEWICHT KPL.
41	967916508	1	COUNTERWEIGHT CPL. 2400X 2400X375 SP	GEGENGEWICHT KPL.

Pos.	Item	Quantity	Description	Bezeichnung
1	968068308	1	ASSEMBLY DEVICE LMZ-23T SPF ⇨ ❑ 658	MONTAGEVORRICHTUNG
2	96007145	1	COOLER GRILL 820X730X80 ABS	KUEHLERGRILL
3	12100291	4	COUNTERSUNK SCREW ISO 7047 M6X30 4	SENKSCHRAUBE
5	12101239	1	WEDGE SOCKET 23-25 GR.26/26 -40°C FE	KEILENDKLEMME
6	773913308	1	ROPE CLAMP DIN 1142 22 VERZ	SEILKLEMME
9	925141508	1	HOSE GUIDE PRE-ASS. ⇨ ❑ 659	SCHLAUCHFUEHRUNG VORM.
10	925185208	1	HOSE CPL.	SCHLAUCH KPL.
11	925185308	1	HOSE CPL.	SCHLAUCH KPL.
12	000608250	5	GRUB SCREW ISO 4026 M12X100 45H	GEWINDESTIFT
14	773445108	3	ROPE SLING DIN EN 13414-3 12T-8M VERZ	ANSCHLAGSEIL
15	779016608	8	BLANKING PLUG PE-LD	VERSCHLUSSSTOPFEN
20	96024265	1	ELECTR. FOR WORK AREA LIGHT LED	ELEKTRIK ARBEITSSCHEINWER
(4)	10877828	1	WORK LIGHT 20W 12-24V ALUMINIUM	ARBEITSSCHEINWERFER
(6)	11631816	1	HEX SCREW ISO 4017 M10X25 8.8 FLZN SP	SECHSKANTSCHRAUBE
(9)	10875629	1	HEX NUT ISO 7040 M10 8 FLZN SPF	SECHSKANTMUTTER
(10)	10289795	2	WASHER ISO 7089 10 300HV FLZN SPF	SCHEIBE

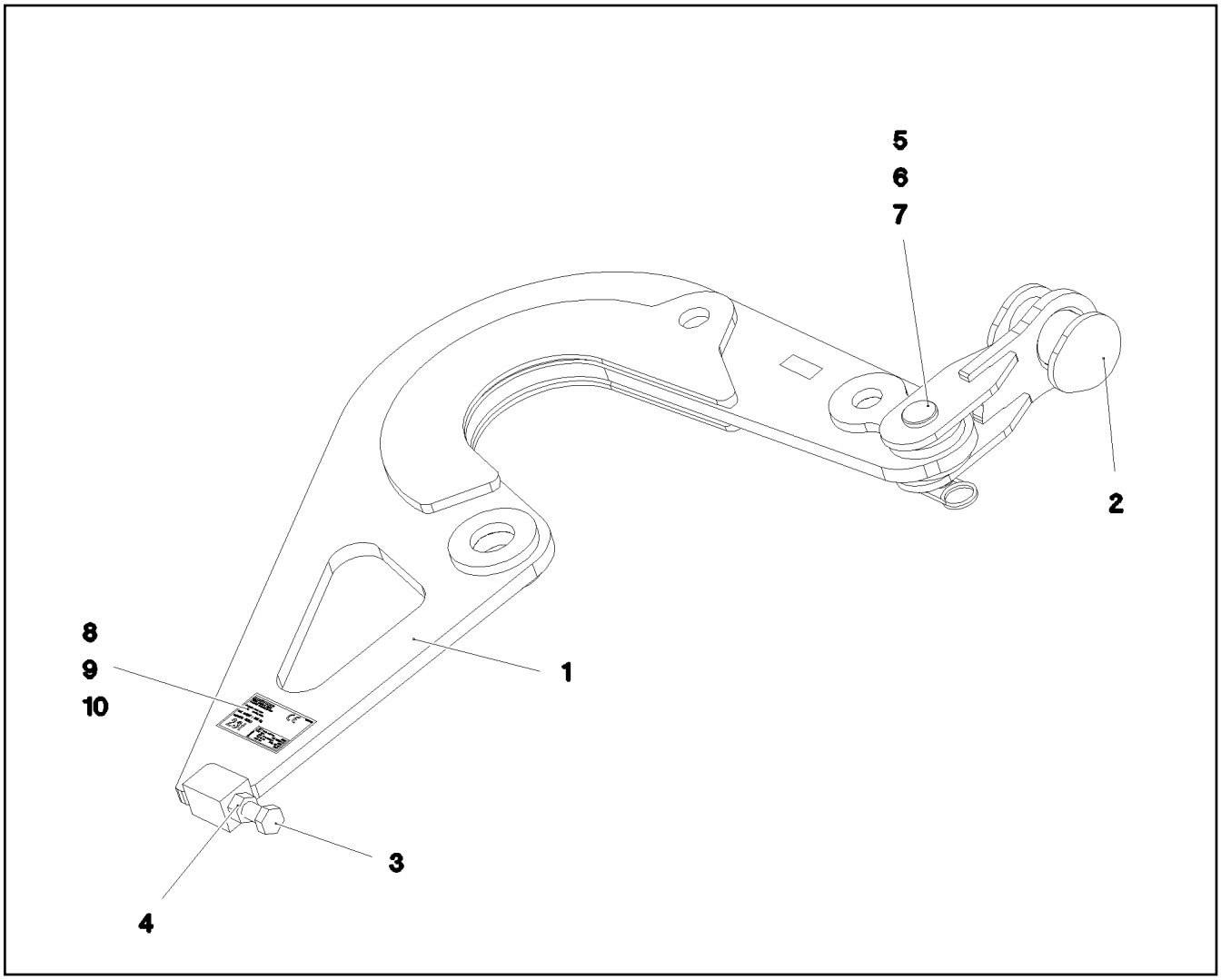

Pos.	Item	Quantity	Description	Bezeichnung
1	968010508	1	ASSEMBLY DEVICE SCHWK.	MONTAGEVORRICHTUNG
2	968498108	1	CROSS STRAP	KREUZLASCHE
3	406607008	1	HEX SCREW ISO 4017 M30X130 10.9 FLZN	SECHSKANTSCHRAUBE
4	10425689	1	HEX NUT ISO 4032 M30 10 FLZN SPF	SECHSKANTMUTTER
5	10179409	1	WASHER ISO 8738 55 160HV-St FLZN SPF	SCHEIBE
6	433105008	1	RETAINING SPRING DIN 2194 6 A3C	SICHERUNGSFEDER
7	97042167	1	PIN 65.0X155 35NICRMOV125 SPF	BOLZEN
8	97067627	2	SIGN 168X88 KLEBEFOLIE SPF	SCHILD
9	97067623	2	SIGN PROJEKT TYP KLEBEFOLIE SPF	SCHILD
10	973567608	2	PLATE IDENTIFICATION NUMBER IDENT-N	SCHILD IDENTNR.

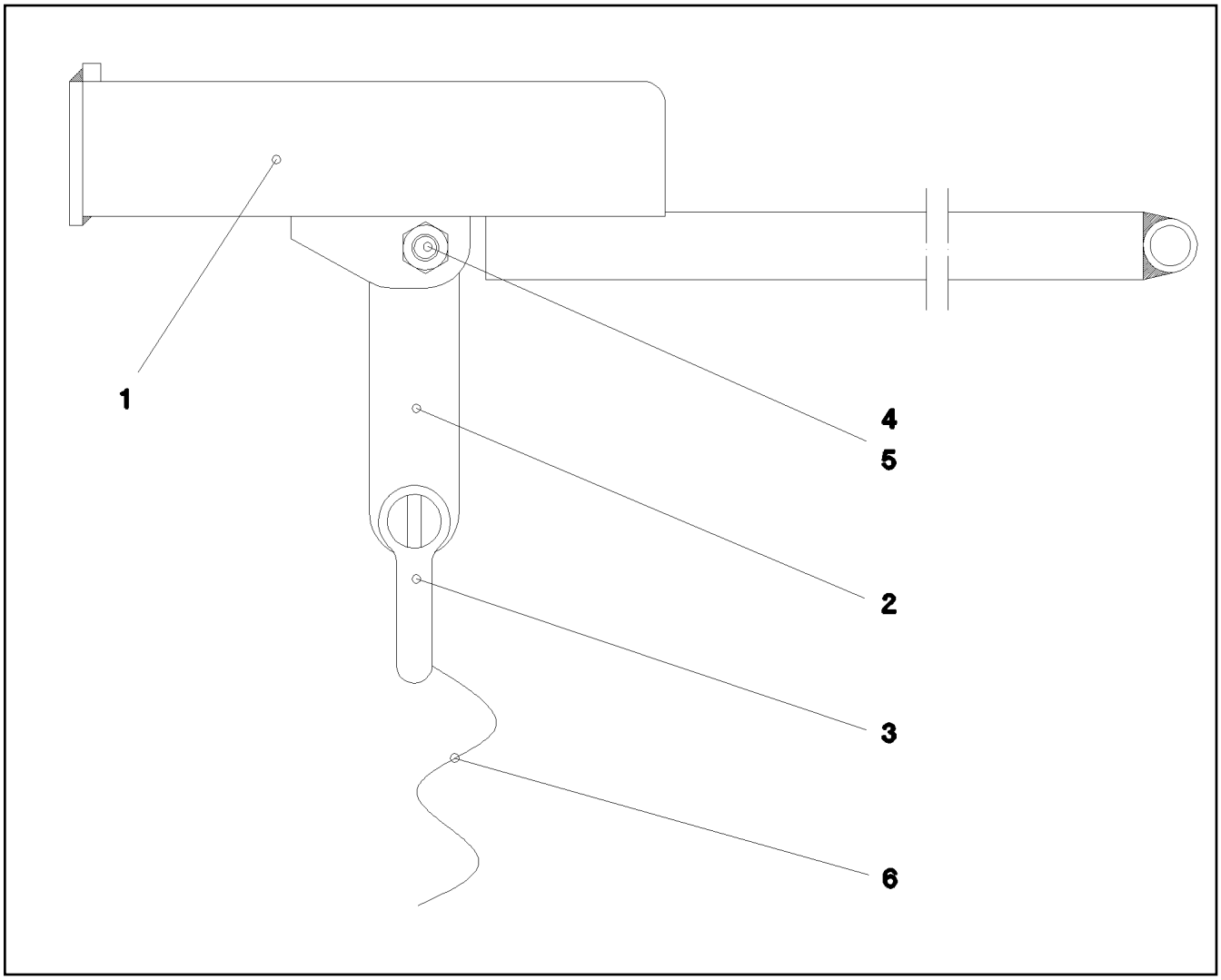

Pos.	Item	Quantity	Description	Bezeichnung
1	925143708	1	HOSE GUIDE WELDED FE//ZNNI8//CN//T0	SCHLAUCHFUEHRUNG SCHWK.
3	773933508	1	SHACKLE DIN 82101 0,25T NG0,25 ST VERZ	SCHAEKEL
4	10875586	1	SOCKET HEAD SCREW ISO 4762 M6X16 8.8	ZYLINDERSCHRAUBE
5	12102692	1	HEX NUT DIN 985 M6 8 ZNNI-480H SPF	SECHSKANTMUTTER
6	773404508	1.6	ROPE 6 0,59KN PERLON	SEIL

Pos.	Item	Quantity	Description	Bezeichnung
10	10876368	1	SENSOR SPF	GEBER

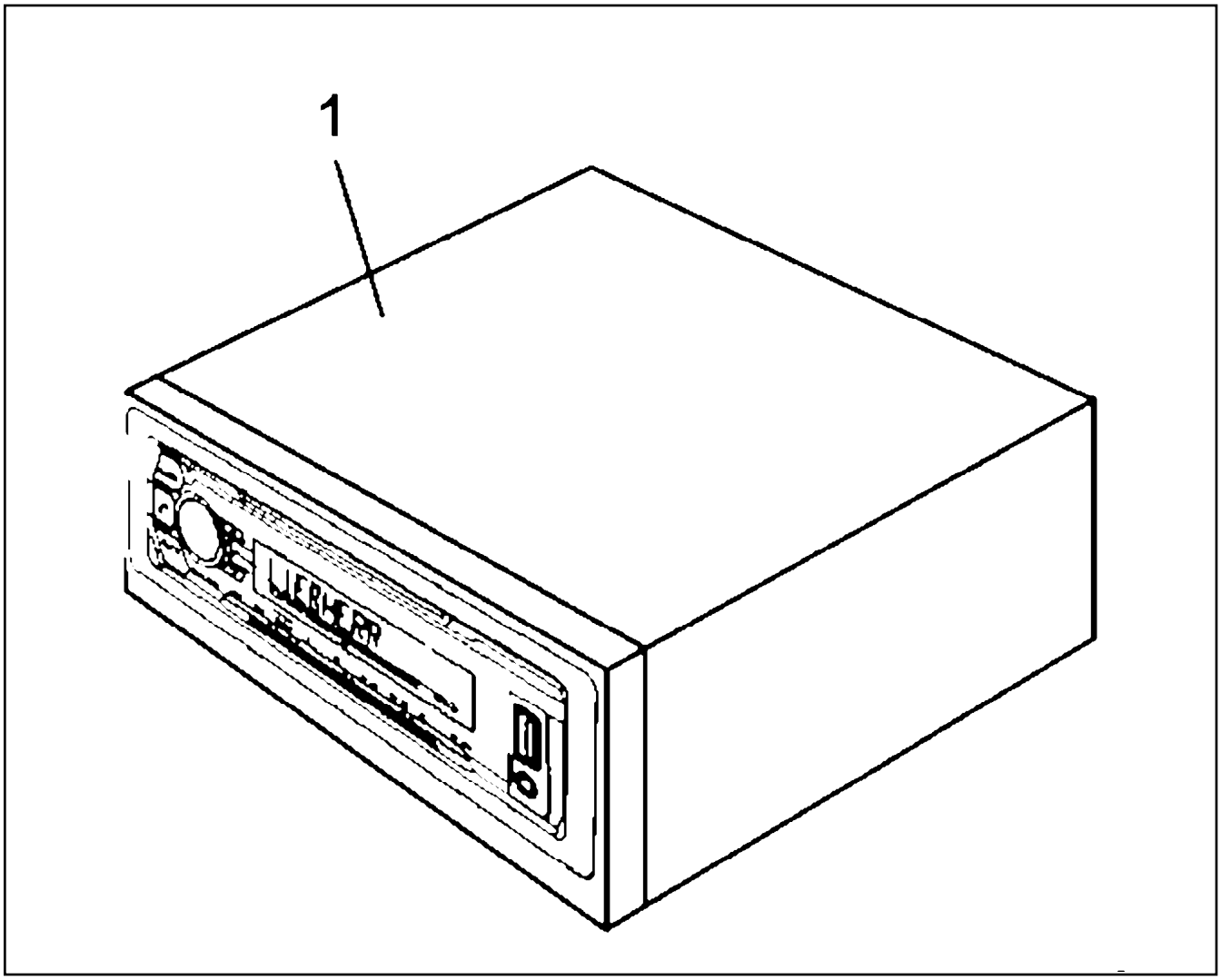

Pos.	Item	Quantity	Description	Bezeichnung
1	12257818	1	CAR RADIO ⇨ ❑ 662	AUTORADIO

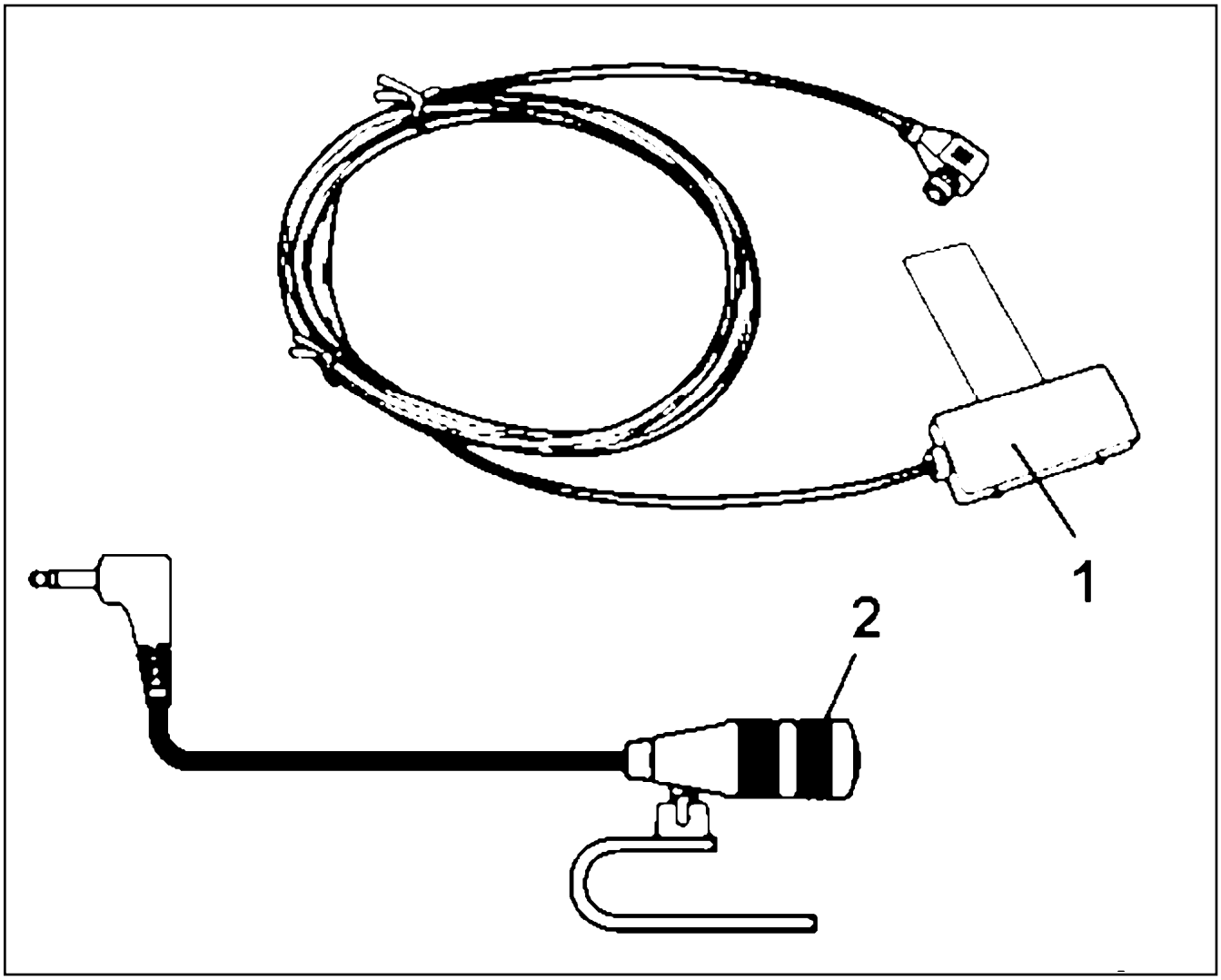

Pos.	Item	Quantity	Description	Bezeichnung
1	10878172	1	ANTENNA	ANTENNE
2	11826513	1	MICROPHONE	MIKROPHON

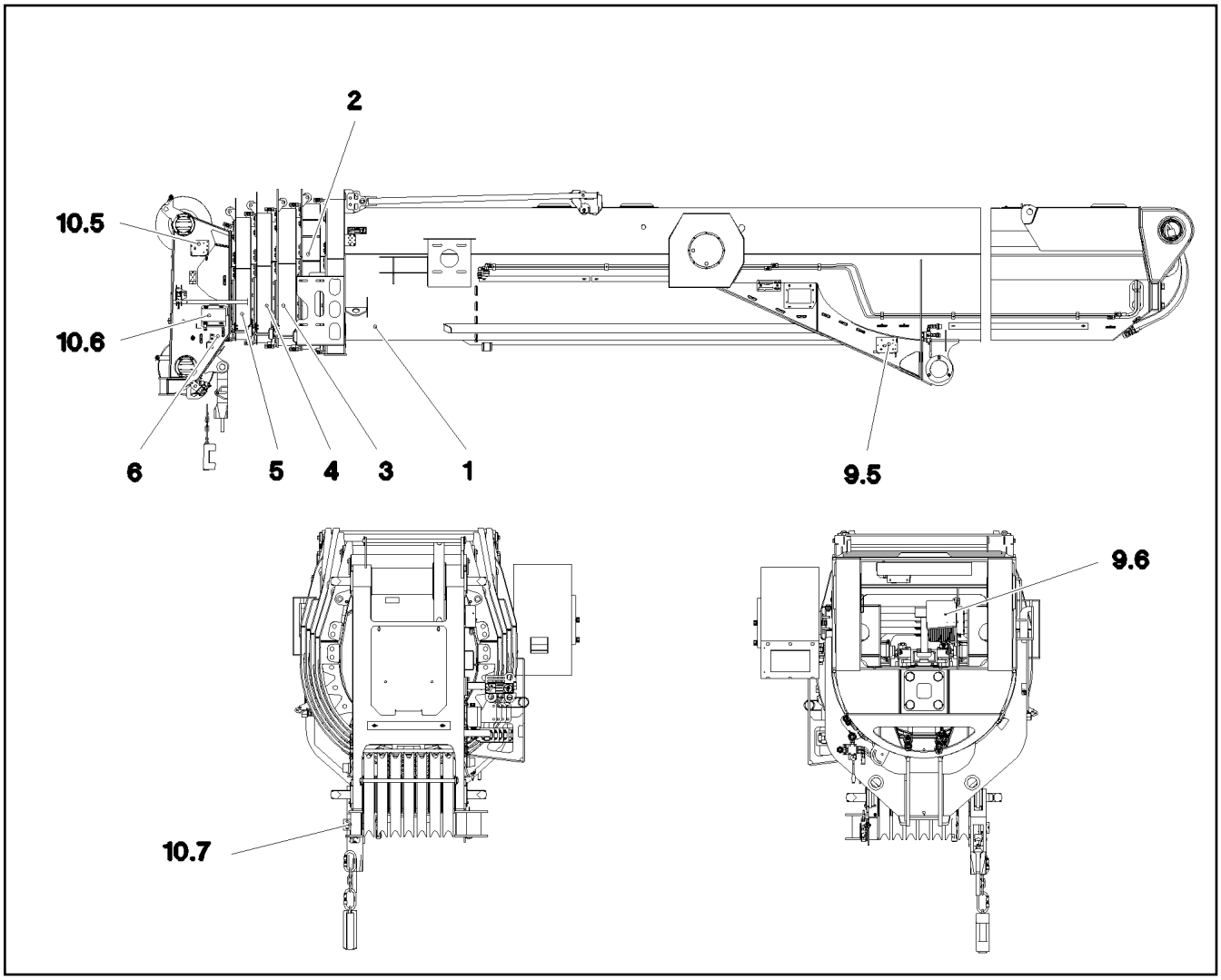

Pos.	Item	Quantity	Description	Bezeichnung
1	917291908	1	PIVOT SECTION, PRE-ASSEMBLED ⇨ ❑ 664	ANLENKSTUECK VORM.
2	917292008	1	TELESCOPIC SECTION 1 PRE-ASSEM ⇨ ❑ 670	TELESKOP 1 VORM.
3	917292108	1	TELESCOPIC SECT.2 PRE-ASSEMBL ⇨ ❑ 675	TELESKOP 2 VORM.
4	917292208	1	TELESCOPIC SECT.3 PRE-ASSEMB ⇨ ❑ 679	TELESKOP 3 VORM.
5	917292308	1	TELESCOPIC SECT.IV PRE-ASSEMBL ⇨ ❑ 683	TELESKOP 4 VORM.
6	917292408	1	TELESCOPIC SECT.5 PRE-ASSEMBLE ⇨ ❑ 687	TELESKOP 5 VORM.
7	918807308	1	MECHANICAL EXTENSION SYSTEM ⇨ ❑ 695	AUSSCHUBMECHANIK
9	966473108	1	ENCODER BASE SECTION ⇨ ❑ 702	GEBER ANLENKSTUECK
10	966200208	1	ENCODER HEAD PIECE ⇨ ❑ 705	GEBER KOPFSTUECK

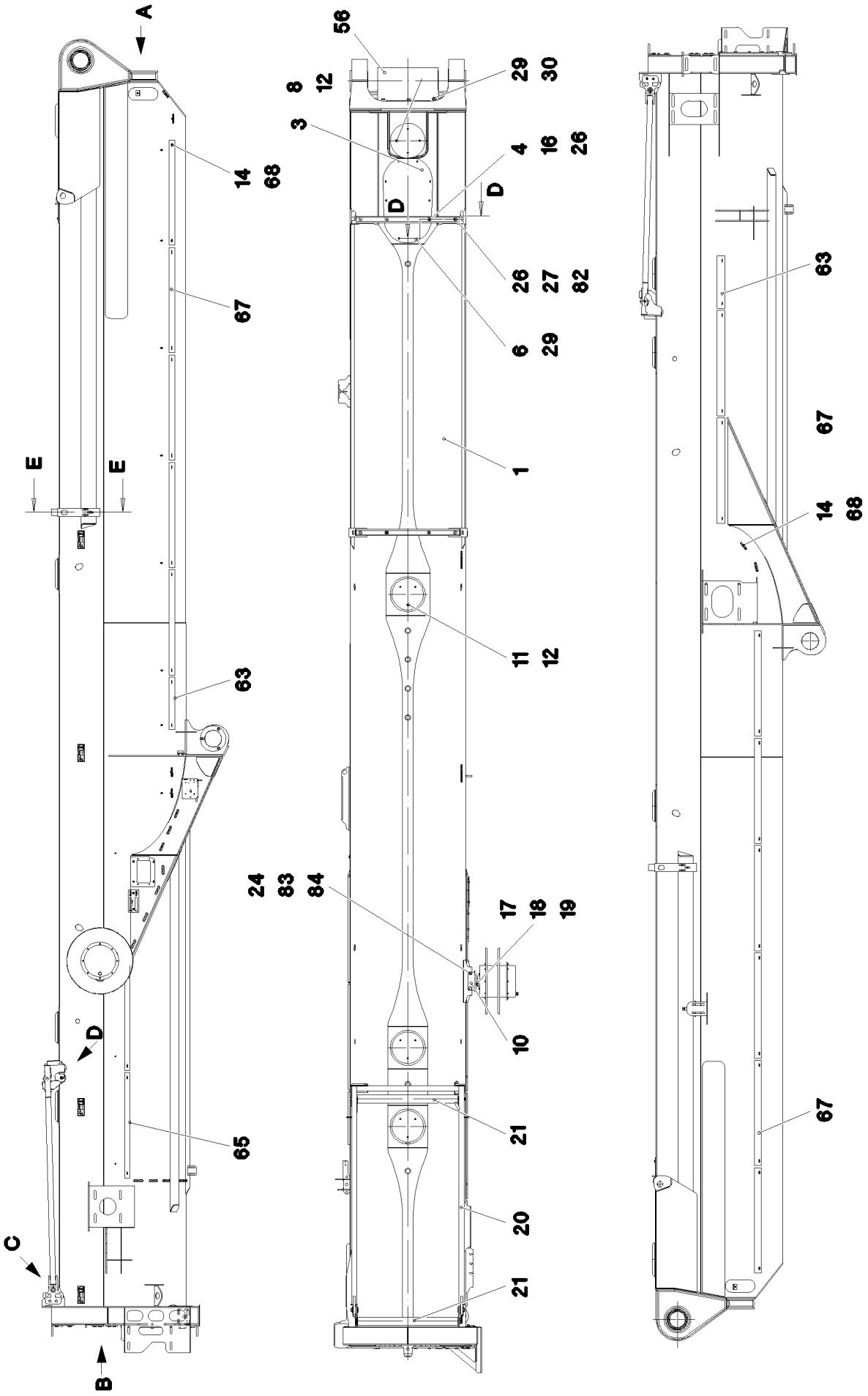

18.7.2022 077507	**etk_en_de_047654 LTR 1220**	664 (1/6)
LIEBHERR	**PIVOT SECTION, PRE-ASSEMBLED** **ANLENKSTUECK VORM.**	**917291908**

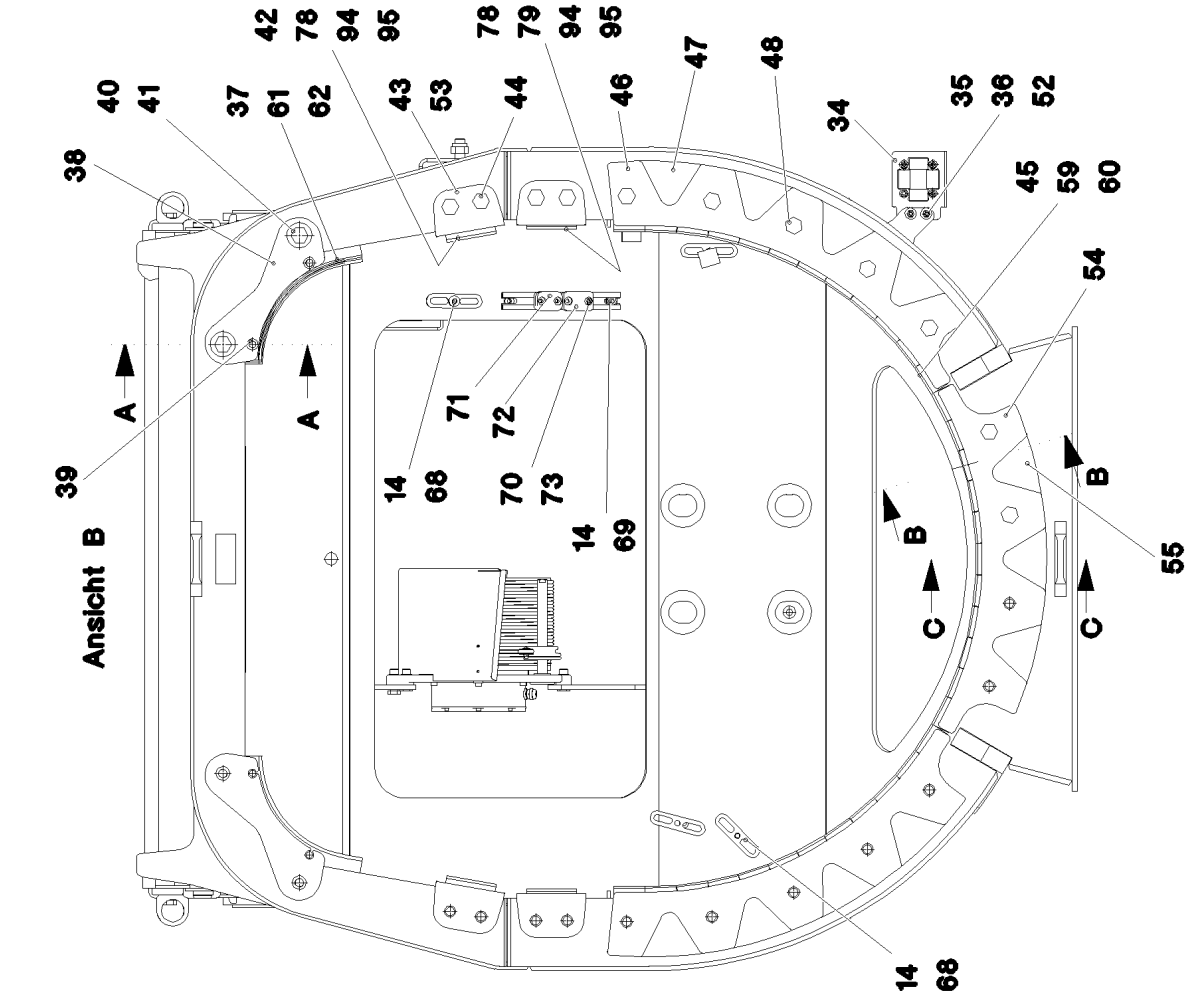
Ansicht B
A
A
B
B
C
C
38
40
41
37
61
62
42
78
94
95
43
53
44
78
79
94
95
46
47
48
34
35
36
52
45
59
60
54
55
39
14
68
71
72
70
73
14
69
14
68

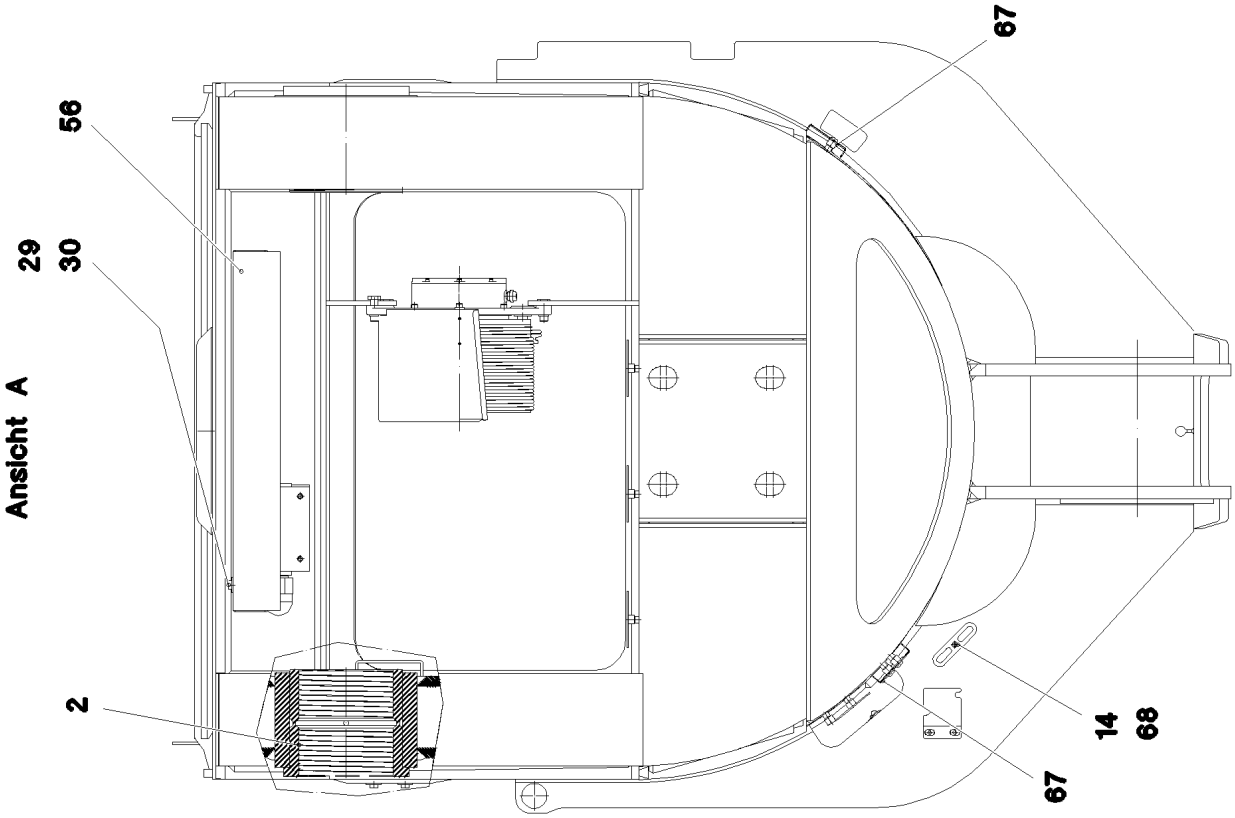
Ansicht A
56
29
30
2
67
14
68
67

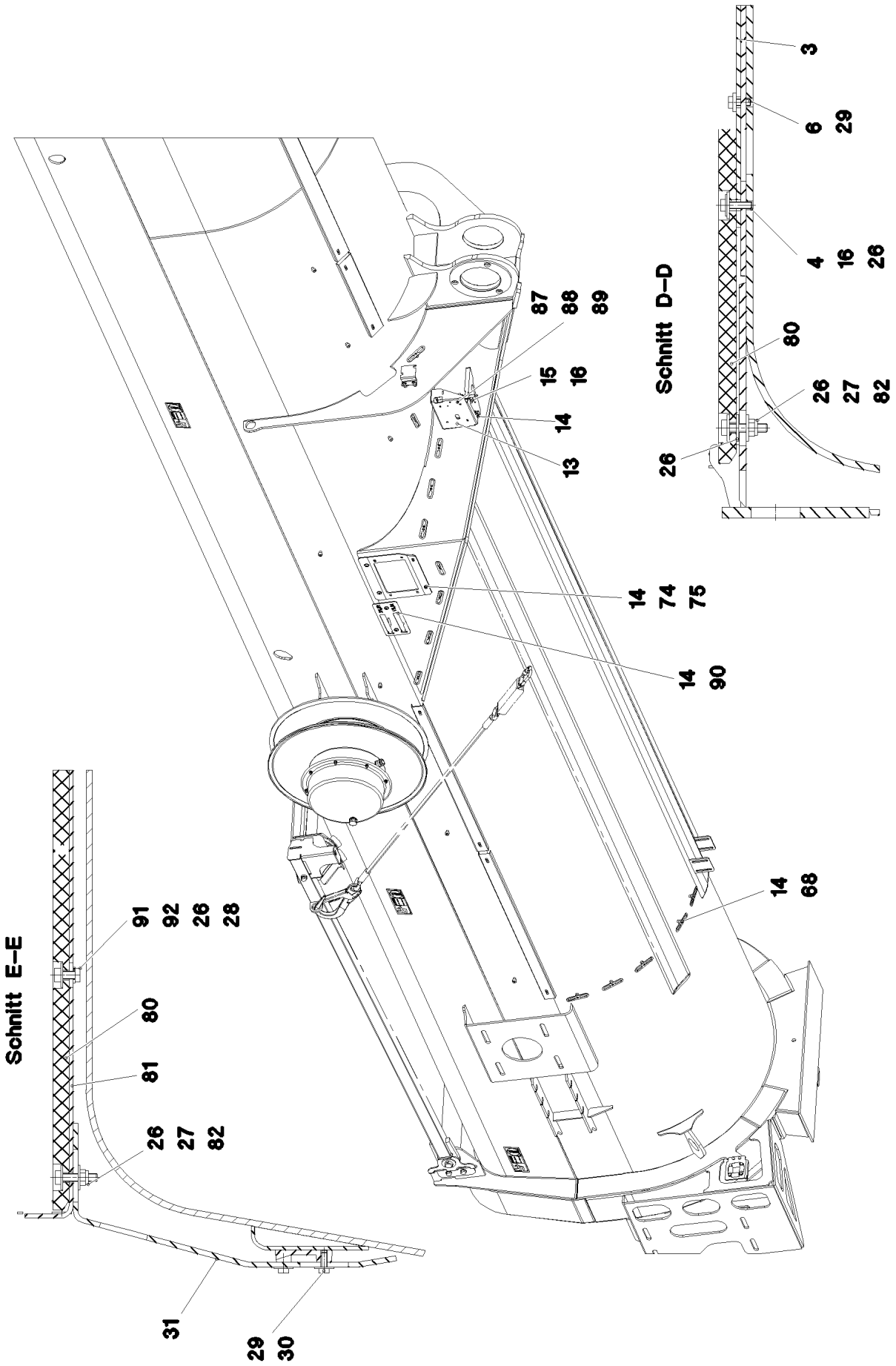
Schnitt D–D
3
6
29
4
16
26
80
26
27
82
26
87
88
89
15
16
14
13
14
74
75
14
90
14
68
Schnitt E–E
91
92
26
28
80
81
26
27
82
31
29
30

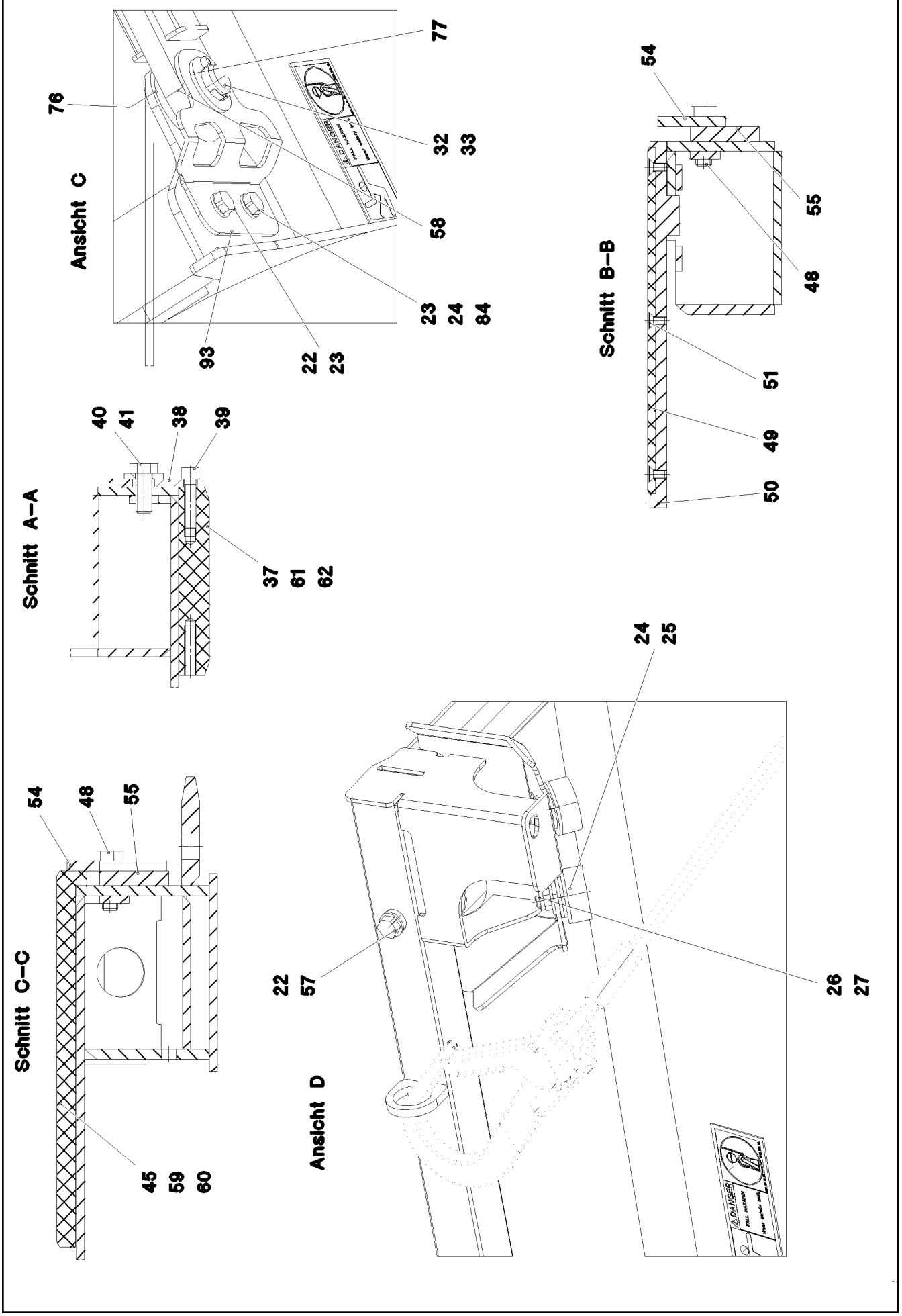
Ansicht C
76
77
32
33
58
23
24
84
93
22
23
Schnitt B–B
54
55
48
51
49
50
Schnitt A–A
40
41
38
39
37
61
62
Schnitt C–C
54
48
55
45
59
60
Ansicht D
24
25
22
57
26
27

Pos.	Item	Quantity	Description	Bezeichnung
1	917292608	1	PIVOT PIECE ST. CONST. SPF	ANLENKSTUECK SCHWK.
2	973357208	2	BEARING BUSH RD200X170 GZ-CUZN25AL5	LAGERBUCHSE
3	96029256	1	COVER WELDED	DECKEL SCHWK.
4	11826527	2	HEX SCREW ISO 4017 M8X30 8.8 480H SPF	SECHSKANTSCHRAUBE
6	11840501	8	WASHER DIN 7349 8,4 200HV 480H SPF	SCHEIBE
8	972144708	1	COVER RD330X27 PA6G	DECKEL
10	972133308	1	PLATE 200X309 S355MC	BLECH
11	973077908	3	COVER 25X300X300 PA6G	DECKEL
12	12208098	13	SOCKET HEAD SCREW ISO 4762 M8X30 8.8	ZYLINDERSCHRAUBE
13	97009056	1	PLATE 2X303X252 DC01 FE//ZNNI8//CN//T0	BLECH
14	12102696	73	BUTTON HEAD SCREW ISO 7380-2 M8X10 0	HALBRUNDKOPFSCHRAUBE
15	10197831	2	HEX SCREW ISO 4017 M8X25 8.8 ZNNI-480	SECHSKANTSCHRAUBE
16	12103465	2	WASHER ISO 7089 8 300HV ZNNI-480H SPF	SCHEIBE
17	10875519	4	HEX SCREW ISO 4017 M16X40 8.8 FLZN SP	SECHSKANTSCHRAUBE
18	10875609	4	HEX NUT DIN 985 M16 8 FLZN SPF	SECHSKANTMUTTER
19	4000809	8	WASHER ISO 7093-1 16 300HV FLZN	SCHEIBE
20	962771108	1	HOIST ROPE GUIDE WELDED	HUBSEILFUEHRUNG SCHWK.
21	749010208	2	CARRYING ROLLER 80/5/20X950 GALV.VER	TRAGROLLE
22	10289804	16	WASHER ISO 7089 12 300HV FLZN SPF	SCHEIBE
23	11631742	4	HEX SCREW ISO 4017 M12X30 8.8 FLZN SP	SECHSKANTSCHRAUBE
24	11182717	8	WASHER ISO 7093-1 12 300HV FLZN SPF	SCHEIBE
25	726613008	4	MEGI BUFFER 50X20-M10X28	MEGIPUFFER
26	11491889	16	WASHER ISO 7093-1 10 300HV FLZN SPF	SCHEIBE
27	10197769	8	HEX NUT DIN 985 M10 8 ZNNI-480H SPF	SECHSKANTMUTTER
28	12102695	2	HEX NUT ISO 4032 M10 8 ZNNI-480H SPF	SECHSKANTMUTTER
29	11651767	17	HEX SCREW ISO 4017 M8X20 8.8 480H SPF	SECHSKANTSCHRAUBE
30	11140469	8	WASHER ISO 7093-1 8 200HV 480H SPF	SCHEIBE
31	973336908	2	PLATE 6X519X80 S355MC	BLECH
32	451430708	2	PIN DIN 1436 30X60X52 ST.50 VERZ	BOLZEN
33	10180363	2	SPLIT PIN ISO 1234 6,3X40 St 480H SPF	SPLINT
34	973774708	1	ROLLER ORIFICE FE//ZNNI8//CN//T0	ROLLENMUNDSTUECK
35	10197836	2	HEX SCREW ISO 4017 M6X25 8.8 ZNNI-480	SECHSKANTSCHRAUBE
36	11656734	2	HEX NUT ISO 7040 M6 8 480H SPF	SECHSKANTMUTTER
37	971063208	2	SLIDE PLATE 190X186X187 PA6G+OEL SPF	GLEITPLATTE
38	970422908	2	PLATE 8X88X270 S960QL FE/FLZN10/NC	BLECH
39	11840140	4	SOCKET HEAD SCREW ISO 4762 M12X50 8	ZYLINDERSCHRAUBE
40	12100310	4	HEX SCREW ISO 4017 M16X40 8.8 FLZN SP	SECHSKANTSCHRAUBE
41	4600021	8	WASHER DIN 7349 17 200HV FLZN SPF	SCHEIBE
42	972898808	2	SLIDE PLATE 20X90X358 SPF	GLEITPLATTE
43	971071608	4	PLATE 4X491X110 S315MC FE//ZNNI8//CN//T	BLECH
44	12100309	8	HEX SCREW ISO 4017 M16X30 8.8 FLZN SP	SECHSKANTSCHRAUBE
45	972898208	33	SLIDE PLATE 30X50X380 PA6G+OEL SPF	GLEITPLATTE
46	973357708	2	PLATE 10X542X412 S960QL	BLECH
47	973357808	2	DISTANCE PLATE 15X141X621 PA6G	DISTANZPLATTE
48	12100283	14	HEX SCREW ISO 4017 M16X50 8.8 FLZN SP	SECHSKANTSCHRAUBE
49	972898608	2	SLIDE PLATE 8X50X350 PA6G+OEL SPF	GLEITPLATTE
50	972898708	2	PLATE 30X370X50 S960QL FE/FLZN10/NC	BLECH
51	10875552	6	COUNTERSUNK SCREW DIN 7991 M8X16 8	SENKSCHRAUBE
52	10875648	2	WASHER ISO 7093-1 6 200HV 480H SPF	SCHEIBE
53	971753708	4	PLATE 8X110X70 S960QL FE/FLZN10/NC	BLECH
54	973357908	1	PLATE 10X504X361 S960QL	BLECH
55	973358008	1	DISTANCE PLATE 15X113X492 PA6G	DISTANZPLATTE
56	970509808	1	PLATE 2X704X353 DC01	BLECH
57	10875508	2	HEX SCREW ISO 4014 M12X80 8.8 FLZN SP	SECHSKANTSCHRAUBE
58	288154508	2	BUSHING RD50,25X20 PA6G	BUCHSE
63	956572408	2	U-PROFILE 1X500X98 DC01 FE//ZNNI8//CN/	U-PROFIL
65	953714108	2	U-PROFILE 1X1000X74 DC01 FE//ZNNI8//CN/	U-PROFIL
67	955927208	13	U-PROFILE 1X1000X98 DC01 FE//ZNNI8//CN/	U-PROFIL
68	953650008	28	CABLE CLAMP DC01 FE//ZNNI8//CN//T0	KABELHALTER
69	954128608	1	CARRIER RAIL X0	TRAGSCHIENE

Pos.	Item	Quantity	Description	Bezeichnung
70	602018008	4	CARRIER RAIL NUT DIN 3015-1 L TM M6 W1	TRAGSCHIENENMUTTER
71	7362946	4	CLAMP-HALF DIN 3015-1 L 2 R 16 PP SW	KLEMMHAELFTE
72	7005052	4	CLAMP-HALF DIN 3015-1 L 3 R 25 PP SW	KLEMMHAELFTE
73	11820284	4	SOCKET HEAD SCREW ISO 4762 M6X30 8.8	ZYLINDERSCHRAUBE
74	953717608	1	PLATE 4X290X230 S315MC FE//ZNNI8//CN//T	BLECH
75	10875857	4	CAGE NUT M6 NIROSTA	KAEFIGMUTTER
76	12226080	2	WASHER DIN 7349 31 100HV FLZN SPF	SCHEIBE
77	10289811	2	WASHER ISO 7089 30 300HV FLZN SPF	SCHEIBE
79	971995508	2	SLIDE PLATE 15X90X358 SPF	GLEITPLATTE
80	973351308	2	SLIDE PLATE 20X60X980 PA6G	GLEITPLATTE
81	975302308	1	PLATE 5X1098X60 S355MC	BLECH
82	11691682	4	HEX SCREW ISO 4017 M10X45 8.8 FLZN SP	SECHSKANTSCHRAUBE
83	11642349	4	HEX SCREW ISO 4017 M12X35 8.8 FLZN SP	SECHSKANTSCHRAUBE
84	10875607	6	HEX NUT DIN 985 M12 8 FLZN SPF	SECHSKANTMUTTER
87	10875642	1	WASHER ISO 7093-1 4 200HV 480H SPF	SCHEIBE
88	10875611	1	HEX NUT DIN 985 M4 8 480H SPF	SECHSKANTMUTTER
89	11691539	1	SOCKET HEAD SCREW ISO 4762 M4X10 8.8	ZYLINDERSCHRAUBE
90	974276208	1	PLATE 2X220X100 DC01 FE//ZNNI8//CN//T0	BLECH
91	11631816	2	HEX SCREW ISO 4017 M10X25 8.8 FLZN SP	SECHSKANTSCHRAUBE
92	500917508	2	WASHER ISO 7089 10 200HV-A2	SCHEIBE
93	974272808	2	PLATE 4X190X188 S315MC FE//ZNNI8//CN//T	BLECH

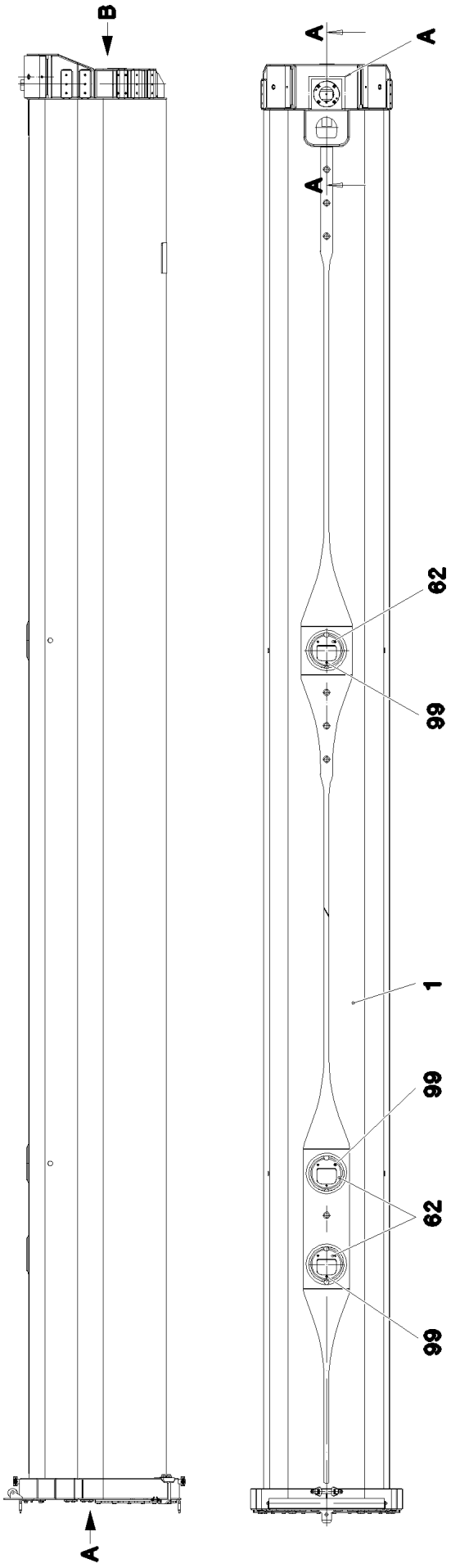
B
A
A
A
62
99
1
99
62
99
A

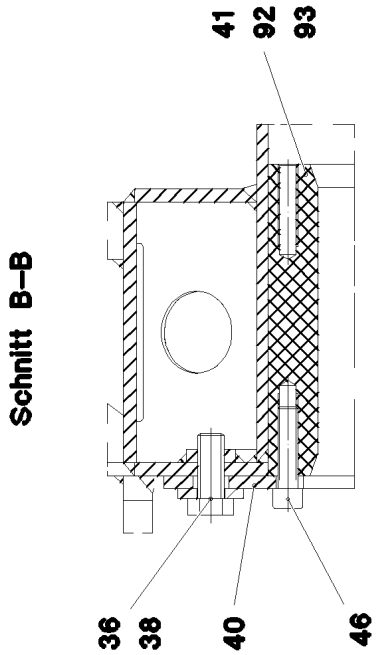
Schnitt B–B
41
92
93
36
38
40
46

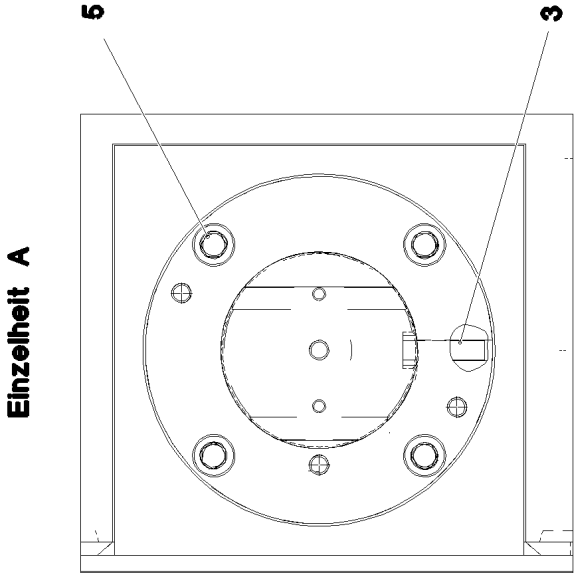
Einzelheit A
5
3

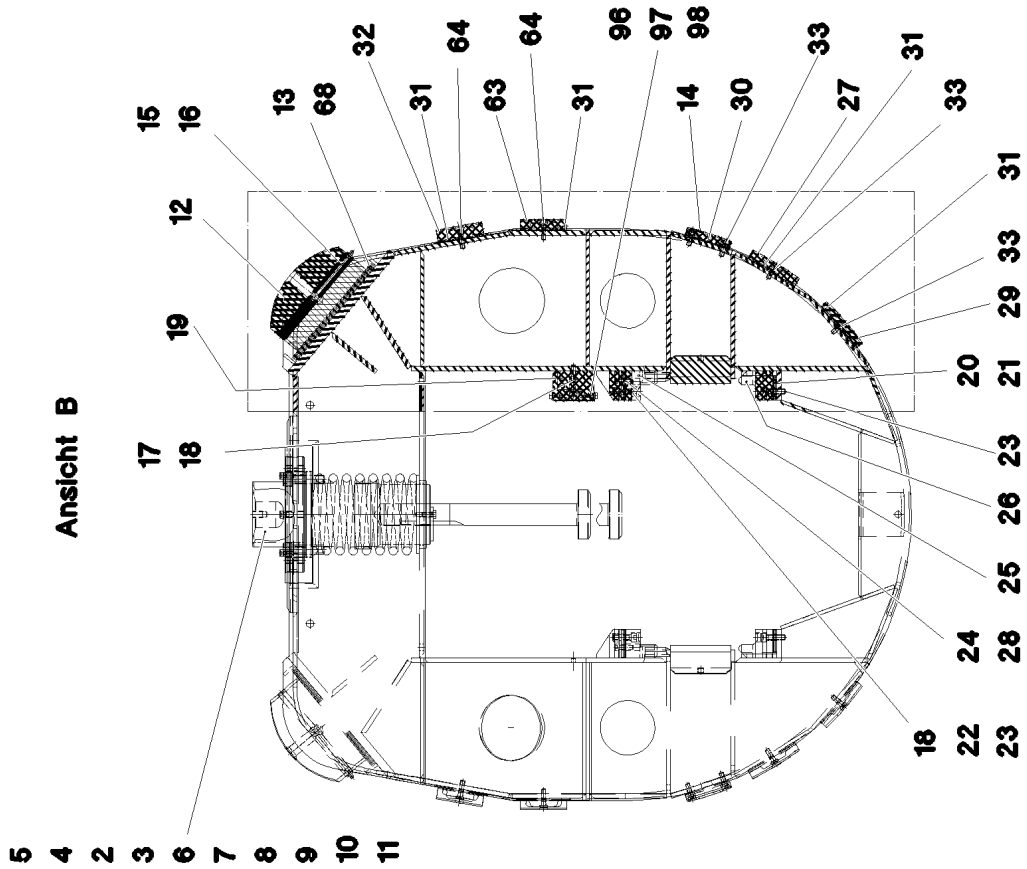
Ansicht B
5 4 2 3 6 7 8 9 10 11
17 18
19
12
15 16
13 68
32
31
64
63
64
31
96 97 98
14
30
33
27
31
33
31
33 29
20 21
23
26
25
24 28
18 22 23

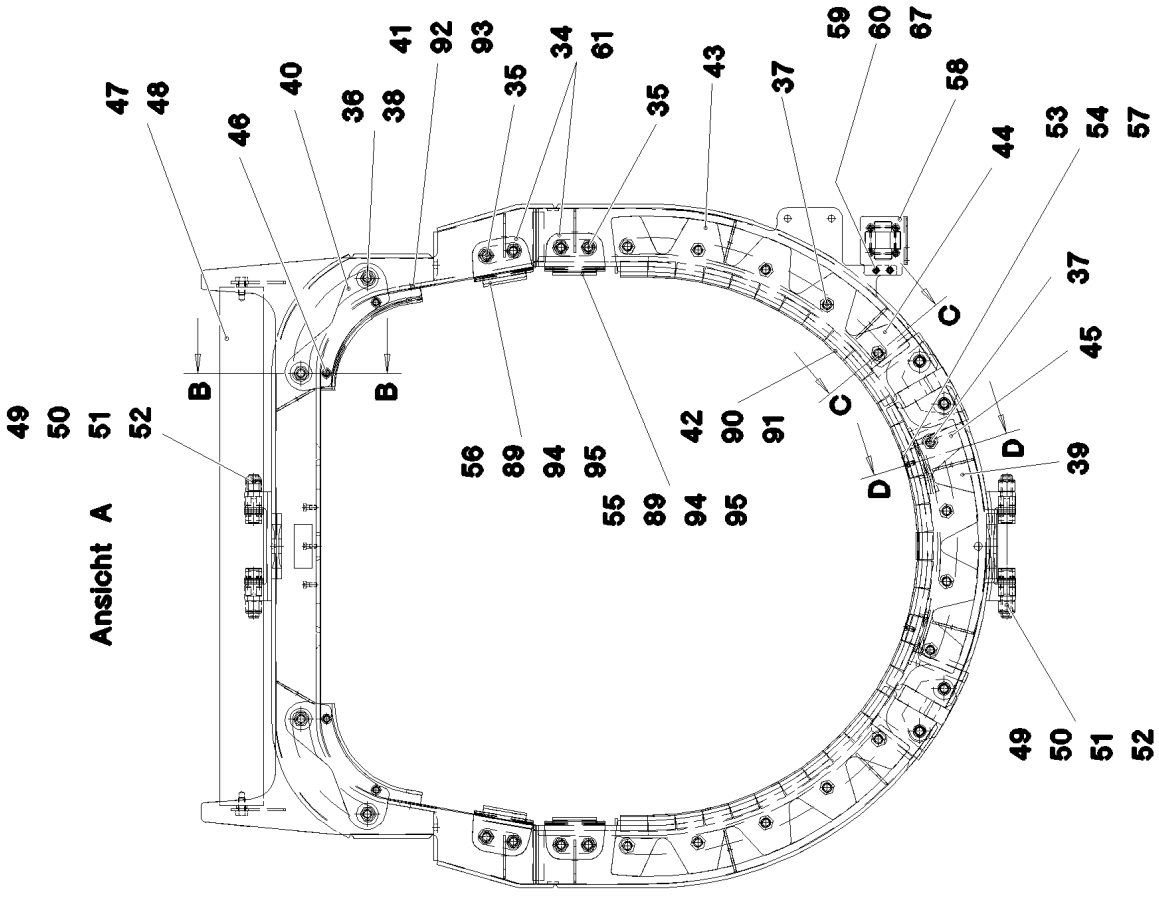
Ansicht A
B
B
C
C
D
D
47 48
46
40
36 38
41 92 93
35
34 61
35
43
37
59 60 67
58
44
53 54 57
37
45
39
49 50 51 52
56 89 94 95
55 89 94 95
42 90 91
49 50 51 52

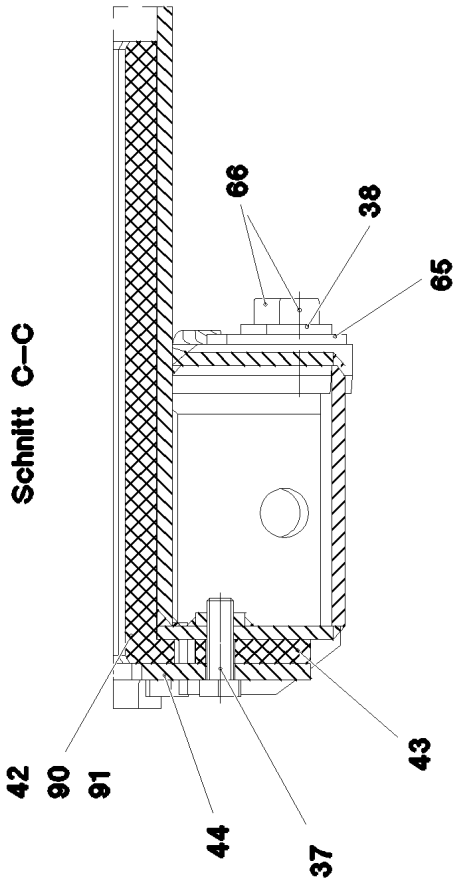
Schnitt C–C
66
38
65
42
90
91
44
37
43

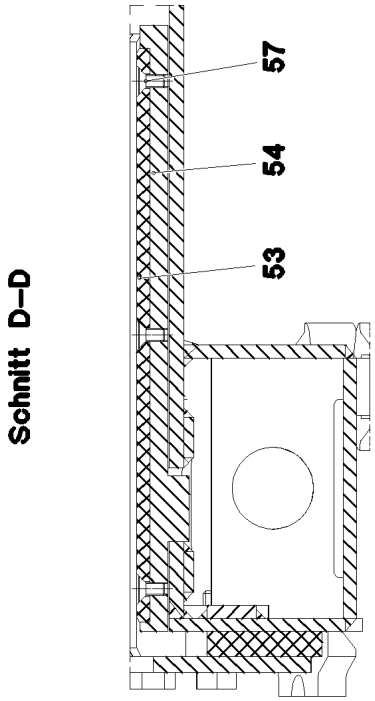
Schnitt D–D
57
54
53

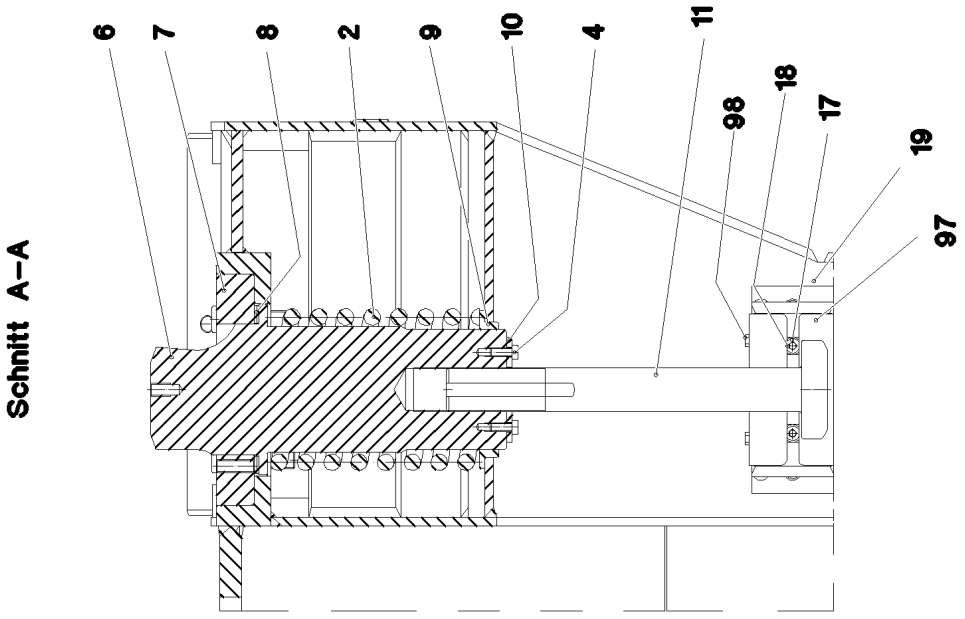
Schnitt A–A
6
7
8
2
9
10
4
11
98
18
17
19
97

Pos.	Item	Quantity	Description	Bezeichnung
1	917292708	1	TELESCOPIC SECTION 1 WELD.CONS RAL	TELESKOP 1 SCHWK.
2	720014908	1	COMPRESSION SPRING 15X133X223 SPF	DRUCKFEDER
3	430611008	1	PARALLEL PIN ISO 2338 12H11X50 30CRNI	ZYLINDERSTIFT
4	11651767	2	HEX SCREW ISO 4017 M8X20 8.8 480H SPF	SECHSKANTSCHRAUBE
5	10001074	4	SOCKET HEAD SCREW ISO 4762 M16X60 10	ZYLINDERSCHRAUBE
6	97027202	1	PIN 160.0X326 35NICRMOV125 SPF	BOLZEN
7	972908008	1	WASHER 40X222X222 S960QL+Z25	SCHEIBE
8	971060108	3	WASHER 2X154X154 DC01 FE//ZNNI8//CN//T	SCHEIBE
9	970535808	1	BUSHING 20x150x150 S960QL	BUCHSE
10	954706408	1	PLATE 5X62X96 S960QL	BLECH
11	970545508	1	SCREW 90x349 35NICRMOV125	SCHRAUBE
12	970545608	2	BEARING PLATE 100X195X350 PA6G+OEL	LAGERPLATTE
13	970545708	10	PLATE 2x350x225 DC01+ZE	BLECH
14	972908108	2	SLIDER 14.5X85X231 PA6G+OEL SPF	GLEITSTUECK
15	970536608	2	BUSHING 16X195	BUCHSE
16	7743242	2	HYDRAULIC-TYPE LUBRICAT.NIPPLE DIN 71	KEGELSCHMIERNIPPEL
17	12103465	2	WASHER ISO 7089 8 300HV ZNNI-480H SPF	SCHEIBE
18	10875599	6	SOCKET HEAD SCREW ISO 4762 M8X25 8.8	ZYLINDERSCHRAUBE
19	97001821	1	SPACER PIECE 190X75X34 PA6G+OEL SPF	DISTANZSTUECK
20	973246808	4	PLATE 3X234X43 DC01 FE//ZNNI8//CN//T0	BLECH
21	973246908	4	PLATE 1X234X43 DC01 FE//ZNNI8//CN//T0	BLECH
22	10875629	4	HEX NUT ISO 7040 M10 8 FLZN SPF	SECHSKANTMUTTER
23	10875572	8	SOCKET HEAD SCREW ISO 4762 M10X35 8	ZYLINDERSCHRAUBE
24	957025308	4	PLATE 1X86X53 DC01 FE//ZNNI8//CN//T0	BLECH
25	970537008	2	SLIDER 53X87X234 PA6G+OEL	GLEITSTUECK
26	970537108	2	SLIDER 234X53X62 PA6G+OEL SPF	GLEITSTUECK
27	970537708	2	SLIDER 18X100X231 PA6G+OEL SPF	GLEITSTUECK
28	957025408	4	PLATE 3X86X53 DC01 FE//ZNNI8//CN//T0	BLECH
29	970537508	2	SLIDER 14X100X233 PA6G+OEL SPF	GLEITSTUECK
30	972908208	2	PLATE 2X210X85 DC01 FE//ZNNI8//CN//T0	BLECH
31	970537808	12	PLATE 2X100X210 DC01 FE//ZNNI8//CN//T0	BLECH
32	972908308	2	SLIDER 23X85X231 PA6G+OEL SPF	GLEITSTUECK
33	10875561	20	SOCKET HEAD SCREW DIN 6912 M8X25 08	ZYLINDERSCHRAUBE
34	971753708	4	PLATE 8X110X70 S960QL FE/FLZN10/NC	BLECH
35	12100309	8	HEX SCREW ISO 4017 M16X30 8.8 FLZN SP	SECHSKANTSCHRAUBE
36	12100310	4	HEX SCREW ISO 4017 M16X40 8.8 FLZN SP	SECHSKANTSCHRAUBE
37	12100283	14	HEX SCREW ISO 4017 M16X50 8.8 FLZN SP	SECHSKANTSCHRAUBE
38	4600021	8	WASHER DIN 7349 17 200HV FLZN SPF	SCHEIBE
39	972898108	1	DISTANCE PLATE 15X110X465 PA6G	DISTANZPLATTE
40	970422908	2	PLATE 8X88X270 S960QL FE/FLZN10/NC	BLECH
41	971063208	2	SLIDE PLATE 190X186X187 PA6G+OEL SPF	GLEITPLATTE
42	972898208	31	SLIDE PLATE 30X50X380 PA6G+OEL SPF	GLEITPLATTE
43	972898308	2	DISTANCE PLATE 15X138X592 PA6G	DISTANZPLATTE
44	972898408	2	PLATE 10X615X181 S960QL FLZN	BLECH
45	972898508	1	PLATE 10X526X167 S960QL	BLECH
46	11840140	4	SOCKET HEAD SCREW ISO 4762 M12X50 8	ZYLINDERSCHRAUBE
47	749010208	1	CARRYING ROLLER 80/5/20X950 GALV.VER	TRAGROLLE
48	11658892	2	HEX SCREW ISO 4017 M12X25 8.8 FLZN SP	SECHSKANTSCHRAUBE
49	972426708	4	GUIDE ISO 8062-3DCTG6 30X50X78 G18NI	EINWEISER
50	10875481	4	GRUB SCREW ISO 4026 M20X90 8.8 FLZN	GEWINDESTIFT
51	10875630	4	HEX NUT ISO 7040 M20 10 FE//ZnNi8//Cn//T0	SECHSKANTMUTTER
52	11691327	16	WASHER ISO 7092 20 300HV FLZN SPF	SCHEIBE
53	972898608	2	SLIDE PLATE 8X50X350 PA6G+OEL SPF	GLEITPLATTE
54	972898708	2	PLATE 30X370X50 S960QL FE/FLZN10/NC	BLECH
55	971995508	2	SLIDE PLATE 15X90X358 SPF	GLEITPLATTE
56	972898808	2	SLIDE PLATE 20X90X358 SPF	GLEITPLATTE
57	10875552	6	COUNTERSUNK SCREW DIN 7991 M8X16 8	SENKSCHRAUBE
58	973774708	1	ROLLER ORIFICE FE//ZNNI8//CN//T0	ROLLENMUNDSTUECK
59	10197836	2	HEX SCREW ISO 4017 M6X25 8.8 ZNNI-480	SECHSKANTSCHRAUBE
60	11656734	2	HEX NUT ISO 7040 M6 8 480H SPF	SECHSKANTMUTTER

Pos.	Item	Quantity	Description	Bezeichnung
61	971071608	4	PLATE 4X491X110 S315MC FE//ZNNI8//CN//T	BLECH
62	97027203	3	COVER 289X289X12 PA6G	DECKEL
63	972908408	2	SLIDER 19X85X231 PA6G+OEL SPF	GLEITSTUECK
64	12216056	12	SOCKET HEAD SCREW DIN 7984 M8X30 08	ZYLINDERSCHRAUBE
65	973154008	2	PLATE 6X125X73 S960QL	BLECH
66	4042302	4	SOCKET HEAD SCREW ISO 4762 M16X40 8	ZYLINDERSCHRAUBE
67	10197771	2	WASHER ISO 7089 6 200HV ZNNI-480H SPF	SCHEIBE
96	972392108	1	SWITCH PANEL 21X75X160 PA6G	SCHALTLEISTE
97	972373808	2	SWITCH PLATE 2X139X46 DC01 FE//ZNNI8/	SCHALTBLECH
98	11642497	4	HEX SCREW ISO 4017 M6X10 8.8 480H SPF	SECHSKANTSCHRAUBE
99	12216054	9	SOCKET HEAD SCREW DIN 7984 M8X20 08	ZYLINDERSCHRAUBE

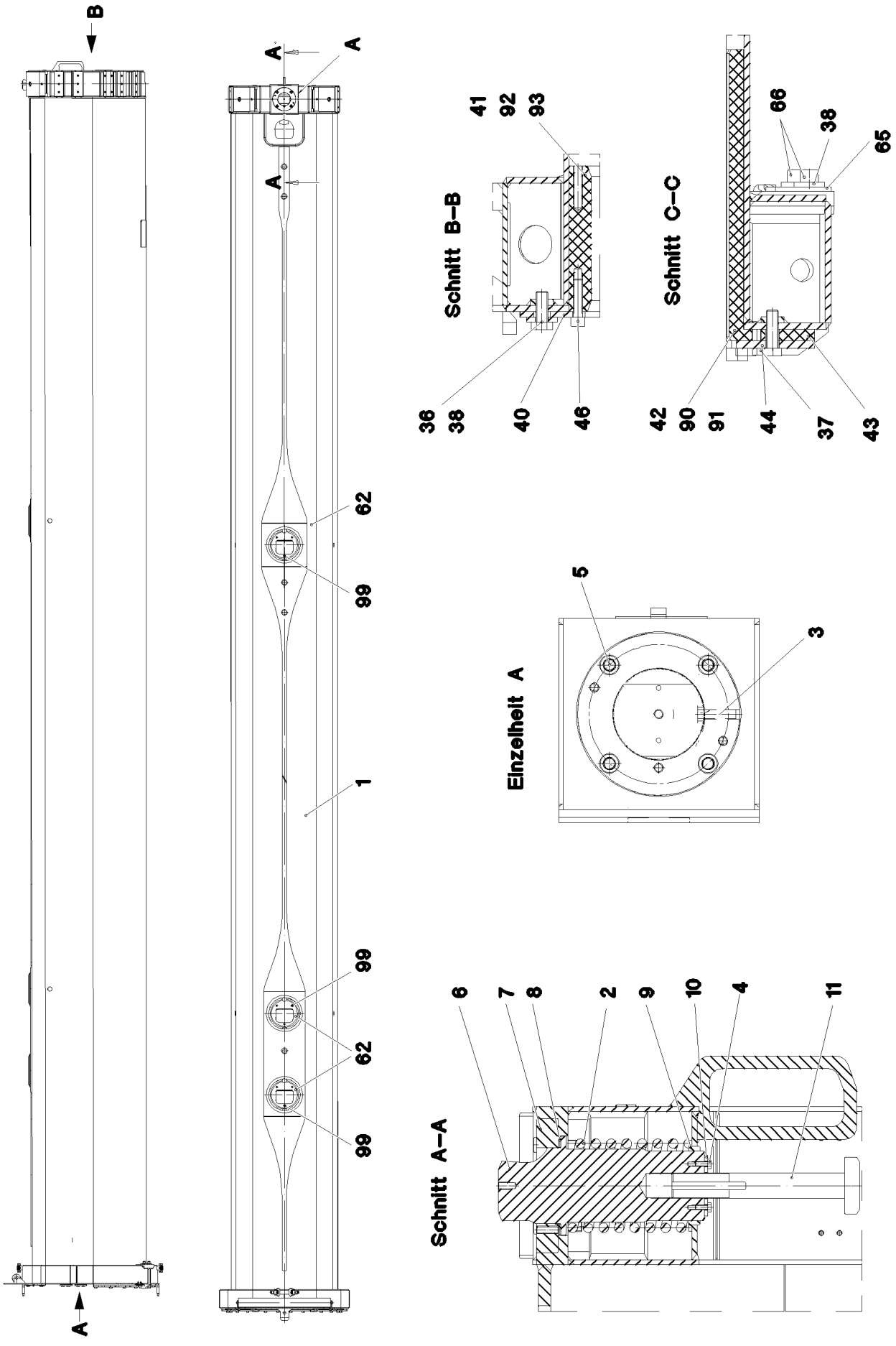

18.7.2022 077514	**etk_en_de_047654 LTR 1220**	675 (1/4)
LIEBHERR	**TELESCOPIC SECT.2 PRE-ASSEMBL** **TELESKOP 2 VORM.**	**917292108**

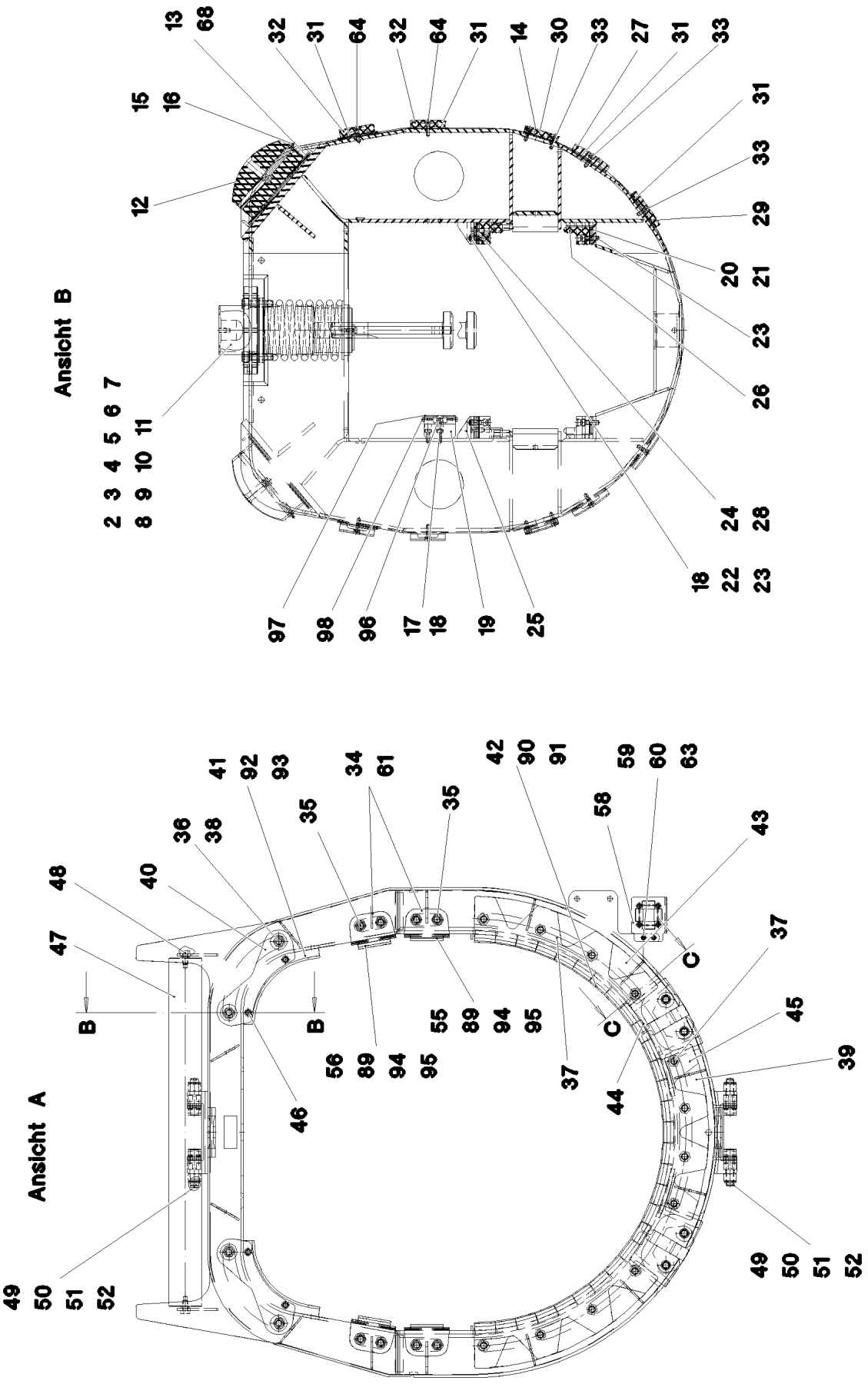
Ansicht B
Ansicht A
B
C

Pos.	Item	Quantity	Description	Bezeichnung
1	917292808	1	TELESCOPIC SECT.2 WELD.CONSTR RAL 7	TELESKOP 2 SCHWK.
2	720014908	1	COMPRESSION SPRING 15X133X223 SPF	DRUCKFEDER
3	430611008	1	PARALLEL PIN ISO 2338 12H11X50 30CRNI	ZYLINDERSTIFT
4	11651767	2	HEX SCREW ISO 4017 M8X20 8.8 480H SPF	SECHSKANTSCHRAUBE
5	10001074	4	SOCKET HEAD SCREW ISO 4762 M16X60 10	ZYLINDERSCHRAUBE
6	97027202	1	PIN 160.0X326 35NICRMOV125 SPF	BOLZEN
7	972908008	1	WASHER 40X222X222 S960QL+Z25	SCHEIBE
8	971060108	2	WASHER 2X154X154 DC01 FE//ZNNI8//CN//T	SCHEIBE
9	970535808	1	BUSHING 20x150x150 S960QL	BUCHSE
10	954706408	1	PLATE 5X62X96 S960QL	BLECH
11	970574508	1	SCREW 90x297 35NICRMOV125	SCHRAUBE
12	970536108	2	BEARING PLATE 100X195X230 PA6G+OEL	LAGERPLATTE
13	970536208	10	PLATE 2x230x225 DC01+ZE	BLECH
14	972908108	2	SLIDER 14.5X85X231 PA6G+OEL SPF	GLEITSTUECK
15	970536608	2	BUSHING 16X195	BUCHSE
16	7743242	2	HYDRAULIC-TYPE LUBRICAT.NIPPLE DIN 71	KEGELSCHMIERNIPPEL
17	12103465	2	WASHER ISO 7089 8 300HV ZNNI-480H SPF	SCHEIBE
18	10875599	8	SOCKET HEAD SCREW ISO 4762 M8X25 8.8	ZYLINDERSCHRAUBE
19	97001821	1	SPACER PIECE 190X75X34 PA6G+OEL SPF	DISTANZSTUECK
20	973246808	4	PLATE 3X234X43 DC01 FE//ZNNI8//CN//T0	BLECH
21	973246908	4	PLATE 1X234X43 DC01 FE//ZNNI8//CN//T0	BLECH
22	10875629	4	HEX NUT ISO 7040 M10 8 FLZN SPF	SECHSKANTMUTTER
23	10875572	8	SOCKET HEAD SCREW ISO 4762 M10X35 8	ZYLINDERSCHRAUBE
24	957025308	4	PLATE 1X86X53 DC01 FE//ZNNI8//CN//T0	BLECH
25	970537008	2	SLIDER 53X87X234 PA6G+OEL	GLEITSTUECK
26	970537108	2	SLIDER 234X53X62 PA6G+OEL SPF	GLEITSTUECK
27	970537708	2	SLIDER 18X100X231 PA6G+OEL SPF	GLEITSTUECK
28	957025408	4	PLATE 3X86X53 DC01 FE//ZNNI8//CN//T0	BLECH
29	970537508	2	SLIDER 14X100X233 PA6G+OEL SPF	GLEITSTUECK
30	972908208	4	PLATE 2X210X85 DC01 FE//ZNNI8//CN//T0	BLECH
31	970537808	18	PLATE 2X100X210 DC01 FE//ZNNI8//CN//T0	BLECH
32	972908408	4	SLIDER 19X85X231 PA6G+OEL SPF	GLEITSTUECK
33	10875561	20	SOCKET HEAD SCREW DIN 6912 M8X25 08	ZYLINDERSCHRAUBE
34	971753708	4	PLATE 8X110X70 S960QL FE/FLZN10/NC	BLECH
35	12100309	8	HEX SCREW ISO 4017 M16X30 8.8 FLZN SP	SECHSKANTSCHRAUBE
36	12100310	4	HEX SCREW ISO 4017 M16X40 8.8 FLZN SP	SECHSKANTSCHRAUBE
37	12100283	12	HEX SCREW ISO 4017 M16X50 8.8 FLZN SP	SECHSKANTSCHRAUBE
38	4600021	8	WASHER DIN 7349 17 200HV FLZN SPF	SCHEIBE
39	973245708	1	DISTANCE PLATE 15X105X429 PA6G	DISTANZPLATTE
40	970422908	2	PLATE 8X88X270 S960QL FE/FLZN10/NC	BLECH
41	971063208	2	SLIDE PLATE 190X186X187 PA6G+OEL SPF	GLEITPLATTE
42	972898208	29	SLIDE PLATE 30X50X380 PA6G+OEL SPF	GLEITPLATTE
43	973245808	2	DISTANCE PLATE 15X119X497 PA6G	DISTANZPLATTE
44	973245908	2	PLATE 10X527X161 S960QL FLZN	BLECH
45	973246008	1	PLATE 10X498X162 S960QL	BLECH
46	11840140	4	SOCKET HEAD SCREW ISO 4762 M12X50 8	ZYLINDERSCHRAUBE
47	749009408	1	CARRYING ROLLER 80/5/20X850 GALV.VER	TRAGROLLE
48	11658892	2	HEX SCREW ISO 4017 M12X25 8.8 FLZN SP	SECHSKANTSCHRAUBE
49	972426708	4	GUIDE ISO 8062-3DCTG6 30X50X78 G18NI	EINWEISER
50	10875481	4	GRUB SCREW ISO 4026 M20X90 8.8 FLZN	GEWINDESTIFT
51	10875630	4	HEX NUT ISO 7040 M20 10 FE//ZnNi8//Cn//T0	SECHSKANTMUTTER
52	11691327	16	WASHER ISO 7092 20 300HV FLZN SPF	SCHEIBE
55	971995508	2	SLIDE PLATE 15X90X358 SPF	GLEITPLATTE
56	972898808	2	SLIDE PLATE 20X90X358 SPF	GLEITPLATTE
58	973774708	1	ROLLER ORIFICE FE//ZNNI8//CN//T0	ROLLENMUNDSTUECK
59	10197836	2	HEX SCREW ISO 4017 M6X25 8.8 ZNNI-480	SECHSKANTSCHRAUBE
60	11656734	2	HEX NUT ISO 7040 M6 8 480H SPF	SECHSKANTMUTTER
61	971071608	4	PLATE 4X491X110 S315MC FE//ZNNI8//CN//T	BLECH
62	97027203	3	COVER 289X289X12 PA6G	DECKEL
63	10197771	2	WASHER ISO 7089 6 200HV ZNNI-480H SPF	SCHEIBE

Pos.	Item	Quantity	Description	Bezeichnung
64	12216056	12	SOCKET HEAD SCREW DIN 7984 M8X30 08	ZYLINDERSCHRAUBE
65	973154008	2	PLATE 6X125X73 S960QL	BLECH
66	4042302	4	SOCKET HEAD SCREW ISO 4762 M16X40 8	ZYLINDERSCHRAUBE
96	972392108	1	SWITCH PANEL 21X75X160 PA6G	SCHALTLEISTE
97	972373808	2	SWITCH PLATE 2X139X46 DC01 FE//ZNNI8/	SCHALTBLECH
98	11642497	4	HEX SCREW ISO 4017 M6X10 8.8 480H SPF	SECHSKANTSCHRAUBE
99	12216054	9	SOCKET HEAD SCREW DIN 7984 M8X20 08	ZYLINDERSCHRAUBE

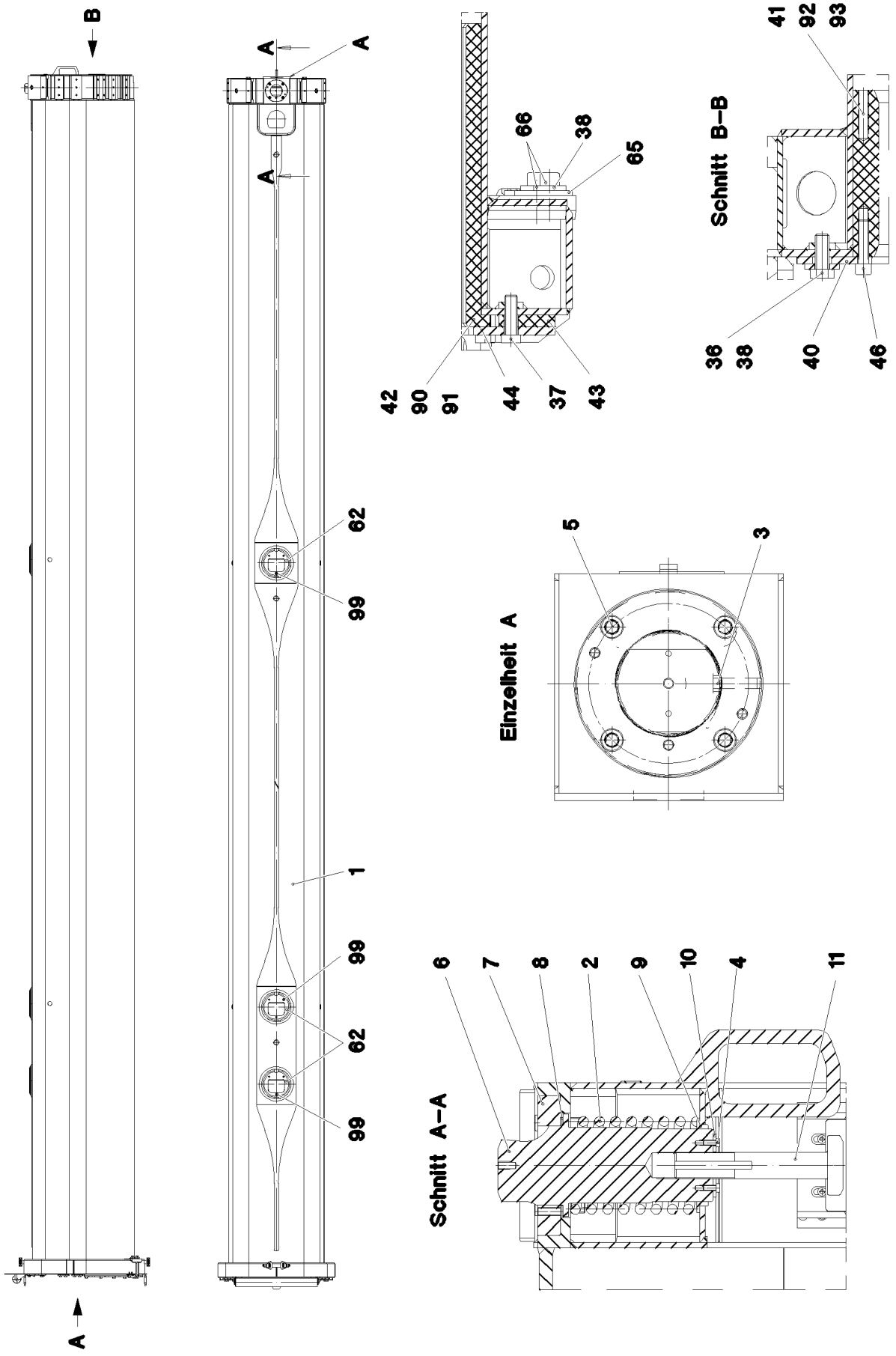

18.7.2022 077516 LIEBHERR	**etk_en_de_047654 LTR 1220** **TELESCOPIC SECT.3 PRE-ASSEMB** **TELESKOP 3 VORM.**	❑ 679 (1/4) **917292208**

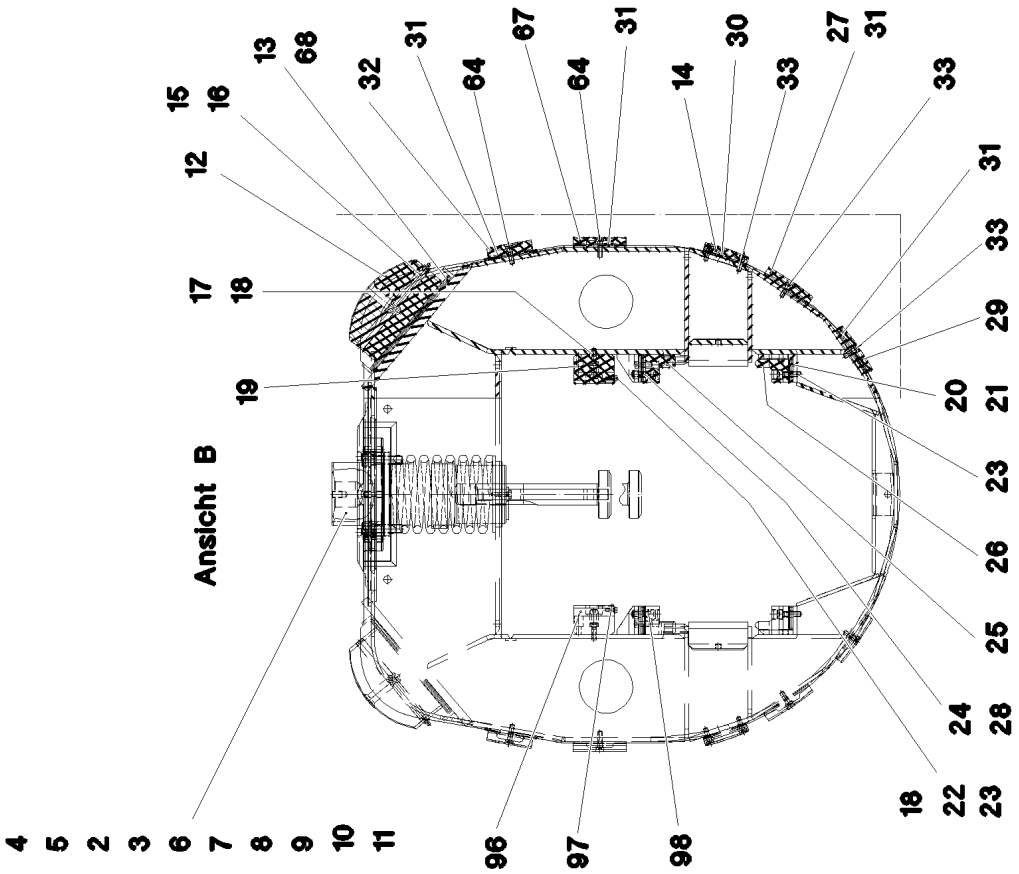
Ansicht B
4 5 2 3 6 7 8 9 10 11
96 97 98
18 22 23 24 28 25 26 23 20 21 29 33 31
19 17 18 12 15 16 13 68 32 31 64 67 64 31 14 30 33 27 31 33

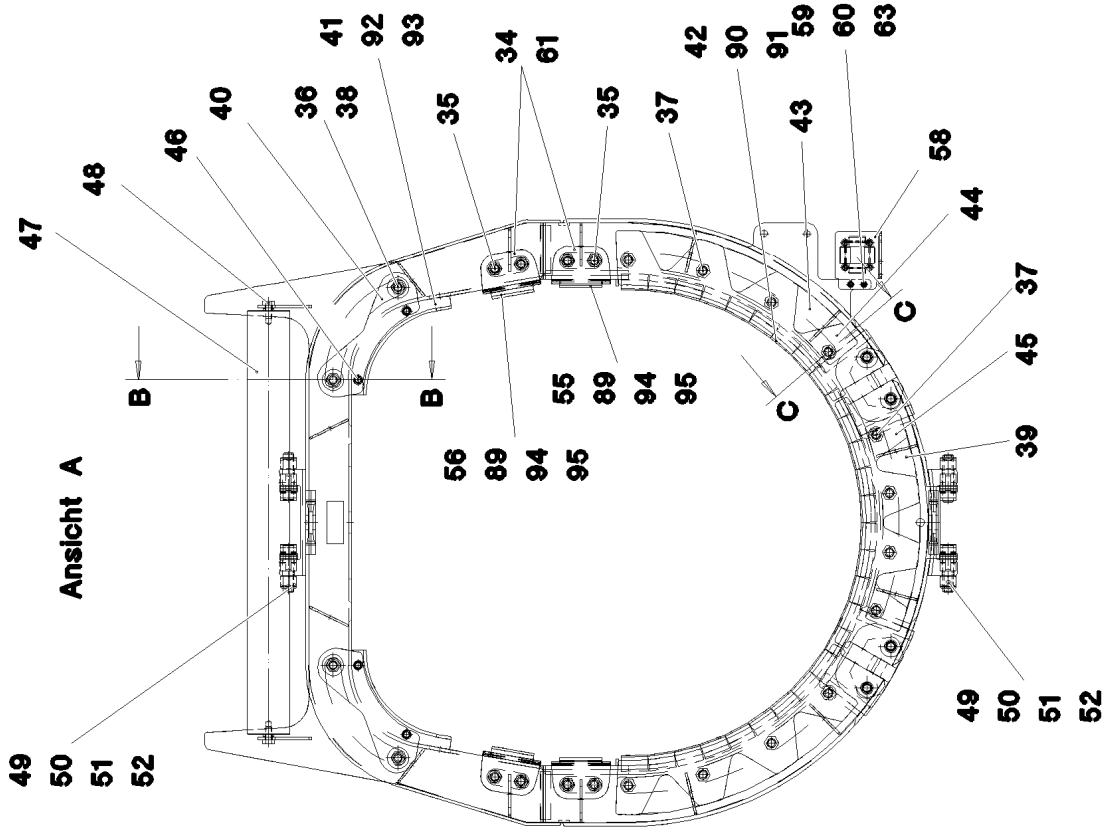
Ansicht A
B B C C
49 50 51 52
56 89 94 95
55 89 94 95
47 48 46 40 36 38 41 92 93 35 34 61 35 37 42 90 91 59 60 63 43 58 44 37 45 39
49 50 51 52

Pos.	Item	Quantity	Description	Bezeichnung
1	917292908	1	TELESCOPIC SECT.3 WELD.CONST RAL 701	TELESKOP 3 SCHWK.
2	720014908	1	COMPRESSION SPRING 15X133X223 SPF	DRUCKFEDER
3	430611008	1	PARALLEL PIN ISO 2338 12H11X50 30CRNI	ZYLINDERSTIFT
4	11651767	2	HEX SCREW ISO 4017 M8X20 8.8 480H SPF	SECHSKANTSCHRAUBE
5	10001074	4	SOCKET HEAD SCREW ISO 4762 M16X60 10	ZYLINDERSCHRAUBE
6	97027202	1	PIN 160.0X326 35NICRMOV125 SPF	BOLZEN
7	972908008	1	WASHER 40X222X222 S960QL+Z25	SCHEIBE
8	971060108	3	WASHER 2X154X154 DC01 FE//ZNNI8//CN//T	SCHEIBE
9	970535808	1	BUSHING 20x150x150 S960QL	BUCHSE
10	954706408	1	PLATE 5X62X96 S960QL	BLECH
11	973253908	1	MUSHROOM-SHAPED DRAWING BOLT 90.	ZIEHPILZ
12	970536108	2	BEARING PLATE 100X195X230 PA6G+OEL	LAGERPLATTE
13	970536208	10	PLATE 2x230x225 DC01+ZE	BLECH
14	972908108	2	SLIDER 14.5X85X231 PA6G+OEL SPF	GLEITSTUECK
15	970536608	2	BUSHING 16X195	BUCHSE
16	7743242	2	HYDRAULIC-TYPE LUBRICAT.NIPPLE DIN 71	KEGELSCHMIERNIPPEL
17	12103465	4	WASHER ISO 7089 8 300HV ZNNI-480H SPF	SCHEIBE
18	10875599	10	SOCKET HEAD SCREW ISO 4762 M8X25 8.8	ZYLINDERSCHRAUBE
19	97001821	2	SPACER PIECE 190X75X34 PA6G+OEL SPF	DISTANZSTUECK
20	973246808	4	PLATE 3X234X43 DC01 FE//ZNNI8//CN//T0	BLECH
21	973246908	4	PLATE 1X234X43 DC01 FE//ZNNI8//CN//T0	BLECH
22	10875629	4	HEX NUT ISO 7040 M10 8 FLZN SPF	SECHSKANTMUTTER
23	10875572	8	SOCKET HEAD SCREW ISO 4762 M10X35 8	ZYLINDERSCHRAUBE
24	957025308	4	PLATE 1X86X53 DC01 FE//ZNNI8//CN//T0	BLECH
25	970537008	2	SLIDER 53X87X234 PA6G+OEL	GLEITSTUECK
26	970537108	2	SLIDER 234X53X62 PA6G+OEL SPF	GLEITSTUECK
27	970537708	2	SLIDER 18X100X231 PA6G+OEL SPF	GLEITSTUECK
28	957025408	4	PLATE 3X86X53 DC01 FE//ZNNI8//CN//T0	BLECH
29	970537508	2	SLIDER 14X100X233 PA6G+OEL SPF	GLEITSTUECK
30	972908208	4	PLATE 2X210X85 DC01 FE//ZNNI8//CN//T0	BLECH
31	970537808	14	PLATE 2X100X210 DC01 FE//ZNNI8//CN//T0	BLECH
32	972908408	2	SLIDER 19X85X231 PA6G+OEL SPF	GLEITSTUECK
33	10875561	20	SOCKET HEAD SCREW DIN 6912 M8X25 08	ZYLINDERSCHRAUBE
34	971753708	4	PLATE 8X110X70 S960QL FE/FLZN10/NC	BLECH
35	12100309	8	HEX SCREW ISO 4017 M16X30 8.8 FLZN SP	SECHSKANTSCHRAUBE
36	12100310	4	HEX SCREW ISO 4017 M16X40 8.8 FLZN SP	SECHSKANTSCHRAUBE
37	12100283	12	HEX SCREW ISO 4017 M16X50 8.8 FLZN SP	SECHSKANTSCHRAUBE
38	4600021	8	WASHER DIN 7349 17 200HV FLZN SPF	SCHEIBE
39	973057708	1	DISTANCE PLATE 15X103X408 PA6G	DISTANZPLATTE
40	970422908	2	PLATE 8X88X270 S960QL FE/FLZN10/NC	BLECH
41	971063208	2	SLIDE PLATE 190X186X187 PA6G+OEL SPF	GLEITPLATTE
42	972898208	28	SLIDE PLATE 30X50X380 PA6G+OEL SPF	GLEITPLATTE
43	973253208	2	DISTANCE PLATE 15X121X498 PA6G	DISTANZPLATTE
44	973253308	2	PLATE 10X523X163 S960QL FLZN	BLECH
45	973253408	1	PLATE 10X470X158 S960QL	BLECH
46	11840140	4	SOCKET HEAD SCREW ISO 4762 M12X50 8	ZYLINDERSCHRAUBE
47	749010808	1	CARRYING ROLLER 80/5/20X795 GALV.VER	TRAGROLLE
48	11658892	2	HEX SCREW ISO 4017 M12X25 8.8 FLZN SP	SECHSKANTSCHRAUBE
49	972426708	4	GUIDE ISO 8062-3DCTG6 30X50X78 G18NI	EINWEISER
50	10875481	4	GRUB SCREW ISO 4026 M20X90 8.8 FLZN	GEWINDESTIFT
51	10875630	4	HEX NUT ISO 7040 M20 10 FE//ZnNi8//Cn//T0	SECHSKANTMUTTER
52	11691327	16	WASHER ISO 7092 20 300HV FLZN SPF	SCHEIBE
55	971995508	2	SLIDE PLATE 15X90X358 SPF	GLEITPLATTE
56	972898808	2	SLIDE PLATE 20X90X358 SPF	GLEITPLATTE
58	973774708	1	ROLLER ORIFICE FE//ZNNI8//CN//T0	ROLLENMUNDSTUECK
59	10197836	2	HEX SCREW ISO 4017 M6X25 8.8 ZNNI-480	SECHSKANTSCHRAUBE
60	11656734	2	HEX NUT ISO 7040 M6 8 480H SPF	SECHSKANTMUTTER
61	971071608	4	PLATE 4X491X110 S315MC FE//ZNNI8//CN//T	BLECH
62	97027203	3	COVER 289X289X12 PA6G	DECKEL
63	10197771	2	WASHER ISO 7089 6 200HV ZNNI-480H SPF	SCHEIBE

Pos.	Item	Quantity	Description	Bezeichnung
64	12216056	12	SOCKET HEAD SCREW DIN 7984 M8X30 08	ZYLINDERSCHRAUBE
65	973154008	2	PLATE 6X125X73 S960QL	BLECH
66	4042302	4	SOCKET HEAD SCREW ISO 4762 M16X40 8	ZYLINDERSCHRAUBE
67	973254708	2	SLIDER 15X100X231 PA6G+OEL SPF	GLEITSTUECK
96	972373708	2	SWITCH PANEL 21X75X160 PA6G	SCHALTLEISTE
97	972373808	2	SWITCH PLATE 2X139X46 DC01 FE//ZNNI8/	SCHALTBLECH
98	11642497	4	HEX SCREW ISO 4017 M6X10 8.8 480H SPF	SECHSKANTSCHRAUBE
99	12216054	9	SOCKET HEAD SCREW DIN 7984 M8X20 08	ZYLINDERSCHRAUBE

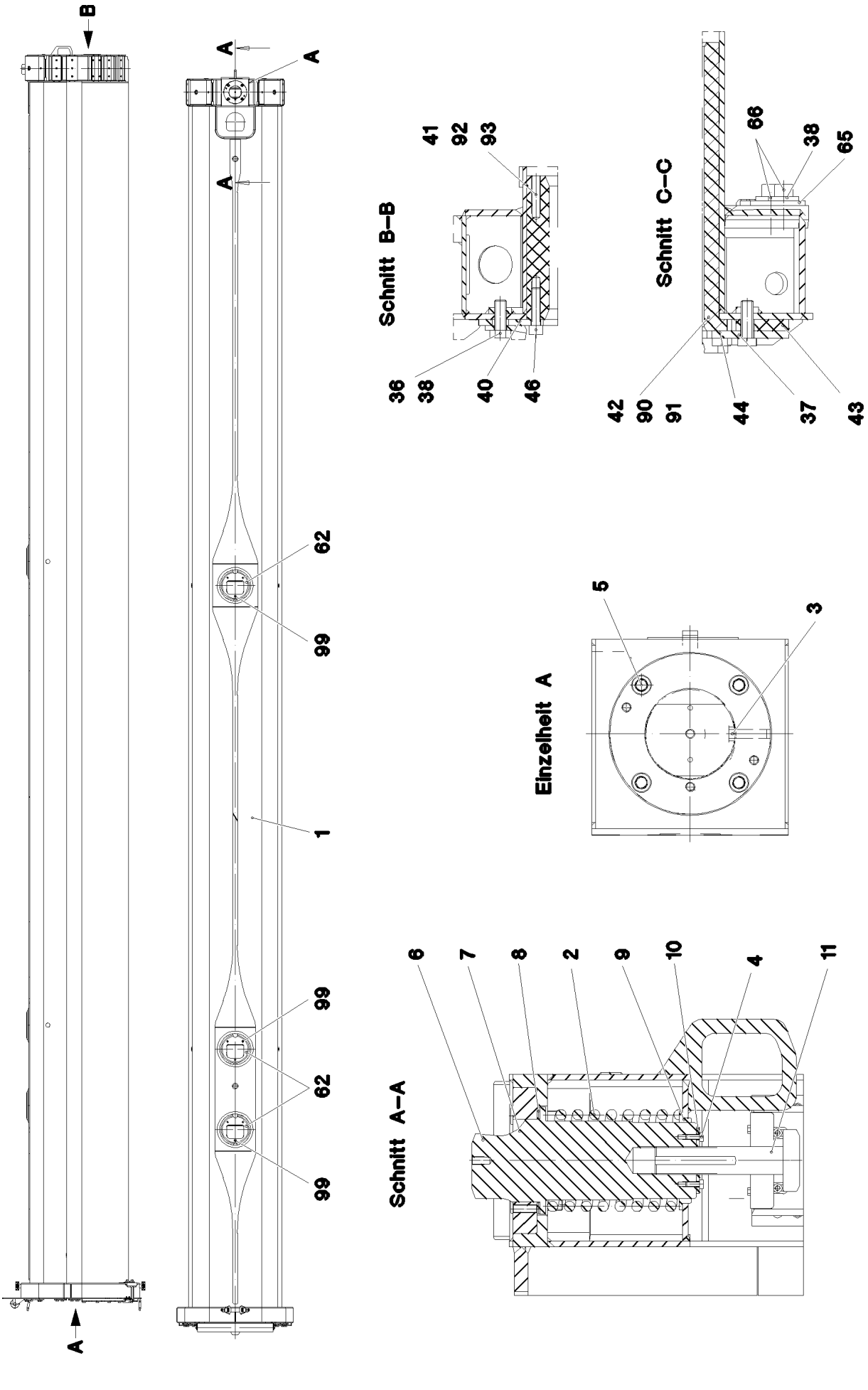

18.7.2022 077518 LIEBHERR	**etk_en_de_047654 LTR 1220** **TELESCOPIC SECT.IV PRE-ASSEMBL** **TELESKOP 4 VORM.**	❑ 683 (1/4) **917292308**

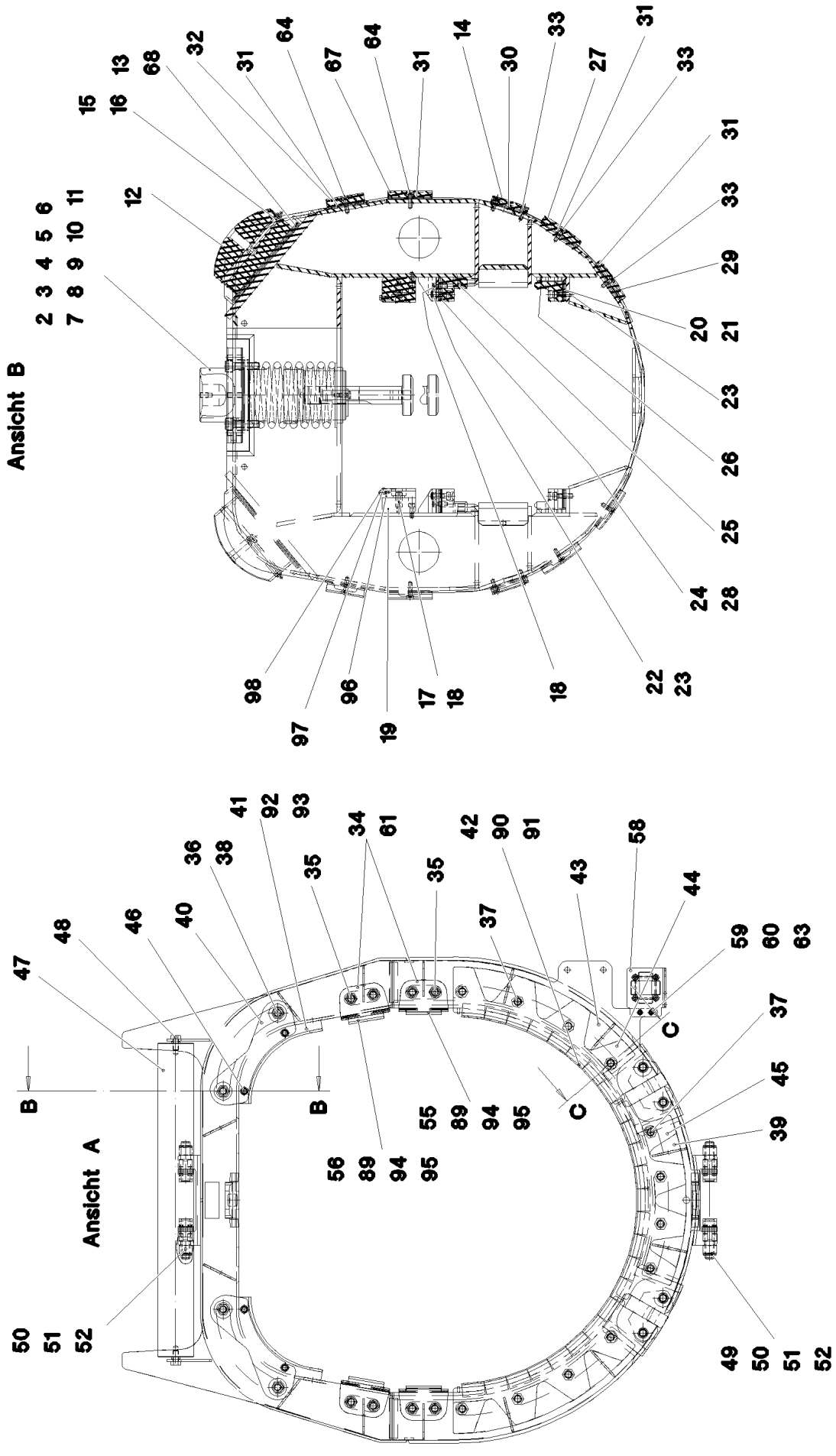
Ansicht B
Ansicht A
B
B
C
C

Pos.	Item	Quantity	Description	Bezeichnung
1	917293008	1	TELESCOPIC SECT.4 WELD.CONSTR RAL 7	TELESKOP 4 SCHWK.
2	720014908	1	COMPRESSION SPRING 15X133X223 SPF	DRUCKFEDER
3	430611008	1	PARALLEL PIN ISO 2338 12H11X50 30CRNI	ZYLINDERSTIFT
4	11651767	2	HEX SCREW ISO 4017 M8X20 8.8 480H SPF	SECHSKANTSCHRAUBE
5	10001074	4	SOCKET HEAD SCREW ISO 4762 M16X60 10	ZYLINDERSCHRAUBE
6	97027202	1	PIN 160.0X326 35NICRMOV125 SPF	BOLZEN
7	972908008	1	WASHER 40X222X222 S960QL+Z25	SCHEIBE
8	971060108	3	WASHER 2X154X154 DC01 FE//ZNNI8//CN//T	SCHEIBE
9	970535808	1	BUSHING 20x150x150 S960QL	BUCHSE
10	954706408	1	PLATE 5X62X96 S960QL	BLECH
11	973259708	1	MUSHROOM-SHAPED DRAWING BOLT 90.	ZIEHPILZ
12	970536108	2	BEARING PLATE 100X195X230 PA6G+OEL	LAGERPLATTE
13	970536208	10	PLATE 2x230x225 DC01+ZE	BLECH
14	972908108	2	SLIDER 14.5X85X231 PA6G+OEL SPF	GLEITSTUECK
15	970536608	2	BUSHING 16X195	BUCHSE
16	7743242	2	HYDRAULIC-TYPE LUBRICAT.NIPPLE DIN 71	KEGELSCHMIERNIPPEL
17	12103465	4	WASHER ISO 7089 8 300HV ZNNI-480H SPF	SCHEIBE
18	10875599	10	SOCKET HEAD SCREW ISO 4762 M8X25 8.8	ZYLINDERSCHRAUBE
19	97001821	2	SPACER PIECE 190X75X34 PA6G+OEL SPF	DISTANZSTUECK
20	973246808	4	PLATE 3X234X43 DC01 FE//ZNNI8//CN//T0	BLECH
21	973246908	4	PLATE 1X234X43 DC01 FE//ZNNI8//CN//T0	BLECH
22	10875629	4	HEX NUT ISO 7040 M10 8 FLZN SPF	SECHSKANTMUTTER
23	10875572	8	SOCKET HEAD SCREW ISO 4762 M10X35 8	ZYLINDERSCHRAUBE
24	957025308	4	PLATE 1X86X53 DC01 FE//ZNNI8//CN//T0	BLECH
25	970537008	2	SLIDER 53X87X234 PA6G+OEL	GLEITSTUECK
26	970537108	2	SLIDER 234X53X62 PA6G+OEL SPF	GLEITSTUECK
27	970537708	2	SLIDER 18X100X231 PA6G+OEL SPF	GLEITSTUECK
28	957025408	4	PLATE 3X86X53 DC01 FE//ZNNI8//CN//T0	BLECH
29	970537508	2	SLIDER 14X100X233 PA6G+OEL SPF	GLEITSTUECK
30	972908208	4	PLATE 2X210X85 DC01 FE//ZNNI8//CN//T0	BLECH
31	970537808	14	PLATE 2X100X210 DC01 FE//ZNNI8//CN//T0	BLECH
32	972908408	2	SLIDER 19X85X231 PA6G+OEL SPF	GLEITSTUECK
33	10875561	20	SOCKET HEAD SCREW DIN 6912 M8X25 08	ZYLINDERSCHRAUBE
34	971753708	4	PLATE 8X110X70 S960QL FE/FLZN10/NC	BLECH
35	12100309	8	HEX SCREW ISO 4017 M16X30 8.8 FLZN SP	SECHSKANTSCHRAUBE
36	12100310	4	HEX SCREW ISO 4017 M16X40 8.8 FLZN SP	SECHSKANTSCHRAUBE
37	12100283	12	HEX SCREW ISO 4017 M16X50 8.8 FLZN SP	SECHSKANTSCHRAUBE
38	4600021	8	WASHER DIN 7349 17 200HV FLZN SPF	SCHEIBE
39	973258608	1	DISTANCE PLATE 15X100X379 PA6G	DISTANZPLATTE
40	970422908	2	PLATE 8X88X270 S960QL FE/FLZN10/NC	BLECH
41	971063208	2	SLIDE PLATE 190X186X187 PA6G+OEL SPF	GLEITPLATTE
42	972898208	25	SLIDE PLATE 30X50X380 PA6G+OEL SPF	GLEITPLATTE
43	973258708	2	DISTANCE PLATE 15X113X449 PA6G	DISTANZPLATTE
44	973258808	2	PLATE 10X477X155 S960QL	BLECH
45	973258908	1	PLATE 10X443X155 S960QL	BLECH
46	11840140	4	SOCKET HEAD SCREW ISO 4762 M12X50 8	ZYLINDERSCHRAUBE
47	749011408	1	CARRYING ROLLER 80/5/20X700 GALV.VER	TRAGROLLE
48	11658892	2	HEX SCREW ISO 4017 M12X25 8.8 FLZN SP	SECHSKANTSCHRAUBE
49	972426708	4	GUIDE ISO 8062-3DCTG6 30X50X78 G18NI	EINWEISER
50	10875481	4	GRUB SCREW ISO 4026 M20X90 8.8 FLZN	GEWINDESTIFT
51	10875630	4	HEX NUT ISO 7040 M20 10 FE//ZnNi8//Cn//T0	SECHSKANTMUTTER
52	11691327	16	WASHER ISO 7092 20 300HV FLZN SPF	SCHEIBE
55	971995508	2	SLIDE PLATE 15X90X358 SPF	GLEITPLATTE
56	972898808	2	SLIDE PLATE 20X90X358 SPF	GLEITPLATTE
58	973774708	1	ROLLER ORIFICE FE//ZNNI8//CN//T0	ROLLENMUNDSTUECK
59	10197836	2	HEX SCREW ISO 4017 M6X25 8.8 ZNNI-480	SECHSKANTSCHRAUBE
60	11656734	2	HEX NUT ISO 7040 M6 8 480H SPF	SECHSKANTMUTTER
61	971071608	4	PLATE 4X491X110 S315MC FE//ZNNI8//CN//T	BLECH
62	97027203	3	COVER 289X289X12 PA6G	DECKEL
63	10197771	2	WASHER ISO 7089 6 200HV ZNNI-480H SPF	SCHEIBE

Pos.	Item	Quantity	Description	Bezeichnung
64	12216056	12	SOCKET HEAD SCREW DIN 7984 M8X30 08	ZYLINDERSCHRAUBE
65	973154008	2	PLATE 6X125X73 S960QL	BLECH
66	4042302	4	SOCKET HEAD SCREW ISO 4762 M16X40 8	ZYLINDERSCHRAUBE
67	973254708	2	SLIDER 15X100X231 PA6G+OEL SPF	GLEITSTUECK
96	972373708	2	SWITCH PANEL 21X75X160 PA6G	SCHALTLEISTE
97	972373808	2	SWITCH PLATE 2X139X46 DC01 FE//ZNNI8/	SCHALTBLECH
98	11642497	4	HEX SCREW ISO 4017 M6X10 8.8 480H SPF	SECHSKANTSCHRAUBE
99	12216054	9	SOCKET HEAD SCREW DIN 7984 M8X20 08	ZYLINDERSCHRAUBE

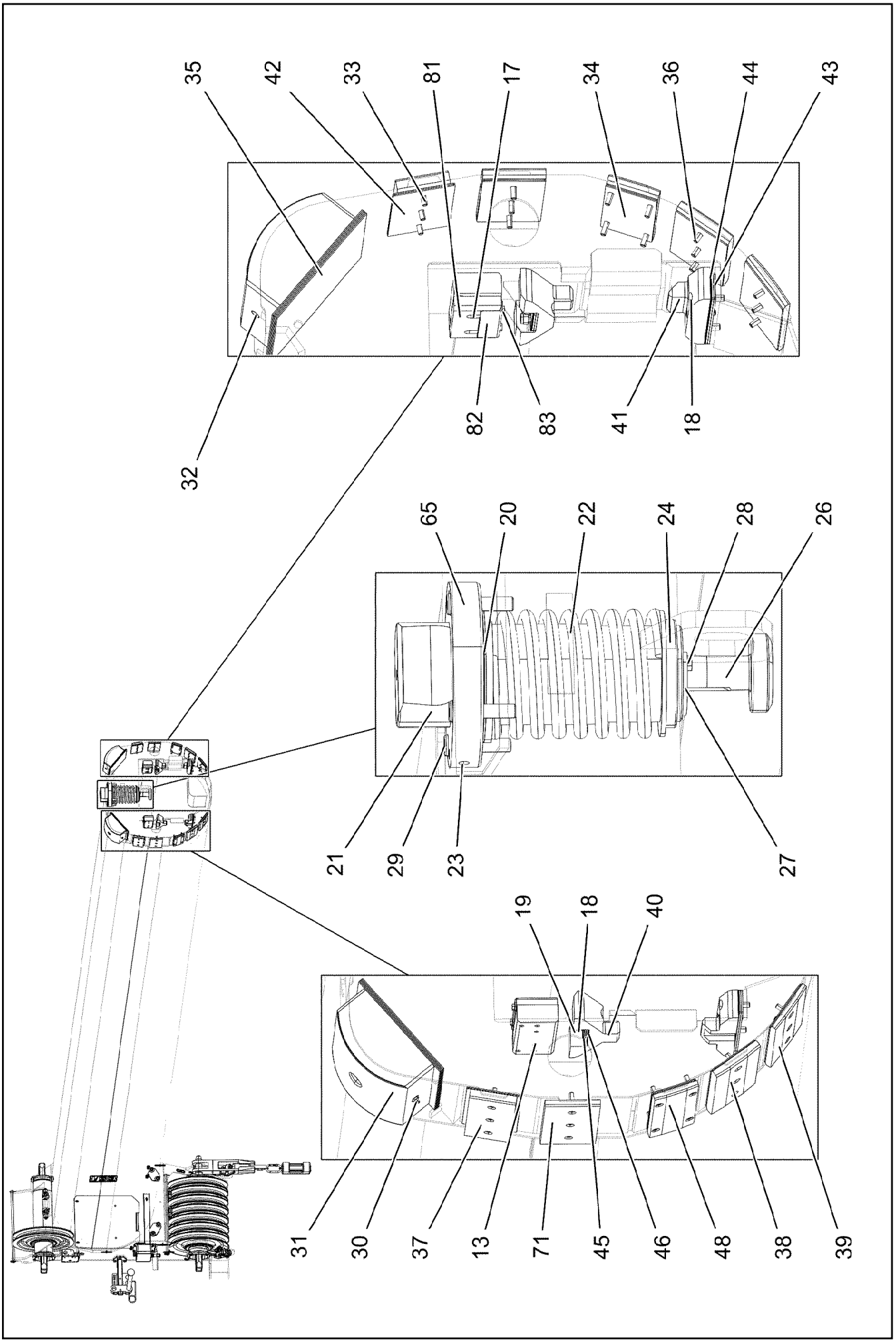

18.7.2022 077520 LIEBHERR	**etk_en_de_047654 LTR 1220** **TELESCOPIC SECT.5 PRE-ASSEMBLE** **TELESKOP 5 VORM.**	687 (1/5) **917292408**

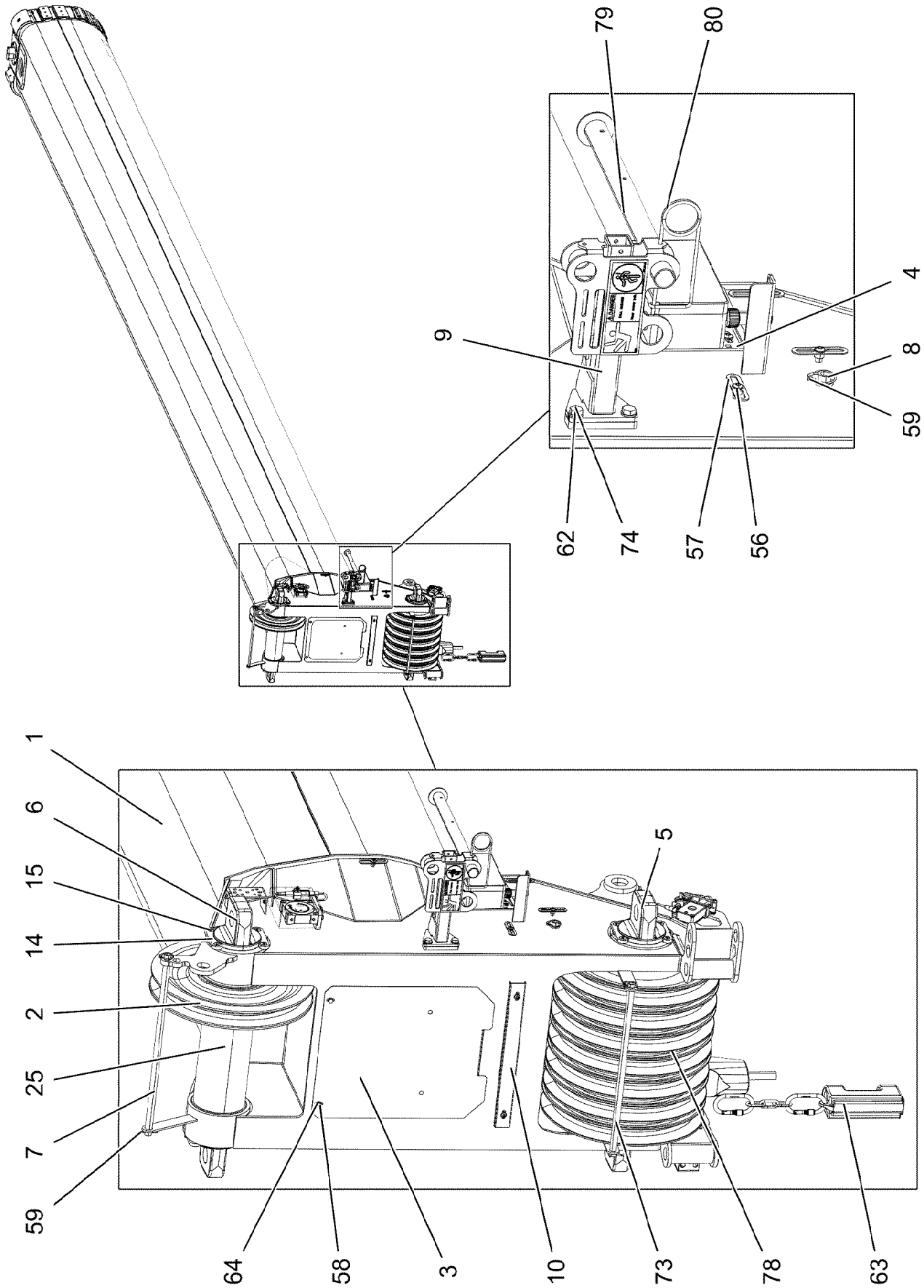

18.7.2022 077521 LIEBHERR	**etk_en_de_047654 LTR 1220** **TELESCOPIC SECT.5 PRE-ASSEMBLE** **TELESKOP 5 VORM.**	688 (2/5) **917292408**

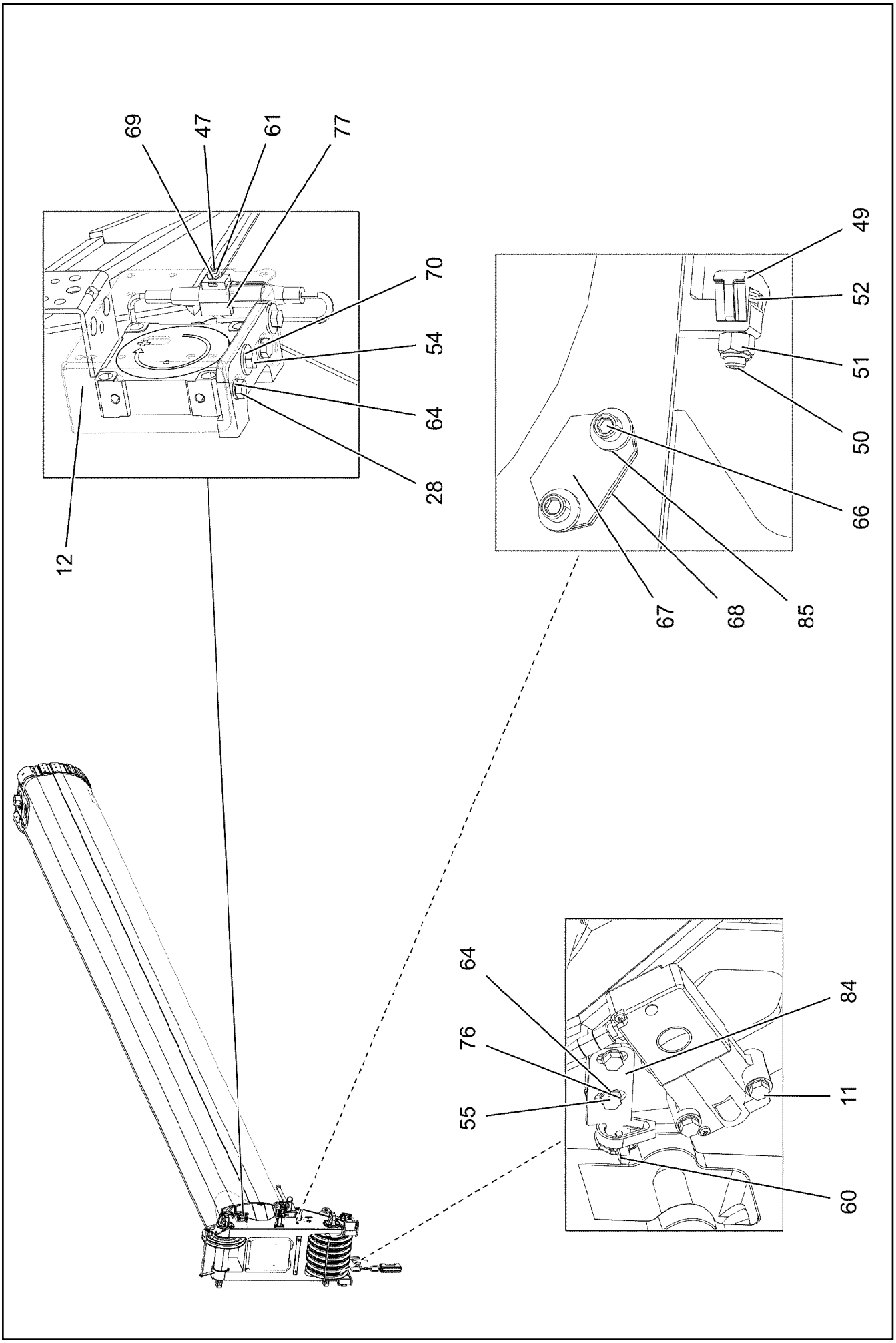

18.7.2022 077522 LIEBHERR	**etk_en_de_047654 LTR 1220** **TELESCOPIC SECT.5 PRE-ASSEMBLE** **TELESKOP 5 VORM.**	689 (3/5) **917292408**

Pos.	Item	Quantity	Description	Bezeichnung
1	917293108	1	TELESCOPIC SECT.5 WELD.CONSTR. RAL 7	TELESKOP 5 SCHWK.
2	921456108	1	ROPE PULLEY CPL. SPF ⇨ ❑ 692	SEILROLLE KPL.
3	97029382	1	PLATE 1.5X456X541 DC01	BLECH
4	953749408	1	PLATE 4X250X190 S315MC FE//ZNNI8//CN//T	BLECH
5	923661808	1	AXLE WELDED	ACHSE SCHWK.
6	923672408	1	AXLE WELDED	ACHSE SCHWK.
7	953536608	1	TUBE 21,3X4X624 S355J2H FE//ZNNI8//CN//T	ROHR
8	953536708	1	TUBE 21,3X4X700 S355J2H FE//ZNNI8//CN//T	ROHR
9	963556008	1	MOUNTING WELDED T ZN O	HALTERUNG SCHWK.
10	953713908	1	U-PROFILE 1X500X74 DC01 FE//ZNNI8//CN/	U-PROFIL
11	11690046	2	HEX SCREW ISO 4017 M8X45 8.8 480H SPF	SECHSKANTSCHRAUBE
12	97028172	1	PLATE 2X278X250 DC01 FE//ZNNI8//CN//T0	BLECH
13	97001821	2	SPACER PIECE 190X75X34 PA6G+OEL SPF	DISTANZSTUECK
14	97028296	8	PIN HOLDER 10X131X38 S960QL SPF	BOLZENHALTER
15	10877246	16	COUNTERSUNK SCREW DIN 7991 M10,0X25	SENKSCHRAUBE
17	10875599	8	SOCKET HEAD SCREW ISO 4762 M8X25 8.8	ZYLINDERSCHRAUBE
18	10875572	8	SOCKET HEAD SCREW ISO 4762 M10X35 8	ZYLINDERSCHRAUBE
19	10875629	4	HEX NUT ISO 7040 M10 8 FLZN SPF	SECHSKANTMUTTER
20	971060108	3	WASHER 2X154X154 DC01 FE//ZNNI8//CN//T	SCHEIBE
21	97027202	1	PIN 160.0X326 35NICRMOV125 SPF	BOLZEN
22	720014908	1	COMPRESSION SPRING 15X133X223 SPF	DRUCKFEDER
23	430611008	1	PARALLEL PIN ISO 2338 12H11X50 30CRNI	ZYLINDERSTIFT
24	970535808	1	BUSHING 20x150x150 S960QL	BUCHSE
25	955581808	1	DISTANCE TUBE RD159X4,5X369 S355J2H	DISTANZROHR
26	973292708	1	MUSHROOM-SHAPED DRAWING BOLT 90.	ZIEHPILZ
27	954706408	1	PLATE 5X62X96 S960QL	BLECH
28	11651767	4	HEX SCREW ISO 4017 M8X20 8.8 480H SPF	SECHSKANTSCHRAUBE
29	10001074	4	SOCKET HEAD SCREW ISO 4762 M16X60 10	ZYLINDERSCHRAUBE
30	7743242	2	HYDRAULIC-TYPE LUBRICAT.NIPPLE DIN 71	KEGELSCHMIERNIPPEL
31	970536108	2	BEARING PLATE 100X195X230 PA6G+OEL	LAGERPLATTE
32	970536608	2	BUSHING 16X195	BUCHSE
33	12216056	20	SOCKET HEAD SCREW DIN 7984 M8X30 08	ZYLINDERSCHRAUBE
34	972908208	4	PLATE 2X210X85 DC01 FE//ZNNI8//CN//T0	BLECH
35	970536208	10	PLATE 2x230x225 DC01+ZE	BLECH
36	10875561	12	SOCKET HEAD SCREW DIN 6912 M8X25 08	ZYLINDERSCHRAUBE
37	972908408	2	SLIDER 19X85X231 PA6G+OEL SPF	GLEITSTUECK
38	970537708	2	SLIDER 18X100X231 PA6G+OEL SPF	GLEITSTUECK
39	970537508	2	SLIDER 14X100X233 PA6G+OEL SPF	GLEITSTUECK
40	970537008	2	SLIDER 53X87X234 PA6G+OEL	GLEITSTUECK
41	970537108	2	SLIDER 234X53X62 PA6G+OEL SPF	GLEITSTUECK
42	970537808	12	PLATE 2X100X210 DC01 FE//ZNNI8//CN//T0	BLECH
43	973246808	4	PLATE 3X234X43 DC01 FE//ZNNI8//CN//T0	BLECH
44	973246908	4	PLATE 1X234X43 DC01 FE//ZNNI8//CN//T0	BLECH
45	957025408	4	PLATE 3X86X53 DC01 FE//ZNNI8//CN//T0	BLECH
46	957025308	4	PLATE 1X86X53 DC01 FE//ZNNI8//CN//T0	BLECH
47	10875564	1	SOCKET HEAD SCREW ISO 1207 M4X10 4.8	ZYLINDERSCHRAUBE
48	972908108	2	SLIDER 14.5X85X231 PA6G+OEL SPF	GLEITSTUECK
49	972426708	4	GUIDE ISO 8062-3DCTG6 30X50X78 G18NI	EINWEISER
50	10875481	4	GRUB SCREW ISO 4026 M20X90 8.8 FLZN	GEWINDESTIFT
51	10875630	4	HEX NUT ISO 7040 M20 10 FE//ZnNi8//Cn//T0	SECHSKANTMUTTER
52	11691327	16	WASHER ISO 7092 20 300HV FLZN SPF	SCHEIBE
54	11690048	2	HEX SCREW ISO 4017 M8X12 8.8 480H SPF	SECHSKANTSCHRAUBE
55	11693875	2	HEX NUT ISO 4032 M8 8 480H SPF	SECHSKANTMUTTER
56	12102696	17	BUTTON HEAD SCREW ISO 7380-2 M8X10 0	HALBRUNDKOPFSCHRAUBE
57	953650008	12	CABLE CLAMP DC01 FE//ZNNI8//CN//T0	KABELHALTER
58	11651612	2	HEX SCREW ISO 4017 M8X16 8.8 480H SPF	SECHSKANTSCHRAUBE
59	10180354	3	SPLIT PIN ISO 1234 4X40 St 480H SPF	SPLINT
60	10875869	4	SAFETY PLUG W HINGE-LID 5X29X4,7X25 4	SICHERHEITSKLAPPSTECKER
61	10875611	1	HEX NUT DIN 985 M4 8 480H SPF	SECHSKANTMUTTER

Pos.	Item	Quantity	Description	Bezeichnung
62	10289804	3	WASHER ISO 7089 12 300HV FLZN SPF	SCHEIBE
63	96013575	1	HOIST LIM.SWITCH PLUMMET CPL ⇨ ❑ 693	HUBENDSCHALTER GEWICHT K
64	12103465	10	WASHER ISO 7089 8 300HV ZNNI-480H SPF	SCHEIBE
65	972908008	1	WASHER 40X222X222 S960QL+Z25	SCHEIBE
66	4042302	4	SOCKET HEAD SCREW ISO 4762 M16X40 8	ZYLINDERSCHRAUBE
67	973154008	2	PLATE 6X125X73 S960QL	BLECH
68	973153908	2	PLATE 5X125X73 S960QL	BLECH
69	10875642	1	WASHER ISO 7093-1 4 200HV 480H SPF	SCHEIBE
70	11140469	2	WASHER ISO 7093-1 8 200HV 480H SPF	SCHEIBE
71	973254708	2	SLIDER 15X100X231 PA6G+OEL SPF	GLEITSTUECK
73	973740408	1	TUBE 21.3X596 S355J2H FE//ZNNI8//CN//T0	ROHR
74	11651006	3	HEX SCREW ISO 4017 M12X20 8.8 FLZN SP	SECHSKANTSCHRAUBE
76	10197831	2	HEX SCREW ISO 4017 M8X25 8.8 ZNNI-480	SECHSKANTSCHRAUBE
77	605215508	1	CLAMP SURE-SEAL	KLAMMER
78	967771908	7	ROPE PULLEY CPL. ⇨ ❑ 694	SEILROLLE KPL.
79	963498508	1	PIPE WELDED	ROHR SCHWK.
80	433102508	1	RETAINING SPRING 5X122 ISO 2081 FE/ZN8/	SICHERUNGSFEDER
81	972373708	2	SWITCH PANEL 21X75X160 PA6G	SCHALTLEISTE
82	972373808	2	SWITCH PLATE 2X139X46 DC01 FE//ZNNI8/	SCHALTBLECH
83	11642497	4	HEX SCREW ISO 4017 M6X10 8.8 480H SPF	SECHSKANTSCHRAUBE
84	979132008	1	PLATE 110X34 S315MC FE//ZNNI8//CN//T0	BLECH
85	4600021	4	WASHER DIN 7349 17 200HV FLZN SPF	SCHEIBE

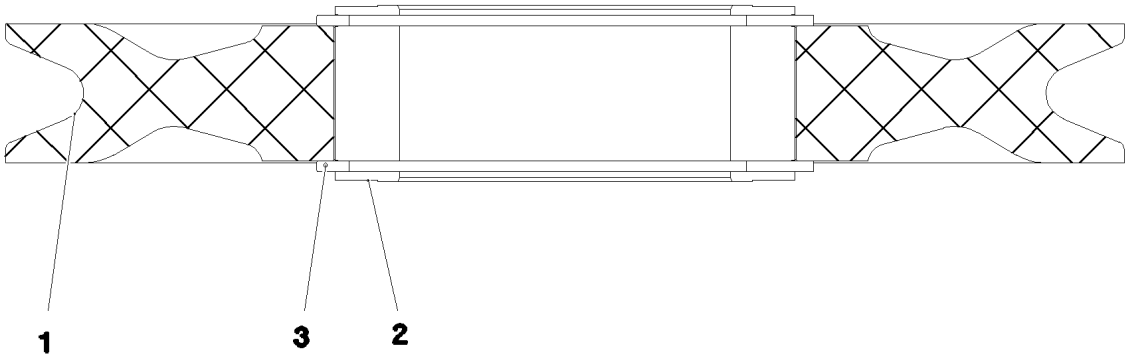

Pos.	Item	Quantity	Description	Bezeichnung
1	288195608	1	ROPE PULLEY RD508X63 PA6G SPF	SEILROLLE
2	746506608	1	ROLLER BEARING 150X210X80	WAELZLAGER
3	10872700	2	LOCKING RING DIN 471 210X5	SICHERUNGSRING

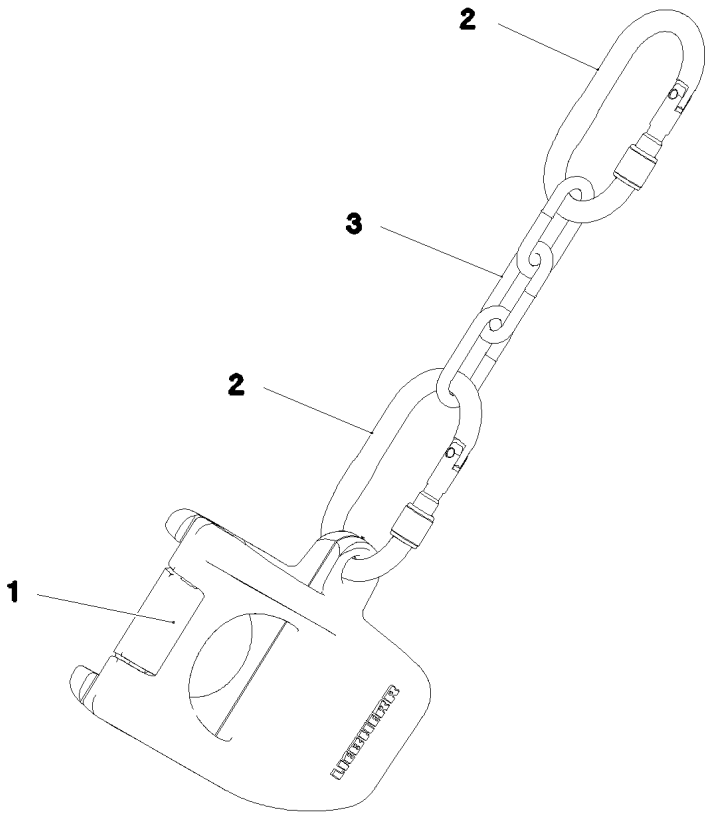

Pos.	Item	Quantity	Description	Bezeichnung
1	10873379	1	WEIGHT EN-GJS400-18 FE//ZN20//B	HUBENDSCHALTERGEWICHT
2	10877382	2	SCREW CARABINER OVAL M.PRAEGUNG S	SCHRAUBKARABINER
3	10663970	2	CHAIN DIN 763 7X49 0.3t ST35 VERZ	KETTE

Schnitt A–A

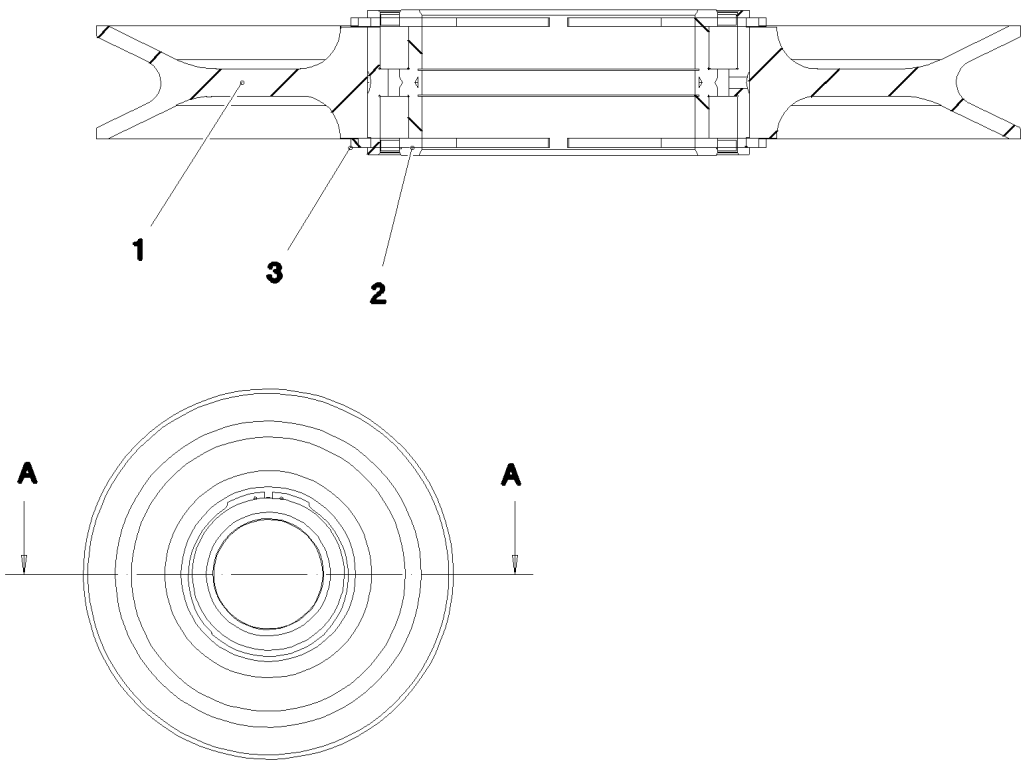

Pos.	Item	Quantity	Description	Bezeichnung
1	97027358	1	ROPE PULLEY 437X12.5 S355J2+N	SEILROLLE
2	746506608	1	ROLLER BEARING 150X210X80	WAELZLAGER
3	428009008	2	LOCKING RING DIN 471 210X5	SICHERUNGSRING

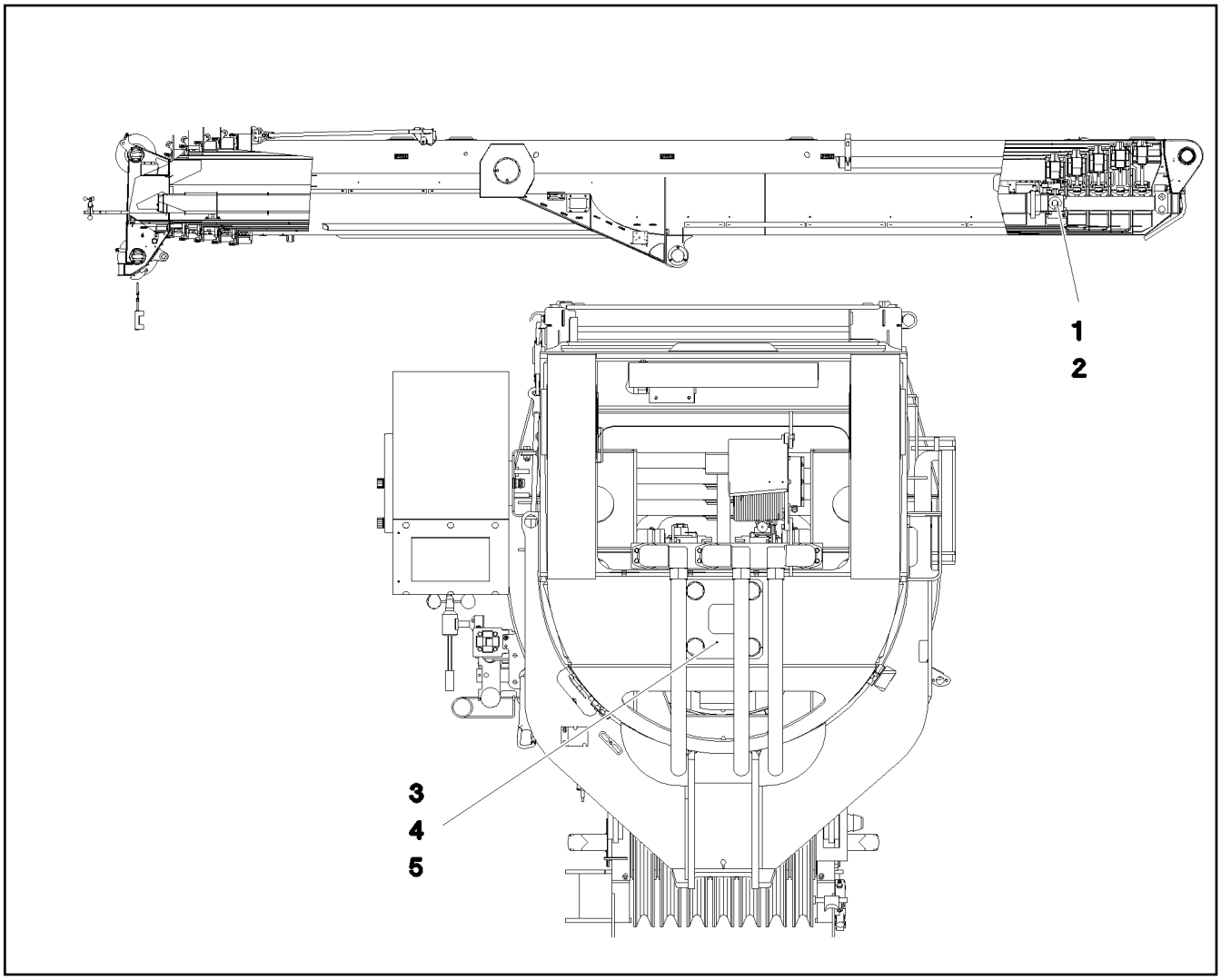

Pos.	Item	Quantity	Description	Bezeichnung
1	10876933	1	TELESCOPIC CYLINDER 225/175-10655 SPF ⇨ ❑ 696	TELESKOPIERZYLINDER
2	966134608	1	ADD-ON PARTS CYLINDER ⇨ ❑ 700	ANBAUTEILE ZYLINDER
3	970491108	1	PLATE 8x240x240 S960QL	BLECH
4	4900000	4	WASHER EN 14399-6 30 300-370HV-ST FLZ	SCHEIBE
5	406216008	4	HEX SCREW ISO 4014 M30X150 10.9 FLZN	SECHSKANTSCHRAUBE

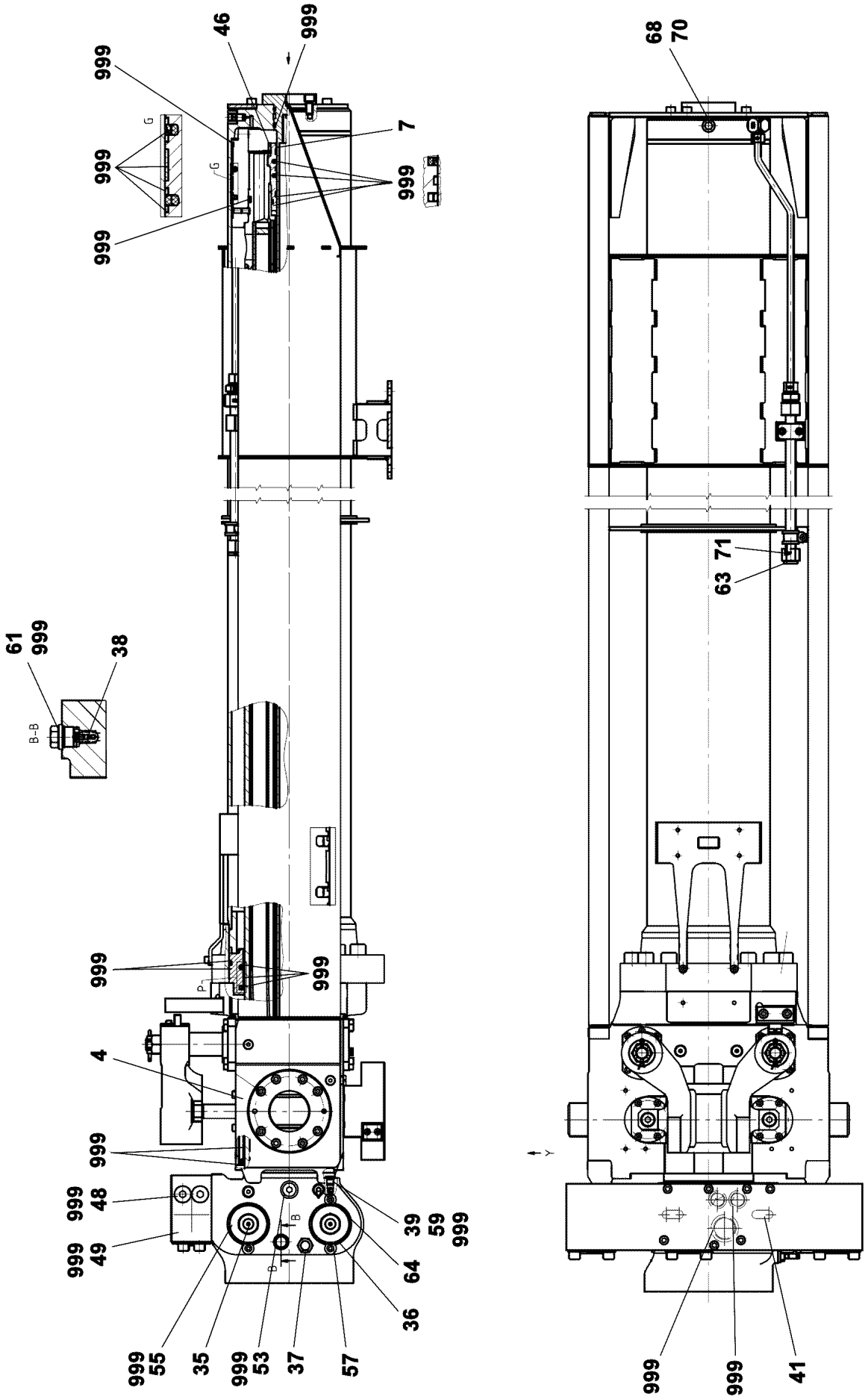

18.7.2022 001061	**etk_en_de_047654 LTR 1220**	696 (1/2)
LIEBHERR	**TELESCOPIC CYLINDER** **TELESKOPIERZYLINDER**	**10876933**

Pos.	Item	Quantity	Description	Bezeichnung
4	571928508	1	CYLINDER HEAD CPL. ⇨ ❑ 698	ZYLINDERKOPF KPL.
7	10470371	1	GUIDE BUSHING 50,1X85X132	FUEHRUNGSBUCHSE
35	10326277	1	LOWERING BRAKE VALVE	SENKBREMSVENTIL
(999)	11170384	1	SEAL KIT	DICHTSATZ
36	571413308	1	LOWERING BRAKE VALVE	SENKBREMSVENTIL
(1)	571614608	1	SEAL KIT	DICHTSATZ
37	571910208	1	PRESSURE LIMITING VALVE	DRUCKBEGRENZUNGSVENTIL
38	10326278	1	THERMO SAFETY VALVE 255BAR	THERMOUEBERDRUCKVENTIL
39	570435308	1	GRUB SCREW	GEWINDESTIFT
41	434022601	2	FITTING KEY DIN 6885 A16X10X40	PASSFEDER
46	518565008	1	PLATE	BLECH
48	570579808	2	SCREW PLUG	VERSCHLUSSSCHRAUBE
49	10650014	1	SCREW PLUG	VERSCHLUSSSCHRAUBE
53	11182678	1	SCREW PLUG	VERSCHLUSSSCHRAUBE
55	518645408	1	SCREW PLUG DIN 908 G1/4X19X12MM ST	VERSCHLUSSSCHRAUBE
57	518614708	2	WASHER	SCHEIBE
59	10470377	1	SCREW PLUG G1/4X19	VERSCHLUSSSCHRAUBE
61	10493479	1	FITTING GEF.A M24X1,5	VERSCHRAUBUNG
63	477704208	1	STOP PLUG VSTI G1/2A CR6-FREI	STOPFEN
64	10430230	1	TEST POINT FITTING G1/4"	MESSANSCHLUSS
68	10493944	1	VENTILATION VALVE	ENTLUEFTUNGSVENTIL
70	518620608	1	DUST CAP	STAUBKAPPE
71	10877167	1	OIL FILTER INSERT OEL	OELFILTEREINSATZ
800	11600988	1	GUIDE FRAME	FUEHRUNGSRAHMEN
999	10878189	1	DS TELESCOPIC CYLINDER	DS TELESKOPZYLINDER

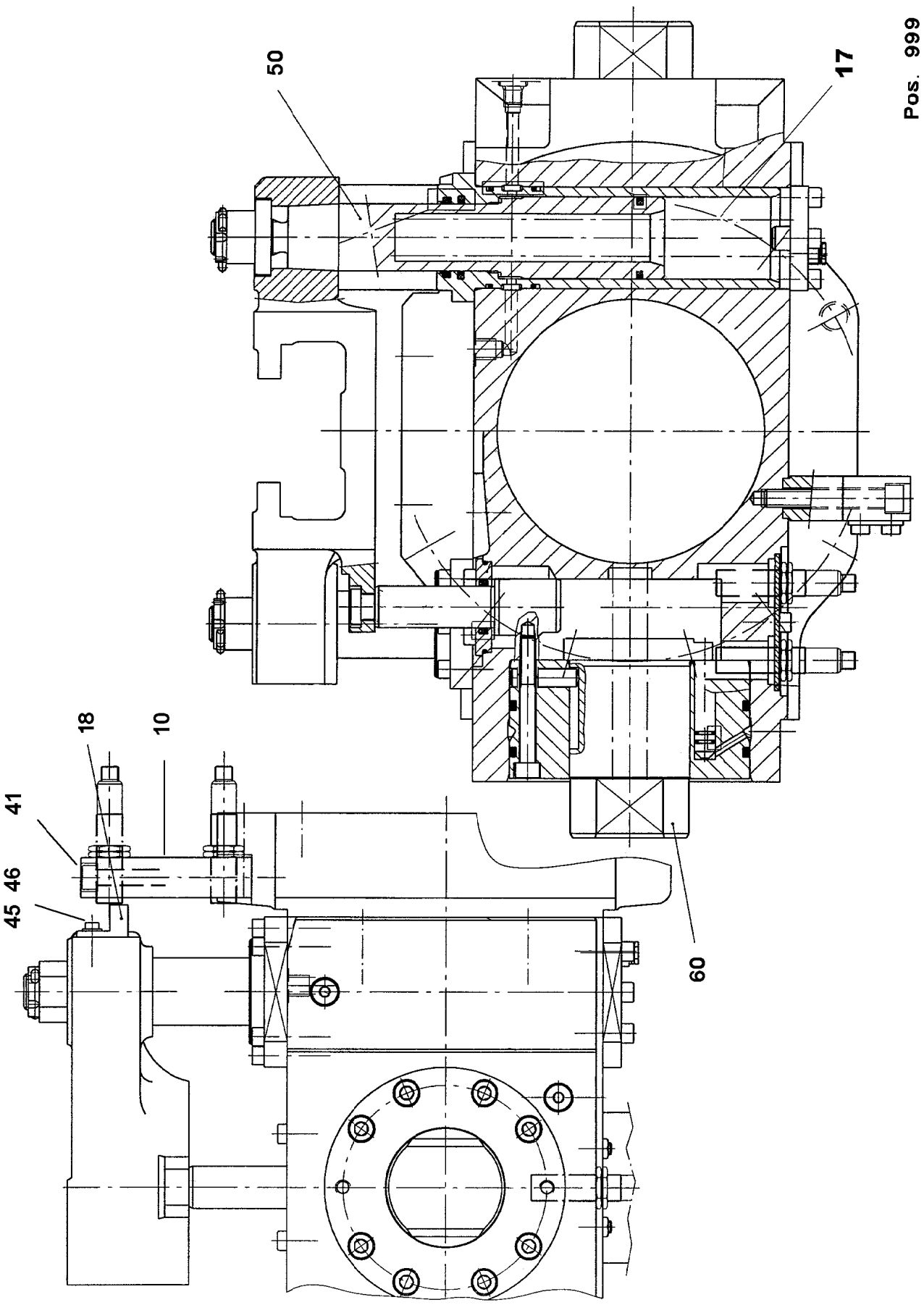
Pos. 999
50
17
18
10
41
46
45
60

Pos.	Item	Quantity	Description	Bezeichnung
10	12106374	1	FASTENER	HALTERUNG
17	11102038	1	COMPRESSION SPRING	DRUCKFEDER
18	571687808	1	ANGLE	WINKEL
41	12208101	2	SOCKET HEAD SCREW ISO 4762 M10X120 8	ZYLINDERSCHRAUBE
45	12217473	2	SOCKET HEAD SCREW DIN 7984 M6X10 08	ZYLINDERSCHRAUBE
46	10197771	2	WASHER ISO 7089 6 200HV ZNNI-480H SPF	SCHEIBE
50	571934508	1	RS TELESCOPIC LOCK	RS TELESKOPVERRIEGELUNG
60	571934608	1	RS CYLINDER LOCK	RS ZYLINDERVERRIEGELUNG
999	12107727	1	SEAL KIT CYLINDER HEAD -30°C	DS ZYLINDERKOPF

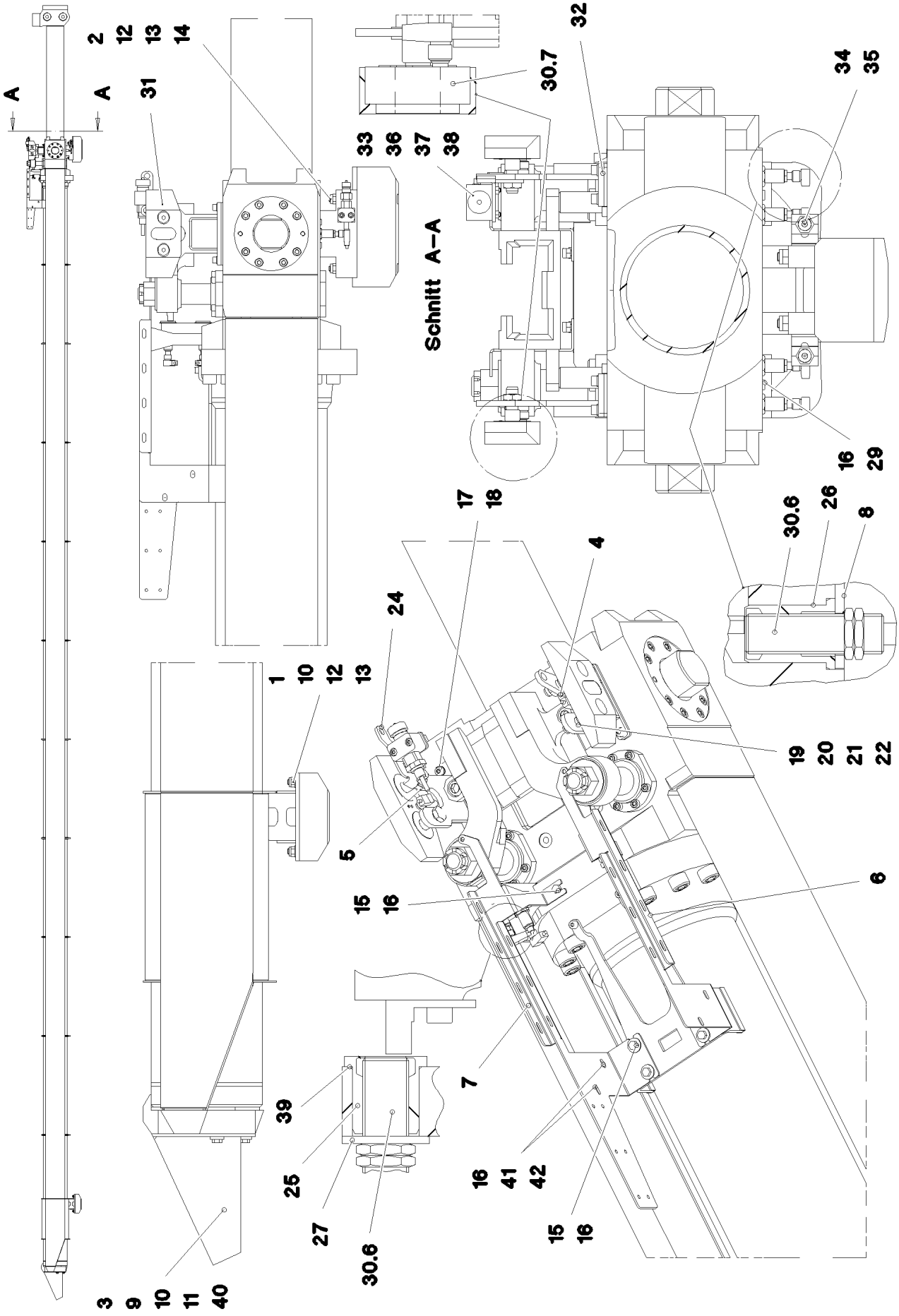

18.7.2022 073664	**etk_en_de_047654 LTR 1220**	❑ 700 (1/2)
LIEBHERR	**ADD-ON PARTS CYLINDER** **ANBAUTEILE ZYLINDER**	**966134608**

Pos.	Item	Quantity	Description	Bezeichnung
1	972997008	1	SLIDER 65X120X190 PA6G+OEL SPF	GLEITSTUECK
2	970456308	1	SLIDER 100X140X260 PA6G+OEL SPF	GLEITSTUECK
3	973763408	1	SLIDER 84X261X468 PA6G+OEL SPF	GLEITSTUECK
4	962947308	1	BRACKET WELDED CONST. FE//ZNNI8//CN/	KONSOLE SCHWK.
5	962947408	1	BRACKET WELDED CONST. FE//ZNNI8//CN/	KONSOLE SCHWK.
6	970456508	1	CABLE CLAMP 3x486x370 DC01 FE//ZNNI8/	KABELHALTER
7	970456608	1	CABLE CLAMP 3x697x370 DC01 FE//ZNNI8/	KABELHALTER
8	970477608	2	COVER 4x83x84 S315MC FE//ZNNI8//CN//T0	DECKEL
9	962625708	1	GUIDE	FUEHRUNG
10	11840140	7	SOCKET HEAD SCREW ISO 4762 M12X50 8	ZYLINDERSCHRAUBE
11	11840139	3	HEX SCREW ISO 4014 M12X90 8.8 FLZN SP	SECHSKANTSCHRAUBE
12	12218127	8	HEX NUT DIN 985 M12 10 FLZN SPF	SECHSKANTMUTTER
13	10289804	8	WASHER ISO 7089 12 300HV FLZN SPF	SCHEIBE
14	10875574	4	SOCKET HEAD SCREW ISO 4762 M12X100 8	ZYLINDERSCHRAUBE
15	11651612	6	HEX SCREW ISO 4017 M8X16 8.8 480H SPF	SECHSKANTSCHRAUBE
16	11140469	12	WASHER ISO 7093-1 8 200HV 480H SPF	SCHEIBE
17	10875598	6	SOCKET HEAD SCREW ISO 4762 M8X20 8.8	ZYLINDERSCHRAUBE
18	10299679	6	WASHER ISO 7092 8 200HV 480H SPF	SCHEIBE
19	10875617	4	HEX NUT ISO 4032 M16 8 FLZN SPF	SECHSKANTMUTTER
20	956414308	4	WASHER DC01+ZE	SCHEIBE
21	956414208	4	SCREW 25X25X65 8.8 FE//ZNNI8//CN//T0	SCHRAUBE
22	720009408	4	COMPRESSION SPRING 1,6X18,2X44	DRUCKFEDER
24	773933508	1	SHACKLE DIN 82101 0,25T NG0,25 ST VERZ	SCHAEKEL
25	955918008	2	SLEEVE 32X30	HUELSE
26	955917908	4	SLEEVE RD.32X41 X12CRNIS188	HUELSE
27	10289807	2	WASHER ISO 7089 18 300HV FLZN SPF	SCHEIBE
29	10875597	4	SOCKET HEAD SCREW ISO 4762 M8X16 8.8	ZYLINDERSCHRAUBE
30	966290708	1	SENSOR INSTALL.TELESCOP.MECHAN	GEBERANBAU AUSSCHUBMEC
(6)	10354584	6	INDUCTIVE SENSOR BERUEHRUNGSLOS	INDUKTIVSENSOR
(7)	692312708	2	INDUCTIVE SENSOR BERUEHRUNGSLOS	INDUKTIVSENSOR
31	972261508	2	SENSOR HOLDER 30X75X190 PA6G+OEL	SENSORHALTER
32	970837708	2	PLATE 4x134x58 S315MC FE//ZNNI8//CN//T0	BLECH
33	971634008	1	HOLDER 4X120X75 S315MC FE//ZNNI8//CN/	HALTER
34	11820284	4	SOCKET HEAD SCREW ISO 4762 M6X30 8.8	ZYLINDERSCHRAUBE
35	602007108	12	CLAMP-HALF DIN 3015-1 L 1 R 10 PP SW	KLEMMHAELFTE
36	7005052	2	CLAMP-HALF DIN 3015-1 L 3 R 25 PP SW	KLEMMHAELFTE
37	10875591	2	SOCKET HEAD SCREW ISO 4762 M6X40 8.8	ZYLINDERSCHRAUBE
38	10299668	2	HEX NUT ISO 4032 M6 10 480H SPF	SECHSKANTMUTTER
40	10006370	3	WASHER DIN 7349 13 200HV FLZN SPF	SCHEIBE
41	12203451	2	SOCKET HEAD SCREW ISO 4762 M8X65 8.8	ZYLINDERSCHRAUBE
42	11693875	2	HEX NUT ISO 4032 M8 8 480H SPF	SECHSKANTMUTTER

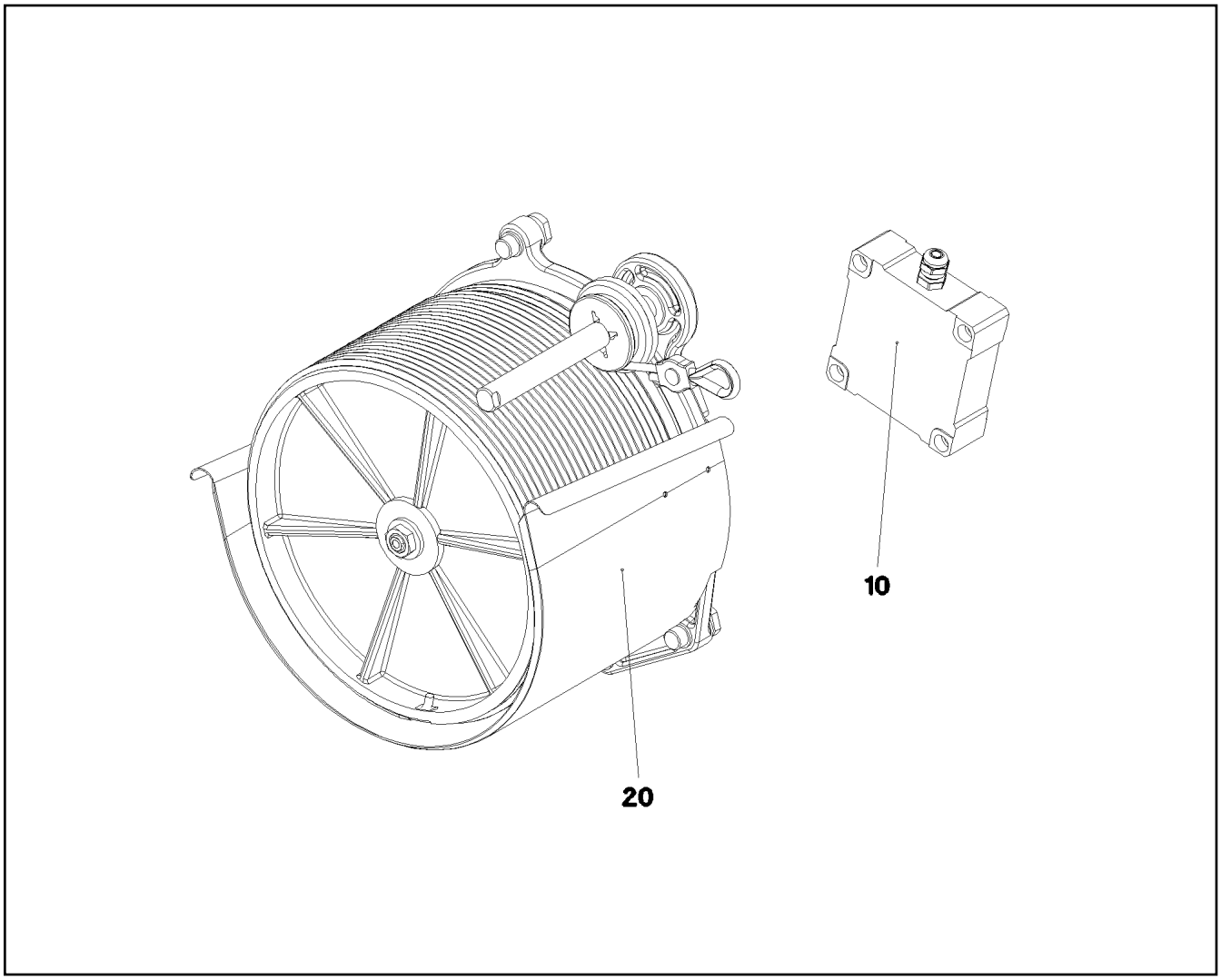

Pos.	Item	Quantity	Description	Bezeichnung
10	10802057	1	ANGLE TRANSMITTER 360° LSB PL:D SPF	WINKELGEBER
20	10802064	1	ROPE LENGTH INDICATOR 15M LSB PL:E ⇨ ❑ 703	SEILLAENGENGEBER

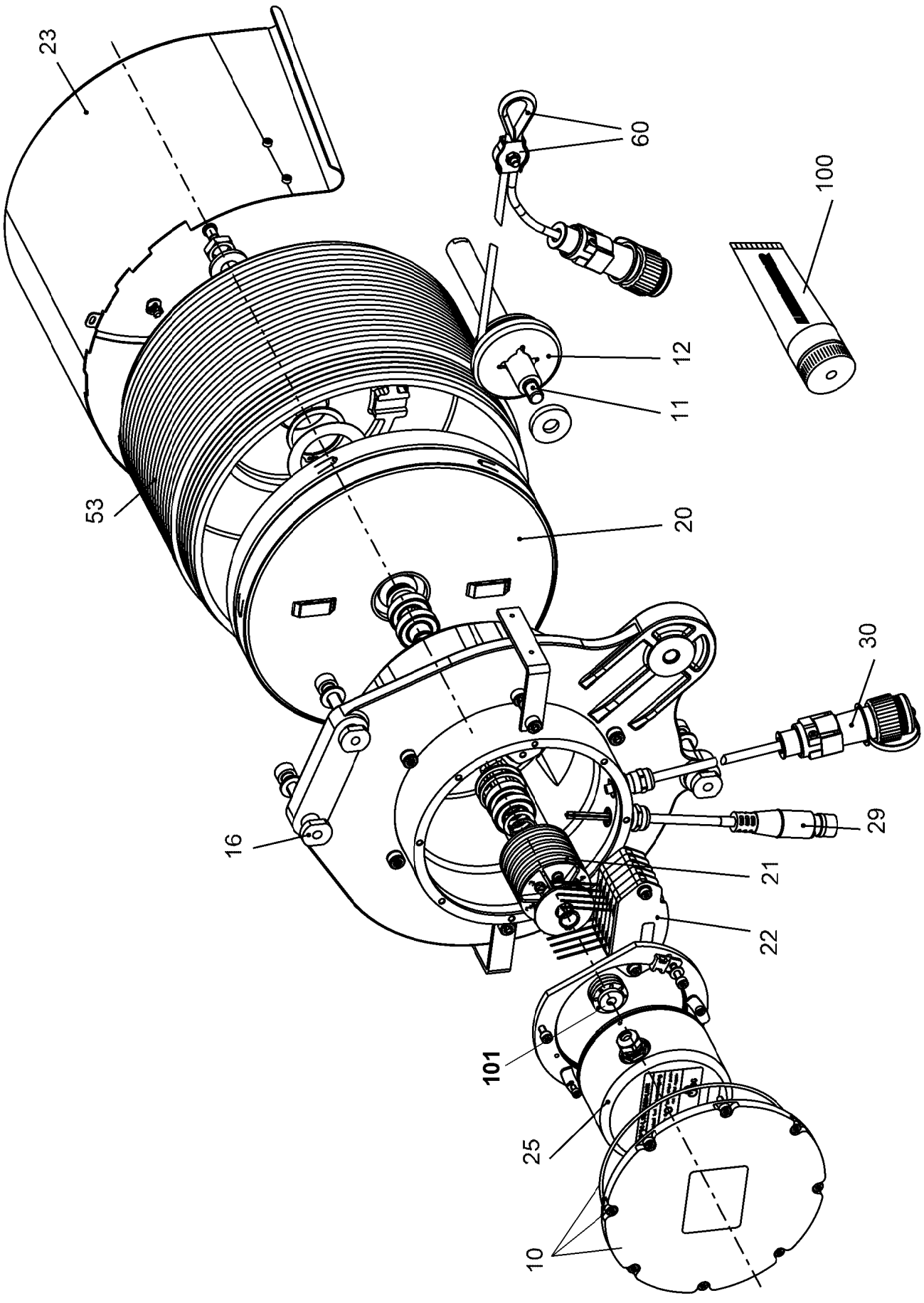

18.7.2022 001745	**etk_en_de_047654 LTR 1220**	❑ 703 (1/2)
LIEBHERR	**ROPE LENGTH INDICATOR** **SEILLAENGENGEBER**	**10802064**

Pos.	Item	Quantity	Description	Bezeichnung
10	12103044	1	COVERING	ABDECKUNG KPL.
11	11006491	1	SHAFT	WELLE
12	571851208	1	DEFLECTION PULLEY	UMLENKROLLE
16	10675205	1	MOUNTING BOLT	MONTAGEBOLZEN
20	10490072	1	SPRING SET	FEDERSATZ
21	571851008	1	SLIP RING SET	SCHLEIFRINGSATZ
(1)	11068607	10	SOLDERING LUGS	LOETOESE
22	11659642	1	CONTACT SET	KONTAKTSATZ
23	692600708	1	COVERING SL 015	ABDECKUNG KPL.
25	11170185	1	LENGTH INDICATOR	LAENGENGEBER
29	12102265	1	CONNECTION CABLE	ANSCHLUSSKABEL
53	571841008	1	LENGTH MEASURING CABLE 5 X 0,382	LAENGENMESSKABEL
60	571851308	1	THIMBLE AND CLAMP	KAUSCHE UND KLEMME
100	10045118	1	SYRINGE	SPRITZE
101	571898408	1	COUPLING	KUPPLUNG
102	11644254	1	HOLDING PLATE	HALTEPLATTE

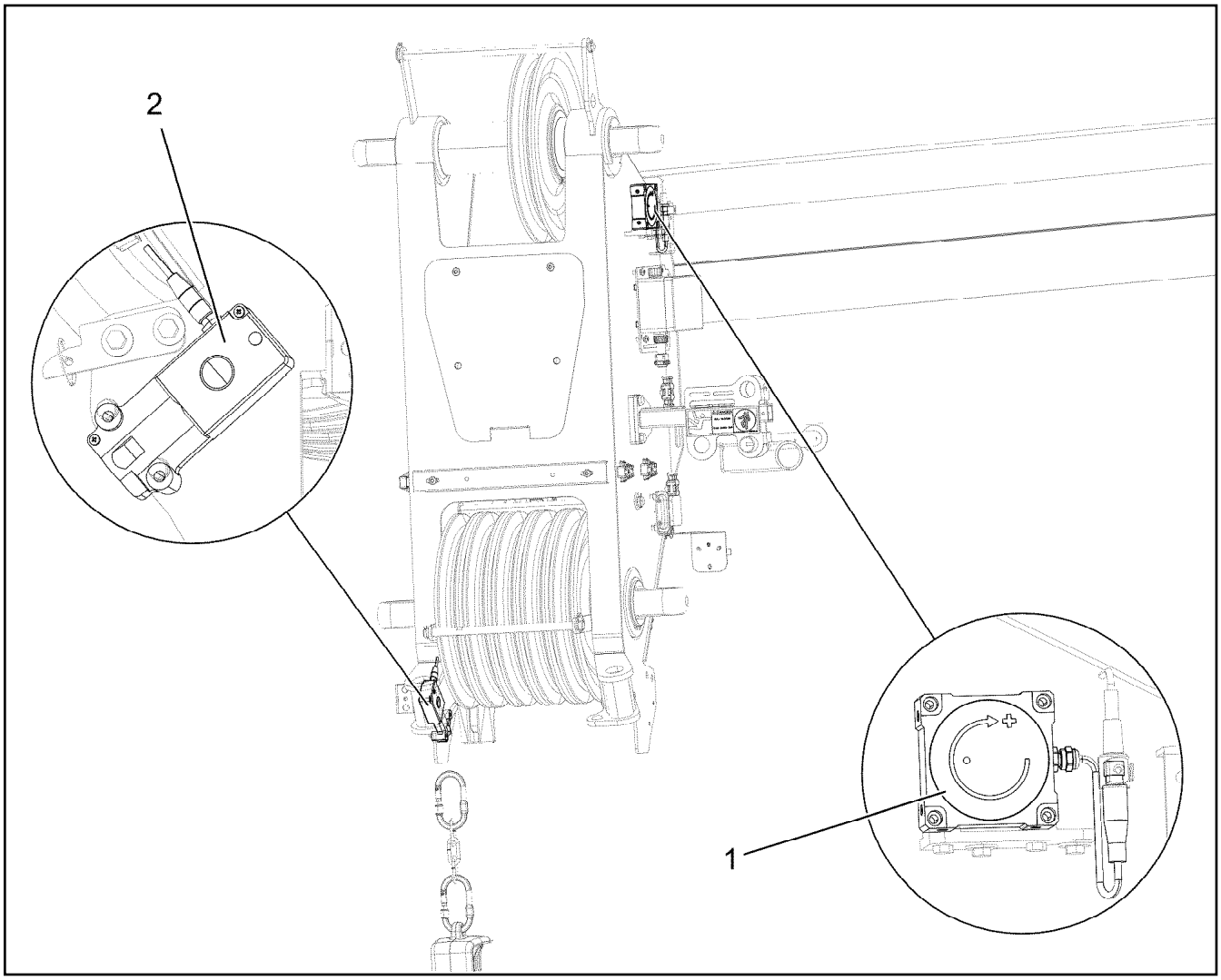

Pos.	Item	Quantity	Description	Bezeichnung
1	10802057	1	ANGLE TRANSMITTER 360° LSB PL:D SPF	WINKELGEBER
2	10678395	1	LIMIT SWITCH TQ200-RFID SPF	ENDSCHALTER

Pos.	Item	Quantity	Description	Bezeichnung
3	966290908	1	ELECTRIC F.BASE SECTION ⇨ ❑ 707	ELEKTRIK ANLENKSTUECK
4	968708608	1	ELECTR. FOR HEAD SECTION ⇨ ❑ 713	ELEKTRIK KOPFSTUECK
6	966361408	1	ELECTR. F.EXTENDING MECHANISM	ELEKTRIK AUSSCHUBMECHANI
(1)	966361508	1	LEAD W916	LEITUNG

Pos.	Item	Quantity	Description	Bezeichnung
4	966354008	1	CABLE DRUM COMPL. ⇨ ❑ 708	LEITUNGSTROMMEL KPL.
5	966291008	1	TERMINAL BOX S900 ⇨ ❑ 711	KLEMMKASTEN
10	966591508	1	LIMIT SWITCH ADD-ON AUSLEGERSTEIL ⇨ ❑ 712	ENDSCHALTER ANBAU

Pos.	Item	Quantity	Description	Bezeichnung
4	966354408	1	LEAD W912	LEITUNG
5	10354493	1	CABLE REEL 50M 14-POL+PE SPF ⇨ ❑ 709	LEITUNGSTROMMEL
6	966354508	1	LEAD W912A	LEITUNG

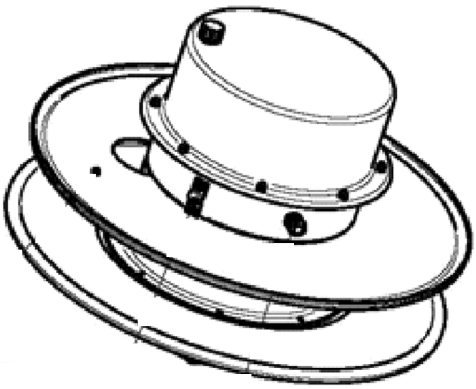

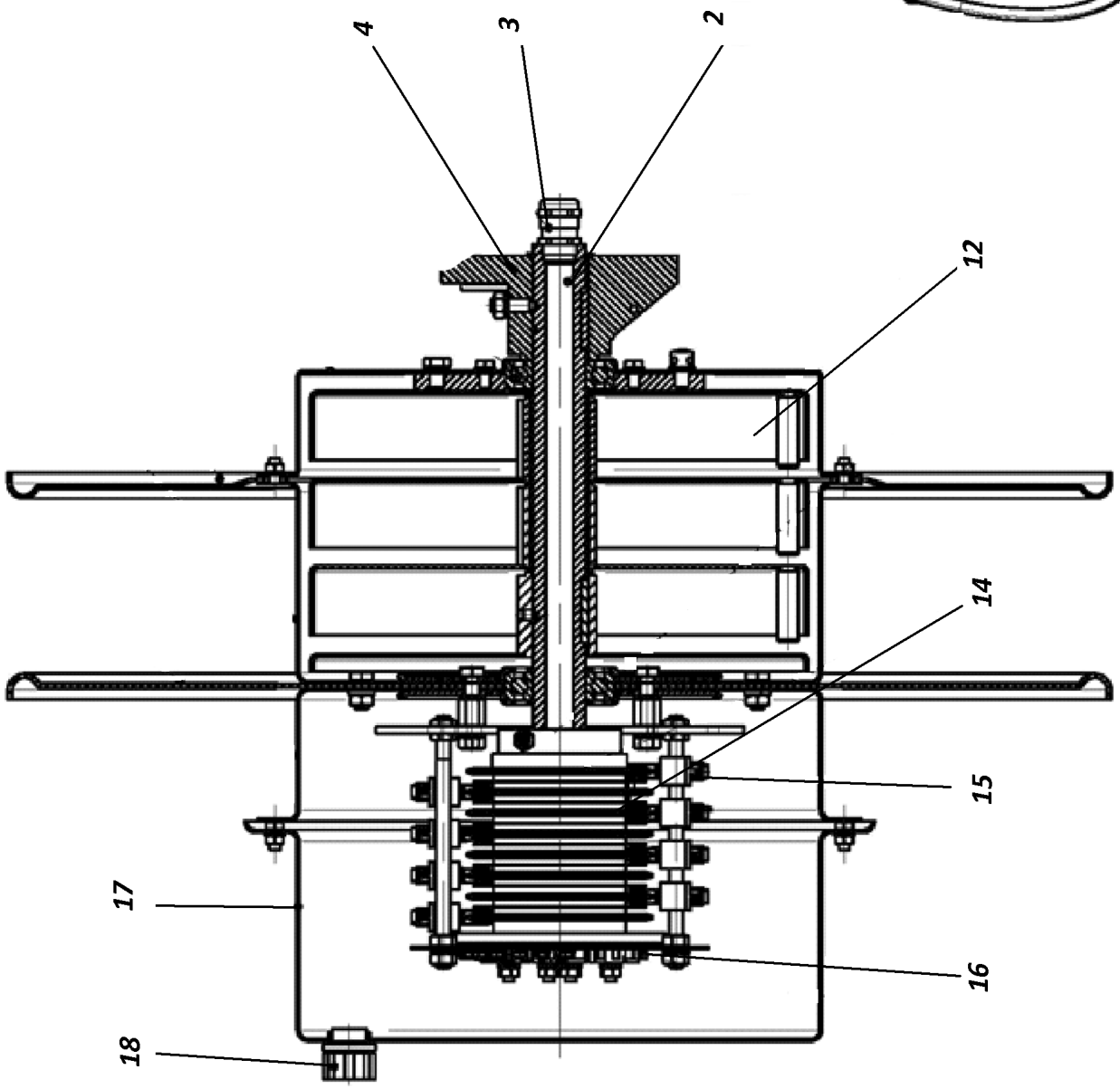
4
3
2
12
14
15
17
16
18

Pos.	Item	Quantity	Description	Bezeichnung
1	12100075	1	FLANGE	FLANSCH
2	12100076	1	DRUM AXLE	TROMMELACHSE
3	602425808	1	CABLE GLAND M25X1,5X12-15 MS	KABELVERSCHRAUBUNG
12	10428198	3	FLAT SPIRAL SPRING	SPIRALBLATTFEDER
14	11060087	8	SLIP RING 16A	SCHLEIFRING
15	10491892	8	CURRENT COLLECTOR	STROMABNEHMER
16	11003841	1	CONNECTING PLATE	ANSCHLUSSPLATTE
17	10451017	1	COVER HOOD	ABDECKHAUBE
18	602501308	1	VENTILATION SCREW G1/2"X30 POLYAMID	ENTLUEFTUNGSSCHRAUBE
140	11060088	8	SLIP RING 16A	SCHLEIFRING

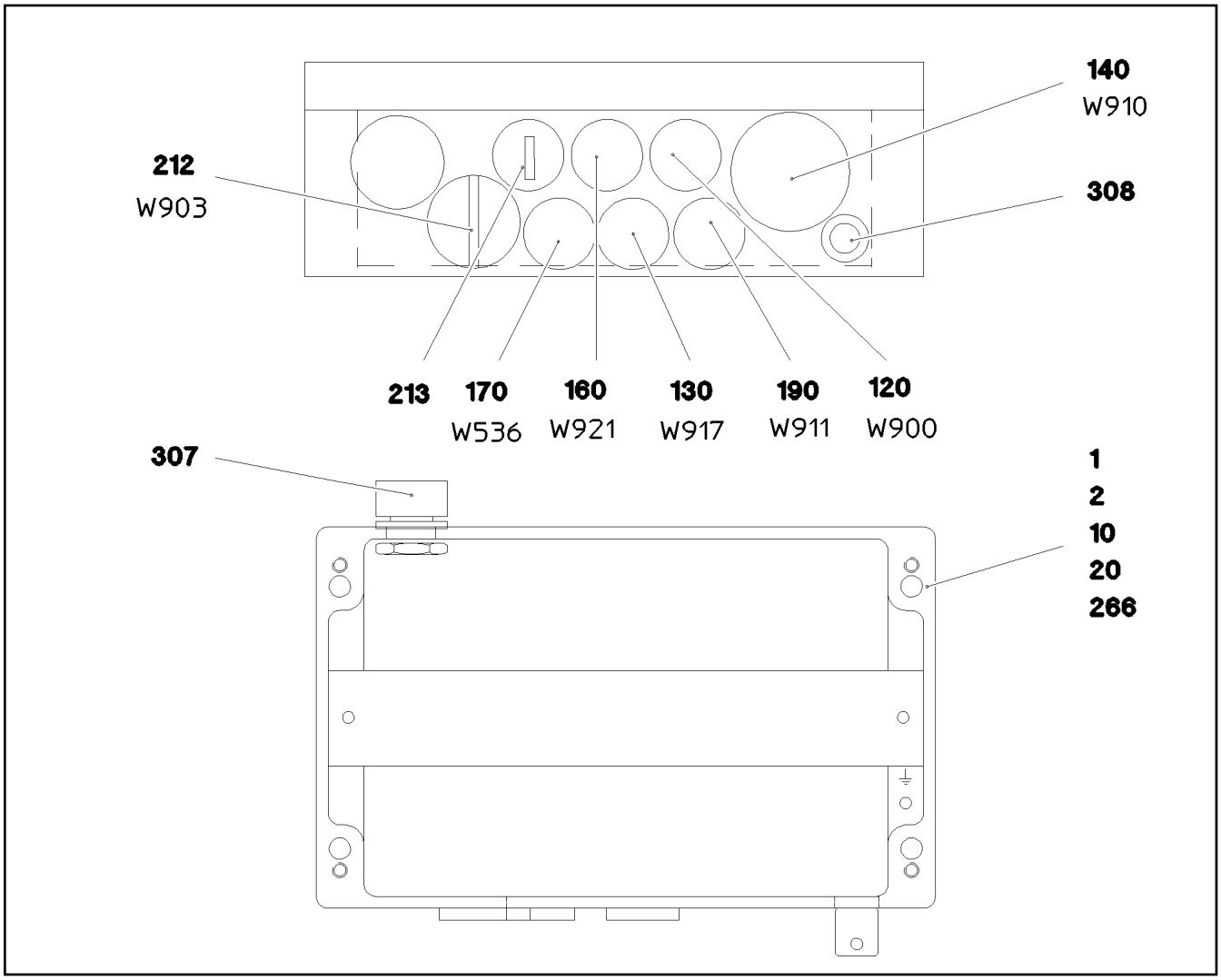

Pos.	Item	Quantity	Description	Bezeichnung
1	975113508	1	EMPTY CASING 160X260X90X0 AL	LEERGEHAEUSE
2	976917008	1	SIGN 80-38X0 LEXAN	SCHILD
10	602106708	0.245	TOP HAT RAIL 35X27X7,3X1	HUTSCHIENE
20	10874588	4	CABLE TIE 4,8X292-SCHWARZ PA66 SPF	KABELBINDER
120	966377308	1	LEAD W900	LEITUNG
130	966394008	1	LEAD W917	LEITUNG
140	966393608	1	LEAD W910	LEITUNG
160	966394208	1	LEAD W921	LEITUNG
170	966394808	1	LEAD W536	LEITUNG
190	966395208	1	LEAD W911	LEITUNG
212	602425208	1	SCREW PLUG M32X1,5 MS	VERSCHLUSSSCHRAUBE
213	602425108	1	SCREW PLUG M25X1,5 MS	VERSCHLUSSSCHRAUBE
265	870002808	0.1	SEALANT A80MR HYLOMAR	DICHTMITTEL
266	12104811	5	CABLE TIE 2,5X99-SCHWARZ PA66 SPF	KABELBINDER
307	10488662	1	VENTILATION SCREW POLYAMID	ENTLUEFTUNGSSCHRAUBE
308	602501208	1	WATER DRAIN PLUG M12 PA6G SPF	ENTWAESSERUNGSSTOPFEN

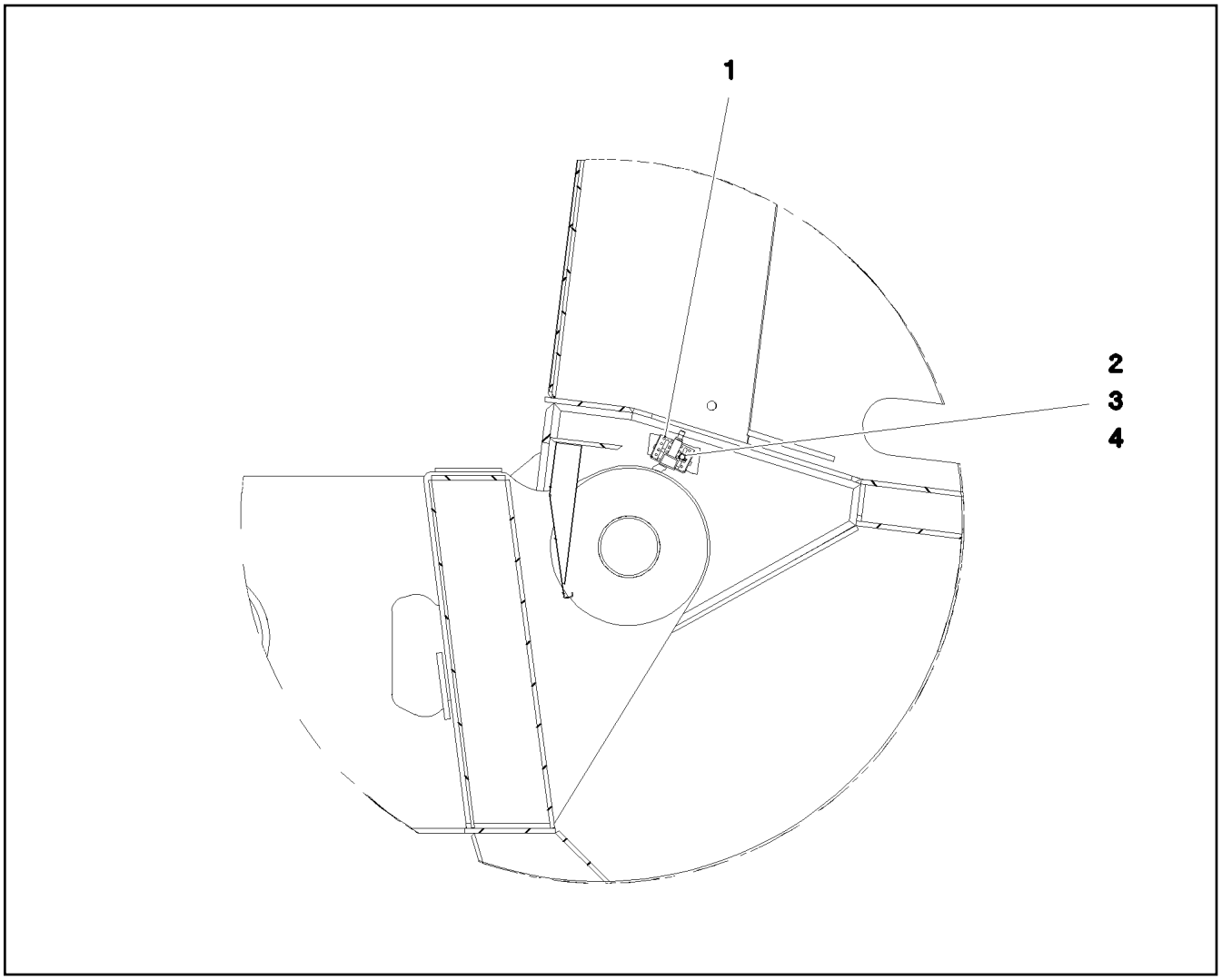

Pos.	Item	Quantity	Description	Bezeichnung
1	965371708	1	HOLDER X12CRNIS188	HALTER
2	10875857	2	CAGE NUT M6 NIROSTA	KAEFIGMUTTER
3	10197771	2	WASHER ISO 7089 6 200HV ZNNI-480H SPF	SCHEIBE
4	10001739	2	HEX SCREW ISO 4017 M6X16 A2-70	SECHSKANTSCHRAUBE
8	966563508	1	LIMIT SWITCH AUSLEGERSTEIL	ENDSCHALTER AUSLEGER STEI
(5)	10354584	1	INDUCTIVE SENSOR BERUEHRUNGSLOS	INDUKTIVSENSOR

Pos.	Item	Quantity	Description	Bezeichnung
1	968708708	1	TERMINAL BOX CPL. S930 ⇨ ❑ 714	KLEMMKASTEN KPL.

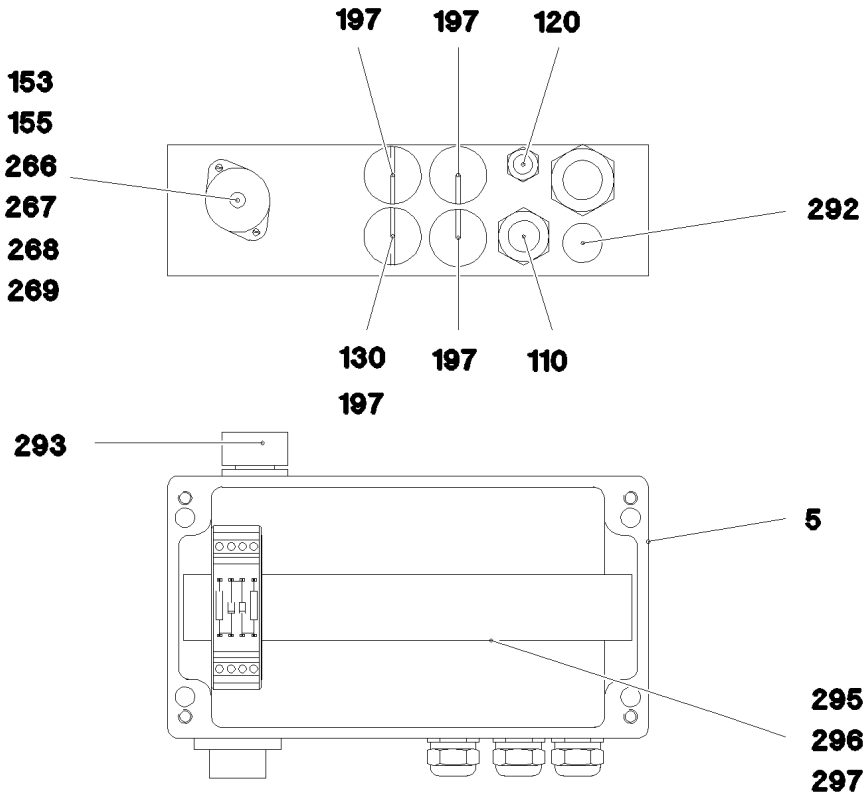

Pos.	Item	Quantity	Description	Bezeichnung
4	977667008	1	SIGN	SCHILD
5	973188508	1	EMPTY CASING 120X220X80X0 AL	LEERGEHAEUSE
18	966354908	1	WIRES TERMINAL BOX CPL. S930	DRAEHTE KLEMMKASTEN KPL.
110	966355308	1	LEAD W932	LEITUNG
120	966357008	1	LEAD W930	LEITUNG
153	604512108	1	SEALING PLUG M1-D	VERSCHLUSSKAPPE
155	604508108	1	TIN M1	DOSE
197	602425008	4	SCREW PLUG 15 M20X 1,5 MS	VERSCHLUSSSCHRAUBE
266	408400701	2	PAN-HEAD SCREW ISO 7045 M3X16 4.8 A2	FLACHKOPFSCHRAUBE
267	12226068	2	HEX NUT ISO 4032 M3 10 480H SPF	SECHSKANTMUTTER
268	420050108	2	WASHER ISO 7089 3 MS	SCHEIBE
269	425100508	2	TOOTH LOCK WASHER DIN 6797 A 3,2	ZAHNSCHEIBE
292	602501208	1	WATER DRAIN PLUG M12 PA6G SPF	ENTWAESSERUNGSSTOPFEN
293	10488662	1	VENTILATION SCREW POLYAMID	ENTLUEFTUNGSSCHRAUBE
295	602106708	0.205	TOP HAT RAIL 35X27X7,3X1	HUTSCHIENE
296	10286353	1	COVER	DECKEL
297	602794608	2	END ANGLE	ENDWINKEL

Pos.	Item	Quantity	Description	Bezeichnung
4	967784508	1	HYDR.F.TELESCOPIC BOOM ⇨ ❑ 716	HYDRAULIK TELE

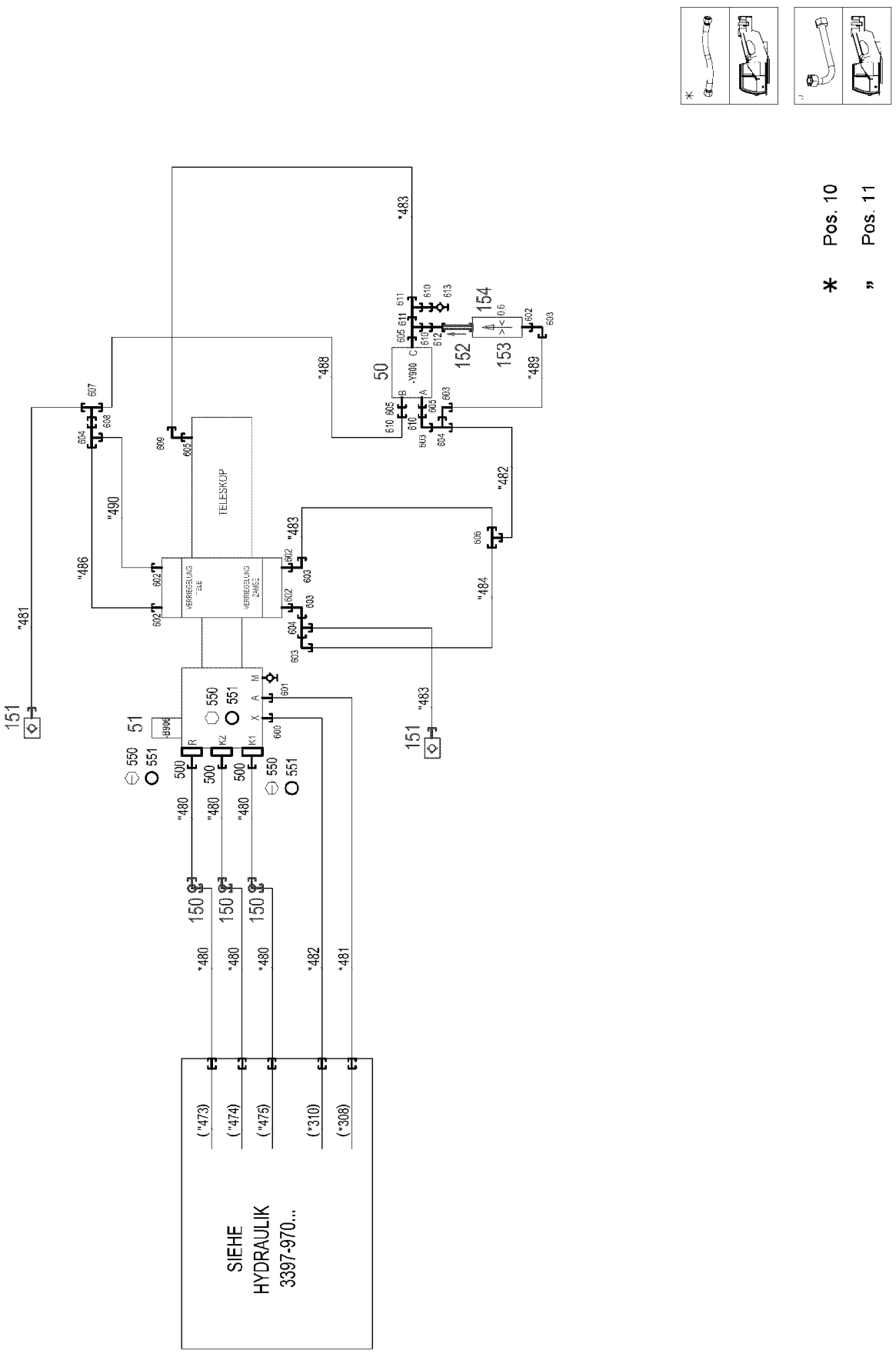

SIEHE
HYDRAULIK
3397-970...
TELESKOP
VERRIEGELUNG TELE
VERRIEGELUNG ZANGE
Y900
B906
* Pos. 10
" Pos. 11

Pos.	Item	Quantity	Description	Bezeichnung
10	968187108	1	HOSE LINES TELESCOPIC ⇨ ❑ 718	SCHLAUCHLEITUNGEN TELE
11	968187308	1	PIPELINES TELESCOPIC ⇨ ❑ 719	ROHRLEITUNGEN TELE
50	511493608	1	DIRECTIONAL CONTROL VALVE 3/2 320BA	WEGEVENTIL
(21)	571135508	1	MAGNET 24V	MAGNET
51	10813738	1	PRESSURE SENSOR 0-400/400 BAR LSB PL:	DRUCKAUFNEHMER
150	474234008	3	SWIVEL SCREW JOINT DG105 38S CF	DREHVERSCHRAUBUNG
151	511515008	2	COUPLING PLUG B2 10-L	KUPPLUNGSSTECKER
152	511493708	1	NON-RETURN VALVE 400BAR 1BAR CR6-F	RUECKSCHLAGVENTIL
153	510746008	1	NOZZLE 0,6 M5X9 CUZN39PB3	DUESE
154	510671108	1	FILTER CARTRIDGE 0,005m³/min 25µm	FILTERPATRONE
500	511517808	3	FLANGE STUB PIPE AFG 38S G1 1/4 CR6-F	FLANSCHSTUTZEN
550	10876373	12	SOCKET HEAD SCREW ISO 4762 M14X45 8	ZYLINDERSCHRAUBE
551	510586708	3	O-RING ARP 568 37,69X3,53 NBR90	O-RING
600	471032108	1	FITTING GE 6S G1/4A CR6-FREI	VERSCHRAUBUNG
601	471033208	1	FITTING XGE16-SR-ED CR6-FREI	VERSCHRAUBUNG
602	7362091	5	FITTING ISO 8434-1 GE 10L G1/4A CR6-FREI	VERSCHRAUBUNG
603	7403569	6	FITTING EW 10L M16X1,5 CR6-FREI	VERSCHRAUBUNG
604	472330208	3	FITTING EL 10L CR6-FREI	VERSCHRAUBUNG
605	471034808	4	FITTING GE 12L G1/2 CR6-FREI	VERSCHRAUBUNG
606	470430308	1	FITTING XT10-L CR6-FREI	VERSCHRAUBUNG
607	482430314	1	FITTING ISO 8434 ET 10L M16X1,5 CR6-FRE	VERSCHRAUBUNG
608	470030308	1	FITTING XG10-L CR6-FREI	VERSCHRAUBUNG
609	247117702	1	SWIVEL ELBOW EW 12L M18X1,5 CR6-FREI	WINKELSTUTZEN
610	475431408	4	FITTING REDSD12/10-L CR6-FREI	VERSCHRAUBUNG
611	247128602	2	L NECK EL 12L M18X1,5 CR6-FREI	L-STUTZEN
612	470010108	1	FITTING SNV10-L CR6-FREI	VERSCHRAUBUNG
613	510629008	1	TEST POINT FITTING VKA3 10LM16X1,5 CR6	MESSANSCHLUSS

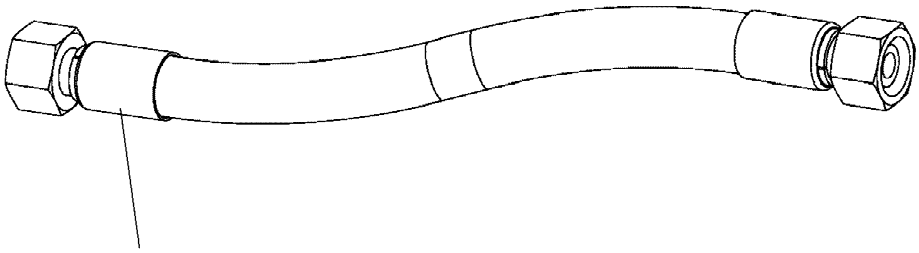

Schlauchnummer
Hose number
Numéro de flexible
Número de flexible
Номера шланга

Die Schlauchnummern auf den Schläuchen entsprechen den Positionen in der Schlauchliste.

The hose numbers from the hoses are in accordance with the items in the hose list.

Les numéros indiqués sur les flexibles correspondent aux repères de la nomenclature des flexibles.

Los números indicados en los flexibles corresponden a las posiciones de la lista de flexibles.

Нанесенные на шлангах номера соответствуют позициям в перечне.

Pos.	Item	Quantity	Description	Bezeichnung
480	962913408	3	HOSE CPL. GH506 31X1620	SCHLAUCH KPL.
481	929331808	1	HOSE CPL. 2SN 12X3400	SCHLAUCH KPL.
482	962968608	1	HOSE CPL. 2SN 6X3500	SCHLAUCH KPL.
483	921255408	1	HOSE CPL. 2SN 10X400	SCHLAUCH KPL.

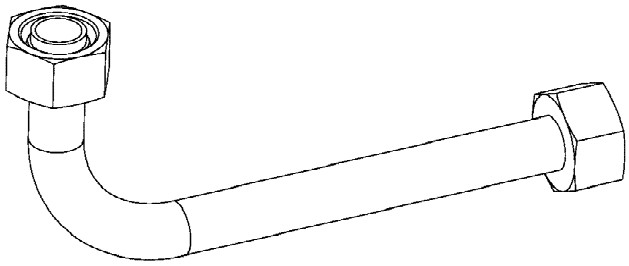

Die Positionsnummern der Rohre auf den Bildtafeln entsprechen den Positionen in der Rohrliste.

The pipe numbers from the illustrations are in accordance with the items in the pipe list.

Les numéros des tuyaux sur les illustrations correspondent aux repères de la nomenclature des tuyaux.

Los números de tubos en las ilustraciones corresponden a las posiciones de la lista de tubos.

Номера позиций труб на изображениях соответствуют позициям в перечне труб.

Pos.	Item	Quantity	Description	Bezeichnung
480	966546008	3	PIPE COMPL. 38X5X619 AS38 - AS38	ROHR KPL.
481	929802108	1	PIPE COMPL. 10X1,5X853 AL10 - AL10	ROHR KPL.
482	929802208	1	PIPE COMPL. 10X1,5X671 AL10 - AL10	ROHR KPL.
483	929802308	2	PIPE COMPL. 10X1,5X239 AL10 - AL10	ROHR KPL.
484	929802808	1	PIPE COMPL. 10X1,5X120 AL10 - AL10	ROHR KPL.
486	929803008	1	PIPE COMPL. 10X1,5X407 AL10 - AL10	ROHR KPL.
488	929803108	1	PIPE COMPL. 10X1,5X137 AL10 - AL10	ROHR KPL.
489	929804608	1	PIPE COMPL. 10X1,5X278 AL10 - AL10	ROHR KPL.
490	929806008	1	PIPE COMPL. 10X1,5X282 AL10 - AL10	ROHR KPL.

Pos.	Item	Quantity	Description	Bezeichnung
4	967785408	1	ADDNL.HYDR. FOLDING JIB ⇨ ❑ 721	ZUSATZHYDRAULIK KLAPPSPI

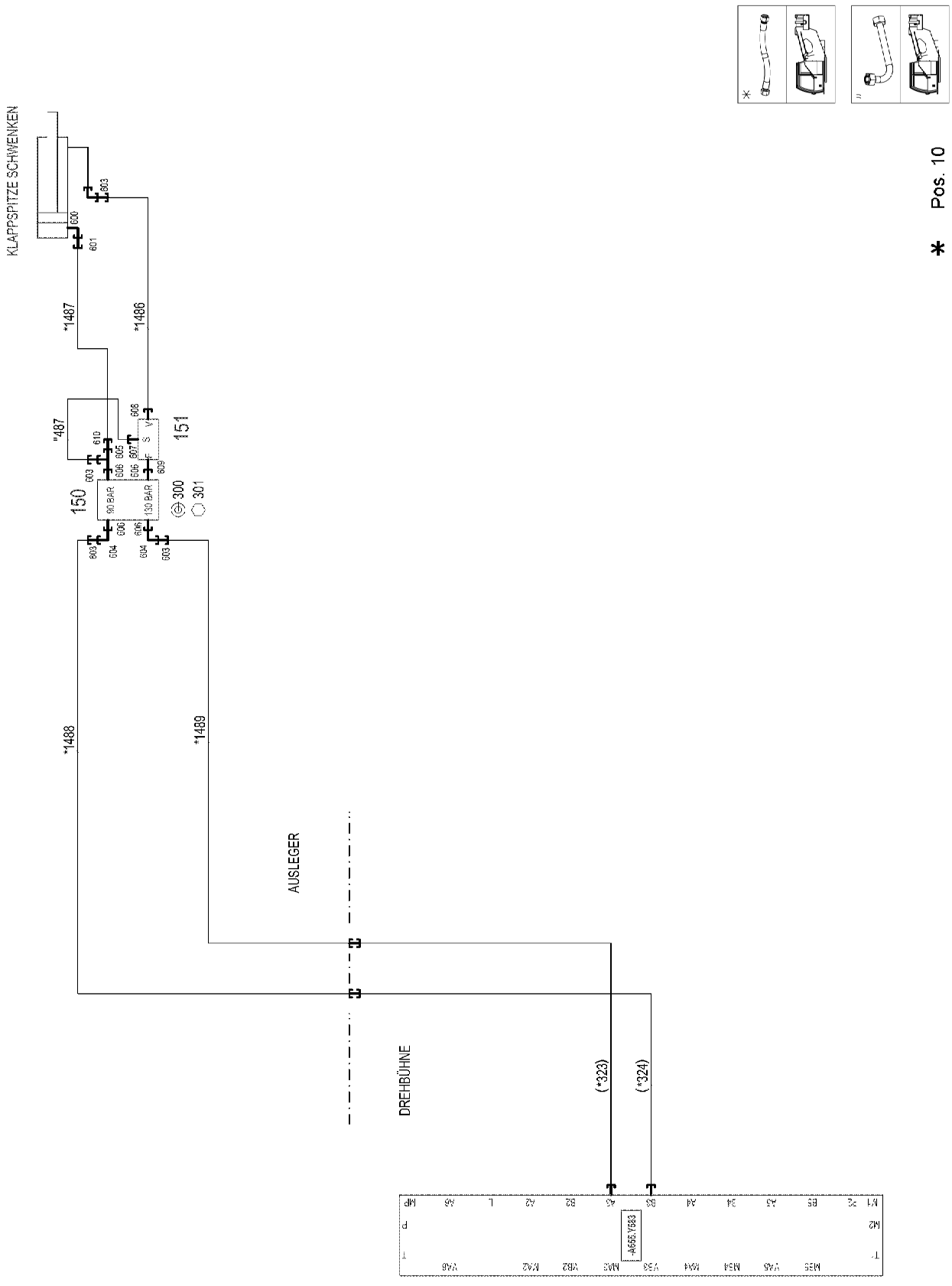

Pos. 10

*

18.7.2022 078289 LIEBHERR	**etk_en_de_047654 LTR 1220** **ADDNL.HYDR. FOLDING JIB** **ZUSATZHYDRAULIK KLAPPSPITZE**	❑ 721 (1/2) **967785408**

Pos.	Item	Quantity	Description	Bezeichnung
10	968222808	1	HOSE LINES FOLDING JIB ⇨ ❑ 723	SCHLAUCHLEITUNGEN KLAPPS
11	927163908	1	PIPE COND. FOLDING SEAT	ROHRLEITUNGEN KLAPPSPITZ
(487)	922676808	1	PIPE COMPL. 6X1X239 AS6 - AL6	ROHR KPL.
150	511450208	1	PRESSURE LIMITING VALVE pmax=350BAR	DRUCKBEGRENZUNGSVENTIL
(23)	710104008	2	SEALING RING DIN 7603 A18X22X1,5 CU	DICHTRING
151	511479408	1	LOAD HOLDING VALVE ⇨ ❑ 724	LASTHALTEVENTIL
300	11140469	2	WASHER ISO 7093-1 8 200HV 480H SPF	SCHEIBE
301	11690048	2	HEX SCREW ISO 4017 M8X12 8.8 480H SPF	SECHSKANTSCHRAUBE
600	473210508	1	FITTING RSWS10-SM-WD CR6-FREI	VERSCHRAUBUNG
601	475432008	1	FITTING REDSDN10/6-S CR6-FREI	VERSCHRAUBUNG
603	475432908	4	FITTING REDSD12/6-S CR6-FREI	VERSCHRAUBUNG
604	7617354	2	FITTING EW 12S CR6-FREI	VERSCHRAUBUNG
605	7617461	1	FITTING EL 12S CR6-FREI	VERSCHRAUBUNG
606	471032608	4	FITTING GE 12S G1/2A CR6-FREI	VERSCHRAUBUNG
607	471030008	1	FITTING XGE6-LR-ED CR6-FREI	VERSCHRAUBUNG
608	471032808	1	FITTING ISO 8434-1 GE 10S G3/8A CR6-FRE	VERSCHRAUBUNG
609	471900508	1	FITTING EGE 12S G3/8A CR6-FREI	VERSCHRAUBUNG
610	475433408	1	FITTING REDSD12/10-S CR6-FREI	VERSCHRAUBUNG

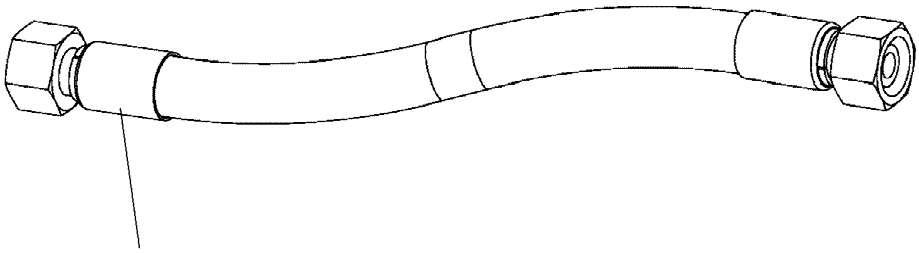

Schlauchnummer
Hose number
Numéro de flexible
Número de flexible
Номера шланга

Die Schlauchnummern auf den Schläuchen entsprechen den Positionen in der Schlauchliste.

The hose numbers from the hoses are in accordance with the items in the hose list.

Les numéros indiqués sur les flexibles correspondent aux repères de la nomenclature des flexibles.

Los números indicados en los flexibles corresponden a las posiciones de la lista de flexibles.

Нанесенные на шлангах номера соответствуют позициям в перечне.

Pos.	Item	Quantity	Description	Bezeichnung
1486	923015608	1	HOSE CPL. 2SN 6X540	SCHLAUCH KPL.
1487	923015608	1	HOSE CPL. 2SN 6X540	SCHLAUCH KPL.
1488	962968508	1	HOSE CPL. 2SN 6X13600	SCHLAUCH KPL.
1489	962968508	1	HOSE CPL. 2SN 6X13600	SCHLAUCH KPL.

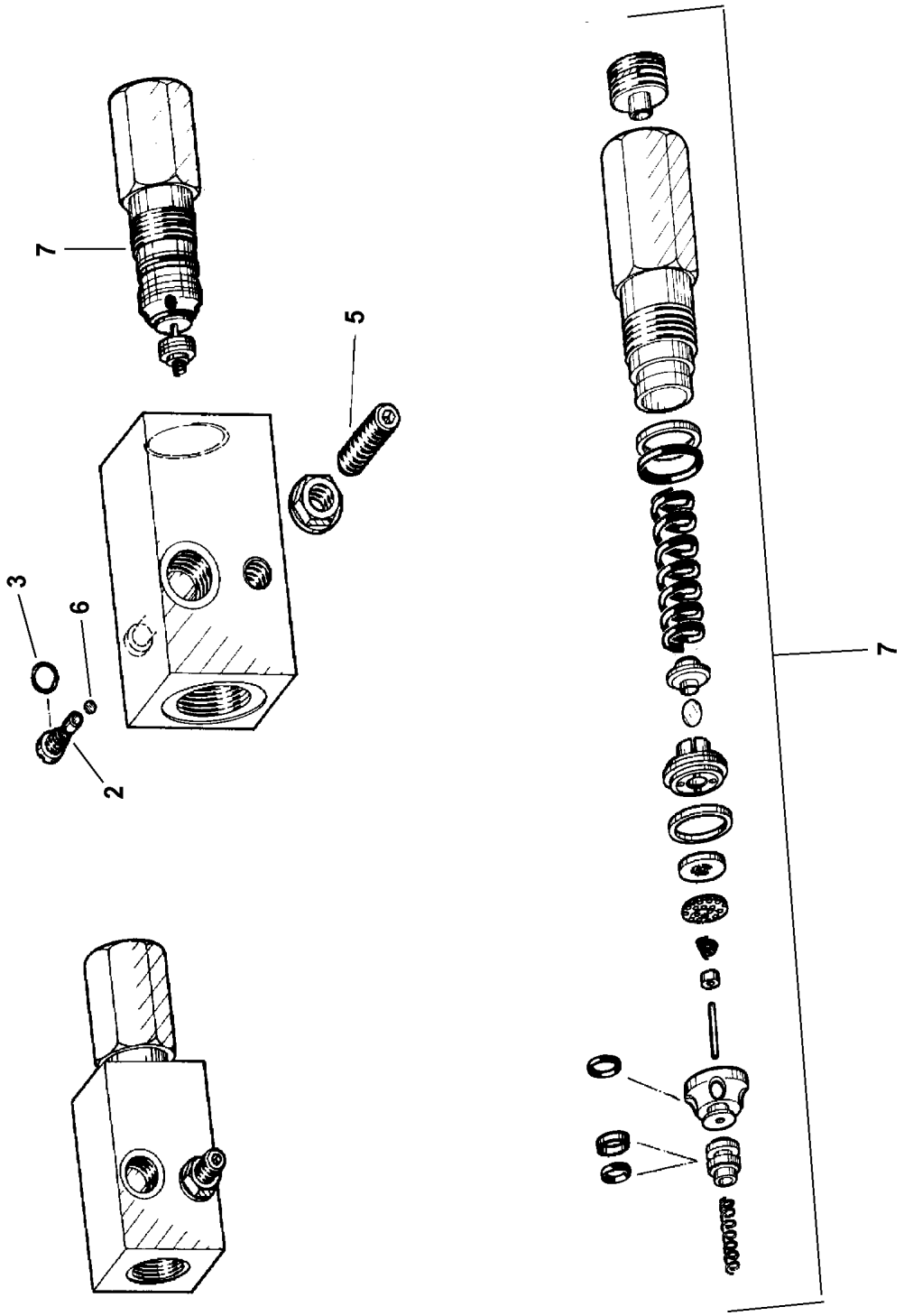
7
5
3
6
2
7

Pos.	Item	Quantity	Description	Bezeichnung
2	570941408	1	SCREW	SCHRAUBE
3	510712308	1	O-RING 4X1 NBR90	O-RING
5	404400508	1	GRUB SCREW DIN 913 M6X25 45H VERZ	GEWINDESTIFT
6	610706308	1	BALL DIN 5401 3	KUGEL
7	11002678	1	LOAD RETAINING VLV ELEMENT,CPL	LASTHALTEVENTILEINSATZ

Pos.	Item	Quantity	Description	Bezeichnung
4	967785008	1	ADDNL.HYDR. FOLDING JIB ⇨ ❑ 727	ZUSATZHYDRAULIK KLAPPSPI

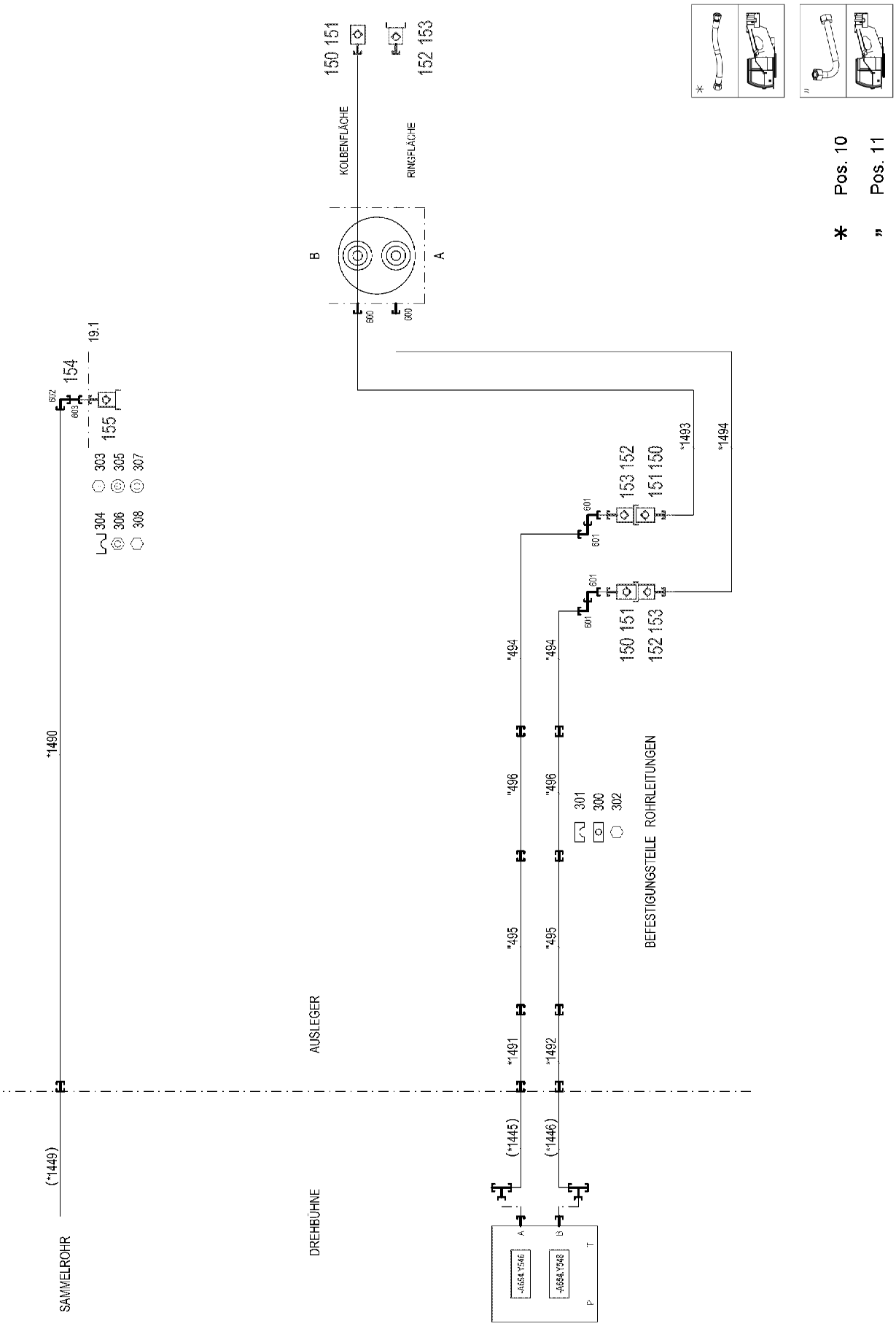

18.7.2022 078294	**etk_en_de_047654 LTR 1220**	727 (1/2)
LIEBHERR	**ADDNL.HYDR. FOLDING JIB** **ZUSATZHYDRAULIK KLAPPSPITZE**	**967785008**

Pos.	Item	Quantity	Description	Bezeichnung
10	968223308	1	HOSE LINES FOLDING JIB WIPPBAR ⇨ ❑ 729	SCHLAUCHLEITUNGEN KLAPPS
11	968223408	1	PIPE COND. FOLDING SEAT WIPPBAR ⇨ ❑ 730	ROHRLEITUNGEN KLAPPSPITZ
19	962602108	1	MECHANICAL AUXILIARIES	MECH.BEFESTIGUNGSTEILE
(1)	972934408	1	PLATE 4X128X75 S315MC FE//ZNNI8//CN//T	BLECH
150	10466915	3	HEX CAP NUT RD36X3 SPF	VERSCHLUSSMUTTER
151	511505908	3	COUPLING SLEEVE B3 16-S	KUPPLUNGSMUFFE
(1)	571081908	1	SHEET GASKET VITON	DICHTSCHEIBE
(2)	571082008	1	O-RING 20X2 FPM70	O-RING
(3)	571082108	1	O-RING 26X1,5 FPM70	O-RING
(4)	571082208	1	SUPPORTING RING 20X23,5X1 PTFE	STUETZRING
(5)	571082308	1	NUT CR6-FREI	MUTTER
152	10466911	3	SCREW PLUG RD36X3 SPF	VERSCHLUSSSCHRAUBE
153	511508608	3	COUPLING PLUG B3 16-S	KUPPLUNGSSTECKER
(1)	571082408	1	SHEET GASKET VITON	DICHTSCHEIBE
(2)	571082008	1	O-RING 20X2 FPM70	O-RING
(3)	571082208	1	SUPPORTING RING 20X23,5X1 PTFE	STUETZRING
154	10031987	1	DUST PLUG 3/8" SPF	STAUBSTECKER
155	10031989	1	COUPLING SLEEVE 3/8"-10L SPF	KUPPLUNGSMUFFE
300	7362606	13	LID PLATE DIN 3015-3 Z-DP 2 W1-ZN	DECKPLATTE
301	602000708	26	CLAMP-HALF 216-16 PP	KLEMMHAELFTE
302	11692827	13	HEX SCREW ISO 4017 M8X35 8.8 480H SPF	SECHSKANTSCHRAUBE
303	12202784	2	SOCKET HEAD SCREW ISO 4762 M6X60 8.8	ZYLINDERSCHRAUBE
304	602009008	2	CLAMP-HALF DIN 3015-1 L 5 R 32 PP SW	KLEMMHAELFTE
305	10875648	2	WASHER ISO 7093-1 6 200HV 480H SPF	SCHEIBE
306	12102692	2	HEX NUT DIN 985 M6 8 ZNNI-480H SPF	SECHSKANTMUTTER
307	11140469	2	WASHER ISO 7093-1 8 200HV 480H SPF	SCHEIBE
308	10197831	2	HEX SCREW ISO 4017 M8X25 8.8 ZNNI-480	SECHSKANTSCHRAUBE
600	471033208	2	FITTING XGE16-SR-ED CR6-FREI	VERSCHRAUBUNG
601	7617460	4	FITTING EW 16S CR6-FREI	VERSCHRAUBUNG
602	470230308	1	FITTING XW10-L CR6-FREI	VERSCHRAUBUNG
603	470010108	1	FITTING SNV10-L CR6-FREI	VERSCHRAUBUNG

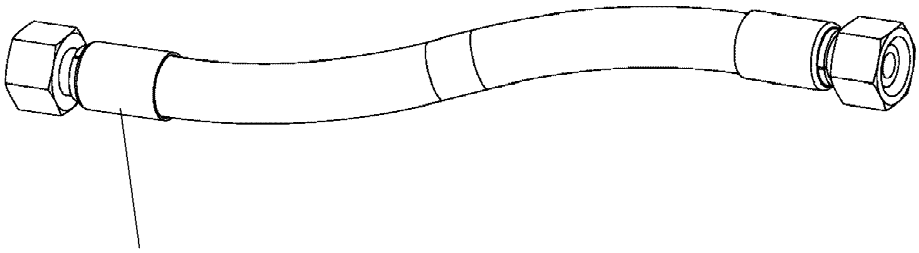

Schlauchnummer
Hose number
Numéro de flexible
Número de flexible
Номера шланга

Die Schlauchnummern auf den Schläuchen entsprechen den Positionen in der Schlauchliste.

The hose numbers from the hoses are in accordance with the items in the hose list.

Les numéros indiqués sur les flexibles correspondent aux repères de la nomenclature des flexibles.

Los números indicados en los flexibles corresponden a las posiciones de la lista de flexibles.

Нанесенные на шлангах номера соответствуют позициям в перечне.

Pos.	Item	Quantity	Description	Bezeichnung
1490	962968908	1	HOSE CPL. 1SC 8X14100	SCHLAUCH KPL.
1491	929753308	1	HOSE CPL. 2SN 12X3600	SCHLAUCH KPL.
1492	961861508	1	HOSE CPL. 2SN 12X3800	SCHLAUCH KPL.
1493	928765908	1	HOSE CPL. 2SN 12X860	SCHLAUCH KPL.
1494	964958008	1	HOSE CPL. 2SN 12X760	SCHLAUCH KPL.

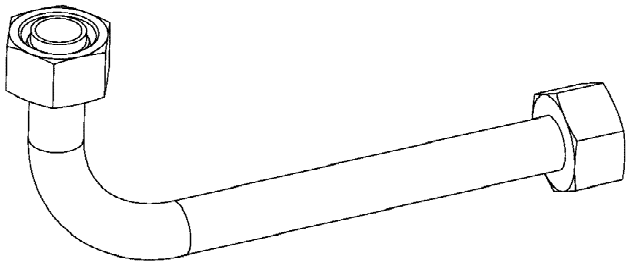

Die Positionsnummern der Rohre auf den Bildtafeln entsprechen den Positionen in der Rohrliste.

The pipe numbers from the illustrations are in accordance with the items in the pipe list.

Les numéros des tuyaux sur les illustrations correspondent aux repères de la nomenclature des tuyaux.

Los números de tubos en las ilustraciones corresponden a las posiciones de la lista de tubos.

Номера позиций труб на изображениях соответствуют позициям в перечне труб.

Pos.	Item	Quantity	Description	Bezeichnung
494	968201408	2	PIPE COMPL. 16X2X2550 AS16 - AS16	ROHR KPL.
495	962977608	2	PIPE COMPL. 16X2X5360 AS16 - AS16	ROHR KPL.
496	962977708	2	PIPE COMPL. 16X2X2361 AS16 - AS16	ROHR KPL.

Pos.	Item	Quantity	Description	Bezeichnung
1	967970408	1	MECH.AUXILIARIES FOR LIGHTING	MECH.ANBAUTEILE SCHEINW
5	10872003	2	WORK LIGHT 50W 12-24V ALU ALU ⇨ ❑ 732	ARBEITSSCHEINWERFER
11	969723508	1	LEAD W903	LEITUNG
12	965760208	1	LEAD W901	LEITUNG
13	965760308	1	LEAD W902	LEITUNG

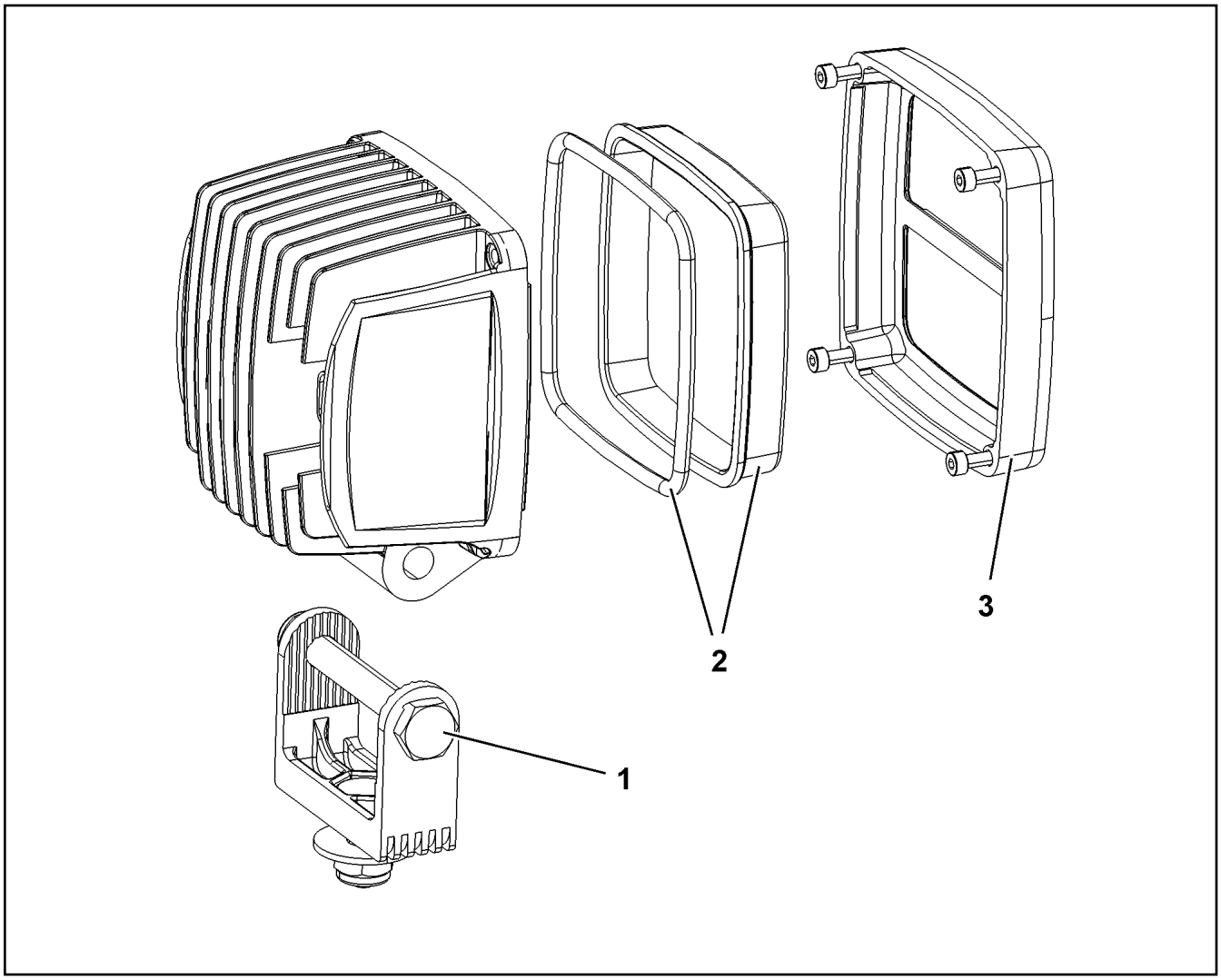

Pos.	Item	Quantity	Description	Bezeichnung
1	10875952	1	CLAMP	KLAMMER
2	10875969	1	LENS	LICHTSCHEIBE
3	10875953	1	ORIFICE	BLENDE

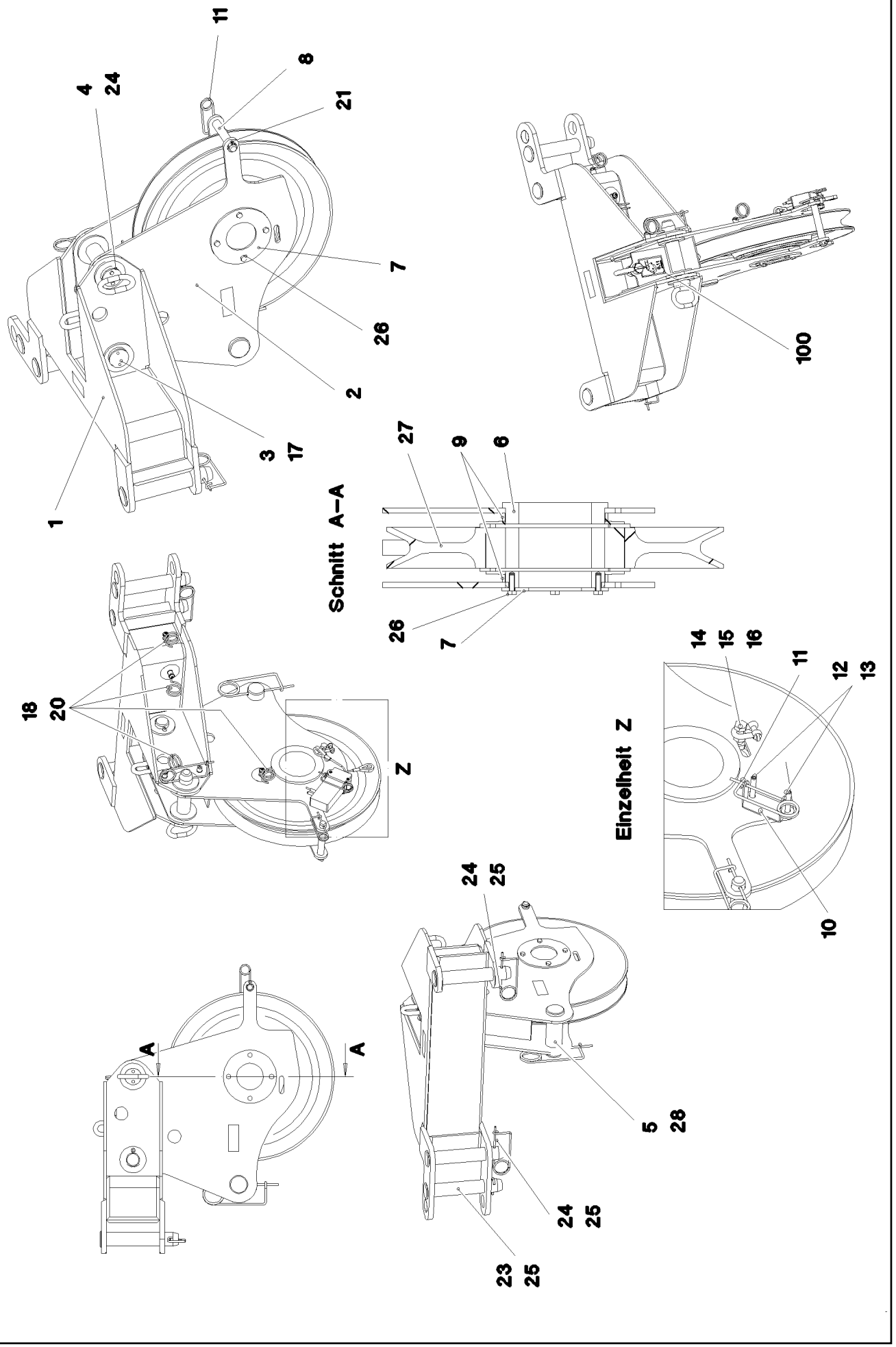

18.7.2022 078819 LIEBHERR	**etk_en_de_047654 LTR 1220** **BOOM NOSE** **MASTNASE**	❑ 733 (1/2) **917268408**

Pos.	Item	Quantity	Description	Bezeichnung
1	961940008	1	BOOM NOSE WELDED CONSTRUCTION	MASTNASE SCHWK.
2	967771808	1	ROLLER CARRIER WELDED	ROLLENTRAEGER SCHWK.
3	97070277	1	PIN 50.0X200 35NICRMOV125 SPF	BOLZEN
4	96002833	1	SOCKET PIN	STECKBOLZEN
(1)	97070277	1	PIN 50.0X200 35NICRMOV125 SPF	BOLZEN
(2)	963557408	1	HANDLE WELD.CONST. FE//ZNNI8//CN//T0	GRIFF SCHWK.
(3)	12211444	2	HEX SCREW ISO 4017 M5X10 8.8 480H SPF	SECHSKANTSCHRAUBE
5	939249808	1	PIN 55.0X158 35NICRMOV125 GASN. SPF	BOLZEN
6	946509308	1	AXLE RD150X120 S355J2H FE//ZNNI8//CN//T	ACHSE
7	971050008	1	PLATE 5X160X160 S700MC	BLECH
8	452551408	1	PIN ISO 2340 B20X150X134 S355J2+AR FE//	BOLZEN
9	971095808	2	DISTANCE TUBE 159.0X12 S355J2H FE//ZN	DISTANZROHR
10	971067708	1	PLATE 2X155X38 DC01 FE//ZNNI8//CN//T0	BLECH
11	433101208	2	RETAINING SPRING 4X68 ISO 2081 FE/ZN8/	SICHERUNGSFEDER
12	12100292	2	GRUB SCREW ISO 4026 M8X50 8.8 480H SP	GEWINDESTIFT
13	410120308	2	HEX NUT ISO 4035 M8 04 A2C	SECHSKANTMUTTER
14	773933508	1	SHACKLE DIN 82101 0,25T NG0,25 ST VERZ	SCHAEKEL
15	11626706	1	HEX SCREW ISO 4017 M10X40 8.8 FLZN SP	SECHSKANTSCHRAUBE
16	12102695	2	HEX NUT ISO 4032 M10 8 ZNNI-480H SPF	SECHSKANTMUTTER
17	10180371	1	SPLIT PIN ISO 1234 8X80 St 480H SPF	SPLINT
18	720014408	4	CABLE CLAMP	KABELHALTER
20	12102696	4	BUTTON HEAD SCREW ISO 7380-2 M8X10 0	HALBRUNDKOPFSCHRAUBE
21	10180359	1	SPLIT PIN ISO 1234 5X40 St 480H SPF	SPLINT
23	10180365	1	SPLIT PIN ISO 1234 6,3X63 St 480H SPF	SPLINT
24	433100908	3	RETAINING SPRING 4,5X98 ISO 2081 FE/ZN	SICHERUNGSFEDER
25	973626408	3	PIN 50.0X235 35NICRMOV125 GASN. SPF	BOLZEN
26	10197831	4	HEX SCREW ISO 4017 M8X25 8.8 ZNNI-480	SECHSKANTSCHRAUBE
27	967771908	1	ROPE PULLEY CPL. ⇨ ❑ 694	SEILROLLE KPL.
28	433105008	1	RETAINING SPRING DIN 2194 6 A3C	SICHERUNGSFEDER
100	967774608	1	SIGNS MASTNASE	BESCHILDERUNG
(1)	97025520	1	SIGN 85X55 SPF	SCHILD

Pos.	Item	Quantity	Description	Bezeichnung
1	966479308	1	SENSOR LIFT TOP LIMIT SWITCH MIT M12 ⇨ ❑ 736	GEBER HUB OBEN ENDSCHAL
10	967321308	1	FIXING DEVICE 2.LIFT TOP ⇨ ❑ 737	HALTERUNG 2.HUB OBEN
13	96068455	1	LEAD W931 ⇨ ❑ 738	LEITUNG

OHNE BILD

WITHOUT ILLUSTRATION

SANS ILLUSTRATION

SIN ILUSTRACION

БЕЗ ИЭОБРАЖЕНИЯ

Pos.	Item	Quantity	Description	Bezeichnung
7	10678395	1	LIMIT SWITCH TQ200-RFID SPF	ENDSCHALTER

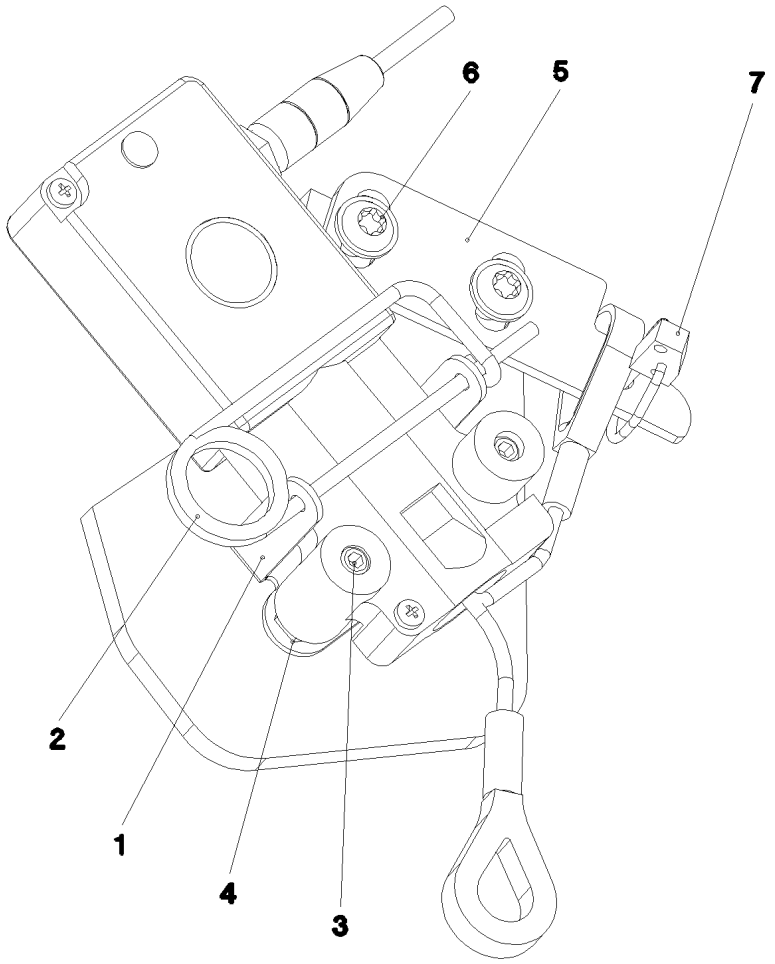

Pos.	Item	Quantity	Description	Bezeichnung
1	971067708	1	PLATE 2X155X38 DC01 FE//ZNNI8//CN//T0	BLECH
2	433101208	1	RETAINING SPRING 4X68 ISO 2081 FE/ZN8/	SICHERUNGSFEDER
3	12100292	2	GRUB SCREW ISO 4026 M8X50 8.8 480H SP	GEWINDESTIFT
4	11693875	2	HEX NUT ISO 4032 M8 8 480H SPF	SECHSKANTMUTTER
5	979132008	1	PLATE 110X34 S315MC FE//ZNNI8//CN//T0	BLECH
6	12102696	2	BUTTON HEAD SCREW ISO 7380-2 M8X10 0	HALBRUNDKOPFSCHRAUBE
7	10875869	1	SAFETY PLUG W HINGE-LID 5X29X4,7X25 4	SICHERHEITSKLAPPSTECKER

Pos.	Item	Quantity	Description	Bezeichnung
5	680000708	1	COUPLING SOCKET 4-POL 90° SPF	KUPPLUNGSDOSE
63	602203708	3	RECEPTACLE FOR TABS 0,3-1,5MM2	FLACHSTECKHUELSE
500	923512208	1	CABLE MARKER	KABELMARKER
501	602424008	1	CABLE GLAND M12X1,5X2-8 MS	KABELVERSCHRAUBUNG
996	965622108	3	LETTERING WIRE	BESCHRIFTUNG ADER
998	965622208	2	LETTERING WIRING HARNESS	BESCHRIFTUNG KABELBAUM

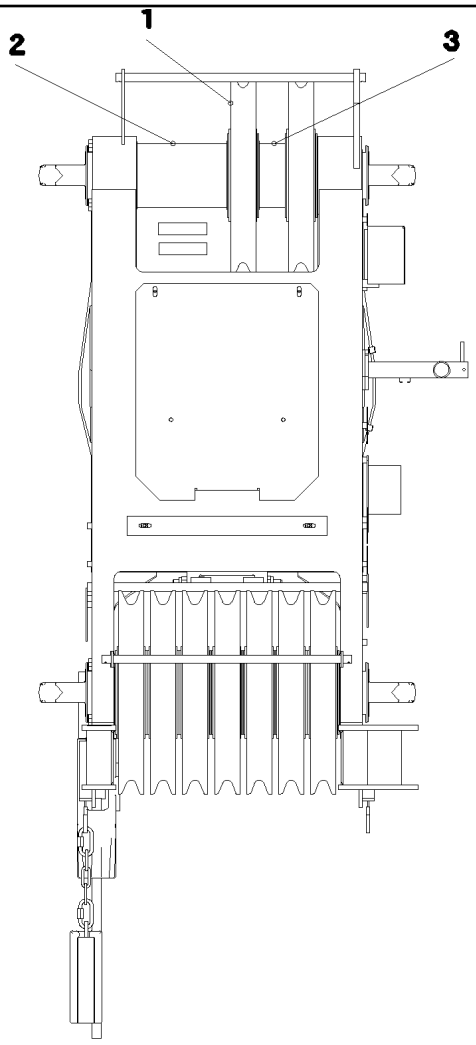

Pos.	Item	Quantity	Description	Bezeichnung
1	921456108	1	ROPE PULLEY CPL. SPF ⇨ ❑ 692	SEILROLLE KPL.
2	953536408	1	DISTANCE TUBE RD159X4,5X224 S355J2H	DISTANZROHR
3	953536508	1	DISTANCE TUBE RD159X4,5X65 S355J2H FE	DISTANZROHR

Pos.	Item	Quantity	Description	Bezeichnung
1	917598408	1	ELECTRIC MEASURING & WARN DEV WW + ⇨ ❑ 741	ELEKTRIK MESS-U.WARNEINRIC
2	968412508	1	MECH MEAS AND WARNING DEVICE WW+H ⇨ ❑ 743	MECHANIK MESS-U.WARNEINR

Pos.	Item	Quantity	Description	Bezeichnung
1	969047708	1	LEAD W933Y	LEITUNG
(5)	600462908	1.46	CONTROL LEAD 5 X 0,5 SPF	STEUERLEITUNG
(6)	680001408	1	COUPLING SOCKET 4-POL SPF	KUPPLUNGSDOSE
(7)	680000008	1	COUPLING SOCKET 4-POLE SPF	KUPPLUNGSDOSE
(500)	923512208	4	CABLE MARKER	KABELMARKER
(501)	604526608	1	PIN CARRIER 6-POL 16A	STIFTTRAEGER
(502)	604526508	1	BUSHING SUPPORT 6-POL 16A	BUCHSENTRAEGER
(503)	604508508	1	SEALING PLUG M 1-K	VERSCHLUSSKAPPE
(504)	10476383	1	PLUG M1	STECKER
(505)	602441001	1	CABLE GLAND M20X1,5X5-10 MS	KABELVERSCHRAUBUNG
(506)	10333297	1	INSERT SKINTOP 3X5,3MM	MEHRFACHDICHTEINSATZ
(507)	10871063	1	PROTECTIVE HOSE DN16XNORMAL PP	SCHUTZSCHLAUCH
(508)	602704808	1	CABLE SLEEVE 4-6	KABELTUELLE
(509)	604505508	1	CABLE SOCKET M11-Z	KABELDOSE
(510)	604512108	1	SEALING PLUG M1-D	VERSCHLUSSKAPPE
(511)	11491897	1	SCREW PLUG M12 PA	VERSCHLUSSSCHRAUBE
(628)	604519208	2	PIN CONTACT 0,75-1MM2	STIFTKONTAKT
(637)	604519108	1	PIN CONTACT 1,5MM2	STIFTKONTAKT
(719)	10493972	2	PIN CONTACT 0,5MM2 SILBER	STIFTKONTAKT
(721)	10493970	4	SLEEVE CONTACT 0,5MM2 SILBER	BUCHSENKONTAKT
(812)	604518908	5	STOPPER PLUG BAUREIHE_M1	BLINDSTOPFEN
(998)	965622208	2	LETTERING WIRING HARNESS	BESCHRIFTUNG KABELBAUM
2	11482252	1	WIND VELOCITY TRANSMITTER 0-50M/S SP ⇨ ❑ 742	WINDGESCHWINDIGKEITSGEBE
3	11482305	1	OBSTRUCTION LIGHT 7,2W 19,2-28,8V PBT	HINDERNISFEUER
5	7621780	1	LASHING STRAP 0,35MX18MM	ZURRGURT

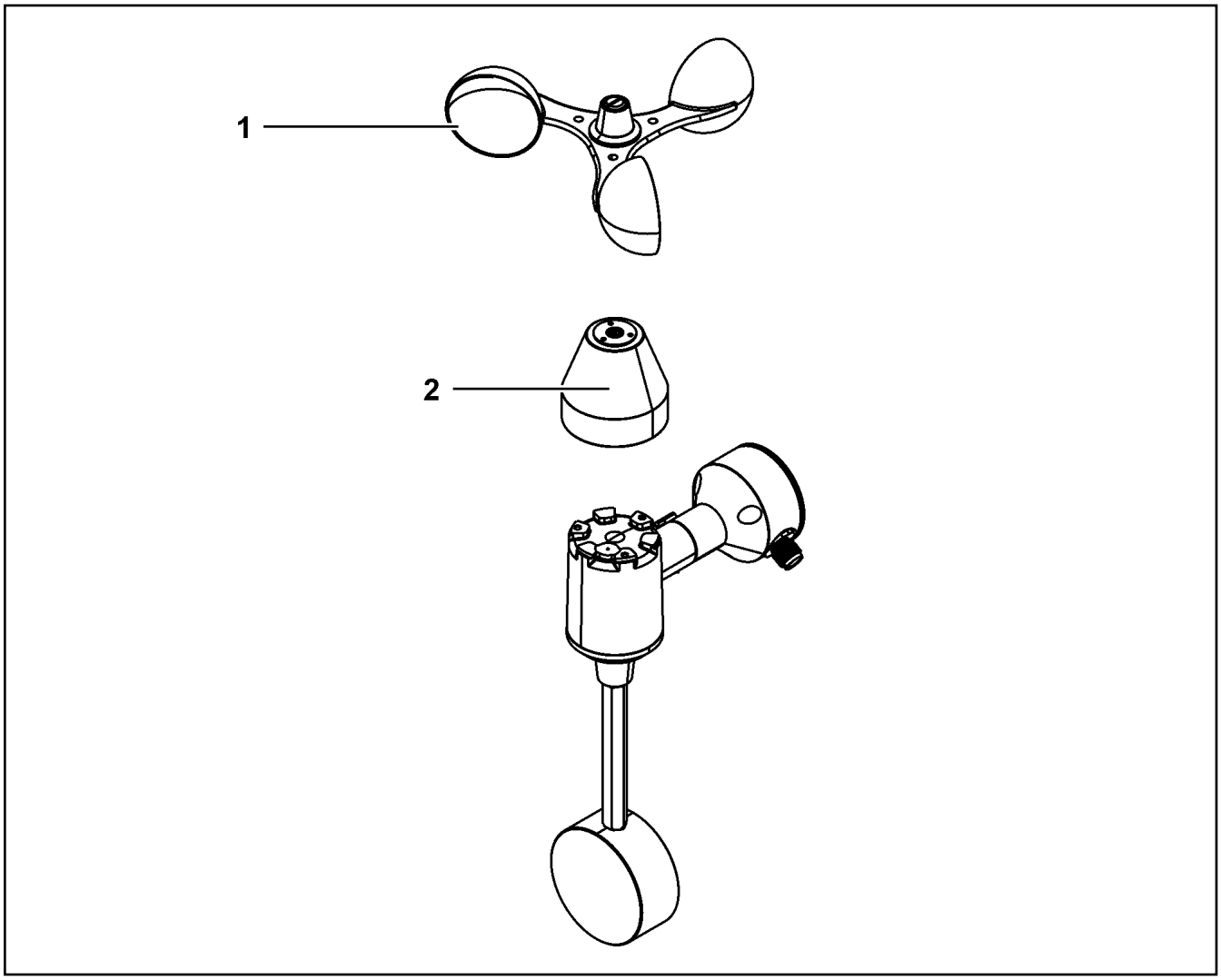

Pos.	Item	Quantity	Description	Bezeichnung
1	11171311	1	ROTOR	ROTOR
2	11171306	1	COVER LID	ABDECKKAPPE

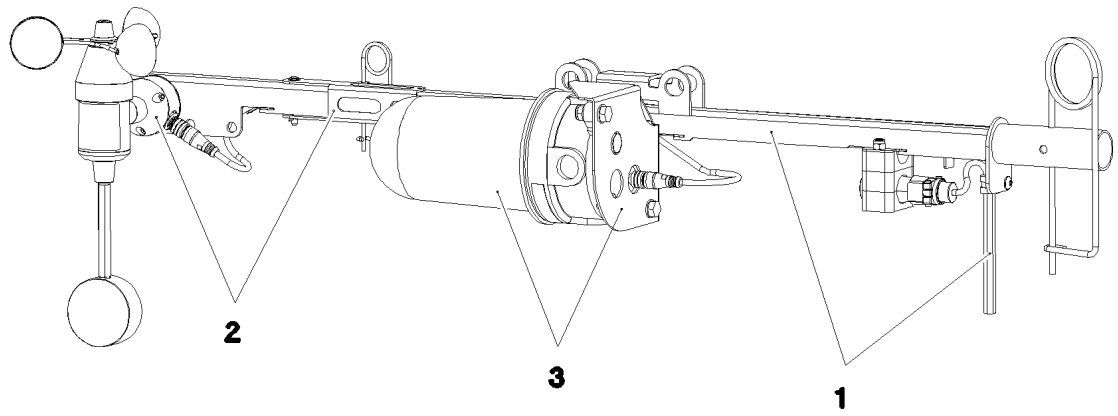

Pos.	Item	Quantity	Description	Bezeichnung
1	967933408	1	LOCATION FIXTURE PRE-ASS. ⇨ ❑ 744	GRUNDHALTER VORM.
2	967936408	1	WIND WARNING PREASSEMBLED ⇨ ❑ 745	WINDWARNUNG VORM.
3	967937608	1	OBSTRUCTION LIGHTS PREASS ⇨ ❑ 746	HINDERNISFEUER VORM.

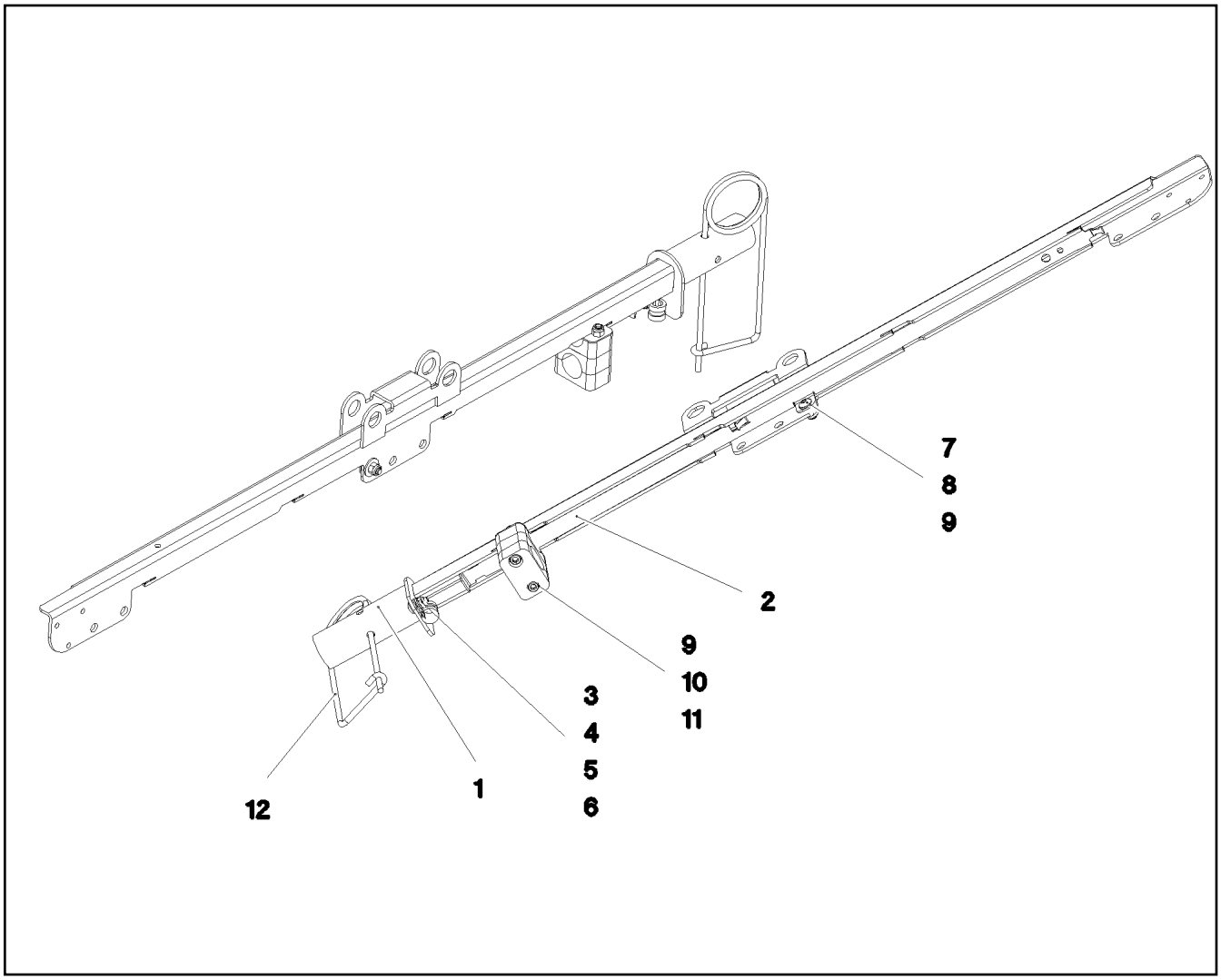

Pos.	Item	Quantity	Description	Bezeichnung
1	968266508	1	LOCATION FIXTURE WELDED	GRUNDHALTER SCHWK.
2	97030182	1	PLATE 1.5X691X50 X5CRNI18-10	BLECH
3	7381679	1	CLAMP DIN 3016-1 10X12XD1 W1-2-CR	SCHELLE
4	10028237	1	BUTTON HEAD SCREW AEHNL.ISO 7380-2	HALBRUNDKOPFSCHRAUBE
5	10301317	1	HEX NUT DIN 985 M5 A2-70	SECHSKANTMUTTER
6	10197808	1	WASHER ISO 7089 5 200HV ZNNI-480H	SCHEIBE
7	10412851	1	BUTTON HEAD SCREW AEHNL.ISO 7380-2	HALBRUNDKOPFSCHRAUBE
8	10540500	1	WASHER ISO 7093-1 6 200HV-A4	SCHEIBE
9	11004444	3	HEX NUT AEHNL.ISO 7040 M6 A2-70	SECHSKANTMUTTER
10	7005052	3	CLAMP-HALF DIN 3015-1 L 3 R 25 PP SW	KLEMMHAELFTE
11	11088382	2	SOCKET HEAD SCREW ISO 4762 M6X55 A2	ZYLINDERSCHRAUBE
12	433102508	1	RETAINING SPRING 5X122 ISO 2081 FE/ZN8/	SICHERUNGSFEDER

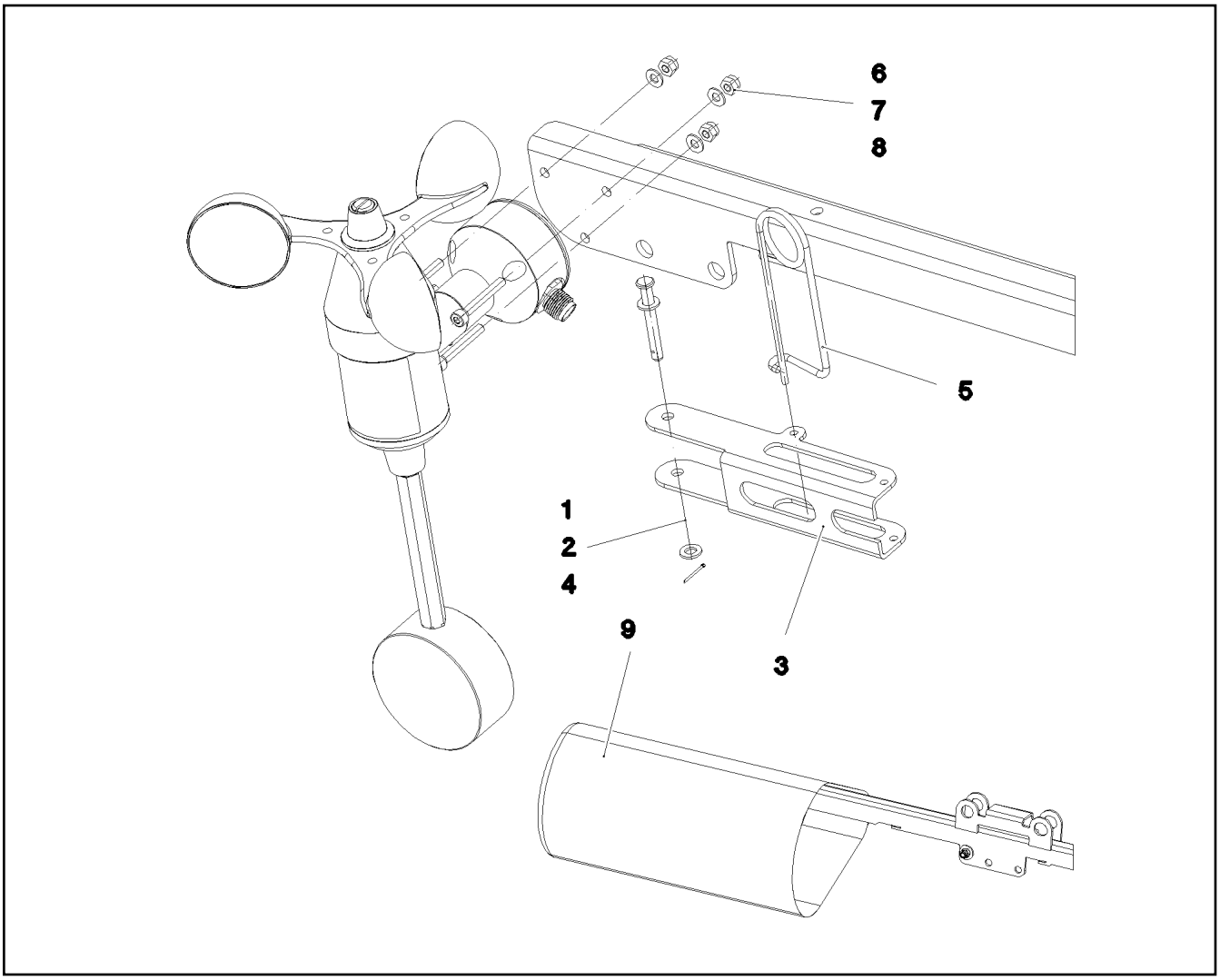

Pos.	Item	Quantity	Description	Bezeichnung
1	451000208	1	PIN DIN 1434 5X40X35 X5CRNI1810	BOLZEN
2	10410193	2	WASHER ISO 7089 5 -A2	SCHEIBE
3	97030562	1	PLATE 2X143X92 X5CRNI18-10	BLECH
4	10180340	1	SPLIT PIN ISO 1234 1,6X14 A2	SPLINT
5	433102808	1	RETAINING SPRING 3X55 VERZ	SICHERUNGSFEDER
6	10875815	3	SOCKET HEAD SCREW ISO 4762 M4X30 8.8	ZYLINDERSCHRAUBE
7	10875611	3	HEX NUT DIN 985 M4 8 480H SPF	SECHSKANTMUTTER
8	10875645	3	WASHER ISO 7089 4 200HV 480H SPF	SCHEIBE
9	97042475	1	HOOD 180X350 GEWEBE ROT	HAUBE

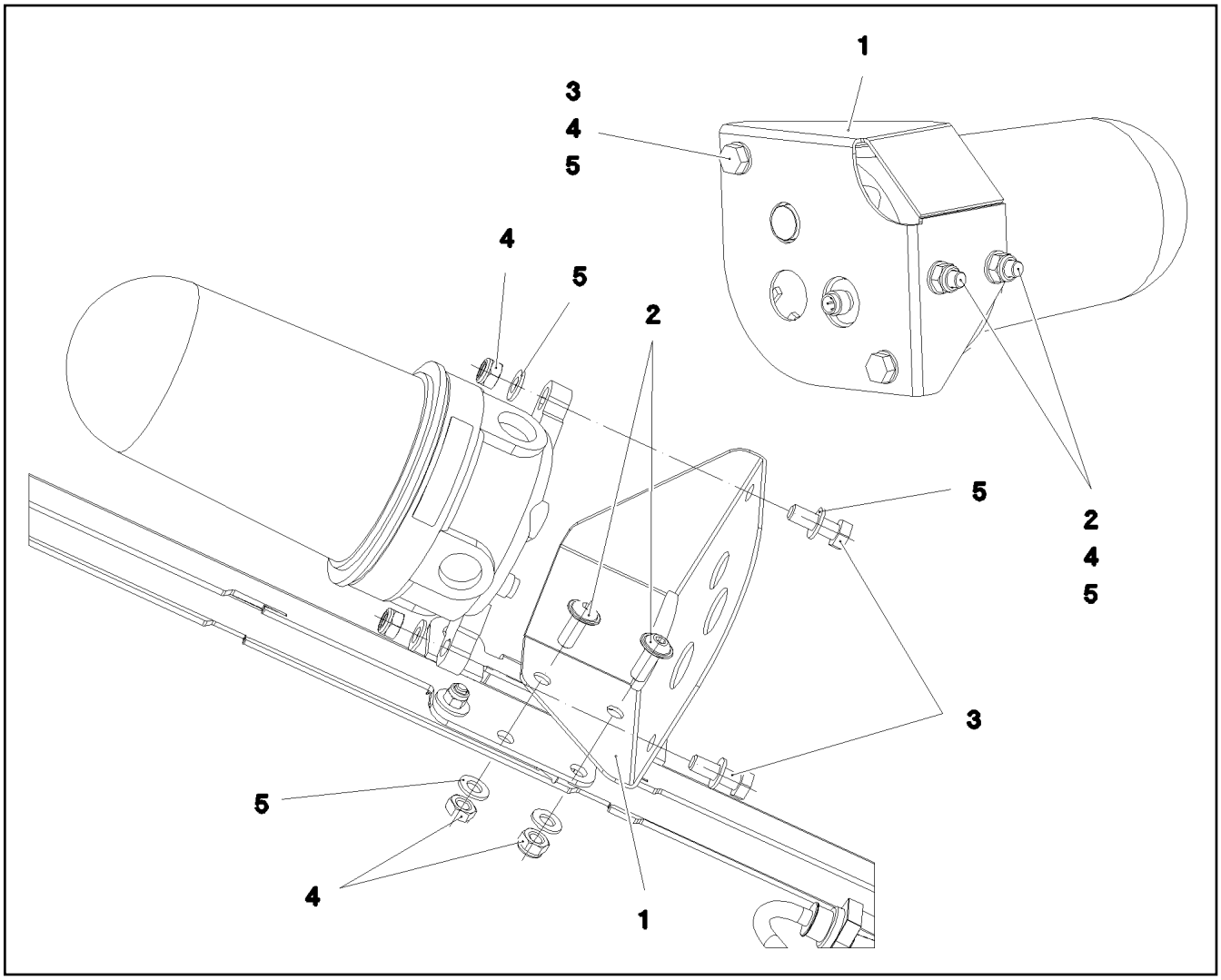

Pos.	Item	Quantity	Description	Bezeichnung
1	97030307	1	PLATE 2X191X185 X5CRNI18-10	BLECH
2	408650608	2	BUTTON HEAD SCREW ISO 7380-2 M8X20 A	HALBRUNDKOPFSCHRAUBE
3	406590105	2	HEX SCREW ISO 4017 M8X25 A2-70	SECHSKANTSCHRAUBE
4	411903108	4	HEX NUT DIN 985 M8 A2-70	SECHSKANTMUTTER
5	420060705	6	WASHER ISO 7089 8 200HV-A2	SCHEIBE

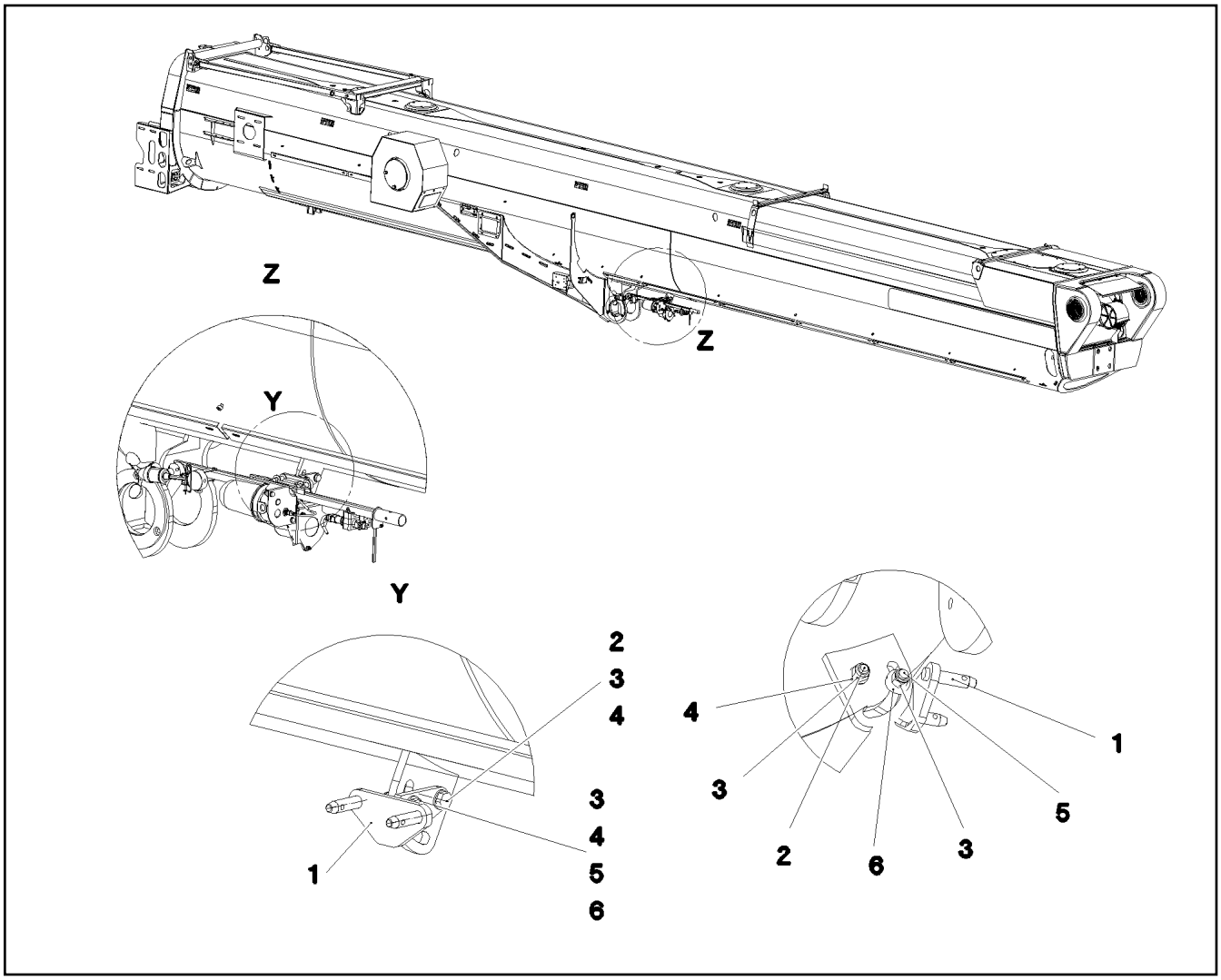

Pos.	Item	Quantity	Description	Bezeichnung
1	968410408	1	MOUNTING WELDED WARNEINRICHTUNG	AUFNAHME SCHWK.
2	11645386	1	HEX SCREW ISO 4017 M12X45 8.8 FLZN SP	SECHSKANTSCHRAUBE
3	11840127	2	HEX NUT ISO 7040 M12 8 FLZN SPF	SECHSKANTMUTTER
4	10289804	3	WASHER ISO 7089 12 300HV FLZN SPF	SCHEIBE
5	11651578	1	HEX SCREW ISO 4014 M12X50 8.8 FLZN SP	SECHSKANTSCHRAUBE
6	10006370	1	WASHER DIN 7349 13 200HV FLZN SPF	SCHEIBE

Pos.	Item	Quantity	Description	Bezeichnung
1	968811608	1	CROSS BEAM DEMONTAGE ⇨ ❑ 749	QUERTRAEGER

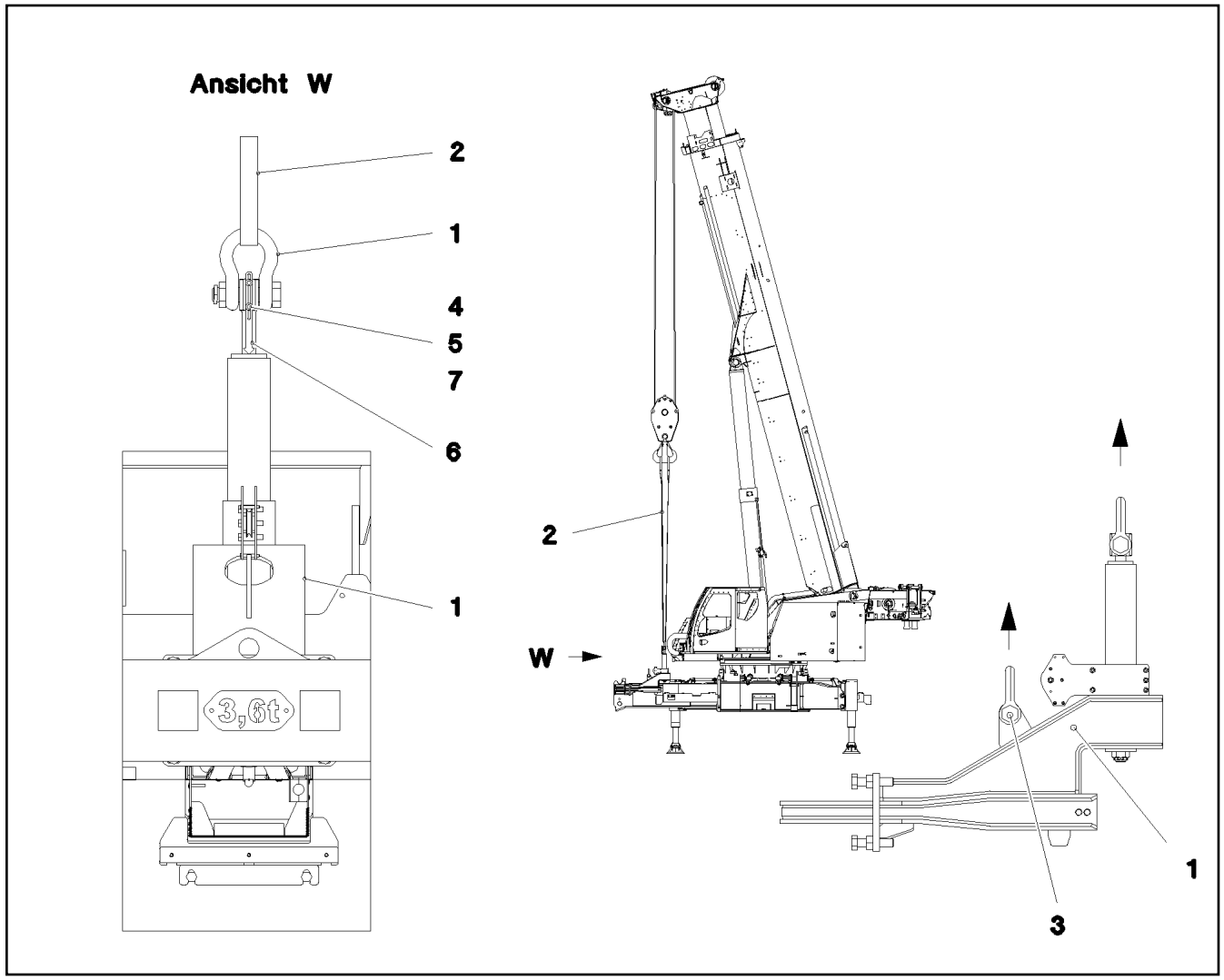

Pos.	Item	Quantity	Description	Bezeichnung
1	968728808	1	CONSOLE PRE-ASS. ⇨ ❑ 750	KONSOLE VORM.
2	10280715	1	ROUND SLING DIN EN 1492-2 2T-4M POLY	RUNDSCHLINGE
4	10441664	2	DISTANCE SLEEVE 15X6,3X25 PA66	DISTANZHUELSE
5	12216183	2	HEX SCREW ISO 4014 M6X40 8.8 480H SPF	SECHSKANTSCHRAUBE
6	97053174	1	PLATE 3X27X206 X5CRNI18-10	BLECH
7	10353667	2	WASHER DIN 7349 6 200HV-A2	SCHEIBE

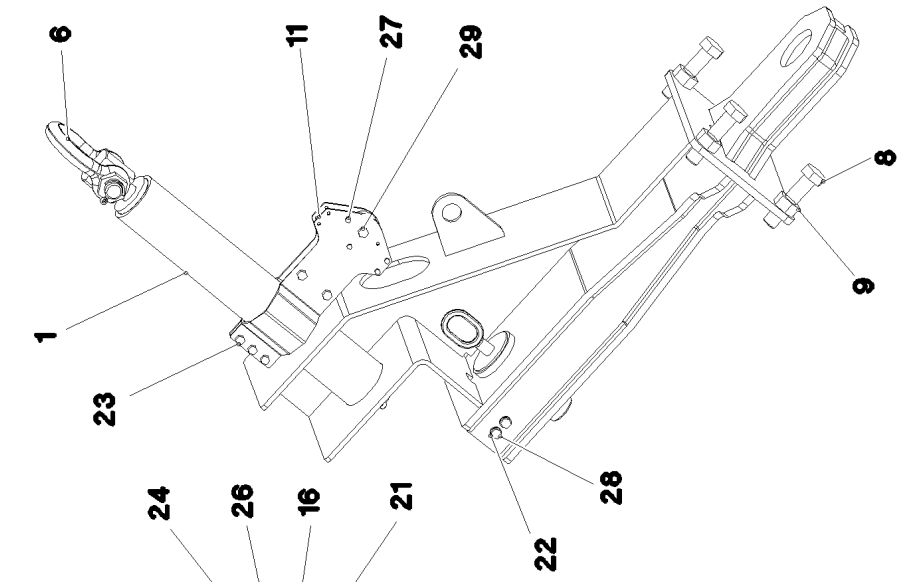

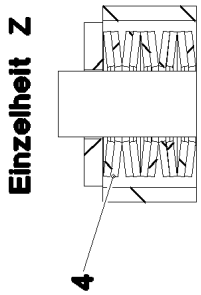

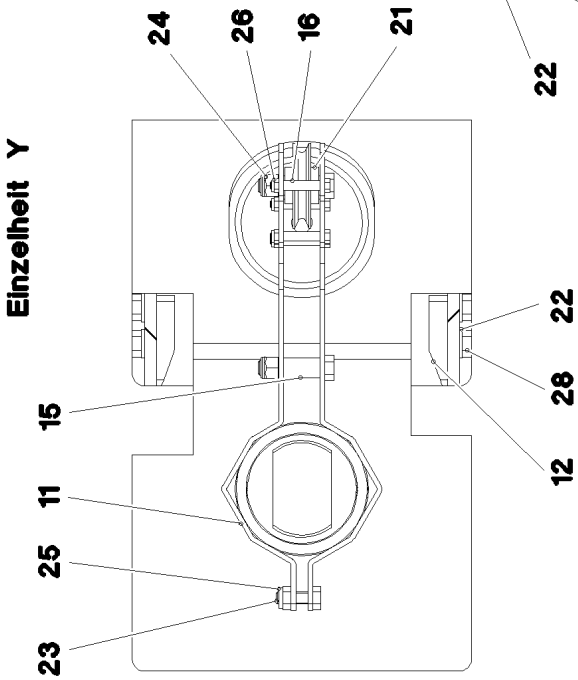

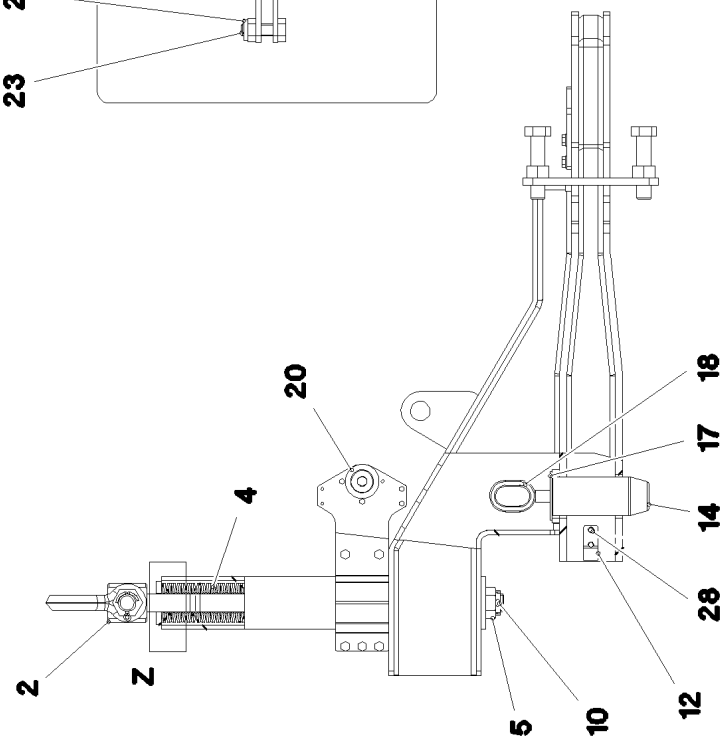

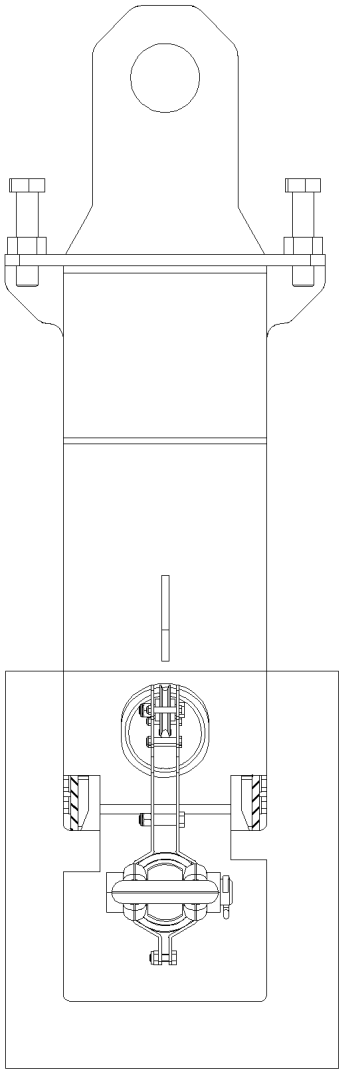

18.7.2022 078146 LIEBHERR	**etk_en_de_047654 LTR 1220** **CONSOLE PRE-ASS.** **KONSOLE VORM.**	❑ 750 (1/2) **968728808**

Pos.	Item	Quantity	Description	Bezeichnung
1	968729008	1	BRACKET WELDED CONST. RAL 9005	KONSOLE SCHWK.
2	97046349	1	THREADED PIN 80.0X816 35NICRMOV125	GEWINDEBOLZEN
4	272012502	130	DISC SPRING 80X41X4	TELLERFEDER
5	10179495	1	CROWN NUT DIN 935 M36 10 FLZN	KRONENMUTTER
6	10283201	1	SHACKLE 12T SPF	SCHAEKEL
8	406607008	4	HEX SCREW ISO 4017 M30X130 10.9 FLZN	SECHSKANTSCHRAUBE
9	10425689	4	HEX NUT ISO 4032 M30 10 FLZN SPF	SECHSKANTMUTTER
10	10180373	1	SPLIT PIN ISO 1234 8X100 St 480H SPF	SPLINT
11	97051275	2	PLATE 4X425X184 S315MC FE//ZNNI8//CN//T	BLECH
12	97051276	2	PLATE 15X30X75 S355MC	BLECH
14	97051278	1	PIN 85.0X200 35NICRMOV125 SPF	BOLZEN
15	97031233	3	SLEEVE 20.0X30 S355J2C+C FE//ZNNI8//CN/	HUELSE
16	97051280	4	DISTANCE TUBE 8.0X30 E235+N	DISTANZROHR
17	97008156	1	WASHER 4X100X100 S315MC FE//ZNNI8//C	SCHEIBE
18	925642908	1	HANDLE GRIP WELDED FE//ZNNI8//CN//T0	GEWINDEGRIFF SCHWK.
19	773404508	2.5	ROPE 6 0,59KN PERLON	SEIL
20	939279608	1	ROLLER RD70X15 PA6G	ROLLE
21	12100254	2	WASHER DIN 7989-2 20 ST FLZN SPF	SCHEIBE
22	10289804	4	WASHER ISO 7089 12 300HV FLZN SPF	SCHEIBE
23	11642358	3	HEX SCREW ISO 4017 M10X30 8.8 FLZN SP	SECHSKANTSCHRAUBE
24	11840127	3	HEX NUT ISO 7040 M12 8 FLZN SPF	SECHSKANTMUTTER
25	10197769	3	HEX NUT DIN 985 M10 8 ZNNI-480H SPF	SECHSKANTMUTTER
26	12102692	4	HEX NUT DIN 985 M6 8 ZNNI-480H SPF	SECHSKANTMUTTER
27	12216201	4	HEX SCREW ISO 4017 M6X45 8.8 480H SPF	SECHSKANTSCHRAUBE
28	11658892	4	HEX SCREW ISO 4017 M12X25 8.8 FLZN SP	SECHSKANTSCHRAUBE
29	11658891	3	HEX SCREW ISO 4014 M12X55 8.8 FLZN SP	SECHSKANTSCHRAUBE

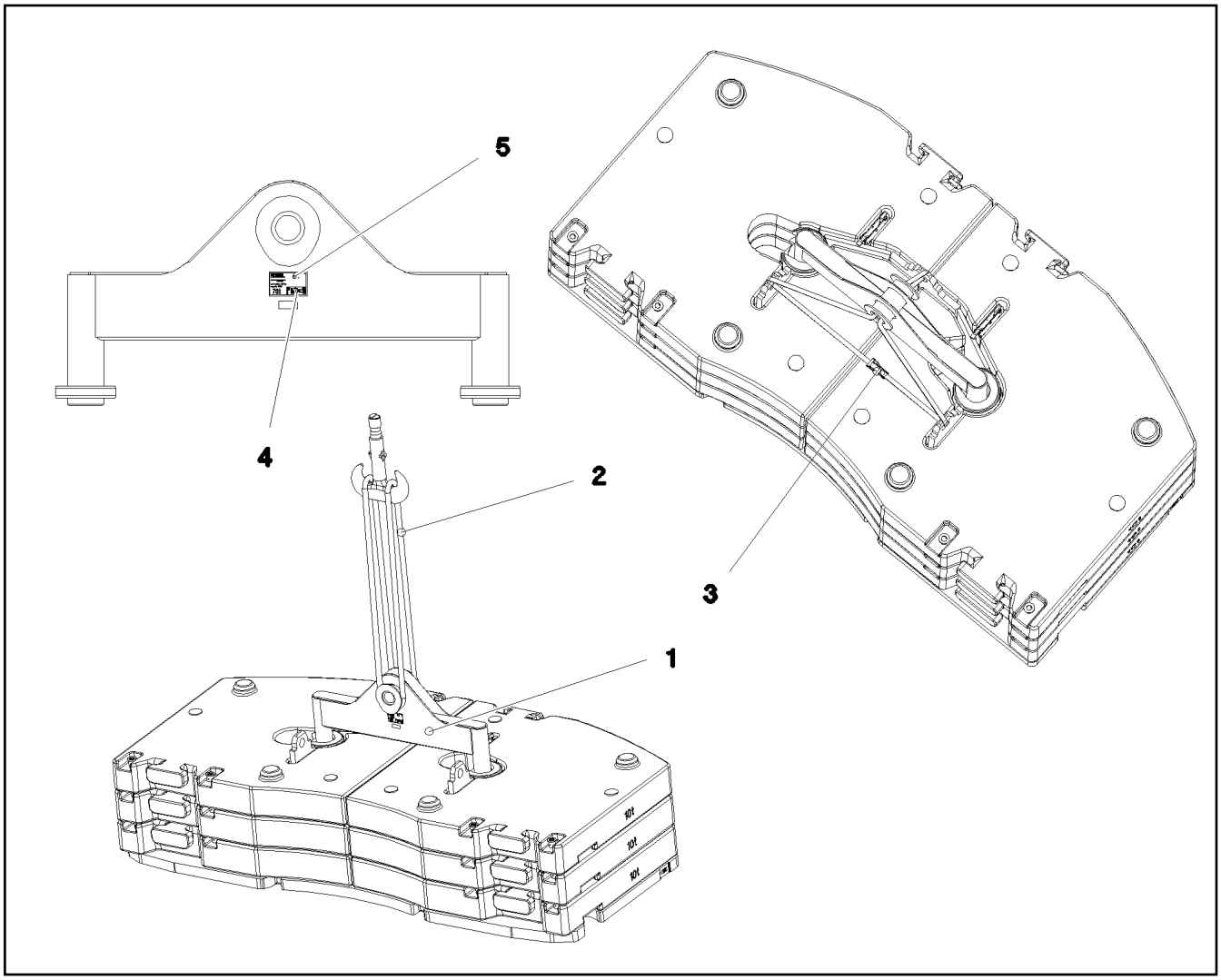

Pos.	Item	Quantity	Description	Bezeichnung
1	968497408	1	CROSS-MEMBER LMZ-70T SPF	TRAVERSE SCHWK.
2	10331368	1	ROPE SLING EN 13414-3 35.5T-8.4M ST VER	ANSCHLAGSEIL
3	779034708	1	LASHING STRAP EN 12195-2 6MX35MM SPF	ZURRGURT
4	97067623	2	SIGN PROJEKT TYP KLEBEFOLIE SPF	SCHILD
5	97067626	2	SIGN 160X100 KLEBEFOLIE SPF	SCHILD

Pos.	Item	Quantity	Description	Bezeichnung
3	11657360	2	HEX SCREW ISO 4017 M6X16 8.8 480H SPF	SECHSKANTSCHRAUBE
4	11212351	1	KEEPER 20X5X80	SICHERUNGSSTUECK
5	12103676	1	THRUST BEARING	AXIALLAGER
6	7743242	1	HYDRAULIC-TYPE LUBRICAT.NIPPLE DIN 71	KEGELSCHMIERNIPPEL
7	10875554	2	COUNTERSUNK SCREW DIN 7991 M8X30 8	SENKSCHRAUBE
9	12103686	1	SAFETY TRAP	SICHERUNGSFALLE
10	11212353	1	TRAVERSE	TRAVERSE

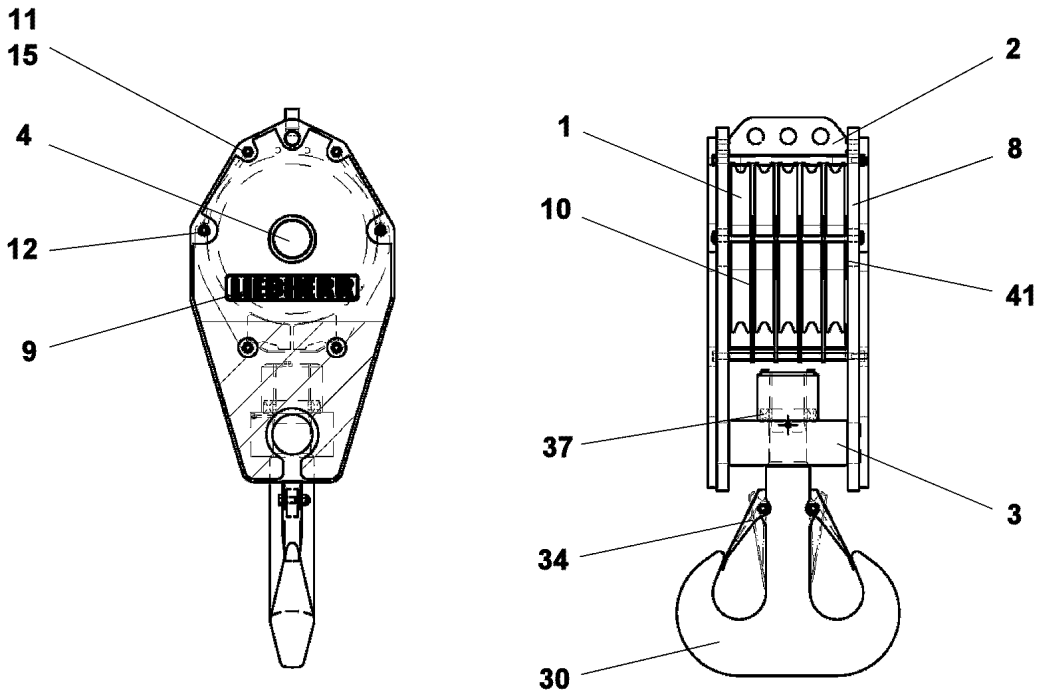

Pos.	Item	Quantity	Description	Bezeichnung
1	925203408	5	ROPE PULLEY CPL. SPF ⇨ ❑ 755	SEILROLLE KPL.
2	11347027	1	ROPE FIXING POINT	SEILFESTPUNKT
3	11347024	1	ROTATABLE BEAM	SCHWENKTRAVERSE
4	11658587	1	DISK PIN	SCHEIBENBOLZEN
8	11658586	2	SIDE PLATE	SEITENBLECH
9	10663718	2	SIGN 88X450X0,1 FOLIE	SCHILD
10	571716008	1	ROPE GUARD CPL	SEILSCHUTZ KPL.
11	11321016	4	SPACER BOLT	DISTANZBOLZEN
12	571716108	2	ROPE GUARD CPL	SEILSCHUTZ KPL.
(1)	10875869	2	SAFETY PLUG W HINGE-LID 5X29X4,7X25 4	SICHERHEITSKLAPPSTECKER
15	10875618	8	HEX NUT ISO 4032 M20 8 FLZN SPF	SECHSKANTMUTTER
30	11347028	1	TWIN HOOK	DOPPELHAKEN
34	571716208	2	SAFETY TRAP	SICHERUNGSFALLE
37	746607401	1	CYLINDER ROLLER THRUST BEARING DIN	AX.ZYL.ROLLENLAGER
41	11494286	2	COVER PLATE	ABDECKBLECH

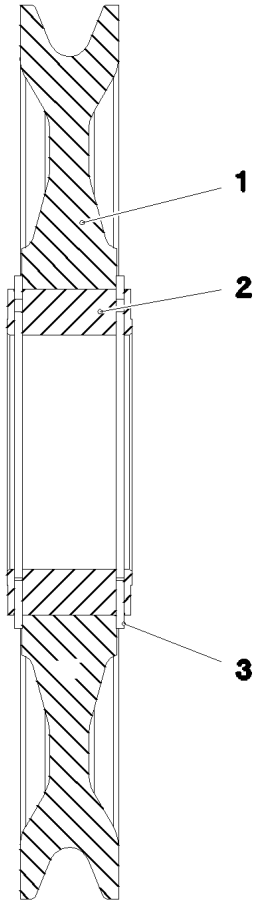

Pos.	Item	Quantity	Description	Bezeichnung
1	773953608	1	ROPE PULLEY D=572/506/210X63 PA6G SP	SEILROLLE
2	746506608	1	ROLLER BEARING 150X210X80	WAELZLAGER
3	10872700	2	LOCKING RING DIN 471 210X5	SICHERUNGSRING

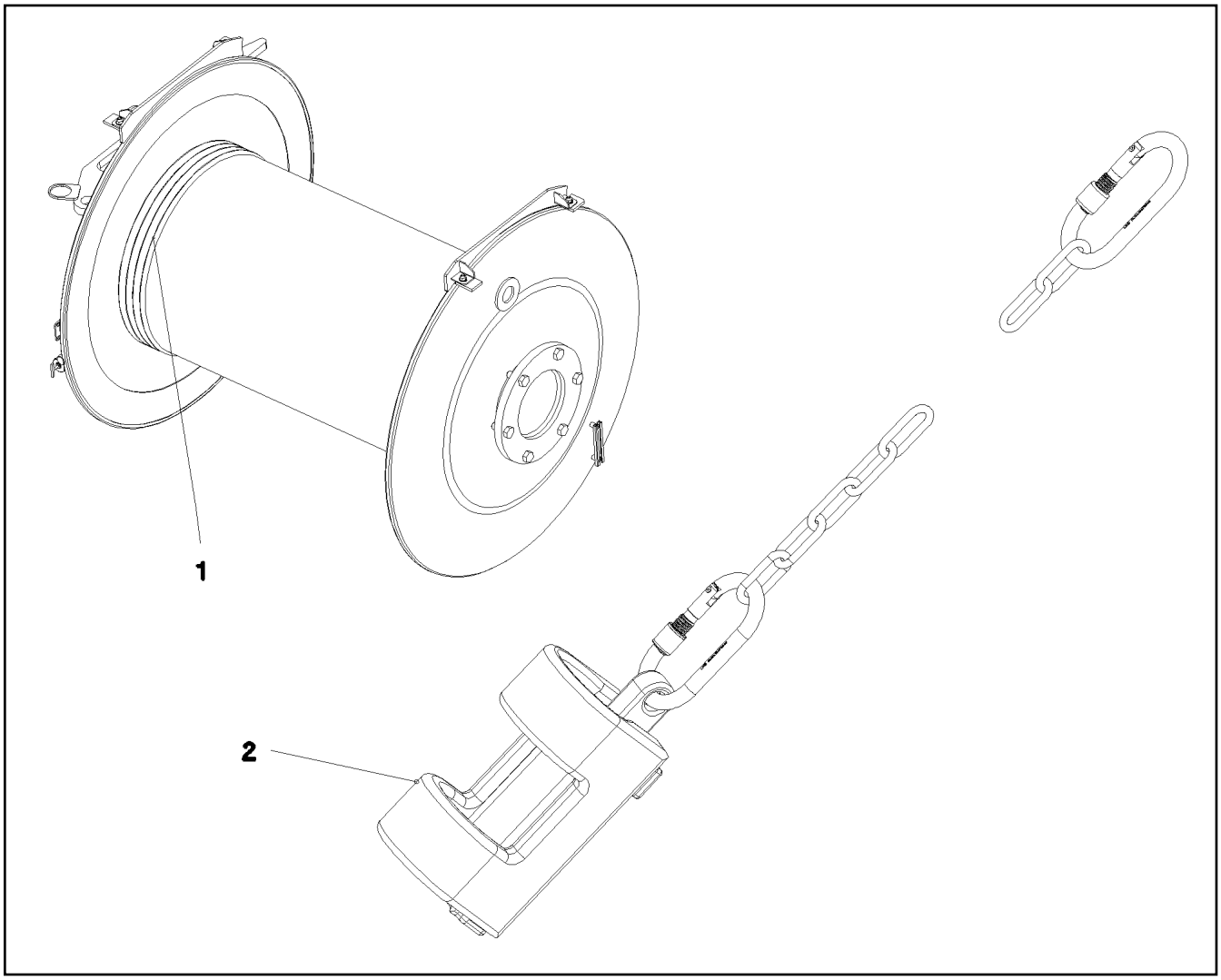

Pos.	Item	Quantity	Description	Bezeichnung
1	773444090	1	HOIST ROPE 23X280M -40°C SPF	HUBSEIL
2	96013575	1	HOIST LIM.SWITCH PLUMMET CPL ⇨ ❑ 693	HUBENDSCHALTER GEWICHT K

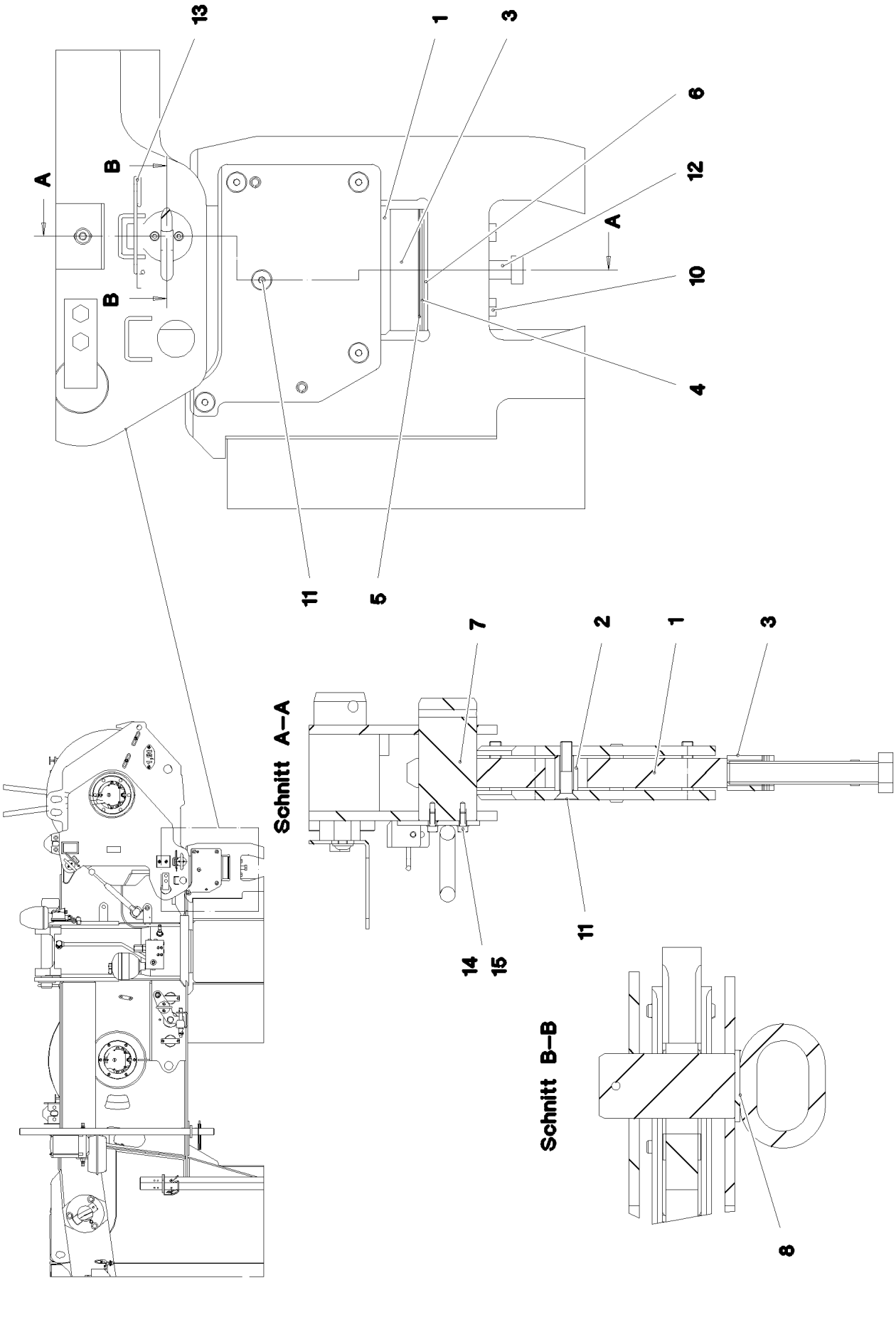
13
1
3
6
12
A
B
B
A
10
4
11
5
7
2
1
3
Schnitt A–A
14
15
11
Schnitt B–B
8

Pos.	Item	Quantity	Description	Bezeichnung
1	97030323	2	PLATE 25X202X279 S690QL SPF	BLECH
2	97031233	2	SLEEVE 20.0X30 S355J2C+C FE//ZNNI8//CN/	HUELSE
3	97031659	2	PLATE 30X130X30 S355J2+N FE//ZNNI8//CN/	BLECH
4	97031660	8	PLATE 2X130X30 DC01 FE//ZNNI8//CN//T0	BLECH
5	97031661	8	PLATE 1X130X30 DC01 FE//ZNNI8//CN//T0	BLECH
6	97031684	8	PLATE 4X130X30 S315MC FE//ZNNI8//CN//T	BLECH
7	97031196	2	PIN 55.0X105 35NICRMOV125 SPF	BOLZEN
8	967969708	2	HANDLE WELD.CONST. FE//ZNNI8//CN//T0	GRIFF SCHWK.
10	10875517	4	HEX SCREW ISO 4017 M12X95 8.8 FLZN SP	SECHSKANTSCHRAUBE
11	12100586	2	COUNTERSUNK SCREW ISO 10642 M10X50	SENKSCHRAUBE
12	12225211	2	HEX SCREW ISO 4017 M20X130 8.8 FLZN SP	SECHSKANTSCHRAUBE
13	433101208	2	RETAINING SPRING 4X68 ISO 2081 FE/ZN8/	SICHERUNGSFEDER
14	10197808	4	WASHER ISO 7089 5 200HV ZNNI-480H	SCHEIBE
15	11690042	4	SOCKET HEAD SCREW ISO 4762 M5X12 8.8	ZYLINDERSCHRAUBE

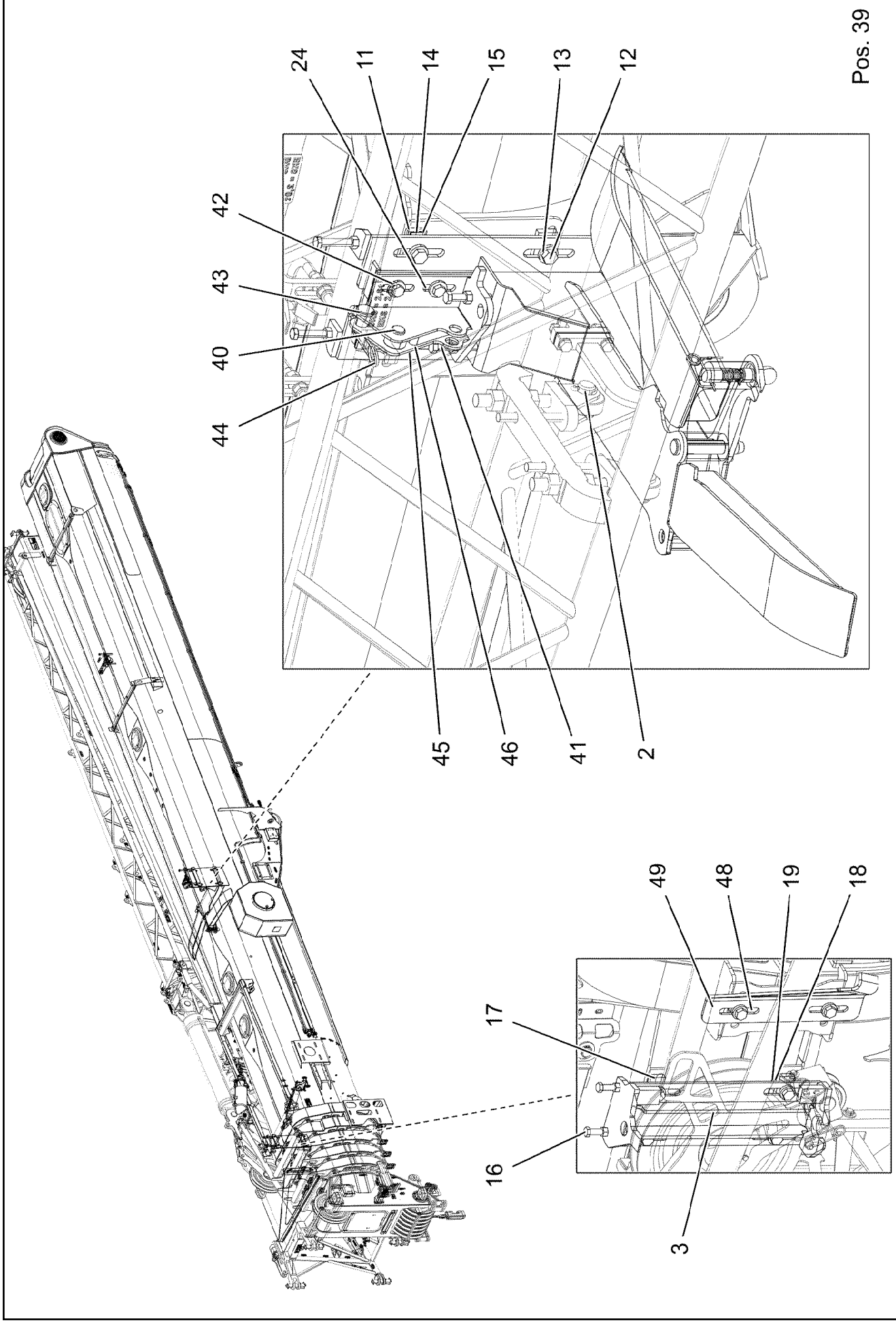
Pos. 39
24
11
14
15
13
12
42
43
40
44
45
46
41
2
49
48
19
18
17
16
3

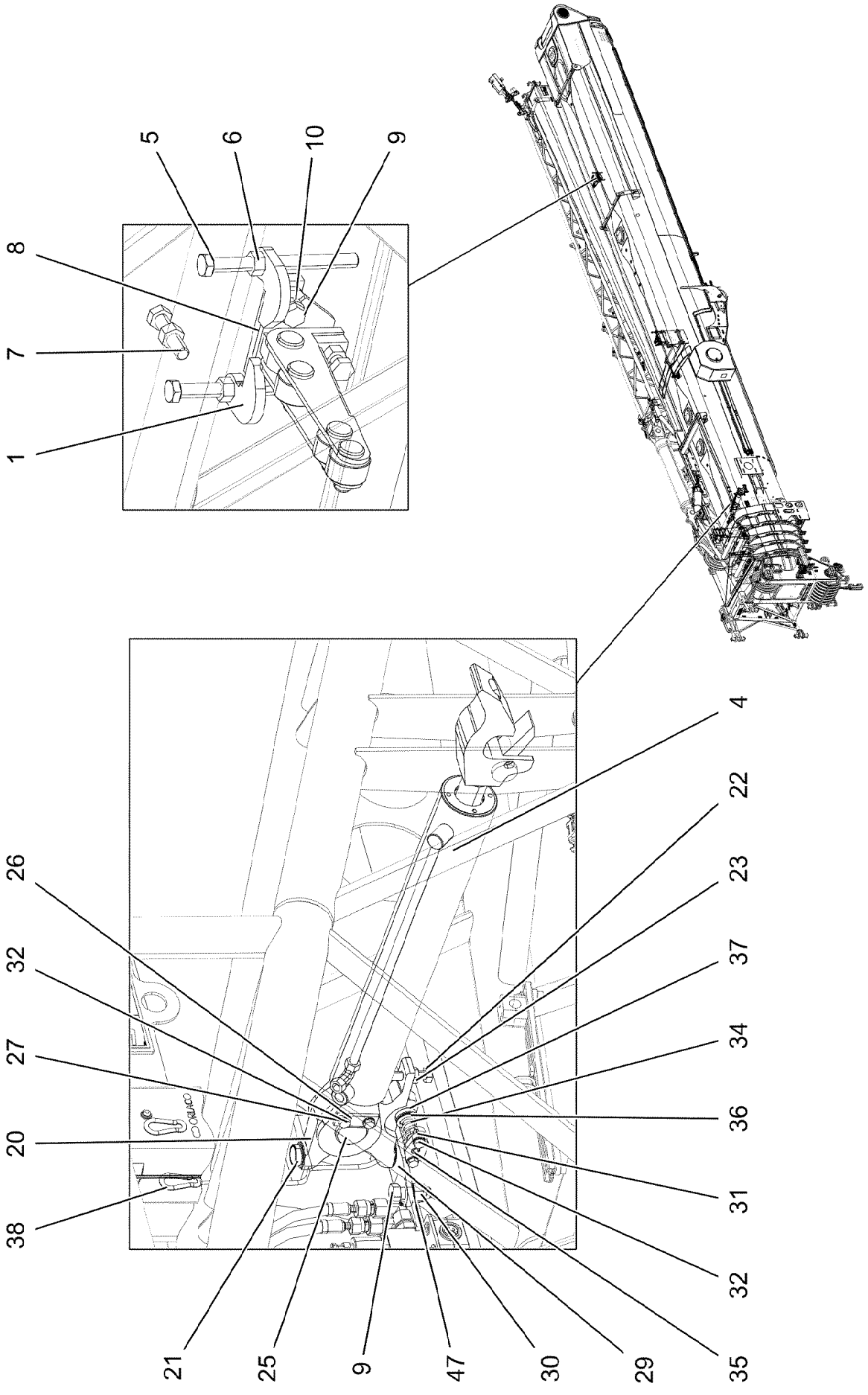
5
6
10
9
8
7
1
4
22
23
37
34
36
31
32
35
29
30
47
9
25
21
38
20
27
32
26

Pos.	Item	Quantity	Description	Bezeichnung
1	929582108	1	MOUNTING PRE-ASS. ⇨ ❑ 762	HALTERUNG VORM.
2	923285508	1	FOLDING BRACKET PRE-ASS. ⇨ ❑ 763	KLAPPKONSOLE VORM.
3	925042108	1	BRACKET WELDED CONST.	KONSOLE SCHWK.
4	512363708	1	HYDRO CYLINDER 65/36-480 SPF ⇨ ❑ 764	HYDROZYLINDER
5	10179032	4	HEX SCREW ISO 4017 M16X180 8.8 FLZN SP	SECHSKANTSCHRAUBE
6	10875617	9	HEX NUT ISO 4032 M16 8 FLZN SPF	SECHSKANTMUTTER
7	12223051	1	HEX SCREW ISO 4017 M16X70 8.8 FLZN SP	SECHSKANTSCHRAUBE
8	953147708	1	THREADED PLATE 15X40X130 S690QL	GEWINDEPLATTE
9	10875803	8	HEX SCREW ISO 4017 M16X45 8.8 FLZN SP	SECHSKANTSCHRAUBE
10	10875866	2	WASHER DIN 7989-2 16 -ST FLZN SPF	SCHEIBE
11	956347808	2	PLATE 15X45X320 S690QL	BLECH
12	10875805	10	HEX SCREW ISO 4017 M20X50 8.8 FLZN SP	SECHSKANTSCHRAUBE
13	4600604	10	WASHER DIN 7349 21 100HV FLZN SPF	SCHEIBE
14	956348808	1	PLATE 1x320x35 DC01+ZE	BLECH
15	956348908	1	PLATE 2x320x35 DC01+ZE	BLECH
16	12225311	2	HEX SCREW ISO 4017 M16X120 10.9 FLZN	SECHSKANTSCHRAUBE
17	953608508	2	PLATE 20X45X230 S690QL	BLECH
18	949361408	1	BASE 1X200X70 DC01 FE//ZNNI8//CN//T0	UNTERLAGE
19	949362208	1	BASE 2X200X70 DC01 FE//ZNNI8//CN//T0	UNTERLAGE
20	955552508	1	TRAVERSE 30X161X190 S690QL	TRAVERSE
21	708011608	2	DU BUSHING	DU-BUCHSE
22	11840136	2	HEX SCREW ISO 4017 M12X50 8.8 FLZN	SECHSKANTSCHRAUBE
23	10875616	2	HEX NUT ISO 4032 M12 8 FLZN SPF	SECHSKANTMUTTER
24	956348108	2	PLATE 15X40X140 S690QL	BLECH
25	944029908	1	PIN RD35X71 35NICRMOV125 GASN. SPF	BOLZEN
26	997040101	1	AXLE HOLDER LN 4/1 S235JR+AR ZNNI	ACHSHALTER
27	11651612	2	HEX SCREW ISO 4017 M8X16 8.8 480H SPF	SECHSKANTSCHRAUBE
28	12103465	4	WASHER ISO 7089 8 300HV ZNNI-480H SPF	SCHEIBE
29	955552608	1	PLATE 8X70X182 S960QL	BLECH
30	10875859	2	HEX NUT ISO 7040 M16 8 FLZN SPF	SECHSKANTMUTTER
31	955974308	1	PLATE 8X30X58 S355MC FE//ZNNI8//CN//T0	BLECH
32	11651767	2	HEX SCREW ISO 4017 M8X20 8.8 480H SPF	SECHSKANTSCHRAUBE
34	720012608	1	COMPRESSION SPRING EN10270-3	DRUCKFEDER
35	10875876	1	DOWEL PIN ISO 8752 12X85 480H SPF	SPANNSTIFT
36	10875863	1	SPHERICAL WASHER DIN 6319 17 480H SP	KUGELSCHEIBE
37	10875862	1	TAPERED SOCKET DIN 6319 19 480H SPF	KEGELPFANNE
38	744010208	2	SNAP HOOK DIN 5299 C 60X6-120KG ST V	KARABINERHAKEN
39	740001808	0.3	KNOTTED-LINK CHAIN DIN 5686 2,5 GALV.V	KNOTENKETTE
40	923879808	1	CONSOLE PRE-ASS. ⇨ ❑ 765	KONSOLE VORM.
41	10875518	2	HEX SCREW ISO 4017 M16X100 8.8 FLZN SP	SECHSKANTSCHRAUBE
42	4600021	4	WASHER DIN 7349 17 200HV FLZN SPF	SCHEIBE
43	451426608	1	PIN DIN 1436 25X55X45 42CRMO4 GASN. SP	BOLZEN
44	433100908	1	RETAINING SPRING 4,5X98 ISO 2081 FE/ZN	SICHERUNGSFEDER
45	956348608	1	PLATE 1X40X140 DC01+ZE	BLECH
46	956348708	1	PLATE 2X40X140 DC01+ZE	BLECH
47	10289806	2	WASHER ISO 7089 16 300HV FLZN SPF	SCHEIBE
48	974911108	1	THREADED PLATE 20X40X315 S690QL	GEWINDEPLATTE
49	975221808	1	PLATE 8X1054X560 S700MC	BLECH

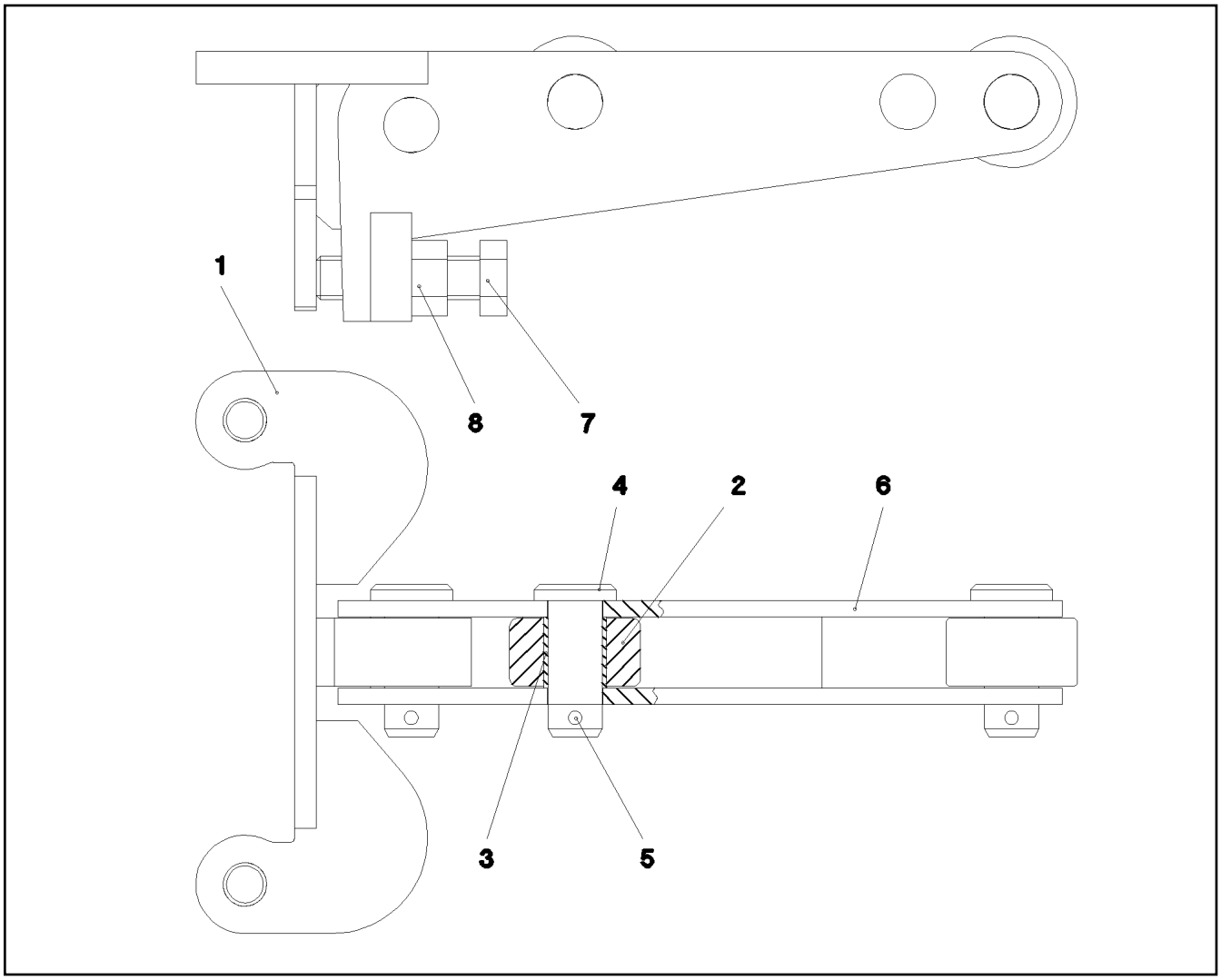

Pos.	Item	Quantity	Description	Bezeichnung
1	929582208	1	MOUNTING WELDED	HALTERUNG SCHWK.
2	947868208	2	ROLLER 50.0X25 S355J2+AR FE//ZNNI8//CN/	ROLLE
3	708010008	2	DU BUSHING	DU-BUCHSE
4	10875669	3	PIN DIN 1435 20X50X43 42CRMO4 GASN. SP	BOLZEN
5	10180359	3	SPLIT PIN ISO 1234 5X40 St 480H SPF	SPLINT
6	929591608	1	ROLLER CARRIER WELDED	ROLLENTRAEGER SCHWK.
7	406603408	1	HEX SCREW ISO 4017 M16X60 10.9 FLZN SP	SECHSKANTSCHRAUBE
8	411514608	1	HEX NUT ISO 4032 M16 8 BLANK	SECHSKANTMUTTER

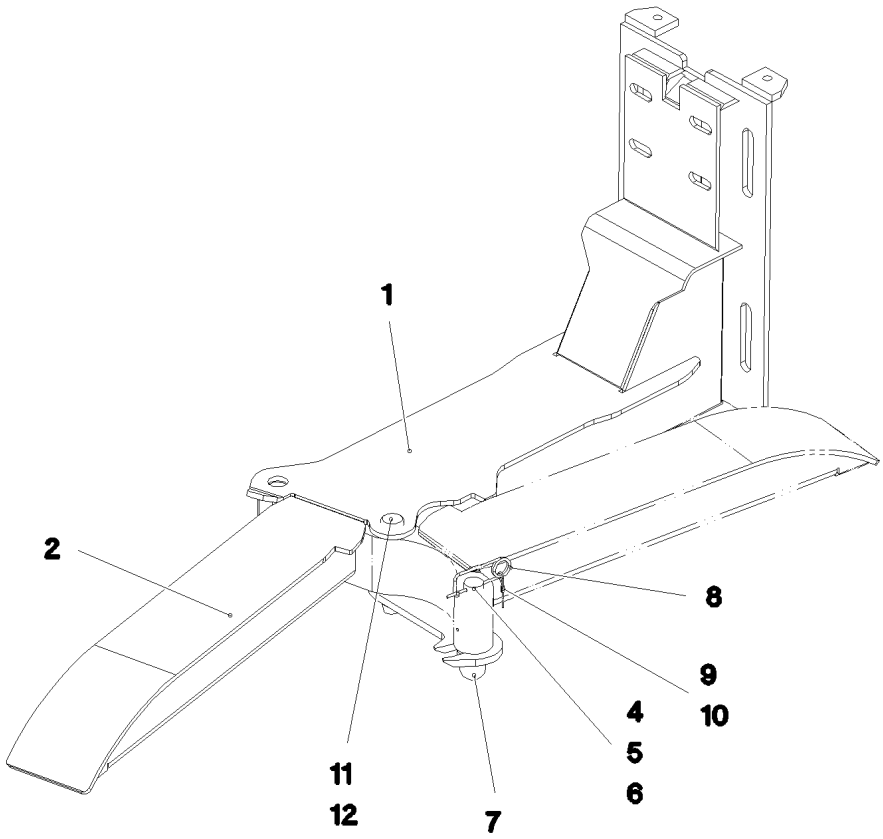

Pos.	Item	Quantity	Description	Bezeichnung
1	922849008	1	FOLDING BRACKET ST.CONST. SPF	KLAPPKONSOLE SCHWK.
2	96020727	1	FOLDING PART WELDED SPF	KLAPPTEIL SCHWK.
4	956349008	1	PIN RD30X107 42CRMO4+QT	BOLZEN
5	956349108	1	PIN RD49.5X58 42CRMO4+QT	BOLZEN
6	720008508	1	COMPRESSION SPRING DIN 2098 2X16X68	DRUCKFEDER
7	704004208	1	SPHERICAL KNOB DIN 319 C40XM10 FS	KUGELKNOPF
8	433101208	1	RETAINING SPRING 4X68 ISO 2081 FE/ZN8/	SICHERUNGSFEDER
9	11160431	0.3	ROPE 2 2,3KN EDELSTAHL	SEIL
10	11170565	2	FERRULE 2 CU	PRESSKLEMME
11	938865908	1	PIN 35.0X165 35NICRMOV125 SPF	BOLZEN
12	10180364	1	SPLIT PIN ISO 1234 6,3X50 St 480H SPF	SPLINT

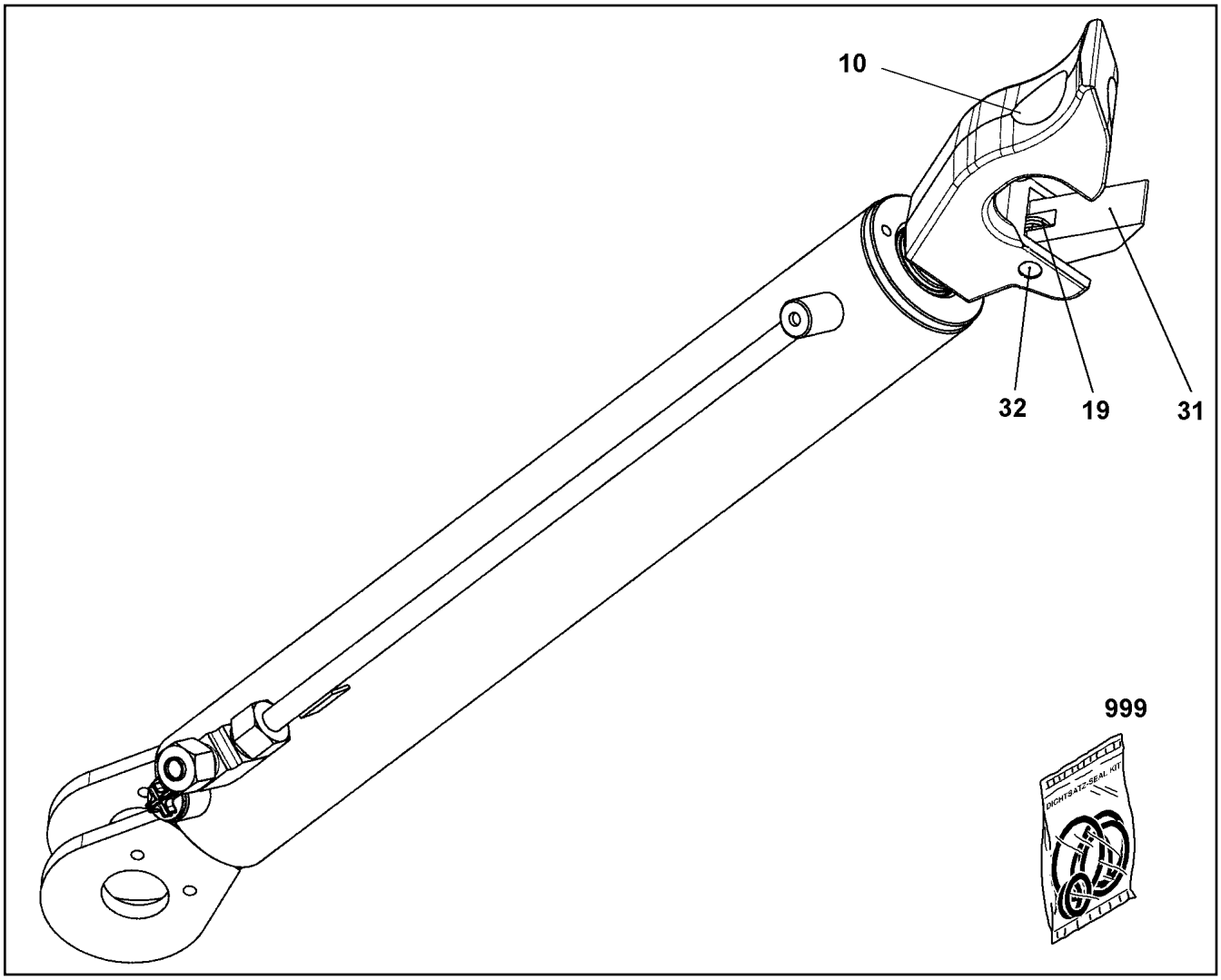

Pos.	Item	Quantity	Description	Bezeichnung
10	11004031	1	CLAW	KLAUE
19	571741908	1	LEG SPRING 2,5X13,5	SCHENKELFEDER
31	11490010	1	LATCH	KLINKE
32	430709608	1	PARALLEL PIN DIN 6325 12M6X50	ZYLINDERSTIFT
999	571496708	1	SEAL KIT	DICHTSATZ

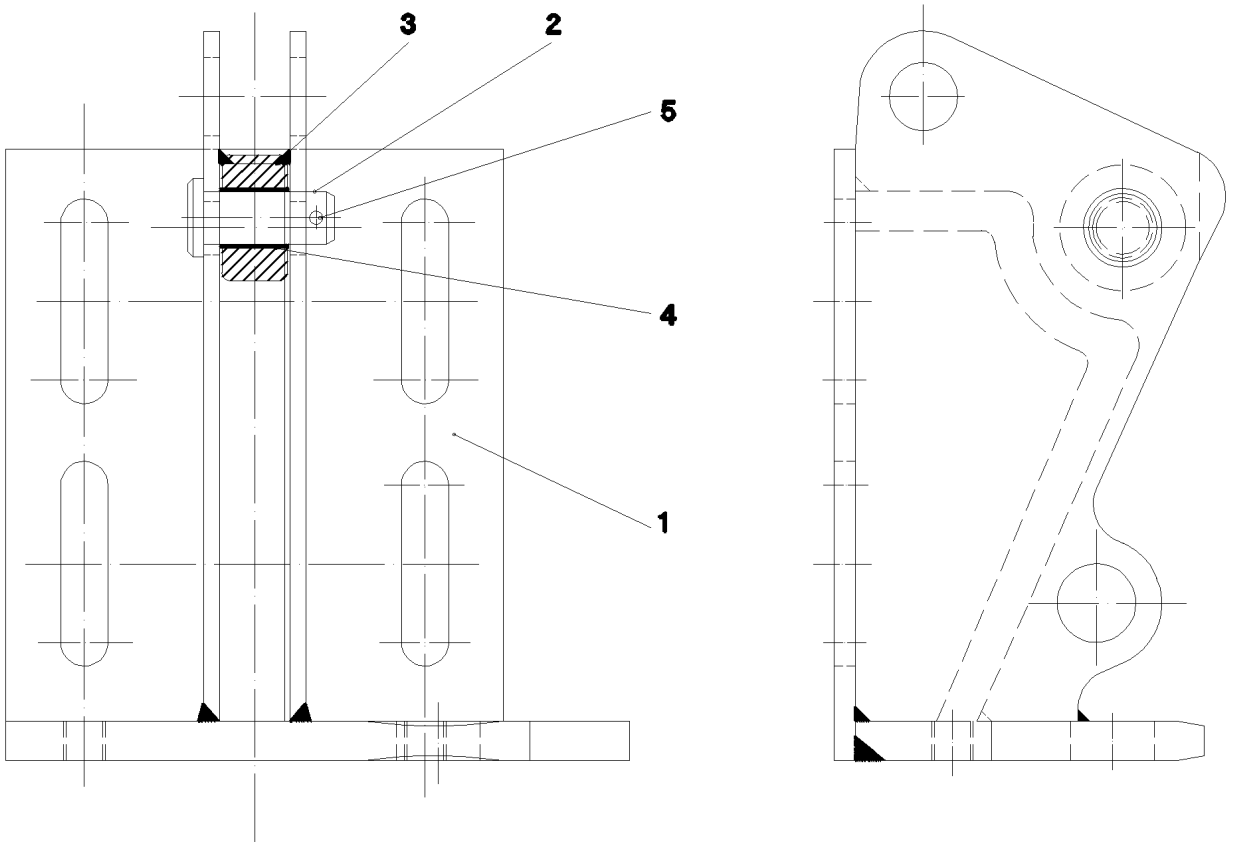

Pos.	Item	Quantity	Description	Bezeichnung
1	923982608	1	BRACKET WELDED CONST.	KONSOLE SCHWK.
2	10875669	1	PIN DIN 1435 20X50X43 42CRMO4 GASN. SP	BOLZEN
3	947868208	1	ROLLER 50.0X25 S355J2+AR FE//ZNNI8//CN/	ROLLE
4	708010008	1	DU BUSHING	DU-BUCHSE
5	10180359	1	SPLIT PIN ISO 1234 5X40 St 480H SPF	SPLINT

Pos.	Item	Quantity	Description	Bezeichnung
1	917268208	1	LADDER ATTACHMENT ⇨ ❑ 767	LEITER ANBAU
2	968090008	1	MOUNTING HOOK ROD ⇨ ❑ 768	HAKENSTANGE ANBAU
3	773326508	1	ROPE SLING -5M PP SPF	ANSCHLAGSEIL

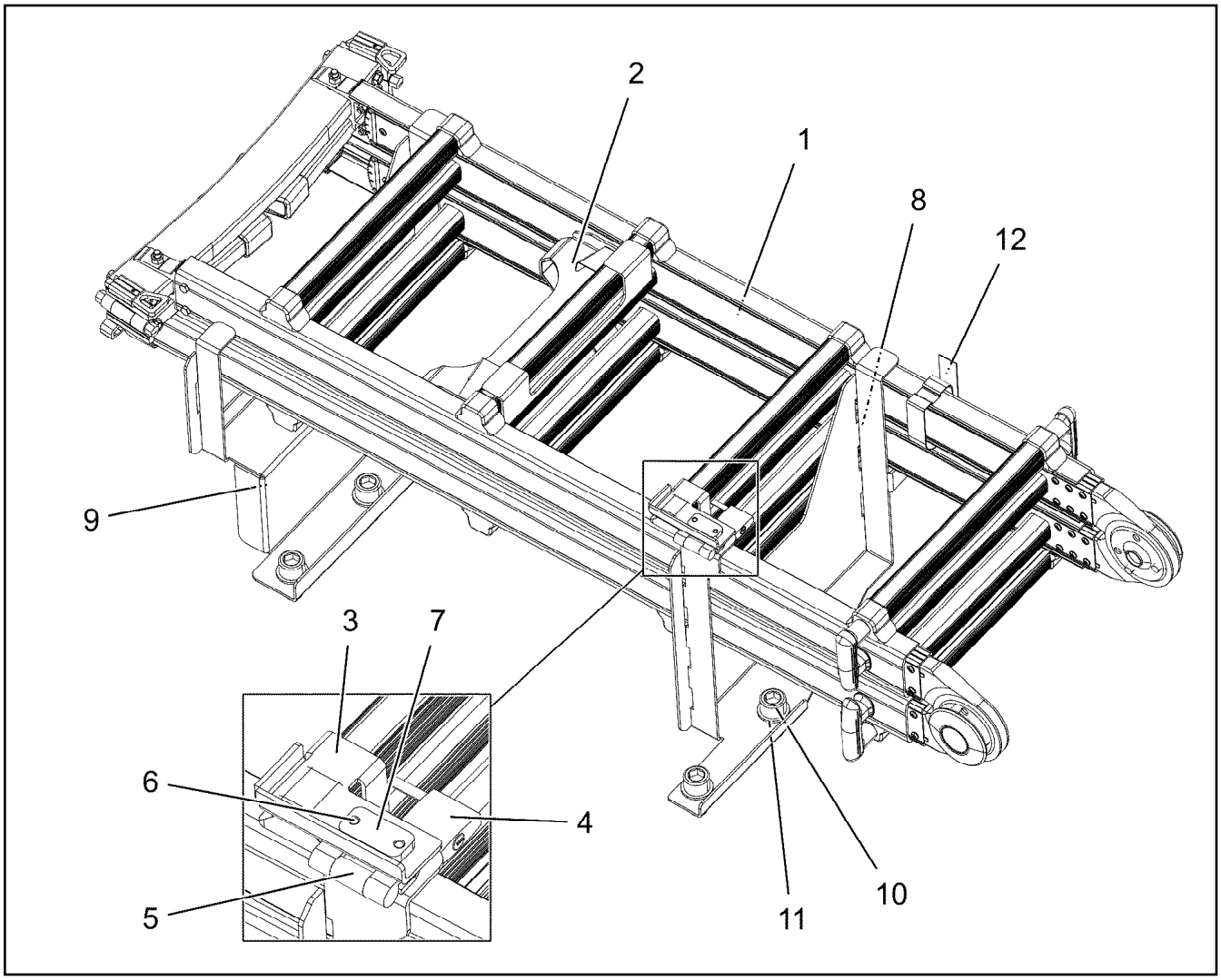

Pos.	Item	Quantity	Description	Bezeichnung
1	10877074	1	MULTI-PURPOSE LADDER 4X4-890X1,25M A	MEHRZWECKLEITER
2	10326792	1	LADDER BRACKET	LEITERHALTERUNG
3	97006497	1	PLATE 3X75X145 DC01 FE//ZNNI8//CN//T0	BLECH
4	885252008	1	PADLOCK	VORHAENGESCHLOSS
5	704228108	1	HINGE 35X35X50/180° ST FE//ZN12//B	SCHARNIER
6	10875809	4	COUNTERSUNK SCREW DIN 7991 M6X12 8	SENKSCHRAUBE
7	97053770	2	THREADED PLATE 6X20X40 S355MC FE//ZN	GEWINDEPLATTE
8	97034193	1	PLATE 3X1039X407 DC01 FE//ZNNI8//CN//T0	BLECH
9	97034194	1	PLATE 3X514X788 DC01 FE//ZNNI8//CN//T0	BLECH
10	12692008	4	SOCKET HEAD SCREW ISO 4762 M20X40 8	ZYLINDERSCHRAUBE
11	10289808	4	WASHER ISO 7089 20 300HV FLZN SPF	SCHEIBE
12	11492423	1	LASHING STRAP 1,25MX25MM POLYTEX SP	ZURRGURT

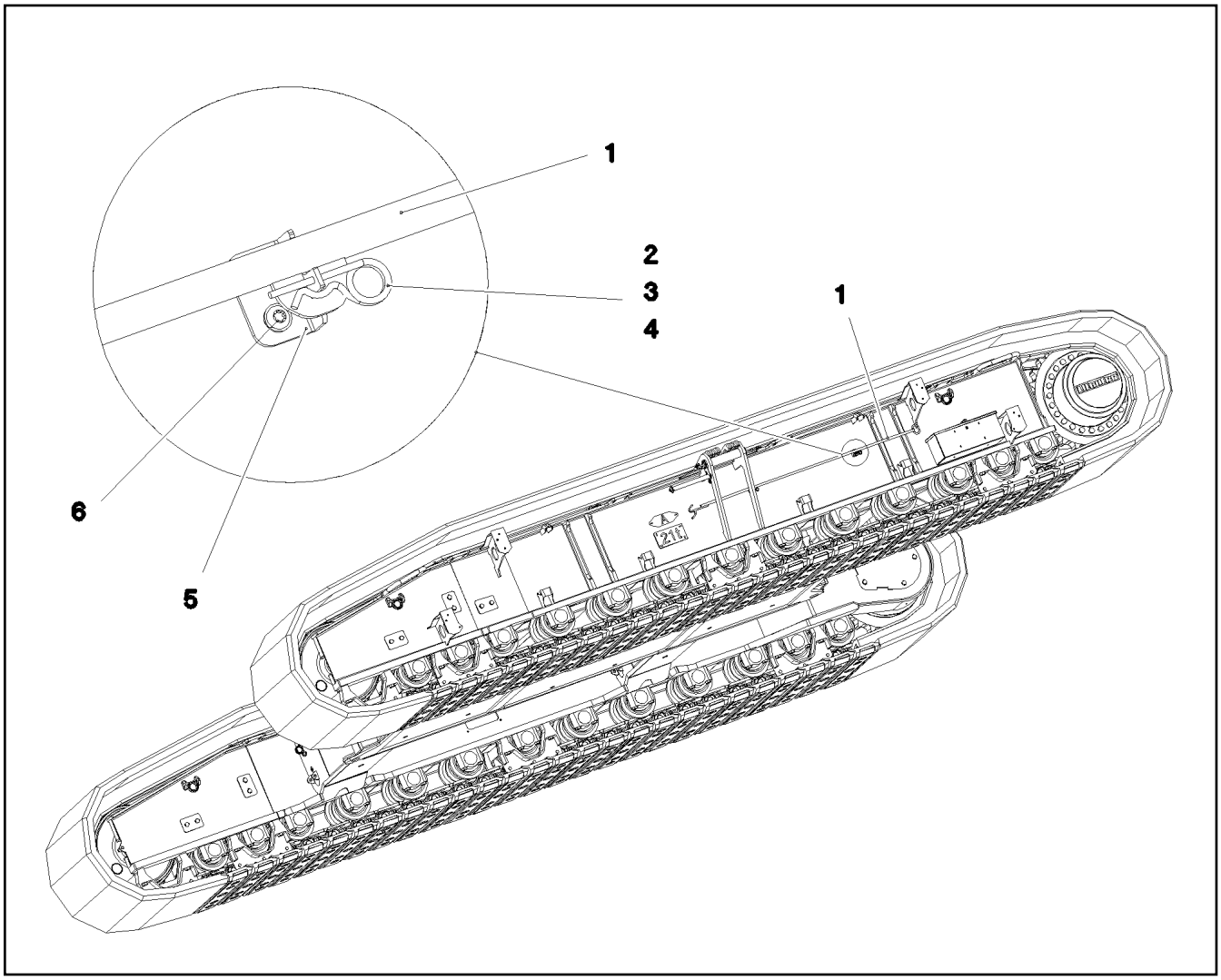

Pos.	Item	Quantity	Description	Bezeichnung
1	929529908	1	HOOK ROD FE//ZNNI8//CN//T0	HAKENSTANGE
2	433206208	2	SPRING PLUG 4,5X4X78 A2K	FEDERSTECKER
3	11160431	0.4	ROPE 2 2,3KN EDELSTAHL	SEIL
4	11170565	4	FERRULE 2 CU	PRESSKLEMME
5	953756708	2	PLATE 3X70X75 DC01 RAL 3000,SDGL,GT	BLECH
6	10875486	4	BUTTON HEAD SCREW AEHNL.ISO 7380-2	HALBRUNDKOPFSCHRAUBE

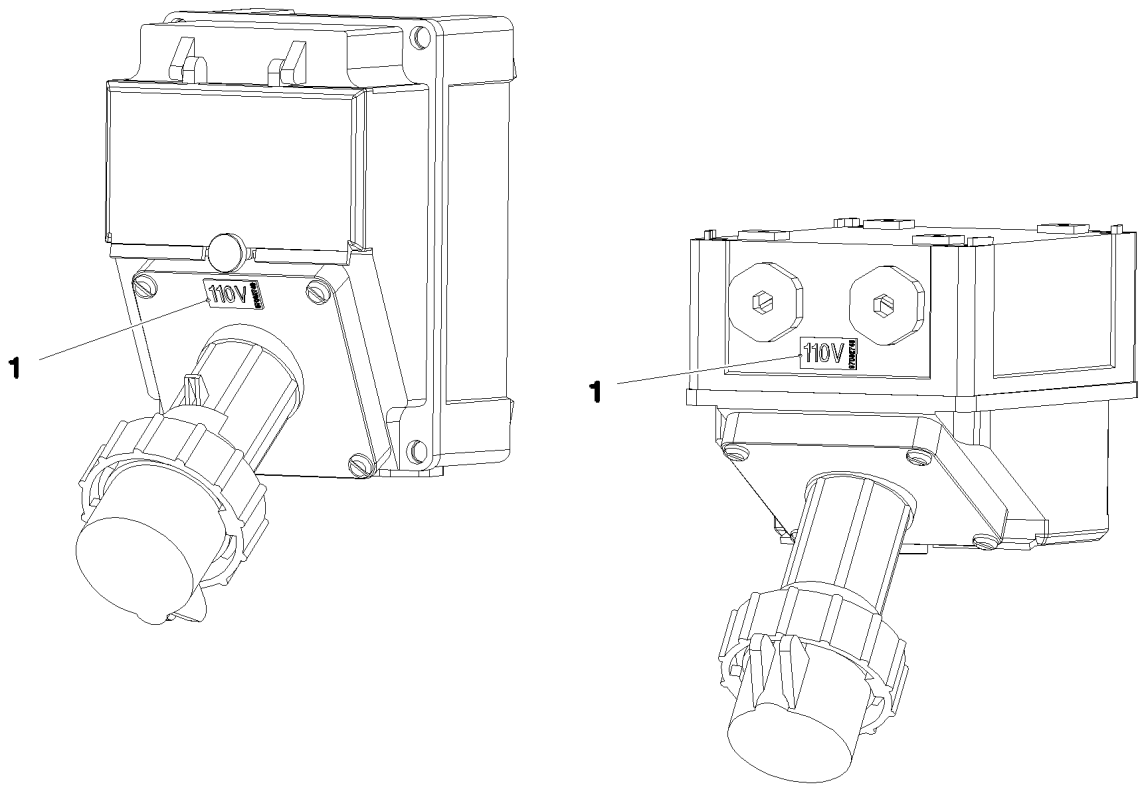

Pos.	Item	Quantity	Description	Bezeichnung
1	97082749	1	INFORMATION SIGN 23X12 KLEBEFOLIE SP	HINWEISSCHILD

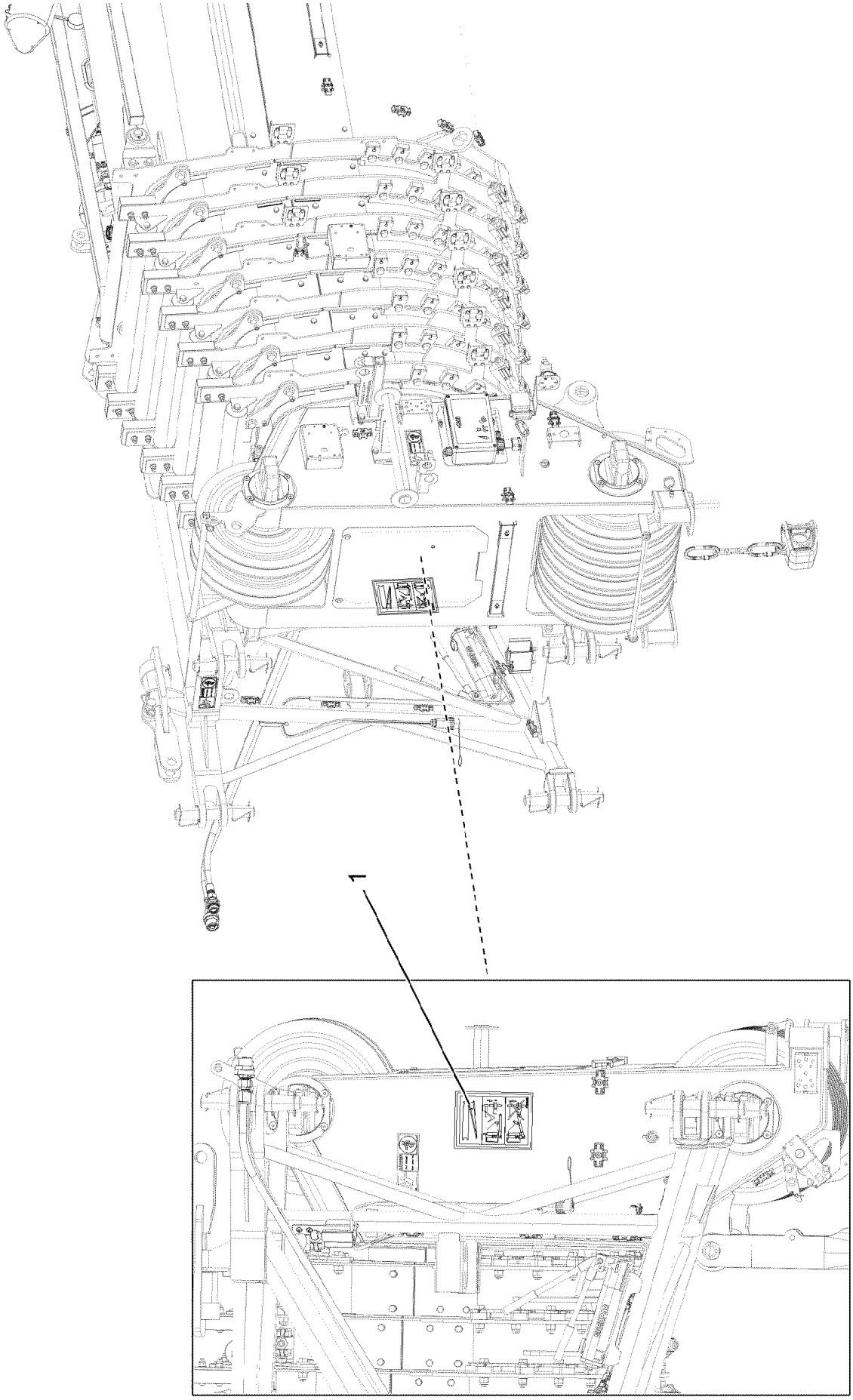

18.7.2022 097294 LIEBHERR	**etk_en_de_047654 LTR 1220** **SIGN TRANSPORT HOLDER** **BESCHILDERUNG TRANSPORTHALTER.**	❑ 770 (1/2) **919127808**

Pos.	Item	Quantity	Description	Bezeichnung
1	971539808	1	SIGN 225X165 KLEBEFOLIE SPF	SCHILD

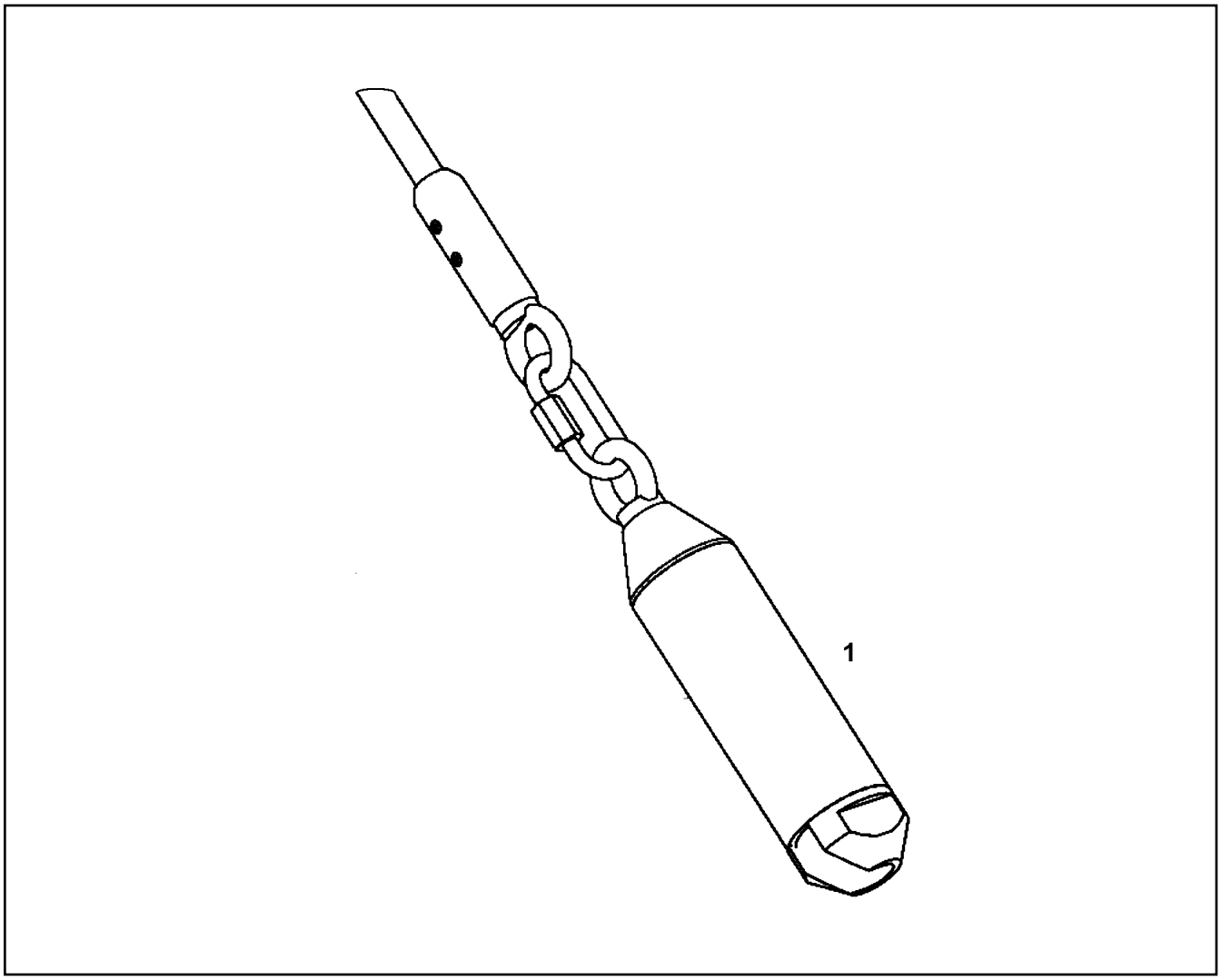

Pos.	Item	Quantity	Description	Bezeichnung
1	11493793	1	SLEEVE	HUELSE

Item	Page	Assembly	Pos.	Quantity	Item	Page	Assembly	Pos.	Quantity
000608250	657	919028808	12	5	10011870	252	10140729	27	1
10000515	305	11210795	20	1	10011871	229	10143342	22	2
10000794	315	10472208	5	1	10012225	207	11448005	5	2
10000796	315	10472208	1	1	10012557	207	11448005	3	2
10001074	673	917292008	5	4	10014387	535	96037136	830	69
10001074	677	917292108	5	4	10014387	537	96037137	830	6
10001074	681	917292208	5	4	10014692	136	11347526	3	1
10001074	685	917292308	5	4	10014692	525	10327065	3	1
10001074	690	917292408	29	4	10014693	136	11347526	4	1
10001077	608	939294001	31	4	10014693	525	10327065	4	1
10001080	370	939292201	21	24	10014697	136	11347526	9	3
10001107	316	10871043	16	1	10014697	525	10327065	10	3
10001111	316	10871043	21	1	10014698	139	774375108	1	1
10001467	129	919644008	31	4	10014701	525	10327065	16	1
10001739	421	917304708	46	1	10014712	525	10327065	27	1
10001739	712	966591508	4	2	10014729	136	11347526	7	1
10002167	246	10148215	4	2	10014729	525	10327065	7	1
10002310	237	10127566	3	1	10014730	136	11347526	8	1
10002552	252	10140729	132	1	10014730	525	10327065	8	1
10003366	235	9078314	3	1	10016907	267	10144227	5	4
10003366	253	12512627	25	2	10019040	433	918810308	29	8
10004261	183	10147687	9	1	10020520	287	919007708	120	4
10004261	212	10129475	4	1	10021245	511	96051842	300	2
10005713	216	10148432	2	1	10021410	220	12489819	3	2
10006370	94	96034962	25	4	10021571	48	96045227	507	1
10006370	112	96034980	25	4	10022183	511	96051842	305	4
10006370	701	966134608	40	3	10023751	335	96023914	(20)	1
10006370	747	917551608	6	1	10024012	645	96037131	10	1
10007205	392	916162808	5	12	10024744	462	96036955	502	2
10007677	392	916162808	4	12	10025057	629	918377508	1	1
10008308	309	11210798	2	1	10025227	531	96045384	68	1
10009007	228	10143341	14	2	10025278	645	96037131	(1)	1
10009007	245	10142733	2	5	10027134	129	919644008	16	4
10009007	267	10144227	3	4	10027448	544	969256608	20	2
10009700	428	11083498	57	1	10028237	616	967784808	308	4
10010025	120	968038208	3	1	10028237	744	967933408	4	1
10010025	121	968038308	3	1	10030440	92	968420608	15	1
10011658	467	96053500	24	1	10030440	421	917304708	9	1
10011832	183	10147687	13	1	10030837	180	11389608	14	14
10011832	214	9078233	1	1	10030904	562	96045351	511	1
10011832	253	12512627	31	1	10031987	728	967785008	154	1
10011864	229	10143342	5	15	10031989	728	967785008	155	1
10011864	243	10145278	8	2	10032297	152	928569808	68	1
10011864	254	11420633	5	2	10035534	560	96045351	(2)	1
10011864	276	10144036	8	2	10035694	393	968514508	10	2
10011865	229	10143342	7	2	10035694	409	966497908	36	8
10011865	253	12512627	27	2	10036325	207	11448005	8	1
10011865	276	10144036	14	2	10036629	630	917368108	10	2
10011866	229	10143342	11	3	10036896	564	96045351	771	1
10011866	247	10148216	2	7	10037616	560	96045351	(1)	1
10011866	249	10142744	6	1	10037623	560	96045351	(1)	1
10011866	253	12512627	28	2	10038271	136	11347526	26	1
10011867	228	10143341	9	2	10038271	525	10327065	29	1
10011867	243	10145278	4	8	10038474	560	96045351	150	1
10011867	253	12512627	26	1	10038509	622	969426308	21	1
10011868	193	10130406	2	1	10040024	13		122	2
10011868	228	10143341	15	10	10040136	579	10878075	1	1
10011869	238	9080294	3	2	10040137	579	10878075	2	1
10011869	276	10144036	12	1	10040984	273	12583633	(2)	1
10011870	232	10145173	5	2	10041876	535	96037136	528	2

Item	Page	Assembly	Pos.	Quantity	Item	Page	Assembly	Pos.	Quantity
10041903	183	10147687	10	5	10114839	52	11346779	4	1
10042592	551	969061708	(2)	4	10114843	52	11346779	7	21
10042593	395	917304508	11	19	10114850	52	11346779	8	15
10042593	421	917304708	35	13	10115128	650	917259808	1	1
10042696	625	918462708	13	2	10115155	52	11346779	18	4
10043002	152	928569808	41	1	10115539	178	13455297	450	1
10043136	183	10147687	16	1	10115664	178	13455297	452	1
10043136	194	10118881	1	1	10115829	178	13455297	520	1
10043136	208	11358102	6	1	10115832	189	10155227	7	1
10043136	253	12512627	8	1	10116110	178	13455297	521	1
10044648	625	918462708	12	2	10116274	267	10144227	4	8
10044661	342	96066379	101	1	10116310	252	10140729	24	1
10044762	153	928620108	1	1	10116939	197	9076457	1	1
10045101	48	96045227	509	1	10117094	263	10116110	10	1
10045101	542	96045387	528	2	10117226	287	919007708	117	4
10045118	704	10802064	100	1	10117709	212	10129475	2	1
10046999	542	96045387	508	10	10118148	262	10115829	1	1
10047000	542	96045387	515	10	10118526	200	10141974	8	1
10047001	542	96045387	513	10	10118556	231	10147365	2	4
10097079	643	96037130	10	1	10118695	234	10149677	9	3
10097085	643	96037130	12	1	10118881	174	13455297	23	1
10097087	641	96045237	15	2	10118910	266	9077238	4	10
10097470	535	96037136	671	2	10118912	200	10141974	10	6
10097613	526	11002916	1	1	10119695	206	10148438	2	2
10097910	339	968999708	10	1	10119927	198	10116939	3	2
10097960	81	11161917	14	1	10119928	198	10116939	4	2
10099208	136	11347526	28	1	10119971	195	10139112	4	1
10099208	525	10327065	32	1	10120066	253	12512627	19	1
10099209	136	11347526	25	4	10120186	175	13455297	90	1
10099209	525	10327065	28	4	10120334	202	10149580	(5)	4
10099856	48	96045227	501	2	10120334	204	10149579	5	4
10099856	542	96045387	521	9	10120639	252	10140729	6	3
10099860	48	96045227	508	1	10121335	199	10153583	2	1
10099860	542	96045387	527	2	10121666	191	10121667	1	1
10099861	48	96045227	510	1	10121667	187	10132560	4	1
10099861	535	96037136	506	1	10121952	199	10153583	1	1
10099863	48	96045227	512	1	10122319	278	9078301	1	1
10099863	542	96045387	510	7	10122841	248	10142742	2	1
10099864	464	96036956	502	3	10123304	268	10144098	1	1
10099864	542	96045387	519	5	10123876	270	10151328	103	1
10099866	48	96045227	511	1	10123878	527	919410708	33	2
10099866	535	96037136	507	1	10124097	179	13455297	600	2
10099867	48	96045227	513	1	10124116	259	10115664	1	1
10099867	542	96045387	511	7	10124798	234	10149677	5	2
10099868	48	96045227	502	2	10125148	507	919674408	121	1
10099868	542	96045387	522	9	10125439	202	10149580	3	6
10100062	463	96036955	669	2	10125687	179	13455297	650	1
10100062	535	96037136	669	4	10125688	275	10125687	1	1
10100063	463	96036955	670	4	10125702	251	10144756	3	2
10100063	535	96037136	670	11	10125739	252	10140729	7	1
10100063	536	96037137	670	6	10125742	210	10138230	1	1
10100429	305	11210795	21	2	10126119	254	11420633	16	1
10100621	455	969015908	20	4	10126317	195	10139112	5	1
10101384	560	96045351	(3)	1	10126417	186	10126713	4	1
10112569	561	96045351	(10)	1	10126713	174	13455297	16	1
10113731	215	10152592	3	1	10126738	183	10147687	2	1
10113975	273	12583633	(2)	1	10127114	514	96041566	155	1
10114441	63	11643183	8	1	10127139	253	12512627	23	2
10114441	66	11643184	8	1	10127566	177	13455297	330	1
10114838	52	11346779	10	1	10127689	267	10144227	2	1

Item	Page	Assembly	Pos.	Quantity	Item	Page	Assembly	Pos.	Quantity
10127967	265	10127979	1	1	10140969	249	10142744	5	1
10127979	178	13455297	526	1	10141140	222	10152874	2	1
10127984	233	10147364	2	1	10141140	225	10153151	1	1
10128228	254	11420633	7	3	10141140	225	10153151	200	1
10128439	178	13455297	524	1	10141215	221	10152867	210	1
10128440	264	10128439	1	1	10141216	223	10141140	12	1
10128516	187	10132560	2	1	10141216	225	10153151	210	1
10128680	205	10149578	7	2	10141549	233	10147364	1	1
10128890	179	13455297	728	1	10141846	229	10143342	8	1
10129392	220	12489819	2	2	10141974	175	13455297	53	1
10129394	220	12489819	7	1	10142170	200	10141974	2	1
10129474	212	10129475	1	1	10142606	255	10142863	1	1
10129475	175	13455297	130	1	10142668	249	10142744	1	1
10129501	215	10152592	4	1	10142670	255	10142863	2	1
10129904	234	10149677	4	1	10142671	248	10142742	1	1
10130104	228	10143341	6	1	10142733	177	13455297	370	1
10130406	174	13455297	22	1	10142742	177	13455297	382	1
10130816	181	10154379	5	10	10142744	177	13455297	387	1
10130906	253	12512627	21	1	10142747	179	13455297	630	1
10131177	196	10147438	1	1	10142749	174	13455297	15	4
10132170	229	10143342	3	1	10142763	249	10142744	2	1
10132180	229	10143342	19	1	10142863	178	13455297	440	1
10132560	174	13455297	20	1	10142864	178	13455297	481	1
10132935	229	10143342	16	1	10142942	176	13455297	150	1
10133607	229	10143342	13	1	10143240	228	10143341	7	1
10133667	202	10149580	2	1	10143251	229	10143342	1	1
10133692	210	10138230	4	1	10143341	176	13455297	212	1
10133693	210	10138230	6	2	10143342	176	13455297	214	1
10133837	187	10132560	1	1	10143454	267	10144227	1	1
10133991	270	10151328	102	1	10143542	228	10143341	4	1
10134348	183	10147687	3	2	10143543	228	10143341	3	1
10134348	262	10115829	3	2	10143612	234	10149677	1	1
10134698	208	11358102	3	1	10143614	234	10149677	2	1
10134750	208	11358102	1	2	10143707	269	10151328	10	1
10135434	222	10152874	5	1	10143825	176	13455297	215	1
10135434	223	10141140	3	1	10143826	230	10143825	1	1
10135434	225	10153151	4	1	10143827	230	10143825	2	3
10135885	250	10140087	3	4	10144036	179	13455297	652	1
10136751	202	10149580	(4)	2	10144038	514	96041566	153	1
10136751	204	10149579	4	2	10144039	514	96041566	154	1
10137602	210	10138230	(2)	1	10144098	267	10144227	6	2
10137721	262	10115829	5	1	10144227	179	13455297	571	1
10137918	184	10138450	2	1	10144270	500	918731808	18	1
10138230	175	13455297	100	1	10144303	500	918731808	19	1
10138447	210	10138230	3	1	10144311	200	10141974	11	1
10138450	174	13455297	14	1	10144556	202	10149580	(2)	2
10138656	250	10140087	4	14	10144556	204	10149579	2	2
10138657	250	10140087	7	14	10144755	251	10144756	1	1
10138820	246	10148215	3	1	10144756	177	13455297	415	1
10138826	253	12512627	6	1	10144861	500	918731808	13	1
10139111	195	10139112	1	1	10145049	210	10138230	(1)	1
10139112	174	13455297	25	1	10145069	253	12512627	17	1
10139578	209	10120186	6	2	10145070	253	12512627	18	1
10139626	252	10140729	1	1	10145100	175	13455297	(2)	1
10139764	209	10120186	4	1	10145101	175	13455297	(3)	1
10139765	209	10120186	5	1	10145173	176	13455297	221	1
10140087	177	13455297	410	1	10145175	242	10145176	1	1
10140729	178	13455297	430	1	10145176	177	13455297	333	1
10140732	232	10145173	9	1	10145177	243	10145278	1	1
10140757	252	10140729	3	1	10145178	243	10145278	2	1

Item	Page	Assembly	Pos.	Quantity	Item	Page	Assembly	Pos.	Quantity
10145278	177	13455297	334	1	10153116	253	12512627	3	1
10145371	272	10143707	2	1	10153151	176	13455297	191	4
10145373	254	11420633	15	1	10153374	244	12418347	4	1
10145524	250	10140087	1	1	10153536	211	9079870	1	2
10145589	276	10144036	11	1	10153538	211	9079870	2	2
10145815	210	10138230	8	1	10153583	174	13455297	52	1
10145815	210	10138230	8	1	10153666	253	12512627	1	1
10145838	276	10144036	9	1	10153973	182	10154458	1	1
10145862	205	10149578	1	1	10153987	269	10151328	1	1
10146185	200	10141974	1	1	10154379	180	11389608	1	1
10146367	175	13455297	70	4	10154458	180	11389608	80	4
10146658	218	10150741	1	1	10154459	182	10154458	2	1
10146722	213	10129474	1	1	10154798	246	10148215	2	1
10146789	226	10146791	2	1	10155227	188	10133837	1	1
10146791	176	13455297	201	1	10166157	370	939292201	73	1
10147364	176	13455297	224	1	10166990	94	96034962	17	6
10147365	176	13455297	220	1	10166990	112	96034980	17	6
10147438	174	13455297	50	1	10167462	353	90008901	64	2
10147680	221	10152867	1	1	10169236	296	97029921	350	1
10147687	174	13455297	12	1	10171579	319	10871282	29	2
10148215	177	13455297	380	1	10171579	353	90008901	92	1
10148216	177	13455297	381	1	10171585	78	90028956	52	1
10148432	175	13455297	140	1	10171626	353	90008901	67	1
10148438	175	13455297	81	4	10171628	52	11346779	14	1
10149144	253	12512627	2	1	10171631	370	939292201	4	1
10149191	254	11420633	1	1	10172636	75	91001377	47	4
10149360	244	12418347	3	2	10172636	108	91001378	47	4
10149578	202	10149580	(1)	1	10175221	353	90008901	(1)	8
10149578	204	10149579	1	1	10175221	356	90025781	5	8
10149579	202	10149580	1	1	10175222	353	90008901	(2)	7
10149580	175	13455297	80	4	10175222	356	90025781	6	7
10149655	184	10138450	1	1	10176328	353	90008901	80	1
10149677	176	13455297	230	1	10176329	358	90025782	7	10
10149679	234	10149677	3	1	10176330	358	90025782	8	10
10149739	205	10149578	6	2	10178883	75	91001377	36	8
10150144	224	10135434	1	1	10178883	108	91001378	36	8
10150144	225	10153151	2	1	10178891	76	91001377	69	24
10150204	205	10149578	4	4	10178891	109	91001378	69	24
10150252	271	10151329	10	1	10178897	76	91001377	70	16
10150386	245	10142733	1	1	10178897	109	91001378	70	16
10150741	176	13455297	171	1	10178901	20	91001569	21	32
10150838	271	10151329	13	1	10179032	761	917267508	5	4
10150934	174	13455297	21	1	10179115	421	917304708	53	1
10150935	192	10150934	1	1	10179265	233	10147364	4	3
10151164	271	10151329	1	1	10179265	256	10115539	4	3
10151328	179	13455297	580	1	10179340	35	917511508	42	8
10151329	269	10151328	2	1	10179376	291	96034631	375	1
10151390	269	10151328	8	1	10179392	20	91001569	18	4
10151634	185	10142749	1	1	10179408	492	967928508	18	4
10152036	273	12583633	40	1	10179409	658	968068308	5	1
10152168	205	10149578	2	1	10179447	124	968046208	40	36
10152441	209	10120186	1	2	10179459	256	10115539	3	3
10152592	213	10129474	12	1	10179463	345	917825508	3	2
10152593	215	10152592	1	1	10179470	437	962282208	4	1
10152594	215	10152592	2	1	10179470	439	962282308	4	1
10152832	210	10138230	8	1	10179495	751	968728808	5	1
10152832	210	10138230	8	1	10179932	129	919644008	18	8
10152867	176	13455297	190	4	10179932	348	969050308	10	1
10152874	221	10152867	200	1	10179943	294	968026308	355	1
10152974	199	10153583	3	1	10179985	56	96035801	305	8

Item	Page	Assembly	Pos.	Quantity	Item	Page	Assembly	Pos.	Quantity
10180175	288	919007708	332	8	10197771	26	96034894	10	12
10180180	291	96034631	379	1	10197771	29	96034977	10	12
10180180	378	917259908	10	9	10197771	42	966167808	14	2
10180340	387	916177508	13	1	10197771	43	968054008	17	2
10180340	745	967936408	4	1	10197771	56	96035801	312	45
10180354	76	91001377	110	2	10197771	147	919087608	33	2
10180354	109	91001378	111	2	10197771	288	919007708	384	2
10180354	690	917292408	59	3	10197771	291	96034631	376	8
10180359	734	917268408	21	1	10197771	334	96023117	26	4
10180359	762	929582108	5	3	10197771	378	917259908	42	2
10180359	765	923879808	5	1	10197771	399	917305408	50	3
10180363	668	917291908	33	2	10197771	412	916168308	18	4
10180364	763	923285508	12	1	10197771	433	918810308	42	4
10180365	734	917268408	23	1	10197771	545	922648308	3	6
10180371	492	967928508	17	4	10197771	547	926891108	4	4
10180371	654	967936908	9	2	10197771	561	96045351	318	14
10180371	734	917268408	17	1	10197771	601	918628408	12	2
10180373	751	968728808	10	1	10197771	616	967784808	311	2
10180375	35	917511508	47	8	10197771	636	968994408	28	2
10180377	489	918956108	7	2	10197771	637	968290608	30	4
10180381	20	91001569	30	2	10197771	639	968993508	15	2
10181340	52	11346779	39	4	10197771	640	968267208	30	4
10181375	291	96034631	300	2	10197771	674	917292008	67	2
10181375	636	968994408	20	4	10197771	677	917292108	63	2
10181375	639	968993508	11	4	10197771	681	917292208	63	2
10181382	561	96045351	302	4	10197771	685	917292308	63	2
10181382	616	967784808	303	4	10197771	699	571928508	46	2
10182032	294	968026308	310	2	10197771	712	966591508	3	2
10190120	612	90200103	5	1	10197808	98	96035796	314	2
10197730	76	91001377	66	4	10197808	115	96035792	314	2
10197730	109	91001378	66	4	10197808	135	917257108	5	4
10197730	119	917691008	18	8	10197808	334	96023117	20	6
10197730	287	919007708	313	12	10197808	339	968999708	4	5
10197730	382	967986308	4	16	10197808	433	918810308	35	28
10197730	445	96036790	314	1	10197808	467	96053500	30	8
10197730	467	96053500	23	1	10197808	523	917261208	6	4
10197730	561	96045351	311	4	10197808	602	917267108	11	4
10197730	604	967969608	18	4	10197808	744	967933408	6	1
10197760	445	96036790	350	7	10197808	758	917413208	14	4
10197760	455	969015908	351	4	10197831	135	917257108	7	2
10197760	547	926891108	10	4	10197831	147	919087608	36	4
10197760	592	967980508	13	6	10197831	287	919007708	311	2
10197764	42	966167808	13	2	10197831	445	96036790	311	7
10197764	43	968054008	16	2	10197831	492	967928508	26	2
10197764	52	11346779	48	12	10197831	500	918731808	53	2
10197764	147	919087608	23	2	10197831	507	919674408	303	2
10197764	288	919007708	350	6	10197831	511	96051842	313	2
10197764	291	96034631	353	4	10197831	523	917261208	20	2
10197764	334	96023117	27	4	10197831	547	926891108	8	2
10197764	399	917305408	51	2	10197831	592	967980508	15	10
10197764	446	96036790	351	4	10197831	668	917291908	15	2
10197764	455	969015908	350	11	10197831	691	917292408	76	2
10197764	545	922648308	5	12	10197831	728	967785008	308	2
10197764	547	926891108	6	4	10197831	734	917268408	26	4
10197764	616	967784808	310	2	10197836	547	926891108	11	2
10197769	76	91001377	108	10	10197836	668	917291908	35	2
10197769	109	91001378	109	10	10197836	673	917292008	59	2
10197769	415	916163008	12	1	10197836	677	917292108	59	2
10197769	668	917291908	27	8	10197836	681	917292208	59	2
10197769	751	968728808	25	3	10197836	685	917292308	59	2

Item	Page	Assembly	Pos.	Quantity	Item	Page	Assembly	Pos.	Quantity
10215892	477	966707708	9	1	10285708	273	12583633	(100)	1
10215893	477	966707708	4	1	10285708	275	10125687	(100)	1
10216340	525	10327065	13	1	10285708	277	9077386	100	1
10216529	601	918628408	21	1	10285724	217	10142942	3	1
10216534	601	918628408	22	2	10286353	714	968708708	296	1
10216578	630	917368108	13	1	10286840	440	916049908	(1)	1
10216678	601	918628408	31	4	10287301	428	11083498	13	2
10216772	535	96037136	513	1	10287382	287	919007708	115	2
10217532	81	11161917	7	1	10288121	45	968252908	300	1
10217777	264	10128439	2	1	10288121	467	96053500	(980)	1
10218310	561	96045351	180	1	10288121	467	96053500	(980)	1
10218370	258	11386644	2	1	10288121	471	96022872	(2)	1
10219361	410	965784408	12	4	10288121	540	91000922	(300)	1
10219462	461	96036954	6	2	10288121	550	968253608	300	1
10219618	293	10492431	1	1	10289536	560	96045351	53	1
10219619	293	10492431	2	1	10289536	616	967784808	51	1
10219620	293	10492431	999	1	10289795	20	91001569	33	12
10220419	305	11210795	23	3	10289795	30	968019508	31	4
10220933	560	96045351	54	1	10289795	35	917511508	40	6
10220933	616	967784808	52	1	10289795	76	91001377	107	20
10222436	288	919007708	423	1	10289795	109	91001378	108	20
10222682	474	963398008	1	1	10289795	280	918731408	375	2
10222686	544	969256608	27	2	10289795	288	919007708	379	28
10224095	69	917436708	(3)	72	10289795	291	96034631	378	2
10280210	624	10038509	20	1	10289795	348	969050308	16	8
10280211	624	10038509	40	1	10289795	363	917259608	7	6
10280212	624	10038509	50	1	10289795	446	96036790	382	4
10280213	624	10038509	60	1	10289795	512	96051842	380	10
10280214	624	10038509	70	1	10289795	643	96037130	18	2
10280215	624	10038509	80	1	10289795	645	96037131	18	2
10280216	624	10038509	90	1	10289795	657	919028808	(10)	2
10280715	749	968811608	2	1	10289804	20	91001569	19	4
10282622	182	10154458	(10)	1	10289804	262	10115829	8	17
10282622	191	10121667	100	1	10289804	288	919007708	381	5
10282622	210	10138230	100	1	10289804	351	919369308	7	4
10282622	259	10115664	100	1	10289804	378	917259908	13	4
10282774	182	10154458	4	2	10289804	492	967928508	19	8
10283201	751	968728808	6	1	10289804	496	969763408	328	4
10285016	120	968038208	4	2	10289804	507	919674408	376	4
10285016	121	968038308	4	2	10289804	562	96045351	340	8
10285016	294	968026308	360	2	10289804	638	968267108	3	2
10285695	569	11482347	999	1	10289804	668	917291908	22	16
10285695	578	571634708	999	1	10289804	691	917292408	62	3
10285695	580	10332397	999	1	10289804	701	966134608	13	8
10285701	381	919010208	17	1	10289804	747	917551608	4	3
10285708	182	10154458	100	1	10289804	751	968728808	22	4
10285708	183	10147687	100	1	10289806	20	91001569	57	32
10285708	205	10149578	100	1	10289806	76	91001377	85	16
10285708	209	10120186	100	1	10289806	95	96062678	8	1
10285708	216	10148432	100	1	10289806	109	91001378	85	16
10285708	232	10145173	100	1	10289806	280	918731408	377	4
10285708	234	10149677	100	1	10289806	288	919007708	382	18
10285708	237	10127566	100	1	10289806	458	917260108	6	8
10285708	245	10142733	100	1	10289806	492	967928508	29	2
10285708	246	10148215	100	1	10289806	493	967978908	13	1
10285708	248	10142742	100	1	10289806	761	917267508	47	2
10285708	253	12512627	100	1	10289807	75	91001377	46	4
10285708	262	10115829	100	1	10289807	108	91001378	46	4
10285708	265	10127979	100	1	10289807	701	966134608	27	2
10285708	273	12583633	(100)	1	10289808	20	91001569	44	4

Item	Page	Assembly	Pos.	Quantity	Item	Page	Assembly	Pos.	Quantity
10289808	76	91001377	109	2	10299668	95	96062678	5	1
10289808	109	91001378	110	2	10299668	701	966134608	38	2
10289808	147	919087608	29	12	10299679	35	917511508	41	64
10289808	767	917268208	11	4	10299679	701	966134608	18	6
10289810	75	91001377	28	4	10299987	626	917269308	(1)	1
10289810	108	91001378	28	4	10300552	409	966497908	31	2
10289810	291	96034631	380	1	10300600	421	917304708	11	4.2
10289811	669	917291908	77	2	10300944	463	96036955	715	2
10289931	305	11210795	39	1	10300946	537	96037137	717	4
10290070	339	968999708	2	1	10301148	462	96036955	520	1
10290126	484	10876576	23	1	10301317	39	96045225	17	4
10290126	484	10876576	(5)	1	10301317	744	967933408	5	1
10290127	484	10876576	24	1	10301319	383	96015921	11	5
10290127	484	10876576	(6)	1	10301409	399	917305408	30	2
10291306	572	10413106	(1)	1	10303270	311	10008308	17	3
10291306	572	10413106	(1)	1	10303270	323	571907208	17	3
10291306	573	571415008	6	1	10324830	532	96045385	511	1
10291989	382	967986308	2	4	10324900	317	11692439	4	1
10291997	399	917305408	33	1	10325001	213	10129474	3	1
10292000	399	917305408	35	2	10326277	697	10876933	35	1
10292008	387	916177508	4	1	10326278	697	10876933	38	1
10292013	399	917305408	28	8	10326792	767	917268208	2	1
10292014	415	916163008	3	1	10326925	305	11210795	2	1
10292015	409	966497908	22	1	10327065	523	917261208	1	1
10292016	415	916163008	5	1	10331026	468	96053500	61	1
10292017	409	966497908	23	1	10331368	752	917531708	2	1
10292018	415	916163008	7	1	10331946	293	10492431	998	1
10292021	415	916163008	2	2	10331947	292	10429930	800	1
10292724	136	11347526	29	1	10332172	81	11161917	48	1
10292801	319	10871282	3	1	10332395	577	12100860	30	1
10292815	324	10292801	5	1	10332397	577	12100860	50	1
10293537	75	91001377	23	1	10332420	81	11161917	(1)	1
10293537	108	91001378	23	1	10332882	560	96045351	24	1
10293775	360	570109008	10	1	10332987	426	917676208	7	4
10293786	360	570109008	5	1	10333297	741	917598408	(506)	1
10294494	387	916177508	3	4	10334488	445	96036790	100	1
10294684	92	968420608	4	2	10334488	455	969015908	100	1
10294684	157	96063087	11	2	10335557	467	96053500	50	1
10294938	521	10871700	2	1	10335596	472	10343693	3	4
10294939	521	10871700	3	1	10335819	463	96036955	689	4
10295188	328	96034515	403	1	10335819	464	96036956	689	4
10295188	564	96045351	737	6	10335820	49	96045228	690	14
10295188	617	967784808	632	2	10335820	463	96036955	690	52
10296157	445	96036790	(2)	3	10335820	464	96036956	690	6
10296157	445	96036790	(2)	3	10335820	533	96045385	690	29
10296157	445	96036790	(2)	3	10335820	535	96037136	690	20
10296644	507	919674408	180	2	10335855	292	10429930	3	1
10297241	521	10871700	5	1	10335960	328	96034515	450	1
10297295	217	10142942	1	2	10337381	574	10332882	(1)	2
10297310	467	96053500	54	2	10337381	586	510697608	7	1
10297396	492	967928508	22	1	10340105	467	96053500	5	1
10297691	383	96015921	5	1	10340438	548	968063108	6	1
10297876	317	11692439	2	1	10342478	319	10871282	12	1
10299564	255	10142863	3	2	10342479	319	10871282	26	1
10299564	260	9079823	2	4	10342480	319	10871282	999	1
10299565	255	10142863	4	1	10342517	462	96036955	509	2
10299585	183	10147687	6	1	10342517	535	96037136	509	3
10299589	183	10147687	5	9	10342517	536	96037137	502	2
10299604	212	10129475	3	14	10342518	462	96036955	525	1
10299649	492	967928508	24	2	10342518	535	96037136	518	3

Item	Page	Assembly	Pos.	Quantity	Item	Page	Assembly	Pos.	Quantity
10342518	536	96037137	512	3	10412851	157	96063087	18	4
10342519	462	96036955	510	2	10412851	390	916170808	10	6
10342519	535	96037136	526	3	10412851	393	968514508	8	1
10342519	536	96037137	518	2	10412851	421	917304708	12	4
10342770	205	10149578	3	1	10412851	445	96036790	300	10
10342823	568	11211756	20	1	10412851	455	969015908	300	6
10342854	467	96053500	8	2	10412851	507	919674408	300	2
10343003	430	969085208	2	1	10412851	511	96051842	307	7
10343003	480	918759808	5	1	10412851	626	917269308	2	4
10343484	467	96053500	55	2	10412851	744	967933408	7	1
10343693	467	96053500	4	2	10412852	35	917511508	30	8
10346599	560	96045351	(1)	1	10412852	92	968420608	5	14
10353004	535	96037136	529	1	10412852	409	966497908	15	6
10353667	749	968811608	7	2	10412852	511	96051842	308	2
10353689	348	969050308	17	4	10412852	636	968994408	26	2
10353713	511	96051842	303	4	10412852	637	968290608	20	6
10353737	334	96023117	21	6	10412852	639	968993508	13	2
10354375	399	917305408	56	1	10412852	640	968267208	20	6
10354377	95	96062678	3	3	10412853	387	916177508	6	8
10354493	708	966354008	5	1	10412853	421	917304708	41	1
10354584	31	968036408	10	1	10413106	560	96045351	22	1
10354584	468	96053500	58	1	10415159	641	96045237	22	1
10354584	701	966134608	(6)	6	10415162	30	968019508	21	4
10354584	712	966591508	(5)	1	10415162	287	919007708	315	1
10354595	187	10132560	100	1	10415162	370	939292201	52	12
10354670	399	917305408	25	2	10415162	489	918956108	12	12
10354922	30	968019508	11	6	10415162	610	939294201	52	12
10355140	136	11347526	2	1	10423992	568	11211756	(1)	2
10355140	525	10327065	2	1	10423993	568	11211756	(999)	1
10355170	462	96036955	505	2	10424210	467	96053500	37	2
10355182	462	96036955	503	4	10424276	467	96053500	7	1
10356273	321	10872488	37	1	10424489	424	966253908	2	2
10359124	52	11346779	20	2	10424622	462	96036955	512	2
10359128	52	11346779	21	2	10424622	532	96045385	509	1
10359142	296	97029921	450	1	10424625	463	96036955	828	4
10410178	120	968038208	6	4	10424625	533	96045385	828	2
10410178	121	968038308	6	4	10424625	537	96037137	828	9
10410178	124	968046208	52	8	10424726	310	10663105	999	1
10410178	129	919644008	65	12	10424983	648	12102921	21	2
10410178	511	96051842	375	8	10425409	520	918731908	175	1
10410193	500	918731808	66	2	10425689	658	968068308	4	1
10410193	745	967936408	2	2	10425689	751	968728808	9	4
10410198	390	916170808	13	2	10428198	710	10354493	12	3
10410305	562	96045351	601	5	10428532	467	96053500	48	2
10410651	305	11210795	31	1	10428544	462	96036955	10	4.367
10410651	319	10871282	28	2	10428544	462	96036955	11	4.367
10410770	564	96045351	810	2	10428545	462	96036955	7	4.375
10410770	622	969426308	616	1	10429057	628	915432508	3	1
10410771	328	96034515	404	1	10429635	381	919010208	7	1
10410771	565	96045351	835	2	10429638	535	96037136	530	1
10411092	258	11386644	4	1	10429930	291	96034631	102	1
10411093	258	11386644	6	2	10429952	136	11347526	33	2
10411094	258	11386644	3	1	10429952	525	10327065	9	1
10411095	258	11386644	5	2	10430042	574	10332882	9	1
10412105	334	96023117	23	4	10430230	697	10876933	64	1
10412433	535	96037136	512	1	10440553	540	91000922	11	1
10412777	471	96022872	10	1	10440976	312	10472196	999	1
10412850	561	96045351	202	1	10441166	462	96036955	298	0.1
10412851	26	96034894	17	4	10441166	536	96037137	298	0.5
10412851	29	96034977	17	4	10441664	399	917305408	55	1

Item	Page	Assembly	Pos.	Quantity	Item	Page	Assembly	Pos.	Quantity
10441664	749	968811608	4	2	10488662	711	966291008	307	1
10443309	400	917305408	59	1	10488662	714	968708708	293	1
10443625	433	918810308	24	2	10488696	305	11210795	98	1
10443748	363	917259608	1	1	10489011	467	96053500	10	2
10447539	525	10327065	99	1	10489734	582	11341035	7	1
10449516	467	96053500	9	3	10490072	704	10802064	20	1
10449664	540	91000922	25	8	10490116	124	968046208	32	2
10449843	132	968077208	300	5.2	10490901	363	917259608	(999)	1
10449853	560	96045351	64	1	10491129	584	10449853	999	1
10450160	424	966253908	7	1	10491593	150	919499408	79	2
10450273	46	966204108	4	1	10491695	379	11214363	999	1
10450694	409	966497908	25	1	10491808	461	96036954	(2)	1
10450694	421	917304708	22	1	10491892	710	10354493	15	8
10451017	710	10354493	17	1	10492113	461	96036954	(1)	1
10455144	435	10877138	15	1	10492347	435	10877138	19	1
10455153	513	96035073	2	1	10492431	292	10429930	11	1
10455281	433	918810308	27	6	10492710	302	11210201	999	1
10465711	183	10147687	15	2	10492710	326	10870964	999	1
10466911	728	967785008	152	3	10492888	496	969763408	325	8
10466912	616	967784808	161	2	10493045	496	969763408	168	2
10466913	616	967784808	157	2	10493479	697	10876933	61	1
10466914	561	96045351	177	2	10493493	535	96037136	724	6
10466915	728	967785008	150	3	10493495	535	96037136	726	65
10466916	616	967784808	159	2	10493495	537	96037137	726	4
10466917	616	967784808	154	2	10493496	535	96037136	727	4
10467292	57	96035801	650	1	10493496	537	96037137	727	2
10467292	98	96035796	617	1	10493625	273	12583633	(1)	1
10467292	115	96035792	617	1	10493920	525	10327065	1	1
10467292	564	96045351	757	1	10493944	697	10876933	68	1
10468820	365	917259708	19	6	10493970	50	96045228	721	16
10470032	160	915731908	1	1	10493970	741	917598408	(721)	4
10470371	697	10876933	7	1	10493972	49	96045228	719	16
10470377	697	10876933	59	1	10493972	142	96045205	719	6
10470385	574	10332882	(999)	1	10493972	741	917598408	(719)	2
10470667	649	10040024	9	1	10494115	507	919674408	181	1
10471363	152	928569808	40	1	10494115	511	96051842	180	2
10471384	305	11210795	5	1	10494116	507	919674408	182	2
10471437	298	11690588	2	2	10494116	511	96051842	181	3
10471437	301	11182664	(5)	2	10539468	511	96051842	302	4
10471437	301	11182664	(5)	2	10539471	561	96045351	325	4
10471437	305	11210795	(2)	2	10540500	52	11346779	35	2
10471439	305	11210795	(98)	1	10540500	124	968046208	34	4
10472196	309	11210798	3	1	10540500	421	917304708	40	4
10472202	312	10472196	3	1	10540500	744	967933408	8	1
10472208	309	11210798	4	1	10540510	421	917304708	21	4
10472219	311	10008308	999	1	10551191	26	96034894	41	1
10472890	421	917304708	8	1	10551191	29	96034977	41	1
10472995	540	91000922	30	1	10562617	287	919007708	317	2
10473048	463	96036955	708	2	10564740	560	96045351	(1)	1
10473048	464	96036956	708	1	10650014	697	10876933	49	1
10475198	319	10871282	11	4	10650092	570	10342823	2	1
10475314	630	917368108	9	1	10650295	393	968514508	4	4
10475426	46	966204108	160	3.4	10650386	435	10877138	(11)	1
10475893	421	917304708	14	10	10650387	435	10877138	(13)	1
10476211	406	916162508	6	2	10650399	435	10877138	35	1
10476382	142	96045205	503	1	10650403	435	10877138	49	1
10476383	49	96045228	524	2	10650488	435	10877138	66	1
10476383	741	917598408	(504)	1	10650489	435	10877138	70	1
10476913	57	96035801	654	1	10650490	435	10877138	85	1
10488035	81	11161917	47	1	10650501	561	96045351	(998)	1

Item	Page	Assembly	Pos.	Quantity	Item	Page	Assembly	Pos.	Quantity
10650501	561	96045351	(998)	1	10802057	702	966473108	10	1
10650507	440	916049908	(2)	1	10802057	705	966200208	1	1
10650720	275	10125687	2	2	10802060	529	968128908	(11)	1
10651363	564	96045351	759	6	10802061	375	966631008	5	1
10652206	406	916162508	8	2	10802061	604	967969608	(5)	1
10652724	560	96045351	23	1	10802064	702	966473108	20	1
10652724	616	967784808	21	1	10802205	26	96034894	33	1
10652772	152	928569808	14	1	10802205	29	96034977	33	1
10663059	319	10871282	7	1	10802205	56	96035801	322	2
10663065	324	10292801	999	1	10802253	560	96045351	(999)	1
10663092	572	10413106	(999)	1	10802682	507	919674408	120	2
10663097	572	10413106	(999)	1	10802682	511	96051842	120	3
10663105	309	11210798	1	1	10802870	132	968077208	(99)	1
10663107	309	11210798	98	1	10803065	359	510229408	14	1
10663120	310	10663105	14	1	10813359	150	919499408	83	8
10663388	351	919369308	4	48	10813359	286	919007708	(300)	2
10663466	435	10877138	1	1	10813359	421	917304708	43	7
10663567	125	968331708	3	1	10813359	500	918731808	52	1
10663718	754	910836808	9	2	10813633	536	96037137	507	2
10663825	298	11690588	(1)	1	10813642	537	96037137	836	1
10663825	324	10292801	1	1	10813644	537	96037137	754	9
10663825	325	10292815	(1)	2	10813738	560	96045351	60	7
10663909	136	11347526	(1)	1	10813738	616	967784808	53	1
10663970	693	96013575	3	2	10813738	717	967784508	51	1
10664141	136	11347526	24	1	10813739	560	96045351	62	2
10664166	560	96045351	(999)	1	10813942	228	10143341	8	1
10664204	335	96023914	5	2	10814800	511	96051842	352	2
10675116	476	917260408	(1)	1	10815004	47	10450273	1	1
10675205	704	10802064	16	1	10815005	47	10450273	2	1
10675728	136	11347526	1	1	10815006	47	10450273	3	1
10678375	392	916162808	7	2	10815283	406	916162508	14	1
10678375	399	917305408	47	1	10815368	291	96034631	104	1
10678377	392	916162808	8	2	10815416	415	916163008	19	1
10678395	705	966200208	2	1	10815496	415	916163008	16	1
10678395	736	966479308	7	1	10815662	496	969763408	644	4
10678452	535	96037136	514	1	10815664	496	969763408	633	3
10678453	535	96037136	503	1	10815777	480	918759808	32	1
10678458	535	96037136	504	2	10815777	482	96020359	15	1
10678491	49	96045228	6	1	10815830	49	96045228	11	4.96
10678491	532	96045385	13	1	10815830	49	96045228	12	4.96
10678491	534	96037136	5	1	10815830	49	96045228	13	4.16
10678491	534	96037136	6	1	10815830	49	96045228	14	4.16
10678491	534	96037136	7	1	10816185	560	96045351	61	1
10678491	534	96037136	8	1	10816196	470	96030724	2	1
10678491	534	96037136	9	1	10816943	193	10130406	1	1
10678494	532	96045385	10	1	10816958	512	96051842	400	8
10678848	472	10343693	4	2	10870204	35	917511508	44	4
10684170	560	96045351	(999)	1	10870226	501	968570808	4	1
10800046	535	96037136	842	6	10870333	527	919410708	(30)	100
10800266	527	919410708	(150)	1	10870376	393	968514508	3	2
10800631	535	96037136	753	4	10870403	537	96037137	844	1
10800916	399	917305408	49	4	10870472	468	96053500	69	1
10801399	253	12512627	29	2	10870538	462	96036955	344	18.2
10801532	572	10413106	5	1	10870539	462	96036955	345	8.16
10801533	572	10413106	6	1	10870539	464	96036956	345	7.7
10801534	572	10413106	7	1	10870539	532	96045385	345	11.4
10801549	572	10413106	9	1	10870539	536	96037137	345	34.5
10801551	572	10413106	10	1	10870540	48	96045227	305	25.99
10801609	500	918731808	22	2	10870540	49	96045228	305	36.53
10801858	428	11083498	14	1	10870540	462	96036955	305	319.78

Item	Page	Assembly	Pos.	Quantity	Item	Page	Assembly	Pos.	Quantity
10870540	464	96036956	305	160.31	10872700	692	921456108	3	2
10870540	532	96045385	305	395.03	10872700	755	925203408	3	2
10870540	534	96037136	305	427.54	10872714	594	10872388	999	1
10870540	536	96037137	305	82.2	10872796	572	10413106	(1)	1
10870540	642	96043733	305	6.6	10872859	572	10413106	(1)	1
10870541	534	96037136	307	37.14	10872859	572	10413106	(1)	1
10870542	462	96036955	309	30.5	10872859	573	571415008	6	1
10870542	464	96036956	309	18.45	10873149	135	917257108	27	50
10870542	534	96037136	309	23.3	10873149	523	917261208	14	50
10870633	426	917676208	25	0.75	10873149	613	921444108	5	5
10870633	426	917676208	26	0.5	10873194	463	96036955	700	4
10870635	531	96045384	71	1.5	10873194	533	96045385	700	2
10870635	643	96037130	13	1.7	10873379	693	96013575	1	1
10870635	645	96037131	13	1.5	10873383	142	96045205	6	1
10870643	531	96045384	69	1	10873434	551	969061708	(1)	1
10870964	287	919007708	109	1	10873517	472	10343693	5	1
10870965	287	919007708	110	1	10873566	147	919087608	(23)	2
10870968	415	916163008	8	1	10873570	305	11210795	3	1
10871016	287	919007708	206	1	10873571	305	11210795	4	1
10871017	286	919007708	104	1	10873838	540	91000922	26	1
10871043	303	10871047	3	1	10874134	569	11482347	1	1
10871047	287	919007708	107	1	10874178	536	96037137	505	1
10871063	741	917598408	(507)	1	10874213	572	10413106	(1)	1
10871126	142	96045205	5	1	10874331	463	96036955	529	1
10871126	532	96045385	375	1	10874331	535	96037136	521	4
10871126	532	96045385	377	1	10874587	527	919410708	(20)	50
10871127	532	96045385	376	1	10874588	269	10151328	99	3
10871127	532	96045385	378	1	10874588	271	10151329	100	8
10871151	561	96045351	200	1	10874588	527	919410708	(10)	50
10871177	409	966497908	12	4	10874588	711	966291008	20	4
10871177	410	965784408	9	2	10874640	593	11622561	10	1
10871282	287	919007708	108	1	10874763	641	96045237	20	1
10871285	49	96045228	18	1.8	10874785	467	96053500	31	1
10871595	561	96045351	201	1	10874825	428	11083498	15	1
10871692	23	12102931	999	1	10874849	568	11211756	4	2
10871700	520	918731908	100	1	10874884	332	918955408	9	3
10871713	305	11210795	1	1	10874884	399	917305408	39	13
10871726	79	11182596	5	1	10874902	593	11622561	9	1
10871759	500	918731808	36	1	10875017	400	917305408	70	2
10871959	624	10038509	(999)	1	10875017	467	96053500	32	4
10872003	731	918124908	5	2	10875074	568	11211756	3	3
10872024	98	96035796	307	1	10875075	568	11211756	5	1
10872024	115	96035792	307	1	10875076	568	11211756	6	1
10872024	616	967784808	302	1	10875077	568	11211756	21	1
10872032	534	96037136	98	8	10875121	462	96036955	19	1
10872033	535	96037136	709	2	10875280	462	96036955	513	1
10872098	624	10038509	(999)	1	10875281	463	96036955	2238	6
10872098	624	10038509	(999)	1	10875422	337	917626608	5	1
10872213	520	918731908	250	1	10875422	345	917825508	9	1
10872307	503	969904608	1	1	10875447	399	917305408	58	2
10872388	593	11622561	8	1	10875448	280	918731408	300	2
10872389	593	11622561	7	1	10875448	388	96025887	7	3
10872448	575	571737808	5	1	10875448	457	969016008	8	2
10872487	323	571907208	999	1	10875468	147	919087608	13	8
10872488	319	10871282	1	1	10875468	328	96034515	302	1
10872521	428	11083498	80	1	10875468	334	96023117	11	12
10872598	503	969904608	3	1	10875468	388	96025887	10	3
10872612	430	969085208	4	1	10875468	395	917304508	14	12
10872612	482	96020359	25	1	10875468	399	917305408	40	73
10872672	403	11002447	998	1	10875468	415	916163008	23	6

Item	Page	Assembly	Pos.	Quantity	Item	Page	Assembly	Pos.	Quantity
10875468	421	917304708	19	5	10875504	496	969763408	330	4
10875468	467	96053500	22	7	10875507	172	918731108	8	4
10875469	399	917305408	41	10	10875508	75	91001377	43	1
10875469	421	917304708	36	7	10875508	108	91001378	43	1
10875470	399	917305408	42	2	10875508	668	917291908	57	2
10875471	144	96045206	10	4	10875517	758	917413208	10	4
10875471	410	965784408	13	2	10875518	761	917267508	41	2
10875471	520	918731908	302	4	10875519	21	91001569	66	4
10875474	399	917305408	38	16	10875519	668	917291908	17	4
10875474	412	916168308	15	5	10875520	75	91001377	25	24
10875474	433	918810308	28	6	10875520	108	91001378	25	24
10875474	467	96053500	18	18	10875521	280	918731408	304	1
10875474	641	96045237	25	4	10875538	399	917305408	44	2
10875475	388	96025887	9	2	10875547	287	919007708	116	2
10875481	673	917292008	50	4	10875549	412	916168308	20	2
10875481	677	917292108	50	4	10875550	540	91000922	16	8
10875481	681	917292208	50	4	10875550	544	969256608	51	16
10875481	685	917292308	50	4	10875551	157	96063087	17	8
10875481	690	917292408	50	4	10875551	378	917259908	16	6
10875482	467	96053500	20	8	10875551	406	916162508	12	8
10875483	334	96023117	17	6	10875551	409	966497908	13	8
10875483	384	96057226	3	2	10875551	421	917304708	18	4
10875483	412	916168308	16	14	10875552	129	919644008	17	16
10875483	415	916163008	26	2	10875552	668	917291908	51	6
10875483	467	96053500	21	8	10875552	673	917292008	57	6
10875485	26	96034894	20	3	10875553	21	91001569	64	4
10875485	29	96034977	20	3	10875553	52	11346779	3	3
10875485	39	96045225	15	4	10875553	648	12102921	32	6
10875485	95	96062678	4	3	10875554	753	919007108	7	2
10875485	129	919644008	14	16	10875557	511	96051842	184	8
10875485	135	917257108	23	3	10875559	150	919499408	86	4
10875485	172	918731108	28	4	10875559	433	918810308	38	6
10875485	287	919007708	305	6	10875561	673	917292008	33	20
10875485	395	917304508	15	6	10875561	677	917292108	33	20
10875485	445	96036790	303	13	10875561	681	917292208	33	20
10875485	455	969015908	305	10	10875561	685	917292308	33	20
10875485	496	969763408	(7)	6	10875561	690	917292408	36	12
10875485	500	918731808	54	4	10875564	544	969256608	47	2
10875485	507	919674408	304	1	10875564	629	918377508	300	4
10875485	518	96039752	300	15	10875564	690	917292408	47	1
10875485	520	918731908	303	2	10875565	78	90028956	92	8
10875485	567	96035117	28	7	10875565	370	939292201	77	8
10875485	616	967784808	312	5	10875565	492	967928508	20	8
10875485	635	968210808	3	3	10875565	562	96045351	553	12
10875486	94	96034962	18	3	10875565	610	939294201	77	8
10875486	112	96034980	18	3	10875565	617	967784808	555	4
10875486	365	917259708	10	12	10875570	400	917305408	61	2
10875486	387	916177508	(6)	11	10875571	75	91001377	58	2
10875486	455	969015908	308	4	10875571	108	91001378	58	2
10875486	768	968090008	6	4	10875571	363	917259608	6	6
10875488	287	919007708	300	3	10875571	365	917259708	18	4
10875488	294	968026308	300	6	10875571	493	967978908	14	2
10875488	390	916170808	17	3	10875571	562	96045351	555	14
10875488	409	966497908	33	4	10875572	351	919369308	5	8
10875503	43	968054008	10	6	10875572	673	917292008	23	8
10875503	540	91000922	20	28	10875572	677	917292108	23	8
10875503	544	969256608	48	18	10875572	681	917292208	23	8
10875503	548	968063108	11	6	10875572	685	917292308	23	8
10875503	625	918462708	5	1	10875572	690	917292408	18	8
10875503	628	915432508	6	4	10875574	701	966134608	14	4

Item	Page	Assembly	Pos.	Quantity
10875578	78	90028956	76	8
10875578	150	919499408	64	12
10875582	400	917305408	62	2
10875582	625	918462708	4	4
10875582	627	917269408	3	4
10875582	627	917269408	4	2
10875583	310	10663105	47	4
10875583	387	916177508	20	11
10875584	39	96045225	18	4
10875584	400	917305408	63	1
10875586	35	917511508	12	8
10875586	63	11643183	13	4
10875586	66	11643184	13	4
10875586	265	10127979	3	1
10875586	273	12583633	(3)	1
10875586	273	12583633	(2)	1
10875586	410	965784408	14	2
10875586	659	925141508	4	1
10875588	56	96035801	310	27
10875588	136	11347526	6	3
10875588	321	10872488	47	4
10875588	381	919010208	(1)	2
10875588	525	10327065	6	3
10875588	562	96045351	329	2
10875588	616	967784808	309	2
10875590	334	96023117	31	4
10875590	390	916170808	9	2
10875591	56	96035801	316	20
10875591	287	919007708	302	4
10875591	574	10332882	4	4
10875591	701	966134608	37	2
10875592	500	918731808	56	4
10875593	423	966230508	6	1
10875597	492	967928508	16	1
10875597	701	966134608	29	4
10875598	359	510229408	7	2
10875598	387	916177508	22	5
10875598	701	966134608	17	6
10875599	35	917511508	33	32
10875599	287	919007708	308	4
10875599	353	90008901	26	8
10875599	476	917260408	3	4
10875599	673	917292008	18	6
10875599	677	917292108	18	8
10875599	681	917292208	18	10
10875599	685	917292308	18	10
10875599	690	917292408	17	8
10875601	359	510229408	10	4
10875601	440	916049908	4	1
10875607	496	969763408	329	4
10875607	669	917291908	84	6
10875609	35	917511508	14	8
10875609	382	967986308	5	4
10875609	492	967928508	25	1
10875609	668	917291908	18	4
10875610	337	917626608	7	1
10875610	345	917825508	6	1
10875611	669	917291908	88	1
10875611	690	917292408	61	1
10875611	745	967936408	7	3
10875614	94	96034962	9	7
10875614	112	96034980	9	7
10875614	294	968026308	350	3
10875614	387	916177508	(7)	11
10875614	399	917305408	46	1
10875614	426	917676208	5	4
10875614	430	969085208	25	1
10875614	440	916049908	5	1
10875614	476	917260408	4	4
10875614	480	918759808	20	8
10875614	482	96020359	32	1
10875614	636	968994408	25	2
10875614	639	968993508	12	2
10875616	20	91001569	22	32
10875616	31	968036408	30	2
10875616	75	91001377	35	3
10875616	108	91001378	35	3
10875616	147	919087608	34	1
10875616	761	917267508	23	2
10875617	35	917511508	43	4
10875617	95	96062678	9	1
10875617	129	919644008	32	4
10875617	493	967978908	17	1
10875617	701	966134608	19	4
10875617	761	917267508	6	9
10875618	20	91001569	48	4
10875618	76	91001377	64	1
10875618	109	91001378	64	1
10875618	754	910836808	15	8
10875619	157	96063087	30	6
10875619	406	916162508	10	2
10875619	446	96036790	354	8
10875620	135	917257108	4	4
10875620	334	96023117	18	6
10875620	523	917261208	5	4
10875629	632	96037229	13	4
10875629	645	96037131	19	1
10875629	657	919028808	(9)	1
10875629	673	917292008	22	4
10875629	677	917292108	22	4
10875629	681	917292208	22	4
10875629	685	917292308	22	4
10875629	690	917292408	19	4
10875630	673	917292008	51	4
10875630	677	917292108	51	4
10875630	681	917292208	51	4
10875630	685	917292308	51	4
10875630	690	917292408	51	4
10875633	467	96053500	25	1
10875637	56	96035801	306	4
10875639	94	96034962	24	2
10875639	112	96034980	24	2
10875640	641	96045237	21	1
10875642	669	917291908	87	1
10875642	691	917292408	69	1
10875643	561	96045351	309	4
10875645	406	916162508	9	2
10875645	446	96036790	381	8
10875645	467	96053500	(2)	4
10875645	467	96053500	42	4

Item	Page	Assembly	Pos.	Quantity	Item	Page	Assembly	Pos.	Quantity
10875645	544	969256608	62	16	10876069	345	917825508	2	2
10875645	745	967936408	8	3	10876074	287	919007708	320	2
10875648	288	919007708	376	5	10876076	604	967969608	11	4
10875648	378	917259908	34	6	10876082	76	91001377	201	2
10875648	410	965784408	11	4	10876082	109	91001378	201	2
10875648	446	96036790	379	6	10876082	144	96045206	11	4
10875648	449	968923508	15	2	10876084	409	966497908	34	14
10875648	455	969015908	309	10	10876162	294	968026308	150	2
10875648	500	918731808	62	8	10876162	378	917259908	43	2
10875648	561	96045351	306	6	10876353	98	96035796	626	1
10875648	616	967784808	315	2	10876353	115	96035792	626	1
10875648	668	917291908	52	2	10876361	561	96045351	327	2
10875648	728	967785008	305	2	10876368	660	918802108	10	1
10875659	321	10872488	36	1	10876373	56	96035801	552	32
10875669	762	929582108	4	3	10876373	98	96035796	551	8
10875669	765	923879808	2	1	10876373	115	96035792	551	8
10875678	387	916177508	10	1	10876373	562	96045351	552	12
10875793	601	918628408	10	2	10876373	616	967784808	550	4
10875795	430	969085208	29	4	10876373	717	967784508	550	12
10875795	480	918759808	26	4	10876374	20	91001569	31	48
10875796	287	919007708	318	2	10876382	399	917305408	43	16
10875797	382	967986308	7	4	10876384	544	969256608	50	2
10875803	147	919087608	26	6	10876385	208	11358102	7	20
10875803	604	967969608	16	4	10876387	41	96045226	12	6
10875803	761	917267508	9	8	10876388	544	969256608	46	8
10875804	280	918731408	303	1	10876394	561	96045351	320	4
10875805	288	919007708	345	4	10876394	568	11211756	11	8
10875805	761	917267508	12	10	10876395	63	11643183	7	4
10875809	406	916162508	11	4	10876395	63	11643183	15	4
10875809	767	917268208	6	4	10876395	66	11643184	15	4
10875815	745	967936408	6	3	10876395	544	969256608	45	16
10875857	669	917291908	75	4	10876399	467	96053500	26	4
10875857	712	966591508	2	2	10876421	378	917259908	11	6
10875859	119	917691008	14	24	10876576	482	96020359	1	1
10875859	124	968046208	22	40	10876620	56	96035801	307	12
10875859	761	917267508	30	2	10876636	511	96051842	185	3
10875862	761	917267508	37	1	10876638	641	96045237	10	1
10875863	761	917267508	36	1	10876704	582	11341035	4	1
10875866	761	917267508	10	2	10876705	582	11341035	5	1
10875868	125	968331708	4	1	10876716	540	91000922	8	1
10875869	129	919644008	34	4	10876819	468	96053500	60	1
10875869	690	917292408	60	4	10876933	695	918807308	1	1
10875869	737	967321308	7	1	10877074	767	917268208	1	1
10875869	754	910836808	(1)	2	10877138	433	918810308	1	1
10875870	20	91001569	51	4	10877167	697	10876933	71	1
10875870	378	917259908	35	1	10877246	690	917292408	15	16
10875872	387	916177508	12	1	10877340	648	12102921	31	6
10875873	129	919644008	30	4	10877342	75	91001377	8	2
10875873	147	919087608	24	2	10877342	108	91001378	8	2
10875876	761	917267508	35	1	10877343	463	96036955	2258	25
10875879	370	939292201	59	2	10877344	463	96036955	2259	5
10875881	406	916162508	25	2	10877382	693	96013575	2	2
10875905	382	967986308	3	4	10877433	560	96045351	25	1
10875930	593	11622561	5	1	10877437	153	928620108	8	1
10875952	732	10872003	1	1	10877685	83	11320954	3	1
10875953	732	10872003	3	1	10877686	83	11320954	2	1
10875969	732	10872003	2	1	10877798	462	96036955	12	1
10876030	467	96053500	34	1	10877798	538	96037133	6	1
10876056	421	917304708	55	3.4	10877798	644	96037132	6	1
10876067	287	919007708	303	2	10877800	532	96045385	371	1

Item	Page	Assembly	Pos.	Quantity	Item	Page	Assembly	Pos.	Quantity
10877801	532	96045385	19	1	11002447	399	917305408	26	1
10877801	532	96045385	372	1	11002524	488	11212257	1	2
10877801	535	96037136	388	1	11002678	725	511479408	7	1
10877801	535	96037136	389	1	11002727	378	917259908	12	5
10877810	489	918956108	1	2	11002743	276	10144036	4	4
10877828	467	96053500	6	1	11002916	523	917261208	2	1
10877828	631	918989008	(10)	1	11002980	637	968290608	10	1
10877828	643	96037130	20	1	11002980	640	968267208	10	1
10877828	645	96037131	20	1	11002988	228	10143341	5	1
10877828	657	919028808	(4)	1	11002995	228	10143341	2	1
10877999	540	91000922	3	1	11003089	497	502657308	998	1
10878064	20	91001569	16	56	11003094	497	502657308	999	1
10878075	578	571634708	5	1	11003121	297	11182708	4	1
10878075	580	10332397	5	2	11003193	530	966720708	10	2
10878117	500	918731808	73	2	11003426	477	966707708	5	1
10878142	335	96023914	(21)	1	11003837	406	916162508	17	2
10878143	335	96023914	(22)	1	11003841	710	10354493	16	1
10878172	662	12257818	1	1	11004031	764	512363708	10	1
10878189	697	10876933	999	1	11004117	409	966497908	28	2
10878281	101	96028333	2	1	11004122	572	10413106	(999)	1
10878281	616	967784808	(2)	1	11004126	572	10413106	12	1
10878366	129	919644008	(999)	1	11004444	26	96034894	32	2
10878394	342	96066379	400	1	11004444	29	96034977	32	2
10878445	415	916163008	20	2	11004444	92	968420608	6	14
10878578	240	5700161	27	1	11004444	744	967933408	9	3
10878580	20	91001569	34	14	11005151	536	96037137	284	5.59
10878582	35	917511508	35	4	11005170	435	10877138	17	1
10878680	335	96023914	(10)	1	11005244	584	10449853	1	1
10878687	124	968046208	20	32	11005983	422	966230408	3	1
10878688	119	917691008	13	24	11005984	422	966230408	2	1
10878785	562	96045351	550	4	11005985	422	966230408	1	1
10878785	617	967784808	552	4	11005987	422	966230408	4	1
10878791	648	12102921	35	8	11006275	575	571737808	999	1
10878799	616	967784808	551	4	11006491	704	10802064	11	1
10878821	562	96045351	557	25	11006584	291	96034631	122	4
10878829	348	969050308	13	4	11006584	451	968977308	60	3.5
10878922	334	96023117	16	4	11007009	421	917304708	7	1
10878951	436	96032222	2	1	11007219	526	11002916	3	6
10878951	438	96032223	2	1	11007300	52	11346779	2	1
10886525	467	96053500	(80)	1	11007305	167	916959808	1	1
11000394	536	96037137	515	1	11007589	387	916177508	5	1
11000401	537	96037137	2253	3	11007817	575	571737808	4	1
11000593	254	11420633	10	2	11007853	45	968252908	301	1
11000700	280	918731408	101	2	11007853	471	96022872	(3)	1
11000700	426	917676208	21	2	11007853	540	91000922	(301)	1
11000700	430	969085208	5	1	11007853	550	968253608	301	1
11000700	480	918759808	11	1	11008020	98	96035796	310	2
11000700	482	96020359	61	1	11008020	115	96035792	310	2
11000710	415	916163008	17	1.3	11008024	463	96036955	527	4
11000710	415	916163008	18	2.8	11008055	232	10145173	2	1
11000901	412	916168308	11	2.15	11008297	218	10150741	2	4
11000902	412	916168308	14	2	11008529	475	966979108	1	1
11000903	412	916168308	13	6	11008530	475	966979108	2	1
11001115	409	966497908	16	1	11060087	710	10354493	14	8
11001194	39	96045225	10	1	11060088	710	10354493	140	8
11001770	136	11347526	39	2	11060128	468	96053500	57	2
11001935	294	968026308	110	1	11060618	536	96037137	519	3
11001955	399	917305408	57	3	11060619	536	96037137	506	2
11002218	426	917676208	3	2.22	11066168	216	10148432	4	1
11002446	399	917305408	27	1	11066521	240	5700161	24	4

Item	Page	Assembly	Pos.	Quantity	Item	Page	Assembly	Pos.	Quantity
11066818	79	11182596	2	1	11118077	430	969085208	21	12
11066829	79	11182596	3	1	11118077	480	918759808	19	6
11067611	166	917258108	2	0.239	11118077	482	96020359	17	8
11067611	166	917258108	3	0.689	11118077	500	918731808	23	2
11067611	166	917258108	4	0.081	11118160	184	10138450	6	1
11067612	166	917258108	1	0.54	11118242	464	96036956	504	1
11067867	421	917304708	38	1	11118396	536	96037137	211	3.8
11067932	542	96045387	525	14	11124205	532	96045385	223	8.35
11068607	704	10802064	(1)	10	11124205	534	96037136	223	3.89
11080088	468	96053500	62	1	11124207	49	96045228	224	1.23
11080392	525	10327065	15	1	11124207	462	96036955	224	0.83
11080881	48	96045227	758	5	11124207	464	96036956	224	0.53
11080881	463	96036955	758	18	11124207	532	96045385	224	0.93
11080881	464	96036956	758	4	11124208	462	96036955	225	0.33
11080881	535	96037136	758	4	11124208	464	96036956	225	0.43
11081053	139	774375108	3	1	11124208	532	96045385	225	2.91
11082158	500	918731808	17	2	11124208	534	96037136	225	1.46
11082601	474	963398008	4	0.28	11124208	536	96037137	225	2.53
11082602	49	96045228	202	2.31	11124209	49	96045228	226	0.35
11082602	410	965784408	15	0.04	11124209	532	96045385	226	0.93
11082602	462	96036955	202	7.44	11124209	534	96037136	226	2.91
11082602	464	96036956	202	5.94	11124209	536	96037137	226	4.53
11082602	532	96045385	202	24.41	11124210	462	96036955	227	2.26
11082602	534	96037136	202	14.02	11124210	464	96036956	227	0.88
11082602	536	96037137	202	8.82	11124210	532	96045385	227	2.86
11082602	642	96043733	202	2.1	11124211	534	96037136	228	1.23
11082603	49	96045228	203	2.41	11124211	542	96045387	228	1.32
11082603	462	96036955	203	2.2	11124212	532	96045385	229	1.2
11082603	464	96036956	203	2.77	11124212	534	96037136	229	3.71
11082603	532	96045385	203	2.14	11124212	542	96045387	229	0.65
11082603	534	96037136	203	9.43	11140402	433	918810308	37	8
11082603	536	96037137	203	5.23	11140402	561	96045351	310	4
11082604	49	96045228	204	4.29	11140465	562	96045351	332	4
11082604	462	96036955	204	4.43	11140469	30	968019508	30	4
11082604	464	96036956	204	0.73	11140469	135	917257108	24	3
11082604	534	96037136	204	7.12	11140469	155	91001571	8	2
11082605	462	96036955	205	1.63	11140469	172	918731108	21	2
11082605	532	96045385	205	0.86	11140469	280	918731408	378	2
11082605	534	96037136	205	1.33	11140469	365	917259708	16	4
11082605	536	96037137	205	5.21	11140469	378	917259908	29	2
11082606	534	96037136	206	1.18	11140469	387	916177508	(5)	4
11082608	534	96037136	208	0.28	11140469	406	916162508	22	2
11083215	428	11083498	7	1	11140469	446	96036790	380	7
11083438	428	11083498	2	1	11140469	449	968923508	18	4
11083445	428	11083498	45	1	11140469	455	969015908	376	11
11083453	428	11083498	1	1	11140469	467	96053500	40	6
11083498	426	917676208	1	1	11140469	480	918759808	27	4
11088382	744	967933408	11	2	11140469	500	918731808	64	4
11100197	470	96030724	(3)	1	11140469	507	919674408	375	2
11100949	52	11346779	13	1	11140469	512	96051842	381	2
11101017	520	918731908	101	1	11140469	561	96045351	321	4
11102038	699	571928508	17	1	11140469	668	917291908	30	8
11110051	480	918759808	2	1	11140469	691	917292408	70	2
11110060	525	10327065	39	1	11140469	701	966134608	16	12
11113906	124	968046208	33	4	11140469	722	967785408	300	2
11113917	511	96051842	351	4	11140469	728	967785008	307	2
11114455	500	918731808	43	4	11160431	129	919644008	35	2
11114556	630	917368108	1	1	11160431	763	923285508	9	0.3
11114971	468	96053500	59	1	11160431	768	968090008	3	0.4
11118077	426	917676208	22	2	11160586	129	919644008	22	4

Item	Page	Assembly	Pos.	Quantity	Item	Page	Assembly	Pos.	Quantity
11160668	287	919007708	190	4	11220418	63	11643183	5	1
11160723	544	969256608	22	2	11220418	66	11643184	5	1
11160744	328	96034515	301	2	11320194	35	917511508	46	4
11160744	421	917304708	13	3	11320194	492	967928508	21	1
11160970	471	96022872	(1)	1	11320194	493	967978908	11	1
11161570	560	96045351	168	1	11320344	370	939292201	71	12
11161571	26	96034894	34	4	11320344	610	939294201	71	12
11161571	29	96034977	34	4	11320604	639	968993508	8	2
11161917	79	11182596	4	1	11320720	167	916959808	(1)	1
11161917	373	11182597	4	1	11320850	78	90028956	66	24
11161917	605	11211058	4	1	11320954	75	91001377	5	1
11161919	81	11161917	27	1	11320954	108	91001378	5	1
11162002	500	918731808	24	8	11320962	75	91001377	6	13
11170185	704	10802064	25	1	11320962	108	91001378	6	13
11170384	697	10876933	(999)	1	11321016	754	910836808	11	4
11170565	129	919644008	36	8	11321126	299	11631893	11	8
11170565	763	923285508	10	2	11321144	262	10115829	7	15
11170565	768	968090008	4	4	11340583	316	10871043	2	1
11170868	353	90008901	(5)	1	11341035	560	96045351	27	1
11170869	353	90008901	(6)	1	11341599	532	96045385	18	5.83
11171270	435	10877138	32	1	11341840	536	96037137	509	1
11171271	435	10877138	33	1	11342133	75	91001377	19	24
11171274	435	10877138	60	1	11342133	108	91001378	19	24
11171275	435	10877138	65	1	11342208	536	96037137	510	1
11171276	435	10877138	(71)	1	11342253	537	96037137	788	9
11171306	742	11482252	2	1	11342255	536	96037137	511	1
11171311	742	11482252	1	1	11342257	536	96037137	513	1
11181884	52	11346779	5	1	11342259	536	96037137	514	1
11181886	52	11346779	12	1	11342417	569	11482347	2	1
11181887	52	11346779	34	1	11346547	119	917691008	1	4
11182242	400	917305408	66	1	11346548	119	917691008	2	2
11182596	75	91001377	3	1	11346549	119	917691008	3	2
11182596	108	91001378	3	1	11346616	160	915731908	(1)	1
11182597	365	917259708	2	1	11346779	39	96045225	5	1
11182664	286	919007708	105	1	11347024	754	910836808	3	1
11182678	697	10876933	53	1	11347027	754	910836808	2	1
11182708	286	919007708	103	1	11347028	754	910836808	30	1
11182717	668	917291908	24	8	11347500	135	917257108	2	2
11182736	147	919087608	1	1	11347526	135	917257108	1	1
11182950	129	919644008	1	4	11348072	175	13455297	60	4
11183029	138	11347500	2	12	11348100	210	10138230	6	2
11210201	286	919007708	106	1	11348648	210	10138230	8	1
11210793	301	11182664	1	1	11349182	514	96041566	151	2
11210794	301	11182664	2	1	11351303	201	10146367	3	1
11210795	303	10871047	1	1	11357514	204	10149579	8	8
11210798	303	10871047	2	1	11358102	175	13455297	82	1
11211058	604	967969608	9	1	11359503	183	10147687	1	1
11211756	560	96045351	21	1	11373478	500	918731808	11	1
11211803	601	918628408	101	0.18	11382888	234	10149677	10	1
11212256	45	968252908	100	1	11386644	256	10115539	1	1
11212257	487	917618608	1	1	11389287	230	10143825	3	1
11212351	753	919007108	4	1	11389608	174	13455297	10	1
11212353	753	919007108	10	1	11403994	221	10152867	2	1
11212467	348	969050308	2	1	11407917	176	13455297	180	1
11213246	119	917691008	4	2	11415774	231	10147365	1	1
11213247	119	917691008	5	2	11420632	254	11420633	3	1
11213706	550	968253608	100	1	11420633	178	13455297	436	1
11214049	56	96035801	156	4	11428887	516	11429728	1	1
11214357	129	919644008	(1)	1	11429728	511	96051842	101	1
11214363	378	917259908	2	1	11429849	516	11429728	2	1

Item	Page	Assembly	Pos.	Quantity	Item	Page	Assembly	Pos.	Quantity
11429873	516	11429728	3	1	11622218	430	969085208	3	1
11443132	228	10143341	17	2	11622218	482	96020359	29	2
11444999	232	10145173	1	1	11622224	430	969085208	20	1
11448000	207	11448005	2	2	11622224	484	10876576	26	1
11448002	207	11448005	1	1	11622224	484	10876576	(7)	1
11448005	206	10148438	1	1	11622278	221	10152867	4	1
11450029	298	11690588	4	1	11622278	222	10152874	4	2
11450030	81	11161917	28	1	11622278	223	10141140	2	1
11450030	298	11690588	3	1	11622278	224	10135434	2	1
11450030	325	10292815	19	1	11622278	225	10153151	3	1
11450420	449	968923508	8	2	11622561	592	967980508	1	1
11450420	457	969016008	5	2	11622989	537	96037137	789	4
11481080	430	969085208	22	3	11626068	244	12418347	5	6
11481080	480	918759808	25	1	11626108	480	918759808	3	5
11481080	482	96020359	26	1	11626108	480	918759808	4	1.65
11481413	501	968570808	1	1	11626246	323	571907208	19	2
11481963	150	919499408	78	1	11626393	511	96051842	350	4
11482252	741	917598408	2	1	11626529	500	918731808	21	2
11482305	741	917598408	3	1	11626706	147	919087608	21	4
11482347	568	11211756	2	1	11626706	280	918731408	301	2
11482426	244	12418347	1	1	11626706	287	919007708	316	24
11485426	316	10871043	3	1	11626706	511	96051842	304	4
11490010	764	512363708	31	1	11626706	734	917268408	15	1
11490271	593	11622561	4	1	11631742	287	919007708	327	4
11491125	288	919007708	412	1	11631742	507	919674408	305	4
11491349	536	96037137	522	1	11631742	668	917291908	23	4
11491889	365	917259708	21	4	11631816	20	91001569	32	8
11491889	455	969015908	377	4	11631816	278	9078301	5	3
11491889	512	96051842	378	4	11631816	332	918955408	2	6
11491889	561	96045351	312	4	11631816	348	969050308	15	8
11491889	604	967969608	30	4	11631816	445	96036790	318	4
11491889	668	917291908	26	16	11631816	455	969015908	379	4
11491897	741	917598408	(511)	1	11631816	632	96037229	11	4
11492315	544	969256608	42	11	11631816	643	96037130	17	1
11492423	767	917268208	12	1	11631816	645	96037131	17	1
11493793	772	915037208	1	1	11631816	657	919028808	(6)	1
11493868	75	91001377	37	1	11631816	669	917291908	91	2
11493868	108	91001378	37	1	11631860	287	919007708	314	2
11493963	132	968077208	(15)	1	11631893	297	11182708	6	1
11494286	754	910836808	41	2	11631893	300	10871017	6	1
11494337	305	11210795	(98)	1	11631940	276	10144036	7	2
11494341	327	10870965	999	1	11642349	287	919007708	328	4
11494432	136	11347526	(2)	1	11642349	669	917291908	83	4
11494567	532	96045385	513	3	11642355	433	918810308	31	2
11494567	535	96037136	531	1	11642358	445	96036790	305	6
11494581	136	11347526	(3)	1	11642358	455	969015908	310	2
11494585	305	11210795	(98)	1	11642358	500	918731808	58	1
11600236	500	918731808	42	2	11642358	511	96051842	306	8
11600280	297	11182708	(999)	1	11642358	562	96045351	556	2
11600879	224	10135434	3	1	11642358	591	917261808	5	6
11600960	210	10138230	(4)	6	11642358	604	967969608	13	4
11600988	697	10876933	800	1	11642358	751	968728808	23	3
11620017	49	96045228	15	2.63	11642377	288	919007708	340	8
11620017	462	96036955	9	3	11642497	286	919007708	(302)	1
11620017	462	96036955	13	0.4	11642497	378	917259908	41	2
11620017	538	96037133	5	9.93	11642497	399	917305408	54	1
11620017	644	96037132	5	4.06	11642497	674	917292008	98	4
11621770	480	918759808	14	0.1	11642497	678	917292108	98	4
11621770	482	96020359	28	0.07	11642497	682	917292208	98	4
11621953	36	10870204	999	1	11642497	686	917292308	98	4

Item	Page	Assembly	Pos.	Quantity
11642497	691	917292408	83	4
11642508	636	968994408	10	2
11642508	639	968993508	7	2
11643183	56	96035801	21	1
11643184	56	96035801	22	1
11643393	373	11182597	2	1
11643393	605	11211058	2	1
11643394	373	11182597	3	1
11643394	605	11211058	3	1
11643397	373	11182597	(999)	1
11643655	315	10472208	10	1
11643686	237	10127566	2	3
11644254	704	10802064	102	1
11644899	43	968054008	15	1
11645138	216	10148432	3	2
11645384	287	919007708	331	2
11645384	562	96045351	554	12
11645384	617	967784808	554	4
11645386	147	919087608	35	1
11645386	747	917551608	2	1
11647373	535	96037136	522	2
11647548	98	96035796	313	2
11647548	115	96035792	313	2
11651006	562	96045351	339	8
11651006	691	917292408	74	3
11651578	747	917551608	5	1
11651580	294	968026308	306	1
11651580	455	969015908	21	4
11651612	26	96034894	12	4
11651612	29	96034977	12	4
11651612	30	968019508	20	4
11651612	56	96035801	303	8
11651612	94	96034962	5	4
11651612	112	96034980	5	4
11651612	119	917691008	21	16
11651612	129	919644008	26	8
11651612	150	919499408	68	16
11651612	172	918731108	16	8
11651612	280	918731408	306	2
11651612	291	96034631	304	18
11651612	365	917259708	15	4
11651612	387	916177508	30	2
11651612	406	916162508	21	2
11651612	426	917676208	11	4
11651612	430	969085208	26	3
11651612	445	96036790	312	2
11651612	480	918759808	22	5
11651612	482	96020359	21	4
11651612	493	967978908	22	2
11651612	561	96045351	322	6
11651612	690	917292408	58	2
11651612	701	966134608	15	6
11651612	761	917267508	27	2
11651767	155	91001571	9	2
11651767	287	919007708	307	19
11651767	291	96034631	303	4
11651767	341	91002861	300	3
11651767	388	96025887	13	3
11651767	415	916163008	15	4
11651767	430	969085208	24	1
11651767	445	96036790	310	2
11651767	449	968923508	17	4
11651767	455	969015908	306	5
11651767	480	918759808	21	13
11651767	482	96020359	31	1
11651767	511	96051842	301	2
11651767	520	918731908	301	4
11651767	544	969256608	52	1
11651767	562	96045351	334	10
11651767	622	969426308	301	2
11651767	668	917291908	29	17
11651767	673	917292008	4	2
11651767	677	917292108	4	2
11651767	681	917292208	4	2
11651767	685	917292308	4	2
11651767	690	917292408	28	4
11651767	761	917267508	32	2
11652470	35	917511508	31	6
11656153	195	10139112	3	2
11656153	269	10151328	68	3
11656153	271	10151329	58	2
11656154	253	12512627	10	3
11656155	259	10115664	3	3
11656155	269	10151328	69	1
11656158	226	10146791	4	2
11656158	231	10147365	3	4
11656158	244	12418347	7	2
11656160	244	12418347	6	1
11656183	496	969763408	327	4
11656452	189	10155227	9	1
11656731	76	91001377	105	8
11656731	109	91001378	106	8
11656731	291	96034631	352	6
11656734	124	968046208	35	4
11656734	668	917291908	36	2
11656734	673	917292008	60	2
11656734	677	917292108	60	2
11656734	681	917292208	60	2
11656734	685	917292308	60	2
11656991	467	96053500	39	6
11656992	229	10143342	15	1
11656992	254	11420633	14	1
11656992	263	10116110	11	4
11656992	269	10151328	60	2
11656992	272	10143707	3	3
11656999	78	90028956	68	12
11657000	370	939292201	56	12
11657000	562	96045351	335	2
11657000	610	939294201	56	12
11657219	228	10143341	12	1
11657219	232	10145173	14	1
11657219	252	10140729	14	2
11657219	254	11420633	11	2
11657219	264	10128439	3	1
11657219	269	10151328	61	14
11657219	271	10151329	51	2
11657219	272	10143707	4	1
11657219	445	96036790	316	4
11657219	627	917269408	5	4
11657360	291	96034631	302	4

Item	Page	Assembly	Pos.	Quantity
11657360	601	918628408	11	2
11657360	604	967969608	(10)	3
11657360	753	919007108	3	2
11658059	383	96015921	9	4
11658580	124	968046208	31	12
11658580	271	10151329	77	1
11658580	332	918955408	3	6
11658580	334	96023117	32	4
11658580	446	96036790	378	6
11658580	455	969015908	380	15
11658580	567	96035117	21	3
11658580	591	917261808	4	6
11658580	592	967980508	10	12
11658580	632	96037229	12	4
11658586	754	910836808	8	2
11658587	754	910836808	4	1
11658660	234	10149677	8	2
11658888	69	917436708	(997)	1
11658890	241	9072906	4	1
11658891	751	968728808	29	3
11658892	20	91001569	20	4
11658892	94	96034962	26	3
11658892	112	96034980	26	3
11658892	287	919007708	325	3
11658892	673	917292008	48	2
11658892	677	917292108	48	2
11658892	681	917292208	48	2
11658892	685	917292308	48	2
11658892	751	968728808	28	4
11659642	704	10802064	22	1
11659651	132	968077208	(14)	1
11690042	426	917676208	10	2
11690042	433	918810308	34	24
11690042	602	917267108	12	4
11690042	758	917413208	15	4
11690044	375	966631008	10	3
11690044	378	917259908	33	6
11690044	520	918731908	300	2
11690046	690	917292408	11	2
11690047	467	96053500	(3)	2
11690048	92	968420608	16	1
11690048	381	919010208	8	1
11690048	387	916177508	14	2
11690048	430	969085208	27	2
11690048	652	917260608	5	8
11690048	690	917292408	54	2
11690048	722	967785408	301	2
11690056	376	10802061	4	1
11690057	376	10802061	3	1
11690584	297	11182708	1	1
11690584	300	10871017	1	1
11690585	297	11182708	2	1
11690585	300	10871017	2	1
11690587	300	10871017	4	1
11690588	297	11182708	5	1
11690588	300	10871017	5	1
11690589	297	11182708	98	1
11690589	300	10871017	98	1
11690637	445	96036790	308	2
11690637	567	96035117	30	4
11691013	269	10151328	97	2
11691035	527	919410708	(40)	10
11691104	319	10871282	40	1
11691327	493	967978908	10	4
11691327	673	917292008	52	16
11691327	677	917292108	52	16
11691327	681	917292208	52	16
11691327	685	917292308	52	16
11691327	690	917292408	52	16
11691328	76	91001377	106	10
11691328	109	91001378	107	10
11691375	379	11214363	1	1
11691377	379	11214363	2	1
11691424	353	90008901	74	8
11691539	381	919010208	15	4
11691539	433	918810308	36	8
11691539	669	917291908	89	1
11691682	669	917291908	82	4
11691686	213	10129474	5	4
11691686	226	10146791	5	1
11691956	63	11643183	3	1
11691956	66	11643184	3	1
11692299	47	10450273	4	1
11692439	316	10871043	50	1
11692824	26	96034894	9	12
11692824	29	96034977	9	12
11692824	56	96035801	318	2
11692824	412	916168308	17	4
11692824	445	96036790	313	2
11692824	449	968923508	14	2
11692824	561	96045351	308	6
11692824	616	967784808	314	2
11692827	120	968038208	7	1
11692827	121	968038308	7	1
11692827	378	917259908	28	2
11692827	482	96020359	22	1
11692827	604	967969608	19	4
11692827	728	967785008	302	13
11693875	120	968038208	8	2
11693875	121	968038308	8	2
11693875	135	917257108	9	2
11693875	288	919007708	351	17
11693875	291	96034631	354	2
11693875	341	91002861	350	3
11693875	378	917259908	25	2
11693875	415	916163008	27	2
11693875	426	917676208	8	4
11693875	449	968923508	12	2
11693875	457	969016008	11	2
11693875	500	918731808	70	7
11693875	520	918731908	350	2
11693875	544	969256608	70	2
11693875	562	96045351	337	2
11693875	567	96035117	22	2
11693875	627	917269408	7	4
11693875	690	917292408	55	2
11693875	701	966134608	42	2
11693875	737	967321308	4	2
11693878	56	96035801	319	2
11695999	69	917436708	1	1

Item	Page	Assembly	Pos.	Quantity
11697855	383	96015921	12	4
11697855	406	916162508	27	7
11698481	220	12489819	5	1
11820284	387	916177508	23	2
11820284	390	916170808	11	4
11820284	496	969763408	307	6
11820284	669	917291908	73	4
11820284	701	966134608	34	4
11820285	234	10149677	11	2
11820285	269	10151328	78	1
11822050	462	96036955	522	1
11822051	467	96053500	33	1
11826513	662	12257818	2	1
11826527	287	919007708	309	4
11826527	291	96034631	305	4
11826527	294	968026308	305	2
11826527	378	917259908	24	2
11826527	399	917305408	45	1
11826527	668	917291908	4	2
11826563	186	10126713	2	2
11826563	226	10146791	6	4
11826563	232	10145173	12	1
11826563	269	10151328	63	1
11826563	271	10151329	53	2
11826647	484	10876576	28	1
11826647	484	10876576	(8)	1
11826648	484	10876576	39	1
11826648	484	10876576	(9)	1
11826649	484	10876576	40	1
11826649	484	10876576	(10)	1
11826650	484	10876576	21	1
11826650	484	10876576	(4)	1
11826653	484	10876576	12	1
11826653	484	10876576	(3)	1
11826654	484	10876576	27	1
11835043	433	918810308	43	2
11835043	445	96036790	317	8
11835061	220	12489819	6	2
11839607	280	918731408	100	1
11840113	48	96045227	7	0.3
11840113	48	96045227	8	0.4
11840113	48	96045227	9	0.45
11840113	49	96045228	7	1.63
11840113	49	96045228	8	4.66
11840113	462	96036955	15	4.46
11840113	462	96036955	16	4.38
11840113	462	96036955	17	4.38
11840113	462	96036955	18	0.17
11840113	534	96037136	374	6.27
11840113	534	96037136	375	6.27
11840113	534	96037136	376	6.27
11840113	536	96037137	5	5.68
11840113	536	96037137	6	0.17
11840113	536	96037137	7	8.81
11840113	536	96037137	8	0.17
11840113	536	96037137	9	3.16
11840113	536	96037137	10	0.17
11840113	536	96037137	11	3.16
11840113	536	96037137	12	0.17
11840113	536	96037137	13	8.06
11840113	536	96037137	14	0.17
11840113	536	96037137	15	0.18
11840127	94	96034962	31	1
11840127	112	96034980	31	1
11840127	120	968038208	5	4
11840127	121	968038308	5	4
11840127	124	968046208	51	8
11840127	129	919644008	66	12
11840127	747	917551608	3	2
11840127	751	968728808	24	3
11840136	94	96034962	27	1
11840136	112	96034980	27	1
11840136	287	919007708	329	1
11840136	761	917267508	22	2
11840139	287	919007708	330	4
11840139	701	966134608	11	3
11840140	124	968046208	50	8
11840140	129	919644008	33	14
11840140	668	917291908	39	4
11840140	673	917292008	46	4
11840140	677	917292108	46	4
11840140	681	917292208	46	4
11840140	685	917292308	46	4
11840140	701	966134608	10	7
11840297	39	96045225	11	3
11840297	208	11358102	8	4
11840297	229	10143342	21	1
11840297	254	11420633	13	7
11840297	269	10151328	54	7
11840297	287	919007708	304	2
11840297	412	916168308	19	2
11840297	415	916163008	24	4
11840297	445	96036790	307	8
11840501	56	96035801	304	20
11840501	446	96036790	377	3
11840501	476	917260408	5	4
11840501	492	967928508	23	1
11840501	567	96035117	25	2
11840501	592	967980508	14	8
11840501	604	967969608	29	12
11840501	622	969426308	300	2
11840501	668	917291908	6	8
11952500	169	919553608	1	2
11963742	507	919674408	185	2
11963742	511	96051842	183	2
11979975	435	10877138	24	1
11979976	435	10877138	29	1
11989723	296	97029921	840	1
12001446	500	918731808	90	1
12100075	710	10354493	1	1
12100076	710	10354493	2	1
12100096	287	919007708	326	8
12100105	507	919674408	106	1
12100177	435	10877138	(59)	1
12100214	534	96037136	371	6.27
12100214	534	96037136	372	6.27
12100214	534	96037136	373	6.27
12100215	534	96037136	10	4.32
12100215	534	96037136	12	6.27
12100215	534	96037136	13	6.27

Item	Page	Assembly	Pos.	Quantity	Item	Page	Assembly	Pos.	Quantity
12100215	534	96037136	14	6.27	12100586	758	917413208	11	2
12100215	534	96037136	384	6.27	12100589	433	918810308	45	4
12100215	535	96037136	386	6.27	12100589	449	968923508	13	12
12100215	536	96037137	18	4.8	12100589	457	969016008	3	8
12100215	536	96037137	375	6.6	12100613	436	96032222	3	1
12100216	534	96037136	378	6.27	12100613	438	96032223	3	1
12100216	536	96037137	16	4.8	12100617	435	10877138	(1)	1
12100217	48	96045227	5	0.4	12100619	435	10877138	(1)	1
12100217	48	96045227	6	0.4	12100620	648	12102921	29	1
12100217	464	96036956	9	3	12100622	403	11002447	1	1
12100217	464	96036956	10	3	12100657	310	10663105	37	1
12100217	534	96037136	15	6.27	12100669	477	966707708	6	1
12100217	534	96037136	16	7.72	12100674	528	965281408	5	2
12100217	534	96037136	17	4.27	12100707	439	962282308	100	1
12100217	534	96037136	18	2.02	12100860	560	96045351	26	1
12100217	534	96037136	19	1.3	12100905	572	10413106	20	12
12100217	534	96037136	379	6.27	12101064	328	96034515	6	1
12100217	534	96037136	380	6.27	12101064	329	96034522	3	1
12100217	534	96037136	381	6.27	12101159	153	928620108	4	1
12100217	534	96037136	383	6.27	12101183	26	96034894	40	1
12100217	536	96037137	17	4.8	12101183	29	96034977	40	1
12100217	536	96037137	19	4.7	12101239	657	919028808	5	1
12100217	536	96037137	371	4.7	12101506	31	968036408	25	2
12100217	536	96037137	372	6.4	12101576	94	96034962	40	1
12100217	536	96037137	373	6.4	12101576	112	96034980	40	1
12100217	536	96037137	374	6.4	12101832	523	917261208	7	11
12100221	41	96045226	26	1	12101847	523	917261208	8	1
12100254	751	968728808	21	2	12101847	613	921444108	4	1
12100256	98	96035796	311	2	12101942	467	96053500	(80)	1
12100256	115	96035792	311	2	12102051	433	918810308	20	4
12100265	395	917304508	13	1	12102104	649	10040024	10	1
12100279	410	965784408	10	4	12102116	435	10877138	28	1
12100283	668	917291908	48	14	12102117	575	571737808	1	1
12100283	673	917292008	37	14	12102265	704	10802064	29	1
12100283	677	917292108	37	12	12102278	83	11320954	(999)	1
12100283	681	917292208	37	12	12102477	136	11347526	40	1
12100283	685	917292308	37	12	12102477	525	10327065	34	1
12100289	343	96034872	20	3	12102524	63	11643183	20	2
12100289	395	917304508	12	9	12102528	507	919674408	184	4
12100291	657	919028808	3	4	12102630	534	96037136	322	5.1
12100292	734	917268408	12	2	12102632	534	96037136	326	5.1
12100292	737	967321308	3	2	12102634	534	96037136	328	8.85
12100293	488	11212257	2	1	12102635	534	96037136	330	7.55
12100309	668	917291908	44	8	12102692	500	918731808	72	4
12100309	673	917292008	35	8	12102692	547	926891108	14	6
12100309	677	917292108	35	8	12102692	561	96045351	304	14
12100309	681	917292208	35	8	12102692	659	925141508	5	1
12100309	685	917292308	35	8	12102692	728	967785008	306	2
12100310	668	917291908	40	4	12102692	751	968728808	26	4
12100310	673	917292008	36	4	12102693	155	91001571	11	2
12100310	677	917292108	36	4	12102694	43	968054008	18	1
12100310	681	917292208	36	4	12102694	393	968514508	12	1
12100310	685	917292308	36	4	12102694	545	922648308	4	12
12100332	332	918955408	8	4	12102695	155	91001571	12	2
12100332	446	96036790	353	22	12102695	433	918810308	32	2
12100332	455	969015908	352	17	12102695	446	96036790	352	5
12100332	518	96039752	350	6	12102695	455	969015908	353	6
12100338	387	916177508	21	4	12102695	511	96051842	354	2
12100570	435	10877138	55	1	12102695	567	96035117	23	2
12100586	654	967936908	10	8	12102695	591	917261808	6	7

Item	Page	Assembly	Pos.	Quantity	Item	Page	Assembly	Pos.	Quantity
12102695	643	96037130	19	1	12103465	480	918759808	23	21
12102695	668	917291908	28	2	12103465	482	96020359	20	7
12102695	734	917268408	16	2	12103465	492	967928508	28	4
12102696	20	91001569	27	24	12103465	511	96051842	377	2
12102696	39	96045225	19	4	12103465	520	918731908	375	6
12102696	68	918925508	32	2	12103465	523	917261208	17	2
12102696	75	91001377	39	4	12103465	544	969256608	61	2
12102696	108	91001378	39	4	12103465	547	926891108	13	4
12102696	135	917257108	21	8	12103465	592	967980508	12	4
12102696	150	919499408	80	8	12103465	627	917269408	6	4
12102696	172	918731108	11	6	12103465	668	917291908	16	2
12102696	363	917259608	10	2	12103465	673	917292008	17	2
12102696	388	96025887	8	10	12103465	677	917292108	17	2
12102696	523	917261208	21	4	12103465	681	917292208	17	4
12102696	561	96045351	307	2	12103465	685	917292308	17	4
12102696	567	96035117	29	4	12103465	691	917292408	64	10
12102696	604	967969608	12	25	12103465	761	917267508	28	4
12102696	668	917291908	14	73	12103676	753	919007108	5	1
12102696	690	917292408	56	17	12103686	753	919007108	9	1
12102696	734	917268408	20	4	12103903	572	10413106	(18)	2
12102696	737	967321308	6	2	12103956	31	968036408	20	2
12102738	477	966707708	7	1	12104031	648	12102921	24	1
12102817	467	96053500	11	1	12104171	560	96045351	(4)	3
12102832	155	91001571	6	1	12104246	52	11346779	50	1
12102869	167	916959808	3	1	12104276	490	10877810	999	1
12102921	646	919617008	1	1	12104385	648	12102921	999	1
12102925	511	96051842	182	2	12104437	63	11643183	21	1
12102931	20	91001569	1	2	12104544	151	919328608	(1)	1
12102954	98	96035796	308	2	12104809	49	96045228	261	2
12102954	115	96035792	308	2	12104809	462	96036955	261	1
12103044	704	10802064	10	1	12104809	464	96036956	261	20
12103076	507	919674408	183	1	12104809	534	96037136	261	8
12103320	76	91001377	(1)	1	12104809	536	96037137	261	1
12103321	76	91001377	(2)	1	12104809	542	96045387	261	30
12103434	435	10877138	(2)	1	12104810	542	96045387	269	30
12103465	26	96034894	11	4	12104811	542	96045387	268	30
12103465	29	96034977	11	4	12104811	711	966291008	266	5
12103465	56	96035801	308	24	12105240	83	11320954	1	1
12103465	92	968420608	17	1	12105369	296	97029921	280	1
12103465	94	96034962	8	7	12105988	540	91000922	(100)	1
12103465	112	96034980	8	7	12106077	387	916177508	27	2
12103465	120	968038208	9	2	12106136	400	917305408	69	1
12103465	121	968038308	9	2	12106173	155	91001571	2	1
12103465	135	917257108	8	2	12106354	155	91001571	13	1
12103465	147	919087608	37	4	12106374	699	571928508	10	1
12103465	288	919007708	377	44	12106548	296	97029921	30	1
12103465	291	96034631	377	28	12106552	69	917436708	(4)	1
12103465	294	968026308	375	6	12106689	119	917691008	(3)	4
12103465	341	91002861	375	6	12106776	577	12100860	90	2
12103465	342	96066379	375	3	12106874	342	96066379	100	1
12103465	381	919010208	9	1	12107367	353	90008901	(3)	10
12103465	387	916177508	28	4	12107368	353	90008901	(4)	10
12103465	388	96025887	12	3	12107727	699	571928508	999	1
12103465	400	917305408	64	4	12107776	167	916959808	2	1
12103465	415	916163008	13	4	12201166	94	96034962	7	4
12103465	426	917676208	6	12	12201166	112	96034980	7	4
12103465	430	969085208	28	7	12202784	26	96034894	31	2
12103465	446	96036790	375	8	12202784	29	96034977	31	2
12103465	449	968923508	16	4	12202784	561	96045351	328	2
12103465	457	969016008	12	4	12202784	728	967785008	303	2

Item	Page	Assembly	Pos.	Quantity	Item	Page	Assembly	Pos.	Quantity
12202976	35	917511508	34	32	12213825	353	90008901	86	10
12202976	56	96035801	324	24	12214460	288	919007708	380	14
12203070	428	11083498	37	2	12214460	482	96020359	23	2
12203167	562	96045351	336	2	12214938	76	91001377	84	16
12203451	368	932916901	22	1	12214938	109	91001378	84	16
12203451	701	966134608	41	2	12214938	280	918731408	302	2
12203634	56	96035801	311	22	12214938	458	917260108	5	8
12203634	428	11083498	38	3	12215338	561	96045351	326	6
12203634	561	96045351	305	4	12215999	249	10142744	3	1
12203635	98	96035796	312	2	12216054	76	91001377	104	4
12203635	115	96035792	312	2	12216054	109	91001378	105	4
12204614	135	917257108	3	4	12216054	674	917292008	99	9
12204614	339	968999708	3	5	12216054	678	917292108	99	9
12204614	523	917261208	4	4	12216054	682	917292208	99	9
12206699	312	10472196	50	5	12216054	686	917292308	99	9
12206699	324	10292801	50	5	12216056	674	917292008	64	12
12206699	574	10332882	3	4	12216056	678	917292108	64	12
12207546	254	11420633	12	2	12216056	682	917292208	64	12
12207546	269	10151328	52	1	12216056	686	917292308	64	12
12207546	271	10151329	42	1	12216056	690	917292408	33	20
12207548	235	9078314	2	4	12216183	749	968811608	5	2
12207548	445	96036790	301	2	12216186	95	96062678	6	1
12207549	253	12512627	24	2	12216193	500	918731808	59	2
12207559	255	10142863	5	1	12216195	342	96066379	300	3
12207562	183	10147687	4	8	12216201	455	969015908	354	2
12207570	261	10142864	2	2	12216201	751	968728808	27	4
12207587	232	10145173	3	1	12216202	147	919087608	20	2
12208088	231	10147365	4	4	12216205	592	967980508	9	4
12208088	253	12512627	9	1	12216217	433	918810308	40	4
12208098	668	917291908	12	13	12216233	348	969050308	12	12
12208101	287	919007708	319	2	12216237	496	969763408	303	3
12208101	699	571928508	41	2	12217239	500	918731808	57	3
12209429	94	96034962	28	1	12217473	699	571928508	45	2
12209429	112	96034980	28	1	12218127	701	966134608	12	8
12209779	180	11389608	2	4	12218194	136	11347526	10	1
12209781	205	10149578	10	3	12218194	525	10327065	12	1
12209783	180	11389608	3	7	12219296	35	917511508	32	8
12209898	95	96062678	7	1	12219309	337	917626608	2	2
12210009	229	10143342	23	1	12219491	221	10152867	3	1
12210010	229	10143342	6	6	12219491	222	10152874	3	1
12210010	243	10145278	7	1	12219804	428	11083498	39	4
12210010	254	11420633	6	1	12220085	345	917825508	4	2
12210010	276	10144036	10	1	12222407	129	919644008	20	16
12210013	229	10143342	17	1	12222407	287	919007708	312	2
12210024	229	10143342	2	1	12222407	291	96034631	301	2
12210024	253	12512627	20	1	12222896	484	10876576	22	1
12210024	276	10144036	13	1	12222989	365	917259708	12	4
12210025	243	10145278	3	4	12222996	455	969015908	304	7
12210029	229	10143342	12	1	12222996	567	96035117	20	3
12210035	233	10147364	3	3	12223034	608	939294001	25	1
12210037	268	10144098	3	1	12223035	624	10038509	30	4
12210040	199	10153583	4	3	12223051	761	917267508	7	1
12210060	187	10132560	3	28	12223057	351	919369308	6	4
12210567	119	917691008	(2)	40	12223057	638	968267108	2	2
12211223	501	968570808	(1)	1	12223058	280	918731408	305	2
12211232	501	968570808	3	1	12224014	288	919007708	337	3
12211444	734	917268408	(3)	2	12224014	365	917259708	17	4
12212022	253	12512627	16	2	12224034	124	968046208	21	8
12212474	157	96063087	16	6	12224035	78	90028956	87	2
12213406	562	96045351	558	3	12224196	561	96045351	316	2

Item	Page	Assembly	Pos.	Quantity	Item	Page	Assembly	Pos.	Quantity
12225211	758	917413208	12	2	12856186	236	13701882	1	1
12225311	761	917267508	16	2	12863021	245	10142733	1	1
12225935	433	918810308	41	4	12874086	208	11358102	2	1
12226068	714	968708708	267	2	12881001	219	10146658	260	1
12226080	20	91001569	53	2	12886223	186	10126713	1	1
12226080	669	917291908	76	2	12886224	186	10126713	(1)	1
12226910	287	919007708	301	5	12888563	507	919674408	102	1
12227697	334	96023117	19	6	12889334	514	96041566	156	1
12228747	20	91001569	23	4	12898375	182	10154458	1	1
12229337	388	96025887	11	14	12898856	511	96051842	102	1
12257818	661	916166208	1	1	12907001	273	12583633	(1)	1
12400857	209	10120186	3	1	12907020	273	12583633	(1)	1
12408221	209	10120186	2	1	12917604	219	10146658	250	1
12412141	514	96041566	152	2	12921811	247	10148216	1	1
12414685	502	11373478	739	1	12922849	244	12418347	2	1
12417001	219	10146658	210	1	12923599	219	10146658	220	1
12418347	177	13455297	340	1	12932487	219	10146658	270	1
12424993	219	10146658	215	1	12932488	219	10146658	275	1
12428325	234	10149677	10	1	12934664	178	13455297	483	1
12429351	254	11420633	2	1	12937883	219	10146658	211	1
12429430	254	11420633	4	1	12966286	219	10146658	240	1
12433377	561	96045351	204	2	12969638	276	10144036	5	1
12436701	253	12512627	32	1	12977971	273	12583633	(1)	1
12438990	216	10148432	1	1	12978423	272	10143707	1	1
12445245	500	918731808	12	1	12983604	253	12512627	3	1
12462476	516	11429728	4	2	12993450	182	10154458	2	1
12466377	502	11373478	738	1	12999384	511	96051842	103	1
12475399	252	10140729	4	1	13187353	169	919553608	2	1
12476138	201	10146367	4	1	13410342	273	12583633	30	2
12478647	201	10146367	5	1	13455297	173	919832508	1	1
12489819	219	10146658	300	1	13470814	179	13455297	570	1
12490199	219	10146658	230	1	13472766	227	13512036	1	1
12503120	501	968570808	2	1	13476764	202	10149580	1	1
12511916	228	10143341	1	1	13486106	202	10149580	(998)	1
12512627	178	13455297	432	1	13512036	226	10146791	1	1
12544505	273	12583633	20	2	13541106	268	10144098	2	1
12549825	206	10148438	1	1	13569467	253	12512627	11	13
12554272	457	969016008	6	1	13574085	222	10152874	1	1
12560584	516	11429728	5	2	13701882	235	9078314	1	1
12565355	208	11358102	4	4	13711602	236	13701882	2	1
12583633	179	13455297	581	1	240049702	209	10120186	7	5
12691274	75	91001377	18	52	240122602	210	10138230	9	3
12691274	108	91001378	18	52	240122602	210	10138230	9	3
12691559	319	10871282	(3)	4	240186402	572	10413106	23	4
12691987	348	969050308	14	4	240186402	572	10413106	29	4
12692008	767	917268208	10	4	240191502	294	968026308	100	1
12692012	20	91001569	15	32	241047802	383	96015921	7	1
12693951	536	96037137	524	1	243034002	209	10120186	10	2
12694669	199	10153583	160	1	247021702	57	96035801	626	2
12696398	254	11420633	8	7	247021702	135	917257108	18	2
12697335	216	10148432	2	1	247021802	500	918731808	35	1
12699046	76	91001377	68	92	247105602	57	96035801	620	1
12699046	109	91001378	68	92	247105602	98	96035796	621	1
12809567	266	9077238	1	1	247105602	115	96035792	621	1
12820742	227	13512036	2	1	247105602	562	96045351	609	4
12826252	235	9078314	4	1	247105602	617	967784808	638	1
12835708	183	10147687	1	1	247105602	622	969426308	605	1
12843150	221	10152867	5	1	247108302	57	96035801	644	2
12843150	222	10152874	6	1	247108302	342	96066379	401	2
12847441	252	10140729	2	1	247108302	496	969763408	635	1

Item	Page	Assembly	Pos.	Quantity	Item	Page	Assembly	Pos.	Quantity
247108302	563	96045351	710	2	4042302	678	917292108	66	4
247108302	622	969426308	610	1	4042302	682	917292208	66	4
247108402	564	96045351	767	1	4042302	686	917292308	66	4
247117702	56	96035801	616	1	4042302	691	917292408	66	4
247117702	98	96035796	612	2	404230208	387	916177508	8	2
247117702	115	96035792	612	2	404230308	421	917304708	45	1
247117702	562	96045351	607	15	404250914	421	917304708	51	1
247117702	717	967784508	609	1	404291213	63	11643183	14	4
247126202	242	10145176	2	1	404291213	66	11643184	14	4
247128502	565	96045351	842	1	404293213	381	919010208	11	1
247128602	56	96035801	614	1	404294613	387	916177508	17	4
247128602	98	96035796	609	1	4043006	206	10148438	5	2
247128602	115	96035792	609	1	404309408	78	90028956	62	24
247128602	563	96045351	639	8	404312108	562	96045351	338	4
247128602	617	967784808	601	2	404317008	365	917259708	11	28
247128602	717	967784508	611	2	404317008	604	967969608	14	28
247138602	564	96045351	790	2	404318008	610	939294201	21	24
247138602	617	967784808	600	3	404319708	319	10871282	25	4
261101108	428	11083498	50	0.3	404320908	78	90028956	11	12
262101308	400	917305408	68	0.04	404360408	572	10413106	27	4
262103108	433	918810308	30	0.064	404361208	568	11211756	9	16
262103908	291	96034631	123	0.5	404361208	570	10342823	4	4
262103908	334	96023117	8	1.6	404364108	568	11211756	10	4
262103908	445	96036790	(3)	0.4	404400508	421	917304708	16	1
262103908	445	96036790	(3)	0.6	404400508	725	511479408	5	1
262103908	455	969015908	12	0.66	404402708	490	10877810	30	1
262103908	547	926891108	7	0.16	404402908	490	10877810	31	1
262103908	637	968290608	11	0.2	404403608	490	10877810	9	2
262103908	640	968267208	11	0.2	4048002	23	12102931	8	1
262104308	42	966167808	5	1.08	406209008	75	91001377	20	24
262105508	75	91001377	40	0.56	406209008	108	91001378	20	24
262105508	108	91001378	40	0.56	406216008	695	918807308	5	4
262106508	449	968923508	19	0.37	4065240	288	919007708	335	2
262106608	458	917260108	7	0.54	406527808	421	917304708	24	4
262106708	157	96063087	13	2.11	406527808	507	919674408	301	3
262108908	450	964093408	4	0.5	406527808	511	96051842	309	6
262181001	350	90025640	315	6.29	4065281	147	919087608	32	12
262181001	350	90025640	316	6.24	406590105	511	96051842	312	6
262183501	350	90025640	314	6.26	406590105	746	967937608	3	2
272012502	751	968728808	4	130	406601008	604	967969608	17	6
288154508	668	917291908	58	2	406603108	172	918731108	3	6
288176208	147	919087608	22	1	406603108	378	917259908	9	9
288182508	480	918759808	35	1	406603108	646	919617008	7	3
288195608	692	921456108	1	1	406603408	762	929582108	7	1
308115114	75	91001377	7	4	406604208	75	91001377	27	2
308115114	108	91001378	7	4	406604208	108	91001378	27	2
380057108	287	919007708	205	6	406605808	646	919617008	6	4
4000521	367	90208882	6	24	406607008	658	968068308	3	1
4000809	382	967986308	6	4	406607008	751	968728808	8	4
4000809	668	917291908	19	8	406608908	288	919007708	338	6
400093303	370	939292201	8	5	408311208	540	91000922	23	4
400208003	372	90017588	33	3	408400701	714	968708708	266	2
4002698	63	11643183	12	4	408401901	467	96053500	41	4
4002698	66	11643184	12	4	408603508	433	918810308	33	4
4002860	52	11346779	32	4	408606414	119	917691008	(4)	40
4002886	136	11347526	32	4	408650508	157	96063087	15	2
4002886	525	10327065	25	4	408650608	332	918955408	11	4
402600208	572	10413106	30	4	408650608	511	96051842	311	2
404230108	124	968046208	30	12	408650608	746	967937608	2	2
4042302	674	917292008	66	4	409710601	78	90028956	67	4

Item	Page	Assembly	Pos.	Quantity	Item	Page	Assembly	Pos.	Quantity
410120308	734	917268408	13	2	424100708	359	510229408	8	6
411514608	762	929582108	8	1	425050608	52	11346779	47	11
411514877	52	11346779	49	7	425050908	278	9078301	7	3
411517114	507	919674408	350	2	425100408	540	91000922	24	4
411517114	511	96051842	353	9	425100508	714	968708708	269	2
411703308	379	11214363	3	1	425220708	467	96053500	43	4
411903008	35	917511508	49	8	425220708	544	969256608	63	16
411903008	393	968514508	11	1	425221108	544	969256608	60	1
411903008	421	917304708	23	4	428002908	310	10663105	36	1
411903008	423	966230508	5	2	428009008	694	967771908	3	2
411903008	626	917269308	4	4	428011301	207	11448005	7	2
411903008	636	968994408	27	2	428100708	292	10429930	5	1
411903008	637	968290608	25	4	4281019	610	939294201	12	1
411903008	639	968993508	14	2	428102508	360	570109008	12	1
411903008	640	968267208	25	4	428102708	610	939294201	4	1
411903108	387	916177508	9	6	4281048	610	939294201	13	1
411903108	392	916162808	6	12	428105908	368	932916901	18	1
411903108	746	967937608	4	4	428105908	608	939294001	21	1
413002708	433	918810308	44	4	429606201	370	939292201	62	1
413002808	399	917305408	53	1	429612001	78	90028956	57	1
413006208	381	919010208	13	4	429900308	92	968420608	7	12
413006208	544	969256608	(3)	16	429900608	520	918731908	376	4
420000414	92	968420608	8	2	430608708	76	91001377	86	8
420001014	500	918731808	68	10	430608708	109	91001378	86	8
420001114	288	919007708	378	4	430611008	673	917292008	3	1
420001114	381	919010208	12	1	430611008	677	917292108	3	1
420002101	78	90028956	88	2	430611008	681	917292208	3	1
420010405	35	917511508	48	16	430611008	685	917292308	3	1
420050108	714	968708708	268	2	430611008	690	917292408	23	1
420060201	421	917304708	39	2	430704808	311	10008308	13	2
420060705	20	91001569	58	6	430706808	323	571907208	13	2
420060705	652	917260608	6	8	430707208	490	10877810	8	2
420060705	746	967937608	5	6	430709608	764	512363708	32	1
420200308	157	96063087	21	12	431100201	368	932916901	21	1
421000408	360	570109008	17	2	431100201	608	939294001	24	1
421000508	360	570109008	18	1	431200501	353	90008901	91	3
421100608	562	96045351	333	14	431204301	608	939294001	18	1
421104208	20	91001569	29	2	432006708	636	968994408	11	1
421300208	147	919087608	14	8	432006801	155	91001571	4	1
421500201	129	919644008	27	8	432007908	610	939294201	72	1
421801708	409	966497908	14	2	432008001	370	939292201	72	1
421801708	421	917304708	58	2	432011808	654	967936908	13	4
421801708	423	966230508	4	2	432310501	209	10120186	10	2
421801708	507	919674408	378	2	433100908	75	91001377	62	1
421801708	511	96051842	376	19	433100908	108	91001378	62	1
421801708	626	917269308	3	4	433100908	129	919644008	37	4
421802108	415	916163008	14	1	433100908	147	919087608	25	1
421802108	423	966230508	7	1	433100908	652	917260608	11	4
421861405	387	916177508	29	4	433100908	734	917268408	24	3
421861405	507	919674408	377	3	433100908	761	917267508	44	1
421861405	512	96051842	379	12	433101208	75	91001377	49	1
422001001	370	939292201	47	3	433101208	108	91001378	49	1
4229913	370	939292201	53	12	433101208	602	917267108	10	2
423901508	608	939294001	26	1	433101208	734	917268408	11	2
423901508	610	939294201	53	12	433101208	737	967321308	2	1
423910801	353	90008901	27	8	433101208	758	917413208	13	2
423910801	353	90008901	75	8	433101208	763	923285508	8	1
423911201	78	90028956	93	8	433102508	691	917292408	80	1
423912001	78	90028956	69	12	433102508	744	967933408	12	1
424000508	604	967969608	(12)	3	433102808	445	96036790	101	1

Item	Page	Assembly	Pos.	Quantity	Item	Page	Assembly	Pos.	Quantity
433102808	455	969015908	101	1	470010608	564	96045351	821	2
433102808	745	967936408	5	1	470010708	563	96045351	713	1
433105008	658	968068308	6	1	470010708	617	967784808	631	1
433105008	734	917268408	28	1	470010908	564	96045351	733	1
433206208	768	968090008	2	2	470011008	565	96045351	830	1
433206408	378	917259908	23	1	470011008	617	967784808	629	1
434000208	376	10802061	5	1	470011208	565	96045351	840	1
434018708	492	967928508	27	1	470011308	98	96035796	611	1
434022601	697	10876933	41	2	470011308	115	96035792	611	1
451000208	745	967936408	1	1	470011308	563	96045351	666	2
451210308	387	916177508	11	1	470011408	564	96045351	802	1
451237208	147	919087608	10	2	470030108	135	917257108	15	10
451237508	147	919087608	11	1	470030308	717	967784508	608	1
451426608	761	917267508	43	1	470030408	622	969426308	600	1
451430708	668	917291908	32	2	470030908	564	96045351	804	1
452551408	734	917268408	8	1	470032408	563	96045351	669	3
453032708	378	917259908	14	1	470032708	563	96045351	670	1
453040908	604	967969608	15	2	470032708	622	969426308	601	2
4600021	75	91001377	24	24	470033108	98	96035796	627	1
4600021	108	91001378	24	24	470033108	115	96035792	627	1
4600021	119	917691008	15	48	470200108	135	917257108	17	14
4600021	124	968046208	23	80	470230308	728	967785008	602	1
4600021	668	917291908	41	8	470230608	496	969763408	645	1
4600021	673	917292008	38	8	470233408	564	96045351	799	1
4600021	677	917292108	38	8	470400708	374	90200104	8	1
4600021	681	917292208	38	8	470402208	57	96035801	657	4
4600021	685	917292308	38	8	470430308	717	967784508	606	1
4600021	691	917292408	85	4	470432608	563	96045351	702	1
4600021	761	917267508	42	4	470432708	565	96045351	832	1
4600199	147	919087608	27	3	470433008	564	96045351	791	1
4600222	75	91001377	26	2	470700208	562	96045351	606	5
4600222	108	91001378	26	2	470700208	617	967784808	608	1
4600222	288	919007708	383	4	471001308	374	90200104	3	2
4600232	240	5700161	29	3	471004514	564	96045351	743	5
4600328	20	91001569	49	4	471008214	564	96045351	764	1
4600328	76	91001377	63	1	471030008	523	917261208	13	2
4600328	109	91001378	63	1	471030008	722	967785408	607	1
4600328	337	917626608	6	1	471030108	135	917257108	16	8
4600328	345	917825508	8	1	471030508	563	96045351	628	1
4600335	78	90028956	84	12	471030508	617	967784808	624	1
4600604	147	919087608	30	3	471030708	563	96045351	650	5
4600604	337	917626608	4	3	471030808	56	96035801	617	1
4600604	345	917825508	7	1	471030808	562	96045351	610	7
4600604	761	917267508	13	10	471030808	617	967784808	612	2
4600612	76	91001377	202	2	471031008	57	96035801	651	1
4600612	109	91001378	202	2	471031108	496	969763408	602	1
4600871	43	968054008	11	4	471031108	564	96045351	749	3
4601105	195	10139112	6	1	471031208	622	969426308	611	1
4601290	75	91001377	32	2	471031308	562	96045351	600	4
4601290	108	91001378	32	2	471031308	617	967784808	636	1
4601499	81	11161917	20	1	471031408	563	96045351	683	4
463000003	353	90008901	41	3	471031608	564	96045351	754	4
463000103	353	90008901	21	5	471032108	613	921444108	3	3
463000103	370	939292201	43	3	471032108	617	967784808	640	1
4635031	567	96035117	24	2	471032108	717	967784508	600	1
4635422	20	91001569	24	4	471032208	564	96045351	738	3
470010108	159	96056969	640	2	471032208	617	967784808	634	1
470010108	717	967784508	612	1	471032608	56	96035801	608	3
470010108	728	967785008	603	1	471032608	98	96035796	622	1
470010208	564	96045351	825	1	471032608	115	96035792	622	1

Item	Page	Assembly	Pos.	Quantity	Item	Page	Assembly	Pos.	Quantity
471032608	722	967785408	606	4	471903808	563	96045351	667	1
471032708	56	96035801	618	10	471903908	98	96035796	603	1
471032708	563	96045351	618	3	471903908	115	96035792	603	1
471032708	617	967784808	613	1	472004008	374	90200104	4	2
471032808	57	96035801	655	8	472300414	565	96045351	841	1
471032808	563	96045351	651	3	472330208	98	96035796	604	2
471032808	722	967785408	608	1	472330208	115	96035792	604	2
471032908	132	968077208	601	12	472330208	562	96045351	614	8
471032908	563	96045351	725	2	472330208	617	967784808	616	2
471033108	563	96045351	696	4	472330208	717	967784508	604	3
471033208	563	96045351	657	13	472331208	562	96045351	604	5
471033208	622	969426308	609	3	472331208	617	967784808	607	1
471033208	717	967784508	601	1	472332008	561	96045351	192	1
471033208	728	967785008	600	2	472530608	563	96045351	625	13
471033308	563	96045351	634	4	472530608	617	967784808	643	3
471033408	56	96035801	607	28	472531508	135	917257108	11	2
471033408	563	96045351	682	4	472531508	564	96045351	726	1
471033608	56	96035801	603	2	472531808	56	96035801	605	6
471034308	288	919007708	425	2	472531808	98	96035796	602	2
471034408	56	96035801	606	9	472531808	115	96035792	602	2
471034508	56	96035801	602	3	472531808	563	96045351	653	5
471034508	98	96035796	624	1	473210508	722	967785408	600	1
471034508	115	96035792	624	1	473230508	563	96045351	664	2
471034708	56	96035801	610	1	473230608	57	96035801	645	2
471034708	563	96045351	672	8	473231008	57	96035801	658	4
471034808	563	96045351	662	4	473231008	565	96045351	843	1
471034808	717	967784508	605	4	473331308	564	96045351	801	1
471035208	159	96056969	641	2	474000408	57	96035801	621	1
471035308	98	96035796	616	2	474001008	56	96035801	600	3
471035308	115	96035792	616	2	474030308	564	96045351	752	1
471035308	563	96045351	643	4	474030508	564	96045351	753	1
471035508	339	968999708	11	2	474030708	564	96045351	751	1
471035508	496	969763408	636	2	474032408	56	96035801	601	10
471037508	342	96066379	402	3	474032708	57	96035801	624	8
471039308	480	918759808	36	1	474032808	57	96035801	636	1
471039408	564	96045351	798	1	474032808	617	967784808	628	1
471039608	562	96045351	611	6	474033008	617	967784808	630	1
471039608	617	967784808	625	1	474200408	98	96035796	601	1
471039708	159	96056969	642	2	474200408	115	96035792	601	1
471039708	496	969763408	605	1	474231508	496	969763408	649	1
471039708	563	96045351	619	5	474232808	57	96035801	623	4
471039708	617	967784808	614	1	474234008	717	967784508	150	3
471039808	496	969763408	623	1	474901708	562	96045351	515	1
471039908	563	96045351	720	3	474906608	562	96045351	503	2
471900108	57	96035801	627	2	474906708	562	96045351	505	2
471900308	563	96045351	671	1	474906908	562	96045351	516	3
471900408	564	96045351	735	1	474907508	562	96045351	502	1
471900508	722	967785408	609	1	474907608	562	96045351	501	1
471900608	57	96035801	637	6	474908108	562	96045351	508	2
471900808	563	96045351	681	1	474909008	562	96045351	517	1
471901108	563	96045351	620	3	475004108	564	96045351	747	1
471901108	617	967784808	621	1	475030108	57	96035801	625	2
471901208	563	96045351	648	1	475030708	57	96035801	643	2
471901208	617	967784808	637	1	475031208	98	96035796	607	1
471901308	57	96035801	646	2	475031208	115	96035792	607	1
471901408	563	96045351	661	1	475031708	563	96045351	714	1
471902208	562	96045351	602	1	475033608	57	96035801	639	6
471902408	98	96035796	605	1	475407208	56	96035801	613	1
471902408	115	96035792	605	1	475407208	564	96045351	780	1
471903608	563	96045351	715	2	475408108	564	96045351	734	1

Item	Page	Assembly	Pos.	Quantity	Item	Page	Assembly	Pos.	Quantity
475430208	565	96045351	846	1	477401608	563	96045351	660	2
475430408	57	96035801	632	3	477401708	564	96045351	795	2
475430508	57	96035801	647	2	477402608	328	96034515	(3)	1
475430508	563	96045351	687	1	477402608	565	96045351	849	1
475430808	564	96045351	827	1	477510501	370	939292201	82	3
475430908	564	96045351	819	1	477511401	370	939292201	86	2
475430908	622	969426308	615	1	477700208	565	96045351	848	1
475431308	56	96035801	609	2	477700408	563	96045351	678	2
475431308	563	96045351	674	2	477700508	563	96045351	659	2
475431408	98	96035796	620	1	477700808	564	96045351	794	2
475431408	115	96035792	620	1	477701108	563	96045351	699	1
475431408	564	96045351	758	1	477704008	565	96045351	847	1
475431408	717	967784508	610	4	477704008	574	10332882	12	1
475431608	564	96045351	789	2	477704008	582	11341035	22	4
475431708	565	96045351	845	1	477704077	490	10877810	25	2
475432008	722	967785408	601	1	477704108	563	96045351	617	2
475432108	563	96045351	701	2	477704108	574	10332882	13	4
475432208	565	96045351	831	1	477704108	582	11341035	23	4
475432308	57	96035801	634	2	477704108	617	967784808	620	1
475432308	563	96045351	711	1	477704108	624	10038509	120	3
475432908	722	967785408	603	4	477704208	339	968999708	12	1
475433108	57	96035801	661	2	477704208	490	10877810	26	2
475433408	722	967785408	610	1	477704208	563	96045351	686	1
475433508	564	96045351	824	4	477704208	568	11211756	23	1
475433508	622	969426308	614	2	477704208	574	10332882	10	2
475433608	563	96045351	622	1	477704208	582	11341035	24	2
475433608	617	967784808	622	1	477704208	624	10038509	110	2
475434208	563	96045351	698	1	477704208	697	10876933	63	1
475435308	565	96045351	844	1	477704308	311	10008308	19	2
475435408	564	96045351	828	1	477704308	496	969763408	600	1
475435508	564	96045351	756	3	477704408	132	968077208	603	4
475435608	564	96045351	727	1	477704408	328	96034515	402	2
475436108	98	96035796	610	1	477704408	329	96034522	401	1
475436108	115	96035792	610	1	477704508	496	969763408	639	2
475436108	564	96045351	740	1	477704608	339	968999708	13	2
475436108	617	967784808	611	1	477704608	572	10413106	34	1
475436708	564	96045351	803	1	477704708	564	96045351	741	2
475501108	57	96035801	662	2	477704708	624	10038509	100	2
475501108	98	96035796	623	1	477704777	577	12100860	70	1
475501108	115	96035792	623	1	477704808	287	919007708	151	1
475502408	564	96045351	769	2	477704908	563	96045351	724	4
475601508	57	96035801	642	4	477705108	339	968999708	6	1
475601508	562	96045351	605	5	477705208	564	96045351	730	1
475601508	617	967784808	609	1	477705208	617	967784808	644	1
475602608	563	96045351	675	9	477705408	572	10413106	31	1
475603208	563	96045351	632	3	477705808	98	96035796	619	1
476607608	496	969763408	634	1	477705808	115	96035792	619	1
477100208	330	96039022	3	1	477705808	348	969050308	11	1
477100208	500	918731808	38	1	477705808	374	90200104	28	1
477100308	500	918731808	32	1	482430314	617	967784808	639	2
477101408	135	917257108	13	22	482430314	717	967784508	607	1
477102808	328	96034515	(2)	1	482430614	98	96035796	606	1
4772028	189	10155227	12	2	482430614	115	96035792	606	1
477400308	563	96045351	679	2	482430614	563	96045351	624	4
477400608	563	96045351	700	1	482430614	617	967784808	635	1
477401308	135	917257108	14	22	482431114	56	96035801	611	1
477401408	330	96039022	4	1	482431314	565	96045351	836	1
477401408	480	918759808	37	1	482431414	57	96035801	648	1
477401408	500	918731808	37	1	482431514	57	96035801	660	2
477401508	500	918731808	33	1	482431514	622	969426308	612	2

Item	Page	Assembly	Pos.	Quantity	Item	Page	Assembly	Pos.	Quantity
482431614	563	96045351	633	2	502923708	467	96053500	46	2
482431814	564	96045351	826	1	502932508	339	968999708	9	1
482530814	56	96035801	615	2	502932808	496	969763408	312	1
482530814	564	96045351	777	3	502932908	339	968999708	8	1
485501414	69	917436708	(2)	288	502933208	520	918731908	430	1
4900000	695	918807308	4	4	502933508	288	919007708	449	1
4901159	317	11692439	3	4	502940108	339	968999708	7	1
4901247	490	10877810	29	1	502987108	496	969763408	166	1
4901531	66	11643184	7	3	510037408	562	96045351	513	1
4901531	570	10342823	19	4	510133208	562	96045351	519	1
4901595	75	91001377	21	4	510146208	291	96034631	400	1
4901595	108	91001378	21	4	510146208	562	96045351	521	1
4901881	507	919674408	302	4	510229408	351	919369308	2	2
4901881	511	96051842	310	2	510408708	560	96045351	153	1
4902172	119	917691008	19	8	510408708	616	967784808	171	1
4980000	209	10120186	9	1	510413508	561	96045351	203	1
4980000	210	10138230	(5)	1	510500508	496	969763408	300	1
4980012	262	10115829	6	2	510501008	496	969763408	301	2
4980257	210	10138230	12	12	510586608	616	967784808	502	4
4980359	213	10129474	4	2	510586708	56	96035801	551	8
4980376	196	10147438	5	1	510586708	98	96035796	550	2
4980482	201	10146367	7	2	510586708	115	96035792	550	2
4980712	572	10413106	15	1	510586708	562	96045351	(1)	1
4980736	210	10138230	5	1	510586708	562	96045351	551	2
4980927	210	10138230	9	3	510586708	617	967784808	553	3
4980927	210	10138230	9	3	510586708	717	967784508	551	3
4981029	195	10139112	6	4	510586908	562	96045351	506	6
4981172	252	10140729	5	3	510586908	616	967784808	501	4
4981226	228	10143341	16	3	510587008	562	96045351	(1)	1
4981233	243	10145278	6	1	510587008	562	96045351	(1)	1
4981235	192	10150934	3	1	510587008	562	96045351	560	6
4981235	252	10140729	19	2	510587008	617	967784808	556	2
500411708	20	91001569	56	6	510587908	288	919007708	(1)	1
5004624	189	10155227	6	1	510598408	288	919007708	432	6
5004929	234	10149677	6	2	510599608	616	967784808	158	1
5005219	561	96045351	317	7	510599708	616	967784808	160	1
5005525	496	969763408	324	4	510629008	98	96035796	618	1
500917508	500	918731808	63	2	510629008	115	96035792	618	1
500917508	669	917291908	92	2	510629008	562	96045351	613	4
500926208	296	97029921	430	2	510629008	617	967784808	618	2
5009648	81	11161917	41	1	510629008	717	967784508	613	1
501201708	288	919007708	440	1	510629508	561	96045351	175	1
501243708	564	96045351	(1)	1	510629508	616	967784808	173	1
501243708	589	471030708	1	1	510642508	561	96045351	182	1
502037001	78	90028956	80	1	510644608	561	96045351	183	1
502037201	370	939292201	70	1	510667308	348	969050308	6	2
502037201	610	939294201	70	1	510671108	98	96035796	158	1
502319101	370	939292201	51	1	510671108	115	96035792	158	1
502618908	172	918731108	20	2	510671108	560	96045351	156	2
502624508	136	11347526	41	1	510671108	616	967784808	168	1
502651408	497	502657308	2	1	510671108	717	967784508	154	1
502652908	610	939294201	73	1	510671508	560	96045351	165	2
502657308	496	969763408	55	1	510671808	348	969050308	(1)	1
502657708	496	969763408	167	1	510674508	560	96045351	166	1
502661608	496	969763408	153	1	510676908	98	96035796	50	1
502806508	101	96028333	1	1	510676908	115	96035792	50	1
502807308	616	967784808	(1)	1	510697608	561	96045351	178	1
502807501	370	939292201	(1)	1	510697708	561	96045351	179	1
502921408	496	969763408	641	1	510702408	562	96045351	504	1
502921908	496	969763408	151	2	510712308	725	511479408	3	1

Item	Page	Assembly	Pos.	Quantity	Item	Page	Assembly	Pos.	Quantity
510718108	583	10489734	27	1	511062708	98	96035796	159	1
510719008	583	10489734	26	1	511062708	115	96035792	159	1
510737408	387	916177508	7	2	511062708	560	96045351	157	1
510738308	313	571900808	12	1	511062708	616	967784808	169	1
510738308	314	10472202	12	1	511311808	560	96045351	154	1
510738408	308	571899508	15	1	511311808	616	967784808	170	1
510738608	572	10413106	(1)	4	511316708	561	96045351	171	1
510738608	572	10413106	(1)	4	511320108	560	96045351	63	1
510741508	572	10413106	32	1	511322808	132	968077208	152	4
510741508	574	10332882	11	2	511419608	561	96045351	198	1
510741508	577	12100860	80	8	511431514	561	96045351	199	1
510741508	582	11341035	21	5	511433908	560	96045351	162	2
510741708	585	511433908	21	1	511435108	561	96045351	172	1
510741708	588	511419608	21	1	511444408	56	96035801	50	1
510746008	717	967784508	153	1	511444408	560	96045351	52	1
510746108	308	571899508	10	1	511444408	616	967784808	50	1
510746108	587	10218310	1	1	511450208	722	967785408	150	1
510753408	583	10489734	11	1	511456808	561	96045351	195	1
510754008	560	96045351	158	1	511457808	348	969050308	9	3
510760408	428	11083498	32	1	511460608	560	96045351	152	1
510760408	573	571415008	2	6	511460608	616	967784808	150	1
510762108	286	919007708	(301)	3	511464108	560	96045351	55	1
510776608	325	10292815	14	1	511476908	561	96045351	197	2
510782508	588	511419608	3	1	511479408	722	967785408	151	1
510782708	588	511419608	5	1	511481508	98	96035796	160	1
510782808	588	511419608	6	1	511481508	115	96035792	160	1
510782908	588	511419608	7	1	511481508	616	967784808	151	1
510783008	588	511419608	9	1	511485408	560	96045351	164	1
510787908	568	11211756	(3)	4	511493608	717	967784508	50	1
510792708	586	510697608	8	2	511493708	717	967784508	152	1
510797008	585	511433908	3	1	511497514	560	96045351	170	1
510797208	585	511433908	5	1	511502608	288	919007708	430	2
510797308	585	511433908	6	1	511505808	561	96045351	176	2
510797408	585	511433908	7	1	511505908	728	967785008	151	3
510797508	585	511433908	9	1	511508108	616	967784808	163	1
510797708	585	511433908	22	1	511508208	616	967784808	162	1
510797708	588	511419608	22	1	511508308	159	96056969	161	2
511001708	426	917676208	9	2	511508408	159	96056969	162	2
511001708	540	91000922	21	5	511508608	728	967785008	153	3
511015108	585	511433908	4	1	511510008	562	96045351	500	1
511015208	588	511419608	1	1	511512208	616	967784808	153	2
511015308	588	511419608	4	1	511512308	616	967784808	155	2
511015408	588	511419608	10	1	511515008	717	967784508	151	2
511015508	585	511433908	17	2	511517808	56	96035801	500	8
511015508	588	511419608	17	1	511517808	98	96035796	500	2
511025408	63	11643183	11	2	511517808	115	96035792	500	2
511025408	66	11643184	11	2	511517808	562	96045351	510	3
511025508	63	11643183	10	2	511517808	717	967784508	500	3
511025508	66	11643184	10	2	511518808	562	96045351	520	1
511035108	562	96045351	(1)	1	512363708	761	917267508	4	1
511036508	63	11643183	1	1	514507808	311	10008308	16	1
511036508	66	11643184	1	1	514525208	360	570109008	20	7
511040408	560	96045351	(2)	3	514530408	360	570109008	15	1
511043308	574	10332882	(999)	1	514539308	311	10008308	12	1
511044108	561	96045351	193	1	514584908	305	11210795	26	1
511055908	560	96045351	169	1	514588908	311	10008308	14	1
511057608	561	96045351	188	1	514589108	314	10472202	13	1
511057608	616	967784808	172	1	514591708	81	11161917	21	1
511058308	561	96045351	196	1	514611808	63	11643183	4	1
511059408	560	96045351	161	1	514611808	66	11643184	4	1

Item	Page	Assembly	Pos.	Quantity	Item	Page	Assembly	Pos.	Quantity
514613208	321	10872488	39	1	570066108	102	502806508	3	1
515710608	428	11083498	31	1	570066208	102	502806508	4	1
518512408	63	11643183	9	2	570066308	102	502806508	5	1
518512408	66	11643184	9	2	570066408	102	502806508	7	1
518565008	697	10876933	46	1	570109008	359	510229408	1	1
518578108	288	919007708	448	1	570109108	359	510229408	3	1
518614708	697	10876933	57	2	570109208	359	510229408	4	1
518620608	697	10876933	70	1	570109308	359	510229408	5	1
518623608	310	10663105	39	1	570109408	359	510229408	11	2
518629608	399	917305408	31	2	570109508	360	570109008	1	1
518645408	697	10876933	55	1	570109608	360	570109008	2	1
518648508	359	510229408	6	1	570109708	360	570109008	3	1
520190408	152	928569808	67	1	570109808	360	570109008	4	1
520303308	240	5700161	10	1	570110008	360	570109008	7	1
520402808	151	919328608	3	1	570110108	360	570109008	9	1
530032508	610	939294201	51	1	570110308	361	570109508	1	1
530609208	468	96053500	65	1	570110408	361	570109508	2	1
540511908	288	919007708	336	3	570110508	361	570109508	3	1
550628308	291	96034631	103	1	570110608	361	570109508	4	7
550639508	291	96034631	101	1	570110708	361	570109508	5	14
550640608	172	918731108	5	4	570110808	361	570109508	6	1
550838008	172	918731108	17	2	570110908	361	570109508	7	4
550838008	287	919007708	185	4	570116908	328	96034515	405	1
551710608	287	919007708	252	1	570116908	561	96045351	303	1
552101308	507	919674408	186	2	570163708	525	10327065	5	1
553027808	390	916170808	4	7	570322408	291	96034631	(1)	1
553027808	447	96017704	20	1	570322408	562	96045351	(1)	1
553031008	601	918628408	2	1	570340077	393	968514508	5	4
553054108	480	918759808	7	1.995	570427408	574	10332882	7	1
553054108	482	96020359	7	0.25	570435308	697	10876933	39	1
553054208	480	918759808	6	1	570435508	292	10429930	18	1
553054208	482	96020359	8	2	570531308	582	11341035	11	1
553102308	480	918759808	30	5	570579808	490	10877810	23	1
553102308	482	96020359	14	1	570579808	697	10876933	48	2
553136608	63	11643183	2	2	570613877	240	5700161	9	4
553136608	66	11643184	2	2	570633808	560	96045351	(1)	1
553159408	482	96020359	9	0.62	570633808	560	96045351	(1)	1
553174008	486	11110051	1	1	570652308	583	10489734	25	1
553174108	480	918759808	8	1	570690608	525	10327065	33	1
553181108	482	96020359	6	1	570818008	582	11341035	10	1
553181208	412	916168308	12	0.25	570824177	52	11346779	30	2
553186908	461	96036954	10	1	570827808	67	511444408	1	1
553187208	482	96020359	5	1	570862108	63	11643183	6	1
553191108	480	918759808	31	0.06	570862108	66	11643184	6	1
553193208	399	917305408	29	6	570941408	725	511479408	2	1
560208508	319	10871282	27	2	570951508	316	10871043	15	1
5603876	462	96036955	517	1	570979708	240	5700161	7	1
5603876	464	96036956	507	1	571058608	325	10292815	13	1
5603876	542	96045387	517	1	571076908	616	967784808	(2)	1
5607617	564	96045351	823	6	571077008	616	967784808	(3)	1
5607617	622	969426308	613	2	571077108	616	967784808	(4)	1
5610999	601	918628408	32	2	571077208	616	967784808	(5)	1
5616114	81	11161917	22	1	571081908	728	967785008	(1)	1
5700161	238	9080294	1	1	571082008	728	967785008	(2)	1
570033608	321	10872488	11	1	571082008	728	967785008	(2)	1
570054708	323	571907208	16	1	571082108	728	967785008	(3)	1
570063108	585	511433908	1	1	571082208	728	967785008	(4)	1
570063208	585	511433908	10	1	571082208	728	967785008	(3)	1
570065908	102	502806508	1	1	571082308	728	967785008	(5)	1
570066008	102	502806508	2	1	571082408	728	967785008	(1)	1

Item	Page	Assembly	Pos.	Quantity	Item	Page	Assembly	Pos.	Quantity
571082508	561	96045351	(1)	1	571819708	296	97029921	190	1
571082608	561	96045351	(2)	1	571819808	296	97029921	360	2
571082708	561	96045351	(3)	1	571824708	472	10343693	1	1
571082808	561	96045351	(4)	1	571840008	560	96045351	(999)	1
571115308	81	11161917	6	1	571841008	704	10802064	53	1
571115508	81	11161917	9	1	571851008	704	10802064	21	1
571135508	717	967784508	(21)	1	571851208	704	10802064	12	1
571141177	573	571415008	3	1	571851308	704	10802064	60	1
571187408	574	10332882	(999)	1	571867708	428	11083498	44	1
571233308	319	10871282	(5)	1	571898008	288	919007708	443	1
571303008	577	12100860	100	1	571898408	704	10802064	101	1
571307708	299	11631893	10	1	571899308	305	11210795	(31)	1
571310608	76	91001377	113	4	571899408	307	10873570	1	1
571310608	109	91001378	114	4	571899508	307	10873570	3	1
571328408	136	11347526	12	2	571900808	312	10472196	2	1
571328408	525	10327065	14	1	571900808	324	10292801	2	1
571352308	497	502657308	1	1	571907208	319	10871282	2	1
571356108	560	96045351	(4)	1	571907508	321	10872488	14	1
571407208	577	12100860	(999)	1	571907608	321	10872488	38	1
571413308	697	10876933	36	1	571910208	697	10876933	37	1
571414608	572	10413106	3	1	571911708	325	10292815	20	1
571415008	572	10413106	8	2	571912308	472	10343693	2	1
571415208	572	10413106	2	1	571928508	697	10876933	4	1
571415208	572	10413106	11	1	571934508	699	571928508	50	1
571430208	649	10040024	2	1	571934608	699	571928508	60	1
571430508	649	10040024	5	1	591051008	415	916163008	22	2
571430708	649	10040024	4	1	591055408	416	966408908	2	2
571477908	321	10872488	31	1	591055508	416	966408908	3	2
571486808	52	11346779	29	1	591055608	415	916163008	10	2
571489008	291	96034631	105	1	591061908	449	968923508	10	2
571489108	291	96034631	106	1	591063508	468	96053500	63	1
571496708	764	512363708	999	1	591063808	409	966497908	30	1
571529508	582	11341035	8	2	591064408	477	966707708	8	1
571535008	582	11341035	9	1	591064708	400	917305408	71	1
571562408	572	10413106	4	1	591065008	457	969016008	9	2
571578608	139	774375108	2	1	591066808	409	966497908	10	2
571582108	240	5700161	1	1	591066808	410	965784408	5	1
571582208	240	5700161	2	1	591067008	433	918810308	23	1
571582308	240	5700161	4	1	591069508	440	916049908	2	1
571582408	240	5700161	6	1	591070408	172	918731108	29	2
571582508	240	5700161	11	1	591070908	476	917260408	1	1
571582608	240	5700161	13	1	591080608	415	916163008	28	0.25
571582708	240	5700161	15	1	591570908	445	96036790	102	3
571582808	240	5700161	30	1	591570908	467	96053500	51	1
571614608	697	10876933	(1)	1	591570908	471	96022872	6	1
571634708	577	12100860	40	1	591570908	548	968063108	8	1
571687808	699	571928508	18	1	6001703	533	96045385	2267	6
571716008	754	910836808	10	1	6001790	462	96036955	524	1
571716108	754	910836808	12	2	6001790	535	96037136	505	4
571716208	754	910836808	34	2	6003168	536	96037137	516	1
571723608	574	10332882	5	1	6003248	536	96037137	503	1
571723708	574	10332882	6	1	600345208	534	96037136	377	6.27
571723808	574	10332882	8	1	6004195	535	96037136	520	2
571737808	574	10332882	2	1	600460808	532	96045385	5	6.6
571741908	764	512363708	19	1	600462908	741	917598408	(5)	1.46
571817208	649	10040024	6	1	600463908	49	96045228	9	3.13
571817308	530	966720708	(1)	1	600463908	49	96045228	10	2.63
571818908	578	571634708	1	1	600463908	49	96045228	16	6.06
571818908	580	10332397	1	2	600463908	49	96045228	17	6.06
571819108	296	97029921	110	2	601406408	548	968063108	4	0.3

Item	Page	Assembly	Pos.	Quantity	Item	Page	Assembly	Pos.	Quantity
601407008	544	969256608	32	0.29	602300108	49	96045228	121	1
602000708	728	967785008	301	26	602300108	462	96036955	121	13
602002208	496	969763408	306	6	602300108	464	96036956	121	27
602007108	701	966134608	35	12	602300108	532	96045385	121	13
602007808	56	96035801	326	64	602300108	534	96037136	121	21
602008308	334	96023117	29	2	602300108	536	96037137	121	9
602008408	56	96035801	315	14	602300208	49	96045228	504	2
602008408	334	96023117	30	2	602300208	462	96036955	501	9
602008508	56	96035801	317	6	602300208	464	96036956	501	6
602008808	26	96034894	35	2	602300208	532	96045385	501	10
602008808	29	96034977	35	2	602300208	535	96037136	501	11
602008808	56	96035801	321	4	602300208	536	96037137	501	2
602008908	561	96045351	324	8	602300208	542	96045387	523	1
602009008	728	967785008	304	2	602300308	48	96045227	125	35
602009108	561	96045351	315	4	602300308	49	96045228	125	19
602009208	561	96045351	319	14	602300308	462	96036955	125	110
602010108	98	96035796	309	6	602300308	464	96036956	125	118
602010108	115	96035792	309	6	602300308	532	96045385	125	96
602015408	26	96034894	36	2	602300308	534	96037136	125	92
602015408	29	96034977	36	2	602300308	536	96037137	125	27
602015408	56	96035801	323	4	602300308	538	96037133	125	2
602018008	56	96035801	313	61	602300308	642	96043733	125	6
602018008	334	96023117	28	4	602300508	462	96036955	514	1
602018008	496	969763408	308	6	602300608	462	96036955	516	1
602018008	562	96045351	330	2	602301408	49	96045228	501	1
602018008	669	917291908	70	4	602301408	542	96045387	507	2
602042208	551	969061708	12	1	602301408	642	96043733	502	1
602042808	467	96053500	38	2	602301708	534	96037136	106	1
602106708	546	967589508	1	0.135	602303308	49	96045228	134	2
602106708	711	966291008	10	0.245	602303308	462	96036955	134	2
602106708	714	968708708	295	0.205	602303308	464	96036956	134	2
602116008	381	919010208	14	4	602303308	532	96045385	134	6
602203108	464	96036956	67	2	602304808	474	963398008	2	2
602203408	48	96045227	72	6	602305605	535	96037136	766	1
602203408	462	96036955	72	3	602305908	48	96045227	517	1
602203408	464	96036956	72	4	602305908	462	96036955	523	1
602203708	738	96068455	63	3	602305908	474	963398008	3	1
602203908	48	96045227	75	2	602305908	542	96045387	503	1
602203908	462	96036955	75	2	602307708	49	96045228	86	2
602203908	534	96037136	75	3	602307708	532	96045385	86	74
602205708	534	96037136	58	4	602307708	534	96037136	86	26
602205808	534	96037136	111	1	602307808	49	96045228	114	8
602207608	464	96036956	140	1	602307808	532	96045385	114	4
602208408	462	96036955	143	2	602307908	532	96045385	85	10
602208608	535	96037136	516	1	602311408	534	96037136	57	2
602208908	535	96037136	511	1	602311508	534	96037136	55	1
602209708	48	96045227	516	1	602319808	462	96036955	521	1
602209708	462	96036955	508	4	602320508	464	96036956	62	13
602209708	464	96036956	506	2	602322708	462	96036955	504	1
602209708	535	96037136	508	1	602322808	463	96036955	615	55
602209708	542	96045387	501	5	602323208	48	96045227	120	21
602213308	48	96045227	39	1	602323308	48	96045227	503	3
602217008	534	96037136	49	1	602323308	542	96045387	505	53
602217308	534	96037136	50	1	602323508	48	96045227	124	34
602217908	48	96045227	34	5	602323508	462	96036955	124	6
602217908	462	96036955	34	1	602325508	462	96036955	506	3
602225508	462	96036955	518	1	602325508	464	96036956	510	1
602225608	462	96036955	519	1	602325508	532	96045385	504	1
602225914	464	96036956	703	2	602325508	542	96045387	526	2
602300108	48	96045227	121	14	602325608	542	96045387	524	2

Item	Page	Assembly	Pos.	Quantity	Item	Page	Assembly	Pos.	Quantity
602329108	49	96045228	617	12	602501208	711	966291008	308	1
602329108	535	96037136	617	8	602501208	714	968708708	292	1
602329208	535	96037136	807	4	602501308	42	966167808	11	1
602330508	535	96037136	801	6	602501308	710	10354493	18	1
602330808	50	96045228	802	12	602504108	41	96045226	15	2
602330808	463	96036955	802	2	602504208	41	96045226	18	1
602330808	535	96037136	802	14	602504508	49	96045228	512	1
602330808	537	96037137	802	4	602600808	390	916170808	12	2
602331108	535	96037136	806	43	602701308	390	916170808	1	1
602331308	462	96036955	507	4	602704808	49	96045228	520	6
602331308	464	96036956	505	2	602704808	538	96037133	504	2
602331308	538	96037133	501	1	602704808	644	96037132	505	3
602331308	542	96045387	504	32	602704808	741	917598408	(508)	1
602331308	642	96043733	501	1	602717308	291	96034631	124	1
602331508	537	96037137	804	9	602717308	445	96036790	114	1
602331808	464	96036956	509	2	602717308	455	969015908	106	1
602332108	464	96036956	611	4	602735508	540	91000922	39	47
602335908	48	96045227	514	1	602761408	547	926891108	12	10
602335908	462	96036955	515	4	602761608	542	96045387	502	2
602335908	464	96036956	511	1	602761608	546	967589508	5	2
602335908	542	96045387	516	4	602761708	546	967589508	6	1
602336008	462	96036955	511	4	602762908	546	967589508	7	1
602336008	542	96045387	506	6	602794608	546	967589508	8	2
602336408	547	926891108	2	1	602794608	714	968708708	297	2
602336508	547	926891108	3	6	603012608	629	918377508	11	1.5
602337008	464	96036956	508	3	604006908	48	96045227	515	1
602337008	542	96045387	518	1	604006908	540	91000922	33	8
602337608	542	96045387	514	1	604007008	48	96045227	505	1
602338208	464	96036956	503	3	604007008	540	91000922	34	12
602338208	542	96045387	520	5	604007108	540	91000922	35	12
602338608	542	96045387	509	1	604007208	540	91000922	36	10
602339108	48	96045227	642	4	604007308	540	91000922	37	7
602339308	49	96045228	507	3	604007608	540	91000922	38	1
602339408	532	96045385	643	3	604007708	540	91000922	32	8
602339408	536	96037137	643	2	604412408	545	922648308	1	1
602339508	532	96045385	647	4	604501608	551	969061708	2	10
602339608	49	96045228	516	3	604501708	48	96045227	504	2
602419608	625	918462708	9	1	604505508	49	96045228	522	4
602421908	49	96045228	525	2	604505508	532	96045385	518	1
602421908	142	96045205	504	1	604505508	538	96037133	506	1
602422108	625	918462708	8	1	604505508	644	96037132	507	1
602424008	468	96053500	67	2	604505508	741	917598408	(509)	1
602424008	738	96068455	501	1	604508108	714	968708708	155	1
602424108	41	96045226	14	2	604508508	49	96045228	515	5
602424108	46	966204108	153	1	604508508	538	96037133	507	1
602424108	49	96045228	527	4	604508508	644	96037132	503	2
602424908	381	919010208	16	2	604508508	741	917598408	(503)	1
602424908	395	917304508	17	1	604508608	49	96045228	514	3
602425008	41	96045226	17	1	604508608	538	96037133	508	1
602425008	714	968708708	197	4	604508608	644	96037132	506	2
602425108	711	966291008	213	1	604508708	532	96045385	516	1
602425208	711	966291008	212	1	604509408	49	96045228	511	1
602425808	710	10354493	3	1	604512108	49	96045228	523	4
602440708	49	96045228	513	1	604512108	142	96045205	502	1
602441001	49	96045228	526	2	604512108	532	96045385	517	1
602441001	142	96045205	505	1	604512108	538	96037133	505	1
602441001	741	917598408	(505)	1	604512108	644	96037132	504	1
602441701	625	918462708	11	2	604512108	714	968708708	153	1
602441701	630	917368108	11	1	604512108	741	917598408	(510)	1
602501208	41	96045226	10	2	604518808	532	96045385	636	2

Item	Page	Assembly	Pos.	Quantity	Item	Page	Assembly	Pos.	Quantity
604518908	50	96045228	812	25	606143508	471	96022872	11	2
604518908	142	96045205	812	1	606144008	471	96022872	15	2
604518908	533	96045385	812	5	606144108	470	96030724	(2)	1
604518908	538	96037133	812	10	606144408	471	96022872	17	1
604518908	644	96037132	812	15	606144608	551	969061708	6	1
604518908	741	917598408	(812)	5	606144908	551	969061708	7	1
604519108	741	917598408	(637)	1	606145108	551	969061708	11	1
604519208	538	96037133	628	2	607008708	471	96022872	13	1
604519208	644	96037132	628	4	607011108	153	928620108	(1)	2
604519208	741	917598408	(628)	2	607023708	160	915731908	2	1
604519308	49	96045228	629	6	607106208	153	928620108	2	2
604519308	538	96037133	629	2	607226808	527	919410708	21	2
604519308	644	96037132	629	2	610701108	535	96037136	525	1
604526508	49	96045228	506	5	610706308	725	511479408	6	1
604526508	532	96045385	510	1	613200608	153	928620108	3	10
604526508	538	96037133	502	1	613206508	335	96023914	22	2
604526508	644	96037132	502	1	613206608	335	96023914	21	2
604526508	741	917598408	(502)	1	613301908	626	917269308	1	1
604526608	49	96045228	509	4	614003108	41	96045226	24	1
604526608	142	96045205	501	1	614003108	527	919410708	32	1
604526608	538	96037133	503	1	614009908	41	96045226	11	1
604526608	644	96037132	501	2	614020508	628	915432508	5	1
604526608	741	917598408	(501)	1	617000608	463	96036955	528	1
605006608	49	96045228	510	2	617000608	464	96036956	512	1
605006608	532	96045385	503	3	6202434	49	96045228	96	4
605007908	49	96045228	505	3	6202434	532	96045385	96	2
605007908	532	96045385	502	34	6202434	534	96037136	96	2
605007908	535	96037136	502	13	6202444	49	96045228	95	3
605012408	49	96045228	517	1	6202444	532	96045385	95	1
605012708	625	918462708	7	1	6202444	534	96037136	95	3
605203908	471	96022872	5	1	6202909	328	96034515	100	1
605203908	551	969061708	3	1	6205239	536	96037137	520	1
605212708	49	96045228	508	1	6205242	536	96037137	521	1
605212708	535	96037136	519	1	630105408	540	91000922	10	1
605212808	49	96045228	519	3	630121508	43	968054008	6	2
605212808	532	96045385	514	1	630121508	540	91000922	9	19
605212808	535	96037136	523	2	630122908	48	96045227	506	2
605215508	49	96045228	518	2	630122908	542	96045387	512	23
605215508	532	96045385	515	1	636107901	542	96045387	529	1
605215508	535	96037136	524	2	636107901	546	967589508	3	2
605215508	691	917292408	77	1	636109301	546	967589508	4	1
605215708	625	918462708	1	1	638109101	544	969256608	30	0.28
605251608	49	96045228	502	1	660024508	540	91000922	29	1
605251608	532	96045385	506	1	680000008	462	96036955	6	1
605613908	535	96037136	510	1	680000008	464	96036956	5	1
605619708	50	96045228	813	1	680000008	464	96036956	7	1
605619708	533	96045385	813	37	680000008	741	917598408	(7)	1
605619708	535	96037136	813	13	680000308	464	96036956	6	1
605619808	533	96045385	816	3	680000708	462	96036955	5	1
605619808	537	96037137	816	2	680000708	738	96068455	5	1
605619908	533	96045385	821	4	680000808	532	96045385	11	1
606012608	375	966631008	6	1	680001408	49	96045228	5	1
606012608	604	967969608	(6)	1	680001408	532	96045385	7	1
606020708	467	96053500	12	1	680001408	532	96045385	8	1
606053108	529	968128908	(11)	2	680001408	532	96045385	9	1
606053108	529	968128908	(11)	2	680001408	532	96045385	14	1
606143008	471	96022872	18	1	680001408	532	96045385	15	1
606143008	551	969061708	8	1	680001408	532	96045385	16	1
606143208	471	96022872	16	1	680001408	741	917598408	(6)	1
606143408	551	969061708	5	1	680001708	532	96045385	12	1

Item	Page	Assembly	Pos.	Quantity	Item	Page	Assembly	Pos.	Quantity
6905877	271	10151329	(1)	1	7023659	315	10472208	3	1
691035008	52	11346779	36	2	7023664	315	10472208	2	1
691041608	52	11346779	19	21	7023666	315	10472208	4	1
691041708	52	11346779	6	37	7023703	311	10008308	10	1
691041808	52	11346779	9	1	7025732	240	5700161	23	1
691043108	52	11346779	17	35	7027052	81	11161917	49	1
691183108	560	96045351	65	1	7027053	81	11161917	46	1
691798508	471	96022872	3	1	7027055	81	11161917	43	1
692312708	701	966134608	(7)	2	7027056	81	11161917	44	1
692404908	50	96045228	811	3	7027459	560	96045351	(2)	1
692404908	533	96045385	811	1	7027497	307	10873570	14	4
692404908	535	96037136	811	2	7027497	311	10008308	20	2
692405708	533	96045385	822	3	7027497	312	10472196	53	1
692405808	533	96045385	817	1	7027497	323	571907208	20	2
692405808	537	96037137	817	2	704004208	763	923285508	7	1
692406008	532	96045385	512	2	704004608	294	968026308	120	1
692406008	536	96037137	517	1	704006308	639	968993508	10	1
692406308	532	96045385	505	1	704008508	30	968019508	10	2
692406308	536	96037137	508	1	704207608	551	969061708	9	20
692406708	532	96045385	507	1	704207708	164	917862808	200	4
692600708	704	10802064	23	1	704228108	150	919499408	84	2
7002253	83	11320954	(16)	1	704228108	334	96023117	12	2
7002458	374	90200104	7	1	704228108	449	968923508	9	3
7003652	220	12489819	4	1	704228108	457	969016008	2	2
7005052	26	96034894	30	3	704228108	767	917268208	5	1
7005052	29	96034977	30	3	704229908	455	969015908	311	10
7005052	669	917291908	72	4	704230208	157	96063087	8	2
7005052	701	966134608	36	2	704230208	334	96023117	25	2
7005052	744	967933408	10	3	704232208	409	966497908	9	1
7005053	56	96035801	314	10	704232308	544	969256608	75	12
7008583	56	96035801	320	2	704232308	548	968063108	10	6
7008583	562	96045351	331	1	704253308	42	966167808	6	4
7009080	246	10148215	5	1	704253308	86	967972208	3	5
7011131	190	5004624	2	1	704253308	87	967972308	3	2
7011745	220	12489819	1	1	704253308	88	967972408	3	2
7012971	307	10873570	13	2	704253308	89	968270108	3	2
7012971	323	571907208	12	1	704253308	90	968274208	3	2
7013456	190	5004624	3	1	704253308	110	968055808	3	5
7014524	26	96034894	8	1	704253308	334	96023117	13	1
7014524	29	96034977	8	1	704253408	42	966167808	(1)	1
7014524	592	967980508	7	3	704253408	42	966167808	7	4
7014529	305	11210795	47	1	704253408	86	967972208	4	5
7015814	421	917304708	50	2	704253408	87	967972308	4	2
7016016	245	10142733	(1)	1	704253408	88	967972408	4	2
7016016	245	10142733	(7)	1	704253408	89	968270108	4	2
7016016	245	10142733	7	1	704253408	90	968274208	4	2
7018842	563	96045351	684	3	704253408	110	968055808	4	5
7020440	601	918628408	100	1.6	704253408	334	96023117	14	1
7021521	503	969904608	2	1	704253708	86	967972208	5	5
7021600	310	10663105	38	1	704253708	89	968270108	5	2
7022127	307	10873570	11	1	704253708	90	968274208	5	2
7022127	311	10008308	11	4	704253708	110	968055808	5	5
7022127	312	10472196	52	7	704254008	92	968420608	9	1
7022127	323	571907208	11	6	704254808	42	966167808	12	4
7022127	324	10292801	52	5	704254808	86	967972208	6	5
7022128	81	11161917	4	1	704254808	87	967972308	6	2
7022315	316	10871043	20	1	704254808	88	967972408	6	2
7022315	359	510229408	(14)	1	704254808	89	968270108	6	2
7022315	360	570109008	14	1	704254808	90	968274208	6	2
7023643	309	11210798	5	1	704254808	110	968055808	6	5

Item	Page	Assembly	Pos.	Quantity	Item	Page	Assembly	Pos.	Quantity
704255508	450	964093408	2	1	720014908	681	917292208	2	1
704256708	42	966167808	8	4	720014908	685	917292308	2	1
704258208	540	91000922	15	2	720014908	690	917292408	22	1
704258208	544	969256608	40	4	720801908	433	918810308	25	4
704259008	87	967972308	5	2	721108801	612	90200103	7	1
704259008	88	967972408	5	2	721114701	370	939292201	83	1
704259008	91	968709108	5	2	725111808	449	968923508	11	2
704259008	334	96023117	15	1	725111808	457	969016008	10	2
704259308	450	964093408	3	1	726204008	348	969050308	5	1
704259608	421	917304708	57	1	726403401	370	939292201	78	6
704262608	334	96023117	22	2	726405608	392	916162808	10	12
704271108	153	928620108	7	2	726405608	610	939294201	78	6
704274808	42	966167808	9	4	726405908	288	919007708	442	1
704274808	86	967972208	7	5	726406908	562	96045351	(1)	1
704274808	87	967972308	7	2	726407908	328	96034515	401	2
704274808	88	967972408	7	2	726407908	342	96066379	(1)	1
704274808	89	968270108	7	2	726407908	348	969050308	(9)	2
704274808	90	968274208	7	2	726411508	467	96053500	47	2
704274808	110	968055808	7	5	726412308	288	919007708	450	2
704274808	348	969050308	(8)	2	7264141	296	97029921	470	1
704274908	42	966167808	10	4	726414901	353	90008901	69	1
704277508	445	96036790	113	2	726417708	296	97029921	485	1
704278708	91	968709108	4	2	726421108	610	939294201	61	1
704278708	92	968420608	10	1	726421501	296	97029921	480	3
708010008	762	929582108	3	2	726421608	288	919007708	445	3
708010008	765	923879808	4	1	726422308	496	969763408	313	1
708011608	761	917267508	21	2	726426008	288	919007708	447	3
710032508	368	932916901	19	1	726426408	648	12102921	33	1
710032508	608	939294001	22	1	726429008	296	97029921	482	1
710035001	296	97029921	440	1	726429901	370	939292201	19	2
710054601	370	939292201	11	1	726429901	610	939294201	19	2
710054601	610	939294201	11	1	726433408	35	917511508	50	4
710059301	353	90008901	11	1	726440001	353	90008901	73	1
710062601	370	939292201	63	2	726452801	136	11347526	5	1
710062601	610	939294201	63	2	726453601	353	90008901	24	1
710100408	393	968514508	9	1	726453601	370	939292201	79	1
710100708	392	916162808	9	8	726455301	370	939292201	61	1
710101408	393	968514508	7	4	726458401	370	939292201	13	1
7101022	616	967784808	306	2	726613008	155	91001571	10	2
710102508	189	10155227	11	1	726613008	668	917291908	25	4
7101030	371	939292201	87	1	726617408	409	966497908	24	1
710103008	430	969085208	7	1	726617408	445	96036790	112	1
710103708	329	96034522	402	1	726905008	291	96034631	120	2
710104008	722	967785408	(23)	2	726905008	592	967980508	8	4
710105908	374	90200104	29	1	726907308	445	96036790	111	1
710106508	184	10138450	3	1	726907308	455	969015908	105	2
710106508	189	10155227	5	3	7361205	395	917304508	10	10
710107208	616	967784808	305	2	7361205	421	917304708	42	2
710107708	616	967784808	307	4	7361553	568	11211756	8	3
710121114	83	11320954	6	2	7361600	325	10292815	18	1
710207408	468	96053500	64	1	7361601	308	571899508	14	1
710908701	370	939292201	12	1	7361601	313	571900808	11	1
720008508	763	923285508	6	1	7361601	314	10472202	11	1
720009408	701	966134608	22	4	7361602	319	10871282	22	2
720011408	363	917259608	4	1	7362091	98	96035796	600	1
720012608	761	917267508	34	1	7362091	115	96035792	600	1
720014408	604	967969608	(15)	1	7362091	562	96045351	608	6
720014408	734	917268408	18	4	7362091	617	967784808	641	1
720014908	673	917292008	2	1	7362091	717	967784508	602	5
720014908	677	917292108	2	1	7362515	242	10145176	3	1

Item	Page	Assembly	Pos.	Quantity	Item	Page	Assembly	Pos.	Quantity
7362606	728	967785008	300	13	7381361	275	10125687	(4)	2
7362946	669	917291908	71	4	7381361	288	919007708	446	1
7363178	370	939292201	81	1	7381363	238	9080294	4	2
7363897	496	969763408	326	4	7381457	180	11389608	7	2
7365090	26	96034894	37	4	7381457	252	10140729	21	1
7365090	29	96034977	37	4	7381526	249	10142744	4	1
7365090	56	96035801	309	62	7381566	191	10121667	2	2
7367374	310	10663105	31	1	7381628	269	10151328	38	2
7367564	85	10877686	6	2	7381629	269	10151328	39	5
7367565	85	10877686	5	1	7381630	232	10145173	13	1
7367566	85	10877686	3	1	7381630	269	10151328	42	3
7367567	85	10877686	4	1	7381638	234	10149677	12	1
7367774	57	96035801	635	1	7381638	243	10145278	9	2
7367774	563	96045351	712	2	7381638	262	10115829	10	2
7367774	617	967784808	623	1	7381638	278	9078301	8	1
7367986	56	96035801	612	1	7381679	744	967933408	3	1
7367986	564	96045351	781	5	7381685	209	10120186	8	1
7368241	463	96036955	526	1	7381685	210	10138230	14	1
7368241	535	96037136	527	2	7381770	269	10151328	32	6
7368241	536	96037137	523	2	7381771	269	10151328	31	1
7368246	536	96037137	504	1	7381779	183	10147687	7	2
7368253	463	96036955	823	5	7381995	259	10115664	4	1
7368253	535	96037136	823	3	7382059	216	10148432	5	1
7368253	537	96037137	823	1	7382085	228	10143341	13	1
7369458	537	96037137	740	6	7382086	271	10151329	39	1
7369933	321	10872488	20	1	7382088	229	10143342	14	1
7371061	83	11320954	(17)	1	7382090	269	10151328	37	4
7371651	561	96045351	(1)	1	7382092	195	10139112	2	2
7372624	307	10873570	35	1	7382092	269	10151328	47	4
7372626	305	11210795	32	1	7382202	274	10142747	1	1
7372626	319	10871282	24	4	7382203	276	10144036	15	2
7373052	319	10871282	(5)	1	7382204	213	10129474	11	1
737350503	78	90028956	(5)	8	740001808	761	917267508	39	0.3
737350603	78	90028956	(4)	9	740300008	399	917305408	22	1
7380083	248	10142742	3	1	7403569	159	96056969	644	2
7380177	180	11389608	10	3	7403569	496	969763408	638	2
7380177	263	10116110	14	1	7403569	562	96045351	616	3
7380401	277	9077386	5	1	7403569	617	967784808	615	1
738048003	370	939292201	2	1	7403569	717	967784508	603	6
7380520	277	9077386	4	1	7403925	564	96045351	770	1
7380566	180	11389608	6	3	7405399	564	96045351	746	2
7380566	232	10145173	4	1	7406865	564	96045351	744	7
7380566	252	10140729	20	1	7406865	617	967784808	642	2
7380574	570	10342823	5	4	7407098	563	96045351	656	5
7380605	233	10147364	5	1	7407107	564	96045351	822	2
7380605	288	919007708	452	1	7407108	57	96035801	640	2
7380653	183	10147687	8	2	7407108	563	96045351	635	1
7380653	262	10115829	9	1	7407118	564	96045351	808	2
7380935	236	13701882	3	1	7407118	617	967784808	610	1
7380960	255	10142863	6	1	7407119	56	96035801	604	2
7380970	234	10149677	7	1	7407120	564	96045351	814	2
7380970	288	919007708	451	1	7407122	57	96035801	633	1
7381103	265	10127979	2	1	7407122	564	96045351	829	1
7381103	273	12583633	(2)	1	7409918	564	96045351	755	1
7381225	183	10147687	14	1	7409922	57	96035801	649	1
7381225	253	12512627	30	1	7410441	563	96045351	692	1
738122523	214	9078233	2	1	7410451	564	96045351	745	1
7381286	232	10145173	11	1	7410455	57	96035801	663	4
7381292	229	10143342	20	1	7410455	98	96035796	625	1
7381292	254	11420633	9	6	7410455	115	96035792	625	1

Item	Page	Assembly	Pos.	Quantity	Item	Page	Assembly	Pos.	Quantity
7411823	601	918628408	30	1	7618383	330	96039022	2	1
7414494	81	11161917	5	1	7619068	521	10871700	4	1
7414500	81	11161917	16	1	7621780	741	917598408	5	1
744010208	761	917267508	38	2	7622478	428	11083498	16	1
745129501	424	966253908	4	1	7623427	319	10871282	20	2
745129508	296	97029921	390	2	7624238	321	10872488	17	4
745139101	353	90008901	66	1	7624353	463	96036955	761	2
745145308	296	97029921	410	4	772002708	500	918731808	31	1
745159301	370	939292201	3	1	772624608	161	916283508	1	1
745159301	610	939294201	3	1	773326508	766	917268108	3	1
745165608	296	97029921	370	1	773404508	659	925141508	6	1.6
746001601	368	932916901	17	1	773404508	751	968728808	19	2.5
746001601	608	939294001	20	1	773444090	756	917267208	1	1
746221908	360	570109008	11	1	773445108	657	919028808	14	3
746506608	692	921456108	2	1	773913308	657	919028808	6	1
746506608	694	967771908	2	1	773933508	659	925141508	3	1
746506608	755	925203408	2	1	773933508	701	966134608	24	1
746607401	754	910836808	37	1	773933508	734	917268408	14	1
747000277	648	12102921	22	2	773953608	755	925203408	1	1
747004501	78	90028956	3	78	774119708	437	962282208	1	1
747006101	370	939292201	17	114	774119808	439	962282308	1	1
747006101	610	939294201	17	114	774206408	287	919007708	186	2
747258401	353	90008901	4	1	774208008	287	919007708	181	4
747272501	368	932916901	16	1	774208508	482	96020359	10	1
747272501	608	939294001	19	1	774209708	291	96034631	180	1
747404001	353	90008901	71	1	774209908	520	918731908	181	1
749009408	677	917292108	47	1	774210508	496	969763408	309	1
749010208	668	917291908	21	2	774211308	496	969763408	304	1
749010208	673	917292008	47	1	774214308	287	919007708	183	4
749010808	681	917292208	47	1	774215008	186	10126713	3	1
749011408	685	917292308	47	1	774215008	232	10145173	8	4
749014908	365	917259708	3	1	774215008	252	10140729	25	2
749014908	604	967969608	20	1	774215508	496	969763408	311	1
749056414	75	91001377	4	1	774217608	520	918731908	180	3
749056414	108	91001378	4	1	774218808	287	919007708	184	6
761021703	370	939292201	76	1	774221708	480	918759808	24	7
761021703	610	939294201	76	1	774225008	482	96020359	18	1
761022503	354	927554301	6	1	774227108	280	918731408	180	2
761022503	374	90200104	14	1	774227708	496	969763408	310	1
761022503	612	90200103	14	1	774227908	287	919007708	180	1
761022903	374	90200104	2	2	774301101	367	90208882	18	1
761022903	612	90200103	2	2	774301808	129	919644008	21	8
761035303	78	90028956	59	2	774320108	348	969050308	7	1
761081903	78	90028956	8	1	7743242	673	917292008	16	2
761081903	370	939292201	9	3	7743242	677	917292108	16	2
7615379	288	919007708	424	1	7743242	681	917292208	16	2
7615379	496	969763408	648	1	7743242	685	917292308	16	2
7615379	565	96045351	833	2	7743242	690	917292408	30	2
7617268	57	96035801	659	2	7743242	753	919007108	6	1
7617268	564	96045351	805	2	774351714	83	11320954	7	1
7617354	57	96035801	638	4	774372608	523	917261208	11	1
7617354	563	96045351	621	2	774372608	613	921444108	1	1
7617354	722	967785408	604	2	774372708	523	917261208	12	1
7617460	57	96035801	641	2	774372708	613	921444108	2	2
7617460	563	96045351	658	11	774372808	523	917261208	10	1
7617460	728	967785008	601	4	774373808	138	11347500	1	1
7617461	56	96035801	619	1	774373808	526	11002916	2	1
7617461	132	968077208	602	4	774374508	129	919644008	38	8
7617461	722	967785408	605	1	774374808	135	917257108	19	16
7617494	564	96045351	731	4	774375108	135	917257108	6	2

Item	Page	Assembly	Pos.	Quantity	Item	Page	Assembly	Pos.	Quantity
774375108	523	917261208	9	2	811203308	406	916162508	15	1
774378108	523	917261208	(1)	1	811203308	421	917304708	48	1
774383508	135	917257108	26	10	811205108	421	917304708	47	1
774387208	523	917261208	3	1	811205708	209	10120186	105	1
774387508	525	10327065	11	1	811205708	244	12418347	105	1
779010901	370	939292201	80	1	811205708	260	9079823	109	1
779012201	370	939292201	84	1	811205708	267	10144227	109	1
779016201	353	90008901	88	1	811205708	276	10144036	105	1
779016608	657	919028808	15	8	811208001	189	10155227	102	1
779020108	545	922648308	2	6	861303501	367	90208882	38	0.1
779034708	752	917531708	3	1	8627609	189	10155227	112	1
779040801	395	917304508	18	2	8655016	217	10142942	105	1
789000308	153	928620108	5	1	8655032	180	11389608	104	1
789000701	367	90208882	34	1	8655032	205	10149578	104	1
789011908	287	919007708	150	2	870002808	711	966291008	265	0.1
789011908	348	969050308	8	1	870004108	406	916162508	23	1
790001708	152	928569808	10	1	872101908	153	928620108	6	1
790002208	152	928569808	12	1	885132208	152	928569808	21	1
790002408	152	928569808	13	1	885166108	152	928569808	29	1
790002508	152	928569808	16	1	885251508	92	968420608	11	1
790002608	152	928569808	17	1	885251508	152	928569808	2	1
790002808	152	928569808	18	1	885251508	157	96063087	7	1
790002908	152	928569808	19	1	885252008	767	917268208	4	1
790003308	152	928569808	11	1	885602114	151	919328608	6	1
790003608	152	928569808	15	1	890020214	151	919328608	11	1
790003908	152	928569808	20	1	90008901	351	919369308	1	2
790004608	152	928569808	22	1	90010683	353	90008901	10	1
790020008	152	928569808	31	1	90017588	371	939292201	700	1
790020108	152	928569808	32	1	90025640	349	917259408	1	1
790021008	152	928569808	33	1	90025781	353	90008901	960	1
790021208	152	928569808	34	1	90025782	353	90008901	970	1
790021308	152	928569808	35	1	90028852	604	967969608	10	1
790021608	152	928569808	30	1	90028956	75	91001377	2	1
790026208	152	928569808	63	1	90028956	108	91001378	2	1
790026308	152	928569808	64	1	90200103	606	90028852	10	1
790026408	152	928569808	65	1	90200104	365	917259708	6	1
790028508	152	928569808	66	1	90208882	365	917259708	1	1
790030008	152	928569808	60	1	90208884	367	90208882	50	1
790031108	152	928569808	61	1	9072834	196	10147438	3	1
790031508	152	928569808	62	1	9072904	241	9072906	1	1
790032008	152	928569808	50	1	9072906	177	13455297	331	1
790032308	152	928569808	51	1	9072907	241	9072906	2	1
790032508	152	928569808	52	1	9072908	241	9072906	3	1
790033208	152	928569808	53	1	9073343	238	9080294	2	1
790042008	152	928569808	70	1	9073699	175	13455297	(3)	1
790042214	151	919328608	7	1	9073734	198	10116939	1	5
790042708	151	919328608	9	1	9074480	202	10149580	(7)	4
790042908	152	928569808	71	1	9074480	204	10149579	7	4
790042914	151	919328608	8	1	9074481	202	10149580	(9)	4
790045408	152	928569808	1	1	9074481	204	10149579	9	4
790065608	151	919328608	4	1	9074798	202	10149580	4	2
790202814	69	917436708	(1)	288	9075606	198	10116939	2	5
790533908	151	919328608	5	2	9075607	175	13455297	(2)	1
8008673	151	919328608	10	1	9076457	174	13455297	51	1
802102008	447	96017704	150	14	9076531	273	12583633	10	2
802102008	451	968977308	50	33.22	9076550	273	12583633	11	1
811201314	226	10146791	108	1	9076588	269	10151328	90	1
811201314	277	9077386	108	1	9076638	252	10140729	17	4
811203108	406	916162508	16	1	9077238	179	13455297	530	1
811203108	421	917304708	49	1	9077327	277	9077386	1	1

Item	Page	Assembly	Pos.	Quantity	Item	Page	Assembly	Pos.	Quantity
9077384	277	9077386	2	1	917260608	13		146	1
9077386	276	10144036	1	1	917261208	13		169	1
9077612	277	9077386	3	1	917261808	14		187	1
9078233	213	10129474	6	1	917262208	14		203	1
9078301	179	13455297	654	1	917262408	14		217	1
9078314	177	13455297	260	1	917262508	14		229	1
9078522	207	11448005	6	2	917265308	14		302	1
9078849	260	9079823	1	1	917267108	14		330	1
9078935	229	10143342	4	1	917267208	14		332	1
9079078	205	10149578	9	1	917267308	14		333	1
9079130	226	10146791	3	1	917267508	14		350	1
9079131	211	9079870	3	2	917268108	14		352	1
9079532	192	10150934	2	1	917268208	766	917268108	1	1
9079603	195	10139112	7	1	917268408	14		356	1
9079823	178	13455297	480	1	917269308	15		383	1
9079870	175	13455297	110	4	917269408	15		389	1
9080294	237	10127566	1	1	917291908	663	918804808	1	1
9080310	243	10145278	5	1	917292008	663	918804808	2	1
9080377	189	10155227	8	1	917292108	663	918804808	3	1
9080466	247	10148216	3	3	917292208	663	918804808	4	1
9080660	189	10155227	10	1	917292308	663	918804808	5	1
91000922	14		181	1	917292408	663	918804808	6	1
91001371	12		10	1	917292608	668	917291908	1	1
91001373	12		11	1	917292708	673	917292008	1	1
91001377	70	91001371	1	1	917292808	677	917292108	1	1
91001378	103	91001373	1	1	917292908	681	917292208	1	1
91001569	12		2	1	917293008	685	917292308	1	1
91001571	12		26	1	917293108	690	917292408	1	1
91002861	12		109	1	917304508	13		131	1
910040808	14		363	1	917304608	13		132	1
910836808	14		316	1	917304708	13		133	1
9132281	181	10154379	11	2	917305408	395	917304508	1	1
9132577	269	10151328	93	1	917368108	629	918377508	10	1
9140351	232	10145173	6	2	917379608	14		285	1
9140351	252	10140729	26	1	917404008	13		148	1
9144757	208	11358102	5	1	917404508	13		147	1
9144762	208	11358102	(3)	1	917413208	14		334	1
915037208	15		440	1	917430308	129	919644008	100	1
915432508	15		391	1	917436708	12		8	2
915731908	12		39	2	917511508	32	919499308	1	1
916049908	13		138	1	917511608	35	917511508	1	1
916162508	395	917304508	2	1	917531708	14		304	1
916162808	381	919010208	19	1	917551608	14		286	1
916163008	395	917304508	5	1	917598408	740	917379608	1	1
916165808	417	917304608	1	1	917610208	13		141	1
916166208	14		199	1	917611508	14		299	1
916168308	395	917304508	3	1	917618608	13		150	1
916170808	381	919010208	5	1	917626608	12		108	1
916177508	381	919010208	3	1	917676208	13		134	1
916283508	12		40	1	917676308	13		155	1
916959808	12		46	1	917691008	12		13	1
917257108	12		20	1	9177636	181	10154379	6	10
917258108	12		44	1	9177776	232	10145173	10	1
917259408	12		117	1	9177776	251	10144756	2	2
917259608	13		121	1	9177948	278	9078301	2	1
917259708	13		125	1	917825508	12		110	1
917259808	13		127	1	9178294	275	10125687	(6)	1
917259908	13		129	1	917862808	12		42	1
917260108	13		140	1	917966708	15		364	1
917260408	13		144	1	918124908	14		321	1

Item	Page	Assembly	Pos.	Quantity	Item	Page	Assembly	Pos.	Quantity
918197708	14		362	1	922676808	722	967785408	(487)	1
918377508	15		401	1	922849008	763	923285508	1	1
918462408	15		417	1	923015608	723	968222808	1486	1
918462708	15		381	1	923015608	723	968222808	1487	1
918628408	14		301	1	923016208	619	968083708	1254	1
918731108	12		103	1	923016308	597	918739608	349	1
918731408	12		105	1	923087208	622	969426308	(1446)	1
918731508	13		139	1	923285508	761	917267508	2	1
918731808	13		162	1	923342808	597	918739608	333	1
918731908	13		165	1	923343408	622	969426308	(1447)	1
918732808	14		185	1	923343608	596	918739608	309	1
918739608	14		191	1	923512208	48	96045227	500	18
918759808	13		145	1	923512208	49	96045228	500	26
918802108	14		195	2	923512208	142	96045205	500	3
918804808	14		201	1	923512208	462	96036955	500	53
918807308	663	918804808	7	1	923512208	464	96036956	500	29
918810308	13		135	1	923512208	532	96045385	500	76
918925508	12		6	2	923512208	535	96037136	500	58
918955408	12		107	1	923512208	536	96037137	500	21
918956108	13		153	1	923512208	538	96037133	500	4
918956208	14		193	1	923512208	642	96043733	500	2
918989008	15		438	1	923512208	644	96037132	500	4
918992008	15		491	1	923512208	738	96068455	500	1
919007108	14		310	1	923512208	741	917598408	(500)	4
919007708	280	918731408	1	1	923661808	690	917292408	5	1
919010208	13		130	1	923672408	690	917292408	6	1
919028808	13		175	1	923702508	58	96035802	803	1
919087608	12		30	1	923853008	596	918739608	314	1
919127808	15		421	1	923879808	761	917267508	40	1
919296408	103	91001373	4	1	923982608	765	923879808	1	1
919296508	70	91001371	4	1	924134808	597	918739608	332	1
919296608	32	919499308	3	1	924496108	58	96035802	813	2
919328608	12		24	1	924567508	622	969426308	(1445)	1
919369308	12		119	1	924741208	596	918739608	303	1
919373908	13		164	1	924741208	596	918739608	304	1
919410708	14		179	1	925042108	761	917267508	3	1
919499308	12		4	1	925141508	657	919028808	9	1
919499408	12		22	1	925143708	659	925141508	1	1
919499508	12		23	1	925185208	657	919028808	10	1
919510708	32	919499308	2	1	925185308	657	919028808	11	1
919553608	12		78	1	925203408	754	910836808	1	5
919617008	12		111	1	925352308	597	918739608	360	1
919644008	12		14	1	925642908	129	919644008	28	4
919674408	13		163	1	925642908	751	968728808	18	1
919783608	13		143	1	925686208	590	969347008	1376	1
919832508	12		104	1	926028808	596	918739608	330	1
920381108	49	96045228	503	1	926041308	596	918739608	228	1
920715608	58	96035802	800	12	926041708	58	96035802	812	1
920715608	58	96035802	814	4	926098108	590	969347008	1377	1
920896108	619	968083708	1261	1	926120008	99	96035799	834	1
920978208	341	91002861	(2390)	1	926120008	116	96035798	834	1
920983508	58	96035802	891	1	926130108	596	918739608	202	1
921255408	718	968187108	483	1	926289108	597	918739608	351	1
921444108	604	967969608	200	1	926315908	58	96035802	815	2
921456108	690	917292408	2	1	926362908	596	918739608	325	1
921456108	739	910040808	1	1	926379108	619	968083708	1256	1
921990108	597	918739608	342	1	926465408	58	96035802	808	1
922068108	597	918739608	368	1	926555408	132	968077208	(881)	4
922628908	597	918739608	410	1	926561708	596	918739608	222	1
922648308	544	969256608	23	1	926606608	596	918739608	214	1

Item	Page	Assembly	Pos.	Quantity	Item	Page	Assembly	Pos.	Quantity
926610108	597	918739608	335	1	927745401	370	939292201	20	1
926711908	597	918739608	350	1	927745901	370	939292201	50	1
926757108	597	918739608	372	1	927746101	370	939292201	55	1
9268131	252	10140729	18	1	927746301	370	939292201	75	1
926891108	544	969256608	25	1	927996308	532	96045385	508	1
926976308	99	96035799	835	1	927996308	535	96037136	517	1
926976308	116	96035798	835	1	928005808	596	918739608	316	1
926990808	597	918739608	402	1	928006008	597	918739608	356	1
927032108	596	918739608	224	1	928013408	159	96056969	(1)	2
9271340	186	10126713	5	1	928022908	597	918739608	364	1
927163908	722	967785408	11	1	928024908	596	918739608	211	1
927232508	590	969347008	1378	1	928025108	619	968083708	1262	1
927294708	597	918739608	379	1	928033508	58	96035802	806	2
927295708	596	918739608	218	1	928037208	597	918739608	406	1
927295708	619	968083708	1266	1	928042908	597	918739608	369	1
9273161	232	10145173	7	2	928046908	596	918739608	313	1
9273271	217	10142942	2	2	928046908	619	968083708	1257	1
9273690	276	10144036	6	1	928456608	496	969763408	(430)	1
9274859	181	10154379	10	5	928569808	151	919328608	1	1
927501901	354	927554301	2	1	928620108	151	919328608	2	1
927501901	374	90200104	13	1	928720408	597	918739608	405	1
927501901	612	90200103	13	1	928762308	596	918739608	317	1
927504701	608	939294001	23	1	928765908	729	968223308	1493	1
927514301	370	939292201	16	38	928865508	58	96035802	810	2
927514301	610	939294201	16	38	928874708	58	96035802	801	4
9275178	269	10151328	91	1	928876208	597	918739608	358	1
927530201	353	90008901	13	1	929310208	132	968077208	(880)	4
927530301	353	90008901	14	1	929312908	590	969347008	1379	1
927530801	353	90008901	40	3	929331808	718	968187108	481	1
927531901	353	90008901	16	1	929391108	596	918739608	318	1
927554301	353	90008901	77	1	929529908	768	968090008	1	1
927554401	354	927554301	1	1	929582108	761	917267508	1	1
9275826	263	10116110	16	1	929582208	762	929582108	1	1
927586201	374	90200104	12	2	929591608	762	929582108	6	1
927586201	612	90200103	12	1	929631408	597	918739608	374	1
927601301	370	939292201	6	1	929742608	619	968083708	1383	1
927601401	370	939292201	7	5	929752308	58	96035802	809	1
927601901	370	939292201	25	1	929753308	729	968223308	1491	1
927602001	372	90017588	30	1	929802108	719	968187308	481	1
927602101	372	90017588	32	3	929802208	719	968187308	482	1
927602301	370	939292201	46	1	929802308	719	968187308	483	2
927602501	370	939292201	60	1	929802808	719	968187308	484	1
927602601	370	939292201	65	1	929803008	719	968187308	486	1
927602801	370	939292201	41	1	929803108	719	968187308	488	1
927602801	372	90017588	31	1	929804608	719	968187308	489	1
927602901	370	939292201	35	1	929806008	719	968187308	490	1
927606901	608	939294001	30	1	931185608	378	917259908	15	3
927608501	370	939292201	40	1	931549101	368	932916901	20	1
927608601	370	939292201	42	3	931807501	353	90008901	5	1
927608801	370	939292201	45	1	932916901	367	90208882	1	1
927610201	374	90200104	15	1	935508808	20	91001569	52	8
927610201	612	90200103	15	1	938865908	763	923285508	11	1
927613508	596	918739608	206	1	938996401	353	90008901	85	1
927637908	619	968083708	1255	1	938996501	353	90008901	90	1
927716701	353	90008901	70	1	939249808	734	917268408	5	1
927742801	370	939292201	58	1	939250301	353	90008901	15	1
927745001	370	939292201	1	1	939251101	353	90008901	20	5
927745101	370	939292201	5	1	939251401	353	90008901	30	1
927745301	370	939292201	15	1	939251501	353	90008901	35	1
927745301	610	939294201	15	1	939251601	353	90008901	45	1

Item	Page	Assembly	Pos.	Quantity	Item	Page	Assembly	Pos.	Quantity
939251701	353	90008901	60	1	953756608	604	967969608	23	1
939251801	353	90008901	65	1	953756708	768	968090008	5	2
939257301	353	90008901	50	1	953873408	41	96045226	25	1
939279608	751	968728808	20	1	953873408	119	917691008	20	16
939292201	367	90208882	5	1	953873408	129	919644008	25	8
939292301	370	939292201	10	1	953873408	144	96045206	12	4
939294001	606	90028852	1	1	953873408	150	919499408	85	4
939294201	606	90028852	5	1	953873408	280	918731408	21	2
939589501	370	939292201	(997)	1	953873408	286	919007708	14	6
939589601	370	939292201	(998)	1	953873408	365	917259708	22	4
939589701	370	939292201	(999)	1	953873408	507	919674408	5	1
939599301	374	90200104	1	2	953873408	616	967784808	313	4
939599301	612	90200103	1	2	954113708	445	96036790	27	2
939637901	368	932916901	15	1	954117308	334	96023117	24	1
940116008	76	91001377	67	4	954128608	668	917291908	69	1
940116008	109	91001378	67	4	954313608	567	96035117	11	1
9412158	164	917862808	35	1	954706408	673	917292008	10	1
941530008	147	919087608	15	4	954706408	677	917292108	10	1
942164608	20	91001569	8	2	954706408	681	917292208	10	1
944029908	761	917267508	25	1	954706408	685	917292308	10	1
944134103	353	90008901	36	1	954706408	690	917292408	27	1
944303303	78	90028956	56	1	955500008	449	968923508	7	1
946104608	286	919007708	34	2	955552508	761	917267508	20	1
946509308	734	917268408	6	1	955552608	761	917267508	29	1
947868208	762	929582108	2	2	955581808	690	917292408	25	1
947868208	765	923879808	3	1	955668108	604	967969608	24	1
948717708	129	919644008	19	4	955668108	604	967969608	(9)	1
949361408	761	917267508	18	1	955917908	701	966134608	26	4
949362208	761	917267508	19	1	955918008	701	966134608	25	2
951111408	20	91001569	28	2	955927208	668	917291908	67	13
952177008	280	918731408	20	2	955974308	761	917267508	31	1
952177008	286	919007708	31	5	956078908	75	91001377	22	1
952940908	449	968923508	5	2	956078908	108	91001378	22	1
953147708	761	917267508	8	1	956078908	345	917825508	5	2
953504308	172	918731108	4	6	956347808	761	917267508	11	2
953515408	337	917626608	8	3	956348108	761	917267508	24	2
953515508	337	917626608	9	1	956348608	761	917267508	45	1
953515508	345	917825508	10	8	956348708	761	917267508	46	1
953536408	739	910040808	2	1	956348808	761	917267508	14	1
953536508	739	910040808	3	1	956348908	761	917267508	15	1
953536608	690	917292408	7	1	956349008	763	923285508	4	1
953536708	690	917292408	8	1	956349108	763	923285508	5	1
953608508	147	919087608	9	2	956414208	701	966134608	21	4
953608508	761	917267508	17	2	956414308	701	966134608	20	4
953650008	604	967969608	22	7	956474508	365	917259708	23	2
953650008	668	917291908	68	28	956474508	604	967969608	4	2
953650008	690	917292408	57	12	956572408	668	917291908	63	2
953661008	288	919007708	400	1	957025308	673	917292008	24	4
953695308	26	96034894	18	2	957025308	677	917292108	24	4
953695308	29	96034977	18	2	957025308	681	917292208	24	4
953695308	157	96063087	4	6	957025308	685	917292308	24	4
953695308	334	96023117	9	4	957025308	690	917292408	46	4
953695308	421	917304708	6	2	957025408	673	917292008	28	4
953695308	449	968923508	6	6	957025408	677	917292108	28	4
953695308	457	969016008	4	4	957025408	681	917292208	28	4
953696908	523	917261208	22	2	957025408	685	917292308	28	4
953713908	690	917292408	10	1	957025408	690	917292408	45	4
953714108	668	917291908	65	2	96000309	76	91001377	80	1
953717608	669	917291908	74	1	96000309	109	91001378	80	1
953749408	690	917292408	4	1	96000310	76	91001377	81	1

Item	Page	Assembly	Pos.	Quantity	Item	Page	Assembly	Pos.	Quantity
96000310	109	91001378	81	1	96029256	668	917291908	3	1
96000311	76	91001377	82	1	96030724	467	96053500	1	1
96000311	109	91001378	82	1	96031888	331	96034533	2450	1
96000312	76	91001377	83	1	96032222	433	918810308	5	1
96000312	109	91001378	83	1	96032223	433	918810308	6	1
96002833	734	917268408	4	1	96032358	331	96034533	2457	1
96004280	652	917260608	10	4	96032574	430	969085208	(2802)	1
96004318	286	919007708	30	1	96033140	467	96053500	19	1
96004475	484	10876576	999	1	96033227	471	96022872	9	1
96006879	531	96045384	58	1	96033235	341	91002861	(2395)	1
96007145	657	919028808	2	1	96034411	596	918739608	201	1
96011801	500	918731808	20	1	96034456	286	919007708	50	1
96013575	691	917292408	63	1	96034457	286	919007708	(1612)	1
96013575	756	917267208	2	1	96034515	280	918731408	2	1
96013988	504	96011801	2333	1	96034522	280	918731408	3	1
96014023	331	96034533	2456	1	96034533	280	918731408	290	1
96014060	331	96034533	2463	1	96034535	331	96034533	2451	1
96014317	99	96035799	844	1	96034540	331	96034533	2453	1
96014317	116	96035798	829	1	96034631	286	919007708	2	1
96014732	504	96011801	2313	1	96034858	341	91002861	(2391)	1
96014733	504	96011801	2311	1	96034872	342	96066379	1	1
96014734	504	96011801	2315	1	96034873	341	91002861	2	1
96014807	463	96036955	2998	2	96034894	20	91001569	2	1
96014807	537	96037137	2998	10	96034962	76	91001377	200	1
96015921	381	919010208	2	1	96034977	20	91001569	10	1
96015926	383	96015921	1	1	96034980	109	91001378	200	1
96017704	445	96036790	1	1	96035067	511	96051842	1	1
96018230	75	91001377	1	1	96035068	511	96051842	2	1
96018575	601	918628408	500	1	96035070	511	96051842	3	2
96019396	108	91001378	1	1	96035071	511	96051842	4	1
96020259	426	917676208	(2824)	1	96035073	511	96051842	5	2
96020359	480	918759808	1	1	96035117	560	96045351	19	1
96020727	763	923285508	2	1	96035171	507	919674408	2	1
96021362	433	918810308	7	1	96035326	328	96034515	1	1
96021363	433	918810308	8	1	96035593	500	918731808	(2335)	1
96021365	433	918810308	9	1	96035597	328	96034515	3	2
96022872	467	96053500	2	1	96035632	596	918739608	203	1
96022873	471	96022872	1	1	96035633	596	918739608	204	1
96022970	531	96045384	63	1	96035634	596	918739608	205	1
96023028	334	96023117	3	1	96035635	596	918739608	207	1
96023109	68	918925508	1	1	96035646	599	918956208	240	1
96023117	332	918955408	1	1	96035739	329	96034522	1	1
96023301	331	96034533	2466	1	96035792	113	919296408	4	1
96023875	468	96053500	56	1	96035796	96	919296508	4	1
96023876	468	96053500	(10)	1	96035798	115	96035792	10	1
96023914	332	918955408	100	1	96035799	98	96035796	10	1
96023930	335	96023914	10	1	96035801	53	919296608	4	1
96023931	335	96023914	11	1	96035802	56	96035801	10	1
96023932	335	96023914	14	1	96035803	56	96035801	11	1
96023960	335	96023914	19	1	96035865	58	96035802	816	4
96023967	331	96034533	2455	1	96035888	99	96035799	840	1
96024265	657	919028808	20	1	96035889	99	96035799	841	1
96024886	426	917676208	(2823)	1	96035890	116	96035798	830	1
96024954	504	96011801	2316	1	96035891	116	96035798	831	1
96025887	381	919010208	4	1	96035892	116	96035798	832	1
96028313	334	96023117	2	1	96035893	116	96035798	833	1
96028331	616	967784808	152	1	96035894	99	96035799	843	1
96028333	98	96035796	161	1	96035905	60	96035803	706	1
96028333	115	96035792	161	1	96035906	60	96035803	707	1
96028878	631	918989008	20	4	96035907	60	96035803	708	1

Item	Page	Assembly	Pos.	Quantity	Item	Page	Assembly	Pos.	Quantity
96035909	60	96035803	709	1	96051842	507	919674408	1	1
96035910	60	96035803	726	1	96051843	511	96051842	90	1
96035911	60	96035803	727	1	96051844	511	96051842	(2)	1
96035912	60	96035803	728	1	96051845	511	96051842	(1)	1
96035913	60	96035803	729	1	96052297	467	96053500	3	2
96035929	599	918956208	304	1	96053500	460	919783608	6	1
96036790	441	918731508	1	1	96056968	155	91001571	1	1
96036907	147	919087608	12	1	96056969	155	91001571	14	1
96036954	460	919783608	5	1	96057002	159	96056969	10	1
96036955	461	96036954	2	1	96057226	383	96015921	8	1
96036956	461	96036954	7	1	96058512	75	91001377	12	8
96036998	332	918955408	4	1	96058512	108	91001378	12	8
96037000	332	918955408	5	1	96061724	540	91000922	6	2
96037028	500	918731808	30	1	96062678	76	91001377	400	1
96037033	500	918731808	8	1	96063087	155	91001571	7	1
96037130	633	918992008	4	1	96066379	341	91002861	1	1
96037131	633	918992008	5	1	96068455	735	918197708	13	1
96037132	643	96037130	23	1	96068483	430	969085208	(2800)	1
96037133	531	96045384	70	1	96069293	430	969085208	400	1
96037136	531	96045384	51	1	961727008	147	919087608	5	1
96037137	531	96045384	52	1	961861508	729	968223308	1492	1
96037138	531	96045384	62	1	961940008	734	917268408	1	1
96037229	631	918989008	10	1	962196208	535	96037136	515	1
96039022	329	96034522	2	1	962255708	597	918739608	386	1
96039752	517	919373908	1	1	962255708	597	918739608	387	1
96040431	597	918739608	370	1	962282208	436	96032222	1	1
96040432	596	918739608	254	2	962282308	438	96032223	1	1
96040433	596	918739608	209	1	962440508	596	918739608	200	1
96040434	596	918739608	255	1	962602108	728	967785008	19	1
96040435	596	918739608	210	1	962625708	701	966134608	9	1
96040847	597	918739608	376	1	962641808	597	918739608	378	1
96041566	511	96051842	100	1	962771108	668	917291908	20	1
96043733	641	96045237	5	1	962913408	718	968187108	480	3
96044685	99	96035799	836	1	962947308	701	966134608	4	1
96044685	116	96035798	836	1	962947408	701	966134608	5	1
96045204	140	919499508	10	1	962956708	597	918739608	346	1
96045205	141	96045204	30	1	962963808	75	91001377	56	1
96045206	140	919499508	30	1	962963808	108	91001378	56	1
96045225	37	919510708	1	1	962963808	493	967978908	15	1
96045226	39	96045225	2	1	962968508	723	968222808	1488	1
96045227	41	96045226	21	1	962968508	723	968222808	1489	1
96045228	41	96045226	23	1	962968608	718	968187108	482	1
96045237	633	918992008	3	1	962968908	729	968223308	1490	1
96045351	552	918732808	4	1	962969208	597	918739608	388	1
96045384	527	919410708	12	1	962969208	597	918739608	389	1
96045385	531	96045384	50	1	962977608	730	968223408	495	2
96045386	540	91000922	2	1	962977708	730	968223408	496	2
96045387	541	96045386	1	1	963062208	445	96036790	25	1
96045388	542	96045387	2	1	963170408	596	918739608	308	1
96045601	150	919499408	50	1	963171408	590	969347008	1373	1
96045603	150	919499408	51	1	963257908	383	96015921	2	1
96045838	286	919007708	(1)	1	963337608	590	969347008	1372	1
96045839	286	919007708	(2)	1	963398008	467	96053500	35	1
96046407	511	96051842	250	2	963398008	544	969256608	26	2
96048757	384	96057226	1	1	963457808	597	918739608	334	1
96049688	129	919644008	2	2	963498508	691	917292408	79	1
96049689	129	919644008	3	2	963544508	445	96036790	26	3
96050083	560	96045351	(999)	1	963544508	518	96039752	4	1
96050169	76	91001377	300	1	963556008	690	917292408	9	1
96050638	426	917676208	400	1	963557408	734	917268408	(2)	1

Item	Page	Assembly	Pos.	Quantity	Item	Page	Assembly	Pos.	Quantity
963560708	597	918739608	411	1	965945408	597	918739608	353	1
963562308	619	968083708	1263	1	965946108	341	91002861	(2394)	1
963703908	619	968083708	1258	1	965991908	627	917269408	10	1
963926708	597	918739608	383	1	966051108	597	918739608	339	1
963949708	445	96036790	39	1	966134608	695	918807308	2	1
964093408	445	96036790	9	1	966142408	596	918739608	306	1
964273708	596	918739608	217	1	966145808	619	968083708	1270	1
964307108	445	96036790	17	2	966167808	41	96045226	2	1
964476008	601	918628408	(1100)	1	966181208	527	919410708	8	1
964581908	129	919644008	5	4	966184308	597	918739608	400	1
964813808	286	919007708	15	1	966189708	42	966167808	1	1
964843708	433	918810308	12	2	966200208	663	918804808	10	1
964843808	433	918810308	13	1	966204108	41	96045226	4	2
964843908	433	918810308	14	1	966230408	421	917304708	25	1
964958008	729	968223308	1494	1	966230508	421	917304708	27	1
964984108	433	918810308	26	2	966230608	421	917304708	28	1
965021508	433	918810308	46	2	966230708	421	917304708	29	1
965155808	596	918739608	236	1	966230808	421	917304708	30	1
965159708	597	918739608	336	1	966241008	390	916170808	14	1
965198708	597	918739608	354	1	966253708	423	966230508	1	1
965255408	378	917259908	26	1	966253908	423	966230508	2	2
965281408	527	919410708	10	1	966269808	387	916177508	2	1
965356108	335	96023914	30	1	966270208	387	916177508	(1)	1
965371708	712	966591508	1	1	966270808	387	916177508	1	1
965417108	467	96053500	17	1	966282308	399	917305408	1	1
965426208	294	968026308	1	1	966282408	399	917305408	2	1
965426308	294	968026308	2	1	966290708	701	966134608	30	1
965434608	597	918739608	352	1	966290908	706	917262208	3	1
965461108	544	969256608	2	1	966291008	707	966290908	5	1
965547208	546	967589508	2	1	966298308	604	967969608	100	1
965617208	463	96036955	995	6	966298408	604	967969608	(8)	1
965617208	533	96045385	995	2	966350208	596	918739608	307	1
965622108	48	96045227	996	20	966354008	707	966290908	4	1
965622108	50	96045228	996	20	966354408	708	966354008	4	1
965622108	463	96036955	996	8	966354508	708	966354008	6	1
965622108	464	96036956	996	8	966354908	714	968708708	18	1
965622108	533	96045385	996	62	966355308	714	968708708	110	1
965622108	535	96037136	996	124	966357008	714	968708708	120	1
965622108	537	96037137	996	52	966361408	706	917262208	6	1
965622108	738	96068455	996	3	966361508	706	917262208	(1)	1
965622208	48	96045227	998	1	966363808	421	917304708	37	1
965622208	50	96045228	998	1	966377308	711	966291008	120	1
965622208	142	96045205	998	3	966393608	711	966291008	140	1
965622208	463	96036955	998	1	966394008	711	966291008	130	1
965622208	464	96036956	998	1	966394208	711	966291008	160	1
965622208	533	96045385	998	1	966394808	711	966291008	170	1
965622208	535	96037136	998	1	966395208	711	966291008	190	1
965622208	537	96037137	998	1	966408908	415	916163008	1	1
965622208	538	96037133	998	3	966435308	157	96063087	3	1
965622208	642	96043733	998	2	966473108	663	918804808	9	1
965622208	644	96037132	998	3	966479308	735	918197708	1	1
965622208	738	96068455	998	2	966497808	409	966497908	2	1
965622208	741	917598408	(998)	2	966497908	406	916162508	1	1
965751108	625	918462708	15	1	966513708	409	966497908	17	1
965760208	731	918124908	12	1	966546008	719	968187308	480	3
965760308	731	918124908	13	1	966563508	712	966591508	8	1
965763608	399	917305408	9	1	966591508	707	966290908	10	1
965784408	406	916162508	4	1	966620008	399	917305408	13	1
965807808	551	969061708	1	1	966621108	399	917305408	12	1
965861108	597	918739608	340	3	966629308	388	96025887	1	1

Item	Page	Assembly	Pos.	Quantity	Item	Page	Assembly	Pos.	Quantity
966631008	365	917259708	100	1	967972308	75	91001377	10	1
966633308	529	968128908	30	1	967972308	108	91001378	10	1
966633408	529	968128908	17	1	967972408	75	91001377	11	4
966633508	529	968128908	18	1	967972408	108	91001378	11	4
966662508	381	919010208	6	1	967977708	591	917261808	2	1
966707708	476	917260408	2	1	967978808	492	967928508	1	1
966720708	529	968128908	50	1	967978908	489	918956108	20	1
966796408	151	919328608	100	1	967980508	591	917261808	1	1
966825408	421	917304708	10	1	967982708	455	969015908	2	1
966860008	619	968083708	1253	1	967985808	378	917259908	1	1
966860408	597	918739608	367	1	967986308	381	919010208	1	1
966861108	597	918739608	331	1	967986408	382	967986308	1	1
966979108	467	96053500	52	1	967996008	20	91001569	9	2
966980708	467	96053500	36	2	967996108	147	919087608	3	1
967219908	597	918739608	373	1	967996608	129	919644008	4	4
967257808	433	918810308	39	2	968007308	597	918739608	357	1
967260908	470	96030724	4	1	968010508	658	968068308	1	1
967307008	387	916177508	26	1	968011508	147	919087608	4	1
967321308	735	918197708	10	1	968011608	147	919087608	6	1
967354708	619	968083708	1267	1	968014808	129	919644008	13	4
967355108	596	918739608	215	1	968014908	129	919644008	6	4
967363808	473	10340105	999	1	968019508	20	91001569	50	1
967421808	136	11347526	27	1	968021308	612	90200103	10	1
967421808	525	10327065	30	1	968021408	612	90200103	25	1
967541908	461	96036954	3	1	968021508	374	90200104	10	1
967542008	461	96036954	4	1	968021608	374	90200104	25	1
967588308	433	918810308	3	1	968025208	286	919007708	3	1
967588408	433	918810308	4	1	968025308	286	919007708	4	1
967589508	544	969256608	24	1	968026308	286	919007708	7	1
967618508	597	918739608	385	1	968036408	30	968019508	1	2
967623008	596	918739608	300	1	968036508	31	968036408	1	1
967709108	49	96045228	521	1	968038208	119	917691008	10	6
967771808	734	917268408	2	1	968038308	119	917691008	11	6
967771908	691	917292408	78	7	968046208	119	917691008	50	2
967771908	734	917268408	27	1	968049608	41	96045226	1	1
967774608	734	917268408	100	1	968050708	124	968046208	1	2
967775308	399	917305408	34	1	968052308	124	968046208	4	4
967784508	715	917262408	4	1	968054008	41	96045226	3	1
967784808	614	917267308	4	1	968054808	365	917259708	5	2
967785008	726	917265308	4	1	968055808	108	91001378	9	1
967785408	720	917262508	4	1	968063108	540	91000922	4	1
967850808	378	917259908	3	1	968068308	657	919028808	1	1
967916508	655	917404508	31	2	968072808	458	917260108	1	1
967916508	656	917404008	41	1	968073008	458	917260108	2	1
967916808	655	917404508	30	2	968075708	393	968514508	1	1
967916808	656	917404008	40	1	968077208	130	917430308	4	1
967921908	630	917368108	20	1	968077308	132	968077208	10	1
967928508	489	918956108	2	1	968078808	132	968077208	11	1
967933408	743	968412508	1	1	968083608	616	967784808	19	1
967936408	743	968412508	2	1	968083708	616	967784808	10	1
967936908	652	917260608	1	1	968083808	616	967784808	11	1
967937508	654	967936908	1	1	968090008	766	917268108	2	1
967937608	743	968412508	3	1	968100408	447	96017704	10	1
967969608	602	917267108	3	1	968128908	527	919410708	11	1
967969708	602	917267108	4	2	968139808	597	918739608	348	1
967969708	758	917413208	8	2	968141708	619	968083708	1260	1
967969908	604	967969608	1	1	968143708	99	96035799	837	1
967970008	604	967969608	2	2	968143708	116	96035798	837	1
967970408	731	918124908	1	1	968144208	58	96035802	805	1
967972208	75	91001377	9	1	968144308	58	96035802	807	1

Item	Page	Assembly	Pos.	Quantity	Item	Page	Assembly	Pos.	Quantity
968144408	58	96035802	811	1	968223408	728	967785008	11	1
968144708	58	96035802	804	1	968252908	43	968054008	5	1
968148408	99	96035799	842	1	968253608	540	91000922	5	5
968148708	622	969426308	(1448)	1	968266508	744	967933408	1	1
968148808	622	969426308	(1449)	1	968267108	633	918992008	2	1
968149608	619	968083708	1250	1	968267208	639	968993508	1	1
968149808	619	968083708	1268	1	968267308	639	968993508	2	1
968149908	619	968083708	1269	1	968267408	639	968993508	3	1
968150008	619	968083708	1384	1	968270108	75	91001377	29	1
968150108	619	968083708	1385	1	968270108	108	91001378	29	1
968150708	596	918739608	219	1	968274208	75	91001377	33	1
968150708	596	918739608	234	1	968274208	108	91001378	33	1
968151108	596	918739608	301	1	968290608	636	968994408	1	1
968151208	596	918739608	302	1	968290708	637	968290608	1	1
968151308	596	918739608	305	1	968290908	636	968994408	2	1
968151408	596	918739608	310	1	968314308	616	967784808	(1)	1
968151808	596	918739608	321	1	968315808	616	967784808	18	1
968151908	596	918739608	322	1	968331708	124	968046208	9	6
968152008	596	918739608	323	1	968349808	590	969347008	1374	1
968152008	596	918739608	324	1	968349908	619	968083708	1251	1
968152508	597	918739608	355	1	968350008	619	968083708	1252	1
968154808	599	918956208	300	1	968350108	619	968083708	1382	1
968154908	599	918956208	301	1	968350608	596	918739608	213	1
968155008	599	918956208	302	1	968350708	596	918739608	226	1
968155108	599	918956208	303	1	968350908	596	918739608	231	1
968156108	599	918956208	320	1	968351008	596	918739608	233	1
968158208	599	918956208	260	1	968351208	596	918739608	320	1
968158508	599	918956208	265	1	968351408	597	918739608	343	1
968158908	599	918956208	473	1	968351508	597	918739608	345	1
968159008	599	918956208	474	1	968351808	597	918739608	381	1
968159108	599	918956208	475	1	968352008	597	918739608	384	1
968159308	599	918956208	477	1	968352108	597	918739608	377	1
968159408	599	918956208	478	2	968401508	531	96045384	57	1
968159508	599	918956208	479	1	968410408	747	917551608	1	1
968162308	616	967784808	(250)	1	968412508	740	917379608	2	1
968162408	616	967784808	(251)	1	968420608	76	91001377	65	1
968166708	60	96035803	700	1	968420608	109	91001378	65	1
968166808	60	96035803	701	1	968497408	752	917531708	1	1
968166908	60	96035803	702	1	968498108	658	968068308	2	1
968167008	60	96035803	703	1	968514508	381	919010208	20	1
968167108	60	96035803	704	1	968537008	596	918739608	225	1
968167808	60	96035803	712	1	968544708	496	969763408	(327)	1
968167908	60	96035803	713	1	968570808	500	918731808	10	1
968168008	60	96035803	714	1	968585908	58	96035802	802	4
968168108	60	96035803	715	1	968593808	60	96035803	722	2
968168208	60	96035803	716	2	968593908	60	96035803	723	2
968168308	60	96035803	717	2	968594008	60	96035803	724	2
968168408	60	96035803	718	2	968594108	60	96035803	725	2
968168508	60	96035803	719	2	968599208	596	918739608	319	1
968168608	60	96035803	720	2	968646408	627	917269408	2	1
968168708	60	96035803	721	2	968648408	626	917269308	9	1
968168808	132	968077208	(760)	4	968648508	626	917269308	10	1
968187108	717	967784508	10	1	968655508	445	96036790	18	1
968187308	717	967784508	11	1	968661408	288	919007708	404	2
968201408	730	968223408	494	2	968693208	527	919410708	30	1
968205108	60	96035803	770	4	968708608	706	917262208	4	1
968205208	60	96035803	771	4	968708708	713	968708608	1	1
968210808	633	918992008	1	1	968709108	75	91001377	34	1
968222808	722	967785408	10	1	968709108	108	91001378	34	1
968223308	728	967785008	10	1	968710308	124	968046208	2	2

Item	Page	Assembly	Pos.	Quantity	Item	Page	Assembly	Pos.	Quantity
968728808	749	968811608	1	1	969493508	445	96036790	19	1
968729008	751	968728808	1	1	969572608	597	918739608	361	1
968765608	35	917511508	25	4	969574508	504	96011801	2310	1
968811608	748	917611508	1	1	969633008	590	969347008	1375	1
968841908	58	96035802	890	1	969633808	596	918739608	212	1
968918808	286	919007708	1	1	969633908	596	918739608	229	1
968923508	445	96036790	2	1	969634008	596	918739608	235	1
968928808	445	96036790	3	1	969634108	596	918739608	221	1
968933608	445	96036790	4	1	969634308	596	918739608	230	1
968977308	445	96036790	24	1	969634408	596	918739608	329	1
968981408	291	96034631	1	1	969634508	597	918739608	375	1
968981508	291	96034631	2	1	969634608	597	918739608	380	1
968986008	286	919007708	8	1	969634708	597	918739608	382	1
968992508	652	917260608	15	1	969634908	597	918739608	403	1
968993508	638	968267108	1	1	969637808	601	918628408	(1103)	1
968994408	635	968210808	1	1	969723508	731	918124908	11	1
968999708	337	917626608	1	1	969759208	507	919674408	104	1
969002508	445	96036790	7	1	969763408	494	917676308	4	1
969007208	449	968923508	1	1	969763608	496	969763408	12	1
969015908	441	918731508	2	1	969763908	496	969763408	19	1
969016008	455	969015908	1	1	969842608	496	969763408	10	1
969016108	455	969015908	3	1	969842808	496	969763408	11	1
969017908	457	969016008	1	1	969904608	500	918731808	16	1
969034108	341	91002861	(2393)	1	969935008	597	918739608	341	1
969041408	601	918628408	(1102)	1	969939408	328	96034515	4	1
969047708	741	917598408	1	1	969978408	496	969763408	(328)	1
969050308	345	917825508	1	1	969979608	496	969763408	(326)	1
969050408	348	969050308	1	1	969997708	78	90028956	(999)	1
969061708	540	91000922	12	1	97000274	421	917304708	2	1
969072608	339	968999708	1	1	97000275	421	917304708	3	1
969085208	426	917676208	20	1	97000276	421	917304708	4	1
969089708	520	918731908	1	1	97000277	421	917304708	5	1
969101808	430	969085208	1	1	97000279	406	916162508	5	1
969132208	455	969015908	4	1	970003708	291	96034631	9	1
969165508	60	96035803	710	1	97000389	415	916163008	6	1
969165608	60	96035803	711	1	97000436	412	916168308	1	1
969168408	129	919644008	11	8	97000437	412	916168308	2	1
969185608	591	917261808	3	1	97000438	412	916168308	3	1
969256608	541	96045386	2	1	97000440	412	916168308	4	1
969324808	599	918956208	245	1	97000442	412	916168308	5	1
969324908	599	918956208	246	1	97000466	399	917305408	10	1
969325008	599	918956208	247	1	97000467	399	917305408	11	1
969325108	599	918956208	290	1	97000469	399	917305408	15	1
969325208	599	918956208	291	1	97000470	399	917305408	14	1
969325308	599	918956208	292	1	97000492	421	917304708	26	1
969344508	599	918956208	200	1	97000516	421	917304708	31	1
969347008	552	918732808	10	1	97000517	421	917304708	32	1
969383908	500	918731808	(2331)	1	97000735	390	916170808	2	1
969384408	504	96011801	2314	1	97001013	401	966282308	1	1
969386508	596	918739608	315	1	97001014	402	966282408	1	1
969386708	597	918739608	396	1	97001015	399	917305408	3	1
969426308	620	917966708	4	1	97001048	399	917305408	6	1
969426408	622	969426308	10	1	97001095	423	966230508	3	2
969431008	567	96035117	3	1	97001102	424	966253908	1	1
969438208	599	918956208	309	1	97001103	424	966253908	3	2
969438308	599	918956208	230	1	97001109	424	966253908	6	2
969444008	172	918731108	19	1	97001248	412	916168308	6	1
969452108	504	96011801	2312	2	97001249	412	916168308	7	1
969452208	596	918739608	326	1	97001250	412	916168308	8	2
969452608	601	918628408	(1101)	1	97001317	387	916177508	25	1

Item	Page	Assembly	Pos.	Quantity	Item	Page	Assembly	Pos.	Quantity
97001318	387	916177508	(2)	1	97009160	395	917304508	7	2
97001404	399	917305408	5	1	97009799	164	917862808	101	1
97001553	399	917305408	17	1	97010811	544	969256608	6	1
97001589	399	917305408	4	1	97010812	544	969256608	7	1
97001699	401	966282308	2	1	97010814	544	969256608	11	1
97001700	402	966282408	2	1	97010815	544	969256608	14	1
97001711	421	917304708	33	1	97011112	150	919499408	74	1
97001760	421	917304708	34	1	97011113	150	919499408	75	1
97001821	673	917292008	19	1	97011114	150	919499408	76	1
97001821	677	917292108	19	1	97011115	150	919499408	77	1
97001821	681	917292208	19	2	97011246	381	919010208	18	1
97001821	685	917292308	19	2	97011478	20	91001569	26	2
97001821	690	917292408	13	2	97011689	164	917862808	95	1
97002207	399	917305408	18	1	97011690	164	917862808	96	1
97002209	399	917305408	19	1	97012017	409	966497908	29	2
97002609	399	917305408	23	1	97012184	421	917304708	44	1
97002645	390	916170808	3	1	97012288	390	916170808	6	1
97002990	421	917304708	15	1	97013718	467	96053500	(1)	1
97002990	433	918810308	47	4	97015127	150	919499408	55	2
97003164	416	966408908	1	1	97015722	381	919010208	10	1
97003298	399	917305408	24	1	97016304	164	917862808	49	1
97003558	409	966497908	1	1	97016392	164	917862808	72	4
97003560	406	916162508	2	1	97016752	387	916177508	31	1
97003561	406	916162508	3	1	97017074	540	91000922	13	1
97003805	383	96015921	10	1	97017499	20	91001569	36	16
97004696	401	966282308	3	1	97019129	421	917304708	52	1
97005040	412	916168308	9	1	97020380	652	917260608	(2)	3
97005042	412	916168308	10	2	97022452	467	96053500	53	1
97005143	401	966282308	4	1	97024733	540	91000922	14	1
97005144	402	966282408	3	1	97024781	406	916162508	19	1
97005272	409	966497908	3	1	97024783	406	916162508	24	1
97005273	409	966497908	4	1	97025080	641	96045237	24	1
97005289	409	966497908	5	1	97025127	409	966497908	35	3
97005290	409	966497908	6	1	97025484	291	96034631	121	4
97005291	409	966497908	7	1	97025520	734	917268408	(1)	1
97005309	409	966497908	11	9	97025690	395	917304508	8	1
97006055	409	966497908	18	1	97025882	544	969256608	8	1
97006057	409	966497908	19	1	97026779	421	917304708	54	1
97006461	415	916163008	9	1	97027202	673	917292008	6	1
97006497	767	917268208	3	1	97027202	677	917292108	6	1
97006624	415	916163008	4	1	97027202	681	917292208	6	1
97006863	399	917305408	16	1	97027202	685	917292308	6	1
97006874	399	917305408	32	6	97027202	690	917292408	21	1
97006875	399	917305408	36	1	97027203	674	917292008	62	3
97006876	399	917305408	37	1	97027203	677	917292108	62	3
97007030	426	917676208	2	1	97027203	681	917292208	62	3
97007043	424	966253908	8	1	97027203	685	917292308	62	3
97007597	400	917305408	60	4	97027358	694	967771908	1	1
97007649	393	968514508	2	1	97027494	400	917305408	65	1
97008063	378	917259908	18	1	97028159	399	917305408	48	4
97008156	751	968728808	17	1	97028172	690	917292408	12	1
97008171	424	966253908	5	1	97028296	690	917292408	14	8
97008317	637	968290608	2	1	97028395	378	917259908	7	2
97008317	640	968267208	1	1	97028396	378	917259908	8	1
97008318	637	968290608	3	1	97029040	482	96020359	50	1
97008318	640	968267208	2	1	97029382	690	917292408	3	1
97008548	477	966707708	2	1	97029921	286	919007708	100	1
97008549	477	966707708	1	1	97030027	492	967928508	2	1
97008572	406	916162508	13	1	97030028	492	967928508	3	1
97009056	668	917291908	13	1	97030029	492	967928508	4	1

Item	Page	Assembly	Pos.	Quantity	Item	Page	Assembly	Pos.	Quantity
97030030	492	967928508	5	1	97031991	20	91001569	13	40
97030031	492	967928508	6	1	97031992	20	91001569	14	16
97030032	492	967928508	7	2	97032012	20	91001569	17	2
97030033	492	967928508	8	2	97032020	147	919087608	7	1
97030037	492	967928508	9	1	97032051	363	917259608	2	1
97030038	489	918956108	5	2	97032093	129	919644008	10	4
97030039	489	918956108	10	6	97032133	35	917511508	21	4
97030182	744	967933408	2	1	97032155	129	919644008	8	8
97030303	654	967936908	5	2	97032162	378	917259908	17	1
97030304	654	967936908	6	2	97032167	129	919644008	7	4
97030305	654	967936908	7	2	97032197	129	919644008	12	4
97030307	746	967937608	1	1	97032260	294	968026308	21	1
97030323	758	917413208	1	2	97032261	348	969050308	3	1
97030562	745	967936408	3	1	97032263	287	919007708	203	1
97031196	758	917413208	7	2	97032320	129	919644008	29	4
97031197	602	917267108	6	2	97032370	75	91001377	48	1
97031203	604	967969608	3	2	97032370	108	91001378	48	1
97031205	604	967969608	5	2	97032383	75	91001377	52	1
97031206	604	967969608	6	2	97032383	108	91001378	52	1
97031233	751	968728808	15	3	97032409	75	91001377	45	2
97031233	758	917413208	2	2	97032409	108	91001378	45	2
97031266	86	967972208	1	1	97032592	287	919007708	256	1
97031267	86	967972208	2	1	97032611	30	968019508	2	4
97031267	110	968055808	2	1	97032616	30	968019508	4	6
97031271	87	967972308	1	1	97032617	30	968019508	5	8
97031272	87	967972308	2	1	97032618	31	968036408	2	1
97031272	89	968270108	2	1	97032619	30	968019508	6	2
97031273	88	967972408	1	1	97032646	120	968038208	1	2
97031274	88	967972408	2	1	97032646	121	968038308	1	2
97031342	492	967928508	10	1	97032647	120	968038208	2	2
97031349	592	967980508	5	1	97032647	121	968038308	2	2
97031350	592	967980508	6	1	97032687	351	919369308	3	2
97031351	592	967980508	4	1	97032691	119	917691008	12	72
97031434	378	917259908	30	1	97032692	124	968046208	10	8
97031454	378	917259908	32	1	97032692	129	919644008	63	12
97031462	378	917259908	36	2	97032692	150	919499408	63	16
97031463	378	917259908	37	1	97032836	124	968046208	5	3
97031480	75	91001377	30	2	97032837	124	968046208	6	3
97031480	108	91001378	30	2	97032838	124	968046208	7	32
97031481	75	91001377	31	2	97032839	124	968046208	8	32
97031481	108	91001378	31	2	97032840	125	968331708	2	1
97031535	378	917259908	4	1	97032978	646	919617008	2	1
97031536	378	917259908	5	1	97032979	646	919617008	3	1
97031537	378	917259908	6	1	97032982	286	919007708	18	1
97031538	455	969015908	5	1	97032989	43	968054008	1	1
97031539	455	969015908	6	1	97032990	43	968054008	2	1
97031540	455	969015908	7	1	97033009	129	919644008	23	2
97031570	455	969015908	8	1	97033010	129	919644008	24	2
97031571	455	969015908	9	1	97033021	365	917259708	4	2
97031639	20	91001569	4	8	97033038	363	917259608	9	1
97031640	20	91001569	5	16	97033100	110	968055808	1	1
97031641	20	91001569	6	32	97033103	480	918759808	50	4
97031642	20	91001569	7	32	97033140	455	969015908	15	1
97031659	758	917413208	3	2	97033141	459	917610208	1	1
97031660	758	917413208	4	8	97033142	455	969015908	17	1
97031661	758	917413208	5	8	97033143	455	969015908	18	1
97031684	758	917413208	6	8	97033190	378	917259908	40	1
97031752	652	917260608	4	4	97033250	150	919499408	56	2
97031860	35	917511508	10	1	97033251	150	919499408	57	2
97031901	507	919674408	7	1	97033301	35	917511508	22	4

Item	Page	Assembly	Pos.	Quantity	Item	Page	Assembly	Pos.	Quantity
97033302	493	967978908	1	1	97038559	20	91001569	54	2
97033304	493	967978908	2	2	97038560	20	91001569	55	2
97033305	493	967978908	3	1	97038833	426	917676208	12	1
97033306	493	967978908	4	2	97038834	426	917676208	13	1
97033307	493	967978908	5	1	97038835	426	917676208	14	1
97033309	493	967978908	6	1	97038836	426	917676208	15	1
97033348	430	969085208	23	1	97038837	426	917676208	16	1
97033383	124	968046208	24	4	97038838	426	917676208	17	1
97033390	124	968046208	25	4	97039156	119	917691008	16	2
97033487	406	916162508	7	1	97039157	119	917691008	17	2
97033889	286	919007708	21	1	97039386	60	96035803	772	4
97033897	26	96034894	16	1	97039387	60	96035803	773	4
97033897	29	96034977	16	1	97039388	60	96035803	774	4
97033902	26	96034894	19	1	97039389	60	96035803	775	4
97033902	29	96034977	19	1	97039420	125	968331708	1	1
97033925	480	918759808	51	1	97039576	124	968046208	11	2
97033935	26	96034894	15	1	97039611	35	917511508	16	8
97033935	29	96034977	15	1	97039612	35	917511508	17	8
97034096	363	917259608	3	1	97039613	35	917511508	18	16
97034193	767	917268208	8	1	97039694	172	918731108	12	1
97034194	767	917268208	9	1	97039859	511	96051842	15	5
97034243	480	918759808	52	1	97039932	35	917511508	15	4
97034262	75	91001377	61	1	97039936	286	919007708	24	2
97034262	108	91001378	61	1	97039973	20	91001569	62	2
97034281	447	96017704	101	1	97039974	21	91001569	63	4
97034282	447	96017704	103	1	97040155	75	91001377	44	16
97034296	445	96036790	12	1	97040155	108	91001378	44	16
97034301	445	96036790	16	1	97040355	378	917259908	21	8
97034322	451	968977308	3	1	97040356	378	917259908	39	6
97034837	363	917259608	8	1	97040643	92	968420608	1	1
97035163	20	91001569	37	8	97040644	92	968420608	2	1
97035164	20	91001569	38	8	97040645	92	968420608	3	1
97035511	616	967784808	(1)	1	97041747	286	919007708	26	1
970365108	280	918731408	10	2	97041755	92	968420608	14	1
97036732	164	917862808	68	1	97042011	135	917257108	22	4
97036914	20	91001569	40	4	97042067	482	96020359	62	1
97036916	20	91001569	42	4	97042069	430	969085208	8	1
97037153	56	96035801	300	6	97042069	480	918759808	16	1
97037154	56	96035801	301	6	97042071	430	969085208	9	1
97037244	75	91001377	60	1	97042155	430	969085208	6	1
97037244	108	91001378	60	1	97042167	658	968068308	7	1
97037383	500	918731808	82	1	970422908	668	917291908	38	2
97037477	400	917305408	67	2	970422908	673	917292008	40	2
97037626	39	96045225	20	2	970422908	677	917292108	40	2
97037694	616	967784808	(2)	1	970422908	681	917292208	40	2
97037936	172	918731108	13	1	970422908	685	917292308	40	2
97037945	20	91001569	25	2	97042475	745	967936408	9	1
97037947	640	968267208	4	1	97042598	489	918956108	6	2
97037948	639	968993508	5	1	97042636	492	967928508	30	1
97037952	164	917862808	18	1	97042769	35	917511508	19	16
97037959	639	968993508	4	1	97042770	35	917511508	20	16
97037975	89	968270108	1	1	97043049	35	917511508	24	4
97038088	90	968274208	1	1	97043050	35	917511508	11	4
97038089	90	968274208	2	1	97043051	35	917511508	13	8
97038268	639	968993508	9	1	97043334	164	917862808	90	4
97038364	496	969763408	(1)	1	97043335	164	917862808	91	4
97038431	286	919007708	22	4	97043336	164	917862808	92	4
97038433	395	917304508	16	1	97043682	20	91001569	60	8
97038475	286	919007708	23	2	97043683	20	91001569	61	8
97038484	147	919087608	16	2	97044048	56	96035801	157	2

Item	Page	Assembly	Pos.	Quantity	Item	Page	Assembly	Pos.	Quantity
970447008	349	917259408	2	62	97052119	409	966497908	8	1
97044721	601	918628408	1	1	97052637	129	919644008	9	4
97045050	286	919007708	16	1	97052638	520	918731908	2	1
97045111	567	96035117	4	1	97053069	172	918731108	22	1
97045292	401	966282308	5	1	97053103	286	919007708	40	1
97045387	365	917259708	26	6	97053104	286	919007708	41	1
97045388	365	917259708	27	2	97053174	749	968811608	6	1
970456308	701	966134608	2	1	97053346	455	969015908	19	1
970456508	701	966134608	6	1	97053350	455	969015908	13	1
970456608	701	966134608	7	1	970535808	673	917292008	9	1
97045974	91	968709108	1	1	970535808	677	917292108	9	1
97045975	91	968709108	2	1	970535808	681	917292208	9	1
97046043	406	916162508	18	1	970535808	685	917292308	9	1
97046324	430	969085208	10	1	970535808	690	917292408	24	1
97046326	430	969085208	13	1	970536108	677	917292108	12	2
97046327	430	969085208	15	1	970536108	681	917292208	12	2
97046328	430	969085208	16	1	970536108	685	917292308	12	2
97046349	751	968728808	2	1	970536108	690	917292408	31	2
97046465	129	919644008	40	4	97053616	287	919007708	202	1
97047272	365	917259708	25	2	970536208	677	917292108	13	10
97047274	365	917259708	28	2	970536208	681	917292208	13	10
97047676	135	917257108	50	1	970536208	685	917292308	13	10
970477608	701	966134608	8	2	970536208	690	917292408	35	10
97047984	286	919007708	13	1	97053626	35	917511508	23	4
97048340	493	967978908	20	1	970536608	673	917292008	15	2
97048341	493	967978908	21	1	970536608	677	917292108	15	2
97049098	20	91001569	59	8	970536608	681	917292208	15	2
970491108	695	918807308	3	1	970536608	685	917292308	15	2
97049712	445	96036790	35	1	970536608	690	917292408	32	2
97049723	507	919674408	105	1	970537008	673	917292008	25	2
97049782	445	96036790	13	1	970537008	677	917292108	25	2
97049819	445	96036790	10	1	970537008	681	917292208	25	2
97049833	445	96036790	14	1	970537008	685	917292308	25	2
97049834	445	96036790	15	1	970537008	690	917292408	40	2
97050548	520	918731908	251	1	970537108	673	917292008	26	2
97050669	451	968977308	5	1	970537108	677	917292108	26	2
97050671	451	968977308	7	1	970537108	681	917292208	26	2
97050672	451	968977308	12	1	970537108	685	917292308	26	2
97050762	291	96034631	5	1	970537108	690	917292408	41	2
97050763	291	96034631	6	1	970537508	673	917292008	29	2
97050764	291	96034631	7	1	970537508	677	917292108	29	2
97050776	21	91001569	65	2	970537508	681	917292208	29	2
97050852	480	918759808	15	1	970537508	685	917292308	29	2
97050857	430	969085208	11	1	970537508	690	917292408	39	2
97050878	287	919007708	201	1	97053770	767	917268208	7	2
97050879	286	919007708	12	1	970537708	673	917292008	27	2
97050880	286	919007708	17	2	970537708	677	917292108	27	2
97050881	286	919007708	10	1	970537708	681	917292208	27	2
97050893	287	919007708	250	1	970537708	685	917292308	27	2
97050894	287	919007708	251	1	970537708	690	917292408	38	2
97050960	291	96034631	10	1	970537808	673	917292008	31	12
970509808	668	917291908	56	1	970537808	677	917292108	31	18
97051193	652	917260608	(1)	1	970537808	681	917292208	31	14
97051275	751	968728808	11	2	970537808	685	917292308	31	14
97051276	751	968728808	12	2	970537808	690	917292408	42	12
97051278	751	968728808	14	1	97053934	288	919007708	402	2
97051280	751	968728808	16	4	970545508	673	917292008	11	1
97051324	468	96053500	66	1	970545608	673	917292008	12	2
97051749	451	968977308	9	1	970545708	673	917292008	13	10
97051989	378	917259908	38	1	97055159	287	919007708	200	1

Item	Page	Assembly	Pos.	Quantity	Item	Page	Assembly	Pos.	Quantity
97055971	451	968977308	8	1	97081505	382	967986308	8	2
97056389	567	96035117	6	1	97081862	388	96025887	6	2
97056391	567	96035117	7	1	970821508	172	918731108	9	4
97056998	562	96045351	341	5	97082749	769	918462408	1	1
97056998	622	969426308	304	1	97083604	520	918731908	431	1
97057024	520	918731908	4	1	970837708	701	966134608	32	2
970574508	677	917292108	11	1	97083880	547	926891108	1	1
97057512	601	918628408	20	1	97084641	500	918731808	1	1
97058382	445	96036790	11	2	97084642	500	918731808	7	1
97058386	451	968977308	10	1	97087964	520	918731908	3	1
97058387	451	968977308	11	1	97088496	421	917304708	56	1
97058414	445	96036790	(1)	1	97089358	388	96025887	4	1
970591108	172	918731108	2	2	970904808	147	919087608	8	8
97059337	286	919007708	19	1	97091350	328	96034515	8	1
97059376	291	96034631	3	1	97093425	94	96034962	16	1
97059489	507	919674408	8	3	97093426	94	96034962	15	1
970598608	646	919617008	5	1	97093426	112	96034980	15	1
97060689	164	917862808	100	1	97093427	94	96034962	1	1
97060781	482	96020359	60	1	97093427	112	96034980	1	1
97060786	482	96020359	55	1	97093428	94	96034962	4	1
97061080	286	919007708	36	1	97093428	112	96034980	4	1
970611208	349	917259408	3	72	97093429	26	96034894	3	1
97061150	286	919007708	5	1	97093430	26	96034894	1	1
97061151	286	919007708	6	1	97093430	29	96034977	1	1
97061320	286	919007708	9	1	97093433	94	96034962	6	1
97061426	20	91001569	41	4	97093433	112	96034980	6	1
97062372	157	96063087	5	2	97093827	511	96051842	14	4
97062373	157	96063087	6	2	97094637	409	966497908	20	10
97064219	500	918731808	80	1	97094940	164	917862808	107	1
97064220	500	918731808	81	1	97096918	433	918810308	2	2
97064857	328	96034515	(1)	1	97097713	94	96034962	2	1
97065229	286	919007708	42	1	97097713	112	96034980	2	1
97065544	287	919007708	207	1	97098446	144	96045206	1	2
970658608	280	918731408	250	1	97100242	75	91001377	41	1
97066482	76	91001377	87	1	97100242	108	91001378	41	1
97066483	109	91001378	87	1	97100243	75	91001377	42	1
97066819	286	919007708	101	1	97100243	108	91001378	42	1
97067623	658	968068308	9	2	97100419	20	91001569	3	2
97067623	752	917531708	4	2	97100598	334	96023117	1	1
97067626	752	917531708	5	2	97100731	334	96023117	4	1
97067627	658	968068308	8	2	97101894	286	919007708	11	1
970689108	172	918731108	6	8	97103093	26	96034894	2	1
970689208	172	918731108	7	4	97103093	29	96034977	2	1
97070277	734	917268408	3	1	97103682	76	91001377	100	2
97070277	734	917268408	(1)	1	97103682	109	91001378	100	2
97070985	76	91001377	102	4	97103683	76	91001377	101	2
97070985	109	91001378	103	4	97103683	109	91001378	101	2
97071962	390	916170808	15	1	97104844	76	91001377	111	1
97071963	390	916170808	16	1	97104844	109	91001378	112	1
97072035	406	916162508	26	4	97104898	76	91001377	112	12
97072923	286	919007708	(1)	1	97104898	109	91001378	113	12
97072959	286	919007708	32	1	971050008	734	917268408	7	1
97073453	76	91001377	103	2	97105652	388	96025887	3	1
97073453	109	91001378	104	2	971060108	673	917292008	8	3
970762808	567	96035117	9	1	971060108	677	917292108	8	2
970762808	616	967784808	(3)	1	971060108	681	917292208	8	3
97077297	286	919007708	33	1	971060108	685	917292308	8	3
97077309	286	919007708	(2)	3	971060108	690	917292408	20	3
97077348	496	969763408	(4)	1	971063208	668	917291908	37	2
970780908	337	917626608	3	2	971063208	673	917292008	41	2

Item	Page	Assembly	Pos.	Quantity	Item	Page	Assembly	Pos.	Quantity
971063208	677	917292108	41	2	97136699	385	96048757	2	1
971063208	681	917292208	41	2	97136700	385	96048757	3	1
971063208	685	917292308	41	2	97138958	399	917305408	21	1
971067708	734	917268408	10	1	97141550	511	96051842	7	2
971067708	737	967321308	1	1	97141617	511	96051842	8	1
971071608	668	917291908	43	4	97150259	20	91001569	43	4
971071608	674	917292008	61	4	97152371	75	91001377	13	6
971071608	677	917292108	61	4	97152371	108	91001378	13	6
971071608	681	917292208	61	4	971539808	771	919127808	1	1
971071608	685	917292308	61	4	97155412	76	91001377	92	1
971095808	734	917268408	9	2	97155761	109	91001378	92	1
97114100	351	919369308	9	48	97155801	409	966497908	37	10
97116895	351	919369308	8	6	971565208	395	917304508	9	1
97118133	291	96034631	100	1	97158080	20	91001569	39	4
97118534	343	96034872	10	1	97158093	155	91001571	3	1
97118611	29	96034977	3	1	971581108	560	96045351	160	1
97118618	94	96034962	30	1	97158146	95	96062678	1	1
97118618	112	96034980	30	1	97158147	95	96062678	2	1
97118621	112	96034980	16	1	97158853	155	91001571	5	1
97118723	511	96051842	10	1	97158863	157	96063087	1	1
97118724	511	96051842	11	1	97158864	157	96063087	2	1
97118725	511	96051842	12	2	971634008	701	966134608	33	1
97118726	507	919674408	4	1	971636608	437	962282208	2	1
97118726	511	96051842	13	7	971636608	439	962282308	2	1
97118731	511	96051842	105	1	971693508	164	917862808	76	1
97118733	511	96051842	104	1	971749908	164	917862808	2	2
97118752	513	96035073	1	1	971753708	668	917291908	53	4
97118864	507	919674408	6	1	971753708	673	917292008	34	4
97118866	511	96051842	17	1	971753708	677	917292108	34	4
97118867	511	96051842	9	1	971753708	681	917292208	34	4
97118888	507	919674408	101	1	971753708	685	917292308	34	4
97118889	507	919674408	103	1	971774408	561	96045351	194	1
97119732	567	96035117	10	1	971805708	433	918810308	19	4
97121228	518	96039752	1	1	971973608	437	962282208	3	1
97121229	518	96039752	2	1	971973608	439	962282308	3	1
97121306	518	96039752	3	1	971974108	433	918810308	21	4
97121634	500	918731808	9	1	971974208	433	918810308	22	2
97124033	330	96039022	1	1	971995508	669	917291908	79	2
97124264	511	96051842	106	1	971995508	673	917292008	55	2
97124562	567	96035117	1	1	971995508	677	917292108	55	2
971252308	654	967936908	8	2	971995508	681	917292208	55	2
97126014	511	96051842	6	1	971995508	685	917292308	55	2
97126204	172	918731108	23	1	972133308	668	917291908	10	1
97126205	172	918731108	24	1	972140108	363	917259608	5	1
97126286	518	96039752	6	1	972144708	668	917291908	8	1
97126865	151	919328608	21	1	972203808	646	919617008	9	3
97127026	332	918955408	10	1	972261508	701	966134608	31	2
97131530	164	917862808	110	1	972272908	348	969050308	4	1
97132168	150	919499408	81	2	972353808	291	96034631	4	2
97132169	150	919499408	82	2	972357608	365	917259708	24	2
97132207	144	96045206	2	2	972373708	682	917292208	96	2
97133544	94	96034962	3	2	972373708	686	917292308	96	2
97133544	112	96034980	3	2	972373708	691	917292408	81	2
97133617	29	96034977	50	1	972373808	674	917292008	97	2
97133618	26	96034894	50	1	972373808	678	917292108	97	2
97134813	507	919674408	3	1	972373808	682	917292208	97	2
97134822	384	96057226	2	1	972373808	686	917292308	97	2
97135430	164	917862808	17	1	972373808	691	917292408	82	2
97135431	164	917862808	19	1	972392108	674	917292008	96	1
97136698	385	96048757	1	1	972392108	678	917292108	96	1

Item	Page	Assembly	Pos.	Quantity	Item	Page	Assembly	Pos.	Quantity
972426708	673	917292008	49	4	973245908	677	917292108	44	2
972426708	677	917292108	49	4	973246008	677	917292108	45	1
972426708	681	917292208	49	4	973246808	673	917292008	20	4
972426708	685	917292308	49	4	973246808	677	917292108	20	4
972426708	690	917292408	49	4	973246808	681	917292208	20	4
972698608	286	919007708	29	4	973246808	685	917292308	20	4
972898108	673	917292008	39	1	973246808	690	917292408	43	4
972898208	668	917291908	45	33	973246908	673	917292008	21	4
972898208	673	917292008	42	31	973246908	677	917292108	21	4
972898208	677	917292108	42	29	973246908	681	917292208	21	4
972898208	681	917292208	42	28	973246908	685	917292308	21	4
972898208	685	917292308	42	25	973246908	690	917292408	44	4
972898308	673	917292008	43	2	973253208	681	917292208	43	2
972898408	673	917292008	44	2	973253308	681	917292208	44	2
972898508	673	917292008	45	1	973253408	681	917292208	45	1
972898608	668	917291908	49	2	973253908	681	917292208	11	1
972898608	673	917292008	53	2	973254708	682	917292208	67	2
972898708	668	917291908	50	2	973254708	686	917292308	67	2
972898708	673	917292008	54	2	973254708	691	917292408	71	2
972898808	668	917291908	42	2	973258608	685	917292308	39	1
972898808	673	917292008	56	2	973258708	685	917292308	43	2
972898808	677	917292108	56	2	973258808	685	917292308	44	2
972898808	681	917292208	56	2	973258908	685	917292308	45	1
972898808	685	917292308	56	2	973259708	685	917292308	11	1
972908008	673	917292008	7	1	973292708	690	917292408	26	1
972908008	677	917292108	7	1	973336908	668	917291908	31	2
972908008	681	917292208	7	1	973351308	669	917291908	80	2
972908008	685	917292308	7	1	973357208	668	917291908	2	2
972908008	691	917292408	65	1	973357708	668	917291908	46	2
972908108	673	917292008	14	2	973357808	668	917291908	47	2
972908108	677	917292108	14	2	973357908	668	917291908	54	1
972908108	681	917292208	14	2	973358008	668	917291908	55	1
972908108	685	917292308	14	2	973411808	172	918731108	1	2
972908108	690	917292408	48	2	973519308	287	919007708	253	1
972908208	673	917292008	30	2	973567608	658	968068308	10	2
972908208	677	917292108	30	4	973618208	291	96034631	8	2
972908208	681	917292208	30	4	973626408	734	917268408	25	3
972908208	685	917292308	30	4	973717208	286	919007708	27	1
972908208	690	917292408	34	4	973717308	286	919007708	25	1
972908308	673	917292008	32	2	973731008	561	96045351	323	2
972908408	674	917292008	63	2	973740408	691	917292408	73	1
972908408	677	917292108	32	4	973763408	701	966134608	3	1
972908408	681	917292208	32	2	973767608	447	96017704	102	1
972908408	685	917292308	32	2	973774708	668	917291908	34	1
972908408	690	917292408	37	2	973774708	673	917292008	58	1
972934408	728	967785008	(1)	1	973774708	677	917292108	58	1
972940008	544	969256608	13	2	973774708	681	917292208	58	1
972997008	701	966134608	1	1	973774708	685	917292308	58	1
973057708	681	917292208	39	1	973998708	477	966707708	3	1
973077908	668	917291908	11	3	974150408	164	917862808	84	2
973153908	691	917292408	68	2	974150508	164	917862808	85	2
973154008	674	917292008	65	2	974150608	164	917862808	86	2
973154008	678	917292108	65	2	974150708	164	917862808	87	2
973154008	682	917292208	65	2	974272808	669	917291908	93	2
973154008	686	917292308	65	2	974276208	669	917291908	90	1
973154008	691	917292408	67	2	974656608	457	969016008	7	1
973178808	489	918956108	11	6	974657908	455	969015908	11	1
973188508	714	968708708	5	1	974680008	388	96025887	2	2
973245708	677	917292108	39	1	974742308	449	968923508	4	1
973245808	677	917292108	43	2	974792608	445	96036790	(1)	1

Item	Page	Assembly	Pos.	Quantity
974792608	445	96036790	(1)	1
974911108	761	917267508	48	1
974922808	387	916177508	15	4
974925508	646	919617008	4	1
974925608	646	919617008	10	4
975040308	383	96015921	4	1
975113508	711	966291008	1	1
975208408	383	96015921	6	1
975218508	392	916162808	1	2
975218608	392	916162808	2	6
975221808	761	917267508	49	1
975231708	68	918925508	6	1
975302308	669	917291908	81	1
975384508	392	916162808	3	6
975418208	567	96035117	8	1
975418208	616	967784808	(4)	1
975427508	496	969763408	(3)	1
975529708	445	96036790	29	2
975614108	286	919007708	20	1
975683808	387	916177508	(4)	1
975685808	387	916177508	(3)	1
975842108	450	964093408	1	1
975850708	399	917305408	7	1
976094108	390	916170808	5	1
976094308	390	916170808	7	1
976167908	467	96053500	16	1
976193208	390	916170808	8	1
976388708	287	919007708	204	1
976490008	288	919007708	401	1
976536208	548	968063108	5	1
976540908	551	969061708	4	1
976673908	378	917259908	27	4
976873708	636	968994408	3	2
976873708	639	968993508	6	2
976917008	711	966291008	2	1
976955508	601	918628408	3	1
977430408	433	918810308	10	2
977444008	433	918810308	15	1
977444108	433	918810308	16	1
977444308	433	918810308	17	1
977444408	433	918810308	18	1
977667008	714	968708708	4	1
978172508	467	96053500	13	1
978361008	294	968026308	24	1
978361308	294	968026308	23	1
978361608	294	968026308	30	1
978554708	294	968026308	22	1
978606708	548	968063108	1	1
978608608	544	969256608	10	1
978610208	544	969256608	(1)	1
978673908	164	917862808	11	2
978674008	164	917862808	12	8
978674108	164	917862808	14	15
978674308	164	917862808	28	2
978674408	164	917862808	29	5
978674508	164	917862808	31	1
978674608	164	917862808	32	1
978674808	164	917862808	63	12
978674808	652	917260608	(3)	2
978674908	164	917862808	64	1
978675008	164	917862808	66	8
978787708	39	96045225	16	4
978787708	75	91001377	38	6
978787708	108	91001378	38	6
978787708	135	917257108	25	3
978787708	150	919499408	69	12
978787708	172	918731108	15	12
978787708	445	96036790	30	5
978787708	480	918759808	53	4
978787708	496	969763408	(6)	6
978787708	518	96039752	5	2
978787708	635	968210808	2	3
978842708	548	968063108	3	2
978844908	492	967928508	15	1
978867108	164	917862808	33	2
979022508	410	965784408	6	1
979022608	410	965784408	7	2
979132008	691	917292408	84	1
979132008	737	967321308	5	1
979142208	410	965784408	8	4
979204408	46	966204108	5	1
979206708	399	917305408	8	1
979206908	399	917305408	20	1
979207008	383	96015921	3	1
979240608	410	965784408	1	1
979243408	410	965784408	2	1
979243508	410	965784408	3	1
979243608	410	965784408	4	2
979294808	544	969256608	12	2
979294908	548	968063108	2	1
979295008	551	969061708	(1)	1
979320608	440	916049908	1	1
979323301	612	90200103	30	1
979374708	288	919007708	403	1
979383308	164	917862808	62	1
979443608	35	917511508	45	4
979489508	440	916049908	3	1
979620608	511	96051842	16	4
979672708	172	918731108	18	1
979717908	449	968923508	2	2
979718908	445	96036790	22	2
979724708	445	96036790	23	1
979896308	42	966167808	2	1
9885529	275	10125687	(5)	1
9886591	213	10129474	8	1
9886756	213	10129474	9	1
9888259	181	10154379	12	6
9888448	277	9077386	(2)	2
9889290	241	9072906	(2)	2
997040101	761	917267508	26	1

Description	Item	Pos.	Quantity	Page	Assembly	Description
12-SIDED SCREW M10X25 X5N	12475399	4	1	252	10140729	EXHAUST TC MOUNTING
2nd NECK PULLEY INSTALLAT	910040808	363	1	14		LIEBHERR LTR 1220
A COLUMN CLADDING LEFT 1	97002207	18	1	399	917305408	INTERNAL PANELLING INSTA
A COLUMN CLADDING RIGHT 1	97002209	19	1	399	917305408	INTERNAL PANELLING INSTA
A-HEADL.SEARCHLIGHT PIVO	918124908	321	1	14		LIEBHERR LTR 1220
A-HEADLIGHT SLEWING PLA	918989008	438	1	15		LIEBHERR LTR 1220
ABSORBER	10650488	66	1	435	10877138	OPERATOR SEAT
ACCESSORIES	928620108	2	1	151	919328608	TOOLS AND ACCESSORIES
ACCESSORIES AIR COMPRES	10145278	334	1	177	13455297	DIESEL ENGINE
ACTIVATOR 1000ML	870004108	23	1	406	916162508	WINDOW ASSEMBLY
ACTIVATOR 250ML DOSE	10815283	14	1	406	916162508	WINDOW ASSEMBLY
ACTUATION SPIKE GD-ZN SW	704253408	(1)	1	42	966167808	COVER COMPL.
ACTUATION SPIKE GD-ZN SW	704253408	7	4	42	966167808	COVER COMPL.
ACTUATION SPIKE GD-ZN SW	704253408	4	5	86	967972208	COVER PRE-ASSY.
ACTUATION SPIKE GD-ZN SW	704253408	4	2	87	967972308	COVER PRE-ASSY.
ACTUATION SPIKE GD-ZN SW	704253408	4	2	88	967972408	COVER PRE-ASSY.
ACTUATION SPIKE GD-ZN SW	704253408	4	2	89	968270108	COVER PRE-ASSY.
ACTUATION SPIKE GD-ZN SW	704253408	4	2	90	968274208	COVER PRE-ASSY.
ACTUATION SPIKE GD-ZN SW	704253408	4	5	110	968055808	COVER PRE-ASSY.
ACTUATION SPIKE GD-ZN SW	704253408	14	1	334	96023117	BATTERY BOX, PRE-ASSEMB
ACTUATOR WELDED	967996108	3	1	147	919087608	ROTARY FEED THROUGH
ADAPTER RING	11007300	2	1	52	11346779	SLIP RING TRANSMITTER
ADAPTOR 18-POL SPF	660024508	29	1	540	91000922	SWITCHBOX MOUNTING PART
ADAPTOR 19.0X17 S235JRC+C	97051324	66	1	468	96053500	ELECTRIC ADD-ON PARTS CA
ADAPTOR 32X185X45 PAGF30	979243408	2	1	410	965784408	ROOF WINDOW PRE-ASS.
ADAPTOR M16-M10 ST.60-2K	972698608	29	4	286	919007708	DRIVE ASSEMBLY, PRE-ASSE
ADAPTOR RI11/2-EDX1 CR6-F	475502408	769	2	564	96045351	HYDRAULICS UPPER CARRI
ADAPTOR RI11/4-EDX1/2 CR6	475501108	662	2	57	96035801	HYDRAULIC EQUIPM.CENTER
ADAPTOR RI11/4-EDX1/2 CR6	475501108	623	1	98	96035796	HYDR.TRAVEL DRIVE
ADAPTOR RI11/4-EDX1/2 CR6	475501108	623	1	115	96035792	HYDR.TRAVEL DRIVE
ADD HEATING SUPERSTRUCT	918759808	145	1	13		LIEBHERR LTR 1220
ADD-ON PARTS BTT	917618608	150	1	13		LIEBHERR LTR 1220
ADD-ON PARTS CAMERA DB-H	968210808	1	1	633	918992008	CAMERA MONITOR OW
ADD-ON PARTS CAMERA DB	968267108	2	1	633	918992008	CAMERA MONITOR OW
ADD-ON PARTS CYLINDER	966134608	2	1	695	918807308	MECHANICAL EXTENSION SYS
ADD-ON PARTS RAUPENTRAE	968046208	50	2	119	917691008	FALL PROTECTION
ADD-ON PARTS TELE	917551608	286	1	14		LIEBHERR LTR 1220
ADD-ON PARTS WORK FLOOD	96037229	10	1	631	918989008	A-HEADLIGHT SLEWING PLA
ADDITIONAL BALLAST	917404008	148	1	13		LIEBHERR LTR 1220
ADDITIONAL HYDRAULICS	96056969	14	1	155	91001571	BOLT EXTRACTION DEVICE
ADDITIONAL KIT	965356108	30	1	335	96023914	ELECTRIC FOR BATTERY BOX
ADDITIONAL PART LEVEL 5	919373908	164	1	13		LIEBHERR LTR 1220
ADDITIONAL PARTS CLADDIN	96039752	1	1	517	919373908	ADDITIONAL PART LEVEL 5
ADDITIONAL PARTS DREHBU	917610208	141	1	13		LIEBHERR LTR 1220
ADDITIONAL SIGNAGE CALIF	919553608	78	1	12		LIEBHERR LTR 1220
ADDNL.HEATING, PRE-ASSE	96020359	1	1	480	918759808	ADD HEATING SUPERSTRUCT
ADDNL.HYDR. FOLDING JIB	917262508	229	1	14		LIEBHERR LTR 1220
ADDNL.HYDR. FOLDING JIB	917265308	302	1	14		LIEBHERR LTR 1220
ADDNL.HYDR. FOLDING JIB	967785008	4	1	726	917265308	ADDNL.HYDR. FOLDING JIB
ADDNL.HYDR. FOLDING JIB	967785408	4	1	720	917262508	ADDNL.HYDR. FOLDING JIB
ADDNL.HYDR. FOLDING JIB D	917966708	364	1	15		LIEBHERR LTR 1220
ADHESIVE 600ML FC-BEUTEL	811203308	15	1	406	916162508	WINDOW ASSEMBLY
ADHESIVE 600ML FC-BEUTEL	811203308	48	1	421	917304708	SLIDING DOOR INSTALLATION
ADHESIVE CLEANER 250ML	811205108	47	1	421	917304708	SLIDING DOOR INSTALLATION
ADHESIVE FOIL OUTSIDE HA	97088496	56	1	421	917304708	SLIDING DOOR INSTALLATION
ADHESIVE INSULATING STRIP	802102008	150	14	447	96017704	RADIATOR HOOD CPL.
ADHESIVE INSULATING STRIP	802102008	50	33.22	451	968977308	SOUND PROOFING/SOUND I
ADJUSTING BUSHING	7022128	4	1	81	11161917	CONTROL ELEMENT
ADJUSTING DISK 8X74X74 S35	97028396	8	1	378	917259908	CRANE DRIVER CAB ADDITIO
ADJUSTING SCREW M10X1	10012225	5	2	207	11448005	ROCKER ARM BRACKET PRE

Description	Item	Pos.	Quantity	Page	Assembly	Description
ADJUSTMENT	10326925	2	1	305	11210795	VARIABLE PUMP
ADJUSTMENT	10472208	4	1	309	11210798	VARIABLE PUMP
ADJUSTMENT	11690585	2	1	297	11182708	VARIABLE PUMP
ADJUSTMENT	11690585	2	1	300	10871017	VARIABLE PUMP
AERATION FILTER	510667308	6	2	348	969050308	OIL TANK PRE-ASS.
AGGREGATE SUPPORT PRE-	12835708	1	1	183	10147687	POWER UNIT SUPPORT ATT
AGITATOR PADDLE	10014712	27	1	525	10327065	ELECTRIC PUMP
AGITATOR PADDLE	10664141	24	1	136	11347526	ELECTRIC PUMP
AIR COMPRESSOR	10650490	85	1	435	10877138	OPERATOR SEAT
AIR COMPRESSOR 293CM3	5700161	1	1	238	9080294	AIR COMPRESSOR PRE-ASSY
AIR COMPRESSOR PRE-ASSY.	9080294	1	1	237	10127566	INSTALLATION BRAKE COMPR
AIR COND. COMPRESSOR A	12418347	340	1	177	13455297	DIESEL ENGINE
AIR COND. UNIT SUPERSTRU	918628408	301	1	14		LIEBHERR LTR 1220
AIR CONDITIONING COMPRES	12922849	2	1	244	12418347	AIR COND. COMPRESSOR A
AIR CONDITIONING UNIT	11083498	1	1	426	917676208	HEATING CRANE DRIVER'S CA
AIR DRYER	502657308	55	1	496	969763408	PIPEWORK AIR INSTALLATIO
AIR DUCT	916168308	3	1	395	917304508	CRANE OPERATOR CABIN P
AIR DUCT 128X523X170 PP SP	97000437	2	1	412	916168308	AIR DUCT
AIR DUCT 152X627X339 PP SP	97000438	3	1	412	916168308	AIR DUCT
AIR DUCT 81X233X419 PP SPF	97000436	1	1	412	916168308	AIR DUCT
AIR FILTER	7371061	(17)	1	83	11320954	GUIDE WHEEL UNIT
AIR FILTER 18M³/MIN PP	10871700	100	1	520	918731908	AIR FILTER UNIT
AIR FILTER UNIT	918731908	165	1	13		LIEBHERR LTR 1220
AIR GUIDE CHANNEL 39X75X	97004696	3	1	401	966282308	PANELLING,LEFT
AIR GUIDE L 107X394X947 PP	97000440	4	1	412	916168308	AIR DUCT
AIR GUIDE L 113X705X1091 AB	97001699	2	1	401	966282308	PANELLING,LEFT
AIR GUIDE L 144X143X275 PV	97001248	6	1	412	916168308	AIR DUCT
AIR GUIDE R 100X714X953 AB	97001700	2	1	402	966282408	PANELLING
AIR GUIDE R 109X391X941 PP	97000442	5	1	412	916168308	AIR DUCT
AIR GUIDE R 143X150X273 PV	97001249	7	1	412	916168308	AIR DUCT
AIR GUIDING HOSE 100/130 X	97050548	251	1	520	918731908	AIR FILTER UNIT
AIR INTAKE ASSEMBLY R-MOT	10147364	224	1	176	13455297	DIESEL ENGINE
AIR INTAKE PIPE ASS. R-MOT	10147365	220	1	176	13455297	DIESEL ENGINE
AIR SUCTION PIPE R-MOTOR	11415774	1	1	231	10147365	AIR INTAKE PIPE ASS.
AIR TANK DIN 74281 4,5L 15,5	502987108	166	1	496	969763408	PIPEWORK AIR INSTALLATIO
AIR TANK EN 286-2 20L 15.5B	502657708	167	1	496	969763408	PIPEWORK AIR INSTALLATIO
ALLEN KEY GR.3	885166108	29	1	152	928569808	MAIN TOOLS
ANGLE	571687808	18	1	699	571928508	CYLINDER HEAD CPL.
ANGLE 4X150X118 S315MC FE	97031752	4	4	652	917260608	COUNTERWEIGHT WITH CLAM
ANGLE FE//ZNNI8//CN//T0	968036508	1	1	31	968036408	LIMIT SWITCH, PRE-ASSEMB
ANGLE SCREW DRIVER TX 40	10043002	41	1	152	928569808	MAIN TOOLS
ANGLE SCREW DRIVER TX30	10471363	40	1	152	928569808	MAIN TOOLS
ANGLE TRANSMITTER 360° L	10802057	10	1	702	966473108	ENCODER BASE SECTION
ANGLE TRANSMITTER 360° L	10802057	1	1	705	966200208	ENCODER HEAD PIECE
ANTENNA	10450273	4	1	46	966204108	ANTENNA CPL.
ANTENNA	10878172	1	1	662	12257818	CAR RADIO
ANTENNA AKTIV	12102817	11	1	467	96053500	ELECTRIC ADD-ON PARTS CA
ANTENNA CABLE 1,27-2M SEI	10876819	60	1	468	96053500	ELECTRIC ADD-ON PARTS CA
ANTENNA CABLE 1-5M	11114971	59	1	468	96053500	ELECTRIC ADD-ON PARTS CA
ANTENNA CPL.	966204108	4	2	41	96045226	SWITCH BOX COMPL.
ANTENNA ROD	10815004	1	1	47	10450273	ANTENNA
ANTI-SLIP SURFACE 1.6X25X	97037477	67	2	400	917305408	INTERNAL PANELLING INSTA
APPLIANCE SOCKET 3-POL	605007908	505	3	49	96045228	WIRING HARNESS
APPLIANCE SOCKET 3-POL	605007908	502	34	532	96045385	WIRING HARNESS
APPLIANCE SOCKET 3-POL	605007908	502	13	535	96037136	WIRING HARNESS
ARM REST 310ERGO	774119708	1	1	437	962282208	ARM REST LEFT
ARM REST 310ERGO	774119808	1	1	439	962282308	ARM REST RIGHT
ARM REST LEFT	962282208	1	1	436	96032222	REWORK ARMREST LEFT
ARM REST RIGHT	962282308	1	1	438	96032223	REWORK ARMREST RIGHT
ARM REST SUPPORT	971636608	2	1	437	962282208	ARM REST LEFT

Description	Item	Pos.	Quantity	Page	Assembly	Description
ARM REST SUPPORT	971636608	2	1	439	962282308	ARM REST RIGHT
ARM WELDED RAL 7016 LACKI	967985808	1	1	378	917259908	CRANE DRIVER CAB ADDITIO
ASH TRAY KUNSTSTOFF	10291997	33	1	399	917305408	INTERNAL PANELLING INSTA
ASSEMBLY DEVICE LMZ-23T	968068308	1	1	657	919028808	DISPATCH ASSY.MECH.PART
ASSEMBLY DEVICE SCHWK.	968010508	1	1	658	968068308	ASSEMBLY DEVICE
ASSEMBLY GEL 1KG DOSE	12694669	160	1	199	10153583	CRANKSHAFT SEALING
ASSEMBLY PARTS F.SLEWIN	918731108	103	1	12		LIEBHERR LTR 1220
ASSEMBLY PLATE PRE-ASS.	965461108	2	1	544	969256608	BASE ASSEMBLY
ASSEMBLY TOOL BOX	790045408	1	1	152	928569808	MAIN TOOLS
ASSORTMENT BOX FLACHSI	10877437	8	1	153	928620108	ACCESSORIES
ATTACHABLE SLEEVE HOUSIN	604501708	504	2	48	96045227	WIRING HARNESS
ATTACHABLE SLEEVE HOUSIN	602209708	516	1	48	96045227	WIRING HARNESS
ATTACHABLE SLEEVE HOUSIN	602209708	508	4	462	96036955	WIRING HARNESS
ATTACHABLE SLEEVE HOUSIN	602209708	506	2	464	96036956	WIRING HARNESS
ATTACHABLE SLEEVE HOUSIN	602209708	508	1	535	96037136	WIRING HARNESS
ATTACHABLE SLEEVE HOUSIN	602209708	501	5	542	96045387	CABLES, BASIC CONSTRUCTI
ATTACHABLE SLEEVE HOUSIN	602208608	516	1	535	96037136	WIRING HARNESS
ATTACHABLE SLEEVE HOUSIN	602319808	521	1	462	96036955	WIRING HARNESS
AUX. HYDR. FOLDING JIB SP	969426308	4	1	620	917966708	ADDNL.HYDR. FOLDING JIB
AUXILIARY DRIVE PRE-ASS.	10125688	1	1	275	10125687	POWER TAKE-OFF ADD-ON
AUXILIARY DRIVE PRE-ASS.	9077386	1	1	276	10144036	POWER TAKE-OFF ADD-ON
AUXILIARY HOIST.ROPE W.AC	917267208	332	1	14		LIEBHERR LTR 1220
AUXILIARY HOISTING GEAR 2	917267108	330	1	14		LIEBHERR LTR 1220
AUXILIARY HOISTING GEAR 2	967969608	3	1	602	917267108	AUXILIARY HOISTING GEAR 2
AUXILIARY HOISTING GEAR 2	967969908	1	1	604	967969608	AUXILIARY HOISTING GEAR 2
AUXILIARY REEVING CABLE, C	915037208	440	1	15		LIEBHERR LTR 1220
AXIAL FAN 24V	10222682	1	1	474	963398008	PREMOUNT.AXIAL FLOW FAN
AXLE 30.0X95 S355J2C+C FE//	97011246	18	1	381	919010208	CRANE OPERATOR CABIN P
AXLE HOLDER 10X109X30 S35	973178808	11	6	489	918956108	HYDRAULIC BALLASTING
AXLE HOLDER 10X140X40 S35	942164608	8	2	20	91001569	CRAWLER TRACK TRAVEL G
AXLE HOLDER 12X222X222 S	970591108	2	2	172	918731108	ASSEMBLY PARTS F.SLEWING
AXLE HOLDER 12X270X220 S	974925508	4	1	646	919617008	LUFFING RAM W. PIVOT
AXLE HOLDER 15X260X217 S	970598608	5	1	646	919617008	LUFFING RAM W. PIVOT
AXLE HOLDER 8X30X60 S235J	931185608	15	3	378	917259908	CRANE DRIVER CAB ADDITIO
AXLE HOLDER LN 4/1 S235JR+	997040101	26	1	761	917267508	TRANSPORT MOUNTING
AXLE RD150X120 S355J2H FE//	946509308	6	1	734	917268408	BOOM NOSE
AXLE WELDED	923661808	5	1	690	917292408	TELESCOPIC SECT.5 PRE-AS
AXLE WELDED	923672408	6	1	690	917292408	TELESCOPIC SECT.5 PRE-AS
BACK PART	10663466	1	1	435	10877138	OPERATOR SEAT
BAG	11320720	(1)	1	167	916959808	PERSONAL PROTECTION EQ
BALANCER ASSEMBLY	10120186	90	1	175	13455297	DIESEL ENGINE
BALANCER SHAFT PRE-ASS.	10152441	1	2	209	10120186	BALANCER ASSEMBLY
BALL DIN 5401 3	610706308	6	1	725	511479408	LOAD HOLDING VALVE
BALL DIN 5401 3,5	511036508	1	1	63	11643183	CONTROL BLOCK
BALL DIN 5401 3,5	511036508	1	1	66	11643184	CONTROL BLOCK
BALL DIN 5401 6	747000277	22	2	648	12102921	LUFFING CYLINDER
BALL DIN 5401 7	570862108	6	1	63	11643183	CONTROL BLOCK
BALL DIN 5401 7	570862108	6	1	66	11643184	CONTROL BLOCK
BALL DIN 5401 7,5	518512408	9	2	63	11643183	CONTROL BLOCK
BALL DIN 5401 7,5	518512408	9	2	66	11643184	CONTROL BLOCK
BALL ELEMENT PUR SPF	975040308	4	1	383	96015921	OPERATING ELEMENT INSTAL
BALL VALVE BKH12-L-10 A3C	510697608	178	1	561	96045351	HYDRAULICS UPPER CARRI
BALL VALVE BKHU DN 10	571723608	5	1	574	10332882	CONTROL BLOCK
BALL VALVE COMBINATION D	510697708	179	1	561	96045351	HYDRAULICS UPPER CARRI
BALL VALVE DN20-G 3/4	10044661	101	1	342	96066379	PREMOUNTED FUEL FILTER
BALLAST DREHBUEHNE 4X10	917404508	147	1	13		LIEBHERR LTR 1220
BALLAST EXTENSION RAM 24	10877810	1	2	489	918956108	HYDRAULIC BALLASTING
BALLAST MONITORING	919499508	23	1	12		LIEBHERR LTR 1220
BALLAST MONITORING ENCO	918802108	195	2	14		LIEBHERR LTR 1220
BALLAST TRAVERSE 70T	917531708	304	1	14		LIEBHERR LTR 1220

Description	Item	Pos.	Quantity	Page	Assembly	Description
BASE 1X200X70 DC01 FE//ZNNI	949361408	18	1	761	917267508	TRANSPORT MOUNTING
BASE 2X200X70 DC01 FE//ZNNI	949362208	19	1	761	917267508	TRANSPORT MOUNTING
BASE 4X53X28 S315MC FE//ZN	97048341	21	1	493	967978908	INTERLOCKING
BASE ASSEMBLY	969256608	2	1	541	96045386	BASE ASSEMBLY CPL.
BASE ASSEMBLY CPL.	96045386	2	1	540	91000922	SWITCHBOX MOUNTING PART
BASIC WIRING CONST.PRE-A	96045388	2	1	542	96045387	CABLES, BASIC CONSTRUCTI
BATTERY 1.5V 16.5AH	613200608	3	10	153	928620108	ACCESSORIES
BATTERY 12V 180AH	10664204	5	2	335	96023914	ELECTRIC FOR BATTERY BOX
BATTERY BOX CPL.	918955408	107	1	12		LIEBHERR LTR 1220
BATTERY BOX ST.CONST. SP	96023028	3	1	334	96023117	BATTERY BOX, PRE-ASSEMB
BATTERY BOX, PRE-ASSEMB	96023117	1	1	332	918955408	BATTERY BOX CPL.
BATTERY MAIN SWITCH	96023960	19	1	335	96023914	ELECTRIC FOR BATTERY BOX
BATTERY TERMINAL CLAMP 1	613206608	21	2	335	96023914	ELECTRIC FOR BATTERY BOX
BATTERY TERMINAL CLAMP 1	613206508	22	2	335	96023914	ELECTRIC FOR BATTERY BOX
BEARING 12X17X4,6	12209429	28	1	94	96034962	GUIDE LEFT
BEARING 12X17X4,6	12209429	28	1	112	96034980	GUIDE RIGHT
BEARING 6X129X209 S355MC	97032646	1	2	120	968038208	BEARING AHEAD LEFT SIDE
BEARING 6X129X209 S355MC	97032646	1	2	121	968038308	BEARING AHEAD RIGHT SIDE
BEARING AHEAD LEFT SIDE	968038208	10	6	119	917691008	FALL PROTECTION
BEARING AHEAD RIGHT SIDE	968038308	11	6	119	917691008	FALL PROTECTION
BEARING BLOCK 40x115x42	970365108	10	2	280	918731408	DRIVE ASSEMBLY CPL.
BEARING BUSH 60X65X28 GLY	9888259	12	6	181	10154379	CRANKCASE PRE-ASSY.
BEARING BUSH RD200X170 G	973357208	2	2	668	917291908	PIVOT SECTION, PRE-ASSEMB
BEARING CARRIER	12106548	30	1	296	97029921	DISTRIBUTOR GEARBOX
BEARING COVER 31CrMoV9	9072908	3	1	241	9072906	INTERMEDIATE GEAR CPL.
BEARING COVER RING 33117	747258401	4	1	353	90008901	SLEWING GEAR DRIVE
BEARING COVER RING 6219 J	747272501	16	1	368	932916901	ROPE DRUM
BEARING COVER RING 6219 J	747272501	19	1	608	939294001	ROPE DRUM
BEARING FLANGE	11631893	6	1	297	11182708	VARIABLE PUMP
BEARING FLANGE	11631893	6	1	300	10871017	VARIABLE PUMP
BEARING FLANGE EN-GJS-40	939637901	15	1	368	932916901	ROPE DRUM
BEARING HOUSING, PRE-AS	9077384	2	1	277	9077386	AUXILIARY DRIVE PRE-ASS.
BEARING INSTALLATION	967986308	1	1	381	919010208	CRANE OPERATOR CABIN P
BEARING MOUNT	11100949	13	1	52	11346779	SLIP RING TRANSMITTER
BEARING PLATE 100X195X230	970536108	12	2	677	917292108	TELESCOPIC SECT.2 PRE-AS
BEARING PLATE 100X195X230	970536108	12	2	681	917292208	TELESCOPIC SECT.3 PRE-ASS
BEARING PLATE 100X195X230	970536108	12	2	685	917292308	TELESCOPIC SECT.IV PRE-A
BEARING PLATE 100X195X230	970536108	31	2	690	917292408	TELESCOPIC SECT.5 PRE-AS
BEARING PLATE 100X195X350	970545608	12	2	673	917292008	TELESCOPIC SECTION 1 PRE
BEARING RING	570109708	3	1	360	570109008	DRIVING GEAR
BEARING RING	927745301	15	1	370	939292201	PLANETARY GEARBOX
BEARING RING	927745301	15	1	610	939294201	PLANETARY GEARBOX
BEARING WELDED	968052308	4	4	124	968046208	ADD-ON PARTS
BEARING WIPERS UNIT 50X1	97052119	8	1	409	966497908	FRONT WINDOW CPL.
BELT CARRIER SYSTEM LSB-	11212257	1	1	487	917618608	ADD-ON PARTS
BELT PULLEY 31.5X8PKX215	10146185	1	1	200	10141974	CRANKSHAFT ADD-ON PARTS
BLANK COVER	11822051	33	1	467	96053500	ELECTRIC ADD-ON PARTS CA
BLANKING PLATE	511497514	170	1	560	96045351	HYDRAULICS UPPER CARRI
BLANKING PLUG	779012201	84	1	370	939292201	PLANETARY GEARBOX
BLANKING PLUG GPN 300 F LD	779016201	88	1	353	90008901	SLEWING GEAR DRIVE
BLANKING PLUG GPN 360 PE-	11698481	5	1	220	12489819	COVERING CAPS - KIT
BLANKING PLUG GPN 360 PE-	11835061	6	2	220	12489819	COVERING CAPS - KIT
BLANKING PLUG ISO 8434-1 PL	477700408	678	2	563	96045351	HYDRAULICS UPPER CARRI
BLANKING PLUG ISO 8434-1 PL	477700508	659	2	563	96045351	HYDRAULICS UPPER CARRI
BLANKING PLUG PE-LD	7361205	10	10	395	917304508	CRANE OPERATOR CABIN P
BLANKING PLUG PE-LD	7361205	42	2	421	917304708	SLIDING DOOR INSTALLATION
BLANKING PLUG PE-LD	779016608	15	8	657	919028808	DISPATCH ASSY.MECH.PART
BLIND	11002446	27	1	399	917305408	INTERNAL PANELLING INSTA
BLIND	11002447	26	1	399	917305408	INTERNAL PANELLING INSTA
BLIND RIVET 4,0X10,5	704232308	75	12	544	969256608	BASE ASSEMBLY

Description	Item	Pos.	Quantity	Page	Assembly	Description
BLIND RIVET 4,0X10,5	704232308	10	6	548	968063108	PRE-ASSEMBLY MOUNTING U
BLIND RIVET NUT M10 K=1,5-5	12100265	13	1	395	917304508	CRANE OPERATOR CABIN P
BLIND RIVET NUT M4 K=1,0-3,	413006208	13	4	381	919010208	CRANE OPERATOR CABIN P
BLIND RIVET NUT M4 K=1,0-3,	413006208	(3)	16	544	969256608	BASE ASSEMBLY
BLIND RIVET NUT M5 K=1,0-3,5	10042592	(2)	4	551	969061708	CARRIER PLATE, PRE-ASSE
BLIND RIVET NUT M6 K=1,5-3,	10042593	11	19	395	917304508	CRANE OPERATOR CABIN P
BLIND RIVET NUT M6 K=1,5-3,	10042593	35	13	421	917304708	SLIDING DOOR INSTALLATION
BLIND RIVET NUT M8 K=1,0-3,	10455153	2	1	513	96035073	RETAINER CPL.
BLIND RIVET NUT M8 K=1,8-5 4	12100289	20	3	343	96034872	RETAINER CPL.
BLIND RIVET NUT M8 K=1,8-5 4	12100289	12	9	395	917304508	CRANE OPERATOR CABIN P
BLOCKING BAR 23-26	12102104	10	1	649	10040024	POUCH SOCKET
BLUB HOLDER LEFT 4X163X3	97126204	23	1	172	918731108	ASSEMBLY PARTS F.SLEWING
BOLT EXTRACTION DEVICE	91001571	26	1	12		LIEBHERR LTR 1220
BOOM NOSE	917268408	356	1	14		LIEBHERR LTR 1220
BOOM NOSE WELDED CONST	961940008	1	1	734	917268408	BOOM NOSE
BOW-TYPE CLAMP 102 X5CRNI	12103076	183	1	507	919674408	EXHAUST SYSTEM
BOW-TYPE CLAMP 132 X5CRNI	11963742	185	2	507	919674408	EXHAUST SYSTEM
BOW-TYPE CLAMP 132 X5CRNI	11963742	183	2	511	96051842	EXHAUST SYSTEM PRE-ASSE
BOW-TYPE CLAMP A 114 EDEL	552101308	186	2	507	919674408	EXHAUST SYSTEM
BOX NUT AL6 A3P	477401308	14	22	135	917257108	CENTRALIZED LUBRICATION
BOX NUT AL8 CR6-FREI	477401408	4	1	330	96039022	CONNECTION PIECE
BOX NUT AL8 CR6-FREI	477401408	37	1	480	918759808	ADD HEATING SUPERSTRUCT
BOX NUT AL8 CR6-FREI	477401408	37	1	500	918731808	UREA PLANT
BOX NUT DIN 3870 AL10 A3P	477401508	33	1	500	918731808	UREA PLANT
BOX NUT DIN 3870 AL12 A3C	477401608	660	2	563	96045351	HYDRAULICS UPPER CARRI
BOX NUT DIN 3870 AL22 A3P	477402608	(3)	1	328	96034515	EXPANSION TANK PRE-ASS.
BOX NUT DIN 3870 AL22 A3P	477402608	849	1	565	96045351	HYDRAULICS UPPER CARRI
BOX NUT DIN 3870 AL28 A3P	477401708	795	2	564	96045351	HYDRAULICS UPPER CARRI
BOX NUT DIN 3870 AS10 A3P	477400308	679	2	563	96045351	HYDRAULICS UPPER CARRI
BOX NUT DIN 3870 AS16 A3P	477400608	700	1	563	96045351	HYDRAULICS UPPER CARRI
BRACKET	11171276	(71)	1	435	10877138	OPERATOR SEAT
BRACKET 10 ST	10216529	21	1	601	918628408	AIR COND. UNIT SUPERSTRU
BRACKET LEFT	968073008	2	1	458	917260108	FALL PROTECTION
BRACKET LEFT SPF	967588308	3	1	433	918810308	CONTROL STAND
BRACKET RIGHT	968072808	1	1	458	917260108	FALL PROTECTION
BRACKET RIGHT FE//ZNNI8//C	96036998	4	1	332	918955408	BATTERY BOX CPL.
BRACKET RIGHT SPF	967588408	4	1	433	918810308	CONTROL STAND
BRACKET WELDED CONST.	923982608	1	1	765	923879808	CONSOLE PRE-ASS.
BRACKET WELDED CONST.	925042108	3	1	761	917267508	TRANSPORT MOUNTING
BRACKET WELDED CONST.	96000309	80	1	76	91001377	CRAWLER SUPPORT PREASS
BRACKET WELDED CONST.	96000309	80	1	109	91001378	CRAWLER SUPPORT PREASS
BRACKET WELDED CONST.	96000310	81	1	76	91001377	CRAWLER SUPPORT PREASS
BRACKET WELDED CONST.	96000310	81	1	109	91001378	CRAWLER SUPPORT PREASS
BRACKET WELDED CONST.	96000311	82	1	76	91001377	CRAWLER SUPPORT PREASS
BRACKET WELDED CONST.	96000311	82	1	109	91001378	CRAWLER SUPPORT PREASS
BRACKET WELDED CONST.	96000312	83	1	76	91001377	CRAWLER SUPPORT PREASS
BRACKET WELDED CONST.	96000312	83	1	109	91001378	CRAWLER SUPPORT PREASS
BRACKET WELDED CONST.	96036907	12	1	147	919087608	ROTARY FEED THROUGH
BRACKET WELDED CONST.	96049688	2	2	129	919644008	HYDRAULIC SUPPORT
BRACKET WELDED CONST.	96049689	3	2	129	919644008	HYDRAULIC SUPPORT
BRACKET WELDED CONST.	96056968	1	1	155	91001571	BOLT EXTRACTION DEVICE
BRACKET WELDED CONST.	967996008	9	2	20	91001569	CRAWLER TRACK TRAVEL G
BRACKET WELDED CONST.	968011508	4	1	147	919087608	ROTARY FEED THROUGH
BRACKET WELDED CONST. FE	96021362	7	1	433	918810308	CONTROL STAND
BRACKET WELDED CONST. FE	962947308	4	1	701	966134608	ADD-ON PARTS CYLINDER
BRACKET WELDED CONST. FE	962947408	5	1	701	966134608	ADD-ON PARTS CYLINDER
BRACKET WELDED CONST. FE	968014908	6	4	129	919644008	HYDRAULIC SUPPORT
BRACKET WELDED CONST. FE	969168408	11	8	129	919644008	HYDRAULIC SUPPORT
BRACKET WELDED CONST. R	969101808	1	1	430	969085208	HEATING, PRE-ASSEMBLED
BRACKET WELDED CONST. R	968729008	1	1	751	968728808	CONSOLE PRE-ASS.

Description	Item	Pos.	Quantity	Page	Assembly	Description
BRACKET WELDED CONST. R	964843708	12	2	433	918810308	CONTROL STAND
BRACKET,LEFT WELDED FE//	96021363	8	1	433	918810308	CONTROL STAND
BRACKET,LEFT WELDED FE//	96037000	5	1	332	918955408	BATTERY BOX CPL.
BRACKET,LEFT WELDED RAL	964843808	13	1	433	918810308	CONTROL STAND
BRACKET,RIGHT WELDED FE//	96021365	9	1	433	918810308	CONTROL STAND
BRACKET,RIGHT WELDED RAL	964843908	14	1	433	918810308	CONTROL STAND
BRAKE ACTUATING UNIT	502807501	(1)	1	370	939292201	PLANETARY GEARBOX
BRAKE MULTI-DISC SET	90025781	960	1	353	90008901	SLEWING GEAR DRIVE
BRAKE MULTI-DISC SET	939589501	(997)	1	370	939292201	PLANETARY GEARBOX
BRAKE PACKING SET	939589601	(998)	1	370	939292201	PLANETARY GEARBOX
BRAKE SPRING SET	90025782	970	1	353	90008901	SLEWING GEAR DRIVE
BRAKE SPRING SET	939589701	(999)	1	370	939292201	PLANETARY GEARBOX
BTB PROGRAMMED	968252908	5	1	43	968054008	MOUNTING PLATE PRE-ASS.
BTB PROGRAMMED LSB-BTB	96061724	6	2	540	91000922	SWITCHBOX MOUNTING PART
BTT PROGRAMMED BTTC	96033227	9	1	471	96022872	CONTROL PANEL ROOF
BUFFER 30X20 GUMMI 50SH	97025484	121	4	291	96034631	RADIATOR, PRE-ASSEMBLED
BUILT-IN SOCKET 2-POL	605203908	5	1	471	96022872	CONTROL PANEL ROOF
BUILT-IN SOCKET 2-POL	605203908	3	1	551	969061708	CARRIER PLATE, PRE-ASSE
BUILT-IN VALVE	10801534	7	1	572	10413106	CONTROL BLOCK
BUILT-IN VALVE	571415208	2	1	572	10413106	CONTROL BLOCK
BUILT-IN VALVE	571415208	11	1	572	10413106	CONTROL BLOCK
BURNER 24V	11826648	39	1	484	10876576	WATER HEATING SYSTEM
BURNER 24V	11826648	(9)	1	484	10876576	WATER HEATING SYSTEM
BUS LINE 2 X 0,5	11840113	7	0.3	48	96045227	WIRING HARNESS
BUS LINE 2 X 0,5	11840113	8	0.4	48	96045227	WIRING HARNESS
BUS LINE 2 X 0,5	11840113	9	0.45	48	96045227	WIRING HARNESS
BUS LINE 2 X 0,5	11840113	7	1.63	49	96045228	WIRING HARNESS
BUS LINE 2 X 0,5	11840113	8	4.66	49	96045228	WIRING HARNESS
BUS LINE 2 X 0,5	11840113	15	4.46	462	96036955	WIRING HARNESS
BUS LINE 2 X 0,5	11840113	16	4.38	462	96036955	WIRING HARNESS
BUS LINE 2 X 0,5	11840113	17	4.38	462	96036955	WIRING HARNESS
BUS LINE 2 X 0,5	11840113	18	0.17	462	96036955	WIRING HARNESS
BUS LINE 2 X 0,5	11840113	374	6.27	534	96037136	WIRING HARNESS
BUS LINE 2 X 0,5	11840113	375	6.27	534	96037136	WIRING HARNESS
BUS LINE 2 X 0,5	11840113	376	6.27	534	96037136	WIRING HARNESS
BUS LINE 2 X 0,5	11840113	5	5.68	536	96037137	WIRING HARNESS
BUS LINE 2 X 0,5	11840113	6	0.17	536	96037137	WIRING HARNESS
BUS LINE 2 X 0,5	11840113	7	8.81	536	96037137	WIRING HARNESS
BUS LINE 2 X 0,5	11840113	8	0.17	536	96037137	WIRING HARNESS
BUS LINE 2 X 0,5	11840113	9	3.16	536	96037137	WIRING HARNESS
BUS LINE 2 X 0,5	11840113	10	0.17	536	96037137	WIRING HARNESS
BUS LINE 2 X 0,5	11840113	11	3.16	536	96037137	WIRING HARNESS
BUS LINE 2 X 0,5	11840113	12	0.17	536	96037137	WIRING HARNESS
BUS LINE 2 X 0,5	11840113	13	8.06	536	96037137	WIRING HARNESS
BUS LINE 2 X 0,5	11840113	14	0.17	536	96037137	WIRING HARNESS
BUS LINE 2 X 0,5	11840113	15	0.18	536	96037137	WIRING HARNESS
BUS LINE 4 X 1 SPF	600345208	377	6.27	534	96037136	WIRING HARNESS
BUSHING	10000794	5	1	315	10472208	ADJUSTMENT
BUSHING	571582208	2	1	240	5700161	AIR COMPRESSOR
BUSHING 14X14X5 PA6 SCHW	97094637	20	10	409	966497908	FRONT WINDOW CPL.
BUSHING 16X12 1.4301	97002990	15	1	421	917304708	SLIDING DOOR INSTALLATION
BUSHING 16X12 1.4301	97002990	47	4	433	918810308	CONTROL STAND
BUSHING 16X195	970536608	15	2	673	917292008	TELESCOPIC SECTION 1 PRE
BUSHING 16X195	970536608	15	2	677	917292108	TELESCOPIC SECT.2 PRE-AS
BUSHING 16X195	970536608	15	2	681	917292208	TELESCOPIC SECT.3 PRE-ASS
BUSHING 16X195	970536608	15	2	685	917292308	TELESCOPIC SECT.IV PRE-A
BUSHING 16X195	970536608	32	2	690	917292408	TELESCOPIC SECT.5 PRE-AS
BUSHING 20x150x150 S960QL	970535808	9	1	673	917292008	TELESCOPIC SECTION 1 PRE
BUSHING 20x150x150 S960QL	970535808	9	1	677	917292108	TELESCOPIC SECT.2 PRE-AS
BUSHING 20x150x150 S960QL	970535808	9	1	681	917292208	TELESCOPIC SECT.3 PRE-ASS

Description	Item	Pos.	Quantity	Page	Assembly	Description
BUSHING 20x150x150 S960QL	970535808	9	1	685	917292308	TELESCOPIC SECT.IV PRE-A
BUSHING 20x150x150 S960QL	970535808	24	1	690	917292408	TELESCOPIC SECT.5 PRE-AS
BUSHING 35.0X30 42CRMO4+Q	973998708	3	1	477	966707708	MIRROR RETAINER PRE-ASS.
BUSHING 45.0X25 35NICRMOV	974925608	10	4	646	919617008	LUFFING RAM W. PIVOT
BUSHING 45.0X30 35NICRMOV	972203808	9	3	646	919617008	LUFFING RAM W. PIVOT
BUSHING 45.0X32 35NICRMOV	97032692	10	8	124	968046208	ADD-ON PARTS
BUSHING 45.0X32 35NICRMOV	97032692	63	12	129	919644008	HYDRAULIC SUPPORT
BUSHING 45.0X32 35NICRMOV	97032692	63	16	150	919499408	CENTRAL BALLAST
BUSHING 60.3X24 S355J2H FE	970689108	6	8	172	918731108	ASSEMBLY PARTS F.SLEWING
BUSHING 8X6 PA6	97155801	37	10	409	966497908	FRONT WINDOW CPL.
BUSHING HOUSING 1-POL	11118242	504	1	464	96036956	WIRING HARNESS
BUSHING HOUSING 2-POL 20	11060619	506	2	536	96037137	WIRING HARNESS
BUSHING HOUSING 2-POL 5A	10424622	512	2	462	96036955	WIRING HARNESS
BUSHING HOUSING 2-POL 5A	10424622	509	1	532	96045385	WIRING HARNESS
BUSHING HOUSING 2-POL BL	11342208	510	1	536	96037137	WIRING HARNESS
BUSHING HOUSING 4-POL PB	11341840	509	1	536	96037137	WIRING HARNESS
BUSHING HOUSING 8-POL 5A	10875280	513	1	462	96036955	WIRING HARNESS
BUSHING RD20X7.5 X5CRNI18	97072035	26	4	406	916162508	WINDOW ASSEMBLY
BUSHING RD40X27 35NICRM	953504308	4	6	172	918731108	ASSEMBLY PARTS F.SLEWING
BUSHING RD50,25X20 PA6G	288154508	58	2	668	917291908	PIVOT SECTION, PRE-ASSEMB
BUSHING SUPPORT 6-POL 16	604526508	506	5	49	96045228	WIRING HARNESS
BUSHING SUPPORT 6-POL 16	604526508	510	1	532	96045385	WIRING HARNESS
BUSHING SUPPORT 6-POL 16	604526508	502	1	538	96037133	LEAD
BUSHING SUPPORT 6-POL 16	604526508	502	1	644	96037132	LEAD
BUSHING SUPPORT 6-POL 16	604526508	(502)	1	741	917598408	ELECTRIC MEASURING & WAR
BUTT STRAP 4X40X20 S315M	978361008	24	1	294	968026308	CLUTCH ACTUATOR
BUTT STRAP 4X95X52 S315M	978554708	22	1	294	968026308	CLUTCH ACTUATOR
BUTTON HEAD SCREW AEHNL	10875475	9	2	388	96025887	PEDAL CANTILEVER INSTALL
BUTTON HEAD SCREW AEHN	11160744	301	2	328	96034515	EXPANSION TANK PRE-ASS.
BUTTON HEAD SCREW AEHN	11160744	13	3	421	917304708	SLIDING DOOR INSTALLATION
BUTTON HEAD SCREW AEHN	10028237	308	4	616	967784808	HYDR.AUXILIARY HOISTING
BUTTON HEAD SCREW AEHN	10028237	4	1	744	967933408	LOCATION FIXTURE PRE-ASS.
BUTTON HEAD SCREW AEHN	10813359	83	8	150	919499408	CENTRAL BALLAST
BUTTON HEAD SCREW AEHN	10813359	(300)	2	286	919007708	DRIVE ASSEMBLY, PRE-ASSE
BUTTON HEAD SCREW AEHN	10813359	43	7	421	917304708	SLIDING DOOR INSTALLATION
BUTTON HEAD SCREW AEHN	10813359	52	1	500	918731808	UREA PLANT
BUTTON HEAD SCREW AEHN	10475893	14	10	421	917304708	SLIDING DOOR INSTALLATION
BUTTON HEAD SCREW AEHN	10875468	13	8	147	919087608	ROTARY FEED THROUGH
BUTTON HEAD SCREW AEHN	10875468	302	1	328	96034515	EXPANSION TANK PRE-ASS.
BUTTON HEAD SCREW AEHN	10875468	11	12	334	96023117	BATTERY BOX, PRE-ASSEMB
BUTTON HEAD SCREW AEHN	10875468	10	3	388	96025887	PEDAL CANTILEVER INSTALL
BUTTON HEAD SCREW AEHN	10875468	14	12	395	917304508	CRANE OPERATOR CABIN P
BUTTON HEAD SCREW AEHN	10875468	40	73	399	917305408	INTERNAL PANELLING INSTA
BUTTON HEAD SCREW AEHN	10875468	23	6	415	916163008	WIPERS INSTALLATION
BUTTON HEAD SCREW AEHN	10875468	19	5	421	917304708	SLIDING DOOR INSTALLATION
BUTTON HEAD SCREW AEHN	10875468	22	7	467	96053500	ELECTRIC ADD-ON PARTS CA
BUTTON HEAD SCREW AEHN	10412851	17	4	26	96034894	PROTECTION PLATE CPL.
BUTTON HEAD SCREW AEHN	10412851	17	4	29	96034977	PROTECTION PLATE
BUTTON HEAD SCREW AEHN	10412851	18	4	157	96063087	STORAGE BOX
BUTTON HEAD SCREW AEHN	10412851	10	6	390	916170808	CABLE INLET
BUTTON HEAD SCREW AEHN	10412851	8	1	393	968514508	INSTALLATION SWITCH CAB. C
BUTTON HEAD SCREW AEHN	10412851	12	4	421	917304708	SLIDING DOOR INSTALLATION
BUTTON HEAD SCREW AEHN	10412851	300	10	445	96036790	SLEWING PLATFORM PANELLI
BUTTON HEAD SCREW AEHN	10412851	300	6	455	969015908	SLEWING PLATFORM PANELLI
BUTTON HEAD SCREW AEHN	10412851	300	2	507	919674408	EXHAUST SYSTEM
BUTTON HEAD SCREW AEHN	10412851	307	7	511	96051842	EXHAUST SYSTEM PRE-ASSE
BUTTON HEAD SCREW AEHN	10412851	2	4	626	917269308	CHARGER
BUTTON HEAD SCREW AEHN	10412851	7	1	744	967933408	LOCATION FIXTURE PRE-ASS.
BUTTON HEAD SCREW AEHN	10412852	30	8	35	917511508	CRAWLER CENTRE PART PRE
BUTTON HEAD SCREW AEHN	10412852	5	14	92	968420608	STORAGE BOX

Description	Item	Pos.	Quantity	Page	Assembly	Description
BUTTON HEAD SCREW AEHN	10412852	15	6	409	966497908	FRONT WINDOW CPL.
BUTTON HEAD SCREW AEHN	10412852	308	2	511	96051842	EXHAUST SYSTEM PRE-ASSE
BUTTON HEAD SCREW AEHN	10412852	26	2	636	968994408	CAMERA HOLDER, PREMOU
BUTTON HEAD SCREW AEHN	10412852	20	6	637	968290608	STAND
BUTTON HEAD SCREW AEHN	10412852	13	2	639	968993508	CAMERA HOLDER, PREMOU
BUTTON HEAD SCREW AEHN	10412852	20	6	640	968267208	STAND
BUTTON HEAD SCREW AEHN	10412853	6	8	387	916177508	STEP CPL.
BUTTON HEAD SCREW AEHN	10412853	41	1	421	917304708	SLIDING DOOR INSTALLATION
BUTTON HEAD SCREW AEHN	11161571	34	4	26	96034894	PROTECTION PLATE CPL.
BUTTON HEAD SCREW AEHN	11161571	34	4	29	96034977	PROTECTION PLATE
BUTTON HEAD SCREW AEHNL	10876082	201	2	76	91001377	CRAWLER SUPPORT PREASS
BUTTON HEAD SCREW AEHNL	10876082	201	2	109	91001378	CRAWLER SUPPORT PREASS
BUTTON HEAD SCREW AEHNL	10876082	11	4	144	96045206	MECHANICAL AUXILIARIES
BUTTON HEAD SCREW AEHN	10875485	20	3	26	96034894	PROTECTION PLATE CPL.
BUTTON HEAD SCREW AEHN	10875485	20	3	29	96034977	PROTECTION PLATE
BUTTON HEAD SCREW AEHN	10875485	15	4	39	96045225	ELECTR.FOR CENTER SECTIO
BUTTON HEAD SCREW AEHN	10875485	4	3	95	96062678	LEVER PRE-ASSY.
BUTTON HEAD SCREW AEHN	10875485	14	16	129	919644008	HYDRAULIC SUPPORT
BUTTON HEAD SCREW AEHN	10875485	23	3	135	917257108	CENTRALIZED LUBRICATION
BUTTON HEAD SCREW AEHN	10875485	28	4	172	918731108	ASSEMBLY PARTS F.SLEWING
BUTTON HEAD SCREW AEHN	10875485	305	6	287	919007708	DRIVE ASSEMBLY, PRE-ASSE
BUTTON HEAD SCREW AEHN	10875485	15	6	395	917304508	CRANE OPERATOR CABIN P
BUTTON HEAD SCREW AEHN	10875485	303	13	445	96036790	SLEWING PLATFORM PANELLI
BUTTON HEAD SCREW AEHN	10875485	305	10	455	969015908	SLEWING PLATFORM PANELLI
BUTTON HEAD SCREW AEHN	10875485	(7)	6	496	969763408	PIPEWORK AIR INSTALLATIO
BUTTON HEAD SCREW AEHN	10875485	54	4	500	918731808	UREA PLANT
BUTTON HEAD SCREW AEHN	10875485	304	1	507	919674408	EXHAUST SYSTEM
BUTTON HEAD SCREW AEHN	10875485	300	15	518	96039752	ADDITIONAL PARTS CLADDIN
BUTTON HEAD SCREW AEHN	10875485	303	2	520	918731908	AIR FILTER UNIT
BUTTON HEAD SCREW AEHN	10875485	28	7	567	96035117	MECHANICAL AUXILIARIES
BUTTON HEAD SCREW AEHN	10875485	312	5	616	967784808	HYDR.AUXILIARY HOISTING
BUTTON HEAD SCREW AEHN	10875485	3	3	635	968210808	ADD-ON PARTS CAMERA
BUTTON HEAD SCREW AEHN	10875471	10	4	144	96045206	MECHANICAL AUXILIARIES
BUTTON HEAD SCREW AEHN	10875471	13	2	410	965784408	ROOF WINDOW PRE-ASS.
BUTTON HEAD SCREW AEHN	10875471	302	4	520	918731908	AIR FILTER UNIT
BUTTON HEAD SCREW AEHN	10876067	303	2	287	919007708	DRIVE ASSEMBLY, PRE-ASSE
BUTTON HEAD SCREW AEHN	10875486	18	3	94	96034962	GUIDE LEFT
BUTTON HEAD SCREW AEHN	10875486	18	3	112	96034980	GUIDE RIGHT
BUTTON HEAD SCREW AEHN	10875486	10	12	365	917259708	MAIN HOIST GEAR
BUTTON HEAD SCREW AEHN	10875486	(6)	11	387	916177508	STEP CPL.
BUTTON HEAD SCREW AEHN	10875486	308	4	455	969015908	SLEWING PLATFORM PANELLI
BUTTON HEAD SCREW AEHN	10875486	6	4	768	968090008	MOUNTING HOOK ROD
BUTTON HEAD SCREW ISO 73	10875017	70	2	400	917305408	INTERNAL PANELLING INSTA
BUTTON HEAD SCREW ISO 73	10875017	32	4	467	96053500	ELECTRIC ADD-ON PARTS CA
BUTTON HEAD SCREW ISO 7	10875448	300	2	280	918731408	DRIVE ASSEMBLY CPL.
BUTTON HEAD SCREW ISO 7	10875448	7	3	388	96025887	PEDAL CANTILEVER INSTALL
BUTTON HEAD SCREW ISO 7	10875448	8	2	457	969016008	FLAP LEFT FRONT PRE-ASS.
BUTTON HEAD SCREW ISO 73	10875482	20	8	467	96053500	ELECTRIC ADD-ON PARTS CA
BUTTON HEAD SCREW ISO 73	11835043	43	2	433	918810308	CONTROL STAND
BUTTON HEAD SCREW ISO 73	11835043	317	8	445	96036790	SLEWING PLATFORM PANELLI
BUTTON HEAD SCREW ISO 73	10875483	17	6	334	96023117	BATTERY BOX, PRE-ASSEMB
BUTTON HEAD SCREW ISO 73	10875483	3	2	384	96057226	CUP HOLDER INSTALLATION
BUTTON HEAD SCREW ISO 73	10875483	16	14	412	916168308	AIR DUCT
BUTTON HEAD SCREW ISO 73	10875483	26	2	415	916163008	WIPERS INSTALLATION
BUTTON HEAD SCREW ISO 73	10875483	21	8	467	96053500	ELECTRIC ADD-ON PARTS CA
BUTTON HEAD SCREW ISO 7	12229337	11	14	388	96025887	PEDAL CANTILEVER INSTALL
BUTTON HEAD SCREW ISO 73	10875474	38	16	399	917305408	INTERNAL PANELLING INSTA
BUTTON HEAD SCREW ISO 73	10875474	15	5	412	916168308	AIR DUCT
BUTTON HEAD SCREW ISO 73	10875474	28	6	433	918810308	CONTROL STAND
BUTTON HEAD SCREW ISO 73	10875474	18	18	467	96053500	ELECTRIC ADD-ON PARTS CA

Description	Item	Pos.	Quantity	Page	Assembly	Description
BUTTON HEAD SCREW ISO 73	10875474	25	4	641	96045237	EQUIPMENT CAMERA CAB
BUTTON HEAD SCREW ISO 7	11697855	12	4	383	96015921	OPERATING ELEMENT INSTAL
BUTTON HEAD SCREW ISO 7	11697855	27	7	406	916162508	WINDOW ASSEMBLY
BUTTON HEAD SCREW ISO 73	10875488	300	3	287	919007708	DRIVE ASSEMBLY, PRE-ASSE
BUTTON HEAD SCREW ISO 73	10875488	300	6	294	968026308	CLUTCH ACTUATOR
BUTTON HEAD SCREW ISO 73	10875488	17	3	390	916170808	CABLE INLET
BUTTON HEAD SCREW ISO 73	10875488	33	4	409	966497908	FRONT WINDOW CPL.
BUTTON HEAD SCREW ISO 73	10874884	9	3	332	918955408	BATTERY BOX CPL.
BUTTON HEAD SCREW ISO 73	10874884	39	13	399	917305408	INTERNAL PANELLING INSTA
BUTTON HEAD SCREW ISO 73	10875469	41	10	399	917305408	INTERNAL PANELLING INSTA
BUTTON HEAD SCREW ISO 73	10875469	36	7	421	917304708	SLIDING DOOR INSTALLATION
BUTTON HEAD SCREW ISO 73	10410198	13	2	390	916170808	CABLE INLET
BUTTON HEAD SCREW ISO 73	10875470	42	2	399	917305408	INTERNAL PANELLING INSTA
BUTTON HEAD SCREW ISO 73	12102696	27	24	20	91001569	CRAWLER TRACK TRAVEL G
BUTTON HEAD SCREW ISO 73	12102696	19	4	39	96045225	ELECTR.FOR CENTER SECTIO
BUTTON HEAD SCREW ISO 73	12102696	32	2	68	918925508	CROSS BEAM CPL.
BUTTON HEAD SCREW ISO 73	12102696	39	4	75	91001377	CRAWLER SUPPORT PREASS
BUTTON HEAD SCREW ISO 73	12102696	39	4	108	91001378	CRAWLER SUPPORT PREASS
BUTTON HEAD SCREW ISO 73	12102696	21	8	135	917257108	CENTRALIZED LUBRICATION
BUTTON HEAD SCREW ISO 73	12102696	80	8	150	919499408	CENTRAL BALLAST
BUTTON HEAD SCREW ISO 73	12102696	11	6	172	918731108	ASSEMBLY PARTS F.SLEWING
BUTTON HEAD SCREW ISO 73	12102696	10	2	363	917259608	ROTATING PLATFORM LOCK
BUTTON HEAD SCREW ISO 73	12102696	8	10	388	96025887	PEDAL CANTILEVER INSTALL
BUTTON HEAD SCREW ISO 73	12102696	21	4	523	917261208	CENT. LUBRIC. SYSTEM SUP
BUTTON HEAD SCREW ISO 73	12102696	307	2	561	96045351	HYDRAULICS UPPER CARRI
BUTTON HEAD SCREW ISO 73	12102696	29	4	567	96035117	MECHANICAL AUXILIARIES
BUTTON HEAD SCREW ISO 73	12102696	12	25	604	967969608	AUXILIARY HOISTING GEAR 2
BUTTON HEAD SCREW ISO 73	12102696	14	73	668	917291908	PIVOT SECTION, PRE-ASSEMB
BUTTON HEAD SCREW ISO 73	12102696	56	17	690	917292408	TELESCOPIC SECT.5 PRE-AS
BUTTON HEAD SCREW ISO 73	12102696	20	4	734	917268408	BOOM NOSE
BUTTON HEAD SCREW ISO 73	12102696	6	2	737	967321308	FIXING DEVICE 2.LIFT TOP
BUTTON HEAD SCREW ISO 73	10353737	21	6	334	96023117	BATTERY BOX, PRE-ASSEMB
BUTTON HEAD SCREW ISO 7	10429635	7	1	381	919010208	CRANE OPERATOR CABIN P
BUTTON HEAD SCREW ISO 73	408650508	15	2	157	96063087	STORAGE BOX
BUTTON HEAD SCREW ISO 73	408650608	11	4	332	918955408	BATTERY BOX CPL.
BUTTON HEAD SCREW ISO 73	408650608	311	2	511	96051842	EXHAUST SYSTEM PRE-ASSE
BUTTON HEAD SCREW ISO 73	408650608	2	2	746	967937608	OBSTRUCTION LIGHTS PREAS
BUTTON HEAD SCREW ISO 73	10301319	11	5	383	96015921	OPERATING ELEMENT INSTAL
BUTTON HEAD SCREW ISO 73	10182032	310	2	294	968026308	CLUTCH ACTUATOR
BUTTON HEAD SCREW ISO 7	12100221	26	1	41	96045226	SWITCH BOX COMPL.
CABLE	10097087	15	2	641	96045237	EQUIPMENT CAMERA CAB
CABLE 2X0,14+2X0,22-9M	10870643	69	1	531	96045384	CABLE LIST SLEWING PLATF
CABLE 2X0,25-7M	10025227	68	1	531	96045384	CABLE LIST SLEWING PLATF
CABLE 2X0,34+1X0,14-4M	10097085	12	1	643	96037130	EQUIPMENT CAMERA SLEW C
CABLE CHANNEL 40X120/2000	601407008	32	0.29	544	969256608	BASE ASSEMBLY
CABLE CHANNEL 40X60/2000	601406408	4	0.3	548	968063108	PRE-ASSEMBLY MOUNTING U
CABLE CLAMP	720014408	(15)	1	604	967969608	AUXILIARY HOISTING GEAR 2
CABLE CLAMP	720014408	18	4	734	917268408	BOOM NOSE
CABLE CLAMP 3x486x370 DC0	970456508	6	1	701	966134608	ADD-ON PARTS CYLINDER
CABLE CLAMP 3x697x370 DC0	970456608	7	1	701	966134608	ADD-ON PARTS CYLINDER
CABLE CLAMP DC01 FE//ZNNI	953650008	22	7	604	967969608	AUXILIARY HOISTING GEAR 2
CABLE CLAMP DC01 FE//ZNNI	953650008	68	28	668	917291908	PIVOT SECTION, PRE-ASSEMB
CABLE CLAMP DC01 FE//ZNNI	953650008	57	12	690	917292408	TELESCOPIC SECT.5 PRE-AS
CABLE CLIP HOLDER 8,1X-S	11492315	42	11	544	969256608	BASE ASSEMBLY
CABLE CONDUIT DN16X0,6 PU	11124205	223	8.35	532	96045385	WIRING HARNESS
CABLE CONDUIT DN16X0,6 PU	11124205	223	3.89	534	96037136	WIRING HARNESS
CABLE CONDUIT DN20X0,6 PU	11124207	224	1.23	49	96045228	WIRING HARNESS
CABLE CONDUIT DN20X0,6 PU	11124207	224	0.83	462	96036955	WIRING HARNESS
CABLE CONDUIT DN20X0,6 PU	11124207	224	0.53	464	96036956	WIRING HARNESS
CABLE CONDUIT DN20X0,6 PU	11124207	224	0.93	532	96045385	WIRING HARNESS

Description	Item	Pos.	Quantity	Page	Assembly	Description
CABLE CONDUIT DN25X0,6 PU	11124208	225	0.33	462	96036955	WIRING HARNESS
CABLE CONDUIT DN25X0,6 PU	11124208	225	0.43	464	96036956	WIRING HARNESS
CABLE CONDUIT DN25X0,6 PU	11124208	225	2.91	532	96045385	WIRING HARNESS
CABLE CONDUIT DN25X0,6 PU	11124208	225	1.46	534	96037136	WIRING HARNESS
CABLE CONDUIT DN25X0,6 PU	11124208	225	2.53	536	96037137	WIRING HARNESS
CABLE CONDUIT DN30X0,6 PU	11124209	226	0.35	49	96045228	WIRING HARNESS
CABLE CONDUIT DN30X0,6 PU	11124209	226	0.93	532	96045385	WIRING HARNESS
CABLE CONDUIT DN30X0,6 PU	11124209	226	2.91	534	96037136	WIRING HARNESS
CABLE CONDUIT DN30X0,6 PU	11124209	226	4.53	536	96037137	WIRING HARNESS
CABLE CONDUIT DN35X0,6 PU	11124210	227	2.26	462	96036955	WIRING HARNESS
CABLE CONDUIT DN35X0,6 PU	11124210	227	0.88	464	96036956	WIRING HARNESS
CABLE CONDUIT DN35X0,6 PU	11124210	227	2.86	532	96045385	WIRING HARNESS
CABLE CONDUIT DN40X0,6 PU	11124211	228	1.23	534	96037136	WIRING HARNESS
CABLE CONDUIT DN40X0,6 PU	11124211	228	1.32	542	96045387	CABLES, BASIC CONSTRUCTI
CABLE CONDUIT DN50X0,6 PU	11124212	229	1.2	532	96045385	WIRING HARNESS
CABLE CONDUIT DN50X0,6 PU	11124212	229	3.71	534	96037136	WIRING HARNESS
CABLE CONDUIT DN50X0,6 PU	11124212	229	0.65	542	96045387	CABLES, BASIC CONSTRUCTI
CABLE CONNECTOR	602336408	2	1	547	926891108	GROUND RAIL
CABLE COUPLING BOX 12/21/	602600808	12	2	390	916170808	CABLE INLET
CABLE DRUM COMPL.	966354008	4	1	707	966290908	ELECTRIC F.BASE SECTION
CABLE GLAND M12X1,5X2-8 M	602424008	67	2	468	96053500	ELECTRIC ADD-ON PARTS CA
CABLE GLAND M12X1,5X2-8 M	602424008	501	1	738	96068455	LEAD
CABLE GLAND M16X1,5X4,5-10	602441701	11	2	625	918462708	EXTERNAL FEED
CABLE GLAND M16X1,5X4,5-10	602441701	11	1	630	917368108	EL.COOLANT PREHEAT
CABLE GLAND M16X1,5X4-11	602424108	14	2	41	96045226	SWITCH BOX COMPL.
CABLE GLAND M16X1,5X4-11	602424108	153	1	46	966204108	ANTENNA CPL.
CABLE GLAND M16X1,5X4-11	602424108	527	4	49	96045228	WIRING HARNESS
CABLE GLAND M16X1,5X4-11	10428532	48	2	467	96053500	ELECTRIC ADD-ON PARTS CA
CABLE GLAND M20X1,5/13X3	10216578	13	1	630	917368108	EL.COOLANT PREHEAT
CABLE GLAND M20X1,5X5-10	602441001	526	2	49	96045228	WIRING HARNESS
CABLE GLAND M20X1,5X5-10	602441001	505	1	142	96045205	WIRING HARNESS
CABLE GLAND M20X1,5X5-10	602441001	(505)	1	741	917598408	ELECTRIC MEASURING & WAR
CABLE GLAND M25X1,5X12-15	602425808	3	1	710	10354493	CABLE REEL
CABLE GLAND PG16/9	602422108	8	1	625	918462708	EXTERNAL FEED
CABLE HARNESS 3300MM	553186908	10	1	461	96036954	CABLE LIST DRIVER'S CABIN
CABLE HARNESS MOUNTING	10151328	580	1	179	13455297	DIESEL ENGINE
CABLE HARNESS W700	10153987	1	1	269	10151328	CABLE HARNESS MOUNTING
CABLE INLET	916170808	5	1	381	919010208	CRANE OPERATOR CABIN P
CABLE LIST	96045204	10	1	140	919499508	BALLAST MONITORING
CABLE LIST DRIVER'S CABIN	96036954	5	1	460	919783608	EL.INSTRUMENTS F.CRANE D
CABLE LIST SLEWING PLATF	96045384	12	1	527	919410708	ELECTR. SYSTEM F.SLEWING
CABLE LOOM WL705	10151164	1	1	271	10151329	WIRING HARNESS ASSEMBLY
CABLE LUG AEHNL.DIN 46237	602305605	766	1	535	96037136	WIRING HARNESS
CABLE LUG DIN 46234 M12/16	602217308	50	1	534	96037136	WIRING HARNESS
CABLE LUG DIN 46234 M6/10	602311508	55	1	534	96037136	WIRING HARNESS
CABLE LUG DIN 46234 M6/16	602205708	58	4	534	96037136	WIRING HARNESS
CABLE LUG DIN 46234 M8/16-2	602301708	106	1	534	96037136	WIRING HARNESS
CABLE LUG DIN 46234 M8/16m	602311408	57	2	534	96037136	WIRING HARNESS
CABLE LUG DIN 46237 6/6mm²	602213308	39	1	48	96045227	WIRING HARNESS
CABLE LUG DIN 46237 M6/1-2,5	602217908	34	5	48	96045227	WIRING HARNESS
CABLE LUG DIN 46237 M6/1-2,5	602217908	34	1	462	96036955	WIRING HARNESS
CABLE LUG M6/16,8-26,7MM²	602205808	111	1	534	96037136	WIRING HARNESS
CABLE LUG M6/16MM²	602217008	49	1	534	96037136	WIRING HARNESS
CABLE MARKER	923512208	500	18	48	96045227	WIRING HARNESS
CABLE MARKER	923512208	500	26	49	96045228	WIRING HARNESS
CABLE MARKER	923512208	500	3	142	96045205	WIRING HARNESS
CABLE MARKER	923512208	500	53	462	96036955	WIRING HARNESS
CABLE MARKER	923512208	500	29	464	96036956	WIRING HARNESS
CABLE MARKER	923512208	500	76	532	96045385	WIRING HARNESS
CABLE MARKER	923512208	500	58	535	96037136	WIRING HARNESS

Description	Item	Pos.	Quantity	Page	Assembly	Description
CABLE MARKER	923512208	500	21	536	96037137	WIRING HARNESS
CABLE MARKER	923512208	500	4	538	96037133	LEAD
CABLE MARKER	923512208	500	2	642	96043733	WIRING HARNESS
CABLE MARKER	923512208	500	4	644	96037132	LEAD
CABLE MARKER	923512208	500	1	738	96068455	LEAD
CABLE MARKER	923512208	(500)	4	741	917598408	ELECTRIC MEASURING & WAR
CABLE PLUG 4-POL 90°	10324830	511	1	532	96045385	WIRING HARNESS
CABLE PLUG 7-POL	10025278	(1)	1	645	96037131	EQUIPMENT CAMERA WINCHE
CABLE REEL 50M 14-POL+PE	10354493	5	1	708	966354008	CABLE DRUM COMPL.
CABLE SLEEVE 12,0-3,0/12/1,4	10872032	98	8	534	96037136	WIRING HARNESS
CABLE SLEEVE 16,0-4,0/16/1,7	10872033	709	2	535	96037136	WIRING HARNESS
CABLE SLEEVE 2,4-3,0/2,4/0,6	10473048	708	2	463	96036955	WIRING HARNESS
CABLE SLEEVE 2,4-3,0/2,4/0,6	10473048	708	1	464	96036956	WIRING HARNESS
CABLE SLEEVE 4-6	602704808	520	6	49	96045228	WIRING HARNESS
CABLE SLEEVE 4-6	602704808	504	2	538	96037133	LEAD
CABLE SLEEVE 4-6	602704808	505	3	644	96037132	LEAD
CABLE SLEEVE 4-6	602704808	(508)	1	741	917598408	ELECTRIC MEASURING & WAR
CABLE SLEEVE 6-8	604508708	516	1	532	96045385	WIRING HARNESS
CABLE SLEEVE 8-10	604509408	511	1	49	96045228	WIRING HARNESS
CABLE SOCKET M1	10476382	503	1	142	96045205	WIRING HARNESS
CABLE SOCKET M11-Z	604505508	522	4	49	96045228	WIRING HARNESS
CABLE SOCKET M11-Z	604505508	518	1	532	96045385	WIRING HARNESS
CABLE SOCKET M11-Z	604505508	506	1	538	96037133	LEAD
CABLE SOCKET M11-Z	604505508	507	1	644	96037132	LEAD
CABLE SOCKET M11-Z	604505508	(509)	1	741	917598408	ELECTRIC MEASURING & WAR
CABLE TIE 2,5X99-SCHWARZ P	12104811	268	30	542	96045387	CABLES, BASIC CONSTRUCTI
CABLE TIE 2,5X99-SCHWARZ P	12104811	266	5	711	966291008	TERMINAL BOX
CABLE TIE 3,6X142-SCHWARZ	12104809	261	2	49	96045228	WIRING HARNESS
CABLE TIE 3,6X142-SCHWARZ	12104809	261	1	462	96036955	WIRING HARNESS
CABLE TIE 3,6X142-SCHWARZ	12104809	261	20	464	96036956	WIRING HARNESS
CABLE TIE 3,6X142-SCHWARZ	12104809	261	8	534	96037136	WIRING HARNESS
CABLE TIE 3,6X142-SCHWARZ	12104809	261	1	536	96037137	WIRING HARNESS
CABLE TIE 3,6X142-SCHWARZ	12104809	261	30	542	96045387	CABLES, BASIC CONSTRUCTI
CABLE TIE 3,6X203-SCHWARZ	12104810	269	30	542	96045387	CABLES, BASIC CONSTRUCTI
CABLE TIE 4,6X200-SCHWARZ	11691035	(40)	10	527	919410708	ELECTR. SYSTEM F.SLEWING
CABLE TIE 4,6X200-SW/GR P	11691013	97	2	269	10151328	CABLE HARNESS MOUNTING
CABLE TIE 4,8X292-SCHWARZ	10874588	99	3	269	10151328	CABLE HARNESS MOUNTING
CABLE TIE 4,8X292-SCHWARZ	10874588	100	8	271	10151329	WIRING HARNESS ASSEMBLY
CABLE TIE 4,8X292-SCHWARZ	10874588	(10)	50	527	919410708	ELECTR. SYSTEM F.SLEWING
CABLE TIE 4,8X292-SCHWARZ	10874588	20	4	711	966291008	TERMINAL BOX
CABLE TIE 7,6X368-SCHWARZ	10874587	(20)	50	527	919410708	ELECTR. SYSTEM F.SLEWING
CABLE TIE 7,6X380-SCHWARZ	10870333	(30)	100	527	919410708	ELECTR. SYSTEM F.SLEWING
CABLES, BASIC CONSTRUCTI	96045387	1	1	541	96045386	BASE ASSEMBLY CPL.
CAGE NUT M5 ST	10455281	27	6	433	918810308	CONTROL STAND
CAGE NUT M6	413002708	44	4	433	918810308	CONTROL STAND
CAGE NUT M6	413002808	53	1	399	917305408	INTERNAL PANELLING INSTA
CAGE NUT M6 NIROSTA	10875857	75	4	669	917291908	PIVOT SECTION, PRE-ASSEMB
CAGE NUT M6 NIROSTA	10875857	2	2	712	966591508	LIMIT SWITCH ADD-ON
CAMERA HOLDER, PREMOU	968993508	1	1	638	968267108	ADD-ON PARTS CAMERA
CAMERA HOLDER, PREMOU	968994408	1	1	635	968210808	ADD-ON PARTS CAMERA
CAMERA MONITOR OW	918992008	491	1	15		LIEBHERR LTR 1220
CAMERA SPF	10024012	10	1	645	96037131	EQUIPMENT CAMERA WINCHE
CAMERA SPF	10097079	10	1	643	96037130	EQUIPMENT CAMERA SLEW C
CAMSHAFT BUSHING 60,897X	9132281	11	2	181	10154379	CRANKCASE PRE-ASSY.
CAMSHAFT BUSHING 70,912X	9274859	10	5	181	10154379	CRANKCASE PRE-ASSY.
CAMSHAFT CPL. R-MOTORXD	10138230	100	1	175	13455297	DIESEL ENGINE
CAMSHAFT R-MOTORXD934/	10125742	1	1	210	10138230	CAMSHAFT CPL.
CAP	571582808	30	1	240	5700161	AIR COMPRESSOR
CAP	591064408	8	1	477	966707708	MIRROR RETAINER PRE-ASS.
CAP NUT DIN 1587 M6 A2-70	10219361	12	4	410	965784408	ROOF WINDOW PRE-ASS.

Description	Item	Pos.	Quantity	Page	Assembly	Description
CAP NUT DIN 986 M4 A2-70	4002886	32	4	136	11347526	ELECTRIC PUMP
CAP NUT DIN 986 M4 A2-70	4002886	25	4	525	10327065	ELECTRIC PUMP
CAP NUT DIN 986 M6	691035008	36	2	52	11346779	SLIP RING TRANSMITTER
CAPACITOR	10815368	104	1	291	96034631	RADIATOR, PRE-ASSEMBLED
CAR RADIO	12257818	1	1	661	916166208	CAR RADIO
CAR RADIO	916166208	199	1	14		LIEBHERR LTR 1220
CARRIER	968050708	1	2	124	968046208	ADD-ON PARTS
CARRIER PLATE, PRE-ASSE	965807808	1	1	551	969061708	CARRIER PLATE, PRE-ASSE
CARRIER PLATE, PRE-ASSE	969061708	12	1	540	91000922	SWITCHBOX MOUNTING PART
CARRIER RAIL NUT DIN 3015-	602018008	313	61	56	96035801	HYDRAULIC EQUIPM.CENTER
CARRIER RAIL NUT DIN 3015-	602018008	28	4	334	96023117	BATTERY BOX, PRE-ASSEMB
CARRIER RAIL NUT DIN 3015-	602018008	308	6	496	969763408	PIPEWORK AIR INSTALLATIO
CARRIER RAIL NUT DIN 3015-	602018008	330	2	562	96045351	HYDRAULICS UPPER CARRI
CARRIER RAIL NUT DIN 3015-	602018008	70	4	669	917291908	PIVOT SECTION, PRE-ASSEMB
CARRIER RAIL X0	954117308	24	1	334	96023117	BATTERY BOX, PRE-ASSEMB
CARRIER RAIL X0	954128608	69	1	668	917291908	PIVOT SECTION, PRE-ASSEMB
CARRIER T ZN O	968710308	2	2	124	968046208	ADD-ON PARTS
CARRIER, MEAS. & WARN. D	917379608	285	1	14		LIEBHERR LTR 1220
CARRYING ROLLER 80/5/20X70	749011408	47	1	685	917292308	TELESCOPIC SECT.IV PRE-A
CARRYING ROLLER 80/5/20X79	749010808	47	1	681	917292208	TELESCOPIC SECT.3 PRE-ASS
CARRYING ROLLER 80/5/20X85	749009408	47	1	677	917292108	TELESCOPIC SECT.2 PRE-AS
CARRYING ROLLER 80/5/20X95	749010208	21	2	668	917291908	PIVOT SECTION, PRE-ASSEMB
CARRYING ROLLER 80/5/20X95	749010208	47	1	673	917292008	TELESCOPIC SECTION 1 PRE
CARRYING ROLLER 90/7/40X1	749014908	3	1	365	917259708	MAIN HOIST GEAR
CARRYING ROLLER 90/7/40X1	749014908	20	1	604	967969608	AUXILIARY HOISTING GEAR 2
CARRYING ROLLER D8KX165	10877342	8	2	75	91001377	CRAWLER SUPPORT PREASS
CARRYING ROLLER D8KX165	10877342	8	2	108	91001378	CRAWLER SUPPORT PREASS
CARTRIDGE	571352308	1	1	497	502657308	AIR DRYER
CARTRIDGE FOR BRAKE VALV	11214357	(1)	1	129	919644008	HYDRAULIC SUPPORT
CAUTION DECAL ACCID.PREV	9412158	35	1	164	917862808	LABELLING GREAT BRITAIN
CELL RUBBER 20X12 CR SC	262104308	5	1.08	42	966167808	COVER COMPL.
CELL RUBBER 6X3X10000 CE	262108908	4	0.5	450	964093408	COVER COMPL.
CENT. LUBRIC. SYSTEM SUP	917261208	169	1	13		LIEBHERR LTR 1220
CENTER STUD	570110508	3	1	361	570109508	DRIVING GEAR
CENTER-ZERO RELAY 24V 10	630121508	6	2	43	968054008	MOUNTING PLATE PRE-ASS.
CENTER-ZERO RELAY 24V 10	630121508	9	19	540	91000922	SWITCHBOX MOUNTING PART
CENTERING FLANGE 42CrMo	10142170	2	1	200	10141974	CRANKSHAFT ADD-ON PARTS
CENTRAL BALLAST	919499408	22	1	12		LIEBHERR LTR 1220
CENTRAL COUNTERWEIGHT	96045601	50	1	150	919499408	CENTRAL BALLAST
CENTRAL COUNTERWEIGHT	96045603	51	1	150	919499408	CENTRAL BALLAST
CENTRAL LUBRICATING SYS	921444108	200	1	604	967969608	AUXILIARY HOISTING GEAR 2
CENTRAL SECTION CRAWLER	917511608	1	1	35	917511508	CRAWLER CENTRE PART PRE
CENTRAL SECTION CRAWLER	919499308	4	1	12		LIEBHERR LTR 1220
CENTRALIZED LUBRICATION S	917257108	20	1	12		LIEBHERR LTR 1220
CHAIN DIN 763 7X49 0.3t ST35	10663970	3	2	693	96013575	HOIST LIM.SWITCH PLUMMET
CHARGE AIR CORRUGATED H	97032592	256	1	287	919007708	DRIVE ASSEMBLY, PRE-ASSE
CHARGE AIR LINE	10143612	1	1	234	10149677	CONNECTING LINE ADD-ON
CHARGE AIR LINE	10143614	2	1	234	10149677	CONNECTING LINE ADD-ON
CHARGE AIR PIPE DN85 STAH	97050878	201	1	287	919007708	DRIVE ASSEMBLY, PRE-ASSE
CHARGE AIR PIPE G-ALST10M	97055159	200	1	287	919007708	DRIVE ASSEMBLY, PRE-ASSE
CHARGER 110V	917269308	383	1	15		LIEBHERR LTR 1220
CHARGER 110V 24V8A SPF	613301908	1	1	626	917269308	CHARGER
CHARGING UNIT BTT SPF	10412777	10	1	471	96022872	CONTROL PANEL ROOF
CIRCLIP	11002524	1	2	488	11212257	BELT CARRIER SYSTEM
CIRCLIP FUER GRIFFKAPPE	10678848	4	2	472	10343693	JOYSTICK
CIRCULAR BEARING C50X30X	726905008	120	2	291	96034631	RADIATOR, PRE-ASSEMBLED
CIRCULAR BEARING C50X30X	726905008	8	4	592	967980508	OIL COOLER, PRE-ASSEMBLE
CIRCULATING PUMP	11622224	20	1	430	969085208	HEATING, PRE-ASSEMBLED
CIRCULATING PUMP	11622224	26	1	484	10876576	WATER HEATING SYSTEM
CIRCULATING PUMP	11622224	(7)	1	484	10876576	WATER HEATING SYSTEM

Description	Item	Pos.	Quantity	Page	Assembly	Description
CLADDING REAR PANEL 193X	97001404	5	1	399	917305408	INTERNAL PANELLING INSTA
CLAMP	10875952	1	1	732	10872003	WORK LIGHT
CLAMP	6202909	100	1	328	96034515	EXPANSION TANK PRE-ASS.
CLAMP	968267308	2	1	639	968993508	CAMERA HOLDER, PREMOU
CLAMP	968267408	3	1	639	968993508	CAMERA HOLDER, PREMOU
CLAMP	968290708	1	1	637	968290608	STAND
CLAMP	968290908	2	1	636	968994408	CAMERA HOLDER, PREMOU
CLAMP - ADD-ON UNIT	10143707	10	1	269	10151328	CABLE HARNESS MOUNTING
CLAMP DIN 3016-1 10X12XD1	7381679	3	1	744	967933408	LOCATION FIXTURE PRE-ASS.
CLAMP DIN 3016-1 10X15XD1	7381770	32	6	269	10151328	CABLE HARNESS MOUNTING
CLAMP DIN 3016-1 10X20XD1	7381628	38	2	269	10151328	CABLE HARNESS MOUNTING
CLAMP DIN 3016-1 10X25XD1	7382092	2	2	195	10139112	OIL LINE PRE-ASSEMBLY
CLAMP DIN 3016-1 10X25XD1	7382092	47	4	269	10151328	CABLE HARNESS MOUNTING
CLAMP DIN 3016-1 12X20XD1	7381629	39	5	269	10151328	CABLE HARNESS MOUNTING
CLAMP DIN 3016-1 16X20XD1	7382085	13	1	228	10143341	FUEL LINES
CLAMP DIN 3016-1 18X25XD1	7382086	39	1	271	10151329	WIRING HARNESS ASSEMBLY
CLAMP DIN 3016-1 22X20XA1	7381286	11	1	232	10145173	INTAKE STACK ASSEMBLY
CLAMP DIN 3016-1 22X20XD1	7381630	13	1	232	10145173	INTAKE STACK ASSEMBLY
CLAMP DIN 3016-1 22X20XD1	7381630	42	3	269	10151328	CABLE HARNESS MOUNTING
CLAMP DIN 3016-1 28X20XD1	11481080	22	3	430	969085208	HEATING, PRE-ASSEMBLED
CLAMP DIN 3016-1 28X20XD1	11481080	25	1	480	918759808	ADD HEATING SUPERSTRUCT
CLAMP DIN 3016-1 28X20XD1	11481080	26	1	482	96020359	ADDNL.HEATING, PRE-ASSE
CLAMP DIN 3016-1 6X15XD1 W	7381292	20	1	229	10143342	LEAK OIL RETURN LINE
CLAMP DIN 3016-1 6X15XD1 W	7381292	9	6	254	11420633	CYCLE VALVE
CLAMP DIN 3016-1 6X20XA1 W	11000593	10	2	254	11420633	CYCLE VALVE
CLAMP DIN 3016-1 6X20XD1 W	7382088	14	1	229	10143342	LEAK OIL RETURN LINE
CLAMP DIN 3016-1 8X15XD1 W	7381771	31	1	269	10151328	CABLE HARNESS MOUNTING
CLAMP DIN 3016-1 8X20XD1 W	7382090	37	4	269	10151328	CABLE HARNESS MOUNTING
CLAMP DIN 3017-1 16/12-20/9	4601105	6	1	195	10139112	OIL LINE PRE-ASSEMBLY
CLAMP EMVFSK 1 FEDERST	10424210	37	2	467	96053500	ELECTRIC ADD-ON PARTS CA
CLAMP EMVSK 12	602042808	38	2	467	96053500	ELECTRIC ADD-ON PARTS CA
CLAMP FITTING 1-3X21X9,3 ZE	262101308	68	0.04	400	917305408	INTERNAL PANELLING INSTA
CLAMP G-ST-52 FE//ZN20//C	97039859	15	5	511	96051842	EXHAUST SYSTEM PRE-ASSE
CLAMP SURE-SEAL	605215508	518	2	49	96045228	WIRING HARNESS
CLAMP SURE-SEAL	605215508	515	1	532	96045385	WIRING HARNESS
CLAMP SURE-SEAL	605215508	524	2	535	96037136	WIRING HARNESS
CLAMP SURE-SEAL	605215508	77	1	691	917292408	TELESCOPIC SECT.5 PRE-AS
CLAMP WELDED CONST.	966230708	29	1	421	917304708	SLIDING DOOR INSTALLATION
CLAMP WELDED CONST.	966230808	30	1	421	917304708	SLIDING DOOR INSTALLATION
CLAMP WELDED CONST. FE//	96035070	3	2	511	96051842	EXHAUST SYSTEM PRE-ASSE
CLAMP WELDED CONST. FE//	96035071	4	1	511	96051842	EXHAUST SYSTEM PRE-ASSE
CLAMP WELDED CONST. FE//	965426208	1	1	294	968026308	CLUTCH ACTUATOR
CLAMP WELDED CONST. FE//	968765608	25	4	35	917511508	CRAWLER CENTRE PART PRE
CLAMP-HALF 216-16 PP	602000708	301	26	728	967785008	ADDNL.HYDR. FOLDING JIB
CLAMP-HALF DIN 3015-1 L 0 G	602007808	326	64	56	96035801	HYDRAULIC EQUIPM.CENTER
CLAMP-HALF DIN 3015-1 L 0 R	7365090	37	4	26	96034894	PROTECTION PLATE CPL.
CLAMP-HALF DIN 3015-1 L 0 R	7365090	37	4	29	96034977	PROTECTION PLATE
CLAMP-HALF DIN 3015-1 L 0 R	7365090	309	62	56	96035801	HYDRAULIC EQUIPM.CENTER
CLAMP-HALF DIN 3015-1 L 0 R	10875557	184	8	511	96051842	EXHAUST SYSTEM PRE-ASSE
CLAMP-HALF DIN 3015-1 L 1 R	602007108	35	12	701	966134608	ADD-ON PARTS CYLINDER
CLAMP-HALF DIN 3015-1 L 2 R	7362946	71	4	669	917291908	PIVOT SECTION, PRE-ASSEMB
CLAMP-HALF DIN 3015-1 L 2 R	602002208	306	6	496	969763408	PIPEWORK AIR INSTALLATIO
CLAMP-HALF DIN 3015-1 L 2 R	602008308	29	2	334	96023117	BATTERY BOX, PRE-ASSEMB
CLAMP-HALF DIN 3015-1 L 3 G	602008408	315	14	56	96035801	HYDRAULIC EQUIPM.CENTER
CLAMP-HALF DIN 3015-1 L 3 G	602008408	30	2	334	96023117	BATTERY BOX, PRE-ASSEMB
CLAMP-HALF DIN 3015-1 L 3 R	602008508	317	6	56	96035801	HYDRAULIC EQUIPM.CENTER
CLAMP-HALF DIN 3015-1 L 3 R	7005052	30	3	26	96034894	PROTECTION PLATE CPL.
CLAMP-HALF DIN 3015-1 L 3 R	7005052	30	3	29	96034977	PROTECTION PLATE
CLAMP-HALF DIN 3015-1 L 3 R	7005052	72	4	669	917291908	PIVOT SECTION, PRE-ASSEMB
CLAMP-HALF DIN 3015-1 L 3 R	7005052	36	2	701	966134608	ADD-ON PARTS CYLINDER

Description	Item	Pos.	Quantity	Page	Assembly	Description
CLAMP-HALF DIN 3015-1 L 3 R	7005052	10	3	744	967933408	LOCATION FIXTURE PRE-ASS.
CLAMP-HALF DIN 3015-1 L 4 R	602008808	35	2	26	96034894	PROTECTION PLATE CPL.
CLAMP-HALF DIN 3015-1 L 4 R	602008808	35	2	29	96034977	PROTECTION PLATE
CLAMP-HALF DIN 3015-1 L 4 R	602008808	321	4	56	96035801	HYDRAULIC EQUIPM.CENTER
CLAMP-HALF DIN 3015-1 L 4 R	602008908	324	8	561	96045351	HYDRAULICS UPPER CARRI
CLAMP-HALF DIN 3015-1 L 5 R	602009008	304	2	728	967785008	ADDNL.HYDR. FOLDING JIB
CLAMP-HALF DIN 3015-1 L 5 R	602009108	315	4	561	96045351	HYDRAULICS UPPER CARRI
CLAMP-HALF DIN 3015-1 L 5 R	602009208	319	14	561	96045351	HYDRAULICS UPPER CARRI
CLAMP-HALF DIN 3015-1 L 6 R	602010108	309	6	98	96035796	HYDR.TRAVEL DRIVE
CLAMP-HALF DIN 3015-1 L 6 R	602010108	309	6	115	96035792	HYDR.TRAVEL DRIVE
CLAMP-HALF L 3 R 22 AL	11160668	190	4	287	919007708	DRIVE ASSEMBLY, PRE-ASSE
CLAMP-HALF S 4 E 64 PP	10492888	325	8	496	969763408	PIPEWORK AIR INSTALLATIO
CLAMPING BOARD 6XM6	604412408	1	1	545	922648308	TERMINAL BOARD PRE-ASS.
CLAMPING LEVER M10X32 ED	11320604	8	2	639	968993508	CAMERA HOLDER, PREMOU
CLAMPING LEVER M8 X10CRN	11642508	10	2	636	968994408	CAMERA HOLDER, PREMOU
CLAMPING LEVER M8 X10CRN	11642508	7	2	639	968993508	CAMERA HOLDER, PREMOU
CLAMPING PIECE 12 G20MN5	380057108	205	6	287	919007708	DRIVE ASSEMBLY, PRE-ASSE
CLAMPING PIECE 24	927606901	30	1	608	939294001	ROPE DRUM
CLAMPING PIECE PA6G+OEL	976873708	3	2	636	968994408	CAMERA HOLDER, PREMOU
CLAMPING PIECE PA6G+OEL	976873708	6	2	639	968993508	CAMERA HOLDER, PREMOU
CLAMPING PROFILE 1,5-4X25X	11002218	3	2.22	426	917676208	HEATING CRANE DRIVER'S CA
CLAMPING PROFILE 25,7X21,5	10876056	55	3.4	421	917304708	SLIDING DOOR INSTALLATION
CLAMPING PROFILE 2X13,5X2	10300600	11	4.2	421	917304708	SLIDING DOOR INSTALLATION
CLAMPING PROFILE 40X1M P	7014524	8	1	26	96034894	PROTECTION PLATE CPL.
CLAMPING PROFILE 40X1M P	7014524	8	1	29	96034977	PROTECTION PLATE
CLAMPING PROFILE 40X1M P	7014524	7	3	592	967980508	OIL COOLER, PRE-ASSEMBLE
CLAMPING RING RD10X12 PA6	288182508	35	1	480	918759808	ADD HEATING SUPERSTRUCT
CLAW	11004031	10	1	764	512363708	HYDRO CYLINDER
CLIP 23 ST	10216534	22	2	601	918628408	AIR COND. UNIT SUPERSTRU
CLOGGING INDICATOR	571356108	(4)	1	560	96045351	HYDRAULICS UPPER CARRI
CLOSING DEVICE	966230408	25	1	421	917304708	SLIDING DOOR INSTALLATION
CLOSING PIN 1.4305	97019129	52	1	421	917304708	SLIDING DOOR INSTALLATION
CLOSING PLATE	11643394	3	1	373	11182597	VARIABLE DISPLACEMENT MO
CLOSING PLATE	11643394	3	1	605	11211058	VARIABLE DISPLACEMENT MO
CLOSING RING	10803065	14	1	359	510229408	HYDRO MOTOR
CLOSING RING	570109808	4	1	360	570109008	DRIVING GEAR
CLUTCH ACTUATOR	968026308	7	1	286	919007708	DRIVE ASSEMBLY, PRE-ASSE
CLUTCH WRENCH 90MM	966796408	100	1	151	919328608	TOOLS AND ACCESSORIES
COAT HOOK SCHWARZ	12106136	69	1	400	917305408	INTERNAL PANELLING INSTA
COLD MACHINE OIL WAECO	11211803	101	0.18	601	918628408	AIR COND. UNIT SUPERSTRU
COLLAR NUT M10X1,5	7361602	22	2	319	10871282	VARIABLE PUMP
COLLAR NUT M6	514591708	21	1	81	11161917	CONTROL ELEMENT
COLLECTING PIPE 22L/10 A3C	10871151	200	1	561	96045351	HYDRAULICS UPPER CARRI
COLLECTING PIPE 42L/10 A3	10412850	202	1	561	96045351	HYDRAULICS UPPER CARRI
COLLECTING PIPE 42L/11 SPF	10871595	201	1	561	96045351	HYDRAULICS UPPER CARRI
COLLER BOLT	571430208	2	1	649	10040024	POUCH SOCKET
COMBI PLIERS DIN 5244 180	790031508	62	1	152	928569808	MAIN TOOLS
COMBINATED RADIATOR	97118133	100	1	291	96034631	RADIATOR, PRE-ASSEMBLED
COMPACT ROPE WINCH KSW	90028852	10	1	604	967969608	AUXILIARY HOISTING GEAR 2
COMPACT ROPE WINCH KSW	90208882	1	1	365	917259708	MAIN HOIST GEAR
COMPANY NAME PLATE	10124097	600	2	179	13455297	DIESEL ENGINE
COMPENSATOR	10149144	2	1	253	12512627	EXHAUST NOZZLE ATTACHM
COMPRESSED-AIR SYST.SU	917676308	155	1	13		LIEBHERR LTR 1220
COMPRESSION RING	502923708	46	2	467	96053500	ELECTRIC ADD-ON PARTS CA
COMPRESSION RING DR/R22	502932508	9	1	339	968999708	FUEL TANK, PRE-ASSEMBLED
COMPRESSION RING DR/R26	502932808	312	1	496	969763408	PIPEWORK AIR INSTALLATIO
COMPRESSION SPRING	10217532	7	1	81	11161917	CONTROL ELEMENT
COMPRESSION SPRING	11102038	17	1	699	571928508	CYLINDER HEAD CPL.
COMPRESSION SPRING	12107367	(3)	10	353	90008901	SLEWING GEAR DRIVE
COMPRESSION SPRING	12107368	(4)	10	353	90008901	SLEWING GEAR DRIVE

Description	Item	Pos.	Quantity	Page	Assembly	Description
COMPRESSION SPRING	510783008	9	1	588	511419608	PRESSURE LIMITING VALVE
COMPRESSION SPRING	510797508	9	1	585	511433908	PRESSURE LIMITING VALVE
COMPRESSION SPRING	511015108	4	1	585	511433908	PRESSURE LIMITING VALVE
COMPRESSION SPRING	511015308	4	1	588	511419608	PRESSURE LIMITING VALVE
COMPRESSION SPRING	511025508	10	2	63	11643183	CONTROL BLOCK
COMPRESSION SPRING	511025508	10	2	66	11643184	CONTROL BLOCK
COMPRESSION SPRING	571115508	9	1	81	11161917	CONTROL ELEMENT
COMPRESSION SPRING	7023659	3	1	315	10472208	ADJUSTMENT
COMPRESSION SPRING	7027053	46	1	81	11161917	CONTROL ELEMENT
COMPRESSION SPRING 0,6X5,	11340583	2	1	316	10871043	VARIABLE PUMP
COMPRESSION SPRING 1,6X1	12101506	25	2	31	968036408	LIMIT SWITCH, PRE-ASSEMB
COMPRESSION SPRING 1,6X	720009408	22	4	701	966134608	ADD-ON PARTS CYLINDER
COMPRESSION SPRING 1,8X7	10176329	7	10	358	90025782	BRAKE SPRING SET
COMPRESSION SPRING 15X13	720014908	2	1	673	917292008	TELESCOPIC SECTION 1 PRE
COMPRESSION SPRING 15X13	720014908	2	1	677	917292108	TELESCOPIC SECT.2 PRE-AS
COMPRESSION SPRING 15X13	720014908	2	1	681	917292208	TELESCOPIC SECT.3 PRE-ASS
COMPRESSION SPRING 15X13	720014908	2	1	685	917292308	TELESCOPIC SECT.IV PRE-A
COMPRESSION SPRING 15X13	720014908	22	1	690	917292408	TELESCOPIC SECT.5 PRE-AS
COMPRESSION SPRING 1X4,1	10176330	8	10	358	90025782	BRAKE SPRING SET
COMPRESSION SPRING 2,10X	9886756	9	1	213	10129474	OIL COOLER, PRE-ASSEMBLE
COMPRESSION SPRING 2X12X	11067867	38	1	421	917304708	SLIDING DOOR INSTALLATION
COMPRESSION SPRING 3,2X	10129501	4	1	215	10152592	PRESSURE RELIEF VALVE
COMPRESSION SPRING 3X17	11118160	6	1	184	10138450	FINAL CONTROL VALVE
COMPRESSION SPRING 4,60X	9074481	(9)	4	202	10149580	CYLINDER HEAD ASSEMBLY
COMPRESSION SPRING 4,60X	9074481	9	4	204	10149579	CYLINDER HEAD PRE-ASSY.
COMPRESSION SPRING 4X25X	11003426	5	1	477	966707708	MIRROR RETAINER PRE-ASS.
COMPRESSION SPRING 6,3X8	720011408	4	1	363	917259608	ROTATING PLATFORM LOCK
COMPRESSION SPRING 8X92X	10297691	5	1	383	96015921	OPERATING ELEMENT INSTAL
COMPRESSION SPRING DIN 2	720008508	6	1	763	923285508	FOLDING BRACKET PRE-ASS.
COMPRESSION SPRING EN10	720012608	34	1	761	917267508	TRANSPORT MOUNTING
CONICAL MOUNT 70NR11	10291989	2	4	382	967986308	BEARING INSTALLATION
CONICAL PLUG	779010901	80	1	370	939292201	PLANETARY GEARBOX
CONNECTING CABLE 4M	11692299	4	1	47	10450273	ANTENNA
CONNECTING DEVICE EN 358	12102869	3	1	167	916959808	PERSONAL PROTECTION EQ
CONNECTING LINE 7X0,25-10,0	10472995	30	1	540	91000922	SWITCHBOX MOUNTING PART
CONNECTING LINE ADD-ON R-	10149677	230	1	176	13455297	DIESEL ENGINE
CONNECTING LINE R-MOTORX	10141549	1	1	233	10147364	AIR INTAKE ASSEMBLY
CONNECTING PIECE Al Rm>=	10121666	1	1	191	10121667	CONNECTING PIECE W.O-RIN
CONNECTING PIECE W.O-RIN	10121667	4	1	187	10132560	OIL SUMP WITH FASTENING
CONNECTING PIPE 0	11000700	101	2	280	918731408	DRIVE ASSEMBLY CPL.
CONNECTING PIPE 0	11000700	21	2	426	917676208	HEATING CRANE DRIVER'S CA
CONNECTING PIPE 0	11000700	5	1	430	969085208	HEATING, PRE-ASSEMBLED
CONNECTING PIPE 0	11000700	11	1	480	918759808	ADD HEATING SUPERSTRUCT
CONNECTING PIPE 0	11000700	61	1	482	96020359	ADDNL.HEATING, PRE-ASSE
CONNECTING PLATE	10008308	2	1	309	11210798	VARIABLE PUMP
CONNECTING PLATE	10873570	3	1	305	11210795	VARIABLE PUMP
CONNECTING PLATE	11003841	16	1	710	10354493	CABLE REEL
CONNECTING PLATE	510629508	175	1	561	96045351	HYDRAULICS UPPER CARRI
CONNECTING PLATE	510629508	173	1	616	967784808	HYDR.AUXILIARY HOISTING
CONNECTING PLATE	570109208	4	1	359	510229408	HYDRO MOTOR
CONNECTING PLATE	571907208	2	1	319	10871282	VARIABLE PUMP
CONNECTING PLATE DP1-10/3	511058308	196	1	561	96045351	HYDRAULICS UPPER CARRI
CONNECTING ROD BEARING 8	10145100	(2)	1	175	13455297	DIESEL ENGINE
CONNECTING ROD BEARING 8	10145101	(3)	1	175	13455297	DIESEL ENGINE
CONNECTING ROD BEARING	9073699	(3)	1	175	13455297	DIESEL ENGINE
CONNECTING ROD BEARING	9075607	(2)	1	175	13455297	DIESEL ENGINE
CONNECTION BLOCK	511055908	169	1	560	96045351	HYDRAULICS UPPER CARRI
CONNECTION CABLE	12102265	29	1	704	10802064	ROPE LENGTH INDICATOR
CONNECTION CABLE 2X0,75-1	10877798	12	1	462	96036955	WIRING HARNESS
CONNECTION CABLE 2X0,75-1	10877798	6	1	538	96037133	LEAD

Description	Item	Pos.	Quantity	Page	Assembly	Description
CONNECTION CABLE 2X0,75-1	10877798	6	1	644	96037132	LEAD
CONNECTION CABLE 2X0,75-	10877801	19	1	532	96045385	WIRING HARNESS
CONNECTION CABLE 2X0,75-	10877801	372	1	532	96045385	WIRING HARNESS
CONNECTION CABLE 2X0,75-	10877801	388	1	535	96037136	WIRING HARNESS
CONNECTION CABLE 2X0,75-	10877801	389	1	535	96037136	WIRING HARNESS
CONNECTION CABLE 2X0,75-5	10877800	371	1	532	96045385	WIRING HARNESS
CONNECTION CARRIER 42CrM	927745001	1	1	370	939292201	PLANETARY GEARBOX
CONNECTION FLANGE	511057608	188	1	561	96045351	HYDRAULICS UPPER CARRI
CONNECTION FLANGE	511057608	172	1	616	967784808	HYDR.AUXILIARY HOISTING
CONNECTION PIECE	96035597	3	2	328	96034515	EXPANSION TANK PRE-ASS.
CONNECTION PIECE	96039022	2	1	329	96034522	EQUALIZING RESERVOIR
CONNECTION STUB 11SMnPb3	927586201	12	2	374	90200104	OIL-GAUGING INSTRUMENT
CONNECTION STUB 11SMnPb3	927586201	12	1	612	90200103	OIL-GAUGING INSTRUMENT
CONNECTOR FOR FUEL HEAT	962196208	515	1	535	96037136	WIRING HARNESS
CONNECTOR PIN 0,75-2,0MM2	10100062	669	2	463	96036955	WIRING HARNESS
CONNECTOR PIN 0,75-2,0MM2	10100062	669	4	535	96037136	WIRING HARNESS
CONNECTOR PLUG A	12102524	20	2	63	11643183	CONTROL BLOCK
CONNECTOR PLUG A AX	602337008	508	3	464	96036956	WIRING HARNESS
CONNECTOR PLUG A AX	602337008	518	1	542	96045387	CABLES, BASIC CONSTRUCTI
CONROD	571582508	11	1	240	5700161	AIR COMPRESSOR
CONROD R-MOTORX88	11348072	60	4	175	13455297	DIESEL ENGINE
CONSOLE 4X163X242 S315MC	97058382	11	2	445	96036790	SLEWING PLATFORM PANELLI
CONSOLE 4X179X282 S315MC	97065229	42	1	286	919007708	DRIVE ASSEMBLY, PRE-ASSE
CONSOLE 4X257X253 S315MC	97056391	7	1	567	96035117	MECHANICAL AUXILIARIES
CONSOLE 4X470X340 S315MC	97056389	6	1	567	96035117	MECHANICAL AUXILIARIES
CONSOLE AUX. REPLENISHIN	917269408	389	1	15		LIEBHERR LTR 1220
CONSOLE FOR FILTER PRE-A	13512036	1	1	226	10146791	FUEL FINE-FILTER ASSEMBLY
CONSOLE PRE-ASS.	923879808	40	1	761	917267508	TRANSPORT MOUNTING
CONSOLE PRE-ASS.	968646408	2	1	627	917269408	CONSOLE AUX. REPLENISHIN
CONSOLE PRE-ASS.	968728808	1	1	749	968811608	CROSS BEAM
CONSOLE PRE-ASS.	969431008	3	1	567	96035117	MECHANICAL AUXILIARIES
CONSOLE X5CrNi18-10	10149679	3	1	234	10149677	CONNECTING LINE ADD-ON
CONTACT 0,5-1MM2	602300308	125	35	48	96045227	WIRING HARNESS
CONTACT 0,5-1MM2	602300308	125	19	49	96045228	WIRING HARNESS
CONTACT 0,5-1MM2	602300308	125	110	462	96036955	WIRING HARNESS
CONTACT 0,5-1MM2	602300308	125	118	464	96036956	WIRING HARNESS
CONTACT 0,5-1MM2	602300308	125	96	532	96045385	WIRING HARNESS
CONTACT 0,5-1MM2	602300308	125	92	534	96037136	WIRING HARNESS
CONTACT 0,5-1MM2	602300308	125	27	536	96037137	WIRING HARNESS
CONTACT 0,5-1MM2	602300308	125	2	538	96037133	LEAD
CONTACT 0,5-1MM2	602300308	125	6	642	96043733	WIRING HARNESS
CONTACT 0,5-1MM2	602329108	617	12	49	96045228	WIRING HARNESS
CONTACT 0,5-1MM2	602329108	617	8	535	96037136	WIRING HARNESS
CONTACT 1,0-2,5MM2	10877344	2259	5	463	96036955	WIRING HARNESS
CONTACT 1-2,5MM2	602300108	121	14	48	96045227	WIRING HARNESS
CONTACT 1-2,5MM2	602300108	121	1	49	96045228	WIRING HARNESS
CONTACT 1-2,5MM2	602300108	121	13	462	96036955	WIRING HARNESS
CONTACT 1-2,5MM2	602300108	121	27	464	96036956	WIRING HARNESS
CONTACT 1-2,5MM2	602300108	121	13	532	96045385	WIRING HARNESS
CONTACT 1-2,5MM2	602300108	121	21	534	96037136	WIRING HARNESS
CONTACT 1-2,5MM2	602300108	121	9	536	96037137	WIRING HARNESS
CONTACT BOW	691041608	19	21	52	11346779	SLIP RING TRANSMITTER
CONTACT BOW HOLDER	10359128	21	2	52	11346779	SLIP RING TRANSMITTER
CONTACT BOW HOLDER	691043108	17	35	52	11346779	SLIP RING TRANSMITTER
CONTACT LOCK 2-POL	7368241	526	1	463	96036955	WIRING HARNESS
CONTACT LOCK 2-POL	7368241	527	2	535	96037136	WIRING HARNESS
CONTACT LOCK 2-POL	7368241	523	2	536	96037137	WIRING HARNESS
CONTACT LOCK 2-POL PBT G	12693951	524	1	536	96037137	WIRING HARNESS
CONTACT LOCK DT 12 POLIG	10216772	513	1	535	96037136	WIRING HARNESS
CONTACT LOCK DT 2 POLIG	10342519	510	2	462	96036955	WIRING HARNESS

Description	Item	Pos.	Quantity	Page	Assembly	Description
CONTACT LOCK DT 2 POLIG	10342519	526	3	535	96037136	WIRING HARNESS
CONTACT LOCK DT 2 POLIG	10342519	518	2	536	96037137	WIRING HARNESS
CONTACT LOCK DT-STECKD	7368246	504	1	536	96037137	WIRING HARNESS
CONTACT LOCK DT-STECKER	6205242	521	1	536	96037137	WIRING HARNESS
CONTACT RETAINING PIN 9P	10045101	509	1	48	96045227	WIRING HARNESS
CONTACT RETAINING PIN 9P	10045101	528	2	542	96045387	CABLES, BASIC CONSTRUCTI
CONTACT RETAINING PIN JPT	10099866	511	1	48	96045227	WIRING HARNESS
CONTACT RETAINING PIN JPT	10099866	507	1	535	96037136	WIRING HARNESS
CONTACT RETAINING PIN JPT	10099867	513	1	48	96045227	WIRING HARNESS
CONTACT RETAINING PIN JPT	10099867	511	7	542	96045387	CABLES, BASIC CONSTRUCTI
CONTACT RETAINING PIN JPT	10099868	502	2	48	96045227	WIRING HARNESS
CONTACT RETAINING PIN JPT	10099868	522	9	542	96045387	CABLES, BASIC CONSTRUCTI
CONTACT SET	11659642	22	1	704	10802064	ROPE LENGTH INDICATOR
CONTAINER	10038271	26	1	136	11347526	ELECTRIC PUMP
CONTAINER	10038271	29	1	525	10327065	ELECTRIC PUMP
CONTAINER PLUG	570066208	4	1	102	502806508	EQUALIZING RESERVOIR
CONTAINER SCREW JOINT	10878281	2	1	101	96028333	EXPANSION TANK CPL.
CONTAINER SCREW JOINT	10878281	(2)	1	616	967784808	HYDR.AUXILIARY HOISTING
CONTROL BLOCK 315BAR SP	12100860	26	1	560	96045351	HYDRAULICS UPPER CARRI
CONTROL BLOCK 320BAR SP	11211756	21	1	560	96045351	HYDRAULICS UPPER CARRI
CONTROL BLOCK 330BAR SP	10332882	24	1	560	96045351	HYDRAULICS UPPER CARRI
CONTROL BLOCK 365BAR SP	10413106	22	1	560	96045351	HYDRAULICS UPPER CARRI
CONTROL BLOCK 380BAR SP	11341035	27	1	560	96045351	HYDRAULICS UPPER CARRI
CONTROL BLOCK 420BAR SP	11643183	21	1	56	96035801	HYDRAULIC EQUIPM.CENTER
CONTROL BLOCK 420BAR SP	11643184	22	1	56	96035801	HYDRAULIC EQUIPM.CENTER
CONTROL BLOCK SPF	10038509	21	1	622	969426308	AUX. HYDR. FOLDING JIB SP
CONTROL BOX ANNEXE	10144227	571	1	179	13455297	DIESEL ENGINE
CONTROL BUSHING	5009648	41	1	81	11161917	CONTROL ELEMENT
CONTROL ELEMENT	11161917	4	1	79	11182596	VARIABLE DISPLACEMENT MO
CONTROL ELEMENT	11161917	4	1	373	11182597	VARIABLE DISPLACEMENT MO
CONTROL ELEMENT	11161917	4	1	605	11211058	VARIABLE DISPLACEMENT MO
CONTROL LEAD 12 X 0,75 SPF	600460808	5	6.6	532	96045385	WIRING HARNESS
CONTROL LEAD 4 X 0,5 SPF	600463908	9	3.13	49	96045228	WIRING HARNESS
CONTROL LEAD 4 X 0,5 SPF	600463908	10	2.63	49	96045228	WIRING HARNESS
CONTROL LEAD 4 X 0,5 SPF	600463908	16	6.06	49	96045228	WIRING HARNESS
CONTROL LEAD 4 X 0,5 SPF	600463908	17	6.06	49	96045228	WIRING HARNESS
CONTROL LEAD 5 X 0,5 SPF	600462908	(5)	1.46	741	917598408	ELECTRIC MEASURING & WAR
CONTROL PANEL ROOF	96022872	2	1	467	96053500	ELECTRIC ADD-ON PARTS CA
CONTROL PANEL SUPPORT	10009700	57	1	428	11083498	AIR CONDITIONING UNIT
CONTROL PARTS	9079870	110	4	175	13455297	DIESEL ENGINE
CONTROL PLATE	570110408	2	1	361	570109508	DRIVING GEAR
CONTROL STAND	918810308	135	1	13		LIEBHERR LTR 1220
CONTROL UNIT	10471384	5	1	305	11210795	VARIABLE PUMP
CONTROL UNIT	11690588	5	1	297	11182708	VARIABLE PUMP
CONTROL UNIT	11690588	5	1	300	10871017	VARIABLE PUMP
CONTROL VALVE	11692439	50	1	316	10871043	VARIABLE PUMP
COOLANT PIPE BEND ADD-ON	10142742	382	1	177	13455297	DIESEL ENGINE
COOLER GRILL 820X730X80	96007145	2	1	657	919028808	DISPATCH ASSY.MECH.PART
COOLING WATER AIR BLEED	10142744	387	1	177	13455297	DIESEL ENGINE
COOLING WATER HOSE 55/6	97050894	251	1	287	919007708	DRIVE ASSEMBLY, PRE-ASSE
COOLING WATER HOSE 55/65	97050893	250	1	287	919007708	DRIVE ASSEMBLY, PRE-ASSE
COOLING WATER HOSE DN20-	11621770	14	0.1	480	918759808	ADD HEATING SUPERSTRUCT
COOLING WATER HOSE DN20-	11621770	28	0.07	482	96020359	ADDNL.HEATING, PRE-ASSE
COOLING WATER LINE 12X1	10145177	1	1	243	10145278	ACCESSORIES AIR COMPRES
COOLING WATER LINE 12X1	10145178	2	1	243	10145278	ACCESSORIES AIR COMPRES
COOLING WATER PRE-HEATI	918377508	401	1	15		LIEBHERR LTR 1220
COPPER PASTE DOSE 850G	10002552	132	1	252	10140729	EXHAUST TC MOUNTING
CORE PIN DIN 1472 4X12	431100201	21	1	368	932916901	ROPE DRUM
CORE PIN DIN 1472 4X12	431100201	24	1	608	939294001	ROPE DRUM
CORE PIN DIN 1473 5X24	431204301	18	1	608	939294001	ROPE DRUM

Description	Item	Pos.	Quantity	Page	Assembly	Description
CORE PIN ISO 8740 3X20	431200501	91	3	353	90008901	SLEWING GEAR DRIVE
CORRUGATED PIPE DN10 PA	10475426	160	3.4	46	966204108	ANTENNA CPL.
COTTER PIN FE//ZNNI8//CN//T	968014808	13	4	129	919644008	HYDRAULIC SUPPORT
COUNTER NUT M20x1,5 PA6	10036629	10	2	630	917368108	EL.COOLANT PREHEAT
COUNTER NUT M25X1,5 POLY	10042696	13	2	625	918462708	EXTERNAL FEED
COUNTER NUT PG16 KUNST	602419608	9	1	625	918462708	EXTERNAL FEED
COUNTERSUNK SCREW AEHN	12100589	45	4	433	918810308	CONTROL STAND
COUNTERSUNK SCREW AEHN	12100589	13	12	449	968923508	FLAP RIGHT PRE-ASS.
COUNTERSUNK SCREW AEHN	12100589	3	8	457	969016008	FLAP LEFT FRONT PRE-ASS.
COUNTERSUNK SCREW DIN 7	10877246	15	16	690	917292408	TELESCOPIC SECT.5 PRE-AS
COUNTERSUNK SCREW DIN 7	10179447	40	36	124	968046208	ADD-ON PARTS
COUNTERSUNK SCREW DIN	10876388	46	8	544	969256608	BASE ASSEMBLY
COUNTERSUNK SCREW DIN 7	408603508	33	4	433	918810308	CONTROL STAND
COUNTERSUNK SCREW DIN	10875549	20	2	412	916168308	AIR DUCT
COUNTERSUNK SCREW DIN	10875550	16	8	540	91000922	SWITCHBOX MOUNTING PART
COUNTERSUNK SCREW DIN	10875550	51	16	544	969256608	BASE ASSEMBLY
COUNTERSUNK SCREW DIN	10875809	11	4	406	916162508	WINDOW ASSEMBLY
COUNTERSUNK SCREW DIN	10875809	6	4	767	917268208	LADDER ATTACHMENT
COUNTERSUNK SCREW DIN	10875551	17	8	157	96063087	STORAGE BOX
COUNTERSUNK SCREW DIN	10875551	16	6	378	917259908	CRANE DRIVER CAB ADDITIO
COUNTERSUNK SCREW DIN	10875551	12	8	406	916162508	WINDOW ASSEMBLY
COUNTERSUNK SCREW DIN	10875551	13	8	409	966497908	FRONT WINDOW CPL.
COUNTERSUNK SCREW DIN	10875551	18	4	421	917304708	SLIDING DOOR INSTALLATION
COUNTERSUNK SCREW DIN	11113906	33	4	124	968046208	ADD-ON PARTS
COUNTERSUNK SCREW DIN	10875552	17	16	129	919644008	HYDRAULIC SUPPORT
COUNTERSUNK SCREW DIN	10875552	51	6	668	917291908	PIVOT SECTION, PRE-ASSEMB
COUNTERSUNK SCREW DIN	10875552	57	6	673	917292008	TELESCOPIC SECTION 1 PRE
COUNTERSUNK SCREW DIN	10875553	64	4	21	91001569	CRAWLER TRACK TRAVEL G
COUNTERSUNK SCREW DIN	10875553	3	3	52	11346779	SLIP RING TRANSMITTER
COUNTERSUNK SCREW DIN	10875553	32	6	648	12102921	LUFFING CYLINDER
COUNTERSUNK SCREW DIN 7	408606414	(4)	40	119	917691008	FALL PROTECTION
COUNTERSUNK SCREW DIN	10875554	7	2	753	919007108	LOAD HOOK
COUNTERSUNK SCREW ISO 1	12100586	10	8	654	967936908	COUNTERWEIGHT CPL.
COUNTERSUNK SCREW ISO 1	12100586	11	2	758	917413208	SELF-ERECT. AUX. HOIST GEA
COUNTERSUNK SCREW ISO	10878064	16	56	20	91001569	CRAWLER TRACK TRAVEL G
COUNTERSUNK SCREW ISO	12100279	10	4	410	965784408	ROOF WINDOW PRE-ASS.
COUNTERSUNK SCREW ISO 1	12210040	4	3	199	10153583	CRANKSHAFT SEALING
COUNTERSUNK SCREW ISO	12216233	12	12	348	969050308	OIL TANK PRE-ASS.
COUNTERSUNK SCREW ISO	12100291	3	4	657	919028808	DISPATCH ASSY.MECH.PART
COUNTERWEIGHT CPL.	967936908	1	1	652	917260608	COUNTERWEIGHT WITH CLAM
COUNTERWEIGHT CPL. 2400X	967916508	31	2	655	917404508	BALLAST
COUNTERWEIGHT CPL. 2400X	967916508	41	1	656	917404008	ADDITIONAL BALLAST
COUNTERWEIGHT CPL. 2400X	967916808	30	2	655	917404508	BALLAST
COUNTERWEIGHT CPL. 2400X	967916808	40	1	656	917404008	ADDITIONAL BALLAST
COUNTERWEIGHT WELDED	967937508	1	1	654	967936908	COUNTERWEIGHT CPL.
COUNTERWEIGHT WITH CLAM	917260608	146	1	13		LIEBHERR LTR 1220
COUPLING	571898408	101	1	704	10802064	ROPE LENGTH INDICATOR
COUPLING	97066819	101	1	286	919007708	DRIVE ASSEMBLY, PRE-ASSE
COUPLING PLUG	774372708	12	1	523	917261208	CENT. LUBRIC. SYSTEM SUP
COUPLING PLUG	774372708	2	2	613	921444108	CENTRAL LUBRICATING SYS
COUPLING PLUG B2 10-L	511508308	161	2	159	96056969	ADDITIONAL HYDRAULICS
COUPLING PLUG B2 10-L	511515008	151	2	717	967784508	HYDR.F.TELESCOPIC BOOM
COUPLING PLUG B3 16-S	511508608	153	3	728	967785008	ADDNL.HYDR. FOLDING JIB
COUPLING PLUG B6 22-L	511508108	163	1	616	967784808	HYDR.AUXILIARY HOISTING
COUPLING PLUG B6 25-S	510599708	160	1	616	967784808	HYDR.AUXILIARY HOISTING
COUPLING PLUG B8 38-S	511512308	155	2	616	967784808	HYDR.AUXILIARY HOISTING
COUPLING SLEEVE	774372608	11	1	523	917261208	CENT. LUBRIC. SYSTEM SUP
COUPLING SLEEVE	774372608	1	1	613	921444108	CENTRAL LUBRICATING SYS
COUPLING SLEEVE 3/8"-10L	10031989	155	1	728	967785008	ADDNL.HYDR. FOLDING JIB
COUPLING SLEEVE B2 10-L	511508408	162	2	159	96056969	ADDITIONAL HYDRAULICS

Description	Item	Pos.	Quantity	Page	Assembly	Description
COUPLING SLEEVE B2 12-L	511505808	176	2	561	96045351	HYDRAULICS UPPER CARRI
COUPLING SLEEVE B3 16-S	511505908	151	3	728	967785008	ADDNL.HYDR. FOLDING JIB
COUPLING SLEEVE B6 22-L	511508208	162	1	616	967784808	HYDR.AUXILIARY HOISTING
COUPLING SLEEVE B6 25-S	510599608	158	1	616	967784808	HYDR.AUXILIARY HOISTING
COUPLING SLEEVE B8 38-S	511512208	153	2	616	967784808	HYDR.AUXILIARY HOISTING
COUPLING SOCKET 3-POL G	605012708	7	1	625	918462708	EXTERNAL FEED
COUPLING SOCKET 4-POL 90°	680000708	5	1	462	96036955	WIRING HARNESS
COUPLING SOCKET 4-POL 90°	680000708	5	1	738	96068455	LEAD
COUPLING SOCKET 4-POL G	680001708	12	1	532	96045385	WIRING HARNESS
COUPLING SOCKET 4-POL SP	10678491	6	1	49	96045228	WIRING HARNESS
COUPLING SOCKET 4-POL SP	10678491	13	1	532	96045385	WIRING HARNESS
COUPLING SOCKET 4-POL SP	10678491	5	1	534	96037136	WIRING HARNESS
COUPLING SOCKET 4-POL SP	10678491	6	1	534	96037136	WIRING HARNESS
COUPLING SOCKET 4-POL SP	10678491	7	1	534	96037136	WIRING HARNESS
COUPLING SOCKET 4-POL SP	10678491	8	1	534	96037136	WIRING HARNESS
COUPLING SOCKET 4-POL SP	10678491	9	1	534	96037136	WIRING HARNESS
COUPLING SOCKET 4-POL SP	10678494	10	1	532	96045385	WIRING HARNESS
COUPLING SOCKET 4-POL SP	10871126	5	1	142	96045205	WIRING HARNESS
COUPLING SOCKET 4-POL SP	10871126	375	1	532	96045385	WIRING HARNESS
COUPLING SOCKET 4-POL SP	10871126	377	1	532	96045385	WIRING HARNESS
COUPLING SOCKET 4-POL SP	10871127	376	1	532	96045385	WIRING HARNESS
COUPLING SOCKET 4-POL SP	10871127	378	1	532	96045385	WIRING HARNESS
COUPLING SOCKET 4-POL SP	10873383	6	1	142	96045205	WIRING HARNESS
COUPLING SOCKET 4-POL SP	680001408	5	1	49	96045228	WIRING HARNESS
COUPLING SOCKET 4-POL SP	680001408	7	1	532	96045385	WIRING HARNESS
COUPLING SOCKET 4-POL SP	680001408	8	1	532	96045385	WIRING HARNESS
COUPLING SOCKET 4-POL SP	680001408	9	1	532	96045385	WIRING HARNESS
COUPLING SOCKET 4-POL SP	680001408	14	1	532	96045385	WIRING HARNESS
COUPLING SOCKET 4-POL SP	680001408	15	1	532	96045385	WIRING HARNESS
COUPLING SOCKET 4-POL SP	680001408	16	1	532	96045385	WIRING HARNESS
COUPLING SOCKET 4-POL SP	680001408	(6)	1	741	917598408	ELECTRIC MEASURING & WAR
COUPLING SOCKET 4-POLE 90	680000308	6	1	464	96036956	WIRING HARNESS
COUPLING SOCKET 4-POLE 90	680000808	11	1	532	96045385	WIRING HARNESS
COUPLING SOCKET 4-POLE	680000008	6	1	462	96036955	WIRING HARNESS
COUPLING SOCKET 4-POLE	680000008	5	1	464	96036956	WIRING HARNESS
COUPLING SOCKET 4-POLE	680000008	7	1	464	96036956	WIRING HARNESS
COUPLING SOCKET 4-POLE	680000008	(7)	1	741	917598408	ELECTRIC MEASURING & WAR
COVER	10122319	1	1	278	9078301	LOCKING PIECES
COVER	10286353	296	1	714	968708708	TERMINAL BOX CPL.
COVER	10297241	5	1	521	10871700	AIR FILTER
COVER	10331026	61	1	468	96053500	ELECTRIC ADD-ON PARTS CA
COVER	10650507	(2)	1	440	916049908	MIRROR ATTACHM.IN CRANE
COVER	10663059	7	1	319	10871282	VARIABLE PUMP
COVER	11005170	17	1	435	10877138	OPERATOR SEAT
COVER	11171270	32	1	435	10877138	OPERATOR SEAT
COVER	12102477	40	1	136	11347526	ELECTRIC PUMP
COVER	12102477	34	1	525	10327065	ELECTRIC PUMP
COVER	602761708	6	1	546	967589508	TERMINAL STRIP
COVER	636109301	4	1	546	967589508	TERMINAL STRIP
COVER	9178294	(6)	1	275	10125687	POWER TAKE-OFF ADD-ON
COVER	9273690	6	1	276	10144036	POWER TAKE-OFF ADD-ON
COVER 10X220X220 ALMG3 F2	972272908	4	1	348	969050308	OIL TANK PRE-ASS.
COVER 25X300X300 PA6G	973077908	11	3	668	917291908	PIVOT SECTION, PRE-ASSEMB
COVER 289X289X12 PA6G	97027203	62	3	674	917292008	TELESCOPIC SECTION 1 PRE
COVER 289X289X12 PA6G	97027203	62	3	677	917292108	TELESCOPIC SECT.2 PRE-AS
COVER 289X289X12 PA6G	97027203	62	3	681	917292208	TELESCOPIC SECT.3 PRE-ASS
COVER 289X289X12 PA6G	97027203	62	3	685	917292308	TELESCOPIC SECT.IV PRE-A
COVER 4X1260X860 ALMG3 H	97031860	10	1	35	917511508	CRAWLER CENTRE PART PRE
COVER 4x83x84 S315MC FE//	970477608	8	2	701	966134608	ADD-ON PARTS CYLINDER
COVER 635X575X95 ABS	97007030	2	1	426	917676208	HEATING CRANE DRIVER'S CA

Description	Item	Pos.	Quantity	Page	Assembly	Description
COVER 8X735X83 PE SCHWAR	97008572	13	1	406	916162508	WINDOW ASSEMBLY
COVER Al Rm>200N/m	10127967	1	1	265	10127979	LOCKING PIECES
COVER COMPL.	963544508	26	3	445	96036790	SLEWING PLATFORM PANELLI
COVER COMPL.	963544508	4	1	518	96039752	ADDITIONAL PARTS CLADDIN
COVER COMPL.	963949708	39	1	445	96036790	SLEWING PLATFORM PANELLI
COVER COMPL.	964093408	9	1	445	96036790	SLEWING PLATFORM PANELLI
COVER COMPL.	966167808	2	1	41	96045226	SWITCH BOX COMPL.
COVER COMPL.	969493508	19	1	445	96036790	SLEWING PLATFORM PANELLI
COVER DISK 8X60	691041808	9	1	52	11346779	SLIP RING TRANSMITTER
COVER EN AC-Al Si8	10124116	1	1	259	10115664	LOCKING PIECES
COVER GLUED	966189708	1	1	42	966167808	COVER COMPL.
COVER HOOD	10451017	17	1	710	10354493	CABLE REEL
COVER LID	11171306	2	1	742	11482252	WIND VELOCITY TRANSMITTE
COVER LID 112,7 PPA	10115832	7	1	189	10155227	OIL SUMP PRE-ASS.
COVER LID 36X22 PVC-SW	10215892	9	1	477	966707708	MIRROR RETAINER PRE-ASS.
COVER LID 700 M18X1,5 PA 6	10129392	2	2	220	12489819	COVERING CAPS - KIT
COVER LID 9,5X11 POLYACE	591064708	71	1	400	917305408	INTERNAL PANELLING INSTA
COVER LID POLYSTIC27-33 AB	591570908	102	3	445	96036790	SLEWING PLATFORM PANELLI
COVER LID POLYSTIC27-33 AB	591570908	51	1	467	96053500	ELECTRIC ADD-ON PARTS CA
COVER LID POLYSTIC27-33 AB	591570908	6	1	471	96022872	CONTROL PANEL ROOF
COVER LID POLYSTIC27-33 AB	591570908	8	1	548	968063108	PRE-ASSEMBLY MOUNTING U
COVER LID PP	10129394	7	1	220	12489819	COVERING CAPS - KIT
COVER MOLERIT T59	11008024	527	4	463	96036955	WIRING HARNESS
COVER PLATE	11494286	41	2	754	910836808	HOOK BLOCK
COVER PLATE PRE-ASS.	965021508	46	2	433	918810308	CONTROL STAND
COVER PLATE ST.CONST.	969016108	3	1	455	969015908	SLEWING PLATFORM PANELLI
COVER PLATE ST.CONST. SP	968928808	3	1	445	96036790	SLEWING PLATFORM PANELLI
COVER PRE-ASSY.	967972208	9	1	75	91001377	CRAWLER SUPPORT PREASS
COVER PRE-ASSY.	967972308	10	1	75	91001377	CRAWLER SUPPORT PREASS
COVER PRE-ASSY.	967972308	10	1	108	91001378	CRAWLER SUPPORT PREASS
COVER PRE-ASSY.	967972408	11	4	75	91001377	CRAWLER SUPPORT PREASS
COVER PRE-ASSY.	967972408	11	4	108	91001378	CRAWLER SUPPORT PREASS
COVER PRE-ASSY.	968055808	9	1	108	91001378	CRAWLER SUPPORT PREASS
COVER PRE-ASSY.	968270108	29	1	75	91001377	CRAWLER SUPPORT PREASS
COVER PRE-ASSY.	968270108	29	1	108	91001378	CRAWLER SUPPORT PREASS
COVER PRE-ASSY.	968274208	33	1	75	91001377	CRAWLER SUPPORT PREASS
COVER PRE-ASSY.	968274208	33	1	108	91001378	CRAWLER SUPPORT PREASS
COVER PRE-ASSY.	968709108	34	1	75	91001377	CRAWLER SUPPORT PREASS
COVER PRE-ASSY.	968709108	34	1	108	91001378	CRAWLER SUPPORT PREASS
COVER RD190X6 S355MC FE//	935508808	52	8	20	91001569	CRAWLER TRACK TRAVEL G
COVER RD330X27 PA6G	972144708	8	1	668	917291908	PIVOT SECTION, PRE-ASSEMB
COVER S235JR	10117094	10	1	263	10116110	LOCKING PIECES
COVER WELDED	96029256	3	1	668	917291908	PIVOT SECTION, PRE-ASSEMB
COVER WELDED RAL 7016,SD	968075708	1	1	393	968514508	INSTALLATION SWITCH CAB. C
COVER WELDED SPF	969002508	7	1	445	96036790	SLEWING PLATFORM PANELLI
COVERING	12100617	(1)	1	435	10877138	OPERATOR SEAT
COVERING	12100619	(1)	1	435	10877138	OPERATOR SEAT
COVERING	12103044	10	1	704	10802064	ROPE LENGTH INDICATOR
COVERING CAPS - KIT	12489819	300	1	219	10146658	HIGH PRESSURE PUMP
COVERING SL 015	692600708	23	1	704	10802064	ROPE LENGTH INDICATOR
CRANE DRIVER CAB ADDITIO	917259908	129	1	13		LIEBHERR LTR 1220
CRANE DRIVER CABIN, UNFIN	917304608	132	1	13		LIEBHERR LTR 1220
CRANE DRIVER'S CABIN PUR	916165808	1	1	417	917304608	CRANE DRIVER CABIN, UNFINI
CRANE OPERATOR CABIN P	917304508	131	1	13		LIEBHERR LTR 1220
CRANE OPERATOR CABIN P	919010208	130	1	13		LIEBHERR LTR 1220
CRANKCASE BREATHER	12886223	1	1	186	10126713	CRANKCASE BREATHER ASS
CRANKCASE BREATHER ASS	10126713	16	1	174	13455297	DIESEL ENGINE
CRANKCASE CPL. WITH CYLI	11389608	10	1	174	13455297	DIESEL ENGINE
CRANKCASE PRE-ASSY. R-M	10154379	1	1	180	11389608	CRANKCASE CPL. WITH CYLIN
CRANKSHAFT ADD-ON PARTS	10141974	53	1	175	13455297	DIESEL ENGINE

Description	Item	Pos.	Quantity	Page	Assembly	Description
CRANKSHAFT R-MOTORXD934	10131177	1	1	196	10147438	CRANKSHAFT WITH GEAR
CRANKSHAFT SEALING	10153583	52	1	174	13455297	DIESEL ENGINE
CRANKSHAFT WITH GEAR R-M	10147438	50	1	174	13455297	DIESEL ENGINE
CRAWLER CARRIER RIGHT CP	91001373	11	1	12		LIEBHERR LTR 1220
CRAWLER CARRIER STEEL	96018230	1	1	75	91001377	CRAWLER SUPPORT PREASS
CRAWLER CARRIER STEEL	96019396	1	1	108	91001378	CRAWLER SUPPORT PREASS
CRAWLER CENTRE PART PRE	917511508	1	1	32	919499308	CENTRAL SECTION CRAWLER
CRAWLER CHAIN	12106552	(4)	1	69	917436708	FLOOR SHEET COMPL.
CRAWLER CHAIN CPL.	11695999	1	1	69	917436708	FLOOR SHEET COMPL.
CRAWLER SUPPORT PREASS	91001377	1	1	70	91001371	CRAWLER TRACK CARRIER LE
CRAWLER SUPPORT PREASS	91001378	1	1	103	91001373	CRAWLER CARRIER RIGHT CP
CRAWLER TRACK CARRIER L	91001371	10	1	12		LIEBHERR LTR 1220
CRAWLER TRACK TRAVEL GE	91001569	2	1	12		LIEBHERR LTR 1220
CRIMPING CONTACT 0,2-0,56	602322808	615	55	463	96036955	WIRING HARNESS
CROSS BEAM CPL.	918925508	6	2	12		LIEBHERR LTR 1220
CROSS BEAM DEMONTAGE	968811608	1	1	748	917611508	SLINGING MEAN
CROSS MEMBER STEEL CON	96023109	1	1	68	918925508	CROSS BEAM CPL.
CROSS STRAP	968498108	2	1	658	968068308	ASSEMBLY DEVICE
CROSS-MEMBER LMZ-70T SP	968497408	1	1	752	917531708	BALLAST TRAVERSE
CROWN NUT DIN 935 M36 10 F	10179495	5	1	751	968728808	CONSOLE PRE-ASS.
CUP HEAD SQUARE NECK B	10181375	300	2	291	96034631	RADIATOR, PRE-ASSEMBLED
CUP HEAD SQUARE NECK B	10181375	20	4	636	968994408	CAMERA HOLDER, PREMOU
CUP HEAD SQUARE NECK B	10181375	11	4	639	968993508	CAMERA HOLDER, PREMOU
CUP HOLDER	96048757	1	1	384	96057226	CUP HOLDER INSTALLATION
CUP HOLDER INSTALLATION	96057226	8	1	383	96015921	OPERATING ELEMENT INSTAL
CUP SPRING PILLAR	570033608	11	1	321	10872488	DRIVING GEAR
CURRENT COLLECTOR	10491892	15	8	710	10354493	CABLE REEL
CURRENT SOURCE LSB SPF	10027448	20	2	544	969256608	BASE ASSEMBLY
CYCLE VALVE 3.4BAR 8L/MIN 6	10149191	1	1	254	11420633	CYCLE VALVE
CYCLE VALVE 3.4BAR 8L/MIN 6	11420633	436	1	178	13455297	DIESEL ENGINE
CYL.ROLLER 14X14	747006101	17	114	370	939292201	PLANETARY GEARBOX
CYL.ROLLER 14X14	747006101	17	114	610	939294201	PLANETARY GEARBOX
CYL.ROLLER DIN 5402-1 32X3	747004501	3	78	78	90028956	TRACTION DRIVE
CYLINDER	570110308	1	1	361	570109508	DRIVING GEAR
CYLINDER BUSHING R-MOTO	10153973	1	1	182	10154458	CYLINDER
CYLINDER BUSHING R-MOTO	12898375	1	1	182	10154458	CYLINDER
CYLINDER HANDLE	704004608	120	1	294	968026308	CLUTCH ACTUATOR
CYLINDER HEAD	7025732	23	1	240	5700161	AIR COMPRESSOR
CYLINDER HEAD ASSEMBLY	10149580	80	4	175	13455297	DIESEL ENGINE
CYLINDER HEAD COVER	10134698	3	1	208	11358102	CYLINDER HEAD COVER ASS
CYLINDER HEAD COVER	10134750	1	2	208	11358102	CYLINDER HEAD COVER ASS
CYLINDER HEAD COVER	12874086	2	1	208	11358102	CYLINDER HEAD COVER ASS
CYLINDER HEAD COVER ASS	11358102	82	1	175	13455297	DIESEL ENGINE
CYLINDER HEAD CPL.	571928508	4	1	697	10876933	TELESCOPIC CYLINDER
CYLINDER HEAD GASKET	10133667	2	1	202	10149580	CYLINDER HEAD ASSEMBLY
CYLINDER HEAD PRE-ASSY.	10149579	1	1	202	10149580	CYLINDER HEAD ASSEMBLY
CYLINDER HEAD PRE-ASSY.	13476764	1	1	202	10149580	CYLINDER HEAD ASSEMBLY
CYLINDER HEAD R-MOTOR	10145862	1	1	205	10149578	CYLINDER HEAD
CYLINDER HEAD R-MOTOR	10149578	(1)	1	202	10149580	CYLINDER HEAD ASSEMBLY
CYLINDER HEAD R-MOTOR	10149578	1	1	204	10149579	CYLINDER HEAD PRE-ASSY.
CYLINDER R-MOTORXD944/D9	10154458	80	4	180	11389608	CRANKCASE CPL. WITH CYLIN
CYLINDER ROLLER THRUST B	746607401	37	1	754	910836808	HOOK BLOCK
CYLINDRICAL ROLLER BEARIN	571899308	(31)	1	305	11210795	VARIABLE PUMP
CYLINDRICAL ROLLER BEARIN	7023703	10	1	311	10008308	CONNECTING PLATE
CYLINDRICAL ROLLER BEARIN	7367374	31	1	310	10663105	DRIVING GEAR
CYLINDRICAL ROLLER BEARI	571477908	31	1	321	10872488	DRIVING GEAR
CYLINDRICAL ROLLER BEARI	500926208	430	2	296	97029921	DISTRIBUTOR GEARBOX
DAMPING PISTON	510782908	7	1	588	511419608	PRESSURE LIMITING VALVE
DAMPING PISTON	510797408	7	1	585	511433908	PRESSURE LIMITING VALVE
DATA LINE 2 X 1 FEP SPF	12100217	5	0.4	48	96045227	WIRING HARNESS

Description	Item	Pos.	Quantity	Page	Assembly	Description
DATA LINE 2 X 1 FEP SPF	12100217	6	0.4	48	96045227	WIRING HARNESS
DATA LINE 2 X 1 FEP SPF	12100217	9	3	464	96036956	WIRING HARNESS
DATA LINE 2 X 1 FEP SPF	12100217	10	3	464	96036956	WIRING HARNESS
DATA LINE 2 X 1 FEP SPF	12100217	15	6.27	534	96037136	WIRING HARNESS
DATA LINE 2 X 1 FEP SPF	12100217	16	7.72	534	96037136	WIRING HARNESS
DATA LINE 2 X 1 FEP SPF	12100217	17	4.27	534	96037136	WIRING HARNESS
DATA LINE 2 X 1 FEP SPF	12100217	18	2.02	534	96037136	WIRING HARNESS
DATA LINE 2 X 1 FEP SPF	12100217	19	1.3	534	96037136	WIRING HARNESS
DATA LINE 2 X 1 FEP SPF	12100217	379	6.27	534	96037136	WIRING HARNESS
DATA LINE 2 X 1 FEP SPF	12100217	380	6.27	534	96037136	WIRING HARNESS
DATA LINE 2 X 1 FEP SPF	12100217	381	6.27	534	96037136	WIRING HARNESS
DATA LINE 2 X 1 FEP SPF	12100217	383	6.27	534	96037136	WIRING HARNESS
DATA LINE 2 X 1 FEP SPF	12100217	17	4.8	536	96037137	WIRING HARNESS
DATA LINE 2 X 1 FEP SPF	12100217	19	4.7	536	96037137	WIRING HARNESS
DATA LINE 2 X 1 FEP SPF	12100217	371	4.7	536	96037137	WIRING HARNESS
DATA LINE 2 X 1 FEP SPF	12100217	372	6.4	536	96037137	WIRING HARNESS
DATA LINE 2 X 1 FEP SPF	12100217	373	6.4	536	96037137	WIRING HARNESS
DATA LINE 2 X 1 FEP SPF	12100217	374	6.4	536	96037137	WIRING HARNESS
DATA LINE 2 X 1,5 FEP SPF	12100216	378	6.27	534	96037136	WIRING HARNESS
DATA LINE 2 X 1,5 FEP SPF	12100216	16	4.8	536	96037137	WIRING HARNESS
DATA LINE 2 X 2,5 FEP SPF	12100214	371	6.27	534	96037136	WIRING HARNESS
DATA LINE 2 X 2,5 FEP SPF	12100214	372	6.27	534	96037136	WIRING HARNESS
DATA LINE 2 X 2,5 FEP SPF	12100214	373	6.27	534	96037136	WIRING HARNESS
DATA LINE 3 X 1 FEP SPF	12100215	10	4.32	534	96037136	WIRING HARNESS
DATA LINE 3 X 1 FEP SPF	12100215	12	6.27	534	96037136	WIRING HARNESS
DATA LINE 3 X 1 FEP SPF	12100215	13	6.27	534	96037136	WIRING HARNESS
DATA LINE 3 X 1 FEP SPF	12100215	14	6.27	534	96037136	WIRING HARNESS
DATA LINE 3 X 1 FEP SPF	12100215	384	6.27	534	96037136	WIRING HARNESS
DATA LINE 3 X 1 FEP SPF	12100215	386	6.27	535	96037136	WIRING HARNESS
DATA LINE 3 X 1 FEP SPF	12100215	18	4.8	536	96037137	WIRING HARNESS
DATA LINE 3 X 1 FEP SPF	12100215	375	6.6	536	96037137	WIRING HARNESS
DATALOGGER LDL2 DIGITAL	10340438	6	1	548	968063108	PRE-ASSEMBLY MOUNTING U
DEEP GROOVE BALL BEARIN	10114839	4	1	52	11346779	SLIP RING TRANSMITTER
DEEP GROOVE BALL BEARIN	10114838	10	1	52	11346779	SLIP RING TRANSMITTER
DEEP GROOVE BALL BEARIN	745139101	66	1	353	90008901	SLEWING GEAR DRIVE
DEEP GROOVE BALL BEARIN	745129508	390	2	296	97029921	DISTRIBUTOR GEARBOX
DEEP GROOVE BALL BEARING	10169236	350	1	296	97029921	DISTRIBUTOR GEARBOX
DEEP GROOVE BALL BEARIN	745159301	3	1	370	939292201	PLANETARY GEARBOX
DEEP GROOVE BALL BEARIN	745159301	3	1	610	939294201	PLANETARY GEARBOX
DEEP GROOVE BALL BEARING	571819808	360	2	296	97029921	DISTRIBUTOR GEARBOX
DEEP GROOVE BALL BEARIN	745145308	410	4	296	97029921	DISTRIBUTOR GEARBOX
DEEP GROOVE BALL BEARIN	745165608	370	1	296	97029921	DISTRIBUTOR GEARBOX
DEEP GROOVE BALL BEARIN	745129501	4	1	424	966253908	WAGON
DEEP GROOVE BALL BEARIN	10294494	3	4	387	916177508	STEP CPL.
DEF INJECTOR SCR ONLY	12445245	12	1	500	918731808	UREA PLANT
DEF PRESSURE LINE 2X7000 P	10144303	19	1	500	918731808	UREA PLANT
DEF PUMP ADBLUE STUFE 4	11373478	11	1	500	918731808	UREA PLANT
DEF SUCTION LINE 4X600 EPD	10144270	18	1	500	918731808	UREA PLANT
DEFLECTION PULLEY	571851208	12	1	704	10802064	ROPE LENGTH INDICATOR
DEVICE PLUG DIN 43650 4-POL	605006608	510	2	49	96045228	WIRING HARNESS
DEVICE PLUG DIN 43650 4-POL	605006608	503	3	532	96045385	WIRING HARNESS
DIAPHRAGM 4X480X167 S31	97031538	5	1	455	969015908	SLEWING PLATFORM PANELLI
DIAPHRAGM 4X553X352 S31	97035511	(1)	1	616	967784808	HYDR.AUXILIARY HOISTING
DIAPHRAGM ACCUMULATOR 0	510644608	183	1	561	96045351	HYDRAULICS UPPER CARRI
DIAPHRAGM ACCUMULATOR 2	510642508	182	1	561	96045351	HYDRAULICS UPPER CARRI
DIAPHRAGM GROMMET 35,5/	602717308	124	1	291	96034631	RADIATOR, PRE-ASSEMBLED
DIAPHRAGM GROMMET 35,5/	602717308	114	1	445	96036790	SLEWING PLATFORM PANELLI
DIAPHRAGM GROMMET 35,5/	602717308	106	1	455	969015908	SLEWING PLATFORM PANELLI
DIAPHRAGM SOCKET 29/37/44	553027808	4	7	390	916170808	CABLE INLET
DIAPHRAGM SOCKET 29/37/44	553027808	20	1	447	96017704	RADIATOR HOOD CPL.

Description	Item	Pos.	Quantity	Page	Assembly	Description
DIE PLUG	11450029	4	1	298	11690588	CONTROL UNIT
DIE PLUG	11450030	28	1	81	11161917	CONTROL ELEMENT
DIE PLUG	11450030	3	1	298	11690588	CONTROL UNIT
DIE PLUG	11450030	19	1	325	10292815	REGULATOR ELEMENT
DIESEL ENGINE D944 A7-05 SP	13455297	1	1	173	919832508	DIESEL ENGINE PURCHASED
DIESEL ENGINE PURCHASED	919832508	104	1	12		LIEBHERR LTR 1220
DIESEL OXIDATION CATALYS	12888563	102	1	507	919674408	EXHAUST SYSTEM
DIFFERENTIAL PRESSURE S	10127114	155	1	514	96041566	ELECTRIC ADD-ON PARTS
DIODE SUBASSEMBLY PBTP-G	10440553	11	1	540	91000922	SWITCHBOX MOUNTING PART
DIRECTIONAL CONTROL VALV	10280210	20	1	624	10038509	CONTROL BLOCK
DIRECTIONAL CONTROL VALV	10801532	5	1	572	10413106	CONTROL BLOCK
DIRECTIONAL CONTROL VALV	10801533	6	1	572	10413106	CONTROL BLOCK
DIRECTIONAL CONTROL VALV	10801549	9	1	572	10413106	CONTROL BLOCK
DIRECTIONAL CONTROL VALV	10801551	10	1	572	10413106	CONTROL BLOCK
DIRECTIONAL CONTROL VALV	10872796	(1)	1	572	10413106	CONTROL BLOCK
DIRECTIONAL CONTROL VALV	10874213	(1)	1	572	10413106	CONTROL BLOCK
DIRECTIONAL CONTROL VALV	11004126	12	1	572	10413106	CONTROL BLOCK
DIRECTIONAL CONTROL VALV	12106776	90	2	577	12100860	CONTROL BLOCK
DIRECTIONAL CONTROL VALV	571303008	100	1	577	12100860	CONTROL BLOCK
DIRECTIONAL CONTROL VALV	571415008	8	2	572	10413106	CONTROL BLOCK
DIRECTIONAL CONTROL VAL	511464108	55	1	560	96045351	HYDRAULICS UPPER CARRI
DIRECTIONAL CONTROL VAL	511320108	63	1	560	96045351	HYDRAULICS UPPER CARRI
DIRECTIONAL CONTROL VAL	511493608	50	1	717	967784508	HYDR.F.TELESCOPIC BOOM
DIRECTIONAL CONTROL VAL	511444408	50	1	56	96035801	HYDRAULIC EQUIPM.CENTER
DIRECTIONAL CONTROL VAL	511444408	52	1	560	96045351	HYDRAULICS UPPER CARRI
DIRECTIONAL CONTROL VAL	511444408	50	1	616	967784808	HYDR.AUXILIARY HOISTING
DIRECTIONAL CONTROL VALV	10449853	64	1	560	96045351	HYDRAULICS UPPER CARRI
DIRECTIONAL CONTROL VALV	571737808	2	1	574	10332882	CONTROL BLOCK
DIRECTIONAL CONTROL VAL	571634708	40	1	577	12100860	CONTROL BLOCK
DIRECTIONAL CONTROL VAL	10652724	23	1	560	96045351	HYDRAULICS UPPER CARRI
DIRECTIONAL CONTROL VAL	10652724	21	1	616	967784808	HYDR.AUXILIARY HOISTING
DIRECTIONAL CONTROL VALV	10874849	4	2	568	11211756	CONTROL BLOCK
DIRECTIONAL CONTROL VALV	10875074	3	3	568	11211756	CONTROL BLOCK
DIRECTIONAL CONTROL VALV	10332397	50	1	577	12100860	CONTROL BLOCK
DIRECTIONAL SEAT VALVE 2/	10280211	40	1	624	10038509	CONTROL BLOCK
DIRECTIONAL SOLENOID	11482347	2	1	568	11211756	CONTROL BLOCK
DISC SPRING	570110908	7	4	361	570109508	DRIVING GEAR
DISC SPRING 80X41X4	272012502	4	130	751	968728808	CONSOLE PRE-ASS.
DISC SPRING DIN 2093 40X20,	720801908	25	4	433	918810308	CONTROL STAND
DISH MOUNTING	10100621	20	4	455	969015908	SLEWING PLATFORM PANELLI
DISK PIN	11658587	4	1	754	910836808	HOOK BLOCK
DISPATCH ASSY.MECH.PART	919028808	175	1	13		LIEBHERR LTR 1220
DISTANCE PLATE 15X100X379	973258608	39	1	685	917292308	TELESCOPIC SECT.IV PRE-A
DISTANCE PLATE 15X103X408	973057708	39	1	681	917292208	TELESCOPIC SECT.3 PRE-ASS
DISTANCE PLATE 15X105X429	973245708	39	1	677	917292108	TELESCOPIC SECT.2 PRE-AS
DISTANCE PLATE 15X110X465	972898108	39	1	673	917292008	TELESCOPIC SECTION 1 PRE
DISTANCE PLATE 15X113X449	973258708	43	2	685	917292308	TELESCOPIC SECT.IV PRE-A
DISTANCE PLATE 15X113X492	973358008	55	1	668	917291908	PIVOT SECTION, PRE-ASSEMB
DISTANCE PLATE 15X119X497	973245808	43	2	677	917292108	TELESCOPIC SECT.2 PRE-AS
DISTANCE PLATE 15X121X498	973253208	43	2	681	917292208	TELESCOPIC SECT.3 PRE-ASS
DISTANCE PLATE 15X138X592	972898308	43	2	673	917292008	TELESCOPIC SECTION 1 PRE
DISTANCE PLATE 15X141X621	973357808	47	2	668	917291908	PIVOT SECTION, PRE-ASSEMB
DISTANCE PLATE 1X60X120 D	97033390	25	4	124	968046208	ADD-ON PARTS
DISTANCE PLATE 60X37X730 P	97031640	5	16	20	91001569	CRAWLER TRACK TRAVEL G
DISTANCE PLATE 8X60X120 S	97033383	24	4	124	968046208	ADD-ON PARTS
DISTANCE SLEEVE 10X6,2X10	10354375	56	1	399	917305408	INTERNAL PANELLING INSTA
DISTANCE SLEEVE 11X18X10	10117226	117	4	287	919007708	DRIVE ASSEMBLY, PRE-ASSE
DISTANCE SLEEVE 11X20X25	10138657	7	14	250	10140087	EXHAUST PIPE ASSEMBLY
DISTANCE SLEEVE 11X24X10	9076588	90	1	269	10151328	CABLE HARNESS MOUNTING
DISTANCE SLEEVE 12X8,2X5 P	10354377	3	3	95	96062678	LEVER PRE-ASSY.

Description	Item	Pos.	Quantity	Page	Assembly	Description
DISTANCE SLEEVE 15X6,3X25	10441664	55	1	399	917305408	INTERNAL PANELLING INSTA
DISTANCE SLEEVE 15X6,3X25	10441664	4	2	749	968811608	CROSS BEAM
DISTANCE SLEEVE 18.0X26 E	97047984	13	1	286	919007708	DRIVE ASSEMBLY, PRE-ASSE
DISTANCE SLEEVE 30.0 X0 4	952177008	20	2	280	918731408	DRIVE ASSEMBLY CPL.
DISTANCE SLEEVE 30.0 X0 4	952177008	31	5	286	919007708	DRIVE ASSEMBLY, PRE-ASSE
DISTANCE SLEEVE 35.0X40 3	970780908	3	2	337	917626608	FUEL TANK ADD-ON UNIT
DISTANCE SLEEVE 8,5X18X10	9132577	93	1	269	10151328	CABLE HARNESS MOUNTING
DISTANCE SLEEVE 9X15X30	12843150	5	1	221	10152867	INJECTOR WITH FASTENING
DISTANCE SLEEVE 9X15X30	12843150	6	1	222	10152874	RK INJECTOR
DISTANCE STUD M5X30 11SM	97028159	48	4	399	917305408	INTERNAL PANELLING INSTA
DISTANCE STUD M6X30 ST V	11001955	57	3	399	917305408	INTERNAL PANELLING INSTA
DISTANCE STUD M6X50 STA	10875447	58	2	399	917305408	INTERNAL PANELLING INSTA
DISTANCE TUBE 159.0X12 S3	971095808	9	2	734	917268408	BOOM NOSE
DISTANCE TUBE 8.0X30 E235+	97051280	16	4	751	968728808	CONSOLE PRE-ASS.
DISTANCE TUBE RD159X4,5X	953536408	2	1	739	910040808	2nd NECK PULLEY INSTALLAT
DISTANCE TUBE RD159X4,5X	955581808	25	1	690	917292408	TELESCOPIC SECT.5 PRE-AS
DISTANCE TUBE RD159X4,5X6	953536508	3	1	739	910040808	2nd NECK PULLEY INSTALLAT
DISTANCE WASHER RD.164X3	97037959	4	1	639	968993508	CAMERA HOLDER, PREMOU
DISTRIBUTION BLOCK 3/6	11002916	2	1	523	917261208	CENT. LUBRIC. SYSTEM SUP
DISTRIBUTION BLOCK 4/7	774387208	3	1	523	917261208	CENT. LUBRIC. SYSTEM SUP
DISTRIBUTION BLOCK MX-F 6	11347500	2	2	135	917257108	CENTRALIZED LUBRICATION
DISTRIBUTION BOX 65X94X57	11114556	1	1	630	917368108	EL.COOLANT PREHEAT
DISTRIBUTOR BLOCK	12511916	1	1	228	10143341	FUEL LINES
DISTRIBUTOR BLOCK G1 1/2 /8	11214049	156	4	56	96035801	HYDRAULIC EQUIPM.CENTER
DISTRIBUTOR GEARBOX SPF	97029921	100	1	286	919007708	DRIVE ASSEMBLY, PRE-ASSE
DOOR CONTACT SWITCH	606020708	12	1	467	96053500	ELECTRIC ADD-ON PARTS CA
DOOR COVERING 880X390X28	97000275	3	1	421	917304708	SLIDING DOOR INSTALLATION
DOOR PANE 4X1161X 950 ES	97000274	2	1	421	917304708	SLIDING DOOR INSTALLATION
DOOR STOPPER	704277508	113	2	445	96036790	SLEWING PLATFORM PANELLI
DOSING PUMP DP42.4 HD	11110051	2	1	480	918759808	ADD HEATING SUPERSTRUCT
DOUBLE BANJO BOLT 6-M10X	12210029	12	1	229	10143342	LEAK OIL RETURN LINE
DOUBLE PLUG	5616114	22	1	81	11161917	CONTROL ELEMENT
DOUBLE PLUG	7012971	13	2	307	10873570	CONNECTING PLATE
DOUBLE PLUG	7012971	12	1	323	571907208	CONNECTING PLATE
DOUBLE PLUG	7022127	11	1	307	10873570	CONNECTING PLATE
DOUBLE PLUG	7022127	11	4	311	10008308	CONNECTING PLATE
DOUBLE PLUG	7022127	52	7	312	10472196	REGULATOR
DOUBLE PLUG	7022127	11	6	323	571907208	CONNECTING PLATE
DOUBLE PLUG	7022127	52	5	324	10292801	REGULATOR
DOUBLE SOCKET 2-POL	10875121	19	1	462	96036955	WIRING HARNESS
DOUBLE SPRING CONTACT 0	6001703	2267	6	533	96045385	WIRING HARNESS
DOUBLE-ENDED STUD DIN 83	12210035	3	3	233	10147364	AIR INTAKE ASSEMBLY
DOUBLE-ENDED STUD DIN 83	10179459	3	3	256	10115539	STARTER ASSEMBLY
DOUBLE-ENDED STUD DIN 93	4981172	5	3	252	10140729	EXHAUST TC MOUNTING
DOUBLE-HEADED SPANNER D	790003908	20	1	152	928569808	MAIN TOOLS
DOUBLE-HEADED SPANNER D	790003308	11	1	152	928569808	MAIN TOOLS
DOUBLE-HEADED SPANNER D	790002208	12	1	152	928569808	MAIN TOOLS
DOUBLE-HEADED SPANNER D	790002408	13	1	152	928569808	MAIN TOOLS
DOUBLE-HEADED SPANNER D	790003608	15	1	152	928569808	MAIN TOOLS
DOUBLE-HEADED SPANNER D	790002508	16	1	152	928569808	MAIN TOOLS
DOUBLE-HEADED SPANNER D	790002608	17	1	152	928569808	MAIN TOOLS
DOUBLE-HEADED SPANNER D	790002808	18	1	152	928569808	MAIN TOOLS
DOUBLE-HEADED SPANNER D	790002908	19	1	152	928569808	MAIN TOOLS
DOUBLE-HEADED SPANNER	790001708	10	1	152	928569808	MAIN TOOLS
DOUBLE-HEADED SPANNER	10652772	14	1	152	928569808	MAIN TOOLS
DOWEL PIN 3X10	10410651	31	1	305	11210795	VARIABLE PUMP
DOWEL PIN 3X10	10410651	28	2	319	10871282	VARIABLE PUMP
DOWEL PIN ISO 8752 12X50	432011808	13	4	654	967936908	COUNTERWEIGHT CPL.
DOWEL PIN ISO 8752 12X85 4	10875876	35	1	761	917267508	TRANSPORT MOUNTING
DOWEL PIN ISO 8752 18X45 4	10876421	11	6	378	917259908	CRANE DRIVER CAB ADDITIO

Description	Item	Pos.	Quantity	Page	Assembly	Description
DOWEL PIN ISO 8752 5X12 480	10875879	59	2	370	939292201	PLANETARY GEARBOX
DOWEL PIN ISO 8752 5X28 480	12100669	6	1	477	966707708	MIRROR RETAINER PRE-ASS.
DOWEL PIN ISO 8752 5X36 A2	12102738	7	1	477	966707708	MIRROR RETAINER PRE-ASS.
DOWEL PIN ISO 8752 5X50 A2	10663567	3	1	125	968331708	FUSE HOLDER
DOWEL PIN ISO 8752 6X10 ST	10875881	25	2	406	916162508	WINDOW ASSEMBLY
DOWEL PIN ISO 8752 6X20 480	10876162	150	2	294	968026308	CLUTCH ACTUATOR
DOWEL PIN ISO 8752 6X20 480	10876162	43	2	378	917259908	CRANE DRIVER CAB ADDITIO
DOWEL PIN ISO 8752 6X30 ST	243034002	10	2	209	10120186	BALANCER ASSEMBLY
DOWEL PIN ISO 8752 6X40 480	12100674	5	2	528	965281408	LIMIT SWITCH ADD-ON
DOWEL PIN ISO 8752 6X50 A2	432006708	11	1	636	968994408	CAMERA HOLDER, PREMOU
DOWEL PIN ISO 8752 6X55 St 4	432006801	4	1	155	91001571	BOLT EXTRACTION DEVICE
DOWEL PIN ISO 8752 8X16 St 4	432008001	72	1	370	939292201	PLANETARY GEARBOX
DOWEL PIN ISO 8752 8X40 St	4980376	5	1	196	10147438	CRANKSHAFT WITH GEAR
DOWEL PIN ISO 8752 A 8X16	432007908	72	1	610	939294201	PLANETARY GEARBOX
DRAWBAR WELDED	961727008	5	1	147	919087608	ROTARY FEED THROUGH
DRIVE ASSEMBLY CPL.	918731408	105	1	12		LIEBHERR LTR 1220
DRIVE ASSEMBLY, PRE-ASSE	919007708	1	1	280	918731408	DRIVE ASSEMBLY CPL.
DRIVE FLANGE EDELSTAHL	606012608	6	1	375	966631008	ELECTRIC FOR WINCH 1
DRIVE FLANGE EDELSTAHL	606012608	(6)	1	604	967969608	AUXILIARY HOISTING GEAR 2
DRIVE FOR HIGH PRESSURE P	11407917	180	1	176	13455297	DIESEL ENGINE
DRIVE SHAFT	927745101	5	1	370	939292201	PLANETARY GEARBOX
DRIVE WHEEL 12XB9SX260,35	749056414	4	1	75	91001377	CRAWLER SUPPORT PREASS
DRIVE WHEEL 12XB9SX260,35	749056414	4	1	108	91001378	CRAWLER SUPPORT PREASS
DRIVER	10014729	7	1	136	11347526	ELECTRIC PUMP
DRIVER	10014729	7	1	525	10327065	ELECTRIC PUMP
DRIVER	931549101	20	1	368	932916901	ROPE DRUM
DRIVING GEAR	10663105	1	1	309	11210798	VARIABLE PUMP
DRIVING GEAR	10871713	1	1	305	11210795	VARIABLE PUMP
DRIVING GEAR	10872488	1	1	319	10871282	VARIABLE PUMP
DRIVING GEAR	11066818	2	1	79	11182596	VARIABLE DISPLACEMENT MO
DRIVING GEAR	11643393	2	1	373	11182597	VARIABLE DISPLACEMENT MO
DRIVING GEAR	11643393	2	1	605	11211058	VARIABLE DISPLACEMENT MO
DRIVING GEAR	11690584	1	1	297	11182708	VARIABLE PUMP
DRIVING GEAR	11690584	1	1	300	10871017	VARIABLE PUMP
DRIVING GEAR	570109008	1	1	359	510229408	HYDRO MOTOR
DRIVING GEAR	570109508	1	1	360	570109008	DRIVING GEAR
DRIVING SHAFT	10663120	14	1	310	10663105	DRIVING GEAR
DRIVING SHAFT	570109608	2	1	360	570109008	DRIVING GEAR
DRIVING SHAFT	571907508	14	1	321	10872488	DRIVING GEAR
DRUM AXLE	12100076	2	1	710	10354493	CABLE REEL
DRYER	571489008	105	1	291	96034631	RADIATOR, PRE-ASSEMBLED
DS HYDRO CYLINDER	10490901	(999)	1	363	917259608	ROTATING PLATFORM LOCK
DS HYDRO CYLINDER	10491695	999	1	379	11214363	TILT CYLINDER
DS LOWERING BRAKE VALVE	10664166	(999)	1	560	96045351	HYDRAULICS UPPER CARRI
DS SUPPORT CYLINDER	10878366	(999)	1	129	919644008	HYDRAULIC SUPPORT
DS TELESCOPIC CYLINDER	10878189	999	1	697	10876933	TELESCOPIC CYLINDER
DSF RING 130X121,9X3,5	12478647	5	1	201	10146367	PISTON CPL.
DU BUSHING	708010008	3	2	762	929582108	MOUNTING PRE-ASS.
DU BUSHING	708010008	4	1	765	923879808	CONSOLE PRE-ASS.
DU BUSHING	708011608	21	2	761	917267508	TRANSPORT MOUNTING
DUMMY PLUG DT 2 POLIG PA	10353004	529	1	535	96037136	WIRING HARNESS
DUST CAP	11494567	513	3	532	96045385	WIRING HARNESS
DUST CAP	11494567	531	1	535	96037136	WIRING HARNESS
DUST CAP	518620608	70	1	697	10876933	TELESCOPIC CYLINDER
DUST CAP POLYETHYLEN SC	704254808	12	4	42	966167808	COVER COMPL.
DUST CAP POLYETHYLEN SC	704254808	6	5	86	967972208	COVER PRE-ASSY.
DUST CAP POLYETHYLEN SC	704254808	6	2	87	967972308	COVER PRE-ASSY.
DUST CAP POLYETHYLEN SC	704254808	6	2	88	967972408	COVER PRE-ASSY.
DUST CAP POLYETHYLEN SC	704254808	6	2	89	968270108	COVER PRE-ASSY.
DUST CAP POLYETHYLEN SC	704254808	6	2	90	968274208	COVER PRE-ASSY.

Description	Item	Pos.	Quantity	Page	Assembly	Description
DUST CAP POLYETHYLEN SC	704254808	6	5	110	968055808	COVER PRE-ASSY.
DUST PLUG 3/8" SPF	10031987	154	1	728	967785008	ADDNL.HYDR. FOLDING JIB
EARTH CONNECTION PLATE C	12826252	4	1	235	9078314	HEATING FLANGE ADD-ON
EASY-CHANGE FILTER OEL 9µ	10297295	1	2	217	10142942	LUBE OIL FILTER ASSEMBLY
EDGE PROTECTION 1-2X9,5X6,	262103908	123	0.5	291	96034631	RADIATOR, PRE-ASSEMBLED
EDGE PROTECTION 1-2X9,5X6,	262103908	8	1.6	334	96023117	BATTERY BOX, PRE-ASSEMB
EDGE PROTECTION 1-2X9,5X6,	262103908	(3)	0.4	445	96036790	SLEWING PLATFORM PANELLI
EDGE PROTECTION 1-2X9,5X6,	262103908	(3)	0.6	445	96036790	SLEWING PLATFORM PANELLI
EDGE PROTECTION 1-2X9,5X6,	262103908	12	0.66	455	969015908	SLEWING PLATFORM PANELLI
EDGE PROTECTION 1-2X9,5X6,	262103908	7	0.16	547	926891108	GROUND RAIL
EDGE PROTECTION 1-2X9,5X6,	262103908	11	0.2	637	968290608	STAND
EDGE PROTECTION 1-2X9,5X6,	262103908	11	0.2	640	968267208	STAND
EDGE PROTECTION 4-6X15,8	262106608	7	0.54	458	917260108	FALL PROTECTION
EDGE SEALING RING	10303270	17	3	311	10008308	CONNECTING PLATE
EDGE SEALING RING	10303270	17	3	323	571907208	CONNECTING PLATE
EL.2 HOISTING LIMIT SWITCH	918197708	362	1	14		LIEBHERR LTR 1220
EL.ADD-ON SET-LIMIT SWITC	968128908	11	1	527	919410708	ELECTR. SYSTEM F.SLEWING
EL.COMP. DISPATCH ASSEM	915731908	39	2	12		LIEBHERR LTR 1220
EL.COOLANT PREHEAT	917368108	10	1	629	918377508	COOLING WATER PRE-HEATIN
EL.INSTRUMENTS F.CRANE	919783608	143	1	13		LIEBHERR LTR 1220
EL.SUPERSTRUCTURE INTERL	966633508	18	1	529	968128908	EL.ADD-ON SET-LIMIT SWITCH
ELASTOMER INSERT DIN 3015	7363897	326	4	496	969763408	PIPEWORK AIR INSTALLATIO
ELBOW	10142671	1	1	248	10142742	COOLANT PIPE BEND ADD-ON
ELECTR. F.EXTENDING MECH	966361408	6	1	706	917262208	ELECTR. SYSTEM F. BOOM
ELECTR. FOR HEAD SECTION	968708608	4	1	706	917262208	ELECTR. SYSTEM F. BOOM
ELECTR. FOR WORK AREA LI	96028878	20	4	631	918989008	A-HEADLIGHT SLEWING PLA
ELECTR. FOR WORK AREA LI	96024265	20	1	657	919028808	DISPATCH ASSY.MECH.PART
ELECTR. SYSTEM F. BOOM	917262208	203	1	14		LIEBHERR LTR 1220
ELECTR. SYSTEM F.SLEWING	919410708	179	1	14		LIEBHERR LTR 1220
ELECTR.CABLE 0,5	10870538	344	18.2	462	96036955	WIRING HARNESS
ELECTR.CABLE 0,75	10870539	345	8.16	462	96036955	WIRING HARNESS
ELECTR.CABLE 0,75	10870539	345	7.7	464	96036956	WIRING HARNESS
ELECTR.CABLE 0,75	10870539	345	11.4	532	96045385	WIRING HARNESS
ELECTR.CABLE 0,75	10870539	345	34.5	536	96037137	WIRING HARNESS
ELECTR.CABLE 1,0	10870540	305	25.99	48	96045227	WIRING HARNESS
ELECTR.CABLE 1,0	10870540	305	36.53	49	96045228	WIRING HARNESS
ELECTR.CABLE 1,0	10870540	305	319.78	462	96036955	WIRING HARNESS
ELECTR.CABLE 1,0	10870540	305	160.31	464	96036956	WIRING HARNESS
ELECTR.CABLE 1,0	10870540	305	395.03	532	96045385	WIRING HARNESS
ELECTR.CABLE 1,0	10870540	305	427.54	534	96037136	WIRING HARNESS
ELECTR.CABLE 1,0	10870540	305	82.2	536	96037137	WIRING HARNESS
ELECTR.CABLE 1,0	10870540	305	6.6	642	96043733	WIRING HARNESS
ELECTR.CABLE 1,5	10870541	307	37.14	534	96037136	WIRING HARNESS
ELECTR.CABLE 10	12102630	322	5.1	534	96037136	WIRING HARNESS
ELECTR.CABLE 16	12102632	326	5.1	534	96037136	WIRING HARNESS
ELECTR.CABLE 16	12102634	328	8.85	534	96037136	WIRING HARNESS
ELECTR.CABLE 2,5	10870542	309	30.5	462	96036955	WIRING HARNESS
ELECTR.CABLE 2,5	10870542	309	18.45	464	96036956	WIRING HARNESS
ELECTR.CABLE 2,5	10870542	309	23.3	534	96037136	WIRING HARNESS
ELECTR.CABLE 25	12102635	330	7.55	534	96037136	WIRING HARNESS
ELECTR.FOR CENTER SECTIO	96045225	1	1	37	919510708	ELECTR.FOR CRAWLER CARR
ELECTR.FOR CRAWLER CARR	919510708	2	1	32	919499308	CENTRAL SECTION CRAWLER
ELECTR.FOR SLEWING GEAR	966720708	50	1	529	968128908	EL.ADD-ON SET-LIMIT SWITCH
ELECTRIC ADD-ON PARTS	96041566	100	1	511	96051842	EXHAUST SYSTEM PRE-ASSE
ELECTRIC ADD-ON PARTS CA	96053500	6	1	460	919783608	EL.INSTRUMENTS F.CRANE D
ELECTRIC BALLASTING ENDS	966633408	17	1	529	968128908	EL.ADD-ON SET-LIMIT SWITCH
ELECTRIC CYLINDER 24V	10292008	4	1	387	916177508	STEP CPL.
ELECTRIC F.BASE SECTION	966290908	3	1	706	917262208	ELECTR. SYSTEM F. BOOM
ELECTRIC FOR BATTERY BOX	96023914	100	1	332	918955408	BATTERY BOX CPL.
ELECTRIC FOR WINCH 1	966631008	100	1	365	917259708	MAIN HOIST GEAR

Description	Item	Pos.	Quantity	Page	Assembly	Description
ELECTRIC FOR WINCH 2	966298308	100	1	604	967969608	AUXILIARY HOISTING GEAR 2
ELECTRIC FOR WINCH 2	968315808	18	1	616	967784808	HYDR.AUXILIARY HOISTING
ELECTRIC MEASURING & WAR	917598408	1	1	740	917379608	CARRIER, MEAS. & WARN. D
ELECTRIC PUMP	10327065	1	1	523	917261208	CENT. LUBRIC. SYSTEM SUP
ELECTRIC PUMP EP-1	11347526	1	1	135	917257108	CENTRALIZED LUBRICATION
ELECTRIC SLEWING SENSOR	966633308	30	1	529	968128908	EL.ADD-ON SET-LIMIT SWITCH
ELECTRONICS UNIT	10650399	35	1	435	10877138	OPERATOR SEAT
EMERGENCY CUT-OFF CRANE	967260908	4	1	470	96030724	INSTRUMENT CLUSTER ELEC
EMERGENCY HAND OPERAT	11007817	4	1	575	571737808	DIRECTIONAL CONTROL VALV
EMERGENCY HAND OPERAT	10878075	5	1	578	571634708	DIRECTIONAL CONTROL VALV
EMERGENCY HAND OPERAT	10878075	5	2	580	10332397	DIRECTIONAL CONTROL VALV
EMERGENCY STOP BUTTON	606144108	(2)	1	470	96030724	INSTRUMENT CLUSTER ELEC
EMPTY CASING 120X220X80X0	973188508	5	1	714	968708708	TERMINAL BOX CPL.
EMPTY CASING 160X260X90X0	975113508	1	1	711	966291008	TERMINAL BOX
EMPTY CASING 80.0X0 AL	979204408	5	1	46	966204108	ANTENNA CPL.
ENCODER BASE SECTION	966473108	9	1	663	918804808	TELESCOPIC BOOM CPL.
ENCODER HEAD PIECE	966200208	10	1	663	918804808	TELESCOPIC BOOM CPL.
END ANGLE	602794608	8	2	546	967589508	TERMINAL STRIP
END ANGLE	602794608	297	2	714	968708708	TERMINAL BOX CPL.
END CAP 34	553181108	6	1	482	96020359	ADDNL.HEATING, PRE-ASSE
END CAP 42,3	553174108	8	1	480	918759808	ADD HEATING SUPERSTRUCT
END COVER 60	9144757	5	1	208	11358102	CYLINDER HEAD COVER ASS
END COVER DIN 443 B 480H	12209779	2	4	180	11389608	CRANKCASE CPL. WITH CYLIN
END COVER DIN 443 B 480H	12209781	10	3	205	10149578	CYLINDER HEAD
END COVER DIN 443 B 480H	12209783	3	7	180	11389608	CRANKCASE CPL. WITH CYLIN
END PIPE X5CRNI18-10	969759208	104	1	507	919674408	EXHAUST SYSTEM
ENGINE BRACKET LEFT G28M	97061150	5	1	286	919007708	DRIVE ASSEMBLY, PRE-ASSE
ENGINE BRACKET RIGHT G2	97061151	6	1	286	919007708	DRIVE ASSEMBLY, PRE-ASSE
ENGINE BRACKET WELDED	968025208	3	1	286	919007708	DRIVE ASSEMBLY, PRE-ASSE
ENGINE BRACKET WELDED	968025308	4	1	286	919007708	DRIVE ASSEMBLY, PRE-ASSE
ENGINE CONTROL SENSORS	12583633	581	1	179	13455297	DIESEL ENGINE
EQUALIZER PLATE	10115155	18	4	52	11346779	SLIP RING TRANSMITTER
EQUALIZER PLATE	10359124	20	2	52	11346779	SLIP RING TRANSMITTER
EQUALIZING RESERVOIR	570065908	1	1	102	502806508	EQUALIZING RESERVOIR
EQUALIZING RESERVOIR	96034522	3	1	280	918731408	DRIVE ASSEMBLY CPL.
EQUALIZING RESERVOIR 0,2L	502807308	(1)	1	616	967784808	HYDR.AUXILIARY HOISTING
EQUALIZING RESERVOIR 1L	502806508	1	1	101	96028333	EXPANSION TANK CPL.
EQUIPMENT CAMERA CAB	96045237	3	1	633	918992008	CAMERA MONITOR OW
EQUIPMENT CAMERA SLEW C	96037130	4	1	633	918992008	CAMERA MONITOR OW
EQUIPMENT CAMERA WINCHE	96037131	5	1	633	918992008	CAMERA MONITOR OW
EQUIPMENT CARRIER WELDE	968918808	1	1	286	919007708	DRIVE ASSEMBLY, PRE-ASSE
ES PIN 8X16 FE/ZN8/CN/T2	725111808	11	2	449	968923508	FLAP RIGHT PRE-ASS.
ES PIN 8X16 FE/ZN8/CN/T2	725111808	10	2	457	969016008	FLAP LEFT FRONT PRE-ASS.
EVAPORATOR	10874825	15	1	428	11083498	AIR CONDITIONING UNIT
EXHAUST FLAP	10153116	3	1	253	12512627	EXHAUST NOZZLE ATTACHM
EXHAUST FLAP	12983604	3	1	253	12512627	EXHAUST NOZZLE ATTACHM
EXHAUST MIXING PIPE SCRFIL	12999384	103	1	511	96051842	EXHAUST SYSTEM PRE-ASSE
EXHAUST MUFFLER 116/55X15	553187208	5	1	482	96020359	ADDNL.HEATING, PRE-ASSE
EXHAUST NOZZLE ATTACHME	12512627	432	1	178	13455297	DIESEL ENGINE
EXHAUST NOZZLE R-MOTOR	10153666	1	1	253	12512627	EXHAUST NOZZLE ATTACHM
EXHAUST PIPE	97118888	101	1	507	919674408	EXHAUST SYSTEM
EXHAUST PIPE 1.4301	97049723	105	1	507	919674408	EXHAUST SYSTEM
EXHAUST PIPE 38/FLEXIBEL	553054108	7	1.995	480	918759808	ADD HEATING SUPERSTRUCT
EXHAUST PIPE 38/FLEXIBEL	553054108	7	0.25	482	96020359	ADDNL.HEATING, PRE-ASSE
EXHAUST PIPE ASSEMBLY R	10140087	410	1	177	13455297	DIESEL ENGINE
EXHAUST PIPE R-MOTORXD93	10145524	1	1	250	10140087	EXHAUST PIPE ASSEMBLY
EXHAUST PIPE X5CRNI18-10	97118731	105	1	511	96051842	EXHAUST SYSTEM PRE-ASSE
EXHAUST PIPE X5CRNI18-10	97118733	104	1	511	96051842	EXHAUST SYSTEM PRE-ASSE
EXHAUST PIPE X5CRNI18-10	97124264	106	1	511	96051842	EXHAUST SYSTEM PRE-ASSE
EXHAUST SYSTEM	919674408	163	1	13		LIEBHERR LTR 1220

Description	Item	Pos.	Quantity	Page	Assembly	Description
EXHAUST SYSTEM PIPELINES	96051843	90	1	511	96051842	EXHAUST SYSTEM PRE-ASSE
EXHAUST SYSTEM PRE-ASSE	96051842	1	1	507	919674408	EXHAUST SYSTEM
EXHAUST TC MOUNTING	10140729	430	1	178	13455297	DIESEL ENGINE
EXHAUST VALVE SEAT INSE	10128680	7	2	205	10149578	CYLINDER HEAD
EXPANSION BOLT 55.0X152 3	970611208	3	72	349	917259408	ROLLER SLEWING RING
EXPANSION BOLT M30X145 10.	970447008	2	62	349	917259408	ROLLER SLEWING RING
EXPANSION TANK CPL.	96028331	152	1	616	967784808	HYDR.AUXILIARY HOISTING
EXPANSION TANK CPL.	96028333	161	1	98	96035796	HYDR.TRAVEL DRIVE
EXPANSION TANK CPL.	96028333	161	1	115	96035792	HYDR.TRAVEL DRIVE
EXPANSION TANK PRE-ASS.	96034515	2	1	280	918731408	DRIVE ASSEMBLY CPL.
EXPANSION TANK WELDED	96035739	1	1	329	96034522	EQUALIZING RESERVOIR
EXPANSION TANK WELDED AL	96035326	1	1	328	96034515	EXPANSION TANK PRE-ASS.
EXTENSION DIN 3123 200X3/4"	790026408	65	1	152	928569808	MAIN TOOLS
EXTENSION DIN 3123 400X3/4"	790026308	64	1	152	928569808	MAIN TOOLS
EXTENSION M8X1	774374508	38	8	129	919644008	HYDRAULIC SUPPORT
EXTERNAL FEED 230V-110V	918462708	381	1	15		LIEBHERR LTR 1220
FALL PROTECTION	917260108	140	1	13		LIEBHERR LTR 1220
FALL PROTECTION	917691008	13	1	12		LIEBHERR LTR 1220
FALL PROTECTION EN 360 H	12107776	2	1	167	916959808	PERSONAL PROTECTION EQ
FALL-BACK GUARD 12-36V 82	614009908	11	1	41	96045226	SWITCH BOX COMPL.
FAN	10650386	(11)	1	435	10877138	OPERATOR SEAT
FAN	12100177	(59)	1	435	10877138	OPERATOR SEAT
FAN BLADE	10874640	10	1	593	11622561	OIL AIR COOLER
FASTENER	12106374	10	1	699	571928508	CYLINDER HEAD CPL.
FASTENING CLAMP	570066408	7	1	102	502806508	EQUALIZING RESERVOIR
FASTENING CLAMP 34 EN AC	10123304	1	1	268	10144098	FASTENING CLAMP
FASTENING CLAMP 34X34	10144098	6	2	267	10144227	CONTROL BOX ANNEXE
FASTENING DEVICE	10153374	4	1	244	12418347	AIR COND. COMPRESSOR A
FAULT INDICATOR	10429952	33	2	136	11347526	ELECTRIC PUMP
FAULT INDICATOR	10429952	9	1	525	10327065	ELECTRIC PUMP
FEMALE PLUG 15-POLE	10024744	502	2	462	96036955	WIRING HARNESS
FEMALE PLUG 25-POLE	602322708	504	1	462	96036955	WIRING HARNESS
FEMALE PLUG 9-POLE	602338608	509	1	542	96045387	CABLES, BASIC CONSTRUCTI
FERRITE KLAPPBAR	617000608	528	1	463	96036955	WIRING HARNESS
FERRITE KLAPPBAR	617000608	512	1	464	96036956	WIRING HARNESS
FERRULE 2 CU	11170565	36	8	129	919644008	HYDRAULIC SUPPORT
FERRULE 2 CU	11170565	10	2	763	923285508	FOLDING BRACKET PRE-ASS.
FERRULE 2 CU	11170565	4	4	768	968090008	MOUNTING HOOK ROD
FILLER CAP 42 PA	10815416	19	1	415	916163008	WIPERS INSTALLATION
FILTER	11083438	2	1	428	11083498	AIR CONDITIONING UNIT
FILTER	12211223	(1)	1	501	968570808	UREA TANK
FILTER CARTRIDGE 0,005m³/m	510671108	158	1	98	96035796	HYDR.TRAVEL DRIVE
FILTER CARTRIDGE 0,005m³/m	510671108	158	1	115	96035792	HYDR.TRAVEL DRIVE
FILTER CARTRIDGE 0,005m³/m	510671108	156	2	560	96045351	HYDRAULICS UPPER CARRI
FILTER CARTRIDGE 0,005m³/m	510671108	168	1	616	967784808	HYDR.AUXILIARY HOISTING
FILTER CARTRIDGE 0,005m³/m	510671108	154	1	717	967784508	HYDR.F.TELESCOPIC BOOM
FILTER HEAD PRE-ASSY.	13472766	1	1	227	13512036	CONSOLE FOR FILTER PRE-A
FILTER INSERT 1m³/min 10µm	510671808	(1)	1	348	969050308	OIL TANK PRE-ASS.
FILTER INSERT OEL 10µm	10037616	(1)	1	560	96045351	HYDRAULICS UPPER CARRI
FILTER INSERT OEL 10µm	10037623	(1)	1	560	96045351	HYDRAULICS UPPER CARRI
FILTER MODULE SCRFILTER G	11429849	2	1	516	11429728	SCRFILTER ASSEMBLY
FILTER SYNFASAN	11182242	66	1	400	917305408	INTERNAL PANELLING INSTA
FINAL CONTROL VALVE pmax	10138450	14	1	174	13455297	DIESEL ENGINE
FINE TOOTH RATCHET DIN 31	12103320	(1)	1	76	91001377	CRAWLER SUPPORT PREASS
FINGER-HOLD X0 KUNSTSTOF	955500008	7	1	449	968923508	FLAP RIGHT PRE-ASS.
FIRE EXTINGUISHER DIN EN 3	12101159	4	1	153	928620108	ACCESSORIES
FIRST AID KIST DIN 13164 260	789000308	5	1	153	928620108	ACCESSORIES
FITTING	11081053	3	1	139	774375108	PASSAGE NIPPLE BLOCK
FITTING	570066008	2	1	102	502806508	EQUALIZING RESERVOIR
FITTING	790065608	4	1	151	919328608	TOOLS AND ACCESSORIES

Description	Item	Pos.	Quantity	Page	Assembly	Description
FITTING	790533908	5	2	151	919328608	TOOLS AND ACCESSORIES
FITTING	971581108	160	1	560	96045351	HYDRAULICS UPPER CARRI
FITTING BUZ 16S CR6-FREI	477701108	699	1	563	96045351	HYDRAULICS UPPER CARRI
FITTING BUZ 22L CR6-FREI	477700208	848	1	565	96045351	HYDRAULICS UPPER CARRI
FITTING BUZ 8 M14X1,5 INOX	10816958	400	8	512	96051842	EXHAUST SYSTEM PRE-ASSE
FITTING E335	979374708	403	1	288	919007708	DRIVE ASSEMBLY, PRE-ASSE
FITTING EGE 10L M12X1,5 CR6	471903908	603	1	98	96035796	HYDR.TRAVEL DRIVE
FITTING EGE 10L M12X1,5 CR6	471903908	603	1	115	96035792	HYDR.TRAVEL DRIVE
FITTING EGE 10S G3/8 CR6-F	471900408	735	1	564	96045351	HYDRAULICS UPPER CARRI
FITTING EGE 12L G1/2 CR6-F	471903808	667	1	563	96045351	HYDRAULICS UPPER CARRI
FITTING EGE 12S G3/8A CR6-F	471900508	609	1	722	967785408	ADDNL.HYDR. FOLDING JIB
FITTING EGE 18L G1/2A CR6-F	471901308	646	2	57	96035801	HYDRAULIC EQUIPM.CENTER
FITTING EGE 18L G3/4 CR6-F	10878394	400	1	342	96066379	PREMOUNTED FUEL FILTER
FITTING EGE 22L G3/4 CR6-F	471901408	661	1	563	96045351	HYDRAULICS UPPER CARRI
FITTING EGE 38S G1 1/4 CR6-F	10876353	626	1	98	96035796	HYDR.TRAVEL DRIVE
FITTING EGE 38S G1 1/4 CR6-F	10876353	626	1	115	96035792	HYDR.TRAVEL DRIVE
FITTING EGE 42L G1 1/2 CR6-F	471903608	715	2	563	96045351	HYDRAULICS UPPER CARRI
FITTING EGESD10-LR-WD CR6	471901108	620	3	563	96045351	HYDRAULICS UPPER CARRI
FITTING EGESD10-LR-WD CR6	471901108	621	1	617	967784808	HYDR.AUXILIARY HOISTING
FITTING EGESD12-LM-WD CR6	471902208	602	1	562	96045351	HYDRAULICS UPPER CARRI
FITTING EGESD12-LR-WD CR6	471901208	648	1	563	96045351	HYDRAULICS UPPER CARRI
FITTING EGESD12-LR-WD CR6	471901208	637	1	617	967784808	HYDR.AUXILIARY HOISTING
FITTING EGESD16-SR-WD CR6	471900608	637	6	57	96035801	HYDRAULIC EQUIPM.CENTER
FITTING EGESD22-LM-WD CR6	471902408	605	1	98	96035796	HYDR.TRAVEL DRIVE
FITTING EGESD22-LM-WD CR6	471902408	605	1	115	96035792	HYDR.TRAVEL DRIVE
FITTING EGESD25-SR-WD CR6	471900808	681	1	563	96045351	HYDRAULICS UPPER CARRI
FITTING EGESD6-LR-WD CR6	471900108	627	2	57	96035801	HYDRAULIC EQUIPM.CENTER
FITTING EGESD6-SR-WD CR6	471900308	671	1	563	96045351	HYDRAULICS UPPER CARRI
FITTING EL 10L CR6-FREI	472330208	604	2	98	96035796	HYDR.TRAVEL DRIVE
FITTING EL 10L CR6-FREI	472330208	604	2	115	96035792	HYDR.TRAVEL DRIVE
FITTING EL 10L CR6-FREI	472330208	614	8	562	96045351	HYDRAULICS UPPER CARRI
FITTING EL 10L CR6-FREI	472330208	616	2	617	967784808	HYDR.AUXILIARY HOISTING
FITTING EL 10L CR6-FREI	472330208	604	3	717	967784508	HYDR.F.TELESCOPIC BOOM
FITTING EL 12S CR6-FREI	7617461	619	1	56	96035801	HYDRAULIC EQUIPM.CENTER
FITTING EL 12S CR6-FREI	7617461	602	4	132	968077208	HYDRAULIC SUPPORT
FITTING EL 12S CR6-FREI	7617461	605	1	722	967785408	ADDNL.HYDR. FOLDING JIB
FITTING EL 15L CR6-FREI	472300414	841	1	565	96045351	HYDRAULICS UPPER CARRI
FITTING EL 16S CR6-FREI	7407098	656	5	563	96045351	HYDRAULICS UPPER CARRI
FITTING EL 20S CR6-FREI	7407107	822	2	564	96045351	HYDRAULICS UPPER CARRI
FITTING EL 25S CR6-FREI	7407118	808	2	564	96045351	HYDRAULICS UPPER CARRI
FITTING EL 25S CR6-FREI	7407118	610	1	617	967784808	HYDR.AUXILIARY HOISTING
FITTING EL 28L CR6-FREI	7407120	814	2	564	96045351	HYDRAULICS UPPER CARRI
FITTING EL 42L CR6-FREI	7367986	612	1	56	96035801	HYDRAULIC EQUIPM.CENTER
FITTING EL 42L CR6-FREI	7367986	781	5	564	96045351	HYDRAULICS UPPER CARRI
FITTING EL 42L CR6-FREI SPF	472332008	192	1	561	96045351	HYDRAULICS UPPER CARRI
FITTING EL 6S CR6-FREI	472331208	604	5	562	96045351	HYDRAULICS UPPER CARRI
FITTING EL 6S CR6-FREI	472331208	607	1	617	967784808	HYDR.AUXILIARY HOISTING
FITTING ET 25S CR6-FREI	7367774	635	1	57	96035801	HYDRAULIC EQUIPM.CENTER
FITTING ET 25S CR6-FREI	7367774	712	2	563	96045351	HYDRAULICS UPPER CARRI
FITTING ET 25S CR6-FREI	7367774	623	1	617	967784808	HYDR.AUXILIARY HOISTING
FITTING ET 28L M36X2 CR6-F	7407122	633	1	57	96035801	HYDRAULIC EQUIPM.CENTER
FITTING ET 28L M36X2 CR6-F	7407122	829	1	564	96045351	HYDRAULICS UPPER CARRI
FITTING EV 12L M18X1,5 CR6-F	10410305	601	5	562	96045351	HYDRAULICS UPPER CARRI
FITTING EV 15L CR6-FREI	10222436	423	1	288	919007708	DRIVE ASSEMBLY, PRE-ASSE
FITTING EV 22L CR6-FREI	10410771	404	1	328	96034515	EXPANSION TANK PRE-ASS.
FITTING EV 22L CR6-FREI	10410771	835	2	565	96045351	HYDRAULICS UPPER CARRI
FITTING EV 42L M52X2 CR6-F	10651363	759	6	564	96045351	HYDRAULICS UPPER CARRI
FITTING EV16S CR6-FREI	10410770	810	2	564	96045351	HYDRAULICS UPPER CARRI
FITTING EV16S CR6-FREI	10410770	616	1	622	969426308	AUX. HYDR. FOLDING JIB SP
FITTING EV38S M52X2 CR6-F	10467292	650	1	57	96035801	HYDRAULIC EQUIPM.CENTER

Description	Item	Pos.	Quantity	Page	Assembly	Description
FITTING EV38S M52X2 CR6-F	10467292	617	1	98	96035796	HYDR.TRAVEL DRIVE
FITTING EV38S M52X2 CR6-F	10467292	617	1	115	96035792	HYDR.TRAVEL DRIVE
FITTING EV38S M52X2 CR6-F	10467292	757	1	564	96045351	HYDRAULICS UPPER CARRI
FITTING EVL16-SR3/4"	472004008	4	2	374	90200104	OIL-GAUGING INSTRUMENT
FITTING EW 10L M16X1,5 CR6	7403569	644	2	159	96056969	ADDITIONAL HYDRAULICS
FITTING EW 10L M16X1,5 CR6	7403569	638	2	496	969763408	PIPEWORK AIR INSTALLATIO
FITTING EW 10L M16X1,5 CR6	7403569	616	3	562	96045351	HYDRAULICS UPPER CARRI
FITTING EW 10L M16X1,5 CR6	7403569	615	1	617	967784808	HYDR.AUXILIARY HOISTING
FITTING EW 10L M16X1,5 CR6	7403569	603	6	717	967784508	HYDR.F.TELESCOPIC BOOM
FITTING EW 10S CR6-FREI	7617268	659	2	57	96035801	HYDRAULIC EQUIPM.CENTER
FITTING EW 10S CR6-FREI	7617268	805	2	564	96045351	HYDRAULICS UPPER CARRI
FITTING EW 12S CR6-FREI	7617354	638	4	57	96035801	HYDRAULIC EQUIPM.CENTER
FITTING EW 12S CR6-FREI	7617354	621	2	563	96045351	HYDRAULICS UPPER CARRI
FITTING EW 12S CR6-FREI	7617354	604	2	722	967785408	ADDNL.HYDR. FOLDING JIB
FITTING EW 15L CR6-FREE	7615379	424	1	288	919007708	DRIVE ASSEMBLY, PRE-ASSE
FITTING EW 15L CR6-FREE	7615379	648	1	496	969763408	PIPEWORK AIR INSTALLATIO
FITTING EW 15L CR6-FREE	7615379	833	2	565	96045351	HYDRAULICS UPPER CARRI
FITTING EW 16S CR6-FREI	7617460	641	2	57	96035801	HYDRAULIC EQUIPM.CENTER
FITTING EW 16S CR6-FREI	7617460	658	11	563	96045351	HYDRAULICS UPPER CARRI
FITTING EW 16S CR6-FREI	7617460	601	4	728	967785008	ADDNL.HYDR. FOLDING JIB
FITTING EW 18L ST CR6-FREI	10815664	633	3	496	969763408	PIPEWORK AIR INSTALLATIO
FITTING EW 20S M30X2 CR6-F	7407108	640	2	57	96035801	HYDRAULIC EQUIPM.CENTER
FITTING EW 20S M30X2 CR6-F	7407108	635	1	563	96045351	HYDRAULICS UPPER CARRI
FITTING EW 25S CR6-FREI	7407119	604	2	56	96035801	HYDRAULIC EQUIPM.CENTER
FITTING EW 28L CR6-FREI	7617494	731	4	564	96045351	HYDRAULICS UPPER CARRI
FITTING EW 6S M14X1,5 CR6-F	472531508	11	2	135	917257108	CENTRALIZED LUBRICATION
FITTING EW 6S M14X1,5 CR6-F	472531508	726	1	564	96045351	HYDRAULICS UPPER CARRI
FITTING EWSD22-L CR6-FREI	472530608	625	13	563	96045351	HYDRAULICS UPPER CARRI
FITTING EWSD22-L CR6-FREI	472530608	643	3	617	967784808	HYDR.AUXILIARY HOISTING
FITTING EWSD38-S CR6-FREI	472531808	605	6	56	96035801	HYDRAULIC EQUIPM.CENTER
FITTING EWSD38-S CR6-FREI	472531808	602	2	98	96035796	HYDR.TRAVEL DRIVE
FITTING EWSD38-S CR6-FREI	472531808	602	2	115	96035792	HYDR.TRAVEL DRIVE
FITTING EWSD38-S CR6-FREI	472531808	653	5	563	96045351	HYDRAULICS UPPER CARRI
FITTING G 24 M30x2 11SMnPb3	9273271	2	2	217	10142942	LUBE OIL FILTER ASSEMBLY
FITTING GE 10L 3/8-18NPT CR6	471035208	641	2	159	96056969	ADDITIONAL HYDRAULICS
FITTING GE 10L M14X1,5 CR6	471030508	628	1	563	96045351	HYDRAULICS UPPER CARRI
FITTING GE 10L M14X1,5 CR6	471030508	624	1	617	967784808	HYDR.AUXILIARY HOISTING
FITTING GE 10L M16X1,5 CR6	7021521	2	1	503	969904608	PRESSURE RELIEF VALVE PR
FITTING GE 10L M22X1,5 CR6	471039808	623	1	496	969763408	PIPEWORK AIR INSTALLATIO
FITTING GE 12 M14X1,5/3/ INO	11002988	5	1	228	10143341	FUEL LINES
FITTING GE 12L G1/2 CR6-FRE	471034808	662	4	563	96045351	HYDRAULICS UPPER CARRI
FITTING GE 12L G1/2 CR6-FRE	471034808	605	4	717	967784508	HYDR.F.TELESCOPIC BOOM
FITTING GE 12L M14X1,5 CR6	7405399	746	2	564	96045351	HYDRAULICS UPPER CARRI
FITTING GE 12L M22X1,5 CR6	471039908	720	3	563	96045351	HYDRAULICS UPPER CARRI
FITTING GE 12S G1/2A CR6-F	471032608	608	3	56	96035801	HYDRAULIC EQUIPM.CENTER
FITTING GE 12S G1/2A CR6-F	471032608	622	1	98	96035796	HYDR.TRAVEL DRIVE
FITTING GE 12S G1/2A CR6-F	471032608	622	1	115	96035792	HYDR.TRAVEL DRIVE
FITTING GE 12S G1/2A CR6-F	471032608	606	4	722	967785408	ADDNL.HYDR. FOLDING JIB
FITTING GE 12S G3/8A CR6-F	471032708	618	10	56	96035801	HYDRAULIC EQUIPM.CENTER
FITTING GE 12S G3/8A CR6-F	471032708	618	3	563	96045351	HYDRAULICS UPPER CARRI
FITTING GE 12S G3/8A CR6-F	471032708	613	1	617	967784808	HYDR.AUXILIARY HOISTING
FITTING GE 12S M18X1,5 CR6	471032908	601	12	132	968077208	HYDRAULIC SUPPORT
FITTING GE 12S M18X1,5 CR6	471032908	725	2	563	96045351	HYDRAULICS UPPER CARRI
FITTING GE 14,15,16 M18X CR6	10813942	8	1	228	10143341	FUEL LINES
FITTING GE 15L M22X1,5 CR6	471035508	11	2	339	968999708	FUEL TANK, PRE-ASSEMBLED
FITTING GE 15L M22X1,5 CR6	471035508	636	2	496	969763408	PIPEWORK AIR INSTALLATIO
FITTING GE 18L M22X1,5 CR6	471031108	602	1	496	969763408	PIPEWORK AIR INSTALLATIO
FITTING GE 18L M22X1,5 CR6	471031108	749	3	564	96045351	HYDRAULICS UPPER CARRI
FITTING GE 18L M22X1,5 ST C	10815662	644	4	496	969763408	PIPEWORK AIR INSTALLATIO
FITTING GE 20S G1/2A CR6-F	7410451	745	1	564	96045351	HYDRAULICS UPPER CARRI

Description	Item	Pos.	Quantity	Page	Assembly	Description
FITTING GE 22L M22X1,5 CR6	10036896	771	1	564	96045351	HYDRAULICS UPPER CARRI
FITTING GE 22L M26X1,5	471001308	3	2	374	90200104	OIL-GAUGING INSTRUMENT
FITTING GE 28L G1 CR6-FREI	471031608	754	4	564	96045351	HYDRAULICS UPPER CARRI
FITTING GE 28L G3/4A CR6-F	7410441	692	1	563	96045351	HYDRAULICS UPPER CARRI
FITTING GE 28L M26X1,5 CR6	7403925	770	1	564	96045351	HYDRAULICS UPPER CARRI
FITTING GE 42L G1 1/2 CR6-F	471034708	610	1	56	96035801	HYDRAULIC EQUIPM.CENTER
FITTING GE 42L G1 1/2 CR6-F	471034708	672	8	563	96045351	HYDRAULICS UPPER CARRI
FITTING GE 6LL M8X1	774374808	19	16	135	917257108	CENTRALIZED LUBRICATION
FITTING GE 6S G1/4A CR6-FRE	471032108	3	3	613	921444108	CENTRAL LUBRICATING SYS
FITTING GE 6S G1/4A CR6-FRE	471032108	640	1	617	967784808	HYDR.AUXILIARY HOISTING
FITTING GE 6S G1/4A CR6-FRE	471032108	600	1	717	967784508	HYDR.F.TELESCOPIC BOOM
FITTING GE 8 M12X1,5/1/2 CR6	10801399	29	2	253	12512627	EXHAUST NOZZLE ATTACHM
FITTING GE 8L M16X1,5 CR6-F	7618383	2	1	330	96039022	CONNECTION PIECE
FITTING GE 8L M18X1,5 CR6-F	471039308	36	1	480	918759808	ADD HEATING SUPERSTRUCT
FITTING GEF.A M24X1,5	10493479	61	1	697	10876933	TELESCOPIC CYLINDER
FITTING GEO 8L M16X1,5 CR6	10872598	3	1	503	969904608	PRESSURE RELIEF VALVE PR
FITTING GR 20/12S CR6-FREI	475004108	747	1	564	96045351	HYDRAULICS UPPER CARRI
FITTING GR 20/16S CR6-FREI	475033608	639	6	57	96035801	HYDRAULIC EQUIPM.CENTER
FITTING GR 22/18L CR6-FREI	475030708	643	2	57	96035801	HYDRAULIC EQUIPM.CENTER
FITTING GZ 15L CR6-FREI	470011208	840	1	565	96045351	HYDRAULICS UPPER CARRI
FITTING ISO 8434 ET 10L M16	482430314	639	2	617	967784808	HYDR.AUXILIARY HOISTING
FITTING ISO 8434 ET 10L M16	482430314	607	1	717	967784508	HYDR.F.TELESCOPIC BOOM
FITTING ISO 8434 ET 10S CR6	482431314	836	1	565	96045351	HYDRAULICS UPPER CARRI
FITTING ISO 8434 ET 12S CR6	482431414	648	1	57	96035801	HYDRAULIC EQUIPM.CENTER
FITTING ISO 8434 ET 16S CR6	482431514	660	2	57	96035801	HYDRAULIC EQUIPM.CENTER
FITTING ISO 8434 ET 16S CR6	482431514	612	2	622	969426308	AUX. HYDR. FOLDING JIB SP
FITTING ISO 8434 ET 20S CR6	482431614	633	2	563	96045351	HYDRAULICS UPPER CARRI
FITTING ISO 8434 ET 22L CR6	482430614	606	1	98	96035796	HYDR.TRAVEL DRIVE
FITTING ISO 8434 ET 22L CR6	482430614	606	1	115	96035792	HYDR.TRAVEL DRIVE
FITTING ISO 8434 ET 22L CR6	482430614	624	4	563	96045351	HYDRAULICS UPPER CARRI
FITTING ISO 8434 ET 22L CR6	482430614	635	1	617	967784808	HYDR.AUXILIARY HOISTING
FITTING ISO 8434 ET 38S CR6	482431814	826	1	564	96045351	HYDRAULICS UPPER CARRI
FITTING ISO 8434 ET 42L CR6	482431114	611	1	56	96035801	HYDRAULIC EQUIPM.CENTER
FITTING ISO 8434 EW 42L CR6	482530814	615	2	56	96035801	HYDRAULIC EQUIPM.CENTER
FITTING ISO 8434 EW 42L CR6	482530814	777	3	564	96045351	HYDRAULICS UPPER CARRI
FITTING ISO 8434 GE 10S G1/4	471004514	743	5	564	96045351	HYDRAULICS UPPER CARRI
FITTING ISO 8434 GE 10S M14	471008214	764	1	564	96045351	HYDRAULICS UPPER CARRI
FITTING ISO 8434-1 GE 10L G1/	7362091	600	1	98	96035796	HYDR.TRAVEL DRIVE
FITTING ISO 8434-1 GE 10L G1/	7362091	600	1	115	96035792	HYDR.TRAVEL DRIVE
FITTING ISO 8434-1 GE 10L G1/	7362091	608	6	562	96045351	HYDRAULICS UPPER CARRI
FITTING ISO 8434-1 GE 10L G1/	7362091	641	1	617	967784808	HYDR.AUXILIARY HOISTING
FITTING ISO 8434-1 GE 10L G1/	7362091	602	5	717	967784508	HYDR.F.TELESCOPIC BOOM
FITTING ISO 8434-1 GE 10L M	471039708	642	2	159	96056969	ADDITIONAL HYDRAULICS
FITTING ISO 8434-1 GE 10L M	471039708	605	1	496	969763408	PIPEWORK AIR INSTALLATIO
FITTING ISO 8434-1 GE 10L M	471039708	619	5	563	96045351	HYDRAULICS UPPER CARRI
FITTING ISO 8434-1 GE 10L M	471039708	614	1	617	967784808	HYDR.AUXILIARY HOISTING
FITTING ISO 8434-1 GE 10L M	4981235	3	1	192	10150934	OIL DIPSTICK CPL.
FITTING ISO 8434-1 GE 10L M	4981235	19	2	252	10140729	EXHAUST TC MOUNTING
FITTING ISO 8434-1 GE 10S G3/	471032808	655	8	57	96035801	HYDRAULIC EQUIPM.CENTER
FITTING ISO 8434-1 GE 10S G3/	471032808	651	3	563	96045351	HYDRAULICS UPPER CARRI
FITTING ISO 8434-1 GE 10S G3/	471032808	608	1	722	967785408	ADDNL.HYDR. FOLDING JIB
FITTING ISO 8434-1 GE 12L M	471030708	650	5	563	96045351	HYDRAULICS UPPER CARRI
FITTING ISO 8434-1 GE 22L M	7362515	3	1	242	10145176	PIPELINE INSTALLATION
FITTING ISO 8434-1 GE 6L M10	4981233	6	1	243	10145278	ACCESSORIES AIR COMPRES
FITTING KEY DIN 6885 A 14X9	434018708	27	1	492	967928508	LOCKING
FITTING KEY DIN 6885 A 4X4X1	434000208	5	1	376	10802061	WINCH REVOLUTION TRANS
FITTING KEY DIN 6885 A16X10	434022601	41	2	697	10876933	TELESCOPIC CYLINDER
FITTING RED 18/15L CR6-FREI	475435608	727	1	564	96045351	HYDRAULICS UPPER CARRI
FITTING RED 25/10S CR6-FREI	475432208	831	1	565	96045351	HYDRAULICS UPPER CARRI
FITTING RED 42/18L CR6-FREI	475431708	845	1	565	96045351	HYDRAULICS UPPER CARRI

Description	Item	Pos.	Quantity	Page	Assembly	Description
FITTING RED 42/22L CR6-FREI	475431608	789	2	564	96045351	HYDRAULICS UPPER CARRI
FITTING RED 42/28L CR6-FREI	475431308	609	2	56	96035801	HYDRAULIC EQUIPM.CENTER
FITTING RED 42/28L CR6-FREI	475431308	674	2	563	96045351	HYDRAULICS UPPER CARRI
FITTING RED 42/35L CR6-FREI	475436708	803	1	564	96045351	HYDRAULICS UPPER CARRI
FITTING REDSD12/10-L CR6-F	475431408	620	1	98	96035796	HYDR.TRAVEL DRIVE
FITTING REDSD12/10-L CR6-F	475431408	620	1	115	96035792	HYDR.TRAVEL DRIVE
FITTING REDSD12/10-L CR6-F	475431408	758	1	564	96045351	HYDRAULICS UPPER CARRI
FITTING REDSD12/10-L CR6-F	475431408	610	4	717	967784508	HYDR.F.TELESCOPIC BOOM
FITTING REDSD12/10-S CR6-F	475433408	610	1	722	967785408	ADDNL.HYDR. FOLDING JIB
FITTING REDSD12/6-S CR6-F	475432908	603	4	722	967785408	ADDNL.HYDR. FOLDING JIB
FITTING REDSD16/10-S CR6-F	475433508	824	4	564	96045351	HYDRAULICS UPPER CARRI
FITTING REDSD16/10-S CR6-F	475433508	614	2	622	969426308	AUX. HYDR. FOLDING JIB SP
FITTING REDSD16/6-S CR6-F	475433108	661	2	57	96035801	HYDRAULIC EQUIPM.CENTER
FITTING REDSD22/10-L CR6-F	475430808	827	1	564	96045351	HYDRAULICS UPPER CARRI
FITTING REDSD22/12-L CR6-F	475436108	610	1	98	96035796	HYDR.TRAVEL DRIVE
FITTING REDSD22/12-L CR6-F	475436108	610	1	115	96035792	HYDR.TRAVEL DRIVE
FITTING REDSD22/12-L CR6-F	475436108	740	1	564	96045351	HYDRAULICS UPPER CARRI
FITTING REDSD22/12-L CR6-F	475436108	611	1	617	967784808	HYDR.AUXILIARY HOISTING
FITTING REDSD22/15-L CR6-F	475435508	756	3	564	96045351	HYDRAULICS UPPER CARRI
FITTING REDSD28/18-L CR6-F	475430908	819	1	564	96045351	HYDRAULICS UPPER CARRI
FITTING REDSD28/18-L CR6-F	475430908	615	1	622	969426308	AUX. HYDR. FOLDING JIB SP
FITTING REDSD28/22-L CR6-F	475430508	647	2	57	96035801	HYDRAULIC EQUIPM.CENTER
FITTING REDSD28/22-L CR6-F	475430508	687	1	563	96045351	HYDRAULICS UPPER CARRI
FITTING REDSD35/28-L CR6-F	475430408	632	3	57	96035801	HYDRAULIC EQUIPM.CENTER
FITTING REDSD38/16-S CR6-F	475434208	698	1	563	96045351	HYDRAULICS UPPER CARRI
FITTING REDSD38/6-S CR6-F	475408108	734	1	564	96045351	HYDRAULICS UPPER CARRI
FITTING REDSDN10/6-S CR6-F	475432008	601	1	722	967785408	ADDNL.HYDR. FOLDING JIB
FITTING REDSDN12/6-L CR6-F	475430208	846	1	565	96045351	HYDRAULICS UPPER CARRI
FITTING REDSDN20/16-S CR6	475432108	701	2	563	96045351	HYDRAULICS UPPER CARRI
FITTING REDSDN25/12-S CR6	475433608	622	1	563	96045351	HYDRAULICS UPPER CARRI
FITTING REDSDN25/12-S CR6	475433608	622	1	617	967784808	HYDR.AUXILIARY HOISTING
FITTING REDSDN25/20-S CR6	475432308	634	2	57	96035801	HYDRAULIC EQUIPM.CENTER
FITTING REDSDN25/20-S CR6	475432308	711	1	563	96045351	HYDRAULICS UPPER CARRI
FITTING REDSDN28/10-L CR6	475435408	828	1	564	96045351	HYDRAULICS UPPER CARRI
FITTING REDSDN38/30-S CR6	475435308	844	1	565	96045351	HYDRAULICS UPPER CARRI
FITTING REDSDN42/12-L CR6	475407208	613	1	56	96035801	HYDRAULIC EQUIPM.CENTER
FITTING REDSDN42/12-L CR6	475407208	780	1	564	96045351	HYDRAULICS UPPER CARRI
FITTING RI M22X1,5/M16X CR6	7381363	4	2	238	9080294	AIR COMPRESSOR PRE-ASSY
FITTING RSWS10-LR-WD CR6	473230508	664	2	563	96045351	HYDRAULICS UPPER CARRI
FITTING RSWS10-SM-WD CR6	473210508	600	1	722	967785408	ADDNL.HYDR. FOLDING JIB
FITTING RSWS10-SR-WD CR6	473231008	658	4	57	96035801	HYDRAULIC EQUIPM.CENTER
FITTING RSWS10-SR-WD CR6	473231008	843	1	565	96045351	HYDRAULICS UPPER CARRI
FITTING RSWS22-LM-WD CR6	473331308	801	1	564	96045351	HYDRAULICS UPPER CARRI
FITTING RSWS6-SR-WD CR6-F	473230608	645	2	57	96035801	HYDRAULIC EQUIPM.CENTER
FITTING S235JR	10145589	11	1	276	10144036	POWER TAKE-OFF ADD-ON
FITTING SNV10-L CR6-FREI	470010108	640	2	159	96056969	ADDITIONAL HYDRAULICS
FITTING SNV10-L CR6-FREI	470010108	612	1	717	967784508	HYDR.F.TELESCOPIC BOOM
FITTING SNV10-L CR6-FREI	470010108	603	1	728	967785008	ADDNL.HYDR. FOLDING JIB
FITTING SNV10-S CR6-FREI	470010208	825	1	564	96045351	HYDRAULICS UPPER CARRI
FITTING SNV12-L CR6-FREI	470011308	611	1	98	96035796	HYDR.TRAVEL DRIVE
FITTING SNV12-L CR6-FREI	470011308	611	1	115	96035792	HYDR.TRAVEL DRIVE
FITTING SNV12-L CR6-FREI	470011308	666	2	563	96045351	HYDRAULICS UPPER CARRI
FITTING SNV22-L CR6-FREI	470010908	733	1	564	96045351	HYDRAULICS UPPER CARRI
FITTING SNV25-S CR6-FREI	470011008	830	1	565	96045351	HYDRAULICS UPPER CARRI
FITTING SNV25-S CR6-FREI	470011008	629	1	617	967784808	HYDR.AUXILIARY HOISTING
FITTING SNV28-L CR6-FREI	470010608	821	2	564	96045351	HYDRAULICS UPPER CARRI
FITTING SNV38-S CR6-FREI	470010708	713	1	563	96045351	HYDRAULICS UPPER CARRI
FITTING SNV38-S CR6-FREI	470010708	631	1	617	967784808	HYDR.AUXILIARY HOISTING
FITTING SNV42-L CR6-FREI	470011408	802	1	564	96045351	HYDRAULICS UPPER CARRI
FITTING SV 18L CR6-FREI	474030708	751	1	564	96045351	HYDRAULICS UPPER CARRI

Description	Item	Pos.	Quantity	Page	Assembly	Description
FITTING SV 25S CR6-FREI	474032808	636	1	57	96035801	HYDRAULIC EQUIPM.CENTER
FITTING SV 25S CR6-FREI	474032808	628	1	617	967784808	HYDR.AUXILIARY HOISTING
FITTING T 10S CR6-FREI	470402208	657	4	57	96035801	HYDRAULIC EQUIPM.CENTER
FITTING T 22L	470400708	8	1	374	90200104	OIL-GAUGING INSTRUMENT
FITTING VSTI G1/4 CR6-FREI	7361553	8	3	568	11211756	CONTROL BLOCK
FITTING W 6L	470200108	17	14	135	917257108	CENTRALIZED LUBRICATION
FITTING WE 6LL M10x1	774373808	1	1	138	11347500	DISTRIBUTION BLOCK
FITTING WE 6LL M10x1	774373808	2	1	526	11002916	DISTRIBUTION BLOCK
FITTING WSV 20S CR6-FREI	474232808	623	4	57	96035801	HYDRAULIC EQUIPM.CENTER
FITTING XG10-L CR6-FREI	470030308	608	1	717	967784508	HYDR.F.TELESCOPIC BOOM
FITTING XG10-S CR6-FREI	470032408	669	3	563	96045351	HYDRAULICS UPPER CARRI
FITTING XG12-L CR6-FREI	470030408	600	1	622	969426308	AUX. HYDR. FOLDING JIB SP
FITTING XG16-S CR6-FREI	470032708	670	1	563	96045351	HYDRAULICS UPPER CARRI
FITTING XG16-S CR6-FREI	470032708	601	2	622	969426308	AUX. HYDR. FOLDING JIB SP
FITTING XG38-S CR6-FREI	470033108	627	1	98	96035796	HYDR.TRAVEL DRIVE
FITTING XG38-S CR6-FREI	470033108	627	1	115	96035792	HYDR.TRAVEL DRIVE
FITTING XG42-L CR6-FREI	470030908	804	1	564	96045351	HYDRAULICS UPPER CARRI
FITTING XG6-L CR6-FREI	470030108	15	10	135	917257108	CENTRALIZED LUBRICATION
FITTING XGAI6-SR CR6-FREI	470700208	606	5	562	96045351	HYDRAULICS UPPER CARRI
FITTING XGAI6-SR CR6-FREI	470700208	608	1	617	967784808	HYDR.AUXILIARY HOISTING
FITTING XGE10-LR-ED3/8" CR6	471039608	611	6	562	96045351	HYDRAULICS UPPER CARRI
FITTING XGE10-LR-ED3/8" CR6	471039608	625	1	617	967784808	HYDR.AUXILIARY HOISTING
FITTING XGE12-LM-ED M18X1	471039408	798	1	564	96045351	HYDRAULICS UPPER CARRI
FITTING XGE12-LR-ED CR6-F	471030808	617	1	56	96035801	HYDRAULIC EQUIPM.CENTER
FITTING XGE12-LR-ED CR6-F	471030808	610	7	562	96045351	HYDRAULICS UPPER CARRI
FITTING XGE12-LR-ED CR6-F	471030808	612	2	617	967784808	HYDR.AUXILIARY HOISTING
FITTING XGE12-LR-ED1/4" CR6	471035308	616	2	98	96035796	HYDR.TRAVEL DRIVE
FITTING XGE12-LR-ED1/4" CR6	471035308	616	2	115	96035792	HYDR.TRAVEL DRIVE
FITTING XGE12-LR-ED1/4" CR6	471035308	643	4	563	96045351	HYDRAULICS UPPER CARRI
FITTING XGE15-LR-ED CR6-F	471031008	651	1	57	96035801	HYDRAULIC EQUIPM.CENTER
FITTING XGE16-SR-ED CR6-F	471033208	657	13	563	96045351	HYDRAULICS UPPER CARRI
FITTING XGE16-SR-ED CR6-F	471033208	609	3	622	969426308	AUX. HYDR. FOLDING JIB SP
FITTING XGE16-SR-ED CR6-F	471033208	601	1	717	967784508	HYDR.F.TELESCOPIC BOOM
FITTING XGE16-SR-ED CR6-F	471033208	600	2	728	967785008	ADDNL.HYDR. FOLDING JIB
FITTING XGE16-SR-ED3/4" CR6	471033108	696	4	563	96045351	HYDRAULICS UPPER CARRI
FITTING XGE18-LM M26X1,5 C	476607608	634	1	496	969763408	PIPEWORK AIR INSTALLATIO
FITTING XGE18-LR-ED CR6-F	471031208	611	1	622	969426308	AUX. HYDR. FOLDING JIB SP
FITTING XGE18-LR-ED3/4" CR6	471037508	402	3	342	96066379	PREMOUNTED FUEL FILTER
FITTING XGE20-SM-ED CR6-F	471033308	634	4	563	96045351	HYDRAULICS UPPER CARRI
FITTING XGE20-SM-ED M33X2	471034308	425	2	288	919007708	DRIVE ASSEMBLY, PRE-ASSE
FITTING XGE20-SR-ED CR6-F	471033408	607	28	56	96035801	HYDRAULIC EQUIPM.CENTER
FITTING XGE20-SR-ED CR6-F	471033408	682	4	563	96045351	HYDRAULICS UPPER CARRI
FITTING XGE22-LM-ED M26X1	471031308	600	4	562	96045351	HYDRAULICS UPPER CARRI
FITTING XGE22-LM-ED M26X1	471031308	636	1	617	967784808	HYDR.AUXILIARY HOISTING
FITTING XGE22-LR-ED CR6-F	471031408	683	4	563	96045351	HYDRAULICS UPPER CARRI
FITTING XGE25-SR-ED CR6-F	471033608	603	2	56	96035801	HYDRAULIC EQUIPM.CENTER
FITTING XGE35-LR-ED CR6-F	471034508	602	3	56	96035801	HYDRAULIC EQUIPM.CENTER
FITTING XGE35-LR-ED CR6-F	471034508	624	1	98	96035796	HYDR.TRAVEL DRIVE
FITTING XGE35-LR-ED CR6-F	471034508	624	1	115	96035792	HYDR.TRAVEL DRIVE
FITTING XGE6-LM-ED CR6-FRE	471030108	16	8	135	917257108	CENTRALIZED LUBRICATION
FITTING XGE6-LR-ED CR6-FRE	471030008	13	2	523	917261208	CENT. LUBRIC. SYSTEM SUP
FITTING XGE6-LR-ED CR6-FRE	471030008	607	1	722	967785408	ADDNL.HYDR. FOLDING JIB
FITTING XGE8-SM-ED CR6-F	471032208	738	3	564	96045351	HYDRAULICS UPPER CARRI
FITTING XGE8-SM-ED CR6-F	471032208	634	1	617	967784808	HYDR.AUXILIARY HOISTING
FITTING XGEV38-SR-WD CR6	471034408	606	9	56	96035801	HYDRAULIC EQUIPM.CENTER
FITTING XGR12/6-L CR6-FREI	475030108	625	2	57	96035801	HYDRAULIC EQUIPM.CENTER
FITTING XGR15/12-L CR6-FREI	475031708	714	1	563	96045351	HYDRAULICS UPPER CARRI
FITTING XGR35/22-L CR6-FREI	475031208	607	1	98	96035796	HYDR.TRAVEL DRIVE
FITTING XGR35/22-L CR6-FREI	475031208	607	1	115	96035792	HYDR.TRAVEL DRIVE
FITTING XSV10-L CR6-FREI	474030308	752	1	564	96045351	HYDRAULICS UPPER CARRI

Description	Item	Pos.	Quantity	Page	Assembly	Description
FITTING XSV12-L CR6-FREI	474000408	621	1	57	96035801	HYDRAULIC EQUIPM.CENTER
FITTING XSV12-S CR6-FREI	474032408	601	10	56	96035801	HYDRAULIC EQUIPM.CENTER
FITTING XSV15-L CR6-FREI	474030508	753	1	564	96045351	HYDRAULICS UPPER CARRI
FITTING XSV20-S CR6-FREI	474032708	624	8	57	96035801	HYDRAULIC EQUIPM.CENTER
FITTING XSV28-L CR6-FREI	474001008	600	3	56	96035801	HYDRAULIC EQUIPM.CENTER
FITTING XSV38-S CR6-FREI	474033008	630	1	617	967784808	HYDR.AUXILIARY HOISTING
FITTING XT10-L CR6-FREI	470430308	606	1	717	967784508	HYDR.F.TELESCOPIC BOOM
FITTING XT20-S CR6-FREI	470432608	702	1	563	96045351	HYDRAULICS UPPER CARRI
FITTING XT25-S CR6-FREI	470432708	832	1	565	96045351	HYDRAULICS UPPER CARRI
FITTING XT38-S CR6-FREI	470433008	791	1	564	96045351	HYDRAULICS UPPER CARRI
FITTING XW10-L CR6-FREI	470230308	602	1	728	967785008	ADDNL.HYDR. FOLDING JIB
FITTING XW18-L CR6-FREI	470230608	645	1	496	969763408	PIPEWORK AIR INSTALLATIO
FITTING XW38-S CR6-FREI	470233408	799	1	564	96045351	HYDRAULICS UPPER CARRI
FITTING XWSV12-L CR6-FREI	474200408	601	1	98	96035796	HYDR.TRAVEL DRIVE
FITTING XWSV12-L CR6-FREI	474200408	601	1	115	96035792	HYDR.TRAVEL DRIVE
FITTING XWSV18-L CR6-FREI	474231508	649	1	496	969763408	PIPEWORK AIR INSTALLATIO
FITTINGS 11SMnPb30+C	10130906	21	1	253	12512627	EXHAUST NOZZLE ATTACHM
FITTINGS ISO 8434-1 GE 22L M	10295188	403	1	328	96034515	EXPANSION TANK PRE-ASS.
FITTINGS ISO 8434-1 GE 22L M	10295188	737	6	564	96045351	HYDRAULICS UPPER CARRI
FITTINGS ISO 8434-1 GE 22L M	10295188	632	2	617	967784808	HYDR.AUXILIARY HOISTING
FIXED BOOM RAISING DEVICE	12102116	28	1	435	10877138	OPERATOR SEAT
FIXING DEVICE 2.LIFT TOP	967321308	10	1	735	918197708	EL.2 HOISTING LIMIT SWITCH
FLANGE	12100075	1	1	710	10354493	CABLE REEL
FLANGE	12400857	3	1	209	10120186	BALANCER ASSEMBLY
FLANGE	927504701	23	1	608	939294001	ROPE DRUM
FLANGE 10X137X137 S355MC	97032260	21	1	294	968026308	CLUTCH ACTUATOR
FLANGE 10X65X37 ALMG3 H11	97057024	4	1	520	918731908	AIR FILTER UNIT
FLANGE 25.0X16 9 42CRMO4	970003708	9	1	291	96034631	RADIATOR, PRE-ASSEMBLED
FLANGE FITTING 101.6X71 S3	97053934	402	2	288	919007708	DRIVE ASSEMBLY, PRE-ASSE
FLANGE FITTING BFG 16S CR6	10030904	511	1	562	96045351	HYDRAULICS UPPER CARRI
FLANGE FITTING CR6-FREI	510037408	513	1	562	96045351	HYDRAULICS UPPER CARRI
FLANGE FITTING CR6-FREI	510133208	519	1	562	96045351	HYDRAULICS UPPER CARRI
FLANGE FITTING CR6-FREI	511518808	520	1	562	96045351	HYDRAULICS UPPER CARRI
FLANGE FITTING FLK40-35-40	10871016	206	1	287	919007708	DRIVE ASSEMBLY, PRE-ASSE
FLANGE FITTING SFL60-50-45	11491125	412	1	288	919007708	DRIVE ASSEMBLY, PRE-ASSE
FLANGE HALF SAE1 1/4-C62-M	510586608	502	4	616	967784808	HYDR.AUXILIARY HOISTING
FLANGE HALF SAE1-C62-M12	510586908	506	6	562	96045351	HYDRAULICS UPPER CARRI
FLANGE HALF SAE1-C62-M12	510586908	501	4	616	967784808	HYDR.AUXILIARY HOISTING
FLANGE PRE-ASS.	10152832	8	1	210	10138230	CAMSHAFT CPL.
FLANGE PRE-ASS.	10152832	8	1	210	10138230	CAMSHAFT CPL.
FLANGE PRE-ASS.	11348648	8	1	210	10138230	CAMSHAFT CPL.
FLANGE PRE-ASS.	12408221	2	1	209	10120186	BALANCER ASSEMBLY
FLANGE SLEEVE 18X12X12 S	10424489	2	2	424	966253908	WAGON
FLANGE SLEEVE 45X50X25	9888448	(2)	2	277	9077386	AUXILIARY DRIVE PRE-ASS.
FLANGE STRAP	12100293	2	1	488	11212257	BELT CARRIER SYSTEM
FLANGE STUB PIPE AFG 38S	511517808	500	8	56	96035801	HYDRAULIC EQUIPM.CENTER
FLANGE STUB PIPE AFG 38S	511517808	500	2	98	96035796	HYDR.TRAVEL DRIVE
FLANGE STUB PIPE AFG 38S	511517808	500	2	115	96035792	HYDR.TRAVEL DRIVE
FLANGE STUB PIPE AFG 38S	511517808	510	3	562	96045351	HYDRAULICS UPPER CARRI
FLANGE STUB PIPE AFG 38S	511517808	500	3	717	967784508	HYDR.F.TELESCOPIC BOOM
FLAP COMPL.	969017908	1	1	457	969016008	FLAP LEFT FRONT PRE-ASS.
FLAP GLUED SPF	969007208	1	1	449	968923508	FLAP RIGHT PRE-ASS.
FLAP LEFT FRONT PRE-ASS.	969016008	1	1	455	969015908	SLEWING PLATFORM PANELLI
FLAP RIGHT PRE-ASS. SPF	968923508	2	1	445	96036790	SLEWING PLATFORM PANELLI
FLASHING LIGHT GLASS	11346616	(1)	1	160	915731908	EL.COMP. DISPATCH ASSEM
FLAT CLIP 114,3 EDELSTAHL	10296644	180	2	507	919674408	EXHAUST SYSTEM
FLAT FUSE LINK 10A 32	604007108	35	12	540	91000922	SWITCHBOX MOUNTING PART
FLAT FUSE LINK 15A	604007208	36	10	540	91000922	SWITCHBOX MOUNTING PART
FLAT FUSE LINK 20A	604007308	37	7	540	91000922	SWITCHBOX MOUNTING PART
FLAT FUSE LINK 25A	604007608	38	1	540	91000922	SWITCHBOX MOUNTING PART

Description	Item	Pos.	Quantity	Page	Assembly	Description
FLAT FUSE LINK 3A	604007708	32	8	540	91000922	SWITCHBOX MOUNTING PART
FLAT FUSE LINK 5A 32	604006908	515	1	48	96045227	WIRING HARNESS
FLAT FUSE LINK 5A 32	604006908	33	8	540	91000922	SWITCHBOX MOUNTING PART
FLAT FUSE LINK 7,5A	604007008	505	1	48	96045227	WIRING HARNESS
FLAT FUSE LINK 7,5A	604007008	34	12	540	91000922	SWITCHBOX MOUNTING PART
FLAT GASKET	704274908	10	4	42	966167808	COVER COMPL.
FLAT PLUG	602304808	2	2	474	963398008	PREMOUNT.AXIAL FLOW FAN
FLAT PLUG 0,8X0,5-1 CuSn4	10097470	671	2	535	96037136	WIRING HARNESS
FLAT PLUG 1,0-2,5MM2	602323208	120	21	48	96045227	WIRING HARNESS
FLAT PLUG 2,8X0,5-1 SN	602323508	124	34	48	96045227	WIRING HARNESS
FLAT PLUG 2,8X0,5-1 SN	602323508	124	6	462	96036955	WIRING HARNESS
FLAT PLUG 6,3X1-2,5 SN	602203908	75	2	48	96045227	WIRING HARNESS
FLAT PLUG 6,3X1-2,5 SN	602203908	75	2	462	96036955	WIRING HARNESS
FLAT PLUG 6,3X1-2,5 SN	602203908	75	3	534	96037136	WIRING HARNESS
FLAT PLUG HOUSING 18-POL	11067932	525	14	542	96045387	CABLES, BASIC CONSTRUCTI
FLAT PLUG HOUSING 18-POL	602323308	503	3	48	96045227	WIRING HARNESS
FLAT PLUG HOUSING 18-POL	602323308	505	53	542	96045387	CABLES, BASIC CONSTRUCTI
FLAT PLUG HOUSING FASTIN	602208908	511	1	535	96037136	WIRING HARNESS
FLAT PLUG HOUSING FASTIN	602305908	517	1	48	96045227	WIRING HARNESS
FLAT PLUG HOUSING FASTIN	602305908	523	1	462	96036955	WIRING HARNESS
FLAT PLUG HOUSING FASTIN	602305908	3	1	474	963398008	PREMOUNT.AXIAL FLOW FAN
FLAT PLUG HOUSING FASTIN	602305908	503	1	542	96045387	CABLES, BASIC CONSTRUCTI
FLAT PLUG HOUSING JPT	602325608	524	2	542	96045387	CABLES, BASIC CONSTRUCTI
FLAT SEALING RING 14X19,5X	570116908	405	1	328	96034515	EXPANSION TANK PRE-ASS.
FLAT SEALING RING 14X19,5X	570116908	303	1	561	96045351	HYDRAULICS UPPER CARRI
FLAT SEALING RING 17,4X24X	710121114	6	2	83	11320954	GUIDE WHEEL UNIT
FLAT SPIRAL SPRING	10428198	12	3	710	10354493	CABLE REEL
FLEXIBLE WASHER	97118889	103	1	507	919674408	EXHAUST SYSTEM
FLOOR MAT 227X798X849 PU	97000467	11	1	399	917305408	INTERNAL PANELLING INSTA
FLOOR MAT 61X753X552 PU-S	97000466	10	1	399	917305408	INTERNAL PANELLING INSTA
FLOOR PLATE B9HDS 983593	10224095	(3)	72	69	917436708	FLOOR SHEET COMPL.
FLOOR SHEET COMPL. 1.0M	917436708	8	2	12		LIEBHERR LTR 1220
FLOOR SHEET WELDED	969132208	4	1	455	969015908	SLEWING PLATFORM PANELLI
FLOOR SHEET WELDED SPF	968933608	4	1	445	96036790	SLEWING PLATFORM PANELLI
FLOW DIVIDER VALVE 120L/MI	511485408	164	1	560	96045351	HYDRAULICS UPPER CARRI
FLUSH-/FEED PRESSURE VA	10871726	5	1	79	11182596	VARIABLE DISPLACEMENT MO
FLYWHEEL ASSEMBLY SAE 1	9077238	530	1	179	13455297	DIESEL ENGINE
FLYWHEEL HOUSING MOUNT	10115829	520	1	178	13455297	DIESEL ENGINE
FLYWHEEL HOUSING PRE-A	10118148	1	1	262	10115829	FLYWHEEL HOUSING MOUNT
FLYWHEEL PRE-ASS. SAE 1X1	12809567	1	1	266	9077238	FLYWHEEL ASSEMBLY
FOLDING BRACKET PRE-ASS.	923285508	2	1	761	917267508	TRANSPORT MOUNTING
FOLDING BRACKET ST.CONST	922849008	1	1	763	923285508	FOLDING BRACKET PRE-ASS.
FOLDING PART WELDED SPF	96020727	2	1	763	923285508	FOLDING BRACKET PRE-ASS.
FOOT ROCKER SPF	10297310	54	2	467	96053500	ELECTRIC ADD-ON PARTS CA
FOOT SWITCH CPL.	96023875	56	1	468	96053500	ELECTRIC ADD-ON PARTS CA
FORM HOSE	96046407	250	2	511	96051842	EXHAUST SYSTEM PRE-ASSE
FORM HOSE DN20 X3.5 B SPF	97042067	62	1	482	96020359	ADDNL.HEATING, PRE-ASSE
FORM HOSE DN20 X3.5 B SPF	97042069	8	1	430	969085208	HEATING, PRE-ASSEMBLED
FORM HOSE DN20 X3.5 B SPF	97042069	16	1	480	918759808	ADD HEATING SUPERSTRUCT
FORM HOSE DN20 X3.5 B SPF	97042071	9	1	430	969085208	HEATING, PRE-ASSEMBLED
FORM HOSE DN20 X3.5 B SPF	97046324	10	1	430	969085208	HEATING, PRE-ASSEMBLED
FORM HOSE DN20 X3.5 B SPF	97046326	13	1	430	969085208	HEATING, PRE-ASSEMBLED
FORM HOSE DN20 X3.5 B SPF	97046327	15	1	430	969085208	HEATING, PRE-ASSEMBLED
FORM HOSE DN20 X3.5 B SPF	97046328	16	1	430	969085208	HEATING, PRE-ASSEMBLED
FORM HOSE DN20 X3.5 B SPF	97050852	15	1	480	918759808	ADD HEATING SUPERSTRUCT
FORM HOSE DN20 X3.5 B SPF	97050857	11	1	430	969085208	HEATING, PRE-ASSEMBLED
FORM HOSE DN20 X3.5 B SPF	97060781	60	1	482	96020359	ADDNL.HEATING, PRE-ASSE
FORM HOSE DN20 X3.5 B SPF	97060786	55	1	482	96020359	ADDNL.HEATING, PRE-ASSE
FRAME RAL 9005 MATT	10875930	5	1	593	11622561	OIL AIR COOLER
FRAME RAL 9005 SPF	97136699	2	1	385	96048757	CUP HOLDER

Description	Item	Pos.	Quantity	Page	Assembly	Description
FRICTION BEARING 30X20 K	10215893	4	1	477	966707708	MIRROR RETAINER PRE-ASS.
FRICTION DISK	975529708	29	2	445	96036790	SLEWING PLATFORM PANELLI
FRICTION PLATE 3M TYP35	97116895	8	6	351	919369308	SLEWING GEAR
FRONT LEFT-HAND HOOD	967982708	2	1	455	969015908	SLEWING PLATFORM PANELLI
FRONT PROFILE 803X122X44 1	97000516	31	1	421	917304708	SLIDING DOOR INSTALLATION
FRONT WINDOW 6X735X1506	97003558	1	1	409	966497908	FRONT WINDOW CPL.
FRONT WINDOW CPL.	966497908	1	1	406	916162508	WINDOW ASSEMBLY
FUEL FEED	91002861	109	1	12		LIEBHERR LTR 1220
FUEL FILTER	12106874	100	1	342	96066379	PREMOUNTED FUEL FILTER
FUEL FILTER	553174008	1	1	486	11110051	DOSING PUMP
FUEL FINE FILTER KRAFTST	12820742	2	1	227	13512036	CONSOLE FOR FILTER PRE-A
FUEL FINE-FILTER ASSEMBLY	10146791	201	1	176	13455297	DIESEL ENGINE
FUEL HOSE DN4,5	10815777	32	1	480	918759808	ADD HEATING SUPERSTRUCT
FUEL HOSE DN4,5	10815777	15	1	482	96020359	ADDNL.HEATING, PRE-ASSE
FUEL HOSE DN4,5-NBR NBR/	553191108	31	0.06	480	918759808	ADD HEATING SUPERSTRUCT
FUEL LINE	9078935	4	1	229	10143342	LEAK OIL RETURN LINE
FUEL LINE 12X1	10143240	7	1	228	10143341	FUEL LINES
FUEL LINES	10143341	212	1	176	13455297	DIESEL ENGINE
FUEL PIPING 5X1 PA12 ETFP	11626108	3	5	480	918759808	ADD HEATING SUPERSTRUCT
FUEL PIPING 5X1 PA12 ETFP	11626108	4	1.65	480	918759808	ADD HEATING SUPERSTRUCT
FUEL TANK ADD-ON UNIT	917626608	108	1	12		LIEBHERR LTR 1220
FUEL TANK WELDED CONSTR	969072608	1	1	339	968999708	FUEL TANK, PRE-ASSEMBLED
FUEL TANK, PRE-ASSEMBLED	968999708	1	1	337	917626608	FUEL TANK ADD-ON UNIT
FUSE 50A 32V SPF	10023751	(20)	1	335	96023914	ELECTRIC FOR BATTERY BOX
FUSE BOX SMALL 6-POL, LEE	604501608	2	10	551	969061708	CARRIER PLATE, PRE-ASSE
FUSE CARTRIDGE 100A DC32	10878143	(22)	1	335	96023914	ELECTRIC FOR BATTERY BOX
FUSE CARTRIDGE 80A DC32	10878142	(21)	1	335	96023914	ELECTRIC FOR BATTERY BOX
FUSE CARTRIDGE DIN 72581	6905877	(1)	1	271	10151329	WIRING HARNESS ASSEMBLY
FUSE HOLDER RAUPENTRAE	968331708	9	6	124	968046208	ADD-ON PARTS
GAS SENSOR NICHT LACKIE	10144038	153	1	514	96041566	ELECTRIC ADD-ON PARTS
GAS SENSOR NICHT LACKIE	12412141	152	2	514	96041566	ELECTRIC ADD-ON PARTS
GAS SPRING 12X80-100N ST	10476211	6	2	406	916162508	WINDOW ASSEMBLY
GAS SPRING 19X60-550N	591067008	23	1	433	918810308	CONTROL STAND
GAS SPRING 23X251-550N ST	11003837	17	2	406	916162508	WINDOW ASSEMBLY
GAS SPRING 23X265-500N	591061908	10	2	449	968923508	FLAP RIGHT PRE-ASS.
GAS SPRING 23X265-750N	591065008	9	2	457	969016008	FLAP LEFT FRONT PRE-ASS.
GASKET KIT INT.FLANGE	10472219	999	1	311	10008308	CONNECTING PLATE
GASKET KIT INT.FLANGE	10872487	999	1	323	571907208	CONNECTING PLATE
GAUGE 1.5X130X25 X5CRNI18	97126865	21	1	151	919328608	TOOLS AND ACCESSORIES
GAUGE CONNECTION 12L CR6	7409918	755	1	564	96045351	HYDRAULICS UPPER CARRI
GAUGE CONNECTION 12S M20	7409922	649	1	57	96035801	HYDRAULIC EQUIPM.CENTER
GAUGE CONNECTION DKO 1	5607617	823	6	564	96045351	HYDRAULICS UPPER CARRI
GAUGE CONNECTION DKO 1	5607617	613	2	622	969426308	AUX. HYDR. FOLDING JIB SP
GEAR PUMP FP12	10870965	110	1	287	919007708	DRIVE ASSEMBLY, PRE-ASSE
GEAR PUMP WP09 SPF	10870964	109	1	287	919007708	DRIVE ASSEMBLY, PRE-ASSE
GEAR PUMP WP09 SPF	11210201	106	1	286	919007708	DRIVE ASSEMBLY, PRE-ASSE
GEAR WHEEL	10872521	80	1	428	11083498	AIR CONDITIONING UNIT
GEAR WHEEL 2,25	10133692	4	1	210	10138230	CAMSHAFT CPL.
GEAR WHEEL 2,5	10139764	4	1	209	10120186	BALANCER ASSEMBLY
GEAR WHEEL 2,5	10139765	5	1	209	10120186	BALANCER ASSEMBLY
GEAR WHEEL 2,5	9072834	3	1	196	10147438	CRANKSHAFT WITH GEAR
GEAR WHEEL 2,5	9073343	2	1	238	9080294	AIR COMPRESSOR PRE-ASSY
GEAR WHEEL 2,75	10137602	(2)	1	210	10138230	CAMSHAFT CPL.
GEAR WHEEL MOTOR AZMF	10429930	102	1	291	96034631	RADIATOR, PRE-ASSEMBLED
GEARBOX COVER	939251801	65	1	353	90008901	SLEWING GEAR DRIVE
GEARWHEEL PRE-ASS.	10138447	3	1	210	10138230	CAMSHAFT CPL.
GEARWHEEL PRE-ASS.	10145049	(1)	1	210	10138230	CAMSHAFT CPL.
GENERATOR, PRE-ASSEMBL	10142863	440	1	178	13455297	DIESEL ENGINE
GLUE 10ML FLASCHE -50/+175	8655032	104	1	180	11389608	CRANKCASE CPL. WITH CYLIN
GLUE 10ML FLASCHE -50/+175	8655032	104	1	205	10149578	CYLINDER HEAD

Description	Item	Pos.	Quantity	Page	Assembly	Description
GREASE CTK 668190 50KG	861303501	38	0.1	367	90208882	COMPACT ROPE WINCH
GREASE NBU 30 1KG DOSE	10285708	100	1	182	10154458	CYLINDER
GREASE NBU 30 1KG DOSE	10285708	100	1	183	10147687	POWER UNIT SUPPORT ATT
GREASE NBU 30 1KG DOSE	10285708	100	1	205	10149578	CYLINDER HEAD
GREASE NBU 30 1KG DOSE	10285708	100	1	209	10120186	BALANCER ASSEMBLY
GREASE NBU 30 1KG DOSE	10285708	100	1	216	10148432	LUBE OIL PUMP WITH FASTEN
GREASE NBU 30 1KG DOSE	10285708	100	1	232	10145173	INTAKE STACK ASSEMBLY
GREASE NBU 30 1KG DOSE	10285708	100	1	234	10149677	CONNECTING LINE ADD-ON
GREASE NBU 30 1KG DOSE	10285708	100	1	237	10127566	INSTALLATION BRAKE COMPR
GREASE NBU 30 1KG DOSE	10285708	100	1	245	10142733	WATER PUMP WITH FASTENIN
GREASE NBU 30 1KG DOSE	10285708	100	1	246	10148215	THERMOSTAT HOUSING ASS
GREASE NBU 30 1KG DOSE	10285708	100	1	248	10142742	COOLANT PIPE BEND ADD-ON
GREASE NBU 30 1KG DOSE	10285708	100	1	253	12512627	EXHAUST NOZZLE ATTACHM
GREASE NBU 30 1KG DOSE	10285708	100	1	262	10115829	FLYWHEEL HOUSING MOUNT
GREASE NBU 30 1KG DOSE	10285708	100	1	265	10127979	LOCKING PIECES
GREASE NBU 30 1KG DOSE	10285708	(100)	1	273	12583633	ENGINE CONTROL SENSORS
GREASE NBU 30 1KG DOSE	10285708	(100)	1	273	12583633	ENGINE CONTROL SENSORS
GREASE NBU 30 1KG DOSE	10285708	(100)	1	275	10125687	POWER TAKE-OFF ADD-ON
GREASE NBU 30 1KG DOSE	10285708	100	1	277	9077386	AUXILIARY DRIVE PRE-ASS.
GREASE NIPPLE CAP	10014701	16	1	525	10327065	ELECTRIC PUMP
GREASE NIPPLE DIN 71412 C	774301808	21	8	129	919644008	HYDRAULIC SUPPORT
GREASE NIPPLE M16X1.5	774351714	7	1	83	11320954	GUIDE WHEEL UNIT
GREASE STABURAGS NBU 30	10282622	(10)	1	182	10154458	CYLINDER
GREASE STABURAGS NBU 30	10282622	100	1	191	10121667	CONNECTING PIECE W.O-RIN
GREASE STABURAGS NBU 30	10282622	100	1	210	10138230	CAMSHAFT CPL.
GREASE STABURAGS NBU 30	10282622	100	1	259	10115664	LOCKING PIECES
GRIDIRON T725X564X30/3 S2	97053346	19	1	455	969015908	SLEWING PLATFORM PANELLI
GRIP	12103434	(2)	1	435	10877138	OPERATOR SEAT
GRIP 4X110X245 S315MC	97100419	3	2	20	91001569	CRAWLER TRACK TRAVEL G
GRIP DIN 3122 A 3/4"	790026208	63	1	152	928569808	MAIN TOOLS
GRIP PA6-30%GF SPF	966435308	3	1	157	96063087	STORAGE BOX
GRIP ZN-DRUCKGUSS	10112569	(10)	1	561	96045351	HYDRAULICS UPPER CARRI
GROMMET 10/12/17,5 PVC BK	602701308	1	1	390	916170808	CABLE INLET
GROMMET NUT M6	7361600	18	1	325	10292815	REGULATOR ELEMENT
GROMMET NUT M8	7361601	14	1	308	571899508	SHUTDOWN VALVE
GROMMET NUT M8	7361601	11	1	313	571900808	REGULATOR ELEMENT
GROMMET NUT M8	7361601	11	1	314	10472202	REGULATOR ELEMENT
GROUND RAIL	926891108	25	1	544	969256608	BASE ASSEMBLY
GRUB SCREW	10488035	47	1	81	11161917	CONTROL ELEMENT
GRUB SCREW	570435308	39	1	697	10876933	TELESCOPIC CYLINDER
GRUB SCREW DIN 913 M10X25	404402708	30	1	490	10877810	BALLAST EXTENSION RAM
GRUB SCREW DIN 913 M10X30	404402908	31	1	490	10877810	BALLAST EXTENSION RAM
GRUB SCREW DIN 913 M10X6	7623427	20	2	319	10871282	VARIABLE PUMP
GRUB SCREW DIN 913 M12X2	404403608	9	2	490	10877810	BALLAST EXTENSION RAM
GRUB SCREW DIN 913 M5X6 4	510762108	(301)	3	286	919007708	DRIVE ASSEMBLY, PRE-ASSE
GRUB SCREW DIN 913 M6X25	404400508	16	1	421	917304708	SLIDING DOOR INSTALLATION
GRUB SCREW DIN 913 M6X25	404400508	5	1	725	511479408	LOAD HOLDING VALVE
GRUB SCREW DIN 914 M8X10	12100620	29	1	648	12102921	LUFFING CYLINDER
GRUB SCREW DIN 915 M10X2	4048002	8	1	23	12102931	TRACK WIDTH ADJUSTING CY
GRUB SCREW ISO 4026 M10X	10179470	4	1	437	962282208	ARM REST LEFT
GRUB SCREW ISO 4026 M10X	10179470	4	1	439	962282308	ARM REST RIGHT
GRUB SCREW ISO 4026 M12X	000608250	12	5	657	919028808	DISPATCH ASSY.MECH.PART
GRUB SCREW ISO 4026 M20X	10875481	50	4	673	917292008	TELESCOPIC SECTION 1 PRE
GRUB SCREW ISO 4026 M20X	10875481	50	4	677	917292108	TELESCOPIC SECT.2 PRE-AS
GRUB SCREW ISO 4026 M20X	10875481	50	4	681	917292208	TELESCOPIC SECT.3 PRE-ASS
GRUB SCREW ISO 4026 M20X	10875481	50	4	685	917292308	TELESCOPIC SECT.IV PRE-A
GRUB SCREW ISO 4026 M20X	10875481	50	4	690	917292408	TELESCOPIC SECT.5 PRE-AS
GRUB SCREW ISO 4026 M6X10	12100613	3	1	436	96032222	REWORK ARMREST LEFT
GRUB SCREW ISO 4026 M6X10	12100613	3	1	438	96032223	REWORK ARMREST RIGHT
GRUB SCREW ISO 4026 M6X35	12106077	27	2	387	916177508	STEP CPL.

Description	Item	Pos.	Quantity	Page	Assembly	Description
GRUB SCREW ISO 4026 M8X50	12100292	12	2	734	917268408	BOOM NOSE
GRUB SCREW ISO 4026 M8X50	12100292	3	2	737	967321308	FIXING DEVICE 2.LIFT TOP
GRUB SCREW ISO 4028 M8X2	4901247	29	1	490	10877810	BALLAST EXTENSION RAM
GRUB SCREW M6X50 A2-70	10450694	25	1	409	966497908	FRONT WINDOW CPL.
GRUB SCREW M6X50 A2-70	10450694	22	1	421	917304708	SLIDING DOOR INSTALLATION
GSM MODULE MC-MRLQ	10873838	26	1	540	91000922	SWITCHBOX MOUNTING PART
GUARD	10872389	7	1	593	11622561	OIL AIR COOLER
GUARD PA	10222686	27	2	544	969256608	BASE ASSEMBLY
GUARD RING	10152974	3	1	199	10153583	CRANKSHAFT SEALING
GUIDE	962625708	9	1	701	966134608	ADD-ON PARTS CYLINDER
GUIDE 180X70X 50 PA6G	97093433	6	1	94	96034962	GUIDE LEFT
GUIDE 180X70X 50 PA6G	97093433	6	1	112	96034980	GUIDE RIGHT
GUIDE 30.0X235 S355J2C+C FE	97033304	2	2	493	967978908	INTERLOCKING
GUIDE 30.0X345 S355J2C+C FE	97030029	4	1	492	967928508	LOCKING
GUIDE 30.0X388 S355J2C+C FE	97033305	3	1	493	967978908	INTERLOCKING
GUIDE 306X48X37 ENAW6060-	977430408	10	2	433	918810308	CONTROL STAND
GUIDE 80.0X76 35NICRMOV12	97008548	2	1	477	966707708	MIRROR RETAINER PRE-ASS.
GUIDE BUSHING 50,1X85X132	10470371	7	1	697	10876933	TELESCOPIC CYLINDER
GUIDE FRAME	11600988	800	1	697	10876933	TELESCOPIC CYLINDER
GUIDE ISO 8062-3DCTG6 30X5	972426708	49	4	673	917292008	TELESCOPIC SECTION 1 PRE
GUIDE ISO 8062-3DCTG6 30X5	972426708	49	4	677	917292108	TELESCOPIC SECT.2 PRE-AS
GUIDE ISO 8062-3DCTG6 30X5	972426708	49	4	681	917292208	TELESCOPIC SECT.3 PRE-ASS
GUIDE ISO 8062-3DCTG6 30X5	972426708	49	4	685	917292308	TELESCOPIC SECT.IV PRE-A
GUIDE ISO 8062-3DCTG6 30X5	972426708	49	4	690	917292408	TELESCOPIC SECT.5 PRE-AS
GUIDE LEFT	96034962	200	1	76	91001377	CRAWLER SUPPORT PREASS
GUIDE PRE-ASS.	966230508	27	1	421	917304708	SLIDING DOOR INSTALLATION
GUIDE PULLEY COMPL.	10149360	3	2	244	12418347	AIR COND. COMPRESSOR A
GUIDE RIGHT	96034980	200	1	109	91001378	CRAWLER SUPPORT PREASS
GUIDE WELDED GLASPERLEN	966230608	28	1	421	917304708	SLIDING DOOR INSTALLATION
GUIDE WHEEL UNIT B9HDSX	11320954	5	1	75	91001377	CRAWLER SUPPORT PREASS
GUIDE WHEEL UNIT B9HDSX	11320954	5	1	108	91001378	CRAWLER SUPPORT PREASS
GUIDING PIPE	9079532	2	1	192	10150934	OIL DIPSTICK CPL.
GUIDING RAIL 5X1380X184 S7	97032836	5	3	124	968046208	ADD-ON PARTS
GUIDING RAIL 5X1380X184 S7	97032837	6	3	124	968046208	ADD-ON PARTS
GUIDING ROD 45.0X445 35NIC	97037244	60	1	75	91001377	CRAWLER SUPPORT PREASS
GUIDING ROD 45.0X445 35NIC	97037244	60	1	108	91001378	CRAWLER SUPPORT PREASS
GUIDING ROD 45.0X455 35NIC	97036914	40	4	20	91001569	CRAWLER TRACK TRAVEL G
GUIDING TAPE 160X25	7367564	6	2	85	10877686	TENSION JACK HYDR CPL
HALF SHELL 80X25 PA6G + OE	97038484	16	2	147	919087608	ROTARY FEED THROUGH
HAND GRIP CPL. DREH KUNST	704232208	9	1	409	966497908	FRONT WINDOW CPL.
HAND HAMMER DIN 1041 800	790030008	60	1	152	928569808	MAIN TOOLS
HAND LEVER PRESS	885602114	6	1	151	919328608	TOOLS AND ACCESSORIES
HAND LEVER PRESS VERZ.	790042008	70	1	152	928569808	MAIN TOOLS
HAND PUMP	12106354	13	1	155	91001571	BOLT EXTRACTION DEVICE
HAND RAIL NIROSTA	10297396	22	1	492	967928508	LOCKING
HANDGRIP 215X25X59,2X169	10443309	59	1	400	917305408	INTERNAL PANELLING INSTA
HANDLE	591066808	10	2	409	966497908	FRONT WINDOW CPL.
HANDLE	591066808	5	1	410	965784408	ROOF WINDOW PRE-ASS.
HANDLE 212X53	12554272	6	1	457	969016008	FLAP LEFT FRONT PRE-ASS.
HANDLE CAP	571824708	1	1	472	10343693	JOYSTICK
HANDLE GRIP WELDED FE//ZN	925642908	28	4	129	919644008	HYDRAULIC SUPPORT
HANDLE GRIP WELDED FE//ZN	925642908	18	1	751	968728808	CONSOLE PRE-ASS.
HANDLE WELD.CONST. FE//ZN	962963808	56	1	75	91001377	CRAWLER SUPPORT PREASS
HANDLE WELD.CONST. FE//ZN	962963808	56	1	108	91001378	CRAWLER SUPPORT PREASS
HANDLE WELD.CONST. FE//ZN	962963808	15	1	493	967978908	INTERLOCKING
HANDLE WELD.CONST. FE//ZN	963557408	(2)	1	734	917268408	BOOM NOSE
HANDLE WELD.CONST. FE//ZN	967969708	4	2	602	917267108	AUXILIARY HOISTING GEAR 2
HANDLE WELD.CONST. FE//ZN	967969708	8	2	758	917413208	SELF-ERECT. AUX. HOIST GEA
HANDLEADAPTER	11005983	3	1	422	966230408	CLOSING DEVICE
HATCHING PLAN SPF	917258108	44	1	12		LIEBHERR LTR 1220

Description	Item	Pos.	Quantity	Page	Assembly	Description
HAZARD WARNING FLASHER 2	607106208	2	2	153	928620108	ACCESSORIES
HEAT EXCHANGER ALU	10801858	14	1	428	11083498	AIR CONDITIONING UNIT
HEAT PROTECTION SHEET	10144755	1	1	251	10144756	HEAT PROTECTION W.FASTEN
HEAT PROTECTION SHEET S	11382888	10	1	234	10149677	CONNECTING LINE ADD-ON
HEAT PROTECTION SHEET S	12428325	10	1	234	10149677	CONNECTING LINE ADD-ON
HEAT PROTECTION W.FASTEN	10144756	415	1	177	13455297	DIESEL ENGINE
HEATING	502651408	2	1	497	502657308	AIR DRYER
HEATING CRANE DRIVER'S C	917676208	134	1	13		LIEBHERR LTR 1220
HEATING ELEMENT	10650387	(13)	1	435	10877138	OPERATOR SEAT
HEATING FLANGE 24V 1,9KW	12856186	1	1	236	13701882	HEATING FLANGE COMPLETE
HEATING FLANGE ADD-ON	9078314	260	1	177	13455297	DIESEL ENGINE
HEATING FLANGE COMPLETE	13701882	1	1	235	9078314	HEATING FLANGE ADD-ON
HEATING HOSE 70/PRIMAFLE	553181208	12	0.25	412	916168308	AIR DUCT
HEATING, PRE-ASSEMBLED	969085208	20	1	426	917676208	HEATING CRANE DRIVER'S CA
HEATSHRINK SLEEVING 11,6/2	10441166	298	0.1	462	96036955	WIRING HARNESS
HEATSHRINK SLEEVING 11,6/2	10441166	298	0.5	536	96037137	WIRING HARNESS
HEAVY FOIL MATTING 2X1115	97051749	9	1	451	968977308	SOUND PROOFING/SOUND I
HEAVY FOIL MATTING 2X390	97058386	10	1	451	968977308	SOUND PROOFING/SOUND I
HEAVY FOIL MATTING 2X885	97058387	11	1	451	968977308	SOUND PROOFING/SOUND I
HEX CAP NUT RD32X3 SPF	10466914	177	2	561	96045351	HYDRAULICS UPPER CARRI
HEX CAP NUT RD36X3 SPF	10466915	150	3	728	967785008	ADDNL.HYDR. FOLDING JIB
HEX CAP NUT RD54X4 SPF	10466916	159	2	616	967784808	HYDR.AUXILIARY HOISTING
HEX CAP NUT RD79X4 SPF	10466917	154	2	616	967784808	HYDR.AUXILIARY HOISTING
HEX NUT AEHNL.ISO 7040 M6	11004444	32	2	26	96034894	PROTECTION PLATE CPL.
HEX NUT AEHNL.ISO 7040 M6	11004444	32	2	29	96034977	PROTECTION PLATE
HEX NUT AEHNL.ISO 7040 M6	11004444	6	14	92	968420608	STORAGE BOX
HEX NUT AEHNL.ISO 7040 M6	11004444	9	3	744	967933408	LOCATION FIXTURE PRE-ASS.
HEX NUT AEHNL.ISO 7042 M12	11626393	350	4	511	96051842	EXHAUST SYSTEM PRE-ASSE
HEX NUT AEHNL.ISO 7042 M6	11113917	351	4	511	96051842	EXHAUST SYSTEM PRE-ASSE
HEX NUT DIN 934 M5 8 VERZ	411514877	49	7	52	11346779	SLIP RING TRANSMITTER
HEX NUT DIN 985 M10 8 ZNNI-4	10197769	108	10	76	91001377	CRAWLER SUPPORT PREASS
HEX NUT DIN 985 M10 8 ZNNI-4	10197769	109	10	109	91001378	CRAWLER SUPPORT PREASS
HEX NUT DIN 985 M10 8 ZNNI-4	10197769	12	1	415	916163008	WIPERS INSTALLATION
HEX NUT DIN 985 M10 8 ZNNI-4	10197769	27	8	668	917291908	PIVOT SECTION, PRE-ASSEMB
HEX NUT DIN 985 M10 8 ZNNI-4	10197769	25	3	751	968728808	CONSOLE PRE-ASS.
HEX NUT DIN 985 M12 10 FLZ	12218127	12	8	701	966134608	ADD-ON PARTS CYLINDER
HEX NUT DIN 985 M12 8 FLZN	10875607	329	4	496	969763408	PIPEWORK AIR INSTALLATIO
HEX NUT DIN 985 M12 8 FLZN	10875607	84	6	669	917291908	PIVOT SECTION, PRE-ASSEMB
HEX NUT DIN 985 M16 8 FLZN	10875609	14	8	35	917511508	CRAWLER CENTRE PART PRE
HEX NUT DIN 985 M16 8 FLZN	10875609	5	4	382	967986308	BEARING INSTALLATION
HEX NUT DIN 985 M16 8 FLZN	10875609	25	1	492	967928508	LOCKING
HEX NUT DIN 985 M16 8 FLZN	10875609	18	4	668	917291908	PIVOT SECTION, PRE-ASSEMB
HEX NUT DIN 985 M20 10 FLZ	10875610	7	1	337	917626608	FUEL TANK ADD-ON UNIT
HEX NUT DIN 985 M20 10 FLZ	10875610	6	1	345	917825508	OIL RESERVOIR, EXTENSION
HEX NUT DIN 985 M3 8 480H	10876399	26	4	467	96053500	ELECTRIC ADD-ON PARTS CA
HEX NUT DIN 985 M4 8 480H	10875611	88	1	669	917291908	PIVOT SECTION, PRE-ASSEMB
HEX NUT DIN 985 M4 8 480H	10875611	61	1	690	917292408	TELESCOPIC SECT.5 PRE-AS
HEX NUT DIN 985 M4 8 480H	10875611	7	3	745	967936408	WIND WARNING PREASSEMB
HEX NUT DIN 985 M5 A2-70	10301317	17	4	39	96045225	ELECTR.FOR CENTER SECTIO
HEX NUT DIN 985 M5 A2-70	10301317	5	1	744	967933408	LOCATION FIXTURE PRE-ASS.
HEX NUT DIN 985 M6 8 ZNNI-4	12102692	72	4	500	918731808	UREA PLANT
HEX NUT DIN 985 M6 8 ZNNI-4	12102692	14	6	547	926891108	GROUND RAIL
HEX NUT DIN 985 M6 8 ZNNI-4	12102692	304	14	561	96045351	HYDRAULICS UPPER CARRI
HEX NUT DIN 985 M6 8 ZNNI-4	12102692	5	1	659	925141508	HOSE GUIDE PRE-ASS.
HEX NUT DIN 985 M6 8 ZNNI-4	12102692	306	2	728	967785008	ADDNL.HYDR. FOLDING JIB
HEX NUT DIN 985 M6 8 ZNNI-4	12102692	26	4	751	968728808	CONSOLE PRE-ASS.
HEX NUT DIN 985 M6 A2-70	411903008	49	8	35	917511508	CRAWLER CENTRE PART PRE
HEX NUT DIN 985 M6 A2-70	411903008	11	1	393	968514508	INSTALLATION SWITCH CAB. C
HEX NUT DIN 985 M6 A2-70	411903008	23	4	421	917304708	SLIDING DOOR INSTALLATION
HEX NUT DIN 985 M6 A2-70	411903008	5	2	423	966230508	GUIDE PRE-ASS.

Description	Item	Pos.	Quantity	Page	Assembly	Description
HEX NUT DIN 985 M6 A2-70	411903008	4	4	626	917269308	CHARGER
HEX NUT DIN 985 M6 A2-70	411903008	27	2	636	968994408	CAMERA HOLDER, PREMOU
HEX NUT DIN 985 M6 A2-70	411903008	25	4	637	968290608	STAND
HEX NUT DIN 985 M6 A2-70	411903008	14	2	639	968993508	CAMERA HOLDER, PREMOU
HEX NUT DIN 985 M6 A2-70	411903008	25	4	640	968267208	STAND
HEX NUT DIN 985 M8 10 480H	10876076	11	4	604	967969608	AUXILIARY HOISTING GEAR 2
HEX NUT DIN 985 M8 8 480H	10875614	9	7	94	96034962	GUIDE LEFT
HEX NUT DIN 985 M8 8 480H	10875614	9	7	112	96034980	GUIDE RIGHT
HEX NUT DIN 985 M8 8 480H	10875614	350	3	294	968026308	CLUTCH ACTUATOR
HEX NUT DIN 985 M8 8 480H	10875614	(7)	11	387	916177508	STEP CPL.
HEX NUT DIN 985 M8 8 480H	10875614	46	1	399	917305408	INTERNAL PANELLING INSTA
HEX NUT DIN 985 M8 8 480H	10875614	5	4	426	917676208	HEATING CRANE DRIVER'S CA
HEX NUT DIN 985 M8 8 480H	10875614	25	1	430	969085208	HEATING, PRE-ASSEMBLED
HEX NUT DIN 985 M8 8 480H	10875614	5	1	440	916049908	MIRROR ATTACHM.IN CRANE
HEX NUT DIN 985 M8 8 480H	10875614	4	4	476	917260408	MIRROR ATTACHM.AT SLEW.P
HEX NUT DIN 985 M8 8 480H	10875614	20	8	480	918759808	ADD HEATING SUPERSTRUCT
HEX NUT DIN 985 M8 8 480H	10875614	32	1	482	96020359	ADDNL.HEATING, PRE-ASSE
HEX NUT DIN 985 M8 8 480H	10875614	25	2	636	968994408	CAMERA HOLDER, PREMOU
HEX NUT DIN 985 M8 8 480H	10875614	12	2	639	968993508	CAMERA HOLDER, PREMOU
HEX NUT DIN 985 M8 A2-70	411903108	9	6	387	916177508	STEP CPL.
HEX NUT DIN 985 M8 A2-70	411903108	6	12	392	916162808	RELING
HEX NUT DIN 985 M8 A2-70	411903108	4	4	746	967937608	OBSTRUCTION LIGHTS PREAS
HEX NUT EN 1661 M10 8 FLZN	10179265	4	3	233	10147364	AIR INTAKE ASSEMBLY
HEX NUT EN 1661 M10 8 FLZN	10179265	4	3	256	10115539	STARTER ASSEMBLY
HEX NUT EN 1661 M8 8 480H	11820285	11	2	234	10149677	CONNECTING LINE ADD-ON
HEX NUT EN 1661 M8 8 480H	11820285	78	1	269	10151328	CABLE HARNESS MOUNTING
HEX NUT ISO 4032 M10 8 ZNNI	12102695	12	2	155	91001571	BOLT EXTRACTION DEVICE
HEX NUT ISO 4032 M10 8 ZNNI	12102695	32	2	433	918810308	CONTROL STAND
HEX NUT ISO 4032 M10 8 ZNNI	12102695	352	5	446	96036790	SLEWING PLATFORM PANELLI
HEX NUT ISO 4032 M10 8 ZNNI	12102695	353	6	455	969015908	SLEWING PLATFORM PANELLI
HEX NUT ISO 4032 M10 8 ZNNI	12102695	354	2	511	96051842	EXHAUST SYSTEM PRE-ASSE
HEX NUT ISO 4032 M10 8 ZNNI	12102695	23	2	567	96035117	MECHANICAL AUXILIARIES
HEX NUT ISO 4032 M10 8 ZNNI	12102695	6	7	591	917261808	OIL COOLER INSTALLATION
HEX NUT ISO 4032 M10 8 ZNNI	12102695	19	1	643	96037130	EQUIPMENT CAMERA SLEW C
HEX NUT ISO 4032 M10 8 ZNNI	12102695	28	2	668	917291908	PIVOT SECTION, PRE-ASSEMB
HEX NUT ISO 4032 M10 8 ZNNI	12102695	16	2	734	917268408	BOOM NOSE
HEX NUT ISO 4032 M12 8 FLZ	10875616	22	32	20	91001569	CRAWLER TRACK TRAVEL G
HEX NUT ISO 4032 M12 8 FLZ	10875616	30	2	31	968036408	LIMIT SWITCH, PRE-ASSEMB
HEX NUT ISO 4032 M12 8 FLZ	10875616	35	3	75	91001377	CRAWLER SUPPORT PREASS
HEX NUT ISO 4032 M12 8 FLZ	10875616	35	3	108	91001378	CRAWLER SUPPORT PREASS
HEX NUT ISO 4032 M12 8 FLZ	10875616	34	1	147	919087608	ROTARY FEED THROUGH
HEX NUT ISO 4032 M12 8 FLZ	10875616	23	2	761	917267508	TRANSPORT MOUNTING
HEX NUT ISO 4032 M16 8 BLAN	411514608	8	1	762	929582108	MOUNTING PRE-ASS.
HEX NUT ISO 4032 M16 8 FLZ	10875617	43	4	35	917511508	CRAWLER CENTRE PART PRE
HEX NUT ISO 4032 M16 8 FLZ	10875617	9	1	95	96062678	LEVER PRE-ASSY.
HEX NUT ISO 4032 M16 8 FLZ	10875617	32	4	129	919644008	HYDRAULIC SUPPORT
HEX NUT ISO 4032 M16 8 FLZ	10875617	17	1	493	967978908	INTERLOCKING
HEX NUT ISO 4032 M16 8 FLZ	10875617	19	4	701	966134608	ADD-ON PARTS CYLINDER
HEX NUT ISO 4032 M16 8 FLZ	10875617	6	9	761	917267508	TRANSPORT MOUNTING
HEX NUT ISO 4032 M20 8 FLZ	10875618	48	4	20	91001569	CRAWLER TRACK TRAVEL G
HEX NUT ISO 4032 M20 8 FLZ	10875618	64	1	76	91001377	CRAWLER SUPPORT PREASS
HEX NUT ISO 4032 M20 8 FLZ	10875618	64	1	109	91001378	CRAWLER SUPPORT PREASS
HEX NUT ISO 4032 M20 8 FLZ	10875618	15	8	754	910836808	HOOK BLOCK
HEX NUT ISO 4032 M3 10 480H	12226068	267	2	714	968708708	TERMINAL BOX CPL.
HEX NUT ISO 4032 M30 10 FLZ	10425689	4	1	658	968068308	ASSEMBLY DEVICE
HEX NUT ISO 4032 M30 10 FLZ	10425689	9	4	751	968728808	CONSOLE PRE-ASS.
HEX NUT ISO 4032 M4 8 480H	10875619	30	6	157	96063087	STORAGE BOX
HEX NUT ISO 4032 M4 8 480H	10875619	10	2	406	916162508	WINDOW ASSEMBLY
HEX NUT ISO 4032 M4 8 480H	10875619	354	8	446	96036790	SLEWING PLATFORM PANELLI
HEX NUT ISO 4032 M5 8 480H	10875620	4	4	135	917257108	CENTRALIZED LUBRICATION

Description	Item	Pos.	Quantity	Page	Assembly	Description
HEX NUT ISO 4032 M5 8 480H	10875620	18	6	334	96023117	BATTERY BOX, PRE-ASSEMB
HEX NUT ISO 4032 M5 8 480H	10875620	5	4	523	917261208	CENT. LUBRIC. SYSTEM SUP
HEX NUT ISO 4032 M5 TI2-WS	10878117	73	2	500	918731808	UREA PLANT
HEX NUT ISO 4032 M6 10 480H	10299668	5	1	95	96062678	LEVER PRE-ASSY.
HEX NUT ISO 4032 M6 10 480H	10299668	38	2	701	966134608	ADD-ON PARTS CYLINDER
HEX NUT ISO 4032 M6 10 ZNNI	10197764	13	2	42	966167808	COVER COMPL.
HEX NUT ISO 4032 M6 10 ZNNI	10197764	16	2	43	968054008	MOUNTING PLATE PRE-ASS.
HEX NUT ISO 4032 M6 10 ZNNI	10197764	48	12	52	11346779	SLIP RING TRANSMITTER
HEX NUT ISO 4032 M6 10 ZNNI	10197764	23	2	147	919087608	ROTARY FEED THROUGH
HEX NUT ISO 4032 M6 10 ZNNI	10197764	350	6	288	919007708	DRIVE ASSEMBLY, PRE-ASSE
HEX NUT ISO 4032 M6 10 ZNNI	10197764	353	4	291	96034631	RADIATOR, PRE-ASSEMBLED
HEX NUT ISO 4032 M6 10 ZNNI	10197764	27	4	334	96023117	BATTERY BOX, PRE-ASSEMB
HEX NUT ISO 4032 M6 10 ZNNI	10197764	51	2	399	917305408	INTERNAL PANELLING INSTA
HEX NUT ISO 4032 M6 10 ZNNI	10197764	351	4	446	96036790	SLEWING PLATFORM PANELLI
HEX NUT ISO 4032 M6 10 ZNNI	10197764	350	11	455	969015908	SLEWING PLATFORM PANELLI
HEX NUT ISO 4032 M6 10 ZNNI	10197764	5	12	545	922648308	TERMINAL BOARD PRE-ASS.
HEX NUT ISO 4032 M6 10 ZNNI	10197764	6	4	547	926891108	GROUND RAIL
HEX NUT ISO 4032 M6 10 ZNNI	10197764	310	2	616	967784808	HYDR.AUXILIARY HOISTING
HEX NUT ISO 4032 M6 A4-70	411517114	350	2	507	919674408	EXHAUST SYSTEM
HEX NUT ISO 4032 M6 A4-70	411517114	353	9	511	96051842	EXHAUST SYSTEM PRE-ASSE
HEX NUT ISO 4032 M8 10 ZNNI	10197760	350	7	445	96036790	SLEWING PLATFORM PANELLI
HEX NUT ISO 4032 M8 10 ZNNI	10197760	351	4	455	969015908	SLEWING PLATFORM PANELLI
HEX NUT ISO 4032 M8 10 ZNNI	10197760	10	4	547	926891108	GROUND RAIL
HEX NUT ISO 4032 M8 10 ZNNI	10197760	13	6	592	967980508	OIL COOLER, PRE-ASSEMBLE
HEX NUT ISO 4032 M8 8 480H	11693875	8	2	120	968038208	BEARING AHEAD LEFT SIDE
HEX NUT ISO 4032 M8 8 480H	11693875	8	2	121	968038308	BEARING AHEAD RIGHT SIDE
HEX NUT ISO 4032 M8 8 480H	11693875	9	2	135	917257108	CENTRALIZED LUBRICATION
HEX NUT ISO 4032 M8 8 480H	11693875	351	17	288	919007708	DRIVE ASSEMBLY, PRE-ASSE
HEX NUT ISO 4032 M8 8 480H	11693875	354	2	291	96034631	RADIATOR, PRE-ASSEMBLED
HEX NUT ISO 4032 M8 8 480H	11693875	350	3	341	91002861	FUEL FEED
HEX NUT ISO 4032 M8 8 480H	11693875	25	2	378	917259908	CRANE DRIVER CAB ADDITIO
HEX NUT ISO 4032 M8 8 480H	11693875	27	2	415	916163008	WIPERS INSTALLATION
HEX NUT ISO 4032 M8 8 480H	11693875	8	4	426	917676208	HEATING CRANE DRIVER'S CA
HEX NUT ISO 4032 M8 8 480H	11693875	12	2	449	968923508	FLAP RIGHT PRE-ASS.
HEX NUT ISO 4032 M8 8 480H	11693875	11	2	457	969016008	FLAP LEFT FRONT PRE-ASS.
HEX NUT ISO 4032 M8 8 480H	11693875	70	7	500	918731808	UREA PLANT
HEX NUT ISO 4032 M8 8 480H	11693875	350	2	520	918731908	AIR FILTER UNIT
HEX NUT ISO 4032 M8 8 480H	11693875	70	2	544	969256608	BASE ASSEMBLY
HEX NUT ISO 4032 M8 8 480H	11693875	337	2	562	96045351	HYDRAULICS UPPER CARRI
HEX NUT ISO 4032 M8 8 480H	11693875	22	2	567	96035117	MECHANICAL AUXILIARIES
HEX NUT ISO 4032 M8 8 480H	11693875	7	4	627	917269408	CONSOLE AUX. REPLENISHIN
HEX NUT ISO 4032 M8 8 480H	11693875	55	2	690	917292408	TELESCOPIC SECT.5 PRE-AS
HEX NUT ISO 4032 M8 8 480H	11693875	42	2	701	966134608	ADD-ON PARTS CYLINDER
HEX NUT ISO 4032 M8 8 480H	11693875	4	2	737	967321308	FIXING DEVICE 2.LIFT TOP
HEX NUT ISO 4032 M8 A2-70	510737408	7	2	387	916177508	STEP CPL.
HEX NUT ISO 4035 M10X1,5 04	10411095	5	2	258	11386644	STARTER PRE-ASSY.
HEX NUT ISO 4035 M24 05 FLZ	10179943	355	1	294	968026308	CLUTCH ACTUATOR
HEX NUT ISO 4035 M30 05 FLZ	4635422	24	4	20	91001569	CRAWLER TRACK TRAVEL G
HEX NUT ISO 4035 M5 04	511001708	9	2	426	917676208	HEATING CRANE DRIVER'S CA
HEX NUT ISO 4035 M5 04	511001708	21	5	540	91000922	SWITCHBOX MOUNTING PART
HEX NUT ISO 4035 M8 04 A2C	410120308	13	2	734	917268408	BOOM NOSE
HEX NUT ISO 7040 M10 8 FLZ	10875629	13	4	632	96037229	ADD-ON PARTS WORK FLOOD
HEX NUT ISO 7040 M10 8 FLZ	10875629	19	1	645	96037131	EQUIPMENT CAMERA WINCHE
HEX NUT ISO 7040 M10 8 FLZ	10875629	(9)	1	657	919028808	DISPATCH ASSY.MECH.PART
HEX NUT ISO 7040 M10 8 FLZ	10875629	22	4	673	917292008	TELESCOPIC SECTION 1 PRE
HEX NUT ISO 7040 M10 8 FLZ	10875629	22	4	677	917292108	TELESCOPIC SECT.2 PRE-AS
HEX NUT ISO 7040 M10 8 FLZ	10875629	22	4	681	917292208	TELESCOPIC SECT.3 PRE-ASS
HEX NUT ISO 7040 M10 8 FLZ	10875629	22	4	685	917292308	TELESCOPIC SECT.IV PRE-A
HEX NUT ISO 7040 M10 8 FLZ	10875629	19	4	690	917292408	TELESCOPIC SECT.5 PRE-AS
HEX NUT ISO 7040 M12 8 FLZ	11840127	31	1	94	96034962	GUIDE LEFT

Description	Item	Pos.	Quantity	Page	Assembly	Description
HEX NUT ISO 7040 M12 8 FLZ	11840127	31	1	112	96034980	GUIDE RIGHT
HEX NUT ISO 7040 M12 8 FLZ	11840127	5	4	120	968038208	BEARING AHEAD LEFT SIDE
HEX NUT ISO 7040 M12 8 FLZ	11840127	5	4	121	968038308	BEARING AHEAD RIGHT SIDE
HEX NUT ISO 7040 M12 8 FLZ	11840127	51	8	124	968046208	ADD-ON PARTS
HEX NUT ISO 7040 M12 8 FLZ	11840127	66	12	129	919644008	HYDRAULIC SUPPORT
HEX NUT ISO 7040 M12 8 FLZ	11840127	3	2	747	917551608	ADD-ON PARTS
HEX NUT ISO 7040 M12 8 FLZ	11840127	24	3	751	968728808	CONSOLE PRE-ASS.
HEX NUT ISO 7040 M16 8 FLZ	10875859	14	24	119	917691008	FALL PROTECTION
HEX NUT ISO 7040 M16 8 FLZ	10875859	22	40	124	968046208	ADD-ON PARTS
HEX NUT ISO 7040 M16 8 FLZ	10875859	30	2	761	917267508	TRANSPORT MOUNTING
HEX NUT ISO 7040 M20 10 FE//	10875630	51	4	673	917292008	TELESCOPIC SECTION 1 PRE
HEX NUT ISO 7040 M20 10 FE//	10875630	51	4	677	917292108	TELESCOPIC SECT.2 PRE-AS
HEX NUT ISO 7040 M20 10 FE//	10875630	51	4	681	917292208	TELESCOPIC SECT.3 PRE-ASS
HEX NUT ISO 7040 M20 10 FE//	10875630	51	4	685	917292308	TELESCOPIC SECT.IV PRE-A
HEX NUT ISO 7040 M20 10 FE//	10875630	51	4	690	917292408	TELESCOPIC SECT.5 PRE-AS
HEX NUT ISO 7040 M6 10 480H	10415159	22	1	641	96045237	EQUIPMENT CAMERA CAB
HEX NUT ISO 7040 M6 8 480H	11656734	35	4	124	968046208	ADD-ON PARTS
HEX NUT ISO 7040 M6 8 480H	11656734	36	2	668	917291908	PIVOT SECTION, PRE-ASSEMB
HEX NUT ISO 7040 M6 8 480H	11656734	60	2	673	917292008	TELESCOPIC SECTION 1 PRE
HEX NUT ISO 7040 M6 8 480H	11656734	60	2	677	917292108	TELESCOPIC SECT.2 PRE-AS
HEX NUT ISO 7040 M6 8 480H	11656734	60	2	681	917292208	TELESCOPIC SECT.3 PRE-ASS
HEX NUT ISO 7040 M6 8 480H	11656734	60	2	685	917292308	TELESCOPIC SECT.IV PRE-A
HEX NUT ISO 7040 M8 8 480H	11656731	105	8	76	91001377	CRAWLER SUPPORT PREASS
HEX NUT ISO 7040 M8 8 480H	11656731	106	8	109	91001378	CRAWLER SUPPORT PREASS
HEX NUT ISO 7040 M8 8 480H	11656731	352	6	291	96034631	RADIATOR, PRE-ASSEMBLED
HEX NUT ISO 7042 M8 10 480H	10814800	352	2	511	96051842	EXHAUST SYSTEM PRE-ASSE
HEX NUT ISO 8673 M10X1 8 F	10179115	53	1	421	917304708	SLIDING DOOR INSTALLATION
HEX NUT ISO 8675 M12X1,0 04	10875633	25	1	467	96053500	ELECTRIC ADD-ON PARTS CA
HEX NUT ISO 8675 M20X1,5 A	10285016	4	2	120	968038208	BEARING AHEAD LEFT SIDE
HEX NUT ISO 8675 M20X1,5 A	10285016	4	2	121	968038308	BEARING AHEAD RIGHT SIDE
HEX NUT ISO 8675 M20X1,5 A	10285016	360	2	294	968026308	CLUTCH ACTUATOR
HEX NUT ISO 8675 M24X2 05	411703308	3	1	379	11214363	TILT CYLINDER
HEX NUT M10X1	10012557	3	2	207	11448005	ROCKER ARM BRACKET PRE
HEX NUT M16X1,5 MS	602504108	15	2	41	96045226	SWITCH BOX COMPL.
HEX NUT M20X1,5 MS	602504208	18	1	41	96045226	SWITCH BOX COMPL.
HEX NUT M40X1,50 MS	602504508	512	1	49	96045228	WIRING HARNESS
HEX NUT M6 8	10411094	3	1	258	11386644	STARTER PRE-ASSY.
HEX SCREW DIN 6921 M8X25	10009007	14	2	228	10143341	FUEL LINES
HEX SCREW DIN 6921 M8X25	10009007	2	5	245	10142733	WATER PUMP WITH FASTENIN
HEX SCREW DIN 6921 M8X25	10009007	3	4	267	10144227	CONTROL BOX ANNEXE
HEX SCREW DIN 6921 M8X40 1	11600960	(4)	6	210	10138230	CAMSHAFT CPL.
HEX SCREW DIN 6921 M8X45	10005713	2	1	216	10148432	LUBE OIL PUMP WITH FASTEN
HEX SCREW DIN 6921 M8X45	10016907	5	4	267	10144227	CONTROL BOX ANNEXE
HEX SCREW DIN 6921 M8X80	11645138	3	2	216	10148432	LUBE OIL PUMP WITH FASTEN
HEX SCREW EN 1665 M10X12	12207562	4	8	183	10147687	POWER UNIT SUPPORT ATT
HEX SCREW EN 1665 M10X120	12207559	5	1	255	10142863	GENERATOR, PRE-ASSEMBLE
HEX SCREW EN 1665 M10X20	11656153	3	2	195	10139112	OIL LINE PRE-ASSEMBLY
HEX SCREW EN 1665 M10X20	11656153	68	3	269	10151328	CABLE HARNESS MOUNTING
HEX SCREW EN 1665 M10X20	11656153	58	2	271	10151329	WIRING HARNESS ASSEMBLY
HEX SCREW EN 1665 M10X25	11656154	10	3	253	12512627	EXHAUST NOZZLE ATTACHM
HEX SCREW EN 1665 M10X30	10299564	3	2	255	10142863	GENERATOR, PRE-ASSEMBLE
HEX SCREW EN 1665 M10X30	10299564	2	4	260	9079823	TRANSPORT DEVICE ATTACH
HEX SCREW EN 1665 M10X30	11656155	3	3	259	10115664	LOCKING PIECES
HEX SCREW EN 1665 M10X30	11656155	69	1	269	10151328	CABLE HARNESS MOUNTING
HEX SCREW EN 1665 M10X35	11643686	2	3	237	10127566	INSTALLATION BRAKE COMPR
HEX SCREW EN 1665 M10X40	11626068	5	6	244	12418347	AIR COND. COMPRESSOR A
HEX SCREW EN 1665 M10X50	10299585	6	1	183	10147687	POWER UNIT SUPPORT ATT
HEX SCREW EN 1665 M10X60	11656158	4	2	226	10146791	FUEL FINE-FILTER ASSEMBLY
HEX SCREW EN 1665 M10X60	11656158	3	4	231	10147365	AIR INTAKE PIPE ASS.
HEX SCREW EN 1665 M10X60	11656158	7	2	244	12418347	AIR COND. COMPRESSOR A

Description	Item	Pos.	Quantity	Page	Assembly	Description
HEX SCREW EN 1665 M10X70	10299589	5	9	183	10147687	POWER UNIT SUPPORT ATT
HEX SCREW EN 1665 M10X80	11656160	6	1	244	12418347	AIR COND. COMPRESSOR A
HEX SCREW EN 1665 M10X90	12208088	4	4	231	10147365	AIR INTAKE PIPE ASS.
HEX SCREW EN 1665 M10X90	12208088	9	1	253	12512627	EXHAUST NOZZLE ATTACHM
HEX SCREW EN 1665 M12X30	11631940	7	2	276	10144036	POWER TAKE-OFF ADD-ON
HEX SCREW EN 1665 M12X40	10299565	4	1	255	10142863	GENERATOR, PRE-ASSEMBLE
HEX SCREW EN 1665 M12X45	11656452	9	1	189	10155227	OIL SUMP PRE-ASS.
HEX SCREW EN 1665 M16X50	12207570	2	2	261	10142864	TRANSPORT DEVICE ATTACH
HEX SCREW EN 1665 M5X10	10875503	10	6	43	968054008	MOUNTING PLATE PRE-ASS.
HEX SCREW EN 1665 M5X10	10875503	20	28	540	91000922	SWITCHBOX MOUNTING PART
HEX SCREW EN 1665 M5X10	10875503	48	18	544	969256608	BASE ASSEMBLY
HEX SCREW EN 1665 M5X10	10875503	11	6	548	968063108	PRE-ASSEMBLY MOUNTING U
HEX SCREW EN 1665 M5X10	10875503	5	1	625	918462708	EXTERNAL FEED
HEX SCREW EN 1665 M5X10	10875503	6	4	628	915432508	RADIO PREPARATION UPPER
HEX SCREW EN 1665 M5X10 8	12207546	12	2	254	11420633	CYCLE VALVE
HEX SCREW EN 1665 M5X10 8	12207546	52	1	269	10151328	CABLE HARNESS MOUNTING
HEX SCREW EN 1665 M5X10 8	12207546	42	1	271	10151329	WIRING HARNESS ASSEMBLY
HEX SCREW EN 1665 M6X16 8	11840297	11	3	39	96045225	ELECTR.FOR CENTER SECTIO
HEX SCREW EN 1665 M6X16 8	11840297	8	4	208	11358102	CYLINDER HEAD COVER ASS
HEX SCREW EN 1665 M6X16 8	11840297	21	1	229	10143342	LEAK OIL RETURN LINE
HEX SCREW EN 1665 M6X16 8	11840297	13	7	254	11420633	CYCLE VALVE
HEX SCREW EN 1665 M6X16 8	11840297	54	7	269	10151328	CABLE HARNESS MOUNTING
HEX SCREW EN 1665 M6X16 8	11840297	304	2	287	919007708	DRIVE ASSEMBLY, PRE-ASSE
HEX SCREW EN 1665 M6X16 8	11840297	19	2	412	916168308	AIR DUCT
HEX SCREW EN 1665 M6X16 8	11840297	24	4	415	916163008	WIPERS INSTALLATION
HEX SCREW EN 1665 M6X16 8	11840297	307	8	445	96036790	SLEWING PLATFORM PANELLI
HEX SCREW EN 1665 M6X20 8	12207548	2	4	235	9078314	HEATING FLANGE ADD-ON
HEX SCREW EN 1665 M6X20 8	12207548	301	2	445	96036790	SLEWING PLATFORM PANELLI
HEX SCREW EN 1665 M6X30 8	12207549	24	2	253	12512627	EXHAUST NOZZLE ATTACHM
HEX SCREW EN 1665 M6X40 8	12207587	3	1	232	10145173	INTAKE STACK ASSEMBLY
HEX SCREW EN 1665 M8X12 8	11656991	39	6	467	96053500	ELECTRIC ADD-ON PARTS CA
HEX SCREW EN 1665 M8X16 8	11656992	15	1	229	10143342	LEAK OIL RETURN LINE
HEX SCREW EN 1665 M8X16 8	11656992	14	1	254	11420633	CYCLE VALVE
HEX SCREW EN 1665 M8X16 8	11656992	11	4	263	10116110	LOCKING PIECES
HEX SCREW EN 1665 M8X16 8	11656992	60	2	269	10151328	CABLE HARNESS MOUNTING
HEX SCREW EN 1665 M8X16 8	11656992	3	3	272	10143707	CLAMP - ADD-ON UNIT
HEX SCREW EN 1665 M8X20 8	11657219	12	1	228	10143341	FUEL LINES
HEX SCREW EN 1665 M8X20 8	11657219	14	1	232	10145173	INTAKE STACK ASSEMBLY
HEX SCREW EN 1665 M8X20 8	11657219	14	2	252	10140729	EXHAUST TC MOUNTING
HEX SCREW EN 1665 M8X20 8	11657219	11	2	254	11420633	CYCLE VALVE
HEX SCREW EN 1665 M8X20 8	11657219	3	1	264	10128439	LOCKING PIECES
HEX SCREW EN 1665 M8X20 8	11657219	61	14	269	10151328	CABLE HARNESS MOUNTING
HEX SCREW EN 1665 M8X20 8	11657219	51	2	271	10151329	WIRING HARNESS ASSEMBLY
HEX SCREW EN 1665 M8X20 8	11657219	4	1	272	10143707	CLAMP - ADD-ON UNIT
HEX SCREW EN 1665 M8X20 8	11657219	316	4	445	96036790	SLEWING PLATFORM PANELLI
HEX SCREW EN 1665 M8X20 8	11657219	5	4	627	917269408	CONSOLE AUX. REPLENISHIN
HEX SCREW EN 1665 M8X25	12215999	3	1	249	10142744	COOLING WATER AIR BLEED
HEX SCREW EN 1665 M8X25 8	11690637	308	2	445	96036790	SLEWING PLATFORM PANELLI
HEX SCREW EN 1665 M8X25 8	11690637	30	4	567	96035117	MECHANICAL AUXILIARIES
HEX SCREW EN 1665 M8X30 8	11826563	2	2	186	10126713	CRANKCASE BREATHER ASS
HEX SCREW EN 1665 M8X30 8	11826563	6	4	226	10146791	FUEL FINE-FILTER ASSEMBLY
HEX SCREW EN 1665 M8X30 8	11826563	12	1	232	10145173	INTAKE STACK ASSEMBLY
HEX SCREW EN 1665 M8X30 8	11826563	63	1	269	10151328	CABLE HARNESS MOUNTING
HEX SCREW EN 1665 M8X30 8	11826563	53	2	271	10151329	WIRING HARNESS ASSEMBLY
HEX SCREW EN 1665 M8X40	10299604	3	14	212	10129475	OIL COOLER ASSEMBLY
HEX SCREW EN 1665 M8X40 8	11658660	8	2	234	10149677	CONNECTING LINE ADD-ON
HEX SCREW EN 1665 M8X50 8	11691686	5	4	213	10129474	OIL COOLER, PRE-ASSEMBLE
HEX SCREW EN 1665 M8X50 8	11691686	5	1	226	10146791	FUEL FINE-FILTER ASSEMBLY
HEX SCREW EN 1665 M8X55 8	12210060	3	28	187	10132560	OIL SUMP WITH FASTENING
HEX SCREW EN 1665 M8X60 8.	12697335	2	1	216	10148432	LUBE OIL PUMP WITH FASTEN

Description	Item	Pos.	Quantity	Page	Assembly	Description
HEX SCREW EN 1665 M8X90 8	10876385	7	20	208	11358102	CYLINDER HEAD COVER ASS
HEX SCREW ISO 4014 M10X1	10875796	318	2	287	919007708	DRIVE ASSEMBLY, PRE-ASSE
HEX SCREW ISO 4014 M10X2	10878922	16	4	334	96023117	BATTERY BOX, PRE-ASSEMB
HEX SCREW ISO 4014 M10X50	11631860	314	2	287	919007708	DRIVE ASSEMBLY, PRE-ASSE
HEX SCREW ISO 4014 M12X1	10875504	330	4	496	969763408	PIPEWORK AIR INSTALLATIO
HEX SCREW ISO 4014 M12X1	11656183	327	4	496	969763408	PIPEWORK AIR INSTALLATIO
HEX SCREW ISO 4014 M12X1	4601290	32	2	75	91001377	CRAWLER SUPPORT PREASS
HEX SCREW ISO 4014 M12X1	4601290	32	2	108	91001378	CRAWLER SUPPORT PREASS
HEX SCREW ISO 4014 M12X50	11651578	5	1	747	917551608	ADD-ON PARTS
HEX SCREW ISO 4014 M12X55	11658891	29	3	751	968728808	CONSOLE PRE-ASS.
HEX SCREW ISO 4014 M12X65	11658890	4	1	241	9072906	INTERMEDIATE GEAR CPL.
HEX SCREW ISO 4014 M12X75	10875507	8	4	172	918731108	ASSEMBLY PARTS F.SLEWING
HEX SCREW ISO 4014 M12X80	10875508	43	1	75	91001377	CRAWLER SUPPORT PREASS
HEX SCREW ISO 4014 M12X80	10875508	43	1	108	91001378	CRAWLER SUPPORT PREASS
HEX SCREW ISO 4014 M12X80	10875508	57	2	668	917291908	PIVOT SECTION, PRE-ASSEMB
HEX SCREW ISO 4014 M12X90	11840139	330	4	287	919007708	DRIVE ASSEMBLY, PRE-ASSE
HEX SCREW ISO 4014 M12X90	11840139	11	3	701	966134608	ADD-ON PARTS CYLINDER
HEX SCREW ISO 4014 M14X90	10878785	550	4	562	96045351	HYDRAULICS UPPER CARRI
HEX SCREW ISO 4014 M14X90	10878785	552	4	617	967784808	HYDR.AUXILIARY HOISTING
HEX SCREW ISO 4014 M16X1	10875797	7	4	382	967986308	BEARING INSTALLATION
HEX SCREW ISO 4014 M16X1	12223058	305	2	280	918731408	DRIVE ASSEMBLY CPL.
HEX SCREW ISO 4014 M16X3	10878582	35	4	35	917511508	CRAWLER CENTRE PART PRE
HEX SCREW ISO 4014 M16X70	11642377	340	8	288	919007708	DRIVE ASSEMBLY, PRE-ASSE
HEX SCREW ISO 4014 M16X85	10878687	20	32	124	968046208	ADD-ON PARTS
HEX SCREW ISO 4014 M16X90	12224034	21	8	124	968046208	ADD-ON PARTS
HEX SCREW ISO 4014 M16X95	10878688	13	24	119	917691008	FALL PROTECTION
HEX SCREW ISO 4014 M18X70	10178883	36	8	75	91001377	CRAWLER SUPPORT PREASS
HEX SCREW ISO 4014 M18X70	10178883	36	8	108	91001378	CRAWLER SUPPORT PREASS
HEX SCREW ISO 4014 M20X75	11656999	68	12	78	90028956	TRACTION DRIVE
HEX SCREW ISO 4014 M20X90	12219309	2	2	337	917626608	FUEL TANK ADD-ON UNIT
HEX SCREW ISO 4014 M24X12	12691274	18	52	75	91001377	CRAWLER SUPPORT PREASS
HEX SCREW ISO 4014 M24X12	12691274	18	52	108	91001378	CRAWLER SUPPORT PREASS
HEX SCREW ISO 4014 M24X1	10876069	2	2	345	917825508	OIL RESERVOIR, EXTENSION
HEX SCREW ISO 4014 M24X13	10178891	69	24	76	91001377	CRAWLER SUPPORT PREASS
HEX SCREW ISO 4014 M24X13	10178891	69	24	109	91001378	CRAWLER SUPPORT PREASS
HEX SCREW ISO 4014 M24X21	10178897	70	16	76	91001377	CRAWLER SUPPORT PREASS
HEX SCREW ISO 4014 M24X21	10178897	70	16	109	91001378	CRAWLER SUPPORT PREASS
HEX SCREW ISO 4014 M30X11	11342133	19	24	75	91001377	CRAWLER SUPPORT PREASS
HEX SCREW ISO 4014 M30X11	11342133	19	24	108	91001378	CRAWLER SUPPORT PREASS
HEX SCREW ISO 4014 M30X12	406209008	20	24	75	91001377	CRAWLER SUPPORT PREASS
HEX SCREW ISO 4014 M30X12	406209008	20	24	108	91001378	CRAWLER SUPPORT PREASS
HEX SCREW ISO 4014 M30X15	406216008	5	4	695	918807308	MECHANICAL EXTENSION SYS
HEX SCREW ISO 4014 M6X40 8	12216183	5	2	749	968811608	CROSS BEAM
HEX SCREW ISO 4014 M6X65 8	12216186	6	1	95	96062678	LEVER PRE-ASSY.
HEX SCREW ISO 4014 M8X100	10876620	307	12	56	96035801	HYDRAULIC EQUIPM.CENTER
HEX SCREW ISO 4014 M8X110	12217239	57	3	500	918731808	UREA PLANT
HEX SCREW ISO 4014 M8X45 8	11651580	306	1	294	968026308	CLUTCH ACTUATOR
HEX SCREW ISO 4014 M8X45 8	11651580	21	4	455	969015908	SLEWING PLATFORM PANELLI
HEX SCREW ISO 4014 M8X75 8	12216193	59	2	500	918731808	UREA PLANT
HEX SCREW ISO 4014 M8X80	10021245	300	2	511	96051842	EXHAUST SYSTEM PRE-ASSE
HEX SCREW ISO 4014 M8X90 8	12216195	300	3	342	96066379	PREMOUNTED FUEL FILTER
HEX SCREW ISO 4017 M10X12	12222989	12	4	365	917259708	MAIN HOIST GEAR
HEX SCREW ISO 4017 M10X16	11652470	31	6	35	917511508	CRAWLER CENTRE PART PRE
HEX SCREW ISO 4017 M10X20	10197730	66	4	76	91001377	CRAWLER SUPPORT PREASS
HEX SCREW ISO 4017 M10X20	10197730	66	4	109	91001378	CRAWLER SUPPORT PREASS
HEX SCREW ISO 4017 M10X20	10197730	18	8	119	917691008	FALL PROTECTION
HEX SCREW ISO 4017 M10X20	10197730	313	12	287	919007708	DRIVE ASSEMBLY, PRE-ASSE
HEX SCREW ISO 4017 M10X20	10197730	4	16	382	967986308	BEARING INSTALLATION
HEX SCREW ISO 4017 M10X20	10197730	314	1	445	96036790	SLEWING PLATFORM PANELLI
HEX SCREW ISO 4017 M10X20	10197730	23	1	467	96053500	ELECTRIC ADD-ON PARTS CA

Description	Item	Pos.	Quantity	Page	Assembly	Description
HEX SCREW ISO 4017 M10X20	10197730	311	4	561	96045351	HYDRAULICS UPPER CARRI
HEX SCREW ISO 4017 M10X20	10197730	18	4	604	967969608	AUXILIARY HOISTING GEAR 2
HEX SCREW ISO 4017 M10X22	12222996	304	7	455	969015908	SLEWING PLATFORM PANELLI
HEX SCREW ISO 4017 M10X22	12222996	20	3	567	96035117	MECHANICAL AUXILIARIES
HEX SCREW ISO 4017 M10X25	11631816	32	8	20	91001569	CRAWLER TRACK TRAVEL G
HEX SCREW ISO 4017 M10X25	11631816	5	3	278	9078301	LOCKING PIECES
HEX SCREW ISO 4017 M10X25	11631816	2	6	332	918955408	BATTERY BOX CPL.
HEX SCREW ISO 4017 M10X25	11631816	15	8	348	969050308	OIL TANK PRE-ASS.
HEX SCREW ISO 4017 M10X25	11631816	318	4	445	96036790	SLEWING PLATFORM PANELLI
HEX SCREW ISO 4017 M10X25	11631816	379	4	455	969015908	SLEWING PLATFORM PANELLI
HEX SCREW ISO 4017 M10X25	11631816	11	4	632	96037229	ADD-ON PARTS WORK FLOOD
HEX SCREW ISO 4017 M10X25	11631816	17	1	643	96037130	EQUIPMENT CAMERA SLEW C
HEX SCREW ISO 4017 M10X25	11631816	17	1	645	96037131	EQUIPMENT CAMERA WINCHE
HEX SCREW ISO 4017 M10X25	11631816	(6)	1	657	919028808	DISPATCH ASSY.MECH.PART
HEX SCREW ISO 4017 M10X25	11631816	91	2	669	917291908	PIVOT SECTION, PRE-ASSEMB
HEX SCREW ISO 4017 M10X28	4635031	24	2	567	96035117	MECHANICAL AUXILIARIES
HEX SCREW ISO 4017 M10X30	11642358	305	6	445	96036790	SLEWING PLATFORM PANELLI
HEX SCREW ISO 4017 M10X30	11642358	310	2	455	969015908	SLEWING PLATFORM PANELLI
HEX SCREW ISO 4017 M10X30	11642358	58	1	500	918731808	UREA PLANT
HEX SCREW ISO 4017 M10X30	11642358	306	8	511	96051842	EXHAUST SYSTEM PRE-ASSE
HEX SCREW ISO 4017 M10X30	11642358	556	2	562	96045351	HYDRAULICS UPPER CARRI
HEX SCREW ISO 4017 M10X30	11642358	5	6	591	917261808	OIL COOLER INSTALLATION
HEX SCREW ISO 4017 M10X30	11642358	13	4	604	967969608	AUXILIARY HOISTING GEAR 2
HEX SCREW ISO 4017 M10X30	11642358	23	3	751	968728808	CONSOLE PRE-ASS.
HEX SCREW ISO 4017 M10X35	406601008	17	6	604	967969608	AUXILIARY HOISTING GEAR 2
HEX SCREW ISO 4017 M10X35	11691328	106	10	76	91001377	CRAWLER SUPPORT PREASS
HEX SCREW ISO 4017 M10X35	11691328	107	10	109	91001378	CRAWLER SUPPORT PREASS
HEX SCREW ISO 4017 M10X40	11626706	21	4	147	919087608	ROTARY FEED THROUGH
HEX SCREW ISO 4017 M10X40	11626706	301	2	280	918731408	DRIVE ASSEMBLY CPL.
HEX SCREW ISO 4017 M10X40	11626706	316	24	287	919007708	DRIVE ASSEMBLY, PRE-ASSE
HEX SCREW ISO 4017 M10X40	11626706	304	4	511	96051842	EXHAUST SYSTEM PRE-ASSE
HEX SCREW ISO 4017 M10X40	11626706	15	1	734	917268408	BOOM NOSE
HEX SCREW ISO 4017 M10X45	11691682	82	4	669	917291908	PIVOT SECTION, PRE-ASSEMB
HEX SCREW ISO 4017 M10X50	11642355	31	2	433	918810308	CONTROL STAND
HEX SCREW ISO 4017 M12X1	10178901	21	32	20	91001569	CRAWLER TRACK TRAVEL G
HEX SCREW ISO 4017 M12X20	11651006	339	8	562	96045351	HYDRAULICS UPPER CARRI
HEX SCREW ISO 4017 M12X20	11651006	74	3	691	917292408	TELESCOPIC SECT.5 PRE-AS
HEX SCREW ISO 4017 M12X25	11658892	20	4	20	91001569	CRAWLER TRACK TRAVEL G
HEX SCREW ISO 4017 M12X25	11658892	26	3	94	96034962	GUIDE LEFT
HEX SCREW ISO 4017 M12X25	11658892	26	3	112	96034980	GUIDE RIGHT
HEX SCREW ISO 4017 M12X25	11658892	325	3	287	919007708	DRIVE ASSEMBLY, PRE-ASSE
HEX SCREW ISO 4017 M12X25	11658892	48	2	673	917292008	TELESCOPIC SECTION 1 PRE
HEX SCREW ISO 4017 M12X25	11658892	48	2	677	917292108	TELESCOPIC SECT.2 PRE-AS
HEX SCREW ISO 4017 M12X25	11658892	48	2	681	917292208	TELESCOPIC SECT.3 PRE-ASS
HEX SCREW ISO 4017 M12X25	11658892	48	2	685	917292308	TELESCOPIC SECT.IV PRE-A
HEX SCREW ISO 4017 M12X25	11658892	28	4	751	968728808	CONSOLE PRE-ASS.
HEX SCREW ISO 4017 M12X28	12100096	326	8	287	919007708	DRIVE ASSEMBLY, PRE-ASSE
HEX SCREW ISO 4017 M12X30	11631742	327	4	287	919007708	DRIVE ASSEMBLY, PRE-ASSE
HEX SCREW ISO 4017 M12X30	11631742	305	4	507	919674408	EXHAUST SYSTEM
HEX SCREW ISO 4017 M12X30	11631742	23	4	668	917291908	PIVOT SECTION, PRE-ASSEMB
HEX SCREW ISO 4017 M12X35	11642349	328	4	287	919007708	DRIVE ASSEMBLY, PRE-ASSE
HEX SCREW ISO 4017 M12X35	11642349	83	4	669	917291908	PIVOT SECTION, PRE-ASSEMB
HEX SCREW ISO 4017 M12X40	11002727	12	5	378	917259908	CRANE DRIVER CAB ADDITIO
HEX SCREW ISO 4017 M12X40	11645384	331	2	287	919007708	DRIVE ASSEMBLY, PRE-ASSE
HEX SCREW ISO 4017 M12X40	11645384	554	12	562	96045351	HYDRAULICS UPPER CARRI
HEX SCREW ISO 4017 M12X40	11645384	554	4	617	967784808	HYDR.AUXILIARY HOISTING
HEX SCREW ISO 4017 M12X45	11645386	35	1	147	919087608	ROTARY FEED THROUGH
HEX SCREW ISO 4017 M12X45	11645386	2	1	747	917551608	ADD-ON PARTS
HEX SCREW ISO 4017 M12X50	11840136	27	1	94	96034962	GUIDE LEFT
HEX SCREW ISO 4017 M12X50	11840136	27	1	112	96034980	GUIDE RIGHT

Description	Item	Pos.	Quantity	Page	Assembly	Description
HEX SCREW ISO 4017 M12X50	11840136	329	1	287	919007708	DRIVE ASSEMBLY, PRE-ASSE
HEX SCREW ISO 4017 M12X50	11840136	22	2	761	917267508	TRANSPORT MOUNTING
HEX SCREW ISO 4017 M12X95	10875517	10	4	758	917413208	SELF-ERECT. AUX. HOIST GEA
HEX SCREW ISO 4017 M14X45	10878799	551	4	616	967784808	HYDR.AUXILIARY HOISTING
HEX SCREW ISO 4017 M14X50	12213406	558	3	562	96045351	HYDRAULICS UPPER CARRI
HEX SCREW ISO 4017 M16X1	10875518	41	2	761	917267508	TRANSPORT MOUNTING
HEX SCREW ISO 4017 M16X12	12225311	16	2	761	917267508	TRANSPORT MOUNTING
HEX SCREW ISO 4017 M16X1	10179032	5	4	761	917267508	TRANSPORT MOUNTING
HEX SCREW ISO 4017 M16X20	4065240	335	2	288	919007708	DRIVE ASSEMBLY, PRE-ASSE
HEX SCREW ISO 4017 M16X30	12100309	44	8	668	917291908	PIVOT SECTION, PRE-ASSEMB
HEX SCREW ISO 4017 M16X30	12100309	35	8	673	917292008	TELESCOPIC SECTION 1 PRE
HEX SCREW ISO 4017 M16X30	12100309	35	8	677	917292108	TELESCOPIC SECT.2 PRE-AS
HEX SCREW ISO 4017 M16X30	12100309	35	8	681	917292208	TELESCOPIC SECT.3 PRE-ASS
HEX SCREW ISO 4017 M16X30	12100309	35	8	685	917292308	TELESCOPIC SECT.IV PRE-A
HEX SCREW ISO 4017 M16X35	12214938	84	16	76	91001377	CRAWLER SUPPORT PREASS
HEX SCREW ISO 4017 M16X35	12214938	84	16	109	91001378	CRAWLER SUPPORT PREASS
HEX SCREW ISO 4017 M16X35	12214938	302	2	280	918731408	DRIVE ASSEMBLY CPL.
HEX SCREW ISO 4017 M16X35	12214938	5	8	458	917260108	FALL PROTECTION
HEX SCREW ISO 4017 M16X40	10875519	66	4	21	91001569	CRAWLER TRACK TRAVEL G
HEX SCREW ISO 4017 M16X40	10875519	17	4	668	917291908	PIVOT SECTION, PRE-ASSEMB
HEX SCREW ISO 4017 M16X40	12100310	40	4	668	917291908	PIVOT SECTION, PRE-ASSEMB
HEX SCREW ISO 4017 M16X40	12100310	36	4	673	917292008	TELESCOPIC SECTION 1 PRE
HEX SCREW ISO 4017 M16X40	12100310	36	4	677	917292108	TELESCOPIC SECT.2 PRE-AS
HEX SCREW ISO 4017 M16X40	12100310	36	4	681	917292208	TELESCOPIC SECT.3 PRE-ASS
HEX SCREW ISO 4017 M16X40	12100310	36	4	685	917292308	TELESCOPIC SECT.IV PRE-A
HEX SCREW ISO 4017 M16X45	406603108	3	6	172	918731108	ASSEMBLY PARTS F.SLEWING
HEX SCREW ISO 4017 M16X45	406603108	9	9	378	917259908	CRANE DRIVER CAB ADDITIO
HEX SCREW ISO 4017 M16X45	406603108	7	3	646	919617008	LUFFING RAM W. PIVOT
HEX SCREW ISO 4017 M16X45	10875803	26	6	147	919087608	ROTARY FEED THROUGH
HEX SCREW ISO 4017 M16X45	10875803	16	4	604	967969608	AUXILIARY HOISTING GEAR 2
HEX SCREW ISO 4017 M16X45	10875803	9	8	761	917267508	TRANSPORT MOUNTING
HEX SCREW ISO 4017 M16X50	10875520	25	24	75	91001377	CRAWLER SUPPORT PREASS
HEX SCREW ISO 4017 M16X50	10875520	25	24	108	91001378	CRAWLER SUPPORT PREASS
HEX SCREW ISO 4017 M16X50	12100283	48	14	668	917291908	PIVOT SECTION, PRE-ASSEMB
HEX SCREW ISO 4017 M16X50	12100283	37	14	673	917292008	TELESCOPIC SECTION 1 PRE
HEX SCREW ISO 4017 M16X50	12100283	37	12	677	917292108	TELESCOPIC SECT.2 PRE-AS
HEX SCREW ISO 4017 M16X50	12100283	37	12	681	917292208	TELESCOPIC SECT.3 PRE-ASS
HEX SCREW ISO 4017 M16X50	12100283	37	12	685	917292308	TELESCOPIC SECT.IV PRE-A
HEX SCREW ISO 4017 M16X55	406608908	338	6	288	919007708	DRIVE ASSEMBLY, PRE-ASSE
HEX SCREW ISO 4017 M16X55	10875804	303	1	280	918731408	DRIVE ASSEMBLY CPL.
HEX SCREW ISO 4017 M16X60	406603408	7	1	762	929582108	MOUNTING PRE-ASS.
HEX SCREW ISO 4017 M16X60	10875521	304	1	280	918731408	DRIVE ASSEMBLY CPL.
HEX SCREW ISO 4017 M16X65	12226910	301	5	287	919007708	DRIVE ASSEMBLY, PRE-ASSE
HEX SCREW ISO 4017 M16X70	12223051	7	1	761	917267508	TRANSPORT MOUNTING
HEX SCREW ISO 4017 M16X80	10001467	31	4	129	919644008	HYDRAULIC SUPPORT
HEX SCREW ISO 4017 M20X1	12225211	12	2	758	917413208	SELF-ERECT. AUX. HOIST GEA
HEX SCREW ISO 4017 M20X20	10878791	35	8	648	12102921	LUFFING CYLINDER
HEX SCREW ISO 4017 M20X30	12224035	87	2	78	90028956	TRACTION DRIVE
HEX SCREW ISO 4017 M20X40	4600199	27	3	147	919087608	ROTARY FEED THROUGH
HEX SCREW ISO 4017 M20X45	4065281	32	12	147	919087608	ROTARY FEED THROUGH
HEX SCREW ISO 4017 M20X50	10875805	345	4	288	919007708	DRIVE ASSEMBLY, PRE-ASSE
HEX SCREW ISO 4017 M20X50	10875805	12	10	761	917267508	TRANSPORT MOUNTING
HEX SCREW ISO 4017 M20X60	406604208	27	2	75	91001377	CRAWLER SUPPORT PREASS
HEX SCREW ISO 4017 M20X60	406604208	27	2	108	91001378	CRAWLER SUPPORT PREASS
HEX SCREW ISO 4017 M20X70	10875422	5	1	337	917626608	FUEL TANK ADD-ON UNIT
HEX SCREW ISO 4017 M20X70	10875422	9	1	345	917825508	OIL RESERVOIR, EXTENSION
HEX SCREW ISO 4017 M24X60	406605808	6	4	646	919617008	LUFFING RAM W. PIVOT
HEX SCREW ISO 4017 M24X80	4901595	21	4	75	91001377	CRAWLER SUPPORT PREASS
HEX SCREW ISO 4017 M24X80	4901595	21	4	108	91001378	CRAWLER SUPPORT PREASS
HEX SCREW ISO 4017 M30X13	406607008	3	1	658	968068308	ASSEMBLY DEVICE

Description	Item	Pos.	Quantity	Page	Assembly	Description
HEX SCREW ISO 4017 M30X13	406607008	8	4	751	968728808	CONSOLE PRE-ASS.
HEX SCREW ISO 4017 M30X60	12228747	23	4	20	91001569	CRAWLER TRACK TRAVEL G
HEX SCREW ISO 4017 M4X10 8	11690047	(3)	2	467	96053500	ELECTRIC ADD-ON PARTS CA
HEX SCREW ISO 4017 M5X10 8	12211444	(3)	2	734	917268408	BOOM NOSE
HEX SCREW ISO 4017 M5X12 8	11140402	37	8	433	918810308	CONTROL STAND
HEX SCREW ISO 4017 M5X12 8	11140402	310	4	561	96045351	HYDRAULICS UPPER CARRI
HEX SCREW ISO 4017 M5X16 8	11647548	313	2	98	96035796	HYDR.TRAVEL DRIVE
HEX SCREW ISO 4017 M5X16 8	11647548	313	2	115	96035792	HYDR.TRAVEL DRIVE
HEX SCREW ISO 4017 M5X8 8.	4600871	11	4	43	968054008	MOUNTING PLATE PRE-ASS.
HEX SCREW ISO 4017 M6X10 8	11642497	(302)	1	286	919007708	DRIVE ASSEMBLY, PRE-ASSE
HEX SCREW ISO 4017 M6X10 8	11642497	41	2	378	917259908	CRANE DRIVER CAB ADDITIO
HEX SCREW ISO 4017 M6X10 8	11642497	54	1	399	917305408	INTERNAL PANELLING INSTA
HEX SCREW ISO 4017 M6X10 8	11642497	98	4	674	917292008	TELESCOPIC SECTION 1 PRE
HEX SCREW ISO 4017 M6X10 8	11642497	98	4	678	917292108	TELESCOPIC SECT.2 PRE-AS
HEX SCREW ISO 4017 M6X10 8	11642497	98	4	682	917292208	TELESCOPIC SECT.3 PRE-ASS
HEX SCREW ISO 4017 M6X10 8	11642497	98	4	686	917292308	TELESCOPIC SECT.IV PRE-A
HEX SCREW ISO 4017 M6X10 8	11642497	83	4	691	917292408	TELESCOPIC SECT.5 PRE-AS
HEX SCREW ISO 4017 M6X12 8	11692824	9	12	26	96034894	PROTECTION PLATE CPL.
HEX SCREW ISO 4017 M6X12 8	11692824	9	12	29	96034977	PROTECTION PLATE
HEX SCREW ISO 4017 M6X12 8	11692824	318	2	56	96035801	HYDRAULIC EQUIPM.CENTER
HEX SCREW ISO 4017 M6X12 8	11692824	17	4	412	916168308	AIR DUCT
HEX SCREW ISO 4017 M6X12 8	11692824	313	2	445	96036790	SLEWING PLATFORM PANELLI
HEX SCREW ISO 4017 M6X12 8	11692824	14	2	449	968923508	FLAP RIGHT PRE-ASS.
HEX SCREW ISO 4017 M6X12 8	11692824	308	6	561	96045351	HYDRAULICS UPPER CARRI
HEX SCREW ISO 4017 M6X12 8	11692824	314	2	616	967784808	HYDR.AUXILIARY HOISTING
HEX SCREW ISO 4017 M6X16 8	11657360	302	4	291	96034631	RADIATOR, PRE-ASSEMBLED
HEX SCREW ISO 4017 M6X16 8	11657360	11	2	601	918628408	AIR COND. UNIT SUPERSTRU
HEX SCREW ISO 4017 M6X16 8	11657360	(10)	3	604	967969608	AUXILIARY HOISTING GEAR 2
HEX SCREW ISO 4017 M6X16 8	11657360	3	2	753	919007108	LOAD HOOK
HEX SCREW ISO 4017 M6X16	10001739	46	1	421	917304708	SLIDING DOOR INSTALLATION
HEX SCREW ISO 4017 M6X16	10001739	4	2	712	966591508	LIMIT SWITCH ADD-ON
HEX SCREW ISO 4017 M6X20 8	11644899	15	1	43	968054008	MOUNTING PLATE PRE-ASS.
HEX SCREW ISO 4017 M6X20	4002860	32	4	52	11346779	SLIP RING TRANSMITTER
HEX SCREW ISO 4017 M6X25	10197836	11	2	547	926891108	GROUND RAIL
HEX SCREW ISO 4017 M6X25	10197836	35	2	668	917291908	PIVOT SECTION, PRE-ASSEMB
HEX SCREW ISO 4017 M6X25	10197836	59	2	673	917292008	TELESCOPIC SECTION 1 PRE
HEX SCREW ISO 4017 M6X25	10197836	59	2	677	917292108	TELESCOPIC SECT.2 PRE-AS
HEX SCREW ISO 4017 M6X25	10197836	59	2	681	917292208	TELESCOPIC SECT.3 PRE-ASS
HEX SCREW ISO 4017 M6X25	10197836	59	2	685	917292308	TELESCOPIC SECT.IV PRE-A
HEX SCREW ISO 4017 M6X45 8	12216201	354	2	455	969015908	SLEWING PLATFORM PANELLI
HEX SCREW ISO 4017 M6X45 8	12216201	27	4	751	968728808	CONSOLE PRE-ASS.
HEX SCREW ISO 4017 M6X50 8	12216202	20	2	147	919087608	ROTARY FEED THROUGH
HEX SCREW ISO 4017 M6X60 8	10181340	39	4	52	11346779	SLIP RING TRANSMITTER
HEX SCREW ISO 4017 M6X85	11007009	7	1	421	917304708	SLIDING DOOR INSTALLATION
HEX SCREW ISO 4017 M8X12 8	11690048	16	1	92	968420608	STORAGE BOX
HEX SCREW ISO 4017 M8X12 8	11690048	8	1	381	919010208	CRANE OPERATOR CABIN P
HEX SCREW ISO 4017 M8X12 8	11690048	14	2	387	916177508	STEP CPL.
HEX SCREW ISO 4017 M8X12 8	11690048	27	2	430	969085208	HEATING, PRE-ASSEMBLED
HEX SCREW ISO 4017 M8X12 8	11690048	5	8	652	917260608	COUNTERWEIGHT WITH CLAM
HEX SCREW ISO 4017 M8X12 8	11690048	54	2	690	917292408	TELESCOPIC SECT.5 PRE-AS
HEX SCREW ISO 4017 M8X12 8	11690048	301	2	722	967785408	ADDNL.HYDR. FOLDING JIB
HEX SCREW ISO 4017 M8X16	10299649	24	2	492	967928508	LOCKING
HEX SCREW ISO 4017 M8X16 8	11651612	12	4	26	96034894	PROTECTION PLATE CPL.
HEX SCREW ISO 4017 M8X16 8	11651612	12	4	29	96034977	PROTECTION PLATE
HEX SCREW ISO 4017 M8X16 8	11651612	20	4	30	968019508	LIMIT SWITCH ADD-ON
HEX SCREW ISO 4017 M8X16 8	11651612	303	8	56	96035801	HYDRAULIC EQUIPM.CENTER
HEX SCREW ISO 4017 M8X16 8	11651612	5	4	94	96034962	GUIDE LEFT
HEX SCREW ISO 4017 M8X16 8	11651612	5	4	112	96034980	GUIDE RIGHT
HEX SCREW ISO 4017 M8X16 8	11651612	21	16	119	917691008	FALL PROTECTION
HEX SCREW ISO 4017 M8X16 8	11651612	26	8	129	919644008	HYDRAULIC SUPPORT

Description	Item	Pos.	Quantity	Page	Assembly	Description
HEX SCREW ISO 4017 M8X16 8	11651612	68	16	150	919499408	CENTRAL BALLAST
HEX SCREW ISO 4017 M8X16 8	11651612	16	8	172	918731108	ASSEMBLY PARTS F.SLEWING
HEX SCREW ISO 4017 M8X16 8	11651612	306	2	280	918731408	DRIVE ASSEMBLY CPL.
HEX SCREW ISO 4017 M8X16 8	11651612	304	18	291	96034631	RADIATOR, PRE-ASSEMBLED
HEX SCREW ISO 4017 M8X16 8	11651612	15	4	365	917259708	MAIN HOIST GEAR
HEX SCREW ISO 4017 M8X16 8	11651612	30	2	387	916177508	STEP CPL.
HEX SCREW ISO 4017 M8X16 8	11651612	21	2	406	916162508	WINDOW ASSEMBLY
HEX SCREW ISO 4017 M8X16 8	11651612	11	4	426	917676208	HEATING CRANE DRIVER'S CA
HEX SCREW ISO 4017 M8X16 8	11651612	26	3	430	969085208	HEATING, PRE-ASSEMBLED
HEX SCREW ISO 4017 M8X16 8	11651612	312	2	445	96036790	SLEWING PLATFORM PANELLI
HEX SCREW ISO 4017 M8X16 8	11651612	22	5	480	918759808	ADD HEATING SUPERSTRUCT
HEX SCREW ISO 4017 M8X16 8	11651612	21	4	482	96020359	ADDNL.HEATING, PRE-ASSE
HEX SCREW ISO 4017 M8X16 8	11651612	22	2	493	967978908	INTERLOCKING
HEX SCREW ISO 4017 M8X16 8	11651612	322	6	561	96045351	HYDRAULICS UPPER CARRI
HEX SCREW ISO 4017 M8X16 8	11651612	58	2	690	917292408	TELESCOPIC SECT.5 PRE-AS
HEX SCREW ISO 4017 M8X16 8	11651612	15	6	701	966134608	ADD-ON PARTS CYLINDER
HEX SCREW ISO 4017 M8X16 8	11651612	27	2	761	917267508	TRANSPORT MOUNTING
HEX SCREW ISO 4017 M8X16	406527808	24	4	421	917304708	SLIDING DOOR INSTALLATION
HEX SCREW ISO 4017 M8X16	406527808	301	3	507	919674408	EXHAUST SYSTEM
HEX SCREW ISO 4017 M8X16	406527808	309	6	511	96051842	EXHAUST SYSTEM PRE-ASSE
HEX SCREW ISO 4017 M8X18 8	12216205	9	4	592	967980508	OIL COOLER, PRE-ASSEMBLE
HEX SCREW ISO 4017 M8X20 8	11651767	9	2	155	91001571	BOLT EXTRACTION DEVICE
HEX SCREW ISO 4017 M8X20 8	11651767	307	19	287	919007708	DRIVE ASSEMBLY, PRE-ASSE
HEX SCREW ISO 4017 M8X20 8	11651767	303	4	291	96034631	RADIATOR, PRE-ASSEMBLED
HEX SCREW ISO 4017 M8X20 8	11651767	300	3	341	91002861	FUEL FEED
HEX SCREW ISO 4017 M8X20 8	11651767	13	3	388	96025887	PEDAL CANTILEVER INSTALL
HEX SCREW ISO 4017 M8X20 8	11651767	15	4	415	916163008	WIPERS INSTALLATION
HEX SCREW ISO 4017 M8X20 8	11651767	24	1	430	969085208	HEATING, PRE-ASSEMBLED
HEX SCREW ISO 4017 M8X20 8	11651767	310	2	445	96036790	SLEWING PLATFORM PANELLI
HEX SCREW ISO 4017 M8X20 8	11651767	17	4	449	968923508	FLAP RIGHT PRE-ASS.
HEX SCREW ISO 4017 M8X20 8	11651767	306	5	455	969015908	SLEWING PLATFORM PANELLI
HEX SCREW ISO 4017 M8X20 8	11651767	21	13	480	918759808	ADD HEATING SUPERSTRUCT
HEX SCREW ISO 4017 M8X20 8	11651767	31	1	482	96020359	ADDNL.HEATING, PRE-ASSE
HEX SCREW ISO 4017 M8X20 8	11651767	301	2	511	96051842	EXHAUST SYSTEM PRE-ASSE
HEX SCREW ISO 4017 M8X20 8	11651767	301	4	520	918731908	AIR FILTER UNIT
HEX SCREW ISO 4017 M8X20 8	11651767	52	1	544	969256608	BASE ASSEMBLY
HEX SCREW ISO 4017 M8X20 8	11651767	334	10	562	96045351	HYDRAULICS UPPER CARRI
HEX SCREW ISO 4017 M8X20 8	11651767	301	2	622	969426308	AUX. HYDR. FOLDING JIB SP
HEX SCREW ISO 4017 M8X20 8	11651767	29	17	668	917291908	PIVOT SECTION, PRE-ASSEMB
HEX SCREW ISO 4017 M8X20 8	11651767	4	2	673	917292008	TELESCOPIC SECTION 1 PRE
HEX SCREW ISO 4017 M8X20 8	11651767	4	2	677	917292108	TELESCOPIC SECT.2 PRE-AS
HEX SCREW ISO 4017 M8X20 8	11651767	4	2	681	917292208	TELESCOPIC SECT.3 PRE-ASS
HEX SCREW ISO 4017 M8X20 8	11651767	4	2	685	917292308	TELESCOPIC SECT.IV PRE-A
HEX SCREW ISO 4017 M8X20 8	11651767	28	4	690	917292408	TELESCOPIC SECT.5 PRE-AS
HEX SCREW ISO 4017 M8X20 8	11651767	32	2	761	917267508	TRANSPORT MOUNTING
HEX SCREW ISO 4017 M8X22	502618908	20	2	172	918731108	ASSEMBLY PARTS F.SLEWING
HEX SCREW ISO 4017 M8X25	10197831	7	2	135	917257108	CENTRALIZED LUBRICATION
HEX SCREW ISO 4017 M8X25	10197831	36	4	147	919087608	ROTARY FEED THROUGH
HEX SCREW ISO 4017 M8X25	10197831	311	2	287	919007708	DRIVE ASSEMBLY, PRE-ASSE
HEX SCREW ISO 4017 M8X25	10197831	311	7	445	96036790	SLEWING PLATFORM PANELLI
HEX SCREW ISO 4017 M8X25	10197831	26	2	492	967928508	LOCKING
HEX SCREW ISO 4017 M8X25	10197831	53	2	500	918731808	UREA PLANT
HEX SCREW ISO 4017 M8X25	10197831	303	2	507	919674408	EXHAUST SYSTEM
HEX SCREW ISO 4017 M8X25	10197831	313	2	511	96051842	EXHAUST SYSTEM PRE-ASSE
HEX SCREW ISO 4017 M8X25	10197831	20	2	523	917261208	CENT. LUBRIC. SYSTEM SUP
HEX SCREW ISO 4017 M8X25	10197831	8	2	547	926891108	GROUND RAIL
HEX SCREW ISO 4017 M8X25	10197831	15	10	592	967980508	OIL COOLER, PRE-ASSEMBLE
HEX SCREW ISO 4017 M8X25	10197831	15	2	668	917291908	PIVOT SECTION, PRE-ASSEMB
HEX SCREW ISO 4017 M8X25	10197831	76	2	691	917292408	TELESCOPIC SECT.5 PRE-AS
HEX SCREW ISO 4017 M8X25	10197831	308	2	728	967785008	ADDNL.HYDR. FOLDING JIB

Description	Item	Pos.	Quantity	Page	Assembly	Description
HEX SCREW ISO 4017 M8X25	10197831	26	4	734	917268408	BOOM NOSE
HEX SCREW ISO 4017 M8X25	406590105	312	6	511	96051842	EXHAUST SYSTEM PRE-ASSE
HEX SCREW ISO 4017 M8X25	406590105	3	2	746	967937608	OBSTRUCTION LIGHTS PREAS
HEX SCREW ISO 4017 M8X28	500411708	56	6	20	91001569	CRAWLER TRACK TRAVEL G
HEX SCREW ISO 4017 M8X30 8	11826527	309	4	287	919007708	DRIVE ASSEMBLY, PRE-ASSE
HEX SCREW ISO 4017 M8X30 8	11826527	305	4	291	96034631	RADIATOR, PRE-ASSEMBLED
HEX SCREW ISO 4017 M8X30 8	11826527	305	2	294	968026308	CLUTCH ACTUATOR
HEX SCREW ISO 4017 M8X30 8	11826527	24	2	378	917259908	CRANE DRIVER CAB ADDITIO
HEX SCREW ISO 4017 M8X30 8	11826527	45	1	399	917305408	INTERNAL PANELLING INSTA
HEX SCREW ISO 4017 M8X30 8	11826527	4	2	668	917291908	PIVOT SECTION, PRE-ASSEMB
HEX SCREW ISO 4017 M8X35 8	11692827	7	1	120	968038208	BEARING AHEAD LEFT SIDE
HEX SCREW ISO 4017 M8X35 8	11692827	7	1	121	968038308	BEARING AHEAD RIGHT SIDE
HEX SCREW ISO 4017 M8X35 8	11692827	28	2	378	917259908	CRANE DRIVER CAB ADDITIO
HEX SCREW ISO 4017 M8X35 8	11692827	22	1	482	96020359	ADDNL.HEATING, PRE-ASSE
HEX SCREW ISO 4017 M8X35 8	11692827	19	4	604	967969608	AUXILIARY HOISTING GEAR 2
HEX SCREW ISO 4017 M8X35 8	11692827	302	13	728	967785008	ADDNL.HYDR. FOLDING JIB
HEX SCREW ISO 4017 M8X45 8	11690046	11	2	690	917292408	TELESCOPIC SECT.5 PRE-AS
HEX SCREW ISO 4017 M8X50 8	10875538	44	2	399	917305408	INTERNAL PANELLING INSTA
HEX SCREW ISO 8676 M12X1,	12216237	303	3	496	969763408	PIPEWORK AIR INSTALLATIO
HEX SCREW M5X16 10.9 480H	10876387	12	6	41	96045226	SWITCH BOX COMPL.
HEX SCREW M8X80 10.9 SC	11066521	24	4	240	5700161	AIR COMPRESSOR
HEXAGON KEY DIN 911 10 GLA	790021208	34	1	152	928569808	MAIN TOOLS
HEXAGON KEY DIN 911 12 GLA	790021308	35	1	152	928569808	MAIN TOOLS
HEXAGON KEY DIN 911 4 GLA	790021608	30	1	152	928569808	MAIN TOOLS
HEXAGON KEY DIN 911 5 GLA	790020008	31	1	152	928569808	MAIN TOOLS
HEXAGON KEY DIN 911 6 GLA	790020108	32	1	152	928569808	MAIN TOOLS
HEXAGON KEY DIN 911 GR.8 G	790021008	33	1	152	928569808	MAIN TOOLS
HEXALOBULAR HEAD SCREW	10138656	4	14	250	10140087	EXHAUST PIPE ASSEMBLY
HEXALOBULAR HEAD SCREW	10139578	6	2	209	10120186	BALANCER ASSEMBLY
HEXALOBULAR HEAD SCREW	10125439	3	6	202	10149580	CYLINDER HEAD ASSEMBLY
HEXALOBULAR HEAD SCREW	10118910	4	10	266	9077238	FLYWHEEL ASSEMBLY
HEXALOBULAR HEAD SCREW	10118912	10	6	200	10141974	CRANKSHAFT ADD-ON PARTS
HEXALOBULAR HEAD SCREW	10130816	5	10	181	10154379	CRANKCASE PRE-ASSY.
HEXALOBULAR HEAD SCREW	13569467	11	13	253	12512627	EXHAUST NOZZLE ATTACHM
HEXALOBULAR HEAD SCREW	10118695	9	3	234	10149677	CONNECTING LINE ADD-ON
HEXALOBULAR HEAD SCREW	10125702	3	2	251	10144756	HEAT PROTECTION W.FASTEN
HIGH CURRENT DISTRIBUTOR	10878680	(10)	1	335	96023914	ELECTRIC FOR BATTERY BOX
HIGH PRESS.CONNECTOR W.	10153151	191	4	176	13455297	DIESEL ENGINE
HIGH PRESSURE PUMP R-M	10146658	1	1	218	10150741	HIGH PRESSURE PUMP W.FAS
HIGH PRESSURE PUMP W.FAS	10150741	171	1	176	13455297	DIESEL ENGINE
HINGE 20X20X40/180° GD-ZN S	704258208	15	2	540	91000922	SWITCHBOX MOUNTING PART
HINGE 20X20X40/180° GD-ZN S	704258208	40	4	544	969256608	BASE ASSEMBLY
HINGE 35X35X50/180° NIROS	10294684	4	2	92	968420608	STORAGE BOX
HINGE 35X35X50/180° NIROS	10294684	11	2	157	96063087	STORAGE BOX
HINGE 35X35X50/180° ST FE//	704228108	84	2	150	919499408	CENTRAL BALLAST
HINGE 35X35X50/180° ST FE//	704228108	12	2	334	96023117	BATTERY BOX, PRE-ASSEMB
HINGE 35X35X50/180° ST FE//	704228108	9	3	449	968923508	FLAP RIGHT PRE-ASS.
HINGE 35X35X50/180° ST FE//	704228108	2	2	457	969016008	FLAP LEFT FRONT PRE-ASS.
HINGE 35X35X50/180° ST FE//	704228108	5	1	767	917268208	LADDER ATTACHMENT
HINGE PIN CLAMP 332X1022X3	12102925	182	2	511	96051842	EXHAUST SYSTEM PRE-ASSE
HOIST LIM.SWITCH PLUMMET	96013575	63	1	691	917292408	TELESCOPIC SECT.5 PRE-AS
HOIST LIM.SWITCH PLUMMET	96013575	2	1	756	917267208	AUXILIARY HOIST.ROPE W.A
HOIST ROPE 23X280M -40°C	773444090	1	1	756	917267208	AUXILIARY HOIST.ROPE W.A
HOIST ROPE 23X350M -40°C	10115128	1	1	650	917259808	ROPE WITH ACCESSORIES 1
HOIST ROPE GUIDE WELDED	962771108	20	1	668	917291908	PIVOT SECTION, PRE-ASSEMB
HOLDER	10145373	15	1	254	11420633	CYCLE VALVE
HOLDER	10146789	2	1	226	10146791	FUEL FINE-FILTER ASSEMBLY
HOLDER	591070408	29	2	172	918731108	ASSEMBLY PARTS F.SLEWING
HOLDER	966253708	1	1	423	966230508	GUIDE PRE-ASS.
HOLDER 1.4308	975218608	2	6	392	916162808	RELING

Description	Item	Pos.	Quantity	Page	Assembly	Description
HOLDER 1.4308	975384508	3	6	392	916162808	RELING
HOLDER 1.5X198X59 DC01 FE//	978608608	10	1	544	969256608	BASE ASSEMBLY
HOLDER 2X163X140 DC01 FE//	97134822	2	1	384	96057226	CUP HOLDER INSTALLATION
HOLDER 40X30X175 PA6G+OE	97033902	19	1	26	96034894	PROTECTION PLATE CPL.
HOLDER 40X30X175 PA6G+OE	97033902	19	1	29	96034977	PROTECTION PLATE
HOLDER 40X80X40 G-ALMG3	979489508	3	1	440	916049908	MIRROR ATTACHM.IN CRANE
HOLDER 44X88.5X40 G-ALSIM	97009160	7	2	395	917304508	CRANE OPERATOR CABIN P
HOLDER 4X120X75 S315MC FE	971634008	33	1	701	966134608	ADD-ON PARTS CYLINDER
HOLDER 4X173X175 X5CRNI18	97032840	2	1	125	968331708	FUSE HOLDER
HOLDER 4X337X245 S315MC	97047676	50	1	135	917257108	CENTRALIZED LUBRICATION
HOLDER DT/DTM	10041876	528	2	535	96037136	WIRING HARNESS
HOLDER GX5CRNI19-10	97077297	33	1	286	919007708	DRIVE ASSEMBLY, PRE-ASSE
HOLDER GX5CRNI19-10	97077309	(2)	3	286	919007708	DRIVE ASSEMBLY, PRE-ASSE
HOLDER LEFT	967977708	2	1	591	917261808	OIL COOLER INSTALLATION
HOLDER MONITOR	10874763	20	1	641	96045237	EQUIPMENT CAMERA CAB
HOLDER PA6MDGF30 SPF	97098446	1	2	144	96045206	MECHANICAL AUXILIARIES
HOLDER RIGHT	969185608	3	1	591	917261808	OIL COOLER INSTALLATION
HOLDER S235JR	10150252	10	1	271	10151329	WIRING HARNESS ASSEMBLY
HOLDER S235JR	10150838	13	1	271	10151329	WIRING HARNESS ASSEMBLY
HOLDER S235JR	12429351	2	1	254	11420633	CYCLE VALVE
HOLDER S235JR	9275178	91	1	269	10151328	CABLE HARNESS MOUNTING
HOLDER X12CRNIS188	965371708	1	1	712	966591508	LIMIT SWITCH ADD-ON
HOLDING BRACKET RAL 9005	97136700	3	1	385	96048757	CUP HOLDER
HOLDING PLATE	11644254	102	1	704	10802064	ROPE LENGTH INDICATOR
HOLDING RING	11659651	(14)	1	132	968077208	HYDRAULIC SUPPORT
HOLLOW KEY	704271108	7	2	153	928620108	ACCESSORIES
HOLLOW SCREW 10X1X27 11S	9080466	3	3	247	10148216	PIPELINE INSTALLATION
HOLLOW SCREW 15-3-32	11443132	17	2	228	10143341	FUEL LINES
HOLLOW SCREW DIN 74305 22	502940108	7	1	339	968999708	FUEL TANK, PRE-ASSEMBLED
HOLLOW SCREW DIN 7643 10	12210013	17	1	229	10143342	LEAK OIL RETURN LINE
HOLLOW SCREW DIN 7643 12	12210025	3	4	243	10145278	ACCESSORIES AIR COMPRES
HOLLOW SCREW DIN 7643 12-	11002995	2	1	228	10143341	FUEL LINES
HOLLOW SCREW DIN 7643 15--	4981226	16	3	228	10143341	FUEL LINES
HOLLOW SCREW DIN 7643 4-3-	12210009	23	1	229	10143342	LEAK OIL RETURN LINE
HOLLOW SCREW DIN 7643 6-3	12210010	6	6	229	10143342	LEAK OIL RETURN LINE
HOLLOW SCREW DIN 7643 6-3	12210010	7	1	243	10145278	ACCESSORIES AIR COMPRES
HOLLOW SCREW DIN 7643 6-3	12210010	6	1	254	11420633	CYCLE VALVE
HOLLOW SCREW DIN 7643 6-3	12210010	10	1	276	10144036	POWER TAKE-OFF ADD-ON
HOLLOW SCREW DIN 7643 8-3	12210024	2	1	229	10143342	LEAK OIL RETURN LINE
HOLLOW SCREW DIN 7643 8-3	12210024	20	1	253	12512627	EXHAUST NOZZLE ATTACHM
HOLLOW SCREW DIN 7643 8-3	12210024	13	1	276	10144036	POWER TAKE-OFF ADD-ON
HOLLOW SCREW M18X1,5 C	11493963	(15)	1	132	968077208	HYDRAULIC SUPPORT
HOOD 180X350 GEWEBE ROT	97042475	9	1	745	967936408	WIND WARNING PREASSEMB
HOOD 5X220X434 S355MC FE//	97032619	6	2	30	968019508	LIMIT SWITCH ADD-ON
HOOD COVER	11181887	34	1	52	11346779	SLIP RING TRANSMITTER
HOOD RIGHT 4X585X711 S31	97066483	87	1	109	91001378	CRAWLER SUPPORT PREASS
HOOD SUPPORT	704229908	311	10	455	969015908	SLEWING PLATFORM PANELLI
HOOD/BONNET LEFT 4X585X7	97066482	87	1	76	91001377	CRAWLER SUPPORT PREASS
HOOK 3X50X45 X5CRNI18-10	97062372	5	2	157	96063087	STORAGE BOX
HOOK 50X358X150 S960QL+Z2	97030305	7	2	654	967936908	COUNTERWEIGHT CPL.
HOOK BLOCK 125DM SPF	910836808	316	1	14		LIEBHERR LTR 1220
HOOK ROD FE//ZNNI8//CN//T0	929529908	1	1	768	968090008	MOUNTING HOOK ROD
HORN 24V	614003108	24	1	41	96045226	SWITCH BOX COMPL.
HORN 24V	614003108	32	1	527	919410708	ELECTR. SYSTEM F.SLEWING
HOSE	97056998	341	5	562	96045351	HYDRAULICS UPPER CARRI
HOSE	97056998	304	1	622	969426308	AUX. HYDR. FOLDING JIB SP
HOSE 100X180 EPDM	10872213	250	1	520	918731908	AIR FILTER UNIT
HOSE 85X200 SILIKON	551710608	252	1	287	919007708	DRIVE ASSEMBLY, PRE-ASSE
HOSE CLAMP 10/9,5-10,5/9 ED	553102308	30	5	480	918759808	ADD HEATING SUPERSTRUCT
HOSE CLAMP 10/9,5-10,5/9 ED	553102308	14	1	482	96020359	ADDNL.HEATING, PRE-ASSE

Description	Item	Pos.	Quantity	Page	Assembly	Description
HOSE CLAMP 115/113-121/25 A	12102528	184	4	507	919674408	EXHAUST SYSTEM
HOSE CLAMP 120/110-130/12	774217608	180	3	520	918731908	AIR FILTER UNIT
HOSE CLAMP 140/130-150/12	774209908	181	1	520	918731908	AIR FILTER UNIT
HOSE CLAMP 169/167-175/25 S	774227108	180	2	280	918731408	DRIVE ASSEMBLY CPL.
HOSE CLAMP 19/17,8-20,2/12	11162002	24	8	500	918731808	UREA PLANT
HOSE CLAMP 21/16-27/12 W3	11118077	22	2	426	917676208	HEATING CRANE DRIVER'S CA
HOSE CLAMP 21/16-27/12 W3	11118077	21	12	430	969085208	HEATING, PRE-ASSEMBLED
HOSE CLAMP 21/16-27/12 W3	11118077	19	6	480	918759808	ADD HEATING SUPERSTRUCT
HOSE CLAMP 21/16-27/12 W3	11118077	17	8	482	96020359	ADDNL.HEATING, PRE-ASSE
HOSE CLAMP 21/16-27/12 W3	11118077	23	2	500	918731808	UREA PLANT
HOSE CLAMP 26/20-32/12 W3	774215008	3	1	186	10126713	CRANKCASE BREATHER ASS
HOSE CLAMP 26/20-32/12 W3	774215008	8	4	232	10145173	INTAKE STACK ASSEMBLY
HOSE CLAMP 26/20-32/12 W3	774215008	25	2	252	10140729	EXHAUST TC MOUNTING
HOSE CLAMP 32/25-40/12 W3	774208508	10	1	482	96020359	ADDNL.HEATING, PRE-ASSE
HOSE CLAMP 45/30-45/9 W3	10878445	20	2	415	916163008	WIPERS INSTALLATION
HOSE CLAMP 50/40-60/12 W3	550838008	17	2	172	918731108	ASSEMBLY PARTS F.SLEWING
HOSE CLAMP 50/40-60/12 W3	550838008	185	4	287	919007708	DRIVE ASSEMBLY, PRE-ASSE
HOSE CLAMP 60/50-70/12 W3	774208008	181	4	287	919007708	DRIVE ASSEMBLY, PRE-ASSE
HOSE CLAMP 70/60-80/12 W3	774214308	183	4	287	919007708	DRIVE ASSEMBLY, PRE-ASSE
HOSE CLAMP 80/70-90/12 W3	774206408	186	2	287	919007708	DRIVE ASSEMBLY, PRE-ASSE
HOSE CLAMP 86-91X25 ST	774227908	180	1	287	919007708	DRIVE ASSEMBLY, PRE-ASSE
HOSE CLAMP 90/80-100/12 W3	774218808	184	6	287	919007708	DRIVE ASSEMBLY, PRE-ASSE
HOSE CLAMP DIN 3017-1 12/8-	10872024	307	1	98	96035796	HYDR.TRAVEL DRIVE
HOSE CLAMP DIN 3017-1 12/8-	10872024	307	1	115	96035792	HYDR.TRAVEL DRIVE
HOSE CLAMP DIN 3017-1 12/8-	10872024	302	1	616	967784808	HYDR.AUXILIARY HOISTING
HOSE CLAMP DIN 3017-1 70/60	5004929	6	2	234	10149677	CONNECTING LINE ADD-ON
HOSE CLAMP DIN 3017-2 12/11	12696398	8	7	254	11420633	CYCLE VALVE
HOSE CLAMP DIN 3017-2 17/16	4981029	6	4	195	10139112	OIL LINE PRE-ASSEMBLY
HOSE CONNECTION SOCKET	10801609	22	2	500	918731808	UREA PLANT
HOSE CPL.	925185208	10	1	657	919028808	DISPATCH ASSY.MECH.PART
HOSE CPL.	925185308	11	1	657	919028808	DISPATCH ASSY.MECH.PART
HOSE CPL.	926990808	402	1	597	918739608	HOSE LINES SUPERSTRUCT
HOSE CPL.	968148808	(1449)	1	622	969426308	AUX. HYDR. FOLDING JIB SP
HOSE CPL. 1SC 8X1400	969452208	326	1	596	918739608	HOSE LINES SUPERSTRUCT
HOSE CPL. 1SC 8X14100	962968908	1490	1	729	968223308	HOSE LINES FOLDING JIB
HOSE CPL. 1SC 8X300	927637908	1255	1	619	968083708	HOSE LINES HOISTING GEAR
HOSE CPL. 1SC 8X330	965198708	354	1	597	918739608	HOSE LINES SUPERSTRUCT
HOSE CPL. 1SC 8X340	969634408	329	1	596	918739608	HOSE LINES SUPERSTRUCT
HOSE CPL. 1SC 8X360	926130108	202	1	596	918739608	HOSE LINES SUPERSTRUCT
HOSE CPL. 1SC 8X3600	96035632	203	1	596	918739608	HOSE LINES SUPERSTRUCT
HOSE CPL. 1SC 8X3700	927232508	1378	1	590	969347008	HOSE LINES ADDITIONAL PA
HOSE CPL. 1SC 8X4100	962956708	346	1	597	918739608	HOSE LINES SUPERSTRUCT
HOSE CPL. 1SC 8X460	96044685	836	1	99	96035799	HOSE LINES CRAWLER
HOSE CPL. 1SC 8X460	96044685	836	1	116	96035798	HOSE LINES CRAWLER
HOSE CPL. 1SC 8X500	926098108	1377	1	590	969347008	HOSE LINES ADDITIONAL PA
HOSE CPL. 1SC 8X720	966861108	331	1	597	918739608	HOSE LINES SUPERSTRUCT
HOSE CPL. 1SC 8X960	926379108	1256	1	619	968083708	HOSE LINES HOISTING GEAR
HOSE CPL. 1SN 25X1240	967219908	373	1	597	918739608	HOSE LINES SUPERSTRUCT
HOSE CPL. 1SN 25X1300	968144308	807	1	58	96035802	HOSE LINES CENTRE SECTIO
HOSE CPL. 1SN 25X1750	928033508	806	2	58	96035802	HOSE LINES CENTRE SECTIO
HOSE CPL. 1SN 25X1800	928720408	405	1	597	918739608	HOSE LINES SUPERSTRUCT
HOSE CPL. 1SN 25X1900	968144208	805	1	58	96035802	HOSE LINES CENTRE SECTIO
HOSE CPL. 1SN 25X3900	968351508	345	1	597	918739608	HOSE LINES SUPERSTRUCT
HOSE CPL. 1SN 25X640	927032108	224	1	596	918739608	HOSE LINES SUPERSTRUCT
HOSE CPL. 1SN 25X700	968144708	804	1	58	96035802	HOSE LINES CENTRE SECTIO
HOSE CPL. 1SN 25X960	969634908	403	1	597	918739608	HOSE LINES SUPERSTRUCT
HOSE CPL. 1SN 32X2200	969634508	375	1	597	918739608	HOSE LINES SUPERSTRUCT
HOSE CPL. 1SN 32X3500	968148408	842	1	99	96035799	HOSE LINES CRAWLER
HOSE CPL. 1SN 32X4250	96035892	832	1	116	96035798	HOSE LINES CRAWLER
HOSE CPL. 2SN 10X1460	926555408	(881)	4	132	968077208	HYDRAULIC SUPPORT

Description	Item	Pos.	Quantity	Page	Assembly	Description
HOSE CPL. 2SN 10X1500	929310208	(880)	4	132	968077208	HYDRAULIC SUPPORT
HOSE CPL. 2SN 10X1700	928865508	810	2	58	96035802	HOSE LINES CENTRE SECTIO
HOSE CPL. 2SN 10X1900	968151308	305	1	596	918739608	HOSE LINES SUPERSTRUCT
HOSE CPL. 2SN 10X2900	929391108	318	1	596	918739608	HOSE LINES SUPERSTRUCT
HOSE CPL. 2SN 10X3000	928762308	317	1	596	918739608	HOSE LINES SUPERSTRUCT
HOSE CPL. 2SN 10X3550	96035894	843	1	99	96035799	HOSE LINES CRAWLER
HOSE CPL. 2SN 10X400	921255408	483	1	718	968187108	HOSE LINES TELESCOPIC
HOSE CPL. 2SN 10X4050	96035893	833	1	116	96035798	HOSE LINES CRAWLER
HOSE CPL. 2SN 12X1300	927613508	206	1	596	918739608	HOSE LINES SUPERSTRUCT
HOSE CPL. 2SN 12X1700	962255708	386	1	597	918739608	HOSE LINES SUPERSTRUCT
HOSE CPL. 2SN 12X1700	962255708	387	1	597	918739608	HOSE LINES SUPERSTRUCT
HOSE CPL. 2SN 12X2150	962969208	388	1	597	918739608	HOSE LINES SUPERSTRUCT
HOSE CPL. 2SN 12X2150	962969208	389	1	597	918739608	HOSE LINES SUPERSTRUCT
HOSE CPL. 2SN 12X3400	929331808	481	1	718	968187108	HOSE LINES TELESCOPIC
HOSE CPL. 2SN 12X3600	929753308	1491	1	729	968223308	HOSE LINES FOLDING JIB
HOSE CPL. 2SN 12X370	96035635	207	1	596	918739608	HOSE LINES SUPERSTRUCT
HOSE CPL. 2SN 12X3700	963457808	334	1	597	918739608	HOSE LINES SUPERSTRUCT
HOSE CPL. 2SN 12X3800	961861508	1492	1	729	968223308	HOSE LINES FOLDING JIB
HOSE CPL. 2SN 12X420	96035633	204	1	596	918739608	HOSE LINES SUPERSTRUCT
HOSE CPL. 2SN 12X760	964958008	1494	1	729	968223308	HOSE LINES FOLDING JIB
HOSE CPL. 2SN 12X860	928765908	1493	1	729	968223308	HOSE LINES FOLDING JIB
HOSE CPL. 2SN 16X250	969633908	229	1	596	918739608	HOSE LINES SUPERSTRUCT
HOSE CPL. 2SN 16X420	96034411	201	1	596	918739608	HOSE LINES SUPERSTRUCT
HOSE CPL. 2SN 16X4600	962440508	200	1	596	918739608	HOSE LINES SUPERSTRUCT
HOSE CPL. 2SN 20X280	969634108	221	1	596	918739608	HOSE LINES SUPERSTRUCT
HOSE CPL. 2SN 20X480	928037208	406	1	597	918739608	HOSE LINES SUPERSTRUCT
HOSE CPL. 2SN 20X480	969386708	396	1	597	918739608	HOSE LINES SUPERSTRUCT
HOSE CPL. 2SN 20X540	969386508	315	1	596	918739608	HOSE LINES SUPERSTRUCT
HOSE CPL. 2SN 6X13600	962968508	1488	1	723	968222808	HOSE LINES FOLDING JIB
HOSE CPL. 2SN 6X13600	962968508	1489	1	723	968222808	HOSE LINES FOLDING JIB
HOSE CPL. 2SN 6X220	966184308	400	1	597	918739608	HOSE LINES SUPERSTRUCT
HOSE CPL. 2SN 6X250	963562308	1263	1	619	968083708	HOSE LINES HOISTING GEAR
HOSE CPL. 2SN 6X300	968351008	233	1	596	918739608	HOSE LINES SUPERSTRUCT
HOSE CPL. 2SN 6X3500	962968608	482	1	718	968187108	HOSE LINES TELESCOPIC
HOSE CPL. 2SN 6X500	968149808	1268	1	619	968083708	HOSE LINES HOISTING GEAR
HOSE CPL. 2SN 6X500	968350908	231	1	596	918739608	HOSE LINES SUPERSTRUCT
HOSE CPL. 2SN 6X540	923015608	1486	1	723	968222808	HOSE LINES FOLDING JIB
HOSE CPL. 2SN 6X540	923015608	1487	1	723	968222808	HOSE LINES FOLDING JIB
HOSE CPL. 2SN 6X640	969634308	230	1	596	918739608	HOSE LINES SUPERSTRUCT
HOSE CPL. 2SN 6X780	968141708	1260	1	619	968083708	HOSE LINES HOISTING GEAR
HOSE CPL. 2SN 6X880	968151408	310	1	596	918739608	HOSE LINES SUPERSTRUCT
HOSE CPL. 2SN 8X1140	968351208	320	1	596	918739608	HOSE LINES SUPERSTRUCT
HOSE CPL. 2SN 8X1180	968599208	319	1	596	918739608	HOSE LINES SUPERSTRUCT
HOSE CPL. 2SN 8X2350	968152008	323	1	596	918739608	HOSE LINES SUPERSTRUCT
HOSE CPL. 2SN 8X2350	968152008	324	1	596	918739608	HOSE LINES SUPERSTRUCT
HOSE CPL. 2SN 8X2500	928013408	(1)	2	159	96056969	ADDITIONAL HYDRAULICS
HOSE CPL. 2SN 8X2550	969633808	212	1	596	918739608	HOSE LINES SUPERSTRUCT
HOSE CPL. 2SN 8X320	968585908	802	4	58	96035802	HOSE LINES CENTRE SECTIO
HOSE CPL. 2SN 8X400	928006008	356	1	597	918739608	HOSE LINES SUPERSTRUCT
HOSE CPL. 2SN 8X400	928874708	801	4	58	96035802	HOSE LINES CENTRE SECTIO
HOSE CPL. 2SN 8X600	928005808	316	1	596	918739608	HOSE LINES SUPERSTRUCT
HOSE CPL. 2SN 8X660	929312908	1379	1	590	969347008	HOSE LINES ADDITIONAL PA
HOSE CPL. 2TE 10X1000	926465408	808	1	58	96035802	HOSE LINES CENTRE SECTIO
HOSE CPL. 2TE 10X1060	926976308	835	1	99	96035799	HOSE LINES CRAWLER
HOSE CPL. 2TE 10X1060	926976308	835	1	116	96035798	HOSE LINES CRAWLER
HOSE CPL. 2TE 10X1200	926711908	350	1	597	918739608	HOSE LINES SUPERSTRUCT
HOSE CPL. 2TE 10X1220	928022908	364	1	597	918739608	HOSE LINES SUPERSTRUCT
HOSE CPL. 2TE 10X1240	96040431	370	1	597	918739608	HOSE LINES SUPERSTRUCT
HOSE CPL. 2TE 10X190	968152508	355	1	597	918739608	HOSE LINES SUPERSTRUCT
HOSE CPL. 2TE 10X1900	968139808	348	1	597	918739608	HOSE LINES SUPERSTRUCT

Description	Item	Pos.	Quantity	Page	Assembly	Description
HOSE CPL. 2TE 10X1900	968144408	811	1	58	96035802	HOSE LINES CENTRE SECTIO
HOSE CPL. 2TE 10X1950	926362908	325	1	596	918739608	HOSE LINES SUPERSTRUCT
HOSE CPL. 2TE 10X2150	926028808	330	1	596	918739608	HOSE LINES SUPERSTRUCT
HOSE CPL. 2TE 10X2150	967355108	215	1	596	918739608	HOSE LINES SUPERSTRUCT
HOSE CPL. 2TE 10X220	927294708	379	1	597	918739608	HOSE LINES SUPERSTRUCT
HOSE CPL. 2TE 10X260	962641808	378	1	597	918739608	HOSE LINES SUPERSTRUCT
HOSE CPL. 2TE 10X260	963703908	1258	1	619	968083708	HOSE LINES HOISTING GEAR
HOSE CPL. 2TE 10X2800	923016308	349	1	597	918739608	HOSE LINES SUPERSTRUCT
HOSE CPL. 2TE 10X360	928046908	313	1	596	918739608	HOSE LINES SUPERSTRUCT
HOSE CPL. 2TE 10X360	928046908	1257	1	619	968083708	HOSE LINES HOISTING GEAR
HOSE CPL. 2TE 10X380	920896108	1261	1	619	968083708	HOSE LINES HOISTING GEAR
HOSE CPL. 2TE 10X400	923016208	1254	1	619	968083708	HOSE LINES HOISTING GEAR
HOSE CPL. 2TE 10X490	965945408	353	1	597	918739608	HOSE LINES SUPERSTRUCT
HOSE CPL. 2TE 10X500	926041708	812	1	58	96035802	HOSE LINES CENTRE SECTIO
HOSE CPL. 2TE 10X520	926610108	335	1	597	918739608	HOSE LINES SUPERSTRUCT
HOSE CPL. 2TE 10X600	926120008	834	1	99	96035799	HOSE LINES CRAWLER
HOSE CPL. 2TE 10X600	926120008	834	1	116	96035798	HOSE LINES CRAWLER
HOSE CPL. 2TE 10X600	929752308	809	1	58	96035802	HOSE LINES CENTRE SECTIO
HOSE CPL. 2TE 10X660	928024908	211	1	596	918739608	HOSE LINES SUPERSTRUCT
HOSE CPL. 2TE 10X700	928025108	1262	1	619	968083708	HOSE LINES HOISTING GEAR
HOSE CPL. 2TE 10X740	964273708	217	1	596	918739608	HOSE LINES SUPERSTRUCT
HOSE CPL. 2TE 10X800	926606608	214	1	596	918739608	HOSE LINES SUPERSTRUCT
HOSE CPL. 2TE 12X1000	926289108	351	1	597	918739608	HOSE LINES SUPERSTRUCT
HOSE CPL. 2TE 12X1900	969034108	(2393)	1	341	91002861	FUEL FEED
HOSE CPL. 2TE 12X3100	926561708	222	1	596	918739608	HOSE LINES SUPERSTRUCT
HOSE CPL. 2TE 12X4100	928456608	(430)	1	496	969763408	PIPEWORK AIR INSTALLATIO
HOSE CPL. 2TE 12X6400	965946108	(2394)	1	341	91002861	FUEL FEED
HOSE CPL. 2TE 12X650	96033235	(2395)	1	341	91002861	FUEL FEED
HOSE CPL. 2TE 12X820	965159708	336	1	597	918739608	HOSE LINES SUPERSTRUCT
HOSE CPL. 2TE 16X1200	926041308	228	1	596	918739608	HOSE LINES SUPERSTRUCT
HOSE CPL. 2TE 16X180	96035634	205	1	596	918739608	HOSE LINES SUPERSTRUCT
HOSE CPL. 2TE 16X2800	96034858	(2391)	1	341	91002861	FUEL FEED
HOSE CPL. 2TE 16X4700	920978208	(2390)	1	341	91002861	FUEL FEED
HOSE CPL. 2TE 16X600	968148708	(1448)	1	622	969426308	AUX. HYDR. FOLDING JIB SP
HOSE CPL. 2TE 16X760	968350608	213	1	596	918739608	HOSE LINES SUPERSTRUCT
HOSE CPL. 2TE 20X1000	928042908	369	1	597	918739608	HOSE LINES SUPERSTRUCT
HOSE CPL. 2TE 20X1020	968350008	1252	1	619	968083708	HOSE LINES HOISTING GEAR
HOSE CPL. 2TE 20X1100	968537008	225	1	596	918739608	HOSE LINES SUPERSTRUCT
HOSE CPL. 2TE 20X1460	966860008	1253	1	619	968083708	HOSE LINES HOISTING GEAR
HOSE CPL. 2TE 20X200	968150708	219	1	596	918739608	HOSE LINES SUPERSTRUCT
HOSE CPL. 2TE 20X200	968150708	234	1	596	918739608	HOSE LINES SUPERSTRUCT
HOSE CPL. 2TE 20X2500	926757108	372	1	597	918739608	HOSE LINES SUPERSTRUCT
HOSE CPL. 2TE 20X3100	968007308	357	1	597	918739608	HOSE LINES SUPERSTRUCT
HOSE CPL. 2TE 20X3600	928876208	358	1	597	918739608	HOSE LINES SUPERSTRUCT
HOSE CPL. 2TE 20X420	929742608	1383	1	619	968083708	HOSE LINES HOISTING GEAR
HOSE CPL. 2TE 20X440	927295708	218	1	596	918739608	HOSE LINES SUPERSTRUCT
HOSE CPL. 2TE 20X440	927295708	1266	1	619	968083708	HOSE LINES HOISTING GEAR
HOSE CPL. 2TE 20X540	967354708	1267	1	619	968083708	HOSE LINES HOISTING GEAR
HOSE CPL. 2TE 20X680	968350108	1382	1	619	968083708	HOSE LINES HOISTING GEAR
HOSE CPL. 2TE 20X760	968350708	226	1	596	918739608	HOSE LINES SUPERSTRUCT
HOSE CPL. 2TE 20X800	929631408	374	1	597	918739608	HOSE LINES SUPERSTRUCT
HOSE CPL. 2TE 20X800	965434608	352	1	597	918739608	HOSE LINES SUPERSTRUCT
HOSE CPL. 2TE 20X960	966860408	367	1	597	918739608	HOSE LINES SUPERSTRUCT
HOSE CPL. 2TE 8X700	968143708	837	1	99	96035799	HOSE LINES CRAWLER
HOSE CPL. 2TE 8X700	968143708	837	1	116	96035798	HOSE LINES CRAWLER
HOSE CPL. 304 35X330	96040432	254	2	596	918739608	HOSE LINES SUPERSTRUCT
HOSE CPL. 304 60X140	96040433	209	1	596	918739608	HOSE LINES SUPERSTRUCT
HOSE CPL. 4ST+ 31X260	968151208	302	1	596	918739608	HOSE LINES SUPERSTRUCT
HOSE CPL. 4ST+ 31X3450	96035889	841	1	99	96035799	HOSE LINES CRAWLER
HOSE CPL. 4ST+ 31X3550	96035888	840	1	99	96035799	HOSE LINES CRAWLER

Description	Item	Pos.	Quantity	Page	Assembly	Description
HOSE CPL. 4ST+ 31X3600	968349808	1374	1	590	969347008	HOSE LINES ADDITIONAL PA
HOSE CPL. 4ST+ 31X4100	96035890	830	1	116	96035798	HOSE LINES CRAWLER
HOSE CPL. 4ST+ 31X4200	96035891	831	1	116	96035798	HOSE LINES CRAWLER
HOSE CPL. 4ST+ 31X630	968351408	343	1	597	918739608	HOSE LINES SUPERSTRUCT
HOSE CPL. 4ST+ 31X880	967623008	300	1	596	918739608	HOSE LINES SUPERSTRUCT
HOSE CPL. 4ST+ 31X920	969572608	361	1	597	918739608	HOSE LINES SUPERSTRUCT
HOSE CPL. 4ST+ 31X940	968151108	301	1	596	918739608	HOSE LINES SUPERSTRUCT
HOSE CPL. 75X150	96040435	210	1	596	918739608	HOSE LINES SUPERSTRUCT
HOSE CPL. CARBURITE10 50X	96040434	255	1	596	918739608	HOSE LINES SUPERSTRUCT
HOSE CPL. CONTI KWS 10X13	969452108	2312	2	504	96011801	HOSE LINES
HOSE CPL. CONTI KWS 10X1	96014023	2456	1	331	96034533	HOSE LINES DRIVE UNIT
HOSE CPL. CONTI KWS 10X1	96023967	2455	1	331	96034533	HOSE LINES DRIVE UNIT
HOSE CPL. CONTI KWS 10X1	96032358	2457	1	331	96034533	HOSE LINES DRIVE UNIT
HOSE CPL. CONTI KWS 10X24	969384408	2314	1	504	96011801	HOSE LINES
HOSE CPL. CONTI KWS 10X2	96024954	2316	1	504	96011801	HOSE LINES
HOSE CPL. CONTI KWS 10X2	969574508	2310	1	504	96011801	HOSE LINES
HOSE CPL. CONTI KWS 10X62	96014733	2311	1	504	96011801	HOSE LINES
HOSE CPL. CONTI KWS 10X70	96014732	2313	1	504	96011801	HOSE LINES
HOSE CPL. CONTI KWS 10X88	96014734	2315	1	504	96011801	HOSE LINES
HOSE CPL. CONTI KWS 20X1	96020259	(2824)	1	426	917676208	HEATING CRANE DRIVER'S CA
HOSE CPL. CONTI KWS 20X2	96023301	2466	1	331	96034533	HOSE LINES DRIVE UNIT
HOSE CPL. CONTI KWS 20X3	96014060	2463	1	331	96034533	HOSE LINES DRIVE UNIT
HOSE CPL. CONTI KWS 20X60	96032574	(2802)	1	430	969085208	HEATING, PRE-ASSEMBLED
HOSE CPL. CONTI KWS 20X75	96024886	(2823)	1	426	917676208	HEATING CRANE DRIVER'S CA
HOSE CPL. CONTI KWS 22X28	96034457	(1612)	1	286	919007708	DRIVE ASSEMBLY, PRE-ASSE
HOSE CPL. CONTI KWS 22X70	96034535	2451	1	331	96034533	HOSE LINES DRIVE UNIT
HOSE CPL. CONTI KWS 8X300	96031888	2450	1	331	96034533	HOSE LINES DRIVE UNIT
HOSE CPL. CONTI KWS 8X440	96034540	2453	1	331	96034533	HOSE LINES DRIVE UNIT
HOSE CPL. CONTI-KWS 20X70	96068483	(2800)	1	430	969085208	HEATING, PRE-ASSEMBLED
HOSE CPL. CONTI-KWS 42X50	96014317	844	1	99	96035799	HOSE LINES CRAWLER
HOSE CPL. CONTI-KWS 42X50	96014317	829	1	116	96035798	HOSE LINES CRAWLER
HOSE CPL. FLEXIT-1T24 38X1	965861108	340	3	597	918739608	HOSE LINES SUPERSTRUCT
HOSE CPL. FLEXIT-1T24 38X2	966051108	339	1	597	918739608	HOSE LINES SUPERSTRUCT
HOSE CPL. FLEXIT-1T24 38X3	968352108	377	1	597	918739608	HOSE LINES SUPERSTRUCT
HOSE CPL. FLEXIT-1T24 38X70	968151808	321	1	596	918739608	HOSE LINES SUPERSTRUCT
HOSE CPL. FLEXIT-1T24 38X82	968151908	322	1	596	918739608	HOSE LINES SUPERSTRUCT
HOSE CPL. GH001 10X1800	969041408	(1102)	1	601	918628408	AIR COND. UNIT SUPERSTRU
HOSE CPL. GH001 13X5200	964476008	(1100)	1	601	918628408	AIR COND. UNIT SUPERSTRU
HOSE CPL. GH001 8X1160	969637808	(1103)	1	601	918628408	AIR COND. UNIT SUPERSTRU
HOSE CPL. GH001 8X6700	969452608	(1101)	1	601	918628408	AIR COND. UNIT SUPERSTRU
HOSE CPL. GH425-10 16X1160	924496108	813	2	58	96035802	HOSE LINES CENTRE SECTIO
HOSE CPL. GH425-10 16X1400	923853008	314	1	596	918739608	HOSE LINES SUPERSTRUCT
HOSE CPL. GH425-10 16X1520	96035865	816	4	58	96035802	HOSE LINES CENTRE SECTIO
HOSE CPL. GH425-10 16X1650	924134808	332	1	597	918739608	HOSE LINES SUPERSTRUCT
HOSE CPL. GH425-10 16X1700	923342808	333	1	597	918739608	HOSE LINES SUPERSTRUCT
HOSE CPL. GH425-10 16X1750	920715608	800	12	58	96035802	HOSE LINES CENTRE SECTIO
HOSE CPL. GH425-10 16X1750	920715608	814	4	58	96035802	HOSE LINES CENTRE SECTIO
HOSE CPL. GH425-10 16X2000	921990108	342	1	597	918739608	HOSE LINES SUPERSTRUCT
HOSE CPL. GH425-10 16X2000	969935008	341	1	597	918739608	HOSE LINES SUPERSTRUCT
HOSE CPL. GH425-10 16X450	969633008	1375	1	590	969347008	HOSE LINES ADDITIONAL PA
HOSE CPL. GH425-10 16X470	925686208	1376	1	590	969347008	HOSE LINES ADDITIONAL PA
HOSE CPL. GH425-10 16X480	924741208	303	1	596	918739608	HOSE LINES SUPERSTRUCT
HOSE CPL. GH425-10 16X480	924741208	304	1	596	918739608	HOSE LINES SUPERSTRUCT
HOSE CPL. GH425-10 16X740	926315908	815	2	58	96035802	HOSE LINES CENTRE SECTIO
HOSE CPL. GH425-12 19X680	925352308	360	1	597	918739608	HOSE LINES SUPERSTRUCT
HOSE CPL. GH425-12 19X700	922068108	368	1	597	918739608	HOSE LINES SUPERSTRUCT
HOSE CPL. GH425-12 19X960	923702508	803	1	58	96035802	HOSE LINES CENTRE SECTIO
HOSE CPL. GH425-8 12X1140	963170408	308	1	596	918739608	HOSE LINES SUPERSTRUCT
HOSE CPL. GH425-8 12X1600	923343608	309	1	596	918739608	HOSE LINES SUPERSTRUCT
HOSE CPL. GH425-8 12X1650	923343408	(1447)	1	622	969426308	AUX. HYDR. FOLDING JIB SP

Description	Item	Pos.	Quantity	Page	Assembly	Description
HOSE CPL. GH425-8 12X1800	966142408	306	1	596	918739608	HOSE LINES SUPERSTRUCT
HOSE CPL. GH425-8 12X2050	924567508	(1445)	1	622	969426308	AUX. HYDR. FOLDING JIB SP
HOSE CPL. GH425-8 12X2100	923087208	(1446)	1	622	969426308	AUX. HYDR. FOLDING JIB SP
HOSE CPL. GH425-8 12X2400	966350208	307	1	596	918739608	HOSE LINES SUPERSTRUCT
HOSE CPL. GH506 31X1620	962913408	480	3	718	968187108	HOSE LINES TELESCOPIC
HOSE CPL. GH506-16 25X1020	968150108	1385	1	619	968083708	HOSE LINES HOISTING GEAR
HOSE CPL. GH506-16 25X1020	969634608	380	1	597	918739608	HOSE LINES SUPERSTRUCT
HOSE CPL. GH506-16 25X1060	966145808	1270	1	619	968083708	HOSE LINES HOISTING GEAR
HOSE CPL. GH506-16 25X1080	968150008	1384	1	619	968083708	HOSE LINES HOISTING GEAR
HOSE CPL. GH506-16 25X1100	968149908	1269	1	619	968083708	HOSE LINES HOISTING GEAR
HOSE CPL. GH506-16 25X1200	96040847	376	1	597	918739608	HOSE LINES SUPERSTRUCT
HOSE CPL. GH506-16 25X1300	963926708	383	1	597	918739608	HOSE LINES SUPERSTRUCT
HOSE CPL. GH506-16 25X1400	965155808	236	1	596	918739608	HOSE LINES SUPERSTRUCT
HOSE CPL. GH506-16 25X1400	968351808	381	1	597	918739608	HOSE LINES SUPERSTRUCT
HOSE CPL. GH506-16 25X1550	969634008	235	1	596	918739608	HOSE LINES SUPERSTRUCT
HOSE CPL. GH506-16 25X1620	968349908	1251	1	619	968083708	HOSE LINES HOISTING GEAR
HOSE CPL. GH506-16 25X1750	967618508	385	1	597	918739608	HOSE LINES SUPERSTRUCT
HOSE CPL. GH506-16 25X600	969634708	382	1	597	918739608	HOSE LINES SUPERSTRUCT
HOSE CPL. GH506-16 25X720	963337608	1372	1	590	969347008	HOSE LINES ADDITIONAL PA
HOSE CPL. GH506-16 25X800	963171408	1373	1	590	969347008	HOSE LINES ADDITIONAL PA
HOSE CPL. GH506-16 25X940	968352008	384	1	597	918739608	HOSE LINES SUPERSTRUCT
HOSE CPL. GH506-16 25X960	968149608	1250	1	619	968083708	HOSE LINES HOISTING GEAR
HOSE CPL. HPC 4X1000	963560708	411	1	597	918739608	HOSE LINES SUPERSTRUCT
HOSE CPL. HPC 4X2850	968841908	890	1	58	96035802	HOSE LINES CENTRE SECTIO
HOSE CPL. HPC 4X3800	922628908	410	1	597	918739608	HOSE LINES SUPERSTRUCT
HOSE CPL. HPC 4X4900	920983508	891	1	58	96035802	HOSE LINES CENTRE SECTIO
HOSE CPL. KUNSTSTOFF 8X60	96013988	2333	1	504	96011801	HOSE LINES
HOSE DIN1283 11X300	12104544	(1)	1	151	919328608	TOOLS AND ACCESSORIES
HOSE DN16 500	510501008	301	2	496	969763408	PIPEWORK AIR INSTALLATIO
HOSE DN3,5-GU23725 GUMMI	591080608	28	0.25	415	916163008	WIPERS INSTALLATION
HOSE DN82-UNIE13 SCHWAR	11000901	11	2.15	412	916168308	AIR DUCT
HOSE GUARD DN44-65 SGX50	10449843	300	5.2	132	968077208	HYDRAULIC SUPPORT
HOSE GUARD SPIRAL DN30,5	10870633	25	0.75	426	917676208	HEATING CRANE DRIVER'S CA
HOSE GUARD SPIRAL DN30,5	10870633	26	0.5	426	917676208	HEATING CRANE DRIVER'S CA
HOSE GUIDE PRE-ASS.	925141508	9	1	657	919028808	DISPATCH ASSY.MECH.PART
HOSE GUIDE WELDED FE//ZN	925143708	1	1	659	925141508	HOSE GUIDE PRE-ASS.
HOSE LINE	96050638	400	1	426	917676208	HEATING CRANE DRIVER'S CA
HOSE LINE X300	790042214	7	1	151	919328608	TOOLS AND ACCESSORIES
HOSE LINE X300	790042914	8	1	151	919328608	TOOLS AND ACCESSORIES
HOSE LINES	96057002	10	1	159	96056969	ADDITIONAL HYDRAULICS
HOSE LINES	96069293	400	1	430	969085208	HEATING, PRE-ASSEMBLED
HOSE LINES ADDITIONAL PAR	969347008	10	1	552	918732808	HYDRAULICS
HOSE LINES AIR CONDITIONIN	96018575	500	1	601	918628408	AIR COND. UNIT SUPERSTRU
HOSE LINES CENTRE SECTIO	96035802	10	1	56	96035801	HYDRAULIC EQUIPM.CENTER
HOSE LINES CRAWLER	96035798	10	1	115	96035792	HYDR.TRAVEL DRIVE
HOSE LINES CRAWLER	96035799	10	1	98	96035796	HYDR.TRAVEL DRIVE
HOSE LINES DRIVE UNIT	96034533	290	1	280	918731408	DRIVE ASSEMBLY CPL.
HOSE LINES DRUCKLUFT OW	969842608	10	1	496	969763408	PIPEWORK AIR INSTALLATIO
HOSE LINES ENGINE PREASS	96034456	50	1	286	919007708	DRIVE ASSEMBLY, PRE-ASSE
HOSE LINES FOLDING JIB	968222808	10	1	722	967785408	ADDNL.HYDR. FOLDING JIB
HOSE LINES FOLDING JIB WI	968223308	10	1	728	967785008	ADDNL.HYDR. FOLDING JIB
HOSE LINES FOLDING JIB WI	969426408	10	1	622	969426308	AUX. HYDR. FOLDING JIB SP
HOSE LINES FUEL	96034873	2	1	341	91002861	FUEL FEED
HOSE LINES HOISTING GEAR	968083708	10	1	616	967784808	HYDR.AUXILIARY HOISTING
HOSE LINES OW STUFE 4	96011801	20	1	500	918731808	UREA PLANT
HOSE LINES SUPERSTRUCT	918739608	191	1	14		LIEBHERR LTR 1220
HOSE LINES SUPPORT SYSTE	968077308	10	1	132	968077208	HYDRAULIC SUPPORT
HOSE LINES TELESCOPIC	968187108	10	1	717	967784508	HYDR.F.TELESCOPIC BOOM
HOSE NIPPLE	10142668	1	1	249	10142744	COOLING WATER AIR BLEED
HOSE NIPPLE 11SMn30+C	10140969	5	1	249	10142744	COOLING WATER AIR BLEED

Description	Item	Pos.	Quantity	Page	Assembly	Description
HOSE NIPPLE CE-0, H54	9140351	6	2	232	10145173	INTAKE STACK ASSEMBLY
HOSE NIPPLE CE-0, H54	9140351	26	1	252	10140729	EXHAUST TC MOUNTING
HOSE PROTECTION WELDM	969444008	19	1	172	918731108	ASSEMBLY PARTS F.SLEWING
HOSE UNION JOINT 0 MS	602440708	513	1	49	96045228	WIRING HARNESS
HOUSING	511015208	1	1	588	511419608	PRESSURE LIMITING VALVE
HOUSING	570063108	1	1	585	511433908	PRESSURE LIMITING VALVE
HOUSING	570109108	3	1	359	510229408	HYDRO MOTOR
HOUSING 12-POL	10099861	510	1	48	96045227	WIRING HARNESS
HOUSING 12-POL	10099861	506	1	535	96037136	WIRING HARNESS
HOUSING 15-POLE	10099863	512	1	48	96045227	WIRING HARNESS
HOUSING 15-POLE	10099863	510	7	542	96045387	CABLES, BASIC CONSTRUCTI
HOUSING 18-POL	10099864	502	3	464	96036956	WIRING HARNESS
HOUSING 18-POL	10099864	519	5	542	96045387	CABLES, BASIC CONSTRUCTI
HOUSING 21-POLE	10099856	501	2	48	96045227	WIRING HARNESS
HOUSING 21-POLE	10099856	521	9	542	96045387	CABLES, BASIC CONSTRUCTI
HOUSING 4-POL	602331308	507	4	462	96036955	WIRING HARNESS
HOUSING 4-POL	602331308	505	2	464	96036956	WIRING HARNESS
HOUSING 4-POL	602331308	501	1	538	96037133	LEAD
HOUSING 4-POL	602331308	504	32	542	96045387	CABLES, BASIC CONSTRUCTI
HOUSING 4-POL	602331308	501	1	642	96043733	WIRING HARNESS
HOUSING 4-POL	602339308	507	3	49	96045228	WIRING HARNESS
HOUSING 6-POL	602325508	506	3	462	96036955	WIRING HARNESS
HOUSING 6-POL	602325508	510	1	464	96036956	WIRING HARNESS
HOUSING 6-POL	602325508	504	1	532	96045385	WIRING HARNESS
HOUSING 6-POL	602325508	526	2	542	96045387	CABLES, BASIC CONSTRUCTI
HOUSING 8-POL	602300508	514	1	462	96036955	WIRING HARNESS
HOUSING 8-POL	602300608	516	1	462	96036955	WIRING HARNESS
HOUSING 8-POL	602301408	501	1	49	96045228	WIRING HARNESS
HOUSING 8-POL	602301408	507	2	542	96045387	CABLES, BASIC CONSTRUCTI
HOUSING 8-POL	602301408	502	1	642	96043733	WIRING HARNESS
HOUSING 9-POL	10099860	508	1	48	96045227	WIRING HARNESS
HOUSING 9-POL	10099860	527	2	542	96045387	CABLES, BASIC CONSTRUCTI
HOUSING GD-ZN SW GEPULV	704253308	6	4	42	966167808	COVER COMPL.
HOUSING GD-ZN SW GEPULV	704253308	3	5	86	967972208	COVER PRE-ASSY.
HOUSING GD-ZN SW GEPULV	704253308	3	2	87	967972308	COVER PRE-ASSY.
HOUSING GD-ZN SW GEPULV	704253308	3	2	88	967972408	COVER PRE-ASSY.
HOUSING GD-ZN SW GEPULV	704253308	3	2	89	968270108	COVER PRE-ASSY.
HOUSING GD-ZN SW GEPULV	704253308	3	2	90	968274208	COVER PRE-ASSY.
HOUSING GD-ZN SW GEPULV	704253308	3	5	110	968055808	COVER PRE-ASSY.
HOUSING GD-ZN SW GEPULV	704253308	13	1	334	96023117	BATTERY BOX, PRE-ASSEMB
HOUSING PUR SPF	975850708	7	1	399	917305408	INTERNAL PANELLING INSTA
HOUSING RAL 9005 SPF	97136698	1	1	385	96048757	CUP HOLDER
HYDR.AUXILIARY HOISTING	917267308	333	1	14		LIEBHERR LTR 1220
HYDR.AUXILIARY HOISTING	967784808	4	1	614	917267308	HYDR.AUXILIARY HOISTING
HYDR.F.TELESCOPIC BOOM	917262408	217	1	14		LIEBHERR LTR 1220
HYDR.F.TELESCOPIC BOOM	967784508	4	1	715	917262408	HYDR.F.TELESCOPIC BOOM
HYDR.TRAVEL DRIVE	919296408	4	1	103	91001373	CRAWLER CARRIER RIGHT CP
HYDR.TRAVEL DRIVE	919296508	4	1	70	91001371	CRAWLER TRACK CARRIER LE
HYDR.TRAVEL DRIVE	96035792	4	1	113	919296408	HYDR.TRAVEL DRIVE
HYDR.TRAVEL DRIVE	96035796	4	1	96	919296508	HYDR.TRAVEL DRIVE
HYDRAULIC BALLASTING	918956108	153	1	13		LIEBHERR LTR 1220
HYDRAULIC EQUIPM.CENTER	919296608	3	1	32	919499308	CENTRAL SECTION CRAWLER
HYDRAULIC EQUIPM.CENTER	96035801	4	1	53	919296608	HYDRAULIC EQUIPM.CENTER
HYDRAULIC SUPPORT	917430308	100	1	129	919644008	HYDRAULIC SUPPORT
HYDRAULIC SUPPORT	919644008	14	1	12		LIEBHERR LTR 1220
HYDRAULIC SUPPORT	968077208	4	1	130	917430308	HYDRAULIC SUPPORT
HYDRAULIC-TYPE LUBRICAT.N	11080392	15	1	525	10327065	ELECTRIC PUMP
HYDRAULIC-TYPE LUBRICAT.N	7743242	16	2	673	917292008	TELESCOPIC SECTION 1 PRE
HYDRAULIC-TYPE LUBRICAT.N	7743242	16	2	677	917292108	TELESCOPIC SECT.2 PRE-AS
HYDRAULIC-TYPE LUBRICAT.N	7743242	16	2	681	917292208	TELESCOPIC SECT.3 PRE-ASS

Description	Item	Pos.	Quantity	Page	Assembly	Description
HYDRAULIC-TYPE LUBRICAT.N	7743242	16	2	685	917292308	TELESCOPIC SECT.IV PRE-A
HYDRAULIC-TYPE LUBRICAT.N	7743242	30	2	690	917292408	TELESCOPIC SECT.5 PRE-AS
HYDRAULIC-TYPE LUBRICAT.N	7743242	6	1	753	919007108	LOAD HOOK
HYDRAULIC-TYPE LUBRICAT.N	571578608	2	1	139	774375108	PASSAGE NIPPLE BLOCK
HYDRAULIC-TYPE LUBRICAT.	774301101	18	1	367	90208882	COMPACT ROPE WINCH
HYDRAULICS	918732808	185	1	14		LIEBHERR LTR 1220
HYDRAULICS UPPER CARRI	96045351	4	1	552	918732808	HYDRAULICS
HYDRO CYLINDER 65/36-480	512363708	4	1	761	917267508	TRANSPORT MOUNTING
HYDRO CYLINDER 70/45-50 SP	10443748	1	1	363	917259608	ROTATING PLATFORM LOCK
HYDRO MOTOR	10872388	8	1	593	11622561	OIL AIR COOLER
HYDRO MOTOR A2FM 23CM³/	510229408	2	2	351	919369308	SLEWING GEAR
IDENTIFICATION STRIPS	602762908	7	1	546	967589508	TERMINAL STRIP
IDLER CPL. B9X740	12105240	1	1	83	11320954	GUIDE WHEEL UNIT
IGNITION STARTER SWITCH 3	10335557	50	1	467	96053500	ELECTRIC ADD-ON PARTS CA
IMMERSION HEATER 120V 1K	10025057	1	1	629	918377508	COOLING WATER PRE-HEATIN
INCLINATION SENSOR +/-25°	11001194	10	1	39	96045225	ELECTR.FOR CENTER SECTIO
INDICATOR LAMP	606143508	11	2	471	96022872	CONTROL PANEL ROOF
INDUCTIVE SENSOR BERUE	10354584	10	1	31	968036408	LIMIT SWITCH, PRE-ASSEMB
INDUCTIVE SENSOR BERUE	10354584	58	1	468	96053500	ELECTRIC ADD-ON PARTS CA
INDUCTIVE SENSOR BERUE	10354584	(6)	6	701	966134608	ADD-ON PARTS CYLINDER
INDUCTIVE SENSOR BERUE	10354584	(5)	1	712	966591508	LIMIT SWITCH ADD-ON
INDUCTIVE SENSOR BERUE	692312708	(7)	2	701	966134608	ADD-ON PARTS CYLINDER
INFORMATION SIGN 120X80 K	97094940	107	1	164	917862808	LABELLING GREAT BRITAIN
INFORMATION SIGN 208X100 K	97131530	110	1	164	917862808	LABELLING GREAT BRITAIN
INFORMATION SIGN 23X12 K	97082749	1	1	769	918462408	SIGN EXTERNAL SUPPLY
INFORMATION SIGN 55X55 K	97158853	5	1	155	91001571	BOLT EXTRACTION DEVICE
INFORMATION SIGN 60X90 K	97135430	17	1	164	917862808	LABELLING GREAT BRITAIN
INFORMATION SIGN 60X90 K	97135431	19	1	164	917862808	LABELLING GREAT BRITAIN
INFORMATION SIGN 90X80 K	97133618	50	1	26	96034894	PROTECTION PLATE CPL.
INFORMATION SIGN 90X80 K	97133617	50	1	29	96034977	PROTECTION PLATE
INJECTION LINE R-MOTORXD	10143826	1	1	230	10143825	INJECTION LINES
INJECTION LINE R-MOTORXD	10143827	2	3	230	10143825	INJECTION LINES
INJECTION LINES R-MOTORXD	10143825	215	1	176	13455297	DIESEL ENGINE
INJECTOR LI2.7-20-SF-950	10147680	1	1	221	10152867	INJECTOR WITH FASTENING
INJECTOR LI2.7-20-SF-950	13574085	1	1	222	10152874	RK INJECTOR
INJECTOR WITH FASTENING LI	10152867	190	4	176	13455297	DIESEL ENGINE
INLET MODULE SCRFILTER GE	11428887	1	1	516	11429728	SCRFILTER ASSEMBLY
INLET VALVE	10144556	(2)	2	202	10149580	CYLINDER HEAD ASSEMBLY
INLET VALVE	10144556	2	2	204	10149579	CYLINDER HEAD PRE-ASSY.
INLET VALVE SEAT INSERT PL	10149739	6	2	205	10149578	CYLINDER HEAD
INNER RING 40X45X20	747404001	71	1	353	90008901	SLEWING GEAR DRIVE
INNER WHEEL Z=-90 42CrMo4	927746101	55	1	370	939292201	PLANETARY GEARBOX
INNER WHEEL Z=74	927745401	20	1	370	939292201	PLANETARY GEARBOX
INPUT/OUTPUT MODULE LSB-	11213706	100	1	550	968253608	UNIVERSAL INPUT-OUTPUT M
INSERT M20 2X5 NBR	602421908	525	2	49	96045228	WIRING HARNESS
INSERT M20 2X5 NBR	602421908	504	1	142	96045205	WIRING HARNESS
INSERT PART 10X91X152 PA6	97032167	7	4	129	919644008	HYDRAULIC SUPPORT
INSERT SKINTOP 3X5,3MM	10333297	(506)	1	741	917598408	ELECTRIC MEASURING & WAR
INSERTION BRIDGE	602735508	39	47	540	91000922	SWITCHBOX MOUNTING PART
INSERTION MODULE 12POLIG	965547208	2	1	546	967589508	TERMINAL STRIP
INSIDE HANDLE ZUG	11005984	2	1	422	966230408	CLOSING DEVICE
INSTALLATION BRAKE COMP	10127566	330	1	177	13455297	DIESEL ENGINE
INSTALLATION SWITCH CAB.	968514508	20	1	381	919010208	CRANE OPERATOR CABIN P
INSTRUMENT CLUSTER ELEC	96030724	1	1	467	96053500	ELECTRIC ADD-ON PARTS CA
INSULATING HOSE DN10X0,65	11082604	204	4.29	49	96045228	WIRING HARNESS
INSULATING HOSE DN10X0,65	11082604	204	4.43	462	96036955	WIRING HARNESS
INSULATING HOSE DN10X0,65	11082604	204	0.73	464	96036956	WIRING HARNESS
INSULATING HOSE DN10X0,65	11082604	204	7.12	534	96037136	WIRING HARNESS
INSULATING HOSE DN12X0,65	11082605	205	1.63	462	96036955	WIRING HARNESS
INSULATING HOSE DN12X0,65	11082605	205	0.86	532	96045385	WIRING HARNESS

Description	Item	Pos.	Quantity	Page	Assembly	Description
INSULATING HOSE DN12X0,65	11082605	205	1.33	534	96037136	WIRING HARNESS
INSULATING HOSE DN12X0,65	11082605	205	5.21	536	96037137	WIRING HARNESS
INSULATING HOSE DN12X0,8	11005151	284	5.59	536	96037137	WIRING HARNESS
INSULATING HOSE DN14X0,65	11082606	206	1.18	534	96037136	WIRING HARNESS
INSULATING HOSE DN14X0,8	603012608	11	1.5	629	918377508	COOLING WATER PRE-HEATIN
INSULATING HOSE DN18X0,85	11082608	208	0.28	534	96037136	WIRING HARNESS
INSULATING HOSE DN4X0,5	11082601	4	0.28	474	963398008	PREMOUNT.AXIAL FLOW FAN
INSULATING HOSE DN6X0,5	11082602	202	2.31	49	96045228	WIRING HARNESS
INSULATING HOSE DN6X0,5	11082602	15	0.04	410	965784408	ROOF WINDOW PRE-ASS.
INSULATING HOSE DN6X0,5	11082602	202	7.44	462	96036955	WIRING HARNESS
INSULATING HOSE DN6X0,5	11082602	202	5.94	464	96036956	WIRING HARNESS
INSULATING HOSE DN6X0,5	11082602	202	24.41	532	96045385	WIRING HARNESS
INSULATING HOSE DN6X0,5	11082602	202	14.02	534	96037136	WIRING HARNESS
INSULATING HOSE DN6X0,5	11082602	202	8.82	536	96037137	WIRING HARNESS
INSULATING HOSE DN6X0,5	11082602	202	2.1	642	96043733	WIRING HARNESS
INSULATING HOSE DN8X0,65	11082603	203	2.41	49	96045228	WIRING HARNESS
INSULATING HOSE DN8X0,65	11082603	203	2.2	462	96036955	WIRING HARNESS
INSULATING HOSE DN8X0,65	11082603	203	2.77	464	96036956	WIRING HARNESS
INSULATING HOSE DN8X0,65	11082603	203	2.14	532	96045385	WIRING HARNESS
INSULATING HOSE DN8X0,65	11082603	203	9.43	534	96037136	WIRING HARNESS
INSULATING HOSE DN8X0,65	11082603	203	5.23	536	96037137	WIRING HARNESS
INSULATING HOSE ISO 3302-1	11006584	122	4	291	96034631	RADIATOR, PRE-ASSEMBLED
INSULATING HOSE ISO 3302-1	11006584	60	3.5	451	968977308	SOUND PROOFING/SOUND I
INSULATING MAT 10X455X110	97038836	15	1	426	917676208	HEATING CRANE DRIVER'S CA
INSULATING MAT 13X115X179	97038834	13	1	426	917676208	HEATING CRANE DRIVER'S CA
INSULATING MAT 20X115X199	97038835	14	1	426	917676208	HEATING CRANE DRIVER'S CA
INSULATING MAT 20X630X440	97050672	12	1	451	968977308	SOUND PROOFING/SOUND I
INSULATING MAT 20X630X440	97055971	8	1	451	968977308	SOUND PROOFING/SOUND I
INSULATING MAT 40X1055X7	97034281	101	1	447	96017704	RADIATOR HOOD CPL.
INSULATING MAT 40X310X235	97050671	7	1	451	968977308	SOUND PROOFING/SOUND I
INSULATING MAT 40X422X93 E	97038833	12	1	426	917676208	HEATING CRANE DRIVER'S CA
INSULATING MAT 40X720X590	97034322	3	1	451	968977308	SOUND PROOFING/SOUND I
INSULATING MAT 40X720X695	97050669	5	1	451	968977308	SOUND PROOFING/SOUND I
INSULATING MAT 40X740X370	973767608	102	1	447	96017704	RADIATOR HOOD CPL.
INSULATING MAT 40X775X10	97034282	103	1	447	96017704	RADIATOR HOOD CPL.
INSULATING MAT 50X60X182 E	97038837	16	1	426	917676208	HEATING CRANE DRIVER'S CA
INSULATING MAT 50X78X235 E	97038838	17	1	426	917676208	HEATING CRANE DRIVER'S CA
INSULATING MATERIAL 20X20	10425409	175	1	520	918731908	AIR FILTER UNIT
INSULATING RING	691041708	6	37	52	11346779	SLIP RING TRANSMITTER
INTAKE 50.0X78 S355J2C+C FE	953661008	400	1	288	919007708	DRIVE ASSEMBLY, PRE-ASSE
INTAKE 82.5X87 S355J2H FE//	976490008	401	1	288	919007708	DRIVE ASSEMBLY, PRE-ASSE
INTAKE STACK ASSEMBLY R	10145173	221	1	176	13455297	DIESEL ENGINE
INTAKE STACK R-MOTORXD93	11444999	1	1	232	10145173	INTAKE STACK ASSEMBLY
INTERLOCKING	967978908	20	1	489	918956108	HYDRAULIC BALLASTING
INTERMED.PLATE VALVE	571414608	3	1	572	10413106	CONTROL BLOCK
INTERMED.PLATE VALVE	571562408	4	1	572	10413106	CONTROL BLOCK
INTERMEDIATE GEAR CPL.	9072906	331	1	177	13455297	DIESEL ENGINE
INTERMEDIATE GEAR PRE-AS	9072904	1	1	241	9072906	INTERMEDIATE GEAR CPL.
INTERMEDIATE PART 11SMnP	10132935	16	1	229	10143342	LEAK OIL RETURN LINE
INTERMEDIATE RING	10014730	8	1	136	11347526	ELECTRIC PUMP
INTERMEDIATE RING	10014730	8	1	525	10327065	ELECTRIC PUMP
INTERMEDIATE WHEEL AXLE 4	9072907	2	1	241	9072906	INTERMEDIATE GEAR CPL.
INTERNAL LIGHT 6W 24V WEIS	10342854	8	2	467	96053500	ELECTRIC ADD-ON PARTS CA
INTERNAL MULTI-DISC	10175222	(2)	7	353	90008901	SLEWING GEAR DRIVE
INTERNAL MULTI-DISC	10175222	6	7	356	90025781	BRAKE MULTI-DISC SET
INTERNAL MULTI-DISC	737350503	(5)	8	78	90028956	TRACTION DRIVE
INTERNAL PANELLING INSTAL	917305408	1	1	395	917304508	CRANE OPERATOR CABIN P
JAW 42CrMoS4+QT	10150144	1	1	224	10135434	PRESSURE ADAPTER FASTEN
JAW 42CrMoS4+QT	10150144	2	1	225	10153151	HIGH PRESS.CONNECTOR W
JAW 42CrMoS4+QT	11403994	2	1	221	10152867	INJECTOR WITH FASTENING

Description	Item	Pos.	Quantity	Page	Assembly	Description
JOINER AL	11002980	10	1	637	968290608	STAND
JOINER AL	11002980	10	1	640	968267208	STAND
JOYSTICK LSB-AMS SPF	10343693	4	2	467	96053500	ELECTRIC ADD-ON PARTS CA
KBA-RING 130X121,1X3,5	11351303	3	1	201	10146367	PISTON CPL.
KEEPER 20X5X80	11212351	4	1	753	919007108	LOAD HOOK
KEY	10873434	(1)	1	551	969061708	CARRIER PLATE, PRE-ASSE
KEYBOARD UNIT LSB-TE PR	96052297	3	2	467	96053500	ELECTRIC ADD-ON PARTS CA
KEYBOARD UNIT LSB-TE-B SP	12101942	(80)	1	467	96053500	ELECTRIC ADD-ON PARTS CA
KEYBOARD UNIT SPF	10816196	2	1	470	96030724	INSTRUMENT CLUSTER ELEC
KEYBOARD UNIT SPF	10874785	31	1	467	96053500	ELECTRIC ADD-ON PARTS CA
KEYPAD BUTTON	606144008	15	2	471	96022872	CONTROL PANEL ROOF
KNOTTED-LINK CHAIN DIN 568	740001808	39	0.3	761	917267508	TRANSPORT MOUNTING
KNURLED BUTTON 21-M4 PA	10652206	8	2	406	916162508	WINDOW ASSEMBLY
KNURLED BUTTON PA	10800916	49	4	399	917305408	INTERNAL PANELLING INSTA
KNURLED SCREW M5X10 PA6	10449664	25	8	540	91000922	SWITCHBOX MOUNTING PART
L NECK EL 12L M18X1,5 CR6-F	247128602	614	1	56	96035801	HYDRAULIC EQUIPM.CENTER
L NECK EL 12L M18X1,5 CR6-F	247128602	609	1	98	96035796	HYDR.TRAVEL DRIVE
L NECK EL 12L M18X1,5 CR6-F	247128602	609	1	115	96035792	HYDR.TRAVEL DRIVE
L NECK EL 12L M18X1,5 CR6-F	247128602	639	8	563	96045351	HYDRAULICS UPPER CARRI
L NECK EL 12L M18X1,5 CR6-F	247128602	601	2	617	967784808	HYDR.AUXILIARY HOISTING
L NECK EL 12L M18X1,5 CR6-F	247128602	611	2	717	967784508	HYDR.F.TELESCOPIC BOOM
L NECK EL 18L CR6-FREI	247128502	842	1	565	96045351	HYDRAULICS UPPER CARRI
L NECK EL 22L CR6-FREI	247138602	790	2	564	96045351	HYDRAULICS UPPER CARRI
L NECK EL 22L CR6-FREI	247138602	600	3	617	967784808	HYDR.AUXILIARY HOISTING
L RING 50X2	429612001	57	1	78	90028956	TRACTION DRIVE
LABEL 160X80X0,5	12934664	483	1	178	13455297	DIESEL ENGINE
LABEL 80X80X0,5	10128890	728	1	179	13455297	DIESEL ENGINE
LABELLING GREAT BRITAIN	917862808	42	1	12		LIEBHERR LTR 1220
LABELS 10X90 POLYESTER	11007853	301	1	45	968252908	BTB PROGRAMMED
LABELS 10X90 POLYESTER	11007853	(3)	1	471	96022872	CONTROL PANEL ROOF
LABELS 10X90 POLYESTER	11007853	(301)	1	540	91000922	SWITCHBOX MOUNTING PART
LABELS 10X90 POLYESTER	11007853	301	1	550	968253608	UNIVERSAL INPUT-OUTPUT M
LADDER ATTACHMENT	917268208	1	1	766	917268108	TOOLS
LADDER BRACKET	10326792	2	1	767	917268208	LADDER ATTACHMENT
LAMP SUPPORT 4X163X370 S	97126205	24	1	172	918731108	ASSEMBLY PARTS F.SLEWING
LASHING STRAP 0,35MX18MM	7621780	5	1	741	917598408	ELECTRIC MEASURING & WAR
LASHING STRAP 0,75MX18MM	10020520	120	4	287	919007708	DRIVE ASSEMBLY, PRE-ASSE
LASHING STRAP 1,25MX25MM	11492423	12	1	767	917268208	LADDER ATTACHMENT
LASHING STRAP 1MX35MM PO	11481963	78	1	150	919499408	CENTRAL BALLAST
LASHING STRAP 4MX35MM PO	10491593	79	2	150	919499408	CENTRAL BALLAST
LASHING STRAP EN 12195-2	779034708	3	1	752	917531708	BALLAST TRAVERSE
LATCH	11490010	31	1	764	512363708	HYDRO CYLINDER
LATCH CLAMP	602116008	14	4	381	919010208	CRANE OPERATOR CABIN P
LATCH GD-ZN SW GEPULVER	704278708	4	2	91	968709108	COVER PRE-ASSY.
LATCH GD-ZN SW GEPULVER	704278708	10	1	92	968420608	STORAGE BOX
LEAD	12104246	50	1	52	11346779	SLIP RING TRANSMITTER
LEAD 15 X 0,34 TPE-U	10428544	10	4.367	462	96036955	WIRING HARNESS
LEAD 15 X 0,34 TPE-U	10428544	11	4.367	462	96036955	WIRING HARNESS
LEAD 2 X 0,5	10815830	11	4.96	49	96045228	WIRING HARNESS
LEAD 2 X 0,5	10815830	12	4.96	49	96045228	WIRING HARNESS
LEAD 2 X 0,5	10815830	13	4.16	49	96045228	WIRING HARNESS
LEAD 2 X 0,5	10815830	14	4.16	49	96045228	WIRING HARNESS
LEAD 2 X 1	11620017	15	2.63	49	96045228	WIRING HARNESS
LEAD 2 X 1	11620017	9	3	462	96036955	WIRING HARNESS
LEAD 2 X 1	11620017	13	0.4	462	96036955	WIRING HARNESS
LEAD 2 X 1	11620017	5	9.93	538	96037133	LEAD
LEAD 2 X 1	11620017	5	4.06	644	96037132	LEAD
LEAD 2 X 1,5	11341599	18	5.83	532	96045385	WIRING HARNESS
LEAD 25 X 0,34 TPE-U	10428545	7	4.375	462	96036955	WIRING HARNESS
LEAD 7 G 1	10871285	18	1.8	49	96045228	WIRING HARNESS

Description	Item	Pos.	Quantity	Page	Assembly	Description
LEAD W510	96006879	58	1	531	96045384	CABLE LIST SLEWING PLATF
LEAD W512	968314308	(1)	1	616	967784808	HYDR.AUXILIARY HOISTING
LEAD W536	966394808	170	1	711	966291008	TERMINAL BOX
LEAD W562	96037133	70	1	531	96045384	CABLE LIST SLEWING PLATF
LEAD W563	96037132	23	1	643	96037130	EQUIPMENT CAMERA SLEW C
LEAD W571	968401508	57	1	531	96045384	CABLE LIST SLEWING PLATF
LEAD W587	96037138	62	1	531	96045384	CABLE LIST SLEWING PLATF
LEAD W588	96022970	63	1	531	96045384	CABLE LIST SLEWING PLATF
LEAD W591	96023931	11	1	335	96023914	ELECTRIC FOR BATTERY BOX
LEAD W592	96023932	14	1	335	96023914	ELECTRIC FOR BATTERY BOX
LEAD W593	96023930	10	1	335	96023914	ELECTRIC FOR BATTERY BOX
LEAD W620	968648508	10	1	626	917269308	CHARGER
LEAD W621	968648408	9	1	626	917269308	CHARGER
LEAD W682	967921908	20	1	630	917368108	EL.COOLANT PREHEAT
LEAD W693	965751108	15	1	625	918462708	EXTERNAL FEED
LEAD W694	965991908	10	1	627	917269408	CONSOLE AUX. REPLENISHIN
LEAD W900	966377308	120	1	711	966291008	TERMINAL BOX
LEAD W901	965760208	12	1	731	918124908	A-HEADL.SEARCHLIGHT PIVO
LEAD W902	965760308	13	1	731	918124908	A-HEADL.SEARCHLIGHT PIVO
LEAD W903	969723508	11	1	731	918124908	A-HEADL.SEARCHLIGHT PIVO
LEAD W910	966393608	140	1	711	966291008	TERMINAL BOX
LEAD W911	966395208	190	1	711	966291008	TERMINAL BOX
LEAD W912	966354408	4	1	708	966354008	CABLE DRUM COMPL.
LEAD W912A	966354508	6	1	708	966354008	CABLE DRUM COMPL.
LEAD W916	966361508	(1)	1	706	917262208	ELECTR. SYSTEM F. BOOM
LEAD W917	966394008	130	1	711	966291008	TERMINAL BOX
LEAD W921	966394208	160	1	711	966291008	TERMINAL BOX
LEAD W930	966357008	120	1	714	968708708	TERMINAL BOX CPL.
LEAD W931	96068455	13	1	735	918197708	EL.2 HOISTING LIMIT SWITCH
LEAD W932	966355308	110	1	714	968708708	TERMINAL BOX CPL.
LEAD W933Y	969047708	1	1	741	917598408	ELECTRIC MEASURING & WAR
LEAK OIL RETURN LINE	10143342	214	1	176	13455297	DIESEL ENGINE
LEG SPRING	571430508	5	1	649	10040024	POUCH SOCKET
LEG SPRING 2,5X13,5	571741908	19	1	764	512363708	HYDRO CYLINDER
LENGTH INDICATOR	11170185	25	1	704	10802064	ROPE LENGTH INDICATOR
LENGTH MEASURING CABLE	571841008	53	1	704	10802064	ROPE LENGTH INDICATOR
LENS	10875969	2	1	732	10872003	WORK LIGHT
LETTERING WIRE	965622108	996	20	48	96045227	WIRING HARNESS
LETTERING WIRE	965622108	996	20	50	96045228	WIRING HARNESS
LETTERING WIRE	965622108	996	8	463	96036955	WIRING HARNESS
LETTERING WIRE	965622108	996	8	464	96036956	WIRING HARNESS
LETTERING WIRE	965622108	996	62	533	96045385	WIRING HARNESS
LETTERING WIRE	965622108	996	124	535	96037136	WIRING HARNESS
LETTERING WIRE	965622108	996	52	537	96037137	WIRING HARNESS
LETTERING WIRE	965622108	996	3	738	96068455	LEAD
LETTERING WIRING HARNES	965622208	998	1	48	96045227	WIRING HARNESS
LETTERING WIRING HARNES	965622208	998	1	50	96045228	WIRING HARNESS
LETTERING WIRING HARNES	965622208	998	3	142	96045205	WIRING HARNESS
LETTERING WIRING HARNES	965622208	998	1	463	96036955	WIRING HARNESS
LETTERING WIRING HARNES	965622208	998	1	464	96036956	WIRING HARNESS
LETTERING WIRING HARNES	965622208	998	1	533	96045385	WIRING HARNESS
LETTERING WIRING HARNES	965622208	998	1	535	96037136	WIRING HARNESS
LETTERING WIRING HARNES	965622208	998	1	537	96037137	WIRING HARNESS
LETTERING WIRING HARNES	965622208	998	3	538	96037133	LEAD
LETTERING WIRING HARNES	965622208	998	2	642	96043733	WIRING HARNESS
LETTERING WIRING HARNES	965622208	998	3	644	96037132	LEAD
LETTERING WIRING HARNES	965622208	998	2	738	96068455	LEAD
LETTERING WIRING HARNES	965622208	(998)	2	741	917598408	ELECTRIC MEASURING & WAR
LEVEL SENSOR L=115 24V	10130406	22	1	174	13455297	DIESEL ENGINE
LEVEL SENSOR L=115 24V	10816943	1	1	193	10130406	LEVEL SENSOR

Description	Item	Pos.	Quantity	Page	Assembly	Description
LEVER	571430708	4	1	649	10040024	POUCH SOCKET
LEVER 30.0X285 S355J2C+C	97030031	6	1	492	967928508	LOCKING
LEVER FASTENER	11450420	8	2	449	968923508	FLAP RIGHT PRE-ASS.
LEVER FASTENER	11450420	5	2	457	969016008	FLAP LEFT FRONT PRE-ASS.
LEVER PRE-ASSY.	96050169	300	1	76	91001377	CRAWLER SUPPORT PREASS
LEVER PRE-ASSY.	96062678	400	1	76	91001377	CRAWLER SUPPORT PREASS
LEVER WELDED FE//ZNNI8//C	965426308	2	1	294	968026308	CLUTCH ACTUATOR
LICCON CONSOLE LCD5C-A	10886525	(80)	1	467	96053500	ELECTRIC ADD-ON PARTS CA
LICCON CONSOLE LSB-BSE	96033140	19	1	467	96053500	ELECTRIC ADD-ON PARTS CA
LID CPL	10551191	41	1	26	96034894	PROTECTION PLATE CPL.
LID CPL	10551191	41	1	29	96034977	PROTECTION PLATE
LID PLATE DIN 3015-1 L-DP 3	7005053	314	10	56	96035801	HYDRAULIC EQUIPM.CENTER
LID PLATE DIN 3015-1 L-DP 4	7008583	320	2	56	96035801	HYDRAULIC EQUIPM.CENTER
LID PLATE DIN 3015-1 L-DP 4	7008583	331	1	562	96045351	HYDRAULICS UPPER CARRI
LID PLATE DIN 3015-1 L-DP 5	5005219	317	7	561	96045351	HYDRAULICS UPPER CARRI
LID PLATE DIN 3015-1 L-DP 6	12102954	308	2	98	96035796	HYDR.TRAVEL DRIVE
LID PLATE DIN 3015-1 L-DP 6	12102954	308	2	115	96035792	HYDR.TRAVEL DRIVE
LID PLATE DIN 3015-2 S-DP-A	5005525	324	4	496	969763408	PIPEWORK AIR INSTALLATIO
LID PLATE DIN 3015-3 Z-DP 2	7362606	300	13	728	967785008	ADDNL.HYDR. FOLDING JIB
LIGHT BULB 1,2W 30V	607008708	13	1	471	96022872	CONTROL PANEL ROOF
LIGHT BULB DIN 49848 2,4W 6	607011108	(1)	2	153	928620108	ACCESSORIES
LIGHT BULB DIN 72601 70W 24	607023708	2	1	160	915731908	EL.COMP. DISPATCH ASSEM
LIMIT STOP	11485426	3	1	316	10871043	VARIABLE PUMP
LIMIT STOP 90X60X10 PA6G	97070985	102	4	76	91001377	CRAWLER SUPPORT PREASS
LIMIT STOP 90X60X10 PA6G	97070985	103	4	109	91001378	CRAWLER SUPPORT PREASS
LIMIT STOP RING 16,5X75X5	10875905	3	4	382	967986308	BEARING INSTALLATION
LIMIT SWITCH ADD-ON	968019508	50	1	20	91001569	CRAWLER TRACK TRAVEL G
LIMIT SWITCH ADD-ON AUSLE	965281408	10	1	527	919410708	ELECTR. SYSTEM F.SLEWING
LIMIT SWITCH ADD-ON AUSL	966591508	10	1	707	966290908	ELECTRIC F.BASE SECTION
LIMIT SWITCH AUSLEGERSTEI	966563508	8	1	712	966591508	LIMIT SWITCH ADD-ON
LIMIT SWITCH TASTEND SPF	606053108	(11)	2	529	968128908	EL.ADD-ON SET-LIMIT SWITCH
LIMIT SWITCH TASTEND SPF	606053108	(11)	2	529	968128908	EL.ADD-ON SET-LIMIT SWITCH
LIMIT SWITCH TQ200-RFID SP	10678395	2	1	705	966200208	ENCODER HEAD PIECE
LIMIT SWITCH TQ200-RFID SP	10678395	7	1	736	966479308	SENSOR LIFT TOP LIMIT SWI
LIMIT SWITCH, PRE-ASSEMB	968036408	1	2	30	968019508	LIMIT SWITCH ADD-ON
LINE CONNECTOR	5603876	517	1	462	96036955	WIRING HARNESS
LINE CONNECTOR	5603876	507	1	464	96036956	WIRING HARNESS
LINE CONNECTOR	5603876	517	1	542	96045387	CABLES, BASIC CONSTRUCTI
LINE FILTER	510674508	166	1	560	96045351	HYDRAULICS UPPER CARRI
LINEAR SLIDEWAY SYSTEM	11007589	5	1	387	916177508	STEP CPL.
LOAD HOLDING VALVE	511479408	151	1	722	967785408	ADDNL.HYDR. FOLDING JIB
LOAD HOLDING VALVE 400BA	10218310	180	1	561	96045351	HYDRAULICS UPPER CARRI
LOAD HOOK 12.5E SPF	919007108	310	1	14		LIEBHERR LTR 1220
LOAD RETAINING VLV ELEM	11002678	7	1	725	511479408	LOAD HOLDING VALVE
LOCATION FIXTURE PRE-ASS.	967933408	1	1	743	968412508	MECH MEAS AND WARNING D
LOCATION FIXTURE WELDED	968266508	1	1	744	967933408	LOCATION FIXTURE PRE-ASS.
LOCK PIECE HAKEN	704230208	8	2	157	96063087	STORAGE BOX
LOCK PIECE HAKEN	704230208	25	2	334	96023117	BATTERY BOX, PRE-ASSEMB
LOCK WASHER DIN 6799 7X0,9	12210037	3	1	268	10144098	FASTENING CLAMP
LOCK WASHER RIPP LOCK 24	12699046	68	92	76	91001377	CRAWLER SUPPORT PREASS
LOCK WASHER RIPP LOCK 24	12699046	68	92	109	91001378	CRAWLER SUPPORT PREASS
LOCK WASHER VS 10	423901508	26	1	608	939294001	ROPE DRUM
LOCK WASHER VS 10	423901508	53	12	610	939294201	PLANETARY GEARBOX
LOCK WASHER VS 10 ZN8M+P	4229913	53	12	370	939292201	PLANETARY GEARBOX
LOCK WASHER VS 12 ZN8M+P	423911201	93	8	78	90028956	TRACTION DRIVE
LOCK WASHER VS 20 ZN8M+P	423912001	69	12	78	90028956	TRACTION DRIVE
LOCK WASHER VS 8 ZN8M+P	423910801	27	8	353	90008901	SLEWING GEAR DRIVE
LOCK WASHER VS 8 ZN8M+P	423910801	75	8	353	90008901	SLEWING GEAR DRIVE
LOCK WITH FALLING LATCH LI	11005985	1	1	422	966230408	CLOSING DEVICE
LOCKABLE TANK CAP 40	10870226	4	1	501	968570808	UREA TANK

Description	Item	Pos.	Quantity	Page	Assembly	Description
LOCKING	967928508	2	1	489	918956108	HYDRAULIC BALLASTING
LOCKING BAR WELDMENT	966825408	10	1	421	917304708	SLIDING DOOR INSTALLATION
LOCKING BOLT 30.0X200 35N	97073453	103	2	76	91001377	CRAWLER SUPPORT PREASS
LOCKING BOLT 30.0X200 35N	97073453	104	2	109	91001378	CRAWLER SUPPORT PREASS
LOCKING CYLINDER 32/22-65	10870204	44	4	35	917511508	CRAWLER CENTRE PART PRE
LOCKING CYLINDER 80/36-150	12106173	2	1	155	91001571	BOLT EXTRACTION DEVICE
LOCKING PIECE	10492347	19	1	435	10877138	OPERATOR SEAT
LOCKING PIECES	10115664	452	1	178	13455297	DIESEL ENGINE
LOCKING PIECES	10116110	521	1	178	13455297	DIESEL ENGINE
LOCKING PIECES	10127979	526	1	178	13455297	DIESEL ENGINE
LOCKING PIECES	10128439	524	1	178	13455297	DIESEL ENGINE
LOCKING PIECES	10142747	630	1	179	13455297	DIESEL ENGINE
LOCKING PIECES	9078301	654	1	179	13455297	DIESEL ENGINE
LOCKING PIECES Al Rm>150N/	10128440	1	1	264	10128439	LOCKING PIECES
LOCKING PIECES M33X2-FPM	10118881	23	1	174	13455297	DIESEL ENGINE
LOCKING RING	10356273	37	1	321	10872488	DRIVING GEAR
LOCKING RING DIN 471 210X5	10872700	3	2	692	921456108	ROPE PULLEY CPL.
LOCKING RING DIN 471 210X5	10872700	3	2	755	925203408	ROPE PULLEY CPL.
LOCKING RING DIN 471 210X5	428009008	3	2	694	967771908	ROPE PULLEY CPL.
LOCKING RING DIN 471 22X1,7	463000003	41	3	353	90008901	SLEWING GEAR DRIVE
LOCKING RING DIN 471 28X2	463000103	21	5	353	90008901	SLEWING GEAR DRIVE
LOCKING RING DIN 471 28X2	463000103	43	3	370	939292201	PLANETARY GEARBOX
LOCKING RING DIN 471 34X1,5	428011301	7	2	207	11448005	ROCKER ARM BRACKET PRE
LOCKING RING DIN 471 35X1,5	428002908	36	1	310	10663105	DRIVING GEAR
LOCKING RING DIN 471 35X1,5	10171579	29	2	319	10871282	VARIABLE PUMP
LOCKING RING DIN 471 35X1,5	10171579	92	1	353	90008901	SLEWING GEAR DRIVE
LOCKING RING DIN 471 40X2,5	400208003	33	3	372	90017588	PLANETARY CARRIER
LOCKING RING DIN 471 50X2 4	10875659	36	1	321	10872488	DRIVING GEAR
LOCKING RING DIN 471 50X2	10171585	52	1	78	90028956	TRACTION DRIVE
LOCKING RING DIN 471 55X3	400093303	8	5	370	939292201	PLANETARY GEARBOX
LOCKING RING DIN 471 8X0,8	10450160	7	1	424	966253908	WAGON
LOCKING RING DIN 471 9X1 4	12100338	21	4	387	916177508	STEP CPL.
LOCKING RING DIN 472 102X4	4281019	12	1	610	939294201	PLANETARY GEARBOX
LOCKING RING DIN 472 155X4	4281048	13	1	610	939294201	PLANETARY GEARBOX
LOCKING RING DIN 472 170X4	428105908	18	1	368	932916901	ROPE DRUM
LOCKING RING DIN 472 170X4	428105908	21	1	608	939294001	ROPE DRUM
LOCKING RING DIN 472 30X1,2	428100708	5	1	292	10429930	GEAR WHEEL MOTOR
LOCKING RING DIN 472 68X2,5	10171626	67	1	353	90008901	SLEWING GEAR DRIVE
LOCKING RING DIN 472 72X2,5	10171628	14	1	52	11346779	SLIP RING TRANSMITTER
LOCKING RING DIN 472 80X2,5	428102508	12	1	360	570109008	DRIVING GEAR
LOCKING RING DIN 472 85X3	428102708	4	1	610	939294201	PLANETARY GEARBOX
LOCKING RING DIN 472 85X3	10171631	4	1	370	939292201	PLANETARY GEARBOX
LOCKING RING DIN 472 90X3 4	12100657	37	1	310	10663105	DRIVING GEAR
LOCKING SCREW M10X19 10.	10153538	2	2	211	9079870	CONTROL PARTS
LOUDSPEAKER 2,77V 86DBA	10489011	10	2	467	96053500	ELECTRIC ADD-ON PARTS CA
LOWERING BRAKE VALVE	10326277	35	1	697	10876933	TELESCOPIC CYLINDER
LOWERING BRAKE VALVE	571413308	36	1	697	10876933	TELESCOPIC CYLINDER
LOWERING BRAKE VALVE SP	10038474	150	1	560	96045351	HYDRAULICS UPPER CARRI
LUBE OIL FILTER ASSEMBLY	10142942	150	1	176	13455297	DIESEL ENGINE
LUBE OIL PUMP WITH FASTE	10148432	140	1	175	13455297	DIESEL ENGINE
LUBRICATING OIL LINE 10X1	10140757	3	1	252	10140729	EXHAUST TC MOUNTING
LUBRICATING OIL LINE 6X1	9080310	5	1	243	10145278	ACCESSORIES AIR COMPRES
LUBRICATING OIL PUMP B=41,	12438990	1	1	216	10148432	LUBE OIL PUMP WITH FASTEN
LUFFING CYLINDER 400/370-3	12102921	1	1	646	919617008	LUFFING RAM W. PIVOT
LUFFING RAM W. PIVOT	919617008	111	1	12		LIEBHERR LTR 1220
LUMP HAMMER DIN 6475 3000	790031108	61	1	152	928569808	MAIN TOOLS
MACHINING CAN- STUETZP	96014807	2998	2	463	96036955	WIRING HARNESS
MACHINING CAN- STUETZP	96014807	2998	10	537	96037137	WIRING HARNESS
MAGNET	10280212	50	1	624	10038509	CONTROL BLOCK
MAGNET 24V	10650092	2	1	570	10342823	PRESSURE CONTROL VALVE

Description	Item	Pos.	Quantity	Page	Assembly	Description
MAGNET 24V	570633808	(1)	1	560	96045351	HYDRAULICS UPPER CARRI
MAGNET 24V	570633808	(1)	1	560	96045351	HYDRAULICS UPPER CARRI
MAGNET 24V	570827808	1	1	67	511444408	DIRECTIONAL CONTROL VALV
MAGNET 24V	571135508	(21)	1	717	967784508	HYDR.F.TELESCOPIC BOOM
MAGNET 28V	10291306	(1)	1	572	10413106	CONTROL BLOCK
MAGNET 28V	10291306	(1)	1	572	10413106	CONTROL BLOCK
MAGNET 28V	10291306	6	1	573	571415008	DIRECTIONAL CONTROL VALV
MAGNET COIL	10564740	(1)	1	560	96045351	HYDRAULICS UPPER CARRI
MAGNET COIL	11005244	1	1	584	10449853	DIRECTIONAL CONTROL VALV
MAGNET COIL	12104171	(4)	3	560	96045351	HYDRAULICS UPPER CARRI
MAGNET COIL 24V	571818908	1	1	578	571634708	DIRECTIONAL CONTROL VALV
MAGNET COIL 24V	571818908	1	2	580	10332397	DIRECTIONAL CONTROL VALV
MAGNET COIL 27V	10874134	1	1	569	11482347	DIRECTIONAL SOLENOID
MAGNET COIL 27V	12102117	1	1	575	571737808	DIRECTIONAL CONTROL VALV
MAGNET COIL 28V	10872859	(1)	1	572	10413106	CONTROL BLOCK
MAGNET COIL 28V	10872859	(1)	1	572	10413106	CONTROL BLOCK
MAGNET COIL 28V	10872859	6	1	573	571415008	DIRECTIONAL CONTROL VALV
MAIN BEARING 104/111/32	9073734	1	5	198	10116939	RS CRANKSHAFT BEARING K
MAIN BEARING 104/111/32 MIB	9075606	2	5	198	10116939	RS CRANKSHAFT BEARING K
MAIN FILTER ELEMENT	10294938	2	1	521	10871700	AIR FILTER
MAIN HOIST GEAR	917259708	125	1	13		LIEBHERR LTR 1220
MAIN TOOLS	928569808	1	1	151	919328608	TOOLS AND ACCESSORIES
MAINTENANCE SWITCH 0,05	11101017	101	1	520	918731908	AIR FILTER UNIT
MALE CONNECTOR WSV 6 M1	12101832	7	11	523	917261208	CENT. LUBRIC. SYSTEM SUP
MANDRIL RIVET 4X10,3	704207608	9	20	551	969061708	CARRIER PLATE, PRE-ASSE
MANDRIL RIVET 4X15	704207708	200	4	164	917862808	LABELLING GREAT BRITAIN
MASTER PLUG 4-POL	602225508	518	1	462	96036955	WIRING HARNESS
MASTER PLUG 6-POL	602225608	519	1	462	96036955	WIRING HARNESS
MECH MEAS AND WARNING D	968412508	2	1	740	917379608	CARRIER, MEAS. & WARN. D
MECH.AUXILIARIES FOR LIG	967970408	1	1	731	918124908	A-HEADL.SEARCHLIGHT PIVO
MECHANICAL AUXILIARIES	96035117	19	1	560	96045351	HYDRAULICS UPPER CARRI
MECHANICAL AUXILIARIES	96045206	30	1	140	919499508	BALLAST MONITORING
MECHANICAL AUXILIARIES	962602108	19	1	728	967785008	ADDNL.HYDR. FOLDING JIB
MECHANICAL AUXILIARIES	968083608	19	1	616	967784808	HYDR.AUXILIARY HOISTING
MECHANICAL AUXILIARIES	969763908	19	1	496	969763408	PIPEWORK AIR INSTALLATIO
MECHANICAL EXTENSION SYS	918807308	7	1	663	918804808	TELESCOPIC BOOM CPL.
MEGI BUFFER	726617408	24	1	409	966497908	FRONT WINDOW CPL.
MEGI BUFFER	726617408	112	1	445	96036790	SLEWING PLATFORM PANELLI
MEGI BUFFER 20X15-M6 NR 55	726907308	111	1	445	96036790	SLEWING PLATFORM PANELLI
MEGI BUFFER 20X15-M6 NR 55	726907308	105	2	455	969015908	SLEWING PLATFORM PANELLI
MEGI BUFFER 30X17 M8 75°SH	10030440	15	1	92	968420608	STORAGE BOX
MEGI BUFFER 30X17 M8 75°SH	10030440	9	1	421	917304708	SLIDING DOOR INSTALLATION
MEGI BUFFER 50X20-M10X28	726613008	10	2	155	91001571	BOLT EXTRACTION DEVICE
MEGI BUFFER 50X20-M10X28	726613008	25	4	668	917291908	PIVOT SECTION, PRE-ASSEMB
MICRO SWITCH	10335596	3	4	472	10343693	JOYSTICK
MICROPHONE	11826513	2	1	662	12257818	CAR RADIO
MIRROR ATTACHM.AT SLEW.	917260408	144	1	13		LIEBHERR LTR 1220
MIRROR ATTACHM.IN CRANE	916049908	138	1	13		LIEBHERR LTR 1220
MIRROR RETAINER PRE-ASS.	966707708	2	1	476	917260408	MIRROR ATTACHM.AT SLEW.P
MIRROR SUPPORT 28X2 ST.37	979320608	1	1	440	916049908	MIRROR ATTACHM.IN CRANE
MONITOR HOUSING GLUED	963257908	2	1	383	96015921	OPERATING ELEMENT INSTAL
MONITOR SUPPORT 162X765X	96015926	1	1	383	96015921	OPERATING ELEMENT INSTAL
MONITOR TFT 7 800X480	10876638	10	1	641	96045237	EQUIPMENT CAMERA CAB
MOTOR CONTROL DEVICE E	13470814	570	1	179	13455297	DIESEL ENGINE
MOTOR FLANGE	927746301	75	1	370	939292201	PLANETARY GEARBOX
MOTOR FLANGE EN-GJL-250	938996401	85	1	353	90008901	SLEWING GEAR DRIVE
MOTOR HOUSING	10014692	3	1	136	11347526	ELECTRIC PUMP
MOTOR HOUSING	10014692	3	1	525	10327065	ELECTRIC PUMP
MOTOR HOUSING	10493920	1	1	525	10327065	ELECTRIC PUMP
MOTOR HOUSING UNTEN	10675728	1	1	136	11347526	ELECTRIC PUMP

Description	Item	Pos.	Quantity	Page	Assembly	Description
MOTOR SEAT	10874902	9	1	593	11622561	OIL AIR COOLER
MOULDING 317-1397-000 SUR	605212808	519	3	49	96045228	WIRING HARNESS
MOULDING 317-1397-000 SUR	605212808	514	1	532	96045385	WIRING HARNESS
MOULDING 317-1397-000 SUR	605212808	523	2	535	96037136	WIRING HARNESS
MOUNTING BOLT	10675205	16	1	704	10802064	ROPE LENGTH INDICATOR
MOUNTING HOOK ROD	968090008	2	1	766	917268108	TOOLS
MOUNTING MATERIAL	968693208	30	1	527	919410708	ELECTR. SYSTEM F.SLEWING
MOUNTING PARTS	10650403	49	1	435	10877138	OPERATOR SEAT
MOUNTING PARTS	11171275	65	1	435	10877138	OPERATOR SEAT
MOUNTING PARTS	11826654	27	1	484	10876576	WATER HEATING SYSTEM
MOUNTING PLATE 1.5X753X8	978610208	(1)	1	544	969256608	BASE ASSEMBLY
MOUNTING PLATE PRE-ASS.	968054008	3	1	41	96045226	SWITCH BOX COMPL.
MOUNTING PRE-ASS.	929582108	1	1	761	917267508	TRANSPORT MOUNTING
MOUNTING SHEET X52,8	10142670	2	1	255	10142863	GENERATOR, PRE-ASSEMBLE
MOUNTING WELDED	929582208	1	1	762	929582108	MOUNTING PRE-ASS.
MOUNTING WELDED T ZN O	963556008	9	1	690	917292408	TELESCOPIC SECT.5 PRE-AS
MOUNTING WELDED WARNEI	968410408	1	1	747	917551608	ADD-ON PARTS
MULTI-DISC CARRIER 100	927602601	65	1	370	939292201	PLANETARY GEARBOX
MULTI-DISC CARRIER 51,6 42C	927716701	70	1	353	90008901	SLEWING GEAR DRIVE
MULTI-PLATE PLUG 28MM PE-	10678377	8	2	392	916162808	RELING
MULTI-PURPOSE LADDER 4X4	10877074	1	1	767	917268208	LADDER ATTACHMENT
MUSHROOM-SHAPED DRAWIN	973292708	26	1	690	917292408	TELESCOPIC SECT.5 PRE-AS
MUSHROOM-SHAPED DRAWIN	973259708	11	1	685	917292308	TELESCOPIC SECT.IV PRE-A
MUSHROOM-SHAPED DRAWIN	973253908	11	1	681	917292208	TELESCOPIC SECT.3 PRE-ASS
NAME PLATE 20X8	602761408	12	10	547	926891108	GROUND RAIL
NAME PLATE 70X40 POLYES	10288121	300	1	45	968252908	BTB PROGRAMMED
NAME PLATE 70X40 POLYES	10288121	(980)	1	467	96053500	ELECTRIC ADD-ON PARTS CA
NAME PLATE 70X40 POLYES	10288121	(980)	1	467	96053500	ELECTRIC ADD-ON PARTS CA
NAME PLATE 70X40 POLYES	10288121	(2)	1	471	96022872	CONTROL PANEL ROOF
NAME PLATE 70X40 POLYES	10288121	(300)	1	540	91000922	SWITCHBOX MOUNTING PART
NAME PLATE 70X40 POLYES	10288121	300	1	550	968253608	UNIVERSAL INPUT-OUTPUT M
NIPPLE GA10-45,H32	97057512	20	1	601	918628408	AIR COND. UNIT SUPERSTRU
NITROGEN TENSIONER CPL	10877685	3	1	83	11320954	GUIDE WHEEL UNIT
NON-RETURN VALVE	10119971	4	1	195	10139112	OIL LINE PRE-ASSEMBLY
NON-RETURN VALVE	10280215	80	1	624	10038509	CONTROL BLOCK
NON-RETURN VALVE	10280216	90	1	624	10038509	CONTROL BLOCK
NON-RETURN VALVE	10430042	9	1	574	10332882	CONTROL BLOCK
NON-RETURN VALVE	10875075	5	1	568	11211756	CONTROL BLOCK
NON-RETURN VALVE	11007219	3	6	526	11002916	DISTRIBUTION BLOCK
NON-RETURN VALVE	11066829	3	1	79	11182596	VARIABLE DISPLACEMENT MO
NON-RETURN VALVE	12104031	24	1	648	12102921	LUFFING CYLINDER
NON-RETURN VALVE	570531308	11	1	582	11341035	CONTROL BLOCK
NON-RETURN VALVE	570818008	10	1	582	11341035	CONTROL BLOCK
NON-RETURN VALVE	591055608	10	2	415	916163008	WIPERS INSTALLATION
NON-RETURN VALVE	774378108	(1)	1	523	917261208	CENT. LUBRIC. SYSTEM SUP
NON-RETURN VALVE 2.5BAR P	11839607	100	1	280	918731408	DRIVE ASSEMBLY CPL.
NON-RETURN VALVE 250BAR	511316708	171	1	561	96045351	HYDRAULICS UPPER CARRI
NON-RETURN VALVE 250BAR	511476908	197	2	561	96045351	HYDRAULICS UPPER CARRI
NON-RETURN VALVE 250BAR	511481508	160	1	98	96035796	HYDR.TRAVEL DRIVE
NON-RETURN VALVE 250BAR	511481508	160	1	115	96035792	HYDR.TRAVEL DRIVE
NON-RETURN VALVE 250BAR	511481508	151	1	616	967784808	HYDR.AUXILIARY HOISTING
NON-RETURN VALVE 250BAR	511435108	172	1	561	96045351	HYDRAULICS UPPER CARRI
NON-RETURN VALVE 250BAR	511457808	9	3	348	969050308	OIL TANK PRE-ASS.
NON-RETURN VALVE 400BAR	510413508	203	1	561	96045351	HYDRAULICS UPPER CARRI
NON-RETURN VALVE 400BAR	511311808	154	1	560	96045351	HYDRAULICS UPPER CARRI
NON-RETURN VALVE 400BAR	511311808	170	1	616	967784808	HYDR.AUXILIARY HOISTING
NON-RETURN VALVE 400BAR	511460608	152	1	560	96045351	HYDRAULICS UPPER CARRI
NON-RETURN VALVE 400BAR	511460608	150	1	616	967784808	HYDR.AUXILIARY HOISTING
NON-RETURN VALVE 400BAR	511493708	152	1	717	967784508	HYDR.F.TELESCOPIC BOOM
NON-RETURN VALVE 400BAR	511431514	199	1	561	96045351	HYDRAULICS UPPER CARRI

Description	Item	Pos.	Quantity	Page	Assembly	Description
NON-RETURN VALVE 420BAR	510408708	153	1	560	96045351	HYDRAULICS UPPER CARRI
NON-RETURN VALVE 420BAR	510408708	171	1	616	967784808	HYDR.AUXILIARY HOISTING
NOZZLE 0,5 M5X5	511044108	193	1	561	96045351	HYDRAULICS UPPER CARRI
NOZZLE 0,5 M5X9 MS	511062708	159	1	98	96035796	HYDR.TRAVEL DRIVE
NOZZLE 0,5 M5X9 MS	511062708	159	1	115	96035792	HYDR.TRAVEL DRIVE
NOZZLE 0,5 M5X9 MS	511062708	157	1	560	96045351	HYDRAULICS UPPER CARRI
NOZZLE 0,5 M5X9 MS	511062708	169	1	616	967784808	HYDR.AUXILIARY HOISTING
NOZZLE 0,6 M5X9 CUZN39PB3	510746008	153	1	717	967784508	HYDR.F.TELESCOPIC BOOM
NOZZLE 0,8 M5X9 MS	510754008	158	1	560	96045351	HYDRAULICS UPPER CARRI
NOZZLE 3,0 M10X10 MS	511059408	161	1	560	96045351	HYDRAULICS UPPER CARRI
NOZZLE SET PA	10815496	16	1	415	916163008	WIPERS INSTALLATION
NUT	10040137	2	1	579	10878075	EMERGENCY HAND OPERAT
NUT	10219618	1	1	293	10492431	PRESSURE LIMITING VALVE
NUT	10332420	(1)	1	81	11161917	CONTROL ELEMENT
NUT	10872448	5	1	575	571737808	DIRECTIONAL CONTROL VALV
NUT	11342417	2	1	569	11482347	DIRECTIONAL SOLENOID
NUT	12100707	100	1	439	962282308	ARM REST RIGHT
NUT	12103903	(18)	2	572	10413106	CONTROL BLOCK
NUT	7027459	(2)	1	560	96045351	HYDRAULICS UPPER CARRI
NUT CR6-FREI	571082308	(5)	1	728	967785008	ADDNL.HYDR. FOLDING JIB
NUT M10X1,5 X6NiCrTiMoVB	10120639	6	3	252	10140729	EXHAUST TC MOUNTING
NUT M54 CR6-FREI	571077208	(5)	1	616	967784808	HYDR.AUXILIARY HOISTING
NUT M6X8	10878951	2	1	436	96032222	REWORK ARMREST LEFT
NUT M6X8	10878951	2	1	438	96032223	REWORK ARMREST RIGHT
O-RING	10001111	21	1	316	10871043	VARIABLE PUMP
O-RING	10332172	48	1	81	11161917	CONTROL ELEMENT
O-RING 10,00X2,5 NBR90	10337381	(1)	2	574	10332882	CONTROL BLOCK
O-RING 10,00X2,5 NBR90	10337381	7	1	586	510697608	BALL VALVE
O-RING 10,8X1, 78 NEOPREN	5610999	32	2	601	918628408	AIR COND. UNIT SUPERSTRU
O-RING 104,37X3,53 VMQ 70 A	7380520	4	1	277	9077386	AUXILIARY DRIVE PRE-ASS.
O-RING 10X2,2 NBR70	502933208	430	1	520	918731908	AIR FILTER UNIT
O-RING 120X3 VMQ 70 A	9177948	2	1	278	9078301	LOCKING PIECES
O-RING 125X3 NBR70	726426008	447	3	288	919007708	DRIVE ASSEMBLY, PRE-ASSE
O-RING 127,76X2,62 NBR 70	11003121	4	1	297	11182708	VARIABLE PUMP
O-RING 12X2 NBR70	704274808	9	4	42	966167808	COVER COMPL.
O-RING 12X2 NBR70	704274808	7	5	86	967972208	COVER PRE-ASSY.
O-RING 12X2 NBR70	704274808	7	2	87	967972308	COVER PRE-ASSY.
O-RING 12X2 NBR70	704274808	7	2	88	967972408	COVER PRE-ASSY.
O-RING 12X2 NBR70	704274808	7	2	89	968270108	COVER PRE-ASSY.
O-RING 12X2 NBR70	704274808	7	2	90	968274208	COVER PRE-ASSY.
O-RING 12X2 NBR70	704274808	7	5	110	968055808	COVER PRE-ASSY.
O-RING 12X2 NBR70	704274808	(8)	2	348	969050308	OIL TANK PRE-ASS.
O-RING 132X3 NBR 70	7264141	470	1	296	97029921	DISTRIBUTOR GEARBOX
O-RING 133,07X1,78 NBR 70	10099208	28	1	136	11347526	ELECTRIC PUMP
O-RING 133,07X1,78 NBR 70	10099208	32	1	525	10327065	ELECTRIC PUMP
O-RING 135X3 NBR 70 SPF	726452801	5	1	136	11347526	ELECTRIC PUMP
O-RING 140X3 NBR70	570163708	5	1	525	10327065	ELECTRIC PUMP
O-RING 145 75 FKM 17939	10282774	4	2	182	10154458	CYLINDER
O-RING 14X2 NBR70	726411508	47	2	467	96053500	ELECTRIC ADD-ON PARTS CA
O-RING 14X3 NBR70	726405608	10	12	392	916162808	RELING
O-RING 14X3 NBR70	726405608	78	6	610	939294201	PLANETARY GEARBOX
O-RING 15,4X2,1 NBR90	571141177	3	1	573	571415008	DIRECTIONAL CONTROL VALV
O-RING 150X3 NBR70	518578108	448	1	288	919007708	DRIVE ASSEMBLY, PRE-ASSE
O-RING 15X3 NBR 70	726403401	78	6	370	939292201	PLANETARY GEARBOX
O-RING 160X3 NBR70	726204008	5	1	348	969050308	OIL TANK PRE-ASS.
O-RING 165X3 FKM 70	726440001	73	1	353	90008901	SLEWING GEAR DRIVE
O-RING 16X2 NBR70	726407908	401	2	328	96034515	EXPANSION TANK PRE-ASS.
O-RING 16X2 NBR70	726407908	(1)	1	342	96066379	PREMOUNTED FUEL FILTER
O-RING 16X2 NBR70	726407908	(9)	2	348	969050308	OIL TANK PRE-ASS.
O-RING 175X3 NBR 70	726453601	24	1	353	90008901	SLEWING GEAR DRIVE

Description	Item	Pos.	Quantity	Page	Assembly	Description
O-RING 175X3 NBR 70	726453601	79	1	370	939292201	PLANETARY GEARBOX
O-RING 17X2 FPM70	571082608	(2)	1	561	96045351	HYDRAULICS UPPER CARRI
O-RING 18X2,5 NBR70	726406908	(1)	1	562	96045351	HYDRAULICS UPPER CARRI
O-RING 192X4 SPF	11493868	37	1	75	91001377	CRAWLER SUPPORT PREASS
O-RING 192X4 SPF	11493868	37	1	108	91001378	CRAWLER SUPPORT PREASS
O-RING 195X3 NBR 70	761021703	76	1	370	939292201	PLANETARY GEARBOX
O-RING 195X3 NBR 70	761021703	76	1	610	939294201	PLANETARY GEARBOX
O-RING 19X1,5 NBR70	502624508	41	1	136	11347526	ELECTRIC PUMP
O-RING 19X2,5 FKM80	10219619	2	1	293	10492431	PRESSURE LIMITING VALVE
O-RING 20,3X2,4 NBR70	502932908	8	1	339	968999708	FUEL TANK, PRE-ASSEMBLED
O-RING 200X3 NBR 70	726421501	480	3	296	97029921	DISTRIBUTOR GEARBOX
O-RING 209,14X3,53 NBR70	10342479	26	1	319	10871282	VARIABLE PUMP
O-RING 20X2 FPM70	571082008	(2)	1	728	967785008	ADDNL.HYDR. FOLDING JIB
O-RING 20X2 FPM70	571082008	(2)	1	728	967785008	ADDNL.HYDR. FOLDING JIB
O-RING 20X2 NBR90	510792708	8	2	586	510697608	BALL VALVE
O-RING 20X4 NBR 70	726414901	69	1	353	90008901	SLEWING GEAR DRIVE
O-RING 22X1,5 FPM70	571082708	(3)	1	561	96045351	HYDRAULICS UPPER CARRI
O-RING 23,52X1,78 NBR90	514611808	4	1	63	11643183	CONTROL BLOCK
O-RING 23,52X1,78 NBR90	514611808	4	1	66	11643184	CONTROL BLOCK
O-RING 230X3 NBR70	726429008	482	1	296	97029921	DISTRIBUTOR GEARBOX
O-RING 24X2,5 NBR70	502933508	449	1	288	919007708	DRIVE ASSEMBLY, PRE-ASSE
O-RING 24X3 FKM 70	10217777	2	1	264	10128439	LOCKING PIECES
O-RING 26X1,5 FPM70	571082108	(3)	1	728	967785008	ADDNL.HYDR. FOLDING JIB
O-RING 280X3 NBR70	726417708	485	1	296	97029921	DISTRIBUTOR GEARBOX
O-RING 300X3 NBR 70	502319101	51	1	370	939292201	PLANETARY GEARBOX
O-RING 300X3 NBR70	530032508	51	1	610	939294201	PLANETARY GEARBOX
O-RING 300X6 EPDM 70	726458401	13	1	370	939292201	PLANETARY GEARBOX
O-RING 30X2 NBR70	510787908	(3)	4	568	11211756	CONTROL BLOCK
O-RING 32X3 FPM70	571076908	(2)	1	616	967784808	HYDR.AUXILIARY HOISTING
O-RING 330X3 NBR 70	726429901	19	2	370	939292201	PLANETARY GEARBOX
O-RING 330X3 NBR 70	726429901	19	2	610	939294201	PLANETARY GEARBOX
O-RING 38X3 NBR 70	726455301	61	1	370	939292201	PLANETARY GEARBOX
O-RING 38X3 NBR90	726421108	61	1	610	939294201	PLANETARY GEARBOX
O-RING 39,34X2,62 FKM 70	10097960	14	1	81	11161917	CONTROL ELEMENT
O-RING 40,64X5,33 FKM 70	7381566	2	2	191	10121667	CONNECTING PIECE W.O-RIN
O-RING 40X3 FPM70	571077108	(4)	1	616	967784808	HYDR.AUXILIARY HOISTING
O-RING 4X1 NBR90	510712308	3	1	725	511479408	LOAD HOLDING VALVE
O-RING 530X5 NBR 70	761035303	59	2	78	90028956	TRACTION DRIVE
O-RING 59,92X3,53 HNBR 70	7381779	7	2	183	10147687	POWER UNIT SUPPORT ATT
O-RING 5X1 NBR70	553136608	2	2	63	11643183	CONTROL BLOCK
O-RING 5X1 NBR70	553136608	2	2	66	11643184	CONTROL BLOCK
O-RING 65X3 NBR70	726412308	450	2	288	919007708	DRIVE ASSEMBLY, PRE-ASSE
O-RING 6X1 NBR90	570690608	33	1	525	10327065	ELECTRIC PUMP
O-RING 7,6X1,78 NEOPREN	10216678	31	4	601	918628408	AIR COND. UNIT SUPERSTRU
O-RING 85X2 HNBR 70	10218370	2	1	258	11386644	STARTER PRE-ASSY.
O-RING 88X3 ACM70	570979708	7	1	240	5700161	AIR COMPRESSOR
O-RING 8X2 NBR70	502652908	73	1	610	939294201	PLANETARY GEARBOX
O-RING 8X2 NBR90	10166157	73	1	370	939292201	PLANETARY GEARBOX
O-RING 94,5X3 VMQ 70	13711602	2	1	236	13701882	HEATING FLANGE COMPLETE
O-RING 94X3 NBR70	726433408	50	4	35	917511508	CRAWLER CENTRE PART PRE
O-RING 98,02X3,53 HNBR 70	7381995	4	1	259	10115664	LOCKING PIECES
O-RING AEHNL.ISO 3601-1 100	11008055	2	1	232	10145173	INTAKE STACK ASSEMBLY
O-RING AEHNL.ISO 3601-1 101	7380401	5	1	277	9077386	AUXILIARY DRIVE PRE-ASS.
O-RING AEHNL.ISO 3601-1 125	10002310	3	1	237	10127566	INSTALLATION BRAKE COMPR
O-RING AEHNL.ISO 3601-1 15,5	10113975	(2)	1	273	12583633	ENGINE CONTROL SENSORS
O-RING AEHNL.ISO 3601-1 21,	7381526	4	1	249	10142744	COOLING WATER AIR BLEED
O-RING AEHNL.ISO 3601-1 25	10342770	3	1	205	10149578	CYLINDER HEAD
O-RING AEHNL.ISO 3601-1 26X	10004261	9	1	183	10147687	POWER UNIT SUPPORT ATT
O-RING AEHNL.ISO 3601-1 26X	10004261	4	1	212	10129475	OIL COOLER ASSEMBLY
O-RING AEHNL.ISO 3601-1 43	11066168	4	1	216	10148432	LUBE OIL PUMP WITH FASTEN

Description	Item	Pos.	Quantity	Page	Assembly	Description
O-RING AEHNL.ISO 3601-1 60	12212022	16	2	253	12512627	EXHAUST NOZZLE ATTACHM
O-RING AEHNL.ISO 3601-1 63,	7380970	7	1	234	10149677	CONNECTING LINE ADD-ON
O-RING AEHNL.ISO 3601-1 63,	7380970	451	1	288	919007708	DRIVE ASSEMBLY, PRE-ASSE
O-RING AEHNL.ISO 3601-1 7X1,	7381685	8	1	209	10120186	BALANCER ASSEMBLY
O-RING AEHNL.ISO 3601-1 7X1,	7381685	14	1	210	10138230	CAMSHAFT CPL.
O-RING ARP 568 10,52X1,83 NB	501243708	(1)	1	564	96045351	HYDRAULICS UPPER CARRI
O-RING ARP 568 10,52X1,83 NB	501243708	1	1	589	471030708	FITTING
O-RING ARP 568 10,82X1,78 NB	510718108	27	1	583	10489734	PRESSURE LIMITING VALVE
O-RING ARP 568 10,82X1,78 NB	510760408	32	1	428	11083498	AIR CONDITIONING UNIT
O-RING ARP 568 10,82X1,78 NB	510760408	2	6	573	571415008	DIRECTIONAL CONTROL VALV
O-RING ARP 568 107,62X2,62	571233308	(5)	1	319	10871282	VARIABLE PUMP
O-RING ARP 568 12,37X2,62 NB	510746108	10	1	308	571899508	SHUTDOWN VALVE
O-RING ARP 568 12,37X2,62 NB	510746108	1	1	587	10218310	LOAD HOLDING VALVE
O-RING ARP 568 14X1,78 NBR9	515710608	31	1	428	11083498	AIR CONDITIONING UNIT
O-RING ARP 568 18,72X2,62 NB	510738308	12	1	313	571900808	REGULATOR ELEMENT
O-RING ARP 568 18,72X2,62 NB	510738308	12	1	314	10472202	REGULATOR ELEMENT
O-RING ARP 568 202,79X3,53	571307708	10	1	299	11631893	BEARING FLANGE
O-RING ARP 568 23,47X2,62 NB	510776608	14	1	325	10292815	REGULATOR ELEMENT
O-RING ARP 568 23,47x2,62 NB	570322408	(1)	1	291	96034631	RADIATOR, PRE-ASSEMBLED
O-RING ARP 568 23,47x2,62 NB	570322408	(1)	1	562	96045351	HYDRAULICS UPPER CARRI
O-RING ARP 568 23,52X1,78 N	570652308	25	1	583	10489734	PRESSURE LIMITING VALVE
O-RING ARP 568 25,07X2,62 NB	571058608	13	1	325	10292815	REGULATOR ELEMENT
O-RING ARP 568 25X3,53 NBR7	511035108	(1)	1	562	96045351	HYDRAULICS UPPER CARRI
O-RING ARP 568 28,17X3,53 NB	501201708	440	1	288	919007708	DRIVE ASSEMBLY, PRE-ASSE
O-RING ARP 568 28,17X3,53 NB	726426408	33	1	648	12102921	LUFFING CYLINDER
O-RING ARP 568 32,92X3,53 NB	510587008	(1)	1	562	96045351	HYDRAULICS UPPER CARRI
O-RING ARP 568 32,92X3,53 NB	510587008	(1)	1	562	96045351	HYDRAULICS UPPER CARRI
O-RING ARP 568 32,92X3,53 NB	510587008	560	6	562	96045351	HYDRAULICS UPPER CARRI
O-RING ARP 568 32,92X3,53 NB	510587008	556	2	617	967784808	HYDR.AUXILIARY HOISTING
O-RING ARP 568 37,69X3,53 NB	510586708	551	8	56	96035801	HYDRAULIC EQUIPM.CENTER
O-RING ARP 568 37,69X3,53 NB	510586708	550	2	98	96035796	HYDR.TRAVEL DRIVE
O-RING ARP 568 37,69X3,53 NB	510586708	550	2	115	96035792	HYDR.TRAVEL DRIVE
O-RING ARP 568 37,69X3,53 NB	510586708	(1)	1	562	96045351	HYDRAULICS UPPER CARRI
O-RING ARP 568 37,69X3,53 NB	510586708	551	2	562	96045351	HYDRAULICS UPPER CARRI
O-RING ARP 568 37,69X3,53 NB	510586708	553	3	617	967784808	HYDR.AUXILIARY HOISTING
O-RING ARP 568 37,69X3,53 NB	510586708	551	3	717	967784508	HYDR.F.TELESCOPIC BOOM
O-RING ARP 568 45,69X2,62 NB	514507808	16	1	311	10008308	CONNECTING PLATE
O-RING ARP 568 47,22X3,53 NB	510587908	(1)	1	288	919007708	DRIVE ASSEMBLY, PRE-ASSE
O-RING ARP 568 50,47X2,62 NB	570054708	16	1	323	571907208	CONNECTING PLATE
O-RING ARP 568 56,74X3,53 NB	726421608	445	3	288	919007708	DRIVE ASSEMBLY, PRE-ASSE
O-RING ARP 568 6,07X1,78 NB	510738408	15	1	308	571899508	SHUTDOWN VALVE
O-RING ARP 568 66,27X3,53 NB	518648508	6	1	359	510229408	HYDRO MOTOR
O-RING ARP 568 72,62X3,53 NB	518629608	31	2	399	917305408	INTERNAL PANELLING INSTA
O-RING ARP 568 75,87X2,62 NB	514530408	15	1	360	570109008	DRIVING GEAR
O-RING ARP 568 82,14X3,53 NB	518623608	39	1	310	10663105	DRIVING GEAR
O-RING ARP 568 9,19X2,62 NB	514589108	13	1	314	10472202	REGULATOR ELEMENT
O-RING ARP 568 9,25X1,78 NB	510719008	26	1	583	10489734	PRESSURE LIMITING VALVE
O-RING ARP 568 9,25X1,78 NB	510738608	(1)	4	572	10413106	CONTROL BLOCK
O-RING ARP 568 9,25X1,78 NB	510738608	(1)	4	572	10413106	CONTROL BLOCK
O-RING ARP 568 98,02X3,53 NB	514613208	39	1	321	10872488	DRIVING GEAR
O-RING DIN 3770 25X2,5 FPM7	726422308	313	1	496	969763408	PIPEWORK AIR INSTALLATIO
O-RING DIN 3771 23,6X2,9 NBR	571817308	(1)	1	530	966720708	ELECTR.FOR SLEWING GEAR
O-RING DIN 3771 44X3 NBR70	726405908	442	1	288	919007708	DRIVE ASSEMBLY, PRE-ASSE
O-RING ISO 3601-1 101,27X2,6	7380605	5	1	233	10147364	AIR INTAKE ASSEMBLY
O-RING ISO 3601-1 101,27X2,6	7380605	452	1	288	919007708	DRIVE ASSEMBLY, PRE-ASSE
O-RING ISO 3601-1 107,54X3,53	10002167	4	2	246	10148215	THERMOSTAT HOUSING ASS
O-RING ISO 3601-1 12,37X2,62	7380935	3	1	236	13701882	HEATING FLANGE COMPLETE
O-RING ISO 3601-1 132,94X3,53	7016016	(1)	1	245	10142733	WATER PUMP WITH FASTENIN
O-RING ISO 3601-1 132,94X3,53	7016016	(7)	1	245	10142733	WATER PUMP WITH FASTENIN
O-RING ISO 3601-1 132,94X3,53	7016016	7	1	245	10142733	WATER PUMP WITH FASTENIN

Description	Item	Pos.	Quantity	Page	Assembly	Description
O-RING ISO 3601-1 17,17X1,78	7381103	2	1	265	10127979	LOCKING PIECES
O-RING ISO 3601-1 17,17X1,78	7381103	(2)	1	273	12583633	ENGINE CONTROL SENSORS
O-RING ISO 3601-1 34,59X2,62	7382059	5	1	216	10148432	LUBE OIL PUMP WITH FASTEN
O-RING ISO 3601-1 34,59X2,62	7380653	8	2	183	10147687	POWER UNIT SUPPORT ATT
O-RING ISO 3601-1 34,59X2,62	7380653	9	1	262	10115829	FLYWHEEL HOUSING MOUNT
O-RING ISO 3601-1 55,25X2,62	7380083	3	1	248	10142742	COOLANT PIPE BEND ADD-ON
O-RING ISO 3601-1 75,79X3,53	7009080	5	1	246	10148215	THERMOSTAT HOUSING ASS
O-RING ISO 3601-1 85,32X3,53	7381361	(4)	2	275	10125687	POWER TAKE-OFF ADD-ON
O-RING ISO 3601-1 85,32X3,53	7381361	446	1	288	919007708	DRIVE ASSEMBLY, PRE-ASSE
O-RING ISO 3601-1 9,25X1,78 F	7380574	5	4	570	10342823	PRESSURE CONTROL VALVE
O-RING NEOPRENE (W)	7411823	30	1	601	918628408	AIR COND. UNIT SUPERSTRU
OBSTRUCTION LIGHT 7,2W 19,	11482305	3	1	741	917598408	ELECTRIC MEASURING & WAR
OBSTRUCTION LIGHTS PREAS	967937608	3	1	743	968412508	MECH MEAS AND WARNING D
OIL AIR COOLER	550628308	103	1	291	96034631	RADIATOR, PRE-ASSEMBLED
OIL AIR COOLER SPF	11622561	1	1	592	967980508	OIL COOLER, PRE-ASSEMBLE
OIL COOLER	10325001	3	1	213	10129474	OIL COOLER, PRE-ASSEMBLE
OIL COOLER ASSEMBLY	10129475	130	1	175	13455297	DIESEL ENGINE
OIL COOLER HOUSING	10146722	1	1	213	10129474	OIL COOLER, PRE-ASSEMBLE
OIL COOLER INSTALLATION	917261808	187	1	14		LIEBHERR LTR 1220
OIL COOLER, PRE-ASSEMBLE	10129474	1	1	212	10129475	OIL COOLER ASSEMBLY
OIL COOLER, PRE-ASSEMBLE	967980508	1	1	591	917261808	OIL COOLER INSTALLATION
OIL DIPSTICK	10150935	1	1	192	10150934	OIL DIPSTICK CPL.
OIL DIPSTICK 1 1/8"	927554401	1	1	354	927554301	VENTILATION CONNECTING PI
OIL DIPSTICK 1 1/8"	927610201	15	1	374	90200104	OIL-GAUGING INSTRUMENT
OIL DIPSTICK 1 1/8"	927610201	15	1	612	90200103	OIL-GAUGING INSTRUMENT
OIL DIPSTICK CPL.	10150934	21	1	174	13455297	DIESEL ENGINE
OIL DRAIN PLUG M 30 1,5	5004624	6	1	189	10155227	OIL SUMP PRE-ASS.
OIL DRAIN PLUG M26X1,5	789011908	150	2	287	919007708	DRIVE ASSEMBLY, PRE-ASSE
OIL DRAIN PLUG M26X1,5	789011908	8	1	348	969050308	OIL TANK PRE-ASS.
OIL DRAINING HOSE COMPL.	10032297	68	1	152	928569808	MAIN TOOLS
OIL FILTER INSERT OEL	10877167	71	1	697	10876933	TELESCOPIC CYLINDER
OIL LINE PRE-ASSEMBLY 10X	10139112	25	1	174	13455297	DIESEL ENGINE
OIL RESERVOIR, EXTENSION	917825508	110	1	12		LIEBHERR LTR 1220
OIL RETURN PIPE 10X1	10139111	1	1	195	10139112	OIL LINE PRE-ASSEMBLY
OIL RETURN PIPE 22X1,5	12847441	2	1	252	10140729	EXHAUST TC MOUNTING
OIL SIGHT GLASS G1" ALU	774320108	7	1	348	969050308	OIL TANK PRE-ASS.
OIL SUMP PRE-ASS. R-MOTO	10155227	1	1	188	10133837	OIL SUMP PRE-ASS.
OIL SUMP PRE-ASS. R-MOTOR	10133837	1	1	187	10132560	OIL SUMP WITH FASTENING
OIL SUMP WITH FASTENING R	10132560	20	1	174	13455297	DIESEL ENGINE
OIL TANK PRE-ASS.	969050308	1	1	345	917825508	OIL RESERVOIR, EXTENSION
OIL TANK ST.CONST. ALMG3	969050408	1	1	348	969050308	OIL TANK PRE-ASS.
OIL-GAUGING INSTRUMENT	90200103	10	1	606	90028852	COMPACT ROPE WINCH
OIL-GAUGING INSTRUMENT	90200104	6	1	365	917259708	MAIN HOIST GEAR
OIL-GAUGING INSTRUMENT	90208884	50	1	367	90208882	COMPACT ROPE WINCH
OPERATING ELEMENT INSTA	96015921	2	1	381	919010208	CRANE OPERATOR CABIN P
OPERATING HOURS COUNTE	691798508	3	1	471	96022872	CONTROL PANEL ROOF
OPERATION	967978808	1	1	492	967928508	LOCKING
OPERATOR SEAT 1030/880NT	10877138	1	1	433	918810308	CONTROL STAND
ORIFICE	10870472	69	1	468	96053500	ELECTRIC ADD-ON PARTS CA
ORIFICE	10875953	3	1	732	10872003	WORK LIGHT
OUTER MULTI-DISC	10175221	(1)	8	353	90008901	SLEWING GEAR DRIVE
OUTER MULTI-DISC	10175221	5	8	356	90025781	BRAKE MULTI-DISC SET
OUTER MULTI-DISC	737350603	(4)	9	78	90028956	TRACTION DRIVE
OUTLET JET D=63 ABS	10301409	30	2	399	917305408	INTERNAL PANELLING INSTA
OUTLET JET D=82 T=5 PA	553193208	29	6	399	917305408	INTERNAL PANELLING INSTA
OUTLET MODULE SCRFILTER	11429873	3	1	516	11429728	SCRFILTER ASSEMBLY
OUTLET VALVE	10136751	(4)	2	202	10149580	CYLINDER HEAD ASSEMBLY
OUTLET VALVE	10136751	4	2	204	10149579	CYLINDER HEAD PRE-ASSY.
OUTPUT SHAFT 135,9 18CrNi	90010683	10	1	353	90008901	SLEWING GEAR DRIVE
OUTSIDE HANDLE ZUG	11005987	4	1	422	966230408	CLOSING DEVICE

Description	Item	Pos.	Quantity	Page	Assembly	Description
OVAL SCREW M4X12 10.9	514525208	20	7	360	570109008	DRIVING GEAR
OVERHEAT PROTECTION	10290127	24	1	484	10876576	WATER HEATING SYSTEM
OVERHEAT PROTECTION	10290127	(6)	1	484	10876576	WATER HEATING SYSTEM
PADLOCK	885252008	4	1	767	917268208	LADDER ATTACHMENT
PADLOCK ABUS-64TI/40 TITAL	885251508	11	1	92	968420608	STORAGE BOX
PADLOCK ABUS-64TI/40 TITAL	885251508	2	1	152	928569808	MAIN TOOLS
PADLOCK ABUS-64TI/40 TITAL	885251508	7	1	157	96063087	STORAGE BOX
PAN-HEAD SCREW ISO 7045	408311208	23	4	540	91000922	SWITCHBOX MOUNTING PART
PAN-HEAD SCREW ISO 7045	408400701	266	2	714	968708708	TERMINAL BOX CPL.
PAN-HEAD SCREW ISO 7045 M	12212474	16	6	157	96063087	STORAGE BOX
PAN-HEAD SCREW ISO 7045 M	12219804	39	4	428	11083498	AIR CONDITIONING UNIT
PAN-HEAD SCREW ISO 7045	408401901	41	4	467	96053500	ELECTRIC ADD-ON PARTS CA
PAN-HEAD SCREW ISO 7045 M	11658059	9	4	383	96015921	OPERATING ELEMENT INSTAL
PAN-HEAD SCREW ISO 7045 M	10876384	50	2	544	969256608	BASE ASSEMBLY
PANELLING	966282408	2	1	399	917305408	INTERNAL PANELLING INSTA
PANELLING 120X526X308 ABS	97138958	21	1	399	917305408	INTERNAL PANELLING INSTA
PANELLING 127X1598X1088 AB	97001014	1	1	402	966282408	PANELLING
PANELLING 201X846X165 ABS	97006863	16	1	399	917305408	INTERNAL PANELLING INSTA
PANELLING ABOVE RIGHT 18	97001589	4	1	399	917305408	INTERNAL PANELLING INSTA
PANELLING FORCED AERATI	979206908	20	1	399	917305408	INTERNAL PANELLING INSTA
PANELLING MONITOR HOUSIN	979207008	3	1	383	96015921	OPERATING ELEMENT INSTAL
PANELLING PEDAL 258X599X	97105652	3	1	388	96025887	PEDAL CANTILEVER INSTALL
PANELLING PEDAL 315X118X	97089358	4	1	388	96025887	PEDAL CANTILEVER INSTALL
PANELLING REST 82X599X144	97001553	17	1	399	917305408	INTERNAL PANELLING INSTA
PANELLING ROLLER BLIND 9	97001048	6	1	399	917305408	INTERNAL PANELLING INSTA
PANELLING,LEFT	966282308	1	1	399	917305408	INTERNAL PANELLING INSTA
PANELLING,LEFT 130X832X126	97001013	1	1	401	966282308	PANELLING,LEFT
PANELLING,STRUT LEFT 84X1	97001015	3	1	399	917305408	INTERNAL PANELLING INSTA
PARALLEL PIN DIN 6325 10M6	430706808	13	2	323	571907208	CONNECTING PLATE
PARALLEL PIN DIN 6325 10M6	430707208	8	2	490	10877810	BALLAST EXTENSION RAM
PARALLEL PIN DIN 6325 12M6	430709608	32	1	764	512363708	HYDRO CYLINDER
PARALLEL PIN DIN 6325 4m6X2	4601499	20	1	81	11161917	CONTROL ELEMENT
PARALLEL PIN DIN 6325 8M6X2	430704808	13	2	311	10008308	CONNECTING PLATE
PARALLEL PIN ISO 2338 10M6X	430608708	86	8	76	91001377	CRAWLER SUPPORT PREASS
PARALLEL PIN ISO 2338 10M6X	430608708	86	8	109	91001378	CRAWLER SUPPORT PREASS
PARALLEL PIN ISO 2338 12H11	430611008	3	1	673	917292008	TELESCOPIC SECTION 1 PRE
PARALLEL PIN ISO 2338 12H11	430611008	3	1	677	917292108	TELESCOPIC SECT.2 PRE-AS
PARALLEL PIN ISO 2338 12H11	430611008	3	1	681	917292208	TELESCOPIC SECT.3 PRE-ASS
PARALLEL PIN ISO 2338 12H11	430611008	3	1	685	917292308	TELESCOPIC SECT.IV PRE-A
PARALLEL PIN ISO 2338 12H11	430611008	23	1	690	917292408	TELESCOPIC SECT.5 PRE-AS
PARALLEL PIN ISO 2338 4M6X	570109308	5	1	359	510229408	HYDRO MOTOR
PARALLEL PIN ISO 8734 5M6X	514588908	14	1	311	10008308	CONNECTING PLATE
PARALLEL PIN ISO 8734 6m6X	4980000	9	1	209	10120186	BALANCER ASSEMBLY
PARALLEL PIN ISO 8734 6m6X	4980000	(5)	1	210	10138230	CAMSHAFT CPL.
PARALLEL PIN ISO 8734 6m6X	4980736	5	1	210	10138230	CAMSHAFT CPL.
PASSAGE NIPPLE BLOCK	774375108	6	2	135	917257108	CENTRALIZED LUBRICATION
PASSAGE NIPPLE BLOCK	774375108	9	2	523	917261208	CENT. LUBRIC. SYSTEM SUP
PATCH CABLE 4X2 AWG 26/7-5	10219462	6	2	461	96036954	CABLE LIST DRIVER'S CABIN
PEDAL CANTILEVER INSTALL	96025887	4	1	381	919010208	CRANE OPERATOR CABIN P
PEDAL TRANSDUCER 20° SPF	10343484	55	2	467	96053500	ELECTRIC ADD-ON PARTS CA
PEDESTAL 50X1166X2200 STA	11346549	3	2	119	917691008	FALL PROTECTION
PEDESTAL 50X1350X1610 STA	11346547	1	4	119	917691008	FALL PROTECTION
PEDESTAL 50X1350X1610 T Z	11346548	2	2	119	917691008	FALL PROTECTION
PENCIL-TYPE GLOW PLUG	11826649	40	1	484	10876576	WATER HEATING SYSTEM
PENCIL-TYPE GLOW PLUG	11826649	(10)	1	484	10876576	WATER HEATING SYSTEM
PERFORATED PLATE 75X75	9080377	8	1	189	10155227	OIL SUMP PRE-ASS.
PERFORMANCE RELAY 75A	11160723	22	2	544	969256608	BASE ASSEMBLY
PERSONAL PROTECTION EQ	916959808	46	1	12		LIEBHERR LTR 1220
PILOT LAMP 24V	10876030	34	1	467	96053500	ELECTRIC ADD-ON PARTS CA
PIN 100.0X178 35NICRMOV125	97033306	4	2	493	967978908	INTERLOCKING

Description	Item	Pos.	Quantity	Page	Assembly	Description
PIN 105.0X230 35NICRMOV125	97030027	2	1	492	967928508	LOCKING
PIN 105.0X452 35NICRMOV125	97031481	31	2	75	91001377	CRAWLER SUPPORT PREASS
PIN 105.0X452 35NICRMOV125	97031481	31	2	108	91001378	CRAWLER SUPPORT PREASS
PIN 110.0X170 35NICRMOV125	97043050	11	4	35	917511508	CRAWLER CENTRE PART PRE
PIN 110.0X245 35NICRMOV125	97039932	15	4	35	917511508	CRAWLER CENTRE PART PRE
PIN 110.0X277 35NICRMOV125	97032012	17	2	20	91001569	CRAWLER TRACK TRAVEL G
PIN 110.0X452 35NICRMOV125	97158080	39	4	20	91001569	CRAWLER TRACK TRAVEL G
PIN 160.0X326 35NICRMOV125	97027202	6	1	673	917292008	TELESCOPIC SECTION 1 PRE
PIN 160.0X326 35NICRMOV125	97027202	6	1	677	917292108	TELESCOPIC SECT.2 PRE-AS
PIN 160.0X326 35NICRMOV125	97027202	6	1	681	917292208	TELESCOPIC SECT.3 PRE-ASS
PIN 160.0X326 35NICRMOV125	97027202	6	1	685	917292308	TELESCOPIC SECT.IV PRE-A
PIN 160.0X326 35NICRMOV125	97027202	21	1	690	917292408	TELESCOPIC SECT.5 PRE-AS
PIN 160.0X394 35NICRMOV125	973411808	1	2	172	918731108	ASSEMBLY PARTS F.SLEWING
PIN 170.0X255 35NICRMOV125	97032979	3	1	646	919617008	LUFFING RAM W. PIVOT
PIN 170.0X555 35NICRMOV125	97032978	2	1	646	919617008	LUFFING RAM W. PIVOT
PIN 18.0X410 S355J2C+C FE//	97032409	45	2	75	91001377	CRAWLER SUPPORT PREASS
PIN 18.0X410 S355J2C+C FE//	97032409	45	2	108	91001378	CRAWLER SUPPORT PREASS
PIN 22X11 1.4301	97001103	3	2	424	966253908	WAGON
PIN 22X57 1.4305	97001095	3	2	423	966230508	GUIDE PRE-ASS.
PIN 25.0X100 S355J2G3C+C FE	97032647	2	2	120	968038208	BEARING AHEAD LEFT SIDE
PIN 25.0X100 S355J2G3C+C FE	97032647	2	2	121	968038308	BEARING AHEAD RIGHT SIDE
PIN 25.0X100 S355J2G3C+C FE	97039420	1	1	125	968331708	FUSE HOLDER
PIN 25.0X131 35NICRMOV125	978844908	15	1	492	967928508	LOCKING
PIN 25.0X50 42CRMO4+QT	974922808	15	4	387	916177508	STEP CPL.
PIN 25.0X52 S355J2G3C+C FE//	971973608	3	1	437	962282208	ARM REST LEFT
PIN 25.0X52 S355J2G3C+C FE//	971973608	3	1	439	962282308	ARM REST RIGHT
PIN 35.0X165 35NICRMOV125	938865908	11	1	763	923285508	FOLDING BRACKET PRE-ASS.
PIN 35.0X65 35NICRMOV125	97008063	18	1	378	917259908	CRANE DRIVER CAB ADDITIO
PIN 35.0X92 35NICRMOV125	97032162	17	1	378	917259908	CRANE DRIVER CAB ADDITIO
PIN 39X18 1.4301	97007043	8	1	424	966253908	WAGON
PIN 40.0X118 35NICRMOV125	97150259	43	4	20	91001569	CRAWLER TRACK TRAVEL G
PIN 45.0X100 35NICRMOV125	97031197	6	2	602	917267108	AUXILIARY HOISTING GEAR 2
PIN 45.0X105 35NICRMOV125	97032320	29	4	129	919644008	HYDRAULIC SUPPORT
PIN 45.0X121 35NICRMOV125	97031434	30	1	378	917259908	CRANE DRIVER CAB ADDITIO
PIN 50.0X200 35NICRMOV125	97070277	3	1	734	917268408	BOOM NOSE
PIN 50.0X200 35NICRMOV125	97070277	(1)	1	734	917268408	BOOM NOSE
PIN 50.0X235 35NICRMOV125	973626408	25	3	734	917268408	BOOM NOSE
PIN 55.0X105 35NICRMOV125	97031196	7	2	758	917413208	SELF-ERECT. AUX. HOIST GEA
PIN 55.0X158 35NICRMOV125	939249808	5	1	734	917268408	BOOM NOSE
PIN 55.0X280 35NICRMOV125	971252308	8	2	654	967936908	COUNTERWEIGHT CPL.
PIN 65.0X155 35NICRMOV125	97042167	7	1	658	968068308	ASSEMBLY DEVICE
PIN 65.0X225 35NICRMOV125	97033301	22	4	35	917511508	CRAWLER CENTRE PART PRE
PIN 70.0X190 35NICRMOV125	97030039	10	6	489	918956108	HYDRAULIC BALLASTING
PIN 70.0X283 35NICRMOV125	97032197	12	4	129	919644008	HYDRAULIC SUPPORT
PIN 70.0X390 35NICRMOV125	97100242	41	1	75	91001377	CRAWLER SUPPORT PREASS
PIN 70.0X390 35NICRMOV125	97100242	41	1	108	91001378	CRAWLER SUPPORT PREASS
PIN 70.0X405 35NICRMOV125	97030038	5	2	489	918956108	HYDRAULIC BALLASTING
PIN 85.0X200 35NICRMOV125	97051278	14	1	751	968728808	CONSOLE PRE-ASS.
PIN 85.0X350 35NICRMOV125	97034096	3	1	363	917259608	ROTATING PLATFORM LOCK
PIN 90.0X415 35NICRMOV125	97032383	52	1	75	91001377	CRAWLER SUPPORT PREASS
PIN 90.0X415 35NICRMOV125	97032383	52	1	108	91001378	CRAWLER SUPPORT PREASS
PIN 90.0X785 35NICRMOV125	97032093	10	4	129	919644008	HYDRAULIC SUPPORT
PIN CARRIER 6-POL 16A	604526608	509	4	49	96045228	WIRING HARNESS
PIN CARRIER 6-POL 16A	604526608	501	1	142	96045205	WIRING HARNESS
PIN CARRIER 6-POL 16A	604526608	503	1	538	96037133	LEAD
PIN CARRIER 6-POL 16A	604526608	501	2	644	96037132	LEAD
PIN CARRIER 6-POL 16A	604526608	(501)	1	741	917598408	ELECTRIC MEASURING & WAR
PIN CONTACT 0,2-0,5MM2	10335819	689	4	463	96036955	WIRING HARNESS
PIN CONTACT 0,2-0,5MM2	10335819	689	4	464	96036956	WIRING HARNESS
PIN CONTACT 0,5-1,0MM2 CU	7369458	740	6	537	96037137	WIRING HARNESS

Description	Item	Pos.	Quantity	Page	Assembly	Description
PIN CONTACT 0,5-1MM2MM2 C	10300944	715	2	463	96036955	WIRING HARNESS
PIN CONTACT 0,5MM2 SILBER	10493972	719	16	49	96045228	WIRING HARNESS
PIN CONTACT 0,5MM2 SILBER	10493972	719	6	142	96045205	WIRING HARNESS
PIN CONTACT 0,5MM2 SILBER	10493972	(719)	2	741	917598408	ELECTRIC MEASURING & WAR
PIN CONTACT 0,75-1,5MM2	6202444	95	3	49	96045228	WIRING HARNESS
PIN CONTACT 0,75-1,5MM2	6202444	95	1	532	96045385	WIRING HARNESS
PIN CONTACT 0,75-1,5MM2	6202444	95	3	534	96037136	WIRING HARNESS
PIN CONTACT 0,75-1MM2	604519208	628	2	538	96037133	LEAD
PIN CONTACT 0,75-1MM2	604519208	628	4	644	96037132	LEAD
PIN CONTACT 0,75-1MM2	604519208	(628)	2	741	917598408	ELECTRIC MEASURING & WAR
PIN CONTACT 1,5MM2	604519108	(637)	1	741	917598408	ELECTRIC MEASURING & WAR
PIN DIN 1434 5X40X35 X5CRN	451000208	1	1	745	967936408	WIND WARNING PREASSEMB
PIN DIN 1435 20X50X43 42CR	10875669	4	3	762	929582108	MOUNTING PRE-ASS.
PIN DIN 1435 20X50X43 42CR	10875669	2	1	765	923879808	CONSOLE PRE-ASS.
PIN DIN 1435 40X60X50 S355J2	451237208	10	2	147	919087608	ROTARY FEED THROUGH
PIN DIN 1435 40X80X68 S355J2	451237508	11	1	147	919087608	ROTARY FEED THROUGH
PIN DIN 1435 8X50X47 ST.50	451210308	11	1	387	916177508	STEP CPL.
PIN DIN 1436 25X55X45 42CR	451426608	43	1	761	917267508	TRANSPORT MOUNTING
PIN DIN 1436 30X60X52 ST.50	451430708	32	2	668	917291908	PIVOT SECTION, PRE-ASSEMB
PIN DIN 1436 35X82X72 35NIC	10027134	16	4	129	919644008	HYDRAULIC SUPPORT
PIN HOLDER 10X131X38 S96	97028296	14	8	690	917292408	TELESCOPIC SECT.5 PRE-AS
PIN ISO 2340 B20X150X134 S3	452551408	8	1	734	917268408	BOOM NOSE
PIN ISO 2341 B30X95X85 35NIC	453032708	14	1	378	917259908	CRANE DRIVER CAB ADDITIO
PIN ISO 2341 B45X110X98 35N	453040908	15	2	604	967969608	AUXILIARY HOISTING GEAR 2
PIN ISO 2341 B6X25X22 ST 480	10875678	10	1	387	916177508	STEP CPL.
PIN RD100X193 35NICRMOV12	951111408	28	2	20	91001569	CRAWLER TRACK TRAVEL G
PIN RD30X107 42CRMO4+QT	956349008	4	1	763	923285508	FOLDING BRACKET PRE-ASS.
PIN RD35X71 35NICRMOV125	944029908	25	1	761	917267508	TRANSPORT MOUNTING
PIN RD49.5X58 42CRMO4+QT	956349108	5	1	763	923285508	FOLDING BRACKET PRE-ASS.
PIN W. HANDLE RAL 3020,SD	967850808	3	1	378	917259908	CRANE DRIVER CAB ADDITIO
PIN WITH HEAD 45.0X167 35N	97036916	42	4	20	91001569	CRAWLER TRACK TRAVEL G
PIPE CLAMP 33/20	774225008	18	1	482	96020359	ADDNL.HEATING, PRE-ASSE
PIPE CLAMP 43/20	774221708	24	7	480	918759808	ADD HEATING SUPERSTRUCT
PIPE CLAMP 8 S235JR	10127139	23	2	253	12512627	EXHAUST NOZZLE ATTACHM
PIPE CLAMP DIN3016 8X15XR	10876636	185	3	511	96051842	EXHAUST SYSTEM PRE-ASSE
PIPE CLAMP PART 26X50X332	97037153	300	6	56	96035801	HYDRAULIC EQUIPM.CENTER
PIPE CLAMP PART 26X50X332	97037154	301	6	56	96035801	HYDRAULIC EQUIPM.CENTER
PIPE COMPL.	96051844	(2)	1	511	96051842	EXHAUST SYSTEM PRE-ASSE
PIPE COMPL.	96051845	(1)	1	511	96051842	EXHAUST SYSTEM PRE-ASSE
PIPE COMPL.	968661408	404	2	288	919007708	DRIVE ASSEMBLY, PRE-ASSE
PIPE COMPL.	969939408	4	1	328	96034515	EXPANSION TANK PRE-ASS.
PIPE COMPL. 10X1,5X120 AL10	929802808	484	1	719	968187308	PIPELINES TELESCOPIC
PIPE COMPL. 10X1,5X137 AL10	929803108	488	1	719	968187308	PIPELINES TELESCOPIC
PIPE COMPL. 10X1,5X175 10L	969325008	247	1	599	918956208	PIPELINES SUPERSTRUCTUR
PIPE COMPL. 10X1,5X1951 10	968593808	722	2	60	96035803	PIPELINES CENTER PART
PIPE COMPL. 10X1,5X200 10L	968155008	302	1	599	918956208	PIPELINES SUPERSTRUCTUR
PIPE COMPL. 10X1,5X2030 10	968593908	723	2	60	96035803	PIPELINES CENTER PART
PIPE COMPL. 10X1,5X239 AL10	929802308	483	2	719	968187308	PIPELINES TELESCOPIC
PIPE COMPL. 10X1,5X2479 G10	968594008	724	2	60	96035803	PIPELINES CENTER PART
PIPE COMPL. 10X1,5X2512 G10	968594108	725	2	60	96035803	PIPELINES CENTER PART
PIPE COMPL. 10X1,5X278 AL10	929804608	489	1	719	968187308	PIPELINES TELESCOPIC
PIPE COMPL. 10X1,5X282 AL10	929806008	490	1	719	968187308	PIPELINES TELESCOPIC
PIPE COMPL. 10X1,5X348 10L	969438308	230	1	599	918956208	PIPELINES SUPERSTRUCTUR
PIPE COMPL. 10X1,5X407 AL10	929803008	486	1	719	968187308	PIPELINES TELESCOPIC
PIPE COMPL. 10X1,5X600 10S	969325208	291	1	599	918956208	PIPELINES SUPERSTRUCTUR
PIPE COMPL. 10X1,5X671 AL10	929802208	482	1	719	968187308	PIPELINES TELESCOPIC
PIPE COMPL. 10X1,5X687 10L	969325108	290	1	599	918956208	PIPELINES SUPERSTRUCTUR
PIPE COMPL. 10X1,5X853 AL10	929802108	481	1	719	968187308	PIPELINES TELESCOPIC
PIPE COMPL. 12X1,5X -	96045839	(2)	1	286	919007708	DRIVE ASSEMBLY, PRE-ASSE
PIPE COMPL. 12X1,5X1680 12L	968168108	715	1	60	96035803	PIPELINES CENTER PART

Description	Item	Pos.	Quantity	Page	Assembly	Description
PIPE COMPL. 12X1,5X1875,7 P	96035909	709	1	60	96035803	PIPELINES CENTER PART
PIPE COMPL. 12X1,5X1881,6 P	96035913	729	1	60	96035803	PIPELINES CENTER PART
PIPE COMPL. 12X1,5X1991 12	968168308	717	2	60	96035803	PIPELINES CENTER PART
PIPE COMPL. 12X1,5X1993 12	968168708	721	2	60	96035803	PIPELINES CENTER PART
PIPE COMPL. 12X1,5X2093 12	968168208	716	2	60	96035803	PIPELINES CENTER PART
PIPE COMPL. 12X1,5X2102 12	968168608	720	2	60	96035803	PIPELINES CENTER PART
PIPE COMPL. 12X1,5X2292 12L	968168008	714	1	60	96035803	PIPELINES CENTER PART
PIPE COMPL. 12X1,5X467 12S	968168808	(760)	4	132	968077208	HYDRAULIC SUPPORT
PIPE COMPL. 12X1,5X480 12L	969325308	292	1	599	918956208	PIPELINES SUPERSTRUCTUR
PIPE COMPL. 12X1,5X780 12S	968167108	704	1	60	96035803	PIPELINES CENTER PART
PIPE COMPL. 16X2X206 16S -	969324808	245	1	599	918956208	PIPELINES SUPERSTRUCTUR
PIPE COMPL. 16X2X2361 AS16	962977708	496	2	730	968223408	PIPE COND. FOLDING SEAT
PIPE COMPL. 16X2X2550 AS16	968201408	494	2	730	968223408	PIPE COND. FOLDING SEAT
PIPE COMPL. 16X2X5360 AS16	962977608	495	2	730	968223408	PIPE COND. FOLDING SEAT
PIPE COMPL. 18X1,5X -	968544708	(327)	1	496	969763408	PIPEWORK AIR INSTALLATIO
PIPE COMPL. 18X1,5X1474 18L	969979608	(326)	1	496	969763408	PIPEWORK AIR INSTALLATIO
PIPE COMPL. 18X1,5X268 18L	969324908	246	1	599	918956208	PIPELINES SUPERSTRUCTUR
PIPE COMPL. 18X1,5X662 18L -	969978408	(328)	1	496	969763408	PIPEWORK AIR INSTALLATIO
PIPE COMPL. 20X2,5X1472 20	969165608	711	1	60	96035803	PIPELINES CENTER PART
PIPE COMPL. 20X2,5X1768 20	968168408	718	2	60	96035803	PIPELINES CENTER PART
PIPE COMPL. 20X2,5X1842 20	968168508	719	2	60	96035803	PIPELINES CENTER PART
PIPE COMPL. 20X2,5X1931 20	969165508	710	1	60	96035803	PIPELINES CENTER PART
PIPE COMPL. 20X2,5X2529 20S	968158208	260	1	599	918956208	PIPELINES SUPERSTRUCTUR
PIPE COMPL. 20X2,5X2536 20S	968158508	265	1	599	918956208	PIPELINES SUPERSTRUCTUR
PIPE COMPL. 22X2,5X -	96045838	(1)	1	286	919007708	DRIVE ASSEMBLY, PRE-ASSE
PIPE COMPL. 22X2,5X1415 G2	968156108	320	1	599	918956208	PIPELINES SUPERSTRUCTUR
PIPE COMPL. 22X2,5X1631 22L	968167908	713	1	60	96035803	PIPELINES CENTER PART
PIPE COMPL. 22X2,5X2118 22L	968167808	712	1	60	96035803	PIPELINES CENTER PART
PIPE COMPL. 22X2,5X229 AL22	968021308	10	1	612	90200103	OIL-GAUGING INSTRUMENT
PIPE COMPL. 22X2,5X245 AL22	968021408	25	1	612	90200103	OIL-GAUGING INSTRUMENT
PIPE COMPL. 22X2,5X357 AL22	968021508	10	1	374	90200104	OIL-GAUGING INSTRUMENT
PIPE COMPL. 22X2,5X407 AL22	968021608	25	1	374	90200104	OIL-GAUGING INSTRUMENT
PIPE COMPL. 25X3X1705 30 B	969344508	200	1	599	918956208	PIPELINES SUPERSTRUCTUR
PIPE COMPL. 28X2X1823,6 PR2	96035912	728	1	60	96035803	PIPELINES CENTER PART
PIPE COMPL. 28X2X1847,9 PR2	96035907	708	1	60	96035803	PIPELINES CENTER PART
PIPE COMPL. 38X5X -	968154808	300	1	599	918956208	PIPELINES SUPERSTRUCTUR
PIPE COMPL. 38X5X -	968154908	301	1	599	918956208	PIPELINES SUPERSTRUCTUR
PIPE COMPL. 38X5X -	968155108	303	1	599	918956208	PIPELINES SUPERSTRUCTUR
PIPE COMPL. 38X5X -	968159308	477	1	599	918956208	PIPELINES SUPERSTRUCTUR
PIPE COMPL. 38X5X -	968166708	700	1	60	96035803	PIPELINES CENTER PART
PIPE COMPL. 38X5X -	968166808	701	1	60	96035803	PIPELINES CENTER PART
PIPE COMPL. 38X5X -	968166908	702	1	60	96035803	PIPELINES CENTER PART
PIPE COMPL. 38X5X -	968167008	703	1	60	96035803	PIPELINES CENTER PART
PIPE COMPL. 38X5X1058 AS38	96035929	304	1	599	918956208	PIPELINES SUPERSTRUCTUR
PIPE COMPL. 38X5X1078 MU.	969438208	309	1	599	918956208	PIPELINES SUPERSTRUCTUR
PIPE COMPL. 38X5X1774,6 38	96035910	726	1	60	96035803	PIPELINES CENTER PART
PIPE COMPL. 38X5X1775 38X1	96035905	706	1	60	96035803	PIPELINES CENTER PART
PIPE COMPL. 38X5X1779,1 38	96035906	707	1	60	96035803	PIPELINES CENTER PART
PIPE COMPL. 38X5X1779,5 38	96035911	727	1	60	96035803	PIPELINES CENTER PART
PIPE COMPL. 38X5X1808 MU.3	968162308	(250)	1	616	967784808	HYDR.AUXILIARY HOISTING
PIPE COMPL. 38X5X1916 MU.3	968162408	(251)	1	616	967784808	HYDR.AUXILIARY HOISTING
PIPE COMPL. 38X5X360 MU.3	968159108	475	1	599	918956208	PIPELINES SUPERSTRUCTUR
PIPE COMPL. 38X5X463 MU.3	968159008	474	1	599	918956208	PIPELINES SUPERSTRUCTUR
PIPE COMPL. 38X5X548 MU.3	968158908	473	1	599	918956208	PIPELINES SUPERSTRUCTUR
PIPE COMPL. 38X5X619 AS38 -	966546008	480	3	719	968187308	PIPELINES TELESCOPIC
PIPE COMPL. 42X3X688 42L -	968159408	478	2	599	918956208	PIPELINES SUPERSTRUCTUR
PIPE COMPL. 42X3X990 42L -	968159508	479	1	599	918956208	PIPELINES SUPERSTRUCTUR
PIPE COMPL. 6X1X239 AS6 -	922676808	(487)	1	722	967785408	ADDNL.HYDR. FOLDING JIB
PIPE COMPL. 6X1X327 AL6 - AL	968205108	770	4	60	96035803	PIPELINES CENTER PART
PIPE COMPL. 6X1X327 AL6 - AL	968205208	771	4	60	96035803	PIPELINES CENTER PART

Description	Item	Pos.	Quantity	Page	Assembly	Description
PIPE COMPL. 6X1X406,6 AS6	96035646	240	1	599	918956208	PIPELINES SUPERSTRUCTUR
PIPE COND. FOLDING SEAT	927163908	11	1	722	967785408	ADDNL.HYDR. FOLDING JIB
PIPE COND. FOLDING SEAT WI	968223408	11	1	728	967785008	ADDNL.HYDR. FOLDING JIB
PIPE ELBOW	570066108	3	1	102	502806508	EQUALIZING RESERVOIR
PIPE LINES WINCH 2	968083808	11	1	616	967784808	HYDR.AUXILIARY HOISTING
PIPE SOCKET GSCK45	97042155	6	1	430	969085208	HEATING, PRE-ASSEMBLED
PIPE SOCKET R1/4"	10014698	1	1	139	774375108	PASSAGE NIPPLE BLOCK
PIPE SUPPORT	774215508	311	1	496	969763408	PIPEWORK AIR INSTALLATIO
PIPE WELDED	963498508	79	1	691	917292408	TELESCOPIC SECT.5 PRE-AS
PIPE WELDED	968011608	6	1	147	919087608	ROTARY FEED THROUGH
PIPE WELDED RAL 9005,M,GT	966621108	12	1	399	917305408	INTERNAL PANELLING INSTA
PIPE WELDED RAL 9005,M,GT,	966620008	13	1	399	917305408	INTERNAL PANELLING INSTA
PIPE WELDED SCHWARZ PUL	966513708	17	1	409	966497908	FRONT WINDOW CPL.
PIPE WELDED SCHWARZ PUL	966662508	6	1	381	919010208	CRANE OPERATOR CABIN P
PIPELINE	10143542	4	1	228	10143341	FUEL LINES
PIPELINE	10143543	3	1	228	10143341	FUEL LINES
PIPELINE 10X1X425	12921811	1	1	247	10148216	PIPELINE INSTALLATION
PIPELINE 15X1,5	10130104	6	1	228	10143341	FUEL LINES
PIPELINE 22X1,5	10140732	9	1	232	10145173	INTAKE STACK ASSEMBLY
PIPELINE 22X1,5	10145175	1	1	242	10145176	PIPELINE INSTALLATION
PIPELINE 6X1	10132170	3	1	229	10143342	LEAK OIL RETURN LINE
PIPELINE 6X1	10133607	13	1	229	10143342	LEAK OIL RETURN LINE
PIPELINE 6X1	10141846	8	1	229	10143342	LEAK OIL RETURN LINE
PIPELINE 6X1	10145838	9	1	276	10144036	POWER TAKE-OFF ADD-ON
PIPELINE 6X1	11420632	3	1	254	11420633	CYCLE VALVE
PIPELINE 6X1	12429430	4	1	254	11420633	CYCLE VALVE
PIPELINE 8X1	10132180	19	1	229	10143342	LEAK OIL RETURN LINE
PIPELINE 8X1	10145069	17	1	253	12512627	EXHAUST NOZZLE ATTACHM
PIPELINE 8X1	10145070	18	1	253	12512627	EXHAUST NOZZLE ATTACHM
PIPELINE 8X2	10143251	1	1	229	10143342	LEAK OIL RETURN LINE
PIPELINE INSTALLATION	10145176	333	1	177	13455297	DIESEL ENGINE
PIPELINE INSTALLATION	10148216	381	1	177	13455297	DIESEL ENGINE
PIPELINE SUPPORT	968078808	11	1	132	968077208	HYDRAULIC SUPPORT
PIPELINES CENTER PART	96035803	11	1	56	96035801	HYDRAULIC EQUIPM.CENTER
PIPELINES DRIVE ASSEMBLY	968986008	8	1	286	919007708	DRIVE ASSEMBLY, PRE-ASSE
PIPELINES DRUCKLUFT OW	969842808	11	1	496	969763408	PIPEWORK AIR INSTALLATIO
PIPELINES SUPERSTRUCTUR	918956208	193	1	14		LIEBHERR LTR 1220
PIPELINES TELESCOPIC	968187308	11	1	717	967784508	HYDR.F.TELESCOPIC BOOM
PIPEWORK AIR INSTALLATIO	969763408	4	1	494	917676308	COMPRESSED-AIR SYST.SU
PISTON	10152593	1	1	215	10152592	PRESSURE RELIEF VALVE
PISTON	570110608	4	7	361	570109508	DRIVING GEAR
PISTON	571582608	13	1	240	5700161	AIR COMPRESSOR
PISTON	9886591	8	1	213	10129474	OIL COOLER, PRE-ASSEMBLE
PISTON 31CrMoV9	10149655	1	1	184	10138450	FINAL CONTROL VALVE
PISTON COOLING	10142749	15	4	174	13455297	DIESEL ENGINE
PISTON COOLING PRE-ASS.	10151634	1	1	185	10142749	PISTON COOLING
PISTON CPL. R-MOTORX130	10146367	70	4	175	13455297	DIESEL ENGINE
PISTON RING MG 130X120,5X	12476138	4	1	201	10146367	PISTON CPL.
PIVOT HEAD	11691377	2	1	379	11214363	TILT CYLINDER
PIVOT PIECE ST. CONST. SPF	917292608	1	1	668	917291908	PIVOT SECTION, PRE-ASSEMB
PIVOT PIN	10475198	11	4	319	10871282	VARIABLE PUMP
PIVOT SECTION, PRE-ASSEMB	917291908	1	1	663	918804808	TELESCOPIC BOOM CPL.
PLAIN BEARING BUSHING 30	9889290	(2)	2	241	9072906	INTERMEDIATE GEAR CPL.
PLANET WHEEL	927530801	40	3	353	90008901	SLEWING GEAR DRIVE
PLANET WHEEL	927601401	7	5	370	939292201	PLANETARY GEARBOX
PLANET WHEEL	927602101	32	3	372	90017588	PLANETARY CARRIER
PLANET WHEEL	927608601	42	3	370	939292201	PLANETARY GEARBOX
PLANET WHEEL Z=28	939251101	20	5	353	90008901	SLEWING GEAR DRIVE
PLANETARY CARRIER	90017588	700	1	371	939292201	PLANETARY GEARBOX
PLANETARY CARRIER 150 42C	939251501	35	1	353	90008901	SLEWING GEAR DRIVE

Description	Item	Pos.	Quantity	Page	Assembly	Description
PLANETARY CARRIER 150 42C	939257301	50	1	353	90008901	SLEWING GEAR DRIVE
PLANETARY CARRIER 170 42	939250301	15	1	353	90008901	SLEWING GEAR DRIVE
PLANETARY CARRIER 225 42	927608501	40	1	370	939292201	PLANETARY GEARBOX
PLANETARY CARRIER 275 42C	927602001	30	1	372	90017588	PLANETARY CARRIER
PLANETARY GEARBOX	939292201	5	1	367	90208882	COMPACT ROPE WINCH
PLANETARY GEARBOX	939294201	5	1	606	90028852	COMPACT ROPE WINCH
PLASTIC PIPE COMPLETE	969383908	(2331)	1	500	918731808	UREA PLANT
PLATE	10142763	2	1	249	10142744	COOLING WATER AIR BLEED
PLATE	518565008	46	1	697	10876933	TELESCOPIC CYLINDER
PLATE	967970008	2	2	604	967969608	AUXILIARY HOISTING GEAR 2
PLATE 1.5X107X120 DC01 RAL	97006876	37	1	399	917305408	INTERNAL PANELLING INSTA
PLATE 1.5X110X178 DC01 FE//	97013718	(1)	1	467	96053500	ELECTRIC ADD-ON PARTS CA
PLATE 1.5X112X30 DC01 FE//	972940008	13	2	544	969256608	BASE ASSEMBLY
PLATE 1.5X114X70 DC01 FE//	97025882	8	1	544	969256608	BASE ASSEMBLY
PLATE 1.5X131X117 DC01 FE//	97002645	3	1	390	916170808	CABLE INLET
PLATE 1.5X156X117 DC01 FE//	97024733	14	1	540	91000922	SWITCHBOX MOUNTING PART
PLATE 1.5X170X50 DC01 FE//	976673908	27	4	378	917259908	CRANE DRIVER CAB ADDITIO
PLATE 1.5X174X114 DC01 RAL	976094108	5	1	390	916170808	CABLE INLET
PLATE 1.5X219X129 DC01 FE//	97031454	32	1	378	917259908	CRANE DRIVER CAB ADDITIO
PLATE 1.5X256X53 DC01 FE//	979294908	2	1	548	968063108	PRE-ASSEMBLY MOUNTING U
PLATE 1.5X25X47 DC01 RAL 7	97006875	36	1	399	917305408	INTERNAL PANELLING INSTA
PLATE 1.5X290X162 DC01 FE//	97000735	2	1	390	916170808	CABLE INLET
PLATE 1.5X322X156 DC01 RAL	97033190	40	1	378	917259908	CRANE DRIVER CAB ADDITIO
PLATE 1.5X399X35 DC01 FE//	97017074	13	1	540	91000922	SWITCHBOX MOUNTING PART
PLATE 1.5X404X230 DC01 FE//	97032990	2	1	43	968054008	MOUNTING PLATE PRE-ASS.
PLATE 1.5X436X90 DC01 RAL 7	97003298	24	1	399	917305408	INTERNAL PANELLING INSTA
PLATE 1.5X44X97 X5CRNI18-1	97015722	10	1	381	919010208	CRANE OPERATOR CABIN P
PLATE 1.5X456X541 DC01	97029382	3	1	690	917292408	TELESCOPIC SECT.5 PRE-AS
PLATE 1.5X551X299 DC01 RAL	97002609	23	1	399	917305408	INTERNAL PANELLING INSTA
PLATE 1.5X560X43 DC01 FE//	97091350	8	1	328	96034515	EXPANSION TANK PRE-ASS.
PLATE 1.5X691X50 X5CRNI18-1	97030182	2	1	744	967933408	LOCATION FIXTURE PRE-ASS.
PLATE 1.5X70X100 DC01 FE//	978842708	3	2	548	968063108	PRE-ASSEMBLY MOUNTING U
PLATE 1.5X72X538 X5CRNI18-1	97000469	15	1	399	917305408	INTERNAL PANELLING INSTA
PLATE 1.5X779X733 DC01 FE//	978606708	1	1	548	968063108	PRE-ASSEMBLY MOUNTING U
PLATE 1.5X832X41 DC01 RAL 7	97027494	65	1	400	917305408	INTERNAL PANELLING INSTA
PLATE 1.5X90X96 DC01 RAL 90	976167908	16	1	467	96053500	ELECTRIC ADD-ON PARTS CA
PLATE 1.5X95X40 DC01 RAL 90	97025127	35	3	409	966497908	FRONT WINDOW CPL.
PLATE 10X170X79 S355MC FE//	97053069	22	1	172	918731108	ASSEMBLY PARTS F.SLEWING
PLATE 10X170X80 S355MC FE//	97030033	8	2	492	967928508	LOCKING
PLATE 10X443X155 S960QL	973258908	45	1	685	917292308	TELESCOPIC SECT.IV PRE-A
PLATE 10X470X158 S960QL	973253408	45	1	681	917292208	TELESCOPIC SECT.3 PRE-ASS
PLATE 10X477X155 S960QL	973258808	44	2	685	917292308	TELESCOPIC SECT.IV PRE-A
PLATE 10X498X162 S960QL	973246008	45	1	677	917292108	TELESCOPIC SECT.2 PRE-AS
PLATE 10X504X361 S960QL	973357908	54	1	668	917291908	PIVOT SECTION, PRE-ASSEMB
PLATE 10X50X350 S355MC	97050776	65	2	21	91001569	CRAWLER TRACK TRAVEL G
PLATE 10X523X163 S960QL F	973253308	44	2	681	917292208	TELESCOPIC SECT.3 PRE-ASS
PLATE 10X526X167 S960QL	972898508	45	1	673	917292008	TELESCOPIC SECTION 1 PRE
PLATE 10X527X161 S960QL F	973245908	44	2	677	917292108	TELESCOPIC SECT.2 PRE-AS
PLATE 10X542X412 S960QL	973357708	46	2	668	917291908	PIVOT SECTION, PRE-ASSEMB
PLATE 10X615X181 S960QL F	972898408	44	2	673	917292008	TELESCOPIC SECTION 1 PRE
PLATE 110X34 S315MC FE//ZN	979132008	84	1	691	917292408	TELESCOPIC SECT.5 PRE-AS
PLATE 110X34 S315MC FE//ZN	979132008	5	1	737	967321308	FIXING DEVICE 2.LIFT TOP
PLATE 12X164X58 S355MC FE//	97118864	6	1	507	919674408	EXHAUST SYSTEM
PLATE 15X105X290 S355MC FE	97031536	5	1	378	917259908	CRANE DRIVER CAB ADDITIO
PLATE 15X260X203 S355MC FE	97031535	4	1	378	917259908	CRANE DRIVER CAB ADDITIO
PLATE 15X30X75 S355MC	97051276	12	2	751	968728808	CONSOLE PRE-ASS.
PLATE 15X40X140 S690QL	956348108	24	2	761	917267508	TRANSPORT MOUNTING
PLATE 15X45X320 S690QL	956347808	11	2	761	917267508	TRANSPORT MOUNTING
PLATE 15X90X60 S355MC FE//	978361308	23	1	294	968026308	CLUTCH ACTUATOR
PLATE 192X126 DC01 FE//ZNNI	97037694	(2)	1	616	967784808	HYDR.AUXILIARY HOISTING

Description	Item	Pos.	Quantity	Page	Assembly	Description
PLATE 196X63 S315MC FE//ZN	955668108	24	1	604	967969608	AUXILIARY HOISTING GEAR 2
PLATE 196X63 S315MC FE//ZN	955668108	(9)	1	604	967969608	AUXILIARY HOISTING GEAR 2
PLATE 1X130X30 DC01 FE//ZN	97031661	5	8	758	917413208	SELF-ERECT. AUX. HOIST GEA
PLATE 1X133X94 DC01 FE//ZN	97042769	19	16	35	917511508	CRAWLER CENTRE PART PRE
PLATE 1X176X176 X5CRNI18-1	974792608	(1)	1	445	96036790	SLEWING PLATFORM PANELLI
PLATE 1X176X176 X5CRNI18-1	974792608	(1)	1	445	96036790	SLEWING PLATFORM PANELLI
PLATE 1X196X130 X5CRNI18-1	97058414	(1)	1	445	96036790	SLEWING PLATFORM PANELLI
PLATE 1X234X43 DC01 FE//ZN	973246908	21	4	673	917292008	TELESCOPIC SECTION 1 PRE
PLATE 1X234X43 DC01 FE//ZN	973246908	21	4	677	917292108	TELESCOPIC SECT.2 PRE-AS
PLATE 1X234X43 DC01 FE//ZN	973246908	21	4	681	917292208	TELESCOPIC SECT.3 PRE-ASS
PLATE 1X234X43 DC01 FE//ZN	973246908	21	4	685	917292308	TELESCOPIC SECT.IV PRE-A
PLATE 1X234X43 DC01 FE//ZN	973246908	44	4	690	917292408	TELESCOPIC SECT.5 PRE-AS
PLATE 1X252X83 DC01 FE//ZN	97033889	21	1	286	919007708	DRIVE ASSEMBLY, PRE-ASSE
PLATE 1X285X126 DC01 RAL 9	977444308	17	1	433	918810308	CONTROL STAND
PLATE 1X285X126 DC01 RAL 9	977444408	18	1	433	918810308	CONTROL STAND
PLATE 1X40X140 DC01+ZE	956348608	45	1	761	917267508	TRANSPORT MOUNTING
PLATE 1X516X48 DC01 FE//ZN	97035164	38	8	20	91001569	CRAWLER TRACK TRAVEL G
PLATE 1X516X55 DC01 FE//ZN	97035163	37	8	20	91001569	CRAWLER TRACK TRAVEL G
PLATE 1X60X115 DC01 FE//ZN	97032839	8	32	124	968046208	ADD-ON PARTS
PLATE 1X65X94 DC01 FE//ZNNI	97042770	20	16	35	917511508	CRAWLER CENTRE PART PRE
PLATE 1X70X80 DC01 FE//ZNNI	953515508	9	1	337	917626608	FUEL TANK ADD-ON UNIT
PLATE 1X70X80 DC01 FE//ZNNI	953515508	10	8	345	917825508	OIL RESERVOIR, EXTENSION
PLATE 1X86X53 DC01 FE//ZNNI	957025308	24	4	673	917292008	TELESCOPIC SECTION 1 PRE
PLATE 1X86X53 DC01 FE//ZNNI	957025308	24	4	677	917292108	TELESCOPIC SECT.2 PRE-AS
PLATE 1X86X53 DC01 FE//ZNNI	957025308	24	4	681	917292208	TELESCOPIC SECT.3 PRE-ASS
PLATE 1X86X53 DC01 FE//ZNNI	957025308	24	4	685	917292308	TELESCOPIC SECT.IV PRE-A
PLATE 1X86X53 DC01 FE//ZNNI	957025308	46	4	690	917292408	TELESCOPIC SECT.5 PRE-AS
PLATE 1X90X60 DC01 FE//ZNNI	97032616	4	6	30	968019508	LIMIT SWITCH ADD-ON
PLATE 1x320x35 DC01+ZE	956348808	14	1	761	917267508	TRANSPORT MOUNTING
PLATE 2.5X130X28 DC01 RAL	979022608	7	2	410	965784408	ROOF WINDOW PRE-ASS.
PLATE 2.5X235X575 DC01 FE//	97100731	4	1	334	96023117	BATTERY BOX, PRE-ASSEMB
PLATE 2.5X71X196 DC01 RAL	97022452	53	1	467	96053500	ELECTRIC ADD-ON PARTS CA
PLATE 2.5X73X78 DC01 FE//ZN	97032370	48	1	75	91001377	CRAWLER SUPPORT PREASS
PLATE 2.5X73X78 DC01 FE//ZN	97032370	48	1	108	91001378	CRAWLER SUPPORT PREASS
PLATE 200X309 S355MC	972133308	10	1	668	917291908	PIVOT SECTION, PRE-ASSEMB
PLATE 20X126X40 S355J2+N	97118866	17	1	511	96051842	EXHAUST SYSTEM PRE-ASSE
PLATE 20X375X135 S960QL	97032051	2	1	363	917259608	ROTATING PLATFORM LOCK
PLATE 20X375X135 S960QL	97034837	8	1	363	917259608	ROTATING PLATFORM LOCK
PLATE 20X45X230 S690QL	953608508	9	2	147	919087608	ROTARY FEED THROUGH
PLATE 20X45X230 S690QL	953608508	17	2	761	917267508	TRANSPORT MOUNTING
PLATE 20X490X490 S690QL F	97061080	36	1	286	919007708	DRIVE ASSEMBLY, PRE-ASSE
PLATE 25X107X49 S690QL	97052637	9	4	129	919644008	HYDRAULIC SUPPORT
PLATE 25X202X279 S690QL SP	97030323	1	2	758	917413208	SELF-ERECT. AUX. HOIST GEA
PLATE 2X100X210 DC01 FE//ZN	970537808	31	12	673	917292008	TELESCOPIC SECTION 1 PRE
PLATE 2X100X210 DC01 FE//ZN	970537808	31	18	677	917292108	TELESCOPIC SECT.2 PRE-AS
PLATE 2X100X210 DC01 FE//ZN	970537808	31	14	681	917292208	TELESCOPIC SECT.3 PRE-ASS
PLATE 2X100X210 DC01 FE//ZN	970537808	31	14	685	917292308	TELESCOPIC SECT.IV PRE-A
PLATE 2X100X210 DC01 FE//ZN	970537808	42	12	690	917292408	TELESCOPIC SECT.5 PRE-AS
PLATE 2X100X290 DC01 FE//ZN	97011478	26	2	20	91001569	CRAWLER TRACK TRAVEL G
PLATE 2X1160X520 ALMG3 H	97121229	2	1	518	96039752	ADDITIONAL PARTS CLADDIN
PLATE 2X1225X659 ALMG3 H	97033140	15	1	455	969015908	SLEWING PLATFORM PANELLI
PLATE 2X1248X623 ALMG3 H	97033141	1	1	459	917610208	ADDITIONAL PARTS
PLATE 2X130X30 DC01 FE//ZN	97031660	4	8	758	917413208	SELF-ERECT. AUX. HOIST GEA
PLATE 2X130X89 ALMG3 H111	97052638	2	1	520	918731908	AIR FILTER UNIT
PLATE 2X138X117 DC01 FE//ZN	97059337	19	1	286	919007708	DRIVE ASSEMBLY, PRE-ASSE
PLATE 2X143X88 DC01 FE//ZN	97083880	1	1	547	926891108	GROUND RAIL
PLATE 2X143X92 X5CRNI18-10	97030562	3	1	745	967936408	WIND WARNING PREASSEMB
PLATE 2X145X62 DC01 FE//ZN	97031205	5	2	604	967969608	AUXILIARY HOISTING GEAR 2
PLATE 2X148X148 ALMG3 H11	97031272	2	1	87	967972308	COVER PRE-ASSY.
PLATE 2X148X148 ALMG3 H11	97031272	2	1	89	968270108	COVER PRE-ASSY.

Description	Item	Pos.	Quantity	Page	Assembly	Description
PLATE 2X155X38 DC01 FE//ZN	971067708	10	1	734	917268408	BOOM NOSE
PLATE 2X155X38 DC01 FE//ZN	971067708	1	1	737	967321308	FIXING DEVICE 2.LIFT TOP
PLATE 2X156X137 DC01 RAL 7	97071962	15	1	390	916170808	CABLE INLET
PLATE 2X158X79 DC01 FE//ZN	97061320	9	1	286	919007708	DRIVE ASSEMBLY, PRE-ASSE
PLATE 2X160X196 DC01 FE//ZN	97034301	16	1	445	96036790	SLEWING PLATFORM PANELLI
PLATE 2X162X142 ALMG3 H11	976536208	5	1	548	968063108	PRE-ASSEMBLY MOUNTING U
PLATE 2X170X51 DC01 FE//ZN	97024781	19	1	406	916162508	WINDOW ASSEMBLY
PLATE 2X173X139 DC01 FE//ZN	97032982	18	1	286	919007708	DRIVE ASSEMBLY, PRE-ASSE
PLATE 2X177X240 DC01 FE//ZN	97006461	9	1	415	916163008	WIPERS INSTALLATION
PLATE 2X180X191 ALMG3 H11	975842108	1	1	450	964093408	COVER COMPL.
PLATE 2X190X18 DC01 FE//ZN	979294808	12	2	544	969256608	BASE ASSEMBLY
PLATE 2X191X185 X5CRNI18-1	97030307	1	1	746	967937608	OBSTRUCTION LIGHTS PREAS
PLATE 2X195X66 X5CRNI18-10	974742308	4	1	449	968923508	FLAP RIGHT PRE-ASS.
PLATE 2X198X248 ALMG3 H11	97038089	2	1	90	968274208	COVER PRE-ASSY.
PLATE 2X200X280 DC01 FE//ZN	97039974	63	4	21	91001569	CRAWLER TRACK TRAVEL G
PLATE 2X200X60 DC01 FE//ZN	97046465	40	4	129	919644008	HYDRAULIC SUPPORT
PLATE 2X2038X172 DC01 FE//	97031350	6	1	592	967980508	OIL COOLER, PRE-ASSEMBLE
PLATE 2X203X318 ALMG3 H11	97045975	2	1	91	968709108	COVER PRE-ASSY.
PLATE 2X210X85 DC01 FE//ZN	972908208	30	2	673	917292008	TELESCOPIC SECTION 1 PRE
PLATE 2X210X85 DC01 FE//ZN	972908208	30	4	677	917292108	TELESCOPIC SECT.2 PRE-AS
PLATE 2X210X85 DC01 FE//ZN	972908208	30	4	681	917292208	TELESCOPIC SECT.3 PRE-ASS
PLATE 2X210X85 DC01 FE//ZN	972908208	30	4	685	917292308	TELESCOPIC SECT.IV PRE-A
PLATE 2X210X85 DC01 FE//ZN	972908208	34	4	690	917292408	TELESCOPIC SECT.5 PRE-AS
PLATE 2X220X100 DC01 FE//ZN	974276208	90	1	669	917291908	PIVOT SECTION, PRE-ASSEMB
PLATE 2X227X109 DC01 FE//ZN	97005289	5	1	409	966497908	FRONT WINDOW CPL.
PLATE 2X231X192 DC01 RAL	97025080	24	1	641	96045237	EQUIPMENT CAMERA CAB
PLATE 2X236X50 X5CRNI18-10	974656608	7	1	457	969016008	FLAP LEFT FRONT PRE-ASS.
PLATE 2X244X449 ALMG3 H11	97031267	2	1	86	967972208	COVER PRE-ASSY.
PLATE 2X244X449 ALMG3 H11	97031267	2	1	110	968055808	COVER PRE-ASSY.
PLATE 2X25X80 DC01 FE//ZNNI	97047274	28	2	365	917259708	MAIN HOIST GEAR
PLATE 2X278X250 DC01 FE//ZN	97028172	12	1	690	917292408	TELESCOPIC SECT.5 PRE-AS
PLATE 2X290X100 DC01 FE//ZN	97037945	25	2	20	91001569	CRAWLER TRACK TRAVEL G
PLATE 2X290X22 DC01 FE//ZN	979724708	23	1	445	96036790	SLEWING PLATFORM PANELLI
PLATE 2X291X200 X5CRNI18-1	97008317	2	1	637	968290608	STAND
PLATE 2X291X200 X5CRNI18-1	97008317	1	1	640	968267208	STAND
PLATE 2X297X1030 DC01 FE//	97049819	10	1	445	96036790	SLEWING PLATFORM PANELLI
PLATE 2X300X125 DC01 FE//ZN	97045050	16	1	286	919007708	DRIVE ASSEMBLY, PRE-ASSE
PLATE 2X303X252 DC01 FE//ZN	97009056	13	1	668	917291908	PIVOT SECTION, PRE-ASSEMB
PLATE 2X361X79 DC01 FE//ZN	97072959	32	1	286	919007708	DRIVE ASSEMBLY, PRE-ASSE
PLATE 2X368X357 DC01 FE//ZN	97103093	2	1	26	96034894	PROTECTION PLATE CPL.
PLATE 2X368X357 DC01 FE//ZN	97103093	2	1	29	96034977	PROTECTION PLATE
PLATE 2X377X579 X5CRNI18-1	97072923	(1)	1	286	919007708	DRIVE ASSEMBLY, PRE-ASSE
PLATE 2X381X148 DC01 FE//ZN	97003805	10	1	383	96015921	OPERATING ELEMENT INSTAL
PLATE 2X388X685 ALMG3 H11	97155412	92	1	76	91001377	CRAWLER SUPPORT PREASS
PLATE 2X388X685 ALMG3 H11	97155761	92	1	109	91001378	CRAWLER SUPPORT PREASS
PLATE 2X40X140 DC01+ZE	956348708	46	1	761	917267508	TRANSPORT MOUNTING
PLATE 2X431X420 ALMG3 H11	97049712	35	1	445	96036790	SLEWING PLATFORM PANELLI
PLATE 2X50X115 X5CRNI18-10	974657908	11	1	455	969015908	SLEWING PLATFORM PANELLI
PLATE 2X50X559 X5CRNI18-10	97016752	31	1	387	916177508	STEP CPL.
PLATE 2X516X48 DC01 FE//ZN	97031992	14	16	20	91001569	CRAWLER TRACK TRAVEL G
PLATE 2X516X55 DC01 FE//ZN	97031991	13	40	20	91001569	CRAWLER TRACK TRAVEL G
PLATE 2X520X250 ALMG3 H11	97126286	6	1	518	96039752	ADDITIONAL PARTS CLADDIN
PLATE 2X550X297 DC01	97100598	1	1	334	96023117	BATTERY BOX, PRE-ASSEMB
PLATE 2X580X25 DC01	97127026	10	1	332	918955408	BATTERY BOX CPL.
PLATE 2X601X334 ALMG3 H11	97050960	10	1	291	96034631	RADIATOR, PRE-ASSEMBLED
PLATE 2X639X612 DC01	97031539	6	1	455	969015908	SLEWING PLATFORM PANELLI
PLATE 2X700X109 DC01 FE//ZN	97025690	8	1	395	917304508	CRANE OPERATOR CABIN P
PLATE 2X704X353 DC01	970509808	56	1	668	917291908	PIVOT SECTION, PRE-ASSEMB
PLATE 2X70X80 DC01	953515408	8	3	337	917626608	FUEL TANK ADD-ON UNIT
PLATE 2X719X40 DC01 FE//ZN	97005273	4	1	409	966497908	FRONT WINDOW CPL.

Description	Item	Pos.	Quantity	Page	Assembly	Description
PLATE 2X730X110 ALMG3 H11	97031642	7	32	20	91001569	CRAWLER TRACK TRAVEL G
PLATE 2X737X46 DC01 RAL 90	979022508	6	1	410	965784408	ROOF WINDOW PRE-ASS.
PLATE 2X768X448 ALMG3 H11	97121306	3	1	518	96039752	ADDITIONAL PARTS CLADDIN
PLATE 2X771X357 ALMG3 H11	97050762	5	1	291	96034631	RADIATOR, PRE-ASSEMBLED
PLATE 2X779X198 ALMG3 H11	97059376	3	1	291	96034631	RADIATOR, PRE-ASSEMBLED
PLATE 2X77X96 DC01 FE//ZNNI	97031462	36	2	378	917259908	CRANE DRIVER CAB ADDITIO
PLATE 2X810X132 DC01 RAL 7	97000470	14	1	399	917305408	INTERNAL PANELLING INSTA
PLATE 2X90X60 DC01 FE//ZNNI	97032617	5	8	30	968019508	LIMIT SWITCH ADD-ON
PLATE 2X90X60 DC01 FE//ZNNI	97104898	112	12	76	91001377	CRAWLER SUPPORT PREASS
PLATE 2X90X60 DC01 FE//ZNNI	97104898	113	12	109	91001378	CRAWLER SUPPORT PREASS
PLATE 2X98X168 ALMG3 H111	97031274	2	1	88	967972408	COVER PRE-ASSY.
PLATE 2X99X24 DC01 FE//ZNNI	979718908	22	2	445	96036790	SLEWING PLATFORM PANELLI
PLATE 2x230x225 DC01+ZE	970536208	13	10	677	917292108	TELESCOPIC SECT.2 PRE-AS
PLATE 2x230x225 DC01+ZE	970536208	13	10	681	917292208	TELESCOPIC SECT.3 PRE-ASS
PLATE 2x230x225 DC01+ZE	970536208	13	10	685	917292308	TELESCOPIC SECT.IV PRE-A
PLATE 2x230x225 DC01+ZE	970536208	35	10	690	917292408	TELESCOPIC SECT.5 PRE-AS
PLATE 2x320x35 DC01+ZE	956348908	15	1	761	917267508	TRANSPORT MOUNTING
PLATE 2x350x225 DC01+ZE	970545708	13	10	673	917292008	TELESCOPIC SECTION 1 PRE
PLATE 30X130X30 S355J2+N	97031659	3	2	758	917413208	SELF-ERECT. AUX. HOIST GEA
PLATE 30X210X140 S355J2+N	97033307	5	1	493	967978908	INTERLOCKING
PLATE 30X246X99 S355J2+N	97033309	6	1	493	967978908	INTERLOCKING
PLATE 30X370X50 S960QL FE/	972898708	50	2	668	917291908	PIVOT SECTION, PRE-ASSEMB
PLATE 30X370X50 S960QL FE/	972898708	54	2	673	917292008	TELESCOPIC SECTION 1 PRE
PLATE 35X96X20 S690QL	97031206	6	2	604	967969608	AUXILIARY HOISTING GEAR 2
PLATE 3X1039X407 DC01 FE//	97034193	8	1	767	917268208	LADDER ATTACHMENT
PLATE 3X105X91 X5CRNI18-10	97081505	8	2	382	967986308	BEARING INSTALLATION
PLATE 3X1101X716 DC01	97040643	1	1	92	968420608	STORAGE BOX
PLATE 3X120X95 DC01 FE//ZN	97050879	12	1	286	919007708	DRIVE ASSEMBLY, PRE-ASSE
PLATE 3X135X251 ALMG3 H1	97045292	5	1	401	966282308	PANELLING,LEFT
PLATE 3X1360X1190 ALMG3 H	97158863	1	1	157	96063087	STORAGE BOX
PLATE 3X140X72 DC01 FE//ZN	97039936	24	2	286	919007708	DRIVE ASSEMBLY, PRE-ASSE
PLATE 3X150X90 S355MC FE//	979672708	18	1	172	918731108	ASSEMBLY PARTS F.SLEWING
PLATE 3X152X46 X5CRNI18-10	97118724	11	1	511	96051842	EXHAUST SYSTEM PRE-ASSE
PLATE 3X182X77 X5CRNI18-10	97134813	3	1	507	919674408	EXHAUST SYSTEM
PLATE 3X185X122 DC01 FE//ZN	97050881	10	1	286	919007708	DRIVE ASSEMBLY, PRE-ASSE
PLATE 3X190X60 DC01 FE//ZN	97118867	9	1	511	96051842	EXHAUST SYSTEM PRE-ASSE
PLATE 3X190X80 DC01 FE//ZN	97038475	23	2	286	919007708	DRIVE ASSEMBLY, PRE-ASSE
PLATE 3X191X55 X5CRNI18-10	97031901	7	1	507	919674408	EXHAUST SYSTEM
PLATE 3X191X55 X5CRNI18-10	97059489	8	3	507	919674408	EXHAUST SYSTEM
PLATE 3X193X93 S355MC FE//	97081862	6	2	388	96025887	PEDAL CANTILEVER INSTALL
PLATE 3X195X183 DC01 FE//ZN	97034243	52	1	480	918759808	ADD HEATING SUPERSTRUCT
PLATE 3X214X101 X5CRNI18-1	97126014	6	1	511	96051842	EXHAUST SYSTEM PRE-ASSE
PLATE 3X231X267 DC01	97041755	14	1	92	968420608	STORAGE BOX
PLATE 3X234X43 DC01 FE//ZN	973246808	20	4	673	917292008	TELESCOPIC SECTION 1 PRE
PLATE 3X234X43 DC01 FE//ZN	973246808	20	4	677	917292108	TELESCOPIC SECT.2 PRE-AS
PLATE 3X234X43 DC01 FE//ZN	973246808	20	4	681	917292208	TELESCOPIC SECT.3 PRE-ASS
PLATE 3X234X43 DC01 FE//ZN	973246808	20	4	685	917292308	TELESCOPIC SECT.IV PRE-A
PLATE 3X234X43 DC01 FE//ZN	973246808	43	4	690	917292408	TELESCOPIC SECT.5 PRE-AS
PLATE 3X240X109 S355MC FE//	97132207	2	2	144	96045206	MECHANICAL AUXILIARIES
PLATE 3X26X26 DC01 FE//ZNNI	971974208	22	2	433	918810308	CONTROL STAND
PLATE 3X27X206 X5CRNI18-10	97053174	6	1	749	968811608	CROSS BEAM
PLATE 3X283X263 DC01 FE//ZN	97033925	51	1	480	918759808	ADD HEATING SUPERSTRUCT
PLATE 3X286X480 ALMG3 H11	97118618	30	1	94	96034962	GUIDE LEFT
PLATE 3X286X480 ALMG3 H11	97118618	30	1	112	96034980	GUIDE RIGHT
PLATE 3X286X61 X5CRNI18-10	97043049	24	4	35	917511508	CRAWLER CENTRE PART PRE
PLATE 3X295X159 S355MC FE//	974680008	2	2	388	96025887	PEDAL CANTILEVER INSTALL
PLATE 3X29X79 X5CRNI18-10	97141550	7	2	511	96051842	EXHAUST SYSTEM PRE-ASSE
PLATE 3X300X84 DC01 FE//ZN	97037936	13	1	172	918731108	ASSEMBLY PARTS F.SLEWING
PLATE 3X30X119 X5CRNI18-10	97026779	54	1	421	917304708	SLIDING DOOR INSTALLATION
PLATE 3X30X156 DC01 FE//ZN	97101894	11	1	286	919007708	DRIVE ASSEMBLY, PRE-ASSE

Description	Item	Pos.	Quantity	Page	Assembly	Description
PLATE 3X324X319 DC01	97118534	10	1	343	96034872	RETAINER CPL.
PLATE 3X325X398 S355MC FE//	97119732	10	1	567	96035117	MECHANICAL AUXILIARIES
PLATE 3X349X278 DC01 FE//ZN	97038364	(1)	1	496	969763408	PIPEWORK AIR INSTALLATIO
PLATE 3X366X104 DC01 RAL 9	977444008	15	1	433	918810308	CONTROL STAND
PLATE 3X366X104 DC01 RAL 9	977444108	16	1	433	918810308	CONTROL STAND
PLATE 3X40X40 DC01 FE//ZNNI	971974108	21	4	433	918810308	CONTROL STAND
PLATE 3X487X107 ALMG3 H11	97121228	1	1	518	96039752	ADDITIONAL PARTS CLADDIN
PLATE 3X50X20 X5CRNI18-10	97062373	6	2	157	96063087	STORAGE BOX
PLATE 3X50X65 DC01 FE//ZNNI	953756608	23	1	604	967969608	AUXILIARY HOISTING GEAR 2
PLATE 3X514X788 DC01 FE//ZN	97034194	9	1	767	917268208	LADDER ATTACHMENT
PLATE 3X55X81 X5CRNI18-10	97141617	8	1	511	96051842	EXHAUST SYSTEM PRE-ASSE
PLATE 3X60X25 DC01 FE//ZNNI	97001250	8	2	412	916168308	AIR DUCT
PLATE 3X60X80 DC01 FE//ZNNI	973717208	27	1	286	919007708	DRIVE ASSEMBLY, PRE-ASSE
PLATE 3X63X94 DC01 FE//ZNNI	97033348	23	1	430	969085208	HEATING, PRE-ASSEMBLED
PLATE 3X646X519 S355MC FE//	97053103	40	1	286	919007708	DRIVE ASSEMBLY, PRE-ASSE
PLATE 3X678X272 DC01	97040644	2	1	92	968420608	STORAGE BOX
PLATE 3X70X105 S355MC FE//	97039576	11	2	124	968046208	ADD-ON PARTS
PLATE 3X70X222 DC01 FE//ZN	97031203	3	2	604	967969608	AUXILIARY HOISTING GEAR 2
PLATE 3X70X75 DC01 RAL 300	953756708	5	2	768	968090008	MOUNTING HOOK ROD
PLATE 3X75X145 DC01 FE//ZN	97006497	3	1	767	917268208	LADDER ATTACHMENT
PLATE 3X75X61 X5CRNI18-10	97000492	26	1	421	917304708	SLIDING DOOR INSTALLATION
PLATE 3X78X46 X5CRNI18-10	97118725	12	2	511	96051842	EXHAUST SYSTEM PRE-ASSE
PLATE 3X80X55 DC01	97040645	3	1	92	968420608	STORAGE BOX
PLATE 3X80X68 DC01 FE//ZNNI	973717308	25	1	286	919007708	DRIVE ASSEMBLY, PRE-ASSE
PLATE 3X830X560 ALMG3 H11	97158864	2	1	157	96063087	STORAGE BOX
PLATE 3X86X53 DC01 FE//ZNNI	957025408	28	4	673	917292008	TELESCOPIC SECTION 1 PRE
PLATE 3X86X53 DC01 FE//ZNNI	957025408	28	4	677	917292108	TELESCOPIC SECT.2 PRE-AS
PLATE 3X86X53 DC01 FE//ZNNI	957025408	28	4	681	917292208	TELESCOPIC SECT.3 PRE-ASS
PLATE 3X86X53 DC01 FE//ZNNI	957025408	28	4	685	917292308	TELESCOPIC SECT.IV PRE-A
PLATE 3X86X53 DC01 FE//ZNNI	957025408	45	4	690	917292408	TELESCOPIC SECT.5 PRE-AS
PLATE 3X926X218 S355MC FE//	97053104	41	1	286	919007708	DRIVE ASSEMBLY, PRE-ASSE
PLATE 3X98X74 DC01 FE//ZNNI	97050880	17	2	286	919007708	DRIVE ASSEMBLY, PRE-ASSE
PLATE 4X110X180 S315MC FE//	97077348	(4)	1	496	969763408	PIPEWORK AIR INSTALLATIO
PLATE 4X110X50 S315MC FE//	97048340	20	1	493	967978908	INTERLOCKING
PLATE 4X110X77 S315MC FE//	979717908	2	2	449	968923508	FLAP RIGHT PRE-ASS.
PLATE 4X115X122 S315MC FE//	975427508	(3)	1	496	969763408	PIPEWORK AIR INSTALLATIO
PLATE 4X116X148 S315MC FE//	97031342	10	1	492	967928508	LOCKING
PLATE 4X117X158 S315MC FE//	97050764	7	1	291	96034631	RADIATOR, PRE-ASSEMBLED
PLATE 4X125X178 S315MC FE//	97037626	20	2	39	96045225	ELECTR.FOR CENTER SECTIO
PLATE 4X128X75 S315MC FE//	972934408	(1)	1	728	967785008	ADDNL.HYDR. FOLDING JIB
PLATE 4X130X144 S315MC FE//	97049834	15	1	445	96036790	SLEWING PLATFORM PANELLI
PLATE 4X130X200 ALMG3 H11	97031273	1	1	88	967972408	COVER PRE-ASSY.
PLATE 4X130X30 S315MC FE//	97031684	6	8	758	917413208	SELF-ERECT. AUX. HOIST GEA
PLATE 4X132X73 S315MC FE//	97041747	26	1	286	919007708	DRIVE ASSEMBLY, PRE-ASSE
PLATE 4X134X188 S315MC FE//	97049833	14	1	445	96036790	SLEWING PLATFORM PANELLI
PLATE 4X138X138 S315MC FE//	975208408	6	1	383	96015921	OPERATING ELEMENT INSTAL
PLATE 4X140X178 S315MC FE//	975418208	8	1	567	96035117	MECHANICAL AUXILIARIES
PLATE 4X140X178 S315MC FE//	975418208	(4)	1	616	967784808	HYDR.AUXILIARY HOISTING
PLATE 4X155X100 S315MC FE//	97053626	23	4	35	917511508	CRAWLER CENTRE PART PRE
PLATE 4X159X133 S315MC FE//	97047272	25	2	365	917259708	MAIN HOIST GEAR
PLATE 4X168X113 S315MC FE//	97033897	16	1	26	96034894	PROTECTION PLATE CPL.
PLATE 4X168X113 S315MC FE//	97033897	16	1	29	96034977	PROTECTION PLATE
PLATE 4X168X113 S315MC FE//	97033935	15	1	26	96034894	PROTECTION PLATE CPL.
PLATE 4X168X113 S315MC FE//	97033935	15	1	29	96034977	PROTECTION PLATE
PLATE 4X178X133 S315MC FE//	97039694	12	1	172	918731108	ASSEMBLY PARTS F.SLEWING
PLATE 4X180X143 S700MC	97033009	23	2	129	919644008	HYDRAULIC SUPPORT
PLATE 4X180X145 S700MC	97033010	24	2	129	919644008	HYDRAULIC SUPPORT
PLATE 4X180X180 ALMG3 H11	97031271	1	1	87	967972308	COVER PRE-ASSY.
PLATE 4X180X180 ALMG3 H11	97037975	1	1	89	968270108	COVER PRE-ASSY.
PLATE 4X180X99 S315MC FE//	97093426	15	1	94	96034962	GUIDE LEFT

Description	Item	Pos.	Quantity	Page	Assembly	Description
PLATE 4X180X99 S315MC FE//	97093426	15	1	112	96034980	GUIDE RIGHT
PLATE 4X190X188 S315MC FE//	974272808	93	2	669	917291908	PIVOT SECTION, PRE-ASSEMB
PLATE 4X210X88 S315MC FE//	97015127	55	2	150	919499408	CENTRAL BALLAST
PLATE 4X2114X788 S315MC FE	97093430	1	1	26	96034894	PROTECTION PLATE CPL.
PLATE 4X2114X788 S315MC FE	97093430	1	1	29	96034977	PROTECTION PLATE
PLATE 4X215X208 S315MC FE//	97050763	6	1	291	96034631	RADIATOR, PRE-ASSEMBLED
PLATE 4X230X107 S315MC FE//	97093425	16	1	94	96034962	GUIDE LEFT
PLATE 4X230X107 S315MC FE//	97118621	16	1	112	96034980	GUIDE RIGHT
PLATE 4X230X280 ALMG3 H11	97038088	1	1	90	968274208	COVER PRE-ASSY.
PLATE 4X239X313 S315MC FE//	97093428	4	1	94	96034962	GUIDE LEFT
PLATE 4X239X313 S315MC FE//	97093428	4	1	112	96034980	GUIDE RIGHT
PLATE 4X240X188 S315MC FE//	97034296	12	1	445	96036790	SLEWING PLATFORM PANELLI
PLATE 4X250X190 S315MC FE//	953749408	4	1	690	917292408	TELESCOPIC SECT.5 PRE-AS
PLATE 4X260X173 S315MC FE//	97031570	8	1	455	969015908	SLEWING PLATFORM PANELLI
PLATE 4X263X50 S315MC FE//	97030037	9	1	492	967928508	LOCKING
PLATE 4X283X50 S315MC FE//	97042636	30	1	492	967928508	LOCKING
PLATE 4X287X288 X5CRNI18-1	97118752	1	1	513	96035073	RETAINER CPL.
PLATE 4X288X139 S315MC FE//	97049782	13	1	445	96036790	SLEWING PLATFORM PANELLI
PLATE 4X290X230 S315MC FE//	953717608	74	1	669	917291908	PIVOT SECTION, PRE-ASSEMB
PLATE 4X307X332 X5CRNI18-1	97118723	10	1	511	96051842	EXHAUST SYSTEM PRE-ASSE
PLATE 4X30X82 X5CRNI18-10	97093827	14	4	511	96051842	EXHAUST SYSTEM PRE-ASSE
PLATE 4X32X32 ALMG3 H111	972353808	4	2	291	96034631	RADIATOR, PRE-ASSEMBLED
PLATE 4X347X222 S315MC FE//	97000389	6	1	415	916163008	WIPERS INSTALLATION
PLATE 4X348X241 S315MC FE//	97093429	3	1	26	96034894	PROTECTION PLATE CPL.
PLATE 4X348X241 S315MC FE//	97118611	3	1	29	96034977	PROTECTION PLATE
PLATE 4X350X235 ALMG3 H11	97045974	1	1	91	968709108	COVER PRE-ASSY.
PLATE 4X383X50 S315MC FE//	97097713	2	1	94	96034962	GUIDE LEFT
PLATE 4X383X50 S315MC FE//	97097713	2	1	112	96034980	GUIDE RIGHT
PLATE 4X386X404 S315MC FE//	97033143	18	1	455	969015908	SLEWING PLATFORM PANELLI
PLATE 4X396X88 S315MC FE//	97033250	56	2	150	919499408	CENTRAL BALLAST
PLATE 4X401X406 S315MC FE//	97033142	17	1	455	969015908	SLEWING PLATFORM PANELLI
PLATE 4X425X184 S315MC FE//	97051275	11	2	751	968728808	CONSOLE PRE-ASS.
PLATE 4X429X566 S315MC	97124562	1	1	567	96035117	MECHANICAL AUXILIARIES
PLATE 4X449X88 S315MC FE//	97033251	57	2	150	919499408	CENTRAL BALLAST
PLATE 4X450X40 S315MC FE//	97038560	55	2	20	91001569	CRAWLER TRACK TRAVEL G
PLATE 4X461X547 S315MC RA	97084642	7	1	500	918731808	UREA PLANT
PLATE 4X463X307 S315MC FE//	97093427	1	1	94	96034962	GUIDE LEFT
PLATE 4X463X307 S315MC FE//	97093427	1	1	112	96034980	GUIDE RIGHT
PLATE 4X48X29 S315MC RAL	97007597	60	4	400	917305408	INTERNAL PANELLING INSTA
PLATE 4X491X110 S315MC FE//	971071608	43	4	668	917291908	PIVOT SECTION, PRE-ASSEMB
PLATE 4X491X110 S315MC FE//	971071608	61	4	674	917292008	TELESCOPIC SECTION 1 PRE
PLATE 4X491X110 S315MC FE//	971071608	61	4	677	917292108	TELESCOPIC SECT.2 PRE-AS
PLATE 4X491X110 S315MC FE//	971071608	61	4	681	917292208	TELESCOPIC SECT.3 PRE-ASS
PLATE 4X491X110 S315MC FE//	971071608	61	4	685	917292308	TELESCOPIC SECT.IV PRE-A
PLATE 4X499X309 S315MC FE//	97032133	21	4	35	917511508	CRAWLER CENTRE PART PRE
PLATE 4X518X425 S315MC RA	97084641	1	1	500	918731808	UREA PLANT
PLATE 4X519X204 S315MC FE//	97029040	50	1	482	96020359	ADDNL.HEATING, PRE-ASSE
PLATE 4X52X32 S315MC FE//	97024783	24	1	406	916162508	WINDOW ASSEMBLY
PLATE 4X55X180 S315MC FE//	954313608	11	1	567	96035117	MECHANICAL AUXILIARIES
PLATE 4X60X115 S315MC FE//	97032838	7	32	124	968046208	ADD-ON PARTS
PLATE 4X60X163 S315MC FE//	97045111	4	1	567	96035117	MECHANICAL AUXILIARIES
PLATE 4X60X50 S315MC FE//	975614108	20	1	286	919007708	DRIVE ASSEMBLY, PRE-ASSE
PLATE 4X62X134 S315MC	97132169	82	2	150	919499408	CENTRAL BALLAST
PLATE 4X644X199 S315MC FE//	97031349	5	1	592	967980508	OIL COOLER, PRE-ASSEMBLE
PLATE 4X668X480 ALMG3 H11	97031266	1	1	86	967972208	COVER PRE-ASSY.
PLATE 4X668X480 ALMG3 H11	97033100	1	1	110	968055808	COVER PRE-ASSY.
PLATE 4X701X174 S315MC FE//	97031351	4	1	592	967980508	OIL COOLER, PRE-ASSEMBLE
PLATE 4X712X218 X5CRNI18-1	97001318	(2)	1	387	916177508	STEP CPL.
PLATE 4X730X110 ALMG3 H11	97031641	6	32	20	91001569	CRAWLER TRACK TRAVEL G
PLATE 4X73X20 S315MC FE//	97033103	50	4	480	918759808	ADD HEATING SUPERSTRUCT

Description	Item	Pos.	Quantity	Page	Assembly	Description
PLATE 4X74X219 S315MC FE//	97132168	81	2	150	919499408	CENTRAL BALLAST
PLATE 4X751X167 S315MC FE//	97031540	7	1	455	969015908	SLEWING PLATFORM PANELLI
PLATE 4X784X220 S315MC FE//	97031571	9	1	455	969015908	SLEWING PLATFORM PANELLI
PLATE 4X78X102 S315MC FE//	97158147	2	1	95	96062678	LEVER PRE-ASSY.
PLATE 4X81X40 S315MC FE//	97053350	13	1	455	969015908	SLEWING PLATFORM PANELLI
PLATE 4X90X67 S315MC FE//	954113708	27	2	445	96036790	SLEWING PLATFORM PANELLI
PLATE 4X93X68 S315MC RAL	97006057	19	1	409	966497908	FRONT WINDOW CPL.
PLATE 4X95X262 S315MC FE//	97044721	1	1	601	918628408	AIR COND. UNIT SUPERSTRU
PLATE 4X965X279 ALMG3 H11	972357608	24	2	365	917259708	MAIN HOIST GEAR
PLATE 4x134x58 S315MC FE//	970837708	32	2	701	966134608	ADD-ON PARTS CYLINDER
PLATE 50X160X165 S355J2+N	97158146	1	1	95	96062678	LEVER PRE-ASSY.
PLATE 50X349X170 S355J2+N	97152371	13	6	75	91001377	CRAWLER SUPPORT PREASS
PLATE 50X349X170 S355J2+N	97152371	13	6	108	91001378	CRAWLER SUPPORT PREASS
PLATE 5X1098X60 S355MC	975302308	81	1	669	917291908	PIVOT SECTION, PRE-ASSEMB
PLATE 5X110X122 X5CRNI18-1	97008318	3	1	637	968290608	STAND
PLATE 5X110X122 X5CRNI18-1	97008318	2	1	640	968267208	STAND
PLATE 5X125X73 S960QL	973153908	68	2	691	917292408	TELESCOPIC SECT.5 PRE-AS
PLATE 5X160X160 S700MC	971050008	7	1	734	917268408	BOOM NOSE
PLATE 5X190X90 S355MC FE//	97034262	61	1	75	91001377	CRAWLER SUPPORT PREASS
PLATE 5X190X90 S355MC FE//	97034262	61	1	108	91001378	CRAWLER SUPPORT PREASS
PLATE 5X269X181 S355MC FE//	97032020	7	1	147	919087608	ROTARY FEED THROUGH
PLATE 5X280X200 S355MC FE//	97039973	62	2	20	91001569	CRAWLER TRACK TRAVEL G
PLATE 5X380X79 X5CRNI18-10	975683808	(4)	1	387	916177508	STEP CPL.
PLATE 5X380X79 X5CRNI18-10	975685808	(3)	1	387	916177508	STEP CPL.
PLATE 5X443X254 S355MC FE//	97104844	111	1	76	91001377	CRAWLER SUPPORT PREASS
PLATE 5X443X254 S355MC FE//	97104844	112	1	109	91001378	CRAWLER SUPPORT PREASS
PLATE 5X62X96 S960QL	954706408	10	1	673	917292008	TELESCOPIC SECTION 1 PRE
PLATE 5X62X96 S960QL	954706408	10	1	677	917292108	TELESCOPIC SECT.2 PRE-AS
PLATE 5X62X96 S960QL	954706408	10	1	681	917292208	TELESCOPIC SECT.3 PRE-ASS
PLATE 5X62X96 S960QL	954706408	10	1	685	917292308	TELESCOPIC SECT.IV PRE-A
PLATE 5X62X96 S960QL	954706408	27	1	690	917292408	TELESCOPIC SECT.5 PRE-AS
PLATE 5X649X337 S355MC FE//	97103683	101	2	76	91001377	CRAWLER SUPPORT PREASS
PLATE 5X649X337 S355MC FE//	97103683	101	2	109	91001378	CRAWLER SUPPORT PREASS
PLATE 5X70X130 S355MC FE//	97032691	12	72	119	917691008	FALL PROTECTION
PLATE 5X86X267 S355MC FE//	97103682	100	2	76	91001377	CRAWLER SUPPORT PREASS
PLATE 5X86X267 S355MC FE//	97103682	100	2	109	91001378	CRAWLER SUPPORT PREASS
PLATE 5X90X189 S355MC FE//	97061426	41	4	20	91001569	CRAWLER TRACK TRAVEL G
PLATE 6X125X73 S960QL	973154008	65	2	674	917292008	TELESCOPIC SECTION 1 PRE
PLATE 6X125X73 S960QL	973154008	65	2	678	917292108	TELESCOPIC SECT.2 PRE-AS
PLATE 6X125X73 S960QL	973154008	65	2	682	917292208	TELESCOPIC SECT.3 PRE-ASS
PLATE 6X125X73 S960QL	973154008	65	2	686	917292308	TELESCOPIC SECT.IV PRE-A
PLATE 6X125X73 S960QL	973154008	67	2	691	917292408	TELESCOPIC SECT.5 PRE-AS
PLATE 6X312X90 S355MC FE//	97033021	4	2	365	917259708	MAIN HOIST GEAR
PLATE 6X519X80 S355MC	973336908	31	2	668	917291908	PIVOT SECTION, PRE-ASSEMB
PLATE 80X110 DC01 FE//ZNNI	970904808	8	8	147	919087608	ROTARY FEED THROUGH
PLATE 8X1054X560 S700MC	975221808	49	1	761	917267508	TRANSPORT MOUNTING
PLATE 8X110X70 S960QL FE/	971753708	53	4	668	917291908	PIVOT SECTION, PRE-ASSEMB
PLATE 8X110X70 S960QL FE/	971753708	34	4	673	917292008	TELESCOPIC SECTION 1 PRE
PLATE 8X110X70 S960QL FE/	971753708	34	4	677	917292108	TELESCOPIC SECT.2 PRE-AS
PLATE 8X110X70 S960QL FE/	971753708	34	4	681	917292208	TELESCOPIC SECT.3 PRE-ASS
PLATE 8X110X70 S960QL FE/	971753708	34	4	685	917292308	TELESCOPIC SECT.IV PRE-A
PLATE 8X25X160 S355MC FE//	952940908	5	2	449	968923508	FLAP RIGHT PRE-ASS.
PLATE 8X270X205 S700MC	97030303	5	2	654	967936908	COUNTERWEIGHT CPL.
PLATE 8X270X205 S700MC	97030304	6	2	654	967936908	COUNTERWEIGHT CPL.
PLATE 8X30X58 S355MC FE//	955974308	31	1	761	917267508	TRANSPORT MOUNTING
PLATE 8X70X182 S960QL	955552608	29	1	761	917267508	TRANSPORT MOUNTING
PLATE 8X82X290 S355MC FE//	97031537	6	1	378	917259908	CRANE DRIVER CAB ADDITIO
PLATE 8X84X108 S355MC FE//	956474508	23	2	365	917259708	MAIN HOIST GEAR
PLATE 8X84X108 S355MC FE//	956474508	4	2	604	967969608	AUXILIARY HOISTING GEAR 2
PLATE 8X88X270 S960QL FE/	970422908	38	2	668	917291908	PIVOT SECTION, PRE-ASSEMB

Description	Item	Pos.	Quantity	Page	Assembly	Description
PLATE 8X88X270 S960QL FE/	970422908	40	2	673	917292008	TELESCOPIC SECTION 1 PRE
PLATE 8X88X270 S960QL FE/	970422908	40	2	677	917292108	TELESCOPIC SECT.2 PRE-AS
PLATE 8X88X270 S960QL FE/	970422908	40	2	681	917292208	TELESCOPIC SECT.3 PRE-ASS
PLATE 8X88X270 S960QL FE/	970422908	40	2	685	917292308	TELESCOPIC SECT.IV PRE-A
PLATE 8x240x240 S960QL	970491108	3	1	695	918807308	MECHANICAL EXTENSION SYS
PLATE DC01	927530301	14	1	353	90008901	SLEWING GEAR DRIVE
PLATE DC01 FE//ZNNI8//CN//T	97011112	74	1	150	919499408	CENTRAL BALLAST
PLATE DC01 FE//ZNNI8//CN//T	97011113	75	1	150	919499408	CENTRAL BALLAST
PLATE DC01 FE//ZNNI8//CN//T	97011114	76	1	150	919499408	CENTRAL BALLAST
PLATE DC01 FE//ZNNI8//CN//T	97011115	77	1	150	919499408	CENTRAL BALLAST
PLATE FE//ZNNI8//CN//T0	968054808	5	2	365	917259708	MAIN HOIST GEAR
PLATE GLAS 315X178	10675116	(1)	1	476	917260408	MIRROR ATTACHM.AT SLEW.P
PLATE IDENTIFICATION NUMB	973567608	10	2	658	968068308	ASSEMBLY DEVICE
PLATE S315MC FE//ZNNI8//CN/	953696908	22	2	523	917261208	CENT. LUBRIC. SYSTEM SUP
PLATE S315MC FE//ZNNI8//CN/	970762808	9	1	567	96035117	MECHANICAL AUXILIARIES
PLATE S315MC FE//ZNNI8//CN/	970762808	(3)	1	616	967784808	HYDR.AUXILIARY HOISTING
PLATE STAHLBLECH	11083215	7	1	428	11083498	AIR CONDITIONING UNIT
PLATE WELDED	96058512	12	8	75	91001377	CRAWLER SUPPORT PREASS
PLATE WELDED	96058512	12	8	108	91001378	CRAWLER SUPPORT PREASS
PLATE WELDED	966363808	37	1	421	917304708	SLIDING DOOR INSTALLATION
PLATE WELDED FE//ZNNI8//C	966629308	1	1	388	96025887	PEDAL CANTILEVER INSTALL
PLATE WELDED FE//ZNNI8//C	967257808	39	2	433	918810308	CONTROL STAND
PLATE WELDED FE//ZNNI8//C	967775308	34	1	399	917305408	INTERNAL PANELLING INSTA
PLATE WELDED FE//ZNNI8//FN/	966497808	2	1	409	966497908	FRONT WINDOW CPL.
PLATE WELDED RAL 9005,M,G	96022873	1	1	471	96022872	CONTROL PANEL ROOF
PLATE WELDED RAL 9005,M,G	965417108	17	1	467	96053500	ELECTRIC ADD-ON PARTS CA
PLATFORM HOLDING REAR R	967307008	26	1	387	916177508	STEP CPL.
PLATING FABRIKDATEN	916283508	40	1	12		LIEBHERR LTR 1220
PLUG	920381108	503	1	49	96045228	WIRING HARNESS
PLUG	927996308	508	1	532	96045385	WIRING HARNESS
PLUG	927996308	517	1	535	96037136	WIRING HARNESS
PLUG 10-POLIG	11690056	4	1	376	10802061	WINCH REVOLUTION TRANS
PLUG 12-POL	10491808	(2)	1	461	96036954	CABLE LIST DRIVER'S CABIN
PLUG 2	10492113	(1)	1	461	96036954	CABLE LIST DRIVER'S CABIN
PLUG 2-POL SW	11342255	511	1	536	96037137	WIRING HARNESS
PLUG 3-POL	6003168	516	1	536	96037137	WIRING HARNESS
PLUG 4-POL 13A	6003248	503	1	536	96037137	WIRING HARNESS
PLUG 4-POL SW	11342257	513	1	536	96037137	WIRING HARNESS
PLUG 4-POL VIOLETT	11342259	514	1	536	96037137	WIRING HARNESS
PLUG 6-POL	604508608	514	3	49	96045228	WIRING HARNESS
PLUG 6-POL	604508608	508	1	538	96037133	LEAD
PLUG 6-POL	604508608	506	2	644	96037132	LEAD
PLUG 8-POL	10046999	508	10	542	96045387	CABLES, BASIC CONSTRUCTI
PLUG 8-POL	10047000	515	10	542	96045387	CABLES, BASIC CONSTRUCTI
PLUG 8-POL	10047001	513	10	542	96045387	CABLES, BASIC CONSTRUCTI
PLUG 9-POL PVC	10301148	520	1	462	96036955	WIRING HARNESS
PLUG BASE 9-POLE	630122908	506	2	48	96045227	WIRING HARNESS
PLUG BASE 9-POLE	630122908	512	23	542	96045387	CABLES, BASIC CONSTRUCTI
PLUG BODY 3-POL	605012408	517	1	49	96045228	WIRING HARNESS
PLUG BODY 4-POL	605613908	510	1	535	96037136	WIRING HARNESS
PLUG BUSHING 0,5-1,0MM2	7624353	761	2	463	96036955	WIRING HARNESS
PLUG BUSHING 0,75-1,0MM2 C	11000401	2253	3	537	96037137	WIRING HARNESS
PLUG BUSHING 0,75-2,0MM2 C	10100063	670	4	463	96036955	WIRING HARNESS
PLUG BUSHING 0,75-2,0MM2 C	10100063	670	11	535	96037136	WIRING HARNESS
PLUG BUSHING 0,75-2,0MM2 C	10100063	670	6	536	96037137	WIRING HARNESS
PLUG CONTACT CPL. 4 POL P	10874178	505	1	536	96037137	WIRING HARNESS
PLUG DIN 72585 4-POL POLY	692406308	505	1	532	96045385	WIRING HARNESS
PLUG DIN 72585 4-POL POLY	692406308	508	1	536	96037137	WIRING HARNESS
PLUG DIN 72585 7-POL POLY	692406708	507	1	532	96045385	WIRING HARNESS
PLUG M1	10476383	524	2	49	96045228	WIRING HARNESS

Description	Item	Pos.	Quantity	Page	Assembly	Description
PLUG M1	10476383	(504)	1	741	917598408	ELECTRIC MEASURING & WAR
PLUG M8	514539308	12	1	311	10008308	CONNECTING PLATE
PLUG PLATE 1.5X449X175 DC0	97010811	6	1	544	969256608	BASE ASSEMBLY
PLUG PLATE 1.5X594X283 DC0	97010812	7	1	544	969256608	BASE ASSEMBLY
PLUG SHELL	11822050	522	1	462	96036955	WIRING HARNESS
PLUG SHELL 12-POL 13A TH.P	10412433	512	1	535	96037136	WIRING HARNESS
PLUG SHELL 14-POL	602336008	511	4	462	96036955	WIRING HARNESS
PLUG SHELL 14-POL	602336008	506	6	542	96045387	CABLES, BASIC CONSTRUCTI
PLUG SHELL 14-POL	602336508	3	6	547	926891108	GROUND RAIL
PLUG SHELL 18-POL	602300208	504	2	49	96045228	WIRING HARNESS
PLUG SHELL 18-POL	602300208	501	9	462	96036955	WIRING HARNESS
PLUG SHELL 18-POL	602300208	501	6	464	96036956	WIRING HARNESS
PLUG SHELL 18-POL	602300208	501	10	532	96045385	WIRING HARNESS
PLUG SHELL 18-POL	602300208	501	11	535	96037136	WIRING HARNESS
PLUG SHELL 18-POL	602300208	501	2	536	96037137	WIRING HARNESS
PLUG SHELL 18-POL	602300208	523	1	542	96045387	CABLES, BASIC CONSTRUCTI
PLUG SHELL 2 13A TH.PLAST	10342517	509	2	462	96036955	WIRING HARNESS
PLUG SHELL 2 13A TH.PLAST	10342517	509	3	535	96037136	WIRING HARNESS
PLUG SHELL 2 13A TH.PLAST	10342517	502	2	536	96037137	WIRING HARNESS
PLUG SHELL 2-POL	6004195	520	2	535	96037136	WIRING HARNESS
PLUG SHELL 2-POL 13A TH.P	10429638	530	1	535	96037136	WIRING HARNESS
PLUG SHELL 2-POLE 9,5A	602331808	509	2	464	96036956	WIRING HARNESS
PLUG SHELL 4-POL	602335908	514	1	48	96045227	WIRING HARNESS
PLUG SHELL 4-POL	602335908	515	4	462	96036955	WIRING HARNESS
PLUG SHELL 4-POL	602335908	511	1	464	96036956	WIRING HARNESS
PLUG SHELL 4-POL	602335908	516	4	542	96045387	CABLES, BASIC CONSTRUCTI
PLUG SHELL 62-POL PBT-GF20	10678453	503	1	535	96037136	WIRING HARNESS
PLUG SHELL 62-POL PBT-GF2	10678452	514	1	535	96037136	WIRING HARNESS
PLUG SHELL 8-POL	10021571	507	1	48	96045227	WIRING HARNESS
PLUG SHELL D-SUB METALL	10355170	505	2	462	96036955	WIRING HARNESS
PLUG SHELL D-SUB METALL	10355182	503	4	462	96036955	WIRING HARNESS
PLUG SHELL HP PBT-GF15	11000394	515	1	536	96037137	WIRING HARNESS
PLUG SHELL MCON MCP1,2	10813633	507	2	536	96037137	WIRING HARNESS
PLUG SOCKET BODY 3-POL	605212708	508	1	49	96045228	WIRING HARNESS
PLUG SOCKET BODY 3-POL	605212708	519	1	535	96037136	WIRING HARNESS
PLUG SOCKET BODY 4-POLE	605251608	502	1	49	96045228	WIRING HARNESS
PLUG SOCKET BODY 4-POLE	605251608	506	1	532	96045385	WIRING HARNESS
PLUG-IN CONNECTOR GE M8X	12101847	8	1	523	917261208	CENT. LUBRIC. SYSTEM SUP
PLUG-IN CONNECTOR GE M8X	12101847	4	1	613	921444108	CENTRAL LUBRICATING SYS
PLUG-IN CONNECTOR GERAD	11183029	2	12	138	11347500	DISTRIBUTION BLOCK
PLUG-IN SLEEVE E10-7	772002708	31	1	500	918731808	UREA PLANT
PLUG-IN SLEEVE E8-6 EDELST	10871759	36	1	500	918731808	UREA PLANT
PLUG-TYPE SCREW COUPLIN	12001446	90	1	500	918731808	UREA PLANT
PNEUMATIC LINES UPPER C	969763608	12	1	496	969763408	PIPEWORK AIR INSTALLATIO
PNEUMATIC TUBE CPL.	96035593	(2335)	1	500	918731808	UREA PLANT
POCKET KUNSTSTOFF	740300008	22	1	399	917305408	INTERNAL PANELLING INSTA
POIGNEE 118X18X43	10870376	3	2	393	968514508	INSTALLATION SWITCH CAB. C
POINTER 3X146X110 DC01 FE//	97033038	9	1	363	917259608	ROTATING PLATFORM LOCK
POLYAMID PIPE DIN 73378 6X1	10873149	27	50	135	917257108	CENTRALIZED LUBRICATION
POLYAMID PIPE DIN 73378 6X1	10873149	14	50	523	917261208	CENT. LUBRIC. SYSTEM SUP
POLYAMID PIPE DIN 73378 6X1	10873149	5	5	613	921444108	CENTRAL LUBRICATING SYS
POST	96004280	10	4	652	917260608	COUNTERWEIGHT WITH CLAM
POUCH SOCKET 23-26 SPF	10040024	122	2	13		LIEBHERR LTR 1220
POWER TAKE-OFF ADD-ON	10125687	650	1	179	13455297	DIESEL ENGINE
POWER TAKE-OFF ADD-ON	10144036	652	1	179	13455297	DIESEL ENGINE
POWER TAKE-OFF FLANGE	939292301	10	1	370	939292201	PLANETARY GEARBOX
POWER UNIT SUPPORT ATTA	10147687	12	1	174	13455297	DIESEL ENGINE
PRE-ASSEMBLY MOUNTING U	968063108	4	1	540	91000922	SWITCHBOX MOUNTING PART
PRECISION RESISTOR -40/+12	10449516	9	3	467	96053500	ELECTRIC ADD-ON PARTS CA
PREMOUNT.AXIAL FLOW FAN	963398008	35	1	467	96053500	ELECTRIC ADD-ON PARTS CA

Description	Item	Pos.	Quantity	Page	Assembly	Description
PREMOUNT.AXIAL FLOW FAN	963398008	26	2	544	969256608	BASE ASSEMBLY
PREMOUNTED FUEL FILTER	96066379	1	1	341	91002861	FUEL FEED
PRESSURE ADAPTER FASTEN	10135434	5	1	222	10152874	RK INJECTOR
PRESSURE ADAPTER FASTEN	10135434	3	1	223	10141140	RK HIGH PRESSURE CONNEC
PRESSURE ADAPTER FASTEN	10135434	4	1	225	10153151	HIGH PRESS.CONNECTOR W
PRESSURE CONTROL VALVE	10342823	20	1	568	11211756	CONTROL BLOCK
PRESSURE FILTER	510671508	165	2	560	96045351	HYDRAULICS UPPER CARRI
PRESSURE LIMITING VALVE	10280213	60	1	624	10038509	CONTROL BLOCK
PRESSURE LIMITING VALVE	10280214	70	1	624	10038509	CONTROL BLOCK
PRESSURE LIMITING VALVE	10489734	7	1	582	11341035	CONTROL BLOCK
PRESSURE LIMITING VALVE	10492431	11	1	292	10429930	GEAR WHEEL MOTOR
PRESSURE LIMITING VALVE	570427408	7	1	574	10332882	CONTROL BLOCK
PRESSURE LIMITING VALVE	571723708	6	1	574	10332882	CONTROL BLOCK
PRESSURE LIMITING VALVE	571723808	8	1	574	10332882	CONTROL BLOCK
PRESSURE LIMITING VALVE	571899408	1	1	307	10873570	CONNECTING PLATE
PRESSURE LIMITING VALVE	571910208	37	1	697	10876933	TELESCOPIC CYLINDER
PRESSURE LIMITING VALVE	10872307	1	1	503	969904608	PRESSURE RELIEF VALVE PR
PRESSURE LIMITING VALVE 3	10332395	30	1	577	12100860	CONTROL BLOCK
PRESSURE LIMITING VALVE	511450208	150	1	722	967785408	ADDNL.HYDR. FOLDING JIB
PRESSURE LIMITING VALVE	11161570	168	1	560	96045351	HYDRAULICS UPPER CARRI
PRESSURE LIMITING VALVE	511456808	195	1	561	96045351	HYDRAULICS UPPER CARRI
PRESSURE LIMITING VALVE	511419608	198	1	561	96045351	HYDRAULICS UPPER CARRI
PRESSURE LIMITING VALVE	511433908	162	2	560	96045351	HYDRAULICS UPPER CARRI
PRESSURE RELIEF VALVE	571328408	12	2	136	11347526	ELECTRIC PUMP
PRESSURE RELIEF VALVE	571328408	14	1	525	10327065	ELECTRIC PUMP
PRESSURE RELIEF VALVE P	969904608	16	1	500	918731808	UREA PLANT
PRESSURE RELIEF VALVE pm	10152592	12	1	213	10129474	OIL COOLER, PRE-ASSEMBLE
PRESSURE SENSOR 0-400/400	10813738	60	7	560	96045351	HYDRAULICS UPPER CARRI
PRESSURE SENSOR 0-400/400	10813738	53	1	616	967784808	HYDR.AUXILIARY HOISTING
PRESSURE SENSOR 0-400/400	10813738	51	1	717	967784508	HYDR.F.TELESCOPIC BOOM
PRESSURE SENSOR 0-400/400	10816185	61	1	560	96045351	HYDRAULICS UPPER CARRI
PRESSURE SENSOR 0-750/750	10813739	62	2	560	96045351	HYDRAULICS UPPER CARRI
PRESSURE SWITCH 0-20/300	10289536	53	1	560	96045351	HYDRAULICS UPPER CARRI
PRESSURE SWITCH 0-20/300	10289536	51	1	616	967784808	HYDR.AUXILIARY HOISTING
PRESSURE SWITCH 0-8/300	10220933	54	1	560	96045351	HYDRAULICS UPPER CARRI
PRESSURE SWITCH 0-8/300	10220933	52	1	616	967784808	HYDR.AUXILIARY HOISTING
PRESSURE SWITCH 1,5-26 BA	571489108	106	1	291	96034631	RADIATOR, PRE-ASSEMBLED
PRESSURE SWITCH 10-100/40	510676908	50	1	98	96035796	HYDR.TRAVEL DRIVE
PRESSURE SWITCH 10-100/40	510676908	50	1	115	96035792	HYDR.TRAVEL DRIVE
PRESSURE TRANSMITTER 0,5-	12907020	(1)	1	273	12583633	ENGINE CONTROL SENSORS
PRESSURE TRANSMITTER 0-1	12907001	(1)	1	273	12583633	ENGINE CONTROL SENSORS
PRESSURE TRANSMITTER C	9076550	11	1	273	12583633	ENGINE CONTROL SENSORS
PRESSURE TRANSMITTER CP	9076531	10	2	273	12583633	ENGINE CONTROL SENSORS
PRESSURE VALVE	10875076	6	1	568	11211756	CONTROL BLOCK
PRESSURE VALVE	10875077	21	1	568	11211756	CONTROL BLOCK
PRESSURE/TEMPERATURE S	12414685	739	1	502	11373478	DEF PUMP
PRETENSIONING VALVE 25BA	511322808	152	4	132	968077208	HYDRAULIC SUPPORT
PROFIL CLAMP 137,6/K1	10494115	181	1	507	919674408	EXHAUST SYSTEM
PROFIL CLAMP 137,6/K1	10494115	180	2	511	96051842	EXHAUST SYSTEM PRE-ASSE
PROFIL CLAMP 163,0/K1	10494116	182	2	507	919674408	EXHAUST SYSTEM
PROFIL CLAMP 163,0/K1	10494116	181	3	511	96051842	EXHAUST SYSTEM PRE-ASSE
PROFIL CLAMP 312/K1	12560584	5	2	516	11429728	SCRFILTER ASSEMBLY
PROFILE 667X50X12 ALMGSI0.	97001317	25	1	387	916177508	STEP CPL.
PROFILE PACKING DIN 3869 1	10040984	(2)	1	273	12583633	ENGINE CONTROL SENSORS
PROFILE RING P-R8-L/S A2GS	477100208	3	1	330	96039022	CONNECTION PIECE
PROFILE RING P-R8-L/S A2GS	477100208	38	1	500	918731808	UREA PLANT
PROFILE RING PR10-S/L A3P	477100308	32	1	500	918731808	UREA PLANT
PROFILE RING PR22-L A3P	477102808	(2)	1	328	96034515	EXPANSION TANK PRE-ASS.
PROFILE RING PR6-S/L A3P	477101408	13	22	135	917257108	CENTRALIZED LUBRICATION
PROFILE SEALING	7373052	(5)	1	319	10871282	VARIABLE PUMP

Description	Item	Pos.	Quantity	Page	Assembly	Description
PROPORTIONAL MAGNET	11161919	27	1	81	11161917	CONTROL ELEMENT
PROPORTIONAL MAGNET 24V	10471437	2	2	298	11690588	CONTROL UNIT
PROPORTIONAL MAGNET 24V	10471437	(5)	2	301	11182664	TWO-STAGE PUMP
PROPORTIONAL MAGNET 24V	10471437	(5)	2	301	11182664	TWO-STAGE PUMP
PROPORTIONAL MAGNET 24V	10471437	(2)	2	305	11210795	VARIABLE PUMP
PROPORTIONAL MAGNET 24V	571911708	20	1	325	10292815	REGULATOR ELEMENT
PROTECTING CAP	610701108	525	1	535	96037136	WIRING HARNESS
PROTECTING CAP 180°	11060618	519	3	536	96037137	WIRING HARNESS
PROTECTING CAP 180°	11491349	522	1	536	96037137	WIRING HARNESS
PROTECTING CAP JPT	10874331	529	1	463	96036955	WIRING HARNESS
PROTECTING CAP JPT	10874331	521	4	535	96037136	WIRING HARNESS
PROTECTING CAP JPT 2 POL	11647373	522	2	535	96037136	WIRING HARNESS
PROTECTING CAP LLD-PE	789000701	34	1	367	90208882	COMPACT ROPE WINCH
PROTECTING CAP M26X1,5	7013456	3	1	190	5004624	OIL DRAIN PLUG
PROTECTING CAP MCP BUC	10678458	504	2	535	96037136	WIRING HARNESS
PROTECTING CAP NETZW. R	11008530	2	1	475	966979108	SOCKET
PROTECTING CAP STECKER 4	602339608	516	3	49	96045228	WIRING HARNESS
PROTECTING CAP SW 24	779040801	18	2	395	917304508	CRANE OPERATOR CABIN P
PROTECTING CAP SW10	779020108	2	6	545	922648308	TERMINAL BOARD PRE-ASS.
PROTECTING SHEET CPL.	96004318	30	1	286	919007708	DRIVE ASSEMBLY, PRE-ASSE
PROTECTION GUARD 3X140X4	97032687	3	2	351	919369308	SLEWING GEAR
PROTECTION PLATE	96034977	10	1	20	91001569	CRAWLER TRACK TRAVEL G
PROTECTION PLATE CPL.	96034894	2	1	20	91001569	CRAWLER TRACK TRAVEL G
PROTECTION PLATE WELDED	96035068	2	1	511	96051842	EXHAUST SYSTEM PRE-ASSE
PROTECTION PLATE WELDED	96035171	2	1	507	919674408	EXHAUST SYSTEM
PROTECTION WELDED STRU	96037033	8	1	500	918731808	UREA PLANT
PROTECTIVE COVER NICHT	12466377	738	1	502	11373478	DEF PUMP
PROTECTIVE HOSE 30MM AL-	11118396	211	3.8	536	96037137	WIRING HARNESS
PROTECTIVE HOSE DN16XNO	10871063	(507)	1	741	917598408	ELECTRIC MEASURING & WAR
PROTECTIVE HOSE DN20 NO	10870635	71	1.5	531	96045384	CABLE LIST SLEWING PLATF
PROTECTIVE HOSE DN20 NO	10870635	13	1.7	643	96037130	EQUIPMENT CAMERA SLEW C
PROTECTIVE HOSE DN20 NO	10870635	13	1.5	645	96037131	EQUIPMENT CAMERA WINCHE
PROTECTIVE PADDING	520402808	3	1	151	919328608	TOOLS AND ACCESSORIES
PROXIMITY SWITCH BERUEHR	10097613	1	1	526	11002916	DISTRIBUTION BLOCK
PROXIMITY SWITCH BERUEHR	11003193	10	2	530	966720708	ELECTR.FOR SLEWING GEAR
PULL ROD	10099209	25	4	136	11347526	ELECTRIC PUMP
PULL ROD	10099209	28	4	525	10327065	ELECTRIC PUMP
PULL-BACK PLATE	570110008	7	1	360	570109008	DRIVING GEAR
PUMP COVER	11690587	4	1	300	10871017	VARIABLE PUMP
PUMP ELEMENT	10216340	13	1	525	10327065	ELECTRIC PUMP
PUMP ELEMENT	11001770	39	2	136	11347526	ELECTRIC PUMP
PUMP ELEMENT	774387508	11	1	525	10327065	ELECTRIC PUMP
PUMP HOUSING	10014693	4	1	136	11347526	ELECTRIC PUMP
PUMP HOUSING	10014693	4	1	525	10327065	ELECTRIC PUMP
PUMP MP41 SPF	591055408	2	2	416	966408908	WATER CONTAINER CPL
PUMP RETURN FLOW	774372808	10	1	523	917261208	CENT. LUBRIC. SYSTEM SUP
PUMP SHAFT Z=40 M=2,25	9077327	1	1	277	9077386	AUXILIARY DRIVE PRE-ASS.
PUMP SUPPORT	10873571	4	1	305	11210795	VARIABLE PUMP
PUSH BUTTON	11171271	33	1	435	10877138	OPERATOR SEAT
PUSH BUTTON	606143008	18	1	471	96022872	CONTROL PANEL ROOF
PUSH BUTTON	606143008	8	1	551	969061708	CARRIER PLATE, PRE-ASSE
PUSH-BUTTON CAP FLACH GR	606145108	11	1	551	969061708	CARRIER PLATE, PRE-ASSE
PUSH-BUTTON CAP FLACH K	606144408	17	1	471	96022872	CONTROL PANEL ROOF
QUICK ACTING COUPLING	790042708	9	1	151	919328608	TOOLS AND ACCESSORIES
QUICK RELEASE FITTING	12101183	40	1	26	96034894	PROTECTION PLATE CPL.
QUICK RELEASE FITTING	12101183	40	1	29	96034977	PROTECTION PLATE
QUICK RELEASE FITTING	12101576	40	1	94	96034962	GUIDE LEFT
QUICK RELEASE FITTING	12101576	40	1	112	96034980	GUIDE RIGHT
QUICK RELEASE PIN 12X115X8	11160586	22	4	129	919644008	HYDRAULIC SUPPORT
QUICK RELEASE PIN 12X90X4	10490116	32	2	124	968046208	ADD-ON PARTS

Description	Item	Pos.	Quantity	Page	Assembly	Description
QUICK RELEASE PIN 20X171,	11320194	46	4	35	917511508	CRAWLER CENTRE PART PRE
QUICK RELEASE PIN 20X171,	11320194	21	1	492	967928508	LOCKING
QUICK RELEASE PIN 20X171,	11320194	11	1	493	967978908	INTERLOCKING
QUICK RELEASE PIN 8X71,5X3	12102832	6	1	155	91001571	BOLT EXTRACTION DEVICE
QUICK RELEASE PIN NIROST	704008508	10	2	30	968019508	LIMIT SWITCH ADD-ON
RADIAL FAN	11083445	45	1	428	11083498	AIR CONDITIONING UNIT
RADIAL PACKING SET DRIVE	11494585	(98)	1	305	11210795	VARIABLE PUMP
RADIATOR HOOD	968100408	10	1	447	96017704	RADIATOR HOOD CPL.
RADIATOR HOOD CPL.	96017704	1	1	445	96036790	SLEWING PLATFORM PANELLI
RADIATOR, PRE-ASSEMBLED	96034631	2	1	286	919007708	DRIVE ASSEMBLY, PRE-ASSE
RADIO PREPARATION UPPER	915432508	391	1	15		LIEBHERR LTR 1220
RAIL PAIR	10650489	70	1	435	10877138	OPERATOR SEAT
RAPID FIXING	704259608	57	1	421	917304708	SLIDING DOOR INSTALLATION
REAR PROFILE 820X125X72.6	97000517	32	1	421	917304708	SLIDING DOOR INSTALLATION
REAR VISION MIRROR UNIT 20	10286840	(1)	1	440	916049908	MIRROR ATTACHM.IN CRANE
REAR WINDOW ESG SPF	97000279	5	1	406	916162508	WINDOW ASSEMBLY
RECEPTACLE 2,8X0,3-1,5 VER	602203108	67	2	464	96036956	WIRING HARNESS
RECEPTACLE 4,8X1,5	602225914	703	2	464	96036956	WIRING HARNESS
RECEPTACLE 5X1,5-2,5	602339108	642	4	48	96045227	WIRING HARNESS
RECEPTACLE 6,3X0,5-1,0 VER	11080881	758	5	48	96045227	WIRING HARNESS
RECEPTACLE 6,3X0,5-1,0 VER	11080881	758	18	463	96036955	WIRING HARNESS
RECEPTACLE 6,3X0,5-1,0 VER	11080881	758	4	464	96036956	WIRING HARNESS
RECEPTACLE 6,3X0,5-1,0 VER	11080881	758	4	535	96037136	WIRING HARNESS
RECEPTACLE 6,3X0,5-1,5 SN	602207608	140	1	464	96036956	WIRING HARNESS
RECEPTACLE 6,3X1-2,5 MESSI	602203408	72	6	48	96045227	WIRING HARNESS
RECEPTACLE 6,3X1-2,5 MESSI	602203408	72	3	462	96036955	WIRING HARNESS
RECEPTACLE 6,3X1-2,5 MESSI	602203408	72	4	464	96036956	WIRING HARNESS
RECEPTACLE 9,5X1-2,5 CUSN	602208408	143	2	462	96036955	WIRING HARNESS
RECEPTACLE FOR TABS 0,3-1	602203708	63	3	738	96068455	LEAD
RECEPTACLE FOR TABS 0,5-1	602320508	62	13	464	96036956	WIRING HARNESS
RECEPTACLE FOR TABS 6,3X	602303308	134	2	49	96045228	WIRING HARNESS
RECEPTACLE FOR TABS 6,3X	602303308	134	2	462	96036955	WIRING HARNESS
RECEPTACLE FOR TABS 6,3X	602303308	134	2	464	96036956	WIRING HARNESS
RECEPTACLE FOR TABS 6,3X	602303308	134	6	532	96045385	WIRING HARNESS
REDUCER M20X1,5-M16X1,5 P	10475314	9	1	630	917368108	EL.COOLANT PREHEAT
REDUCER M25X1,5 M16X1,5 P	10044648	12	2	625	918462708	EXTERNAL FEED
REDUCING PIECE	7002253	(16)	1	83	11320954	GUIDE WHEEL UNIT
REDUCING STUD RI 8 M16x1.5	10120066	19	1	253	12512627	EXHAUST NOZZLE ATTACHM
REFRIGERANT 12KG FLASCH	7020440	100	1.6	601	918628408	AIR COND. UNIT SUPERSTRU
REGULATION HYDRAULIC	7023643	5	1	309	11210798	VARIABLE PUMP
REGULATION REPAIR KIT	10872672	998	1	403	11002447	BLIND
REGULATOR	10292801	3	1	319	10871282	VARIABLE PUMP
REGULATOR	10472196	3	1	309	11210798	VARIABLE PUMP
REGULATOR ELEMENT	10292815	5	1	324	10292801	REGULATOR
REGULATOR ELEMENT	10472202	3	1	312	10472196	REGULATOR
REGULATOR ELEMENT	571900808	2	1	312	10472196	REGULATOR
REGULATOR ELEMENT	571900808	2	1	324	10292801	REGULATOR
REINFORCED RUBBER HOSE	790042908	71	1	152	928569808	MAIN TOOLS
RELAY 24V/1W 26X26X24MM	630105408	10	1	540	91000922	SWITCHBOX MOUNTING PART
RELING	916162808	19	1	381	919010208	CRANE OPERATOR CABIN P
REMOTE CONTROL APPARA	11212256	100	1	45	968252908	BTB PROGRAMMED
REMOTE CONTROL APPARAT	12105988	(100)	1	540	91000922	SWITCHBOX MOUNTING PART
REMOTE CONTROL TRANSMIT	11160970	(1)	1	471	96022872	CONTROL PANEL ROOF
REP-SHEET GASKET 151,6X15	12993450	2	1	182	10154458	CYLINDER
REPAIR KIT	10650501	(998)	1	561	96045351	HYDRAULICS UPPER CARRI
REPAIR KIT	10650501	(998)	1	561	96045351	HYDRAULICS UPPER CARRI
REPAIR KIT	11003094	999	1	497	502657308	AIR DRYER
REPAIR KIT	571582108	1	1	240	5700161	AIR COMPRESSOR
REPAIR KIT	571582708	15	1	240	5700161	AIR COMPRESSOR
REPAIR KIT -E DF/LF	10035534	(2)	1	560	96045351	HYDRAULICS UPPER CARRI

Description	Item	Pos.	Quantity	Page	Assembly	Description
REPAIR KIT HANDLE	12100622	1	1	403	11002447	BLIND
REPAIR KIT SCREW PLUG	12932488	275	1	219	10146658	HIGH PRESSURE PUMP
REPAIR KIT VALVE	12917604	250	1	219	10146658	HIGH PRESSURE PUMP
REPAIR KIT VALVE	12966286	240	1	219	10146658	HIGH PRESSURE PUMP
REPAIR KIT WATER HEATING	96004475	999	1	484	10876576	WATER HEATING SYSTEM
REPAIR SEGMENT 1-FACH	11658888	(997)	1	69	917436708	FLOOR SHEET COMPL.
REPAIR SET PRESSURE GOV	11003089	998	1	497	502657308	AIR DRYER
RETAINER 70.0X74 35NICRM	97158093	3	1	155	91001571	BOLT EXTRACTION DEVICE
RETAINER CLIP 122,5/K1 St/Ino	10127984	2	1	233	10147364	AIR INTAKE ASSEMBLY
RETAINER CLIP 125/K1 Inox	10138826	6	1	253	12512627	EXHAUST NOZZLE ATTACHM
RETAINER CLIP 129	12222896	22	1	484	10876576	WATER HEATING SYSTEM
RETAINER CLIP 150/K1 Inox	10138820	3	1	246	10148215	THERMOSTAT HOUSING ASS
RETAINER CLIP 73/K1 St/Inox	10122841	2	1	248	10142742	COOLANT PIPE BEND ADD-ON
RETAINER CLIP 75/25	774209708	180	1	291	96034631	RADIATOR, PRE-ASSEMBLED
RETAINER CLIP 77/K1 St/Inox	10124798	5	2	234	10149677	CONNECTING LINE ADD-ON
RETAINER CPL.	10127689	2	1	267	10144227	CONTROL BOX ANNEXE
RETAINER CPL.	10143454	1	1	267	10144227	CONTROL BOX ANNEXE
RETAINER CPL.	96035073	5	2	511	96051842	EXHAUST SYSTEM PRE-ASSE
RETAINER CPL. FE//ZNNI8//CN/	96034872	1	1	342	96066379	PREMOUNTED FUEL FILTER
RETAINER CPL. S235JR	10145371	2	1	272	10143707	CLAMP - ADD-ON UNIT
RETAINER CPL. S235JR	12978423	1	1	272	10143707	CLAMP - ADD-ON UNIT
RETAINER HOUSING 4-POL 19	602337608	514	1	542	96045387	CABLES, BASIC CONSTRUCTI
RETAINER PLATE 2X121X18 D	97010815	14	1	544	969256608	BASE ASSEMBLY
RETAINER PLATE 2X192X41 D	97010814	11	1	544	969256608	BASE ASSEMBLY
RETAINING DISK 100X55X6	927601301	6	1	370	939292201	PLANETARY GEARBOX
RETAINING DISK 4X60X4	944134103	36	1	353	90008901	SLEWING GEAR DRIVE
RETAINING DISK 4X70X4	927531901	16	1	353	90008901	SLEWING GEAR DRIVE
RETAINING DISK 50X4	944303303	56	1	78	90028956	TRACTION DRIVE
RETAINING DISK 55X125X6	927602801	41	1	370	939292201	PLANETARY GEARBOX
RETAINING DISK 55X125X6	927602801	31	1	372	90017588	PLANETARY CARRIER
RETAINING NUT	10423992	(1)	2	568	11211756	CONTROL BLOCK
RETAINING NUT	10663825	(1)	1	298	11690588	CONTROL UNIT
RETAINING NUT	10663825	1	1	324	10292801	REGULATOR
RETAINING NUT	10663825	(1)	2	325	10292815	REGULATOR ELEMENT
RETAINING NUT M16X1	602042208	12	1	551	969061708	CARRIER PLATE, PRE-ASSE
RETAINING SPRING 3X55 VER	433102808	101	1	445	96036790	SLEWING PLATFORM PANELLI
RETAINING SPRING 3X55 VER	433102808	101	1	455	969015908	SLEWING PLATFORM PANELLI
RETAINING SPRING 3X55 VER	433102808	5	1	745	967936408	WIND WARNING PREASSEMB
RETAINING SPRING 4,5X98 IS	433100908	62	1	75	91001377	CRAWLER SUPPORT PREASS
RETAINING SPRING 4,5X98 IS	433100908	62	1	108	91001378	CRAWLER SUPPORT PREASS
RETAINING SPRING 4,5X98 IS	433100908	37	4	129	919644008	HYDRAULIC SUPPORT
RETAINING SPRING 4,5X98 IS	433100908	25	1	147	919087608	ROTARY FEED THROUGH
RETAINING SPRING 4,5X98 IS	433100908	11	4	652	917260608	COUNTERWEIGHT WITH CLAM
RETAINING SPRING 4,5X98 IS	433100908	24	3	734	917268408	BOOM NOSE
RETAINING SPRING 4,5X98 IS	433100908	44	1	761	917267508	TRANSPORT MOUNTING
RETAINING SPRING 4X68 ISO	433101208	49	1	75	91001377	CRAWLER SUPPORT PREASS
RETAINING SPRING 4X68 ISO	433101208	49	1	108	91001378	CRAWLER SUPPORT PREASS
RETAINING SPRING 4X68 ISO	433101208	10	2	602	917267108	AUXILIARY HOISTING GEAR 2
RETAINING SPRING 4X68 ISO	433101208	11	2	734	917268408	BOOM NOSE
RETAINING SPRING 4X68 ISO	433101208	2	1	737	967321308	FIXING DEVICE 2.LIFT TOP
RETAINING SPRING 4X68 ISO	433101208	13	2	758	917413208	SELF-ERECT. AUX. HOIST GEA
RETAINING SPRING 4X68 ISO	433101208	8	1	763	923285508	FOLDING BRACKET PRE-ASS.
RETAINING SPRING 5X122 IS	433102508	80	1	691	917292408	TELESCOPIC SECT.5 PRE-AS
RETAINING SPRING 5X122 IS	433102508	12	1	744	967933408	LOCATION FIXTURE PRE-ASS.
RETAINING SPRING DIN 2194	433105008	6	1	658	968068308	ASSEMBLY DEVICE
RETAINING SPRING DIN 2194	433105008	28	1	734	917268408	BOOM NOSE
RETAINING STRAP 25X795 PO	591063808	30	1	409	966497908	FRONT WINDOW CPL.
RETAINING STRIP 15X180X30	97039613	18	16	35	917511508	CRAWLER CENTRE PART PRE
REWORK ARMREST LEFT	96032222	5	1	433	918810308	CONTROL STAND
REWORK ARMREST RIGHT	96032223	6	1	433	918810308	CONTROL STAND

Description	Item	Pos.	Quantity	Page	Assembly	Description
RIBBED HEX NUT M10 10	7380960	6	1	255	10142863	GENERATOR, PRE-ASSEMBLE
RIBBED HEX NUT M6 10	10003366	3	1	235	9078314	HEATING FLANGE ADD-ON
RIBBED HEX NUT M6 10	10003366	25	2	253	12512627	EXHAUST NOZZLE ATTACHM
RIBBED TUBE ALU	10493045	168	2	496	969763408	PIPEWORK AIR INSTALLATIO
RING	570110708	5	14	361	570109508	DRIVING GEAR
RING BOLT DIN 580 M10X17 C	402600208	30	4	572	10413106	CONTROL BLOCK
RING BOLT DIN 580 M12 C15E	10179932	18	8	129	919644008	HYDRAULIC SUPPORT
RING BOLT DIN 580 M12 C15E	10179932	10	1	348	969050308	OIL TANK PRE-ASS.
RING FAN D=654	550639508	101	1	291	96034631	RADIATOR, PRE-ASSEMBLED
RIVET NUT M8	12210567	(2)	40	119	917691008	FALL PROTECTION
RK AGGREGATE SUPPORT P	11359503	1	1	183	10147687	POWER UNIT SUPPORT ATT
RK CABLE LOOM	967363808	999	1	473	10340105	WARNING LIGHT
RK CRANKSHAFT SEAL 110 VO	10121952	1	1	199	10153583	CRANKSHAFT SEALING
RK CRANKSHAFT SEAL 115 H	10121335	2	1	199	10153583	CRANKSHAFT SEALING
RK CYLINDER HEAD	13486106	(998)	1	202	10149580	CYLINDER HEAD ASSEMBLY
RK HIGH PRESSURE CONNE	12932487	270	1	219	10146658	HIGH PRESSURE PUMP
RK HIGH PRESSURE CONNEC	10141140	2	1	222	10152874	RK INJECTOR
RK HIGH PRESSURE CONNEC	10141140	1	1	225	10153151	HIGH PRESS.CONNECTOR W
RK HIGH PRESSURE CONNEC	10141140	200	1	225	10153151	HIGH PRESS.CONNECTOR W
RK HIGH PRESSURE SENSOR	12881001	260	1	219	10146658	HIGH PRESSURE PUMP
RK INJECTOR LI2.7-20-SF-950	10152874	200	1	221	10152867	INJECTOR WITH FASTENING
RK PRE-FEED PUMP	12923599	220	1	219	10146658	HIGH PRESSURE PUMP
RK VOLUME CONTROL VALVE	12490199	230	1	219	10146658	HIGH PRESSURE PUMP
ROCKER ARM BRACKET CPL.	10148438	81	4	175	13455297	DIESEL ENGINE
ROCKER ARM BRACKET PRE	11448005	1	1	206	10148438	ROCKER ARM BRACKET CPL.
ROCKER ARM BRACKET PRE	12549825	1	1	206	10148438	ROCKER ARM BRACKET CPL.
ROCKER ARM PRE-ASSY.	11448000	2	2	207	11448005	ROCKER ARM BRACKET PRE
ROCKER ARM SUPPORT	11448002	1	1	207	11448005	ROCKER ARM BRACKET PRE
ROD 18.0X700 E235+N	978361608	30	1	294	968026308	CLUTCH ACTUATOR
ROD 30.0X1724 S355J2C+C FE	97033302	1	1	493	967978908	INTERLOCKING
ROD 30.0X339 S355J2C+C FE//	97133544	3	2	94	96034962	GUIDE LEFT
ROD 30.0X339 S355J2C+C FE//	97133544	3	2	112	96034980	GUIDE RIGHT
ROD SEAL 160X168X11,5	7367566	3	1	85	10877686	TENSION JACK HYDR CPL
ROD ST.CONST.	964581908	5	4	129	919644008	HYDRAULIC SUPPORT
ROLLER 22X13 PA 12	97001109	6	2	424	966253908	WAGON
ROLLER 25X180 ALCUMGPB	97031463	37	1	378	917259908	CRANE DRIVER CAB ADDITIO
ROLLER 30X11 PA 12	97008171	5	1	424	966253908	WAGON
ROLLER 50.0X25 S355J2+AR	947868208	2	2	762	929582108	MOUNTING PRE-ASS.
ROLLER 50.0X25 S355J2+AR	947868208	3	1	765	923879808	CONSOLE PRE-ASS.
ROLLER BEARING 150X210X8	746506608	2	1	692	921456108	ROPE PULLEY CPL.
ROLLER BEARING 150X210X8	746506608	2	1	694	967771908	ROPE PULLEY CPL.
ROLLER BEARING 150X210X8	746506608	2	1	755	925203408	ROPE PULLEY CPL.
ROLLER CAGE	927514301	16	38	370	939292201	PLANETARY GEARBOX
ROLLER CAGE	927514301	16	38	610	939294201	PLANETARY GEARBOX
ROLLER CARRIER WELDED	929591608	6	1	762	929582108	MOUNTING PRE-ASS.
ROLLER CARRIER WELDED	967771808	2	1	734	917268408	BOOM NOSE
ROLLER ORIFICE FE//ZNNI8//C	973774708	34	1	668	917291908	PIVOT SECTION, PRE-ASSEMB
ROLLER ORIFICE FE//ZNNI8//C	973774708	58	1	673	917292008	TELESCOPIC SECTION 1 PRE
ROLLER ORIFICE FE//ZNNI8//C	973774708	58	1	677	917292108	TELESCOPIC SECT.2 PRE-AS
ROLLER ORIFICE FE//ZNNI8//C	973774708	58	1	681	917292208	TELESCOPIC SECT.3 PRE-ASS
ROLLER ORIFICE FE//ZNNI8//C	973774708	58	1	685	917292308	TELESCOPIC SECT.IV PRE-A
ROLLER RD70X15 PA6G	939279608	20	1	751	968728808	CONSOLE PRE-ASS.
ROLLER SLEWING RING	917259408	117	1	12		LIEBHERR LTR 1220
ROLLER SLEWING RING 1792	90025640	1	1	349	917259408	ROLLER SLEWING RING
ROLLER TAPPET	10153536	1	2	211	9079870	CONTROL PARTS
ROLLING NOZZLE	10292013	28	8	399	917305408	INTERNAL PANELLING INSTA
ROOF COVERING COMPL.	965763608	9	1	399	917305408	INTERNAL PANELLING INSTA
ROOF WINDOW 10.28X941X74	979240608	1	1	410	965784408	ROOF WINDOW PRE-ASS.
ROOF WINDOW PRE-ASS.	965784408	4	1	406	916162508	WINDOW ASSEMBLY
ROPE 2 2,3KN EDELSTAHL	11160431	35	2	129	919644008	HYDRAULIC SUPPORT

Description	Item	Pos.	Quantity	Page	Assembly	Description
ROPE 2 2,3KN EDELSTAHL	11160431	9	0.3	763	923285508	FOLDING BRACKET PRE-ASS.
ROPE 2 2,3KN EDELSTAHL	11160431	3	0.4	768	968090008	MOUNTING HOOK ROD
ROPE 6 0,59KN PERLON	773404508	6	1.6	659	925141508	HOSE GUIDE PRE-ASS.
ROPE 6 0,59KN PERLON	773404508	19	2.5	751	968728808	CONSOLE PRE-ASS.
ROPE CLAMP DIN 1142 22 VER	773913308	6	1	657	919028808	DISPATCH ASSY.MECH.PART
ROPE DRUM	939294001	1	1	606	90028852	COMPACT ROPE WINCH
ROPE DRUM D=490 SEIL=23	932916901	1	1	367	90208882	COMPACT ROPE WINCH
ROPE FIXING POINT	11347027	2	1	754	910836808	HOOK BLOCK
ROPE GUARD CPL	571716008	10	1	754	910836808	HOOK BLOCK
ROPE GUARD CPL	571716108	12	2	754	910836808	HOOK BLOCK
ROPE LENGTH INDICATOR 1	10802064	20	1	702	966473108	ENCODER BASE SECTION
ROPE PULLEY 437X12.5 S355J	97027358	1	1	694	967771908	ROPE PULLEY CPL.
ROPE PULLEY CPL.	967771908	78	7	691	917292408	TELESCOPIC SECT.5 PRE-AS
ROPE PULLEY CPL.	967771908	27	1	734	917268408	BOOM NOSE
ROPE PULLEY CPL. SPF	921456108	2	1	690	917292408	TELESCOPIC SECT.5 PRE-AS
ROPE PULLEY CPL. SPF	921456108	1	1	739	910040808	2nd NECK PULLEY INSTALLAT
ROPE PULLEY CPL. SPF	925203408	1	5	754	910836808	HOOK BLOCK
ROPE PULLEY D=572/506/210X	773953608	1	1	755	925203408	ROPE PULLEY CPL.
ROPE PULLEY RD508X63 PA6	288195608	1	1	692	921456108	ROPE PULLEY CPL.
ROPE SLING -5M PP SPF	773326508	3	1	766	917268108	TOOLS
ROPE SLING DIN EN 13414-3	773445108	14	3	657	919028808	DISPATCH ASSY.MECH.PART
ROPE SLING EN 13414-3 35.5T	10331368	2	1	752	917531708	BALLAST TRAVERSE
ROPE WITH ACCESSORIES 1	917259808	127	1	13		LIEBHERR LTR 1220
ROTARY ENCODER 360° LSB P	10802060	(11)	1	529	968128908	EL.ADD-ON SET-LIMIT SWITCH
ROTARY FEED THROUGH	919087608	30	1	12		LIEBHERR LTR 1220
ROTARY FEED THROUGH SPF	11182736	1	1	147	919087608	ROTARY FEED THROUGH
ROTARY SHAFT LIP SEAL BAB	710062601	63	2	370	939292201	PLANETARY GEARBOX
ROTARY SHAFT LIP SEAL BAB	710062601	63	2	610	939294201	PLANETARY GEARBOX
ROTARY SHAFT LIP SEAL DIN	710032508	19	1	368	932916901	ROPE DRUM
ROTARY SHAFT LIP SEAL DIN	710032508	22	1	608	939294001	ROPE DRUM
ROTARY SHAFT LIP SEAL DIN	10167462	64	2	353	90008901	SLEWING GEAR DRIVE
ROTARY SHAFT LIP SEAL DIN	10359142	450	1	296	97029921	DISTRIBUTOR GEARBOX
ROTARY SHAFT LIP SEAL DIN	710059301	11	1	353	90008901	SLEWING GEAR DRIVE
ROTARY SHAFT LIP SEAL DIN	710035001	440	1	296	97029921	DISTRIBUTOR GEARBOX
ROTARY SHAFT LIP SEAL DIN	710054601	11	1	370	939292201	PLANETARY GEARBOX
ROTARY SHAFT LIP SEAL DIN	710054601	11	1	610	939294201	PLANETARY GEARBOX
ROTATABLE BEAM	11347024	3	1	754	910836808	HOOK BLOCK
ROTATING BEACON 55W 24V	10470032	1	1	160	915731908	EL.COMP. DISPATCH ASSEM
ROTATING PLATFORM LOCK	917259608	121	1	13		LIEBHERR LTR 1220
ROTATIONAL SPEED SENSOR	12977971	(1)	1	273	12583633	ENGINE CONTROL SENSORS
ROTATIONAL SPEED SENSOR	12544505	20	2	273	12583633	ENGINE CONTROL SENSORS
ROTOR	11171311	1	1	742	11482252	WIND VELOCITY TRANSMITTE
ROUND SLING DIN EN 1492-2	10280715	2	1	749	968811608	CROSS BEAM
RS CRANKSHAFT BEARING KP	10116939	1	1	197	9076457	SET MAIN BEARINGS
RS CYLINDER LOCK	571934608	60	1	699	571928508	CYLINDER HEAD CPL.
RS FLANGE	10145815	8	1	210	10138230	CAMSHAFT CPL.
RS FLANGE	10145815	8	1	210	10138230	CAMSHAFT CPL.
RS PRESSURE FILTER DF...33	10101384	(3)	1	560	96045351	HYDRAULICS UPPER CARRI
RS TELESCOPIC LOCK	571934508	50	1	699	571928508	CYLINDER HEAD CPL.
RUBBER BEARING 13,51/47,75	550640608	5	4	172	918731108	ASSEMBLY PARTS F.SLEWING
RUBBER BELLOWS	571912308	2	1	472	10343693	JOYSTICK
RUBBER BUFFER 19X9,6 PU	10354670	25	2	399	917305408	INTERNAL PANELLING INSTA
RUBBER BUFFER 32X32XM6	10472890	8	1	421	917304708	SLIDING DOOR INSTALLATION
RUBBER BUFFER 8,3/26X7,2 3	10116274	4	8	267	10144227	CONTROL BOX ANNEXE
RUBBER CONNECTION	10116310	24	1	252	10140729	EXHAUST TC MOUNTING
RUBBER CONNECTION	10126317	5	1	195	10139112	OIL LINE PRE-ASSEMBLY
RUBBER CONNECTION	10129904	4	1	234	10149677	CONNECTING LINE ADD-ON
RUBBER CONNECTION 06-12X	10126119	16	1	254	11420633	CYCLE VALVE
RUBBER CONNECTION 12X18	9079603	7	1	195	10139112	OIL LINE PRE-ASSEMBLY
RUBBER CONNECTION 22X30	9273161	7	2	232	10145173	INTAKE STACK ASSEMBLY

Description	Item	Pos.	Quantity	Page	Assembly	Description
RUBBER CONNECTION 25X35	9271340	5	1	186	10126713	CRANKCASE BREATHER ASS
RUBBER CONNECTION Rubbe	10126417	4	1	186	10126713	CRANKCASE BREATHER ASS
RUBBER CONNECTION Silicon	10128228	7	3	254	11420633	CYCLE VALVE
RUBBER PLATE 1.5X185X45 E	979243608	4	2	410	965784408	ROOF WINDOW PRE-ASS.
RUBBER PLATE SBR M.GEW	973731008	323	2	561	96045351	HYDRAULICS UPPER CARRI
RUBBER PROTECTION CAP	10040136	1	1	579	10878075	EMERGENCY HAND OPERAT
RUBBER RING X12	10133991	102	1	270	10151328	CABLE HARNESS MOUNTING
RUBBER RING X16	10123876	103	1	270	10151328	CABLE HARNESS MOUNTING
RUBBER RING X22	10123878	33	2	527	919410708	ELECTR. SYSTEM F.SLEWING
SAE FLANGE CONNECTION G	474901708	515	1	562	96045351	HYDRAULICS UPPER CARRI
SAE FLANGE CONNECTION G	510702408	504	1	562	96045351	HYDRAULICS UPPER CARRI
SAE FLANGE CONNECTION W	474909008	517	1	562	96045351	HYDRAULICS UPPER CARRI
SAE FLANGE CONNECTION	474908108	508	2	562	96045351	HYDRAULICS UPPER CARRI
SAE FLANGE CONNECTION W	474907608	501	1	562	96045351	HYDRAULICS UPPER CARRI
SAE FLANGE CONNECTION W	474906708	505	2	562	96045351	HYDRAULICS UPPER CARRI
SAE FLANGE CONNECTION	474907508	502	1	562	96045351	HYDRAULICS UPPER CARRI
SAE FLANGE CONNECTION	474906908	516	3	562	96045351	HYDRAULICS UPPER CARRI
SAE FLANGE CONNECTION	474906608	503	2	562	96045351	HYDRAULICS UPPER CARRI
SAE FLANGE SAE1 1/2-C61-M1	511502608	430	2	288	919007708	DRIVE ASSEMBLY, PRE-ASSE
SAE SEALING FLANGE SAE1 1	511510008	500	1	562	96045351	HYDRAULICS UPPER CARRI
SAE-FLANGE HALF SAE2-C61	510598408	432	6	288	919007708	DRIVE ASSEMBLY, PRE-ASSE
SAFETY BUTTON	10470667	9	1	649	10040024	POUCH SOCKET
SAFETY ELEMENT	10294939	3	1	521	10871700	AIR FILTER
SAFETY HARNESS EN 361 IK	11007305	1	1	167	916959808	PERSONAL PROTECTION EQ
SAFETY JACKET EN ISO 2047	872101908	6	1	153	928620108	ACCESSORIES
SAFETY PLUG W HINGE-LID	571817208	6	1	649	10040024	POUCH SOCKET
SAFETY PLUG W HINGE-LID 5	10875869	34	4	129	919644008	HYDRAULIC SUPPORT
SAFETY PLUG W HINGE-LID 5	10875869	60	4	690	917292408	TELESCOPIC SECT.5 PRE-AS
SAFETY PLUG W HINGE-LID 5	10875869	7	1	737	967321308	FIXING DEVICE 2.LIFT TOP
SAFETY PLUG W HINGE-LID 5	10875869	(1)	2	754	910836808	HOOK BLOCK
SAFETY PLUG W HINGE-LID 6	10875870	51	4	20	91001569	CRAWLER TRACK TRAVEL G
SAFETY PLUG W HINGE-LID 6	10875870	35	1	378	917259908	CRANE DRIVER CAB ADDITIO
SAFETY TRAP	12103686	9	1	753	919007108	LOAD HOOK
SAFETY TRAP	571716208	34	2	754	910836808	HOOK BLOCK
SASH LOCK	10650295	4	4	393	968514508	INSTALLATION SWITCH CAB. C
SCOOP WELDED	969089708	1	1	520	918731908	AIR FILTER UNIT
SCRAPER 160X175X9	7367567	4	1	85	10877686	TENSION JACK HYDR CPL
SCREENING	966980708	36	2	467	96053500	ELECTRIC ADD-ON PARTS CA
SCREW	570941408	2	1	725	511479408	LOAD HOLDING VALVE
SCREW 25X25X65 8.8 FE//ZNNI	956414208	21	4	701	966134608	ADD-ON PARTS CYLINDER
SCREW 90x297 35NICRMOV12	970574508	11	1	677	917292108	TELESCOPIC SECT.2 PRE-AS
SCREW 90x349 35NICRMOV12	970545508	11	1	673	917292008	TELESCOPIC SECTION 1 PRE
SCREW CAP GPN 800 M14X1,	10021410	3	2	220	12489819	COVERING CAPS - KIT
SCREW CARABINER OVAL M.	10877382	2	2	693	96013575	HOIST LIM.SWITCH PLUMMET
SCREW COUPLING EMA3 M14	7406865	744	7	564	96045351	HYDRAULICS UPPER CARRI
SCREW COUPLING EMA3 M14	7406865	642	2	617	967784808	HYDR.AUXILIARY HOISTING
SCREW DIN 912 M8X25 12.9	570613877	9	4	240	5700161	AIR COMPRESSOR
SCREW LOCKING 10ML -50/+1	8655016	105	1	217	10142942	LUBE OIL FILTER ASSEMBLY
SCREW LOCKING FLASCHE 5	811205708	105	1	209	10120186	BALANCER ASSEMBLY
SCREW LOCKING FLASCHE 5	811205708	105	1	244	12418347	AIR COND. COMPRESSOR A
SCREW LOCKING FLASCHE 5	811205708	109	1	260	9079823	TRANSPORT DEVICE ATTACH
SCREW LOCKING FLASCHE 5	811205708	109	1	267	10144227	CONTROL BOX ANNEXE
SCREW LOCKING FLASCHE 5	811205708	105	1	276	10144036	POWER TAKE-OFF ADD-ON
SCREW M8X30 St Rm>=800MP	13541106	2	1	268	10144098	FASTENING CLAMP
SCREW PLUG	10324900	4	1	317	11692439	CONTROL VALVE
SCREW PLUG	10650014	49	1	697	10876933	TELESCOPIC CYLINDER
SCREW PLUG	11182678	53	1	697	10876933	TELESCOPIC CYLINDER
SCREW PLUG	11690057	3	1	376	10802061	WINCH REVOLUTION TRANS
SCREW PLUG	511025408	11	2	63	11643183	CONTROL BLOCK
SCREW PLUG	511025408	11	2	66	11643184	CONTROL BLOCK

Description	Item	Pos.	Quantity	Page	Assembly	Description
SCREW PLUG	570579808	23	1	490	10877810	BALLAST EXTENSION RAM
SCREW PLUG	570579808	48	2	697	10876933	TELESCOPIC CYLINDER
SCREW PLUG	7027056	44	1	81	11161917	CONTROL ELEMENT
SCREW PLUG 15 M20X 1,5 MS	602425008	17	1	41	96045226	SWITCH BOX COMPL.
SCREW PLUG 15 M20X 1,5 MS	602425008	197	4	714	968708708	TERMINAL BOX CPL.
SCREW PLUG DIN 906 M6X1 S	4980712	15	1	572	10413106	CONTROL BLOCK
SCREW PLUG DIN 906 M8X1 5.	514584908	26	1	305	11210795	VARIABLE PUMP
SCREW PLUG DIN 908 G1/4X1	518645408	55	1	697	10876933	TELESCOPIC CYLINDER
SCREW PLUG DIN 908 M12X1,	11626246	19	2	323	571907208	CONNECTING PLATE
SCREW PLUG DIN 908 M20X1,	12218194	10	1	136	11347526	ELECTRIC PUMP
SCREW PLUG DIN 908 M20X1,	12218194	12	1	525	10327065	ELECTRIC PUMP
SCREW PLUG DIN 908 M22X1,5	10878578	27	1	240	5700161	AIR COMPRESSOR
SCREW PLUG DIN 908 M26X1,5	4600232	29	3	240	5700161	AIR COMPRESSOR
SCREW PLUG G1/4X19	10470377	59	1	697	10876933	TELESCOPIC CYLINDER
SCREW PLUG M10X1	7372626	32	1	305	11210795	VARIABLE PUMP
SCREW PLUG M10X1	7372626	24	4	319	10871282	VARIABLE PUMP
SCREW PLUG M12 PA	11491897	(511)	1	741	917598408	ELECTRIC MEASURING & WAR
SCREW PLUG M12X1,5	7372624	35	1	307	10873570	CONNECTING PLATE
SCREW PLUG M14X1,5	10100429	21	2	305	11210795	VARIABLE PUMP
SCREW PLUG M14X1,5	7414500	16	1	81	11161917	CONTROL ELEMENT
SCREW PLUG M16X1,5 MS	602424908	16	2	381	919010208	CRANE OPERATOR CABIN P
SCREW PLUG M16X1,5 MS	602424908	17	1	395	917304508	CRANE OPERATOR CABIN P
SCREW PLUG M18X1,5	10220419	23	3	305	11210795	VARIABLE PUMP
SCREW PLUG M22X1,5	10000515	20	1	305	11210795	VARIABLE PUMP
SCREW PLUG M25X1,5 MS	602425108	213	1	711	966291008	TERMINAL BOX
SCREW PLUG M26X1,5	560208508	27	2	319	10871282	VARIABLE PUMP
SCREW PLUG M27X2	570109408	11	2	359	510229408	HYDRO MOTOR
SCREW PLUG M30X1,5 11SMn	10137918	2	1	184	10138450	FINAL CONTROL VALVE
SCREW PLUG M30X1,5X40 ET	10152594	2	1	215	10152592	PRESSURE RELIEF VALVE
SCREW PLUG M32X1,5 MS	602425208	212	1	711	966291008	TERMINAL BOX
SCREW PLUG M33X2 ST Fe//Zn	409710601	67	4	78	90028956	TRACTION DRIVE
SCREW PLUG M33X2,00	10289931	39	1	305	11210795	VARIABLE PUMP
SCREW PLUG M8X1	7027497	14	4	307	10873570	CONNECTING PLATE
SCREW PLUG M8X1	7027497	20	2	311	10008308	CONNECTING PLATE
SCREW PLUG M8X1	7027497	53	1	312	10472196	REGULATOR
SCREW PLUG M8X1	7027497	20	2	323	571907208	CONNECTING PLATE
SCREW PLUG RD36X3 SPF	10466911	152	3	728	967785008	ADDNL.HYDR. FOLDING JIB
SCREW PLUG RD54X4 SPF	10466912	161	2	616	967784808	HYDR.AUXILIARY HOISTING
SCREW PLUG RD79X4 SPF	10466913	157	2	616	967784808	HYDR.AUXILIARY HOISTING
SCREW PLUG VSTI M10X1	7381638	12	1	234	10149677	CONNECTING LINE ADD-ON
SCREW PLUG VSTI M10X1	7381638	9	2	243	10145278	ACCESSORIES AIR COMPRES
SCREW PLUG VSTI M10X1	7381638	10	2	262	10115829	FLYWHEEL HOUSING MOUNT
SCREW PLUG VSTI M10X1	7381638	8	1	278	9078301	LOCKING PIECES
SCREW PLUG VSTI M10X1 CR6	477510501	82	3	370	939292201	PLANETARY GEARBOX
SCREW PLUG VSTI M12X1,5 C	7363178	81	1	370	939292201	PLANETARY GEARBOX
SCREW PLUG VSTI M14X1,5	7380566	6	3	180	11389608	CRANKCASE CPL. WITH CYLIN
SCREW PLUG VSTI M14X1,5	7380566	4	1	232	10145173	INTAKE STACK ASSEMBLY
SCREW PLUG VSTI M14X1,5	7380566	20	1	252	10140729	EXHAUST TC MOUNTING
SCREW PLUG VSTI M16X1,5	7382203	15	2	276	10144036	POWER TAKE-OFF ADD-ON
SCREW PLUG VSTI M20X1,5 C	477511401	86	2	370	939292201	PLANETARY GEARBOX
SCREW PLUG VSTI M22X1,5 C	7380177	10	3	180	11389608	CRANKCASE CPL. WITH CYLIN
SCREW PLUG VSTI M22X1,5 C	7380177	14	1	263	10116110	LOCKING PIECES
SCREW PLUG VSTI M24X1,5	10041903	10	5	183	10147687	POWER UNIT SUPPORT ATT
SCREW PLUG VSTI M26X1,5 C	7381457	7	2	180	11389608	CRANKCASE CPL. WITH CYLIN
SCREW PLUG VSTI M26X1,5 C	7381457	21	1	252	10140729	EXHAUST TC MOUNTING
SCREW PLUG VSTI M30X1,5 S	7382204	11	1	213	10129474	OIL COOLER, PRE-ASSEMBLE
SCREW PLUG VSTI M33X2 CR6	10043136	16	1	183	10147687	POWER UNIT SUPPORT ATT
SCREW PLUG VSTI M33X2 CR6	10043136	1	1	194	10118881	LOCKING PIECES
SCREW PLUG VSTI M33X2 CR6	10043136	6	1	208	11358102	CYLINDER HEAD COVER ASS
SCREW PLUG VSTI M33X2 CR6	10043136	8	1	253	12512627	EXHAUST NOZZLE ATTACHM

Description	Item	Pos.	Quantity	Page	Assembly	Description
SCREW PLUG VSTI M38X1,5	7382202	1	1	274	10142747	LOCKING PIECES
SCREW PLUG VSTI M42X2 CR6	10285724	3	1	217	10142942	LUBE OIL FILTER ASSEMBLY
SCREW SOCKET	12211232	3	1	501	968570808	UREA TANK
SCREW STOPPER GPN 700 M1	7003652	4	1	220	12489819	COVERING CAPS - KIT
SCREW STOPPER GPN 700 M1	7011745	1	1	220	12489819	COVERING CAPS - KIT
SCREW UNF1 1/8"X12X130 12.	485501414	(2)	288	69	917436708	FLOOR SHEET COMPL.
SCREW-ON CONNECTION GE	7410455	663	4	57	96035801	HYDRAULIC EQUIPM.CENTER
SCREW-ON CONNECTION GE	7410455	625	1	98	96035796	HYDR.TRAVEL DRIVE
SCREW-ON CONNECTION GE	7410455	625	1	115	96035792	HYDR.TRAVEL DRIVE
SCREW-ON CONNECTION GE	10476913	654	1	57	96035801	HYDRAULIC EQUIPM.CENTER
SCREW-ON CONNECTION ISO	7018842	684	3	563	96045351	HYDRAULICS UPPER CARRI
SCREW-ON HINGE 25X25X50/	10871177	12	4	409	966497908	FRONT WINDOW CPL.
SCREW-ON HINGE 25X25X50/	10871177	9	2	410	965784408	ROOF WINDOW PRE-ASS.
SCREWDRIVER 10 CRV-VERNI	790032508	52	1	152	928569808	MAIN TOOLS
SCREWDRIVER 2 CRV-VERNI	790033208	53	1	152	928569808	MAIN TOOLS
SCREWDRIVER 3,5 CRV-VERNI	790032008	50	1	152	928569808	MAIN TOOLS
SCREWDRIVER 5,5 CRV-VERNI	790032308	51	1	152	928569808	MAIN TOOLS
SCRFILTER ASSEMBLY SCRF	11429728	101	1	511	96051842	EXHAUST SYSTEM PRE-ASSE
SEAL	10135885	3	4	250	10140087	EXHAUST PIPE ASSEMBLY
SEAL	10144861	13	1	500	918731808	UREA PLANT
SEAL	10297876	2	1	317	11692439	CONTROL VALVE
SEAL	10815005	2	1	47	10450273	ANTENNA
SEAL	11826653	12	1	484	10876576	WATER HEATING SYSTEM
SEAL	11826653	(3)	1	484	10876576	WATER HEATING SYSTEM
SEAL	12462476	4	2	516	11429728	SCRFILTER ASSEMBLY
SEAL	12565355	4	4	208	11358102	CYLINDER HEAD COVER ASS
SEAL	7011131	2	1	190	5004624	OIL DRAIN PLUG
SEAL	9144762	(3)	1	208	11358102	CYLINDER HEAD COVER ASS
SEAL	9885529	(5)	1	275	10125687	POWER TAKE-OFF ADD-ON
SEAL 0,33 METALOSEAL 1	10126738	2	1	183	10147687	POWER UNIT SUPPORT ATT
SEAL 0,33 METALOSEAL 1	10137721	5	1	262	10115829	FLYWHEEL HOUSING MOUNT
SEAL 0,75X104X146 AFM 30	12969638	5	1	276	10144036	POWER TAKE-OFF ADD-ON
SEAL 1	9079130	3	1	226	10146791	FUEL FINE-FILTER ASSEMBLY
SEAL 1,5 AFM 32/2	9268131	18	1	252	10140729	EXHAUST TC MOUNTING
SEAL 1.5X210X360 GUMMI	97083604	431	1	520	918731908	AIR FILTER UNIT
SEAL 1.5X721X86 EPDM	97005272	3	1	409	966497908	FRONT WINDOW CPL.
SEAL 120X60X 30 SCHWARZ	976094308	7	1	390	916170808	CABLE INLET
SEAL 25X14X4080 EPDM	97046043	18	1	406	916162508	WINDOW ASSEMBLY
SEAL 25X892X720 EPDM	97033487	7	1	406	916162508	WINDOW ASSEMBLY
SEAL 2X148X84 EPDM	97005291	7	1	409	966497908	FRONT WINDOW CPL.
SEAL 2X225X107 EPDM	97005290	6	1	409	966497908	FRONT WINDOW CPL.
SEAL 2X86X28 EPDM	97012017	29	2	409	966497908	FRONT WINDOW CPL.
SEAL 2X94X39 EPDM	97005309	11	9	409	966497908	FRONT WINDOW CPL.
SEAL 439X120X5 POLYALEFIN	97012288	6	1	390	916170808	CABLE INLET
SEAL 4X322X62 EPDM 20SHOR	97005040	9	1	412	916168308	AIR DUCT
SEAL 4X407X85 EPDM 20SHOR	97005042	10	2	412	916168308	AIR DUCT
SEAL 645X786 EPDM	97007649	2	1	393	968514508	INSTALLATION SWITCH CAB. C
SEAL 721X43X 1.5 EPDM	97006055	18	1	409	966497908	FRONT WINDOW CPL.
SEAL 78X64 30	976193208	8	1	390	916170808	CABLE INLET
SEAL 7X182X51 POLYOLEFIN	97006874	32	6	399	917305408	INTERNAL PANELLING INSTA
SEAL 85.5X89X30 ZP-30 S	97071963	16	1	390	916170808	CABLE INLET
SEAL 90X97X5 POLYALEFIN	978172508	13	1	467	96053500	ELECTRIC ADD-ON PARTS CA
SEAL AFM 30	10117709	2	1	212	10129475	OIL COOLER ASSEMBLY
SEAL AFM 30	10128516	2	1	187	10132560	OIL SUMP WITH FASTENING
SEAL DIN 71511 1,5X25X48 A	4980359	4	2	213	10129474	OIL COOLER, PRE-ASSEMBLE
SEAL KIT	10219620	999	1	293	10492431	PRESSURE LIMITING VALVE
SEAL KIT	10285695	999	1	569	11482347	DIRECTIONAL SOLENOID
SEAL KIT	10285695	999	1	578	571634708	DIRECTIONAL CONTROL VALV
SEAL KIT	10285695	999	1	580	10332397	DIRECTIONAL CONTROL VALV
SEAL KIT	10331946	998	1	293	10492431	PRESSURE LIMITING VALVE

Description	Item	Pos.	Quantity	Page	Assembly	Description
SEAL KIT	10331947	800	1	292	10429930	GEAR WHEEL MOTOR
SEAL KIT	10342480	999	1	319	10871282	VARIABLE PUMP
SEAL KIT	10423993	(999)	1	568	11211756	CONTROL BLOCK
SEAL KIT	10424726	999	1	310	10663105	DRIVING GEAR
SEAL KIT	11004122	(999)	1	572	10413106	CONTROL BLOCK
SEAL KIT	11170384	(999)	1	697	10876933	TELESCOPIC CYLINDER
SEAL KIT	11170868	(5)	1	353	90008901	SLEWING GEAR DRIVE
SEAL KIT	11170869	(6)	1	353	90008901	SLEWING GEAR DRIVE
SEAL KIT	11494337	(98)	1	305	11210795	VARIABLE PUMP
SEAL KIT	11600280	(999)	1	297	11182708	VARIABLE PUMP
SEAL KIT	11643397	(999)	1	373	11182597	VARIABLE DISPLACEMENT MO
SEAL KIT	11691956	3	1	63	11643183	CONTROL BLOCK
SEAL KIT	11691956	3	1	66	11643184	CONTROL BLOCK
SEAL KIT	12102278	(999)	1	83	11320954	GUIDE WHEEL UNIT
SEAL KIT	511043308	(999)	1	574	10332882	CONTROL BLOCK
SEAL KIT	571407208	(999)	1	577	12100860	CONTROL BLOCK
SEAL KIT	571496708	999	1	764	512363708	HYDRO CYLINDER
SEAL KIT	571614608	(1)	1	697	10876933	TELESCOPIC CYLINDER
SEAL KIT	571840008	(999)	1	560	96045351	HYDRAULICS UPPER CARRI
SEAL KIT BALLASTING CYLIN	12104276	999	1	490	10877810	BALLAST EXTENSION RAM
SEAL KIT CONNECTING BLOC	11220418	5	1	63	11643183	CONTROL BLOCK
SEAL KIT CONNECTING BLOC	11220418	5	1	66	11643184	CONTROL BLOCK
SEAL KIT CONTROL BLOCK	10491129	999	1	584	10449853	DIRECTIONAL CONTROL VALV
SEAL KIT CYLINDER	10871692	999	1	23	12102931	TRACK WIDTH ADJUSTING CY
SEAL KIT CYLINDER	11621953	999	1	36	10870204	LOCKING CYLINDER
SEAL KIT CYLINDER HEAD -30°	12107727	999	1	699	571928508	CYLINDER HEAD CPL.
SEAL KIT DIRECTIONAL VALV	10802253	(999)	1	560	96045351	HYDRAULICS UPPER CARRI
SEAL KIT DIRECTIONAL VALV	10871959	(999)	1	624	10038509	CONTROL BLOCK
SEAL KIT DIRECTIONAL VALV	11006275	999	1	575	571737808	DIRECTIONAL CONTROL VALV
SEAL KIT F. OIL MOTOR	10872714	999	1	594	10872388	HYDRO MOTOR
SEAL KIT F.BRAKE	969997708	(999)	1	78	90028956	TRACTION DRIVE
SEAL KIT F.REGULATOR	10440976	999	1	312	10472196	REGULATOR
SEAL KIT F.REGULATOR	10663065	999	1	324	10292801	REGULATOR
SEAL KIT GEAR PUMP	10492710	999	1	302	11210201	GEAR PUMP
SEAL KIT GEAR PUMP	10492710	999	1	326	10870964	GEAR PUMP
SEAL KIT GEAR PUMP	11494341	999	1	327	10870965	GEAR PUMP
SEAL KIT GRUNDBLOCK	10684170	(999)	1	560	96045351	HYDRAULICS UPPER CARRI
SEAL KIT HIGH PRESS.CONN	10141216	12	1	223	10141140	RK HIGH PRESSURE CONNEC
SEAL KIT HIGH PRESS.CONN	10141216	210	1	225	10153151	HIGH PRESS.CONNECTOR W
SEAL KIT HIGH PRESSURE P	12417001	210	1	219	10146658	HIGH PRESSURE PUMP
SEAL KIT HIGH PRESSURE P	12937883	211	1	219	10146658	HIGH PRESSURE PUMP
SEAL KIT INJECTOR	10141215	210	1	221	10152867	INJECTOR WITH FASTENING
SEAL KIT LIMIT VALVE	10470385	(999)	1	574	10332882	CONTROL BLOCK
SEAL KIT LIMIT VALVE	10872098	(999)	1	624	10038509	CONTROL BLOCK
SEAL KIT LIMIT VALVE	10872098	(999)	1	624	10038509	CONTROL BLOCK
SEAL KIT PREFEEDING PUMP	12424993	215	1	219	10146658	HIGH PRESSURE PUMP
SEAL KIT REGULATING VALVE	10488696	98	1	305	11210795	VARIABLE PUMP
SEAL KIT REGULATING VALVE	10663107	98	1	309	11210798	VARIABLE PUMP
SEAL KIT REGULATING VALVE	11690589	98	1	297	11182708	VARIABLE PUMP
SEAL KIT REGULATING VALVE	11690589	98	1	300	10871017	VARIABLE PUMP
SEAL KIT TOGGLE CYLINDER	12104385	999	1	648	12102921	LUFFING CYLINDER
SEAL KIT VALVE BLOCK	96050083	(999)	1	560	96045351	HYDRAULICS UPPER CARRI
SEAL KIT VITON	571187408	(999)	1	574	10332882	CONTROL BLOCK
SEAL S235JR	10118556	2	4	231	10147365	AIR INTAKE PIPE ASS.
SEAL X15CrNiSi20-	10125739	7	1	252	10140729	EXHAUST TC MOUNTING
SEAL X5CrNi18-10	12436701	32	1	253	12512627	EXHAUST NOZZLE ATTACHM
SEAL XTREME PLUS	10125148	121	1	507	919674408	EXHAUST SYSTEM
SEAL-LOCK-SHOULDER NUT	7014529	47	1	305	11210795	VARIABLE PUMP
SEAL-LOCK-SHOULDER NUT M	7027052	49	1	81	11161917	CONTROL ELEMENT
SEALANT 90G TUBE	8627609	112	1	189	10155227	OIL SUMP PRE-ASS.

Description	Item	Pos.	Quantity	Page	Assembly	Description
SEALANT A80MR HYLOMAR	870002808	265	0.1	711	966291008	TERMINAL BOX
SEALING COMPOUND	10447539	99	1	525	10327065	ELECTRIC PUMP
SEALING COMPOUND TUBE 5	811201314	108	1	226	10146791	FUEL FINE-FILTER ASSEMBLY
SEALING COMPOUND TUBE 5	811201314	108	1	277	9077386	AUXILIARY DRIVE PRE-ASS.
SEALING NUT M6	510753408	11	1	583	10489734	PRESSURE LIMITING VALVE
SEALING NUT M8	510741708	21	1	585	511433908	PRESSURE LIMITING VALVE
SEALING NUT M8	510741708	21	1	588	511419608	PRESSURE LIMITING VALVE
SEALING PLUG	738048003	2	1	370	939292201	PLANETARY GEARBOX
SEALING PLUG	7619068	4	1	521	10871700	AIR FILTER
SEALING PLUG 9	761081903	8	1	78	90028956	TRACTION DRIVE
SEALING PLUG 9	761081903	9	3	370	939292201	PLANETARY GEARBOX
SEALING PLUG GPN 735 M33	10465711	15	2	183	10147687	POWER UNIT SUPPORT ATT
SEALING PLUG LK 950	10030837	14	14	180	11389608	CRANKCASE CPL. WITH CYLIN
SEALING PLUG LK 950	10036325	8	1	207	11448005	ROCKER ARM BRACKET PRE
SEALING PLUG M 1-K	604508508	515	5	49	96045228	WIRING HARNESS
SEALING PLUG M 1-K	604508508	507	1	538	96037133	LEAD
SEALING PLUG M 1-K	604508508	503	2	644	96037132	LEAD
SEALING PLUG M 1-K	604508508	(503)	1	741	917598408	ELECTRIC MEASURING & WAR
SEALING PLUG M1-D	604512108	523	4	49	96045228	WIRING HARNESS
SEALING PLUG M1-D	604512108	502	1	142	96045205	WIRING HARNESS
SEALING PLUG M1-D	604512108	517	1	532	96045385	WIRING HARNESS
SEALING PLUG M1-D	604512108	505	1	538	96037133	LEAD
SEALING PLUG M1-D	604512108	504	1	644	96037132	LEAD
SEALING PLUG M1-D	604512108	153	1	714	968708708	TERMINAL BOX CPL.
SEALING PLUG M1-D	604512108	(510)	1	741	917598408	ELECTRIC MEASURING & WAR
SEALING PLUG M18X1.5	11389287	3	1	230	10143825	INJECTION LINES
SEALING PROFILE	262183501	314	6.26	350	90025640	ROLLER SLEWING RING
SEALING PROFILE	979896308	2	1	42	966167808	COVER COMPL.
SEALING PROFILE 1,5-3X14,6	262106508	19	0.37	449	968923508	FLAP RIGHT PRE-ASS.
SEALING PROFILE 1-3X21,5X1	262106708	13	2.11	157	96063087	STORAGE BOX
SEALING PROFILE 1-4X21,5X1	262105508	40	0.56	75	91001377	CRAWLER SUPPORT PREASS
SEALING PROFILE 1-4X21,5X1	262105508	40	0.56	108	91001378	CRAWLER SUPPORT PREASS
SEALING PROFILE NBR 70-483	262181001	315	6.29	350	90025640	ROLLER SLEWING RING
SEALING PROFILE NBR 70-483	262181001	316	6.24	350	90025640	ROLLER SLEWING RING
SEALING RING	571898008	443	1	288	919007708	DRIVE ASSEMBLY, PRE-ASSE
SEALING RING 10,7X16X1,5 St/	10011864	5	15	229	10143342	LEAK OIL RETURN LINE
SEALING RING 10,7X16X1,5 St/	10011864	8	2	243	10145278	ACCESSORIES AIR COMPRES
SEALING RING 10,7X16X1,5 St/	10011864	5	2	254	11420633	CYCLE VALVE
SEALING RING 10,7X16X1,5 St/	10011864	8	2	276	10144036	POWER TAKE-OFF ADD-ON
SEALING RING 12,7X18,00X1,5	10011865	7	2	229	10143342	LEAK OIL RETURN LINE
SEALING RING 12,7X18,00X1,5	10011865	27	2	253	12512627	EXHAUST NOZZLE ATTACHM
SEALING RING 12,7X18,00X1,5	10011865	14	2	276	10144036	POWER TAKE-OFF ADD-ON
SEALING RING 14,7X22,00X1,5	10011866	11	3	229	10143342	LEAK OIL RETURN LINE
SEALING RING 14,7X22,00X1,5	10011866	2	7	247	10148216	PIPELINE INSTALLATION
SEALING RING 14,7X22,00X1,5	10011866	6	1	249	10142744	COOLING WATER AIR BLEED
SEALING RING 14,7X22,00X1,5	10011866	28	2	253	12512627	EXHAUST NOZZLE ATTACHM
SEALING RING 140X155X13	10802682	120	2	507	919674408	EXHAUST SYSTEM
SEALING RING 140X155X13	10802682	120	3	511	96051842	EXHAUST SYSTEM PRE-ASSE
SEALING RING 16,7X24,00X1,5	10011867	9	2	228	10143341	FUEL LINES
SEALING RING 16,7X24,00X1,5	10011867	4	8	243	10145278	ACCESSORIES AIR COMPRES
SEALING RING 16,7X24,00X1,5	10011867	26	1	253	12512627	EXHAUST NOZZLE ATTACHM
SEALING RING 18,7X26X1,5 St/	10011868	2	1	193	10130406	LEVEL SENSOR
SEALING RING 18,7X26X1,5 St/	10011868	15	10	228	10143341	FUEL LINES
SEALING RING 19,6X24,3X1,5	761022503	6	1	354	927554301	VENTILATION CONNECTING PI
SEALING RING 19,6X24,3X1,5	761022503	14	1	374	90200104	OIL-GAUGING INSTRUMENT
SEALING RING 19,6X24,3X1,5	761022503	14	1	612	90200103	OIL-GAUGING INSTRUMENT
SEALING RING 22,7X30X2 St/	10011869	3	2	238	9080294	AIR COMPRESSOR PRE-ASSY
SEALING RING 22,7X30X2 St/	10011869	12	1	276	10144036	POWER TAKE-OFF ADD-ON
SEALING RING 26,7X34,93X2 S	10011870	5	2	232	10145173	INTAKE STACK ASSEMBLY
SEALING RING 26,7X34,93X2 S	10011870	27	1	252	10140729	EXHAUST TC MOUNTING

Description	Item	Pos.	Quantity	Page	Assembly	Description
SEALING RING 27X20X1,5 CU	10014697	9	3	136	11347526	ELECTRIC PUMP
SEALING RING 27X20X1,5 CU	10014697	10	3	525	10327065	ELECTRIC PUMP
SEALING RING 30,7X39X2 St/	10113731	3	1	215	10152592	PRESSURE RELIEF VALVE
SEALING RING 8,7X14X1 St/FP	10011871	22	2	229	10143342	LEAK OIL RETURN LINE
SEALING RING DIN 3869 20X1	761022903	2	2	374	90200104	OIL-GAUGING INSTRUMENT
SEALING RING DIN 3869 20X1	761022903	2	2	612	90200103	OIL-GAUGING INSTRUMENT
SEALING RING DIN 3869 21X1	7371651	(1)	1	561	96045351	HYDRAULICS UPPER CARRI
SEALING RING DIN 7603 A10X	710101408	7	4	393	968514508	INSTALLATION SWITCH CAB. C
SEALING RING DIN 7603 A12X	7101030	87	1	371	939292201	PLANETARY GEARBOX
SEALING RING DIN 7603 A14X	710102508	11	1	189	10155227	OIL SUMP PRE-ASS.
SEALING RING DIN 7603 A14X	710103008	7	1	430	969085208	HEATING, PRE-ASSEMBLED
SEALING RING DIN 7603 A14X	738122523	2	1	214	9078233	VALVE
SEALING RING DIN 7603 A14X	7381225	14	1	183	10147687	POWER UNIT SUPPORT ATT
SEALING RING DIN 7603 A14X	7381225	30	1	253	12512627	EXHAUST NOZZLE ATTACHM
SEALING RING DIN 7603 A16X	710103708	402	1	329	96034522	EQUALIZING RESERVOIR
SEALING RING DIN 7603 A18X	710104008	(23)	2	722	967785408	ADDNL.HYDR. FOLDING JIB
SEALING RING DIN 7603 A27X	710105908	29	1	374	90200104	OIL-GAUGING INSTRUMENT
SEALING RING DIN 7603 A30X	710106508	3	1	184	10138450	FINAL CONTROL VALVE
SEALING RING DIN 7603 A30X	710106508	5	3	189	10155227	OIL SUMP PRE-ASS.
SEALING RING DIN 7603 A33X	7101022	306	2	616	967784808	HYDR.AUXILIARY HOISTING
SEALING RING DIN 7603 A38X	710107208	305	2	616	967784808	HYDR.AUXILIARY HOISTING
SEALING RING DIN 7603 A52X	710107708	307	4	616	967784808	HYDR.AUXILIARY HOISTING
SEALING RING DIN 7603 A6,5	710100408	9	1	393	968514508	INSTALLATION SWITCH CAB. C
SEALING RING DIN 7603 A8X12	710100708	9	8	392	916162808	RELING
SEALING SET CONTROL UNIT	10471439	(98)	1	305	11210795	VARIABLE PUMP
SEALING SET VALVE	10663092	(999)	1	572	10413106	CONTROL BLOCK
SEALING SET VALVE	10663097	(999)	1	572	10413106	CONTROL BLOCK
SEALING SET VALVE	10802870	(99)	1	132	968077208	HYDRAULIC SUPPORT
SEALING STRIP 40X4 NBR/SBR	11114455	43	4	500	918731808	UREA PLANT
SEALING TAPE	261101108	50	0.3	428	11083498	AIR CONDITIONING UNIT
SEALINGSET ROTARY TRANS	10873566	(23)	2	147	919087608	ROTARY FEED THROUGH
SEAT CPL.	12100570	55	1	435	10877138	OPERATOR SEAT
SECURING PIN FOR JPT PLUG	602338208	503	3	464	96036956	WIRING HARNESS
SECURING PIN FOR JPT PLUG	602338208	520	5	542	96045387	CABLES, BASIC CONSTRUCTI
SELF-ALIGNING ROLLER BEA	746001601	17	1	368	932916901	ROPE DRUM
SELF-ALIGNING ROLLER BEA	746001601	20	1	608	939294001	ROPE DRUM
SELF-ERECT. AUX. HOIST GEA	917413208	334	1	14		LIEBHERR LTR 1220
SENSOR CONTROL DEVICE NI	10144039	154	1	514	96041566	ELECTRIC ADD-ON PARTS
SENSOR HOLDER 30X75X190	972261508	31	2	701	966134608	ADD-ON PARTS CYLINDER
SENSOR INSTALL.TELESCOP	966290708	30	1	701	966134608	ADD-ON PARTS CYLINDER
SENSOR LIFT TOP LIMIT SWI	966479308	1	1	735	918197708	EL.2 HOISTING LIMIT SWITCH
SENSOR PIPE	12898856	102	1	511	96051842	EXHAUST SYSTEM PRE-ASSE
SENSOR SPF	10876368	10	1	660	918802108	BALLAST MONITORING ENCO
SEPARATING RING	10114850	8	15	52	11346779	SLIP RING TRANSMITTER
SERRATED LOCK WASHER D	12102694	18	1	43	968054008	MOUNTING PLATE PRE-ASS.
SERRATED LOCK WASHER D	12102694	12	1	393	968514508	INSTALLATION SWITCH CAB. C
SERRATED LOCK WASHER D	12102694	4	12	545	922648308	TERMINAL BOARD PRE-ASS.
SERRATED LOCK WASHER D	425220708	43	4	467	96053500	ELECTRIC ADD-ON PARTS CA
SERRATED LOCK WASHER D	425220708	63	16	544	969256608	BASE ASSEMBLY
SERRATED LOCK WASHER D	425221108	60	1	544	969256608	BASE ASSEMBLY
SERVOMOTOR 0,0024KW24V	10287301	13	2	428	11083498	AIR CONDITIONING UNIT
SET MAIN BEARINGS	9076457	51	1	174	13455297	DIESEL ENGINE
SETTING ROD	7023664	2	1	315	10472208	ADJUSTMENT
SHACKLE 0,08T NG4 STAINLE	10300552	31	2	409	966497908	FRONT WINDOW CPL.
SHACKLE 12T SPF	10283201	6	1	751	968728808	CONSOLE PRE-ASS.
SHACKLE DIN 82101 0,25T NG0	773933508	3	1	659	925141508	HOSE GUIDE PRE-ASS.
SHACKLE DIN 82101 0,25T NG0	773933508	24	1	701	966134608	ADD-ON PARTS CYLINDER
SHACKLE DIN 82101 0,25T NG0	773933508	14	1	734	917268408	BOOM NOSE
SHAFT	11006491	11	1	704	10802064	ROPE LENGTH INDICATOR
SHAFT 50.0X1020 S355J2C+C	97030028	3	1	492	967928508	LOCKING

Description	Item	Pos.	Quantity	Page	Assembly	Description
SHAFT SEAL	10335855	3	1	292	10429930	GEAR WHEEL MOTOR
SHAFT SEAL 35X52X6/5 FKM	7022315	20	1	316	10871043	VARIABLE PUMP
SHAFT SEAL 35X52X6/5 FKM	7022315	(14)	1	359	510229408	HYDRO MOTOR
SHAFT SEAL 35X52X6/5 FKM	7022315	14	1	360	570109008	DRIVING GEAR
SHAFT SEAL 55X70X7 FPM	571907608	38	1	321	10872488	DRIVING GEAR
SHAFT SEAL BAFSL 45X62X7	7021600	38	1	310	10663105	DRIVING GEAR
SHAPED HOSE-OIL NBR	973519308	253	1	287	919007708	DRIVE ASSEMBLY, PRE-ASSE
SHEET 126X24X1.5 EPDM 80	979142208	8	4	410	965784408	ROOF WINDOW PRE-ASS.
SHEET 15X30X50 PA6G	288176208	22	1	147	919087608	ROTARY FEED THROUGH
SHEET CPL. RAL 7037,SDGL,G	96028313	2	1	334	96023117	BATTERY BOX, PRE-ASSEMB
SHEET GASKET 150X158X0,10	10154459	2	1	182	10154458	CYLINDER
SHEET GASKET 7,6X15,8X1 VI	571082508	(1)	1	561	96045351	HYDRAULICS UPPER CARRI
SHEET GASKET 7X19X4 A2	429900308	7	12	92	968420608	STORAGE BOX
SHEET GASKET 8X22X4 -A2	429900608	376	4	520	918731908	AIR FILTER UNIT
SHEET GASKET VITON	571081908	(1)	1	728	967785008	ADDNL.HYDR. FOLDING JIB
SHEET GASKET VITON	571082408	(1)	1	728	967785008	ADDNL.HYDR. FOLDING JIB
SHEET METAL NUT M8 480H	12100332	8	4	332	918955408	BATTERY BOX CPL.
SHEET METAL NUT M8 480H	12100332	353	22	446	96036790	SLEWING PLATFORM PANELLI
SHEET METAL NUT M8 480H	12100332	352	17	455	969015908	SLEWING PLATFORM PANELLI
SHEET METAL NUT M8 480H	12100332	350	6	518	96039752	ADDITIONAL PARTS CLADDIN
SHEET S235JR	9275826	16	1	263	10116110	LOCKING PIECES
SHEET-METAL SCREW ISO 704	10875793	10	2	601	918628408	AIR COND. UNIT SUPERSTRU
SHEET-METAL SCREW ISO 705	10876382	43	16	399	917305408	INTERNAL PANELLING INSTA
SHIELDING TIED BACK	965617208	995	6	463	96036955	WIRING HARNESS
SHIELDING TIED BACK	965617208	995	2	533	96045385	WIRING HARNESS
SHIM	511015508	17	2	585	511433908	PRESSURE LIMITING VALVE
SHIM	511015508	17	1	588	511419608	PRESSURE LIMITING VALVE
SHIM FE//ZNNI8//CN//T0	964984108	26	2	433	918810308	CONTROL STAND
SHIM RING	7369933	20	1	321	10872488	DRIVING GEAR
SHIM RING DIN 988 63X80X0,1	421000408	17	2	360	570109008	DRIVING GEAR
SHIM RING DIN 988 63X80X0,3	421000508	18	1	360	570109008	DRIVING GEAR
SHIM WASHER	10293786	5	1	360	570109008	DRIVING GEAR
SHUT OFF DEVICE DN150-FL	11212467	2	1	348	969050308	OIL TANK PRE-ASS.
SHUTDOWN VALVE	571899508	3	1	307	10873570	CONNECTING PLATE
SHUTTLE VALVE	11691104	40	1	319	10871282	VARIABLE PUMP
SHUTTLE VALVE	571535008	9	1	582	11341035	CONTROL BLOCK
SHUTTLE VALVE 350BAR	571529508	8	2	582	11341035	CONTROL BLOCK
SIDE PANEL WELDED	968981408	1	1	291	96034631	RADIATOR, PRE-ASSEMBLED
SIDE PANEL WELDED	968981508	2	1	291	96034631	RADIATOR, PRE-ASSEMBLED
SIDE PLATE	11658586	8	2	754	910836808	HOOK BLOCK
SIDE STEP	966269808	2	1	387	916177508	STEP CPL.
SIDE WINDOW LEFT 646.2X94X	97003560	2	1	406	916162508	WINDOW ASSEMBLY
SIDE WINDOW RIGHT 1252X12	97003561	3	1	406	916162508	WINDOW ASSEMBLY
SIEVE SLEEVE	570066308	5	1	102	502806508	EQUALIZING RESERVOIR
SIGN	11494432	(2)	1	136	11347526	ELECTRIC PUMP
SIGN	11494581	(3)	1	136	11347526	ELECTRIC PUMP
SIGN	553031008	2	1	601	918628408	AIR COND. UNIT SUPERSTRU
SIGN	971749908	2	2	164	917862808	LABELLING GREAT BRITAIN
SIGN	976540908	4	1	551	969061708	CARRIER PLATE, PRE-ASSE
SIGN	977667008	4	1	714	968708708	TERMINAL BOX CPL.
SIGN 100X184X0,1 KLEBEFOLI	11952500	1	2	169	919553608	ADDITIONAL SIGNAGE CALIF
SIGN 100X80 KLEBEFOLIE SP	97051193	(1)	1	652	917260608	COUNTERWEIGHT WITH CLAM
SIGN 108DBA/100X90 KLEBE	971693508	76	1	164	917862808	LABELLING GREAT BRITAIN
SIGN 120X80 KLEBEFOLIE SP	97037383	82	1	500	918731808	UREA PLANT
SIGN 158X33X1 AL-BL	97044048	157	2	56	96035801	HYDRAULIC EQUIPM.CENTER
SIGN 158X68 KLEBEFOLIE SP	97020380	(2)	3	652	917260608	COUNTERWEIGHT WITH CLAM
SIGN 160X100 KLEBEFOLIE SP	97067626	5	2	752	917531708	BALLAST TRAVERSE
SIGN 168X62 KLEBEFOLIE SP	978674808	63	12	164	917862808	LABELLING GREAT BRITAIN
SIGN 168X62 KLEBEFOLIE SP	978674808	(3)	2	652	917260608	COUNTERWEIGHT WITH CLAM
SIGN 168X88 KLEBEFOLIE SP	97009799	101	1	164	917862808	LABELLING GREAT BRITAIN

Description	Item	Pos.	Quantity	Page	Assembly	Description
SIGN 168X88 KLEBEFOLIE SP	97011689	95	1	164	917862808	LABELLING GREAT BRITAIN
SIGN 168X88 KLEBEFOLIE SP	97011690	96	1	164	917862808	LABELLING GREAT BRITAIN
SIGN 168X88 KLEBEFOLIE SP	97036732	68	1	164	917862808	LABELLING GREAT BRITAIN
SIGN 168X88 KLEBEFOLIE SP	97037952	18	1	164	917862808	LABELLING GREAT BRITAIN
SIGN 168X88 KLEBEFOLIE SP	97043334	90	4	164	917862808	LABELLING GREAT BRITAIN
SIGN 168X88 KLEBEFOLIE SP	97043335	91	4	164	917862808	LABELLING GREAT BRITAIN
SIGN 168X88 KLEBEFOLIE SP	97043336	92	4	164	917862808	LABELLING GREAT BRITAIN
SIGN 168X88 KLEBEFOLIE SP	97060689	100	1	164	917862808	LABELLING GREAT BRITAIN
SIGN 168X88 KLEBEFOLIE SP	97067627	8	2	658	968068308	ASSEMBLY DEVICE
SIGN 168X88 KLEBEFOLIE SP	978674308	28	2	164	917862808	LABELLING GREAT BRITAIN
SIGN 168X88 KLEBEFOLIE SP	978867108	33	2	164	917862808	LABELLING GREAT BRITAIN
SIGN 168X88 KLEBEFOLIE SP	979383308	62	1	164	917862808	LABELLING GREAT BRITAIN
SIGN 1X75X45 ALUMINIUM	97038433	16	1	395	917304508	CRANE OPERATOR CABIN P
SIGN 1X80X80 KLEBEFOLIE SP	974150408	84	2	164	917862808	LABELLING GREAT BRITAIN
SIGN 1X80X80 KLEBEFOLIE SP	974150508	85	2	164	917862808	LABELLING GREAT BRITAIN
SIGN 1X80X80 KLEBEFOLIE SP	974150608	86	2	164	917862808	LABELLING GREAT BRITAIN
SIGN 1X80X80 KLEBEFOLIE SP	974150708	87	2	164	917862808	LABELLING GREAT BRITAIN
SIGN 208X88 KLEBEFOLIE SP	97016304	49	1	164	917862808	LABELLING GREAT BRITAIN
SIGN 208X88 KLEBEFOLIE SP	97016392	72	4	164	917862808	LABELLING GREAT BRITAIN
SIGN 208X88 KLEBEFOLIE SP	978673908	11	2	164	917862808	LABELLING GREAT BRITAIN
SIGN 208X88 KLEBEFOLIE SP	978674008	12	8	164	917862808	LABELLING GREAT BRITAIN
SIGN 208X88 KLEBEFOLIE SP	978674108	14	15	164	917862808	LABELLING GREAT BRITAIN
SIGN 208X88 KLEBEFOLIE SP	978674408	29	5	164	917862808	LABELLING GREAT BRITAIN
SIGN 208X88 KLEBEFOLIE SP	978674508	31	1	164	917862808	LABELLING GREAT BRITAIN
SIGN 208X88 KLEBEFOLIE SP	978674608	32	1	164	917862808	LABELLING GREAT BRITAIN
SIGN 208X88 KLEBEFOLIE SP	978674908	64	1	164	917862808	LABELLING GREAT BRITAIN
SIGN 208X88 KLEBEFOLIE SP	978675008	66	8	164	917862808	LABELLING GREAT BRITAIN
SIGN 20X10 KLEBEFOLIE SPF	97064219	80	1	500	918731808	UREA PLANT
SIGN 20X10 KLEBEFOLIE SPF	97064220	81	1	500	918731808	UREA PLANT
SIGN 225X165 KLEBEFOLIE SP	971539808	1	1	771	919127808	SIGN TRANSPORT HOLDER
SIGN 4X228X100 S315MC FE//	975231708	6	1	68	918925508	CROSS BEAM CPL.
SIGN 6X107X237 G-ALSI12	772624608	1	1	161	916283508	PLATING
SIGN 70X184X0,1 KLEBEFOLIE	13187353	2	1	169	919553608	ADDITIONAL SIGNAGE CALIF
SIGN 75X45 ALUMINIUM	976955508	3	1	601	918628408	AIR COND. UNIT SUPERSTRU
SIGN 80-38X0 LEXAN	976917008	2	1	711	966291008	TERMINAL BOX
SIGN 85X55 SPF	97025520	(1)	1	734	917268408	BOOM NOSE
SIGN 88X450X0,1 FOLIE	10663718	9	2	754	910836808	HOOK BLOCK
SIGN EXTERNAL SUPPLY 110	918462408	417	1	15		LIEBHERR LTR 1220
SIGN PROJEKT TYP KLEBEFO	97067623	9	2	658	968068308	ASSEMBLY DEVICE
SIGN PROJEKT TYP KLEBEFO	97067623	4	2	752	917531708	BALLAST TRAVERSE
SIGN TRANSPORT HOLDER	919127808	421	1	15		LIEBHERR LTR 1220
SIGNAGE COUNTERWEIGHT	968992508	15	1	652	917260608	COUNTERWEIGHT WITH CLAM
SIGNS MASTNASE	967774608	100	1	734	917268408	BOOM NOSE
SILENCER	502661608	153	1	496	969763408	PIPEWORK AIR INSTALLATIO
SINGEL SEAL 1,0-1,5MM2	10014387	830	69	535	96037136	WIRING HARNESS
SINGEL SEAL 1,0-1,5MM2	10014387	830	6	537	96037137	WIRING HARNESS
SINGLE STRAND SEALING	602331508	804	9	537	96037137	WIRING HARNESS
SINGLE STRAND SEALING 1,2	602330808	802	12	50	96045228	WIRING HARNESS
SINGLE STRAND SEALING 1,2	602330808	802	2	463	96036955	WIRING HARNESS
SINGLE STRAND SEALING 1,2	602330808	802	14	535	96037136	WIRING HARNESS
SINGLE STRAND SEALING 1,2	602330808	802	4	537	96037137	WIRING HARNESS
SINGLE STRAND SEALING 1,4-	10424625	828	4	463	96036955	WIRING HARNESS
SINGLE STRAND SEALING 1,4-	10424625	828	2	533	96045385	WIRING HARNESS
SINGLE STRAND SEALING 1,4-	10424625	828	9	537	96037137	WIRING HARNESS
SINGLE STRAND SEALING 2	605619708	813	1	50	96045228	WIRING HARNESS
SINGLE STRAND SEALING 2	605619708	813	37	533	96045385	WIRING HARNESS
SINGLE STRAND SEALING 2	605619708	813	13	535	96037136	WIRING HARNESS
SINGLE STRAND SEALING 2,2-	602330508	801	6	535	96037136	WIRING HARNESS
SINGLE STRAND SEALING DIN	605619908	821	4	533	96045385	WIRING HARNESS
SINGLE STRAND SEALING DIN	605619808	816	3	533	96045385	WIRING HARNESS

Description	Item	Pos.	Quantity	Page	Assembly	Description
SINGLE STRAND SEALING DIN	605619808	816	2	537	96037137	WIRING HARNESS
SINGLE-END SPANNER DIN 8	885132208	21	1	152	928569808	MAIN TOOLS
SINGLE-END SPANNER DIN 8	790004608	22	1	152	928569808	MAIN TOOLS
SLEEVE	10815006	3	1	47	10450273	ANTENNA
SLEEVE	11493793	1	1	772	915037208	AUXILIARY REEVING CABLE, C
SLEEVE 108.0X196 S235JRH	97031480	30	2	75	91001377	CRAWLER SUPPORT PREASS
SLEEVE 108.0X196 S235JRH	97031480	30	2	108	91001378	CRAWLER SUPPORT PREASS
SLEEVE 12.0X6 E235+N FE//ZN	97032611	2	4	30	968019508	LIMIT SWITCH ADD-ON
SLEEVE 140.0X25 35NICRMOV	972140108	5	1	363	917259608	ROTATING PLATFORM LOCK
SLEEVE 18X12 PA 12	97012184	44	1	421	917304708	SLIDING DOOR INSTALLATION
SLEEVE 18X24 PA12	97001760	34	1	421	917304708	SLIDING DOOR INSTALLATION
SLEEVE 20.0X30 S355J2C+C	97031233	15	3	751	968728808	CONSOLE PRE-ASS.
SLEEVE 20.0X30 S355J2C+C	97031233	2	2	758	917413208	SELF-ERECT. AUX. HOIST GEA
SLEEVE 25.0X30 35NICRMOV	97114100	9	48	351	919369308	SLEWING GEAR
SLEEVE 25X15 PA 12	97001711	33	1	421	917304708	SLIDING DOOR INSTALLATION
SLEEVE 25X20 11SMN37 FE//	953873408	25	1	41	96045226	SWITCH BOX COMPL.
SLEEVE 25X20 11SMN37 FE//	953873408	20	16	119	917691008	FALL PROTECTION
SLEEVE 25X20 11SMN37 FE//	953873408	25	8	129	919644008	HYDRAULIC SUPPORT
SLEEVE 25X20 11SMN37 FE//	953873408	12	4	144	96045206	MECHANICAL AUXILIARIES
SLEEVE 25X20 11SMN37 FE//	953873408	85	4	150	919499408	CENTRAL BALLAST
SLEEVE 25X20 11SMN37 FE//	953873408	21	2	280	918731408	DRIVE ASSEMBLY CPL.
SLEEVE 25X20 11SMN37 FE//	953873408	14	6	286	919007708	DRIVE ASSEMBLY, PRE-ASSE
SLEEVE 25X20 11SMN37 FE//	953873408	22	4	365	917259708	MAIN HOIST GEAR
SLEEVE 25X20 11SMN37 FE//	953873408	5	1	507	919674408	EXHAUST SYSTEM
SLEEVE 25X20 11SMN37 FE//	953873408	313	4	616	967784808	HYDR.AUXILIARY HOISTING
SLEEVE 32X30	955918008	25	2	701	966134608	ADD-ON PARTS CYLINDER
SLEEVE 33.0X19 FE//ZNNI8//C	978787708	16	4	39	96045225	ELECTR.FOR CENTER SECTIO
SLEEVE 33.0X19 FE//ZNNI8//C	978787708	38	6	75	91001377	CRAWLER SUPPORT PREASS
SLEEVE 33.0X19 FE//ZNNI8//C	978787708	38	6	108	91001378	CRAWLER SUPPORT PREASS
SLEEVE 33.0X19 FE//ZNNI8//C	978787708	25	3	135	917257108	CENTRALIZED LUBRICATION
SLEEVE 33.0X19 FE//ZNNI8//C	978787708	69	12	150	919499408	CENTRAL BALLAST
SLEEVE 33.0X19 FE//ZNNI8//C	978787708	15	12	172	918731108	ASSEMBLY PARTS F.SLEWING
SLEEVE 33.0X19 FE//ZNNI8//C	978787708	30	5	445	96036790	SLEWING PLATFORM PANELLI
SLEEVE 33.0X19 FE//ZNNI8//C	978787708	53	4	480	918759808	ADD HEATING SUPERSTRUCT
SLEEVE 33.0X19 FE//ZNNI8//C	978787708	(6)	6	496	969763408	PIPEWORK AIR INSTALLATIO
SLEEVE 33.0X19 FE//ZNNI8//C	978787708	5	2	518	96039752	ADDITIONAL PARTS CLADDIN
SLEEVE 33.0X19 FE//ZNNI8//C	978787708	2	3	635	968210808	ADD-ON PARTS CAMERA
SLEEVE 45X60X32,8 -16MnCr5	927602501	60	1	370	939292201	PLANETARY GEARBOX
SLEEVE 65.0X248 E235+N	97100243	42	1	75	91001377	CRAWLER SUPPORT PREASS
SLEEVE 65.0X248 E235+N	97100243	42	1	108	91001378	CRAWLER SUPPORT PREASS
SLEEVE 70.0X120 S355J2+AR	979443608	45	4	35	917511508	CRAWLER CENTRE PART PRE
SLEEVE 8X26X64,5 X46Cr13	10152168	2	1	205	10149578	CYLINDER HEAD
SLEEVE CONTACT 0,2-0,5MM2	10335820	690	14	49	96045228	WIRING HARNESS
SLEEVE CONTACT 0,2-0,5MM2	10335820	690	52	463	96036955	WIRING HARNESS
SLEEVE CONTACT 0,2-0,5MM2	10335820	690	6	464	96036956	WIRING HARNESS
SLEEVE CONTACT 0,2-0,5MM2	10335820	690	29	533	96045385	WIRING HARNESS
SLEEVE CONTACT 0,2-0,5MM2	10335820	690	20	535	96037136	WIRING HARNESS
SLEEVE CONTACT 0,3-0,89MM	602332108	611	4	464	96036956	WIRING HARNESS
SLEEVE CONTACT 0,5-0,75MM	10873194	700	4	463	96036955	WIRING HARNESS
SLEEVE CONTACT 0,5-0,75MM	10873194	700	2	533	96045385	WIRING HARNESS
SLEEVE CONTACT 0,5-0,75M	10813644	754	9	537	96037137	WIRING HARNESS
SLEEVE CONTACT 0,5-1,0MM2	10493495	726	65	535	96037136	WIRING HARNESS
SLEEVE CONTACT 0,5-1,0MM2	10493495	726	4	537	96037137	WIRING HARNESS
SLEEVE CONTACT 0,5-1,0MM2	10800631	753	4	535	96037136	WIRING HARNESS
SLEEVE CONTACT 0,5-1,0MM2	11622989	789	4	537	96037137	WIRING HARNESS
SLEEVE CONTACT 0,5-1MM2	10877343	2258	25	463	96036955	WIRING HARNESS
SLEEVE CONTACT 0,50-1MM	10300946	717	4	537	96037137	WIRING HARNESS
SLEEVE CONTACT 0,5MM2	10875281	2238	6	463	96036955	WIRING HARNESS
SLEEVE CONTACT 0,5MM2 SIL	10493970	721	16	50	96045228	WIRING HARNESS
SLEEVE CONTACT 0,5MM2 SIL	10493970	(721)	4	741	917598408	ELECTRIC MEASURING & WAR

Description	Item	Pos.	Quantity	Page	Assembly	Description
SLEEVE CONTACT 0,75-1,0MM	604519308	629	6	49	96045228	WIRING HARNESS
SLEEVE CONTACT 0,75-1,0MM	604519308	629	2	538	96037133	LEAD
SLEEVE CONTACT 0,75-1,0MM	604519308	629	2	644	96037132	LEAD
SLEEVE CONTACT 0,75-1,0M	11342253	788	9	537	96037137	WIRING HARNESS
SLEEVE CONTACT 0,75-1,5MM	6202434	96	4	49	96045228	WIRING HARNESS
SLEEVE CONTACT 0,75-1,5MM	6202434	96	2	532	96045385	WIRING HARNESS
SLEEVE CONTACT 0,75-1,5MM	6202434	96	2	534	96037136	WIRING HARNESS
SLEEVE CONTACT 1,0-1,5MM2	10493496	727	4	535	96037136	WIRING HARNESS
SLEEVE CONTACT 1,0-1,5MM2	10493496	727	2	537	96037137	WIRING HARNESS
SLEEVE CONTACT 1,0-2,5MM2	10493493	724	6	535	96037136	WIRING HARNESS
SLEEVE CONTACT 1,5MM2	604518808	636	2	532	96045385	WIRING HARNESS
SLEEVE CONTACT DIN 72585 0	602339508	647	4	532	96045385	WIRING HARNESS
SLEEVE CONTACT DIN 72585 0	602339408	643	3	532	96045385	WIRING HARNESS
SLEEVE CONTACT DIN 72585 0	602339408	643	2	536	96037137	WIRING HARNESS
SLEEVE D60/50X25	571819708	190	1	296	97029921	DISTRIBUTOR GEARBOX
SLEEVE PA6G	97030030	5	1	492	967928508	LOCKING
SLEEVE RD.32X41 X12CRNIS	955917908	26	4	701	966134608	ADD-ON PARTS CYLINDER
SLEEVE RD20X15 S355J2+AR	941530008	15	4	147	919087608	ROTARY FEED THROUGH
SLEEVE RD40X50 42CRMO4+Q	956078908	22	1	75	91001377	CRAWLER SUPPORT PREASS
SLEEVE RD40X50 42CRMO4+Q	956078908	22	1	108	91001378	CRAWLER SUPPORT PREASS
SLEEVE RD40X50 42CRMO4+Q	956078908	5	2	345	917825508	OIL RESERVOIR, EXTENSION
SLEWING GEAR	919369308	119	1	12		LIEBHERR LTR 1220
SLEWING GEAR DRIVE DAT 2	90008901	1	2	351	919369308	SLEWING GEAR
SLEWING PLATFORM PANELL	969015908	2	1	441	918731508	TURNTABLE PANELLING
SLEWING PLATFORM PANELL	96036790	1	1	441	918731508	TURNTABLE PANELLING
SLIDE BLOCK CPL.	10455144	15	1	435	10877138	OPERATOR SEAT
SLIDE PLATE 120X100X2090 P	97031639	4	8	20	91001569	CRAWLER TRACK TRAVEL G
SLIDE PLATE 15X120X450 PA6	97038559	54	2	20	91001569	CRAWLER TRACK TRAVEL G
SLIDE PLATE 15X90X358 SPF	971995508	79	2	669	917291908	PIVOT SECTION, PRE-ASSEMB
SLIDE PLATE 15X90X358 SPF	971995508	55	2	673	917292008	TELESCOPIC SECTION 1 PRE
SLIDE PLATE 15X90X358 SPF	971995508	55	2	677	917292108	TELESCOPIC SECT.2 PRE-AS
SLIDE PLATE 15X90X358 SPF	971995508	55	2	681	917292208	TELESCOPIC SECT.3 PRE-ASS
SLIDE PLATE 15X90X358 SPF	971995508	55	2	685	917292308	TELESCOPIC SECT.IV PRE-A
SLIDE PLATE 190X186X187 P	971063208	37	2	668	917291908	PIVOT SECTION, PRE-ASSEMB
SLIDE PLATE 190X186X187 P	971063208	41	2	673	917292008	TELESCOPIC SECTION 1 PRE
SLIDE PLATE 190X186X187 P	971063208	41	2	677	917292108	TELESCOPIC SECT.2 PRE-AS
SLIDE PLATE 190X186X187 P	971063208	41	2	681	917292208	TELESCOPIC SECT.3 PRE-ASS
SLIDE PLATE 190X186X187 P	971063208	41	2	685	917292308	TELESCOPIC SECT.IV PRE-A
SLIDE PLATE 20X60X980 PA6	973351308	80	2	669	917291908	PIVOT SECTION, PRE-ASSEMB
SLIDE PLATE 20X90X358 SPF	972898808	42	2	668	917291908	PIVOT SECTION, PRE-ASSEMB
SLIDE PLATE 20X90X358 SPF	972898808	56	2	673	917292008	TELESCOPIC SECTION 1 PRE
SLIDE PLATE 20X90X358 SPF	972898808	56	2	677	917292108	TELESCOPIC SECT.2 PRE-AS
SLIDE PLATE 20X90X358 SPF	972898808	56	2	681	917292208	TELESCOPIC SECT.3 PRE-ASS
SLIDE PLATE 20X90X358 SPF	972898808	56	2	685	917292308	TELESCOPIC SECT.IV PRE-A
SLIDE PLATE 30X50X380 PA6	972898208	45	33	668	917291908	PIVOT SECTION, PRE-ASSEMB
SLIDE PLATE 30X50X380 PA6	972898208	42	31	673	917292008	TELESCOPIC SECTION 1 PRE
SLIDE PLATE 30X50X380 PA6	972898208	42	29	677	917292108	TELESCOPIC SECT.2 PRE-AS
SLIDE PLATE 30X50X380 PA6	972898208	42	28	681	917292208	TELESCOPIC SECT.3 PRE-ASS
SLIDE PLATE 30X50X380 PA6	972898208	42	25	685	917292308	TELESCOPIC SECT.IV PRE-A
SLIDE PLATE 8X50X350 PA6G+	972898608	49	2	668	917291908	PIVOT SECTION, PRE-ASSEMB
SLIDE PLATE 8X50X350 PA6G+	972898608	53	2	673	917292008	TELESCOPIC SECTION 1 PRE
SLIDE SHEET 520X50X 13 CU	97043682	60	8	20	91001569	CRAWLER TRACK TRAVEL G
SLIDE SHEET 520X57X 18 CU	97043683	61	8	20	91001569	CRAWLER TRACK TRAVEL G
SLIDE SHEET 560X46X 35 CU	97049098	59	8	20	91001569	CRAWLER TRACK TRAVEL G
SLIDER 100X140X260 PA6G+	970456308	2	1	701	966134608	ADD-ON PARTS CYLINDER
SLIDER 110X56X30 PA6G	97032618	2	1	31	968036408	LIMIT SWITCH, PRE-ASSEMB
SLIDER 14.5X85X231 PA6G+OE	972908108	14	2	673	917292008	TELESCOPIC SECTION 1 PRE
SLIDER 14.5X85X231 PA6G+OE	972908108	14	2	677	917292108	TELESCOPIC SECT.2 PRE-AS
SLIDER 14.5X85X231 PA6G+OE	972908108	14	2	681	917292208	TELESCOPIC SECT.3 PRE-ASS
SLIDER 14.5X85X231 PA6G+OE	972908108	14	2	685	917292308	TELESCOPIC SECT.IV PRE-A

Description	Item	Pos.	Quantity	Page	Assembly	Description
SLIDER 14.5X85X231 PA6G+OE	972908108	48	2	690	917292408	TELESCOPIC SECT.5 PRE-AS
SLIDER 14X100X233 PA6G+OE	970537508	29	2	673	917292008	TELESCOPIC SECTION 1 PRE
SLIDER 14X100X233 PA6G+OE	970537508	29	2	677	917292108	TELESCOPIC SECT.2 PRE-AS
SLIDER 14X100X233 PA6G+OE	970537508	29	2	681	917292208	TELESCOPIC SECT.3 PRE-ASS
SLIDER 14X100X233 PA6G+OE	970537508	29	2	685	917292308	TELESCOPIC SECT.IV PRE-A
SLIDER 14X100X233 PA6G+OE	970537508	39	2	690	917292408	TELESCOPIC SECT.5 PRE-AS
SLIDER 150X130X70 CUZN25	97039611	16	8	35	917511508	CRAWLER CENTRE PART PRE
SLIDER 150X130X70 CUZN25	97039612	17	8	35	917511508	CRAWLER CENTRE PART PRE
SLIDER 15X100X231 PA6G+OE	973254708	67	2	682	917292208	TELESCOPIC SECT.3 PRE-ASS
SLIDER 15X100X231 PA6G+OE	973254708	67	2	686	917292308	TELESCOPIC SECT.IV PRE-A
SLIDER 15X100X231 PA6G+OE	973254708	71	2	691	917292408	TELESCOPIC SECT.5 PRE-AS
SLIDER 18X100X231 PA6G+OE	970537708	27	2	673	917292008	TELESCOPIC SECTION 1 PRE
SLIDER 18X100X231 PA6G+OE	970537708	27	2	677	917292108	TELESCOPIC SECT.2 PRE-AS
SLIDER 18X100X231 PA6G+OE	970537708	27	2	681	917292208	TELESCOPIC SECT.3 PRE-ASS
SLIDER 18X100X231 PA6G+OE	970537708	27	2	685	917292308	TELESCOPIC SECT.IV PRE-A
SLIDER 18X100X231 PA6G+OE	970537708	38	2	690	917292408	TELESCOPIC SECT.5 PRE-AS
SLIDER 19X85X231 PA6G+OEL	972908408	63	2	674	917292008	TELESCOPIC SECTION 1 PRE
SLIDER 19X85X231 PA6G+OEL	972908408	32	4	677	917292108	TELESCOPIC SECT.2 PRE-AS
SLIDER 19X85X231 PA6G+OEL	972908408	32	2	681	917292208	TELESCOPIC SECT.3 PRE-ASS
SLIDER 19X85X231 PA6G+OEL	972908408	32	2	685	917292308	TELESCOPIC SECT.IV PRE-A
SLIDER 19X85X231 PA6G+OEL	972908408	37	2	690	917292408	TELESCOPIC SECT.5 PRE-AS
SLIDER 234X53X62 PA6G+OEL	970537108	26	2	673	917292008	TELESCOPIC SECTION 1 PRE
SLIDER 234X53X62 PA6G+OEL	970537108	26	2	677	917292108	TELESCOPIC SECT.2 PRE-AS
SLIDER 234X53X62 PA6G+OEL	970537108	26	2	681	917292208	TELESCOPIC SECT.3 PRE-ASS
SLIDER 234X53X62 PA6G+OEL	970537108	26	2	685	917292308	TELESCOPIC SECT.IV PRE-A
SLIDER 234X53X62 PA6G+OEL	970537108	41	2	690	917292408	TELESCOPIC SECT.5 PRE-AS
SLIDER 23X85X231 PA6G+OEL	972908308	32	2	673	917292008	TELESCOPIC SECTION 1 PRE
SLIDER 53X87X234 PA6G+OEL	970537008	25	2	673	917292008	TELESCOPIC SECTION 1 PRE
SLIDER 53X87X234 PA6G+OEL	970537008	25	2	677	917292108	TELESCOPIC SECT.2 PRE-AS
SLIDER 53X87X234 PA6G+OEL	970537008	25	2	681	917292208	TELESCOPIC SECT.3 PRE-ASS
SLIDER 53X87X234 PA6G+OEL	970537008	25	2	685	917292308	TELESCOPIC SECT.IV PRE-A
SLIDER 53X87X234 PA6G+OEL	970537008	40	2	690	917292408	TELESCOPIC SECT.5 PRE-AS
SLIDER 65X120X190 PA6G+OE	972997008	1	1	701	966134608	ADD-ON PARTS CYLINDER
SLIDER 84X261X468 PA6G+OE	973763408	3	1	701	966134608	ADD-ON PARTS CYLINDER
SLIDING DOOR INSTALLATION	917304708	133	1	13		LIEBHERR LTR 1220
SLIDING RAIL	12106689	(3)	4	119	917691008	FALL PROTECTION
SLINGING MEAN	917611508	299	1	14		LIEBHERR LTR 1220
SLIP RING 16A	11060087	14	8	710	10354493	CABLE REEL
SLIP RING 16A	11060088	140	8	710	10354493	CABLE REEL
SLIP RING 60X2 2,5²	10114843	7	21	52	11346779	SLIP RING TRANSMITTER
SLIP RING SET	571851008	21	1	704	10802064	ROPE LENGTH INDICATOR
SLIP RING TRANSMITTER 21X	11346779	5	1	39	96045225	ELECTR.FOR CENTER SECTIO
SLIP-ON TUBE	607226808	21	2	527	919410708	ELECTR. SYSTEM F.SLEWING
SLIPPER 65X340X450 GS-CK 4	308115114	7	4	75	91001377	CRAWLER SUPPORT PREASS
SLIPPER 65X340X450 GS-CK 4	308115114	7	4	108	91001378	CRAWLER SUPPORT PREASS
SLOTTED NUT DIN 1804 M80X	241047802	7	1	383	96015921	OPERATING ELEMENT INSTAL
SLOTTED NUT M38X1,5	570110108	9	1	360	570109008	DRIVING GEAR
SLOTTED NUT M70X2X19 C45	927530201	13	1	353	90008901	SLEWING GEAR DRIVE
SMALL HILL COVERING 65X2	979206708	8	1	399	917305408	INTERNAL PANELLING INSTA
SNAP HOOK DIN 5299 C 60X6-	744010208	38	2	761	917267508	TRANSPORT MOUNTING
SNAP LOCK ABS	10296157	(2)	3	445	96036790	SLEWING PLATFORM PANELLI
SNAP LOCK ABS	10296157	(2)	3	445	96036790	SLEWING PLATFORM PANELLI
SNAP LOCK ABS	10296157	(2)	3	445	96036790	SLEWING PLATFORM PANELLI
SNAP RING 45X1,75	429606201	62	1	370	939292201	PLANETARY GEARBOX
SNAP RING 52X2 FSt	4980482	7	2	201	10146367	PISTON CPL.
SNAP RING DIN 7993 16X1,6	11643655	10	1	315	10472208	ADJUSTMENT
SNAP SWITCH	571486808	29	1	52	11346779	SLIP RING TRANSMITTER
SNAP-IN LOCK NIROSTA	10010025	3	1	120	968038208	BEARING AHEAD LEFT SIDE
SNAP-IN LOCK NIROSTA	10010025	3	1	121	968038308	BEARING AHEAD RIGHT SIDE
SOCKET	10429057	3	1	628	915432508	RADIO PREPARATION UPPER

Description	Item	Pos.	Quantity	Page	Assembly	Description
SOCKET 2-POL	10342518	525	1	462	96036955	WIRING HARNESS
SOCKET 2-POL	10342518	518	3	535	96037136	WIRING HARNESS
SOCKET 2-POL	10342518	512	3	536	96037137	WIRING HARNESS
SOCKET 3-POL	6205239	520	1	536	96037137	WIRING HARNESS
SOCKET 8-POL	11008529	1	1	475	966979108	SOCKET
SOCKET COMBINATION 3-POL	605215708	1	1	625	918462708	EXTERNAL FEED
SOCKET ETHERNET	966979108	52	1	467	96053500	ELECTRIC ADD-ON PARTS CA
SOCKET FOR SPANNER DIN	790028508	66	1	152	928569808	MAIN TOOLS
SOCKET FOR SPANNER SW46	8008673	10	1	151	919328608	TOOLS AND ACCESSORIES
SOCKET HEAD SCREW DIN 6	10875559	86	4	150	919499408	CENTRAL BALLAST
SOCKET HEAD SCREW DIN 6	10875559	38	6	433	918810308	CONTROL STAND
SOCKET HEAD SCREW DIN 6	10875561	33	20	673	917292008	TELESCOPIC SECTION 1 PRE
SOCKET HEAD SCREW DIN 6	10875561	33	20	677	917292108	TELESCOPIC SECT.2 PRE-AS
SOCKET HEAD SCREW DIN 6	10875561	33	20	681	917292208	TELESCOPIC SECT.3 PRE-ASS
SOCKET HEAD SCREW DIN 6	10875561	33	20	685	917292308	TELESCOPIC SECT.IV PRE-A
SOCKET HEAD SCREW DIN 6	10875561	36	12	690	917292408	TELESCOPIC SECT.5 PRE-AS
SOCKET HEAD SCREW DIN 69	571310608	113	4	76	91001377	CRAWLER SUPPORT PREASS
SOCKET HEAD SCREW DIN 69	571310608	114	4	109	91001378	CRAWLER SUPPORT PREASS
SOCKET HEAD SCREW DIN 7	4980927	9	3	210	10138230	CAMSHAFT CPL.
SOCKET HEAD SCREW DIN 7	4980927	9	3	210	10138230	CAMSHAFT CPL.
SOCKET HEAD SCREW DIN 79	10179392	18	4	20	91001569	CRAWLER TRACK TRAVEL G
SOCKET HEAD SCREW DIN 7	240122602	9	3	210	10138230	CAMSHAFT CPL.
SOCKET HEAD SCREW DIN 7	240122602	9	3	210	10138230	CAMSHAFT CPL.
SOCKET HEAD SCREW DIN 79	10180175	332	8	288	919007708	DRIVE ASSEMBLY, PRE-ASSE
SOCKET HEAD SCREW DIN 79	12691559	(3)	4	319	10871282	VARIABLE PUMP
SOCKET HEAD SCREW DIN 79	12103956	20	2	31	968036408	LIMIT SWITCH, PRE-ASSEMB
SOCKET HEAD SCREW DIN 7	540511908	336	3	288	919007708	DRIVE ASSEMBLY, PRE-ASSE
SOCKET HEAD SCREW DIN 7	12217473	45	2	699	571928508	CYLINDER HEAD CPL.
SOCKET HEAD SCREW DIN 7	10876084	34	14	409	966497908	FRONT WINDOW CPL.
SOCKET HEAD SCREW DIN 7	12216054	104	4	76	91001377	CRAWLER SUPPORT PREASS
SOCKET HEAD SCREW DIN 7	12216054	105	4	109	91001378	CRAWLER SUPPORT PREASS
SOCKET HEAD SCREW DIN 7	12216054	99	9	674	917292008	TELESCOPIC SECTION 1 PRE
SOCKET HEAD SCREW DIN 7	12216054	99	9	678	917292108	TELESCOPIC SECT.2 PRE-AS
SOCKET HEAD SCREW DIN 7	12216054	99	9	682	917292208	TELESCOPIC SECT.3 PRE-ASS
SOCKET HEAD SCREW DIN 7	12216054	99	9	686	917292308	TELESCOPIC SECT.IV PRE-A
SOCKET HEAD SCREW DIN 7	12216056	64	12	674	917292008	TELESCOPIC SECTION 1 PRE
SOCKET HEAD SCREW DIN 7	12216056	64	12	678	917292108	TELESCOPIC SECT.2 PRE-AS
SOCKET HEAD SCREW DIN 7	12216056	64	12	682	917292208	TELESCOPIC SECT.3 PRE-ASS
SOCKET HEAD SCREW DIN 7	12216056	64	12	686	917292308	TELESCOPIC SECT.IV PRE-A
SOCKET HEAD SCREW DIN 7	12216056	33	20	690	917292408	TELESCOPIC SECT.5 PRE-AS
SOCKET HEAD SCREW DIN 84	510797708	22	1	585	511433908	PRESSURE LIMITING VALVE
SOCKET HEAD SCREW DIN 84	510797708	22	1	588	511419608	PRESSURE LIMITING VALVE
SOCKET HEAD SCREW DIN 91	404360408	27	4	572	10413106	CONTROL BLOCK
SOCKET HEAD SCREW DIN 91	404319708	25	4	319	10871282	VARIABLE PUMP
SOCKET HEAD SCREW DIN 91	10876394	320	4	561	96045351	HYDRAULICS UPPER CARRI
SOCKET HEAD SCREW DIN 91	10876394	11	8	568	11211756	CONTROL BLOCK
SOCKET HEAD SCREW ISO 12	10875564	47	2	544	969256608	BASE ASSEMBLY
SOCKET HEAD SCREW ISO 12	10875564	300	4	629	918377508	COOLING WATER PRE-HEATIN
SOCKET HEAD SCREW ISO 12	10875564	47	1	690	917292408	TELESCOPIC SECT.5 PRE-AS
SOCKET HEAD SCREW ISO 14	11600879	3	1	224	10135434	PRESSURE ADAPTER FASTEN
SOCKET HEAD SCREW ISO 1	12219491	3	1	221	10152867	INJECTOR WITH FASTENING
SOCKET HEAD SCREW ISO 1	12219491	3	1	222	10152874	RK INJECTOR
SOCKET HEAD SCREW ISO 47	10562617	317	2	287	919007708	DRIVE ASSEMBLY, PRE-ASSE
SOCKET HEAD SCREW ISO 47	12208101	319	2	287	919007708	DRIVE ASSEMBLY, PRE-ASSE
SOCKET HEAD SCREW ISO 47	12208101	41	2	699	571928508	CYLINDER HEAD CPL.
SOCKET HEAD SCREW ISO 4	11320344	71	12	370	939292201	PLANETARY GEARBOX
SOCKET HEAD SCREW ISO 4	11320344	71	12	610	939294201	PLANETARY GEARBOX
SOCKET HEAD SCREW ISO 47	10876074	320	2	287	919007708	DRIVE ASSEMBLY, PRE-ASSE
SOCKET HEAD SCREW ISO 4	12222407	20	16	129	919644008	HYDRAULIC SUPPORT
SOCKET HEAD SCREW ISO 4	12222407	312	2	287	919007708	DRIVE ASSEMBLY, PRE-ASSE

Description	Item	Pos.	Quantity	Page	Assembly	Description
SOCKET HEAD SCREW ISO 4	12222407	301	2	291	96034631	RADIATOR, PRE-ASSEMBLED
SOCKET HEAD SCREW ISO 4	12219296	32	8	35	917511508	CRAWLER CENTRE PART PRE
SOCKET HEAD SCREW ISO 47	404293213	11	1	381	919010208	CRANE OPERATOR CABIN P
SOCKET HEAD SCREW ISO 47	10650720	2	2	275	10125687	POWER TAKE-OFF ADD-ON
SOCKET HEAD SCREW ISO 4	10415162	21	4	30	968019508	LIMIT SWITCH ADD-ON
SOCKET HEAD SCREW ISO 4	10415162	315	1	287	919007708	DRIVE ASSEMBLY, PRE-ASSE
SOCKET HEAD SCREW ISO 4	10415162	52	12	370	939292201	PLANETARY GEARBOX
SOCKET HEAD SCREW ISO 4	10415162	12	12	489	918956108	HYDRAULIC BALLASTING
SOCKET HEAD SCREW ISO 4	10415162	52	12	610	939294201	PLANETARY GEARBOX
SOCKET HEAD SCREW ISO 47	404230108	30	12	124	968046208	ADD-ON PARTS
SOCKET HEAD SCREW ISO 47	11002743	4	4	276	10144036	POWER TAKE-OFF ADD-ON
SOCKET HEAD SCREW ISO 4	10875571	58	2	75	91001377	CRAWLER SUPPORT PREASS
SOCKET HEAD SCREW ISO 4	10875571	58	2	108	91001378	CRAWLER SUPPORT PREASS
SOCKET HEAD SCREW ISO 4	10875571	6	6	363	917259608	ROTATING PLATFORM LOCK
SOCKET HEAD SCREW ISO 4	10875571	18	4	365	917259708	MAIN HOIST GEAR
SOCKET HEAD SCREW ISO 4	10875571	14	2	493	967978908	INTERLOCKING
SOCKET HEAD SCREW ISO 4	10875571	555	14	562	96045351	HYDRAULICS UPPER CARRI
SOCKET HEAD SCREW ISO 47	10468820	19	6	365	917259708	MAIN HOIST GEAR
SOCKET HEAD SCREW ISO 4	10875572	5	8	351	919369308	SLEWING GEAR
SOCKET HEAD SCREW ISO 4	10875572	23	8	673	917292008	TELESCOPIC SECTION 1 PRE
SOCKET HEAD SCREW ISO 4	10875572	23	8	677	917292108	TELESCOPIC SECT.2 PRE-AS
SOCKET HEAD SCREW ISO 4	10875572	23	8	681	917292208	TELESCOPIC SECT.3 PRE-ASS
SOCKET HEAD SCREW ISO 4	10875572	23	8	685	917292308	TELESCOPIC SECT.IV PRE-A
SOCKET HEAD SCREW ISO 4	10875572	18	8	690	917292408	TELESCOPIC SECT.5 PRE-AS
SOCKET HEAD SCREW ISO 47	404309408	62	24	78	90028956	TRACTION DRIVE
SOCKET HEAD SCREW ISO 4	11657000	56	12	370	939292201	PLANETARY GEARBOX
SOCKET HEAD SCREW ISO 4	11657000	335	2	562	96045351	HYDRAULICS UPPER CARRI
SOCKET HEAD SCREW ISO 4	11657000	56	12	610	939294201	PLANETARY GEARBOX
SOCKET HEAD SCREW ISO 47	11008297	2	4	218	10150741	HIGH PRESSURE PUMP W.FAS
SOCKET HEAD SCREW ISO 4	240186402	23	4	572	10413106	CONTROL BLOCK
SOCKET HEAD SCREW ISO 4	240186402	29	4	572	10413106	CONTROL BLOCK
SOCKET HEAD SCREW ISO 4	12223034	25	1	608	939294001	ROPE DRUM
SOCKET HEAD SCREW ISO 4	11321144	7	15	262	10115829	FLYWHEEL HOUSING MOUNT
SOCKET HEAD SCREW ISO 47	4043006	5	2	206	10148438	ROCKER ARM BRACKET CPL.
SOCKET HEAD SCREW ISO 47	10875574	14	4	701	966134608	ADD-ON PARTS CYLINDER
SOCKET HEAD SCREW ISO 4	12223057	6	4	351	919369308	SLEWING GEAR
SOCKET HEAD SCREW ISO 4	12223057	2	2	638	968267108	ADD-ON PARTS CAMERA
SOCKET HEAD SCREW ISO 47	11321126	11	8	299	11631893	BEARING FLANGE
SOCKET HEAD SCREW ISO 47	404294613	17	4	387	916177508	STEP CPL.
SOCKET HEAD SCREW ISO 4	10875578	76	8	78	90028956	TRACTION DRIVE
SOCKET HEAD SCREW ISO 4	10875578	64	12	150	919499408	CENTRAL BALLAST
SOCKET HEAD SCREW ISO 4	4980012	6	2	262	10115829	FLYWHEEL HOUSING MOUNT
SOCKET HEAD SCREW ISO 4	10875565	92	8	78	90028956	TRACTION DRIVE
SOCKET HEAD SCREW ISO 4	10875565	77	8	370	939292201	PLANETARY GEARBOX
SOCKET HEAD SCREW ISO 4	10875565	20	8	492	967928508	LOCKING
SOCKET HEAD SCREW ISO 4	10875565	553	12	562	96045351	HYDRAULICS UPPER CARRI
SOCKET HEAD SCREW ISO 4	10875565	77	8	610	939294201	PLANETARY GEARBOX
SOCKET HEAD SCREW ISO 4	10875565	555	4	617	967784808	HYDR.AUXILIARY HOISTING
SOCKET HEAD SCREW ISO 4	4980257	12	12	210	10138230	CAMSHAFT CPL.
SOCKET HEAD SCREW ISO 47	404312108	338	4	562	96045351	HYDRAULICS UPPER CARRI
SOCKET HEAD SCREW ISO 4	11840140	50	8	124	968046208	ADD-ON PARTS
SOCKET HEAD SCREW ISO 4	11840140	33	14	129	919644008	HYDRAULIC SUPPORT
SOCKET HEAD SCREW ISO 4	11840140	39	4	668	917291908	PIVOT SECTION, PRE-ASSEMB
SOCKET HEAD SCREW ISO 4	11840140	46	4	673	917292008	TELESCOPIC SECTION 1 PRE
SOCKET HEAD SCREW ISO 4	11840140	46	4	677	917292108	TELESCOPIC SECT.2 PRE-AS
SOCKET HEAD SCREW ISO 4	11840140	46	4	681	917292208	TELESCOPIC SECT.3 PRE-ASS
SOCKET HEAD SCREW ISO 4	11840140	46	4	685	917292308	TELESCOPIC SECT.IV PRE-A
SOCKET HEAD SCREW ISO 4	11840140	10	7	701	966134608	ADD-ON PARTS CYLINDER
SOCKET HEAD SCREW ISO 4	10876374	31	48	20	91001569	CRAWLER TRACK TRAVEL G
SOCKET HEAD SCREW ISO 47	11320850	66	24	78	90028956	TRACTION DRIVE

Description	Item	Pos.	Quantity	Page	Assembly	Description
SOCKET HEAD SCREW ISO 4	12100905	20	12	572	10413106	CONTROL BLOCK
SOCKET HEAD SCREW ISO 47	10353713	303	4	511	96051842	EXHAUST SYSTEM PRE-ASSE
SOCKET HEAD SCREW ISO 47	10663388	4	48	351	919369308	SLEWING GEAR
SOCKET HEAD SCREW ISO 4	10876373	552	32	56	96035801	HYDRAULIC EQUIPM.CENTER
SOCKET HEAD SCREW ISO 4	10876373	551	8	98	96035796	HYDR.TRAVEL DRIVE
SOCKET HEAD SCREW ISO 4	10876373	551	8	115	96035792	HYDR.TRAVEL DRIVE
SOCKET HEAD SCREW ISO 4	10876373	552	12	562	96045351	HYDRAULICS UPPER CARRI
SOCKET HEAD SCREW ISO 4	10876373	550	4	616	967784808	HYDR.AUXILIARY HOISTING
SOCKET HEAD SCREW ISO 4	10876373	550	12	717	967784508	HYDR.F.TELESCOPIC BOOM
SOCKET HEAD SCREW ISO 4	10878821	557	25	562	96045351	HYDRAULICS UPPER CARRI
SOCKET HEAD SCREW ISO 4	10001080	21	24	370	939292201	PLANETARY GEARBOX
SOCKET HEAD SCREW ISO 4	404318008	21	24	610	939294201	PLANETARY GEARBOX
SOCKET HEAD SCREW ISO 47	12209898	7	1	95	96062678	LEVER PRE-ASSY.
SOCKET HEAD SCREW ISO 4	4042302	66	4	674	917292008	TELESCOPIC SECTION 1 PRE
SOCKET HEAD SCREW ISO 4	4042302	66	4	678	917292108	TELESCOPIC SECT.2 PRE-AS
SOCKET HEAD SCREW ISO 4	4042302	66	4	682	917292208	TELESCOPIC SECT.3 PRE-ASS
SOCKET HEAD SCREW ISO 4	4042302	66	4	686	917292308	TELESCOPIC SECT.IV PRE-A
SOCKET HEAD SCREW ISO 4	4042302	66	4	691	917292408	TELESCOPIC SECT.5 PRE-AS
SOCKET HEAD SCREW ISO 47	404317008	11	28	365	917259708	MAIN HOIST GEAR
SOCKET HEAD SCREW ISO 47	404317008	14	28	604	967969608	AUXILIARY HOISTING GEAR 2
SOCKET HEAD SCREW ISO 4	12224014	337	3	288	919007708	DRIVE ASSEMBLY, PRE-ASSE
SOCKET HEAD SCREW ISO 4	12224014	17	4	365	917259708	MAIN HOIST GEAR
SOCKET HEAD SCREW ISO 47	10001077	31	4	608	939294001	ROPE DRUM
SOCKET HEAD SCREW ISO 47	10001074	5	4	673	917292008	TELESCOPIC SECTION 1 PRE
SOCKET HEAD SCREW ISO 47	10001074	5	4	677	917292108	TELESCOPIC SECT.2 PRE-AS
SOCKET HEAD SCREW ISO 47	10001074	5	4	681	917292208	TELESCOPIC SECT.3 PRE-ASS
SOCKET HEAD SCREW ISO 47	10001074	5	4	685	917292308	TELESCOPIC SECT.IV PRE-A
SOCKET HEAD SCREW ISO 47	10001074	29	4	690	917292408	TELESCOPIC SECT.5 PRE-AS
SOCKET HEAD SCREW ISO 4	12692012	15	32	20	91001569	CRAWLER TRACK TRAVEL G
SOCKET HEAD SCREW ISO 47	4000521	6	24	367	90208882	COMPACT ROPE WINCH
SOCKET HEAD SCREW ISO 4	10878829	13	4	348	969050308	OIL TANK PRE-ASS.
SOCKET HEAD SCREW ISO 4	12692008	10	4	767	917268208	LADDER ATTACHMENT
SOCKET HEAD SCREW ISO 47	404320908	11	12	78	90028956	TRACTION DRIVE
SOCKET HEAD SCREW ISO 4	12691987	14	4	348	969050308	OIL TANK PRE-ASS.
SOCKET HEAD SCREW ISO 47	10293537	23	1	75	91001377	CRAWLER SUPPORT PREASS
SOCKET HEAD SCREW ISO 47	10293537	23	1	108	91001378	CRAWLER SUPPORT PREASS
SOCKET HEAD SCREW ISO 4	10878580	34	14	20	91001569	CRAWLER TRACK TRAVEL G
SOCKET HEAD SCREW ISO 47	11691539	15	4	381	919010208	CRANE OPERATOR CABIN P
SOCKET HEAD SCREW ISO 47	11691539	36	8	433	918810308	CONTROL STAND
SOCKET HEAD SCREW ISO 47	11691539	89	1	669	917291908	PIVOT SECTION, PRE-ASSEMB
SOCKET HEAD SCREW ISO 47	10876395	7	4	63	11643183	CONTROL BLOCK
SOCKET HEAD SCREW ISO 47	10876395	15	4	63	11643183	CONTROL BLOCK
SOCKET HEAD SCREW ISO 47	10876395	15	4	66	11643184	CONTROL BLOCK
SOCKET HEAD SCREW ISO 47	10876395	45	16	544	969256608	BASE ASSEMBLY
SOCKET HEAD SCREW ISO 47	10875815	6	3	745	967936408	WIND WARNING PREASSEMB
SOCKET HEAD SCREW ISO 4	4901531	7	3	66	11643184	CONTROL BLOCK
SOCKET HEAD SCREW ISO 4	4901531	19	4	570	10342823	PRESSURE CONTROL VALVE
SOCKET HEAD SCREW ISO 47	11690042	10	2	426	917676208	HEATING CRANE DRIVER'S CA
SOCKET HEAD SCREW ISO 47	11690042	34	24	433	918810308	CONTROL STAND
SOCKET HEAD SCREW ISO 47	11690042	12	4	602	917267108	AUXILIARY HOISTING GEAR 2
SOCKET HEAD SCREW ISO 47	11690042	15	4	758	917413208	SELF-ERECT. AUX. HOIST GEA
SOCKET HEAD SCREW ISO 47	10875582	62	2	400	917305408	INTERNAL PANELLING INSTA
SOCKET HEAD SCREW ISO 47	10875582	4	4	625	918462708	EXTERNAL FEED
SOCKET HEAD SCREW ISO 47	10875582	3	4	627	917269408	CONSOLE AUX. REPLENISHIN
SOCKET HEAD SCREW ISO 47	10875582	4	2	627	917269408	CONSOLE AUX. REPLENISHIN
SOCKET HEAD SCREW ISO 47	10875583	47	4	310	10663105	DRIVING GEAR
SOCKET HEAD SCREW ISO 47	10875583	20	11	387	916177508	STEP CPL.
SOCKET HEAD SCREW ISO 47	10875584	18	4	39	96045225	ELECTR.FOR CENTER SECTIO
SOCKET HEAD SCREW ISO 47	10875584	63	1	400	917305408	INTERNAL PANELLING INSTA
SOCKET HEAD SCREW ISO 47	12204614	3	4	135	917257108	CENTRALIZED LUBRICATION

Description	Item	Pos.	Quantity	Page	Assembly	Description
SOCKET HEAD SCREW ISO 47	12204614	3	5	339	968999708	FUEL TANK, PRE-ASSEMBLED
SOCKET HEAD SCREW ISO 47	12204614	4	4	523	917261208	CENT. LUBRIC. SYSTEM SUP
SOCKET HEAD SCREW ISO 47	12203070	37	2	428	11083498	AIR CONDITIONING UNIT
SOCKET HEAD SCREW ISO 47	404361208	9	16	568	11211756	CONTROL BLOCK
SOCKET HEAD SCREW ISO 47	404361208	4	4	570	10342823	PRESSURE CONTROL VALVE
SOCKET HEAD SCREW ISO 4	10181382	302	4	561	96045351	HYDRAULICS UPPER CARRI
SOCKET HEAD SCREW ISO 4	10181382	303	4	616	967784808	HYDR.AUXILIARY HOISTING
SOCKET HEAD SCREW ISO 47	12216217	40	4	433	918810308	CONTROL STAND
SOCKET HEAD SCREW ISO 47	404364108	10	4	568	11211756	CONTROL BLOCK
SOCKET HEAD SCREW ISO 47	11690044	10	3	375	966631008	ELECTRIC FOR WINCH 1
SOCKET HEAD SCREW ISO 47	11690044	33	6	378	917259908	CRANE DRIVER CAB ADDITIO
SOCKET HEAD SCREW ISO 47	11690044	300	2	520	918731908	AIR FILTER UNIT
SOCKET HEAD SCREW ISO 4	12100256	311	2	98	96035796	HYDR.TRAVEL DRIVE
SOCKET HEAD SCREW ISO 4	12100256	311	2	115	96035792	HYDR.TRAVEL DRIVE
SOCKET HEAD SCREW ISO 47	10875586	12	8	35	917511508	CRAWLER CENTRE PART PRE
SOCKET HEAD SCREW ISO 47	10875586	13	4	63	11643183	CONTROL BLOCK
SOCKET HEAD SCREW ISO 47	10875586	13	4	66	11643184	CONTROL BLOCK
SOCKET HEAD SCREW ISO 47	10875586	3	1	265	10127979	LOCKING PIECES
SOCKET HEAD SCREW ISO 47	10875586	(3)	1	273	12583633	ENGINE CONTROL SENSORS
SOCKET HEAD SCREW ISO 47	10875586	(2)	1	273	12583633	ENGINE CONTROL SENSORS
SOCKET HEAD SCREW ISO 47	10875586	14	2	410	965784408	ROOF WINDOW PRE-ASS.
SOCKET HEAD SCREW ISO 47	10875586	4	1	659	925141508	HOSE GUIDE PRE-ASS.
SOCKET HEAD SCREW ISO 4	404250914	51	1	421	917304708	SLIDING DOOR INSTALLATION
SOCKET HEAD SCREW ISO 4	12224196	316	2	561	96045351	HYDRAULICS UPPER CARRI
SOCKET HEAD SCREW ISO 47	11140465	332	4	562	96045351	HYDRAULICS UPPER CARRI
SOCKET HEAD SCREW ISO 4	12225935	41	4	433	918810308	CONTROL STAND
SOCKET HEAD SCREW ISO 47	10875588	310	27	56	96035801	HYDRAULIC EQUIPM.CENTER
SOCKET HEAD SCREW ISO 47	10875588	6	3	136	11347526	ELECTRIC PUMP
SOCKET HEAD SCREW ISO 47	10875588	47	4	321	10872488	DRIVING GEAR
SOCKET HEAD SCREW ISO 47	10875588	(1)	2	381	919010208	CRANE OPERATOR CABIN P
SOCKET HEAD SCREW ISO 47	10875588	6	3	525	10327065	ELECTRIC PUMP
SOCKET HEAD SCREW ISO 47	10875588	329	2	562	96045351	HYDRAULICS UPPER CARRI
SOCKET HEAD SCREW ISO 47	10875588	309	2	616	967784808	HYDR.AUXILIARY HOISTING
SOCKET HEAD SCREW ISO 47	404291213	14	4	63	11643183	CONTROL BLOCK
SOCKET HEAD SCREW ISO 47	404291213	14	4	66	11643184	CONTROL BLOCK
SOCKET HEAD SCREW ISO 47	4901159	3	4	317	11692439	CONTROL VALVE
SOCKET HEAD SCREW ISO 47	11820284	23	2	387	916177508	STEP CPL.
SOCKET HEAD SCREW ISO 47	11820284	11	4	390	916170808	CABLE INLET
SOCKET HEAD SCREW ISO 47	11820284	307	6	496	969763408	PIPEWORK AIR INSTALLATIO
SOCKET HEAD SCREW ISO 47	11820284	73	4	669	917291908	PIVOT SECTION, PRE-ASSEMB
SOCKET HEAD SCREW ISO 47	11820284	34	4	701	966134608	ADD-ON PARTS CYLINDER
SOCKET HEAD SCREW ISO 47	10875590	31	4	334	96023117	BATTERY BOX, PRE-ASSEMB
SOCKET HEAD SCREW ISO 47	10875590	9	2	390	916170808	CABLE INLET
SOCKET HEAD SCREW ISO 4	10022183	305	4	511	96051842	EXHAUST SYSTEM PRE-ASSE
SOCKET HEAD SCREW ISO 4	12223035	30	4	624	10038509	CONTROL BLOCK
SOCKET HEAD SCREW ISO 47	10875591	316	20	56	96035801	HYDRAULIC EQUIPM.CENTER
SOCKET HEAD SCREW ISO 47	10875591	302	4	287	919007708	DRIVE ASSEMBLY, PRE-ASSE
SOCKET HEAD SCREW ISO 47	10875591	4	4	574	10332882	CONTROL BLOCK
SOCKET HEAD SCREW ISO 47	10875591	37	2	701	966134608	ADD-ON PARTS CYLINDER
SOCKET HEAD SCREW ISO 4	404230308	45	1	421	917304708	SLIDING DOOR INSTALLATION
SOCKET HEAD SCREW ISO 47	4002698	12	4	63	11643183	CONTROL BLOCK
SOCKET HEAD SCREW ISO 47	4002698	12	4	66	11643184	CONTROL BLOCK
SOCKET HEAD SCREW ISO 47	10875592	56	4	500	918731808	UREA PLANT
SOCKET HEAD SCREW ISO 47	12203634	311	22	56	96035801	HYDRAULIC EQUIPM.CENTER
SOCKET HEAD SCREW ISO 47	12203634	38	3	428	11083498	AIR CONDITIONING UNIT
SOCKET HEAD SCREW ISO 47	12203634	305	4	561	96045351	HYDRAULICS UPPER CARRI
SOCKET HEAD SCREW ISO 4	11088382	11	2	744	967933408	LOCATION FIXTURE PRE-ASS.
SOCKET HEAD SCREW ISO 47	12202784	31	2	26	96034894	PROTECTION PLATE CPL.
SOCKET HEAD SCREW ISO 47	12202784	31	2	29	96034977	PROTECTION PLATE
SOCKET HEAD SCREW ISO 47	12202784	328	2	561	96045351	HYDRAULICS UPPER CARRI

Description	Item	Pos.	Quantity	Page	Assembly	Description
SOCKET HEAD SCREW ISO 47	12202784	303	2	728	967785008	ADDNL.HYDR. FOLDING JIB
SOCKET HEAD SCREW ISO 47	10876361	327	2	561	96045351	HYDRAULICS UPPER CARRI
SOCKET HEAD SCREW ISO 47	12215338	326	6	561	96045351	HYDRAULICS UPPER CARRI
SOCKET HEAD SCREW ISO 4	10539468	302	4	511	96051842	EXHAUST SYSTEM PRE-ASSE
SOCKET HEAD SCREW ISO 47	12203635	312	2	98	96035796	HYDR.TRAVEL DRIVE
SOCKET HEAD SCREW ISO 47	12203635	312	2	115	96035792	HYDR.TRAVEL DRIVE
SOCKET HEAD SCREW ISO 4	10539471	325	4	561	96045351	HYDRAULICS UPPER CARRI
SOCKET HEAD SCREW ISO 47	10875593	6	1	423	966230508	GUIDE PRE-ASS.
SOCKET HEAD SCREW ISO 47	10875597	16	1	492	967928508	LOCKING
SOCKET HEAD SCREW ISO 47	10875597	29	4	701	966134608	ADD-ON PARTS CYLINDER
SOCKET HEAD SCREW ISO 4	4901881	302	4	507	919674408	EXHAUST SYSTEM
SOCKET HEAD SCREW ISO 4	4901881	310	2	511	96051842	EXHAUST SYSTEM PRE-ASSE
SOCKET HEAD SCREW ISO 47	10875598	7	2	359	510229408	HYDRO MOTOR
SOCKET HEAD SCREW ISO 47	10875598	22	5	387	916177508	STEP CPL.
SOCKET HEAD SCREW ISO 47	10875598	17	6	701	966134608	ADD-ON PARTS CYLINDER
SOCKET HEAD SCREW ISO 4	10007677	4	12	392	916162808	RELING
SOCKET HEAD SCREW ISO 4	240049702	7	5	209	10120186	BALANCER ASSEMBLY
SOCKET HEAD SCREW ISO 47	10875599	33	32	35	917511508	CRAWLER CENTRE PART PRE
SOCKET HEAD SCREW ISO 47	10875599	308	4	287	919007708	DRIVE ASSEMBLY, PRE-ASSE
SOCKET HEAD SCREW ISO 47	10875599	26	8	353	90008901	SLEWING GEAR DRIVE
SOCKET HEAD SCREW ISO 47	10875599	3	4	476	917260408	MIRROR ATTACHM.AT SLEW.P
SOCKET HEAD SCREW ISO 47	10875599	18	6	673	917292008	TELESCOPIC SECTION 1 PRE
SOCKET HEAD SCREW ISO 47	10875599	18	8	677	917292108	TELESCOPIC SECT.2 PRE-AS
SOCKET HEAD SCREW ISO 47	10875599	18	10	681	917292208	TELESCOPIC SECT.3 PRE-ASS
SOCKET HEAD SCREW ISO 47	10875599	18	10	685	917292308	TELESCOPIC SECT.IV PRE-A
SOCKET HEAD SCREW ISO 47	10875599	17	8	690	917292408	TELESCOPIC SECT.5 PRE-AS
SOCKET HEAD SCREW ISO 4	10007205	5	12	392	916162808	RELING
SOCKET HEAD SCREW ISO 47	12208098	12	13	668	917291908	PIVOT SECTION, PRE-ASSEMB
SOCKET HEAD SCREW ISO 4	404230208	8	2	387	916177508	STEP CPL.
SOCKET HEAD SCREW ISO 47	11691424	74	8	353	90008901	SLEWING GEAR DRIVE
SOCKET HEAD SCREW ISO 47	12202976	34	32	35	917511508	CRAWLER CENTRE PART PRE
SOCKET HEAD SCREW ISO 47	12202976	324	24	56	96035801	HYDRAULIC EQUIPM.CENTER
SOCKET HEAD SCREW ISO 47	4600335	84	12	78	90028956	TRACTION DRIVE
SOCKET HEAD SCREW ISO 47	12206699	50	5	312	10472196	REGULATOR
SOCKET HEAD SCREW ISO 47	12206699	50	5	324	10292801	REGULATOR
SOCKET HEAD SCREW ISO 47	12206699	3	4	574	10332882	CONTROL BLOCK
SOCKET HEAD SCREW ISO 47	10875601	10	4	359	510229408	HYDRO MOTOR
SOCKET HEAD SCREW ISO 47	10875601	4	1	440	916049908	MIRROR ATTACHM.IN CRANE
SOCKET HEAD SCREW ISO 47	10875570	61	2	400	917305408	INTERNAL PANELLING INSTA
SOCKET HEAD SCREW ISO 47	12201166	7	4	94	96034962	GUIDE LEFT
SOCKET HEAD SCREW ISO 47	12201166	7	4	112	96034980	GUIDE RIGHT
SOCKET HEAD SCREW ISO 47	12203451	22	1	368	932916901	ROPE DRUM
SOCKET HEAD SCREW ISO 47	12203451	41	2	701	966134608	ADD-ON PARTS CYLINDER
SOCKET HEAD SCREW ISO 47	12203167	336	2	562	96045351	HYDRAULICS UPPER CARRI
SOCKET HEAD SCREW ISO 47	12213825	86	10	353	90008901	SLEWING GEAR DRIVE
SOCKET HOUSING 2-POL	6001790	524	1	462	96036955	WIRING HARNESS
SOCKET HOUSING 2-POL	6001790	505	4	535	96037136	WIRING HARNESS
SOCKET PIN	96002833	4	1	734	917268408	BOOM NOSE
SOLDERING LUGS	11068607	(1)	10	704	10802064	ROPE LENGTH INDICATOR
SOLENOID VALVE	10343003	2	1	430	969085208	HEATING, PRE-ASSEMBLED
SOLENOID VALVE	10343003	5	1	480	918759808	ADD HEATING SUPERSTRUCT
SOLENOID VALVE	10876704	4	1	582	11341035	CONTROL BLOCK
SOLENOID VALVE	10876705	5	1	582	11341035	CONTROL BLOCK
SOUND PROOFING/SOUND I	968977308	24	1	445	96036790	SLEWING PLATFORM PANELLI
SPACER BOLT	11321016	11	4	754	910836808	HOOK BLOCK
SPACER PIECE 190X75X34 P	97001821	19	1	673	917292008	TELESCOPIC SECTION 1 PRE
SPACER PIECE 190X75X34 P	97001821	19	1	677	917292108	TELESCOPIC SECT.2 PRE-AS
SPACER PIECE 190X75X34 P	97001821	19	2	681	917292208	TELESCOPIC SECT.3 PRE-ASS
SPACER PIECE 190X75X34 P	97001821	19	2	685	917292308	TELESCOPIC SECT.IV PRE-A
SPACER PIECE 190X75X34 P	97001821	13	2	690	917292408	TELESCOPIC SECT.5 PRE-AS

Description	Item	Pos.	Quantity	Page	Assembly	Description
SPACER PIECE PA6G	97040155	44	16	75	91001377	CRAWLER SUPPORT PREASS
SPACER PIECE PA6G	97040155	44	16	108	91001378	CRAWLER SUPPORT PREASS
SPACER RING	11181884	5	1	52	11346779	SLIP RING TRANSMITTER
SPARE ELEMENT OEL	12886224	(1)	1	186	10126713	CRANKCASE BREATHER ASS
SPARE PARTS SET GRIFF	10873517	5	1	472	10343693	JOYSTICK
SPHERICAL BEARING	11691375	1	1	379	11214363	TILT CYLINDER
SPHERICAL KNOB DIN 319 C2	704006308	10	1	639	968993508	CAMERA HOLDER, PREMOU
SPHERICAL KNOB DIN 319 C40	704004208	7	1	763	923285508	FOLDING BRACKET PRE-ASS.
SPHERICAL WASHER DIN 631	10875863	36	1	761	917267508	TRANSPORT MOUNTING
SPHERICAL WASHER DIN 631	11622278	4	1	221	10152867	INJECTOR WITH FASTENING
SPHERICAL WASHER DIN 631	11622278	4	2	222	10152874	RK INJECTOR
SPHERICAL WASHER DIN 631	11622278	2	1	223	10141140	RK HIGH PRESSURE CONNEC
SPHERICAL WASHER DIN 631	11622278	2	1	224	10135434	PRESSURE ADAPTER FASTEN
SPHERICAL WASHER DIN 631	11622278	3	1	225	10153151	HIGH PRESS.CONNECTOR W
SPLIT PIN ISO 1234 1,6X14 A2	10180340	13	1	387	916177508	STEP CPL.
SPLIT PIN ISO 1234 1,6X14 A2	10180340	4	1	745	967936408	WIND WARNING PREASSEMB
SPLIT PIN ISO 1234 10X100 St	10180377	7	2	489	918956108	HYDRAULIC BALLASTING
SPLIT PIN ISO 1234 10X80 St 4	10180375	47	8	35	917511508	CRAWLER CENTRE PART PRE
SPLIT PIN ISO 1234 13X125 St	10180381	30	2	20	91001569	CRAWLER TRACK TRAVEL G
SPLIT PIN ISO 1234 1X14 ST 4	10875872	12	1	387	916177508	STEP CPL.
SPLIT PIN ISO 1234 3,2X40 A4	10172636	47	4	75	91001377	CRAWLER SUPPORT PREASS
SPLIT PIN ISO 1234 3,2X40 A4	10172636	47	4	108	91001378	CRAWLER SUPPORT PREASS
SPLIT PIN ISO 1234 4X40 St 4	10180354	110	2	76	91001377	CRAWLER SUPPORT PREASS
SPLIT PIN ISO 1234 4X40 St 4	10180354	111	2	109	91001378	CRAWLER SUPPORT PREASS
SPLIT PIN ISO 1234 4X40 St 4	10180354	59	3	690	917292408	TELESCOPIC SECT.5 PRE-AS
SPLIT PIN ISO 1234 5X40 St 4	10180359	21	1	734	917268408	BOOM NOSE
SPLIT PIN ISO 1234 5X40 St 4	10180359	5	3	762	929582108	MOUNTING PRE-ASS.
SPLIT PIN ISO 1234 5X40 St 4	10180359	5	1	765	923879808	CONSOLE PRE-ASS.
SPLIT PIN ISO 1234 6,3X40 St 4	10180363	33	2	668	917291908	PIVOT SECTION, PRE-ASSEMB
SPLIT PIN ISO 1234 6,3X50 St 4	10180364	12	1	763	923285508	FOLDING BRACKET PRE-ASS.
SPLIT PIN ISO 1234 6,3X63 St 4	10180365	23	1	734	917268408	BOOM NOSE
SPLIT PIN ISO 1234 8X100 St 4	10180373	10	1	751	968728808	CONSOLE PRE-ASS.
SPLIT PIN ISO 1234 8X63 ST 4	10875873	30	4	129	919644008	HYDRAULIC SUPPORT
SPLIT PIN ISO 1234 8X63 ST 4	10875873	24	2	147	919087608	ROTARY FEED THROUGH
SPLIT PIN ISO 1234 8X80 St 4	10180371	17	4	492	967928508	LOCKING
SPLIT PIN ISO 1234 8X80 St 4	10180371	9	2	654	967936908	COUNTERWEIGHT CPL.
SPLIT PIN ISO 1234 8X80 St 4	10180371	17	1	734	917268408	BOOM NOSE
SPONGE RUBBER 20X4 MOOS	262103108	30	0.064	433	918810308	CONTROL STAND
SPOOL	10000796	1	1	315	10472208	ADJUSTMENT
SPOUT	971565208	9	1	395	917304508	CRANE OPERATOR CABIN P
SPOUT 6,5/6,5/2 GUMMI	591055508	3	2	416	966408908	WATER CONTAINER CPL
SPRING CUP ABOVE 11,7X23X	9074480	(7)	4	202	10149580	CYLINDER HEAD ASSEMBLY
SPRING CUP ABOVE 11,7X23X	9074480	7	4	204	10149579	CYLINDER HEAD PRE-ASSY.
SPRING LOADED MULTI-DISC	10176328	80	1	353	90008901	SLEWING GEAR DRIVE
SPRING LOADED MULTI-DISC	502037001	80	1	78	90028956	TRACTION DRIVE
SPRING LOADED MULTI-DISC	502037201	70	1	370	939292201	PLANETARY GEARBOX
SPRING LOADED MULTI-DISC	502037201	70	1	610	939294201	PLANETARY GEARBOX
SPRING PLUG 3-3,5-62 480H	10875868	4	1	125	968331708	FUSE HOLDER
SPRING PLUG 4,5X4X78 A2K	433206208	2	2	768	968090008	MOUNTING HOOK ROD
SPRING PLUG 6 ZINC COATE	433206408	23	1	378	917259908	CRANE DRIVER CAB ADDITIO
SPRING SET	10490072	20	1	704	10802064	ROPE LENGTH INDICATOR
SPRING SUPPORT	510782508	3	1	588	511419608	PRESSURE LIMITING VALVE
SPRING SUPPORT	510797008	3	1	585	511433908	PRESSURE LIMITING VALVE
SPRING SUPPORT	570110808	6	1	361	570109508	DRIVING GEAR
SPRING SUPPORT	571115308	6	1	81	11161917	CONTROL ELEMENT
SPRING SUPPORT	7023666	4	1	315	10472208	ADJUSTMENT
SPRING SUPPORT	7027055	43	1	81	11161917	CONTROL ELEMENT
SPRING SUPPORT	7414494	5	1	81	11161917	CONTROL ELEMENT
SPRING WASHER DIN 137 10	10411093	6	2	258	11386644	STARTER PRE-ASSY.
SPRING WASHER DIN 137 6 X1	10411092	4	1	258	11386644	STARTER PRE-ASSY.

Description	Item	Pos.	Quantity	Page	Assembly	Description
SPRING WASHER DIN 137 B 1	425050908	7	3	278	9078301	LOCKING PIECES
SPRING WASHER DIN 137 B 3	570824177	30	2	52	11346779	SLIP RING TRANSMITTER
SPRING WASHER DIN 137 B 6	425050608	47	11	52	11346779	SLIP RING TRANSMITTER
SPRING-LOADED PIN	510782808	6	1	588	511419608	PRESSURE LIMITING VALVE
SPRING-LOADED PIN	510797308	6	1	585	511433908	PRESSURE LIMITING VALVE
SPUR WHEEL D147/75X32	571819108	110	2	296	97029921	DISTRIBUTOR GEARBOX
STAIR 5-631X0,754M ALMG3 E	11213246	4	2	119	917691008	FALL PROTECTION
STAIR 5-631X0,754M ALMG3 E	11213247	5	2	119	917691008	FALL PROTECTION
STAND	968267208	1	1	639	968993508	CAMERA HOLDER, PREMOU
STAND	968290608	1	1	636	968994408	CAMERA HOLDER, PREMOU
STAR HANDLE SCREW	10443625	24	2	433	918810308	CONTROL STAND
STARTER ASSEMBLY 7.8KW	10115539	450	1	178	13455297	DIESEL ENGINE
STARTER PRE-ASSY. 7.8KW 24	11386644	1	1	256	10115539	STARTER ASSEMBLY
STEP CPL.	916177508	3	1	381	919010208	CRANE OPERATOR CABIN P
STICKER	10663909	(1)	1	136	11347526	ELECTRIC PUMP
STICKER BEHAELTER 2,5KG	967421808	27	1	136	11347526	ELECTRIC PUMP
STICKER BEHAELTER 2,5KG	967421808	30	1	525	10327065	ELECTRIC PUMP
STOP BOLT CK12X67X15 NIRO	11001935	110	1	294	968026308	CLUTCH ACTUATOR
STOP PLUG	511040408	(2)	3	560	96045351	HYDRAULICS UPPER CARRI
STOP PLUG D10,7 LD-PE	10678375	7	2	392	916162808	RELING
STOP PLUG D10,7 LD-PE	10678375	47	1	399	917305408	INTERNAL PANELLING INSTA
STOP PLUG VSTI G1/2A CR6-F	477704208	12	1	339	968999708	FUEL TANK, PRE-ASSEMBLED
STOP PLUG VSTI G1/2A CR6-F	477704208	26	2	490	10877810	BALLAST EXTENSION RAM
STOP PLUG VSTI G1/2A CR6-F	477704208	686	1	563	96045351	HYDRAULICS UPPER CARRI
STOP PLUG VSTI G1/2A CR6-F	477704208	23	1	568	11211756	CONTROL BLOCK
STOP PLUG VSTI G1/2A CR6-F	477704208	10	2	574	10332882	CONTROL BLOCK
STOP PLUG VSTI G1/2A CR6-F	477704208	24	2	582	11341035	CONTROL BLOCK
STOP PLUG VSTI G1/2A CR6-F	477704208	110	2	624	10038509	CONTROL BLOCK
STOP PLUG VSTI G1/2A CR6-F	477704208	63	1	697	10876933	TELESCOPIC CYLINDER
STOP PLUG VSTI G1A CR6-F	477704608	13	2	339	968999708	FUEL TANK, PRE-ASSEMBLED
STOP PLUG VSTI G1A CR6-F	477704608	34	1	572	10413106	CONTROL BLOCK
STOP PLUG VSTI G3/4A CR6-F	477704708	741	2	564	96045351	HYDRAULICS UPPER CARRI
STOP PLUG VSTI G3/4A CR6-F	477704708	100	2	624	10038509	CONTROL BLOCK
STOP PLUG VSTI M12X1,5 CR6	477704308	19	2	311	10008308	CONNECTING PLATE
STOP PLUG VSTI M12X1,5 CR6	477704308	600	1	496	969763408	PIPEWORK AIR INSTALLATIO
STOP PLUG VSTI1/4"ED A3P	477704077	25	2	490	10877810	BALLAST EXTENSION RAM
STOP PLUG VSTI1/8"ED ST C	510741508	32	1	572	10413106	CONTROL BLOCK
STOP PLUG VSTI1/8"ED ST C	510741508	11	2	574	10332882	CONTROL BLOCK
STOP PLUG VSTI1/8"ED ST C	510741508	80	8	577	12100860	CONTROL BLOCK
STOP PLUG VSTI1/8"ED ST C	510741508	21	5	582	11341035	CONTROL BLOCK
STOP PLUG VSTI11/4"ED CR6	477705408	31	1	572	10413106	CONTROL BLOCK
STOP PLUG VSTI3/4"ED A3P	477704777	70	1	577	12100860	CONTROL BLOCK
STOP PLUG VSTI3/8"ED CR6-F	477704108	617	2	563	96045351	HYDRAULICS UPPER CARRI
STOP PLUG VSTI3/8"ED CR6-F	477704108	13	4	574	10332882	CONTROL BLOCK
STOP PLUG VSTI3/8"ED CR6-F	477704108	23	4	582	11341035	CONTROL BLOCK
STOP PLUG VSTI3/8"ED CR6-F	477704108	620	1	617	967784808	HYDR.AUXILIARY HOISTING
STOP PLUG VSTI3/8"ED CR6-F	477704108	120	3	624	10038509	CONTROL BLOCK
STOP PLUG VSTIM14X1,5ED C	477704908	724	4	563	96045351	HYDRAULICS UPPER CARRI
STOP PLUG VSTIM16X1,5ED C	477704408	603	4	132	968077208	HYDRAULIC SUPPORT
STOP PLUG VSTIM16X1,5ED C	477704408	402	2	328	96034515	EXPANSION TANK PRE-ASS.
STOP PLUG VSTIM16X1,5ED C	477704408	401	1	329	96034522	EQUALIZING RESERVOIR
STOP PLUG VSTIM18X1,5ED C	477705108	6	1	339	968999708	FUEL TANK, PRE-ASSEMBLED
STOP PLUG VSTIM22X1,5ED C	477704508	639	2	496	969763408	PIPEWORK AIR INSTALLATIO
STOP PLUG VSTIM26X1,5ED C	477705808	619	1	98	96035796	HYDR.TRAVEL DRIVE
STOP PLUG VSTIM26X1,5ED C	477705808	619	1	115	96035792	HYDR.TRAVEL DRIVE
STOP PLUG VSTIM26X1,5ED C	477705808	11	1	348	969050308	OIL TANK PRE-ASS.
STOP PLUG VSTIM26X1,5ED C	477705808	28	1	374	90200104	OIL-GAUGING INSTRUMENT
STOP PLUG VSTIM33X2ED C	477705208	730	1	564	96045351	HYDRAULICS UPPER CARRI
STOP PLUG VSTIM33X2ED C	477705208	644	1	617	967784808	HYDR.AUXILIARY HOISTING
STOP PLUG VSTIM42X2ED C	477704808	151	1	287	919007708	DRIVE ASSEMBLY, PRE-ASSE

Description	Item	Pos.	Quantity	Page	Assembly	Description
STOPPER BUZ 28L CR6-FREI	477700808	794	2	564	96045351	HYDRAULICS UPPER CARRI
STOPPER PLUG	692404908	811	3	50	96045228	WIRING HARNESS
STOPPER PLUG	692404908	811	1	533	96045385	WIRING HARNESS
STOPPER PLUG	692404908	811	2	535	96037136	WIRING HARNESS
STOPPER PLUG 3,6MM SILIK	602331108	806	43	535	96037136	WIRING HARNESS
STOPPER PLUG 3,9-4,1MM SIL	10870403	844	1	537	96037137	WIRING HARNESS
STOPPER PLUG AMP JPT-SER	602329208	807	4	535	96037136	WIRING HARNESS
STOPPER PLUG BAUREIHE_M	604518908	812	25	50	96045228	WIRING HARNESS
STOPPER PLUG BAUREIHE_M	604518908	812	1	142	96045205	WIRING HARNESS
STOPPER PLUG BAUREIHE_M	604518908	812	5	533	96045385	WIRING HARNESS
STOPPER PLUG BAUREIHE_M	604518908	812	10	538	96037133	LEAD
STOPPER PLUG BAUREIHE_M	604518908	812	15	644	96037132	LEAD
STOPPER PLUG BAUREIHE_M	604518908	(812)	5	741	917598408	ELECTRIC MEASURING & WAR
STOPPER PLUG DEUTSCH GR	7368253	823	5	463	96036955	WIRING HARNESS
STOPPER PLUG DEUTSCH GR	7368253	823	3	535	96037136	WIRING HARNESS
STOPPER PLUG DEUTSCH GR	7368253	823	1	537	96037137	WIRING HARNESS
STOPPER PLUG DEUTSCH-ST	10800046	842	6	535	96037136	WIRING HARNESS
STOPPER PLUG DIN 72585 4	692405808	817	1	533	96045385	WIRING HARNESS
STOPPER PLUG DIN 72585 4	692405808	817	2	537	96037137	WIRING HARNESS
STOPPER PLUG DIN 72585 7	692405708	822	3	533	96045385	WIRING HARNESS
STOPPER PLUG MCON 1,23,5	10813642	836	1	537	96037137	WIRING HARNESS
STOPPER PLUG VSTI1/4"ED C	477704008	847	1	565	96045351	HYDRAULICS UPPER CARRI
STOPPER PLUG VSTI1/4"ED C	477704008	12	1	574	10332882	CONTROL BLOCK
STOPPER PLUG VSTI1/4"ED C	477704008	22	4	582	11341035	CONTROL BLOCK
STORAGE BOX	96063087	7	1	155	91001571	BOLT EXTRACTION DEVICE
STORAGE BOX	968420608	65	1	76	91001377	CRAWLER SUPPORT PREASS
STORAGE BOX	968420608	65	1	109	91001378	CRAWLER SUPPORT PREASS
STRAINER FILTER	10346599	(1)	1	560	96045351	HYDRAULICS UPPER CARRI
SUBPLATE 2X275X250 DC01	97032989	1	1	43	968054008	MOUNTING PLATE PRE-ASS.
SUBSTRUCTURE	11171274	60	1	435	10877138	OPERATOR SEAT
SUCTION FLANGE CR6-FREI	510146208	400	1	291	96034631	RADIATOR, PRE-ASSEMBLED
SUCTION FLANGE CR6-FREI	510146208	521	1	562	96045351	HYDRAULICS UPPER CARRI
SUCTION HOSE SPF	970658608	250	1	280	918731408	DRIVE ASSEMBLY CPL.
SUCTION MODUL L=682,5 24V	12503120	2	1	501	968570808	UREA TANK
SUCTION PIPE OIL G-ALSI10M	97032261	3	1	348	969050308	OIL TANK PRE-ASS.
SUCTION PIPE OIL G-ALSI10M	97032263	203	1	287	919007708	DRIVE ASSEMBLY, PRE-ASSE
SUCTION PIPE OIL G-ALSI10M	97053616	202	1	287	919007708	DRIVE ASSEMBLY, PRE-ASSE
SUCTION PIPE OIL G-ALSI10M	97065544	207	1	287	919007708	DRIVE ASSEMBLY, PRE-ASSE
SUCTION PIPE OIL SPF	976388708	204	1	287	919007708	DRIVE ASSEMBLY, PRE-ASSE
SUN WHEEL Z=21 18CrNiMo7-	927601901	25	1	370	939292201	PLANETARY GEARBOX
SUN WHEEL Z=24 18CrNiMo7-	939251401	30	1	353	90008901	SLEWING GEAR DRIVE
SUN WHEEL Z=24 18CrNiMo7-	939251601	45	1	353	90008901	SLEWING GEAR DRIVE
SUN WHEEL Z=24 18CrNiMo7-	939251701	60	1	353	90008901	SLEWING GEAR DRIVE
SUN WHEEL Z=28 18CrNiMo7-	927602901	35	1	370	939292201	PLANETARY GEARBOX
SUN WHEEL Z=42 18CrNiMo7-	927608801	45	1	370	939292201	PLANETARY GEARBOX
SUPPORT CYLINDER 240/210-	11182950	1	4	129	919644008	HYDRAULIC SUPPORT
SUPPORT FLANGE	927745901	50	1	370	939292201	PLANETARY GEARBOX
SUPPORT FRAME RAL 7016 L	967986408	1	1	382	967986308	BEARING INSTALLATION
SUPPORT PLATE 1.5X442X181	979295008	(1)	1	551	969061708	CARRIER PLATE, PRE-ASSE
SUPPORT PLATE ST.CONST.	967996608	4	4	129	919644008	HYDRAULIC SUPPORT
SUPPORT TRESTLE FE//ZNNI8/	965255408	26	1	378	917259908	CRANE DRIVER CAB ADDITIO
SUPPORTING ARM T ZN O	96035067	1	1	511	96051842	EXHAUST SYSTEM PRE-ASSE
SUPPORTING BRACKET 3X206	97039156	16	2	119	917691008	FALL PROTECTION
SUPPORTING BRACKET 3X206	97039157	17	2	119	917691008	FALL PROTECTION
SUPPORTING RING 160,1X167,	7367565	5	1	85	10877686	TENSION JACK HYDR CPL
SUPPORTING RING 17,5X20,9	571082808	(4)	1	561	96045351	HYDRAULICS UPPER CARRI
SUPPORTING RING 20X23,5X1	571082208	(4)	1	728	967785008	ADDNL.HYDR. FOLDING JIB
SUPPORTING RING 20X23,5X1	571082208	(3)	1	728	967785008	ADDNL.HYDR. FOLDING JIB
SUPPORTING RING 32X37,2X1	571077008	(3)	1	616	967784808	HYDR.AUXILIARY HOISTING
SUPPORTING WASHER DIN 9	422001001	47	3	370	939292201	PLANETARY GEARBOX

Description	Item	Pos.	Quantity	Page	Assembly	Description
SURFACE SEALING 300ML KA	10354595	100	1	187	10132560	OIL SUMP WITH FASTENING
SWITCH	11979975	24	1	435	10877138	OPERATOR SEAT
SWITCH BOX COMPL. S200	96045226	2	1	39	96045225	ELECTR.FOR CENTER SECTIO
SWITCH BOX WELDED RAL 7	968049608	1	1	41	96045226	SWITCH BOX COMPL.
SWITCH PANEL 21X75X160 P	972373708	96	2	682	917292208	TELESCOPIC SECT.3 PRE-ASS
SWITCH PANEL 21X75X160 P	972373708	96	2	686	917292308	TELESCOPIC SECT.IV PRE-A
SWITCH PANEL 21X75X160 P	972373708	81	2	691	917292408	TELESCOPIC SECT.5 PRE-AS
SWITCH PANEL 21X75X160 P	972392108	96	1	674	917292008	TELESCOPIC SECTION 1 PRE
SWITCH PANEL 21X75X160 P	972392108	96	1	678	917292108	TELESCOPIC SECT.2 PRE-AS
SWITCH PLATE 2X139X46 DC0	972373808	97	2	674	917292008	TELESCOPIC SECTION 1 PRE
SWITCH PLATE 2X139X46 DC0	972373808	97	2	678	917292108	TELESCOPIC SECT.2 PRE-AS
SWITCH PLATE 2X139X46 DC0	972373808	97	2	682	917292208	TELESCOPIC SECT.3 PRE-ASS
SWITCH PLATE 2X139X46 DC0	972373808	97	2	686	917292308	TELESCOPIC SECT.IV PRE-A
SWITCH PLATE 2X139X46 DC0	972373808	82	2	691	917292408	TELESCOPIC SECT.5 PRE-AS
SWITCHBOX MOUNTING PART	91000922	181	1	14		LIEBHERR LTR 1220
SWIVEL BOLT CLAMPING BA	11600236	42	2	500	918731808	UREA PLANT
SWIVEL ELBOW	591051008	22	2	415	916163008	WIPERS INSTALLATION
SWIVEL ELBOW EW 12L M18X1	247117702	616	1	56	96035801	HYDRAULIC EQUIPM.CENTER
SWIVEL ELBOW EW 12L M18X1	247117702	612	2	98	96035796	HYDR.TRAVEL DRIVE
SWIVEL ELBOW EW 12L M18X1	247117702	612	2	115	96035792	HYDR.TRAVEL DRIVE
SWIVEL ELBOW EW 12L M18X1	247117702	607	15	562	96045351	HYDRAULICS UPPER CARRI
SWIVEL ELBOW EW 12L M18X1	247117702	609	1	717	967784508	HYDR.F.TELESCOPIC BOOM
SWIVEL ELBOW EW 18L M26X1	247108302	644	2	57	96035801	HYDRAULIC EQUIPM.CENTER
SWIVEL ELBOW EW 18L M26X1	247108302	401	2	342	96066379	PREMOUNTED FUEL FILTER
SWIVEL ELBOW EW 18L M26X1	247108302	635	1	496	969763408	PIPEWORK AIR INSTALLATIO
SWIVEL ELBOW EW 18L M26X1	247108302	710	2	563	96045351	HYDRAULICS UPPER CARRI
SWIVEL ELBOW EW 18L M26X1	247108302	610	1	622	969426308	AUX. HYDR. FOLDING JIB SP
SWIVEL ELBOW EW 22L CR6-F	247126202	2	1	242	10145176	PIPELINE INSTALLATION
SWIVEL ELBOW EW 6L CR6-F	247021702	626	2	57	96035801	HYDRAULIC EQUIPM.CENTER
SWIVEL ELBOW EW 6L CR6-F	247021702	18	2	135	917257108	CENTRALIZED LUBRICATION
SWIVEL ELBOW EW 8L CR6-F	247021802	35	1	500	918731808	UREA PLANT
SWIVEL SCREW JOINT DG105	474234008	150	3	717	967784508	HYDR.F.TELESCOPIC BOOM
SYRINGE	10045118	100	1	704	10802064	ROPE LENGTH INDICATOR
T CONNECTION PIECE ET 12L	247105602	620	1	57	96035801	HYDRAULIC EQUIPM.CENTER
T CONNECTION PIECE ET 12L	247105602	621	1	98	96035796	HYDR.TRAVEL DRIVE
T CONNECTION PIECE ET 12L	247105602	621	1	115	96035792	HYDR.TRAVEL DRIVE
T CONNECTION PIECE ET 12L	247105602	609	4	562	96045351	HYDRAULICS UPPER CARRI
T CONNECTION PIECE ET 12L	247105602	638	1	617	967784808	HYDR.AUXILIARY HOISTING
T CONNECTION PIECE ET 12L	247105602	605	1	622	969426308	AUX. HYDR. FOLDING JIB SP
T CONNECTION PIECE ET 18L	247108402	767	1	564	96045351	HYDRAULICS UPPER CARRI
TALLOW-DROP SCREW 4X10 1	10875795	29	4	430	969085208	HEATING, PRE-ASSEMBLED
TALLOW-DROP SCREW 4X10 1	10875795	26	4	480	918759808	ADD HEATING SUPERSTRUCT
TALLOW-DROP SCREW K4X12	10019040	29	8	433	918810308	CONTROL STAND
TANK SENSOR L=1450 24V SP	10290070	2	1	339	968999708	FUEL TANK, PRE-ASSEMBLED
TAPER COLLET VKA 22L CR6-F	4772028	12	2	189	10155227	OIL SUMP PRE-ASS.
TAPERED ROLLER BEARING	10001107	16	1	316	10871043	VARIABLE PUMP
TAPERED ROLLER BEARING	10293775	10	1	360	570109008	DRIVING GEAR
TAPERED ROLLER BEARING	570951508	15	1	316	10871043	VARIABLE PUMP
TAPERED ROLLER BEARING	746221908	11	1	360	570109008	DRIVING GEAR
TAPERED SOCKET DIN 6319	10875862	37	1	761	917267508	TRANSPORT MOUNTING
TAPPET PUSH ROD	9079131	3	2	211	9079870	CONTROL PARTS
TEE 20X20 L=90	10872612	4	1	430	969085208	HEATING, PRE-ASSEMBLED
TEE 20X20 L=90	10872612	25	1	482	96020359	ADDNL.HEATING, PRE-ASSE
TEE 30 G-ALMG TROWALPOLI	10285701	17	1	381	919010208	CRANE OPERATOR CABIN P
TEE REDUCER 20X10 L=80	11626529	21	2	500	918731808	UREA PLANT
TEFLON HOSE DN16 750 CR6	510500508	300	1	496	969763408	PIPEWORK AIR INSTALLATIO
TELESCOPIC BOOM CPL. SPF	918804808	201	1	14		LIEBHERR LTR 1220
TELESCOPIC CYLINDER 225/	10876933	1	1	695	918807308	MECHANICAL EXTENSION SYS
TELESCOPIC SECT.2 PRE-AS	917292108	3	1	663	918804808	TELESCOPIC BOOM CPL.
TELESCOPIC SECT.2 WELD.	917292808	1	1	677	917292108	TELESCOPIC SECT.2 PRE-AS

Description	Item	Pos.	Quantity	Page	Assembly	Description
TELESCOPIC SECT.3 PRE-ASS	917292208	4	1	663	918804808	TELESCOPIC BOOM CPL.
TELESCOPIC SECT.3 WELD.C	917292908	1	1	681	917292208	TELESCOPIC SECT.3 PRE-ASS
TELESCOPIC SECT.4 WELD.	917293008	1	1	685	917292308	TELESCOPIC SECT.IV PRE-A
TELESCOPIC SECT.5 PRE-ASS	917292408	6	1	663	918804808	TELESCOPIC BOOM CPL.
TELESCOPIC SECT.5 WELD.C	917293108	1	1	690	917292408	TELESCOPIC SECT.5 PRE-AS
TELESCOPIC SECT.IV PRE-AS	917292308	5	1	663	918804808	TELESCOPIC BOOM CPL.
TELESCOPIC SECTION 1 PRE-	917292008	2	1	663	918804808	TELESCOPIC BOOM CPL.
TELESCOPIC SECTION 1 WEL	917292708	1	1	673	917292008	TELESCOPIC SECTION 1 PRE
TEMPERATURE PROBE CPL. -	10152036	40	1	273	12583633	ENGINE CONTROL SENSORS
TEMPERATURE PROBE CPL. -	13410342	30	2	273	12583633	ENGINE CONTROL SENSORS
TEMPERATURE SENSOR	10290126	23	1	484	10876576	WATER HEATING SYSTEM
TEMPERATURE SENSOR	10290126	(5)	1	484	10876576	WATER HEATING SYSTEM
TEMPERATURE SENSOR	10299987	(1)	1	626	917269308	CHARGER
TEMPERATURE SENSOR	11826650	21	1	484	10876576	WATER HEATING SYSTEM
TEMPERATURE SENSOR	11826650	(4)	1	484	10876576	WATER HEATING SYSTEM
TEMPERATURE SENSOR	966181208	8	1	527	919410708	ELECTR. SYSTEM F.SLEWING
TEMPERATURE SENSOR -30/+	691183108	65	1	560	96045351	HYDRAULICS UPPER CARRI
TEMPERATURE SENSOR -30°C	10424276	7	1	467	96053500	ELECTRIC ADD-ON PARTS CA
TEMPERATURE SENSOR -40°C	10493625	(1)	1	273	12583633	ENGINE CONTROL SENSORS
TEMPERATURE SENSOR -40°C	12889334	156	1	514	96041566	ELECTRIC ADD-ON PARTS
TEMPERATURE SENSOR -40°	11349182	151	2	514	96041566	ELECTRIC ADD-ON PARTS
TEMPERATURE SENSOR -50/+	10800266	(150)	1	527	919410708	ELECTR. SYSTEM F.SLEWING
TENSION FLANGE 47X2220	10334488	100	1	445	96036790	SLEWING PLATFORM PANELLI
TENSION FLANGE 47X2220	10334488	100	1	455	969015908	SLEWING PLATFORM PANELLI
TENSION JACK HYDR CPL	10877686	2	1	83	11320954	GUIDE WHEEL UNIT
TENSION PIN 6H12X30 51CrV4	432310501	10	2	209	10120186	BALANCER ASSEMBLY
TERMINAL BOARD PRE-ASS.	922648308	23	1	544	969256608	BASE ASSEMBLY
TERMINAL BOX CPL. S930	968708708	1	1	713	968708608	ELECTR. FOR HEAD SECTION
TERMINAL BOX S900	966291008	5	1	707	966290908	ELECTRIC F.BASE SECTION
TERMINAL CLIP 40,5/39-42	553054208	6	1	480	918759808	ADD HEATING SUPERSTRUCT
TERMINAL CLIP 40,5/39-42	553054208	8	2	482	96020359	ADDNL.HEATING, PRE-ASSE
TERMINAL HOUSING DIN 7258	692406008	512	2	532	96045385	WIRING HARNESS
TERMINAL HOUSING DIN 7258	692406008	517	1	536	96037137	WIRING HARNESS
TERMINAL MARKER 0,2-2,5MM	602761608	502	2	542	96045387	CABLES, BASIC CONSTRUCTI
TERMINAL MARKER 0,2-2,5MM	602761608	5	2	546	967589508	TERMINAL STRIP
TERMINAL STRIP	967589508	24	1	544	969256608	BASE ASSEMBLY
TERMINAL/CLAMP	636107901	529	1	542	96045387	CABLES, BASIC CONSTRUCTI
TERMINAL/CLAMP	636107901	3	2	546	967589508	TERMINAL STRIP
TEST CONNECTION M22X1,5	502921408	641	1	496	969763408	PIPEWORK AIR INSTALLATIO
TEST POINT FITTING BMA3 6S	475601508	642	4	57	96035801	HYDRAULIC EQUIPM.CENTER
TEST POINT FITTING BMA3 6S	475601508	605	5	562	96045351	HYDRAULICS UPPER CARRI
TEST POINT FITTING BMA3 6S	475601508	609	1	617	967784808	HYDR.AUXILIARY HOISTING
TEST POINT FITTING EMA3 G1	475602608	675	9	563	96045351	HYDRAULICS UPPER CARRI
TEST POINT FITTING EMA3 M	475603208	632	3	563	96045351	HYDRAULICS UPPER CARRI
TEST POINT FITTING G1/4"	10430230	64	1	697	10876933	TELESCOPIC CYLINDER
TEST POINT FITTING VKA3 10	510629008	618	1	98	96035796	HYDR.TRAVEL DRIVE
TEST POINT FITTING VKA3 10	510629008	618	1	115	96035792	HYDR.TRAVEL DRIVE
TEST POINT FITTING VKA3 10	510629008	613	4	562	96045351	HYDRAULICS UPPER CARRI
TEST POINT FITTING VKA3 10	510629008	618	2	617	967784808	HYDR.AUXILIARY HOISTING
TEST POINT FITTING VKA3 10	510629008	613	1	717	967784508	HYDR.F.TELESCOPIC BOOM
THERMAL SWITCH BERUEHR	11080088	62	1	468	96053500	ELECTRIC ADD-ON PARTS CA
THERMO SAFETY VALVE 255	10326278	38	1	697	10876933	TELESCOPIC CYLINDER
THERMO-VALVE pv=2BAR	11490271	4	1	593	11622561	OIL AIR COOLER
THERMOSTAT	10154798	2	1	246	10148215	THERMOSTAT HOUSING ASS
THERMOSTAT	571867708	44	1	428	11083498	AIR CONDITIONING UNIT
THERMOSTAT HOUSING ASS	10148215	380	1	177	13455297	DIESEL ENGINE
THIMBLE AND CLAMP	571851308	60	1	704	10802064	ROPE LENGTH INDICATOR
THREAD FORM SCREW DIN 7	12102051	20	4	433	918810308	CONTROL STAND
THREAD LOCK 50ML FLASCH	811208001	102	1	189	10155227	OIL SUMP PRE-ASS.
THREADED BUSHING 14,5X24	9079078	9	1	205	10149578	CYLINDER HEAD

Description	Item	Pos.	Quantity	Page	Assembly	Description
THREADED CARRIER FE//ZNNI	963062208	25	1	445	96036790	SLEWING PLATFORM PANELLI
THREADED CARRIER FE//ZNNI	964307108	17	2	445	96036790	SLEWING PLATFORM PANELLI
THREADED CARRIER FE//ZNNI	964813808	15	1	286	919007708	DRIVE ASSEMBLY, PRE-ASSE
THREADED CARRIER FE//ZNNI	968655508	18	1	445	96036790	SLEWING PLATFORM PANELLI
THREADED CONNECTION PI	939599301	1	2	374	90200104	OIL-GAUGING INSTRUMENT
THREADED CONNECTION PI	939599301	1	2	612	90200103	OIL-GAUGING INSTRUMENT
THREADED DISK	12104437	21	1	63	11643183	CONTROL BLOCK
THREADED ELBOW JOINT	12433377	204	2	561	96045351	HYDRAULICS UPPER CARRI
THREADED ELBOW JOINT G 1	11989723	840	1	296	97029921	DISTRIBUTOR GEARBOX
THREADED ELEMENT EDELST	97037948	5	1	639	968993508	CAMERA HOLDER, PREMOU
THREADED PIN 20X53X78 C45	97096918	2	2	433	918810308	CONTROL STAND
THREADED PIN 25.0X160 S355	97043051	13	8	35	917511508	CRAWLER CENTRE PART PRE
THREADED PIN 80.0X816 35N	97046349	2	1	751	968728808	CONSOLE PRE-ASS.
THREADED PIN DIN 976 M8X14	10332987	7	4	426	917676208	HEATING CRANE DRIVER'S CA
THREADED PLATE 10X180X30	97051989	38	1	378	917259908	CRANE DRIVER CAB ADDITIO
THREADED PLATE 10X70X20 S	97045388	27	2	365	917259708	MAIN HOIST GEAR
THREADED PLATE 10X80X170	97030032	7	2	492	967928508	LOCKING
THREADED PLATE 15X40X130	953147708	8	1	761	917267508	TRANSPORT MOUNTING
THREADED PLATE 20X185X45	979243508	3	1	410	965784408	ROOF WINDOW PRE-ASS.
THREADED PLATE 20X40X315	974911108	48	1	761	917267508	TRANSPORT MOUNTING
THREADED PLATE 3X54X25 S	97118726	4	1	507	919674408	EXHAUST SYSTEM
THREADED PLATE 3X54X25 S	97118726	13	7	511	96051842	EXHAUST SYSTEM PRE-ASSE
THREADED PLATE 6X20X40 S	97053770	7	2	767	917268208	LADDER ATTACHMENT
THREADED PLATE 8.0 X0 S23	953695308	18	2	26	96034894	PROTECTION PLATE CPL.
THREADED PLATE 8.0 X0 S23	953695308	18	2	29	96034977	PROTECTION PLATE
THREADED PLATE 8.0 X0 S23	953695308	4	6	157	96063087	STORAGE BOX
THREADED PLATE 8.0 X0 S23	953695308	9	4	334	96023117	BATTERY BOX, PRE-ASSEMB
THREADED PLATE 8.0 X0 S23	953695308	6	2	421	917304708	SLIDING DOOR INSTALLATION
THREADED PLATE 8.0 X0 S23	953695308	6	6	449	968923508	FLAP RIGHT PRE-ASS.
THREADED PLATE 8.0 X0 S23	953695308	4	4	457	969016008	FLAP LEFT FRONT PRE-ASS.
THREADED PLATE 8X110X35 S	97000276	4	1	421	917304708	SLIDING DOOR INSTALLATION
THREADED PLATE 8X70X20 S	97045387	26	6	365	917259708	MAIN HOIST GEAR
THREADED PLATE 8X98X60 S	97000277	5	1	421	917304708	SLIDING DOOR INSTALLATION
THREADED PLATE M6 PA6GF3	11004117	28	2	409	966497908	FRONT WINDOW CPL.
THREADED PLATE M8	704262608	22	2	334	96023117	BATTERY BOX, PRE-ASSEMB
THREADED ROD 5X0X0 X5CR	97038268	9	1	639	968993508	CAMERA HOLDER, PREMOU
THREE PHASE CURRENT GEN	10142606	1	1	255	10142863	GENERATOR, PRE-ASSEMBLE
THRUST BEARING	12103676	5	1	753	919007108	LOAD HOOK
THRUST PIECE	240191502	100	1	294	968026308	CLUTCH ACTUATOR
THRUST WASHER	571582308	4	1	240	5700161	AIR COMPRESSOR
THRUST WASHER	571582408	6	1	240	5700161	AIR COMPRESSOR
THRUST WASHER	927602301	46	1	370	939292201	PLANETARY GEARBOX
THRUST WASHER 112X138X3	10119927	3	2	198	10116939	RS CRANKSHAFT BEARING K
THRUST WASHER 112X138X3	10119928	4	2	198	10116939	RS CRANKSHAFT BEARING K
THRUST WASHER 200X7 GZ-	97032155	8	8	129	919644008	HYDRAULIC SUPPORT
THRUST WASHER 8X70X70 P	97028395	7	2	378	917259908	CRANE DRIVER CAB ADDITIO
TIGHT FIT SLEEVE 12X20X20 1	10134348	3	2	183	10147687	POWER UNIT SUPPORT ATT
TIGHT FIT SLEEVE 12X20X20 1	10134348	3	2	262	10115829	FLYWHEEL HOUSING MOUNT
TIGHT FIT SLEEVE 15,5X19,5	9177636	6	10	181	10154379	CRANKCASE PRE-ASSY.
TIGHT FIT SLEEVE 16X20X20 S	9074798	4	2	202	10149580	CYLINDER HEAD ASSEMBLY
TIGHTENING STRAP 206/206/	774211308	304	1	496	969763408	PIPEWORK AIR INSTALLATIO
TIGHTENING STRAP 240-280/	774210508	309	1	496	969763408	PIPEWORK AIR INSTALLATIO
TIGHTENING STRAP 260X735	774227708	310	1	496	969763408	PIPEWORK AIR INSTALLATIO
TILT CYLINDER 50/28-135 SPF	11214363	2	1	378	917259908	CRANE DRIVER CAB ADDITIO
TIME RELAY 10 H 24V	10876716	8	1	540	91000922	SWITCHBOX MOUNTING PART
TIME RELAY 60S 24V	10877999	3	1	540	91000922	SWITCHBOX MOUNTING PART
TIN M1	604508108	155	1	714	968708708	TERMINAL BOX CPL.
TOGGLE GD-ZN	704255508	2	1	450	964093408	COVER COMPL.
TONGUE	570340077	5	4	393	968514508	INSTALLATION SWITCH CAB. C
TONGUE	704253708	5	5	86	967972208	COVER PRE-ASSY.

Description	Item	Pos.	Quantity	Page	Assembly	Description
TONGUE	704253708	5	2	89	968270108	COVER PRE-ASSY.
TONGUE	704253708	5	2	90	968274208	COVER PRE-ASSY.
TONGUE	704253708	5	5	110	968055808	COVER PRE-ASSY.
TONGUE	704254008	9	1	92	968420608	STORAGE BOX
TONGUE	704256708	8	4	42	966167808	COVER COMPL.
TONGUE	704259308	3	1	450	964093408	COVER COMPL.
TONGUE 45X19 STAHL VERZ	704259008	5	2	87	967972308	COVER PRE-ASSY.
TONGUE 45X19 STAHL VERZ	704259008	5	2	88	967972408	COVER PRE-ASSY.
TONGUE 45X19 STAHL VERZ	704259008	5	2	91	968709108	COVER PRE-ASSY.
TONGUE 45X19 STAHL VERZ	704259008	15	1	334	96023117	BATTERY BOX, PRE-ASSEMB
TOOLING AGENT KANISTER-5L	811203108	16	1	406	916162508	WINDOW ASSEMBLY
TOOLING AGENT KANISTER-5L	811203108	49	1	421	917304708	SLIDING DOOR INSTALLATION
TOOLS	917268108	352	1	14		LIEBHERR LTR 1220
TOOLS AND ACCESSORIES	919328608	24	1	12		LIEBHERR LTR 1220
TOOTH LOCK WASHER 12X99/	938996501	90	1	353	90008901	SLEWING GEAR DRIVE
TOOTH LOCK WASHER DIN 6	425100408	24	4	540	91000922	SWITCHBOX MOUNTING PART
TOOTH LOCK WASHER DIN 6	425100508	269	2	714	968708708	TERMINAL BOX CPL.
TOOTHED BELT	11083453	1	1	428	11083498	AIR CONDITIONING UNIT
TOP HAT RAIL 35X27X7,3X1	602106708	1	0.135	546	967589508	TERMINAL STRIP
TOP HAT RAIL 35X27X7,3X1	602106708	10	0.245	711	966291008	TERMINAL BOX
TOP HAT RAIL 35X27X7,3X1	602106708	295	0.205	714	968708708	TERMINAL BOX CPL.
TORCH TIP	11826647	28	1	484	10876576	WATER HEATING SYSTEM
TORCH TIP	11826647	(8)	1	484	10876576	WATER HEATING SYSTEM
TOUCH CONTACT TRANSMITT	11100197	(3)	1	470	96030724	INSTRUMENT CLUSTER ELEC
TOUCH CONTACT TRANSMITT	606143208	16	1	471	96022872	CONTROL PANEL ROOF
TOUCH CONTACT TRANSMITT	606143408	5	1	551	969061708	CARRIER PLATE, PRE-ASSE
TOUCH CONTACT TRANSMITT	606144608	6	1	551	969061708	CARRIER PLATE, PRE-ASSE
TRACK PAD NUT UNF1 1/8X12	790202814	(1)	288	69	917436708	FLOOR SHEET COMPL.
TRACK ROLLER 250X250	11320962	6	13	75	91001377	CRAWLER SUPPORT PREASS
TRACK ROLLER 250X250	11320962	6	13	108	91001378	CRAWLER SUPPORT PREASS
TRACK WIDTH ADJUSTING CY	12102931	1	2	20	91001569	CRAWLER TRACK TRAVEL G
TRACTION DRIVE FAT 600P049	90028956	2	1	75	91001377	CRAWLER SUPPORT PREASS
TRACTION DRIVE FAT 600P049	90028956	2	1	108	91001378	CRAWLER SUPPORT PREASS
TRANSMISSION MOTOR 24V	10355140	2	1	136	11347526	ELECTRIC PUMP
TRANSMISSION MOTOR 24V	10355140	2	1	525	10327065	ELECTRIC PUMP
TRANSPONDER SPF	10354922	11	6	30	968019508	LIMIT SWITCH ADD-ON
TRANSPONDER SPF	11060128	57	2	468	96053500	ELECTRIC ADD-ON PARTS CA
TRANSPORT DEVICE ATTACH	10142864	481	1	178	13455297	DIESEL ENGINE
TRANSPORT DEVICE ATTACH	9079823	480	1	178	13455297	DIESEL ENGINE
TRANSPORT MOUNTING	917267508	350	1	14		LIEBHERR LTR 1220
TRANSPORTER CONSOLE S35	9078849	1	1	260	9079823	TRANSPORT DEVICE ATTACH
TRAVEL WHEEL	10342478	12	1	319	10871282	VARIABLE PUMP
TRAVERSE	11212353	10	1	753	919007108	LOAD HOOK
TRAVERSE 20X61X37 S355J2+	979620608	16	4	511	96051842	EXHAUST SYSTEM PRE-ASSE
TRAVERSE 30X161X190 S690Q	955552508	20	1	761	917267508	TRANSPORT MOUNTING
TRAY RAL 7016 SPF	966241008	14	1	390	916170808	CABLE INLET
TREAD 1818X290X43 ALMG3	966270208	(1)	1	387	916177508	STEP CPL.
TREAD IN FRONT SPF	966270808	1	1	387	916177508	STEP CPL.
TRIP CAM	11181886	12	1	52	11346779	SLIP RING TRANSMITTER
TRIPLE PUMP A4VG+A11VO+	10871047	107	1	287	919007708	DRIVE ASSEMBLY, PRE-ASSE
TUBE	9080660	10	1	189	10155227	OIL SUMP PRE-ASS.
TUBE 100X33 ABS	97005143	4	1	401	966282308	PANELLING,LEFT
TUBE 12.0X1189 X5CRNI18-10	97121634	9	1	500	918731808	UREA PLANT
TUBE 15.0 X24 S355J2C+C FE//	971805708	19	4	433	918810308	CONTROL STAND
TUBE 16X2X70 E235+N VERZ	946104608	34	2	286	919007708	DRIVE ASSEMBLY, PRE-ASSE
TUBE 18.0X622 X5CRNI18-10	97008549	1	1	477	966707708	MIRROR RETAINER PRE-ASS.
TUBE 18X2X640	12105369	280	1	296	97029921	DISTRIBUTOR GEARBOX
TUBE 1959X1553X30 X5CRNI18	975218508	1	2	392	916162808	RELING
TUBE 21,3X4X624 S355J2H FE//	953536608	7	1	690	917292408	TELESCOPIC SECT.5 PRE-AS
TUBE 21,3X4X700 S355J2H FE//	953536708	8	1	690	917292408	TELESCOPIC SECT.5 PRE-AS

Description	Item	Pos.	Quantity	Page	Assembly	Description
TUBE 21.3X596 S355J2H FE//	973740408	73	1	691	917292408	TELESCOPIC SECT.5 PRE-AS
TUBE 22.0X319 X6CRNITI1810	97064857	(1)	1	328	96034515	EXPANSION TANK PRE-ASS.
TUBE 30/FLEXIBEL PAK	553159408	9	0.62	482	96020359	ADDNL.HEATING, PRE-ASSE
TUBE 3X0X0 X5CRNI18-10	97037947	4	1	640	968267208	STAND
TUBE 49X68X78 EPDM	97006624	4	1	415	916163008	WIPERS INSTALLATION
TUBE 6X1X1161 E235+N	97039388	774	4	60	96035803	PIPELINES CENTER PART
TUBE 6X1X1169 E235+N	97039389	775	4	60	96035803	PIPELINES CENTER PART
TUBE 6X1X132 E235+N	97039386	772	4	60	96035803	PIPELINES CENTER PART
TUBE 6X1X132 E235+N	97039387	773	4	60	96035803	PIPELINES CENTER PART
TUBE 8.0X80 X5CRNI18-10	97124033	1	1	330	96039022	CONNECTION PIECE
TUBE 85X27 ABS	97005144	3	1	402	966282408	PANELLING
TUBE EN 10305-4 22X1,5X107	10190120	5	1	612	90200103	OIL-GAUGING INSTRUMENT
TUBE LN 80 401 22X1.5X255 E	979323301	30	1	612	90200103	OIL-GAUGING INSTRUMENT
TUBE ST12 SPF	97087964	3	1	520	918731908	AIR FILTER UNIT
TUBING COIL 9	774383508	26	10	135	917257108	CENTRALIZED LUBRICATION
TURBOCHARGER HE300	10139626	1	1	252	10140729	EXHAUST TC MOUNTING
TURNLOCK ACTUATOR 1W	606144908	7	1	551	969061708	CARRIER PLATE, PRE-ASSE
TURNTABLE PANELLING	918731508	139	1	13		LIEBHERR LTR 1220
TWIN HOOK	11347028	30	1	754	910836808	HOOK BLOCK
TWIN MAGNET	10114441	8	1	63	11643183	CONTROL BLOCK
TWIN MAGNET	10114441	8	1	66	11643184	CONTROL BLOCK
TWO-STAGE PUMP A4VG+A4V	11182664	105	1	286	919007708	DRIVE ASSEMBLY, PRE-ASSE
TYRE INFLATING HOSE 4,5X10	520190408	67	1	152	928569808	MAIN TOOLS
U-PROFILE 1X1000X74 DC01	953714108	65	2	668	917291908	PIVOT SECTION, PRE-ASSEMB
U-PROFILE 1X1000X98 DC01	955927208	67	13	668	917291908	PIVOT SECTION, PRE-ASSEMB
U-PROFILE 1X500X74 DC01 FE	953713908	10	1	690	917292408	TELESCOPIC SECT.5 PRE-AS
U-PROFILE 1X500X89 DC01 FE	97042011	22	4	135	917257108	CENTRALIZED LUBRICATION
U-PROFILE 1X500X98 DC01 FE	956572408	63	2	668	917291908	PIVOT SECTION, PRE-ASSEMB
UNION PIECE RETOUCH	971774408	194	1	561	96045351	HYDRAULICS UPPER CARRI
UNIVERSAL INPUT-OUTPUT M	968253608	5	5	540	91000922	SWITCHBOX MOUNTING PART
UREA CONTAINER 65L PE SP	11481413	1	1	501	968570808	UREA TANK
UREA PLANT	918731808	162	1	13		LIEBHERR LTR 1220
UREA SYSTEM AIR LINE STU	96037028	30	1	500	918731808	UREA PLANT
UREA TANK 73L/65L SPF	968570808	10	1	500	918731808	UREA PLANT
V-RING 350 NBR,60 SHORE	710908701	12	1	370	939292201	PLANETARY GEARBOX
V-RIPPED BELT 8XPKX2152 EP	11482426	1	1	244	12418347	AIR COND. COMPRESSOR A
VALVE	10011832	13	1	183	10147687	POWER UNIT SUPPORT ATT
VALVE	10011832	1	1	214	9078233	VALVE
VALVE	10011832	31	1	253	12512627	EXHAUST NOZZLE ATTACHM
VALVE	11979976	29	1	435	10877138	OPERATOR SEAT
VALVE	7622478	16	1	428	11083498	AIR CONDITIONING UNIT
VALVE BLOCK 420BAR ZNNI	10877433	25	1	560	96045351	HYDRAULICS UPPER CARRI
VALVE BRIDGE	10119695	2	2	206	10148438	ROCKER ARM BRACKET CPL.
VALVE COLLET MK9	11357514	8	8	204	10149579	CYLINDER HEAD PRE-ASSY.
VALVE COVER 45 PA6.6	12101064	6	1	328	96034515	EXPANSION TANK PRE-ASS.
VALVE COVER 45 PA6.6	12101064	3	1	329	96034522	EQUALIZING RESERVOIR
VALVE M14X1,5	9078233	6	1	213	10129474	OIL COOLER, PRE-ASSEMBLE
VALVE SEAT	511015408	10	1	588	511419608	PRESSURE LIMITING VALVE
VALVE SEAT	570063208	10	1	585	511433908	PRESSURE LIMITING VALVE
VALVE STEM GUIDE NOVOFE	10150204	4	4	205	10149578	CYLINDER HEAD
VALVE STEM SEAL RING	10120334	(5)	4	202	10149580	CYLINDER HEAD ASSEMBLY
VALVE STEM SEAL RING	10120334	5	4	204	10149579	CYLINDER HEAD PRE-ASSY.
VARIABLE DISPLACEMENT MO	11182596	3	1	75	91001377	CRAWLER SUPPORT PREASS
VARIABLE DISPLACEMENT MO	11182596	3	1	108	91001378	CRAWLER SUPPORT PREASS
VARIABLE DISPLACEMENT MO	11182597	2	1	365	917259708	MAIN HOIST GEAR
VARIABLE DISPLACEMENT MO	11211058	9	1	604	967969608	AUXILIARY HOISTING GEAR 2
VARIABLE PUMP A10VNO SPF	10871043	3	1	303	10871047	TRIPLE PUMP
VARIABLE PUMP A11V0 SPF	11210798	2	1	303	10871047	TRIPLE PUMP
VARIABLE PUMP A11VLO SPF	10871282	108	1	287	919007708	DRIVE ASSEMBLY, PRE-ASSE
VARIABLE PUMP A4VG SPF	10871017	104	1	286	919007708	DRIVE ASSEMBLY, PRE-ASSE

Description	Item	Pos.	Quantity	Page	Assembly	Description
VARIABLE PUMP A4VG SPF	11182708	103	1	286	919007708	DRIVE ASSEMBLY, PRE-ASSE
VARIABLE PUMP A4VG SPF	11210793	1	1	301	11182664	TWO-STAGE PUMP
VARIABLE PUMP A4VG SPF	11210794	2	1	301	11182664	TWO-STAGE PUMP
VARIABLE PUMP A4VG SPF	11210795	1	1	303	10871047	TRIPLE PUMP
VENTILATION	10292000	35	2	399	917305408	INTERNAL PANELLING INSTA
VENTILATION CONNECTING PI	927501901	2	1	354	927554301	VENTILATION CONNECTING PI
VENTILATION CONNECTING PI	927501901	13	1	374	90200104	OIL-GAUGING INSTRUMENT
VENTILATION CONNECTING PI	927501901	13	1	612	90200103	OIL-GAUGING INSTRUMENT
VENTILATION CONNECTING PI	927554301	77	1	353	90008901	SLEWING GEAR DRIVE
VENTILATION SCREW G1/2"X3	602501308	11	1	42	966167808	COVER COMPL.
VENTILATION SCREW G1/2"X3	602501308	18	1	710	10354493	CABLE REEL
VENTILATION SCREW POLYA	10488662	307	1	711	966291008	TERMINAL BOX
VENTILATION SCREW POLYA	10488662	293	1	714	968708708	TERMINAL BOX CPL.
VENTILATION TUBE	10292724	29	1	136	11347526	ELECTRIC PUMP
VENTILATION UNIT CR6-FREI	7002458	7	1	374	90200104	OIL-GAUGING INSTRUMENT
VENTILATION UNIT Steel CR6-F	721108801	7	1	612	90200103	OIL-GAUGING INSTRUMENT
VENTILATION VALVE	10097910	10	1	339	968999708	FUEL TANK, PRE-ASSEMBLED
VENTILATION VALVE	10424983	21	2	648	12102921	LUFFING CYLINDER
VENTILATION VALVE	10493944	68	1	697	10876933	TELESCOPIC CYLINDER
VENTILATION VALVE	11622218	3	1	430	969085208	HEATING, PRE-ASSEMBLED
VENTILATION VALVE	11622218	29	2	482	96020359	ADDNL.HEATING, PRE-ASSE
VENTILATION VALVE	721114701	83	1	370	939292201	PLANETARY GEARBOX
VIBRATION DAMPER 60NR39	10287382	115	2	287	919007708	DRIVE ASSEMBLY, PRE-ASSE
VIBRATION DAMPER 72NR39	10875547	116	2	287	919007708	DRIVE ASSEMBLY, PRE-ASSE
VISCOSE DAMPER D934 L	10118526	8	1	200	10141974	CRANKSHAFT ADD-ON PARTS
VOLTAGE REGULATOR 24V 1	614020508	5	1	628	915432508	RADIO PREPARATION UPPER
WAGON	966253908	2	2	423	966230508	GUIDE PRE-ASS.
WAGON 68X64.5X33 G-ALSI7	97001102	1	1	424	966253908	WAGON
WARNING DESIGNATION DIN	11067612	1	0.54	166	917258108	HATCHING PLAN
WARNING DESIGNATION DIN 4	11067611	2	0.239	166	917258108	HATCHING PLAN
WARNING DESIGNATION DIN 4	11067611	3	0.689	166	917258108	HATCHING PLAN
WARNING DESIGNATION DIN 4	11067611	4	0.081	166	917258108	HATCHING PLAN
WARNING LIGHT 14W 13-36V	10340105	5	1	467	96053500	ELECTRIC ADD-ON PARTS CA
WARNING TRIANGLE 430X45	10044762	1	1	153	928620108	ACCESSORIES
WASHER	510782708	5	1	588	511419608	PRESSURE LIMITING VALVE
WASHER	510797208	5	1	585	511433908	PRESSURE LIMITING VALVE
WASHER	518614708	57	2	697	10876933	TELESCOPIC CYLINDER
WASHER	591063508	63	1	468	96053500	ELECTRIC ADD-ON PARTS CA
WASHER	927742801	58	1	370	939292201	PLANETARY GEARBOX
WASHER 10,5X18,5X2	9076638	17	4	252	10140729	EXHAUST TC MOUNTING
WASHER 10X100X100 S355MC	97042598	6	2	489	918956108	HYDRAULIC BALLASTING
WASHER 20,2X25X3XA GUMMI	710207408	64	1	468	96053500	ELECTRIC ADD-ON PARTS CA
WASHER 2X154X154 DC01 FE//	971060108	8	3	673	917292008	TELESCOPIC SECTION 1 PRE
WASHER 2X154X154 DC01 FE//	971060108	8	2	677	917292108	TELESCOPIC SECT.2 PRE-AS
WASHER 2X154X154 DC01 FE//	971060108	8	3	681	917292208	TELESCOPIC SECT.3 PRE-ASS
WASHER 2X154X154 DC01 FE//	971060108	8	3	685	917292308	TELESCOPIC SECT.IV PRE-A
WASHER 2X154X154 DC01 FE//	971060108	20	3	690	917292408	TELESCOPIC SECT.5 PRE-AS
WASHER 30X8	10877340	31	6	648	12102921	LUFFING CYLINDER
WASHER 34X45X1	9078522	6	2	207	11448005	ROCKER ARM BRACKET PRE
WASHER 3X21X21 DC01 FE//	973618208	8	2	291	96034631	RADIATOR, PRE-ASSEMBLED
WASHER 3X54X54 X5CRNI18-1	97017499	36	16	20	91001569	CRAWLER TRACK TRAVEL G
WASHER 40X222X222 S960QL+	972908008	7	1	673	917292008	TELESCOPIC SECTION 1 PRE
WASHER 40X222X222 S960QL+	972908008	7	1	677	917292108	TELESCOPIC SECT.2 PRE-AS
WASHER 40X222X222 S960QL+	972908008	7	1	681	917292208	TELESCOPIC SECT.3 PRE-ASS
WASHER 40X222X222 S960QL+	972908008	7	1	685	917292308	TELESCOPIC SECT.IV PRE-A
WASHER 40X222X222 S960QL+	972908008	65	1	691	917292408	TELESCOPIC SECT.5 PRE-AS
WASHER 4X100X100 S315MC	97008156	17	1	751	968728808	CONSOLE PRE-ASS.
WASHER 4X40X40 S315MC FE	940116008	67	4	76	91001377	CRAWLER SUPPORT PREASS
WASHER 4X40X40 S315MC FE	940116008	67	4	109	91001378	CRAWLER SUPPORT PREASS
WASHER 50.0x9 S355J2C+C FE	970689208	7	4	172	918731108	ASSEMBLY PARTS F.SLEWING

Description	Item	Pos.	Quantity	Page	Assembly	Description
WASHER 50X5 S355J2C+C	970821508	9	4	172	918731108	ASSEMBLY PARTS F.SLEWING
WASHER 52,2X107X3 -S355J2G	10144311	11	1	200	10141974	CRANKSHAFT ADD-ON PARTS
WASHER 5X35X35 S355MC FE	97040355	21	8	378	917259908	CRANE DRIVER CAB ADDITIO
WASHER 5X40X40 S355MC FE	97040356	39	6	378	917259908	CRANE DRIVER CAB ADDITIO
WASHER 8,4X18X15 -	9177776	10	1	232	10145173	INTAKE STACK ASSEMBLY
WASHER 8,4X18X15 -	9177776	2	2	251	10144756	HEAT PROTECTION W.FASTEN
WASHER 85,2X139X9,5	931807501	5	1	353	90008901	SLEWING GEAR DRIVE
WASHER 8X65X65 S355MC FE	97038431	22	4	286	919007708	DRIVE ASSEMBLY, PRE-ASSE
WASHER A 10X20X2 200HV-St	10011658	24	1	467	96053500	ELECTRIC ADD-ON PARTS CA
WASHER AEHNL.ISO 7089 6 -	420010405	48	16	35	917511508	CRAWLER CENTRE PART PRE
WASHER AEHNL.ISO 7089 8 P	10166990	17	6	94	96034962	GUIDE LEFT
WASHER AEHNL.ISO 7089 8 P	10166990	17	6	112	96034980	GUIDE RIGHT
WASHER DC01+ZE	956414308	20	4	701	966134608	ADD-ON PARTS CYLINDER
WASHER DIN 1440 100 ST VER	421104208	29	2	20	91001569	CRAWLER TRACK TRAVEL G
WASHER DIN 1440 60 -St FLZN	10179340	42	8	35	917511508	CRAWLER CENTRE PART PRE
WASHER DIN 1440 8 ST VERZ	421100608	333	14	562	96045351	HYDRAULICS UPPER CARRI
WASHER DIN 1441 21 ST FLZN	10875637	306	4	56	96035801	HYDRAULIC EQUIPM.CENTER
WASHER DIN 1441 26 -St FLZN	10179376	375	1	291	96034631	RADIATOR, PRE-ASSEMBLED
WASHER DIN 433 19 140HV A3	530609208	65	1	468	96053500	ELECTRIC ADD-ON PARTS CA
WASHER DIN 433 4 140HV A2K	420200308	21	12	157	96063087	STORAGE BOX
WASHER DIN 440 13,5 ST FLZ	10875639	24	2	94	96034962	GUIDE LEFT
WASHER DIN 440 13,5 ST FLZ	10875639	24	2	112	96034980	GUIDE RIGHT
WASHER DIN 440 6,6 -ST 480H	10875640	21	1	641	96045237	EQUIPMENT CAMERA CAB
WASHER DIN 6340 10,5 C35	421300208	14	8	147	919087608	ROTARY FEED THROUGH
WASHER DIN 6340 21 FLZN SP	10179985	305	8	56	96035801	HYDRAULIC EQUIPM.CENTER
WASHER DIN 7349 10,5 140HV	4902172	19	8	119	917691008	FALL PROTECTION
WASHER DIN 7349 10,5 200HV-	11658580	31	12	124	968046208	ADD-ON PARTS
WASHER DIN 7349 10,5 200HV-	11658580	77	1	271	10151329	WIRING HARNESS ASSEMBLY
WASHER DIN 7349 10,5 200HV-	11658580	3	6	332	918955408	BATTERY BOX CPL.
WASHER DIN 7349 10,5 200HV-	11658580	32	4	334	96023117	BATTERY BOX, PRE-ASSEMB
WASHER DIN 7349 10,5 200HV-	11658580	378	6	446	96036790	SLEWING PLATFORM PANELLI
WASHER DIN 7349 10,5 200HV-	11658580	380	15	455	969015908	SLEWING PLATFORM PANELLI
WASHER DIN 7349 10,5 200HV-	11658580	21	3	567	96035117	MECHANICAL AUXILIARIES
WASHER DIN 7349 10,5 200HV-	11658580	4	6	591	917261808	OIL COOLER INSTALLATION
WASHER DIN 7349 10,5 200HV-	11658580	10	12	592	967980508	OIL COOLER, PRE-ASSEMBLE
WASHER DIN 7349 10,5 200HV-	11658580	12	4	632	96037229	ADD-ON PARTS WORK FLOOD
WASHER DIN 7349 13 200HV F	10006370	25	4	94	96034962	GUIDE LEFT
WASHER DIN 7349 13 200HV F	10006370	25	4	112	96034980	GUIDE RIGHT
WASHER DIN 7349 13 200HV F	10006370	40	3	701	966134608	ADD-ON PARTS CYLINDER
WASHER DIN 7349 13 200HV F	10006370	6	1	747	917551608	ADD-ON PARTS
WASHER DIN 7349 17 200HV F	4600021	24	24	75	91001377	CRAWLER SUPPORT PREASS
WASHER DIN 7349 17 200HV F	4600021	24	24	108	91001378	CRAWLER SUPPORT PREASS
WASHER DIN 7349 17 200HV F	4600021	15	48	119	917691008	FALL PROTECTION
WASHER DIN 7349 17 200HV F	4600021	23	80	124	968046208	ADD-ON PARTS
WASHER DIN 7349 17 200HV F	4600021	41	8	668	917291908	PIVOT SECTION, PRE-ASSEMB
WASHER DIN 7349 17 200HV F	4600021	38	8	673	917292008	TELESCOPIC SECTION 1 PRE
WASHER DIN 7349 17 200HV F	4600021	38	8	677	917292108	TELESCOPIC SECT.2 PRE-AS
WASHER DIN 7349 17 200HV F	4600021	38	8	681	917292208	TELESCOPIC SECT.3 PRE-ASS
WASHER DIN 7349 17 200HV F	4600021	38	8	685	917292308	TELESCOPIC SECT.IV PRE-A
WASHER DIN 7349 17 200HV F	4600021	85	4	691	917292408	TELESCOPIC SECT.5 PRE-AS
WASHER DIN 7349 17 200HV F	4600021	42	4	761	917267508	TRANSPORT MOUNTING
WASHER DIN 7349 21 100HV F	4600604	30	3	147	919087608	ROTARY FEED THROUGH
WASHER DIN 7349 21 100HV F	4600604	4	3	337	917626608	FUEL TANK ADD-ON UNIT
WASHER DIN 7349 21 100HV F	4600604	7	1	345	917825508	OIL RESERVOIR, EXTENSION
WASHER DIN 7349 21 100HV F	4600604	13	10	761	917267508	TRANSPORT MOUNTING
WASHER DIN 7349 25 FLZN SP	12220085	4	2	345	917825508	OIL RESERVOIR, EXTENSION
WASHER DIN 7349 31 100HV F	12226080	53	2	20	91001569	CRAWLER TRACK TRAVEL G
WASHER DIN 7349 31 100HV F	12226080	76	2	669	917291908	PIVOT SECTION, PRE-ASSEMB
WASHER DIN 7349 6 200HV-A2	10353667	7	2	749	968811608	CROSS BEAM
WASHER DIN 7349 6,4 200HV 4	11693878	319	2	56	96035801	HYDRAULIC EQUIPM.CENTER

Description	Item	Pos.	Quantity	Page	Assembly	Description
WASHER DIN 7349 8,4 200HV 4	11840501	304	20	56	96035801	HYDRAULIC EQUIPM.CENTER
WASHER DIN 7349 8,4 200HV 4	11840501	377	3	446	96036790	SLEWING PLATFORM PANELLI
WASHER DIN 7349 8,4 200HV 4	11840501	5	4	476	917260408	MIRROR ATTACHM.AT SLEW.P
WASHER DIN 7349 8,4 200HV 4	11840501	23	1	492	967928508	LOCKING
WASHER DIN 7349 8,4 200HV 4	11840501	25	2	567	96035117	MECHANICAL AUXILIARIES
WASHER DIN 7349 8,4 200HV 4	11840501	14	8	592	967980508	OIL COOLER, PRE-ASSEMBLE
WASHER DIN 7349 8,4 200HV 4	11840501	29	12	604	967969608	AUXILIARY HOISTING GEAR 2
WASHER DIN 7349 8,4 200HV 4	11840501	300	2	622	969426308	AUX. HYDR. FOLDING JIB SP
WASHER DIN 7349 8,4 200HV 4	11840501	6	8	668	917291908	PIVOT SECTION, PRE-ASSEMB
WASHER DIN 7989-2 16 -ST F	10875866	10	2	761	917267508	TRANSPORT MOUNTING
WASHER DIN 7989-2 20 ST FLZ	12100254	21	2	751	968728808	CONSOLE PRE-ASS.
WASHER DIN 7989-2 A 10 100	12214460	380	14	288	919007708	DRIVE ASSEMBLY, PRE-ASSE
WASHER DIN 7989-2 A 10 100	12214460	23	2	482	96020359	ADDNL.HEATING, PRE-ASSE
WASHER EN 14399-6 16 300-3	421500201	27	8	129	919644008	HYDRAULIC SUPPORT
WASHER EN 14399-6 16 300-37	10180180	379	1	291	96034631	RADIATOR, PRE-ASSEMBLED
WASHER EN 14399-6 16 300-37	10180180	10	9	378	917259908	CRANE DRIVER CAB ADDITIO
WASHER EN 14399-6 20 300-3	4600222	26	2	75	91001377	CRAWLER SUPPORT PREASS
WASHER EN 14399-6 20 300-3	4600222	26	2	108	91001378	CRAWLER SUPPORT PREASS
WASHER EN 14399-6 20 300-3	4600222	383	4	288	919007708	DRIVE ASSEMBLY, PRE-ASSE
WASHER EN 14399-6 30 300-37	4900000	4	4	695	918807308	MECHANICAL EXTENSION SYS
WASHER ISO 7089 10 200HV-A	500917508	63	2	500	918731808	UREA PLANT
WASHER ISO 7089 10 200HV-A	500917508	92	2	669	917291908	PIVOT SECTION, PRE-ASSEMB
WASHER ISO 7089 10 200HV-A	420001114	378	4	288	919007708	DRIVE ASSEMBLY, PRE-ASSE
WASHER ISO 7089 10 200HV-A	420001114	12	1	381	919010208	CRANE OPERATOR CABIN P
WASHER ISO 7089 10 300HV F	10289795	33	12	20	91001569	CRAWLER TRACK TRAVEL G
WASHER ISO 7089 10 300HV F	10289795	31	4	30	968019508	LIMIT SWITCH ADD-ON
WASHER ISO 7089 10 300HV F	10289795	40	6	35	917511508	CRAWLER CENTRE PART PRE
WASHER ISO 7089 10 300HV F	10289795	107	20	76	91001377	CRAWLER SUPPORT PREASS
WASHER ISO 7089 10 300HV F	10289795	108	20	109	91001378	CRAWLER SUPPORT PREASS
WASHER ISO 7089 10 300HV F	10289795	375	2	280	918731408	DRIVE ASSEMBLY CPL.
WASHER ISO 7089 10 300HV F	10289795	379	28	288	919007708	DRIVE ASSEMBLY, PRE-ASSE
WASHER ISO 7089 10 300HV F	10289795	378	2	291	96034631	RADIATOR, PRE-ASSEMBLED
WASHER ISO 7089 10 300HV F	10289795	16	8	348	969050308	OIL TANK PRE-ASS.
WASHER ISO 7089 10 300HV F	10289795	7	6	363	917259608	ROTATING PLATFORM LOCK
WASHER ISO 7089 10 300HV F	10289795	382	4	446	96036790	SLEWING PLATFORM PANELLI
WASHER ISO 7089 10 300HV F	10289795	380	10	512	96051842	EXHAUST SYSTEM PRE-ASSE
WASHER ISO 7089 10 300HV F	10289795	18	2	643	96037130	EQUIPMENT CAMERA SLEW C
WASHER ISO 7089 10 300HV F	10289795	18	2	645	96037131	EQUIPMENT CAMERA WINCHE
WASHER ISO 7089 10 300HV F	10289795	(10)	2	657	919028808	DISPATCH ASSY.MECH.PART
WASHER ISO 7089 12 200HV-A	10410178	6	4	120	968038208	BEARING AHEAD LEFT SIDE
WASHER ISO 7089 12 200HV-A	10410178	6	4	121	968038308	BEARING AHEAD RIGHT SIDE
WASHER ISO 7089 12 200HV-A	10410178	52	8	124	968046208	ADD-ON PARTS
WASHER ISO 7089 12 200HV-A	10410178	65	12	129	919644008	HYDRAULIC SUPPORT
WASHER ISO 7089 12 200HV-A	10410178	375	8	511	96051842	EXHAUST SYSTEM PRE-ASSE
WASHER ISO 7089 12 300HV F	10289804	19	4	20	91001569	CRAWLER TRACK TRAVEL G
WASHER ISO 7089 12 300HV F	10289804	8	17	262	10115829	FLYWHEEL HOUSING MOUNT
WASHER ISO 7089 12 300HV F	10289804	381	5	288	919007708	DRIVE ASSEMBLY, PRE-ASSE
WASHER ISO 7089 12 300HV F	10289804	7	4	351	919369308	SLEWING GEAR
WASHER ISO 7089 12 300HV F	10289804	13	4	378	917259908	CRANE DRIVER CAB ADDITIO
WASHER ISO 7089 12 300HV F	10289804	19	8	492	967928508	LOCKING
WASHER ISO 7089 12 300HV F	10289804	328	4	496	969763408	PIPEWORK AIR INSTALLATIO
WASHER ISO 7089 12 300HV F	10289804	376	4	507	919674408	EXHAUST SYSTEM
WASHER ISO 7089 12 300HV F	10289804	340	8	562	96045351	HYDRAULICS UPPER CARRI
WASHER ISO 7089 12 300HV F	10289804	3	2	638	968267108	ADD-ON PARTS CAMERA
WASHER ISO 7089 12 300HV F	10289804	22	16	668	917291908	PIVOT SECTION, PRE-ASSEMB
WASHER ISO 7089 12 300HV F	10289804	62	3	691	917292408	TELESCOPIC SECT.5 PRE-AS
WASHER ISO 7089 12 300HV F	10289804	13	8	701	966134608	ADD-ON PARTS CYLINDER
WASHER ISO 7089 12 300HV F	10289804	4	3	747	917551608	ADD-ON PARTS
WASHER ISO 7089 12 300HV F	10289804	22	4	751	968728808	CONSOLE PRE-ASS.
WASHER ISO 7089 16 300HV F	10289806	57	32	20	91001569	CRAWLER TRACK TRAVEL G

Description	Item	Pos.	Quantity	Page	Assembly	Description
WASHER ISO 7089 16 300HV F	10289806	85	16	76	91001377	CRAWLER SUPPORT PREASS
WASHER ISO 7089 16 300HV F	10289806	8	1	95	96062678	LEVER PRE-ASSY.
WASHER ISO 7089 16 300HV F	10289806	85	16	109	91001378	CRAWLER SUPPORT PREASS
WASHER ISO 7089 16 300HV F	10289806	377	4	280	918731408	DRIVE ASSEMBLY CPL.
WASHER ISO 7089 16 300HV F	10289806	382	18	288	919007708	DRIVE ASSEMBLY, PRE-ASSE
WASHER ISO 7089 16 300HV F	10289806	6	8	458	917260108	FALL PROTECTION
WASHER ISO 7089 16 300HV F	10289806	29	2	492	967928508	LOCKING
WASHER ISO 7089 16 300HV F	10289806	13	1	493	967978908	INTERLOCKING
WASHER ISO 7089 16 300HV F	10289806	47	2	761	917267508	TRANSPORT MOUNTING
WASHER ISO 7089 18 300HV F	10289807	46	4	75	91001377	CRAWLER SUPPORT PREASS
WASHER ISO 7089 18 300HV F	10289807	46	4	108	91001378	CRAWLER SUPPORT PREASS
WASHER ISO 7089 18 300HV F	10289807	27	2	701	966134608	ADD-ON PARTS CYLINDER
WASHER ISO 7089 20 200HV	420002101	88	2	78	90028956	TRACTION DRIVE
WASHER ISO 7089 20 200HV-A	10353689	17	4	348	969050308	OIL TANK PRE-ASS.
WASHER ISO 7089 20 300HV F	10289808	44	4	20	91001569	CRAWLER TRACK TRAVEL G
WASHER ISO 7089 20 300HV F	10289808	109	2	76	91001377	CRAWLER SUPPORT PREASS
WASHER ISO 7089 20 300HV F	10289808	110	2	109	91001378	CRAWLER SUPPORT PREASS
WASHER ISO 7089 20 300HV F	10289808	29	12	147	919087608	ROTARY FEED THROUGH
WASHER ISO 7089 20 300HV F	10289808	11	4	767	917268208	LADDER ATTACHMENT
WASHER ISO 7089 24 300HV F	10289810	28	4	75	91001377	CRAWLER SUPPORT PREASS
WASHER ISO 7089 24 300HV F	10289810	28	4	108	91001378	CRAWLER SUPPORT PREASS
WASHER ISO 7089 24 300HV F	10289810	380	1	291	96034631	RADIATOR, PRE-ASSEMBLED
WASHER ISO 7089 3 MS	420050108	268	2	714	968708708	TERMINAL BOX CPL.
WASHER ISO 7089 30 300HV F	10289811	77	2	669	917291908	PIVOT SECTION, PRE-ASSEMB
WASHER ISO 7089 4 200HV 4	10875645	9	2	406	916162508	WINDOW ASSEMBLY
WASHER ISO 7089 4 200HV 4	10875645	381	8	446	96036790	SLEWING PLATFORM PANELLI
WASHER ISO 7089 4 200HV 4	10875645	(2)	4	467	96053500	ELECTRIC ADD-ON PARTS CA
WASHER ISO 7089 4 200HV 4	10875645	42	4	467	96053500	ELECTRIC ADD-ON PARTS CA
WASHER ISO 7089 4 200HV 4	10875645	62	16	544	969256608	BASE ASSEMBLY
WASHER ISO 7089 4 200HV 4	10875645	8	3	745	967936408	WIND WARNING PREASSEMB
WASHER ISO 7089 5 -A2	10410193	66	2	500	918731808	UREA PLANT
WASHER ISO 7089 5 -A2	10410193	2	2	745	967936408	WIND WARNING PREASSEMB
WASHER ISO 7089 5 200HV ZN	10197808	314	2	98	96035796	HYDR.TRAVEL DRIVE
WASHER ISO 7089 5 200HV ZN	10197808	314	2	115	96035792	HYDR.TRAVEL DRIVE
WASHER ISO 7089 5 200HV ZN	10197808	5	4	135	917257108	CENTRALIZED LUBRICATION
WASHER ISO 7089 5 200HV ZN	10197808	20	6	334	96023117	BATTERY BOX, PRE-ASSEMB
WASHER ISO 7089 5 200HV ZN	10197808	4	5	339	968999708	FUEL TANK, PRE-ASSEMBLED
WASHER ISO 7089 5 200HV ZN	10197808	35	28	433	918810308	CONTROL STAND
WASHER ISO 7089 5 200HV ZN	10197808	30	8	467	96053500	ELECTRIC ADD-ON PARTS CA
WASHER ISO 7089 5 200HV ZN	10197808	6	4	523	917261208	CENT. LUBRIC. SYSTEM SUP
WASHER ISO 7089 5 200HV ZN	10197808	11	4	602	917267108	AUXILIARY HOISTING GEAR 2
WASHER ISO 7089 5 200HV ZN	10197808	6	1	744	967933408	LOCATION FIXTURE PRE-ASS.
WASHER ISO 7089 5 200HV ZN	10197808	14	4	758	917413208	SELF-ERECT. AUX. HOIST GEA
WASHER ISO 7089 6 200HV ZN	10197771	10	12	26	96034894	PROTECTION PLATE CPL.
WASHER ISO 7089 6 200HV ZN	10197771	10	12	29	96034977	PROTECTION PLATE
WASHER ISO 7089 6 200HV ZN	10197771	14	2	42	966167808	COVER COMPL.
WASHER ISO 7089 6 200HV ZN	10197771	17	2	43	968054008	MOUNTING PLATE PRE-ASS.
WASHER ISO 7089 6 200HV ZN	10197771	312	45	56	96035801	HYDRAULIC EQUIPM.CENTER
WASHER ISO 7089 6 200HV ZN	10197771	33	2	147	919087608	ROTARY FEED THROUGH
WASHER ISO 7089 6 200HV ZN	10197771	384	2	288	919007708	DRIVE ASSEMBLY, PRE-ASSE
WASHER ISO 7089 6 200HV ZN	10197771	376	8	291	96034631	RADIATOR, PRE-ASSEMBLED
WASHER ISO 7089 6 200HV ZN	10197771	26	4	334	96023117	BATTERY BOX, PRE-ASSEMB
WASHER ISO 7089 6 200HV ZN	10197771	42	2	378	917259908	CRANE DRIVER CAB ADDITIO
WASHER ISO 7089 6 200HV ZN	10197771	50	3	399	917305408	INTERNAL PANELLING INSTA
WASHER ISO 7089 6 200HV ZN	10197771	18	4	412	916168308	AIR DUCT
WASHER ISO 7089 6 200HV ZN	10197771	42	4	433	918810308	CONTROL STAND
WASHER ISO 7089 6 200HV ZN	10197771	3	6	545	922648308	TERMINAL BOARD PRE-ASS.
WASHER ISO 7089 6 200HV ZN	10197771	4	4	547	926891108	GROUND RAIL
WASHER ISO 7089 6 200HV ZN	10197771	318	14	561	96045351	HYDRAULICS UPPER CARRI
WASHER ISO 7089 6 200HV ZN	10197771	12	2	601	918628408	AIR COND. UNIT SUPERSTRU

Description	Item	Pos.	Quantity	Page	Assembly	Description
WASHER ISO 7089 6 200HV ZN	10197771	311	2	616	967784808	HYDR.AUXILIARY HOISTING
WASHER ISO 7089 6 200HV ZN	10197771	28	2	636	968994408	CAMERA HOLDER, PREMOU
WASHER ISO 7089 6 200HV ZN	10197771	30	4	637	968290608	STAND
WASHER ISO 7089 6 200HV ZN	10197771	15	2	639	968993508	CAMERA HOLDER, PREMOU
WASHER ISO 7089 6 200HV ZN	10197771	30	4	640	968267208	STAND
WASHER ISO 7089 6 200HV ZN	10197771	67	2	674	917292008	TELESCOPIC SECTION 1 PRE
WASHER ISO 7089 6 200HV ZN	10197771	63	2	677	917292108	TELESCOPIC SECT.2 PRE-AS
WASHER ISO 7089 6 200HV ZN	10197771	63	2	681	917292208	TELESCOPIC SECT.3 PRE-ASS
WASHER ISO 7089 6 200HV ZN	10197771	63	2	685	917292308	TELESCOPIC SECT.IV PRE-A
WASHER ISO 7089 6 200HV ZN	10197771	46	2	699	571928508	CYLINDER HEAD CPL.
WASHER ISO 7089 6 200HV ZN	10197771	3	2	712	966591508	LIMIT SWITCH ADD-ON
WASHER ISO 7089 6 200HV-A2	420060201	39	2	421	917304708	SLIDING DOOR INSTALLATION
WASHER ISO 7089 6 200HV-A4	420000414	8	2	92	968420608	STORAGE BOX
WASHER ISO 7089 8 200HV-A2	420060705	58	6	20	91001569	CRAWLER TRACK TRAVEL G
WASHER ISO 7089 8 200HV-A2	420060705	6	8	652	917260608	COUNTERWEIGHT WITH CLAM
WASHER ISO 7089 8 200HV-A2	420060705	5	6	746	967937608	OBSTRUCTION LIGHTS PREAS
WASHER ISO 7089 8 200HV-A4	420001014	68	10	500	918731808	UREA PLANT
WASHER ISO 7089 8 300HV ZN	12103465	11	4	26	96034894	PROTECTION PLATE CPL.
WASHER ISO 7089 8 300HV ZN	12103465	11	4	29	96034977	PROTECTION PLATE
WASHER ISO 7089 8 300HV ZN	12103465	308	24	56	96035801	HYDRAULIC EQUIPM.CENTER
WASHER ISO 7089 8 300HV ZN	12103465	17	1	92	968420608	STORAGE BOX
WASHER ISO 7089 8 300HV ZN	12103465	8	7	94	96034962	GUIDE LEFT
WASHER ISO 7089 8 300HV ZN	12103465	8	7	112	96034980	GUIDE RIGHT
WASHER ISO 7089 8 300HV ZN	12103465	9	2	120	968038208	BEARING AHEAD LEFT SIDE
WASHER ISO 7089 8 300HV ZN	12103465	9	2	121	968038308	BEARING AHEAD RIGHT SIDE
WASHER ISO 7089 8 300HV ZN	12103465	8	2	135	917257108	CENTRALIZED LUBRICATION
WASHER ISO 7089 8 300HV ZN	12103465	37	4	147	919087608	ROTARY FEED THROUGH
WASHER ISO 7089 8 300HV ZN	12103465	377	44	288	919007708	DRIVE ASSEMBLY, PRE-ASSE
WASHER ISO 7089 8 300HV ZN	12103465	377	28	291	96034631	RADIATOR, PRE-ASSEMBLED
WASHER ISO 7089 8 300HV ZN	12103465	375	6	294	968026308	CLUTCH ACTUATOR
WASHER ISO 7089 8 300HV ZN	12103465	375	6	341	91002861	FUEL FEED
WASHER ISO 7089 8 300HV ZN	12103465	375	3	342	96066379	PREMOUNTED FUEL FILTER
WASHER ISO 7089 8 300HV ZN	12103465	9	1	381	919010208	CRANE OPERATOR CABIN P
WASHER ISO 7089 8 300HV ZN	12103465	28	4	387	916177508	STEP CPL.
WASHER ISO 7089 8 300HV ZN	12103465	12	3	388	96025887	PEDAL CANTILEVER INSTALL
WASHER ISO 7089 8 300HV ZN	12103465	64	4	400	917305408	INTERNAL PANELLING INSTA
WASHER ISO 7089 8 300HV ZN	12103465	13	4	415	916163008	WIPERS INSTALLATION
WASHER ISO 7089 8 300HV ZN	12103465	6	12	426	917676208	HEATING CRANE DRIVER'S CA
WASHER ISO 7089 8 300HV ZN	12103465	28	7	430	969085208	HEATING, PRE-ASSEMBLED
WASHER ISO 7089 8 300HV ZN	12103465	375	8	446	96036790	SLEWING PLATFORM PANELLI
WASHER ISO 7089 8 300HV ZN	12103465	16	4	449	968923508	FLAP RIGHT PRE-ASS.
WASHER ISO 7089 8 300HV ZN	12103465	12	4	457	969016008	FLAP LEFT FRONT PRE-ASS.
WASHER ISO 7089 8 300HV ZN	12103465	23	21	480	918759808	ADD HEATING SUPERSTRUCT
WASHER ISO 7089 8 300HV ZN	12103465	20	7	482	96020359	ADDNL.HEATING, PRE-ASSE
WASHER ISO 7089 8 300HV ZN	12103465	28	4	492	967928508	LOCKING
WASHER ISO 7089 8 300HV ZN	12103465	377	2	511	96051842	EXHAUST SYSTEM PRE-ASSE
WASHER ISO 7089 8 300HV ZN	12103465	375	6	520	918731908	AIR FILTER UNIT
WASHER ISO 7089 8 300HV ZN	12103465	17	2	523	917261208	CENT. LUBRIC. SYSTEM SUP
WASHER ISO 7089 8 300HV ZN	12103465	61	2	544	969256608	BASE ASSEMBLY
WASHER ISO 7089 8 300HV ZN	12103465	13	4	547	926891108	GROUND RAIL
WASHER ISO 7089 8 300HV ZN	12103465	12	4	592	967980508	OIL COOLER, PRE-ASSEMBLE
WASHER ISO 7089 8 300HV ZN	12103465	6	4	627	917269408	CONSOLE AUX. REPLENISHIN
WASHER ISO 7089 8 300HV ZN	12103465	16	2	668	917291908	PIVOT SECTION, PRE-ASSEMB
WASHER ISO 7089 8 300HV ZN	12103465	17	2	673	917292008	TELESCOPIC SECTION 1 PRE
WASHER ISO 7089 8 300HV ZN	12103465	17	2	677	917292108	TELESCOPIC SECT.2 PRE-AS
WASHER ISO 7089 8 300HV ZN	12103465	17	4	681	917292208	TELESCOPIC SECT.3 PRE-ASS
WASHER ISO 7089 8 300HV ZN	12103465	17	4	685	917292308	TELESCOPIC SECT.IV PRE-A
WASHER ISO 7089 8 300HV ZN	12103465	64	10	691	917292408	TELESCOPIC SECT.5 PRE-AS
WASHER ISO 7089 8 300HV ZN	12103465	28	4	761	917267508	TRANSPORT MOUNTING
WASHER ISO 7092 10 200HV	12102693	11	2	155	91001571	BOLT EXTRACTION DEVICE

Description	Item	Pos.	Quantity	Page	Assembly	Description
WASHER ISO 7092 20 300HV F	11691327	10	4	493	967978908	INTERLOCKING
WASHER ISO 7092 20 300HV F	11691327	52	16	673	917292008	TELESCOPIC SECTION 1 PRE
WASHER ISO 7092 20 300HV F	11691327	52	16	677	917292108	TELESCOPIC SECT.2 PRE-AS
WASHER ISO 7092 20 300HV F	11691327	52	16	681	917292208	TELESCOPIC SECT.3 PRE-ASS
WASHER ISO 7092 20 300HV F	11691327	52	16	685	917292308	TELESCOPIC SECT.IV PRE-A
WASHER ISO 7092 20 300HV F	11691327	52	16	690	917292408	TELESCOPIC SECT.5 PRE-AS
WASHER ISO 7092 6 200HV-A2	10035694	10	2	393	968514508	INSTALLATION SWITCH CAB. C
WASHER ISO 7092 6 200HV-A2	10035694	36	8	409	966497908	FRONT WINDOW CPL.
WASHER ISO 7092 8 200HV 4	10299679	41	64	35	917511508	CRAWLER CENTRE PART PRE
WASHER ISO 7092 8 200HV 4	10299679	18	6	701	966134608	ADD-ON PARTS CYLINDER
WASHER ISO 7093-1 10 300HV	11491889	21	4	365	917259708	MAIN HOIST GEAR
WASHER ISO 7093-1 10 300HV	11491889	377	4	455	969015908	SLEWING PLATFORM PANELLI
WASHER ISO 7093-1 10 300HV	11491889	378	4	512	96051842	EXHAUST SYSTEM PRE-ASSE
WASHER ISO 7093-1 10 300HV	11491889	312	4	561	96045351	HYDRAULICS UPPER CARRI
WASHER ISO 7093-1 10 300HV	11491889	30	4	604	967969608	AUXILIARY HOISTING GEAR 2
WASHER ISO 7093-1 10 300HV	11491889	26	16	668	917291908	PIVOT SECTION, PRE-ASSEMB
WASHER ISO 7093-1 10 A2	421802108	14	1	415	916163008	WIPERS INSTALLATION
WASHER ISO 7093-1 10 A2	421802108	7	1	423	966230508	GUIDE PRE-ASS.
WASHER ISO 7093-1 12 300HV	11182717	24	8	668	917291908	PIVOT SECTION, PRE-ASSEMB
WASHER ISO 7093-1 16 300HV	4000809	6	4	382	967986308	BEARING INSTALLATION
WASHER ISO 7093-1 16 300HV	4000809	19	8	668	917291908	PIVOT SECTION, PRE-ASSEMB
WASHER ISO 7093-1 20 300HV	4600328	49	4	20	91001569	CRAWLER TRACK TRAVEL G
WASHER ISO 7093-1 20 300HV	4600328	63	1	76	91001377	CRAWLER SUPPORT PREASS
WASHER ISO 7093-1 20 300HV	4600328	63	1	109	91001378	CRAWLER SUPPORT PREASS
WASHER ISO 7093-1 20 300HV	4600328	6	1	337	917626608	FUEL TANK ADD-ON UNIT
WASHER ISO 7093-1 20 300HV	4600328	8	1	345	917825508	OIL RESERVOIR, EXTENSION
WASHER ISO 7093-1 24 300HV	10179463	3	2	345	917825508	OIL RESERVOIR, EXTENSION
WASHER ISO 7093-1 4 200HV 4	10875642	87	1	669	917291908	PIVOT SECTION, PRE-ASSEMB
WASHER ISO 7093-1 4 200HV 4	10875642	69	1	691	917292408	TELESCOPIC SECT.5 PRE-AS
WASHER ISO 7093-1 5 200HV 4	10875643	309	4	561	96045351	HYDRAULICS UPPER CARRI
WASHER ISO 7093-1 6 200HV 4	10875648	376	5	288	919007708	DRIVE ASSEMBLY, PRE-ASSE
WASHER ISO 7093-1 6 200HV 4	10875648	34	6	378	917259908	CRANE DRIVER CAB ADDITIO
WASHER ISO 7093-1 6 200HV 4	10875648	11	4	410	965784408	ROOF WINDOW PRE-ASS.
WASHER ISO 7093-1 6 200HV 4	10875648	379	6	446	96036790	SLEWING PLATFORM PANELLI
WASHER ISO 7093-1 6 200HV 4	10875648	15	2	449	968923508	FLAP RIGHT PRE-ASS.
WASHER ISO 7093-1 6 200HV 4	10875648	309	10	455	969015908	SLEWING PLATFORM PANELLI
WASHER ISO 7093-1 6 200HV 4	10875648	62	8	500	918731808	UREA PLANT
WASHER ISO 7093-1 6 200HV 4	10875648	306	6	561	96045351	HYDRAULICS UPPER CARRI
WASHER ISO 7093-1 6 200HV 4	10875648	315	2	616	967784808	HYDR.AUXILIARY HOISTING
WASHER ISO 7093-1 6 200HV 4	10875648	52	2	668	917291908	PIVOT SECTION, PRE-ASSEMB
WASHER ISO 7093-1 6 200HV 4	10875648	305	2	728	967785008	ADDNL.HYDR. FOLDING JIB
WASHER ISO 7093-1 6 200HV-A	421801708	14	2	409	966497908	FRONT WINDOW CPL.
WASHER ISO 7093-1 6 200HV-A	421801708	58	2	421	917304708	SLIDING DOOR INSTALLATION
WASHER ISO 7093-1 6 200HV-A	421801708	4	2	423	966230508	GUIDE PRE-ASS.
WASHER ISO 7093-1 6 200HV-A	421801708	378	2	507	919674408	EXHAUST SYSTEM
WASHER ISO 7093-1 6 200HV-A	421801708	376	19	511	96051842	EXHAUST SYSTEM PRE-ASSE
WASHER ISO 7093-1 6 200HV-A	421801708	3	4	626	917269308	CHARGER
WASHER ISO 7093-1 6 200HV-A	10540500	35	2	52	11346779	SLIP RING TRANSMITTER
WASHER ISO 7093-1 6 200HV-A	10540500	34	4	124	968046208	ADD-ON PARTS
WASHER ISO 7093-1 6 200HV-A	10540500	40	4	421	917304708	SLIDING DOOR INSTALLATION
WASHER ISO 7093-1 6 200HV-A	10540500	8	1	744	967933408	LOCATION FIXTURE PRE-ASS.
WASHER ISO 7093-1 8 200HV 4	11140469	30	4	30	968019508	LIMIT SWITCH ADD-ON
WASHER ISO 7093-1 8 200HV 4	11140469	24	3	135	917257108	CENTRALIZED LUBRICATION
WASHER ISO 7093-1 8 200HV 4	11140469	8	2	155	91001571	BOLT EXTRACTION DEVICE
WASHER ISO 7093-1 8 200HV 4	11140469	21	2	172	918731108	ASSEMBLY PARTS F.SLEWING
WASHER ISO 7093-1 8 200HV 4	11140469	378	2	280	918731408	DRIVE ASSEMBLY CPL.
WASHER ISO 7093-1 8 200HV 4	11140469	16	4	365	917259708	MAIN HOIST GEAR
WASHER ISO 7093-1 8 200HV 4	11140469	29	2	378	917259908	CRANE DRIVER CAB ADDITIO
WASHER ISO 7093-1 8 200HV 4	11140469	(5)	4	387	916177508	STEP CPL.
WASHER ISO 7093-1 8 200HV 4	11140469	22	2	406	916162508	WINDOW ASSEMBLY

Description	Item	Pos.	Quantity	Page	Assembly	Description
WASHER ISO 7093-1 8 200HV 4	11140469	380	7	446	96036790	SLEWING PLATFORM PANELLI
WASHER ISO 7093-1 8 200HV 4	11140469	18	4	449	968923508	FLAP RIGHT PRE-ASS.
WASHER ISO 7093-1 8 200HV 4	11140469	376	11	455	969015908	SLEWING PLATFORM PANELLI
WASHER ISO 7093-1 8 200HV 4	11140469	40	6	467	96053500	ELECTRIC ADD-ON PARTS CA
WASHER ISO 7093-1 8 200HV 4	11140469	27	4	480	918759808	ADD HEATING SUPERSTRUCT
WASHER ISO 7093-1 8 200HV 4	11140469	64	4	500	918731808	UREA PLANT
WASHER ISO 7093-1 8 200HV 4	11140469	375	2	507	919674408	EXHAUST SYSTEM
WASHER ISO 7093-1 8 200HV 4	11140469	381	2	512	96051842	EXHAUST SYSTEM PRE-ASSE
WASHER ISO 7093-1 8 200HV 4	11140469	321	4	561	96045351	HYDRAULICS UPPER CARRI
WASHER ISO 7093-1 8 200HV 4	11140469	30	8	668	917291908	PIVOT SECTION, PRE-ASSEMB
WASHER ISO 7093-1 8 200HV 4	11140469	70	2	691	917292408	TELESCOPIC SECT.5 PRE-AS
WASHER ISO 7093-1 8 200HV 4	11140469	16	12	701	966134608	ADD-ON PARTS CYLINDER
WASHER ISO 7093-1 8 200HV 4	11140469	300	2	722	967785408	ADDNL.HYDR. FOLDING JIB
WASHER ISO 7093-1 8 200HV 4	11140469	307	2	728	967785008	ADDNL.HYDR. FOLDING JIB
WASHER ISO 7093-1 8 200HV-A	421861405	29	4	387	916177508	STEP CPL.
WASHER ISO 7093-1 8 200HV-A	421861405	377	3	507	919674408	EXHAUST SYSTEM
WASHER ISO 7093-1 8 200HV-A	421861405	379	12	512	96051842	EXHAUST SYSTEM PRE-ASSE
WASHER ISO 7093-1 8 200HV-A	10540510	21	4	421	917304708	SLIDING DOOR INSTALLATION
WASHER ISO 8738 50 160HV-St	10179408	18	4	492	967928508	LOCKING
WASHER ISO 8738 55 160HV-St	10179409	5	1	658	968068308	ASSEMBLY DEVICE
WASHER RD60X2 ALMG3 H11	948717708	19	4	129	919644008	HYDRAULIC SUPPORT
WASHER SPRING DIN 127 A 6	424000508	(12)	3	604	967969608	AUXILIARY HOISTING GEAR 2
WASHER SPRING DIN 128 A 5	12227697	19	6	334	96023117	BATTERY BOX, PRE-ASSEMB
WASHER SPRING DIN 7980 8 F	424100708	8	6	359	510229408	HYDRO MOTOR
WATER BASIN 505X126X100 P	97003164	1	1	416	966408908	WATER CONTAINER CPL
WATER CONTAINER CPL	966408908	1	1	415	916163008	WIPERS INSTALLATION
WATER DRAIN PLUG M12 PA6	602501208	10	2	41	96045226	SWITCH BOX COMPL.
WATER DRAIN PLUG M12 PA6	602501208	308	1	711	966291008	TERMINAL BOX
WATER DRAIN PLUG M12 PA6	602501208	292	1	714	968708708	TERMINAL BOX CPL.
WATER DRAIN VALVE 22BAR	502921908	151	2	496	969763408	PIPEWORK AIR INSTALLATIO
WATER HEATING SYSTEM 24	10876576	1	1	482	96020359	ADDNL.HEATING, PRE-ASSE
WATER HOSE DN4-RAUCLAIR-	11000710	17	1.3	415	916163008	WIPERS INSTALLATION
WATER HOSE DN4-RAUCLAIR-	11000710	18	2.8	415	916163008	WIPERS INSTALLATION
WATER LEVEL SENSOR L=50	10335960	450	1	328	96034515	EXPANSION TANK PRE-ASS.
WATER PUMP WITH FASTENIN	10142733	370	1	177	13455297	DIESEL ENGINE
WATER PUMP, PRE-ASSEMB	10150386	1	1	245	10142733	WATER PUMP WITH FASTENIN
WATER PUMP, PRE-ASSEMB	12863021	1	1	245	10142733	WATER PUMP WITH FASTENIN
WATER VALVE NW12X2,5 NICH	11082158	17	2	500	918731808	UREA PLANT
WEARING RING AlSn20Cu	10133693	6	2	210	10138230	CAMSHAFT CPL.
WEARING RING AlSn20Cu	11348100	6	2	210	10138230	CAMSHAFT CPL.
WEARING RING M 40X1,5	9077612	3	1	277	9077386	AUXILIARY DRIVE PRE-ASS.
WEDGE LOCK WASHER NORD	7015814	50	2	421	917304708	SLIDING DOOR INSTALLATION
WEDGE SOCKET 23-25 GR.26	12101239	5	1	657	919028808	DISPATCH ASSY.MECH.PART
WEIGHT EN-GJS400-18 FE//ZN	10873379	1	1	693	96013575	HOIST LIM.SWITCH PLUMMET
WELD PLATE DIN 3015-1 L-AP	602015408	36	2	26	96034894	PROTECTION PLATE CPL.
WELD PLATE DIN 3015-1 L-AP	602015408	36	2	29	96034977	PROTECTION PLATE
WELD PLATE DIN 3015-1 L-AP	602015408	323	4	56	96035801	HYDRAULIC EQUIPM.CENTER
WELD PLATE DIN 3015-1 L-AP	10802205	33	1	26	96034894	PROTECTION PLATE CPL.
WELD PLATE DIN 3015-1 L-AP	10802205	33	1	29	96034977	PROTECTION PLATE
WELD PLATE DIN 3015-1 L-AP	10802205	322	2	56	96035801	HYDRAULIC EQUIPM.CENTER
WELD PLATE DIN 3015-1 L-AP	11008020	310	2	98	96035796	HYDR.TRAVEL DRIVE
WELD PLATE DIN 3015-1 L-AP	11008020	310	2	115	96035792	HYDR.TRAVEL DRIVE
WELDING SLEEVE M8X17 ST37	10412105	23	4	334	96023117	BATTERY BOX, PRE-ASSEMB
WHEATHER CAP 114,3 EDEL	12100105	106	1	507	919674408	EXHAUST SYSTEM
WHEEL NUT DIN 74361 M20X1,	520303308	10	1	240	5700161	AIR COMPRESSOR
WIDE ANGLE MIRROR 219X17	591069508	2	1	440	916049908	MIRROR ATTACHM.IN CRANE
WIDE ANGLE MIRROR 316X17	591070908	1	1	476	917260408	MIRROR ATTACHM.AT SLEW.P
WINCH REVOLUTION TRANS	10802061	5	1	375	966631008	ELECTRIC FOR WINCH 1
WINCH REVOLUTION TRANS	10802061	(5)	1	604	967969608	AUXILIARY HOISTING GEAR 2
WIND VELOCITY TRANSMITTE	11482252	2	1	741	917598408	ELECTRIC MEASURING & WAR

Description	Item	Pos.	Quantity	Page	Assembly	Description
WIND WARNING PREASSEMB	967936408	2	1	743	968412508	MECH MEAS AND WARNING D
WINDOW	11110060	39	1	525	10327065	ELECTRIC PUMP
WINDOW ASSEMBLY SPF	916162508	2	1	395	917304508	CRANE OPERATOR CABIN P
WING SCREW DIN 316 M12X20	4600612	202	2	76	91001377	CRAWLER SUPPORT PREASS
WING SCREW DIN 316 M12X20	4600612	202	2	109	91001378	CRAWLER SUPPORT PREASS
WIPER ARM 650MM	10292014	3	1	415	916163008	WIPERS INSTALLATION
WIPER ARM 900MM	10292015	22	1	409	966497908	FRONT WINDOW CPL.
WIPER BEARING ST	11001115	16	1	409	966497908	FRONT WINDOW CPL.
WIPER BLADE 1000	10292017	23	1	409	966497908	FRONT WINDOW CPL.
WIPER BLADE 700	10292016	5	1	415	916163008	WIPERS INSTALLATION
WIPER FRAME	10292018	7	1	415	916163008	WIPERS INSTALLATION
WIPER FRAME	10870968	8	1	415	916163008	WIPERS INSTALLATION
WIPER MOTOR 55NM 24V SPF	10292021	2	2	415	916163008	WIPERS INSTALLATION
WIPERS INSTALLATION	916163008	5	1	395	917304508	CRANE OPERATOR CABIN P
WIRE	7624238	17	4	321	10872488	DRIVING GEAR
WIRE HOSE CLAMP 70-75	11000902	14	2	412	916168308	AIR DUCT
WIRE HOSE CLAMP 79-85	11000903	13	6	412	916168308	AIR DUCT
WIRED END FERRULE DIN 46	602307808	114	8	49	96045228	WIRING HARNESS
WIRED END FERRULE DIN 46	602307808	114	4	532	96045385	WIRING HARNESS
WIRED END FERRULE DIN 462	602307908	85	10	532	96045385	WIRING HARNESS
WIRED END FERRULE DIN 46	602307708	86	2	49	96045228	WIRING HARNESS
WIRED END FERRULE DIN 46	602307708	86	74	532	96045385	WIRING HARNESS
WIRED END FERRULE DIN 46	602307708	86	26	534	96037136	WIRING HARNESS
WIRES TERMINAL BOX CPL. S	966354908	18	1	714	968708708	TERMINAL BOX CPL.
WIRING DUCT 80X40/2000 HAR	638109101	30	0.28	544	969256608	BASE ASSEMBLY
WIRING HARNESS ASSEMBLY	10151329	2	1	269	10151328	CABLE HARNESS MOUNTING
WIRING HARNESS ASSEMBLY	10151390	8	1	269	10151328	CABLE HARNESS MOUNTING
WIRING HARNESS W200	96045227	21	1	41	96045226	SWITCH BOX COMPL.
WIRING HARNESS W202	96045228	23	1	41	96045226	SWITCH BOX COMPL.
WIRING HARNESS W227	96045205	30	1	141	96045204	CABLE LIST
WIRING HARNESS W300	96036955	2	1	461	96036954	CABLE LIST DRIVER'S CABIN
WIRING HARNESS W301	967541908	3	1	461	96036954	CABLE LIST DRIVER'S CABIN
WIRING HARNESS W302	967542008	4	1	461	96036954	CABLE LIST DRIVER'S CABIN
WIRING HARNESS W310	96036956	7	1	461	96036954	CABLE LIST DRIVER'S CABIN
WIRING HARNESS W321	96043733	5	1	641	96045237	EQUIPMENT CAMERA CAB
WIRING HARNESS W346	96023876	(10)	1	468	96053500	ELECTRIC ADD-ON PARTS CA
WIRING HARNESS W500	96045385	50	1	531	96045384	CABLE LIST SLEWING PLATF
WIRING HARNESS W501	96037136	51	1	531	96045384	CABLE LIST SLEWING PLATF
WIRING HARNESS W522	966298408	(8)	1	604	967969608	AUXILIARY HOISTING GEAR 2
WIRING HARNESS W555	96037137	52	1	531	96045384	CABLE LIST SLEWING PLATF
WIRING HARNESS WRCAN	967709108	521	1	49	96045228	WIRING HARNESS
WOODRUFF KEY DIN 6888 3X5	570435508	18	1	292	10429930	GEAR WHEEL MOTOR
WORK LIGHT 20W 12-24V AL	10877828	6	1	467	96053500	ELECTRIC ADD-ON PARTS CA
WORK LIGHT 20W 12-24V AL	10877828	(10)	1	631	918989008	A-HEADLIGHT SLEWING PLA
WORK LIGHT 20W 12-24V AL	10877828	20	1	643	96037130	EQUIPMENT CAMERA SLEW C
WORK LIGHT 20W 12-24V AL	10877828	20	1	645	96037131	EQUIPMENT CAMERA WINCHE
WORK LIGHT 20W 12-24V AL	10877828	(4)	1	657	919028808	DISPATCH ASSY.MECH.PART
WORK LIGHT 50W 12-24V ALU	10872003	5	2	731	918124908	A-HEADL.SEARCHLIGHT PIVO
WRENCH SOCKET 1/2"-14WN	12103321	(2)	1	76	91001377	CRAWLER SUPPORT PREASS
WRENCH SOCKET SW1 11/16"	890020214	11	1	151	919328608	TOOLS AND ACCESSORIES

Bezeichnung	Artikel	Pos.	Menge	Seite	Baugruppe	Bezeichnung
2.NACKENROLLE EINBAU	910040808	363	1	14		LIEBHERR LTR 1220
A-SCHEINWERFER ANLENKST	918124908	321	1	14		LIEBHERR LTR 1220
A-SCHEINWERFER DREHBUE	918989008	438	1	15		LIEBHERR LTR 1220
ABDECKBLECH	11494286	41	2	754	910836808	HAKENFLASCHE
ABDECKBLECH VORM.	965021508	46	2	433	918810308	STEUERSTAND
ABDECKHAUBE	10451017	17	1	710	10354493	LEITUNGSTROMMEL
ABDECKKAPPE	11171306	2	1	742	11482252	WINDGESCHWINDIGKEITSGE
ABDECKKAPPE 112,7 PPA	10115832	7	1	189	10155227	OELWANNE VORM.
ABDECKKAPPE 36X22 PVC-S	10215892	9	1	477	966707708	SPIEGELHALTER VORM.
ABDECKKAPPE 700 M18X1,5 P	10129392	2	2	220	12489819	ABDECKKAPPEN-KIT
ABDECKKAPPE 9,5X11 POLYA	591064708	71	1	400	917305408	INNENVERKLEIDUNG EINBAU
ABDECKKAPPE POLYSTIC27-3	591570908	102	3	445	96036790	DREHBUEHNENVERKLEIDUN
ABDECKKAPPE POLYSTIC27-3	591570908	51	1	467	96053500	ELEKTRIK ANBAUTEILE KABIN
ABDECKKAPPE POLYSTIC27-3	591570908	6	1	471	96022872	ARMATURENBRETT DACH
ABDECKKAPPE POLYSTIC27-3	591570908	8	1	548	968063108	MONTAGEEINHEIT VORM.
ABDECKKAPPE PP	10129394	7	1	220	12489819	ABDECKKAPPEN-KIT
ABDECKKAPPEN-KIT	12489819	300	1	219	10146658	HOCHDRUCKPUMPE
ABDECKUNG	10650507	(2)	1	440	916049908	SPIEGELANBAU KRANFUEHR
ABDECKUNG	11005170	17	1	435	10877138	FAHRERSITZ
ABDECKUNG	11171270	32	1	435	10877138	FAHRERSITZ
ABDECKUNG 8X735X83 PE SC	97008572	13	1	406	916162508	SCHEIBEN EINBAU
ABDECKUNG KPL.	12103044	10	1	704	10802064	SEILLAENGENGEBER
ABDECKUNG KPL. SL 015	692600708	23	1	704	10802064	SEILLAENGENGEBER
ABDECKUNG MOLERIT T59	11008024	527	4	463	96036955	KABELSTRANG
ABDICHTPROFIL	979896308	2	1	42	966167808	DECKEL KPL.
ABDICHTPROFIL 1,5-3X14,6X1	262106508	19	0.37	449	968923508	KLAPPE VORM.RECHTS
ABDICHTPROFIL 1-3X21,5X11	262106708	13	2.11	157	96063087	STAUKASTEN
ABGASANLAGE	919674408	163	1	13		LIEBHERR LTR 1220
ABGASANLAGE VORM.	96051842	1	1	507	919674408	ABGASANLAGE
ABGASKLAPPE	10153116	3	1	253	12512627	ABGASSTUTZEN ANBAU
ABGASKLAPPE	12983604	3	1	253	12512627	ABGASSTUTZEN ANBAU
ABGASMISCHROHR SCRFILTE	12999384	103	1	511	96051842	ABGASANLAGE VORM.
ABGASROHR	97118888	101	1	507	919674408	ABGASANLAGE
ABGASROHR 1.4301	97049723	105	1	507	919674408	ABGASANLAGE
ABGASROHR 38/FLEXIBEL	553054108	7	1.995	480	918759808	ZUSATZHEIZUNG OW
ABGASROHR 38/FLEXIBEL	553054108	7	0.25	482	96020359	ZUSATZHEIZUNG VORM.
ABGASROHR ANBAU R-MOT	10140087	410	1	177	13455297	DIESELMOTOR
ABGASROHR R-MOTORXD934	10145524	1	1	250	10140087	ABGASROHR ANBAU
ABGASROHR X5CRNI18-10 SP	97118731	105	1	511	96051842	ABGASANLAGE VORM.
ABGASROHR X5CRNI18-10 SP	97118733	104	1	511	96051842	ABGASANLAGE VORM.
ABGASROHR X5CRNI18-10 SP	97124264	106	1	511	96051842	ABGASANLAGE VORM.
ABGASSCHALLDAEMPFER 116	553187208	5	1	482	96020359	ZUSATZHEIZUNG VORM.
ABGASSTUTZEN ANBAU R-M	12512627	432	1	178	13455297	DIESELMOTOR
ABGASSTUTZEN R-MOTOR D	10153666	1	1	253	12512627	ABGASSTUTZEN ANBAU
ABGLAETTMITTEL KANISTER-	811203108	16	1	406	916162508	SCHEIBEN EINBAU
ABGLAETTMITTEL KANISTER-	811203108	49	1	421	917304708	SCHIEBETUER EINBAU
ABREISSSTOPFEN M8	514539308	12	1	311	10008308	ANSCHLUSSPLATTE
ABSCHALTVENTIL	571899508	3	1	307	10873570	ANSCHLUSSPLATTE
ABSCHIRMUNG	966980708	36	2	467	96053500	ELEKTRIK ANBAUTEILE KABIN
ABSCHIRMUNG ZURUECKGEB	965617208	995	6	463	96036955	KABELSTRANG
ABSCHIRMUNG ZURUECKGEB	965617208	995	2	533	96045385	KABELSTRANG
ABSCHLUSSPLATTE	11643394	3	1	373	11182597	VERSTELLMOTOR
ABSCHLUSSPLATTE	11643394	3	1	605	11211058	VERSTELLMOTOR
ABSPERRORGAN DN150-FLAN	11212467	2	1	348	969050308	OELBEHAELTER VORM.
ABSTANDSBOLZEN M5X30 11	97028159	48	4	399	917305408	INNENVERKLEIDUNG EINBAU
ABSTANDSBOLZEN M6X30 ST	11001955	57	3	399	917305408	INNENVERKLEIDUNG EINBAU
ABSTANDSBOLZEN M6X50 S	10875447	58	2	399	917305408	INNENVERKLEIDUNG EINBAU
ABSTANDSRING	11181884	5	1	52	11346779	SCHLEIFRINGUEBERTRAGER
ABSTREIFER 160X175X9	7367567	4	1	85	10877686	SPANNER HYDR KPL
ABSTUETZPLATTE SCHWK.	967996608	4	4	129	919644008	HYDRAULISCHE ABSTUETZUN

Bezeichnung	Artikel	Pos.	Menge	Seite	Baugruppe	Bezeichnung
ABSTUETZZYLINDER 240/210-	11182950	1	4	129	919644008	HYDRAULISCHE ABSTUETZUN
ABSTURZSICHERUNG	917260108	140	1	13		LIEBHERR LTR 1220
ABSTURZSICHERUNG	917691008	13	1	12		LIEBHERR LTR 1220
ABTRIEBSFLANSCH	939292301	10	1	370	939292201	PLANETENGETRIEBE
ABTRIEBSWELLE 135,9 18CrNi	90010683	10	1	353	90008901	DREHWERKANTRIEB
ACHSE 30.0X95 S355J2C+C FE	97011246	18	1	381	919010208	KRANFUEHRERKABINE VORM.
ACHSE RD150X120 S355J2H	946509308	6	1	734	917268408	MASTNASE
ACHSE SCHWK.	923661808	5	1	690	917292408	TELESKOP 5 VORM.
ACHSE SCHWK.	923672408	6	1	690	917292408	TELESKOP 5 VORM.
ACHSHALTER 10X109X30 S35	973178808	11	6	489	918956108	HYDRAULISCHE BALLASTIER
ACHSHALTER 10X140X40 S35	942164608	8	2	20	91001569	RAUPENFAHRWERK KPL.
ACHSHALTER 12X222X222 S96	970591108	2	2	172	918731108	MONTAGETEILE DREHBUEHN
ACHSHALTER 12X270X220 S96	974925508	4	1	646	919617008	WIPPZYLINDER M.LAGERUNG
ACHSHALTER 15X260X217 S96	970598608	5	1	646	919617008	WIPPZYLINDER M.LAGERUNG
ACHSHALTER 8X30X60 S235J	931185608	15	3	378	917259908	KRANFUEHRERKABINE ANBA
ACHSHALTER LN 4/1 S235JR+	997040101	26	1	761	917267508	TRANSPORTHALTERUNG DKS
ADAPTER 18-POL SPF	660024508	29	1	540	91000922	EINBAUTEILE SCHALTSCHRAN
ADAPTER 19.0X17 S235JRC+C	97051324	66	1	468	96053500	ELEKTRIK ANBAUTEILE KABIN
ADAPTER 32X185X45 PAGF30	979243408	2	1	410	965784408	DACHSCHEIBE VORM.
ADAPTER M16-M10 ST.60-2K	972698608	29	4	286	919007708	ANTRIEBSAGGREGAT VORM.
ADAPTER RI11/2-EDX1 CR6-F	475502408	769	2	564	96045351	HYDRAULIK OBERWAGEN
ADAPTER RI11/4-EDX1/2 CR6-F	475501108	662	2	57	96035801	HYDRAULIK MITTELTEIL
ADAPTER RI11/4-EDX1/2 CR6-F	475501108	623	1	98	96035796	HYDR.FAHRANTRIEB
ADAPTER RI11/4-EDX1/2 CR6-F	475501108	623	1	115	96035792	HYDR.FAHRANTRIEB
ADAPTERRING	11007300	2	1	52	11346779	SCHLEIFRINGUEBERTRAGER
ADERENDHUELSE DIN 46228-	602307808	114	8	49	96045228	KABELSTRANG
ADERENDHUELSE DIN 46228-	602307808	114	4	532	96045385	KABELSTRANG
ADERENDHUELSE DIN 46228-1	602307908	85	10	532	96045385	KABELSTRANG
ADERENDHUELSE DIN 46228-	602307708	86	2	49	96045228	KABELSTRANG
ADERENDHUELSE DIN 46228-	602307708	86	74	532	96045385	KABELSTRANG
ADERENDHUELSE DIN 46228-	602307708	86	26	534	96037136	KABELSTRANG
AGGREGATETRAEGER ANBAU	10147687	12	1	174	13455297	DIESELMOTOR
AGGREGATETRAEGER SCH	968918808	1	1	286	919007708	ANTRIEBSAGGREGAT VORM.
AGGREGATETRAEGER VORM.	12835708	1	1	183	10147687	AGGREGATETRAEGER ANBA
AKTIVATOR 1000ML	870004108	23	1	406	916162508	SCHEIBEN EINBAU
AKTIVATOR 250ML DOSE	10815283	14	1	406	916162508	SCHEIBEN EINBAU
ANBAUTEILE ARBEITSSCHEI	96037229	10	1	631	918989008	A-SCHEINWERFER DREHBUE
ANBAUTEILE BTT	917618608	150	1	13		LIEBHERR LTR 1220
ANBAUTEILE KAMERA DB-HEC	968210808	1	1	633	918992008	KAMERAUEBERWACHUNG O
ANBAUTEILE KAMERA DB-WIN	968267108	2	1	633	918992008	KAMERAUEBERWACHUNG O
ANBAUTEILE LUFTPRESSER	10145278	334	1	177	13455297	DIESELMOTOR
ANBAUTEILE RAUPENTRAEGE	968046208	50	2	119	917691008	ABSTURZSICHERUNG
ANBAUTEILE TELE	917551608	286	1	14		LIEBHERR LTR 1220
ANBAUTEILE ZYLINDER	966134608	2	1	695	918807308	AUSSCHUBMECHANIK
ANHAENGE ETIKETTE 160X8	12934664	483	1	178	13455297	DIESELMOTOR
ANHAENGE ETIKETTE 80X80X	10128890	728	1	179	13455297	DIESELMOTOR
ANLAUFRING AlSn20Cu	10133693	6	2	210	10138230	NOCKENWELLE KPL.
ANLAUFRING AlSn20Cu	11348100	6	2	210	10138230	NOCKENWELLE KPL.
ANLAUFRING M 40X1,5	9077612	3	1	277	9077386	NEBENABTRIEB VORM.
ANLAUFSCHEIBE	571582308	4	1	240	5700161	LUFTPRESSER
ANLAUFSCHEIBE	571582408	6	1	240	5700161	LUFTPRESSER
ANLAUFSCHEIBE	927602301	46	1	370	939292201	PLANETENGETRIEBE
ANLAUFSCHEIBE 112X138X3	10119927	3	2	198	10116939	RS KURBELWELLENLAGERU
ANLAUFSCHEIBE 112X138X3	10119928	4	2	198	10116939	RS KURBELWELLENLAGERU
ANLAUFSCHEIBE 200X7 GZ-CU	97032155	8	8	129	919644008	HYDRAULISCHE ABSTUETZUN
ANLAUFSCHEIBE 8X70X70 PA6	97028395	7	2	378	917259908	KRANFUEHRERKABINE ANBA
ANLENKSTUECK SCHWK. SPF	917292608	1	1	668	917291908	ANLENKSTUECK VORM.
ANLENKSTUECK VORM.	917291908	1	1	663	918804808	TELESKOPAUSLEGER KPL.
ANSAUGSTUTZEN ANBAU R-M	10145173	221	1	176	13455297	DIESELMOTOR
ANSAUGSTUTZEN R-MOTOR	11444999	1	1	232	10145173	ANSAUGSTUTZEN ANBAU

Bezeichnung	Artikel	Pos.	Menge	Seite	Baugruppe	Bezeichnung
ANSCHLAG	11485426	3	1	316	10871043	VERSTELLPUMPE
ANSCHLAG 90X60X10 PA6G	97070985	102	4	76	91001377	RAUPENTRAEGER VORM.LI.
ANSCHLAG 90X60X10 PA6G	97070985	103	4	109	91001378	RAUPENTRAEGER VORM.RE.
ANSCHLAGMITTEL	917611508	299	1	14		LIEBHERR LTR 1220
ANSCHLAGSCHEIBE 16,5X75X	10875905	3	4	382	967986308	LAGERUNG EINBAU
ANSCHLAGSEIL -5M PP SPF	773326508	3	1	766	917268108	WERKZEUG KLAPPSPITZE
ANSCHLAGSEIL DIN EN 13414-	773445108	14	3	657	919028808	MECH.TEILE VERSANDMONT
ANSCHLAGSEIL EN 13414-3 35.	10331368	2	1	752	917531708	BALLASTTRAVERSE
ANSCHLUSSBLOCK	511055908	169	1	560	96045351	HYDRAULIK OBERWAGEN
ANSCHLUSSFLANSCH	511057608	188	1	561	96045351	HYDRAULIK OBERWAGEN
ANSCHLUSSFLANSCH	511057608	172	1	616	967784808	HYDRAULIK HILFSHUBWERK
ANSCHLUSSKABEL	12102265	29	1	704	10802064	SEILLAENGENGEBER
ANSCHLUSSKABEL 2X0,75-1,5	10877798	12	1	462	96036955	KABELSTRANG
ANSCHLUSSKABEL 2X0,75-1,5	10877798	6	1	538	96037133	LEITUNG
ANSCHLUSSKABEL 2X0,75-1,5	10877798	6	1	644	96037132	LEITUNG
ANSCHLUSSKABEL 2X0,75-10	10877801	19	1	532	96045385	KABELSTRANG
ANSCHLUSSKABEL 2X0,75-10	10877801	372	1	532	96045385	KABELSTRANG
ANSCHLUSSKABEL 2X0,75-10	10877801	388	1	535	96037136	KABELSTRANG
ANSCHLUSSKABEL 2X0,75-10	10877801	389	1	535	96037136	KABELSTRANG
ANSCHLUSSKABEL 2X0,75-5M	10877800	371	1	532	96045385	KABELSTRANG
ANSCHLUSSPLATTE	10008308	2	1	309	11210798	VERSTELLPUMPE
ANSCHLUSSPLATTE	10873570	3	1	305	11210795	VERSTELLPUMPE
ANSCHLUSSPLATTE	11003841	16	1	710	10354493	LEITUNGSTROMMEL
ANSCHLUSSPLATTE	510629508	175	1	561	96045351	HYDRAULIK OBERWAGEN
ANSCHLUSSPLATTE	510629508	173	1	616	967784808	HYDRAULIK HILFSHUBWERK
ANSCHLUSSPLATTE	570109208	4	1	359	510229408	HYDROMOTOR
ANSCHLUSSPLATTE	571907208	2	1	319	10871282	VERSTELLPUMPE
ANSCHLUSSPLATTE DP1-10/3	511058308	196	1	561	96045351	HYDRAULIK OBERWAGEN
ANSCHLUSSSTECKER	12102524	20	2	63	11643183	STEUERBLOCK
ANSCHLUSSSTECKER AX	602337008	508	3	464	96036956	KABELSTRANG
ANSCHLUSSSTECKER AX	602337008	518	1	542	96045387	DRAEHTE GRUNDAUFBAU KPL
ANSCHLUSSSTUTZEN 11SMnP	927586201	12	2	374	90200104	OELMESSEINRICHTUNG
ANSCHLUSSSTUTZEN 11SMnP	927586201	12	1	612	90200103	OELMESSEINRICHTUNG
ANSCHLUSSTRAEGER 42CrM	927745001	1	1	370	939292201	PLANETENGETRIEBE
ANSCHRAUBSCHARNIER 25X	10871177	12	4	409	966497908	FRONTSCHEIBE KPL.
ANSCHRAUBSCHARNIER 25X	10871177	9	2	410	965784408	DACHSCHEIBE VORM.
ANSCHWEISSPLATTE DIN 301	602015408	36	2	26	96034894	SCHUTZBLECH KPL.LI.
ANSCHWEISSPLATTE DIN 301	602015408	36	2	29	96034977	SCHUTZBLECH KPL.RE.
ANSCHWEISSPLATTE DIN 301	602015408	323	4	56	96035801	HYDRAULIK MITTELTEIL
ANSCHWEISSPLATTE DIN 301	10802205	33	1	26	96034894	SCHUTZBLECH KPL.LI.
ANSCHWEISSPLATTE DIN 301	10802205	33	1	29	96034977	SCHUTZBLECH KPL.RE.
ANSCHWEISSPLATTE DIN 301	10802205	322	2	56	96035801	HYDRAULIK MITTELTEIL
ANSCHWEISSPLATTE DIN 301	11008020	310	2	98	96035796	HYDR.FAHRANTRIEB
ANSCHWEISSPLATTE DIN 301	11008020	310	2	115	96035792	HYDR.FAHRANTRIEB
ANSTEUERGERAET	10471384	5	1	305	11210795	VERSTELLPUMPE
ANSTEUERGERAET	11690588	5	1	297	11182708	VERSTELLPUMPE
ANSTEUERGERAET	11690588	5	1	300	10871017	VERSTELLPUMPE
ANTENNE	10450273	4	1	46	966204108	ANTENNE KPL.
ANTENNE	10878172	1	1	662	12257818	AUTORADIO
ANTENNE AKTIV	12102817	11	1	467	96053500	ELEKTRIK ANBAUTEILE KABIN
ANTENNE KPL.	966204108	4	2	41	96045226	SCHALTKASTEN VORM.
ANTENNENKABEL 1,27-2M SEI	10876819	60	1	468	96053500	ELEKTRIK ANBAUTEILE KABIN
ANTENNENKABEL 1-5M	11114971	59	1	468	96053500	ELEKTRIK ANBAUTEILE KABIN
ANTENNENSTAB	10815004	1	1	47	10450273	ANTENNE
ANTIRUTSCHBELAG 1.6X25X	97037477	67	2	400	917305408	INNENVERKLEIDUNG EINBAU
ANTRIEB FUER HOCHDRUCK	11407917	180	1	176	13455297	DIESELMOTOR
ANTRIEBSAGGREGAT KPL.	918731408	105	1	12		LIEBHERR LTR 1220
ANTRIEBSAGGREGAT VORM.	919007708	1	1	280	918731408	ANTRIEBSAGGREGAT KPL.
ANTRIEBSFLANSCH EDELST	606012608	6	1	375	966631008	ELEKTRIK WINDE 1
ANTRIEBSFLANSCH EDELST	606012608	(6)	1	604	967969608	HILFSHUBWERK WINDE 2 VO

Bezeichnung	Artikel	Pos.	Menge	Seite	Baugruppe	Bezeichnung
ANTRIEBSRAD 12XB9SX260,3	749056414	4	1	75	91001377	RAUPENTRAEGER VORM.LI.
ANTRIEBSRAD 12XB9SX260,3	749056414	4	1	108	91001378	RAUPENTRAEGER VORM.RE.
ANTRIEBSWELLE	927745101	5	1	370	939292201	PLANETENGETRIEBE
ARBEITSSCHEINWERFER 20W	10877828	6	1	467	96053500	ELEKTRIK ANBAUTEILE KABIN
ARBEITSSCHEINWERFER 20W	10877828	(10)	1	631	918989008	A-SCHEINWERFER DREHBUE
ARBEITSSCHEINWERFER 20W	10877828	20	1	643	96037130	AUSRUESTUNG KAMERA DRE
ARBEITSSCHEINWERFER 20W	10877828	20	1	645	96037131	AUSRUESTUNG KAMERA WIN
ARBEITSSCHEINWERFER 20W	10877828	(4)	1	657	919028808	MECH.TEILE VERSANDMONT
ARBEITSSCHEINWERFER 50W	10872003	5	2	731	918124908	A-SCHEINWERFER ANLENKS
ARMATURENBRETT DACH	96022872	2	1	467	96053500	ELEKTRIK ANBAUTEILE KABIN
ARMATURENHALTER	10009700	57	1	428	11083498	HEIZKLIMAGERAET
ARMLEHNE 310ERGO	774119708	1	1	437	962282208	ARMLEHNE LINKS
ARMLEHNE 310ERGO	774119808	1	1	439	962282308	ARMLEHNE RECHTS
ARMLEHNE LINKS	962282208	1	1	436	96032222	NACHARBEIT ARMLEHNE LI.
ARMLEHNE RECHTS	962282308	1	1	438	96032223	NACHARBEIT ARMLEHNE RE.
ARMLEHNENAUFLAGE	971636608	2	1	437	962282208	ARMLEHNE LINKS
ARMLEHNENAUFLAGE	971636608	2	1	439	962282308	ARMLEHNE RECHTS
ASCHENBECHER KUNSTSTOF	10291997	33	1	399	917305408	INNENVERKLEIDUNG EINBAU
ATL-ANBAU	10140729	430	1	178	13455297	DIESELMOTOR
AUFFANGGURT EN 361 IK G 2	11007305	1	1	167	916959808	PERSOENLICHE SCHUTZAUS
AUFKLEBER	10663909	(1)	1	136	11347526	ELEKTROPUMPE
AUFKLEBER BEHAELTER 2,5K	967421808	27	1	136	11347526	ELEKTROPUMPE
AUFKLEBER BEHAELTER 2,5K	967421808	30	1	525	10327065	ELEKTROPUMPE
AUFLAGEBOCK FE//ZNNI8//CN/	965255408	26	1	378	917259908	KRANFUEHRERKABINE ANBA
AUFNAHME 70.0X74 35NICRM	97158093	3	1	155	91001571	BOLZENZIEHVORRICHTUNG
AUFNAHME SCHWK. WARNEI	968410408	1	1	747	917551608	ANBAUTEILE
AUFNAHMEGEHAEUSE 4-POL	602337608	514	1	542	96045387	DRAEHTE GRUNDAUFBAU KPL
AUFSTECKROHR	607226808	21	2	527	919410708	EL.ANLAGE DREHBUEHNE
AUSGLEICHSBEHAELTER	570065908	1	1	102	502806508	AUSGLEICHSBEHAELTER
AUSGLEICHSBEHAELTER	96034522	3	1	280	918731408	ANTRIEBSAGGREGAT KPL.
AUSGLEICHSBEHAELTER 0,2L	502807308	(1)	1	616	967784808	HYDRAULIK HILFSHUBWERK
AUSGLEICHSBEHAELTER 1L	502806508	1	1	101	96028333	AUSGLEICHSBEHAELTER KPL
AUSGLEICHSBEHAELTER KPL	96028331	152	1	616	967784808	HYDRAULIK HILFSHUBWERK
AUSGLEICHSBEHAELTER KPL	96028333	161	1	98	96035796	HYDR.FAHRANTRIEB
AUSGLEICHSBEHAELTER KPL	96028333	161	1	115	96035792	HYDR.FAHRANTRIEB
AUSGLEICHSBEHAELTER SCH	96035739	1	1	329	96034522	AUSGLEICHSBEHAELTER
AUSGLEICHSBEHAELTER SCH	96035326	1	1	328	96034515	AUSGLEICHSBEHAELTER VO
AUSGLEICHSBEHAELTER VO	96034515	2	1	280	918731408	ANTRIEBSAGGREGAT KPL.
AUSGLEICHSBLECH FE//ZNNI	964984108	26	2	433	918810308	STEUERSTAND
AUSGLEICHSCHEIBE	511015508	17	2	585	511433908	DRUCKBEGRENZUNGSVENTI
AUSGLEICHSCHEIBE	511015508	17	1	588	511419608	DRUCKBEGRENZUNGSVENTI
AUSGLEICHSPLATTE	10115155	18	4	52	11346779	SCHLEIFRINGUEBERTRAGER
AUSGLEICHSPLATTE	10359124	20	2	52	11346779	SCHLEIFRINGUEBERTRAGER
AUSGLEICHWELLE VORM.	10152441	1	2	209	10120186	MASSENAUSGLEICH ANBAU
AUSLASSMODUL SCRFILTER	11429873	3	1	516	11429728	SCRFILTER-BAUGRUPPE
AUSLASSVENTIL	10136751	(4)	2	202	10149580	ZYLINDERKOPF ANBAU
AUSLASSVENTIL	10136751	4	2	204	10149579	ZYLINDERKOPF VORM.
AUSRUESTUNG KAMERA DRE	96037130	4	1	633	918992008	KAMERAUEBERWACHUNG O
AUSRUESTUNG KAMERA KAB	96045237	3	1	633	918992008	KAMERAUEBERWACHUNG O
AUSRUESTUNG KAMERA WIN	96037131	5	1	633	918992008	KAMERAUEBERWACHUNG O
AUSSCHUBMECHANIK	918807308	7	1	663	918804808	TELESKOPAUSLEGER KPL.
AUSSENGRIFF ZUG	11005987	4	1	422	966230408	SCHLIESSANLAGE
AUSSENLAMELLE	10175221	(1)	8	353	90008901	DREHWERKANTRIEB
AUSSENLAMELLE	10175221	5	8	356	90025781	BREMSLAMELLENSATZ
AUSSENLAMELLE	737350603	(4)	9	78	90028956	FAHRANTRIEB
AUSSTROEMDUESE D=63 AB	10301409	30	2	399	917305408	INNENVERKLEIDUNG EINBAU
AUSSTROEMDUESE D=82 T=5	553193208	29	6	399	917305408	INNENVERKLEIDUNG EINBAU
AUTORADIO	12257818	1	1	661	916166208	AUTORADIO
AUTORADIO	916166208	199	1	14		LIEBHERR LTR 1220
AX.ZYL.ROLLENLAGER DIN 7	746607401	37	1	754	910836808	HAKENFLASCHE

Bezeichnung	Artikel	Pos.	Menge	Seite	Baugruppe	Bezeichnung
AXIALLAGER	12103676	5	1	753	919007108	LASTHAKEN
AXIALLUEFTER 24V	10222682	1	1	474	963398008	AXIALLUEFTER VORM.OBEN
AXIALLUEFTER VORM.OBEN	963398008	35	1	467	96053500	ELEKTRIK ANBAUTEILE KABIN
AXIALLUEFTER VORM.OBEN	963398008	26	2	544	969256608	GRUNDAUFBAU
BALLAST DREHBUEHNE 4X10	917404508	147	1	13		LIEBHERR LTR 1220
BALLASTIERZYLINDER 240/15	10877810	1	2	489	918956108	HYDRAULISCHE BALLASTIER
BALLASTTRAVERSE 70T	917531708	304	1	14		LIEBHERR LTR 1220
BALLASTUEBERWACHUNG	919499508	23	1	12		LIEBHERR LTR 1220
BATTERIE 1.5V 16.5AH	613200608	3	10	153	928620108	ZUBEHOER
BATTERIE 12V 180AH	10664204	5	2	335	96023914	ELEKTRIK BATTERIEKASTEN
BATTERIEHAUPTSCHALTER	96023960	19	1	335	96023914	ELEKTRIK BATTERIEKASTEN
BATTERIEKASTEN KPL.	918955408	107	1	12		LIEBHERR LTR 1220
BATTERIEKASTEN SCHWK. SP	96023028	3	1	334	96023117	BATTERIEKASTEN VORM.
BATTERIEKASTEN VORM.	96023117	1	1	332	918955408	BATTERIEKASTEN KPL.
BATTERIEKLEMME 15,9MM² V	613206608	21	2	335	96023914	ELEKTRIK BATTERIEKASTEN
BATTERIEKLEMME 17,5MM² V	613206508	22	2	335	96023914	ELEKTRIK BATTERIEKASTEN
BE- UND ENTLUEFTUNGSFILT	7002458	7	1	374	90200104	OELMESSEINRICHTUNG
BE- UND ENTLUEFTUNGSFILT	721108801	7	1	612	90200103	OELMESSEINRICHTUNG
BEARBEITUNG CAN- STUETZ	96014807	2998	2	463	96036955	KABELSTRANG
BEARBEITUNG CAN- STUETZ	96014807	2998	10	537	96037137	KABELSTRANG
BECHERHALTER	96048757	1	1	384	96057226	BECHERHALTER EINBAU
BECHERHALTER EINBAU	96057226	8	1	383	96015921	BEDIENELEMENTE EINBAU
BEDIENELEMENTE EINBAU	96015921	2	1	381	919010208	KRANFUEHRERKABINE VORM.
BEFESTIGUNG DRUCKROHR	10135434	5	1	222	10152874	RS INJEKTOR
BEFESTIGUNG DRUCKROHR	10135434	3	1	223	10141140	RS DRUCKROHRSTUTZEN
BEFESTIGUNG DRUCKROHR	10135434	4	1	225	10153151	DRUCKROHRSTUTZEN MIT BE
BEFESTIGUNGSBLECH X52,8	10142670	2	1	255	10142863	GENERATOR VORM.
BEFESTIGUNGSMATERIAL	10650403	49	1	435	10877138	FAHRERSITZ
BEFESTIGUNGSMATERIAL	11171275	65	1	435	10877138	FAHRERSITZ
BEFESTIGUNGSMUTTER	10423992	(1)	2	568	11211756	STEUERBLOCK
BEFESTIGUNGSMUTTER	10663825	(1)	1	298	11690588	ANSTEUERGERAET
BEFESTIGUNGSMUTTER	10663825	1	1	324	10292801	REGLER
BEFESTIGUNGSMUTTER	10663825	(1)	2	325	10292815	REGLERELEMENT
BEFESTIGUNGSMUTTER M16X	602042208	12	1	551	969061708	TRAEGERBLECH SICHERUNG
BEFESTIGUNGSSCHELLE	570066408	7	1	102	502806508	AUSGLEICHSBEHAELTER
BEFESTIGUNGSSCHELLE 34 E	10123304	1	1	268	10144098	BEFESTIGUNGSSCHELLE
BEFESTIGUNGSSCHELLE 34	10144098	6	2	267	10144227	STEUERGERAET ANBAU
BEHAELTER	10038271	26	1	136	11347526	ELEKTROPUMPE
BEHAELTER	10038271	29	1	525	10327065	ELEKTROPUMPE
BEHAELTERDECKEL	12102477	40	1	136	11347526	ELEKTROPUMPE
BEHAELTERDECKEL	12102477	34	1	525	10327065	ELEKTROPUMPE
BEHAELTERSTOPFEN	570066208	4	1	102	502806508	AUSGLEICHSBEHAELTER
BEHAELTERVERSCHRAUBUN	10878281	2	1	101	96028333	AUSGLEICHSBEHAELTER KPL
BEHAELTERVERSCHRAUBUN	10878281	(2)	1	616	967784808	HYDRAULIK HILFSHUBWERK
BELUEFTUNGSFILTER	510667308	6	2	348	969050308	OELBEHAELTER VORM.
BESCHILDERUNG FREMDEIN	918462408	417	1	15		LIEBHERR LTR 1220
BESCHILDERUNG GEGENGE	968992508	15	1	652	917260608	GEGENGEWICHT M.BEFESTIG
BESCHILDERUNG GROSSBRI	917862808	42	1	12		LIEBHERR LTR 1220
BESCHILDERUNG MASTNASE	967774608	100	1	734	917268408	MASTNASE
BESCHILDERUNG TRANSPO	919127808	421	1	15		LIEBHERR LTR 1220
BESCHRIFTUNG ADER	965622108	996	20	48	96045227	KABELSTRANG
BESCHRIFTUNG ADER	965622108	996	20	50	96045228	KABELSTRANG
BESCHRIFTUNG ADER	965622108	996	8	463	96036955	KABELSTRANG
BESCHRIFTUNG ADER	965622108	996	8	464	96036956	KABELSTRANG
BESCHRIFTUNG ADER	965622108	996	62	533	96045385	KABELSTRANG
BESCHRIFTUNG ADER	965622108	996	124	535	96037136	KABELSTRANG
BESCHRIFTUNG ADER	965622108	996	52	537	96037137	KABELSTRANG
BESCHRIFTUNG ADER	965622108	996	3	738	96068455	LEITUNG
BESCHRIFTUNG KABELBAUM	965622208	998	1	48	96045227	KABELSTRANG
BESCHRIFTUNG KABELBAUM	965622208	998	1	50	96045228	KABELSTRANG

Bezeichnung	Artikel	Pos.	Menge	Seite	Baugruppe	Bezeichnung
BESCHRIFTUNG KABELBAUM	965622208	998	3	142	96045205	KABELSTRANG
BESCHRIFTUNG KABELBAUM	965622208	998	1	463	96036955	KABELSTRANG
BESCHRIFTUNG KABELBAUM	965622208	998	1	464	96036956	KABELSTRANG
BESCHRIFTUNG KABELBAUM	965622208	998	1	533	96045385	KABELSTRANG
BESCHRIFTUNG KABELBAUM	965622208	998	1	535	96037136	KABELSTRANG
BESCHRIFTUNG KABELBAUM	965622208	998	1	537	96037137	KABELSTRANG
BESCHRIFTUNG KABELBAUM	965622208	998	3	538	96037133	LEITUNG
BESCHRIFTUNG KABELBAUM	965622208	998	2	642	96043733	KABELSTRANG
BESCHRIFTUNG KABELBAUM	965622208	998	3	644	96037132	LEITUNG
BESCHRIFTUNG KABELBAUM	965622208	998	2	738	96068455	LEITUNG
BESCHRIFTUNG KABELBAUM	965622208	(998)	2	741	917598408	ELEKTRIK MESS-U.WARNEINR
BESTUECKUNGSMODUL 12PO	965547208	2	1	546	967589508	KLEMMENLEISTE
BETAETIGUNG	967978808	1	1	492	967928508	VERRIEGELUNG
BETAETIGUNGSDORN GD-ZN	704253408	(1)	1	42	966167808	DECKEL KPL.
BETAETIGUNGSDORN GD-ZN	704253408	7	4	42	966167808	DECKEL KPL.
BETAETIGUNGSDORN GD-ZN	704253408	4	5	86	967972208	DECKEL VORM.
BETAETIGUNGSDORN GD-ZN	704253408	4	2	87	967972308	DECKEL VORM.
BETAETIGUNGSDORN GD-ZN	704253408	4	2	88	967972408	DECKEL VORM.
BETAETIGUNGSDORN GD-ZN	704253408	4	2	89	968270108	DECKEL VORM.
BETAETIGUNGSDORN GD-ZN	704253408	4	2	90	968274208	DECKEL VORM.
BETAETIGUNGSDORN GD-ZN	704253408	4	5	110	968055808	DECKEL VORM.
BETAETIGUNGSDORN GD-ZN	704253408	14	1	334	96023117	BATTERIEKASTEN VORM.
BETRIEBSSTUNDENZAEHLER	691798508	3	1	471	96022872	ARMATURENBRETT DACH
BEUTEL	11320720	(1)	1	167	916959808	PERSOENLICHE SCHUTZAUS
BEZEICHNUNGSSCHILD 20X8	602761408	12	10	547	926891108	VERTEILER MASSE
BEZEICHNUNGSSCHILD 70X4	10288121	300	1	45	968252908	BTB PROGRAMMIERT
BEZEICHNUNGSSCHILD 70X4	10288121	(980)	1	467	96053500	ELEKTRIK ANBAUTEILE KABIN
BEZEICHNUNGSSCHILD 70X4	10288121	(980)	1	467	96053500	ELEKTRIK ANBAUTEILE KABIN
BEZEICHNUNGSSCHILD 70X4	10288121	(2)	1	471	96022872	ARMATURENBRETT DACH
BEZEICHNUNGSSCHILD 70X4	10288121	(300)	1	540	91000922	EINBAUTEILE SCHALTSCHRAN
BEZEICHNUNGSSCHILD 70X4	10288121	300	1	550	968253608	UNIVERSAL EIN-AUSGANGS
BEZEICHNUNGSSTREIFEN	602762908	7	1	546	967589508	KLEMMENLEISTE
BEZUG	12100617	(1)	1	435	10877138	FAHRERSITZ
BEZUG	12100619	(1)	1	435	10877138	FAHRERSITZ
BLECH	10142763	2	1	249	10142744	KUEHLWASSERENTLUEFTUN
BLECH	518565008	46	1	697	10876933	TELESKOPIERZYLINDER
BLECH 1.5X107X120 DC01 RA	97006876	37	1	399	917305408	INNENVERKLEIDUNG EINBAU
BLECH 1.5X110X178 DC01 FE//	97013718	(1)	1	467	96053500	ELEKTRIK ANBAUTEILE KABIN
BLECH 1.5X112X30 DC01 FE//	972940008	13	2	544	969256608	GRUNDAUFBAU
BLECH 1.5X114X70 DC01 FE//	97025882	8	1	544	969256608	GRUNDAUFBAU
BLECH 1.5X131X117 DC01 FE//	97002645	3	1	390	916170808	KABELEINFUEHRUNG
BLECH 1.5X156X117 DC01 FE//	97024733	14	1	540	91000922	EINBAUTEILE SCHALTSCHRAN
BLECH 1.5X170X50 DC01 FE//	976673908	27	4	378	917259908	KRANFUEHRERKABINE ANBA
BLECH 1.5X174X114 DC01 RAL	976094108	5	1	390	916170808	KABELEINFUEHRUNG
BLECH 1.5X219X129 DC01 FE//	97031454	32	1	378	917259908	KRANFUEHRERKABINE ANBA
BLECH 1.5X256X53 DC01 FE//	979294908	2	1	548	968063108	MONTAGEEINHEIT VORM.
BLECH 1.5X25X47 DC01 RAL 7	97006875	36	1	399	917305408	INNENVERKLEIDUNG EINBAU
BLECH 1.5X290X162 DC01 FE//	97000735	2	1	390	916170808	KABELEINFUEHRUNG
BLECH 1.5X322X156 DC01 RAL	97033190	40	1	378	917259908	KRANFUEHRERKABINE ANBA
BLECH 1.5X399X35 DC01 FE//	97017074	13	1	540	91000922	EINBAUTEILE SCHALTSCHRAN
BLECH 1.5X404X230 DC01 FE//	97032990	2	1	43	968054008	MONTAGEPLATTE VORM.
BLECH 1.5X436X90 DC01 RAL	97003298	24	1	399	917305408	INNENVERKLEIDUNG EINBAU
BLECH 1.5X44X97 X5CRNI18-1	97015722	10	1	381	919010208	KRANFUEHRERKABINE VORM.
BLECH 1.5X456X541 DC01	97029382	3	1	690	917292408	TELESKOP 5 VORM.
BLECH 1.5X551X299 DC01 RA	97002609	23	1	399	917305408	INNENVERKLEIDUNG EINBAU
BLECH 1.5X560X43 DC01 FE//	97091350	8	1	328	96034515	AUSGLEICHSBEHAELTER VO
BLECH 1.5X691X50 X5CRNI18	97030182	2	1	744	967933408	GRUNDHALTER VORM.
BLECH 1.5X70X100 DC01 FE//	978842708	3	2	548	968063108	MONTAGEEINHEIT VORM.
BLECH 1.5X72X538 X5CRNI18	97000469	15	1	399	917305408	INNENVERKLEIDUNG EINBAU
BLECH 1.5X779X733 DC01 FE//	978606708	1	1	548	968063108	MONTAGEEINHEIT VORM.

Bezeichnung	Artikel	Pos.	Menge	Seite	Baugruppe	Bezeichnung
BLECH 1.5X832X41 DC01 RAL	97027494	65	1	400	917305408	INNENVERKLEIDUNG EINBAU
BLECH 1.5X90X96 DC01 RAL	976167908	16	1	467	96053500	ELEKTRIK ANBAUTEILE KABIN
BLECH 1.5X95X40 DC01 RAL	97025127	35	3	409	966497908	FRONTSCHEIBE KPL.
BLECH 10X170X79 S355MC FE	97053069	22	1	172	918731108	MONTAGETEILE DREHBUEHN
BLECH 10X170X80 S355MC FE	97030033	8	2	492	967928508	VERRIEGELUNG
BLECH 10X443X155 S960QL	973258908	45	1	685	917292308	TELESKOP 4 VORM.
BLECH 10X470X158 S960QL	973253408	45	1	681	917292208	TELESKOP 3 VORM.
BLECH 10X477X155 S960QL	973258808	44	2	685	917292308	TELESKOP 4 VORM.
BLECH 10X498X162 S960QL	973246008	45	1	677	917292108	TELESKOP 2 VORM.
BLECH 10X504X361 S960QL	973357908	54	1	668	917291908	ANLENKSTUECK VORM.
BLECH 10X50X350 S355MC	97050776	65	2	21	91001569	RAUPENFAHRWERK KPL.
BLECH 10X523X163 S960QL F	973253308	44	2	681	917292208	TELESKOP 3 VORM.
BLECH 10X526X167 S960QL	972898508	45	1	673	917292008	TELESKOP 1 VORM.
BLECH 10X527X161 S960QL F	973245908	44	2	677	917292108	TELESKOP 2 VORM.
BLECH 10X542X412 S960QL	973357708	46	2	668	917291908	ANLENKSTUECK VORM.
BLECH 10X615X181 S960QL F	972898408	44	2	673	917292008	TELESKOP 1 VORM.
BLECH 110X34 S315MC FE//ZN	979132008	84	1	691	917292408	TELESKOP 5 VORM.
BLECH 110X34 S315MC FE//ZN	979132008	5	1	737	967321308	HALTERUNG 2.HUB OBEN
BLECH 12X164X58 S355MC FE	97118864	6	1	507	919674408	ABGASANLAGE
BLECH 15X105X290 S355MC	97031536	5	1	378	917259908	KRANFUEHRERKABINE ANBA
BLECH 15X260X203 S355MC	97031535	4	1	378	917259908	KRANFUEHRERKABINE ANBA
BLECH 15X30X75 S355MC	97051276	12	2	751	968728808	KONSOLE VORM.
BLECH 15X40X140 S690QL	956348108	24	2	761	917267508	TRANSPORTHALTERUNG DKS
BLECH 15X45X320 S690QL	956347808	11	2	761	917267508	TRANSPORTHALTERUNG DKS
BLECH 15X90X60 S355MC FE//	978361308	23	1	294	968026308	KUPPLUNGSSTELLER
BLECH 192X126 DC01 FE//ZNNI	97037694	(2)	1	616	967784808	HYDRAULIK HILFSHUBWERK
BLECH 196X63 S315MC FE//ZN	955668108	24	1	604	967969608	HILFSHUBWERK WINDE 2 VO
BLECH 196X63 S315MC FE//ZN	955668108	(9)	1	604	967969608	HILFSHUBWERK WINDE 2 VO
BLECH 1X130X30 DC01 FE//ZN	97031661	5	8	758	917413208	SELBSTMONTAGE HILFSHU
BLECH 1X133X94 DC01 FE//ZN	97042769	19	16	35	917511508	RAUPENMITTELTEIL VORM.
BLECH 1X176X176 X5CRNI18-1	974792608	(1)	1	445	96036790	DREHBUEHNENVERKLEIDUN
BLECH 1X176X176 X5CRNI18-1	974792608	(1)	1	445	96036790	DREHBUEHNENVERKLEIDUN
BLECH 1X196X130 X5CRNI18-1	97058414	(1)	1	445	96036790	DREHBUEHNENVERKLEIDUN
BLECH 1X234X43 DC01 FE//ZN	973246908	21	4	673	917292008	TELESKOP 1 VORM.
BLECH 1X234X43 DC01 FE//ZN	973246908	21	4	677	917292108	TELESKOP 2 VORM.
BLECH 1X234X43 DC01 FE//ZN	973246908	21	4	681	917292208	TELESKOP 3 VORM.
BLECH 1X234X43 DC01 FE//ZN	973246908	21	4	685	917292308	TELESKOP 4 VORM.
BLECH 1X234X43 DC01 FE//ZN	973246908	44	4	690	917292408	TELESKOP 5 VORM.
BLECH 1X252X83 DC01 FE//ZN	97033889	21	1	286	919007708	ANTRIEBSAGGREGAT VORM.
BLECH 1X285X126 DC01 RAL 9	977444308	17	1	433	918810308	STEUERSTAND
BLECH 1X285X126 DC01 RAL 9	977444408	18	1	433	918810308	STEUERSTAND
BLECH 1X40X140 DC01+ZE	956348608	45	1	761	917267508	TRANSPORTHALTERUNG DKS
BLECH 1X516X48 DC01 FE//ZN	97035164	38	8	20	91001569	RAUPENFAHRWERK KPL.
BLECH 1X516X55 DC01 FE//ZN	97035163	37	8	20	91001569	RAUPENFAHRWERK KPL.
BLECH 1X60X115 DC01 FE//ZN	97032839	8	32	124	968046208	ANBAUTEILE
BLECH 1X65X94 DC01 FE//ZN	97042770	20	16	35	917511508	RAUPENMITTELTEIL VORM.
BLECH 1X70X80 DC01 FE//ZN	953515508	9	1	337	917626608	KRAFTSTOFFBEHAELTER AN
BLECH 1X70X80 DC01 FE//ZN	953515508	10	8	345	917825508	OELBEHAELTER ANBAU
BLECH 1X86X53 DC01 FE//ZN	957025308	24	4	673	917292008	TELESKOP 1 VORM.
BLECH 1X86X53 DC01 FE//ZN	957025308	24	4	677	917292108	TELESKOP 2 VORM.
BLECH 1X86X53 DC01 FE//ZN	957025308	24	4	681	917292208	TELESKOP 3 VORM.
BLECH 1X86X53 DC01 FE//ZN	957025308	24	4	685	917292308	TELESKOP 4 VORM.
BLECH 1X86X53 DC01 FE//ZN	957025308	46	4	690	917292408	TELESKOP 5 VORM.
BLECH 1X90X60 DC01 FE//ZN	97032616	4	6	30	968019508	ENDSCHALTER ANBAU
BLECH 1x320x35 DC01+ZE	956348808	14	1	761	917267508	TRANSPORTHALTERUNG DKS
BLECH 2.5X130X28 DC01 RAL	979022608	7	2	410	965784408	DACHSCHEIBE VORM.
BLECH 2.5X235X575 DC01 FE//	97100731	4	1	334	96023117	BATTERIEKASTEN VORM.
BLECH 2.5X71X196 DC01 RAL	97022452	53	1	467	96053500	ELEKTRIK ANBAUTEILE KABIN
BLECH 2.5X73X78 DC01 FE//ZN	97032370	48	1	75	91001377	RAUPENTRAEGER VORM.LI.
BLECH 2.5X73X78 DC01 FE//ZN	97032370	48	1	108	91001378	RAUPENTRAEGER VORM.RE.

Bezeichnung	Artikel	Pos.	Menge	Seite	Baugruppe	Bezeichnung
BLECH 200X309 S355MC	972133308	10	1	668	917291908	ANLENKSTUECK VORM.
BLECH 20X126X40 S355J2+N	97118866	17	1	511	96051842	ABGASANLAGE VORM.
BLECH 20X375X135 S960QL	97032051	2	1	363	917259608	DREHBUEHNENARRETIERUN
BLECH 20X375X135 S960QL	97034837	8	1	363	917259608	DREHBUEHNENARRETIERUN
BLECH 20X45X230 S690QL	953608508	9	2	147	919087608	DREHDURCHFUEHRUNG
BLECH 20X45X230 S690QL	953608508	17	2	761	917267508	TRANSPORTHALTERUNG DKS
BLECH 20X490X490 S690QL F	97061080	36	1	286	919007708	ANTRIEBSAGGREGAT VORM.
BLECH 25X107X49 S690QL	97052637	9	4	129	919644008	HYDRAULISCHE ABSTUETZUN
BLECH 25X202X279 S690QL SP	97030323	1	2	758	917413208	SELBSTMONTAGE HILFSHU
BLECH 2X100X210 DC01 FE//	970537808	31	12	673	917292008	TELESKOP 1 VORM.
BLECH 2X100X210 DC01 FE//	970537808	31	18	677	917292108	TELESKOP 2 VORM.
BLECH 2X100X210 DC01 FE//	970537808	31	14	681	917292208	TELESKOP 3 VORM.
BLECH 2X100X210 DC01 FE//	970537808	31	14	685	917292308	TELESKOP 4 VORM.
BLECH 2X100X210 DC01 FE//	970537808	42	12	690	917292408	TELESKOP 5 VORM.
BLECH 2X100X290 DC01 FE//	97011478	26	2	20	91001569	RAUPENFAHRWERK KPL.
BLECH 2X1160X520 ALMG3 H	97121229	2	1	518	96039752	ZUSATZTEILE VERKLEIDUNG
BLECH 2X1225X659 ALMG3 H	97033140	15	1	455	969015908	DREHBUEHNENVERKLEIDUN
BLECH 2X1248X623 ALMG3 H	97033141	1	1	459	917610208	ZUSATZTEILE
BLECH 2X130X30 DC01 FE//ZN	97031660	4	8	758	917413208	SELBSTMONTAGE HILFSHU
BLECH 2X130X89 ALMG3 H111	97052638	2	1	520	918731908	LUFTFILTERANLAGE
BLECH 2X138X117 DC01 FE//	97059337	19	1	286	919007708	ANTRIEBSAGGREGAT VORM.
BLECH 2X143X88 DC01 FE//ZN	97083880	1	1	547	926891108	VERTEILER MASSE
BLECH 2X143X92 X5CRNI18-1	97030562	3	1	745	967936408	WINDWARNUNG VORM.
BLECH 2X145X62 DC01 FE//ZN	97031205	5	2	604	967969608	HILFSHUBWERK WINDE 2 VO
BLECH 2X148X148 ALMG3 H11	97031272	2	1	87	967972308	DECKEL VORM.
BLECH 2X148X148 ALMG3 H11	97031272	2	1	89	968270108	DECKEL VORM.
BLECH 2X155X38 DC01 FE//ZN	971067708	10	1	734	917268408	MASTNASE
BLECH 2X155X38 DC01 FE//ZN	971067708	1	1	737	967321308	HALTERUNG 2.HUB OBEN
BLECH 2X156X137 DC01 RAL 7	97071962	15	1	390	916170808	KABELEINFUEHRUNG
BLECH 2X158X79 DC01 FE//ZN	97061320	9	1	286	919007708	ANTRIEBSAGGREGAT VORM.
BLECH 2X160X196 DC01 FE//	97034301	16	1	445	96036790	DREHBUEHNENVERKLEIDUN
BLECH 2X162X142 ALMG3 H11	976536208	5	1	548	968063108	MONTAGEEINHEIT VORM.
BLECH 2X170X51 DC01 FE//ZN	97024781	19	1	406	916162508	SCHEIBEN EINBAU
BLECH 2X173X139 DC01 FE//	97032982	18	1	286	919007708	ANTRIEBSAGGREGAT VORM.
BLECH 2X177X240 DC01 FE//	97006461	9	1	415	916163008	WISCHANLAGE EINBAU
BLECH 2X180X191 ALMG3 H11	975842108	1	1	450	964093408	DECKEL KPL.
BLECH 2X190X18 DC01 FE//ZN	979294808	12	2	544	969256608	GRUNDAUFBAU
BLECH 2X191X185 X5CRNI18-1	97030307	1	1	746	967937608	HINDERNISFEUER VORM.
BLECH 2X195X66 X5CRNI18-1	974742308	4	1	449	968923508	KLAPPE VORM.RECHTS
BLECH 2X198X248 ALMG3 H11	97038089	2	1	90	968274208	DECKEL VORM.
BLECH 2X200X280 DC01 FE//	97039974	63	4	21	91001569	RAUPENFAHRWERK KPL.
BLECH 2X200X60 DC01 FE//ZN	97046465	40	4	129	919644008	HYDRAULISCHE ABSTUETZUN
BLECH 2X2038X172 DC01 FE//	97031350	6	1	592	967980508	OELKUEHLER VORM.
BLECH 2X203X318 ALMG3 H11	97045975	2	1	91	968709108	DECKEL VORM.
BLECH 2X210X85 DC01 FE//ZN	972908208	30	2	673	917292008	TELESKOP 1 VORM.
BLECH 2X210X85 DC01 FE//ZN	972908208	30	4	677	917292108	TELESKOP 2 VORM.
BLECH 2X210X85 DC01 FE//ZN	972908208	30	4	681	917292208	TELESKOP 3 VORM.
BLECH 2X210X85 DC01 FE//ZN	972908208	30	4	685	917292308	TELESKOP 4 VORM.
BLECH 2X210X85 DC01 FE//ZN	972908208	34	4	690	917292408	TELESKOP 5 VORM.
BLECH 2X220X100 DC01 FE//	974276208	90	1	669	917291908	ANLENKSTUECK VORM.
BLECH 2X227X109 DC01 FE//	97005289	5	1	409	966497908	FRONTSCHEIBE KPL.
BLECH 2X231X192 DC01 RAL	97025080	24	1	641	96045237	AUSRUESTUNG KAMERA KAB
BLECH 2X236X50 X5CRNI18-1	974656608	7	1	457	969016008	KLAPPE VORM.VORN LINKS
BLECH 2X244X449 ALMG3 H11	97031267	2	1	86	967972208	DECKEL VORM.
BLECH 2X244X449 ALMG3 H11	97031267	2	1	110	968055808	DECKEL VORM.
BLECH 2X25X80 DC01 FE//ZN	97047274	28	2	365	917259708	HAUPTHUBWERK
BLECH 2X278X250 DC01 FE//	97028172	12	1	690	917292408	TELESKOP 5 VORM.
BLECH 2X290X100 DC01 FE//	97037945	25	2	20	91001569	RAUPENFAHRWERK KPL.
BLECH 2X290X22 DC01 FE//ZN	979724708	23	1	445	96036790	DREHBUEHNENVERKLEIDUN
BLECH 2X291X200 X5CRNI18-1	97008317	2	1	637	968290608	STATIV

Bezeichnung	Artikel	Pos.	Menge	Seite	Baugruppe	Bezeichnung
BLECH 2X291X200 X5CRNI18-1	97008317	1	1	640	968267208	STATIV
BLECH 2X297X1030 DC01 FE//	97049819	10	1	445	96036790	DREHBUEHNENVERKLEIDUN
BLECH 2X300X125 DC01 FE//	97045050	16	1	286	919007708	ANTRIEBSAGGREGAT VORM.
BLECH 2X303X252 DC01 FE//	97009056	13	1	668	917291908	ANLENKSTUECK VORM.
BLECH 2X361X79 DC01 FE//ZN	97072959	32	1	286	919007708	ANTRIEBSAGGREGAT VORM.
BLECH 2X368X357 DC01 FE//	97103093	2	1	26	96034894	SCHUTZBLECH KPL.LI.
BLECH 2X368X357 DC01 FE//	97103093	2	1	29	96034977	SCHUTZBLECH KPL.RE.
BLECH 2X377X579 X5CRNI18-1	97072923	(1)	1	286	919007708	ANTRIEBSAGGREGAT VORM.
BLECH 2X381X148 DC01 FE//	97003805	10	1	383	96015921	BEDIENELEMENTE EINBAU
BLECH 2X388X685 ALMG3 H11	97155412	92	1	76	91001377	RAUPENTRAEGER VORM.LI.
BLECH 2X388X685 ALMG3 H11	97155761	92	1	109	91001378	RAUPENTRAEGER VORM.RE.
BLECH 2X40X140 DC01+ZE	956348708	46	1	761	917267508	TRANSPORTHALTERUNG DKS
BLECH 2X431X420 ALMG3 H11	97049712	35	1	445	96036790	DREHBUEHNENVERKLEIDUN
BLECH 2X50X115 X5CRNI18-1	974657908	11	1	455	969015908	DREHBUEHNENVERKLEIDUN
BLECH 2X50X559 X5CRNI18-1	97016752	31	1	387	916177508	TRITT KPL.
BLECH 2X516X48 DC01 FE//ZN	97031992	14	16	20	91001569	RAUPENFAHRWERK KPL.
BLECH 2X516X55 DC01 FE//ZN	97031991	13	40	20	91001569	RAUPENFAHRWERK KPL.
BLECH 2X520X250 ALMG3 H11	97126286	6	1	518	96039752	ZUSATZTEILE VERKLEIDUNG
BLECH 2X550X297 DC01	97100598	1	1	334	96023117	BATTERIEKASTEN VORM.
BLECH 2X580X25 DC01	97127026	10	1	332	918955408	BATTERIEKASTEN KPL.
BLECH 2X601X334 ALMG3 H11	97050960	10	1	291	96034631	KUEHLER VORM.
BLECH 2X639X612 DC01	97031539	6	1	455	969015908	DREHBUEHNENVERKLEIDUN
BLECH 2X700X109 DC01 FE//	97025690	8	1	395	917304508	KRANFUEHRERKABINE VORM.
BLECH 2X704X353 DC01	970509808	56	1	668	917291908	ANLENKSTUECK VORM.
BLECH 2X70X80 DC01	953515408	8	3	337	917626608	KRAFTSTOFFBEHAELTER AN
BLECH 2X719X40 DC01 FE//ZN	97005273	4	1	409	966497908	FRONTSCHEIBE KPL.
BLECH 2X730X110 ALMG3 H11	97031642	7	32	20	91001569	RAUPENFAHRWERK KPL.
BLECH 2X737X46 DC01 RAL 90	979022508	6	1	410	965784408	DACHSCHEIBE VORM.
BLECH 2X768X448 ALMG3 H11	97121306	3	1	518	96039752	ZUSATZTEILE VERKLEIDUNG
BLECH 2X771X357 ALMG3 H11	97050762	5	1	291	96034631	KUEHLER VORM.
BLECH 2X779X198 ALMG3 H11	97059376	3	1	291	96034631	KUEHLER VORM.
BLECH 2X77X96 DC01 FE//ZN	97031462	36	2	378	917259908	KRANFUEHRERKABINE ANBA
BLECH 2X810X132 DC01 RAL 7	97000470	14	1	399	917305408	INNENVERKLEIDUNG EINBAU
BLECH 2X90X60 DC01 FE//ZN	97032617	5	8	30	968019508	ENDSCHALTER ANBAU
BLECH 2X90X60 DC01 FE//ZN	97104898	112	12	76	91001377	RAUPENTRAEGER VORM.LI.
BLECH 2X90X60 DC01 FE//ZN	97104898	113	12	109	91001378	RAUPENTRAEGER VORM.RE.
BLECH 2X98X168 ALMG3 H111	97031274	2	1	88	967972408	DECKEL VORM.
BLECH 2X99X24 DC01 FE//ZN	979718908	22	2	445	96036790	DREHBUEHNENVERKLEIDUN
BLECH 2x230x225 DC01+ZE	970536208	13	10	677	917292108	TELESKOP 2 VORM.
BLECH 2x230x225 DC01+ZE	970536208	13	10	681	917292208	TELESKOP 3 VORM.
BLECH 2x230x225 DC01+ZE	970536208	13	10	685	917292308	TELESKOP 4 VORM.
BLECH 2x230x225 DC01+ZE	970536208	35	10	690	917292408	TELESKOP 5 VORM.
BLECH 2x320x35 DC01+ZE	956348908	15	1	761	917267508	TRANSPORTHALTERUNG DKS
BLECH 2x350x225 DC01+ZE	970545708	13	10	673	917292008	TELESKOP 1 VORM.
BLECH 30X130X30 S355J2+N	97031659	3	2	758	917413208	SELBSTMONTAGE HILFSHU
BLECH 30X210X140 S355J2+N	97033307	5	1	493	967978908	VERRIEGELUNG VORM.
BLECH 30X246X99 S355J2+N	97033309	6	1	493	967978908	VERRIEGELUNG VORM.
BLECH 30X370X50 S960QL FE/	972898708	50	2	668	917291908	ANLENKSTUECK VORM.
BLECH 30X370X50 S960QL FE/	972898708	54	2	673	917292008	TELESKOP 1 VORM.
BLECH 35X96X20 S690QL	97031206	6	2	604	967969608	HILFSHUBWERK WINDE 2 VO
BLECH 3X1039X407 DC01 FE//	97034193	8	1	767	917268208	LEITER ANBAU
BLECH 3X105X91 X5CRNI18-1	97081505	8	2	382	967986308	LAGERUNG EINBAU
BLECH 3X1101X716 DC01	97040643	1	1	92	968420608	STAUKASTEN VORM.
BLECH 3X120X95 DC01 FE//ZN	97050879	12	1	286	919007708	ANTRIEBSAGGREGAT VORM.
BLECH 3X135X251 ALMG3 H1	97045292	5	1	401	966282308	VERKLEIDUNG LI.
BLECH 3X1360X1190 ALMG3 H	97158863	1	1	157	96063087	STAUKASTEN
BLECH 3X140X72 DC01 FE//ZN	97039936	24	2	286	919007708	ANTRIEBSAGGREGAT VORM.
BLECH 3X150X90 S355MC FE//	979672708	18	1	172	918731108	MONTAGETEILE DREHBUEHN
BLECH 3X152X46 X5CRNI18-1	97118724	11	1	511	96051842	ABGASANLAGE VORM.
BLECH 3X182X77 X5CRNI18-1	97134813	3	1	507	919674408	ABGASANLAGE

Bezeichnung	Artikel	Pos.	Menge	Seite	Baugruppe	Bezeichnung
BLECH 3X185X122 DC01 FE//	97050881	10	1	286	919007708	ANTRIEBSAGGREGAT VORM.
BLECH 3X190X60 DC01 FE//ZN	97118867	9	1	511	96051842	ABGASANLAGE VORM.
BLECH 3X190X80 DC01 FE//ZN	97038475	23	2	286	919007708	ANTRIEBSAGGREGAT VORM.
BLECH 3X191X55 X5CRNI18-1	97031901	7	1	507	919674408	ABGASANLAGE
BLECH 3X191X55 X5CRNI18-1	97059489	8	3	507	919674408	ABGASANLAGE
BLECH 3X193X93 S355MC FE//	97081862	6	2	388	96025887	PEDALTRAEGER EINBAU
BLECH 3X195X183 DC01 FE//	97034243	52	1	480	918759808	ZUSATZHEIZUNG OW
BLECH 3X214X101 X5CRNI18-1	97126014	6	1	511	96051842	ABGASANLAGE VORM.
BLECH 3X231X267 DC01	97041755	14	1	92	968420608	STAUKASTEN VORM.
BLECH 3X234X43 DC01 FE//ZN	973246808	20	4	673	917292008	TELESKOP 1 VORM.
BLECH 3X234X43 DC01 FE//ZN	973246808	20	4	677	917292108	TELESKOP 2 VORM.
BLECH 3X234X43 DC01 FE//ZN	973246808	20	4	681	917292208	TELESKOP 3 VORM.
BLECH 3X234X43 DC01 FE//ZN	973246808	20	4	685	917292308	TELESKOP 4 VORM.
BLECH 3X234X43 DC01 FE//ZN	973246808	43	4	690	917292408	TELESKOP 5 VORM.
BLECH 3X240X109 S355MC FE	97132207	2	2	144	96045206	MECHANISCHE ANBAUTEILE
BLECH 3X26X26 DC01 FE//ZN	971974208	22	2	433	918810308	STEUERSTAND
BLECH 3X27X206 X5CRNI18-1	97053174	6	1	749	968811608	QUERTRAEGER
BLECH 3X283X263 DC01 FE//	97033925	51	1	480	918759808	ZUSATZHEIZUNG OW
BLECH 3X286X480 ALMG3 H11	97118618	30	1	94	96034962	FUEHRUNG LI.
BLECH 3X286X480 ALMG3 H11	97118618	30	1	112	96034980	FUEHRUNG RE.
BLECH 3X286X61 X5CRNI18-1	97043049	24	4	35	917511508	RAUPENMITTELTEIL VORM.
BLECH 3X295X159 S355MC FE	974680008	2	2	388	96025887	PEDALTRAEGER EINBAU
BLECH 3X29X79 X5CRNI18-10	97141550	7	2	511	96051842	ABGASANLAGE VORM.
BLECH 3X300X84 DC01 FE//ZN	97037936	13	1	172	918731108	MONTAGETEILE DREHBUEHN
BLECH 3X30X119 X5CRNI18-1	97026779	54	1	421	917304708	SCHIEBETUER EINBAU
BLECH 3X30X156 DC01 FE//ZN	97101894	11	1	286	919007708	ANTRIEBSAGGREGAT VORM.
BLECH 3X324X319 DC01	97118534	10	1	343	96034872	HALTER KPL.
BLECH 3X325X398 S355MC FE	97119732	10	1	567	96035117	MECH.BEFESTIGUNGSTEILE
BLECH 3X349X278 DC01 FE//	97038364	(1)	1	496	969763408	VERROHRUNG DRUCKLUFTA
BLECH 3X366X104 DC01 RAL 9	977444008	15	1	433	918810308	STEUERSTAND
BLECH 3X366X104 DC01 RAL 9	977444108	16	1	433	918810308	STEUERSTAND
BLECH 3X40X40 DC01 FE//ZN	971974108	21	4	433	918810308	STEUERSTAND
BLECH 3X487X107 ALMG3 H11	97121228	1	1	518	96039752	ZUSATZTEILE VERKLEIDUNG
BLECH 3X50X20 X5CRNI18-10	97062373	6	2	157	96063087	STAUKASTEN
BLECH 3X50X65 DC01 FE//ZN	953756608	23	1	604	967969608	HILFSHUBWERK WINDE 2 VO
BLECH 3X514X788 DC01 FE//	97034194	9	1	767	917268208	LEITER ANBAU
BLECH 3X55X81 X5CRNI18-10	97141617	8	1	511	96051842	ABGASANLAGE VORM.
BLECH 3X60X25 DC01 FE//ZN	97001250	8	2	412	916168308	LUFTFUEHRUNG
BLECH 3X60X80 DC01 FE//ZN	973717208	27	1	286	919007708	ANTRIEBSAGGREGAT VORM.
BLECH 3X63X94 DC01 FE//ZN	97033348	23	1	430	969085208	HEIZUNG VORM.
BLECH 3X646X519 S355MC FE	97053103	40	1	286	919007708	ANTRIEBSAGGREGAT VORM.
BLECH 3X678X272 DC01	97040644	2	1	92	968420608	STAUKASTEN VORM.
BLECH 3X70X105 S355MC FE//	97039576	11	2	124	968046208	ANBAUTEILE
BLECH 3X70X222 DC01 FE//ZN	97031203	3	2	604	967969608	HILFSHUBWERK WINDE 2 VO
BLECH 3X70X75 DC01 RAL 300	953756708	5	2	768	968090008	HAKENSTANGE ANBAU
BLECH 3X75X145 DC01 FE//ZN	97006497	3	1	767	917268208	LEITER ANBAU
BLECH 3X75X61 X5CRNI18-10	97000492	26	1	421	917304708	SCHIEBETUER EINBAU
BLECH 3X78X46 X5CRNI18-10	97118725	12	2	511	96051842	ABGASANLAGE VORM.
BLECH 3X80X55 DC01	97040645	3	1	92	968420608	STAUKASTEN VORM.
BLECH 3X80X68 DC01 FE//ZN	973717308	25	1	286	919007708	ANTRIEBSAGGREGAT VORM.
BLECH 3X830X560 ALMG3 H11	97158864	2	1	157	96063087	STAUKASTEN
BLECH 3X86X53 DC01 FE//ZN	957025408	28	4	673	917292008	TELESKOP 1 VORM.
BLECH 3X86X53 DC01 FE//ZN	957025408	28	4	677	917292108	TELESKOP 2 VORM.
BLECH 3X86X53 DC01 FE//ZN	957025408	28	4	681	917292208	TELESKOP 3 VORM.
BLECH 3X86X53 DC01 FE//ZN	957025408	28	4	685	917292308	TELESKOP 4 VORM.
BLECH 3X86X53 DC01 FE//ZN	957025408	45	4	690	917292408	TELESKOP 5 VORM.
BLECH 3X926X218 S355MC FE	97053104	41	1	286	919007708	ANTRIEBSAGGREGAT VORM.
BLECH 3X98X74 DC01 FE//ZN	97050880	17	2	286	919007708	ANTRIEBSAGGREGAT VORM.
BLECH 4X110X180 S315MC FE	97077348	(4)	1	496	969763408	VERROHRUNG DRUCKLUFTA
BLECH 4X110X50 S315MC FE//	97048340	20	1	493	967978908	VERRIEGELUNG VORM.

Bezeichnung	Artikel	Pos.	Menge	Seite	Baugruppe	Bezeichnung
BLECH 4X110X77 S315MC FE//	979717908	2	2	449	968923508	KLAPPE VORM.RECHTS
BLECH 4X115X122 S315MC FE	975427508	(3)	1	496	969763408	VERROHRUNG DRUCKLUFTA
BLECH 4X116X148 S315MC FE	97031342	10	1	492	967928508	VERRIEGELUNG
BLECH 4X117X158 S315MC FE	97050764	7	1	291	96034631	KUEHLER VORM.
BLECH 4X125X178 S315MC FE	97037626	20	2	39	96045225	ELEKTRIK MITTELSTUECK
BLECH 4X128X75 S315MC FE//	972934408	(1)	1	728	967785008	ZUSATZHYDRAULIK KLAPPSPI
BLECH 4X130X144 S315MC FE	97049834	15	1	445	96036790	DREHBUEHNENVERKLEIDUN
BLECH 4X130X200 ALMG3 H11	97031273	1	1	88	967972408	DECKEL VORM.
BLECH 4X130X30 S315MC FE//	97031684	6	8	758	917413208	SELBSTMONTAGE HILFSHU
BLECH 4X132X73 S315MC FE//	97041747	26	1	286	919007708	ANTRIEBSAGGREGAT VORM.
BLECH 4X134X188 S315MC FE	97049833	14	1	445	96036790	DREHBUEHNENVERKLEIDUN
BLECH 4X138X138 S315MC FE	975208408	6	1	383	96015921	BEDIENELEMENTE EINBAU
BLECH 4X140X178 S315MC FE	975418208	8	1	567	96035117	MECH.BEFESTIGUNGSTEILE
BLECH 4X140X178 S315MC FE	975418208	(4)	1	616	967784808	HYDRAULIK HILFSHUBWERK
BLECH 4X155X100 S315MC FE	97053626	23	4	35	917511508	RAUPENMITTELTEIL VORM.
BLECH 4X159X133 S315MC FE	97047272	25	2	365	917259708	HAUPTHUBWERK
BLECH 4X168X113 S315MC FE	97033897	16	1	26	96034894	SCHUTZBLECH KPL.LI.
BLECH 4X168X113 S315MC FE	97033897	16	1	29	96034977	SCHUTZBLECH KPL.RE.
BLECH 4X168X113 S315MC FE	97033935	15	1	26	96034894	SCHUTZBLECH KPL.LI.
BLECH 4X168X113 S315MC FE	97033935	15	1	29	96034977	SCHUTZBLECH KPL.RE.
BLECH 4X178X133 S315MC FE	97039694	12	1	172	918731108	MONTAGETEILE DREHBUEHN
BLECH 4X180X143 S700MC	97033009	23	2	129	919644008	HYDRAULISCHE ABSTUETZUN
BLECH 4X180X145 S700MC	97033010	24	2	129	919644008	HYDRAULISCHE ABSTUETZUN
BLECH 4X180X180 ALMG3 H11	97031271	1	1	87	967972308	DECKEL VORM.
BLECH 4X180X180 ALMG3 H11	97037975	1	1	89	968270108	DECKEL VORM.
BLECH 4X180X99 S315MC FE//	97093426	15	1	94	96034962	FUEHRUNG LI.
BLECH 4X180X99 S315MC FE//	97093426	15	1	112	96034980	FUEHRUNG RE.
BLECH 4X190X188 S315MC FE	974272808	93	2	669	917291908	ANLENKSTUECK VORM.
BLECH 4X210X88 S315MC FE//	97015127	55	2	150	919499408	ZENTRALBALLAST
BLECH 4X2114X788 S315MC	97093430	1	1	26	96034894	SCHUTZBLECH KPL.LI.
BLECH 4X2114X788 S315MC	97093430	1	1	29	96034977	SCHUTZBLECH KPL.RE.
BLECH 4X215X208 S315MC FE	97050763	6	1	291	96034631	KUEHLER VORM.
BLECH 4X230X107 S315MC FE	97093425	16	1	94	96034962	FUEHRUNG LI.
BLECH 4X230X107 S315MC FE	97118621	16	1	112	96034980	FUEHRUNG RE.
BLECH 4X230X280 ALMG3 H11	97038088	1	1	90	968274208	DECKEL VORM.
BLECH 4X239X313 S315MC FE	97093428	4	1	94	96034962	FUEHRUNG LI.
BLECH 4X239X313 S315MC FE	97093428	4	1	112	96034980	FUEHRUNG RE.
BLECH 4X240X188 S315MC FE	97034296	12	1	445	96036790	DREHBUEHNENVERKLEIDUN
BLECH 4X250X190 S315MC FE	953749408	4	1	690	917292408	TELESKOP 5 VORM.
BLECH 4X260X173 S315MC FE	97031570	8	1	455	969015908	DREHBUEHNENVERKLEIDUN
BLECH 4X263X50 S315MC FE//	97030037	9	1	492	967928508	VERRIEGELUNG
BLECH 4X283X50 S315MC FE//	97042636	30	1	492	967928508	VERRIEGELUNG
BLECH 4X287X288 X5CRNI18-1	97118752	1	1	513	96035073	HALTER KPL.
BLECH 4X288X139 S315MC FE	97049782	13	1	445	96036790	DREHBUEHNENVERKLEIDUN
BLECH 4X290X230 S315MC FE	953717608	74	1	669	917291908	ANLENKSTUECK VORM.
BLECH 4X307X332 X5CRNI18-1	97118723	10	1	511	96051842	ABGASANLAGE VORM.
BLECH 4X30X82 X5CRNI18-10	97093827	14	4	511	96051842	ABGASANLAGE VORM.
BLECH 4X32X32 ALMG3 H111	972353808	4	2	291	96034631	KUEHLER VORM.
BLECH 4X347X222 S315MC FE	97000389	6	1	415	916163008	WISCHANLAGE EINBAU
BLECH 4X348X241 S315MC FE	97093429	3	1	26	96034894	SCHUTZBLECH KPL.LI.
BLECH 4X348X241 S315MC FE	97118611	3	1	29	96034977	SCHUTZBLECH KPL.RE.
BLECH 4X350X235 ALMG3 H11	97045974	1	1	91	968709108	DECKEL VORM.
BLECH 4X383X50 S315MC FE//	97097713	2	1	94	96034962	FUEHRUNG LI.
BLECH 4X383X50 S315MC FE//	97097713	2	1	112	96034980	FUEHRUNG RE.
BLECH 4X386X404 S315MC FE	97033143	18	1	455	969015908	DREHBUEHNENVERKLEIDUN
BLECH 4X396X88 S315MC FE//	97033250	56	2	150	919499408	ZENTRALBALLAST
BLECH 4X401X406 S315MC FE	97033142	17	1	455	969015908	DREHBUEHNENVERKLEIDUN
BLECH 4X425X184 S315MC FE	97051275	11	2	751	968728808	KONSOLE VORM.
BLECH 4X429X566 S315MC	97124562	1	1	567	96035117	MECH.BEFESTIGUNGSTEILE
BLECH 4X449X88 S315MC FE//	97033251	57	2	150	919499408	ZENTRALBALLAST

Bezeichnung	Artikel	Pos.	Menge	Seite	Baugruppe	Bezeichnung
BLECH 4X450X40 S315MC FE//	97038560	55	2	20	91001569	RAUPENFAHRWERK KPL.
BLECH 4X461X547 S315MC RA	97084642	7	1	500	918731808	HARNSTOFFANLAGE
BLECH 4X463X307 S315MC FE	97093427	1	1	94	96034962	FUEHRUNG LI.
BLECH 4X463X307 S315MC FE	97093427	1	1	112	96034980	FUEHRUNG RE.
BLECH 4X48X29 S315MC RAL	97007597	60	4	400	917305408	INNENVERKLEIDUNG EINBAU
BLECH 4X491X110 S315MC FE	971071608	43	4	668	917291908	ANLENKSTUECK VORM.
BLECH 4X491X110 S315MC FE	971071608	61	4	674	917292008	TELESKOP 1 VORM.
BLECH 4X491X110 S315MC FE	971071608	61	4	677	917292108	TELESKOP 2 VORM.
BLECH 4X491X110 S315MC FE	971071608	61	4	681	917292208	TELESKOP 3 VORM.
BLECH 4X491X110 S315MC FE	971071608	61	4	685	917292308	TELESKOP 4 VORM.
BLECH 4X499X309 S315MC FE	97032133	21	4	35	917511508	RAUPENMITTELTEIL VORM.
BLECH 4X518X425 S315MC RA	97084641	1	1	500	918731808	HARNSTOFFANLAGE
BLECH 4X519X204 S315MC FE	97029040	50	1	482	96020359	ZUSATZHEIZUNG VORM.
BLECH 4X52X32 S315MC FE//	97024783	24	1	406	916162508	SCHEIBEN EINBAU
BLECH 4X55X180 S315MC FE//	954313608	11	1	567	96035117	MECH.BEFESTIGUNGSTEILE
BLECH 4X60X115 S315MC FE//	97032838	7	32	124	968046208	ANBAUTEILE
BLECH 4X60X163 S315MC FE//	97045111	4	1	567	96035117	MECH.BEFESTIGUNGSTEILE
BLECH 4X60X50 S315MC FE//	975614108	20	1	286	919007708	ANTRIEBSAGGREGAT VORM.
BLECH 4X62X134 S315MC	97132169	82	2	150	919499408	ZENTRALBALLAST
BLECH 4X644X199 S315MC FE	97031349	5	1	592	967980508	OELKUEHLER VORM.
BLECH 4X668X480 ALMG3 H11	97031266	1	1	86	967972208	DECKEL VORM.
BLECH 4X668X480 ALMG3 H11	97033100	1	1	110	968055808	DECKEL VORM.
BLECH 4X701X174 S315MC FE	97031351	4	1	592	967980508	OELKUEHLER VORM.
BLECH 4X712X218 X5CRNI18-1	97001318	(2)	1	387	916177508	TRITT KPL.
BLECH 4X730X110 ALMG3 H11	97031641	6	32	20	91001569	RAUPENFAHRWERK KPL.
BLECH 4X73X20 S315MC FE//	97033103	50	4	480	918759808	ZUSATZHEIZUNG OW
BLECH 4X74X219 S315MC FE//	97132168	81	2	150	919499408	ZENTRALBALLAST
BLECH 4X751X167 S315MC FE	97031540	7	1	455	969015908	DREHBUEHNENVERKLEIDUN
BLECH 4X784X220 S315MC FE	97031571	9	1	455	969015908	DREHBUEHNENVERKLEIDUN
BLECH 4X78X102 S315MC FE//	97158147	2	1	95	96062678	HEBEL VORM.
BLECH 4X81X40 S315MC FE//	97053350	13	1	455	969015908	DREHBUEHNENVERKLEIDUN
BLECH 4X90X67 S315MC FE//	954113708	27	2	445	96036790	DREHBUEHNENVERKLEIDUN
BLECH 4X93X68 S315MC RAL	97006057	19	1	409	966497908	FRONTSCHEIBE KPL.
BLECH 4X95X262 S315MC FE//	97044721	1	1	601	918628408	KLIMAANLAGE OW
BLECH 4X965X279 ALMG3 H11	972357608	24	2	365	917259708	HAUPTHUBWERK
BLECH 4x134x58 S315MC FE//	970837708	32	2	701	966134608	ANBAUTEILE ZYLINDER
BLECH 50X160X165 S355J2+N	97158146	1	1	95	96062678	HEBEL VORM.
BLECH 50X349X170 S355J2+N	97152371	13	6	75	91001377	RAUPENTRAEGER VORM.LI.
BLECH 50X349X170 S355J2+N	97152371	13	6	108	91001378	RAUPENTRAEGER VORM.RE.
BLECH 5X1098X60 S355MC	975302308	81	1	669	917291908	ANLENKSTUECK VORM.
BLECH 5X110X122 X5CRNI18-1	97008318	3	1	637	968290608	STATIV
BLECH 5X110X122 X5CRNI18-1	97008318	2	1	640	968267208	STATIV
BLECH 5X125X73 S960QL	973153908	68	2	691	917292408	TELESKOP 5 VORM.
BLECH 5X160X160 S700MC	971050008	7	1	734	917268408	MASTNASE
BLECH 5X190X90 S355MC FE//	97034262	61	1	75	91001377	RAUPENTRAEGER VORM.LI.
BLECH 5X190X90 S355MC FE//	97034262	61	1	108	91001378	RAUPENTRAEGER VORM.RE.
BLECH 5X269X181 S355MC FE	97032020	7	1	147	919087608	DREHDURCHFUEHRUNG
BLECH 5X280X200 S355MC FE	97039973	62	2	20	91001569	RAUPENFAHRWERK KPL.
BLECH 5X380X79 X5CRNI18-1	975683808	(4)	1	387	916177508	TRITT KPL.
BLECH 5X380X79 X5CRNI18-1	975685808	(3)	1	387	916177508	TRITT KPL.
BLECH 5X443X254 S355MC FE	97104844	111	1	76	91001377	RAUPENTRAEGER VORM.LI.
BLECH 5X443X254 S355MC FE	97104844	112	1	109	91001378	RAUPENTRAEGER VORM.RE.
BLECH 5X62X96 S960QL	954706408	10	1	673	917292008	TELESKOP 1 VORM.
BLECH 5X62X96 S960QL	954706408	10	1	677	917292108	TELESKOP 2 VORM.
BLECH 5X62X96 S960QL	954706408	10	1	681	917292208	TELESKOP 3 VORM.
BLECH 5X62X96 S960QL	954706408	10	1	685	917292308	TELESKOP 4 VORM.
BLECH 5X62X96 S960QL	954706408	27	1	690	917292408	TELESKOP 5 VORM.
BLECH 5X649X337 S355MC FE	97103683	101	2	76	91001377	RAUPENTRAEGER VORM.LI.
BLECH 5X649X337 S355MC FE	97103683	101	2	109	91001378	RAUPENTRAEGER VORM.RE.
BLECH 5X70X130 S355MC FE//	97032691	12	72	119	917691008	ABSTURZSICHERUNG

Bezeichnung	Artikel	Pos.	Menge	Seite	Baugruppe	Bezeichnung
BLECH 5X86X267 S355MC FE//	97103682	100	2	76	91001377	RAUPENTRAEGER VORM.LI.
BLECH 5X86X267 S355MC FE//	97103682	100	2	109	91001378	RAUPENTRAEGER VORM.RE.
BLECH 5X90X189 S355MC FE//	97061426	41	4	20	91001569	RAUPENFAHRWERK KPL.
BLECH 6X125X73 S960QL	973154008	65	2	674	917292008	TELESKOP 1 VORM.
BLECH 6X125X73 S960QL	973154008	65	2	678	917292108	TELESKOP 2 VORM.
BLECH 6X125X73 S960QL	973154008	65	2	682	917292208	TELESKOP 3 VORM.
BLECH 6X125X73 S960QL	973154008	65	2	686	917292308	TELESKOP 4 VORM.
BLECH 6X125X73 S960QL	973154008	67	2	691	917292408	TELESKOP 5 VORM.
BLECH 6X312X90 S355MC FE//	97033021	4	2	365	917259708	HAUPTHUBWERK
BLECH 6X519X80 S355MC	973336908	31	2	668	917291908	ANLENKSTUECK VORM.
BLECH 80X110 DC01 FE//ZNNI	970904808	8	8	147	919087608	DREHDURCHFUEHRUNG
BLECH 8X1054X560 S700MC	975221808	49	1	761	917267508	TRANSPORTHALTERUNG DKS
BLECH 8X110X70 S960QL FE/	971753708	53	4	668	917291908	ANLENKSTUECK VORM.
BLECH 8X110X70 S960QL FE/	971753708	34	4	673	917292008	TELESKOP 1 VORM.
BLECH 8X110X70 S960QL FE/	971753708	34	4	677	917292108	TELESKOP 2 VORM.
BLECH 8X110X70 S960QL FE/	971753708	34	4	681	917292208	TELESKOP 3 VORM.
BLECH 8X110X70 S960QL FE/	971753708	34	4	685	917292308	TELESKOP 4 VORM.
BLECH 8X25X160 S355MC FE//	952940908	5	2	449	968923508	KLAPPE VORM.RECHTS
BLECH 8X270X205 S700MC	97030303	5	2	654	967936908	GEGENGEWICHT KPL.
BLECH 8X270X205 S700MC	97030304	6	2	654	967936908	GEGENGEWICHT KPL.
BLECH 8X30X58 S355MC FE//	955974308	31	1	761	917267508	TRANSPORTHALTERUNG DKS
BLECH 8X70X182 S960QL	955552608	29	1	761	917267508	TRANSPORTHALTERUNG DKS
BLECH 8X82X290 S355MC FE//	97031537	6	1	378	917259908	KRANFUEHRERKABINE ANBA
BLECH 8X84X108 S355MC FE//	956474508	23	2	365	917259708	HAUPTHUBWERK
BLECH 8X84X108 S355MC FE//	956474508	4	2	604	967969608	HILFSHUBWERK WINDE 2 VO
BLECH 8X88X270 S960QL FE/	970422908	38	2	668	917291908	ANLENKSTUECK VORM.
BLECH 8X88X270 S960QL FE/	970422908	40	2	673	917292008	TELESKOP 1 VORM.
BLECH 8X88X270 S960QL FE/	970422908	40	2	677	917292108	TELESKOP 2 VORM.
BLECH 8X88X270 S960QL FE/	970422908	40	2	681	917292208	TELESKOP 3 VORM.
BLECH 8X88X270 S960QL FE/	970422908	40	2	685	917292308	TELESKOP 4 VORM.
BLECH 8x240x240 S960QL	970491108	3	1	695	918807308	AUSSCHUBMECHANIK
BLECH DC01	927530301	14	1	353	90008901	DREHWERKANTRIEB
BLECH DC01 FE//ZNNI8//CN//T	97011112	74	1	150	919499408	ZENTRALBALLAST
BLECH DC01 FE//ZNNI8//CN//T	97011113	75	1	150	919499408	ZENTRALBALLAST
BLECH DC01 FE//ZNNI8//CN//T	97011114	76	1	150	919499408	ZENTRALBALLAST
BLECH DC01 FE//ZNNI8//CN//T	97011115	77	1	150	919499408	ZENTRALBALLAST
BLECH KPL. RAL 7037,SDGL,G	96028313	2	1	334	96023117	BATTERIEKASTEN VORM.
BLECH S315MC FE//ZNNI8//CN/	953696908	22	2	523	917261208	ZENTRALSCHMIERANLAGE O
BLECH S315MC FE//ZNNI8//CN/	970762808	9	1	567	96035117	MECH.BEFESTIGUNGSTEILE
BLECH S315MC FE//ZNNI8//CN/	970762808	(3)	1	616	967784808	HYDRAULIK HILFSHUBWERK
BLECH SCHWK.	96058512	12	8	75	91001377	RAUPENTRAEGER VORM.LI.
BLECH SCHWK.	96058512	12	8	108	91001378	RAUPENTRAEGER VORM.RE.
BLECH SCHWK.	966363808	37	1	421	917304708	SCHIEBETUER EINBAU
BLECH SCHWK. FE//ZNNI8//CN/	966629308	1	1	388	96025887	PEDALTRAEGER EINBAU
BLECH SCHWK. FE//ZNNI8//CN/	967257808	39	2	433	918810308	STEUERSTAND
BLECH SCHWK. FE//ZNNI8//CN/	967775308	34	1	399	917305408	INNENVERKLEIDUNG EINBAU
BLECH SCHWK. FE//ZNNI8//FN/	966497808	2	1	409	966497908	FRONTSCHEIBE KPL.
BLECH SCHWK. RAL 9005,M,G	96022873	1	1	471	96022872	ARMATURENBRETT DACH
BLECH SCHWK. RAL 9005,M,G	965417108	17	1	467	96053500	ELEKTRIK ANBAUTEILE KABIN
BLECH STAHLBLECH	11083215	7	1	428	11083498	HEIZKLIMAGERAET
BLECHMUTTER M8 480H SPF	12100332	8	4	332	918955408	BATTERIEKASTEN KPL.
BLECHMUTTER M8 480H SPF	12100332	353	22	446	96036790	DREHBUEHNENVERKLEIDUN
BLECHMUTTER M8 480H SPF	12100332	352	17	455	969015908	DREHBUEHNENVERKLEIDUN
BLECHMUTTER M8 480H SPF	12100332	350	6	518	96039752	ZUSATZTEILE VERKLEIDUNG
BLECHSCHRAUBE ISO 7049 ST	10875793	10	2	601	918628408	KLIMAANLAGE OW
BLECHSCHRAUBE ISO 7050 ST	10876382	43	16	399	917305408	INNENVERKLEIDUNG EINBAU
BLENDE	10870472	69	1	468	96053500	ELEKTRIK ANBAUTEILE KABIN
BLENDE	10875953	3	1	732	10872003	ARBEITSSCHEINWERFER
BLINDABDECKUNG	11822051	33	1	467	96053500	ELEKTRIK ANBAUTEILE KABIN
BLINDNIET 4,0X10,5	704232308	75	12	544	969256608	GRUNDAUFBAU

Bezeichnung	Artikel	Pos.	Menge	Seite	Baugruppe	Bezeichnung
BLINDNIET 4,0X10,5	704232308	10	6	548	968063108	MONTAGEEINHEIT VORM.
BLINDNIETMUTTER M10 K=1,5	12100265	13	1	395	917304508	KRANFUEHRERKABINE VORM.
BLINDNIETMUTTER M4 K=1,0-	413006208	13	4	381	919010208	KRANFUEHRERKABINE VORM.
BLINDNIETMUTTER M4 K=1,0-	413006208	(3)	16	544	969256608	GRUNDAUFBAU
BLINDNIETMUTTER M5 K=1,0-3	10042592	(2)	4	551	969061708	TRAEGERBLECH SICHERUNG
BLINDNIETMUTTER M6 K=1,5-	10042593	11	19	395	917304508	KRANFUEHRERKABINE VORM.
BLINDNIETMUTTER M6 K=1,5-	10042593	35	13	421	917304708	SCHIEBETUER EINBAU
BLINDNIETMUTTER M8 K=1,0-	10455153	2	1	513	96035073	HALTER KPL.
BLINDNIETMUTTER M8 K=1,8-5	12100289	20	3	343	96034872	HALTER KPL.
BLINDNIETMUTTER M8 K=1,8-5	12100289	12	9	395	917304508	KRANFUEHRERKABINE VORM.
BLINDPLATTE	511497514	170	1	560	96045351	HYDRAULIK OBERWAGEN
BLINDSTECKER DT 2 POLIG	10353004	529	1	535	96037136	KABELSTRANG
BLINDSTOPFEN	692404908	811	3	50	96045228	KABELSTRANG
BLINDSTOPFEN	692404908	811	1	533	96045385	KABELSTRANG
BLINDSTOPFEN	692404908	811	2	535	96037136	KABELSTRANG
BLINDSTOPFEN 3,6MM SILIK	602331108	806	43	535	96037136	KABELSTRANG
BLINDSTOPFEN 3,9-4,1MM SIL	10870403	844	1	537	96037137	KABELSTRANG
BLINDSTOPFEN AMP JPT-SER	602329208	807	4	535	96037136	KABELSTRANG
BLINDSTOPFEN BAUREIHE_M	604518908	812	25	50	96045228	KABELSTRANG
BLINDSTOPFEN BAUREIHE_M	604518908	812	1	142	96045205	KABELSTRANG
BLINDSTOPFEN BAUREIHE_M	604518908	812	5	533	96045385	KABELSTRANG
BLINDSTOPFEN BAUREIHE_M	604518908	812	10	538	96037133	LEITUNG
BLINDSTOPFEN BAUREIHE_M	604518908	812	15	644	96037132	LEITUNG
BLINDSTOPFEN BAUREIHE_M	604518908	(812)	5	741	917598408	ELEKTRIK MESS-U.WARNEINR
BLINDSTOPFEN DEUTSCH GR	7368253	823	5	463	96036955	KABELSTRANG
BLINDSTOPFEN DEUTSCH GR	7368253	823	3	535	96037136	KABELSTRANG
BLINDSTOPFEN DEUTSCH GR	7368253	823	1	537	96037137	KABELSTRANG
BLINDSTOPFEN DEUTSCH-ST	10800046	842	6	535	96037136	KABELSTRANG
BLINDSTOPFEN DIN 72585 4	692405808	817	1	533	96045385	KABELSTRANG
BLINDSTOPFEN DIN 72585 4	692405808	817	2	537	96037137	KABELSTRANG
BLINDSTOPFEN DIN 72585 7	692405708	822	3	533	96045385	KABELSTRANG
BLINDSTOPFEN MCON 1,23,5	10813642	836	1	537	96037137	KABELSTRANG
BLINDSTOPFEN VSTI1/4"ED C	477704008	847	1	565	96045351	HYDRAULIK OBERWAGEN
BLINDSTOPFEN VSTI1/4"ED C	477704008	12	1	574	10332882	STEUERBLOCK
BLINDSTOPFEN VSTI1/4"ED C	477704008	22	4	582	11341035	STEUERBLOCK
BLOCKIERBUEGEL 23-26	12102104	10	1	649	10040024	TASCHENSCHLOSS
BODENBLECH SCHWK.	969132208	4	1	455	969015908	DREHBUEHNENVERKLEIDUN
BODENBLECH SCHWK. SPF	968933608	4	1	445	96036790	DREHBUEHNENVERKLEIDUN
BODENMATTE 227X798X849	97000467	11	1	399	917305408	INNENVERKLEIDUNG EINBAU
BODENMATTE 61X753X552 PU	97000466	10	1	399	917305408	INNENVERKLEIDUNG EINBAU
BODENPLATTE B9HDS 983593	10224095	(3)	72	69	917436708	BODENPLATTEN KPL.
BODENPLATTEN KPL. 1.0M	917436708	8	2	12		LIEBHERR LTR 1220
BODENPLATTENMUTTER UNF	790202814	(1)	288	69	917436708	BODENPLATTEN KPL.
BOLZEN 100.0X178 35NICRM	97033306	4	2	493	967978908	VERRIEGELUNG VORM.
BOLZEN 105.0X230 35NICRM	97030027	2	1	492	967928508	VERRIEGELUNG
BOLZEN 105.0X452 35NICRM	97031481	31	2	75	91001377	RAUPENTRAEGER VORM.LI.
BOLZEN 105.0X452 35NICRM	97031481	31	2	108	91001378	RAUPENTRAEGER VORM.RE.
BOLZEN 110.0X170 35NICRM	97043050	11	4	35	917511508	RAUPENMITTELTEIL VORM.
BOLZEN 110.0X245 35NICRM	97039932	15	4	35	917511508	RAUPENMITTELTEIL VORM.
BOLZEN 110.0X277 35NICRM	97032012	17	2	20	91001569	RAUPENFAHRWERK KPL.
BOLZEN 110.0X452 35NICRM	97158080	39	4	20	91001569	RAUPENFAHRWERK KPL.
BOLZEN 160.0X326 35NICRM	97027202	6	1	673	917292008	TELESKOP 1 VORM.
BOLZEN 160.0X326 35NICRM	97027202	6	1	677	917292108	TELESKOP 2 VORM.
BOLZEN 160.0X326 35NICRM	97027202	6	1	681	917292208	TELESKOP 3 VORM.
BOLZEN 160.0X326 35NICRM	97027202	6	1	685	917292308	TELESKOP 4 VORM.
BOLZEN 160.0X326 35NICRM	97027202	21	1	690	917292408	TELESKOP 5 VORM.
BOLZEN 160.0X394 35NICRM	973411808	1	2	172	918731108	MONTAGETEILE DREHBUEHN
BOLZEN 170.0X255 35NICRM	97032979	3	1	646	919617008	WIPPZYLINDER M.LAGERUNG
BOLZEN 170.0X555 35NICRM	97032978	2	1	646	919617008	WIPPZYLINDER M.LAGERUNG
BOLZEN 18.0X410 S355J2C+C	97032409	45	2	75	91001377	RAUPENTRAEGER VORM.LI.

Bezeichnung	Artikel	Pos.	Menge	Seite	Baugruppe	Bezeichnung
BOLZEN 18.0X410 S355J2C+C	97032409	45	2	108	91001378	RAUPENTRAEGER VORM.RE.
BOLZEN 22X11 1.4301	97001103	3	2	424	966253908	WAGEN
BOLZEN 22X57 1.4305	97001095	3	2	423	966230508	FUEHRUNG VORM.
BOLZEN 25.0X100 S355J2G3C+	97032647	2	2	120	968038208	LAGERUNG VORN LI.
BOLZEN 25.0X100 S355J2G3C+	97032647	2	2	121	968038308	LAGERUNG VORN RE.
BOLZEN 25.0X100 S355J2G3C+	97039420	1	1	125	968331708	SICHERUNGSHALTER
BOLZEN 25.0X131 35NICRMOV	978844908	15	1	492	967928508	VERRIEGELUNG
BOLZEN 25.0X50 42CRMO4+Q	974922808	15	4	387	916177508	TRITT KPL.
BOLZEN 25.0X52 S355J2G3C+	971973608	3	1	437	962282208	ARMLEHNE LINKS
BOLZEN 25.0X52 S355J2G3C+	971973608	3	1	439	962282308	ARMLEHNE RECHTS
BOLZEN 35.0X165 35NICRMOV	938865908	11	1	763	923285508	KLAPPKONSOLE VORM.
BOLZEN 35.0X65 35NICRMOV	97008063	18	1	378	917259908	KRANFUEHRERKABINE ANBA
BOLZEN 35.0X92 35NICRMOV	97032162	17	1	378	917259908	KRANFUEHRERKABINE ANBA
BOLZEN 39X18 1.4301	97007043	8	1	424	966253908	WAGEN
BOLZEN 40.0X118 35NICRMOV	97150259	43	4	20	91001569	RAUPENFAHRWERK KPL.
BOLZEN 45.0X100 35NICRMOV	97031197	6	2	602	917267108	HILFSHUBWERK WINDE 2
BOLZEN 45.0X105 35NICRMOV	97032320	29	4	129	919644008	HYDRAULISCHE ABSTUETZUN
BOLZEN 45.0X121 35NICRMOV	97031434	30	1	378	917259908	KRANFUEHRERKABINE ANBA
BOLZEN 50.0X200 35NICRMOV	97070277	3	1	734	917268408	MASTNASE
BOLZEN 50.0X200 35NICRMOV	97070277	(1)	1	734	917268408	MASTNASE
BOLZEN 50.0X235 35NICRMOV	973626408	25	3	734	917268408	MASTNASE
BOLZEN 55.0X105 35NICRMOV	97031196	7	2	758	917413208	SELBSTMONTAGE HILFSHU
BOLZEN 55.0X158 35NICRMOV	939249808	5	1	734	917268408	MASTNASE
BOLZEN 55.0X280 35NICRMOV	971252308	8	2	654	967936908	GEGENGEWICHT KPL.
BOLZEN 65.0X155 35NICRMOV	97042167	7	1	658	968068308	MONTAGEVORRICHTUNG
BOLZEN 65.0X225 35NICRMOV	97033301	22	4	35	917511508	RAUPENMITTELTEIL VORM.
BOLZEN 70.0X190 35NICRMOV	97030039	10	6	489	918956108	HYDRAULISCHE BALLASTIER
BOLZEN 70.0X283 35NICRMOV	97032197	12	4	129	919644008	HYDRAULISCHE ABSTUETZUN
BOLZEN 70.0X390 35NICRMOV	97100242	41	1	75	91001377	RAUPENTRAEGER VORM.LI.
BOLZEN 70.0X390 35NICRMOV	97100242	41	1	108	91001378	RAUPENTRAEGER VORM.RE.
BOLZEN 70.0X405 35NICRMOV	97030038	5	2	489	918956108	HYDRAULISCHE BALLASTIER
BOLZEN 85.0X200 35NICRMOV	97051278	14	1	751	968728808	KONSOLE VORM.
BOLZEN 85.0X350 35NICRMOV	97034096	3	1	363	917259608	DREHBUEHNENARRETIERUN
BOLZEN 90.0X415 35NICRMOV	97032383	52	1	75	91001377	RAUPENTRAEGER VORM.LI.
BOLZEN 90.0X415 35NICRMOV	97032383	52	1	108	91001378	RAUPENTRAEGER VORM.RE.
BOLZEN 90.0X785 35NICRMOV	97032093	10	4	129	919644008	HYDRAULISCHE ABSTUETZUN
BOLZEN DIN 1434 5X40X35 X	451000208	1	1	745	967936408	WINDWARNUNG VORM.
BOLZEN DIN 1435 20X50X43 42	10875669	4	3	762	929582108	HALTERUNG VORM.
BOLZEN DIN 1435 20X50X43 42	10875669	2	1	765	923879808	KONSOLE VORM.
BOLZEN DIN 1435 40X60X50 S3	451237208	10	2	147	919087608	DREHDURCHFUEHRUNG
BOLZEN DIN 1435 40X80X68 S3	451237508	11	1	147	919087608	DREHDURCHFUEHRUNG
BOLZEN DIN 1435 8X50X47 ST	451210308	11	1	387	916177508	TRITT KPL.
BOLZEN DIN 1436 25X55X45 42	451426608	43	1	761	917267508	TRANSPORTHALTERUNG DKS
BOLZEN DIN 1436 30X60X52 S	451430708	32	2	668	917291908	ANLENKSTUECK VORM.
BOLZEN DIN 1436 35X82X72 3	10027134	16	4	129	919644008	HYDRAULISCHE ABSTUETZUN
BOLZEN ISO 2340 B20X150X13	452551408	8	1	734	917268408	MASTNASE
BOLZEN ISO 2341 B30X95X85 3	453032708	14	1	378	917259908	KRANFUEHRERKABINE ANBA
BOLZEN ISO 2341 B45X110X98	453040908	15	2	604	967969608	HILFSHUBWERK WINDE 2 VO
BOLZEN ISO 2341 B6X25X22	10875678	10	1	387	916177508	TRITT KPL.
BOLZEN MIT GRIFF RAL 3020,	967850808	3	1	378	917259908	KRANFUEHRERKABINE ANBA
BOLZEN MIT KOPF 45.0X167 3	97036916	42	4	20	91001569	RAUPENFAHRWERK KPL.
BOLZEN RD100X193 35NICRM	951111408	28	2	20	91001569	RAUPENFAHRWERK KPL.
BOLZEN RD30X107 42CRMO4	956349008	4	1	763	923285508	KLAPPKONSOLE VORM.
BOLZEN RD35X71 35NICRMOV	944029908	25	1	761	917267508	TRANSPORTHALTERUNG DKS
BOLZEN RD49.5X58 42CRMO4	956349108	5	1	763	923285508	KLAPPKONSOLE VORM.
BOLZENHALTER 10X131X38 S	97028296	14	8	690	917292408	TELESKOP 5 VORM.
BOLZENZIEHVORRICHTUNG	91001571	26	1	12		LIEBHERR LTR 1220
BREMSBETAETIGUNGSEINHEI	502807501	(1)	1	370	939292201	PLANETENGETRIEBE
BREMSE-DICHTUNGSSATZ	939589601	(998)	1	370	939292201	PLANETENGETRIEBE
BREMSFEDERSATZ	90025782	970	1	353	90008901	DREHWERKANTRIEB

Bezeichnung	Artikel	Pos.	Menge	Seite	Baugruppe	Bezeichnung
BREMSFEDERSATZ	939589701	(999)	1	370	939292201	PLANETENGETRIEBE
BREMSLAMELLENSATZ	90025781	960	1	353	90008901	DREHWERKANTRIEB
BREMSLAMELLENSATZ	939589501	(997)	1	370	939292201	PLANETENGETRIEBE
BREMSVENTILPATRONE 600B	11214357	(1)	1	129	919644008	HYDRAULISCHE ABSTUETZUN
BRENNER 24V	11826648	39	1	484	10876576	WASSERHEIZGERAET
BRENNER 24V	11826648	(9)	1	484	10876576	WASSERHEIZGERAET
BRENNERKOPF	11826647	28	1	484	10876576	WASSERHEIZGERAET
BRENNERKOPF	11826647	(8)	1	484	10876576	WASSERHEIZGERAET
BRENNSTOFFLEITUNG 5X1 PA	11626108	3	5	480	918759808	ZUSATZHEIZUNG OW
BRENNSTOFFLEITUNG 5X1 PA	11626108	4	1.65	480	918759808	ZUSATZHEIZUNG OW
BTB PROGRAMMIERT	968252908	5	1	43	968054008	MONTAGEPLATTE VORM.
BTB PROGRAMMIERT LSB-BTB	96061724	6	2	540	91000922	EINBAUTEILE SCHALTSCHRAN
BTT PROGRAMMIERT BTTC	96033227	9	1	471	96022872	ARMATURENBRETT DACH
BUCHSE	10000794	5	1	315	10472208	VERSTELLUNG
BUCHSE	571582208	2	1	240	5700161	LUFTPRESSER
BUCHSE 14X14X5 PA6 SCHW	97094637	20	10	409	966497908	FRONTSCHEIBE KPL.
BUCHSE 16X12 1.4301	97002990	15	1	421	917304708	SCHIEBETUER EINBAU
BUCHSE 16X12 1.4301	97002990	47	4	433	918810308	STEUERSTAND
BUCHSE 16X195	970536608	15	2	673	917292008	TELESKOP 1 VORM.
BUCHSE 16X195	970536608	15	2	677	917292108	TELESKOP 2 VORM.
BUCHSE 16X195	970536608	15	2	681	917292208	TELESKOP 3 VORM.
BUCHSE 16X195	970536608	15	2	685	917292308	TELESKOP 4 VORM.
BUCHSE 16X195	970536608	32	2	690	917292408	TELESKOP 5 VORM.
BUCHSE 20x150x150 S960QL	970535808	9	1	673	917292008	TELESKOP 1 VORM.
BUCHSE 20x150x150 S960QL	970535808	9	1	677	917292108	TELESKOP 2 VORM.
BUCHSE 20x150x150 S960QL	970535808	9	1	681	917292208	TELESKOP 3 VORM.
BUCHSE 20x150x150 S960QL	970535808	9	1	685	917292308	TELESKOP 4 VORM.
BUCHSE 20x150x150 S960QL	970535808	24	1	690	917292408	TELESKOP 5 VORM.
BUCHSE 35.0X30 42CRMO4+Q	973998708	3	1	477	966707708	SPIEGELHALTER VORM.
BUCHSE 45.0X25 35NICRMOV	974925608	10	4	646	919617008	WIPPZYLINDER M.LAGERUNG
BUCHSE 45.0X30 35NICRMOV	972203808	9	3	646	919617008	WIPPZYLINDER M.LAGERUNG
BUCHSE 45.0X32 35NICRMOV	97032692	10	8	124	968046208	ANBAUTEILE
BUCHSE 45.0X32 35NICRMOV	97032692	63	12	129	919644008	HYDRAULISCHE ABSTUETZUN
BUCHSE 45.0X32 35NICRMOV	97032692	63	16	150	919499408	ZENTRALBALLAST
BUCHSE 60.3X24 S355J2H FE//	970689108	6	8	172	918731108	MONTAGETEILE DREHBUEHN
BUCHSE 8X6 PA6	97155801	37	10	409	966497908	FRONTSCHEIBE KPL.
BUCHSE RD20X7.5 X5CRNI18	97072035	26	4	406	916162508	SCHEIBEN EINBAU
BUCHSE RD40X27 35NICRMOV	953504308	4	6	172	918731108	MONTAGETEILE DREHBUEHN
BUCHSE RD50,25X20 PA6G	288154508	58	2	668	917291908	ANLENKSTUECK VORM.
BUCHSENGEHAEUSE 1-POL	11118242	504	1	464	96036956	KABELSTRANG
BUCHSENGEHAEUSE 2-POL	11060619	506	2	536	96037137	KABELSTRANG
BUCHSENGEHAEUSE 2-POL 5	10424622	512	2	462	96036955	KABELSTRANG
BUCHSENGEHAEUSE 2-POL 5	10424622	509	1	532	96045385	KABELSTRANG
BUCHSENGEHAEUSE 2-POL B	11342208	510	1	536	96037137	KABELSTRANG
BUCHSENGEHAEUSE 4-POL	11341840	509	1	536	96037137	KABELSTRANG
BUCHSENGEHAEUSE 8-POL 5	10875280	513	1	462	96036955	KABELSTRANG
BUCHSENKONTAKT 0,2-0,5MM	10335820	690	14	49	96045228	KABELSTRANG
BUCHSENKONTAKT 0,2-0,5MM	10335820	690	52	463	96036955	KABELSTRANG
BUCHSENKONTAKT 0,2-0,5MM	10335820	690	6	464	96036956	KABELSTRANG
BUCHSENKONTAKT 0,2-0,5MM	10335820	690	29	533	96045385	KABELSTRANG
BUCHSENKONTAKT 0,2-0,5MM	10335820	690	20	535	96037136	KABELSTRANG
BUCHSENKONTAKT 0,3-0,89	602332108	611	4	464	96036956	KABELSTRANG
BUCHSENKONTAKT 0,5-0,75	10873194	700	4	463	96036955	KABELSTRANG
BUCHSENKONTAKT 0,5-0,75	10873194	700	2	533	96045385	KABELSTRANG
BUCHSENKONTAKT 0,5-0,75M	10813644	754	9	537	96037137	KABELSTRANG
BUCHSENKONTAKT 0,5-1,0M	10493495	726	65	535	96037136	KABELSTRANG
BUCHSENKONTAKT 0,5-1,0M	10493495	726	4	537	96037137	KABELSTRANG
BUCHSENKONTAKT 0,5-1,0M	10800631	753	4	535	96037136	KABELSTRANG
BUCHSENKONTAKT 0,5-1,0M	11622989	789	4	537	96037137	KABELSTRANG
BUCHSENKONTAKT 0,5-1MM2	10877343	2258	25	463	96036955	KABELSTRANG

Bezeichnung	Artikel	Pos.	Menge	Seite	Baugruppe	Bezeichnung
BUCHSENKONTAKT 0,50-1MM	10300946	717	4	537	96037137	KABELSTRANG
BUCHSENKONTAKT 0,5MM2	10875281	2238	6	463	96036955	KABELSTRANG
BUCHSENKONTAKT 0,5MM2 S	10493970	721	16	50	96045228	KABELSTRANG
BUCHSENKONTAKT 0,5MM2 S	10493970	(721)	4	741	917598408	ELEKTRIK MESS-U.WARNEINR
BUCHSENKONTAKT 0,75-1,0	604519308	629	6	49	96045228	KABELSTRANG
BUCHSENKONTAKT 0,75-1,0	604519308	629	2	538	96037133	LEITUNG
BUCHSENKONTAKT 0,75-1,0	604519308	629	2	644	96037132	LEITUNG
BUCHSENKONTAKT 0,75-1,0M	11342253	788	9	537	96037137	KABELSTRANG
BUCHSENKONTAKT 0,75-1,5	6202434	96	4	49	96045228	KABELSTRANG
BUCHSENKONTAKT 0,75-1,5	6202434	96	2	532	96045385	KABELSTRANG
BUCHSENKONTAKT 0,75-1,5	6202434	96	2	534	96037136	KABELSTRANG
BUCHSENKONTAKT 1,0-1,5M	10493496	727	4	535	96037136	KABELSTRANG
BUCHSENKONTAKT 1,0-1,5M	10493496	727	2	537	96037137	KABELSTRANG
BUCHSENKONTAKT 1,0-2,5M	10493493	724	6	535	96037136	KABELSTRANG
BUCHSENKONTAKT 1,5MM2	604518808	636	2	532	96045385	KABELSTRANG
BUCHSENKONTAKT DIN 72585	602339508	647	4	532	96045385	KABELSTRANG
BUCHSENKONTAKT DIN 72585	602339408	643	3	532	96045385	KABELSTRANG
BUCHSENKONTAKT DIN 72585	602339408	643	2	536	96037137	KABELSTRANG
BUCHSENSTECKER 15-POLE	10024744	502	2	462	96036955	KABELSTRANG
BUCHSENSTECKER 25-POLE	602322708	504	1	462	96036955	KABELSTRANG
BUCHSENSTECKER 9-POLE	602338608	509	1	542	96045387	DRAEHTE GRUNDAUFBAU KPL
BUCHSENTRAEGER 6-POL 16	604526508	506	5	49	96045228	KABELSTRANG
BUCHSENTRAEGER 6-POL 16	604526508	510	1	532	96045385	KABELSTRANG
BUCHSENTRAEGER 6-POL 16	604526508	502	1	538	96037133	LEITUNG
BUCHSENTRAEGER 6-POL 16	604526508	502	1	644	96037132	LEITUNG
BUCHSENTRAEGER 6-POL 16	604526508	(502)	1	741	917598408	ELEKTRIK MESS-U.WARNEINR
BUEGEL	11171276	(71)	1	435	10877138	FAHRERSITZ
BUEGEL 10 ST	10216529	21	1	601	918628408	KLIMAANLAGE OW
BUEGELSCHELLE 102 X5CRNI	12103076	183	1	507	919674408	ABGASANLAGE
BUEGELSCHELLE 132 X5CRNI	11963742	185	2	507	919674408	ABGASANLAGE
BUEGELSCHELLE 132 X5CRNI	11963742	183	2	511	96051842	ABGASANLAGE VORM.
BUEGELSCHELLE A 114 EDEL	552101308	186	2	507	919674408	ABGASANLAGE
BUNDBOLZEN	571430208	2	1	649	10040024	TASCHENSCHLOSS
BUNDLAGER 18X12X12 SINT	10424489	2	2	424	966253908	WAGEN
BUNDLAGER 45X50X25	9888448	(2)	2	277	9077386	NEBENABTRIEB VORM.
BUNDMUTTER M10X1,5	7361602	22	2	319	10871282	VERSTELLPUMPE
BUNDMUTTER M6	514591708	21	1	81	11161917	STEUERTEIL
BUSLEITUNG 2 X 0,5	11840113	7	0.3	48	96045227	KABELSTRANG
BUSLEITUNG 2 X 0,5	11840113	8	0.4	48	96045227	KABELSTRANG
BUSLEITUNG 2 X 0,5	11840113	9	0.45	48	96045227	KABELSTRANG
BUSLEITUNG 2 X 0,5	11840113	7	1.63	49	96045228	KABELSTRANG
BUSLEITUNG 2 X 0,5	11840113	8	4.66	49	96045228	KABELSTRANG
BUSLEITUNG 2 X 0,5	11840113	15	4.46	462	96036955	KABELSTRANG
BUSLEITUNG 2 X 0,5	11840113	16	4.38	462	96036955	KABELSTRANG
BUSLEITUNG 2 X 0,5	11840113	17	4.38	462	96036955	KABELSTRANG
BUSLEITUNG 2 X 0,5	11840113	18	0.17	462	96036955	KABELSTRANG
BUSLEITUNG 2 X 0,5	11840113	374	6.27	534	96037136	KABELSTRANG
BUSLEITUNG 2 X 0,5	11840113	375	6.27	534	96037136	KABELSTRANG
BUSLEITUNG 2 X 0,5	11840113	376	6.27	534	96037136	KABELSTRANG
BUSLEITUNG 2 X 0,5	11840113	5	5.68	536	96037137	KABELSTRANG
BUSLEITUNG 2 X 0,5	11840113	6	0.17	536	96037137	KABELSTRANG
BUSLEITUNG 2 X 0,5	11840113	7	8.81	536	96037137	KABELSTRANG
BUSLEITUNG 2 X 0,5	11840113	8	0.17	536	96037137	KABELSTRANG
BUSLEITUNG 2 X 0,5	11840113	9	3.16	536	96037137	KABELSTRANG
BUSLEITUNG 2 X 0,5	11840113	10	0.17	536	96037137	KABELSTRANG
BUSLEITUNG 2 X 0,5	11840113	11	3.16	536	96037137	KABELSTRANG
BUSLEITUNG 2 X 0,5	11840113	12	0.17	536	96037137	KABELSTRANG
BUSLEITUNG 2 X 0,5	11840113	13	8.06	536	96037137	KABELSTRANG
BUSLEITUNG 2 X 0,5	11840113	14	0.17	536	96037137	KABELSTRANG
BUSLEITUNG 2 X 0,5	11840113	15	0.18	536	96037137	KABELSTRANG

Bezeichnung	Artikel	Pos.	Menge	Seite	Baugruppe	Bezeichnung
BUSLEITUNG 4 X 1 SPF	600345208	377	6.27	534	96037136	KABELSTRANG
BUTZEN BUZ 28L CR6-FREI	477700808	794	2	564	96045351	HYDRAULIK OBERWAGEN
CLIP 23 ST	10216534	22	2	601	918628408	KLIMAANLAGE OW
CRIMPKONTAKT 0,2-0,56MM2	602322808	615	55	463	96036955	KABELSTRANG
DACHSCHEIBE 10.28X941X740	979240608	1	1	410	965784408	DACHSCHEIBE VORM.
DACHSCHEIBE VORM.	965784408	4	1	406	916162508	SCHEIBEN EINBAU
DACHVERKLEIDUNG KPL.	965763608	9	1	399	917305408	INNENVERKLEIDUNG EINBAU
DAEMMMATTE 10X455X110 E	97038836	15	1	426	917676208	HEIZUNG KRANFUEHRERKAB
DAEMMMATTE 13X115X179 ZP	97038834	13	1	426	917676208	HEIZUNG KRANFUEHRERKAB
DAEMMMATTE 20X115X199 ZP	97038835	14	1	426	917676208	HEIZUNG KRANFUEHRERKAB
DAEMMMATTE 20X630X440 ME	97050672	12	1	451	968977308	SCHALLDAEMMUNG
DAEMMMATTE 20X630X440 ME	97055971	8	1	451	968977308	SCHALLDAEMMUNG
DAEMMMATTE 40X1055X750 P	97034281	101	1	447	96017704	KUEHLERHAUBE KPL.
DAEMMMATTE 40X310X235 P	97050671	7	1	451	968977308	SCHALLDAEMMUNG
DAEMMMATTE 40X422X93 E30	97038833	12	1	426	917676208	HEIZUNG KRANFUEHRERKAB
DAEMMMATTE 40X720X590 P	97034322	3	1	451	968977308	SCHALLDAEMMUNG
DAEMMMATTE 40X720X695 P	97050669	5	1	451	968977308	SCHALLDAEMMUNG
DAEMMMATTE 40X740X370 P	973767608	102	1	447	96017704	KUEHLERHAUBE KPL.
DAEMMMATTE 40X775X1064 P	97034282	103	1	447	96017704	KUEHLERHAUBE KPL.
DAEMMMATTE 50X60X182 E30	97038837	16	1	426	917676208	HEIZUNG KRANFUEHRERKAB
DAEMMMATTE 50X78X235 E30	97038838	17	1	426	917676208	HEIZUNG KRANFUEHRERKAB
DAEMMSTOFF 20X20X2000 PU	10425409	175	1	520	918731908	LUFTFILTERANLAGE
DAEMPFER	10650488	66	1	435	10877138	FAHRERSITZ
DAEMPFUNGSKOLBEN	510782908	7	1	588	511419608	DRUCKBEGRENZUNGSVENTI
DAEMPFUNGSKOLBEN	510797408	7	1	585	511433908	DRUCKBEGRENZUNGSVENTI
DATENLEITUNG 2 X 1 FEP SP	12100217	5	0.4	48	96045227	KABELSTRANG
DATENLEITUNG 2 X 1 FEP SP	12100217	6	0.4	48	96045227	KABELSTRANG
DATENLEITUNG 2 X 1 FEP SP	12100217	9	3	464	96036956	KABELSTRANG
DATENLEITUNG 2 X 1 FEP SP	12100217	10	3	464	96036956	KABELSTRANG
DATENLEITUNG 2 X 1 FEP SP	12100217	15	6.27	534	96037136	KABELSTRANG
DATENLEITUNG 2 X 1 FEP SP	12100217	16	7.72	534	96037136	KABELSTRANG
DATENLEITUNG 2 X 1 FEP SP	12100217	17	4.27	534	96037136	KABELSTRANG
DATENLEITUNG 2 X 1 FEP SP	12100217	18	2.02	534	96037136	KABELSTRANG
DATENLEITUNG 2 X 1 FEP SP	12100217	19	1.3	534	96037136	KABELSTRANG
DATENLEITUNG 2 X 1 FEP SP	12100217	379	6.27	534	96037136	KABELSTRANG
DATENLEITUNG 2 X 1 FEP SP	12100217	380	6.27	534	96037136	KABELSTRANG
DATENLEITUNG 2 X 1 FEP SP	12100217	381	6.27	534	96037136	KABELSTRANG
DATENLEITUNG 2 X 1 FEP SP	12100217	383	6.27	534	96037136	KABELSTRANG
DATENLEITUNG 2 X 1 FEP SP	12100217	17	4.8	536	96037137	KABELSTRANG
DATENLEITUNG 2 X 1 FEP SP	12100217	19	4.7	536	96037137	KABELSTRANG
DATENLEITUNG 2 X 1 FEP SP	12100217	371	4.7	536	96037137	KABELSTRANG
DATENLEITUNG 2 X 1 FEP SP	12100217	372	6.4	536	96037137	KABELSTRANG
DATENLEITUNG 2 X 1 FEP SP	12100217	373	6.4	536	96037137	KABELSTRANG
DATENLEITUNG 2 X 1 FEP SP	12100217	374	6.4	536	96037137	KABELSTRANG
DATENLEITUNG 2 X 1,5 FEP	12100216	378	6.27	534	96037136	KABELSTRANG
DATENLEITUNG 2 X 1,5 FEP	12100216	16	4.8	536	96037137	KABELSTRANG
DATENLEITUNG 2 X 2,5 FEP	12100214	371	6.27	534	96037136	KABELSTRANG
DATENLEITUNG 2 X 2,5 FEP	12100214	372	6.27	534	96037136	KABELSTRANG
DATENLEITUNG 2 X 2,5 FEP	12100214	373	6.27	534	96037136	KABELSTRANG
DATENLEITUNG 3 X 1 FEP SP	12100215	10	4.32	534	96037136	KABELSTRANG
DATENLEITUNG 3 X 1 FEP SP	12100215	12	6.27	534	96037136	KABELSTRANG
DATENLEITUNG 3 X 1 FEP SP	12100215	13	6.27	534	96037136	KABELSTRANG
DATENLEITUNG 3 X 1 FEP SP	12100215	14	6.27	534	96037136	KABELSTRANG
DATENLEITUNG 3 X 1 FEP SP	12100215	384	6.27	534	96037136	KABELSTRANG
DATENLEITUNG 3 X 1 FEP SP	12100215	386	6.27	535	96037136	KABELSTRANG
DATENLEITUNG 3 X 1 FEP SP	12100215	18	4.8	536	96037137	KABELSTRANG
DATENLEITUNG 3 X 1 FEP SP	12100215	375	6.6	536	96037137	KABELSTRANG
DATENLOGGER LDL2 DIGITAL	10340438	6	1	548	968063108	MONTAGEEINHEIT VORM.
DECKBLECH SCHWK.	969016108	3	1	455	969015908	DREHBUEHNENVERKLEIDUN
DECKBLECH SCHWK. SPF	968928808	3	1	445	96036790	DREHBUEHNENVERKLEIDUN

Bezeichnung	Artikel	Pos.	Menge	Seite	Baugruppe	Bezeichnung
DECKEL	10122319	1	1	278	9078301	VERSCHLUSSTEILE
DECKEL	10286353	296	1	714	968708708	KLEMMKASTEN KPL.
DECKEL	10297241	5	1	521	10871700	LUFTFILTER
DECKEL	10331026	61	1	468	96053500	ELEKTRIK ANBAUTEILE KABIN
DECKEL	10663059	7	1	319	10871282	VERSTELLPUMPE
DECKEL	602761708	6	1	546	967589508	KLEMMENLEISTE
DECKEL	636109301	4	1	546	967589508	KLEMMENLEISTE
DECKEL	9178294	(6)	1	275	10125687	NEBENABTRIEB ANBAU
DECKEL	9273690	6	1	276	10144036	NEBENABTRIEB ANBAU
DECKEL 10X220X220 ALMG3	972272908	4	1	348	969050308	OELBEHAELTER VORM.
DECKEL 25X300X300 PA6G	973077908	11	3	668	917291908	ANLENKSTUECK VORM.
DECKEL 289X289X12 PA6G	97027203	62	3	674	917292008	TELESKOP 1 VORM.
DECKEL 289X289X12 PA6G	97027203	62	3	677	917292108	TELESKOP 2 VORM.
DECKEL 289X289X12 PA6G	97027203	62	3	681	917292208	TELESKOP 3 VORM.
DECKEL 289X289X12 PA6G	97027203	62	3	685	917292308	TELESKOP 4 VORM.
DECKEL 4X1260X860 ALMG3 H	97031860	10	1	35	917511508	RAUPENMITTELTEIL VORM.
DECKEL 4x83x84 S315MC FE//	970477608	8	2	701	966134608	ANBAUTEILE ZYLINDER
DECKEL 635X575X95 ABS	97007030	2	1	426	917676208	HEIZUNG KRANFUEHRERKAB
DECKEL Al Rm>200N/m	10127967	1	1	265	10127979	VERSCHLUSSTEILE
DECKEL EN AC-Al Si8	10124116	1	1	259	10115664	VERSCHLUSSTEILE
DECKEL GEKLEBT	966189708	1	1	42	966167808	DECKEL KPL.
DECKEL KPL	10551191	41	1	26	96034894	SCHUTZBLECH KPL.LI.
DECKEL KPL	10551191	41	1	29	96034977	SCHUTZBLECH KPL.RE.
DECKEL KPL.	963544508	26	3	445	96036790	DREHBUEHNENVERKLEIDUN
DECKEL KPL.	963544508	4	1	518	96039752	ZUSATZTEILE VERKLEIDUNG
DECKEL KPL.	963949708	39	1	445	96036790	DREHBUEHNENVERKLEIDUN
DECKEL KPL.	964093408	9	1	445	96036790	DREHBUEHNENVERKLEIDUN
DECKEL KPL.	966167808	2	1	41	96045226	SCHALTKASTEN VORM.
DECKEL KPL.	969493508	19	1	445	96036790	DREHBUEHNENVERKLEIDUN
DECKEL RD190X6 S355MC FE//	935508808	52	8	20	91001569	RAUPENFAHRWERK KPL.
DECKEL RD330X27 PA6G	972144708	8	1	668	917291908	ANLENKSTUECK VORM.
DECKEL S235JR	10117094	10	1	263	10116110	VERSCHLUSSTEILE
DECKEL SCHWK.	96029256	3	1	668	917291908	ANLENKSTUECK VORM.
DECKEL SCHWK. RAL 7016,SD	968075708	1	1	393	968514508	SCHALTSCHRANKDECKEL EIN
DECKEL SCHWK. SPF	969002508	7	1	445	96036790	DREHBUEHNENVERKLEIDUN
DECKEL VORM.	967972208	9	1	75	91001377	RAUPENTRAEGER VORM.LI.
DECKEL VORM.	967972308	10	1	75	91001377	RAUPENTRAEGER VORM.LI.
DECKEL VORM.	967972308	10	1	108	91001378	RAUPENTRAEGER VORM.RE.
DECKEL VORM.	967972408	11	4	75	91001377	RAUPENTRAEGER VORM.LI.
DECKEL VORM.	967972408	11	4	108	91001378	RAUPENTRAEGER VORM.RE.
DECKEL VORM.	968055808	9	1	108	91001378	RAUPENTRAEGER VORM.RE.
DECKEL VORM.	968270108	29	1	75	91001377	RAUPENTRAEGER VORM.LI.
DECKEL VORM.	968270108	29	1	108	91001378	RAUPENTRAEGER VORM.RE.
DECKEL VORM.	968274208	33	1	75	91001377	RAUPENTRAEGER VORM.LI.
DECKEL VORM.	968274208	33	1	108	91001378	RAUPENTRAEGER VORM.RE.
DECKEL VORM.	968709108	34	1	75	91001377	RAUPENTRAEGER VORM.LI.
DECKEL VORM.	968709108	34	1	108	91001378	RAUPENTRAEGER VORM.RE.
DECKPLATTE DIN 3015-1 L-DP	7005053	314	10	56	96035801	HYDRAULIK MITTELTEIL
DECKPLATTE DIN 3015-1 L-DP	7008583	320	2	56	96035801	HYDRAULIK MITTELTEIL
DECKPLATTE DIN 3015-1 L-DP	7008583	331	1	562	96045351	HYDRAULIK OBERWAGEN
DECKPLATTE DIN 3015-1 L-DP	5005219	317	7	561	96045351	HYDRAULIK OBERWAGEN
DECKPLATTE DIN 3015-1 L-DP	12102954	308	2	98	96035796	HYDR.FAHRANTRIEB
DECKPLATTE DIN 3015-1 L-DP	12102954	308	2	115	96035792	HYDR.FAHRANTRIEB
DECKPLATTE DIN 3015-2 S-DP-	5005525	324	4	496	969763408	VERROHRUNG DRUCKLUFTA
DECKPLATTE DIN 3015-3 Z-DP	7362606	300	13	728	967785008	ZUSATZHYDRAULIK KLAPPSPI
DECKSCHEIBE 8X60	691041808	9	1	52	11346779	SCHLEIFRINGUEBERTRAGER
DEHNSCHRAUBE 55.0X152 3	970611208	3	72	349	917259408	ROLLENDREHVERBINDUNG
DEHNSCHRAUBE M30X145 10.	970447008	2	62	349	917259408	ROLLENDREHVERBINDUNG
DEICHSEL SCHWK.	961727008	5	1	147	919087608	DREHDURCHFUEHRUNG
DICHTBAND	261101108	50	0.3	428	11083498	HEIZKLIMAGERAET

Bezeichnung	Artikel	Pos.	Menge	Seite	Baugruppe	Bezeichnung
DICHTKANTENRING	10303270	17	3	311	10008308	ANSCHLUSSPLATTE
DICHTKANTENRING	10303270	17	3	323	571907208	ANSCHLUSSPLATTE
DICHTMITTEL A80MR HYLOMA	870002808	265	0.1	711	966291008	KLEMMKASTEN
DICHTMUTTER M6	510753408	11	1	583	10489734	DRUCKBEGRENZUNGSVENTI
DICHTMUTTER M8	510741708	21	1	585	511433908	DRUCKBEGRENZUNGSVENTI
DICHTMUTTER M8	510741708	21	1	588	511419608	DRUCKBEGRENZUNGSVENTI
DICHTPROFIL	262183501	314	6.26	350	90025640	ROLLENDREHVERBINDUNG
DICHTPROFIL 1-4X21,5X10	262105508	40	0.56	75	91001377	RAUPENTRAEGER VORM.LI.
DICHTPROFIL 1-4X21,5X10	262105508	40	0.56	108	91001378	RAUPENTRAEGER VORM.RE.
DICHTPROFIL NBR 70-4833	262181001	315	6.29	350	90025640	ROLLENDREHVERBINDUNG
DICHTPROFIL NBR 70-4833	262181001	316	6.24	350	90025640	ROLLENDREHVERBINDUNG
DICHTRING	571898008	443	1	288	919007708	ANTRIEBSAGGREGAT VORM.
DICHTRING 10,7X16X1,5 St/FP	10011864	5	15	229	10143342	LECKOELRUECKLAUF
DICHTRING 10,7X16X1,5 St/FP	10011864	8	2	243	10145278	ANBAUTEILE LUFTPRESSER
DICHTRING 10,7X16X1,5 St/FP	10011864	5	2	254	11420633	TAKTVENTIL
DICHTRING 10,7X16X1,5 St/FP	10011864	8	2	276	10144036	NEBENABTRIEB ANBAU
DICHTRING 12,7X18,00X1,5 F	10011865	7	2	229	10143342	LECKOELRUECKLAUF
DICHTRING 12,7X18,00X1,5 F	10011865	27	2	253	12512627	ABGASSTUTZEN ANBAU
DICHTRING 12,7X18,00X1,5 F	10011865	14	2	276	10144036	NEBENABTRIEB ANBAU
DICHTRING 14,7X22,00X1,5 F	10011866	11	3	229	10143342	LECKOELRUECKLAUF
DICHTRING 14,7X22,00X1,5 F	10011866	2	7	247	10148216	ROHRLEITUNG ANBAU
DICHTRING 14,7X22,00X1,5 F	10011866	6	1	249	10142744	KUEHLWASSERENTLUEFTUN
DICHTRING 14,7X22,00X1,5 F	10011866	28	2	253	12512627	ABGASSTUTZEN ANBAU
DICHTRING 140X155X13	10802682	120	2	507	919674408	ABGASANLAGE
DICHTRING 140X155X13	10802682	120	3	511	96051842	ABGASANLAGE VORM.
DICHTRING 16,7X24,00X1,5 F	10011867	9	2	228	10143341	KRAFTSTOFFLEITUNGEN
DICHTRING 16,7X24,00X1,5 F	10011867	4	8	243	10145278	ANBAUTEILE LUFTPRESSER
DICHTRING 16,7X24,00X1,5 F	10011867	26	1	253	12512627	ABGASSTUTZEN ANBAU
DICHTRING 18,7X26X1,5 St/FP	10011868	2	1	193	10130406	NIVEAUGEBER
DICHTRING 18,7X26X1,5 St/FP	10011868	15	10	228	10143341	KRAFTSTOFFLEITUNGEN
DICHTRING 19,6X24,3X1,5 NBR	761022503	6	1	354	927554301	ENTLUEFTUNGSSTUTZEN
DICHTRING 19,6X24,3X1,5 NBR	761022503	14	1	374	90200104	OELMESSEINRICHTUNG
DICHTRING 19,6X24,3X1,5 NBR	761022503	14	1	612	90200103	OELMESSEINRICHTUNG
DICHTRING 22,7X30X2 St/FPM1	10011869	3	2	238	9080294	LUFTPRESSER VORM.
DICHTRING 22,7X30X2 St/FPM1	10011869	12	1	276	10144036	NEBENABTRIEB ANBAU
DICHTRING 26,7X34,93X2 St/FP	10011870	5	2	232	10145173	ANSAUGSTUTZEN ANBAU
DICHTRING 26,7X34,93X2 St/FP	10011870	27	1	252	10140729	ATL-ANBAU
DICHTRING 27X20X1,5 CU	10014697	9	3	136	11347526	ELEKTROPUMPE
DICHTRING 27X20X1,5 CU	10014697	10	3	525	10327065	ELEKTROPUMPE
DICHTRING 30,7X39X2 St/FPM1	10113731	3	1	215	10152592	UEBERDRUCKVENTIL
DICHTRING 8,7X14X1 St/FPM1	10011871	22	2	229	10143342	LECKOELRUECKLAUF
DICHTRING DIN 3869 20X17,8	761022903	2	2	374	90200104	OELMESSEINRICHTUNG
DICHTRING DIN 3869 20X17,8	761022903	2	2	612	90200103	OELMESSEINRICHTUNG
DICHTRING DIN 3869 21X18,5	7371651	(1)	1	561	96045351	HYDRAULIK OBERWAGEN
DICHTRING DIN 7603 A10X16	710101408	7	4	393	968514508	SCHALTSCHRANKDECKEL EIN
DICHTRING DIN 7603 A12X15,5	7101030	87	1	371	939292201	PLANETENGETRIEBE
DICHTRING DIN 7603 A14X18	710102508	11	1	189	10155227	OELWANNE VORM.
DICHTRING DIN 7603 A14X20	710103008	7	1	430	969085208	HEIZUNG VORM.
DICHTRING DIN 7603 A14X20	738122523	2	1	214	9078233	VENTIL
DICHTRING DIN 7603 A14X20	7381225	14	1	183	10147687	AGGREGATETRAEGER ANBA
DICHTRING DIN 7603 A14X20	7381225	30	1	253	12512627	ABGASSTUTZEN ANBAU
DICHTRING DIN 7603 A16X22	710103708	402	1	329	96034522	AUSGLEICHSBEHAELTER
DICHTRING DIN 7603 A18X22	710104008	(23)	2	722	967785408	ZUSATZHYDRAULIK KLAPPSPI
DICHTRING DIN 7603 A27X32	710105908	29	1	374	90200104	OELMESSEINRICHTUNG
DICHTRING DIN 7603 A30X36	710106508	3	1	184	10138450	ENDREGELVENTIL
DICHTRING DIN 7603 A30X36	710106508	5	3	189	10155227	OELWANNE VORM.
DICHTRING DIN 7603 A33X39	7101022	306	2	616	967784808	HYDRAULIK HILFSHUBWERK
DICHTRING DIN 7603 A38X44	710107208	305	2	616	967784808	HYDRAULIK HILFSHUBWERK
DICHTRING DIN 7603 A52X60	710107708	307	4	616	967784808	HYDRAULIK HILFSHUBWERK
DICHTRING DIN 7603 A6,5X9,5	710100408	9	1	393	968514508	SCHALTSCHRANKDECKEL EIN

Bezeichnung	Artikel	Pos.	Menge	Seite	Baugruppe	Bezeichnung
DICHTRING DIN 7603 A8X12X1	710100708	9	8	392	916162808	RELING
DICHTSATZ	10219620	999	1	293	10492431	DRUCKBEGRENZUNGSVENTI
DICHTSATZ	10285695	999	1	569	11482347	WEGEMAGNETVENTIL
DICHTSATZ	10285695	999	1	578	571634708	WEGEVENTIL
DICHTSATZ	10285695	999	1	580	10332397	WEGEVENTIL
DICHTSATZ	10331946	998	1	293	10492431	DRUCKBEGRENZUNGSVENTI
DICHTSATZ	10342480	999	1	319	10871282	VERSTELLPUMPE
DICHTSATZ	10423993	(999)	1	568	11211756	STEUERBLOCK
DICHTSATZ	10424726	999	1	310	10663105	TRIEBWERK
DICHTSATZ	11004122	(999)	1	572	10413106	STEUERBLOCK
DICHTSATZ	11170384	(999)	1	697	10876933	TELESKOPIERZYLINDER
DICHTSATZ	11170868	(5)	1	353	90008901	DREHWERKANTRIEB
DICHTSATZ	11170869	(6)	1	353	90008901	DREHWERKANTRIEB
DICHTSATZ	11494337	(98)	1	305	11210795	VERSTELLPUMPE
DICHTSATZ	11600280	(999)	1	297	11182708	VERSTELLPUMPE
DICHTSATZ	11643397	(999)	1	373	11182597	VERSTELLMOTOR
DICHTSATZ	11691956	3	1	63	11643183	STEUERBLOCK
DICHTSATZ	11691956	3	1	66	11643184	STEUERBLOCK
DICHTSATZ	12102278	(999)	1	83	11320954	LEITRADEINHEIT
DICHTSATZ	511043308	(999)	1	574	10332882	STEUERBLOCK
DICHTSATZ	571407208	(999)	1	577	12100860	STEUERBLOCK
DICHTSATZ	571496708	999	1	764	512363708	HYDROZYLINDER
DICHTSATZ	571614608	(1)	1	697	10876933	TELESKOPIERZYLINDER
DICHTSATZ	571840008	(999)	1	560	96045351	HYDRAULIK OBERWAGEN
DICHTSATZ GRUNDBLOCK	10684170	(999)	1	560	96045351	HYDRAULIK OBERWAGEN
DICHTSATZ VITON	571187408	(999)	1	574	10332882	STEUERBLOCK
DICHTSCHEIBE 150X158X0,10	10154459	2	1	182	10154458	ZYLINDER
DICHTSCHEIBE 7,6X15,8X1 VI	571082508	(1)	1	561	96045351	HYDRAULIK OBERWAGEN
DICHTSCHEIBE 7X19X4 A2	429900308	7	12	92	968420608	STAUKASTEN VORM.
DICHTSCHEIBE 8X22X4 -A2	429900608	376	4	520	918731908	LUFTFILTERANLAGE
DICHTSCHEIBE VITON	571081908	(1)	1	728	967785008	ZUSATZHYDRAULIK KLAPPSPI
DICHTSCHEIBE VITON	571082408	(1)	1	728	967785008	ZUSATZHYDRAULIK KLAPPSPI
DICHTSTOPFEN	738048003	2	1	370	939292201	PLANETENGETRIEBE
DICHTSTOPFEN 9	761081903	8	1	78	90028956	FAHRANTRIEB
DICHTSTOPFEN 9	761081903	9	3	370	939292201	PLANETENGETRIEBE
DICHTSTOPFEN GPN 735 M33	10465711	15	2	183	10147687	AGGREGATETRAEGER ANBA
DICHTSTOPFEN LK 950	10030837	14	14	180	11389608	KURBELGEHAEUSE KPL. MIT
DICHTSTOPFEN LK 950	10036325	8	1	207	11448005	KIPPHEBELBOCK VORM.
DICHTSTOPFEN M18X1.5	11389287	3	1	230	10143825	EINSPRITZLEITUNGEN
DICHTSTREIFEN 40X4 NBR/S	11114455	43	4	500	918731808	HARNSTOFFANLAGE
DICHTUNG	10135885	3	4	250	10140087	ABGASROHR ANBAU
DICHTUNG	10144861	13	1	500	918731808	HARNSTOFFANLAGE
DICHTUNG	10297876	2	1	317	11692439	STEUERVENTIL
DICHTUNG	10815005	2	1	47	10450273	ANTENNE
DICHTUNG	11826653	12	1	484	10876576	WASSERHEIZGERAET
DICHTUNG	11826653	(3)	1	484	10876576	WASSERHEIZGERAET
DICHTUNG	12462476	4	2	516	11429728	SCRFILTER-BAUGRUPPE
DICHTUNG	12565355	4	4	208	11358102	ZYLINDERKOPFDECKEL ANBA
DICHTUNG	7011131	2	1	190	5004624	OELABLASSSCHRAUBE
DICHTUNG	9144762	(3)	1	208	11358102	ZYLINDERKOPFDECKEL ANBA
DICHTUNG	9885529	(5)	1	275	10125687	NEBENABTRIEB ANBAU
DICHTUNG 0,33 METALOSEAL	10126738	2	1	183	10147687	AGGREGATETRAEGER ANBA
DICHTUNG 0,33 METALOSEAL	10137721	5	1	262	10115829	SCHWUNGRADGEHAEUSE AN
DICHTUNG 0,75X104X146 AFM	12969638	5	1	276	10144036	NEBENABTRIEB ANBAU
DICHTUNG 1	9079130	3	1	226	10146791	KRAFTSTOFF-FEINFILTERAN
DICHTUNG 1,5 AFM 32/2	9268131	18	1	252	10140729	ATL-ANBAU
DICHTUNG 1.5X210X360 GU	97083604	431	1	520	918731908	LUFTFILTERANLAGE
DICHTUNG 1.5X721X86 EPDM	97005272	3	1	409	966497908	FRONTSCHEIBE KPL.
DICHTUNG 120X60X 30 SCHW	976094308	7	1	390	916170808	KABELEINFUEHRUNG
DICHTUNG 25X14X4080 EPDM	97046043	18	1	406	916162508	SCHEIBEN EINBAU

Bezeichnung	Artikel	Pos.	Menge	Seite	Baugruppe	Bezeichnung
DICHTUNG 25X892X720 EPDM	97033487	7	1	406	916162508	SCHEIBEN EINBAU
DICHTUNG 2X148X84 EPDM	97005291	7	1	409	966497908	FRONTSCHEIBE KPL.
DICHTUNG 2X225X107 EPDM	97005290	6	1	409	966497908	FRONTSCHEIBE KPL.
DICHTUNG 2X86X28 EPDM	97012017	29	2	409	966497908	FRONTSCHEIBE KPL.
DICHTUNG 2X94X39 EPDM	97005309	11	9	409	966497908	FRONTSCHEIBE KPL.
DICHTUNG 439X120X5 POLYA	97012288	6	1	390	916170808	KABELEINFUEHRUNG
DICHTUNG 4X322X62 EPDM 20	97005040	9	1	412	916168308	LUFTFUEHRUNG
DICHTUNG 4X407X85 EPDM 20	97005042	10	2	412	916168308	LUFTFUEHRUNG
DICHTUNG 645X786 EPDM	97007649	2	1	393	968514508	SCHALTSCHRANKDECKEL EIN
DICHTUNG 721X43X 1.5 EPDM	97006055	18	1	409	966497908	FRONTSCHEIBE KPL.
DICHTUNG 78X64 30	976193208	8	1	390	916170808	KABELEINFUEHRUNG
DICHTUNG 7X182X51 POLYO	97006874	32	6	399	917305408	INNENVERKLEIDUNG EINBAU
DICHTUNG 85.5X89X30 ZP-30	97071963	16	1	390	916170808	KABELEINFUEHRUNG
DICHTUNG 90X97X5 POLYALE	978172508	13	1	467	96053500	ELEKTRIK ANBAUTEILE KABIN
DICHTUNG AFM 30	10117709	2	1	212	10129475	OELKUEHLER ANBAU
DICHTUNG AFM 30	10128516	2	1	187	10132560	OELWANNE MIT BEFEST.
DICHTUNG DIN 71511 1,5X25X	4980359	4	2	213	10129474	OELKUEHLER VORM.
DICHTUNG S235JR	10118556	2	4	231	10147365	LUFTANSAUGROHR ANBAU
DICHTUNG X15CrNiSi20-	10125739	7	1	252	10140729	ATL-ANBAU
DICHTUNG X5CrNi18-10	12436701	32	1	253	12512627	ABGASSTUTZEN ANBAU
DICHTUNG XTREME PLUS	10125148	121	1	507	919674408	ABGASANLAGE
DICHTUNGSMASSE	10447539	99	1	525	10327065	ELEKTROPUMPE
DICHTUNGSMASSE TUBE 50M	811201314	108	1	226	10146791	KRAFTSTOFF-FEINFILTERAN
DICHTUNGSMASSE TUBE 50M	811201314	108	1	277	9077386	NEBENABTRIEB VORM.
DICHTUNGSMITTEL 90G TUBE	8627609	112	1	189	10155227	OELWANNE VORM.
DICHTUNGSMUTTER M6	7361600	18	1	325	10292815	REGLERELEMENT
DICHTUNGSMUTTER M8	7361601	14	1	308	571899508	ABSCHALTVENTIL
DICHTUNGSMUTTER M8	7361601	11	1	313	571900808	REGLERELEMENT
DICHTUNGSMUTTER M8	7361601	11	1	314	10472202	REGLERELEMENT
DICHTUNGSSATZ	10331947	800	1	292	10429930	ZAHNRADMOTOR
DIESELMOTOR D944 A7-05 SP	13455297	1	1	173	919832508	DIESELMOTOR KAUFTEIL
DIESELMOTOR KAUFTEIL	919832508	104	1	12		LIEBHERR LTR 1220
DIESELOXIDATIONSKATALYSA	12888563	102	1	507	919674408	ABGASANLAGE
DIFFERENZDRUCKSENSOR 0-	10127114	155	1	514	96041566	ELEKTRIK ANBAUTEILE
DIODENBAUSTEIN PBTP-GF20	10440553	11	1	540	91000922	EINBAUTEILE SCHALTSCHRAN
DISTANZBLECH 1X60X120 DC0	97033390	25	4	124	968046208	ANBAUTEILE
DISTANZBLECH 8X60X120 S35	97033383	24	4	124	968046208	ANBAUTEILE
DISTANZBOLZEN	11321016	11	4	754	910836808	HAKENFLASCHE
DISTANZHUELSE 10X6,2X10 P	10354375	56	1	399	917305408	INNENVERKLEIDUNG EINBAU
DISTANZHUELSE 11X18X10 St	10117226	117	4	287	919007708	ANTRIEBSAGGREGAT VORM.
DISTANZHUELSE 11X20X25 42	10138657	7	14	250	10140087	ABGASROHR ANBAU
DISTANZHUELSE 11X24X10,5	9076588	90	1	269	10151328	KABELBAUM ANBAU
DISTANZHUELSE 12X8,2X5 P	10354377	3	3	95	96062678	HEBEL VORM.
DISTANZHUELSE 15X6,3X25 P	10441664	55	1	399	917305408	INNENVERKLEIDUNG EINBAU
DISTANZHUELSE 15X6,3X25 P	10441664	4	2	749	968811608	QUERTRAEGER
DISTANZHUELSE 18.0X26 E23	97047984	13	1	286	919007708	ANTRIEBSAGGREGAT VORM.
DISTANZHUELSE 30.0 X0 42C	952177008	20	2	280	918731408	ANTRIEBSAGGREGAT KPL.
DISTANZHUELSE 30.0 X0 42C	952177008	31	5	286	919007708	ANTRIEBSAGGREGAT VORM.
DISTANZHUELSE 35.0X40 35N	970780908	3	2	337	917626608	KRAFTSTOFFBEHAELTER AN
DISTANZHUELSE 8,5X18X10 11	9132577	93	1	269	10151328	KABELBAUM ANBAU
DISTANZHUELSE 9X15X30 42	12843150	5	1	221	10152867	INJEKTOR MIT BEFEST.
DISTANZHUELSE 9X15X30 42	12843150	6	1	222	10152874	RS INJEKTOR
DISTANZPLATTE 15X100X379	973258608	39	1	685	917292308	TELESKOP 4 VORM.
DISTANZPLATTE 15X103X408	973057708	39	1	681	917292208	TELESKOP 3 VORM.
DISTANZPLATTE 15X105X429	973245708	39	1	677	917292108	TELESKOP 2 VORM.
DISTANZPLATTE 15X110X465	972898108	39	1	673	917292008	TELESKOP 1 VORM.
DISTANZPLATTE 15X113X449	973258708	43	2	685	917292308	TELESKOP 4 VORM.
DISTANZPLATTE 15X113X492	973358008	55	1	668	917291908	ANLENKSTUECK VORM.
DISTANZPLATTE 15X119X497	973245808	43	2	677	917292108	TELESKOP 2 VORM.
DISTANZPLATTE 15X121X498	973253208	43	2	681	917292208	TELESKOP 3 VORM.

Bezeichnung	Artikel	Pos.	Menge	Seite	Baugruppe	Bezeichnung
DISTANZPLATTE 15X138X592	972898308	43	2	673	917292008	TELESKOP 1 VORM.
DISTANZPLATTE 15X141X621	973357808	47	2	668	917291908	ANLENKSTUECK VORM.
DISTANZPLATTE 60X37X730 P	97031640	5	16	20	91001569	RAUPENFAHRWERK KPL.
DISTANZROHR 159.0X12 S355	971095808	9	2	734	917268408	MASTNASE
DISTANZROHR 8.0X30 E235+N	97051280	16	4	751	968728808	KONSOLE VORM.
DISTANZROHR RD159X4,5X22	953536408	2	1	739	910040808	2.NACKENROLLE EINBAU
DISTANZROHR RD159X4,5X36	955581808	25	1	690	917292408	TELESKOP 5 VORM.
DISTANZROHR RD159X4,5X65	953536508	3	1	739	910040808	2.NACKENROLLE EINBAU
DISTANZSCHEIBE RD.164X3 P	97037959	4	1	639	968993508	KAMERAHALTER VORM.
DISTANZSTUECK 190X75X34 P	97001821	19	1	673	917292008	TELESKOP 1 VORM.
DISTANZSTUECK 190X75X34 P	97001821	19	1	677	917292108	TELESKOP 2 VORM.
DISTANZSTUECK 190X75X34 P	97001821	19	2	681	917292208	TELESKOP 3 VORM.
DISTANZSTUECK 190X75X34 P	97001821	19	2	685	917292308	TELESKOP 4 VORM.
DISTANZSTUECK 190X75X34 P	97001821	13	2	690	917292408	TELESKOP 5 VORM.
DISTANZSTUECK PA6G	97040155	44	16	75	91001377	RAUPENTRAEGER VORM.LI.
DISTANZSTUECK PA6G	97040155	44	16	108	91001378	RAUPENTRAEGER VORM.RE.
DOPPELABREISSSTOPFEN	5616114	22	1	81	11161917	STEUERTEIL
DOPPELABREISSSTOPFEN	7012971	13	2	307	10873570	ANSCHLUSSPLATTE
DOPPELABREISSSTOPFEN	7012971	12	1	323	571907208	ANSCHLUSSPLATTE
DOPPELABREISSSTOPFEN	7022127	11	1	307	10873570	ANSCHLUSSPLATTE
DOPPELABREISSSTOPFEN	7022127	11	4	311	10008308	ANSCHLUSSPLATTE
DOPPELABREISSSTOPFEN	7022127	52	7	312	10472196	REGLER
DOPPELABREISSSTOPFEN	7022127	11	6	323	571907208	ANSCHLUSSPLATTE
DOPPELABREISSSTOPFEN	7022127	52	5	324	10292801	REGLER
DOPPELFEDERKONTAKT 0,5-1	6001703	2267	6	533	96045385	KABELSTRANG
DOPPELHAKEN	11347028	30	1	754	910836808	HAKENFLASCHE
DOPPELHOHLSCHRAUBE 6-M1	12210029	12	1	229	10143342	LECKOELRUECKLAUF
DOPPELMAULSCHLUESSEL D	790003908	20	1	152	928569808	GRUNDWERKZEUG
DOPPELMAULSCHLUESSEL D	790003308	11	1	152	928569808	GRUNDWERKZEUG
DOPPELMAULSCHLUESSEL D	790002208	12	1	152	928569808	GRUNDWERKZEUG
DOPPELMAULSCHLUESSEL D	790002408	13	1	152	928569808	GRUNDWERKZEUG
DOPPELMAULSCHLUESSEL D	790003608	15	1	152	928569808	GRUNDWERKZEUG
DOPPELMAULSCHLUESSEL D	790002508	16	1	152	928569808	GRUNDWERKZEUG
DOPPELMAULSCHLUESSEL D	790002608	17	1	152	928569808	GRUNDWERKZEUG
DOPPELMAULSCHLUESSEL D	790002808	18	1	152	928569808	GRUNDWERKZEUG
DOPPELMAULSCHLUESSEL D	790002908	19	1	152	928569808	GRUNDWERKZEUG
DOPPELMAULSCHLUESSEL DI	790001708	10	1	152	928569808	GRUNDWERKZEUG
DOPPELMAULSCHLUESSEL	10652772	14	1	152	928569808	GRUNDWERKZEUG
DOPPELSTECKDOSE 2-POL	10875121	19	1	462	96036955	KABELSTRANG
DORNNIET 4X10,3	704207608	9	20	551	969061708	TRAEGERBLECH SICHERUNG
DORNNIET 4X15	704207708	200	4	164	917862808	BESCHILDERUNG GROSSBRI
DOSE M1	604508108	155	1	714	968708708	KLEMMKASTEN KPL.
DOSIERPUMPE DP42.4 HD	11110051	2	1	480	918759808	ZUSATZHEIZUNG OW
DRAEHTE GRUNDAUFBAU KP	96045387	1	1	541	96045386	GRUNDAUFBAU KPL.
DRAEHTE GRUNDAUFBAU V	96045388	2	1	542	96045387	DRAEHTE GRUNDAUFBAU KPL
DRAEHTE KLEMMKASTEN KP	966354908	18	1	714	968708708	KLEMMKASTEN KPL.
DRAHT	7624238	17	4	321	10872488	TRIEBWERK
DRAHTSCHLAUCHKLEMME 70	11000902	14	2	412	916168308	LUFTFUEHRUNG
DRAHTSCHLAUCHKLEMME 79	11000903	13	6	412	916168308	LUFTFUEHRUNG
DREHBUEHNENARRETIERUN	917259608	121	1	13		LIEBHERR LTR 1220
DREHBUEHNENVERKLEIDUN	918731508	139	1	13		LIEBHERR LTR 1220
DREHBUEHNENVERKLEIDUN	969015908	2	1	441	918731508	DREHBUEHNENVERKLEIDUN
DREHBUEHNENVERKLEIDUN	96036790	1	1	441	918731508	DREHBUEHNENVERKLEIDUN
DREHDURCHFUEHRUNG	919087608	30	1	12		LIEBHERR LTR 1220
DREHDURCHFUEHRUNG SPF	11182736	1	1	147	919087608	DREHDURCHFUEHRUNG
DREHFALLENSCHLOSS LINKS	11005985	1	1	422	966230408	SCHLIESSANLAGE
DREHGEBER 360° LSB PL:E SP	10802060	(11)	1	529	968128908	EL.GEBER U.ENDSCHALTER
DREHSCHLOSSBETAETIGER 1	606144908	7	1	551	969061708	TRAEGERBLECH SICHERUNG
DREHSTROMGENERATOR 5.0	10142606	1	1	255	10142863	GENERATOR VORM.
DREHVERSCHRAUBUNG DG1	474234008	150	3	717	967784508	HYDRAULIK TELE

Bezeichnung	Artikel	Pos.	Menge	Seite	Baugruppe	Bezeichnung
DREHWERK	919369308	119	1	12		LIEBHERR LTR 1220
DREHWERKANTRIEB DAT 225	90008901	1	2	351	919369308	DREHWERK
DREHZAHLGEBER 10-10000H	12977971	(1)	1	273	12583633	MOTORREGELUNGSENSORIK
DREHZAHLGEBER KPL. 10-10	12544505	20	2	273	12583633	MOTORREGELUNGSENSORIK
DREIFACHPUMPE A4VG+A11V	10871047	107	1	287	919007708	ANTRIEBSAGGREGAT VORM.
DRUCK-/TEMPERATUR SENSO	12414685	739	1	502	11373478	REDUKTIONSMITTELPUMPE
DRUCKAUFNEHMER 0-400/400	10813738	60	7	560	96045351	HYDRAULIK OBERWAGEN
DRUCKAUFNEHMER 0-400/400	10813738	53	1	616	967784808	HYDRAULIK HILFSHUBWERK
DRUCKAUFNEHMER 0-400/400	10813738	51	1	717	967784508	HYDRAULIK TELE
DRUCKAUFNEHMER 0-400/400	10816185	61	1	560	96045351	HYDRAULIK OBERWAGEN
DRUCKAUFNEHMER 0-750/750	10813739	62	2	560	96045351	HYDRAULIK OBERWAGEN
DRUCKBEGRENZUNGSVENTI	10280213	60	1	624	10038509	STEUERBLOCK
DRUCKBEGRENZUNGSVENTI	10280214	70	1	624	10038509	STEUERBLOCK
DRUCKBEGRENZUNGSVENTI	10489734	7	1	582	11341035	STEUERBLOCK
DRUCKBEGRENZUNGSVENTI	10492431	11	1	292	10429930	ZAHNRADMOTOR
DRUCKBEGRENZUNGSVENTI	570427408	7	1	574	10332882	STEUERBLOCK
DRUCKBEGRENZUNGSVENTI	571723708	6	1	574	10332882	STEUERBLOCK
DRUCKBEGRENZUNGSVENTI	571723808	8	1	574	10332882	STEUERBLOCK
DRUCKBEGRENZUNGSVENTI	571899408	1	1	307	10873570	ANSCHLUSSPLATTE
DRUCKBEGRENZUNGSVENTI	571910208	37	1	697	10876933	TELESKOPIERZYLINDER
DRUCKBEGRENZUNGSVENTI	10872307	1	1	503	969904608	DRUCKBEGRENZUNGSVENTI
DRUCKBEGRENZUNGSVENTIL	10332395	30	1	577	12100860	STEUERBLOCK
DRUCKBEGRENZUNGSVENTI	969904608	16	1	500	918731808	HARNSTOFFANLAGE
DRUCKBEGRENZUNGSVENTI	511450208	150	1	722	967785408	ZUSATZHYDRAULIK KLAPPSPI
DRUCKBEGRENZUNGSVENTI	11161570	168	1	560	96045351	HYDRAULIK OBERWAGEN
DRUCKBEGRENZUNGSVENTI	511456808	195	1	561	96045351	HYDRAULIK OBERWAGEN
DRUCKBEGRENZUNGSVENTI	511419608	198	1	561	96045351	HYDRAULIK OBERWAGEN
DRUCKBEGRENZUNGSVENTI	511433908	162	2	560	96045351	HYDRAULIK OBERWAGEN
DRUCKFEDER	10217532	7	1	81	11161917	STEUERTEIL
DRUCKFEDER	11102038	17	1	699	571928508	ZYLINDERKOPF KPL.
DRUCKFEDER	12107367	(3)	10	353	90008901	DREHWERKANTRIEB
DRUCKFEDER	12107368	(4)	10	353	90008901	DREHWERKANTRIEB
DRUCKFEDER	510783008	9	1	588	511419608	DRUCKBEGRENZUNGSVENTI
DRUCKFEDER	510797508	9	1	585	511433908	DRUCKBEGRENZUNGSVENTI
DRUCKFEDER	511015108	4	1	585	511433908	DRUCKBEGRENZUNGSVENTI
DRUCKFEDER	511015308	4	1	588	511419608	DRUCKBEGRENZUNGSVENTI
DRUCKFEDER	511025508	10	2	63	11643183	STEUERBLOCK
DRUCKFEDER	511025508	10	2	66	11643184	STEUERBLOCK
DRUCKFEDER	571115508	9	1	81	11161917	STEUERTEIL
DRUCKFEDER	7023659	3	1	315	10472208	VERSTELLUNG
DRUCKFEDER	7027053	46	1	81	11161917	STEUERTEIL
DRUCKFEDER 0,6X5,1X4	11340583	2	1	316	10871043	VERSTELLPUMPE
DRUCKFEDER 1,6X14,4X59,3 E	12101506	25	2	31	968036408	ENDSCHALTER VORM.
DRUCKFEDER 1,6X18,2X44	720009408	22	4	701	966134608	ANBAUTEILE ZYLINDER
DRUCKFEDER 1,8X7,3X40,5	10176329	7	10	358	90025782	BREMSFEDERSATZ
DRUCKFEDER 15X133X223 SP	720014908	2	1	673	917292008	TELESKOP 1 VORM.
DRUCKFEDER 15X133X223 SP	720014908	2	1	677	917292108	TELESKOP 2 VORM.
DRUCKFEDER 15X133X223 SP	720014908	2	1	681	917292208	TELESKOP 3 VORM.
DRUCKFEDER 15X133X223 SP	720014908	2	1	685	917292308	TELESKOP 4 VORM.
DRUCKFEDER 15X133X223 SP	720014908	22	1	690	917292408	TELESKOP 5 VORM.
DRUCKFEDER 1X4,1X41,3	10176330	8	10	358	90025782	BREMSFEDERSATZ
DRUCKFEDER 2,10X17,80X75,0	9886756	9	1	213	10129474	OELKUEHLER VORM.
DRUCKFEDER 2X12X41,73 EN	11067867	38	1	421	917304708	SCHIEBETUER EINBAU
DRUCKFEDER 3,2X16,8X100,7	10129501	4	1	215	10152592	UEBERDRUCKVENTIL
DRUCKFEDER 3X17X74,67 O	11118160	6	1	184	10138450	ENDREGELVENTIL
DRUCKFEDER 4,60X28,40X62,7	9074481	(9)	4	202	10149580	ZYLINDERKOPF ANBAU
DRUCKFEDER 4,60X28,40X62,7	9074481	9	4	204	10149579	ZYLINDERKOPF VORM.
DRUCKFEDER 4X25X41 EN 10	11003426	5	1	477	966707708	SPIEGELHALTER VORM.
DRUCKFEDER 6,3X80X145	720011408	4	1	363	917259608	DREHBUEHNENARRETIERUN
DRUCKFEDER 8X92X50 FED	10297691	5	1	383	96015921	BEDIENELEMENTE EINBAU

Bezeichnung	Artikel	Pos.	Menge	Seite	Baugruppe	Bezeichnung
DRUCKFEDER DIN 2098 2X16	720008508	6	1	763	923285508	KLAPPKONSOLE VORM.
DRUCKFEDER EN10270-3	720012608	34	1	761	917267508	TRANSPORTHALTERUNG DKS
DRUCKFILTER	510671508	165	2	560	96045351	HYDRAULIK OBERWAGEN
DRUCKGEBER 0,5-4,5 BAR	12907020	(1)	1	273	12583633	MOTORREGELUNGSENSORIK
DRUCKGEBER 0-10 BAR	12907001	(1)	1	273	12583633	MOTORREGELUNGSENSORIK
DRUCKGEBER KPL. 0,5-4,5 BA	9076550	11	1	273	12583633	MOTORREGELUNGSENSORIK
DRUCKGEBER KPL. 0-10 BAR	9076531	10	2	273	12583633	MOTORREGELUNGSENSORIK
DRUCKLUFTANLAGE OW	917676308	155	1	13		LIEBHERR LTR 1220
DRUCKREGELVENTIL SPF	10342823	20	1	568	11211756	STEUERBLOCK
DRUCKRING	502923708	46	2	467	96053500	ELEKTRIK ANBAUTEILE KABIN
DRUCKRING DR/R22X27	502932508	9	1	339	968999708	KRAFTSTOFFBEHAELTER VO
DRUCKRING DR/R26X31	502932808	312	1	496	969763408	VERROHRUNG DRUCKLUFTA
DRUCKROHRSTUTZEN MIT BE	10153151	191	4	176	13455297	DIESELMOTOR
DRUCKSCHALTER 0-20/300BA	10289536	53	1	560	96045351	HYDRAULIK OBERWAGEN
DRUCKSCHALTER 0-20/300BA	10289536	51	1	616	967784808	HYDRAULIK HILFSHUBWERK
DRUCKSCHALTER 0-8/300 BA	10220933	54	1	560	96045351	HYDRAULIK OBERWAGEN
DRUCKSCHALTER 0-8/300 BA	10220933	52	1	616	967784808	HYDRAULIK HILFSHUBWERK
DRUCKSCHALTER 1,5-26 BAR	571489108	106	1	291	96034631	KUEHLER VORM.
DRUCKSCHALTER 10-100/400	510676908	50	1	98	96035796	HYDR.FAHRANTRIEB
DRUCKSCHALTER 10-100/400	510676908	50	1	115	96035792	HYDR.FAHRANTRIEB
DRUCKSTUECK	240191502	100	1	294	968026308	KUPPLUNGSSTELLER
DRUCKTASTE	606143008	18	1	471	96022872	ARMATURENBRETT DACH
DRUCKTASTE	606143008	8	1	551	969061708	TRAEGERBLECH SICHERUNG
DRUCKTASTER	11171271	33	1	435	10877138	FAHRERSITZ
DRUCKVENTIL	10875076	6	1	568	11211756	STEUERBLOCK
DRUCKVENTIL	10875077	21	1	568	11211756	STEUERBLOCK
DS ABSTUETZZYLINDER	10878366	(999)	1	129	919644008	HYDRAULISCHE ABSTUETZUN
DS ANSCHLUSSBLOCK	11220418	5	1	63	11643183	STEUERBLOCK
DS ANSCHLUSSBLOCK	11220418	5	1	66	11643184	STEUERBLOCK
DS ANSCHLUSSPLATTE	10472219	999	1	311	10008308	ANSCHLUSSPLATTE
DS ANSCHLUSSPLATTE	10872487	999	1	323	571907208	ANSCHLUSSPLATTE
DS ANSTEUERGERAET	10471439	(98)	1	305	11210795	VERSTELLPUMPE
DS BALLASTIERZYLINDER	12104276	999	1	490	10877810	BALLASTIERZYLINDER
DS BREMSE	969997708	(999)	1	78	90028956	FAHRANTRIEB
DS DREHDURCHFUEHRUNG	10873566	(23)	2	147	919087608	DREHDURCHFUEHRUNG
DS DRUCKBEGRENZUNGSV	10470385	(999)	1	574	10332882	STEUERBLOCK
DS DRUCKBEGRENZUNGSV	10872098	(999)	1	624	10038509	STEUERBLOCK
DS DRUCKBEGRENZUNGSV	10872098	(999)	1	624	10038509	STEUERBLOCK
DS DRUCKROHRSTUTZEN	10141216	12	1	223	10141140	RS DRUCKROHRSTUTZEN
DS DRUCKROHRSTUTZEN	10141216	210	1	225	10153151	DRUCKROHRSTUTZEN MIT BE
DS HOCHDRUCKPUMPE	12417001	210	1	219	10146658	HOCHDRUCKPUMPE
DS HOCHDRUCKPUMPE	12937883	211	1	219	10146658	HOCHDRUCKPUMPE
DS HYDROMOTOR	10872714	999	1	594	10872388	HYDROMOTOR
DS HYDROZYLINDER	10490901	(999)	1	363	917259608	DREHBUEHNENARRETIERUN
DS HYDROZYLINDER	10491695	999	1	379	11214363	KIPPZYLINDER
DS INJEKTOR	10141215	210	1	221	10152867	INJEKTOR MIT BEFEST.
DS REGLER	10440976	999	1	312	10472196	REGLER
DS REGLER	10663065	999	1	324	10292801	REGLER
DS SENKBREMSVENTIL	10664166	(999)	1	560	96045351	HYDRAULIK OBERWAGEN
DS STEUERBLOCK	10491129	999	1	584	10449853	WEGEVENTIL
DS TELESKOPZYLINDER	10878189	999	1	697	10876933	TELESKOPIERZYLINDER
DS TRIEBWELLE	11494585	(98)	1	305	11210795	VERSTELLPUMPE
DS VENTIL	10663092	(999)	1	572	10413106	STEUERBLOCK
DS VENTIL	10663097	(999)	1	572	10413106	STEUERBLOCK
DS VENTIL	10802870	(99)	1	132	968077208	HYDRAULIK ABSTUETZUNG
DS VENTILBLOCK	96050083	(999)	1	560	96045351	HYDRAULIK OBERWAGEN
DS VERSTELLPUMPE	10488696	98	1	305	11210795	VERSTELLPUMPE
DS VERSTELLPUMPE	10663107	98	1	309	11210798	VERSTELLPUMPE
DS VERSTELLPUMPE	11690589	98	1	297	11182708	VERSTELLPUMPE
DS VERSTELLPUMPE	11690589	98	1	300	10871017	VERSTELLPUMPE

Bezeichnung	Artikel	Pos.	Menge	Seite	Baugruppe	Bezeichnung
DS VORFOERDERPUMPE	12424993	215	1	219	10146658	HOCHDRUCKPUMPE
DS WEGEVENTIL	10802253	(999)	1	560	96045351	HYDRAULIK OBERWAGEN
DS WEGEVENTIL	10871959	(999)	1	624	10038509	STEUERBLOCK
DS WEGEVENTIL	11006275	999	1	575	571737808	WEGEVENTIL
DS WIPPZYLINDER	12104385	999	1	648	12102921	WIPPZYLINDER
DS ZAHNRADPUMPE	10492710	999	1	302	11210201	ZAHNRADPUMPE
DS ZAHNRADPUMPE	10492710	999	1	326	10870964	ZAHNRADPUMPE
DS ZAHNRADPUMPE	11494341	999	1	327	10870965	ZAHNRADPUMPE
DS ZYLINDER	10871692	999	1	23	12102931	SPURVERSTELLZYLINDER
DS ZYLINDER	11621953	999	1	36	10870204	VERRIEGELUNGSZYLINDER
DS ZYLINDERKOPF -30°C	12107727	999	1	699	571928508	ZYLINDERKOPF KPL.
DSF-RING 130X121,9X3,5	12478647	5	1	201	10146367	KOLBEN KPL.
DU-BUCHSE	708010008	3	2	762	929582108	HALTERUNG VORM.
DU-BUCHSE	708010008	4	1	765	923879808	KONSOLE VORM.
DU-BUCHSE	708011608	21	2	761	917267508	TRANSPORTHALTERUNG DKS
DUESE 0,5 M5X5	511044108	193	1	561	96045351	HYDRAULIK OBERWAGEN
DUESE 0,5 M5X9 MS	511062708	159	1	98	96035796	HYDR.FAHRANTRIEB
DUESE 0,5 M5X9 MS	511062708	159	1	115	96035792	HYDR.FAHRANTRIEB
DUESE 0,5 M5X9 MS	511062708	157	1	560	96045351	HYDRAULIK OBERWAGEN
DUESE 0,5 M5X9 MS	511062708	169	1	616	967784808	HYDRAULIK HILFSHUBWERK
DUESE 0,6 M5X9 CUZN39PB3	510746008	153	1	717	967784508	HYDRAULIK TELE
DUESE 0,8 M5X9 MS	510754008	158	1	560	96045351	HYDRAULIK OBERWAGEN
DUESE 3,0 M10X10 MS	511059408	161	1	560	96045351	HYDRAULIK OBERWAGEN
DUESENSATZ PA	10815496	16	1	415	916163008	WISCHANLAGE EINBAU
DURCHFUEHRUNGSTUELLE	602701308	1	1	390	916170808	KABELEINFUEHRUNG
DURCHGANGSNIPPELBLOCK	774375108	6	2	135	917257108	ZENTRALSCHMIERUNG RAUP
DURCHGANGSNIPPELBLOCK	774375108	9	2	523	917261208	ZENTRALSCHMIERANLAGE O
EIN-/AUSGANGSMODUL LSB-	11213706	100	1	550	968253608	UNIVERSAL EIN-AUSGANGS
EINBAUSTECKDOSE 2-POL	605203908	5	1	471	96022872	ARMATURENBRETT DACH
EINBAUSTECKDOSE 2-POL	605203908	3	1	551	969061708	TRAEGERBLECH SICHERUNG
EINBAUTEILE SCHALTSCHRAN	91000922	181	1	14		LIEBHERR LTR 1220
EINBAUVENTIL	10801534	7	1	572	10413106	STEUERBLOCK
EINBAUVENTIL	571415208	2	1	572	10413106	STEUERBLOCK
EINBAUVENTIL	571415208	11	1	572	10413106	STEUERBLOCK
EINFUELLDECKEL 42 PA	10815416	19	1	415	916163008	WISCHANLAGE EINBAU
EINLASSMODUL SCRFILTER	11428887	1	1	516	11429728	SCRFILTER-BAUGRUPPE
EINLASSVENTIL	10144556	(2)	2	202	10149580	ZYLINDERKOPF ANBAU
EINLASSVENTIL	10144556	2	2	204	10149579	ZYLINDERKOPF VORM.
EINLEGEBRUECKE	602735508	39	47	540	91000922	EINBAUTEILE SCHALTSCHRAN
EINLEGETEIL 10X91X152 PA6	97032167	7	4	129	919644008	HYDRAULISCHE ABSTUETZUN
EINMAULSCHLUESSEL DIN 8	885132208	21	1	152	928569808	GRUNDWERKZEUG
EINMAULSCHLUESSEL DIN 8	790004608	22	1	152	928569808	GRUNDWERKZEUG
EINSCHRAUBSTUTZEN GE 38S	7410455	663	4	57	96035801	HYDRAULIK MITTELTEIL
EINSCHRAUBSTUTZEN GE 38S	7410455	625	1	98	96035796	HYDR.FAHRANTRIEB
EINSCHRAUBSTUTZEN GE 38S	7410455	625	1	115	96035792	HYDR.FAHRANTRIEB
EINSCHRAUBSTUTZEN GE 42L	10476913	654	1	57	96035801	HYDRAULIK MITTELTEIL
EINSCHRAUBSTUTZEN ISO 8	7018842	684	3	563	96045351	HYDRAULIK OBERWAGEN
EINSPRITZLEITUNG R-MOTOR	10143826	1	1	230	10143825	EINSPRITZLEITUNGEN
EINSPRITZLEITUNG R-MOTOR	10143827	2	3	230	10143825	EINSPRITZLEITUNGEN
EINSPRITZLEITUNGEN R-MOT	10143825	215	1	176	13455297	DIESELMOTOR
EINSTECKHUELSE E10-7	772002708	31	1	500	918731808	HARNSTOFFANLAGE
EINSTECKHUELSE E8-6 EDEL	10871759	36	1	500	918731808	HARNSTOFFANLAGE
EINSTELLBUCHSE	7022128	4	1	81	11161917	STEUERTEIL
EINSTELLSCHEIBE 8X74X74 S	97028396	8	1	378	917259908	KRANFUEHRERKABINE ANBA
EINSTELLSCHRAUBE M10X1	10012225	5	2	207	11448005	KIPPHEBELBOCK VORM.
EINWEISER ISO 8062-3DCTG6	972426708	49	4	673	917292008	TELESKOP 1 VORM.
EINWEISER ISO 8062-3DCTG6	972426708	49	4	677	917292108	TELESKOP 2 VORM.
EINWEISER ISO 8062-3DCTG6	972426708	49	4	681	917292208	TELESKOP 3 VORM.
EINWEISER ISO 8062-3DCTG6	972426708	49	4	685	917292308	TELESKOP 4 VORM.
EINWEISER ISO 8062-3DCTG6	972426708	49	4	690	917292408	TELESKOP 5 VORM.

Bezeichnung	Artikel	Pos.	Menge	Seite	Baugruppe	Bezeichnung
EINZELADERABDICHTUNG	602331508	804	9	537	96037137	KABELSTRANG
EINZELADERABDICHTUNG 1,2	602330808	802	12	50	96045228	KABELSTRANG
EINZELADERABDICHTUNG 1,2	602330808	802	2	463	96036955	KABELSTRANG
EINZELADERABDICHTUNG 1,2	602330808	802	14	535	96037136	KABELSTRANG
EINZELADERABDICHTUNG 1,2	602330808	802	4	537	96037137	KABELSTRANG
EINZELADERABDICHTUNG 1,4-	10424625	828	4	463	96036955	KABELSTRANG
EINZELADERABDICHTUNG 1,4-	10424625	828	2	533	96045385	KABELSTRANG
EINZELADERABDICHTUNG 1,4-	10424625	828	9	537	96037137	KABELSTRANG
EINZELADERABDICHTUNG 2	605619708	813	1	50	96045228	KABELSTRANG
EINZELADERABDICHTUNG 2	605619708	813	37	533	96045385	KABELSTRANG
EINZELADERABDICHTUNG 2	605619708	813	13	535	96037136	KABELSTRANG
EINZELADERABDICHTUNG 2,2-	602330508	801	6	535	96037136	KABELSTRANG
EINZELADERABDICHTUNG DI	605619908	821	4	533	96045385	KABELSTRANG
EINZELADERABDICHTUNG DI	605619808	816	3	533	96045385	KABELSTRANG
EINZELADERABDICHTUNG DI	605619808	816	2	537	96037137	KABELSTRANG
EINZELDICHTUNG 1,0-1,5MM2	10014387	830	69	535	96037136	KABELSTRANG
EINZELDICHTUNG 1,0-1,5MM2	10014387	830	6	537	96037137	KABELSTRANG
EL.ANLAGE AUSLEGER	917262208	203	1	14		LIEBHERR LTR 1220
EL.ANLAGE DREHBUEHNE	919410708	179	1	14		LIEBHERR LTR 1220
EL.DREHBUEHNENARRETIER	966633508	18	1	529	968128908	EL.GEBER U.ENDSCHALTER
EL.GEBER U.ENDSCHALTER	968128908	11	1	527	919410708	EL.ANLAGE DREHBUEHNE
EL.KUEHLWASSERVORWAE	917368108	10	1	629	918377508	KUEHLWASSERVORWAERM
EL.TEILE VERSANDMONTAGE	915731908	39	2	12		LIEBHERR LTR 1220
ELASTOMEREINSATZ DIN 301	7363897	326	4	496	969763408	VERROHRUNG DRUCKLUFTA
ELEKTRIK 2.HUBENDSCHALTE	918197708	362	1	14		LIEBHERR LTR 1220
ELEKTRIK ANBAUTEILE	96041566	100	1	511	96051842	ABGASANLAGE VORM.
ELEKTRIK ANBAUTEILE KABIN	96053500	6	1	460	919783608	ELEKTRIK KRANFUEHRERKAB
ELEKTRIK ANLENKSTUECK	966290908	3	1	706	917262208	EL.ANLAGE AUSLEGER
ELEKTRIK ARBEITSSCHEINW	96028878	20	4	631	918989008	A-SCHEINWERFER DREHBUE
ELEKTRIK ARBEITSSCHEINW	96024265	20	1	657	919028808	MECH.TEILE VERSANDMONT
ELEKTRIK ARMATURENKONS	96030724	1	1	467	96053500	ELEKTRIK ANBAUTEILE KABIN
ELEKTRIK AUSSCHUBMECHA	966361408	6	1	706	917262208	EL.ANLAGE AUSLEGER
ELEKTRIK BALLASTIERUNG	966633408	17	1	529	968128908	EL.GEBER U.ENDSCHALTER
ELEKTRIK BATTERIEKASTEN	96023914	100	1	332	918955408	BATTERIEKASTEN KPL.
ELEKTRIK DREHWERK	966720708	50	1	529	968128908	EL.GEBER U.ENDSCHALTER
ELEKTRIK DREHWERTGEBER	966633308	30	1	529	968128908	EL.GEBER U.ENDSCHALTER
ELEKTRIK KOPFSTUECK	968708608	4	1	706	917262208	EL.ANLAGE AUSLEGER
ELEKTRIK KRANFUEHRERKAB	919783608	143	1	13		LIEBHERR LTR 1220
ELEKTRIK MESS-U.WARNEIN	917598408	1	1	740	917379608	TRAEGER MESS-U.WARNEIN
ELEKTRIK MITTELSTUECK	96045225	1	1	37	919510708	ELEKTRIK RAUPE
ELEKTRIK RAUPE	919510708	2	1	32	919499308	RAUPENMITTELTEIL KPL.
ELEKTRIK VORBEREITUNG WI	968315808	18	1	616	967784808	HYDRAULIK HILFSHUBWERK
ELEKTRIK WINDE 1	966631008	100	1	365	917259708	HAUPTHUBWERK
ELEKTRIK WINDE 2	966298308	100	1	604	967969608	HILFSHUBWERK WINDE 2 VO
ELEKTRONIKEINHEIT	10650399	35	1	435	10877138	FAHRERSITZ
ELEKTROPUMPE	10327065	1	1	523	917261208	ZENTRALSCHMIERANLAGE O
ELEKTROPUMPE EP-1	11347526	1	1	135	917257108	ZENTRALSCHMIERUNG RAUP
ELEKTROZYLINDER 24V	10292008	4	1	387	916177508	TRITT KPL.
ENDGEHAEUSE DIN 72585 AP	692406008	512	2	532	96045385	KABELSTRANG
ENDGEHAEUSE DIN 72585 AP	692406008	517	1	536	96037137	KABELSTRANG
ENDKAPPE 34	553181108	6	1	482	96020359	ZUSATZHEIZUNG VORM.
ENDKAPPE 42,3	553174108	8	1	480	918759808	ZUSATZHEIZUNG OW
ENDREGELVENTIL pmax=4.5	10138450	14	1	174	13455297	DIESELMOTOR
ENDROHR X5CRNI18-10	969759208	104	1	507	919674408	ABGASANLAGE
ENDSCHALTER ANBAU	968019508	50	1	20	91001569	RAUPENFAHRWERK KPL.
ENDSCHALTER ANBAU AUSLE	965281408	10	1	527	919410708	EL.ANLAGE DREHBUEHNE
ENDSCHALTER ANBAU AUSL	966591508	10	1	707	966290908	ELEKTRIK ANLENKSTUECK
ENDSCHALTER AUSLEGER ST	966563508	8	1	712	966591508	ENDSCHALTER ANBAU
ENDSCHALTER TASTEND SPF	606053108	(11)	2	529	968128908	EL.GEBER U.ENDSCHALTER
ENDSCHALTER TASTEND SPF	606053108	(11)	2	529	968128908	EL.GEBER U.ENDSCHALTER

Bezeichnung	Artikel	Pos.	Menge	Seite	Baugruppe	Bezeichnung
ENDSCHALTER TQ200-RFID	10678395	2	1	705	966200208	GEBER KOPFSTUECK
ENDSCHALTER TQ200-RFID	10678395	7	1	736	966479308	GEBER HUB OBEN ENDSCHAL
ENDSCHALTER VORM.	968036408	1	2	30	968019508	ENDSCHALTER ANBAU
ENDWINKEL	602794608	8	2	546	967589508	KLEMMENLEISTE
ENDWINKEL	602794608	297	2	714	968708708	KLEMMKASTEN KPL.
ENTLUEFTUNG	10292000	35	2	399	917305408	INNENVERKLEIDUNG EINBAU
ENTLUEFTUNGSROHR	10292724	29	1	136	11347526	ELEKTROPUMPE
ENTLUEFTUNGSSCHRAUBE G	602501308	11	1	42	966167808	DECKEL KPL.
ENTLUEFTUNGSSCHRAUBE G	602501308	18	1	710	10354493	LEITUNGSTROMMEL
ENTLUEFTUNGSSCHRAUBE P	10488662	307	1	711	966291008	KLEMMKASTEN
ENTLUEFTUNGSSCHRAUBE P	10488662	293	1	714	968708708	KLEMMKASTEN KPL.
ENTLUEFTUNGSSTUTZEN	927501901	2	1	354	927554301	ENTLUEFTUNGSSTUTZEN
ENTLUEFTUNGSSTUTZEN	927501901	13	1	374	90200104	OELMESSEINRICHTUNG
ENTLUEFTUNGSSTUTZEN	927501901	13	1	612	90200103	OELMESSEINRICHTUNG
ENTLUEFTUNGSSTUTZEN	927554301	77	1	353	90008901	DREHWERKANTRIEB
ENTLUEFTUNGSVENTIL	10097910	10	1	339	968999708	KRAFTSTOFFBEHAELTER VO
ENTLUEFTUNGSVENTIL	10424983	21	2	648	12102921	WIPPZYLINDER
ENTLUEFTUNGSVENTIL	10493944	68	1	697	10876933	TELESKOPIERZYLINDER
ENTLUEFTUNGSVENTIL	11622218	3	1	430	969085208	HEIZUNG VORM.
ENTLUEFTUNGSVENTIL	11622218	29	2	482	96020359	ZUSATZHEIZUNG VORM.
ENTLUEFTUNGSVENTIL	721114701	83	1	370	939292201	PLANETENGETRIEBE
ENTNAHMEMODUL L=682,5 24	12503120	2	1	501	968570808	HARNSTOFFTANK
ENTWAESSERUNGSSTOPFEN	602501208	10	2	41	96045226	SCHALTKASTEN VORM.
ENTWAESSERUNGSSTOPFEN	602501208	308	1	711	966291008	KLEMMKASTEN
ENTWAESSERUNGSSTOPFEN	602501208	292	1	714	968708708	KLEMMKASTEN KPL.
ENTWAESSERUNGSVENTIL 22	502921908	151	2	496	969763408	VERROHRUNG DRUCKLUFTA
ERSATZELEMENT OEL	12886224	(1)	1	186	10126713	KURBELGEHAEUSEENTLUEF
ERSATZTEILSATZ GRIFF	10873517	5	1	472	10343693	MEISTERSCHALTER
ES BOLZEN 8X16 FE/ZN8/CN/T	725111808	11	2	449	968923508	KLAPPE VORM.RECHTS
ES BOLZEN 8X16 FE/ZN8/CN/T	725111808	10	2	457	969016008	KLAPPE VORM.VORN LINKS
ETIKETTEN 10X90 POLYESTE	11007853	301	1	45	968252908	BTB PROGRAMMIERT
ETIKETTEN 10X90 POLYESTE	11007853	(3)	1	471	96022872	ARMATURENBRETT DACH
ETIKETTEN 10X90 POLYESTE	11007853	(301)	1	540	91000922	EINBAUTEILE SCHALTSCHRAN
ETIKETTEN 10X90 POLYESTE	11007853	301	1	550	968253608	UNIVERSAL EIN-AUSGANGS
FAECHERSCHEIBE DIN 6798 A	12102694	18	1	43	968054008	MONTAGEPLATTE VORM.
FAECHERSCHEIBE DIN 6798 A	12102694	12	1	393	968514508	SCHALTSCHRANKDECKEL EIN
FAECHERSCHEIBE DIN 6798 A	12102694	4	12	545	922648308	KLEMMBRETT VORM.
FAECHERSCHEIBE DIN 6798 J	425220708	43	4	467	96053500	ELEKTRIK ANBAUTEILE KABIN
FAECHERSCHEIBE DIN 6798 J	425220708	63	16	544	969256608	GRUNDAUFBAU
FAECHERSCHEIBE DIN 6798 J	425221108	60	1	544	969256608	GRUNDAUFBAU
FAEUSTEL DIN 6475 3000	790031108	61	1	152	928569808	GRUNDWERKZEUG
FAHRANTRIEB FAT 600P049 R	90028956	2	1	75	91001377	RAUPENTRAEGER VORM.LI.
FAHRANTRIEB FAT 600P049 R	90028956	2	1	108	91001378	RAUPENTRAEGER VORM.RE.
FAHRERSITZ 1030/880NTS	10877138	1	1	433	918810308	STEUERSTAND
FALTENBALG	571912308	2	1	472	10343693	MEISTERSCHALTER
FEDERBOLZEN	510782808	6	1	588	511419608	DRUCKBEGRENZUNGSVENTI
FEDERBOLZEN	510797308	6	1	585	511433908	DRUCKBEGRENZUNGSVENTI
FEDERDRUCKLAMELLENBRE	10176328	80	1	353	90008901	DREHWERKANTRIEB
FEDERDRUCKLAMELLENBRE	502037001	80	1	78	90028956	FAHRANTRIEB
FEDERDRUCKLAMELLENBRE	502037201	70	1	370	939292201	PLANETENGETRIEBE
FEDERDRUCKLAMELLENBRE	502037201	70	1	610	939294201	PLANETENGETRIEBE
FEDERRING DIN 127 A 6 FST	424000508	(12)	3	604	967969608	HILFSHUBWERK WINDE 2 VO
FEDERRING DIN 128 A 5 FST 4	12227697	19	6	334	96023117	BATTERIEKASTEN VORM.
FEDERRING DIN 7980 8 FST V	424100708	8	6	359	510229408	HYDROMOTOR
FEDERSATZ	10490072	20	1	704	10802064	SEILLAENGENGEBER
FEDERSCHEIBE DIN 137 10 X1	10411093	6	2	258	11386644	STARTER VORM.
FEDERSCHEIBE DIN 137 6 X1	10411092	4	1	258	11386644	STARTER VORM.
FEDERSCHEIBE DIN 137 B 10	425050908	7	3	278	9078301	VERSCHLUSSTEILE
FEDERSCHEIBE DIN 137 B 3 V	570824177	30	2	52	11346779	SCHLEIFRINGUEBERTRAGER
FEDERSCHEIBE DIN 137 B 6	425050608	47	11	52	11346779	SCHLEIFRINGUEBERTRAGER

Bezeichnung	Artikel	Pos.	Menge	Seite	Baugruppe	Bezeichnung
FEDERSTECKER 3-3,5-62 480	10875868	4	1	125	968331708	SICHERUNGSHALTER
FEDERSTECKER 4,5X4X78 A2	433206208	2	2	768	968090008	HAKENSTANGE ANBAU
FEDERSTECKER 6 ZINC COA	433206408	23	1	378	917259908	KRANFUEHRERKABINE ANBA
FEDERTELLER	510782508	3	1	588	511419608	DRUCKBEGRENZUNGSVENTI
FEDERTELLER	510797008	3	1	585	511433908	DRUCKBEGRENZUNGSVENTI
FEDERTELLER	570110808	6	1	361	570109508	TRIEBWERK
FEDERTELLER	571115308	6	1	81	11161917	STEUERTEIL
FEDERTELLER	7023666	4	1	315	10472208	VERSTELLUNG
FEDERTELLER	7027055	43	1	81	11161917	STEUERTEIL
FEDERTELLER	7414494	5	1	81	11161917	STEUERTEIL
FEDERTELLER OBEN 11,7X23X	9074480	(7)	4	202	10149580	ZYLINDERKOPF ANBAU
FEDERTELLER OBEN 11,7X23X	9074480	7	4	204	10149579	ZYLINDERKOPF VORM.
FEINZAHNKNARRE DIN 3120-A	12103320	(1)	1	76	91001377	RAUPENTRAEGER VORM.LI.
FERNSTEUEREMPFAENGER	11212256	100	1	45	968252908	BTB PROGRAMMIERT
FERNSTEUEREMPFAENGER L	12105988	(100)	1	540	91000922	EINBAUTEILE SCHALTSCHRAN
FERNSTEUERSENDER SPF	11160970	(1)	1	471	96022872	ARMATURENBRETT DACH
FERRIT KLAPPBAR	617000608	528	1	463	96036955	KABELSTRANG
FERRIT KLAPPBAR	617000608	512	1	464	96036956	KABELSTRANG
FETT CTK 668190 50KG	861303501	38	0.1	367	90208882	KOMPAKTSEILWINDE
FETT NBU 30 1KG DOSE	10285708	100	1	182	10154458	ZYLINDER
FETT NBU 30 1KG DOSE	10285708	100	1	183	10147687	AGGREGATETRAEGER ANBA
FETT NBU 30 1KG DOSE	10285708	100	1	205	10149578	ZYLINDERKOPF
FETT NBU 30 1KG DOSE	10285708	100	1	209	10120186	MASSENAUSGLEICH ANBAU
FETT NBU 30 1KG DOSE	10285708	100	1	216	10148432	SCHMIEROELPUMPE MIT BE
FETT NBU 30 1KG DOSE	10285708	100	1	232	10145173	ANSAUGSTUTZEN ANBAU
FETT NBU 30 1KG DOSE	10285708	100	1	234	10149677	VERBINDUNGSLEITUNG ANBA
FETT NBU 30 1KG DOSE	10285708	100	1	237	10127566	LUFTPRESSER ANBAU
FETT NBU 30 1KG DOSE	10285708	100	1	245	10142733	WASSERPUMPE MIT BEFEST.
FETT NBU 30 1KG DOSE	10285708	100	1	246	10148215	THERMOSTATGEHAEUSE AN
FETT NBU 30 1KG DOSE	10285708	100	1	248	10142742	KUEHLMITTELKRUEMMER AN
FETT NBU 30 1KG DOSE	10285708	100	1	253	12512627	ABGASSTUTZEN ANBAU
FETT NBU 30 1KG DOSE	10285708	100	1	262	10115829	SCHWUNGRADGEHAEUSE AN
FETT NBU 30 1KG DOSE	10285708	100	1	265	10127979	VERSCHLUSSTEILE
FETT NBU 30 1KG DOSE	10285708	(100)	1	273	12583633	MOTORREGELUNGSENSORIK
FETT NBU 30 1KG DOSE	10285708	(100)	1	273	12583633	MOTORREGELUNGSENSORIK
FETT NBU 30 1KG DOSE	10285708	(100)	1	275	10125687	NEBENABTRIEB ANBAU
FETT NBU 30 1KG DOSE	10285708	100	1	277	9077386	NEBENABTRIEB VORM.
FETT STABURAGS NBU 30 0.01	10282622	(10)	1	182	10154458	ZYLINDER
FETT STABURAGS NBU 30 0.01	10282622	100	1	191	10121667	VERBINDUNGSSTUECK M.O-R
FETT STABURAGS NBU 30 0.01	10282622	100	1	210	10138230	NOCKENWELLE KPL.
FETT STABURAGS NBU 30 0.01	10282622	100	1	259	10115664	VERSCHLUSSTEILE
FEUERLOESCHER DIN EN 3	12101159	4	1	153	928620108	ZUBEHOER
FILTER	11083438	2	1	428	11083498	HEIZKLIMAGERAET
FILTER	12211223	(1)	1	501	968570808	HARNSTOFFTANK
FILTER SYNFASAN	11182242	66	1	400	917305408	INNENVERKLEIDUNG EINBAU
FILTEREINSATZ 1m³/min 10µm	510671808	(1)	1	348	969050308	OELBEHAELTER VORM.
FILTEREINSATZ OEL 10µm	10037616	(1)	1	560	96045351	HYDRAULIK OBERWAGEN
FILTEREINSATZ OEL 10µm	10037623	(1)	1	560	96045351	HYDRAULIK OBERWAGEN
FILTERKONSOLE VORM.	13512036	1	1	226	10146791	KRAFTSTOFF-FEINFILTERAN
FILTERKOPF VORM.	13472766	1	1	227	13512036	FILTERKONSOLE VORM.
FILTERMODUL SCRFILTER G	11429849	2	1	516	11429728	SCRFILTER-BAUGRUPPE
FILTERPATRONE 0,005m³/min 2	510671108	158	1	98	96035796	HYDR.FAHRANTRIEB
FILTERPATRONE 0,005m³/min 2	510671108	158	1	115	96035792	HYDR.FAHRANTRIEB
FILTERPATRONE 0,005m³/min 2	510671108	156	2	560	96045351	HYDRAULIK OBERWAGEN
FILTERPATRONE 0,005m³/min 2	510671108	168	1	616	967784808	HYDRAULIK HILFSHUBWERK
FILTERPATRONE 0,005m³/min 2	510671108	154	1	717	967784508	HYDRAULIK TELE
FIRMENSCHILD	10124097	600	2	179	13455297	DIESELMOTOR
FLACHDICHTRING 14X19,5X1,	570116908	405	1	328	96034515	AUSGLEICHSBEHAELTER VO
FLACHDICHTRING 14X19,5X1,	570116908	303	1	561	96045351	HYDRAULIK OBERWAGEN
FLACHDICHTRING 17,4X24X1,	710121114	6	2	83	11320954	LEITRADEINHEIT

Bezeichnung	Artikel	Pos.	Menge	Seite	Baugruppe	Bezeichnung
FLACHDICHTUNG	704274908	10	4	42	966167808	DECKEL KPL.
FLACHKOPFSCHRAUBE ISO 7	408311208	23	4	540	91000922	EINBAUTEILE SCHALTSCHRAN
FLACHKOPFSCHRAUBE ISO 7	408400701	266	2	714	968708708	KLEMMKASTEN KPL.
FLACHKOPFSCHRAUBE ISO 70	12212474	16	6	157	96063087	STAUKASTEN
FLACHKOPFSCHRAUBE ISO 70	12219804	39	4	428	11083498	HEIZKLIMAGERAET
FLACHKOPFSCHRAUBE ISO 7	408401901	41	4	467	96053500	ELEKTRIK ANBAUTEILE KABIN
FLACHKOPFSCHRAUBE ISO 70	11658059	9	4	383	96015921	BEDIENELEMENTE EINBAU
FLACHKOPFSCHRAUBE ISO 70	10876384	50	2	544	969256608	GRUNDAUFBAU
FLACHRUNDSCHRAUBE DIN	10181375	300	2	291	96034631	KUEHLER VORM.
FLACHRUNDSCHRAUBE DIN	10181375	20	4	636	968994408	KAMERAHALTER VORM.
FLACHRUNDSCHRAUBE DIN	10181375	11	4	639	968993508	KAMERAHALTER VORM.
FLACHSCHELLE 114,3 EDELST	10296644	180	2	507	919674408	ABGASANLAGE
FLACHSICHERUNGSEINSATZ	604007108	35	12	540	91000922	EINBAUTEILE SCHALTSCHRAN
FLACHSICHERUNGSEINSATZ	604007208	36	10	540	91000922	EINBAUTEILE SCHALTSCHRAN
FLACHSICHERUNGSEINSATZ	604007308	37	7	540	91000922	EINBAUTEILE SCHALTSCHRAN
FLACHSICHERUNGSEINSATZ	604007608	38	1	540	91000922	EINBAUTEILE SCHALTSCHRAN
FLACHSICHERUNGSEINSATZ	604007708	32	8	540	91000922	EINBAUTEILE SCHALTSCHRAN
FLACHSICHERUNGSEINSATZ	604006908	515	1	48	96045227	KABELSTRANG
FLACHSICHERUNGSEINSATZ	604006908	33	8	540	91000922	EINBAUTEILE SCHALTSCHRAN
FLACHSICHERUNGSEINSATZ	604007008	505	1	48	96045227	KABELSTRANG
FLACHSICHERUNGSEINSATZ	604007008	34	12	540	91000922	EINBAUTEILE SCHALTSCHRAN
FLACHSTECKER	602304808	2	2	474	963398008	AXIALLUEFTER VORM.OBEN
FLACHSTECKER 0,8X0,5-1 Cu	10097470	671	2	535	96037136	KABELSTRANG
FLACHSTECKER 1,0-2,5MM2	602323208	120	21	48	96045227	KABELSTRANG
FLACHSTECKER 2,8X0,5-1 SN	602323508	124	34	48	96045227	KABELSTRANG
FLACHSTECKER 2,8X0,5-1 SN	602323508	124	6	462	96036955	KABELSTRANG
FLACHSTECKER 6,3X1-2,5 SN	602203908	75	2	48	96045227	KABELSTRANG
FLACHSTECKER 6,3X1-2,5 SN	602203908	75	2	462	96036955	KABELSTRANG
FLACHSTECKER 6,3X1-2,5 SN	602203908	75	3	534	96037136	KABELSTRANG
FLACHSTECKERGEHAEUSE 1	11067932	525	14	542	96045387	DRAEHTE GRUNDAUFBAU KPL
FLACHSTECKERGEHAEUSE 1	602323308	503	3	48	96045227	KABELSTRANG
FLACHSTECKERGEHAEUSE 1	602323308	505	53	542	96045387	DRAEHTE GRUNDAUFBAU KPL
FLACHSTECKERGEHAEUSE	602208908	511	1	535	96037136	KABELSTRANG
FLACHSTECKERGEHAEUSE	602305908	517	1	48	96045227	KABELSTRANG
FLACHSTECKERGEHAEUSE	602305908	523	1	462	96036955	KABELSTRANG
FLACHSTECKERGEHAEUSE	602305908	3	1	474	963398008	AXIALLUEFTER VORM.OBEN
FLACHSTECKERGEHAEUSE	602305908	503	1	542	96045387	DRAEHTE GRUNDAUFBAU KPL
FLACHSTECKERGEHAEUSE	602325608	524	2	542	96045387	DRAEHTE GRUNDAUFBAU KPL
FLACHSTECKHUELSE 0,3-1,5	602203708	63	3	738	96068455	LEITUNG
FLACHSTECKHUELSE 0,5-1,5	602320508	62	13	464	96036956	KABELSTRANG
FLACHSTECKHUELSE 6,3X0,5-	602303308	134	2	49	96045228	KABELSTRANG
FLACHSTECKHUELSE 6,3X0,5-	602303308	134	2	462	96036955	KABELSTRANG
FLACHSTECKHUELSE 6,3X0,5-	602303308	134	2	464	96036956	KABELSTRANG
FLACHSTECKHUELSE 6,3X0,5-	602303308	134	6	532	96045385	KABELSTRANG
FLAECHENDICHTUNG 300ML	10354595	100	1	187	10132560	OELWANNE MIT BEFEST.
FLANSCH	12100075	1	1	710	10354493	LEITUNGSTROMMEL
FLANSCH	12400857	3	1	209	10120186	MASSENAUSGLEICH ANBAU
FLANSCH	927504701	23	1	608	939294001	SEILTROMMEL
FLANSCH 10X137X137 S355M	97032260	21	1	294	968026308	KUPPLUNGSSTELLER
FLANSCH 10X65X37 ALMG3 H	97057024	4	1	520	918731908	LUFTFILTERANLAGE
FLANSCH 25.0X16 9 42CRMO4	970003708	9	1	291	96034631	KUEHLER VORM.
FLANSCH VORM.	10152832	8	1	210	10138230	NOCKENWELLE KPL.
FLANSCH VORM.	10152832	8	1	210	10138230	NOCKENWELLE KPL.
FLANSCH VORM.	11348648	8	1	210	10138230	NOCKENWELLE KPL.
FLANSCH VORM.	12408221	2	1	209	10120186	MASSENAUSGLEICH ANBAU
FLANSCHARMATUR FLK40-35-	10871016	206	1	287	919007708	ANTRIEBSAGGREGAT VORM.
FLANSCHARMATUR SFL60-50	11491125	412	1	288	919007708	ANTRIEBSAGGREGAT VORM.
FLANSCHHAELFTE SAE1 1/4-C	510586608	502	4	616	967784808	HYDRAULIK HILFSHUBWERK
FLANSCHHAELFTE SAE1-C62	510586908	506	6	562	96045351	HYDRAULIK OBERWAGEN
FLANSCHHAELFTE SAE1-C62	510586908	501	4	616	967784808	HYDRAULIK HILFSHUBWERK

Bezeichnung	Artikel	Pos.	Menge	Seite	Baugruppe	Bezeichnung
FLANSCHSTUTZEN AFG 38S	511517808	500	8	56	96035801	HYDRAULIK MITTELTEIL
FLANSCHSTUTZEN AFG 38S	511517808	500	2	98	96035796	HYDR.FAHRANTRIEB
FLANSCHSTUTZEN AFG 38S	511517808	500	2	115	96035792	HYDR.FAHRANTRIEB
FLANSCHSTUTZEN AFG 38S	511517808	510	3	562	96045351	HYDRAULIK OBERWAGEN
FLANSCHSTUTZEN AFG 38S	511517808	500	3	717	967784508	HYDRAULIK TELE
FLANSCHVERSCHRAUBUNG 1	97053934	402	2	288	919007708	ANTRIEBSAGGREGAT VORM.
FLANSCHVERSCHRAUBUNG B	10030904	511	1	562	96045351	HYDRAULIK OBERWAGEN
FLANSCHVERSCHRAUBUNG C	510037408	513	1	562	96045351	HYDRAULIK OBERWAGEN
FLANSCHVERSCHRAUBUNG C	510133208	519	1	562	96045351	HYDRAULIK OBERWAGEN
FLANSCHVERSCHRAUBUNG C	511518808	520	1	562	96045351	HYDRAULIK OBERWAGEN
FLEXROHR	97118889	103	1	507	919674408	ABGASANLAGE
FLUEGELSCHRAUBE DIN 316	4600612	202	2	76	91001377	RAUPENTRAEGER VORM.LI.
FLUEGELSCHRAUBE DIN 316	4600612	202	2	109	91001378	RAUPENTRAEGER VORM.RE.
FORMSCHLAUCH	96046407	250	2	511	96051842	ABGASANLAGE VORM.
FORMSCHLAUCH DN20 X3.5 B	97042067	62	1	482	96020359	ZUSATZHEIZUNG VORM.
FORMSCHLAUCH DN20 X3.5 B	97042069	8	1	430	969085208	HEIZUNG VORM.
FORMSCHLAUCH DN20 X3.5 B	97042069	16	1	480	918759808	ZUSATZHEIZUNG OW
FORMSCHLAUCH DN20 X3.5 B	97042071	9	1	430	969085208	HEIZUNG VORM.
FORMSCHLAUCH DN20 X3.5 B	97046324	10	1	430	969085208	HEIZUNG VORM.
FORMSCHLAUCH DN20 X3.5 B	97046326	13	1	430	969085208	HEIZUNG VORM.
FORMSCHLAUCH DN20 X3.5 B	97046327	15	1	430	969085208	HEIZUNG VORM.
FORMSCHLAUCH DN20 X3.5 B	97046328	16	1	430	969085208	HEIZUNG VORM.
FORMSCHLAUCH DN20 X3.5 B	97050852	15	1	480	918759808	ZUSATZHEIZUNG OW
FORMSCHLAUCH DN20 X3.5 B	97050857	11	1	430	969085208	HEIZUNG VORM.
FORMSCHLAUCH DN20 X3.5 B	97060781	60	1	482	96020359	ZUSATZHEIZUNG VORM.
FORMSCHLAUCH DN20 X3.5 B	97060786	55	1	482	96020359	ZUSATZHEIZUNG VORM.
FORMSCHLAUCH OEL NBR	973519308	253	1	287	919007708	ANTRIEBSAGGREGAT VORM.
FORMTEIL 317-1397-000 SUR	605212808	519	3	49	96045228	KABELSTRANG
FORMTEIL 317-1397-000 SUR	605212808	514	1	532	96045385	KABELSTRANG
FORMTEIL 317-1397-000 SUR	605212808	523	2	535	96037136	KABELSTRANG
FREMDEINSPEISUNG 230V-1	918462708	381	1	15		LIEBHERR LTR 1220
FRONTHAUBE LI.	967982708	2	1	455	969015908	DREHBUEHNENVERKLEIDUN
FRONTSCHEIBE 6X735X1506	97003558	1	1	409	966497908	FRONTSCHEIBE KPL.
FRONTSCHEIBE KPL.	966497908	1	1	406	916162508	SCHEIBEN EINBAU
FUEHRUNG	962625708	9	1	701	966134608	ANBAUTEILE ZYLINDER
FUEHRUNG 180X70X 50 PA6G	97093433	6	1	94	96034962	FUEHRUNG LI.
FUEHRUNG 180X70X 50 PA6G	97093433	6	1	112	96034980	FUEHRUNG RE.
FUEHRUNG 30.0X235 S355J2	97033304	2	2	493	967978908	VERRIEGELUNG VORM.
FUEHRUNG 30.0X345 S355J2	97030029	4	1	492	967928508	VERRIEGELUNG
FUEHRUNG 30.0X388 S355J2	97033305	3	1	493	967978908	VERRIEGELUNG VORM.
FUEHRUNG 306X48X37 ENA	977430408	10	2	433	918810308	STEUERSTAND
FUEHRUNG 80.0X76 35NICRM	97008548	2	1	477	966707708	SPIEGELHALTER VORM.
FUEHRUNG LI.	96034962	200	1	76	91001377	RAUPENTRAEGER VORM.LI.
FUEHRUNG RE.	96034980	200	1	109	91001378	RAUPENTRAEGER VORM.RE.
FUEHRUNG SCHWK. GLASPE	966230608	28	1	421	917304708	SCHIEBETUER EINBAU
FUEHRUNG VORM.	966230508	27	1	421	917304708	SCHIEBETUER EINBAU
FUEHRUNGSBAND 160X25	7367564	6	2	85	10877686	SPANNER HYDR KPL
FUEHRUNGSBUCHSE 50,1X8	10470371	7	1	697	10876933	TELESKOPIERZYLINDER
FUEHRUNGSRAHMEN	11600988	800	1	697	10876933	TELESKOPIERZYLINDER
FUEHRUNGSROHR	9079532	2	1	192	10150934	OELMESSSTAB KPL.
FUEHRUNGSSCHIENE 5X138	97032836	5	3	124	968046208	ANBAUTEILE
FUEHRUNGSSCHIENE 5X138	97032837	6	3	124	968046208	ANBAUTEILE
FUEHRUNGSSTANGE 45.0X4	97037244	60	1	75	91001377	RAUPENTRAEGER VORM.LI.
FUEHRUNGSSTANGE 45.0X4	97037244	60	1	108	91001378	RAUPENTRAEGER VORM.RE.
FUEHRUNGSSTANGE 45.0X4	97036914	40	4	20	91001569	RAUPENFAHRWERK KPL.
FUNKVORBEREITUNG OW	915432508	391	1	15		LIEBHERR LTR 1220
FUSSTASTER KPL.	96023875	56	1	468	96053500	ELEKTRIK ANBAUTEILE KABIN
FUSSWIPPE SPF	10297310	54	2	467	96053500	ELEKTRIK ANBAUTEILE KABIN
GARDEROBENHAKEN SCHW	12106136	69	1	400	917305408	INNENVERKLEIDUNG EINBAU
GASFEDER 12X80-100N ST	10476211	6	2	406	916162508	SCHEIBEN EINBAU

Bezeichnung	Artikel	Pos.	Menge	Seite	Baugruppe	Bezeichnung
GASFEDER 19X60-550N	591067008	23	1	433	918810308	STEUERSTAND
GASFEDER 23X251-550N ST	11003837	17	2	406	916162508	SCHEIBEN EINBAU
GASFEDER 23X265-500N	591061908	10	2	449	968923508	KLAPPE VORM.RECHTS
GASFEDER 23X265-750N	591065008	9	2	457	969016008	KLAPPE VORM.VORN LINKS
GASSENSOR NICHT LACKIERE	10144038	153	1	514	96041566	ELEKTRIK ANBAUTEILE
GASSENSOR NICHT LACKIERE	12412141	152	2	514	96041566	ELEKTRIK ANBAUTEILE
GEBER ANLENKSTUECK	966473108	9	1	663	918804808	TELESKOPAUSLEGER KPL.
GEBER BALLASTUEBERWACH	918802108	195	2	14		LIEBHERR LTR 1220
GEBER HUB OBEN ENDSCHAL	966479308	1	1	735	918197708	ELEKTRIK 2.HUBENDSCHALTE
GEBER KOPFSTUECK	966200208	10	1	663	918804808	TELESKOPAUSLEGER KPL.
GEBER SPF	10876368	10	1	660	918802108	GEBER BALLASTUEBERWACH
GEBERANBAU AUSSCHUBM	966290708	30	1	701	966134608	ANBAUTEILE ZYLINDER
GEGENGEWICHT KPL.	967936908	1	1	652	917260608	GEGENGEWICHT M.BEFESTIG
GEGENGEWICHT KPL. 2400X 2	967916508	31	2	655	917404508	BALLAST
GEGENGEWICHT KPL. 2400X 2	967916508	41	1	656	917404008	ZUSATZBALLAST
GEGENGEWICHT KPL. 2400X 2	967916808	30	2	655	917404508	BALLAST
GEGENGEWICHT KPL. 2400X 2	967916808	40	1	656	917404008	ZUSATZBALLAST
GEGENGEWICHT M.BEFESTIG	917260608	146	1	13		LIEBHERR LTR 1220
GEGENGEWICHT SCHWK. SP	967937508	1	1	654	967936908	GEGENGEWICHT KPL.
GEGENMUTTER M20x1,5 PA6	10036629	10	2	630	917368108	EL.KUEHLWASSERVORWAE
GEGENMUTTER M25X1,5 PO	10042696	13	2	625	918462708	FREMDEINSPEISUNG
GEGENMUTTER PG16 KUNST	602419608	9	1	625	918462708	FREMDEINSPEISUNG
GEHAEUSE	511015208	1	1	588	511419608	DRUCKBEGRENZUNGSVENTI
GEHAEUSE	570063108	1	1	585	511433908	DRUCKBEGRENZUNGSVENTI
GEHAEUSE	570109108	3	1	359	510229408	HYDROMOTOR
GEHAEUSE 12-POL	10099861	510	1	48	96045227	KABELSTRANG
GEHAEUSE 12-POL	10099861	506	1	535	96037136	KABELSTRANG
GEHAEUSE 15-POLE	10099863	512	1	48	96045227	KABELSTRANG
GEHAEUSE 15-POLE	10099863	510	7	542	96045387	DRAEHTE GRUNDAUFBAU KPL
GEHAEUSE 18-POL	10099864	502	3	464	96036956	KABELSTRANG
GEHAEUSE 18-POL	10099864	519	5	542	96045387	DRAEHTE GRUNDAUFBAU KPL
GEHAEUSE 21-POLE	10099856	501	2	48	96045227	KABELSTRANG
GEHAEUSE 21-POLE	10099856	521	9	542	96045387	DRAEHTE GRUNDAUFBAU KPL
GEHAEUSE 4-POL	602331308	507	4	462	96036955	KABELSTRANG
GEHAEUSE 4-POL	602331308	505	2	464	96036956	KABELSTRANG
GEHAEUSE 4-POL	602331308	501	1	538	96037133	LEITUNG
GEHAEUSE 4-POL	602331308	504	32	542	96045387	DRAEHTE GRUNDAUFBAU KPL
GEHAEUSE 4-POL	602331308	501	1	642	96043733	KABELSTRANG
GEHAEUSE 4-POL	602339308	507	3	49	96045228	KABELSTRANG
GEHAEUSE 6-POL	602325508	506	3	462	96036955	KABELSTRANG
GEHAEUSE 6-POL	602325508	510	1	464	96036956	KABELSTRANG
GEHAEUSE 6-POL	602325508	504	1	532	96045385	KABELSTRANG
GEHAEUSE 6-POL	602325508	526	2	542	96045387	DRAEHTE GRUNDAUFBAU KPL
GEHAEUSE 8-POL	602300508	514	1	462	96036955	KABELSTRANG
GEHAEUSE 8-POL	602300608	516	1	462	96036955	KABELSTRANG
GEHAEUSE 8-POL	602301408	501	1	49	96045228	KABELSTRANG
GEHAEUSE 8-POL	602301408	507	2	542	96045387	DRAEHTE GRUNDAUFBAU KPL
GEHAEUSE 8-POL	602301408	502	1	642	96043733	KABELSTRANG
GEHAEUSE 9-POL	10099860	508	1	48	96045227	KABELSTRANG
GEHAEUSE 9-POL	10099860	527	2	542	96045387	DRAEHTE GRUNDAUFBAU KPL
GEHAEUSE GD-ZN SW GEPU	704253308	6	4	42	966167808	DECKEL KPL.
GEHAEUSE GD-ZN SW GEPU	704253308	3	5	86	967972208	DECKEL VORM.
GEHAEUSE GD-ZN SW GEPU	704253308	3	2	87	967972308	DECKEL VORM.
GEHAEUSE GD-ZN SW GEPU	704253308	3	2	88	967972408	DECKEL VORM.
GEHAEUSE GD-ZN SW GEPU	704253308	3	2	89	968270108	DECKEL VORM.
GEHAEUSE GD-ZN SW GEPU	704253308	3	2	90	968274208	DECKEL VORM.
GEHAEUSE GD-ZN SW GEPU	704253308	3	5	110	968055808	DECKEL VORM.
GEHAEUSE GD-ZN SW GEPU	704253308	13	1	334	96023117	BATTERIEKASTEN VORM.
GEHAEUSE PUR SPF	975850708	7	1	399	917305408	INNENVERKLEIDUNG EINBAU
GEHAEUSE RAL 9005 SPF	97136698	1	1	385	96048757	BECHERHALTER

Bezeichnung	Artikel	Pos.	Menge	Seite	Baugruppe	Bezeichnung
GELENKBOLZENSCHELLE 33	12102925	182	2	511	96051842	ABGASANLAGE VORM.
GELENKBOLZENSPANNBAND	11600236	42	2	500	918731808	HARNSTOFFANLAGE
GELENKKOPF	11691377	2	1	379	11214363	KIPPZYLINDER
GELENKLAGER	11691375	1	1	379	11214363	KIPPZYLINDER
GELENKSTIFT	10475198	11	4	319	10871282	VERSTELLPUMPE
GENERATOR VORM. 4.32KW	10142863	440	1	178	13455297	DIESELMOTOR
GERAETESTECKDOSE 3-POL	605007908	505	3	49	96045228	KABELSTRANG
GERAETESTECKDOSE 3-POL	605007908	502	34	532	96045385	KABELSTRANG
GERAETESTECKDOSE 3-POL	605007908	502	13	535	96037136	KABELSTRANG
GERAETESTECKER DIN 43650	605006608	510	2	49	96045228	KABELSTRANG
GERAETESTECKER DIN 43650	605006608	503	3	532	96045385	KABELSTRANG
GERAEUSCHDAEMPFER	502661608	153	1	496	969763408	VERROHRUNG DRUCKLUFTA
GETRIEBEDECKEL	939251801	65	1	353	90008901	DREHWERKANTRIEB
GEWINDEANSCHLUSSSTUTZE	939599301	1	2	374	90200104	OELMESSEINRICHTUNG
GEWINDEANSCHLUSSSTUTZE	939599301	1	2	612	90200103	OELMESSEINRICHTUNG
GEWINDEBOLZEN 20X53X78	97096918	2	2	433	918810308	STEUERSTAND
GEWINDEBOLZEN 25.0X160 S3	97043051	13	8	35	917511508	RAUPENMITTELTEIL VORM.
GEWINDEBOLZEN 80.0X816 3	97046349	2	1	751	968728808	KONSOLE VORM.
GEWINDEBOLZEN DIN 976 M	10332987	7	4	426	917676208	HEIZUNG KRANFUEHRERKAB
GEWINDEBUCHSE 14,5X24X1	9079078	9	1	205	10149578	ZYLINDERKOPF
GEWINDEFORMSCHRAUBE D	12102051	20	4	433	918810308	STEUERSTAND
GEWINDEGRIFF SCHWK. FE//	925642908	28	4	129	919644008	HYDRAULISCHE ABSTUETZUN
GEWINDEGRIFF SCHWK. FE//	925642908	18	1	751	968728808	KONSOLE VORM.
GEWINDEPLATTE 10X180X30	97051989	38	1	378	917259908	KRANFUEHRERKABINE ANBA
GEWINDEPLATTE 10X70X20 S	97045388	27	2	365	917259708	HAUPTHUBWERK
GEWINDEPLATTE 10X80X170	97030032	7	2	492	967928508	VERRIEGELUNG
GEWINDEPLATTE 15X40X130	953147708	8	1	761	917267508	TRANSPORTHALTERUNG DKS
GEWINDEPLATTE 20X185X45	979243508	3	1	410	965784408	DACHSCHEIBE VORM.
GEWINDEPLATTE 20X40X315	974911108	48	1	761	917267508	TRANSPORTHALTERUNG DKS
GEWINDEPLATTE 3X54X25 S	97118726	4	1	507	919674408	ABGASANLAGE
GEWINDEPLATTE 3X54X25 S	97118726	13	7	511	96051842	ABGASANLAGE VORM.
GEWINDEPLATTE 6X20X40 S	97053770	7	2	767	917268208	LEITER ANBAU
GEWINDEPLATTE 8.0 X0 S235J	953695308	18	2	26	96034894	SCHUTZBLECH KPL.LI.
GEWINDEPLATTE 8.0 X0 S235J	953695308	18	2	29	96034977	SCHUTZBLECH KPL.RE.
GEWINDEPLATTE 8.0 X0 S235J	953695308	4	6	157	96063087	STAUKASTEN
GEWINDEPLATTE 8.0 X0 S235J	953695308	9	4	334	96023117	BATTERIEKASTEN VORM.
GEWINDEPLATTE 8.0 X0 S235J	953695308	6	2	421	917304708	SCHIEBETUER EINBAU
GEWINDEPLATTE 8.0 X0 S235J	953695308	6	6	449	968923508	KLAPPE VORM.RECHTS
GEWINDEPLATTE 8.0 X0 S235J	953695308	4	4	457	969016008	KLAPPE VORM.VORN LINKS
GEWINDEPLATTE 8X110X35 S	97000276	4	1	421	917304708	SCHIEBETUER EINBAU
GEWINDEPLATTE 8X70X20 S	97045387	26	6	365	917259708	HAUPTHUBWERK
GEWINDEPLATTE 8X98X60 S	97000277	5	1	421	917304708	SCHIEBETUER EINBAU
GEWINDEPLATTE M6 PA6GF3	11004117	28	2	409	966497908	FRONTSCHEIBE KPL.
GEWINDEPLATTE M8	704262608	22	2	334	96023117	BATTERIEKASTEN VORM.
GEWINDESCHEIBE	12104437	21	1	63	11643183	STEUERBLOCK
GEWINDESICHERUNG 50ML	811208001	102	1	189	10155227	OELWANNE VORM.
GEWINDESTANGE 5X0X0 X5	97038268	9	1	639	968993508	KAMERAHALTER VORM.
GEWINDESTIFT	10488035	47	1	81	11161917	STEUERTEIL
GEWINDESTIFT	570435308	39	1	697	10876933	TELESKOPIERZYLINDER
GEWINDESTIFT DIN 913 M10X	404402708	30	1	490	10877810	BALLASTIERZYLINDER
GEWINDESTIFT DIN 913 M10X	404402908	31	1	490	10877810	BALLASTIERZYLINDER
GEWINDESTIFT DIN 913 M10X6	7623427	20	2	319	10871282	VERSTELLPUMPE
GEWINDESTIFT DIN 913 M12X2	404403608	9	2	490	10877810	BALLASTIERZYLINDER
GEWINDESTIFT DIN 913 M5X6	510762108	(301)	3	286	919007708	ANTRIEBSAGGREGAT VORM.
GEWINDESTIFT DIN 913 M6X25	404400508	16	1	421	917304708	SCHIEBETUER EINBAU
GEWINDESTIFT DIN 913 M6X25	404400508	5	1	725	511479408	LASTHALTEVENTIL
GEWINDESTIFT DIN 914 M8X10	12100620	29	1	648	12102921	WIPPZYLINDER
GEWINDESTIFT DIN 915 M10X2	4048002	8	1	23	12102931	SPURVERSTELLZYLINDER
GEWINDESTIFT ISO 4026 M10X	10179470	4	1	437	962282208	ARMLEHNE LINKS
GEWINDESTIFT ISO 4026 M10X	10179470	4	1	439	962282308	ARMLEHNE RECHTS

Bezeichnung	Artikel	Pos.	Menge	Seite	Baugruppe	Bezeichnung
GEWINDESTIFT ISO 4026 M12X	000608250	12	5	657	919028808	MECH.TEILE VERSANDMONT
GEWINDESTIFT ISO 4026 M20X	10875481	50	4	673	917292008	TELESKOP 1 VORM.
GEWINDESTIFT ISO 4026 M20X	10875481	50	4	677	917292108	TELESKOP 2 VORM.
GEWINDESTIFT ISO 4026 M20X	10875481	50	4	681	917292208	TELESKOP 3 VORM.
GEWINDESTIFT ISO 4026 M20X	10875481	50	4	685	917292308	TELESKOP 4 VORM.
GEWINDESTIFT ISO 4026 M20X	10875481	50	4	690	917292408	TELESKOP 5 VORM.
GEWINDESTIFT ISO 4026 M6X	12100613	3	1	436	96032222	NACHARBEIT ARMLEHNE LI.
GEWINDESTIFT ISO 4026 M6X	12100613	3	1	438	96032223	NACHARBEIT ARMLEHNE RE.
GEWINDESTIFT ISO 4026 M6X	12106077	27	2	387	916177508	TRITT KPL.
GEWINDESTIFT ISO 4026 M8X	12100292	12	2	734	917268408	MASTNASE
GEWINDESTIFT ISO 4026 M8X	12100292	3	2	737	967321308	HALTERUNG 2.HUB OBEN
GEWINDESTIFT ISO 4028 M8X2	4901247	29	1	490	10877810	BALLASTIERZYLINDER
GEWINDESTIFT M6X50 A2-70	10450694	25	1	409	966497908	FRONTSCHEIBE KPL.
GEWINDESTIFT M6X50 A2-70	10450694	22	1	421	917304708	SCHIEBETUER EINBAU
GEWINDETEIL EDELSTAHL	97037948	5	1	639	968993508	KAMERAHALTER VORM.
GEWINDETRAEGER FE//ZNNI8/	963062208	25	1	445	96036790	DREHBUEHNENVERKLEIDUN
GEWINDETRAEGER FE//ZNNI8/	964307108	17	2	445	96036790	DREHBUEHNENVERKLEIDUN
GEWINDETRAEGER FE//ZNNI8/	964813808	15	1	286	919007708	ANTRIEBSAGGREGAT VORM.
GEWINDETRAEGER FE//ZNNI8/	968655508	18	1	445	96036790	DREHBUEHNENVERKLEIDUN
GITTERROST-P T725X564X30/	97053346	19	1	455	969015908	DREHBUEHNENVERKLEIDUN
GLASEINHEIT 203X154	10286840	(1)	1	440	916049908	SPIEGELANBAU KRANFUEHR
GLEICHSTROMGETRIEBEMO	10355140	2	1	136	11347526	ELEKTROPUMPE
GLEICHSTROMGETRIEBEMO	10355140	2	1	525	10327065	ELEKTROPUMPE
GLEITBLECH 520X50X 13 CU	97043682	60	8	20	91001569	RAUPENFAHRWERK KPL.
GLEITBLECH 520X57X 18 CU	97043683	61	8	20	91001569	RAUPENFAHRWERK KPL.
GLEITBLECH 560X46X 35 CU	97049098	59	8	20	91001569	RAUPENFAHRWERK KPL.
GLEITBLOCK 110X56X30 PA6	97032618	2	1	31	968036408	ENDSCHALTER VORM.
GLEITKLOTZ KPL.	10455144	15	1	435	10877138	FAHRERSITZ
GLEITLAGER 30X20 KUNSTST	10215893	4	1	477	966707708	SPIEGELHALTER VORM.
GLEITLAGERBUCHSE 30X34X	9889290	(2)	2	241	9072906	ZWISCHENRAD KPL.
GLEITPLATTE 120X100X2090 P	97031639	4	8	20	91001569	RAUPENFAHRWERK KPL.
GLEITPLATTE 15X120X450 PA6	97038559	54	2	20	91001569	RAUPENFAHRWERK KPL.
GLEITPLATTE 15X90X358 SPF	971995508	79	2	669	917291908	ANLENKSTUECK VORM.
GLEITPLATTE 15X90X358 SPF	971995508	55	2	673	917292008	TELESKOP 1 VORM.
GLEITPLATTE 15X90X358 SPF	971995508	55	2	677	917292108	TELESKOP 2 VORM.
GLEITPLATTE 15X90X358 SPF	971995508	55	2	681	917292208	TELESKOP 3 VORM.
GLEITPLATTE 15X90X358 SPF	971995508	55	2	685	917292308	TELESKOP 4 VORM.
GLEITPLATTE 190X186X187 P	971063208	37	2	668	917291908	ANLENKSTUECK VORM.
GLEITPLATTE 190X186X187 P	971063208	41	2	673	917292008	TELESKOP 1 VORM.
GLEITPLATTE 190X186X187 P	971063208	41	2	677	917292108	TELESKOP 2 VORM.
GLEITPLATTE 190X186X187 P	971063208	41	2	681	917292208	TELESKOP 3 VORM.
GLEITPLATTE 190X186X187 P	971063208	41	2	685	917292308	TELESKOP 4 VORM.
GLEITPLATTE 20X60X980 PA6	973351308	80	2	669	917291908	ANLENKSTUECK VORM.
GLEITPLATTE 20X90X358 SPF	972898808	42	2	668	917291908	ANLENKSTUECK VORM.
GLEITPLATTE 20X90X358 SPF	972898808	56	2	673	917292008	TELESKOP 1 VORM.
GLEITPLATTE 20X90X358 SPF	972898808	56	2	677	917292108	TELESKOP 2 VORM.
GLEITPLATTE 20X90X358 SPF	972898808	56	2	681	917292208	TELESKOP 3 VORM.
GLEITPLATTE 20X90X358 SPF	972898808	56	2	685	917292308	TELESKOP 4 VORM.
GLEITPLATTE 30X50X380 PA6	972898208	45	33	668	917291908	ANLENKSTUECK VORM.
GLEITPLATTE 30X50X380 PA6	972898208	42	31	673	917292008	TELESKOP 1 VORM.
GLEITPLATTE 30X50X380 PA6	972898208	42	29	677	917292108	TELESKOP 2 VORM.
GLEITPLATTE 30X50X380 PA6	972898208	42	28	681	917292208	TELESKOP 3 VORM.
GLEITPLATTE 30X50X380 PA6	972898208	42	25	685	917292308	TELESKOP 4 VORM.
GLEITPLATTE 8X50X350 PA6	972898608	49	2	668	917291908	ANLENKSTUECK VORM.
GLEITPLATTE 8X50X350 PA6	972898608	53	2	673	917292008	TELESKOP 1 VORM.
GLEITSCHIENE	12106689	(3)	4	119	917691008	ABSTURZSICHERUNG
GLEITSCHUH 65X340X450 GS-	308115114	7	4	75	91001377	RAUPENTRAEGER VORM.LI.
GLEITSCHUH 65X340X450 GS-	308115114	7	4	108	91001378	RAUPENTRAEGER VORM.RE.
GLEITSTUECK 100X140X260 P	970456308	2	1	701	966134608	ANBAUTEILE ZYLINDER
GLEITSTUECK 14.5X85X231 P	972908108	14	2	673	917292008	TELESKOP 1 VORM.

Bezeichnung	Artikel	Pos.	Menge	Seite	Baugruppe	Bezeichnung
GLEITSTUECK 14.5X85X231 P	972908108	14	2	677	917292108	TELESKOP 2 VORM.
GLEITSTUECK 14.5X85X231 P	972908108	14	2	681	917292208	TELESKOP 3 VORM.
GLEITSTUECK 14.5X85X231 P	972908108	14	2	685	917292308	TELESKOP 4 VORM.
GLEITSTUECK 14.5X85X231 P	972908108	48	2	690	917292408	TELESKOP 5 VORM.
GLEITSTUECK 14X100X233 P	970537508	29	2	673	917292008	TELESKOP 1 VORM.
GLEITSTUECK 14X100X233 P	970537508	29	2	677	917292108	TELESKOP 2 VORM.
GLEITSTUECK 14X100X233 P	970537508	29	2	681	917292208	TELESKOP 3 VORM.
GLEITSTUECK 14X100X233 P	970537508	29	2	685	917292308	TELESKOP 4 VORM.
GLEITSTUECK 14X100X233 P	970537508	39	2	690	917292408	TELESKOP 5 VORM.
GLEITSTUECK 150X130X70 CU	97039611	16	8	35	917511508	RAUPENMITTELTEIL VORM.
GLEITSTUECK 150X130X70 CU	97039612	17	8	35	917511508	RAUPENMITTELTEIL VORM.
GLEITSTUECK 15X100X231 P	973254708	67	2	682	917292208	TELESKOP 3 VORM.
GLEITSTUECK 15X100X231 P	973254708	67	2	686	917292308	TELESKOP 4 VORM.
GLEITSTUECK 15X100X231 P	973254708	71	2	691	917292408	TELESKOP 5 VORM.
GLEITSTUECK 18X100X231 P	970537708	27	2	673	917292008	TELESKOP 1 VORM.
GLEITSTUECK 18X100X231 P	970537708	27	2	677	917292108	TELESKOP 2 VORM.
GLEITSTUECK 18X100X231 P	970537708	27	2	681	917292208	TELESKOP 3 VORM.
GLEITSTUECK 18X100X231 P	970537708	27	2	685	917292308	TELESKOP 4 VORM.
GLEITSTUECK 18X100X231 P	970537708	38	2	690	917292408	TELESKOP 5 VORM.
GLEITSTUECK 19X85X231 PA6	972908408	63	2	674	917292008	TELESKOP 1 VORM.
GLEITSTUECK 19X85X231 PA6	972908408	32	4	677	917292108	TELESKOP 2 VORM.
GLEITSTUECK 19X85X231 PA6	972908408	32	2	681	917292208	TELESKOP 3 VORM.
GLEITSTUECK 19X85X231 PA6	972908408	32	2	685	917292308	TELESKOP 4 VORM.
GLEITSTUECK 19X85X231 PA6	972908408	37	2	690	917292408	TELESKOP 5 VORM.
GLEITSTUECK 234X53X62 PA6	970537108	26	2	673	917292008	TELESKOP 1 VORM.
GLEITSTUECK 234X53X62 PA6	970537108	26	2	677	917292108	TELESKOP 2 VORM.
GLEITSTUECK 234X53X62 PA6	970537108	26	2	681	917292208	TELESKOP 3 VORM.
GLEITSTUECK 234X53X62 PA6	970537108	26	2	685	917292308	TELESKOP 4 VORM.
GLEITSTUECK 234X53X62 PA6	970537108	41	2	690	917292408	TELESKOP 5 VORM.
GLEITSTUECK 23X85X231 PA6	972908308	32	2	673	917292008	TELESKOP 1 VORM.
GLEITSTUECK 53X87X234 PA6	970537008	25	2	673	917292008	TELESKOP 1 VORM.
GLEITSTUECK 53X87X234 PA6	970537008	25	2	677	917292108	TELESKOP 2 VORM.
GLEITSTUECK 53X87X234 PA6	970537008	25	2	681	917292208	TELESKOP 3 VORM.
GLEITSTUECK 53X87X234 PA6	970537008	25	2	685	917292308	TELESKOP 4 VORM.
GLEITSTUECK 53X87X234 PA6	970537008	40	2	690	917292408	TELESKOP 5 VORM.
GLEITSTUECK 65X120X190 P	972997008	1	1	701	966134608	ANBAUTEILE ZYLINDER
GLEITSTUECK 84X261X468 P	973763408	3	1	701	966134608	ANBAUTEILE ZYLINDER
GLUEHLAMPE 1,2W 30V	607008708	13	1	471	96022872	ARMATURENBRETT DACH
GLUEHLAMPE DIN 49848 2,4W	607011108	(1)	2	153	928620108	ZUBEHOER
GLUEHLAMPE DIN 72601 70W	607023708	2	1	160	915731908	EL.TEILE VERSANDMONTAGE
GLUEHSTIFT	11826649	40	1	484	10876576	WASSERHEIZGERAET
GLUEHSTIFT	11826649	(10)	1	484	10876576	WASSERHEIZGERAET
GRIFF	12103434	(2)	1	435	10877138	FAHRERSITZ
GRIFF 4X110X245 S315MC	97100419	3	2	20	91001569	RAUPENFAHRWERK KPL.
GRIFF DIN 3122 A 3/4"	790026208	63	1	152	928569808	GRUNDWERKZEUG
GRIFF PA6-30%GF SPF	966435308	3	1	157	96063087	STAUKASTEN
GRIFF SCHWK. FE//ZNNI8//CN/	962963808	56	1	75	91001377	RAUPENTRAEGER VORM.LI.
GRIFF SCHWK. FE//ZNNI8//CN/	962963808	56	1	108	91001378	RAUPENTRAEGER VORM.RE.
GRIFF SCHWK. FE//ZNNI8//CN/	962963808	15	1	493	967978908	VERRIEGELUNG VORM.
GRIFF SCHWK. FE//ZNNI8//CN/	963557408	(2)	1	734	917268408	MASTNASE
GRIFF SCHWK. FE//ZNNI8//CN/	967969708	4	2	602	917267108	HILFSHUBWERK WINDE 2
GRIFF SCHWK. FE//ZNNI8//CN/	967969708	8	2	758	917413208	SELBSTMONTAGE HILFSHU
GRIFF ZN-DRUCKGUSS	10112569	(10)	1	561	96045351	HYDRAULIK OBERWAGEN
GRIFFADAPTION	11005983	3	1	422	966230408	SCHLIESSANLAGE
GRIFFKAPPE	571824708	1	1	472	10343693	MEISTERSCHALTER
GRIFFMULDE X0 KUNSTSTOF	955500008	7	1	449	968923508	KLAPPE VORM.RECHTS
GRIFFSTANGE NIROSTA	10297396	22	1	492	967928508	VERRIEGELUNG
GRUNDAUFBAU	969256608	2	1	541	96045386	GRUNDAUFBAU KPL.
GRUNDAUFBAU KPL.	96045386	2	1	540	91000922	EINBAUTEILE SCHALTSCHRAN
GRUNDHALTER SCHWK.	968266508	1	1	744	967933408	GRUNDHALTER VORM.

Bezeichnung	Artikel	Pos.	Menge	Seite	Baugruppe	Bezeichnung
GRUNDHALTER VORM.	967933408	1	1	743	968412508	MECHANIK MESS-U.WARNEI
GRUNDWERKZEUG	928569808	1	1	151	919328608	WERKZEUG M.ZUBEHOER
GSM-MODUL MC-MRLQ	10873838	26	1	540	91000922	EINBAUTEILE SCHALTSCHRAN
GUMMILAGER 13,51/47,75X19,	550640608	5	4	172	918731108	MONTAGETEILE DREHBUEHN
GUMMIMUFFE	10116310	24	1	252	10140729	ATL-ANBAU
GUMMIMUFFE	10126317	5	1	195	10139112	OELLEITUNG VORM.
GUMMIMUFFE	10129904	4	1	234	10149677	VERBINDUNGSLEITUNG ANBA
GUMMIMUFFE 06-12X45 Silicon	10126119	16	1	254	11420633	TAKTVENTIL
GUMMIMUFFE 12X18X45	9079603	7	1	195	10139112	OELLEITUNG VORM.
GUMMIMUFFE 22X30X65L.	9273161	7	2	232	10145173	ANSAUGSTUTZEN ANBAU
GUMMIMUFFE 25X35/33X56 L.	9271340	5	1	186	10126713	KURBELGEHAEUSEENTLUEF
GUMMIMUFFE Rubber	10126417	4	1	186	10126713	KURBELGEHAEUSEENTLUEF
GUMMIMUFFE Silicone	10128228	7	3	254	11420633	TAKTVENTIL
GUMMIPANZERSCHLAUCH 30	790042908	71	1	152	928569808	GRUNDWERKZEUG
GUMMIPLATTE 1.5X185X45 E	979243608	4	2	410	965784408	DACHSCHEIBE VORM.
GUMMIPLATTE SBR M.GEWEB	973731008	323	2	561	96045351	HYDRAULIK OBERWAGEN
GUMMIPUFFER 19X9,6 PU SC	10354670	25	2	399	917305408	INNENVERKLEIDUNG EINBAU
GUMMIPUFFER 32X32XM6 EL	10472890	8	1	421	917304708	SCHIEBETUER EINBAU
GUMMIPUFFER 8,3/26X7,2 30	10116274	4	8	267	10144227	STEUERGERAET ANBAU
GUMMIRING X12	10133991	102	1	270	10151328	KABELBAUM ANBAU
GUMMIRING X16	10123876	103	1	270	10151328	KABELBAUM ANBAU
GUMMIRING X22	10123878	33	2	527	919410708	EL.ANLAGE DREHBUEHNE
GUMMISCHUTZKAPPE	10040136	1	1	579	10878075	NOTHANDBETAETIGUNG
GURT	12100293	2	1	488	11212257	GURTTRAGESYSTEM
GURTTRAGESYSTEM LSB-BT	11212257	1	1	487	917618608	ANBAUTEILE
HAFTREINIGER 250ML	811205108	47	1	421	917304708	SCHIEBETUER EINBAU
HAKEN 3X50X45 X5CRNI18-10	97062372	5	2	157	96063087	STAUKASTEN
HAKEN 50X358X150 S960QL+	97030305	7	2	654	967936908	GEGENGEWICHT KPL.
HAKENFLASCHE 125DM SPF	910836808	316	1	14		LIEBHERR LTR 1220
HAKENSTANGE ANBAU	968090008	2	1	766	917268108	WERKZEUG KLAPPSPITZE
HAKENSTANGE FE//ZNNI8//CN/	929529908	1	1	768	968090008	HAKENSTANGE ANBAU
HALBRUNDKOPFSCHRAUBE A	10875475	9	2	388	96025887	PEDALTRAEGER EINBAU
HALBRUNDKOPFSCHRAUBE	11160744	301	2	328	96034515	AUSGLEICHSBEHAELTER VO
HALBRUNDKOPFSCHRAUBE	11160744	13	3	421	917304708	SCHIEBETUER EINBAU
HALBRUNDKOPFSCHRAUBE	10028237	308	4	616	967784808	HYDRAULIK HILFSHUBWERK
HALBRUNDKOPFSCHRAUBE	10028237	4	1	744	967933408	GRUNDHALTER VORM.
HALBRUNDKOPFSCHRAUBE	10813359	83	8	150	919499408	ZENTRALBALLAST
HALBRUNDKOPFSCHRAUBE	10813359	(300)	2	286	919007708	ANTRIEBSAGGREGAT VORM.
HALBRUNDKOPFSCHRAUBE	10813359	43	7	421	917304708	SCHIEBETUER EINBAU
HALBRUNDKOPFSCHRAUBE	10813359	52	1	500	918731808	HARNSTOFFANLAGE
HALBRUNDKOPFSCHRAUBE	10475893	14	10	421	917304708	SCHIEBETUER EINBAU
HALBRUNDKOPFSCHRAUBE	10875468	13	8	147	919087608	DREHDURCHFUEHRUNG
HALBRUNDKOPFSCHRAUBE	10875468	302	1	328	96034515	AUSGLEICHSBEHAELTER VO
HALBRUNDKOPFSCHRAUBE	10875468	11	12	334	96023117	BATTERIEKASTEN VORM.
HALBRUNDKOPFSCHRAUBE	10875468	10	3	388	96025887	PEDALTRAEGER EINBAU
HALBRUNDKOPFSCHRAUBE	10875468	14	12	395	917304508	KRANFUEHRERKABINE VORM.
HALBRUNDKOPFSCHRAUBE	10875468	40	73	399	917305408	INNENVERKLEIDUNG EINBAU
HALBRUNDKOPFSCHRAUBE	10875468	23	6	415	916163008	WISCHANLAGE EINBAU
HALBRUNDKOPFSCHRAUBE	10875468	19	5	421	917304708	SCHIEBETUER EINBAU
HALBRUNDKOPFSCHRAUBE	10875468	22	7	467	96053500	ELEKTRIK ANBAUTEILE KABIN
HALBRUNDKOPFSCHRAUBE	10412851	17	4	26	96034894	SCHUTZBLECH KPL.LI.
HALBRUNDKOPFSCHRAUBE	10412851	17	4	29	96034977	SCHUTZBLECH KPL.RE.
HALBRUNDKOPFSCHRAUBE	10412851	18	4	157	96063087	STAUKASTEN
HALBRUNDKOPFSCHRAUBE	10412851	10	6	390	916170808	KABELEINFUEHRUNG
HALBRUNDKOPFSCHRAUBE	10412851	8	1	393	968514508	SCHALTSCHRANKDECKEL EIN
HALBRUNDKOPFSCHRAUBE	10412851	12	4	421	917304708	SCHIEBETUER EINBAU
HALBRUNDKOPFSCHRAUBE	10412851	300	10	445	96036790	DREHBUEHNENVERKLEIDUN
HALBRUNDKOPFSCHRAUBE	10412851	300	6	455	969015908	DREHBUEHNENVERKLEIDUN
HALBRUNDKOPFSCHRAUBE	10412851	300	2	507	919674408	ABGASANLAGE
HALBRUNDKOPFSCHRAUBE	10412851	307	7	511	96051842	ABGASANLAGE VORM.

Bezeichnung	Artikel	Pos.	Menge	Seite	Baugruppe	Bezeichnung
HALBRUNDKOPFSCHRAUBE	10412851	2	4	626	917269308	LADEGERAET
HALBRUNDKOPFSCHRAUBE	10412851	7	1	744	967933408	GRUNDHALTER VORM.
HALBRUNDKOPFSCHRAUBE	10412852	30	8	35	917511508	RAUPENMITTELTEIL VORM.
HALBRUNDKOPFSCHRAUBE	10412852	5	14	92	968420608	STAUKASTEN VORM.
HALBRUNDKOPFSCHRAUBE	10412852	15	6	409	966497908	FRONTSCHEIBE KPL.
HALBRUNDKOPFSCHRAUBE	10412852	308	2	511	96051842	ABGASANLAGE VORM.
HALBRUNDKOPFSCHRAUBE	10412852	26	2	636	968994408	KAMERAHALTER VORM.
HALBRUNDKOPFSCHRAUBE	10412852	20	6	637	968290608	STATIV
HALBRUNDKOPFSCHRAUBE	10412852	13	2	639	968993508	KAMERAHALTER VORM.
HALBRUNDKOPFSCHRAUBE	10412852	20	6	640	968267208	STATIV
HALBRUNDKOPFSCHRAUBE	10412853	6	8	387	916177508	TRITT KPL.
HALBRUNDKOPFSCHRAUBE	10412853	41	1	421	917304708	SCHIEBETUER EINBAU
HALBRUNDKOPFSCHRAUBE	11161571	34	4	26	96034894	SCHUTZBLECH KPL.LI.
HALBRUNDKOPFSCHRAUBE	11161571	34	4	29	96034977	SCHUTZBLECH KPL.RE.
HALBRUNDKOPFSCHRAUBE A	10876082	201	2	76	91001377	RAUPENTRAEGER VORM.LI.
HALBRUNDKOPFSCHRAUBE A	10876082	201	2	109	91001378	RAUPENTRAEGER VORM.RE.
HALBRUNDKOPFSCHRAUBE A	10876082	11	4	144	96045206	MECHANISCHE ANBAUTEILE
HALBRUNDKOPFSCHRAUBE	10875485	20	3	26	96034894	SCHUTZBLECH KPL.LI.
HALBRUNDKOPFSCHRAUBE	10875485	20	3	29	96034977	SCHUTZBLECH KPL.RE.
HALBRUNDKOPFSCHRAUBE	10875485	15	4	39	96045225	ELEKTRIK MITTELSTUECK
HALBRUNDKOPFSCHRAUBE	10875485	4	3	95	96062678	HEBEL VORM.
HALBRUNDKOPFSCHRAUBE	10875485	14	16	129	919644008	HYDRAULISCHE ABSTUETZUN
HALBRUNDKOPFSCHRAUBE	10875485	23	3	135	917257108	ZENTRALSCHMIERUNG RAUP
HALBRUNDKOPFSCHRAUBE	10875485	28	4	172	918731108	MONTAGETEILE DREHBUEHN
HALBRUNDKOPFSCHRAUBE	10875485	305	6	287	919007708	ANTRIEBSAGGREGAT VORM.
HALBRUNDKOPFSCHRAUBE	10875485	15	6	395	917304508	KRANFUEHRERKABINE VORM.
HALBRUNDKOPFSCHRAUBE	10875485	303	13	445	96036790	DREHBUEHNENVERKLEIDUN
HALBRUNDKOPFSCHRAUBE	10875485	305	10	455	969015908	DREHBUEHNENVERKLEIDUN
HALBRUNDKOPFSCHRAUBE	10875485	(7)	6	496	969763408	VERROHRUNG DRUCKLUFTA
HALBRUNDKOPFSCHRAUBE	10875485	54	4	500	918731808	HARNSTOFFANLAGE
HALBRUNDKOPFSCHRAUBE	10875485	304	1	507	919674408	ABGASANLAGE
HALBRUNDKOPFSCHRAUBE	10875485	300	15	518	96039752	ZUSATZTEILE VERKLEIDUNG
HALBRUNDKOPFSCHRAUBE	10875485	303	2	520	918731908	LUFTFILTERANLAGE
HALBRUNDKOPFSCHRAUBE	10875485	28	7	567	96035117	MECH.BEFESTIGUNGSTEILE
HALBRUNDKOPFSCHRAUBE	10875485	312	5	616	967784808	HYDRAULIK HILFSHUBWERK
HALBRUNDKOPFSCHRAUBE	10875485	3	3	635	968210808	ANBAUTEILE KAMERA
HALBRUNDKOPFSCHRAUBE	10875471	10	4	144	96045206	MECHANISCHE ANBAUTEILE
HALBRUNDKOPFSCHRAUBE	10875471	13	2	410	965784408	DACHSCHEIBE VORM.
HALBRUNDKOPFSCHRAUBE	10875471	302	4	520	918731908	LUFTFILTERANLAGE
HALBRUNDKOPFSCHRAUBE	10876067	303	2	287	919007708	ANTRIEBSAGGREGAT VORM.
HALBRUNDKOPFSCHRAUBE	10875486	18	3	94	96034962	FUEHRUNG LI.
HALBRUNDKOPFSCHRAUBE	10875486	18	3	112	96034980	FUEHRUNG RE.
HALBRUNDKOPFSCHRAUBE	10875486	10	12	365	917259708	HAUPTHUBWERK
HALBRUNDKOPFSCHRAUBE	10875486	(6)	11	387	916177508	TRITT KPL.
HALBRUNDKOPFSCHRAUBE	10875486	308	4	455	969015908	DREHBUEHNENVERKLEIDUN
HALBRUNDKOPFSCHRAUBE	10875486	6	4	768	968090008	HAKENSTANGE ANBAU
HALBRUNDKOPFSCHRAUBE	10875017	70	2	400	917305408	INNENVERKLEIDUNG EINBAU
HALBRUNDKOPFSCHRAUBE	10875017	32	4	467	96053500	ELEKTRIK ANBAUTEILE KABIN
HALBRUNDKOPFSCHRAUBE I	10875448	300	2	280	918731408	ANTRIEBSAGGREGAT KPL.
HALBRUNDKOPFSCHRAUBE I	10875448	7	3	388	96025887	PEDALTRAEGER EINBAU
HALBRUNDKOPFSCHRAUBE I	10875448	8	2	457	969016008	KLAPPE VORM.VORN LINKS
HALBRUNDKOPFSCHRAUBE	10875482	20	8	467	96053500	ELEKTRIK ANBAUTEILE KABIN
HALBRUNDKOPFSCHRAUBE	11835043	43	2	433	918810308	STEUERSTAND
HALBRUNDKOPFSCHRAUBE	11835043	317	8	445	96036790	DREHBUEHNENVERKLEIDUN
HALBRUNDKOPFSCHRAUBE	10875483	17	6	334	96023117	BATTERIEKASTEN VORM.
HALBRUNDKOPFSCHRAUBE	10875483	3	2	384	96057226	BECHERHALTER EINBAU
HALBRUNDKOPFSCHRAUBE	10875483	16	14	412	916168308	LUFTFUEHRUNG
HALBRUNDKOPFSCHRAUBE	10875483	26	2	415	916163008	WISCHANLAGE EINBAU
HALBRUNDKOPFSCHRAUBE	10875483	21	8	467	96053500	ELEKTRIK ANBAUTEILE KABIN
HALBRUNDKOPFSCHRAUBE I	12229337	11	14	388	96025887	PEDALTRAEGER EINBAU

Bezeichnung	Artikel	Pos.	Menge	Seite	Baugruppe	Bezeichnung
HALBRUNDKOPFSCHRAUBE	10875474	38	16	399	917305408	INNENVERKLEIDUNG EINBAU
HALBRUNDKOPFSCHRAUBE	10875474	15	5	412	916168308	LUFTFUEHRUNG
HALBRUNDKOPFSCHRAUBE	10875474	28	6	433	918810308	STEUERSTAND
HALBRUNDKOPFSCHRAUBE	10875474	18	18	467	96053500	ELEKTRIK ANBAUTEILE KABIN
HALBRUNDKOPFSCHRAUBE	10875474	25	4	641	96045237	AUSRUESTUNG KAMERA KAB
HALBRUNDKOPFSCHRAUBE I	11697855	12	4	383	96015921	BEDIENELEMENTE EINBAU
HALBRUNDKOPFSCHRAUBE I	11697855	27	7	406	916162508	SCHEIBEN EINBAU
HALBRUNDKOPFSCHRAUBE	10875488	300	3	287	919007708	ANTRIEBSAGGREGAT VORM.
HALBRUNDKOPFSCHRAUBE	10875488	300	6	294	968026308	KUPPLUNGSSTELLER
HALBRUNDKOPFSCHRAUBE	10875488	17	3	390	916170808	KABELEINFUEHRUNG
HALBRUNDKOPFSCHRAUBE	10875488	33	4	409	966497908	FRONTSCHEIBE KPL.
HALBRUNDKOPFSCHRAUBE	10874884	9	3	332	918955408	BATTERIEKASTEN KPL.
HALBRUNDKOPFSCHRAUBE	10874884	39	13	399	917305408	INNENVERKLEIDUNG EINBAU
HALBRUNDKOPFSCHRAUBE	10875469	41	10	399	917305408	INNENVERKLEIDUNG EINBAU
HALBRUNDKOPFSCHRAUBE	10875469	36	7	421	917304708	SCHIEBETUER EINBAU
HALBRUNDKOPFSCHRAUBE	10410198	13	2	390	916170808	KABELEINFUEHRUNG
HALBRUNDKOPFSCHRAUBE	10875470	42	2	399	917305408	INNENVERKLEIDUNG EINBAU
HALBRUNDKOPFSCHRAUBE	12102696	27	24	20	91001569	RAUPENFAHRWERK KPL.
HALBRUNDKOPFSCHRAUBE	12102696	19	4	39	96045225	ELEKTRIK MITTELSTUECK
HALBRUNDKOPFSCHRAUBE	12102696	32	2	68	918925508	QUERTRAEGER KPL.
HALBRUNDKOPFSCHRAUBE	12102696	39	4	75	91001377	RAUPENTRAEGER VORM.LI.
HALBRUNDKOPFSCHRAUBE	12102696	39	4	108	91001378	RAUPENTRAEGER VORM.RE.
HALBRUNDKOPFSCHRAUBE	12102696	21	8	135	917257108	ZENTRALSCHMIERUNG RAUP
HALBRUNDKOPFSCHRAUBE	12102696	80	8	150	919499408	ZENTRALBALLAST
HALBRUNDKOPFSCHRAUBE	12102696	11	6	172	918731108	MONTAGETEILE DREHBUEHN
HALBRUNDKOPFSCHRAUBE	12102696	10	2	363	917259608	DREHBUEHNENARRETIERUN
HALBRUNDKOPFSCHRAUBE	12102696	8	10	388	96025887	PEDALTRAEGER EINBAU
HALBRUNDKOPFSCHRAUBE	12102696	21	4	523	917261208	ZENTRALSCHMIERANLAGE O
HALBRUNDKOPFSCHRAUBE	12102696	307	2	561	96045351	HYDRAULIK OBERWAGEN
HALBRUNDKOPFSCHRAUBE	12102696	29	4	567	96035117	MECH.BEFESTIGUNGSTEILE
HALBRUNDKOPFSCHRAUBE	12102696	12	25	604	967969608	HILFSHUBWERK WINDE 2 VO
HALBRUNDKOPFSCHRAUBE	12102696	14	73	668	917291908	ANLENKSTUECK VORM.
HALBRUNDKOPFSCHRAUBE	12102696	56	17	690	917292408	TELESKOP 5 VORM.
HALBRUNDKOPFSCHRAUBE	12102696	20	4	734	917268408	MASTNASE
HALBRUNDKOPFSCHRAUBE	12102696	6	2	737	967321308	HALTERUNG 2.HUB OBEN
HALBRUNDKOPFSCHRAUBE	10353737	21	6	334	96023117	BATTERIEKASTEN VORM.
HALBRUNDKOPFSCHRAUBE I	10429635	7	1	381	919010208	KRANFUEHRERKABINE VORM.
HALBRUNDKOPFSCHRAUBE	408650508	15	2	157	96063087	STAUKASTEN
HALBRUNDKOPFSCHRAUBE	408650608	11	4	332	918955408	BATTERIEKASTEN KPL.
HALBRUNDKOPFSCHRAUBE	408650608	311	2	511	96051842	ABGASANLAGE VORM.
HALBRUNDKOPFSCHRAUBE	408650608	2	2	746	967937608	HINDERNISFEUER VORM.
HALBRUNDKOPFSCHRAUBE	10301319	11	5	383	96015921	BEDIENELEMENTE EINBAU
HALBRUNDKOPFSCHRAUBE	10182032	310	2	294	968026308	KUPPLUNGSSTELLER
HALBRUNDKOPFSCHRAUBE I	12100221	26	1	41	96045226	SCHALTKASTEN VORM.
HALBSCHALE 80X25 PA6G +	97038484	16	2	147	919087608	DREHDURCHFUEHRUNG
HALTEBUEGEL RAL 9005 SPF	97136700	3	1	385	96048757	BECHERHALTER
HALTEGRIFF 215X25X59,2X16	10443309	59	1	400	917305408	INNENVERKLEIDUNG EINBAU
HALTEGURT 25X795 POLYES	591063808	30	1	409	966497908	FRONTSCHEIBE KPL.
HALTELEISTE 15X180X30 S35	97039613	18	16	35	917511508	RAUPENMITTELTEIL VORM.
HALTEPLATTE	11644254	102	1	704	10802064	SEILLAENGENGEBER
HALTER	10145373	15	1	254	11420633	TAKTVENTIL
HALTER	10146789	2	1	226	10146791	KRAFTSTOFF-FEINFILTERAN
HALTER	591070408	29	2	172	918731108	MONTAGETEILE DREHBUEHN
HALTER	966253708	1	1	423	966230508	FUEHRUNG VORM.
HALTER 1.4308	975218608	2	6	392	916162808	RELING
HALTER 1.4308	975384508	3	6	392	916162808	RELING
HALTER 1.5X198X59 DC01 FE//	978608608	10	1	544	969256608	GRUNDAUFBAU
HALTER 2X163X140 DC01 FE//	97134822	2	1	384	96057226	BECHERHALTER EINBAU
HALTER 40X30X175 PA6G+OE	97033902	19	1	26	96034894	SCHUTZBLECH KPL.LI.
HALTER 40X30X175 PA6G+OE	97033902	19	1	29	96034977	SCHUTZBLECH KPL.RE.

Bezeichnung	Artikel	Pos.	Menge	Seite	Baugruppe	Bezeichnung
HALTER 40X80X40 G-ALMG3	979489508	3	1	440	916049908	SPIEGELANBAU KRANFUEHR
HALTER 44X88.5X40 G-ALSIM	97009160	7	2	395	917304508	KRANFUEHRERKABINE VORM.
HALTER 4X120X75 S315MC FE	971634008	33	1	701	966134608	ANBAUTEILE ZYLINDER
HALTER 4X173X175 X5CRNI18	97032840	2	1	125	968331708	SICHERUNGSHALTER
HALTER 4X337X245 S315MC	97047676	50	1	135	917257108	ZENTRALSCHMIERUNG RAUP
HALTER ANBAU	10143707	10	1	269	10151328	KABELBAUM ANBAU
HALTER DT/DTM	10041876	528	2	535	96037136	KABELSTRANG
HALTER GX5CRNI19-10	97077297	33	1	286	919007708	ANTRIEBSAGGREGAT VORM.
HALTER GX5CRNI19-10	97077309	(2)	3	286	919007708	ANTRIEBSAGGREGAT VORM.
HALTER KPL.	10127689	2	1	267	10144227	STEUERGERAET ANBAU
HALTER KPL.	10143454	1	1	267	10144227	STEUERGERAET ANBAU
HALTER KPL.	96035073	5	2	511	96051842	ABGASANLAGE VORM.
HALTER KPL. FE//ZNNI8//CN//T	96034872	1	1	342	96066379	KRAFTSTOFFFILTER VORM.
HALTER KPL. S235JR	10145371	2	1	272	10143707	HALTER ANBAU
HALTER KPL. S235JR	12978423	1	1	272	10143707	HALTER ANBAU
HALTER LINKS	967977708	2	1	591	917261808	OELKUEHLER EINBAU
HALTER MONITOR	10874763	20	1	641	96045237	AUSRUESTUNG KAMERA KAB
HALTER PA6MDGF30 SPF	97098446	1	2	144	96045206	MECHANISCHE ANBAUTEILE
HALTER RECHTS	969185608	3	1	591	917261808	OELKUEHLER EINBAU
HALTER S235JR	10150252	10	1	271	10151329	KABELSATZ ANBAU
HALTER S235JR	10150838	13	1	271	10151329	KABELSATZ ANBAU
HALTER S235JR	12429351	2	1	254	11420633	TAKTVENTIL
HALTER S235JR	9275178	91	1	269	10151328	KABELBAUM ANBAU
HALTER SCHWK.	966230708	29	1	421	917304708	SCHIEBETUER EINBAU
HALTER SCHWK.	966230808	30	1	421	917304708	SCHIEBETUER EINBAU
HALTER SCHWK. FE//ZNNI8//C	96035070	3	2	511	96051842	ABGASANLAGE VORM.
HALTER SCHWK. FE//ZNNI8//C	96035071	4	1	511	96051842	ABGASANLAGE VORM.
HALTER SCHWK. FE//ZNNI8//C	965426208	1	1	294	968026308	KUPPLUNGSSTELLER
HALTER SCHWK. FE//ZNNI8//C	968765608	25	4	35	917511508	RAUPENMITTELTEIL VORM.
HALTER X12CRNIS188	965371708	1	1	712	966591508	ENDSCHALTER ANBAU
HALTERBLECH 2X121X18 DC0	97010815	14	1	544	969256608	GRUNDAUFBAU
HALTERBLECH 2X192X41 DC0	97010814	11	1	544	969256608	GRUNDAUFBAU
HALTERING	11659651	(14)	1	132	968077208	HYDRAULIK ABSTUETZUNG
HALTERUNG	12106374	10	1	699	571928508	ZYLINDERKOPF KPL.
HALTERUNG 2.HUB OBEN	967321308	10	1	735	918197708	ELEKTRIK 2.HUBENDSCHALTE
HALTERUNG SCHWK.	929582208	1	1	762	929582108	HALTERUNG VORM.
HALTERUNG SCHWK. T ZN O	963556008	9	1	690	917292408	TELESKOP 5 VORM.
HALTERUNG VORM.	929582108	1	1	761	917267508	TRANSPORTHALTERUNG DKS
HALTESCHEIBE 100X55X6	927601301	6	1	370	939292201	PLANETENGETRIEBE
HALTESCHEIBE 4X60X4	944134103	36	1	353	90008901	DREHWERKANTRIEB
HALTESCHEIBE 4X70X4	927531901	16	1	353	90008901	DREHWERKANTRIEB
HALTESCHEIBE 50X4	944303303	56	1	78	90028956	FAHRANTRIEB
HALTESCHEIBE 55X125X6	927602801	41	1	370	939292201	PLANETENGETRIEBE
HALTESCHEIBE 55X125X6	927602801	31	1	372	90017588	PLANETENTRAEGER
HANDGRIFF	591066808	10	2	409	966497908	FRONTSCHEIBE KPL.
HANDGRIFF	591066808	5	1	410	965784408	DACHSCHEIBE VORM.
HANDGRIFF 212X53	12554272	6	1	457	969016008	KLAPPE VORM.VORN LINKS
HANDGRIFF KPL. DREH KUN	704232208	9	1	409	966497908	FRONTSCHEIBE KPL.
HANDHAMMER DIN 1041 800G	790030008	60	1	152	928569808	GRUNDWERKZEUG
HANDHEBELPRESSE	885602114	6	1	151	919328608	WERKZEUG M.ZUBEHOER
HANDHEBELPRESSE VERZ.	790042008	70	1	152	928569808	GRUNDWERKZEUG
HANDPUMPE	12106354	13	1	155	91001571	BOLZENZIEHVORRICHTUNG
HARNSTOFFANLAGE	918731808	162	1	13		LIEBHERR LTR 1220
HARNSTOFFBEHAELTER 65L P	11481413	1	1	501	968570808	HARNSTOFFTANK
HARNSTOFFTANK 73L/65L SP	968570808	10	1	500	918731808	HARNSTOFFANLAGE
HAUBE 180X350 GEWEBE RO	97042475	9	1	745	967936408	WINDWARNUNG VORM.
HAUBE 5X220X434 S355MC FE	97032619	6	2	30	968019508	ENDSCHALTER ANBAU
HAUBE LI. 4X585X711 S315MC	97066482	87	1	76	91001377	RAUPENTRAEGER VORM.LI.
HAUBE RE. 4X585X711 S315M	97066483	87	1	109	91001378	RAUPENTRAEGER VORM.RE.
HAUBENAUFLAGE	704229908	311	10	455	969015908	DREHBUEHNENVERKLEIDUN

Bezeichnung	Artikel	Pos.	Menge	Seite	Baugruppe	Bezeichnung
HAUBENDECKEL	11181887	34	1	52	11346779	SCHLEIFRINGUEBERTRAGER
HAUPTFILTERELEMENT	10294938	2	1	521	10871700	LUFTFILTER
HAUPTHUBWERK	917259708	125	1	13		LIEBHERR LTR 1220
HAUPTLAGER 104/111/32	9073734	1	5	198	10116939	RS KURBELWELLENLAGERU
HAUPTLAGER 104/111/32 MIB	9075606	2	5	198	10116939	RS KURBELWELLENLAGERU
HEBEL	571430708	4	1	649	10040024	TASCHENSCHLOSS
HEBEL 30.0X285 S355J2C+C	97030031	6	1	492	967928508	VERRIEGELUNG
HEBEL SCHWK. FE//ZNNI8//CN/	965426308	2	1	294	968026308	KUPPLUNGSSTELLER
HEBEL VORM.	96050169	300	1	76	91001377	RAUPENTRAEGER VORM.LI.
HEBEL VORM.	96062678	400	1	76	91001377	RAUPENTRAEGER VORM.LI.
HEBELVERSCHLUSS	11450420	8	2	449	968923508	KLAPPE VORM.RECHTS
HEBELVERSCHLUSS	11450420	5	2	457	969016008	KLAPPE VORM.VORN LINKS
HECKSCHEIBE ESG SPF	97000279	5	1	406	916162508	SCHEIBEN EINBAU
HEIZELEMENT	10650387	(13)	1	435	10877138	FAHRERSITZ
HEIZFLANSCH 24V 1,9KW	12856186	1	1	236	13701882	HEIZFLANSCH KOMPLETT
HEIZFLANSCH ANBAU	9078314	260	1	177	13455297	DIESELMOTOR
HEIZFLANSCH KOMPLETT 24V	13701882	1	1	235	9078314	HEIZFLANSCH ANBAU
HEIZKLIMAGERAET	11083498	1	1	426	917676208	HEIZUNG KRANFUEHRERKAB
HEIZUNG	502651408	2	1	497	502657308	LUFTTROCKNER
HEIZUNG KRANFUEHRERKABI	917676208	134	1	13		LIEBHERR LTR 1220
HEIZUNG VORM.	969085208	20	1	426	917676208	HEIZUNG KRANFUEHRERKAB
HEIZUNGSSCHLAUCH 70/PRIM	553181208	12	0.25	412	916168308	LUFTFUEHRUNG
HILFSEINSCHERSEIL KPL. 16X	915037208	440	1	15		LIEBHERR LTR 1220
HILFSHUBSEIL M.ZUBEHOER	917267208	332	1	14		LIEBHERR LTR 1220
HILFSHUBWERK WINDE 2	917267108	330	1	14		LIEBHERR LTR 1220
HILFSHUBWERK WINDE 2 SCH	967969908	1	1	604	967969608	HILFSHUBWERK WINDE 2 VO
HILFSHUBWERK WINDE 2 VO	967969608	3	1	602	917267108	HILFSHUBWERK WINDE 2
HINDERNISFEUER 7,2W 19,2-	11482305	3	1	741	917598408	ELEKTRIK MESS-U.WARNEINR
HINDERNISFEUER VORM.	967937608	3	1	743	968412508	MECHANIK MESS-U.WARNEI
HINWEISSCHILD 120X80 KLE	97094940	107	1	164	917862808	BESCHILDERUNG GROSSBRI
HINWEISSCHILD 208X100 KLE	97131530	110	1	164	917862808	BESCHILDERUNG GROSSBRI
HINWEISSCHILD 23X12 KLEBE	97082749	1	1	769	918462408	BESCHILDERUNG FREMDEIN
HINWEISSCHILD 55X55 KLEBE	97158853	5	1	155	91001571	BOLZENZIEHVORRICHTUNG
HINWEISSCHILD 60X90 KLEBE	97135430	17	1	164	917862808	BESCHILDERUNG GROSSBRI
HINWEISSCHILD 60X90 KLEBE	97135431	19	1	164	917862808	BESCHILDERUNG GROSSBRI
HINWEISSCHILD 90X80 KLEBE	97133618	50	1	26	96034894	SCHUTZBLECH KPL.LI.
HINWEISSCHILD 90X80 KLEBE	97133617	50	1	29	96034977	SCHUTZBLECH KPL.RE.
HITZESCHUTZ MIT BEFESTIG	10144756	415	1	177	13455297	DIESELMOTOR
HITZESCHUTZBLECH	10144755	1	1	251	10144756	HITZESCHUTZ MIT BEFESTIG
HITZESCHUTZBLECH S355JR	11382888	10	1	234	10149677	VERBINDUNGSLEITUNG ANBA
HITZESCHUTZBLECH S355JR	12428325	10	1	234	10149677	VERBINDUNGSLEITUNG ANBA
HOCHDRUCKPUMPE MIT BEF	10150741	171	1	176	13455297	DIESELMOTOR
HOCHDRUCKPUMPE R-MOT	10146658	1	1	218	10150741	HOCHDRUCKPUMPE MIT BEFE
HOCHSTROMVERTEILER	10878680	(10)	1	335	96023914	ELEKTRIK BATTERIEKASTEN
HOEHENSICHERUNGSGERAE	12107776	2	1	167	916959808	PERSOENLICHE SCHUTZAUS
HOEHENVERSTELLUNG	12102116	28	1	435	10877138	FAHRERSITZ
HOHLSCHLUESSEL	704271108	7	2	153	928620108	ZUBEHOER
HOHLSCHRAUBE 10X1X27 11S	9080466	3	3	247	10148216	ROHRLEITUNG ANBAU
HOHLSCHRAUBE 15-3-32	11443132	17	2	228	10143341	KRAFTSTOFFLEITUNGEN
HOHLSCHRAUBE DIN 74305 22	502940108	7	1	339	968999708	KRAFTSTOFFBEHAELTER VO
HOHLSCHRAUBE DIN 7643 10	12210013	17	1	229	10143342	LECKOELRUECKLAUF
HOHLSCHRAUBE DIN 7643 12	12210025	3	4	243	10145278	ANBAUTEILE LUFTPRESSER
HOHLSCHRAUBE DIN 7643 12-	11002995	2	1	228	10143341	KRAFTSTOFFLEITUNGEN
HOHLSCHRAUBE DIN 7643 15--	4981226	16	3	228	10143341	KRAFTSTOFFLEITUNGEN
HOHLSCHRAUBE DIN 7643 4-3-	12210009	23	1	229	10143342	LECKOELRUECKLAUF
HOHLSCHRAUBE DIN 7643 6-3	12210010	6	6	229	10143342	LECKOELRUECKLAUF
HOHLSCHRAUBE DIN 7643 6-3	12210010	7	1	243	10145278	ANBAUTEILE LUFTPRESSER
HOHLSCHRAUBE DIN 7643 6-3	12210010	6	1	254	11420633	TAKTVENTIL
HOHLSCHRAUBE DIN 7643 6-3	12210010	10	1	276	10144036	NEBENABTRIEB ANBAU
HOHLSCHRAUBE DIN 7643 8-3	12210024	2	1	229	10143342	LECKOELRUECKLAUF

Bezeichnung	Artikel	Pos.	Menge	Seite	Baugruppe	Bezeichnung
HOHLSCHRAUBE DIN 7643 8-3	12210024	20	1	253	12512627	ABGASSTUTZEN ANBAU
HOHLSCHRAUBE DIN 7643 8-3	12210024	13	1	276	10144036	NEBENABTRIEB ANBAU
HOHLSCHRAUBE M18X1,5 C	11493963	(15)	1	132	968077208	HYDRAULIK ABSTUETZUNG
HORN 24V	614003108	24	1	41	96045226	SCHALTKASTEN VORM.
HORN 24V	614003108	32	1	527	919410708	EL.ANLAGE DREHBUEHNE
HUBENDSCHALTER GEWICHT	96013575	63	1	691	917292408	TELESKOP 5 VORM.
HUBENDSCHALTER GEWICHT	96013575	2	1	756	917267208	HILFSHUBSEIL M.ZUBEHOER
HUBENDSCHALTERGEWICHT	10873379	1	1	693	96013575	HUBENDSCHALTER GEWICHT
HUBSEIL 23X280M -40°C SPF	773444090	1	1	756	917267208	HILFSHUBSEIL M.ZUBEHOER
HUBSEIL 23X350M -40°C SPF	10115128	1	1	650	917259808	SEIL F.WINDE 1
HUBSEILFUEHRUNG SCHWK.	962771108	20	1	668	917291908	ANLENKSTUECK VORM.
HUELSE	10815006	3	1	47	10450273	ANTENNE
HUELSE	11493793	1	1	772	915037208	HILFSEINSCHERSEIL KPL.
HUELSE 108.0X196 S235JRH	97031480	30	2	75	91001377	RAUPENTRAEGER VORM.LI.
HUELSE 108.0X196 S235JRH	97031480	30	2	108	91001378	RAUPENTRAEGER VORM.RE.
HUELSE 12.0X6 E235+N FE//ZN	97032611	2	4	30	968019508	ENDSCHALTER ANBAU
HUELSE 18X12 PA 12	97012184	44	1	421	917304708	SCHIEBETUER EINBAU
HUELSE 18X24 PA12	97001760	34	1	421	917304708	SCHIEBETUER EINBAU
HUELSE 20.0X30 S355J2C+C	97031233	15	3	751	968728808	KONSOLE VORM.
HUELSE 20.0X30 S355J2C+C	97031233	2	2	758	917413208	SELBSTMONTAGE HILFSHU
HUELSE 25.0X30 35NICRMOV	97114100	9	48	351	919369308	DREHWERK
HUELSE 25X15 PA 12	97001711	33	1	421	917304708	SCHIEBETUER EINBAU
HUELSE 25X20 11SMN37 FE//	953873408	25	1	41	96045226	SCHALTKASTEN VORM.
HUELSE 25X20 11SMN37 FE//	953873408	20	16	119	917691008	ABSTURZSICHERUNG
HUELSE 25X20 11SMN37 FE//	953873408	25	8	129	919644008	HYDRAULISCHE ABSTUETZUN
HUELSE 25X20 11SMN37 FE//	953873408	12	4	144	96045206	MECHANISCHE ANBAUTEILE
HUELSE 25X20 11SMN37 FE//	953873408	85	4	150	919499408	ZENTRALBALLAST
HUELSE 25X20 11SMN37 FE//	953873408	21	2	280	918731408	ANTRIEBSAGGREGAT KPL.
HUELSE 25X20 11SMN37 FE//	953873408	14	6	286	919007708	ANTRIEBSAGGREGAT VORM.
HUELSE 25X20 11SMN37 FE//	953873408	22	4	365	917259708	HAUPTHUBWERK
HUELSE 25X20 11SMN37 FE//	953873408	5	1	507	919674408	ABGASANLAGE
HUELSE 25X20 11SMN37 FE//	953873408	313	4	616	967784808	HYDRAULIK HILFSHUBWERK
HUELSE 32X30	955918008	25	2	701	966134608	ANBAUTEILE ZYLINDER
HUELSE 33.0X19 FE//ZNNI8//C	978787708	16	4	39	96045225	ELEKTRIK MITTELSTUECK
HUELSE 33.0X19 FE//ZNNI8//C	978787708	38	6	75	91001377	RAUPENTRAEGER VORM.LI.
HUELSE 33.0X19 FE//ZNNI8//C	978787708	38	6	108	91001378	RAUPENTRAEGER VORM.RE.
HUELSE 33.0X19 FE//ZNNI8//C	978787708	25	3	135	917257108	ZENTRALSCHMIERUNG RAUP
HUELSE 33.0X19 FE//ZNNI8//C	978787708	69	12	150	919499408	ZENTRALBALLAST
HUELSE 33.0X19 FE//ZNNI8//C	978787708	15	12	172	918731108	MONTAGETEILE DREHBUEHN
HUELSE 33.0X19 FE//ZNNI8//C	978787708	30	5	445	96036790	DREHBUEHNENVERKLEIDUN
HUELSE 33.0X19 FE//ZNNI8//C	978787708	53	4	480	918759808	ZUSATZHEIZUNG OW
HUELSE 33.0X19 FE//ZNNI8//C	978787708	(6)	6	496	969763408	VERROHRUNG DRUCKLUFTA
HUELSE 33.0X19 FE//ZNNI8//C	978787708	5	2	518	96039752	ZUSATZTEILE VERKLEIDUNG
HUELSE 33.0X19 FE//ZNNI8//C	978787708	2	3	635	968210808	ANBAUTEILE KAMERA
HUELSE 65.0X248 E235+N	97100243	42	1	75	91001377	RAUPENTRAEGER VORM.LI.
HUELSE 65.0X248 E235+N	97100243	42	1	108	91001378	RAUPENTRAEGER VORM.RE.
HUELSE 70.0X120 S355J2+AR	979443608	45	4	35	917511508	RAUPENMITTELTEIL VORM.
HUELSE 8X26X64,5 X46Cr13	10152168	2	1	205	10149578	ZYLINDERKOPF
HUELSE PA6G	97030030	5	1	492	967928508	VERRIEGELUNG
HUELSE RD.32X41 X12CRNIS	955917908	26	4	701	966134608	ANBAUTEILE ZYLINDER
HUELSE RD20X15 S355J2+AR	941530008	15	4	147	919087608	DREHDURCHFUEHRUNG
HUELSE RD40X50 42CRMO4+Q	956078908	22	1	75	91001377	RAUPENTRAEGER VORM.LI.
HUELSE RD40X50 42CRMO4+Q	956078908	22	1	108	91001378	RAUPENTRAEGER VORM.RE.
HUELSE RD40X50 42CRMO4+Q	956078908	5	2	345	917825508	OELBEHAELTER ANBAU
HUTMUTTER DIN 1587 M6 A2-7	10219361	12	4	410	965784408	DACHSCHEIBE VORM.
HUTMUTTER DIN 986 M4 A2-7	4002886	32	4	136	11347526	ELEKTROPUMPE
HUTMUTTER DIN 986 M4 A2-7	4002886	25	4	525	10327065	ELEKTROPUMPE
HUTMUTTER DIN 986 M6	691035008	36	2	52	11346779	SCHLEIFRINGUEBERTRAGER
HUTSCHIENE 35X27X7,3X1	602106708	1	0.135	546	967589508	KLEMMENLEISTE
HUTSCHIENE 35X27X7,3X1	602106708	10	0.245	711	966291008	KLEMMKASTEN

Bezeichnung	Artikel	Pos.	Menge	Seite	Baugruppe	Bezeichnung
HUTSCHIENE 35X27X7,3X1	602106708	295	0.205	714	968708708	KLEMMKASTEN KPL.
HYDR.FAHRANTRIEB	919296408	4	1	103	91001373	RAUPENTRAEGER KPL.RE.
HYDR.FAHRANTRIEB	919296508	4	1	70	91001371	RAUPENTRAEGER KPL.LI.
HYDR.FAHRANTRIEB	96035792	4	1	113	919296408	HYDR.FAHRANTRIEB
HYDR.FAHRANTRIEB	96035796	4	1	96	919296508	HYDR.FAHRANTRIEB
HYDRAULIK	918732808	185	1	14		LIEBHERR LTR 1220
HYDRAULIK ABSTUETZUNG	917430308	100	1	129	919644008	HYDRAULISCHE ABSTUETZUN
HYDRAULIK ABSTUETZUNG	968077208	4	1	130	917430308	HYDRAULIK ABSTUETZUNG
HYDRAULIK HILFSHUBWERK	917267308	333	1	14		LIEBHERR LTR 1220
HYDRAULIK HILFSHUBWERK	967784808	4	1	614	917267308	HYDRAULIK HILFSHUBWERK
HYDRAULIK MITTELTEIL	919296608	3	1	32	919499308	RAUPENMITTELTEIL KPL.
HYDRAULIK MITTELTEIL	96035801	4	1	53	919296608	HYDRAULIK MITTELTEIL
HYDRAULIK OBERWAGEN	96045351	4	1	552	918732808	HYDRAULIK
HYDRAULIK TELE	917262408	217	1	14		LIEBHERR LTR 1220
HYDRAULIK TELE	967784508	4	1	715	917262408	HYDRAULIK TELE
HYDRAULISCHE ABSTUETZUN	919644008	14	1	12		LIEBHERR LTR 1220
HYDRAULISCHE BALLASTIER	918956108	153	1	13		LIEBHERR LTR 1220
HYDROMOTOR	10872388	8	1	593	11622561	OEL-LUFTKUEHLER
HYDROMOTOR A2FM 23CM³/U	510229408	2	2	351	919369308	DREHWERK
HYDROZYLINDER 65/36-480 SP	512363708	4	1	761	917267508	TRANSPORTHALTERUNG DKS
HYDROZYLINDER 70/45-50 SP	10443748	1	1	363	917259608	DREHBUEHNENARRETIERUN
INBUSSCHLUESSEL DIN 911	790021208	34	1	152	928569808	GRUNDWERKZEUG
INBUSSCHLUESSEL DIN 911	790021308	35	1	152	928569808	GRUNDWERKZEUG
INBUSSCHLUESSEL DIN 911 4	790021608	30	1	152	928569808	GRUNDWERKZEUG
INBUSSCHLUESSEL DIN 911 5	790020008	31	1	152	928569808	GRUNDWERKZEUG
INBUSSCHLUESSEL DIN 911 6	790020108	32	1	152	928569808	GRUNDWERKZEUG
INBUSSCHLUESSEL DIN 911	790021008	33	1	152	928569808	GRUNDWERKZEUG
INDUKTIVSENSOR BERUEHR	10354584	10	1	31	968036408	ENDSCHALTER VORM.
INDUKTIVSENSOR BERUEHR	10354584	58	1	468	96053500	ELEKTRIK ANBAUTEILE KABIN
INDUKTIVSENSOR BERUEHR	10354584	(6)	6	701	966134608	ANBAUTEILE ZYLINDER
INDUKTIVSENSOR BERUEHR	10354584	(5)	1	712	966591508	ENDSCHALTER ANBAU
INDUKTIVSENSOR BERUEHR	692312708	(7)	2	701	966134608	ANBAUTEILE ZYLINDER
INJEKTOR LI2.7-20-SF-950	10147680	1	1	221	10152867	INJEKTOR MIT BEFEST.
INJEKTOR LI2.7-20-SF-950	13574085	1	1	222	10152874	RS INJEKTOR
INJEKTOR MIT BEFEST. LI2.7-	10152867	190	4	176	13455297	DIESELMOTOR
INNENGRIFF ZUG	11005984	2	1	422	966230408	SCHLIESSANLAGE
INNENLAMELLE	10175222	(2)	7	353	90008901	DREHWERKANTRIEB
INNENLAMELLE	10175222	6	7	356	90025781	BREMSLAMELLENSATZ
INNENLAMELLE	737350503	(5)	8	78	90028956	FAHRANTRIEB
INNENLEUCHTE 6W 24V WEIS	10342854	8	2	467	96053500	ELEKTRIK ANBAUTEILE KABIN
INNENRAD Z=-90 42CrMo4	927746101	55	1	370	939292201	PLANETENGETRIEBE
INNENRAD Z=74	927745401	20	1	370	939292201	PLANETENGETRIEBE
INNENRING 40X45X20	747404001	71	1	353	90008901	DREHWERKANTRIEB
INNENVERKLEIDUNG EINBAU	917305408	1	1	395	917304508	KRANFUEHRERKABINE VORM.
ISOLIERRING	691041708	6	37	52	11346779	SCHLEIFRINGUEBERTRAGER
ISOLIERSCHLAUCH DN10X0,6	11082604	204	4.29	49	96045228	KABELSTRANG
ISOLIERSCHLAUCH DN10X0,6	11082604	204	4.43	462	96036955	KABELSTRANG
ISOLIERSCHLAUCH DN10X0,6	11082604	204	0.73	464	96036956	KABELSTRANG
ISOLIERSCHLAUCH DN10X0,6	11082604	204	7.12	534	96037136	KABELSTRANG
ISOLIERSCHLAUCH DN12X0,6	11082605	205	1.63	462	96036955	KABELSTRANG
ISOLIERSCHLAUCH DN12X0,6	11082605	205	0.86	532	96045385	KABELSTRANG
ISOLIERSCHLAUCH DN12X0,6	11082605	205	1.33	534	96037136	KABELSTRANG
ISOLIERSCHLAUCH DN12X0,6	11082605	205	5.21	536	96037137	KABELSTRANG
ISOLIERSCHLAUCH DN12X0,8	11005151	284	5.59	536	96037137	KABELSTRANG
ISOLIERSCHLAUCH DN14X0,6	11082606	206	1.18	534	96037136	KABELSTRANG
ISOLIERSCHLAUCH DN14X0,8	603012608	11	1.5	629	918377508	KUEHLWASSERVORWAERM
ISOLIERSCHLAUCH DN18X0,8	11082608	208	0.28	534	96037136	KABELSTRANG
ISOLIERSCHLAUCH DN4X0,5	11082601	4	0.28	474	963398008	AXIALLUEFTER VORM.OBEN
ISOLIERSCHLAUCH DN6X0,5	11082602	202	2.31	49	96045228	KABELSTRANG
ISOLIERSCHLAUCH DN6X0,5	11082602	15	0.04	410	965784408	DACHSCHEIBE VORM.

Bezeichnung	Artikel	Pos.	Menge	Seite	Baugruppe	Bezeichnung
ISOLIERSCHLAUCH DN6X0,5	11082602	202	7.44	462	96036955	KABELSTRANG
ISOLIERSCHLAUCH DN6X0,5	11082602	202	5.94	464	96036956	KABELSTRANG
ISOLIERSCHLAUCH DN6X0,5	11082602	202	24.41	532	96045385	KABELSTRANG
ISOLIERSCHLAUCH DN6X0,5	11082602	202	14.02	534	96037136	KABELSTRANG
ISOLIERSCHLAUCH DN6X0,5	11082602	202	8.82	536	96037137	KABELSTRANG
ISOLIERSCHLAUCH DN6X0,5	11082602	202	2.1	642	96043733	KABELSTRANG
ISOLIERSCHLAUCH DN8X0,65	11082603	203	2.41	49	96045228	KABELSTRANG
ISOLIERSCHLAUCH DN8X0,65	11082603	203	2.2	462	96036955	KABELSTRANG
ISOLIERSCHLAUCH DN8X0,65	11082603	203	2.77	464	96036956	KABELSTRANG
ISOLIERSCHLAUCH DN8X0,65	11082603	203	2.14	532	96045385	KABELSTRANG
ISOLIERSCHLAUCH DN8X0,65	11082603	203	9.43	534	96037136	KABELSTRANG
ISOLIERSCHLAUCH DN8X0,65	11082603	203	5.23	536	96037137	KABELSTRANG
ISOLIERSCHLAUCH ISO 3302-	11006584	122	4	291	96034631	KUEHLER VORM.
ISOLIERSCHLAUCH ISO 3302-	11006584	60	3.5	451	968977308	SCHALLDAEMMUNG
KABEL	10097087	15	2	641	96045237	AUSRUESTUNG KAMERA KAB
KABEL 2X0,14+2X0,22-9M	10870643	69	1	531	96045384	KABELLISTE DREHBUEHNE
KABEL 2X0,25-7M	10025227	68	1	531	96045384	KABELLISTE DREHBUEHNE
KABEL 2X0,34+1X0,14-4M	10097085	12	1	643	96037130	AUSRUESTUNG KAMERA DRE
KABELBAUM 3300MM	553186908	10	1	461	96036954	KABELLISTE KRANFUEHRERK
KABELBAUM ANBAU	10151328	580	1	179	13455297	DIESELMOTOR
KABELBAUM W700	10153987	1	1	269	10151328	KABELBAUM ANBAU
KABELBINDER 2,5X99-SCHWA	12104811	268	30	542	96045387	DRAEHTE GRUNDAUFBAU KPL
KABELBINDER 2,5X99-SCHWA	12104811	266	5	711	966291008	KLEMMKASTEN
KABELBINDER 3,6X142-SCH	12104809	261	2	49	96045228	KABELSTRANG
KABELBINDER 3,6X142-SCH	12104809	261	1	462	96036955	KABELSTRANG
KABELBINDER 3,6X142-SCH	12104809	261	20	464	96036956	KABELSTRANG
KABELBINDER 3,6X142-SCH	12104809	261	8	534	96037136	KABELSTRANG
KABELBINDER 3,6X142-SCH	12104809	261	1	536	96037137	KABELSTRANG
KABELBINDER 3,6X142-SCH	12104809	261	30	542	96045387	DRAEHTE GRUNDAUFBAU KPL
KABELBINDER 3,6X203-SCH	12104810	269	30	542	96045387	DRAEHTE GRUNDAUFBAU KPL
KABELBINDER 4,6X200-SCH	11691035	(40)	10	527	919410708	EL.ANLAGE DREHBUEHNE
KABELBINDER 4,6X200-SW/GR	11691013	97	2	269	10151328	KABELBAUM ANBAU
KABELBINDER 4,8X292-SCH	10874588	99	3	269	10151328	KABELBAUM ANBAU
KABELBINDER 4,8X292-SCH	10874588	100	8	271	10151329	KABELSATZ ANBAU
KABELBINDER 4,8X292-SCH	10874588	(10)	50	527	919410708	EL.ANLAGE DREHBUEHNE
KABELBINDER 4,8X292-SCH	10874588	20	4	711	966291008	KLEMMKASTEN
KABELBINDER 7,6X368-SCH	10874587	(20)	50	527	919410708	EL.ANLAGE DREHBUEHNE
KABELBINDER 7,6X380-SCHW	10870333	(30)	100	527	919410708	EL.ANLAGE DREHBUEHNE
KABELBINDERHALTER 8,1X-S	11492315	42	11	544	969256608	GRUNDAUFBAU
KABELDOSE M1	10476382	503	1	142	96045205	KABELSTRANG
KABELDOSE M11-Z	604505508	522	4	49	96045228	KABELSTRANG
KABELDOSE M11-Z	604505508	518	1	532	96045385	KABELSTRANG
KABELDOSE M11-Z	604505508	506	1	538	96037133	LEITUNG
KABELDOSE M11-Z	604505508	507	1	644	96037132	LEITUNG
KABELDOSE M11-Z	604505508	(509)	1	741	917598408	ELEKTRIK MESS-U.WARNEINR
KABELEINFUEHRUNG	916170808	5	1	381	919010208	KRANFUEHRERKABINE VORM.
KABELHALTER	720014408	(15)	1	604	967969608	HILFSHUBWERK WINDE 2 VO
KABELHALTER	720014408	18	4	734	917268408	MASTNASE
KABELHALTER 3x486x370 DC0	970456508	6	1	701	966134608	ANBAUTEILE ZYLINDER
KABELHALTER 3x697x370 DC0	970456608	7	1	701	966134608	ANBAUTEILE ZYLINDER
KABELHALTER DC01 FE//ZNNI	953650008	22	7	604	967969608	HILFSHUBWERK WINDE 2 VO
KABELHALTER DC01 FE//ZNNI	953650008	68	28	668	917291908	ANLENKSTUECK VORM.
KABELHALTER DC01 FE//ZNNI	953650008	57	12	690	917292408	TELESKOP 5 VORM.
KABELKANAL 40X120/2000	601407008	32	0.29	544	969256608	GRUNDAUFBAU
KABELKANAL 40X60/2000	601406408	4	0.3	548	968063108	MONTAGEEINHEIT VORM.
KABELLISTE	96045204	10	1	140	919499508	BALLASTUEBERWACHUNG
KABELLISTE DREHBUEHNE	96045384	12	1	527	919410708	EL.ANLAGE DREHBUEHNE
KABELLISTE KRANFUEHRERK	96036954	5	1	460	919783608	ELEKTRIK KRANFUEHRERKAB
KABELMARKER	923512208	500	18	48	96045227	KABELSTRANG
KABELMARKER	923512208	500	26	49	96045228	KABELSTRANG

Bezeichnung	Artikel	Pos.	Menge	Seite	Baugruppe	Bezeichnung
KABELMARKER	923512208	500	3	142	96045205	KABELSTRANG
KABELMARKER	923512208	500	53	462	96036955	KABELSTRANG
KABELMARKER	923512208	500	29	464	96036956	KABELSTRANG
KABELMARKER	923512208	500	76	532	96045385	KABELSTRANG
KABELMARKER	923512208	500	58	535	96037136	KABELSTRANG
KABELMARKER	923512208	500	21	536	96037137	KABELSTRANG
KABELMARKER	923512208	500	4	538	96037133	LEITUNG
KABELMARKER	923512208	500	2	642	96043733	KABELSTRANG
KABELMARKER	923512208	500	4	644	96037132	LEITUNG
KABELMARKER	923512208	500	1	738	96068455	LEITUNG
KABELMARKER	923512208	(500)	4	741	917598408	ELEKTRIK MESS-U.WARNEINR
KABELMUFFE 12/21/25 EDPM	602600808	12	2	390	916170808	KABELEINFUEHRUNG
KABELSATZ ANBAU	10151329	2	1	269	10151328	KABELBAUM ANBAU
KABELSATZ ANBAU	10151390	8	1	269	10151328	KABELBAUM ANBAU
KABELSATZ WL705	10151164	1	1	271	10151329	KABELSATZ ANBAU
KABELSCHLAUCH DN16X0,6	11124205	223	8.35	532	96045385	KABELSTRANG
KABELSCHLAUCH DN16X0,6	11124205	223	3.89	534	96037136	KABELSTRANG
KABELSCHLAUCH DN20X0,6	11124207	224	1.23	49	96045228	KABELSTRANG
KABELSCHLAUCH DN20X0,6	11124207	224	0.83	462	96036955	KABELSTRANG
KABELSCHLAUCH DN20X0,6	11124207	224	0.53	464	96036956	KABELSTRANG
KABELSCHLAUCH DN20X0,6	11124207	224	0.93	532	96045385	KABELSTRANG
KABELSCHLAUCH DN25X0,6	11124208	225	0.33	462	96036955	KABELSTRANG
KABELSCHLAUCH DN25X0,6	11124208	225	0.43	464	96036956	KABELSTRANG
KABELSCHLAUCH DN25X0,6	11124208	225	2.91	532	96045385	KABELSTRANG
KABELSCHLAUCH DN25X0,6	11124208	225	1.46	534	96037136	KABELSTRANG
KABELSCHLAUCH DN25X0,6	11124208	225	2.53	536	96037137	KABELSTRANG
KABELSCHLAUCH DN30X0,6	11124209	226	0.35	49	96045228	KABELSTRANG
KABELSCHLAUCH DN30X0,6	11124209	226	0.93	532	96045385	KABELSTRANG
KABELSCHLAUCH DN30X0,6	11124209	226	2.91	534	96037136	KABELSTRANG
KABELSCHLAUCH DN30X0,6	11124209	226	4.53	536	96037137	KABELSTRANG
KABELSCHLAUCH DN35X0,6	11124210	227	2.26	462	96036955	KABELSTRANG
KABELSCHLAUCH DN35X0,6	11124210	227	0.88	464	96036956	KABELSTRANG
KABELSCHLAUCH DN35X0,6	11124210	227	2.86	532	96045385	KABELSTRANG
KABELSCHLAUCH DN40X0,6	11124211	228	1.23	534	96037136	KABELSTRANG
KABELSCHLAUCH DN40X0,6	11124211	228	1.32	542	96045387	DRAEHTE GRUNDAUFBAU KPL
KABELSCHLAUCH DN50X0,6	11124212	229	1.2	532	96045385	KABELSTRANG
KABELSCHLAUCH DN50X0,6	11124212	229	3.71	534	96037136	KABELSTRANG
KABELSCHLAUCH DN50X0,6	11124212	229	0.65	542	96045387	DRAEHTE GRUNDAUFBAU KPL
KABELSCHUH AEHNL.DIN 462	602305605	766	1	535	96037136	KABELSTRANG
KABELSCHUH DIN 46234 M12/	602217308	50	1	534	96037136	KABELSTRANG
KABELSCHUH DIN 46234 M6/10	602311508	55	1	534	96037136	KABELSTRANG
KABELSCHUH DIN 46234 M6/16	602205708	58	4	534	96037136	KABELSTRANG
KABELSCHUH DIN 46234 M8/16	602301708	106	1	534	96037136	KABELSTRANG
KABELSCHUH DIN 46234 M8/1	602311408	57	2	534	96037136	KABELSTRANG
KABELSCHUH DIN 46237 6/6m	602213308	39	1	48	96045227	KABELSTRANG
KABELSCHUH DIN 46237 M6/1	602217908	34	5	48	96045227	KABELSTRANG
KABELSCHUH DIN 46237 M6/1	602217908	34	1	462	96036955	KABELSTRANG
KABELSCHUH M6/16,8-26,7MM	602205808	111	1	534	96037136	KABELSTRANG
KABELSCHUH M6/16MM²	602217008	49	1	534	96037136	KABELSTRANG
KABELSTECKER 4-POL 90°	10324830	511	1	532	96045385	KABELSTRANG
KABELSTECKER 7-POL	10025278	(1)	1	645	96037131	AUSRUESTUNG KAMERA WIN
KABELSTRANG W200	96045227	21	1	41	96045226	SCHALTKASTEN VORM.
KABELSTRANG W202	96045228	23	1	41	96045226	SCHALTKASTEN VORM.
KABELSTRANG W227	96045205	30	1	141	96045204	KABELLISTE
KABELSTRANG W300	96036955	2	1	461	96036954	KABELLISTE KRANFUEHRERK
KABELSTRANG W301	967541908	3	1	461	96036954	KABELLISTE KRANFUEHRERK
KABELSTRANG W302	967542008	4	1	461	96036954	KABELLISTE KRANFUEHRERK
KABELSTRANG W310	96036956	7	1	461	96036954	KABELLISTE KRANFUEHRERK
KABELSTRANG W321	96043733	5	1	641	96045237	AUSRUESTUNG KAMERA KAB
KABELSTRANG W346	96023876	(10)	1	468	96053500	ELEKTRIK ANBAUTEILE KABIN

Bezeichnung	Artikel	Pos.	Menge	Seite	Baugruppe	Bezeichnung
KABELSTRANG W500	96045385	50	1	531	96045384	KABELLISTE DREHBUEHNE
KABELSTRANG W501	96037136	51	1	531	96045384	KABELLISTE DREHBUEHNE
KABELSTRANG W522	966298408	(8)	1	604	967969608	HILFSHUBWERK WINDE 2 VO
KABELSTRANG W555	96037137	52	1	531	96045384	KABELLISTE DREHBUEHNE
KABELSTRANG WRCAN	967709108	521	1	49	96045228	KABELSTRANG
KABELTUELLE 12,0-3,0/12/1,4	10872032	98	8	534	96037136	KABELSTRANG
KABELTUELLE 16,0-4,0/16/1,78	10872033	709	2	535	96037136	KABELSTRANG
KABELTUELLE 2,4-3,0/2,4/0,6 SI	10473048	708	2	463	96036955	KABELSTRANG
KABELTUELLE 2,4-3,0/2,4/0,6 SI	10473048	708	1	464	96036956	KABELSTRANG
KABELTUELLE 4-6	602704808	520	6	49	96045228	KABELSTRANG
KABELTUELLE 4-6	602704808	504	2	538	96037133	LEITUNG
KABELTUELLE 4-6	602704808	505	3	644	96037132	LEITUNG
KABELTUELLE 4-6	602704808	(508)	1	741	917598408	ELEKTRIK MESS-U.WARNEINR
KABELTUELLE 6-8	604508708	516	1	532	96045385	KABELSTRANG
KABELTUELLE 8-10	604509408	511	1	49	96045228	KABELSTRANG
KABELVERBINDER	602336408	2	1	547	926891108	VERTEILER MASSE
KABELVERSCHRAUBUNG M12	602424008	67	2	468	96053500	ELEKTRIK ANBAUTEILE KABIN
KABELVERSCHRAUBUNG M12	602424008	501	1	738	96068455	LEITUNG
KABELVERSCHRAUBUNG M1	602441701	11	2	625	918462708	FREMDEINSPEISUNG
KABELVERSCHRAUBUNG M1	602441701	11	1	630	917368108	EL.KUEHLWASSERVORWAE
KABELVERSCHRAUBUNG M1	602424108	14	2	41	96045226	SCHALTKASTEN VORM.
KABELVERSCHRAUBUNG M1	602424108	153	1	46	966204108	ANTENNE KPL.
KABELVERSCHRAUBUNG M1	602424108	527	4	49	96045228	KABELSTRANG
KABELVERSCHRAUBUNG M16	10428532	48	2	467	96053500	ELEKTRIK ANBAUTEILE KABIN
KABELVERSCHRAUBUNG M2	10216578	13	1	630	917368108	EL.KUEHLWASSERVORWAE
KABELVERSCHRAUBUNG M2	602441001	526	2	49	96045228	KABELSTRANG
KABELVERSCHRAUBUNG M2	602441001	505	1	142	96045205	KABELSTRANG
KABELVERSCHRAUBUNG M2	602441001	(505)	1	741	917598408	ELEKTRIK MESS-U.WARNEINR
KABELVERSCHRAUBUNG M25	602425808	3	1	710	10354493	LEITUNGSTROMMEL
KABELVERSCHRAUBUNG PG1	602422108	8	1	625	918462708	FREMDEINSPEISUNG
KABINENARM SCHWK. RAL 70	967985808	1	1	378	917259908	KRANFUEHRERKABINE ANBA
KAEFIGMUTTER M5 ST	10455281	27	6	433	918810308	STEUERSTAND
KAEFIGMUTTER M6	413002708	44	4	433	918810308	STEUERSTAND
KAEFIGMUTTER M6	413002808	53	1	399	917305408	INNENVERKLEIDUNG EINBAU
KAEFIGMUTTER M6 NIROSTA	10875857	75	4	669	917291908	ANLENKSTUECK VORM.
KAEFIGMUTTER M6 NIROSTA	10875857	2	2	712	966591508	ENDSCHALTER ANBAU
KAELTEMASCHINENOEL WA	11211803	101	0.18	601	918628408	KLIMAANLAGE OW
KAELTEMITTEL 12KG FLASCH	7020440	100	1.6	601	918628408	KLIMAANLAGE OW
KAMERA SPF	10024012	10	1	645	96037131	AUSRUESTUNG KAMERA WIN
KAMERA SPF	10097079	10	1	643	96037130	AUSRUESTUNG KAMERA DRE
KAMERAHALTER VORM.	968993508	1	1	638	968267108	ANBAUTEILE KAMERA
KAMERAHALTER VORM.	968994408	1	1	635	968210808	ANBAUTEILE KAMERA
KAMERAUEBERWACHUNG O	918992008	491	1	15		LIEBHERR LTR 1220
KANTENSCHUTZ 1-2X9,5X6,5	262103908	123	0.5	291	96034631	KUEHLER VORM.
KANTENSCHUTZ 1-2X9,5X6,5	262103908	8	1.6	334	96023117	BATTERIEKASTEN VORM.
KANTENSCHUTZ 1-2X9,5X6,5	262103908	(3)	0.4	445	96036790	DREHBUEHNENVERKLEIDUN
KANTENSCHUTZ 1-2X9,5X6,5	262103908	(3)	0.6	445	96036790	DREHBUEHNENVERKLEIDUN
KANTENSCHUTZ 1-2X9,5X6,5	262103908	12	0.66	455	969015908	DREHBUEHNENVERKLEIDUN
KANTENSCHUTZ 1-2X9,5X6,5	262103908	7	0.16	547	926891108	VERTEILER MASSE
KANTENSCHUTZ 1-2X9,5X6,5	262103908	11	0.2	637	968290608	STATIV
KANTENSCHUTZ 1-2X9,5X6,5	262103908	11	0.2	640	968267208	STATIV
KANTENSCHUTZ 4-6X15,8X11	262106608	7	0.54	458	917260108	ABSTURZSICHERUNG
KAPPE	571582808	30	1	240	5700161	LUFTPRESSER
KAPPE	591064408	8	1	477	966707708	SPIEGELHALTER VORM.
KARABINERHAKEN DIN 5299 C	744010208	38	2	761	917267508	TRANSPORTHALTERUNG DKS
KARTUSCHE	571352308	1	1	497	502657308	LUFTTROCKNER
KAUSCHE UND KLEMME	571851308	60	1	704	10802064	SEILLAENGENGEBER
KBA-RING 130X121,1X3,5	11351303	3	1	201	10146367	KOLBEN KPL.
KEGELPFANNE DIN 6319 19 4	10875862	37	1	761	917267508	TRANSPORTHALTERUNG DKS
KEGELROLLENLAGER	10001107	16	1	316	10871043	VERSTELLPUMPE

Bezeichnung	Artikel	Pos.	Menge	Seite	Baugruppe	Bezeichnung
KEGELROLLENLAGER	10293775	10	1	360	570109008	TRIEBWERK
KEGELROLLENLAGER	570951508	15	1	316	10871043	VERSTELLPUMPE
KEGELROLLENLAGER DIN 720	746221908	11	1	360	570109008	TRIEBWERK
KEGELSCHMIERNIPPEL	11080392	15	1	525	10327065	ELEKTROPUMPE
KEGELSCHMIERNIPPEL DIN 71	7743242	16	2	673	917292008	TELESKOP 1 VORM.
KEGELSCHMIERNIPPEL DIN 71	7743242	16	2	677	917292108	TELESKOP 2 VORM.
KEGELSCHMIERNIPPEL DIN 71	7743242	16	2	681	917292208	TELESKOP 3 VORM.
KEGELSCHMIERNIPPEL DIN 71	7743242	16	2	685	917292308	TELESKOP 4 VORM.
KEGELSCHMIERNIPPEL DIN 71	7743242	30	2	690	917292408	TELESKOP 5 VORM.
KEGELSCHMIERNIPPEL DIN 71	7743242	6	1	753	919007108	LASTHAKEN
KEGELSCHMIERNIPPEL DIN 71	571578608	2	1	139	774375108	DURCHGANGSNIPPELBLOCK
KEGELSCHMIERNIPPEL DIN 7	774301101	18	1	367	90208882	KOMPAKTSEILWINDE
KEGELSTOPFEN	779010901	80	1	370	939292201	PLANETENGETRIEBE
KEILENDKLEMME 23-25 GR.26	12101239	5	1	657	919028808	MECH.TEILE VERSANDMONT
KEILRIPPENRIEMEN 8XPKX215	11482426	1	1	244	12418347	KLIMAKOMPRESSOR ANBAU
KEILSICHERUNGSSCHEIBE	7015814	50	2	421	917304708	SCHIEBETUER EINBAU
KERBSTIFT DIN 1472 4X12	431100201	21	1	368	932916901	SEILTROMMEL
KERBSTIFT DIN 1472 4X12	431100201	24	1	608	939294001	SEILTROMMEL
KERBSTIFT DIN 1473 5X24	431204301	18	1	608	939294001	SEILTROMMEL
KERBSTIFT ISO 8740 3X20	431200501	91	3	353	90008901	DREHWERKANTRIEB
KETTE DIN 763 7X49 0.3t ST35	10663970	3	2	693	96013575	HUBENDSCHALTER GEWICHT
KFZ-LEITUNG 0,5	10870538	344	18.2	462	96036955	KABELSTRANG
KFZ-LEITUNG 0,75	10870539	345	8.16	462	96036955	KABELSTRANG
KFZ-LEITUNG 0,75	10870539	345	7.7	464	96036956	KABELSTRANG
KFZ-LEITUNG 0,75	10870539	345	11.4	532	96045385	KABELSTRANG
KFZ-LEITUNG 0,75	10870539	345	34.5	536	96037137	KABELSTRANG
KFZ-LEITUNG 1,0	10870540	305	25.99	48	96045227	KABELSTRANG
KFZ-LEITUNG 1,0	10870540	305	36.53	49	96045228	KABELSTRANG
KFZ-LEITUNG 1,0	10870540	305	319.78	462	96036955	KABELSTRANG
KFZ-LEITUNG 1,0	10870540	305	160.31	464	96036956	KABELSTRANG
KFZ-LEITUNG 1,0	10870540	305	395.03	532	96045385	KABELSTRANG
KFZ-LEITUNG 1,0	10870540	305	427.54	534	96037136	KABELSTRANG
KFZ-LEITUNG 1,0	10870540	305	82.2	536	96037137	KABELSTRANG
KFZ-LEITUNG 1,0	10870540	305	6.6	642	96043733	KABELSTRANG
KFZ-LEITUNG 1,5	10870541	307	37.14	534	96037136	KABELSTRANG
KFZ-LEITUNG 10	12102630	322	5.1	534	96037136	KABELSTRANG
KFZ-LEITUNG 16	12102632	326	5.1	534	96037136	KABELSTRANG
KFZ-LEITUNG 16	12102634	328	8.85	534	96037136	KABELSTRANG
KFZ-LEITUNG 2,5	10870542	309	30.5	462	96036955	KABELSTRANG
KFZ-LEITUNG 2,5	10870542	309	18.45	464	96036956	KABELSTRANG
KFZ-LEITUNG 2,5	10870542	309	23.3	534	96037136	KABELSTRANG
KFZ-LEITUNG 25	12102635	330	7.55	534	96037136	KABELSTRANG
KIPPHEBEL VORM.	11448000	2	2	207	11448005	KIPPHEBELBOCK VORM.
KIPPHEBELBOCK	11448002	1	1	207	11448005	KIPPHEBELBOCK VORM.
KIPPHEBELBOCK KPL. NEIN	10148438	81	4	175	13455297	DIESELMOTOR
KIPPHEBELBOCK VORM.	11448005	1	1	206	10148438	KIPPHEBELBOCK KPL.
KIPPHEBELBOCK VORM.	12549825	1	1	206	10148438	KIPPHEBELBOCK KPL.
KIPPZYLINDER 50/28-135 SPF	11214363	2	1	378	917259908	KRANFUEHRERKABINE ANBA
KLAMMER	10875952	1	1	732	10872003	ARBEITSSCHEINWERFER
KLAMMER	6202909	100	1	328	96034515	AUSGLEICHSBEHAELTER VO
KLAMMER EMVFSK 1 FEDER	10424210	37	2	467	96053500	ELEKTRIK ANBAUTEILE KABIN
KLAMMER EMVSK 12	602042808	38	2	467	96053500	ELEKTRIK ANBAUTEILE KABIN
KLAMMER SURE-SEAL	605215508	518	2	49	96045228	KABELSTRANG
KLAMMER SURE-SEAL	605215508	515	1	532	96045385	KABELSTRANG
KLAMMER SURE-SEAL	605215508	524	2	535	96037136	KABELSTRANG
KLAMMER SURE-SEAL	605215508	77	1	691	917292408	TELESKOP 5 VORM.
KLAPPE GEKLEBT SPF	969007208	1	1	449	968923508	KLAPPE VORM.RECHTS
KLAPPE KPL.	969017908	1	1	457	969016008	KLAPPE VORM.VORN LINKS
KLAPPE VORM.RECHTS SPF	968923508	2	1	445	96036790	DREHBUEHNENVERKLEIDUN
KLAPPE VORM.VORN LINKS	969016008	1	1	455	969015908	DREHBUEHNENVERKLEIDUN

Bezeichnung	Artikel	Pos.	Menge	Seite	Baugruppe	Bezeichnung
KLAPPGRIFF 118X18X43	10870376	3	2	393	968514508	SCHALTSCHRANKDECKEL EIN
KLAPPKONSOLE SCHWK. SPF	922849008	1	1	763	923285508	KLAPPKONSOLE VORM.
KLAPPKONSOLE VORM.	923285508	2	1	761	917267508	TRANSPORTHALTERUNG DKS
KLAPPTEIL SCHWK. SPF	96020727	2	1	763	923285508	KLAPPKONSOLE VORM.
KLAUE	11004031	10	1	764	512363708	HYDROZYLINDER
KLEBEFOLIE AUSSENGRIFF 2	97088496	56	1	421	917304708	SCHIEBETUER EINBAU
KLEBER 600ML FC-BEUTEL	811203308	15	1	406	916162508	SCHEIBEN EINBAU
KLEBER 600ML FC-BEUTEL	811203308	48	1	421	917304708	SCHIEBETUER EINBAU
KLEBSTOFF 10ML FLASCHE -5	8655032	104	1	180	11389608	KURBELGEHAEUSE KPL. MIT
KLEBSTOFF 10ML FLASCHE -5	8655032	104	1	205	10149578	ZYLINDERKOPF
KLEMMBAND 1-3X21X9,3 ZELL	262101308	68	0.04	400	917305408	INNENVERKLEIDUNG EINBAU
KLEMMBRETT 6XM6	604412408	1	1	545	922648308	KLEMMBRETT VORM.
KLEMMBRETT VORM.	922648308	23	1	544	969256608	GRUNDAUFBAU
KLEMME	636107901	529	1	542	96045387	DRAEHTE GRUNDAUFBAU KPL
KLEMME	636107901	3	2	546	967589508	KLEMMENLEISTE
KLEMMENLEISTE	967589508	24	1	544	969256608	GRUNDAUFBAU
KLEMMHAELFTE 216-16 PP	602000708	301	26	728	967785008	ZUSATZHYDRAULIK KLAPPSPI
KLEMMHAELFTE DIN 3015-1 L	602007808	326	64	56	96035801	HYDRAULIK MITTELTEIL
KLEMMHAELFTE DIN 3015-1 L	7365090	37	4	26	96034894	SCHUTZBLECH KPL.LI.
KLEMMHAELFTE DIN 3015-1 L	7365090	37	4	29	96034977	SCHUTZBLECH KPL.RE.
KLEMMHAELFTE DIN 3015-1 L	7365090	309	62	56	96035801	HYDRAULIK MITTELTEIL
KLEMMHAELFTE DIN 3015-1 L	10875557	184	8	511	96051842	ABGASANLAGE VORM.
KLEMMHAELFTE DIN 3015-1 L	602007108	35	12	701	966134608	ANBAUTEILE ZYLINDER
KLEMMHAELFTE DIN 3015-1 L	7362946	71	4	669	917291908	ANLENKSTUECK VORM.
KLEMMHAELFTE DIN 3015-1 L	602002208	306	6	496	969763408	VERROHRUNG DRUCKLUFTA
KLEMMHAELFTE DIN 3015-1 L	602008308	29	2	334	96023117	BATTERIEKASTEN VORM.
KLEMMHAELFTE DIN 3015-1 L	602008408	315	14	56	96035801	HYDRAULIK MITTELTEIL
KLEMMHAELFTE DIN 3015-1 L	602008408	30	2	334	96023117	BATTERIEKASTEN VORM.
KLEMMHAELFTE DIN 3015-1 L	602008508	317	6	56	96035801	HYDRAULIK MITTELTEIL
KLEMMHAELFTE DIN 3015-1 L	7005052	30	3	26	96034894	SCHUTZBLECH KPL.LI.
KLEMMHAELFTE DIN 3015-1 L	7005052	30	3	29	96034977	SCHUTZBLECH KPL.RE.
KLEMMHAELFTE DIN 3015-1 L	7005052	72	4	669	917291908	ANLENKSTUECK VORM.
KLEMMHAELFTE DIN 3015-1 L	7005052	36	2	701	966134608	ANBAUTEILE ZYLINDER
KLEMMHAELFTE DIN 3015-1 L	7005052	10	3	744	967933408	GRUNDHALTER VORM.
KLEMMHAELFTE DIN 3015-1 L	602008808	35	2	26	96034894	SCHUTZBLECH KPL.LI.
KLEMMHAELFTE DIN 3015-1 L	602008808	35	2	29	96034977	SCHUTZBLECH KPL.RE.
KLEMMHAELFTE DIN 3015-1 L	602008808	321	4	56	96035801	HYDRAULIK MITTELTEIL
KLEMMHAELFTE DIN 3015-1 L	602008908	324	8	561	96045351	HYDRAULIK OBERWAGEN
KLEMMHAELFTE DIN 3015-1 L	602009008	304	2	728	967785008	ZUSATZHYDRAULIK KLAPPSPI
KLEMMHAELFTE DIN 3015-1 L	602009108	315	4	561	96045351	HYDRAULIK OBERWAGEN
KLEMMHAELFTE DIN 3015-1 L	602009208	319	14	561	96045351	HYDRAULIK OBERWAGEN
KLEMMHAELFTE DIN 3015-1 L	602010108	309	6	98	96035796	HYDR.FAHRANTRIEB
KLEMMHAELFTE DIN 3015-1 L	602010108	309	6	115	96035792	HYDR.FAHRANTRIEB
KLEMMHAELFTE L 3 R 22 AL	11160668	190	4	287	919007708	ANTRIEBSAGGREGAT VORM.
KLEMMHAELFTE S 4 E 64 PP	10492888	325	8	496	969763408	VERROHRUNG DRUCKLUFTA
KLEMMHEBEL M10X32 EDEL	11320604	8	2	639	968993508	KAMERAHALTER VORM.
KLEMMHEBEL M8 X10CRNIS18	11642508	10	2	636	968994408	KAMERAHALTER VORM.
KLEMMHEBEL M8 X10CRNIS18	11642508	7	2	639	968993508	KAMERAHALTER VORM.
KLEMMKASTEN KPL. S930	968708708	1	1	713	968708608	ELEKTRIK KOPFSTUECK
KLEMMKASTEN S900	966291008	5	1	707	966290908	ELEKTRIK ANLENKSTUECK
KLEMMPROFIL 1,5-4X25X13 E	11002218	3	2.22	426	917676208	HEIZUNG KRANFUEHRERKAB
KLEMMPROFIL 25,7X21,5 EPD	10876056	55	3.4	421	917304708	SCHIEBETUER EINBAU
KLEMMPROFIL 2X13,5X20 EP	10300600	11	4.2	421	917304708	SCHIEBETUER EINBAU
KLEMMPROFIL 40X1M PUR-H	7014524	8	1	26	96034894	SCHUTZBLECH KPL.LI.
KLEMMPROFIL 40X1M PUR-H	7014524	8	1	29	96034977	SCHUTZBLECH KPL.RE.
KLEMMPROFIL 40X1M PUR-H	7014524	7	3	592	967980508	OELKUEHLER VORM.
KLEMMRING RD10X12 PA6G	288182508	35	1	480	918759808	ZUSATZHEIZUNG OW
KLEMMSCHELLE 40,5/39-42	553054208	6	1	480	918759808	ZUSATZHEIZUNG OW
KLEMMSCHELLE 40,5/39-42	553054208	8	2	482	96020359	ZUSATZHEIZUNG VORM.
KLEMMSTUECK 12 G20MN5 FE	380057108	205	6	287	919007708	ANTRIEBSAGGREGAT VORM.

Bezeichnung	Artikel	Pos.	Menge	Seite	Baugruppe	Bezeichnung
KLEMMSTUECK 24	927606901	30	1	608	939294001	SEILTROMMEL
KLEMMSTUECK PA6G+OEL	976873708	3	2	636	968994408	KAMERAHALTER VORM.
KLEMMSTUECK PA6G+OEL	976873708	6	2	639	968993508	KAMERAHALTER VORM.
KLIMAANLAGE OW	918628408	301	1	14		LIEBHERR LTR 1220
KLIMAKOMPRESSOR	12922849	2	1	244	12418347	KLIMAKOMPRESSOR ANBAU
KLIMAKOMPRESSOR ANBAU	12418347	340	1	177	13455297	DIESELMOTOR
KLINKE	11490010	31	1	764	512363708	HYDROZYLINDER
KNEBEL GD-ZN	704255508	2	1	450	964093408	DECKEL KPL.
KNEBELVORREIBER GD-ZN S	704278708	4	2	91	968709108	DECKEL VORM.
KNEBELVORREIBER GD-ZN S	704278708	10	1	92	968420608	STAUKASTEN VORM.
KNIESTUECK	570066108	3	1	102	502806508	AUSGLEICHSBEHAELTER
KNOTENKETTE DIN 5686 2,5	740001808	39	0.3	761	917267508	TRANSPORTHALTERUNG DKS
KOLBEN	10152593	1	1	215	10152592	UEBERDRUCKVENTIL
KOLBEN	570110608	4	7	361	570109508	TRIEBWERK
KOLBEN	571582608	13	1	240	5700161	LUFTPRESSER
KOLBEN	9886591	8	1	213	10129474	OELKUEHLER VORM.
KOLBEN 31CrMoV9	10149655	1	1	184	10138450	ENDREGELVENTIL
KOLBEN KPL. R-MOTORX130	10146367	70	4	175	13455297	DIESELMOTOR
KOLBENKUEHLUNG	10142749	15	4	174	13455297	DIESELMOTOR
KOLBENKUEHLUNG VORM.	10151634	1	1	185	10142749	KOLBENKUEHLUNG
KOMBIKUEHLER	97118133	100	1	291	96034631	KUEHLER VORM.
KOMBIZANGE DIN 5244 180	790031508	62	1	152	928569808	GRUNDWERKZEUG
KOMPAKTSEILWINDE KSW 400	90028852	10	1	604	967969608	HILFSHUBWERK WINDE 2 VO
KOMPAKTSEILWINDE KSW 400	90208882	1	1	365	917259708	HAUPTHUBWERK
KOMPENSATOR	10149144	2	1	253	12512627	ABGASSTUTZEN ANBAU
KONDENSATOR	10815368	104	1	291	96034631	KUEHLER VORM.
KONSOLE 4X163X242 S315MC	97058382	11	2	445	96036790	DREHBUEHNENVERKLEIDUN
KONSOLE 4X179X282 S315MC	97065229	42	1	286	919007708	ANTRIEBSAGGREGAT VORM.
KONSOLE 4X257X253 S315MC	97056391	7	1	567	96035117	MECH.BEFESTIGUNGSTEILE
KONSOLE 4X470X340 S315MC	97056389	6	1	567	96035117	MECH.BEFESTIGUNGSTEILE
KONSOLE FREMDEINSPEISUN	917269408	389	1	15		LIEBHERR LTR 1220
KONSOLE LINKS	968073008	2	1	458	917260108	ABSTURZSICHERUNG
KONSOLE LINKS SPF	967588308	3	1	433	918810308	STEUERSTAND
KONSOLE RECHTS	968072808	1	1	458	917260108	ABSTURZSICHERUNG
KONSOLE RECHTS FE//ZNNI8/	96036998	4	1	332	918955408	BATTERIEKASTEN KPL.
KONSOLE RECHTS SPF	967588408	4	1	433	918810308	STEUERSTAND
KONSOLE SCHWK.	923982608	1	1	765	923879808	KONSOLE VORM.
KONSOLE SCHWK.	925042108	3	1	761	917267508	TRANSPORTHALTERUNG DKS
KONSOLE SCHWK.	96000309	80	1	76	91001377	RAUPENTRAEGER VORM.LI.
KONSOLE SCHWK.	96000309	80	1	109	91001378	RAUPENTRAEGER VORM.RE.
KONSOLE SCHWK.	96000310	81	1	76	91001377	RAUPENTRAEGER VORM.LI.
KONSOLE SCHWK.	96000310	81	1	109	91001378	RAUPENTRAEGER VORM.RE.
KONSOLE SCHWK.	96000311	82	1	76	91001377	RAUPENTRAEGER VORM.LI.
KONSOLE SCHWK.	96000311	82	1	109	91001378	RAUPENTRAEGER VORM.RE.
KONSOLE SCHWK.	96000312	83	1	76	91001377	RAUPENTRAEGER VORM.LI.
KONSOLE SCHWK.	96000312	83	1	109	91001378	RAUPENTRAEGER VORM.RE.
KONSOLE SCHWK.	96036907	12	1	147	919087608	DREHDURCHFUEHRUNG
KONSOLE SCHWK.	96049688	2	2	129	919644008	HYDRAULISCHE ABSTUETZUN
KONSOLE SCHWK.	96049689	3	2	129	919644008	HYDRAULISCHE ABSTUETZUN
KONSOLE SCHWK.	96056968	1	1	155	91001571	BOLZENZIEHVORRICHTUNG
KONSOLE SCHWK.	967996008	9	2	20	91001569	RAUPENFAHRWERK KPL.
KONSOLE SCHWK.	968011508	4	1	147	919087608	DREHDURCHFUEHRUNG
KONSOLE SCHWK. FE//ZNNI8/	96021362	7	1	433	918810308	STEUERSTAND
KONSOLE SCHWK. FE//ZNNI8/	962947308	4	1	701	966134608	ANBAUTEILE ZYLINDER
KONSOLE SCHWK. FE//ZNNI8/	962947408	5	1	701	966134608	ANBAUTEILE ZYLINDER
KONSOLE SCHWK. FE//ZNNI8/	968014908	6	4	129	919644008	HYDRAULISCHE ABSTUETZUN
KONSOLE SCHWK. FE//ZNNI8/	969168408	11	8	129	919644008	HYDRAULISCHE ABSTUETZUN
KONSOLE SCHWK. RAL 7016,	969101808	1	1	430	969085208	HEIZUNG VORM.
KONSOLE SCHWK. RAL 9005	968729008	1	1	751	968728808	KONSOLE VORM.
KONSOLE SCHWK. RAL 9005	964843708	12	2	433	918810308	STEUERSTAND

Bezeichnung	Artikel	Pos.	Menge	Seite	Baugruppe	Bezeichnung
KONSOLE SCHWK.LI. FE//ZNNI	96021363	8	1	433	918810308	STEUERSTAND
KONSOLE SCHWK.LI. FE//ZNNI	96037000	5	1	332	918955408	BATTERIEKASTEN KPL.
KONSOLE SCHWK.LI. RAL 900	964843808	13	1	433	918810308	STEUERSTAND
KONSOLE SCHWK.RE. FE//ZN	96021365	9	1	433	918810308	STEUERSTAND
KONSOLE SCHWK.RE. RAL 900	964843908	14	1	433	918810308	STEUERSTAND
KONSOLE VORM.	923879808	40	1	761	917267508	TRANSPORTHALTERUNG DKS
KONSOLE VORM.	968646408	2	1	627	917269408	KONSOLE FREMDEINSPEISUN
KONSOLE VORM.	968728808	1	1	749	968811608	QUERTRAEGER
KONSOLE VORM.	969431008	3	1	567	96035117	MECH.BEFESTIGUNGSTEILE
KONSOLE X5CrNi18-10	10149679	3	1	234	10149677	VERBINDUNGSLEITUNG ANBA
KONTAKT 0,5-1MM2	602300308	125	35	48	96045227	KABELSTRANG
KONTAKT 0,5-1MM2	602300308	125	19	49	96045228	KABELSTRANG
KONTAKT 0,5-1MM2	602300308	125	110	462	96036955	KABELSTRANG
KONTAKT 0,5-1MM2	602300308	125	118	464	96036956	KABELSTRANG
KONTAKT 0,5-1MM2	602300308	125	96	532	96045385	KABELSTRANG
KONTAKT 0,5-1MM2	602300308	125	92	534	96037136	KABELSTRANG
KONTAKT 0,5-1MM2	602300308	125	27	536	96037137	KABELSTRANG
KONTAKT 0,5-1MM2	602300308	125	2	538	96037133	LEITUNG
KONTAKT 0,5-1MM2	602300308	125	6	642	96043733	KABELSTRANG
KONTAKT 0,5-1MM2	602329108	617	12	49	96045228	KABELSTRANG
KONTAKT 0,5-1MM2	602329108	617	8	535	96037136	KABELSTRANG
KONTAKT 1,0-2,5MM2	10877344	2259	5	463	96036955	KABELSTRANG
KONTAKT 1-2,5MM2	602300108	121	14	48	96045227	KABELSTRANG
KONTAKT 1-2,5MM2	602300108	121	1	49	96045228	KABELSTRANG
KONTAKT 1-2,5MM2	602300108	121	13	462	96036955	KABELSTRANG
KONTAKT 1-2,5MM2	602300108	121	27	464	96036956	KABELSTRANG
KONTAKT 1-2,5MM2	602300108	121	13	532	96045385	KABELSTRANG
KONTAKT 1-2,5MM2	602300108	121	21	534	96037136	KABELSTRANG
KONTAKT 1-2,5MM2	602300108	121	9	536	96037137	KABELSTRANG
KONTAKTSATZ	11659642	22	1	704	10802064	SEILLAENGENGEBER
KONTAKTSICHERUNGSSTIFT	10045101	509	1	48	96045227	KABELSTRANG
KONTAKTSICHERUNGSSTIFT	10045101	528	2	542	96045387	DRAEHTE GRUNDAUFBAU KPL
KONTAKTSICHERUNGSSTIFT J	10099866	511	1	48	96045227	KABELSTRANG
KONTAKTSICHERUNGSSTIFT J	10099866	507	1	535	96037136	KABELSTRANG
KONTAKTSICHERUNGSSTIFT	10099867	513	1	48	96045227	KABELSTRANG
KONTAKTSICHERUNGSSTIFT	10099867	511	7	542	96045387	DRAEHTE GRUNDAUFBAU KPL
KONTAKTSICHERUNGSSTIFT J	10099868	502	2	48	96045227	KABELSTRANG
KONTAKTSICHERUNGSSTIFT J	10099868	522	9	542	96045387	DRAEHTE GRUNDAUFBAU KPL
KONTAKTVERRIEGELUNG 2-	7368241	526	1	463	96036955	KABELSTRANG
KONTAKTVERRIEGELUNG 2-	7368241	527	2	535	96037136	KABELSTRANG
KONTAKTVERRIEGELUNG 2-	7368241	523	2	536	96037137	KABELSTRANG
KONTAKTVERRIEGELUNG 2-P	12693951	524	1	536	96037137	KABELSTRANG
KONTAKTVERRIEGELUNG DT	10216772	513	1	535	96037136	KABELSTRANG
KONTAKTVERRIEGELUNG DT	10342519	510	2	462	96036955	KABELSTRANG
KONTAKTVERRIEGELUNG DT	10342519	526	3	535	96037136	KABELSTRANG
KONTAKTVERRIEGELUNG DT	10342519	518	2	536	96037137	KABELSTRANG
KONTAKTVERRIEGELUNG DT-	7368246	504	1	536	96037137	KABELSTRANG
KONTAKTVERRIEGELUNG DT-	6205242	521	1	536	96037137	KABELSTRANG
KONUSLAGER 70NR11	10291989	2	4	382	967986308	LAGERUNG EINBAU
KRAFTSTOFF-FEINFILTERAN	10146791	201	1	176	13455297	DIESELMOTOR
KRAFTSTOFFBEHAELTER AN	917626608	108	1	12		LIEBHERR LTR 1220
KRAFTSTOFFBEHAELTER SCH	969072608	1	1	339	968999708	KRAFTSTOFFBEHAELTER VO
KRAFTSTOFFBEHAELTER VO	968999708	1	1	337	917626608	KRAFTSTOFFBEHAELTER AN
KRAFTSTOFFFEINFILTER KRA	12820742	2	1	227	13512036	FILTERKONSOLE VORM.
KRAFTSTOFFFILTER	12106874	100	1	342	96066379	KRAFTSTOFFFILTER VORM.
KRAFTSTOFFFILTER	553174008	1	1	486	11110051	DOSIERPUMPE
KRAFTSTOFFFILTER VORM.	96066379	1	1	341	91002861	KRAFTSTOFFFOERDERUNG
KRAFTSTOFFFOERDERUNG	91002861	109	1	12		LIEBHERR LTR 1220
KRAFTSTOFFLEITUNG	9078935	4	1	229	10143342	LECKOELRUECKLAUF
KRAFTSTOFFLEITUNG 12X1	10143240	7	1	228	10143341	KRAFTSTOFFLEITUNGEN

Bezeichnung	Artikel	Pos.	Menge	Seite	Baugruppe	Bezeichnung
KRAFTSTOFFLEITUNGEN	10143341	212	1	176	13455297	DIESELMOTOR
KRAFTSTOFFSCHLAUCH DN4,	10815777	32	1	480	918759808	ZUSATZHEIZUNG OW
KRAFTSTOFFSCHLAUCH DN4,	10815777	15	1	482	96020359	ZUSATZHEIZUNG VORM.
KRAFTSTOFFSCHLAUCH DN4,	553191108	31	0.06	480	918759808	ZUSATZHEIZUNG OW
KRANFUEHRERKABINE ANBA	917259908	129	1	13		LIEBHERR LTR 1220
KRANFUEHRERKABINE KAUF	916165808	1	1	417	917304608	KRANFUEHRERKABINE ROH
KRANFUEHRERKABINE ROH	917304608	132	1	13		LIEBHERR LTR 1220
KRANFUEHRERKABINE VORM.	917304508	131	1	13		LIEBHERR LTR 1220
KRANFUEHRERKABINE VORM.	919010208	130	1	13		LIEBHERR LTR 1220
KREUZLASCHE	968498108	2	1	658	968068308	MONTAGEVORRICHTUNG
KREUZSCHL.SCHR.DREHER 2	790033208	53	1	152	928569808	GRUNDWERKZEUG
KRONENMUTTER DIN 935 M36	10179495	5	1	751	968728808	KONSOLE VORM.
KRUEMMER	10142671	1	1	248	10142742	KUEHLMITTELKRUEMMER AN
KUEHLER VORM.	96034631	2	1	286	919007708	ANTRIEBSAGGREGAT VORM.
KUEHLERGRILL 820X730X80	96007145	2	1	657	919028808	MECH.TEILE VERSANDMONT
KUEHLERHAUBE	968100408	10	1	447	96017704	KUEHLERHAUBE KPL.
KUEHLERHAUBE KPL.	96017704	1	1	445	96036790	DREHBUEHNENVERKLEIDUN
KUEHLMITTELKRUEMMER AN	10142742	382	1	177	13455297	DIESELMOTOR
KUEHLWASSERENTLUEFTUN	10142744	387	1	177	13455297	DIESELMOTOR
KUEHLWASSERLEITUNG 12X1	10145177	1	1	243	10145278	ANBAUTEILE LUFTPRESSER
KUEHLWASSERLEITUNG 12X1	10145178	2	1	243	10145278	ANBAUTEILE LUFTPRESSER
KUEHLWASSERSCHLAUCH 55	97050894	251	1	287	919007708	ANTRIEBSAGGREGAT VORM.
KUEHLWASSERSCHLAUCH 55/	97050893	250	1	287	919007708	ANTRIEBSAGGREGAT VORM.
KUEHLWASSERSCHLAUCH D	11621770	14	0.1	480	918759808	ZUSATZHEIZUNG OW
KUEHLWASSERSCHLAUCH D	11621770	28	0.07	482	96020359	ZUSATZHEIZUNG VORM.
KUEHLWASSERVORWAERMU	918377508	401	1	15		LIEBHERR LTR 1220
KUGEL DIN 5401 3	610706308	6	1	725	511479408	LASTHALTEVENTIL
KUGEL DIN 5401 3,5	511036508	1	1	63	11643183	STEUERBLOCK
KUGEL DIN 5401 3,5	511036508	1	1	66	11643184	STEUERBLOCK
KUGEL DIN 5401 6	747000277	22	2	648	12102921	WIPPZYLINDER
KUGEL DIN 5401 7	570862108	6	1	63	11643183	STEUERBLOCK
KUGEL DIN 5401 7	570862108	6	1	66	11643184	STEUERBLOCK
KUGEL DIN 5401 7,5	518512408	9	2	63	11643183	STEUERBLOCK
KUGEL DIN 5401 7,5	518512408	9	2	66	11643184	STEUERBLOCK
KUGELELEMENT PUR SPF	975040308	4	1	383	96015921	BEDIENELEMENTE EINBAU
KUGELHAHN BKH12-L-10 A3C	510697608	178	1	561	96045351	HYDRAULIK OBERWAGEN
KUGELHAHN BKHU DN 10	571723608	5	1	574	10332882	STEUERBLOCK
KUGELHAHN DN20-G 3/4	10044661	101	1	342	96066379	KRAFTSTOFFFILTER VORM.
KUGELHAHNKOMBINATION D	510697708	179	1	561	96045351	HYDRAULIK OBERWAGEN
KUGELKNOPF DIN 319 C20XM5	704006308	10	1	639	968993508	KAMERAHALTER VORM.
KUGELKNOPF DIN 319 C40XM	704004208	7	1	763	923285508	KLAPPKONSOLE VORM.
KUGELSCHEIBE DIN 6319 17 4	10875863	36	1	761	917267508	TRANSPORTHALTERUNG DKS
KUGELSCHEIBE DIN 6319 C 8,	11622278	4	1	221	10152867	INJEKTOR MIT BEFEST.
KUGELSCHEIBE DIN 6319 C 8,	11622278	4	2	222	10152874	RS INJEKTOR
KUGELSCHEIBE DIN 6319 C 8,	11622278	2	1	223	10141140	RS DRUCKROHRSTUTZEN
KUGELSCHEIBE DIN 6319 C 8,	11622278	2	1	224	10135434	BEFESTIGUNG DRUCKROHR
KUGELSCHEIBE DIN 6319 C 8,	11622278	3	1	225	10153151	DRUCKROHRSTUTZEN MIT BE
KUGELSPERRBOLZEN 12X115	11160586	22	4	129	919644008	HYDRAULISCHE ABSTUETZUN
KUGELSPERRBOLZEN 12X90	10490116	32	2	124	968046208	ANBAUTEILE
KUGELSPERRBOLZEN 20X171,	11320194	46	4	35	917511508	RAUPENMITTELTEIL VORM.
KUGELSPERRBOLZEN 20X171,	11320194	21	1	492	967928508	VERRIEGELUNG
KUGELSPERRBOLZEN 20X171,	11320194	11	1	493	967978908	VERRIEGELUNG VORM.
KUGELSPERRBOLZEN 8X71,5	12102832	6	1	155	91001571	BOLZENZIEHVORRICHTUNG
KUGELSPERRBOLZEN NIROST	704008508	10	2	30	968019508	ENDSCHALTER ANBAU
KUNSTSTOFFROHR KPL.	969383908	(2331)	1	500	918731808	HARNSTOFFANLAGE
KUPFERPASTE DOSE 850G	10002552	132	1	252	10140729	ATL-ANBAU
KUPPLUNG	571898408	101	1	704	10802064	SEILLAENGENGEBER
KUPPLUNG	97066819	101	1	286	919007708	ANTRIEBSAGGREGAT VORM.
KUPPLUNGSDOSE 3-POL GER	605012708	7	1	625	918462708	FREMDEINSPEISUNG
KUPPLUNGSDOSE 4-POL 90°	680000708	5	1	462	96036955	KABELSTRANG

Bezeichnung	Artikel	Pos.	Menge	Seite	Baugruppe	Bezeichnung
KUPPLUNGSDOSE 4-POL 90°	680000708	5	1	738	96068455	LEITUNG
KUPPLUNGSDOSE 4-POL GER	680001708	12	1	532	96045385	KABELSTRANG
KUPPLUNGSDOSE 4-POL SPF	10678491	6	1	49	96045228	KABELSTRANG
KUPPLUNGSDOSE 4-POL SPF	10678491	13	1	532	96045385	KABELSTRANG
KUPPLUNGSDOSE 4-POL SPF	10678491	5	1	534	96037136	KABELSTRANG
KUPPLUNGSDOSE 4-POL SPF	10678491	6	1	534	96037136	KABELSTRANG
KUPPLUNGSDOSE 4-POL SPF	10678491	7	1	534	96037136	KABELSTRANG
KUPPLUNGSDOSE 4-POL SPF	10678491	8	1	534	96037136	KABELSTRANG
KUPPLUNGSDOSE 4-POL SPF	10678491	9	1	534	96037136	KABELSTRANG
KUPPLUNGSDOSE 4-POL SPF	10678494	10	1	532	96045385	KABELSTRANG
KUPPLUNGSDOSE 4-POL SPF	10871126	5	1	142	96045205	KABELSTRANG
KUPPLUNGSDOSE 4-POL SPF	10871126	375	1	532	96045385	KABELSTRANG
KUPPLUNGSDOSE 4-POL SPF	10871126	377	1	532	96045385	KABELSTRANG
KUPPLUNGSDOSE 4-POL SPF	10871127	376	1	532	96045385	KABELSTRANG
KUPPLUNGSDOSE 4-POL SPF	10871127	378	1	532	96045385	KABELSTRANG
KUPPLUNGSDOSE 4-POL SPF	10873383	6	1	142	96045205	KABELSTRANG
KUPPLUNGSDOSE 4-POL SPF	680001408	5	1	49	96045228	KABELSTRANG
KUPPLUNGSDOSE 4-POL SPF	680001408	7	1	532	96045385	KABELSTRANG
KUPPLUNGSDOSE 4-POL SPF	680001408	8	1	532	96045385	KABELSTRANG
KUPPLUNGSDOSE 4-POL SPF	680001408	9	1	532	96045385	KABELSTRANG
KUPPLUNGSDOSE 4-POL SPF	680001408	14	1	532	96045385	KABELSTRANG
KUPPLUNGSDOSE 4-POL SPF	680001408	15	1	532	96045385	KABELSTRANG
KUPPLUNGSDOSE 4-POL SPF	680001408	16	1	532	96045385	KABELSTRANG
KUPPLUNGSDOSE 4-POL SPF	680001408	(6)	1	741	917598408	ELEKTRIK MESS-U.WARNEINR
KUPPLUNGSDOSE 4-POLE 90°	680000308	6	1	464	96036956	KABELSTRANG
KUPPLUNGSDOSE 4-POLE 90°	680000808	11	1	532	96045385	KABELSTRANG
KUPPLUNGSDOSE 4-POLE SP	680000008	6	1	462	96036955	KABELSTRANG
KUPPLUNGSDOSE 4-POLE SP	680000008	5	1	464	96036956	KABELSTRANG
KUPPLUNGSDOSE 4-POLE SP	680000008	7	1	464	96036956	KABELSTRANG
KUPPLUNGSDOSE 4-POLE SP	680000008	(7)	1	741	917598408	ELEKTRIK MESS-U.WARNEINR
KUPPLUNGSMUFFE	774372608	11	1	523	917261208	ZENTRALSCHMIERANLAGE O
KUPPLUNGSMUFFE	774372608	1	1	613	921444108	ZENTRALSCHMIERANLAGE
KUPPLUNGSMUFFE 3/8"-10L	10031989	155	1	728	967785008	ZUSATZHYDRAULIK KLAPPSPI
KUPPLUNGSMUFFE B2 10-L	511508408	162	2	159	96056969	ZUSATZHYDRAULIK
KUPPLUNGSMUFFE B2 12-L	511505808	176	2	561	96045351	HYDRAULIK OBERWAGEN
KUPPLUNGSMUFFE B3 16-S	511505908	151	3	728	967785008	ZUSATZHYDRAULIK KLAPPSPI
KUPPLUNGSMUFFE B6 22-L	511508208	162	1	616	967784808	HYDRAULIK HILFSHUBWERK
KUPPLUNGSMUFFE B6 25-S	510599608	158	1	616	967784808	HYDRAULIK HILFSHUBWERK
KUPPLUNGSMUFFE B8 38-S	511512208	153	2	616	967784808	HYDRAULIK HILFSHUBWERK
KUPPLUNGSSCHLUESSEL 9	966796408	100	1	151	919328608	WERKZEUG M.ZUBEHOER
KUPPLUNGSSTECKER	774372708	12	1	523	917261208	ZENTRALSCHMIERANLAGE O
KUPPLUNGSSTECKER	774372708	2	2	613	921444108	ZENTRALSCHMIERANLAGE
KUPPLUNGSSTECKER B2 10-L	511508308	161	2	159	96056969	ZUSATZHYDRAULIK
KUPPLUNGSSTECKER B2 10-L	511515008	151	2	717	967784508	HYDRAULIK TELE
KUPPLUNGSSTECKER B3 16-	511508608	153	3	728	967785008	ZUSATZHYDRAULIK KLAPPSPI
KUPPLUNGSSTECKER B6 22-L	511508108	163	1	616	967784808	HYDRAULIK HILFSHUBWERK
KUPPLUNGSSTECKER B6 25-	510599708	160	1	616	967784808	HYDRAULIK HILFSHUBWERK
KUPPLUNGSSTECKER B8 38-	511512308	155	2	616	967784808	HYDRAULIK HILFSHUBWERK
KUPPLUNGSSTELLER	968026308	7	1	286	919007708	ANTRIEBSAGGREGAT VORM.
KURBELGEHAEUSE KPL. MIT Z	11389608	10	1	174	13455297	DIESELMOTOR
KURBELGEHAEUSE VORM. R	10154379	1	1	180	11389608	KURBELGEHAEUSE KPL. MIT
KURBELGEHAEUSEENTLUEF	10126713	16	1	174	13455297	DIESELMOTOR
KURBELGEHAEUSEENTLUEFT	12886223	1	1	186	10126713	KURBELGEHAEUSEENTLUEF
KURBELWELLE MIT ZAHNRAD	10147438	50	1	174	13455297	DIESELMOTOR
KURBELWELLE R-MOTORXD9	10131177	1	1	196	10147438	KURBELWELLE MIT ZAHNRAD
KURBELWELLENANBAUTEILE	10141974	53	1	175	13455297	DIESELMOTOR
KURBELWELLENDICHTUNG	10153583	52	1	174	13455297	DIESELMOTOR
KURBELWELLENLAGERSATZ	9076457	51	1	174	13455297	DIESELMOTOR
L-RING 50X2	429612001	57	1	78	90028956	FAHRANTRIEB
L-STUTZEN EL 12L M18X1,5 C	247128602	614	1	56	96035801	HYDRAULIK MITTELTEIL

Bezeichnung	Artikel	Pos.	Menge	Seite	Baugruppe	Bezeichnung
L-STUTZEN EL 12L M18X1,5 C	247128602	609	1	98	96035796	HYDR.FAHRANTRIEB
L-STUTZEN EL 12L M18X1,5 C	247128602	609	1	115	96035792	HYDR.FAHRANTRIEB
L-STUTZEN EL 12L M18X1,5 C	247128602	639	8	563	96045351	HYDRAULIK OBERWAGEN
L-STUTZEN EL 12L M18X1,5 C	247128602	601	2	617	967784808	HYDRAULIK HILFSHUBWERK
L-STUTZEN EL 12L M18X1,5 C	247128602	611	2	717	967784508	HYDRAULIK TELE
L-STUTZEN EL 18L CR6-FREI	247128502	842	1	565	96045351	HYDRAULIK OBERWAGEN
L-STUTZEN EL 22L CR6-FREI	247138602	790	2	564	96045351	HYDRAULIK OBERWAGEN
L-STUTZEN EL 22L CR6-FREI	247138602	600	3	617	967784808	HYDRAULIK HILFSHUBWERK
LADEEINHEIT BTT SPF	10412777	10	1	471	96022872	ARMATURENBRETT DACH
LADEGERAET 110V	917269308	383	1	15		LIEBHERR LTR 1220
LADEGERAET 110V 24V8A SP	613301908	1	1	626	917269308	LADEGERAET
LADELUFTLEITUNG	10143612	1	1	234	10149677	VERBINDUNGSLEITUNG ANBA
LADELUFTLEITUNG	10143614	2	1	234	10149677	VERBINDUNGSLEITUNG ANBA
LADELUFTROHR DN85 STAHL	97050878	201	1	287	919007708	ANTRIEBSAGGREGAT VORM.
LADELUFTROHR G-ALST10MG	97055159	200	1	287	919007708	ANTRIEBSAGGREGAT VORM.
LADELUFTWELLSCHLAUCH	97032592	256	1	287	919007708	ANTRIEBSAGGREGAT VORM.
LAENGENGEBER	11170185	25	1	704	10802064	SEILLAENGENGEBER
LAENGENMESSKABEL 5 X 0,38	571841008	53	1	704	10802064	SEILLAENGENGEBER
LAGER 12X17X4,6	12209429	28	1	94	96034962	FUEHRUNG LI.
LAGER 12X17X4,6	12209429	28	1	112	96034980	FUEHRUNG RE.
LAGER FRONTWISCHANLAGE	97052119	8	1	409	966497908	FRONTSCHEIBE KPL.
LAGERABDECKRING 33117 AV	747258401	4	1	353	90008901	DREHWERKANTRIEB
LAGERABDECKRING 6219 JV	747272501	16	1	368	932916901	SEILTROMMEL
LAGERABDECKRING 6219 JV	747272501	19	1	608	939294001	SEILTROMMEL
LAGERAUFNAHME	11100949	13	1	52	11346779	SCHLEIFRINGUEBERTRAGER
LAGERBOCK 40x115x42	970365108	10	2	280	918731408	ANTRIEBSAGGREGAT KPL.
LAGERBUCHSE 60X65X28 GLY	9888259	12	6	181	10154379	KURBELGEHAEUSE VORM.
LAGERBUCHSE RD200X170 G	973357208	2	2	668	917291908	ANLENKSTUECK VORM.
LAGERDECKEL 31CrMoV9	9072908	3	1	241	9072906	ZWISCHENRAD KPL.
LAGERFLANSCH	11631893	6	1	297	11182708	VERSTELLPUMPE
LAGERFLANSCH	11631893	6	1	300	10871017	VERSTELLPUMPE
LAGERFLANSCH EN-GJS-400-	939637901	15	1	368	932916901	SEILTROMMEL
LAGERGEHAEUSE VORM.	9077384	2	1	277	9077386	NEBENABTRIEB VORM.
LAGERPLATTE 100X195X230 P	970536108	12	2	677	917292108	TELESKOP 2 VORM.
LAGERPLATTE 100X195X230 P	970536108	12	2	681	917292208	TELESKOP 3 VORM.
LAGERPLATTE 100X195X230 P	970536108	12	2	685	917292308	TELESKOP 4 VORM.
LAGERPLATTE 100X195X230 P	970536108	31	2	690	917292408	TELESKOP 5 VORM.
LAGERPLATTE 100X195X350 P	970545608	12	2	673	917292008	TELESKOP 1 VORM.
LAGERRING	570109708	3	1	360	570109008	TRIEBWERK
LAGERRING	927745301	15	1	370	939292201	PLANETENGETRIEBE
LAGERRING	927745301	15	1	610	939294201	PLANETENGETRIEBE
LAGERTRAEGER	12106548	30	1	296	97029921	VERTEILERGETRIEBE
LAGERUNG 6X129X209 S355M	97032646	1	2	120	968038208	LAGERUNG VORN LI.
LAGERUNG 6X129X209 S355M	97032646	1	2	121	968038308	LAGERUNG VORN RE.
LAGERUNG EINBAU	967986308	1	1	381	919010208	KRANFUEHRERKABINE VORM.
LAGERUNG SCHWK.	968052308	4	4	124	968046208	ANBAUTEILE
LAGERUNG VORN LI.	968038208	10	6	119	917691008	ABSTURZSICHERUNG
LAGERUNG VORN RE.	968038308	11	6	119	917691008	ABSTURZSICHERUNG
LAMELLENSTOPFEN 28MM PE-	10678377	8	2	392	916162808	RELING
LAMELLENTRAEGER 100	927602601	65	1	370	939292201	PLANETENGETRIEBE
LAMELLENTRAEGER 51,6 42C	927716701	70	1	353	90008901	DREHWERKANTRIEB
LAMPENHALTER LI. 4X163X370	97126204	23	1	172	918731108	MONTAGETEILE DREHBUEHN
LAMPENHALTER RE. 4X163X3	97126205	24	1	172	918731108	MONTAGETEILE DREHBUEHN
LASCHE 4X40X20 S315MC FE//	978361008	24	1	294	968026308	KUPPLUNGSSTELLER
LASCHE 4X95X52 S315MC FE//	978554708	22	1	294	968026308	KUPPLUNGSSTELLER
LASTHAKEN 12.5E SPF	919007108	310	1	14		LIEBHERR LTR 1220
LASTHALTEVENTIL	511479408	151	1	722	967785408	ZUSATZHYDRAULIK KLAPPSPI
LASTHALTEVENTIL 400BAR SP	10218310	180	1	561	96045351	HYDRAULIK OBERWAGEN
LASTHALTEVENTILEINSATZ	11002678	7	1	725	511479408	LASTHALTEVENTIL
LAUFRAD	10342478	12	1	319	10871282	VERSTELLPUMPE

Bezeichnung	Artikel	Pos.	Menge	Seite	Baugruppe	Bezeichnung
LAUFRING 45X60X32,8 -16Mn	927602501	60	1	370	939292201	PLANETENGETRIEBE
LAUFRING D60/50X25	571819708	190	1	296	97029921	VERTEILERGETRIEBE
LAUFROLLE 250X250	11320962	6	13	75	91001377	RAUPENTRAEGER VORM.LI.
LAUFROLLE 250X250	11320962	6	13	108	91001378	RAUPENTRAEGER VORM.RE.
LAUTSPRECHER 2,77V 86DBA	10489011	10	2	467	96053500	ELEKTRIK ANBAUTEILE KABIN
LECKOELRUECKLAUF	10143342	214	1	176	13455297	DIESELMOTOR
LEERGEHAEUSE 120X220X80	973188508	5	1	714	968708708	KLEMMKASTEN KPL.
LEERGEHAEUSE 160X260X90	975113508	1	1	711	966291008	KLEMMKASTEN
LEERGEHAEUSE 80.0X0 AL	979204408	5	1	46	966204108	ANTENNE KPL.
LEHRE 1.5X130X25 X5CRNI18	97126865	21	1	151	919328608	WERKZEUG M.ZUBEHOER
LEISTUNGSRELAIS 75A	11160723	22	2	544	969256608	GRUNDAUFBAU
LEITER ANBAU	917268208	1	1	766	917268108	WERKZEUG KLAPPSPITZE
LEITERHALTERUNG	10326792	2	1	767	917268208	LEITER ANBAU
LEITRAD KPL. B9X740	12105240	1	1	83	11320954	LEITRADEINHEIT
LEITRADEINHEIT B9HDSX740	11320954	5	1	75	91001377	RAUPENTRAEGER VORM.LI.
LEITRADEINHEIT B9HDSX740	11320954	5	1	108	91001378	RAUPENTRAEGER VORM.RE.
LEITUNG	12104246	50	1	52	11346779	SCHLEIFRINGUEBERTRAGER
LEITUNG 15 X 0,34 TPE-U	10428544	10	4.367	462	96036955	KABELSTRANG
LEITUNG 15 X 0,34 TPE-U	10428544	11	4.367	462	96036955	KABELSTRANG
LEITUNG 2 X 0,5	10815830	11	4.96	49	96045228	KABELSTRANG
LEITUNG 2 X 0,5	10815830	12	4.96	49	96045228	KABELSTRANG
LEITUNG 2 X 0,5	10815830	13	4.16	49	96045228	KABELSTRANG
LEITUNG 2 X 0,5	10815830	14	4.16	49	96045228	KABELSTRANG
LEITUNG 2 X 1	11620017	15	2.63	49	96045228	KABELSTRANG
LEITUNG 2 X 1	11620017	9	3	462	96036955	KABELSTRANG
LEITUNG 2 X 1	11620017	13	0.4	462	96036955	KABELSTRANG
LEITUNG 2 X 1	11620017	5	9.93	538	96037133	LEITUNG
LEITUNG 2 X 1	11620017	5	4.06	644	96037132	LEITUNG
LEITUNG 2 X 1,5	11341599	18	5.83	532	96045385	KABELSTRANG
LEITUNG 25 X 0,34 TPE-U	10428545	7	4.375	462	96036955	KABELSTRANG
LEITUNG 7 G 1	10871285	18	1.8	49	96045228	KABELSTRANG
LEITUNG W510	96006879	58	1	531	96045384	KABELLISTE DREHBUEHNE
LEITUNG W512	968314308	(1)	1	616	967784808	HYDRAULIK HILFSHUBWERK
LEITUNG W536	966394808	170	1	711	966291008	KLEMMKASTEN
LEITUNG W562	96037133	70	1	531	96045384	KABELLISTE DREHBUEHNE
LEITUNG W563	96037132	23	1	643	96037130	AUSRUESTUNG KAMERA DRE
LEITUNG W571	968401508	57	1	531	96045384	KABELLISTE DREHBUEHNE
LEITUNG W587	96037138	62	1	531	96045384	KABELLISTE DREHBUEHNE
LEITUNG W588	96022970	63	1	531	96045384	KABELLISTE DREHBUEHNE
LEITUNG W591	96023931	11	1	335	96023914	ELEKTRIK BATTERIEKASTEN
LEITUNG W592	96023932	14	1	335	96023914	ELEKTRIK BATTERIEKASTEN
LEITUNG W593	96023930	10	1	335	96023914	ELEKTRIK BATTERIEKASTEN
LEITUNG W620	968648508	10	1	626	917269308	LADEGERAET
LEITUNG W621	968648408	9	1	626	917269308	LADEGERAET
LEITUNG W682	967921908	20	1	630	917368108	EL.KUEHLWASSERVORWAE
LEITUNG W693	965751108	15	1	625	918462708	FREMDEINSPEISUNG
LEITUNG W694	965991908	10	1	627	917269408	KONSOLE FREMDEINSPEISUN
LEITUNG W900	966377308	120	1	711	966291008	KLEMMKASTEN
LEITUNG W901	965760208	12	1	731	918124908	A-SCHEINWERFER ANLENKS
LEITUNG W902	965760308	13	1	731	918124908	A-SCHEINWERFER ANLENKS
LEITUNG W903	969723508	11	1	731	918124908	A-SCHEINWERFER ANLENKS
LEITUNG W910	966393608	140	1	711	966291008	KLEMMKASTEN
LEITUNG W911	966395208	190	1	711	966291008	KLEMMKASTEN
LEITUNG W912	966354408	4	1	708	966354008	LEITUNGSTROMMEL KPL.
LEITUNG W912A	966354508	6	1	708	966354008	LEITUNGSTROMMEL KPL.
LEITUNG W916	966361508	(1)	1	706	917262208	EL.ANLAGE AUSLEGER
LEITUNG W917	966394008	130	1	711	966291008	KLEMMKASTEN
LEITUNG W921	966394208	160	1	711	966291008	KLEMMKASTEN
LEITUNG W930	966357008	120	1	714	968708708	KLEMMKASTEN KPL.
LEITUNG W931	96068455	13	1	735	918197708	ELEKTRIK 2.HUBENDSCHALTE

Bezeichnung	Artikel	Pos.	Menge	Seite	Baugruppe	Bezeichnung
LEITUNG W932	966355308	110	1	714	968708708	KLEMMKASTEN KPL.
LEITUNG W933Y	969047708	1	1	741	917598408	ELEKTRIK MESS-U.WARNEINR
LEITUNGSDOSE	11450029	4	1	298	11690588	ANSTEUERGERAET
LEITUNGSDOSE	11450030	28	1	81	11161917	STEUERTEIL
LEITUNGSDOSE	11450030	3	1	298	11690588	ANSTEUERGERAET
LEITUNGSDOSE	11450030	19	1	325	10292815	REGLERELEMENT
LEITUNGSFILTER	510674508	166	1	560	96045351	HYDRAULIK OBERWAGEN
LEITUNGSTROMMEL 50M 14-P	10354493	5	1	708	966354008	LEITUNGSTROMMEL KPL.
LEITUNGSTROMMEL KPL.	966354008	4	1	707	966290908	ELEKTRIK ANLENKSTUECK
LEITUNGSVERBINDER	5603876	517	1	462	96036955	KABELSTRANG
LEITUNGSVERBINDER	5603876	507	1	464	96036956	KABELSTRANG
LEITUNGSVERBINDER	5603876	517	1	542	96045387	DRAEHTE GRUNDAUFBAU KPL
LEUCHTMELDER	606143508	11	2	471	96022872	ARMATURENBRETT DACH
LICCON MONITOR LCD5C-A LS	10886525	(80)	1	467	96053500	ELEKTRIK ANBAUTEILE KABIN
LICCON MONITOR LSB-BSE LC	96033140	19	1	467	96053500	ELEKTRIK ANBAUTEILE KABIN
LICHTHAUBE	11346616	(1)	1	160	915731908	EL.TEILE VERSANDMONTAGE
LICHTSCHEIBE	10875969	2	1	732	10872003	ARBEITSSCHEINWERFER
LINEARGLEITFUEHRUNGSSYS	11007589	5	1	387	916177508	TRITT KPL.
LINSENKOPFSCHRAUBE 4X10	10875795	29	4	430	969085208	HEIZUNG VORM.
LINSENKOPFSCHRAUBE 4X10	10875795	26	4	480	918759808	ZUSATZHEIZUNG OW
LINSENKOPFSCHRAUBE K4X	10019040	29	8	433	918810308	STEUERSTAND
LINSENSCHRAUBE M4X12 10.	514525208	20	7	360	570109008	TRIEBWERK
LOCHBLECH 75X75	9080377	8	1	189	10155227	OELWANNE VORM.
LOETOESE	11068607	(1)	10	704	10802064	SEILLAENGENGEBER
LUEFTER	10650386	(11)	1	435	10877138	FAHRERSITZ
LUEFTER	12100177	(59)	1	435	10877138	FAHRERSITZ
LUEFTERFLUEGEL	10874640	10	1	593	11622561	OEL-LUFTKUEHLER
LUFTANSAUGROHR ANBAU R	10147365	220	1	176	13455297	DIESELMOTOR
LUFTANSAUGROHR R-MOTOR	11415774	1	1	231	10147365	LUFTANSAUGROHR ANBAU
LUFTANSAUGUNG ANBAU R-M	10147364	224	1	176	13455297	DIESELMOTOR
LUFTBEHAELTER DIN 74281 4	502987108	166	1	496	969763408	VERROHRUNG DRUCKLUFTA
LUFTBEHAELTER EN 286-2 20L	502657708	167	1	496	969763408	VERROHRUNG DRUCKLUFTA
LUFTFILTER	7371061	(17)	1	83	11320954	LEITRADEINHEIT
LUFTFILTER 18M³/MIN PP	10871700	100	1	520	918731908	LUFTFILTERANLAGE
LUFTFILTERANLAGE	918731908	165	1	13		LIEBHERR LTR 1220
LUFTFUEHRUNG	916168308	3	1	395	917304508	KRANFUEHRERKABINE VORM.
LUFTFUEHRUNG 128X523X170	97000437	2	1	412	916168308	LUFTFUEHRUNG
LUFTFUEHRUNG 152X627X339	97000438	3	1	412	916168308	LUFTFUEHRUNG
LUFTFUEHRUNG 81X233X419	97000436	1	1	412	916168308	LUFTFUEHRUNG
LUFTFUEHRUNG LI. 107X394	97000440	4	1	412	916168308	LUFTFUEHRUNG
LUFTFUEHRUNG LI. 113X705	97001699	2	1	401	966282308	VERKLEIDUNG LI.
LUFTFUEHRUNG LI. 144X143X	97001248	6	1	412	916168308	LUFTFUEHRUNG
LUFTFUEHRUNG RE. 100X71	97001700	2	1	402	966282408	VERKLEIDUNG RE.
LUFTFUEHRUNG RE. 109X391	97000442	5	1	412	916168308	LUFTFUEHRUNG
LUFTFUEHRUNG RE. 143X15	97001249	7	1	412	916168308	LUFTFUEHRUNG
LUFTFUEHRUNGSSCHLAUCH	97050548	251	1	520	918731908	LUFTFILTERANLAGE
LUFTHUTZE SCHWK.	969089708	1	1	520	918731908	LUFTFILTERANLAGE
LUFTLEITKANAL 39X75X227	97004696	3	1	401	966282308	VERKLEIDUNG LI.
LUFTLEITUNGEN HARNSTOFF	96037028	30	1	500	918731808	HARNSTOFFANLAGE
LUFTPRESSER	10650490	85	1	435	10877138	FAHRERSITZ
LUFTPRESSER 293CM3	5700161	1	1	238	9080294	LUFTPRESSER VORM.
LUFTPRESSER ANBAU 293CM	10127566	330	1	177	13455297	DIESELMOTOR
LUFTPRESSER VORM. 293CM	9080294	1	1	237	10127566	LUFTPRESSER ANBAU
LUFTTROCKNER	502657308	55	1	496	969763408	VERROHRUNG DRUCKLUFTA
M-RING 130X120,5X2,5 F14	12476138	4	1	201	10146367	KOLBEN KPL.
MAGNET	10280212	50	1	624	10038509	STEUERBLOCK
MAGNET 24V	10650092	2	1	570	10342823	DRUCKREGELVENTIL
MAGNET 24V	570633808	(1)	1	560	96045351	HYDRAULIK OBERWAGEN
MAGNET 24V	570633808	(1)	1	560	96045351	HYDRAULIK OBERWAGEN
MAGNET 24V	570827808	1	1	67	511444408	WEGEVENTIL

Bezeichnung	Artikel	Pos.	Menge	Seite	Baugruppe	Bezeichnung
MAGNET 24V	571135508	(21)	1	717	967784508	HYDRAULIK TELE
MAGNET 28V	10291306	(1)	1	572	10413106	STEUERBLOCK
MAGNET 28V	10291306	(1)	1	572	10413106	STEUERBLOCK
MAGNET 28V	10291306	6	1	573	571415008	WEGEVENTIL
MAGNETSPULE	10564740	(1)	1	560	96045351	HYDRAULIK OBERWAGEN
MAGNETSPULE	11005244	1	1	584	10449853	WEGEVENTIL
MAGNETSPULE	12104171	(4)	3	560	96045351	HYDRAULIK OBERWAGEN
MAGNETSPULE 24V	571818908	1	1	578	571634708	WEGEVENTIL
MAGNETSPULE 24V	571818908	1	2	580	10332397	WEGEVENTIL
MAGNETSPULE 27V	10874134	1	1	569	11482347	WEGEMAGNETVENTIL
MAGNETSPULE 27V	12102117	1	1	575	571737808	WEGEVENTIL
MAGNETSPULE 28V	10872859	(1)	1	572	10413106	STEUERBLOCK
MAGNETSPULE 28V	10872859	(1)	1	572	10413106	STEUERBLOCK
MAGNETSPULE 28V	10872859	6	1	573	571415008	WEGEVENTIL
MAGNETVENTIL	10343003	2	1	430	969085208	HEIZUNG VORM.
MAGNETVENTIL	10343003	5	1	480	918759808	ZUSATZHEIZUNG OW
MAGNETVENTIL	10876704	4	1	582	11341035	STEUERBLOCK
MAGNETVENTIL	10876705	5	1	582	11341035	STEUERBLOCK
MASSENAUSGLEICH ANBAU	10120186	90	1	175	13455297	DIESELMOTOR
MASSEVERBINDUNGSBLECH	12826252	4	1	235	9078314	HEIZFLANSCH ANBAU
MASTNASE	917268408	356	1	14		LIEBHERR LTR 1220
MASTNASE SCHWK.	961940008	1	1	734	917268408	MASTNASE
MECH.ANBAUTEILE SCHEINW	967970408	1	1	731	918124908	A-SCHEINWERFER ANLENKS
MECH.BEFESTIGUNGSTEILE	96035117	19	1	560	96045351	HYDRAULIK OBERWAGEN
MECH.BEFESTIGUNGSTEILE	962602108	19	1	728	967785008	ZUSATZHYDRAULIK KLAPPSPI
MECH.BEFESTIGUNGSTEILE	968083608	19	1	616	967784808	HYDRAULIK HILFSHUBWERK
MECH.BEFESTIGUNGSTEILE	969763908	19	1	496	969763408	VERROHRUNG DRUCKLUFTA
MECH.TEILE VERSANDMONT	919028808	175	1	13		LIEBHERR LTR 1220
MECHANIK MESS-U.WARNEIN	968412508	2	1	740	917379608	TRAEGER MESS-U.WARNEIN
MECHANISCHE ANBAUTEILE	96045206	30	1	140	919499508	BALLASTUEBERWACHUNG
MEGIPUFFER	726617408	24	1	409	966497908	FRONTSCHEIBE KPL.
MEGIPUFFER	726617408	112	1	445	96036790	DREHBUEHNENVERKLEIDUN
MEGIPUFFER 20X15-M6 NR 55	726907308	111	1	445	96036790	DREHBUEHNENVERKLEIDUN
MEGIPUFFER 20X15-M6 NR 55	726907308	105	2	455	969015908	DREHBUEHNENVERKLEIDUN
MEGIPUFFER 30X17 M8 75°SH	10030440	15	1	92	968420608	STAUKASTEN VORM.
MEGIPUFFER 30X17 M8 75°SH	10030440	9	1	421	917304708	SCHIEBETUER EINBAU
MEGIPUFFER 50X20-M10X28	726613008	10	2	155	91001571	BOLZENZIEHVORRICHTUNG
MEGIPUFFER 50X20-M10X28	726613008	25	4	668	917291908	ANLENKSTUECK VORM.
MEHRFACHDICHTEINSATZ M2	602421908	525	2	49	96045228	KABELSTRANG
MEHRFACHDICHTEINSATZ M2	602421908	504	1	142	96045205	KABELSTRANG
MEHRFACHDICHTEINSATZ SK	10333297	(506)	1	741	917598408	ELEKTRIK MESS-U.WARNEINR
MEHRZWECKLEITER 4X4-890	10877074	1	1	767	917268208	LEITER ANBAU
MEISTERSCHALTER LSB-AMS	10343693	4	2	467	96053500	ELEKTRIK ANBAUTEILE KABIN
MELDELEUCHTE 24V	10876030	34	1	467	96053500	ELEKTRIK ANBAUTEILE KABIN
MEMBRAN-DURCHFUEHRUN	602717308	124	1	291	96034631	KUEHLER VORM.
MEMBRAN-DURCHFUEHRUN	602717308	114	1	445	96036790	DREHBUEHNENVERKLEIDUN
MEMBRAN-DURCHFUEHRUN	602717308	106	1	455	969015908	DREHBUEHNENVERKLEIDUN
MEMBRANSPEICHER 0,7L 25	510644608	183	1	561	96045351	HYDRAULIK OBERWAGEN
MEMBRANSPEICHER 2L 10BA	510642508	182	1	561	96045351	HYDRAULIK OBERWAGEN
MEMBRANTUELLE 29/37/44	553027808	4	7	390	916170808	KABELEINFUEHRUNG
MEMBRANTUELLE 29/37/44	553027808	20	1	447	96017704	KUEHLERHAUBE KPL.
MESSANSCHLUSS BMA3 6S C	475601508	642	4	57	96035801	HYDRAULIK MITTELTEIL
MESSANSCHLUSS BMA3 6S C	475601508	605	5	562	96045351	HYDRAULIK OBERWAGEN
MESSANSCHLUSS BMA3 6S C	475601508	609	1	617	967784808	HYDRAULIK HILFSHUBWERK
MESSANSCHLUSS EMA3 G1/4	475602608	675	9	563	96045351	HYDRAULIK OBERWAGEN
MESSANSCHLUSS EMA3 M12	475603208	632	3	563	96045351	HYDRAULIK OBERWAGEN
MESSANSCHLUSS G1/4"	10430230	64	1	697	10876933	TELESKOPIERZYLINDER
MESSANSCHLUSS VKA3 10LM	510629008	618	1	98	96035796	HYDR.FAHRANTRIEB
MESSANSCHLUSS VKA3 10LM	510629008	618	1	115	96035792	HYDR.FAHRANTRIEB
MESSANSCHLUSS VKA3 10LM	510629008	613	4	562	96045351	HYDRAULIK OBERWAGEN

Bezeichnung	Artikel	Pos.	Menge	Seite	Baugruppe	Bezeichnung
MESSANSCHLUSS VKA3 10LM	510629008	618	2	617	967784808	HYDRAULIK HILFSHUBWERK
MESSANSCHLUSS VKA3 10LM	510629008	613	1	717	967784508	HYDRAULIK TELE
MESSERTRENNKLEMME 0,2-2	602761608	502	2	542	96045387	DRAEHTE GRUNDAUFBAU KPL
MESSERTRENNKLEMME 0,2-2	602761608	5	2	546	967589508	KLEMMENLEISTE
MESSSTUTZEN 12L CR6-FREI	7409918	755	1	564	96045351	HYDRAULIK OBERWAGEN
MESSSTUTZEN 12S M20X1,5 C	7409922	649	1	57	96035801	HYDRAULIK MITTELTEIL
MESSSTUTZEN DKO 10S M18	5607617	823	6	564	96045351	HYDRAULIK OBERWAGEN
MESSSTUTZEN DKO 10S M18	5607617	613	2	622	969426308	ZUSATZHYDRAULIK KLAPPSPI
MESSWIDERSTAND -40/+125°	10449516	9	3	467	96053500	ELEKTRIK ANBAUTEILE KABIN
MIKROPHON	11826513	2	1	662	12257818	AUTORADIO
MIKROSCHALTER	10335596	3	4	472	10343693	MEISTERSCHALTER
MITNEHMER	10014729	7	1	136	11347526	ELEKTROPUMPE
MITNEHMER	10014729	7	1	525	10327065	ELEKTROPUMPE
MITNEHMER	931549101	20	1	368	932916901	SEILTROMMEL
MITNEHMER SCHWK.	967996108	3	1	147	919087608	DREHDURCHFUEHRUNG
MITTELZAPFEN	570110508	3	1	361	570109508	TRIEBWERK
MONITOR TFT 7 800X480	10876638	10	1	641	96045237	AUSRUESTUNG KAMERA KAB
MONITORGEHAEUSE GEKLEB	963257908	2	1	383	96015921	BEDIENELEMENTE EINBAU
MONITORTRAEGER 162X765X	96015926	1	1	383	96015921	BEDIENELEMENTE EINBAU
MONTAGE-GEL 1KG DOSE	12694669	160	1	199	10153583	KURBELWELLENDICHTUNG
MONTAGEBLECH 1.5X753X899	978610208	(1)	1	544	969256608	GRUNDAUFBAU
MONTAGEBLECH VORM.	965461108	2	1	544	969256608	GRUNDAUFBAU
MONTAGEBOLZEN	10675205	16	1	704	10802064	SEILLAENGENGEBER
MONTAGEEINHEIT VORM.	968063108	4	1	540	91000922	EINBAUTEILE SCHALTSCHRAN
MONTAGEMATERIAL	968693208	30	1	527	919410708	EL.ANLAGE DREHBUEHNE
MONTAGEPLATTE 2X275X250	97032989	1	1	43	968054008	MONTAGEPLATTE VORM.
MONTAGEPLATTE VORM.	968054008	3	1	41	96045226	SCHALTKASTEN VORM.
MONTAGETEILE	11826654	27	1	484	10876576	WASSERHEIZGERAET
MONTAGETEILE DREHBUEHN	918731108	103	1	12		LIEBHERR LTR 1220
MONTAGEVORRICHTUNG LM	968068308	1	1	657	919028808	MECH.TEILE VERSANDMONT
MONTAGEVORRICHTUNG SCH	968010508	1	1	658	968068308	MONTAGEVORRICHTUNG
MONTAGEWERKZEUGKASTE	790045408	1	1	152	928569808	GRUNDWERKZEUG
MOOSGUMMI 20X4 MOOSGU	262103108	30	0.064	433	918810308	STEUERSTAND
MOTORAUFNAHME	10874902	9	1	593	11622561	OEL-LUFTKUEHLER
MOTORFLANSCH	927746301	75	1	370	939292201	PLANETENGETRIEBE
MOTORFLANSCH EN-GJL-250	938996401	85	1	353	90008901	DREHWERKANTRIEB
MOTORGEHAEUSE	10014692	3	1	136	11347526	ELEKTROPUMPE
MOTORGEHAEUSE	10014692	3	1	525	10327065	ELEKTROPUMPE
MOTORGEHAEUSE	10493920	1	1	525	10327065	ELEKTROPUMPE
MOTORGEHAEUSE UNTEN	10675728	1	1	136	11347526	ELEKTROPUMPE
MOTORKONSOLE LI. G28MN6	97061150	5	1	286	919007708	ANTRIEBSAGGREGAT VORM.
MOTORKONSOLE RE. G28MN6	97061151	6	1	286	919007708	ANTRIEBSAGGREGAT VORM.
MOTORKONSOLE SCHWK.	968025208	3	1	286	919007708	ANTRIEBSAGGREGAT VORM.
MOTORKONSOLE SCHWK.	968025308	4	1	286	919007708	ANTRIEBSAGGREGAT VORM.
MOTORREGELUNGSENSORIK	12583633	581	1	179	13455297	DIESELMOTOR
MOTORSTEUERGERAET ECU	13470814	570	1	179	13455297	DIESELMOTOR
MUFFE 140.0X25 35NICRMOV	972140108	5	1	363	917259608	DREHBUEHNENARRETIERUN
MUTTER	10040137	2	1	579	10878075	NOTHANDBETAETIGUNG
MUTTER	10219618	1	1	293	10492431	DRUCKBEGRENZUNGSVENTI
MUTTER	7027459	(2)	1	560	96045351	HYDRAULIK OBERWAGEN
MUTTER CR6-FREI	571082308	(5)	1	728	967785008	ZUSATZHYDRAULIK KLAPPSPI
MUTTER M10X1,5 X6NiCrTiMoV	10120639	6	3	252	10140729	ATL-ANBAU
MUTTER M54 CR6-FREI	571077208	(5)	1	616	967784808	HYDRAULIK HILFSHUBWERK
MUTTER M6X8	10878951	2	1	436	96032222	NACHARBEIT ARMLEHNE LI.
MUTTER M6X8	10878951	2	1	438	96032223	NACHARBEIT ARMLEHNE RE.
NACHARBEIT ARMLEHNE LI.	96032222	5	1	433	918810308	STEUERSTAND
NACHARBEIT ARMLEHNE RE.	96032223	6	1	433	918810308	STEUERSTAND
NACHRUESTSATZ	965356108	30	1	335	96023914	ELEKTRIK BATTERIEKASTEN
NAEHERUNGSSCHALTER BER	10097613	1	1	526	11002916	VERTEILERKOMBINATION
NAEHERUNGSSCHALTER BER	11003193	10	2	530	966720708	ELEKTRIK DREHWERK

Bezeichnung	Artikel	Pos.	Menge	Seite	Baugruppe	Bezeichnung
NEBENABTRIEB ANBAU	10125687	650	1	179	13455297	DIESELMOTOR
NEBENABTRIEB ANBAU	10144036	652	1	179	13455297	DIESELMOTOR
NEBENABTRIEB VORM.	10125688	1	1	275	10125687	NEBENABTRIEB ANBAU
NEBENABTRIEB VORM.	9077386	1	1	276	10144036	NEBENABTRIEB ANBAU
NEIGUNGSGEBER +/-25° ALU	11001194	10	1	39	96045225	ELEKTRIK MITTELSTUECK
NIETMUTTER M8	12210567	(2)	40	119	917691008	ABSTURZSICHERUNG
NIPPEL GA10-45,H32	97057512	20	1	601	918628408	KLIMAANLAGE OW
NIVEAUGEBER L=115 24V	10130406	22	1	174	13455297	DIESELMOTOR
NIVEAUGEBER L=115 24V	10816943	1	1	193	10130406	NIVEAUGEBER
NOCKENWELLE KPL. R-MOT	10138230	100	1	175	13455297	DIESELMOTOR
NOCKENWELLE R-MOTORXD	10125742	1	1	210	10138230	NOCKENWELLE KPL.
NOCKENWELLENBUCHSE 60,	9132281	11	2	181	10154379	KURBELGEHAEUSE VORM.
NOCKENWELLENBUCHSE 70,	9274859	10	5	181	10154379	KURBELGEHAEUSE VORM.
NOT-AUS TASTE	606144108	(2)	1	470	96030724	ELEKTRIK ARMATURENKONS
NOTAUS KRANFUEHRERKAB	967260908	4	1	470	96030724	ELEKTRIK ARMATURENKONS
NOTHANDBETAETIGUNG	11007817	4	1	575	571737808	WEGEVENTIL
NOTHANDBETAETIGUNG RP	10878075	5	1	578	571634708	WEGEVENTIL
NOTHANDBETAETIGUNG RP	10878075	5	2	580	10332397	WEGEVENTIL
NUTMUTTER DIN 1804 M80X2	241047802	7	1	383	96015921	BEDIENELEMENTE EINBAU
NUTMUTTER M38X1,5	570110108	9	1	360	570109008	TRIEBWERK
NUTMUTTER M70X2X19 C45	927530201	13	1	353	90008901	DREHWERKANTRIEB
NUTRING 160X168X11,5	7367566	3	1	85	10877686	SPANNER HYDR KPL
O-RING	10001111	21	1	316	10871043	VERSTELLPUMPE
O-RING	10332172	48	1	81	11161917	STEUERTEIL
O-RING 10,00X2,5 NBR90	10337381	(1)	2	574	10332882	STEUERBLOCK
O-RING 10,00X2,5 NBR90	10337381	7	1	586	510697608	KUGELHAHN
O-RING 10,8X1, 78 NEOPREN	5610999	32	2	601	918628408	KLIMAANLAGE OW
O-RING 104,37X3,53 VMQ 70 A	7380520	4	1	277	9077386	NEBENABTRIEB VORM.
O-RING 10X2,2 NBR70	502933208	430	1	520	918731908	LUFTFILTERANLAGE
O-RING 120X3 VMQ 70 A	9177948	2	1	278	9078301	VERSCHLUSSTEILE
O-RING 125X3 NBR70	726426008	447	3	288	919007708	ANTRIEBSAGGREGAT VORM.
O-RING 127,76X2,62 NBR 70	11003121	4	1	297	11182708	VERSTELLPUMPE
O-RING 12X2 NBR70	704274808	9	4	42	966167808	DECKEL KPL.
O-RING 12X2 NBR70	704274808	7	5	86	967972208	DECKEL VORM.
O-RING 12X2 NBR70	704274808	7	2	87	967972308	DECKEL VORM.
O-RING 12X2 NBR70	704274808	7	2	88	967972408	DECKEL VORM.
O-RING 12X2 NBR70	704274808	7	2	89	968270108	DECKEL VORM.
O-RING 12X2 NBR70	704274808	7	2	90	968274208	DECKEL VORM.
O-RING 12X2 NBR70	704274808	7	5	110	968055808	DECKEL VORM.
O-RING 12X2 NBR70	704274808	(8)	2	348	969050308	OELBEHAELTER VORM.
O-RING 132X3 NBR 70	7264141	470	1	296	97029921	VERTEILERGETRIEBE
O-RING 133,07X1,78 NBR 70	10099208	28	1	136	11347526	ELEKTROPUMPE
O-RING 133,07X1,78 NBR 70	10099208	32	1	525	10327065	ELEKTROPUMPE
O-RING 135X3 NBR 70 SPF	726452801	5	1	136	11347526	ELEKTROPUMPE
O-RING 140X3 NBR70	570163708	5	1	525	10327065	ELEKTROPUMPE
O-RING 145 75 FKM 17939	10282774	4	2	182	10154458	ZYLINDER
O-RING 14X2 NBR70	726411508	47	2	467	96053500	ELEKTRIK ANBAUTEILE KABIN
O-RING 14X3 NBR70	726405608	10	12	392	916162808	RELING
O-RING 14X3 NBR70	726405608	78	6	610	939294201	PLANETENGETRIEBE
O-RING 15,4X2,1 NBR90	571141177	3	1	573	571415008	WEGEVENTIL
O-RING 150X3 NBR70	518578108	448	1	288	919007708	ANTRIEBSAGGREGAT VORM.
O-RING 15X3 NBR 70	726403401	78	6	370	939292201	PLANETENGETRIEBE
O-RING 160X3 NBR70	726204008	5	1	348	969050308	OELBEHAELTER VORM.
O-RING 165X3 FKM 70	726440001	73	1	353	90008901	DREHWERKANTRIEB
O-RING 16X2 NBR70	726407908	401	2	328	96034515	AUSGLEICHSBEHAELTER VO
O-RING 16X2 NBR70	726407908	(1)	1	342	96066379	KRAFTSTOFFFILTER VORM.
O-RING 16X2 NBR70	726407908	(9)	2	348	969050308	OELBEHAELTER VORM.
O-RING 175X3 NBR 70	726453601	24	1	353	90008901	DREHWERKANTRIEB
O-RING 175X3 NBR 70	726453601	79	1	370	939292201	PLANETENGETRIEBE
O-RING 17X2 FPM70	571082608	(2)	1	561	96045351	HYDRAULIK OBERWAGEN

Bezeichnung	Artikel	Pos.	Menge	Seite	Baugruppe	Bezeichnung
O-RING 18X2,5 NBR70	726406908	(1)	1	562	96045351	HYDRAULIK OBERWAGEN
O-RING 192X4 SPF	11493868	37	1	75	91001377	RAUPENTRAEGER VORM.LI.
O-RING 192X4 SPF	11493868	37	1	108	91001378	RAUPENTRAEGER VORM.RE.
O-RING 195X3 NBR 70	761021703	76	1	370	939292201	PLANETENGETRIEBE
O-RING 195X3 NBR 70	761021703	76	1	610	939294201	PLANETENGETRIEBE
O-RING 19X1,5 NBR70	502624508	41	1	136	11347526	ELEKTROPUMPE
O-RING 19X2,5 FKM80	10219619	2	1	293	10492431	DRUCKBEGRENZUNGSVENTI
O-RING 20,3X2,4 NBR70	502932908	8	1	339	968999708	KRAFTSTOFFBEHAELTER VO
O-RING 200X3 NBR 70	726421501	480	3	296	97029921	VERTEILERGETRIEBE
O-RING 209,14X3,53 NBR70	10342479	26	1	319	10871282	VERSTELLPUMPE
O-RING 20X2 FPM70	571082008	(2)	1	728	967785008	ZUSATZHYDRAULIK KLAPPSPI
O-RING 20X2 FPM70	571082008	(2)	1	728	967785008	ZUSATZHYDRAULIK KLAPPSPI
O-RING 20X2 NBR90	510792708	8	2	586	510697608	KUGELHAHN
O-RING 20X4 NBR 70	726414901	69	1	353	90008901	DREHWERKANTRIEB
O-RING 22X1,5 FPM70	571082708	(3)	1	561	96045351	HYDRAULIK OBERWAGEN
O-RING 23,52X1,78 NBR90	514611808	4	1	63	11643183	STEUERBLOCK
O-RING 23,52X1,78 NBR90	514611808	4	1	66	11643184	STEUERBLOCK
O-RING 230X3 NBR70	726429008	482	1	296	97029921	VERTEILERGETRIEBE
O-RING 24X2,5 NBR70	502933508	449	1	288	919007708	ANTRIEBSAGGREGAT VORM.
O-RING 24X3 FKM 70	10217777	2	1	264	10128439	VERSCHLUSSTEILE
O-RING 26X1,5 FPM70	571082108	(3)	1	728	967785008	ZUSATZHYDRAULIK KLAPPSPI
O-RING 280X3 NBR70	726417708	485	1	296	97029921	VERTEILERGETRIEBE
O-RING 300X3 NBR 70	502319101	51	1	370	939292201	PLANETENGETRIEBE
O-RING 300X3 NBR70	530032508	51	1	610	939294201	PLANETENGETRIEBE
O-RING 300X6 EPDM 70	726458401	13	1	370	939292201	PLANETENGETRIEBE
O-RING 30X2 NBR70	510787908	(3)	4	568	11211756	STEUERBLOCK
O-RING 32X3 FPM70	571076908	(2)	1	616	967784808	HYDRAULIK HILFSHUBWERK
O-RING 330X3 NBR 70	726429901	19	2	370	939292201	PLANETENGETRIEBE
O-RING 330X3 NBR 70	726429901	19	2	610	939294201	PLANETENGETRIEBE
O-RING 38X3 NBR 70	726455301	61	1	370	939292201	PLANETENGETRIEBE
O-RING 38X3 NBR90	726421108	61	1	610	939294201	PLANETENGETRIEBE
O-RING 39,34X2,62 FKM 70	10097960	14	1	81	11161917	STEUERTEIL
O-RING 40,64X5,33 FKM 70	7381566	2	2	191	10121667	VERBINDUNGSSTUECK M.O-R
O-RING 40X3 FPM70	571077108	(4)	1	616	967784808	HYDRAULIK HILFSHUBWERK
O-RING 4X1 NBR90	510712308	3	1	725	511479408	LASTHALTEVENTIL
O-RING 530X5 NBR 70	761035303	59	2	78	90028956	FAHRANTRIEB
O-RING 59,92X3,53 HNBR 70	7381779	7	2	183	10147687	AGGREGATETRAEGER ANBA
O-RING 5X1 NBR70	553136608	2	2	63	11643183	STEUERBLOCK
O-RING 5X1 NBR70	553136608	2	2	66	11643184	STEUERBLOCK
O-RING 65X3 NBR70	726412308	450	2	288	919007708	ANTRIEBSAGGREGAT VORM.
O-RING 6X1 NBR90	570690608	33	1	525	10327065	ELEKTROPUMPE
O-RING 7,6X1,78 NEOPREN	10216678	31	4	601	918628408	KLIMAANLAGE OW
O-RING 85X2 HNBR 70	10218370	2	1	258	11386644	STARTER VORM.
O-RING 88X3 ACM70	570979708	7	1	240	5700161	LUFTPRESSER
O-RING 8X2 NBR70	502652908	73	1	610	939294201	PLANETENGETRIEBE
O-RING 8X2 NBR90	10166157	73	1	370	939292201	PLANETENGETRIEBE
O-RING 94,5X3 VMQ 70	13711602	2	1	236	13701882	HEIZFLANSCH KOMPLETT
O-RING 94X3 NBR70	726433408	50	4	35	917511508	RAUPENMITTELTEIL VORM.
O-RING 98,02X3,53 HNBR 70	7381995	4	1	259	10115664	VERSCHLUSSTEILE
O-RING AEHNL.ISO 3601-1 100	11008055	2	1	232	10145173	ANSAUGSTUTZEN ANBAU
O-RING AEHNL.ISO 3601-1 101	7380401	5	1	277	9077386	NEBENABTRIEB VORM.
O-RING AEHNL.ISO 3601-1 125	10002310	3	1	237	10127566	LUFTPRESSER ANBAU
O-RING AEHNL.ISO 3601-1 15,5	10113975	(2)	1	273	12583633	MOTORREGELUNGSENSORIK
O-RING AEHNL.ISO 3601-1 21,	7381526	4	1	249	10142744	KUEHLWASSERENTLUEFTUN
O-RING AEHNL.ISO 3601-1 25	10342770	3	1	205	10149578	ZYLINDERKOPF
O-RING AEHNL.ISO 3601-1 26X	10004261	9	1	183	10147687	AGGREGATETRAEGER ANBA
O-RING AEHNL.ISO 3601-1 26X	10004261	4	1	212	10129475	OELKUEHLER ANBAU
O-RING AEHNL.ISO 3601-1 43	11066168	4	1	216	10148432	SCHMIEROELPUMPE MIT BE
O-RING AEHNL.ISO 3601-1 60	12212022	16	2	253	12512627	ABGASSTUTZEN ANBAU
O-RING AEHNL.ISO 3601-1 63,	7380970	7	1	234	10149677	VERBINDUNGSLEITUNG ANBA

Bezeichnung	Artikel	Pos.	Menge	Seite	Baugruppe	Bezeichnung
O-RING AEHNL.ISO 3601-1 63,	7380970	451	1	288	919007708	ANTRIEBSAGGREGAT VORM.
O-RING AEHNL.ISO 3601-1 7X1,	7381685	8	1	209	10120186	MASSENAUSGLEICH ANBAU
O-RING AEHNL.ISO 3601-1 7X1,	7381685	14	1	210	10138230	NOCKENWELLE KPL.
O-RING ARP 568 10,52X1,83 NB	501243708	(1)	1	564	96045351	HYDRAULIK OBERWAGEN
O-RING ARP 568 10,52X1,83 NB	501243708	1	1	589	471030708	VERSCHRAUBUNG
O-RING ARP 568 10,82X1,78 NB	510718108	27	1	583	10489734	DRUCKBEGRENZUNGSVENTI
O-RING ARP 568 10,82X1,78 NB	510760408	32	1	428	11083498	HEIZKLIMAGERAET
O-RING ARP 568 10,82X1,78 NB	510760408	2	6	573	571415008	WEGEVENTIL
O-RING ARP 568 107,62X2,62	571233308	(5)	1	319	10871282	VERSTELLPUMPE
O-RING ARP 568 12,37X2,62 NB	510746108	10	1	308	571899508	ABSCHALTVENTIL
O-RING ARP 568 12,37X2,62 NB	510746108	1	1	587	10218310	LASTHALTEVENTIL
O-RING ARP 568 14X1,78 NBR9	515710608	31	1	428	11083498	HEIZKLIMAGERAET
O-RING ARP 568 18,72X2,62 NB	510738308	12	1	313	571900808	REGLERELEMENT
O-RING ARP 568 18,72X2,62 NB	510738308	12	1	314	10472202	REGLERELEMENT
O-RING ARP 568 202,79X3,53	571307708	10	1	299	11631893	LAGERFLANSCH
O-RING ARP 568 23,47X2,62 NB	510776608	14	1	325	10292815	REGLERELEMENT
O-RING ARP 568 23,47x2,62 NB	570322408	(1)	1	291	96034631	KUEHLER VORM.
O-RING ARP 568 23,47x2,62 NB	570322408	(1)	1	562	96045351	HYDRAULIK OBERWAGEN
O-RING ARP 568 23,52X1,78 N	570652308	25	1	583	10489734	DRUCKBEGRENZUNGSVENTI
O-RING ARP 568 25,07X2,62 NB	571058608	13	1	325	10292815	REGLERELEMENT
O-RING ARP 568 25X3,53 NBR7	511035108	(1)	1	562	96045351	HYDRAULIK OBERWAGEN
O-RING ARP 568 28,17X3,53 NB	501201708	440	1	288	919007708	ANTRIEBSAGGREGAT VORM.
O-RING ARP 568 28,17X3,53 NB	726426408	33	1	648	12102921	WIPPZYLINDER
O-RING ARP 568 32,92X3,53 NB	510587008	(1)	1	562	96045351	HYDRAULIK OBERWAGEN
O-RING ARP 568 32,92X3,53 NB	510587008	(1)	1	562	96045351	HYDRAULIK OBERWAGEN
O-RING ARP 568 32,92X3,53 NB	510587008	560	6	562	96045351	HYDRAULIK OBERWAGEN
O-RING ARP 568 32,92X3,53 NB	510587008	556	2	617	967784808	HYDRAULIK HILFSHUBWERK
O-RING ARP 568 37,69X3,53 NB	510586708	551	8	56	96035801	HYDRAULIK MITTELTEIL
O-RING ARP 568 37,69X3,53 NB	510586708	550	2	98	96035796	HYDR.FAHRANTRIEB
O-RING ARP 568 37,69X3,53 NB	510586708	550	2	115	96035792	HYDR.FAHRANTRIEB
O-RING ARP 568 37,69X3,53 NB	510586708	(1)	1	562	96045351	HYDRAULIK OBERWAGEN
O-RING ARP 568 37,69X3,53 NB	510586708	551	2	562	96045351	HYDRAULIK OBERWAGEN
O-RING ARP 568 37,69X3,53 NB	510586708	553	3	617	967784808	HYDRAULIK HILFSHUBWERK
O-RING ARP 568 37,69X3,53 NB	510586708	551	3	717	967784508	HYDRAULIK TELE
O-RING ARP 568 45,69X2,62 NB	514507808	16	1	311	10008308	ANSCHLUSSPLATTE
O-RING ARP 568 47,22X3,53 NB	510587908	(1)	1	288	919007708	ANTRIEBSAGGREGAT VORM.
O-RING ARP 568 50,47X2,62 NB	570054708	16	1	323	571907208	ANSCHLUSSPLATTE
O-RING ARP 568 56,74X3,53 NB	726421608	445	3	288	919007708	ANTRIEBSAGGREGAT VORM.
O-RING ARP 568 6,07X1,78 NB	510738408	15	1	308	571899508	ABSCHALTVENTIL
O-RING ARP 568 66,27X3,53 NB	518648508	6	1	359	510229408	HYDROMOTOR
O-RING ARP 568 72,62X3,53 NB	518629608	31	2	399	917305408	INNENVERKLEIDUNG EINBAU
O-RING ARP 568 75,87X2,62 NB	514530408	15	1	360	570109008	TRIEBWERK
O-RING ARP 568 82,14X3,53 NB	518623608	39	1	310	10663105	TRIEBWERK
O-RING ARP 568 9,19X2,62 NB	514589108	13	1	314	10472202	REGLERELEMENT
O-RING ARP 568 9,25X1,78 NB	510719008	26	1	583	10489734	DRUCKBEGRENZUNGSVENTI
O-RING ARP 568 9,25X1,78 NB	510738608	(1)	4	572	10413106	STEUERBLOCK
O-RING ARP 568 9,25X1,78 NB	510738608	(1)	4	572	10413106	STEUERBLOCK
O-RING ARP 568 98,02X3,53 NB	514613208	39	1	321	10872488	TRIEBWERK
O-RING DIN 3770 25X2,5 FPM7	726422308	313	1	496	969763408	VERROHRUNG DRUCKLUFTA
O-RING DIN 3771 23,6X2,9 NBR	571817308	(1)	1	530	966720708	ELEKTRIK DREHWERK
O-RING DIN 3771 44X3 NBR70	726405908	442	1	288	919007708	ANTRIEBSAGGREGAT VORM.
O-RING ISO 3601-1 101,27X2,6	7380605	5	1	233	10147364	LUFTANSAUGUNG ANBAU
O-RING ISO 3601-1 101,27X2,6	7380605	452	1	288	919007708	ANTRIEBSAGGREGAT VORM.
O-RING ISO 3601-1 107,54X3,53	10002167	4	2	246	10148215	THERMOSTATGEHAEUSE AN
O-RING ISO 3601-1 12,37X2,62	7380935	3	1	236	13701882	HEIZFLANSCH KOMPLETT
O-RING ISO 3601-1 132,94X3,53	7016016	(1)	1	245	10142733	WASSERPUMPE MIT BEFEST.
O-RING ISO 3601-1 132,94X3,53	7016016	(7)	1	245	10142733	WASSERPUMPE MIT BEFEST.
O-RING ISO 3601-1 132,94X3,53	7016016	7	1	245	10142733	WASSERPUMPE MIT BEFEST.
O-RING ISO 3601-1 17,17X1,78	7381103	2	1	265	10127979	VERSCHLUSSTEILE
O-RING ISO 3601-1 17,17X1,78	7381103	(2)	1	273	12583633	MOTORREGELUNGSENSORIK

Bezeichnung	Artikel	Pos.	Menge	Seite	Baugruppe	Bezeichnung
O-RING ISO 3601-1 34,59X2,62	7382059	5	1	216	10148432	SCHMIEROELPUMPE MIT BE
O-RING ISO 3601-1 34,59X2,62	7380653	8	2	183	10147687	AGGREGATETRAEGER ANBA
O-RING ISO 3601-1 34,59X2,62	7380653	9	1	262	10115829	SCHWUNGRADGEHAEUSE AN
O-RING ISO 3601-1 55,25X2,62	7380083	3	1	248	10142742	KUEHLMITTELKRUEMMER AN
O-RING ISO 3601-1 75,79X3,53	7009080	5	1	246	10148215	THERMOSTATGEHAEUSE AN
O-RING ISO 3601-1 85,32X3,53	7381361	(4)	2	275	10125687	NEBENABTRIEB ANBAU
O-RING ISO 3601-1 85,32X3,53	7381361	446	1	288	919007708	ANTRIEBSAGGREGAT VORM.
O-RING ISO 3601-1 9,25X1,78 F	7380574	5	4	570	10342823	DRUCKREGELVENTIL
O-RING NEOPRENE (W)	7411823	30	1	601	918628408	KLIMAANLAGE OW
OEL-LUFTKUEHLER	550628308	103	1	291	96034631	KUEHLER VORM.
OEL-LUFTKUEHLER SPF	11622561	1	1	592	967980508	OELKUEHLER VORM.
OELABLASSSCHLAUCH KPL.	10032297	68	1	152	928569808	GRUNDWERKZEUG
OELABLASSSCHRAUBE M 30	5004624	6	1	189	10155227	OELWANNE VORM.
OELABLASSSCHRAUBE M26X	789011908	150	2	287	919007708	ANTRIEBSAGGREGAT VORM.
OELABLASSSCHRAUBE M26X	789011908	8	1	348	969050308	OELBEHAELTER VORM.
OELBEHAELTER ANBAU	917825508	110	1	12		LIEBHERR LTR 1220
OELBEHAELTER SCHWK. AL	969050408	1	1	348	969050308	OELBEHAELTER VORM.
OELBEHAELTER VORM.	969050308	1	1	345	917825508	OELBEHAELTER ANBAU
OELFILTEREINSATZ OEL	10877167	71	1	697	10876933	TELESKOPIERZYLINDER
OELKUEHLER	10325001	3	1	213	10129474	OELKUEHLER VORM.
OELKUEHLER ANBAU	10129475	130	1	175	13455297	DIESELMOTOR
OELKUEHLER EINBAU	917261808	187	1	14		LIEBHERR LTR 1220
OELKUEHLER VORM.	10129474	1	1	212	10129475	OELKUEHLER ANBAU
OELKUEHLER VORM.	967980508	1	1	591	917261808	OELKUEHLER EINBAU
OELKUEHLERGEHAEUSE	10146722	1	1	213	10129474	OELKUEHLER VORM.
OELLEITUNG VORM. 10X1	10139112	25	1	174	13455297	DIESELMOTOR
OELMESSEINRICHTUNG	90200103	10	1	606	90028852	KOMPAKTSEILWINDE
OELMESSEINRICHTUNG	90200104	6	1	365	917259708	HAUPTHUBWERK
OELMESSEINRICHTUNG	90208884	50	1	367	90208882	KOMPAKTSEILWINDE
OELMESSSTAB 1 1/8"	927554401	1	1	354	927554301	ENTLUEFTUNGSSTUTZEN
OELMESSSTAB 1 1/8"	927610201	15	1	374	90200104	OELMESSEINRICHTUNG
OELMESSSTAB 1 1/8"	927610201	15	1	612	90200103	OELMESSEINRICHTUNG
OELMESSSTAB KPL.	10150934	21	1	174	13455297	DIESELMOTOR
OELMESSSTAB MIT RING	10150935	1	1	192	10150934	OELMESSSTAB KPL.
OELRUECKLAUFLEITUNG 10X	10139111	1	1	195	10139112	OELLEITUNG VORM.
OELRUECKLAUFLEITUNG 22X	12847441	2	1	252	10140729	ATL-ANBAU
OELSTANDSAUGE G1" ALU	774320108	7	1	348	969050308	OELBEHAELTER VORM.
OELWANNE MIT BEFEST. R-M	10132560	20	1	174	13455297	DIESELMOTOR
OELWANNE VORM. R-MOTOR	10155227	1	1	188	10133837	OELWANNE VORM.
OELWANNE VORM. R-MOTOR	10133837	1	1	187	10132560	OELWANNE MIT BEFEST.
PASSFEDER DIN 6885 A 14X9	434018708	27	1	492	967928508	VERRIEGELUNG
PASSFEDER DIN 6885 A 4X4X1	434000208	5	1	376	10802061	WINDENDREHGEBER
PASSFEDER DIN 6885 A16X10	434022601	41	2	697	10876933	TELESKOPIERZYLINDER
PASSHUELSE 12X20X20 100Cr	10134348	3	2	183	10147687	AGGREGATETRAEGER ANBA
PASSHUELSE 12X20X20 100Cr	10134348	3	2	262	10115829	SCHWUNGRADGEHAEUSE AN
PASSHUELSE 15,5X19,5X24	9177636	6	10	181	10154379	KURBELGEHAEUSE VORM.
PASSHUELSE 16X20X20 S235J	9074798	4	2	202	10149580	ZYLINDERKOPF ANBAU
PASSSCHEIBE	7369933	20	1	321	10872488	TRIEBWERK
PASSSCHEIBE DIN 988 63X80X	421000408	17	2	360	570109008	TRIEBWERK
PASSSCHEIBE DIN 988 63X80X	421000508	18	1	360	570109008	TRIEBWERK
PATCHKABEL 4X2 AWG 26/7-5	10219462	6	2	461	96036954	KABELLISTE KRANFUEHRERK
PEDALGEBER 20° SPF	10343484	55	2	467	96053500	ELEKTRIK ANBAUTEILE KABIN
PEDALTRAEGER EINBAU	96025887	4	1	381	919010208	KRANFUEHRERKABINE VORM.
PENDELROLLENLAGER DIN 6	746001601	17	1	368	932916901	SEILTROMMEL
PENDELROLLENLAGER DIN 6	746001601	20	1	608	939294001	SEILTROMMEL
PERSOENLICHE SCHUTZAUSR	916959808	46	1	12		LIEBHERR LTR 1220
PFOSTEN	96004280	10	4	652	917260608	GEGENGEWICHT M.BEFESTIG
PILZKOPFBAND 25MM PS18	802102008	150	14	447	96017704	KUEHLERHAUBE KPL.
PILZKOPFBAND 25MM PS18	802102008	50	33.22	451	968977308	SCHALLDAEMMUNG
PLANETENGETRIEBE	939292201	5	1	367	90208882	KOMPAKTSEILWINDE

Bezeichnung	Artikel	Pos.	Menge	Seite	Baugruppe	Bezeichnung
PLANETENGETRIEBE	939294201	5	1	606	90028852	KOMPAKTSEILWINDE
PLANETENRAD	927530801	40	3	353	90008901	DREHWERKANTRIEB
PLANETENRAD	927601401	7	5	370	939292201	PLANETENGETRIEBE
PLANETENRAD	927602101	32	3	372	90017588	PLANETENTRAEGER
PLANETENRAD	927608601	42	3	370	939292201	PLANETENGETRIEBE
PLANETENRAD Z=28	939251101	20	5	353	90008901	DREHWERKANTRIEB
PLANETENTRAEGER	90017588	700	1	371	939292201	PLANETENGETRIEBE
PLANETENTRAEGER 150 42C	939251501	35	1	353	90008901	DREHWERKANTRIEB
PLANETENTRAEGER 150 42C	939257301	50	1	353	90008901	DREHWERKANTRIEB
PLANETENTRAEGER 170 42Cr	939250301	15	1	353	90008901	DREHWERKANTRIEB
PLANETENTRAEGER 225 42Cr	927608501	40	1	370	939292201	PLANETENGETRIEBE
PLANETENTRAEGER 275 42C	927602001	30	1	372	90017588	PLANETENTRAEGER
PLATTE 126X24X1.5 EPDM 80	979142208	8	4	410	965784408	DACHSCHEIBE VORM.
PLATTE 15X30X50 PA6G	288176208	22	1	147	919087608	DREHDURCHFUEHRUNG
PLATTE S235JR	9275826	16	1	263	10116110	VERSCHLUSSTEILE
PLEUELLAGER 88/92/38	10145100	(2)	1	175	13455297	DIESELMOTOR
PLEUELLAGER 88/92/38	10145101	(3)	1	175	13455297	DIESELMOTOR
PLEUELLAGER 88/92/38 Glyco	9073699	(3)	1	175	13455297	DIESELMOTOR
PLEUELLAGER 88/92/38 MIBA	9075607	(2)	1	175	13455297	DIESELMOTOR
PLEUELSTANGE	571582508	11	1	240	5700161	LUFTPRESSER
PLEUELSTANGE R-MOTORX8	11348072	60	4	175	13455297	DIESELMOTOR
PNEUMATIKLEITUNGEN OW	969763608	12	1	496	969763408	VERROHRUNG DRUCKLUFTA
PNEUMATIKROHR KPL.	96035593	(2335)	1	500	918731808	HARNSTOFFANLAGE
PODEST 50X1166X2200 STAHL	11346549	3	2	119	917691008	ABSTURZSICHERUNG
PODEST 50X1350X1610 STAHL	11346547	1	4	119	917691008	ABSTURZSICHERUNG
PODEST 50X1350X1610 T ZN	11346548	2	2	119	917691008	ABSTURZSICHERUNG
PODESTHALTERUNG HINTEN	967307008	26	1	387	916177508	TRITT KPL.
POLYAMIDROHR DIN 73378 6	10873149	27	50	135	917257108	ZENTRALSCHMIERUNG RAUP
POLYAMIDROHR DIN 73378 6	10873149	14	50	523	917261208	ZENTRALSCHMIERANLAGE O
POLYAMIDROHR DIN 73378 6	10873149	5	5	613	921444108	ZENTRALSCHMIERANLAGE
PRATZE 42CrMoS4+QT	10150144	1	1	224	10135434	BEFESTIGUNG DRUCKROHR
PRATZE 42CrMoS4+QT	10150144	2	1	225	10153151	DRUCKROHRSTUTZEN MIT BE
PRATZE 42CrMoS4+QT	11403994	2	1	221	10152867	INJEKTOR MIT BEFEST.
PRESSKLEMME 2 CU	11170565	36	8	129	919644008	HYDRAULISCHE ABSTUETZUN
PRESSKLEMME 2 CU	11170565	10	2	763	923285508	KLAPPKONSOLE VORM.
PRESSKLEMME 2 CU	11170565	4	4	768	968090008	HAKENSTANGE ANBAU
PROFIL 667X50X12 ALMGSI0.5	97001317	25	1	387	916177508	TRITT KPL.
PROFIL HINTEN 820X125X72.6	97000517	32	1	421	917304708	SCHIEBETUER EINBAU
PROFIL VORN 803X122X44 1.4	97000516	31	1	421	917304708	SCHIEBETUER EINBAU
PROFILDICHTRING DIN 3869 1	10040984	(2)	1	273	12583633	MOTORREGELUNGSENSORIK
PROFILDICHTUNG	7373052	(5)	1	319	10871282	VERSTELLPUMPE
PROFILRING P-R8-L/S A2GS	477100208	3	1	330	96039022	STUTZEN KPL.
PROFILRING P-R8-L/S A2GS	477100208	38	1	500	918731808	HARNSTOFFANLAGE
PROFILRING PR10-S/L A3P	477100308	32	1	500	918731808	HARNSTOFFANLAGE
PROFILRING PR22-L A3P	477102808	(2)	1	328	96034515	AUSGLEICHSBEHAELTER VO
PROFILRING PR6-S/L A3P	477101408	13	22	135	917257108	ZENTRALSCHMIERUNG RAUP
PROFILSCHELLE 137,6/K1	10494115	181	1	507	919674408	ABGASANLAGE
PROFILSCHELLE 137,6/K1	10494115	180	2	511	96051842	ABGASANLAGE VORM.
PROFILSCHELLE 163,0/K1	10494116	182	2	507	919674408	ABGASANLAGE
PROFILSCHELLE 163,0/K1	10494116	181	3	511	96051842	ABGASANLAGE VORM.
PROFILSCHELLE 312/K1	12560584	5	2	516	11429728	SCRFILTER-BAUGRUPPE
PROPORTIONALMAGNET	11161919	27	1	81	11161917	STEUERTEIL
PROPORTIONALMAGNET 24V	10471437	2	2	298	11690588	ANSTEUERGERAET
PROPORTIONALMAGNET 24V	10471437	(5)	2	301	11182664	ZWEIFACHPUMPE
PROPORTIONALMAGNET 24V	10471437	(5)	2	301	11182664	ZWEIFACHPUMPE
PROPORTIONALMAGNET 24V	10471437	(2)	2	305	11210795	VERSTELLPUMPE
PROPORTIONALMAGNET 24V	571911708	20	1	325	10292815	REGLERELEMENT
PRUEFANSCHLUSS M22X1,5	502921408	641	1	496	969763408	VERROHRUNG DRUCKLUFTA
PUFFER 30X20 GUMMI 50SH	97025484	121	4	291	96034631	KUEHLER VORM.
PUMPE MP41 SPF	591055408	2	2	416	966408908	WASSERBEHAELTER KPL.

Bezeichnung	Artikel	Pos.	Menge	Seite	Baugruppe	Bezeichnung
PUMPENDECKEL	11690587	4	1	300	10871017	VERSTELLPUMPE
PUMPENELEMENT	10216340	13	1	525	10327065	ELEKTROPUMPE
PUMPENELEMENT	11001770	39	2	136	11347526	ELEKTROPUMPE
PUMPENELEMENT	774387508	11	1	525	10327065	ELEKTROPUMPE
PUMPENGEHAEUSE	10014693	4	1	136	11347526	ELEKTROPUMPE
PUMPENGEHAEUSE	10014693	4	1	525	10327065	ELEKTROPUMPE
PUMPENRUECKLAUF	774372808	10	1	523	917261208	ZENTRALSCHMIERANLAGE O
PUMPENTRAEGER	10873571	4	1	305	11210795	VERSTELLPUMPE
PUMPENWELLE Z=40 M=2,25	9077327	1	1	277	9077386	NEBENABTRIEB VORM.
QUERTRAEGER DEMONTAGE	968811608	1	1	748	917611508	ANSCHLAGMITTEL
QUERTRAEGER KPL.	918925508	6	2	12		LIEBHERR LTR 1220
QUERTRAEGER STAHLBAU	96023109	1	1	68	918925508	QUERTRAEGER KPL.
RADIALGEBLAESE	11083445	45	1	428	11083498	HEIZKLIMAGERAET
RADIALWELLENDICHTRING B	710062601	63	2	370	939292201	PLANETENGETRIEBE
RADIALWELLENDICHTRING B	710062601	63	2	610	939294201	PLANETENGETRIEBE
RADIALWELLENDICHTRING DI	710032508	19	1	368	932916901	SEILTROMMEL
RADIALWELLENDICHTRING DI	710032508	22	1	608	939294001	SEILTROMMEL
RADIALWELLENDICHTRING DI	10167462	64	2	353	90008901	DREHWERKANTRIEB
RADIALWELLENDICHTRING DI	10359142	450	1	296	97029921	VERTEILERGETRIEBE
RADIALWELLENDICHTRING D	710059301	11	1	353	90008901	DREHWERKANTRIEB
RADIALWELLENDICHTRING D	710035001	440	1	296	97029921	VERTEILERGETRIEBE
RADIALWELLENDICHTRING DI	710054601	11	1	370	939292201	PLANETENGETRIEBE
RADIALWELLENDICHTRING DI	710054601	11	1	610	939294201	PLANETENGETRIEBE
RADMUTTER DIN 74361 M20X	520303308	10	1	240	5700161	LUFTPRESSER
RAENDELKNOPF 21-M4 PA	10652206	8	2	406	916162508	SCHEIBEN EINBAU
RAENDELKNOPF PA	10800916	49	4	399	917305408	INNENVERKLEIDUNG EINBAU
RAENDELMUTTER	10332420	(1)	1	81	11161917	STEUERTEIL
RAENDELMUTTER	10872448	5	1	575	571737808	WEGEVENTIL
RAENDELMUTTER	11342417	2	1	569	11482347	WEGEMAGNETVENTIL
RAENDELMUTTER	12100707	100	1	439	962282308	ARMLEHNE RECHTS
RAENDELMUTTER	12103903	(18)	2	572	10413106	STEUERBLOCK
RAENDELSCHRAUBE M5X10	10449664	25	8	540	91000922	EINBAUTEILE SCHALTSCHRAN
RAHMEN RAL 9005 MATT	10875930	5	1	593	11622561	OEL-LUFTKUEHLER
RASTBOLZEN CK12X67X15 NI	11001935	110	1	294	968026308	KUPPLUNGSSTELLER
RASTE	10492347	19	1	435	10877138	FAHRERSITZ
RASTRIEGEL NIROSTA	10010025	3	1	120	968038208	LAGERUNG VORN LI.
RASTRIEGEL NIROSTA	10010025	3	1	121	968038308	LAGERUNG VORN RE.
RAUPENFAHRWERK KPL.	91001569	2	1	12		LIEBHERR LTR 1220
RAUPENKETTE	12106552	(4)	1	69	917436708	BODENPLATTEN KPL.
RAUPENKETTE KPL.	11695999	1	1	69	917436708	BODENPLATTEN KPL.
RAUPENMITTELTEIL	917511608	1	1	35	917511508	RAUPENMITTELTEIL VORM.
RAUPENMITTELTEIL KPL.	919499308	4	1	12		LIEBHERR LTR 1220
RAUPENMITTELTEIL VORM.	917511508	1	1	32	919499308	RAUPENMITTELTEIL KPL.
RAUPENTRAEGER KPL.LI.	91001371	10	1	12		LIEBHERR LTR 1220
RAUPENTRAEGER KPL.RE.	91001373	11	1	12		LIEBHERR LTR 1220
RAUPENTRAEGER STAHLBAU	96018230	1	1	75	91001377	RAUPENTRAEGER VORM.LI.
RAUPENTRAEGER STAHLBAU	96019396	1	1	108	91001378	RAUPENTRAEGER VORM.RE.
RAUPENTRAEGER VORM.LI.	91001377	1	1	70	91001371	RAUPENTRAEGER KPL.LI.
RAUPENTRAEGER VORM.RE.	91001378	1	1	103	91001373	RAUPENTRAEGER KPL.RE.
REDUKTIONSMITTEL-DRUCK	10144303	19	1	500	918731808	HARNSTOFFANLAGE
REDUKTIONSMITTEL-SAUGLEI	10144270	18	1	500	918731808	HARNSTOFFANLAGE
REDUKTIONSMITTELINJEKT	12445245	12	1	500	918731808	HARNSTOFFANLAGE
REDUKTIONSMITTELPUMPE A	11373478	11	1	500	918731808	HARNSTOFFANLAGE
REDUZIERSTUECK	7002253	(16)	1	83	11320954	LEITRADEINHEIT
REDUZIERSTUTZEN RI 8 M16x	10120066	19	1	253	12512627	ABGASSTUTZEN ANBAU
REDUZIERUNG M20X1,5-M16	10475314	9	1	630	917368108	EL.KUEHLWASSERVORWAE
REDUZIERUNG M25X1,5 M16	10044648	12	2	625	918462708	FREMDEINSPEISUNG
REGLER	10292801	3	1	319	10871282	VERSTELLPUMPE
REGLER	10472196	3	1	309	11210798	VERSTELLPUMPE
REGLERELEMENT	10292815	5	1	324	10292801	REGLER

Bezeichnung	Artikel	Pos.	Menge	Seite	Baugruppe	Bezeichnung
REGLERELEMENT	10472202	3	1	312	10472196	REGLER
REGLERELEMENT	571900808	2	1	312	10472196	REGLER
REGLERELEMENT	571900808	2	1	324	10292801	REGLER
REIBPLATTE 3M TYP35	97116895	8	6	351	919369308	DREHWERK
REIBSCHEIBE	975529708	29	2	445	96036790	DREHBUEHNENVERKLEIDUN
REIFENFUELLSCHLAUCH 4,5X	520190408	67	1	152	928569808	GRUNDWERKZEUG
RELAIS 24V/1W 26X26X24MM	630105408	10	1	540	91000922	EINBAUTEILE SCHALTSCHRAN
RELAISSTECKSOCKEL 9-POL	630122908	506	2	48	96045227	KABELSTRANG
RELAISSTECKSOCKEL 9-POL	630122908	512	23	542	96045387	DRAEHTE GRUNDAUFBAU KPL
RELING	916162808	19	1	381	919010208	KRANFUEHRERKABINE VORM.
REP-DICHTSCHEIBE 151,6X15	12993450	2	1	182	10154458	ZYLINDER
REPARATURSATZ	10650501	(998)	1	561	96045351	HYDRAULIK OBERWAGEN
REPARATURSATZ	10650501	(998)	1	561	96045351	HYDRAULIK OBERWAGEN
REPARATURSATZ	11003094	999	1	497	502657308	LUFTTROCKNER
REPARATURSATZ	571582108	1	1	240	5700161	LUFTPRESSER
REPARATURSATZ	571582708	15	1	240	5700161	LUFTPRESSER
REPARATURSATZ -E DF/LF	10035534	(2)	1	560	96045351	HYDRAULIK OBERWAGEN
REPARATURSEGMENT 1-FAC	11658888	(997)	1	69	917436708	BODENPLATTEN KPL.
RIEGEL SCHWK.	966825408	10	1	421	917304708	SCHIEBETUER EINBAU
RIEGELKLEMME	602116008	14	4	381	919010208	KRANFUEHRERKABINE VORM.
RIEMENSCHEIBE 31.5X8PKX21	10146185	1	1	200	10141974	KURBELWELLENANBAUTEILE
RILLENKUGELLAGER	10114839	4	1	52	11346779	SCHLEIFRINGUEBERTRAGER
RILLENKUGELLAGER 50X65X7	10114838	10	1	52	11346779	SCHLEIFRINGUEBERTRAGER
RILLENKUGELLAGER DIN 625	745139101	66	1	353	90008901	DREHWERKANTRIEB
RILLENKUGELLAGER DIN 625	745129508	390	2	296	97029921	VERTEILERGETRIEBE
RILLENKUGELLAGER DIN 625	10169236	350	1	296	97029921	VERTEILERGETRIEBE
RILLENKUGELLAGER DIN 625	745159301	3	1	370	939292201	PLANETENGETRIEBE
RILLENKUGELLAGER DIN 625	745159301	3	1	610	939294201	PLANETENGETRIEBE
RILLENKUGELLAGER DIN 625	571819808	360	2	296	97029921	VERTEILERGETRIEBE
RILLENKUGELLAGER DIN 625	745145308	410	4	296	97029921	VERTEILERGETRIEBE
RILLENKUGELLAGER DIN 625	745165608	370	1	296	97029921	VERTEILERGETRIEBE
RILLENKUGELLAGER DIN 625	745129501	4	1	424	966253908	WAGEN
RILLENKUGELLAGER DIN 625	10294494	3	4	387	916177508	TRITT KPL.
RING	570110708	5	14	361	570109508	TRIEBWERK
RINGLUEFTER D=654	550639508	101	1	291	96034631	KUEHLER VORM.
RINGSCHRAUBE DIN 580 M10X	402600208	30	4	572	10413106	STEUERBLOCK
RINGSCHRAUBE DIN 580 M12	10179932	18	8	129	919644008	HYDRAULISCHE ABSTUETZUN
RINGSCHRAUBE DIN 580 M12	10179932	10	1	348	969050308	OELBEHAELTER VORM.
RIPPENROHR ALU	10493045	168	2	496	969763408	VERROHRUNG DRUCKLUFTA
ROHR	9080660	10	1	189	10155227	OELWANNE VORM.
ROHR 100X33 ABS	97005143	4	1	401	966282308	VERKLEIDUNG LI.
ROHR 12.0X1189 X5CRNI18-10	97121634	9	1	500	918731808	HARNSTOFFANLAGE
ROHR 15.0 X24 S355J2C+C FE	971805708	19	4	433	918810308	STEUERSTAND
ROHR 16X2X70 E235+N VERZ	946104608	34	2	286	919007708	ANTRIEBSAGGREGAT VORM.
ROHR 18.0X622 X5CRNI18-10	97008549	1	1	477	966707708	SPIEGELHALTER VORM.
ROHR 18X2X640	12105369	280	1	296	97029921	VERTEILERGETRIEBE
ROHR 1959X1553X30 X5CRNI	975218508	1	2	392	916162808	RELING
ROHR 21,3X4X624 S355J2H FE	953536608	7	1	690	917292408	TELESKOP 5 VORM.
ROHR 21,3X4X700 S355J2H FE	953536708	8	1	690	917292408	TELESKOP 5 VORM.
ROHR 21.3X596 S355J2H FE//	973740408	73	1	691	917292408	TELESKOP 5 VORM.
ROHR 22.0X319 X6CRNITI1810	97064857	(1)	1	328	96034515	AUSGLEICHSBEHAELTER VO
ROHR 30/FLEXIBEL PAK	553159408	9	0.62	482	96020359	ZUSATZHEIZUNG VORM.
ROHR 3X0X0 X5CRNI18-10	97037947	4	1	640	968267208	STATIV
ROHR 49X68X78 EPDM	97006624	4	1	415	916163008	WISCHANLAGE EINBAU
ROHR 6X1X1161 E235+N	97039388	774	4	60	96035803	ROHRLEITUNGEN MITTELTEIL
ROHR 6X1X1169 E235+N	97039389	775	4	60	96035803	ROHRLEITUNGEN MITTELTEIL
ROHR 6X1X132 E235+N	97039386	772	4	60	96035803	ROHRLEITUNGEN MITTELTEIL
ROHR 6X1X132 E235+N	97039387	773	4	60	96035803	ROHRLEITUNGEN MITTELTEIL
ROHR 8.0X80 X5CRNI18-10	97124033	1	1	330	96039022	STUTZEN KPL.
ROHR 85X27 ABS	97005144	3	1	402	966282408	VERKLEIDUNG RE.

Bezeichnung	Artikel	Pos.	Menge	Seite	Baugruppe	Bezeichnung
ROHR EN 10305-4 22X1,5X107	10190120	5	1	612	90200103	OELMESSEINRICHTUNG
ROHR KPL.	96051844	(2)	1	511	96051842	ABGASANLAGE VORM.
ROHR KPL.	96051845	(1)	1	511	96051842	ABGASANLAGE VORM.
ROHR KPL.	968661408	404	2	288	919007708	ANTRIEBSAGGREGAT VORM.
ROHR KPL.	969939408	4	1	328	96034515	AUSGLEICHSBEHAELTER VO
ROHR KPL. 10X1,5X120 AL10 -	929802808	484	1	719	968187308	ROHRLEITUNGEN TELE
ROHR KPL. 10X1,5X137 AL10 -	929803108	488	1	719	968187308	ROHRLEITUNGEN TELE
ROHR KPL. 10X1,5X175 10L -	969325008	247	1	599	918956208	ROHRLEITUNGEN OBERWAGE
ROHR KPL. 10X1,5X1951 10S -	968593808	722	2	60	96035803	ROHRLEITUNGEN MITTELTEIL
ROHR KPL. 10X1,5X200 10L -	968155008	302	1	599	918956208	ROHRLEITUNGEN OBERWAGE
ROHR KPL. 10X1,5X2030 10S -	968593908	723	2	60	96035803	ROHRLEITUNGEN MITTELTEIL
ROHR KPL. 10X1,5X239 AL10 -	929802308	483	2	719	968187308	ROHRLEITUNGEN TELE
ROHR KPL. 10X1,5X2479 G10S	968594008	724	2	60	96035803	ROHRLEITUNGEN MITTELTEIL
ROHR KPL. 10X1,5X2512 G10S	968594108	725	2	60	96035803	ROHRLEITUNGEN MITTELTEIL
ROHR KPL. 10X1,5X278 AL10 -	929804608	489	1	719	968187308	ROHRLEITUNGEN TELE
ROHR KPL. 10X1,5X282 AL10 -	929806008	490	1	719	968187308	ROHRLEITUNGEN TELE
ROHR KPL. 10X1,5X348 10L -	969438308	230	1	599	918956208	ROHRLEITUNGEN OBERWAGE
ROHR KPL. 10X1,5X407 AL10 -	929803008	486	1	719	968187308	ROHRLEITUNGEN TELE
ROHR KPL. 10X1,5X600 10S -	969325208	291	1	599	918956208	ROHRLEITUNGEN OBERWAGE
ROHR KPL. 10X1,5X671 AL10 -	929802208	482	1	719	968187308	ROHRLEITUNGEN TELE
ROHR KPL. 10X1,5X687 10L -	969325108	290	1	599	918956208	ROHRLEITUNGEN OBERWAGE
ROHR KPL. 10X1,5X853 AL10 -	929802108	481	1	719	968187308	ROHRLEITUNGEN TELE
ROHR KPL. 12X1,5X -	96045839	(2)	1	286	919007708	ANTRIEBSAGGREGAT VORM.
ROHR KPL. 12X1,5X1680 12L -	968168108	715	1	60	96035803	ROHRLEITUNGEN MITTELTEIL
ROHR KPL. 12X1,5X1875,7 PR1	96035909	709	1	60	96035803	ROHRLEITUNGEN MITTELTEIL
ROHR KPL. 12X1,5X1881,6 PR1	96035913	729	1	60	96035803	ROHRLEITUNGEN MITTELTEIL
ROHR KPL. 12X1,5X1991 12S -	968168308	717	2	60	96035803	ROHRLEITUNGEN MITTELTEIL
ROHR KPL. 12X1,5X1993 12S -	968168708	721	2	60	96035803	ROHRLEITUNGEN MITTELTEIL
ROHR KPL. 12X1,5X2093 12S -	968168208	716	2	60	96035803	ROHRLEITUNGEN MITTELTEIL
ROHR KPL. 12X1,5X2102 12S -	968168608	720	2	60	96035803	ROHRLEITUNGEN MITTELTEIL
ROHR KPL. 12X1,5X2292 12L -	968168008	714	1	60	96035803	ROHRLEITUNGEN MITTELTEIL
ROHR KPL. 12X1,5X467 12S -	968168808	(760)	4	132	968077208	HYDRAULIK ABSTUETZUNG
ROHR KPL. 12X1,5X480 12L -	969325308	292	1	599	918956208	ROHRLEITUNGEN OBERWAGE
ROHR KPL. 12X1,5X780 12S -	968167108	704	1	60	96035803	ROHRLEITUNGEN MITTELTEIL
ROHR KPL. 16X2X206 16S - 16	969324808	245	1	599	918956208	ROHRLEITUNGEN OBERWAGE
ROHR KPL. 16X2X2361 AS16 -	962977708	496	2	730	968223408	ROHRLEITUNGEN KLAPPSPI
ROHR KPL. 16X2X2550 AS16 -	968201408	494	2	730	968223408	ROHRLEITUNGEN KLAPPSPI
ROHR KPL. 16X2X5360 AS16 -	962977608	495	2	730	968223408	ROHRLEITUNGEN KLAPPSPI
ROHR KPL. 18X1,5X -	968544708	(327)	1	496	969763408	VERROHRUNG DRUCKLUFTA
ROHR KPL. 18X1,5X1474 18L -	969979608	(326)	1	496	969763408	VERROHRUNG DRUCKLUFTA
ROHR KPL. 18X1,5X268 18L -	969324908	246	1	599	918956208	ROHRLEITUNGEN OBERWAGE
ROHR KPL. 18X1,5X662 18L - G	969978408	(328)	1	496	969763408	VERROHRUNG DRUCKLUFTA
ROHR KPL. 20X2,5X1472 20S -	969165608	711	1	60	96035803	ROHRLEITUNGEN MITTELTEIL
ROHR KPL. 20X2,5X1768 20S -	968168408	718	2	60	96035803	ROHRLEITUNGEN MITTELTEIL
ROHR KPL. 20X2,5X1842 20S -	968168508	719	2	60	96035803	ROHRLEITUNGEN MITTELTEIL
ROHR KPL. 20X2,5X1931 20S -	969165508	710	1	60	96035803	ROHRLEITUNGEN MITTELTEIL
ROHR KPL. 20X2,5X2529 20S -	968158208	260	1	599	918956208	ROHRLEITUNGEN OBERWAGE
ROHR KPL. 20X2,5X2536 20S -	968158508	265	1	599	918956208	ROHRLEITUNGEN OBERWAGE
ROHR KPL. 22X2,5X -	96045838	(1)	1	286	919007708	ANTRIEBSAGGREGAT VORM.
ROHR KPL. 22X2,5X1415 G22L	968156108	320	1	599	918956208	ROHRLEITUNGEN OBERWAGE
ROHR KPL. 22X2,5X1631 22L -	968167908	713	1	60	96035803	ROHRLEITUNGEN MITTELTEIL
ROHR KPL. 22X2,5X2118 22L -	968167808	712	1	60	96035803	ROHRLEITUNGEN MITTELTEIL
ROHR KPL. 22X2,5X229 AL22 -	968021308	10	1	612	90200103	OELMESSEINRICHTUNG
ROHR KPL. 22X2,5X245 AL22 -	968021408	25	1	612	90200103	OELMESSEINRICHTUNG
ROHR KPL. 22X2,5X357 AL22 -	968021508	10	1	374	90200104	OELMESSEINRICHTUNG
ROHR KPL. 22X2,5X407 AL22 -	968021608	25	1	374	90200104	OELMESSEINRICHTUNG
ROHR KPL. 25X3X1705 30 BO.	969344508	200	1	599	918956208	ROHRLEITUNGEN OBERWAGE
ROHR KPL. 28X2X1823,6 PR28-	96035912	728	1	60	96035803	ROHRLEITUNGEN MITTELTEIL
ROHR KPL. 28X2X1847,9 PR28-	96035907	708	1	60	96035803	ROHRLEITUNGEN MITTELTEIL
ROHR KPL. 38X5X -	968154808	300	1	599	918956208	ROHRLEITUNGEN OBERWAGE

Bezeichnung	Artikel	Pos.	Menge	Seite	Baugruppe	Bezeichnung
ROHR KPL. 38X5X -	968154908	301	1	599	918956208	ROHRLEITUNGEN OBERWAGE
ROHR KPL. 38X5X -	968155108	303	1	599	918956208	ROHRLEITUNGEN OBERWAGE
ROHR KPL. 38X5X -	968159308	477	1	599	918956208	ROHRLEITUNGEN OBERWAGE
ROHR KPL. 38X5X -	968166708	700	1	60	96035803	ROHRLEITUNGEN MITTELTEIL
ROHR KPL. 38X5X -	968166808	701	1	60	96035803	ROHRLEITUNGEN MITTELTEIL
ROHR KPL. 38X5X -	968166908	702	1	60	96035803	ROHRLEITUNGEN MITTELTEIL
ROHR KPL. 38X5X -	968167008	703	1	60	96035803	ROHRLEITUNGEN MITTELTEIL
ROHR KPL. 38X5X1058 AS38 3	96035929	304	1	599	918956208	ROHRLEITUNGEN OBERWAGE
ROHR KPL. 38X5X1078 MU.38	969438208	309	1	599	918956208	ROHRLEITUNGEN OBERWAGE
ROHR KPL. 38X5X1774,6 38X1	96035910	726	1	60	96035803	ROHRLEITUNGEN MITTELTEIL
ROHR KPL. 38X5X1775 38X1,5	96035905	706	1	60	96035803	ROHRLEITUNGEN MITTELTEIL
ROHR KPL. 38X5X1779,1 38X1	96035906	707	1	60	96035803	ROHRLEITUNGEN MITTELTEIL
ROHR KPL. 38X5X1779,5 38X1	96035911	727	1	60	96035803	ROHRLEITUNGEN MITTELTEIL
ROHR KPL. 38X5X1808 MU.38S	968162308	(250)	1	616	967784808	HYDRAULIK HILFSHUBWERK
ROHR KPL. 38X5X1916 MU.38S	968162408	(251)	1	616	967784808	HYDRAULIK HILFSHUBWERK
ROHR KPL. 38X5X360 MU.38S	968159108	475	1	599	918956208	ROHRLEITUNGEN OBERWAGE
ROHR KPL. 38X5X463 MU.38S	968159008	474	1	599	918956208	ROHRLEITUNGEN OBERWAGE
ROHR KPL. 38X5X548 MU.38S	968158908	473	1	599	918956208	ROHRLEITUNGEN OBERWAGE
ROHR KPL. 38X5X619 AS38 - A	966546008	480	3	719	968187308	ROHRLEITUNGEN TELE
ROHR KPL. 42X3X688 42L - W	968159408	478	2	599	918956208	ROHRLEITUNGEN OBERWAGE
ROHR KPL. 42X3X990 42L - W	968159508	479	1	599	918956208	ROHRLEITUNGEN OBERWAGE
ROHR KPL. 6X1X239 AS6 - AL6	922676808	(487)	1	722	967785408	ZUSATZHYDRAULIK KLAPPSPI
ROHR KPL. 6X1X327 AL6 - AL6	968205108	770	4	60	96035803	ROHRLEITUNGEN MITTELTEIL
ROHR KPL. 6X1X327 AL6 - AL6	968205208	771	4	60	96035803	ROHRLEITUNGEN MITTELTEIL
ROHR KPL. 6X1X406,6 AS6 PR	96035646	240	1	599	918956208	ROHRLEITUNGEN OBERWAGE
ROHR LN 80 401 22X1.5X255 E	979323301	30	1	612	90200103	OELMESSEINRICHTUNG
ROHR SCHWK.	963498508	79	1	691	917292408	TELESKOP 5 VORM.
ROHR SCHWK.	968011608	6	1	147	919087608	DREHDURCHFUEHRUNG
ROHR SCHWK. RAL 9005,M,G	966621108	12	1	399	917305408	INNENVERKLEIDUNG EINBAU
ROHR SCHWK. RAL 9005,M,GT	966620008	13	1	399	917305408	INNENVERKLEIDUNG EINBAU
ROHR SCHWK. SCHWARZ PUL	966513708	17	1	409	966497908	FRONTSCHEIBE KPL.
ROHR SCHWK. SCHWARZ PUL	966662508	6	1	381	919010208	KRANFUEHRERKABINE VORM.
ROHR ST12 SPF	97087964	3	1	520	918731908	LUFTFILTERANLAGE
ROHRLEITUNG	10143542	4	1	228	10143341	KRAFTSTOFFLEITUNGEN
ROHRLEITUNG	10143543	3	1	228	10143341	KRAFTSTOFFLEITUNGEN
ROHRLEITUNG 10X1X425	12921811	1	1	247	10148216	ROHRLEITUNG ANBAU
ROHRLEITUNG 15X1,5	10130104	6	1	228	10143341	KRAFTSTOFFLEITUNGEN
ROHRLEITUNG 22X1,5	10140732	9	1	232	10145173	ANSAUGSTUTZEN ANBAU
ROHRLEITUNG 22X1,5	10145175	1	1	242	10145176	ROHRLEITUNG ANBAU
ROHRLEITUNG 6X1	10132170	3	1	229	10143342	LECKOELRUECKLAUF
ROHRLEITUNG 6X1	10133607	13	1	229	10143342	LECKOELRUECKLAUF
ROHRLEITUNG 6X1	10141846	8	1	229	10143342	LECKOELRUECKLAUF
ROHRLEITUNG 6X1	10145838	9	1	276	10144036	NEBENABTRIEB ANBAU
ROHRLEITUNG 6X1	11420632	3	1	254	11420633	TAKTVENTIL
ROHRLEITUNG 6X1	12429430	4	1	254	11420633	TAKTVENTIL
ROHRLEITUNG 8X1	10132180	19	1	229	10143342	LECKOELRUECKLAUF
ROHRLEITUNG 8X1	10145069	17	1	253	12512627	ABGASSTUTZEN ANBAU
ROHRLEITUNG 8X1	10145070	18	1	253	12512627	ABGASSTUTZEN ANBAU
ROHRLEITUNG 8X2	10143251	1	1	229	10143342	LECKOELRUECKLAUF
ROHRLEITUNG ANBAU	10145176	333	1	177	13455297	DIESELMOTOR
ROHRLEITUNG ANBAU	10148216	381	1	177	13455297	DIESELMOTOR
ROHRLEITUNGEN ABGASANL	96051843	90	1	511	96051842	ABGASANLAGE VORM.
ROHRLEITUNGEN ABSTUETZ	968078808	11	1	132	968077208	HYDRAULIK ABSTUETZUNG
ROHRLEITUNGEN ANTRIEBSA	968986008	8	1	286	919007708	ANTRIEBSAGGREGAT VORM.
ROHRLEITUNGEN DRUCKLUFT	969842808	11	1	496	969763408	VERROHRUNG DRUCKLUFTA
ROHRLEITUNGEN KLAPPSPI	927163908	11	1	722	967785408	ZUSATZHYDRAULIK KLAPPSPI
ROHRLEITUNGEN KLAPPSPI	968223408	11	1	728	967785008	ZUSATZHYDRAULIK KLAPPSPI
ROHRLEITUNGEN MITTELTEIL	96035803	11	1	56	96035801	HYDRAULIK MITTELTEIL
ROHRLEITUNGEN OBERWAGE	918956208	193	1	14		LIEBHERR LTR 1220
ROHRLEITUNGEN TELE	968187308	11	1	717	967784508	HYDRAULIK TELE

Bezeichnung	Artikel	Pos.	Menge	Seite	Baugruppe	Bezeichnung
ROHRLEITUNGEN WINDE 2	968083808	11	1	616	967784808	HYDRAULIK HILFSHUBWERK
ROHRSCHELLE 33/20	774225008	18	1	482	96020359	ZUSATZHEIZUNG VORM.
ROHRSCHELLE 43/20	774221708	24	7	480	918759808	ZUSATZHEIZUNG OW
ROHRSCHELLE 8 S235JR	10127139	23	2	253	12512627	ABGASSTUTZEN ANBAU
ROHRSCHELLE DIN3016 8X15	10876636	185	3	511	96051842	ABGASANLAGE VORM.
ROHRSCHELLENTEIL 26X50X3	97037153	300	6	56	96035801	HYDRAULIK MITTELTEIL
ROHRSCHELLENTEIL 26X50X3	97037154	301	6	56	96035801	HYDRAULIK MITTELTEIL
ROHRSTUTZEN GSCK45	97042155	6	1	430	969085208	HEIZUNG VORM.
ROHRSTUTZEN R1/4"	10014698	1	1	139	774375108	DURCHGANGSNIPPELBLOCK
ROHRUNTERLAGE	774215508	311	1	496	969763408	VERROHRUNG DRUCKLUFTA
ROHRWENDEL 9	774383508	26	10	135	917257108	ZENTRALSCHMIERUNG RAUP
ROLLE 22X13 PA 12	97001109	6	2	424	966253908	WAGEN
ROLLE 25X180 ALCUMGPB	97031463	37	1	378	917259908	KRANFUEHRERKABINE ANBA
ROLLE 30X11 PA 12	97008171	5	1	424	966253908	WAGEN
ROLLE 50.0X25 S355J2+AR FE	947868208	2	2	762	929582108	HALTERUNG VORM.
ROLLE 50.0X25 S355J2+AR FE	947868208	3	1	765	923879808	KONSOLE VORM.
ROLLE RD70X15 PA6G	939279608	20	1	751	968728808	KONSOLE VORM.
ROLLENDREHVERBINDUNG	917259408	117	1	12		LIEBHERR LTR 1220
ROLLENDREHVERBINDUNG 17	90025640	1	1	349	917259408	ROLLENDREHVERBINDUNG
ROLLENKAEFIG	927514301	16	38	370	939292201	PLANETENGETRIEBE
ROLLENKAEFIG	927514301	16	38	610	939294201	PLANETENGETRIEBE
ROLLENMUNDSTUECK FE//ZN	973774708	34	1	668	917291908	ANLENKSTUECK VORM.
ROLLENMUNDSTUECK FE//ZN	973774708	58	1	673	917292008	TELESKOP 1 VORM.
ROLLENMUNDSTUECK FE//ZN	973774708	58	1	677	917292108	TELESKOP 2 VORM.
ROLLENMUNDSTUECK FE//ZN	973774708	58	1	681	917292208	TELESKOP 3 VORM.
ROLLENMUNDSTUECK FE//ZN	973774708	58	1	685	917292308	TELESKOP 4 VORM.
ROLLENSTOESSEL	10153536	1	2	211	9079870	STEUERUNGSTEILE
ROLLENTRAEGER SCHWK.	929591608	6	1	762	929582108	HALTERUNG VORM.
ROLLENTRAEGER SCHWK.	967771808	2	1	734	917268408	MASTNASE
ROLLO	11002446	27	1	399	917305408	INNENVERKLEIDUNG EINBAU
ROLLO	11002447	26	1	399	917305408	INNENVERKLEIDUNG EINBAU
ROTOR	11171311	1	1	742	11482252	WINDGESCHWINDIGKEITSGE
RS AGGREGATETRAEGER VO	11359503	1	1	183	10147687	AGGREGATETRAEGER ANBA
RS DRUCKFILTER DF...330FG	10101384	(3)	1	560	96045351	HYDRAULIK OBERWAGEN
RS DRUCKREGLER	11003089	998	1	497	502657308	LUFTTROCKNER
RS DRUCKROHRSTUTZEN	10141140	2	1	222	10152874	RS INJEKTOR
RS DRUCKROHRSTUTZEN	10141140	1	1	225	10153151	DRUCKROHRSTUTZEN MIT BE
RS DRUCKROHRSTUTZEN	10141140	200	1	225	10153151	DRUCKROHRSTUTZEN MIT BE
RS FLANSCH	10145815	8	1	210	10138230	NOCKENWELLE KPL.
RS FLANSCH	10145815	8	1	210	10138230	NOCKENWELLE KPL.
RS GRIFF	12100622	1	1	403	11002447	ROLLO
RS HOCHDRUCKANSCHLUSS	12932487	270	1	219	10146658	HOCHDRUCKPUMPE
RS HOCHDRUCKSENSOR	12881001	260	1	219	10146658	HOCHDRUCKPUMPE
RS INJEKTOR LI2.7-20-SF-950	10152874	200	1	221	10152867	INJEKTOR MIT BEFEST.
RS KABELSATZ	967363808	999	1	473	10340105	WARNLEUCHTE
RS KURBELWELLENDICHTUN	10121952	1	1	199	10153583	KURBELWELLENDICHTUNG
RS KURBELWELLENDICHTU	10121335	2	1	199	10153583	KURBELWELLENDICHTUNG
RS KURBELWELLENLAGERUN	10116939	1	1	197	9076457	KURBELWELLENLAGERSATZ
RS SAUGDROSSELVENTIL	12490199	230	1	219	10146658	HOCHDRUCKPUMPE
RS TELESKOPVERRIEGELUN	571934508	50	1	699	571928508	ZYLINDERKOPF KPL.
RS VENTIL	12917604	250	1	219	10146658	HOCHDRUCKPUMPE
RS VENTIL	12966286	240	1	219	10146658	HOCHDRUCKPUMPE
RS VERSCHLUSSSCHRAUBE	12932488	275	1	219	10146658	HOCHDRUCKPUMPE
RS VERSTELLUNG	10872672	998	1	403	11002447	ROLLO
RS VORFOERDERPUMPE	12923599	220	1	219	10146658	HOCHDRUCKPUMPE
RS WASSERHEIZGERAET	96004475	999	1	484	10876576	WASSERHEIZGERAET
RS ZYLINDERKOPF	13486106	(998)	1	202	10149580	ZYLINDERKOPF ANBAU
RS ZYLINDERVERRIEGELUNG	571934608	60	1	699	571928508	ZYLINDERKOPF KPL.
RUECKENTEIL	10663466	1	1	435	10877138	FAHRERSITZ
RUECKFAHRWARNUNG 12-36	614009908	11	1	41	96045226	SCHALTKASTEN VORM.

Bezeichnung	Artikel	Pos.	Menge	Seite	Baugruppe	Bezeichnung
RUECKSCHLAGVENTIL	10119971	4	1	195	10139112	OELLEITUNG VORM.
RUECKSCHLAGVENTIL	10280215	80	1	624	10038509	STEUERBLOCK
RUECKSCHLAGVENTIL	10280216	90	1	624	10038509	STEUERBLOCK
RUECKSCHLAGVENTIL	10430042	9	1	574	10332882	STEUERBLOCK
RUECKSCHLAGVENTIL	10875075	5	1	568	11211756	STEUERBLOCK
RUECKSCHLAGVENTIL	11007219	3	6	526	11002916	VERTEILERKOMBINATION
RUECKSCHLAGVENTIL	11066829	3	1	79	11182596	VERSTELLMOTOR
RUECKSCHLAGVENTIL	12104031	24	1	648	12102921	WIPPZYLINDER
RUECKSCHLAGVENTIL	570531308	11	1	582	11341035	STEUERBLOCK
RUECKSCHLAGVENTIL	570818008	10	1	582	11341035	STEUERBLOCK
RUECKSCHLAGVENTIL	591055608	10	2	415	916163008	WISCHANLAGE EINBAU
RUECKSCHLAGVENTIL	774378108	(1)	1	523	917261208	ZENTRALSCHMIERANLAGE O
RUECKSCHLAGVENTIL 2.5BAR	11839607	100	1	280	918731408	ANTRIEBSAGGREGAT KPL.
RUECKSCHLAGVENTIL 250BA	511316708	171	1	561	96045351	HYDRAULIK OBERWAGEN
RUECKSCHLAGVENTIL 250BA	511476908	197	2	561	96045351	HYDRAULIK OBERWAGEN
RUECKSCHLAGVENTIL 250B	511481508	160	1	98	96035796	HYDR.FAHRANTRIEB
RUECKSCHLAGVENTIL 250B	511481508	160	1	115	96035792	HYDR.FAHRANTRIEB
RUECKSCHLAGVENTIL 250B	511481508	151	1	616	967784808	HYDRAULIK HILFSHUBWERK
RUECKSCHLAGVENTIL 250BA	511435108	172	1	561	96045351	HYDRAULIK OBERWAGEN
RUECKSCHLAGVENTIL 250BA	511457808	9	3	348	969050308	OELBEHAELTER VORM.
RUECKSCHLAGVENTIL 400BA	510413508	203	1	561	96045351	HYDRAULIK OBERWAGEN
RUECKSCHLAGVENTIL 400BA	511311808	154	1	560	96045351	HYDRAULIK OBERWAGEN
RUECKSCHLAGVENTIL 400BA	511311808	170	1	616	967784808	HYDRAULIK HILFSHUBWERK
RUECKSCHLAGVENTIL 400BA	511460608	152	1	560	96045351	HYDRAULIK OBERWAGEN
RUECKSCHLAGVENTIL 400BA	511460608	150	1	616	967784808	HYDRAULIK HILFSHUBWERK
RUECKSCHLAGVENTIL 400BA	511493708	152	1	717	967784508	HYDRAULIK TELE
RUECKSCHLAGVENTIL 400B	511431514	199	1	561	96045351	HYDRAULIK OBERWAGEN
RUECKSCHLAGVENTIL 420BA	510408708	153	1	560	96045351	HYDRAULIK OBERWAGEN
RUECKSCHLAGVENTIL 420BA	510408708	171	1	616	967784808	HYDRAULIK HILFSHUBWERK
RUECKZUGPLATTE	570110008	7	1	360	570109008	TRIEBWERK
RUEHRFLUEGEL	10014712	27	1	525	10327065	ELEKTROPUMPE
RUEHRFLUEGEL	10664141	24	1	136	11347526	ELEKTROPUMPE
RUNDLAGER C50X30XM10	726905008	120	2	291	96034631	KUEHLER VORM.
RUNDLAGER C50X30XM10	726905008	8	4	592	967980508	OELKUEHLER VORM.
RUNDSCHLINGE DIN EN 1492-	10280715	2	1	749	968811608	QUERTRAEGER
RUNDUMKENNLEUCHTE 55W	10470032	1	1	160	915731908	EL.TEILE VERSANDMONTAGE
SAE-FLANSCH SAE1 1/2-C61-	511502608	430	2	288	919007708	ANTRIEBSAGGREGAT VORM.
SAE-FLANSCHHAELFTE SAE2	510598408	432	6	288	919007708	ANTRIEBSAGGREGAT VORM.
SAE-FLANSCHVERBINDUNG G	474901708	515	1	562	96045351	HYDRAULIK OBERWAGEN
SAE-FLANSCHVERBINDUNG G	510702408	504	1	562	96045351	HYDRAULIK OBERWAGEN
SAE-FLANSCHVERBINDUNG W	474909008	517	1	562	96045351	HYDRAULIK OBERWAGEN
SAE-FLANSCHVERBINDUNG	474908108	508	2	562	96045351	HYDRAULIK OBERWAGEN
SAE-FLANSCHVERBINDUNG W	474907608	501	1	562	96045351	HYDRAULIK OBERWAGEN
SAE-FLANSCHVERBINDUNG W	474906708	505	2	562	96045351	HYDRAULIK OBERWAGEN
SAE-FLANSCHVERBINDUNG	474907508	502	1	562	96045351	HYDRAULIK OBERWAGEN
SAE-FLANSCHVERBINDUNG	474906908	516	3	562	96045351	HYDRAULIK OBERWAGEN
SAE-FLANSCHVERBINDUNG	474906608	503	2	562	96045351	HYDRAULIK OBERWAGEN
SAE-VERSCHLUSSFLANSCH	511510008	500	1	562	96045351	HYDRAULIK OBERWAGEN
SAMMELROHR 22L/10 A3CR6	10871151	200	1	561	96045351	HYDRAULIK OBERWAGEN
SAMMELROHR 42L/10 A3CR6F	10412850	202	1	561	96045351	HYDRAULIK OBERWAGEN
SAMMELROHR 42L/11 SPF	10871595	201	1	561	96045351	HYDRAULIK OBERWAGEN
SAUGFLANSCH CR6-FREI	510146208	400	1	291	96034631	KUEHLER VORM.
SAUGFLANSCH CR6-FREI	510146208	521	1	562	96045351	HYDRAULIK OBERWAGEN
SAUGROHR-OEL G-ALSI10MG	97032261	3	1	348	969050308	OELBEHAELTER VORM.
SAUGROHR-OEL G-ALSI10MG	97032263	203	1	287	919007708	ANTRIEBSAGGREGAT VORM.
SAUGROHR-OEL G-ALSI10MG	97053616	202	1	287	919007708	ANTRIEBSAGGREGAT VORM.
SAUGROHR-OEL G-ALSI10MG	97065544	207	1	287	919007708	ANTRIEBSAGGREGAT VORM.
SAUGROHR-OEL SPF	976388708	204	1	287	919007708	ANTRIEBSAGGREGAT VORM.
SAUGSCHLAUCH SPF	970658608	250	1	280	918731408	ANTRIEBSAGGREGAT KPL.
SAUGSTUTZEN 50.0X78 S355	953661008	400	1	288	919007708	ANTRIEBSAGGREGAT VORM.

Bezeichnung	Artikel	Pos.	Menge	Seite	Baugruppe	Bezeichnung
SAUGSTUTZEN 82.5X87 S355	976490008	401	1	288	919007708	ANTRIEBSAGGREGAT VORM.
SCHAEKEL 0,08T NG4 STAINLE	10300552	31	2	409	966497908	FRONTSCHEIBE KPL.
SCHAEKEL 12T SPF	10283201	6	1	751	968728808	KONSOLE VORM.
SCHAEKEL DIN 82101 0,25T N	773933508	3	1	659	925141508	SCHLAUCHFUEHRUNG VORM.
SCHAEKEL DIN 82101 0,25T N	773933508	24	1	701	966134608	ANBAUTEILE ZYLINDER
SCHAEKEL DIN 82101 0,25T N	773933508	14	1	734	917268408	MASTNASE
SCHALLDAEMMUNG	968977308	24	1	445	96036790	DREHBUEHNENVERKLEIDUN
SCHALTBLECH 2X139X46 DC0	972373808	97	2	674	917292008	TELESKOP 1 VORM.
SCHALTBLECH 2X139X46 DC0	972373808	97	2	678	917292108	TELESKOP 2 VORM.
SCHALTBLECH 2X139X46 DC0	972373808	97	2	682	917292208	TELESKOP 3 VORM.
SCHALTBLECH 2X139X46 DC0	972373808	97	2	686	917292308	TELESKOP 4 VORM.
SCHALTBLECH 2X139X46 DC0	972373808	82	2	691	917292408	TELESKOP 5 VORM.
SCHALTER	11979975	24	1	435	10877138	FAHRERSITZ
SCHALTKASTEN SCHWK. RAL	968049608	1	1	41	96045226	SCHALTKASTEN VORM.
SCHALTKASTEN VORM. S200	96045226	2	1	39	96045225	ELEKTRIK MITTELSTUECK
SCHALTLEISTE 21X75X160 P	972373708	96	2	682	917292208	TELESKOP 3 VORM.
SCHALTLEISTE 21X75X160 P	972373708	96	2	686	917292308	TELESKOP 4 VORM.
SCHALTLEISTE 21X75X160 P	972373708	81	2	691	917292408	TELESKOP 5 VORM.
SCHALTLEISTE 21X75X160 P	972392108	96	1	674	917292008	TELESKOP 1 VORM.
SCHALTLEISTE 21X75X160 P	972392108	96	1	678	917292108	TELESKOP 2 VORM.
SCHALTNOCKE	11181886	12	1	52	11346779	SCHLEIFRINGUEBERTRAGER
SCHALTSCHRANKDECKEL EIN	968514508	20	1	381	919010208	KRANFUEHRERKABINE VORM.
SCHARNIER 20X20X40/180° G	704258208	15	2	540	91000922	EINBAUTEILE SCHALTSCHRAN
SCHARNIER 20X20X40/180° G	704258208	40	4	544	969256608	GRUNDAUFBAU
SCHARNIER 35X35X50/180° N	10294684	4	2	92	968420608	STAUKASTEN VORM.
SCHARNIER 35X35X50/180° N	10294684	11	2	157	96063087	STAUKASTEN
SCHARNIER 35X35X50/180° S	704228108	84	2	150	919499408	ZENTRALBALLAST
SCHARNIER 35X35X50/180° S	704228108	12	2	334	96023117	BATTERIEKASTEN VORM.
SCHARNIER 35X35X50/180° S	704228108	9	3	449	968923508	KLAPPE VORM.RECHTS
SCHARNIER 35X35X50/180° S	704228108	2	2	457	969016008	KLAPPE VORM.VORN LINKS
SCHARNIER 35X35X50/180° S	704228108	5	1	767	917268208	LEITER ANBAU
SCHEIBE	510782708	5	1	588	511419608	DRUCKBEGRENZUNGSVENTI
SCHEIBE	510797208	5	1	585	511433908	DRUCKBEGRENZUNGSVENTI
SCHEIBE	518614708	57	2	697	10876933	TELESKOPIERZYLINDER
SCHEIBE	591063508	63	1	468	96053500	ELEKTRIK ANBAUTEILE KABIN
SCHEIBE	927742801	58	1	370	939292201	PLANETENGETRIEBE
SCHEIBE 10,5X18,5X2	9076638	17	4	252	10140729	ATL-ANBAU
SCHEIBE 10X100X100 S355MC	97042598	6	2	489	918956108	HYDRAULISCHE BALLASTIER
SCHEIBE 20,2X25X3XA GUMMI	710207408	64	1	468	96053500	ELEKTRIK ANBAUTEILE KABIN
SCHEIBE 2X154X154 DC01 FE//	971060108	8	3	673	917292008	TELESKOP 1 VORM.
SCHEIBE 2X154X154 DC01 FE//	971060108	8	2	677	917292108	TELESKOP 2 VORM.
SCHEIBE 2X154X154 DC01 FE//	971060108	8	3	681	917292208	TELESKOP 3 VORM.
SCHEIBE 2X154X154 DC01 FE//	971060108	8	3	685	917292308	TELESKOP 4 VORM.
SCHEIBE 2X154X154 DC01 FE//	971060108	20	3	690	917292408	TELESKOP 5 VORM.
SCHEIBE 30X8	10877340	31	6	648	12102921	WIPPZYLINDER
SCHEIBE 34X45X1	9078522	6	2	207	11448005	KIPPHEBELBOCK VORM.
SCHEIBE 3X21X21 DC01 FE//	973618208	8	2	291	96034631	KUEHLER VORM.
SCHEIBE 3X54X54 X5CRNI18-1	97017499	36	16	20	91001569	RAUPENFAHRWERK KPL.
SCHEIBE 40X222X222 S960QL+	972908008	7	1	673	917292008	TELESKOP 1 VORM.
SCHEIBE 40X222X222 S960QL+	972908008	7	1	677	917292108	TELESKOP 2 VORM.
SCHEIBE 40X222X222 S960QL+	972908008	7	1	681	917292208	TELESKOP 3 VORM.
SCHEIBE 40X222X222 S960QL+	972908008	7	1	685	917292308	TELESKOP 4 VORM.
SCHEIBE 40X222X222 S960QL+	972908008	65	1	691	917292408	TELESKOP 5 VORM.
SCHEIBE 4X100X100 S315MC	97008156	17	1	751	968728808	KONSOLE VORM.
SCHEIBE 4X40X40 S315MC FE	940116008	67	4	76	91001377	RAUPENTRAEGER VORM.LI.
SCHEIBE 4X40X40 S315MC FE	940116008	67	4	109	91001378	RAUPENTRAEGER VORM.RE.
SCHEIBE 50.0x9 S355J2C+C FE	970689208	7	4	172	918731108	MONTAGETEILE DREHBUEHN
SCHEIBE 50X5 S355J2C+C	970821508	9	4	172	918731108	MONTAGETEILE DREHBUEHN
SCHEIBE 52,2X107X3 -S355J2G	10144311	11	1	200	10141974	KURBELWELLENANBAUTEILE
SCHEIBE 5X35X35 S355MC FE	97040355	21	8	378	917259908	KRANFUEHRERKABINE ANBA

Bezeichnung	Artikel	Pos.	Menge	Seite	Baugruppe	Bezeichnung
SCHEIBE 5X40X40 S355MC FE	97040356	39	6	378	917259908	KRANFUEHRERKABINE ANBA
SCHEIBE 8,4X18X15 -	9177776	10	1	232	10145173	ANSAUGSTUTZEN ANBAU
SCHEIBE 8,4X18X15 -	9177776	2	2	251	10144756	HITZESCHUTZ MIT BEFESTIG
SCHEIBE 85,2X139X9,5	931807501	5	1	353	90008901	DREHWERKANTRIEB
SCHEIBE 8X65X65 S355MC FE	97038431	22	4	286	919007708	ANTRIEBSAGGREGAT VORM.
SCHEIBE A 10X20X2 200HV-St	10011658	24	1	467	96053500	ELEKTRIK ANBAUTEILE KABIN
SCHEIBE AEHNL.ISO 7089 6 -	420010405	48	16	35	917511508	RAUPENMITTELTEIL VORM.
SCHEIBE AEHNL.ISO 7089 8 P	10166990	17	6	94	96034962	FUEHRUNG LI.
SCHEIBE AEHNL.ISO 7089 8 P	10166990	17	6	112	96034980	FUEHRUNG RE.
SCHEIBE DC01+ZE	956414308	20	4	701	966134608	ANBAUTEILE ZYLINDER
SCHEIBE DIN 1440 100 ST VER	421104208	29	2	20	91001569	RAUPENFAHRWERK KPL.
SCHEIBE DIN 1440 60 -St FLZN	10179340	42	8	35	917511508	RAUPENMITTELTEIL VORM.
SCHEIBE DIN 1440 8 ST VERZ	421100608	333	14	562	96045351	HYDRAULIK OBERWAGEN
SCHEIBE DIN 1441 21 ST FLZN	10875637	306	4	56	96035801	HYDRAULIK MITTELTEIL
SCHEIBE DIN 1441 26 -St FLZN	10179376	375	1	291	96034631	KUEHLER VORM.
SCHEIBE DIN 433 19 140HV A3	530609208	65	1	468	96053500	ELEKTRIK ANBAUTEILE KABIN
SCHEIBE DIN 433 4 140HV A2K	420200308	21	12	157	96063087	STAUKASTEN
SCHEIBE DIN 440 13,5 ST FLZ	10875639	24	2	94	96034962	FUEHRUNG LI.
SCHEIBE DIN 440 13,5 ST FLZ	10875639	24	2	112	96034980	FUEHRUNG RE.
SCHEIBE DIN 440 6,6 -ST 480H	10875640	21	1	641	96045237	AUSRUESTUNG KAMERA KAB
SCHEIBE DIN 6340 10,5 C35	421300208	14	8	147	919087608	DREHDURCHFUEHRUNG
SCHEIBE DIN 6340 21 FLZN SP	10179985	305	8	56	96035801	HYDRAULIK MITTELTEIL
SCHEIBE DIN 7349 10,5 140HV	4902172	19	8	119	917691008	ABSTURZSICHERUNG
SCHEIBE DIN 7349 10,5 200HV-	11658580	31	12	124	968046208	ANBAUTEILE
SCHEIBE DIN 7349 10,5 200HV-	11658580	77	1	271	10151329	KABELSATZ ANBAU
SCHEIBE DIN 7349 10,5 200HV-	11658580	3	6	332	918955408	BATTERIEKASTEN KPL.
SCHEIBE DIN 7349 10,5 200HV-	11658580	32	4	334	96023117	BATTERIEKASTEN VORM.
SCHEIBE DIN 7349 10,5 200HV-	11658580	378	6	446	96036790	DREHBUEHNENVERKLEIDUN
SCHEIBE DIN 7349 10,5 200HV-	11658580	380	15	455	969015908	DREHBUEHNENVERKLEIDUN
SCHEIBE DIN 7349 10,5 200HV-	11658580	21	3	567	96035117	MECH.BEFESTIGUNGSTEILE
SCHEIBE DIN 7349 10,5 200HV-	11658580	4	6	591	917261808	OELKUEHLER EINBAU
SCHEIBE DIN 7349 10,5 200HV-	11658580	10	12	592	967980508	OELKUEHLER VORM.
SCHEIBE DIN 7349 10,5 200HV-	11658580	12	4	632	96037229	ANBAUTEILE ARBEITSSCHEIN
SCHEIBE DIN 7349 13 200HV F	10006370	25	4	94	96034962	FUEHRUNG LI.
SCHEIBE DIN 7349 13 200HV F	10006370	25	4	112	96034980	FUEHRUNG RE.
SCHEIBE DIN 7349 13 200HV F	10006370	40	3	701	966134608	ANBAUTEILE ZYLINDER
SCHEIBE DIN 7349 13 200HV F	10006370	6	1	747	917551608	ANBAUTEILE
SCHEIBE DIN 7349 17 200HV F	4600021	24	24	75	91001377	RAUPENTRAEGER VORM.LI.
SCHEIBE DIN 7349 17 200HV F	4600021	24	24	108	91001378	RAUPENTRAEGER VORM.RE.
SCHEIBE DIN 7349 17 200HV F	4600021	15	48	119	917691008	ABSTURZSICHERUNG
SCHEIBE DIN 7349 17 200HV F	4600021	23	80	124	968046208	ANBAUTEILE
SCHEIBE DIN 7349 17 200HV F	4600021	41	8	668	917291908	ANLENKSTUECK VORM.
SCHEIBE DIN 7349 17 200HV F	4600021	38	8	673	917292008	TELESKOP 1 VORM.
SCHEIBE DIN 7349 17 200HV F	4600021	38	8	677	917292108	TELESKOP 2 VORM.
SCHEIBE DIN 7349 17 200HV F	4600021	38	8	681	917292208	TELESKOP 3 VORM.
SCHEIBE DIN 7349 17 200HV F	4600021	38	8	685	917292308	TELESKOP 4 VORM.
SCHEIBE DIN 7349 17 200HV F	4600021	85	4	691	917292408	TELESKOP 5 VORM.
SCHEIBE DIN 7349 17 200HV F	4600021	42	4	761	917267508	TRANSPORTHALTERUNG DKS
SCHEIBE DIN 7349 21 100HV F	4600604	30	3	147	919087608	DREHDURCHFUEHRUNG
SCHEIBE DIN 7349 21 100HV F	4600604	4	3	337	917626608	KRAFTSTOFFBEHAELTER AN
SCHEIBE DIN 7349 21 100HV F	4600604	7	1	345	917825508	OELBEHAELTER ANBAU
SCHEIBE DIN 7349 21 100HV F	4600604	13	10	761	917267508	TRANSPORTHALTERUNG DKS
SCHEIBE DIN 7349 25 FLZN SP	12220085	4	2	345	917825508	OELBEHAELTER ANBAU
SCHEIBE DIN 7349 31 100HV F	12226080	53	2	20	91001569	RAUPENFAHRWERK KPL.
SCHEIBE DIN 7349 31 100HV F	12226080	76	2	669	917291908	ANLENKSTUECK VORM.
SCHEIBE DIN 7349 6 200HV-A2	10353667	7	2	749	968811608	QUERTRAEGER
SCHEIBE DIN 7349 6,4 200HV 4	11693878	319	2	56	96035801	HYDRAULIK MITTELTEIL
SCHEIBE DIN 7349 8,4 200HV 4	11840501	304	20	56	96035801	HYDRAULIK MITTELTEIL
SCHEIBE DIN 7349 8,4 200HV 4	11840501	377	3	446	96036790	DREHBUEHNENVERKLEIDUN
SCHEIBE DIN 7349 8,4 200HV 4	11840501	5	4	476	917260408	SPIEGELANBAU DREHBUEHN

Bezeichnung	Artikel	Pos.	Menge	Seite	Baugruppe	Bezeichnung
SCHEIBE DIN 7349 8,4 200HV 4	11840501	23	1	492	967928508	VERRIEGELUNG
SCHEIBE DIN 7349 8,4 200HV 4	11840501	25	2	567	96035117	MECH.BEFESTIGUNGSTEILE
SCHEIBE DIN 7349 8,4 200HV 4	11840501	14	8	592	967980508	OELKUEHLER VORM.
SCHEIBE DIN 7349 8,4 200HV 4	11840501	29	12	604	967969608	HILFSHUBWERK WINDE 2 VO
SCHEIBE DIN 7349 8,4 200HV 4	11840501	300	2	622	969426308	ZUSATZHYDRAULIK KLAPPSPI
SCHEIBE DIN 7349 8,4 200HV 4	11840501	6	8	668	917291908	ANLENKSTUECK VORM.
SCHEIBE DIN 7989-2 16 -ST F	10875866	10	2	761	917267508	TRANSPORTHALTERUNG DKS
SCHEIBE DIN 7989-2 20 ST FLZ	12100254	21	2	751	968728808	KONSOLE VORM.
SCHEIBE DIN 7989-2 A 10 100	12214460	380	14	288	919007708	ANTRIEBSAGGREGAT VORM.
SCHEIBE DIN 7989-2 A 10 100	12214460	23	2	482	96020359	ZUSATZHEIZUNG VORM.
SCHEIBE EN 14399-6 16 300-3	421500201	27	8	129	919644008	HYDRAULISCHE ABSTUETZUN
SCHEIBE EN 14399-6 16 300-37	10180180	379	1	291	96034631	KUEHLER VORM.
SCHEIBE EN 14399-6 16 300-37	10180180	10	9	378	917259908	KRANFUEHRERKABINE ANBA
SCHEIBE EN 14399-6 20 300-3	4600222	26	2	75	91001377	RAUPENTRAEGER VORM.LI.
SCHEIBE EN 14399-6 20 300-3	4600222	26	2	108	91001378	RAUPENTRAEGER VORM.RE.
SCHEIBE EN 14399-6 20 300-3	4600222	383	4	288	919007708	ANTRIEBSAGGREGAT VORM.
SCHEIBE EN 14399-6 30 300-37	4900000	4	4	695	918807308	AUSSCHUBMECHANIK
SCHEIBE ISO 7089 10 200HV-A	500917508	63	2	500	918731808	HARNSTOFFANLAGE
SCHEIBE ISO 7089 10 200HV-A	500917508	92	2	669	917291908	ANLENKSTUECK VORM.
SCHEIBE ISO 7089 10 200HV-A	420001114	378	4	288	919007708	ANTRIEBSAGGREGAT VORM.
SCHEIBE ISO 7089 10 200HV-A	420001114	12	1	381	919010208	KRANFUEHRERKABINE VORM.
SCHEIBE ISO 7089 10 300HV F	10289795	33	12	20	91001569	RAUPENFAHRWERK KPL.
SCHEIBE ISO 7089 10 300HV F	10289795	31	4	30	968019508	ENDSCHALTER ANBAU
SCHEIBE ISO 7089 10 300HV F	10289795	40	6	35	917511508	RAUPENMITTELTEIL VORM.
SCHEIBE ISO 7089 10 300HV F	10289795	107	20	76	91001377	RAUPENTRAEGER VORM.LI.
SCHEIBE ISO 7089 10 300HV F	10289795	108	20	109	91001378	RAUPENTRAEGER VORM.RE.
SCHEIBE ISO 7089 10 300HV F	10289795	375	2	280	918731408	ANTRIEBSAGGREGAT KPL.
SCHEIBE ISO 7089 10 300HV F	10289795	379	28	288	919007708	ANTRIEBSAGGREGAT VORM.
SCHEIBE ISO 7089 10 300HV F	10289795	378	2	291	96034631	KUEHLER VORM.
SCHEIBE ISO 7089 10 300HV F	10289795	16	8	348	969050308	OELBEHAELTER VORM.
SCHEIBE ISO 7089 10 300HV F	10289795	7	6	363	917259608	DREHBUEHNENARRETIERUN
SCHEIBE ISO 7089 10 300HV F	10289795	382	4	446	96036790	DREHBUEHNENVERKLEIDUN
SCHEIBE ISO 7089 10 300HV F	10289795	380	10	512	96051842	ABGASANLAGE VORM.
SCHEIBE ISO 7089 10 300HV F	10289795	18	2	643	96037130	AUSRUESTUNG KAMERA DRE
SCHEIBE ISO 7089 10 300HV F	10289795	18	2	645	96037131	AUSRUESTUNG KAMERA WIN
SCHEIBE ISO 7089 10 300HV F	10289795	(10)	2	657	919028808	MECH.TEILE VERSANDMONT
SCHEIBE ISO 7089 12 200HV-A	10410178	6	4	120	968038208	LAGERUNG VORN LI.
SCHEIBE ISO 7089 12 200HV-A	10410178	6	4	121	968038308	LAGERUNG VORN RE.
SCHEIBE ISO 7089 12 200HV-A	10410178	52	8	124	968046208	ANBAUTEILE
SCHEIBE ISO 7089 12 200HV-A	10410178	65	12	129	919644008	HYDRAULISCHE ABSTUETZUN
SCHEIBE ISO 7089 12 200HV-A	10410178	375	8	511	96051842	ABGASANLAGE VORM.
SCHEIBE ISO 7089 12 300HV F	10289804	19	4	20	91001569	RAUPENFAHRWERK KPL.
SCHEIBE ISO 7089 12 300HV F	10289804	8	17	262	10115829	SCHWUNGRADGEHAEUSE AN
SCHEIBE ISO 7089 12 300HV F	10289804	381	5	288	919007708	ANTRIEBSAGGREGAT VORM.
SCHEIBE ISO 7089 12 300HV F	10289804	7	4	351	919369308	DREHWERK
SCHEIBE ISO 7089 12 300HV F	10289804	13	4	378	917259908	KRANFUEHRERKABINE ANBA
SCHEIBE ISO 7089 12 300HV F	10289804	19	8	492	967928508	VERRIEGELUNG
SCHEIBE ISO 7089 12 300HV F	10289804	328	4	496	969763408	VERROHRUNG DRUCKLUFTA
SCHEIBE ISO 7089 12 300HV F	10289804	376	4	507	919674408	ABGASANLAGE
SCHEIBE ISO 7089 12 300HV F	10289804	340	8	562	96045351	HYDRAULIK OBERWAGEN
SCHEIBE ISO 7089 12 300HV F	10289804	3	2	638	968267108	ANBAUTEILE KAMERA
SCHEIBE ISO 7089 12 300HV F	10289804	22	16	668	917291908	ANLENKSTUECK VORM.
SCHEIBE ISO 7089 12 300HV F	10289804	62	3	691	917292408	TELESKOP 5 VORM.
SCHEIBE ISO 7089 12 300HV F	10289804	13	8	701	966134608	ANBAUTEILE ZYLINDER
SCHEIBE ISO 7089 12 300HV F	10289804	4	3	747	917551608	ANBAUTEILE
SCHEIBE ISO 7089 12 300HV F	10289804	22	4	751	968728808	KONSOLE VORM.
SCHEIBE ISO 7089 16 300HV F	10289806	57	32	20	91001569	RAUPENFAHRWERK KPL.
SCHEIBE ISO 7089 16 300HV F	10289806	85	16	76	91001377	RAUPENTRAEGER VORM.LI.
SCHEIBE ISO 7089 16 300HV F	10289806	8	1	95	96062678	HEBEL VORM.
SCHEIBE ISO 7089 16 300HV F	10289806	85	16	109	91001378	RAUPENTRAEGER VORM.RE.

Bezeichnung	Artikel	Pos.	Menge	Seite	Baugruppe	Bezeichnung
SCHEIBE ISO 7089 16 300HV F	10289806	377	4	280	918731408	ANTRIEBSAGGREGAT KPL.
SCHEIBE ISO 7089 16 300HV F	10289806	382	18	288	919007708	ANTRIEBSAGGREGAT VORM.
SCHEIBE ISO 7089 16 300HV F	10289806	6	8	458	917260108	ABSTURZSICHERUNG
SCHEIBE ISO 7089 16 300HV F	10289806	29	2	492	967928508	VERRIEGELUNG
SCHEIBE ISO 7089 16 300HV F	10289806	13	1	493	967978908	VERRIEGELUNG VORM.
SCHEIBE ISO 7089 16 300HV F	10289806	47	2	761	917267508	TRANSPORTHALTERUNG DKS
SCHEIBE ISO 7089 18 300HV F	10289807	46	4	75	91001377	RAUPENTRAEGER VORM.LI.
SCHEIBE ISO 7089 18 300HV F	10289807	46	4	108	91001378	RAUPENTRAEGER VORM.RE.
SCHEIBE ISO 7089 18 300HV F	10289807	27	2	701	966134608	ANBAUTEILE ZYLINDER
SCHEIBE ISO 7089 20 200HV	420002101	88	2	78	90028956	FAHRANTRIEB
SCHEIBE ISO 7089 20 200HV-A	10353689	17	4	348	969050308	OELBEHAELTER VORM.
SCHEIBE ISO 7089 20 300HV F	10289808	44	4	20	91001569	RAUPENFAHRWERK KPL.
SCHEIBE ISO 7089 20 300HV F	10289808	109	2	76	91001377	RAUPENTRAEGER VORM.LI.
SCHEIBE ISO 7089 20 300HV F	10289808	110	2	109	91001378	RAUPENTRAEGER VORM.RE.
SCHEIBE ISO 7089 20 300HV F	10289808	29	12	147	919087608	DREHDURCHFUEHRUNG
SCHEIBE ISO 7089 20 300HV F	10289808	11	4	767	917268208	LEITER ANBAU
SCHEIBE ISO 7089 24 300HV F	10289810	28	4	75	91001377	RAUPENTRAEGER VORM.LI.
SCHEIBE ISO 7089 24 300HV F	10289810	28	4	108	91001378	RAUPENTRAEGER VORM.RE.
SCHEIBE ISO 7089 24 300HV F	10289810	380	1	291	96034631	KUEHLER VORM.
SCHEIBE ISO 7089 3 MS	420050108	268	2	714	968708708	KLEMMKASTEN KPL.
SCHEIBE ISO 7089 30 300HV F	10289811	77	2	669	917291908	ANLENKSTUECK VORM.
SCHEIBE ISO 7089 4 200HV 4	10875645	9	2	406	916162508	SCHEIBEN EINBAU
SCHEIBE ISO 7089 4 200HV 4	10875645	381	8	446	96036790	DREHBUEHNENVERKLEIDUN
SCHEIBE ISO 7089 4 200HV 4	10875645	(2)	4	467	96053500	ELEKTRIK ANBAUTEILE KABIN
SCHEIBE ISO 7089 4 200HV 4	10875645	42	4	467	96053500	ELEKTRIK ANBAUTEILE KABIN
SCHEIBE ISO 7089 4 200HV 4	10875645	62	16	544	969256608	GRUNDAUFBAU
SCHEIBE ISO 7089 4 200HV 4	10875645	8	3	745	967936408	WINDWARNUNG VORM.
SCHEIBE ISO 7089 5 -A2	10410193	66	2	500	918731808	HARNSTOFFANLAGE
SCHEIBE ISO 7089 5 -A2	10410193	2	2	745	967936408	WINDWARNUNG VORM.
SCHEIBE ISO 7089 5 200HV ZN	10197808	314	2	98	96035796	HYDR.FAHRANTRIEB
SCHEIBE ISO 7089 5 200HV ZN	10197808	314	2	115	96035792	HYDR.FAHRANTRIEB
SCHEIBE ISO 7089 5 200HV ZN	10197808	5	4	135	917257108	ZENTRALSCHMIERUNG RAUP
SCHEIBE ISO 7089 5 200HV ZN	10197808	20	6	334	96023117	BATTERIEKASTEN VORM.
SCHEIBE ISO 7089 5 200HV ZN	10197808	4	5	339	968999708	KRAFTSTOFFBEHAELTER VO
SCHEIBE ISO 7089 5 200HV ZN	10197808	35	28	433	918810308	STEUERSTAND
SCHEIBE ISO 7089 5 200HV ZN	10197808	30	8	467	96053500	ELEKTRIK ANBAUTEILE KABIN
SCHEIBE ISO 7089 5 200HV ZN	10197808	6	4	523	917261208	ZENTRALSCHMIERANLAGE O
SCHEIBE ISO 7089 5 200HV ZN	10197808	11	4	602	917267108	HILFSHUBWERK WINDE 2
SCHEIBE ISO 7089 5 200HV ZN	10197808	6	1	744	967933408	GRUNDHALTER VORM.
SCHEIBE ISO 7089 5 200HV ZN	10197808	14	4	758	917413208	SELBSTMONTAGE HILFSHU
SCHEIBE ISO 7089 6 200HV ZN	10197771	10	12	26	96034894	SCHUTZBLECH KPL.LI.
SCHEIBE ISO 7089 6 200HV ZN	10197771	10	12	29	96034977	SCHUTZBLECH KPL.RE.
SCHEIBE ISO 7089 6 200HV ZN	10197771	14	2	42	966167808	DECKEL KPL.
SCHEIBE ISO 7089 6 200HV ZN	10197771	17	2	43	968054008	MONTAGEPLATTE VORM.
SCHEIBE ISO 7089 6 200HV ZN	10197771	312	45	56	96035801	HYDRAULIK MITTELTEIL
SCHEIBE ISO 7089 6 200HV ZN	10197771	33	2	147	919087608	DREHDURCHFUEHRUNG
SCHEIBE ISO 7089 6 200HV ZN	10197771	384	2	288	919007708	ANTRIEBSAGGREGAT VORM.
SCHEIBE ISO 7089 6 200HV ZN	10197771	376	8	291	96034631	KUEHLER VORM.
SCHEIBE ISO 7089 6 200HV ZN	10197771	26	4	334	96023117	BATTERIEKASTEN VORM.
SCHEIBE ISO 7089 6 200HV ZN	10197771	42	2	378	917259908	KRANFUEHRERKABINE ANBA
SCHEIBE ISO 7089 6 200HV ZN	10197771	50	3	399	917305408	INNENVERKLEIDUNG EINBAU
SCHEIBE ISO 7089 6 200HV ZN	10197771	18	4	412	916168308	LUFTFUEHRUNG
SCHEIBE ISO 7089 6 200HV ZN	10197771	42	4	433	918810308	STEUERSTAND
SCHEIBE ISO 7089 6 200HV ZN	10197771	3	6	545	922648308	KLEMMBRETT VORM.
SCHEIBE ISO 7089 6 200HV ZN	10197771	4	4	547	926891108	VERTEILER MASSE
SCHEIBE ISO 7089 6 200HV ZN	10197771	318	14	561	96045351	HYDRAULIK OBERWAGEN
SCHEIBE ISO 7089 6 200HV ZN	10197771	12	2	601	918628408	KLIMAANLAGE OW
SCHEIBE ISO 7089 6 200HV ZN	10197771	311	2	616	967784808	HYDRAULIK HILFSHUBWERK
SCHEIBE ISO 7089 6 200HV ZN	10197771	28	2	636	968994408	KAMERAHALTER VORM.
SCHEIBE ISO 7089 6 200HV ZN	10197771	30	4	637	968290608	STATIV

Bezeichnung	Artikel	Pos.	Menge	Seite	Baugruppe	Bezeichnung
SCHEIBE ISO 7089 6 200HV ZN	10197771	15	2	639	968993508	KAMERAHALTER VORM.
SCHEIBE ISO 7089 6 200HV ZN	10197771	30	4	640	968267208	STATIV
SCHEIBE ISO 7089 6 200HV ZN	10197771	67	2	674	917292008	TELESKOP 1 VORM.
SCHEIBE ISO 7089 6 200HV ZN	10197771	63	2	677	917292108	TELESKOP 2 VORM.
SCHEIBE ISO 7089 6 200HV ZN	10197771	63	2	681	917292208	TELESKOP 3 VORM.
SCHEIBE ISO 7089 6 200HV ZN	10197771	63	2	685	917292308	TELESKOP 4 VORM.
SCHEIBE ISO 7089 6 200HV ZN	10197771	46	2	699	571928508	ZYLINDERKOPF KPL.
SCHEIBE ISO 7089 6 200HV ZN	10197771	3	2	712	966591508	ENDSCHALTER ANBAU
SCHEIBE ISO 7089 6 200HV-A2	420060201	39	2	421	917304708	SCHIEBETUER EINBAU
SCHEIBE ISO 7089 6 200HV-A4	420000414	8	2	92	968420608	STAUKASTEN VORM.
SCHEIBE ISO 7089 8 200HV-A2	420060705	58	6	20	91001569	RAUPENFAHRWERK KPL.
SCHEIBE ISO 7089 8 200HV-A2	420060705	6	8	652	917260608	GEGENGEWICHT M.BEFESTIG
SCHEIBE ISO 7089 8 200HV-A2	420060705	5	6	746	967937608	HINDERNISFEUER VORM.
SCHEIBE ISO 7089 8 200HV-A4	420001014	68	10	500	918731808	HARNSTOFFANLAGE
SCHEIBE ISO 7089 8 300HV ZN	12103465	11	4	26	96034894	SCHUTZBLECH KPL.LI.
SCHEIBE ISO 7089 8 300HV ZN	12103465	11	4	29	96034977	SCHUTZBLECH KPL.RE.
SCHEIBE ISO 7089 8 300HV ZN	12103465	308	24	56	96035801	HYDRAULIK MITTELTEIL
SCHEIBE ISO 7089 8 300HV ZN	12103465	17	1	92	968420608	STAUKASTEN VORM.
SCHEIBE ISO 7089 8 300HV ZN	12103465	8	7	94	96034962	FUEHRUNG LI.
SCHEIBE ISO 7089 8 300HV ZN	12103465	8	7	112	96034980	FUEHRUNG RE.
SCHEIBE ISO 7089 8 300HV ZN	12103465	9	2	120	968038208	LAGERUNG VORN LI.
SCHEIBE ISO 7089 8 300HV ZN	12103465	9	2	121	968038308	LAGERUNG VORN RE.
SCHEIBE ISO 7089 8 300HV ZN	12103465	8	2	135	917257108	ZENTRALSCHMIERUNG RAUP
SCHEIBE ISO 7089 8 300HV ZN	12103465	37	4	147	919087608	DREHDURCHFUEHRUNG
SCHEIBE ISO 7089 8 300HV ZN	12103465	377	44	288	919007708	ANTRIEBSAGGREGAT VORM.
SCHEIBE ISO 7089 8 300HV ZN	12103465	377	28	291	96034631	KUEHLER VORM.
SCHEIBE ISO 7089 8 300HV ZN	12103465	375	6	294	968026308	KUPPLUNGSSTELLER
SCHEIBE ISO 7089 8 300HV ZN	12103465	375	6	341	91002861	KRAFTSTOFFFOERDERUNG
SCHEIBE ISO 7089 8 300HV ZN	12103465	375	3	342	96066379	KRAFTSTOFFFILTER VORM.
SCHEIBE ISO 7089 8 300HV ZN	12103465	9	1	381	919010208	KRANFUEHRERKABINE VORM.
SCHEIBE ISO 7089 8 300HV ZN	12103465	28	4	387	916177508	TRITT KPL.
SCHEIBE ISO 7089 8 300HV ZN	12103465	12	3	388	96025887	PEDALTRAEGER EINBAU
SCHEIBE ISO 7089 8 300HV ZN	12103465	64	4	400	917305408	INNENVERKLEIDUNG EINBAU
SCHEIBE ISO 7089 8 300HV ZN	12103465	13	4	415	916163008	WISCHANLAGE EINBAU
SCHEIBE ISO 7089 8 300HV ZN	12103465	6	12	426	917676208	HEIZUNG KRANFUEHRERKAB
SCHEIBE ISO 7089 8 300HV ZN	12103465	28	7	430	969085208	HEIZUNG VORM.
SCHEIBE ISO 7089 8 300HV ZN	12103465	375	8	446	96036790	DREHBUEHNENVERKLEIDUN
SCHEIBE ISO 7089 8 300HV ZN	12103465	16	4	449	968923508	KLAPPE VORM.RECHTS
SCHEIBE ISO 7089 8 300HV ZN	12103465	12	4	457	969016008	KLAPPE VORM.VORN LINKS
SCHEIBE ISO 7089 8 300HV ZN	12103465	23	21	480	918759808	ZUSATZHEIZUNG OW
SCHEIBE ISO 7089 8 300HV ZN	12103465	20	7	482	96020359	ZUSATZHEIZUNG VORM.
SCHEIBE ISO 7089 8 300HV ZN	12103465	28	4	492	967928508	VERRIEGELUNG
SCHEIBE ISO 7089 8 300HV ZN	12103465	377	2	511	96051842	ABGASANLAGE VORM.
SCHEIBE ISO 7089 8 300HV ZN	12103465	375	6	520	918731908	LUFTFILTERANLAGE
SCHEIBE ISO 7089 8 300HV ZN	12103465	17	2	523	917261208	ZENTRALSCHMIERANLAGE O
SCHEIBE ISO 7089 8 300HV ZN	12103465	61	2	544	969256608	GRUNDAUFBAU
SCHEIBE ISO 7089 8 300HV ZN	12103465	13	4	547	926891108	VERTEILER MASSE
SCHEIBE ISO 7089 8 300HV ZN	12103465	12	4	592	967980508	OELKUEHLER VORM.
SCHEIBE ISO 7089 8 300HV ZN	12103465	6	4	627	917269408	KONSOLE FREMDEINSPEISUN
SCHEIBE ISO 7089 8 300HV ZN	12103465	16	2	668	917291908	ANLENKSTUECK VORM.
SCHEIBE ISO 7089 8 300HV ZN	12103465	17	2	673	917292008	TELESKOP 1 VORM.
SCHEIBE ISO 7089 8 300HV ZN	12103465	17	2	677	917292108	TELESKOP 2 VORM.
SCHEIBE ISO 7089 8 300HV ZN	12103465	17	4	681	917292208	TELESKOP 3 VORM.
SCHEIBE ISO 7089 8 300HV ZN	12103465	17	4	685	917292308	TELESKOP 4 VORM.
SCHEIBE ISO 7089 8 300HV ZN	12103465	64	10	691	917292408	TELESKOP 5 VORM.
SCHEIBE ISO 7089 8 300HV ZN	12103465	28	4	761	917267508	TRANSPORTHALTERUNG DKS
SCHEIBE ISO 7092 10 200HV	12102693	11	2	155	91001571	BOLZENZIEHVORRICHTUNG
SCHEIBE ISO 7092 20 300HV F	11691327	10	4	493	967978908	VERRIEGELUNG VORM.
SCHEIBE ISO 7092 20 300HV F	11691327	52	16	673	917292008	TELESKOP 1 VORM.
SCHEIBE ISO 7092 20 300HV F	11691327	52	16	677	917292108	TELESKOP 2 VORM.

Bezeichnung	Artikel	Pos.	Menge	Seite	Baugruppe	Bezeichnung
SCHEIBE ISO 7092 20 300HV F	11691327	52	16	681	917292208	TELESKOP 3 VORM.
SCHEIBE ISO 7092 20 300HV F	11691327	52	16	685	917292308	TELESKOP 4 VORM.
SCHEIBE ISO 7092 20 300HV F	11691327	52	16	690	917292408	TELESKOP 5 VORM.
SCHEIBE ISO 7092 6 200HV-A2	10035694	10	2	393	968514508	SCHALTSCHRANKDECKEL EIN
SCHEIBE ISO 7092 6 200HV-A2	10035694	36	8	409	966497908	FRONTSCHEIBE KPL.
SCHEIBE ISO 7092 8 200HV 4	10299679	41	64	35	917511508	RAUPENMITTELTEIL VORM.
SCHEIBE ISO 7092 8 200HV 4	10299679	18	6	701	966134608	ANBAUTEILE ZYLINDER
SCHEIBE ISO 7093-1 10 300HV	11491889	21	4	365	917259708	HAUPTHUBWERK
SCHEIBE ISO 7093-1 10 300HV	11491889	377	4	455	969015908	DREHBUEHNENVERKLEIDUN
SCHEIBE ISO 7093-1 10 300HV	11491889	378	4	512	96051842	ABGASANLAGE VORM.
SCHEIBE ISO 7093-1 10 300HV	11491889	312	4	561	96045351	HYDRAULIK OBERWAGEN
SCHEIBE ISO 7093-1 10 300HV	11491889	30	4	604	967969608	HILFSHUBWERK WINDE 2 VO
SCHEIBE ISO 7093-1 10 300HV	11491889	26	16	668	917291908	ANLENKSTUECK VORM.
SCHEIBE ISO 7093-1 10 A2	421802108	14	1	415	916163008	WISCHANLAGE EINBAU
SCHEIBE ISO 7093-1 10 A2	421802108	7	1	423	966230508	FUEHRUNG VORM.
SCHEIBE ISO 7093-1 12 300HV	11182717	24	8	668	917291908	ANLENKSTUECK VORM.
SCHEIBE ISO 7093-1 16 300HV	4000809	6	4	382	967986308	LAGERUNG EINBAU
SCHEIBE ISO 7093-1 16 300HV	4000809	19	8	668	917291908	ANLENKSTUECK VORM.
SCHEIBE ISO 7093-1 20 300HV	4600328	49	4	20	91001569	RAUPENFAHRWERK KPL.
SCHEIBE ISO 7093-1 20 300HV	4600328	63	1	76	91001377	RAUPENTRAEGER VORM.LI.
SCHEIBE ISO 7093-1 20 300HV	4600328	63	1	109	91001378	RAUPENTRAEGER VORM.RE.
SCHEIBE ISO 7093-1 20 300HV	4600328	6	1	337	917626608	KRAFTSTOFFBEHAELTER AN
SCHEIBE ISO 7093-1 20 300HV	4600328	8	1	345	917825508	OELBEHAELTER ANBAU
SCHEIBE ISO 7093-1 24 300HV	10179463	3	2	345	917825508	OELBEHAELTER ANBAU
SCHEIBE ISO 7093-1 4 200HV 4	10875642	87	1	669	917291908	ANLENKSTUECK VORM.
SCHEIBE ISO 7093-1 4 200HV 4	10875642	69	1	691	917292408	TELESKOP 5 VORM.
SCHEIBE ISO 7093-1 5 200HV 4	10875643	309	4	561	96045351	HYDRAULIK OBERWAGEN
SCHEIBE ISO 7093-1 6 200HV 4	10875648	376	5	288	919007708	ANTRIEBSAGGREGAT VORM.
SCHEIBE ISO 7093-1 6 200HV 4	10875648	34	6	378	917259908	KRANFUEHRERKABINE ANBA
SCHEIBE ISO 7093-1 6 200HV 4	10875648	11	4	410	965784408	DACHSCHEIBE VORM.
SCHEIBE ISO 7093-1 6 200HV 4	10875648	379	6	446	96036790	DREHBUEHNENVERKLEIDUN
SCHEIBE ISO 7093-1 6 200HV 4	10875648	15	2	449	968923508	KLAPPE VORM.RECHTS
SCHEIBE ISO 7093-1 6 200HV 4	10875648	309	10	455	969015908	DREHBUEHNENVERKLEIDUN
SCHEIBE ISO 7093-1 6 200HV 4	10875648	62	8	500	918731808	HARNSTOFFANLAGE
SCHEIBE ISO 7093-1 6 200HV 4	10875648	306	6	561	96045351	HYDRAULIK OBERWAGEN
SCHEIBE ISO 7093-1 6 200HV 4	10875648	315	2	616	967784808	HYDRAULIK HILFSHUBWERK
SCHEIBE ISO 7093-1 6 200HV 4	10875648	52	2	668	917291908	ANLENKSTUECK VORM.
SCHEIBE ISO 7093-1 6 200HV 4	10875648	305	2	728	967785008	ZUSATZHYDRAULIK KLAPPSPI
SCHEIBE ISO 7093-1 6 200HV-A	421801708	14	2	409	966497908	FRONTSCHEIBE KPL.
SCHEIBE ISO 7093-1 6 200HV-A	421801708	58	2	421	917304708	SCHIEBETUER EINBAU
SCHEIBE ISO 7093-1 6 200HV-A	421801708	4	2	423	966230508	FUEHRUNG VORM.
SCHEIBE ISO 7093-1 6 200HV-A	421801708	378	2	507	919674408	ABGASANLAGE
SCHEIBE ISO 7093-1 6 200HV-A	421801708	376	19	511	96051842	ABGASANLAGE VORM.
SCHEIBE ISO 7093-1 6 200HV-A	421801708	3	4	626	917269308	LADEGERAET
SCHEIBE ISO 7093-1 6 200HV-A	10540500	35	2	52	11346779	SCHLEIFRINGUEBERTRAGER
SCHEIBE ISO 7093-1 6 200HV-A	10540500	34	4	124	968046208	ANBAUTEILE
SCHEIBE ISO 7093-1 6 200HV-A	10540500	40	4	421	917304708	SCHIEBETUER EINBAU
SCHEIBE ISO 7093-1 6 200HV-A	10540500	8	1	744	967933408	GRUNDHALTER VORM.
SCHEIBE ISO 7093-1 8 200HV 4	11140469	30	4	30	968019508	ENDSCHALTER ANBAU
SCHEIBE ISO 7093-1 8 200HV 4	11140469	24	3	135	917257108	ZENTRALSCHMIERUNG RAUP
SCHEIBE ISO 7093-1 8 200HV 4	11140469	8	2	155	91001571	BOLZENZIEHVORRICHTUNG
SCHEIBE ISO 7093-1 8 200HV 4	11140469	21	2	172	918731108	MONTAGETEILE DREHBUEHN
SCHEIBE ISO 7093-1 8 200HV 4	11140469	378	2	280	918731408	ANTRIEBSAGGREGAT KPL.
SCHEIBE ISO 7093-1 8 200HV 4	11140469	16	4	365	917259708	HAUPTHUBWERK
SCHEIBE ISO 7093-1 8 200HV 4	11140469	29	2	378	917259908	KRANFUEHRERKABINE ANBA
SCHEIBE ISO 7093-1 8 200HV 4	11140469	(5)	4	387	916177508	TRITT KPL.
SCHEIBE ISO 7093-1 8 200HV 4	11140469	22	2	406	916162508	SCHEIBEN EINBAU
SCHEIBE ISO 7093-1 8 200HV 4	11140469	380	7	446	96036790	DREHBUEHNENVERKLEIDUN
SCHEIBE ISO 7093-1 8 200HV 4	11140469	18	4	449	968923508	KLAPPE VORM.RECHTS
SCHEIBE ISO 7093-1 8 200HV 4	11140469	376	11	455	969015908	DREHBUEHNENVERKLEIDUN

Bezeichnung	Artikel	Pos.	Menge	Seite	Baugruppe	Bezeichnung
SCHEIBE ISO 7093-1 8 200HV 4	11140469	40	6	467	96053500	ELEKTRIK ANBAUTEILE KABIN
SCHEIBE ISO 7093-1 8 200HV 4	11140469	27	4	480	918759808	ZUSATZHEIZUNG OW
SCHEIBE ISO 7093-1 8 200HV 4	11140469	64	4	500	918731808	HARNSTOFFANLAGE
SCHEIBE ISO 7093-1 8 200HV 4	11140469	375	2	507	919674408	ABGASANLAGE
SCHEIBE ISO 7093-1 8 200HV 4	11140469	381	2	512	96051842	ABGASANLAGE VORM.
SCHEIBE ISO 7093-1 8 200HV 4	11140469	321	4	561	96045351	HYDRAULIK OBERWAGEN
SCHEIBE ISO 7093-1 8 200HV 4	11140469	30	8	668	917291908	ANLENKSTUECK VORM.
SCHEIBE ISO 7093-1 8 200HV 4	11140469	70	2	691	917292408	TELESKOP 5 VORM.
SCHEIBE ISO 7093-1 8 200HV 4	11140469	16	12	701	966134608	ANBAUTEILE ZYLINDER
SCHEIBE ISO 7093-1 8 200HV 4	11140469	300	2	722	967785408	ZUSATZHYDRAULIK KLAPPSPI
SCHEIBE ISO 7093-1 8 200HV 4	11140469	307	2	728	967785008	ZUSATZHYDRAULIK KLAPPSPI
SCHEIBE ISO 7093-1 8 200HV-A	421861405	29	4	387	916177508	TRITT KPL.
SCHEIBE ISO 7093-1 8 200HV-A	421861405	377	3	507	919674408	ABGASANLAGE
SCHEIBE ISO 7093-1 8 200HV-A	421861405	379	12	512	96051842	ABGASANLAGE VORM.
SCHEIBE ISO 7093-1 8 200HV-A	10540510	21	4	421	917304708	SCHIEBETUER EINBAU
SCHEIBE ISO 8738 50 160HV-St	10179408	18	4	492	967928508	VERRIEGELUNG
SCHEIBE ISO 8738 55 160HV-St	10179409	5	1	658	968068308	MONTAGEVORRICHTUNG
SCHEIBE RD60X2 ALMG3 H11	948717708	19	4	129	919644008	HYDRAULISCHE ABSTUETZUN
SCHEIBEN EINBAU SPF	916162508	2	1	395	917304508	KRANFUEHRERKABINE VORM.
SCHEIBENBOLZEN	11658587	4	1	754	910836808	HAKENFLASCHE
SCHEIBENFEDER DIN 6888 3	570435508	18	1	292	10429930	ZAHNRADMOTOR
SCHELLE DIN 3016-1 10X12XD	7381679	3	1	744	967933408	GRUNDHALTER VORM.
SCHELLE DIN 3016-1 10X15X	7381770	32	6	269	10151328	KABELBAUM ANBAU
SCHELLE DIN 3016-1 10X20X	7381628	38	2	269	10151328	KABELBAUM ANBAU
SCHELLE DIN 3016-1 10X25X	7382092	2	2	195	10139112	OELLEITUNG VORM.
SCHELLE DIN 3016-1 10X25X	7382092	47	4	269	10151328	KABELBAUM ANBAU
SCHELLE DIN 3016-1 12X20X	7381629	39	5	269	10151328	KABELBAUM ANBAU
SCHELLE DIN 3016-1 16X20X	7382085	13	1	228	10143341	KRAFTSTOFFLEITUNGEN
SCHELLE DIN 3016-1 18X25X	7382086	39	1	271	10151329	KABELSATZ ANBAU
SCHELLE DIN 3016-1 22X20X	7381286	11	1	232	10145173	ANSAUGSTUTZEN ANBAU
SCHELLE DIN 3016-1 22X20X	7381630	13	1	232	10145173	ANSAUGSTUTZEN ANBAU
SCHELLE DIN 3016-1 22X20X	7381630	42	3	269	10151328	KABELBAUM ANBAU
SCHELLE DIN 3016-1 28X20XD	11481080	22	3	430	969085208	HEIZUNG VORM.
SCHELLE DIN 3016-1 28X20XD	11481080	25	1	480	918759808	ZUSATZHEIZUNG OW
SCHELLE DIN 3016-1 28X20XD	11481080	26	1	482	96020359	ZUSATZHEIZUNG VORM.
SCHELLE DIN 3016-1 6X15XD1	7381292	20	1	229	10143342	LECKOELRUECKLAUF
SCHELLE DIN 3016-1 6X15XD1	7381292	9	6	254	11420633	TAKTVENTIL
SCHELLE DIN 3016-1 6X20XA1	11000593	10	2	254	11420633	TAKTVENTIL
SCHELLE DIN 3016-1 6X20XD1	7382088	14	1	229	10143342	LECKOELRUECKLAUF
SCHELLE DIN 3016-1 8X15XD1	7381771	31	1	269	10151328	KABELBAUM ANBAU
SCHELLE DIN 3016-1 8X20XD1	7382090	37	4	269	10151328	KABELBAUM ANBAU
SCHELLE DIN 3017-1 16/12-20	4601105	6	1	195	10139112	OELLEITUNG VORM.
SCHELLE G-ST-52 FE//ZN20//C	97039859	15	5	511	96051842	ABGASANLAGE VORM.
SCHENKELFEDER	571430508	5	1	649	10040024	TASCHENSCHLOSS
SCHENKELFEDER 2,5X13,5	571741908	19	1	764	512363708	HYDROZYLINDER
SCHIEBEKUPPLUNG	790042708	9	1	151	919328608	WERKZEUG M.ZUBEHOER
SCHIEBERAHMEN RAL 9005	97136699	2	1	385	96048757	BECHERHALTER
SCHIEBETUER EINBAU SPF	917304708	133	1	13		LIEBHERR LTR 1220
SCHIENENPAAR	10650489	70	1	435	10877138	FAHRERSITZ
SCHILD	11494432	(2)	1	136	11347526	ELEKTROPUMPE
SCHILD	11494581	(3)	1	136	11347526	ELEKTROPUMPE
SCHILD	553031008	2	1	601	918628408	KLIMAANLAGE OW
SCHILD	971749908	2	2	164	917862808	BESCHILDERUNG GROSSBRI
SCHILD	976540908	4	1	551	969061708	TRAEGERBLECH SICHERUNG
SCHILD	977667008	4	1	714	968708708	KLEMMKASTEN KPL.
SCHILD 100X184X0,1 KLEBEFO	11952500	1	2	169	919553608	ZUSATZBESCHILD.CALIFORN
SCHILD 100X80 KLEBEFOLIE	97051193	(1)	1	652	917260608	GEGENGEWICHT M.BEFESTIG
SCHILD 108DBA/100X90 KLEBE	971693508	76	1	164	917862808	BESCHILDERUNG GROSSBRI
SCHILD 120X80 KLEBEFOLIE	97037383	82	1	500	918731808	HARNSTOFFANLAGE
SCHILD 158X33X1 AL-BL	97044048	157	2	56	96035801	HYDRAULIK MITTELTEIL

Bezeichnung	Artikel	Pos.	Menge	Seite	Baugruppe	Bezeichnung
SCHILD 158X68 KLEBEFOLIE	97020380	(2)	3	652	917260608	GEGENGEWICHT M.BEFESTIG
SCHILD 160X100 KLEBEFOLIE	97067626	5	2	752	917531708	BALLASTTRAVERSE
SCHILD 168X62 KLEBEFOLIE	978674808	63	12	164	917862808	BESCHILDERUNG GROSSBRI
SCHILD 168X62 KLEBEFOLIE	978674808	(3)	2	652	917260608	GEGENGEWICHT M.BEFESTIG
SCHILD 168X88 KLEBEFOLIE	97009799	101	1	164	917862808	BESCHILDERUNG GROSSBRI
SCHILD 168X88 KLEBEFOLIE	97011689	95	1	164	917862808	BESCHILDERUNG GROSSBRI
SCHILD 168X88 KLEBEFOLIE	97011690	96	1	164	917862808	BESCHILDERUNG GROSSBRI
SCHILD 168X88 KLEBEFOLIE	97036732	68	1	164	917862808	BESCHILDERUNG GROSSBRI
SCHILD 168X88 KLEBEFOLIE	97037952	18	1	164	917862808	BESCHILDERUNG GROSSBRI
SCHILD 168X88 KLEBEFOLIE	97043334	90	4	164	917862808	BESCHILDERUNG GROSSBRI
SCHILD 168X88 KLEBEFOLIE	97043335	91	4	164	917862808	BESCHILDERUNG GROSSBRI
SCHILD 168X88 KLEBEFOLIE	97043336	92	4	164	917862808	BESCHILDERUNG GROSSBRI
SCHILD 168X88 KLEBEFOLIE	97060689	100	1	164	917862808	BESCHILDERUNG GROSSBRI
SCHILD 168X88 KLEBEFOLIE	97067627	8	2	658	968068308	MONTAGEVORRICHTUNG
SCHILD 168X88 KLEBEFOLIE	978674308	28	2	164	917862808	BESCHILDERUNG GROSSBRI
SCHILD 168X88 KLEBEFOLIE	978867108	33	2	164	917862808	BESCHILDERUNG GROSSBRI
SCHILD 168X88 KLEBEFOLIE	979383308	62	1	164	917862808	BESCHILDERUNG GROSSBRI
SCHILD 1X75X45 ALUMINIUM	97038433	16	1	395	917304508	KRANFUEHRERKABINE VORM.
SCHILD 1X80X80 KLEBEFOLIE	974150408	84	2	164	917862808	BESCHILDERUNG GROSSBRI
SCHILD 1X80X80 KLEBEFOLIE	974150508	85	2	164	917862808	BESCHILDERUNG GROSSBRI
SCHILD 1X80X80 KLEBEFOLIE	974150608	86	2	164	917862808	BESCHILDERUNG GROSSBRI
SCHILD 1X80X80 KLEBEFOLIE	974150708	87	2	164	917862808	BESCHILDERUNG GROSSBRI
SCHILD 208X88 KLEBEFOLIE	97016304	49	1	164	917862808	BESCHILDERUNG GROSSBRI
SCHILD 208X88 KLEBEFOLIE	97016392	72	4	164	917862808	BESCHILDERUNG GROSSBRI
SCHILD 208X88 KLEBEFOLIE	978673908	11	2	164	917862808	BESCHILDERUNG GROSSBRI
SCHILD 208X88 KLEBEFOLIE	978674008	12	8	164	917862808	BESCHILDERUNG GROSSBRI
SCHILD 208X88 KLEBEFOLIE	978674108	14	15	164	917862808	BESCHILDERUNG GROSSBRI
SCHILD 208X88 KLEBEFOLIE	978674408	29	5	164	917862808	BESCHILDERUNG GROSSBRI
SCHILD 208X88 KLEBEFOLIE	978674508	31	1	164	917862808	BESCHILDERUNG GROSSBRI
SCHILD 208X88 KLEBEFOLIE	978674608	32	1	164	917862808	BESCHILDERUNG GROSSBRI
SCHILD 208X88 KLEBEFOLIE	978674908	64	1	164	917862808	BESCHILDERUNG GROSSBRI
SCHILD 208X88 KLEBEFOLIE	978675008	66	8	164	917862808	BESCHILDERUNG GROSSBRI
SCHILD 20X10 KLEBEFOLIE SP	97064219	80	1	500	918731808	HARNSTOFFANLAGE
SCHILD 20X10 KLEBEFOLIE SP	97064220	81	1	500	918731808	HARNSTOFFANLAGE
SCHILD 225X165 KLEBEFOLIE	971539808	1	1	771	919127808	BESCHILDERUNG TRANSPOR
SCHILD 4X228X100 S315MC FE	975231708	6	1	68	918925508	QUERTRAEGER KPL.
SCHILD 6X107X237 G-ALSI12	772624608	1	1	161	916283508	ZUSATZBESCHILDERUNG
SCHILD 70X184X0,1 KLEBEFO	13187353	2	1	169	919553608	ZUSATZBESCHILD.CALIFORN
SCHILD 75X45 ALUMINIUM	976955508	3	1	601	918628408	KLIMAANLAGE OW
SCHILD 80-38X0 LEXAN	976917008	2	1	711	966291008	KLEMMKASTEN
SCHILD 85X55 SPF	97025520	(1)	1	734	917268408	MASTNASE
SCHILD 88X450X0,1 FOLIE	10663718	9	2	754	910836808	HAKENFLASCHE
SCHILD IDENTNR. IDENT-NR	973567608	10	2	658	968068308	MONTAGEVORRICHTUNG
SCHILD PROJEKT TYP KLEBE	97067623	9	2	658	968068308	MONTAGEVORRICHTUNG
SCHILD PROJEKT TYP KLEBE	97067623	4	2	752	917531708	BALLASTTRAVERSE
SCHLAUCH 100X180 EPDM	10872213	250	1	520	918731908	LUFTFILTERANLAGE
SCHLAUCH 85X200 SILIKON	551710608	252	1	287	919007708	ANTRIEBSAGGREGAT VORM.
SCHLAUCH DIN1283 11X300	12104544	(1)	1	151	919328608	WERKZEUG M.ZUBEHOER
SCHLAUCH DN16 500	510501008	301	2	496	969763408	VERROHRUNG DRUCKLUFTA
SCHLAUCH DN3,5-GU23725	591080608	28	0.25	415	916163008	WISCHANLAGE EINBAU
SCHLAUCH DN82-UNIE13 SC	11000901	11	2.15	412	916168308	LUFTFUEHRUNG
SCHLAUCH GESCHLITZT	97056998	341	5	562	96045351	HYDRAULIK OBERWAGEN
SCHLAUCH GESCHLITZT	97056998	304	1	622	969426308	ZUSATZHYDRAULIK KLAPPSPI
SCHLAUCH KPL.	925185208	10	1	657	919028808	MECH.TEILE VERSANDMONT
SCHLAUCH KPL.	925185308	11	1	657	919028808	MECH.TEILE VERSANDMONT
SCHLAUCH KPL.	926990808	402	1	597	918739608	SCHLAUCHLEITUNGEN OBER
SCHLAUCH KPL.	968148808	(1449)	1	622	969426308	ZUSATZHYDRAULIK KLAPPSPI
SCHLAUCH KPL. 1SC 8X1400	969452208	326	1	596	918739608	SCHLAUCHLEITUNGEN OBER
SCHLAUCH KPL. 1SC 8X14100	962968908	1490	1	729	968223308	SCHLAUCHLEITUNGEN KLAP
SCHLAUCH KPL. 1SC 8X300	927637908	1255	1	619	968083708	SCHLAUCHLEITUNGEN HUBW

Bezeichnung	Artikel	Pos.	Menge	Seite	Baugruppe	Bezeichnung
SCHLAUCH KPL. 1SC 8X330	965198708	354	1	597	918739608	SCHLAUCHLEITUNGEN OBER
SCHLAUCH KPL. 1SC 8X340	969634408	329	1	596	918739608	SCHLAUCHLEITUNGEN OBER
SCHLAUCH KPL. 1SC 8X360	926130108	202	1	596	918739608	SCHLAUCHLEITUNGEN OBER
SCHLAUCH KPL. 1SC 8X3600	96035632	203	1	596	918739608	SCHLAUCHLEITUNGEN OBER
SCHLAUCH KPL. 1SC 8X3700	927232508	1378	1	590	969347008	SCHLAUCHLEITUNGEN ZUSA
SCHLAUCH KPL. 1SC 8X4100	962956708	346	1	597	918739608	SCHLAUCHLEITUNGEN OBER
SCHLAUCH KPL. 1SC 8X460	96044685	836	1	99	96035799	SCHLAUCHLEITUNGEN RAUP
SCHLAUCH KPL. 1SC 8X460	96044685	836	1	116	96035798	SCHLAUCHLEITUNGEN RAUP
SCHLAUCH KPL. 1SC 8X500	926098108	1377	1	590	969347008	SCHLAUCHLEITUNGEN ZUSA
SCHLAUCH KPL. 1SC 8X720	966861108	331	1	597	918739608	SCHLAUCHLEITUNGEN OBER
SCHLAUCH KPL. 1SC 8X960	926379108	1256	1	619	968083708	SCHLAUCHLEITUNGEN HUBW
SCHLAUCH KPL. 1SN 25X1240	967219908	373	1	597	918739608	SCHLAUCHLEITUNGEN OBER
SCHLAUCH KPL. 1SN 25X1300	968144308	807	1	58	96035802	SCHLAUCHLEITUNGEN MITTE
SCHLAUCH KPL. 1SN 25X1750	928033508	806	2	58	96035802	SCHLAUCHLEITUNGEN MITTE
SCHLAUCH KPL. 1SN 25X1800	928720408	405	1	597	918739608	SCHLAUCHLEITUNGEN OBER
SCHLAUCH KPL. 1SN 25X1900	968144208	805	1	58	96035802	SCHLAUCHLEITUNGEN MITTE
SCHLAUCH KPL. 1SN 25X3900	968351508	345	1	597	918739608	SCHLAUCHLEITUNGEN OBER
SCHLAUCH KPL. 1SN 25X640	927032108	224	1	596	918739608	SCHLAUCHLEITUNGEN OBER
SCHLAUCH KPL. 1SN 25X700	968144708	804	1	58	96035802	SCHLAUCHLEITUNGEN MITTE
SCHLAUCH KPL. 1SN 25X960	969634908	403	1	597	918739608	SCHLAUCHLEITUNGEN OBER
SCHLAUCH KPL. 1SN 32X2200	969634508	375	1	597	918739608	SCHLAUCHLEITUNGEN OBER
SCHLAUCH KPL. 1SN 32X3500	968148408	842	1	99	96035799	SCHLAUCHLEITUNGEN RAUP
SCHLAUCH KPL. 1SN 32X4250	96035892	832	1	116	96035798	SCHLAUCHLEITUNGEN RAUP
SCHLAUCH KPL. 2SN 10X1460	926555408	(881)	4	132	968077208	HYDRAULIK ABSTUETZUNG
SCHLAUCH KPL. 2SN 10X1500	929310208	(880)	4	132	968077208	HYDRAULIK ABSTUETZUNG
SCHLAUCH KPL. 2SN 10X1700	928865508	810	2	58	96035802	SCHLAUCHLEITUNGEN MITTE
SCHLAUCH KPL. 2SN 10X1900	968151308	305	1	596	918739608	SCHLAUCHLEITUNGEN OBER
SCHLAUCH KPL. 2SN 10X2900	929391108	318	1	596	918739608	SCHLAUCHLEITUNGEN OBER
SCHLAUCH KPL. 2SN 10X3000	928762308	317	1	596	918739608	SCHLAUCHLEITUNGEN OBER
SCHLAUCH KPL. 2SN 10X3550	96035894	843	1	99	96035799	SCHLAUCHLEITUNGEN RAUP
SCHLAUCH KPL. 2SN 10X400	921255408	483	1	718	968187108	SCHLAUCHLEITUNGEN TELE
SCHLAUCH KPL. 2SN 10X4050	96035893	833	1	116	96035798	SCHLAUCHLEITUNGEN RAUP
SCHLAUCH KPL. 2SN 12X1300	927613508	206	1	596	918739608	SCHLAUCHLEITUNGEN OBER
SCHLAUCH KPL. 2SN 12X1700	962255708	386	1	597	918739608	SCHLAUCHLEITUNGEN OBER
SCHLAUCH KPL. 2SN 12X1700	962255708	387	1	597	918739608	SCHLAUCHLEITUNGEN OBER
SCHLAUCH KPL. 2SN 12X2150	962969208	388	1	597	918739608	SCHLAUCHLEITUNGEN OBER
SCHLAUCH KPL. 2SN 12X2150	962969208	389	1	597	918739608	SCHLAUCHLEITUNGEN OBER
SCHLAUCH KPL. 2SN 12X3400	929331808	481	1	718	968187108	SCHLAUCHLEITUNGEN TELE
SCHLAUCH KPL. 2SN 12X3600	929753308	1491	1	729	968223308	SCHLAUCHLEITUNGEN KLAP
SCHLAUCH KPL. 2SN 12X370	96035635	207	1	596	918739608	SCHLAUCHLEITUNGEN OBER
SCHLAUCH KPL. 2SN 12X3700	963457808	334	1	597	918739608	SCHLAUCHLEITUNGEN OBER
SCHLAUCH KPL. 2SN 12X3800	961861508	1492	1	729	968223308	SCHLAUCHLEITUNGEN KLAP
SCHLAUCH KPL. 2SN 12X420	96035633	204	1	596	918739608	SCHLAUCHLEITUNGEN OBER
SCHLAUCH KPL. 2SN 12X760	964958008	1494	1	729	968223308	SCHLAUCHLEITUNGEN KLAP
SCHLAUCH KPL. 2SN 12X860	928765908	1493	1	729	968223308	SCHLAUCHLEITUNGEN KLAP
SCHLAUCH KPL. 2SN 16X250	969633908	229	1	596	918739608	SCHLAUCHLEITUNGEN OBER
SCHLAUCH KPL. 2SN 16X420	96034411	201	1	596	918739608	SCHLAUCHLEITUNGEN OBER
SCHLAUCH KPL. 2SN 16X4600	962440508	200	1	596	918739608	SCHLAUCHLEITUNGEN OBER
SCHLAUCH KPL. 2SN 20X280	969634108	221	1	596	918739608	SCHLAUCHLEITUNGEN OBER
SCHLAUCH KPL. 2SN 20X480	928037208	406	1	597	918739608	SCHLAUCHLEITUNGEN OBER
SCHLAUCH KPL. 2SN 20X480	969386708	396	1	597	918739608	SCHLAUCHLEITUNGEN OBER
SCHLAUCH KPL. 2SN 20X540	969386508	315	1	596	918739608	SCHLAUCHLEITUNGEN OBER
SCHLAUCH KPL. 2SN 6X13600	962968508	1488	1	723	968222808	SCHLAUCHLEITUNGEN KLAP
SCHLAUCH KPL. 2SN 6X13600	962968508	1489	1	723	968222808	SCHLAUCHLEITUNGEN KLAP
SCHLAUCH KPL. 2SN 6X220	966184308	400	1	597	918739608	SCHLAUCHLEITUNGEN OBER
SCHLAUCH KPL. 2SN 6X250	963562308	1263	1	619	968083708	SCHLAUCHLEITUNGEN HUBW
SCHLAUCH KPL. 2SN 6X300	968351008	233	1	596	918739608	SCHLAUCHLEITUNGEN OBER
SCHLAUCH KPL. 2SN 6X3500	962968608	482	1	718	968187108	SCHLAUCHLEITUNGEN TELE
SCHLAUCH KPL. 2SN 6X500	968149808	1268	1	619	968083708	SCHLAUCHLEITUNGEN HUBW
SCHLAUCH KPL. 2SN 6X500	968350908	231	1	596	918739608	SCHLAUCHLEITUNGEN OBER

Bezeichnung	Artikel	Pos.	Menge	Seite	Baugruppe	Bezeichnung
SCHLAUCH KPL. 2SN 6X540	923015608	1486	1	723	968222808	SCHLAUCHLEITUNGEN KLAP
SCHLAUCH KPL. 2SN 6X540	923015608	1487	1	723	968222808	SCHLAUCHLEITUNGEN KLAP
SCHLAUCH KPL. 2SN 6X640	969634308	230	1	596	918739608	SCHLAUCHLEITUNGEN OBER
SCHLAUCH KPL. 2SN 6X780	968141708	1260	1	619	968083708	SCHLAUCHLEITUNGEN HUBW
SCHLAUCH KPL. 2SN 6X880	968151408	310	1	596	918739608	SCHLAUCHLEITUNGEN OBER
SCHLAUCH KPL. 2SN 8X1140	968351208	320	1	596	918739608	SCHLAUCHLEITUNGEN OBER
SCHLAUCH KPL. 2SN 8X1180	968599208	319	1	596	918739608	SCHLAUCHLEITUNGEN OBER
SCHLAUCH KPL. 2SN 8X2350	968152008	323	1	596	918739608	SCHLAUCHLEITUNGEN OBER
SCHLAUCH KPL. 2SN 8X2350	968152008	324	1	596	918739608	SCHLAUCHLEITUNGEN OBER
SCHLAUCH KPL. 2SN 8X2500	928013408	(1)	2	159	96056969	ZUSATZHYDRAULIK
SCHLAUCH KPL. 2SN 8X2550	969633808	212	1	596	918739608	SCHLAUCHLEITUNGEN OBER
SCHLAUCH KPL. 2SN 8X320	968585908	802	4	58	96035802	SCHLAUCHLEITUNGEN MITTE
SCHLAUCH KPL. 2SN 8X400	928006008	356	1	597	918739608	SCHLAUCHLEITUNGEN OBER
SCHLAUCH KPL. 2SN 8X400	928874708	801	4	58	96035802	SCHLAUCHLEITUNGEN MITTE
SCHLAUCH KPL. 2SN 8X600	928005808	316	1	596	918739608	SCHLAUCHLEITUNGEN OBER
SCHLAUCH KPL. 2SN 8X660	929312908	1379	1	590	969347008	SCHLAUCHLEITUNGEN ZUSA
SCHLAUCH KPL. 2TE 10X1000	926465408	808	1	58	96035802	SCHLAUCHLEITUNGEN MITTE
SCHLAUCH KPL. 2TE 10X1060	926976308	835	1	99	96035799	SCHLAUCHLEITUNGEN RAUP
SCHLAUCH KPL. 2TE 10X1060	926976308	835	1	116	96035798	SCHLAUCHLEITUNGEN RAUP
SCHLAUCH KPL. 2TE 10X1200	926711908	350	1	597	918739608	SCHLAUCHLEITUNGEN OBER
SCHLAUCH KPL. 2TE 10X1220	928022908	364	1	597	918739608	SCHLAUCHLEITUNGEN OBER
SCHLAUCH KPL. 2TE 10X1240	96040431	370	1	597	918739608	SCHLAUCHLEITUNGEN OBER
SCHLAUCH KPL. 2TE 10X190	968152508	355	1	597	918739608	SCHLAUCHLEITUNGEN OBER
SCHLAUCH KPL. 2TE 10X1900	968139808	348	1	597	918739608	SCHLAUCHLEITUNGEN OBER
SCHLAUCH KPL. 2TE 10X1900	968144408	811	1	58	96035802	SCHLAUCHLEITUNGEN MITTE
SCHLAUCH KPL. 2TE 10X1950	926362908	325	1	596	918739608	SCHLAUCHLEITUNGEN OBER
SCHLAUCH KPL. 2TE 10X2150	926028808	330	1	596	918739608	SCHLAUCHLEITUNGEN OBER
SCHLAUCH KPL. 2TE 10X2150	967355108	215	1	596	918739608	SCHLAUCHLEITUNGEN OBER
SCHLAUCH KPL. 2TE 10X220	927294708	379	1	597	918739608	SCHLAUCHLEITUNGEN OBER
SCHLAUCH KPL. 2TE 10X260	962641808	378	1	597	918739608	SCHLAUCHLEITUNGEN OBER
SCHLAUCH KPL. 2TE 10X260	963703908	1258	1	619	968083708	SCHLAUCHLEITUNGEN HUBW
SCHLAUCH KPL. 2TE 10X2800	923016308	349	1	597	918739608	SCHLAUCHLEITUNGEN OBER
SCHLAUCH KPL. 2TE 10X360	928046908	313	1	596	918739608	SCHLAUCHLEITUNGEN OBER
SCHLAUCH KPL. 2TE 10X360	928046908	1257	1	619	968083708	SCHLAUCHLEITUNGEN HUBW
SCHLAUCH KPL. 2TE 10X380	920896108	1261	1	619	968083708	SCHLAUCHLEITUNGEN HUBW
SCHLAUCH KPL. 2TE 10X400	923016208	1254	1	619	968083708	SCHLAUCHLEITUNGEN HUBW
SCHLAUCH KPL. 2TE 10X490	965945408	353	1	597	918739608	SCHLAUCHLEITUNGEN OBER
SCHLAUCH KPL. 2TE 10X500	926041708	812	1	58	96035802	SCHLAUCHLEITUNGEN MITTE
SCHLAUCH KPL. 2TE 10X520	926610108	335	1	597	918739608	SCHLAUCHLEITUNGEN OBER
SCHLAUCH KPL. 2TE 10X600	926120008	834	1	99	96035799	SCHLAUCHLEITUNGEN RAUP
SCHLAUCH KPL. 2TE 10X600	926120008	834	1	116	96035798	SCHLAUCHLEITUNGEN RAUP
SCHLAUCH KPL. 2TE 10X600	929752308	809	1	58	96035802	SCHLAUCHLEITUNGEN MITTE
SCHLAUCH KPL. 2TE 10X660	928024908	211	1	596	918739608	SCHLAUCHLEITUNGEN OBER
SCHLAUCH KPL. 2TE 10X700	928025108	1262	1	619	968083708	SCHLAUCHLEITUNGEN HUBW
SCHLAUCH KPL. 2TE 10X740	964273708	217	1	596	918739608	SCHLAUCHLEITUNGEN OBER
SCHLAUCH KPL. 2TE 10X800	926606608	214	1	596	918739608	SCHLAUCHLEITUNGEN OBER
SCHLAUCH KPL. 2TE 12X1000	926289108	351	1	597	918739608	SCHLAUCHLEITUNGEN OBER
SCHLAUCH KPL. 2TE 12X1900	969034108	(2393)	1	341	91002861	KRAFTSTOFFFOERDERUNG
SCHLAUCH KPL. 2TE 12X3100	926561708	222	1	596	918739608	SCHLAUCHLEITUNGEN OBER
SCHLAUCH KPL. 2TE 12X4100	928456608	(430)	1	496	969763408	VERROHRUNG DRUCKLUFTA
SCHLAUCH KPL. 2TE 12X6400	965946108	(2394)	1	341	91002861	KRAFTSTOFFFOERDERUNG
SCHLAUCH KPL. 2TE 12X650	96033235	(2395)	1	341	91002861	KRAFTSTOFFFOERDERUNG
SCHLAUCH KPL. 2TE 12X820	965159708	336	1	597	918739608	SCHLAUCHLEITUNGEN OBER
SCHLAUCH KPL. 2TE 16X1200	926041308	228	1	596	918739608	SCHLAUCHLEITUNGEN OBER
SCHLAUCH KPL. 2TE 16X180	96035634	205	1	596	918739608	SCHLAUCHLEITUNGEN OBER
SCHLAUCH KPL. 2TE 16X2800	96034858	(2391)	1	341	91002861	KRAFTSTOFFFOERDERUNG
SCHLAUCH KPL. 2TE 16X4700	920978208	(2390)	1	341	91002861	KRAFTSTOFFFOERDERUNG
SCHLAUCH KPL. 2TE 16X600	968148708	(1448)	1	622	969426308	ZUSATZHYDRAULIK KLAPPSPI
SCHLAUCH KPL. 2TE 16X760	968350608	213	1	596	918739608	SCHLAUCHLEITUNGEN OBER
SCHLAUCH KPL. 2TE 20X1000	928042908	369	1	597	918739608	SCHLAUCHLEITUNGEN OBER

Bezeichnung	Artikel	Pos.	Menge	Seite	Baugruppe	Bezeichnung
SCHLAUCH KPL. 2TE 20X1020	968350008	1252	1	619	968083708	SCHLAUCHLEITUNGEN HUBW
SCHLAUCH KPL. 2TE 20X1100	968537008	225	1	596	918739608	SCHLAUCHLEITUNGEN OBER
SCHLAUCH KPL. 2TE 20X1460	966860008	1253	1	619	968083708	SCHLAUCHLEITUNGEN HUBW
SCHLAUCH KPL. 2TE 20X200	968150708	219	1	596	918739608	SCHLAUCHLEITUNGEN OBER
SCHLAUCH KPL. 2TE 20X200	968150708	234	1	596	918739608	SCHLAUCHLEITUNGEN OBER
SCHLAUCH KPL. 2TE 20X2500	926757108	372	1	597	918739608	SCHLAUCHLEITUNGEN OBER
SCHLAUCH KPL. 2TE 20X3100	968007308	357	1	597	918739608	SCHLAUCHLEITUNGEN OBER
SCHLAUCH KPL. 2TE 20X3600	928876208	358	1	597	918739608	SCHLAUCHLEITUNGEN OBER
SCHLAUCH KPL. 2TE 20X420	929742608	1383	1	619	968083708	SCHLAUCHLEITUNGEN HUBW
SCHLAUCH KPL. 2TE 20X440	927295708	218	1	596	918739608	SCHLAUCHLEITUNGEN OBER
SCHLAUCH KPL. 2TE 20X440	927295708	1266	1	619	968083708	SCHLAUCHLEITUNGEN HUBW
SCHLAUCH KPL. 2TE 20X540	967354708	1267	1	619	968083708	SCHLAUCHLEITUNGEN HUBW
SCHLAUCH KPL. 2TE 20X680	968350108	1382	1	619	968083708	SCHLAUCHLEITUNGEN HUBW
SCHLAUCH KPL. 2TE 20X760	968350708	226	1	596	918739608	SCHLAUCHLEITUNGEN OBER
SCHLAUCH KPL. 2TE 20X800	929631408	374	1	597	918739608	SCHLAUCHLEITUNGEN OBER
SCHLAUCH KPL. 2TE 20X800	965434608	352	1	597	918739608	SCHLAUCHLEITUNGEN OBER
SCHLAUCH KPL. 2TE 20X960	966860408	367	1	597	918739608	SCHLAUCHLEITUNGEN OBER
SCHLAUCH KPL. 2TE 8X700	968143708	837	1	99	96035799	SCHLAUCHLEITUNGEN RAUP
SCHLAUCH KPL. 2TE 8X700	968143708	837	1	116	96035798	SCHLAUCHLEITUNGEN RAUP
SCHLAUCH KPL. 304 35X330	96040432	254	2	596	918739608	SCHLAUCHLEITUNGEN OBER
SCHLAUCH KPL. 304 60X140	96040433	209	1	596	918739608	SCHLAUCHLEITUNGEN OBER
SCHLAUCH KPL. 4ST+ 31X260	968151208	302	1	596	918739608	SCHLAUCHLEITUNGEN OBER
SCHLAUCH KPL. 4ST+ 31X345	96035889	841	1	99	96035799	SCHLAUCHLEITUNGEN RAUP
SCHLAUCH KPL. 4ST+ 31X355	96035888	840	1	99	96035799	SCHLAUCHLEITUNGEN RAUP
SCHLAUCH KPL. 4ST+ 31X360	968349808	1374	1	590	969347008	SCHLAUCHLEITUNGEN ZUSA
SCHLAUCH KPL. 4ST+ 31X410	96035890	830	1	116	96035798	SCHLAUCHLEITUNGEN RAUP
SCHLAUCH KPL. 4ST+ 31X420	96035891	831	1	116	96035798	SCHLAUCHLEITUNGEN RAUP
SCHLAUCH KPL. 4ST+ 31X630	968351408	343	1	597	918739608	SCHLAUCHLEITUNGEN OBER
SCHLAUCH KPL. 4ST+ 31X880	967623008	300	1	596	918739608	SCHLAUCHLEITUNGEN OBER
SCHLAUCH KPL. 4ST+ 31X920	969572608	361	1	597	918739608	SCHLAUCHLEITUNGEN OBER
SCHLAUCH KPL. 4ST+ 31X940	968151108	301	1	596	918739608	SCHLAUCHLEITUNGEN OBER
SCHLAUCH KPL. 75X150	96040435	210	1	596	918739608	SCHLAUCHLEITUNGEN OBER
SCHLAUCH KPL. CARBURITE	96040434	255	1	596	918739608	SCHLAUCHLEITUNGEN OBER
SCHLAUCH KPL. CONTI KWS 1	969452108	2312	2	504	96011801	SCHLAUCHLEITUNGEN HARN
SCHLAUCH KPL. CONTI KWS	96014023	2456	1	331	96034533	SCHLAUCHLEITUNGEN ANTR
SCHLAUCH KPL. CONTI KWS	96023967	2455	1	331	96034533	SCHLAUCHLEITUNGEN ANTR
SCHLAUCH KPL. CONTI KWS	96032358	2457	1	331	96034533	SCHLAUCHLEITUNGEN ANTR
SCHLAUCH KPL. CONTI KWS 1	969384408	2314	1	504	96011801	SCHLAUCHLEITUNGEN HARN
SCHLAUCH KPL. CONTI KWS	96024954	2316	1	504	96011801	SCHLAUCHLEITUNGEN HARN
SCHLAUCH KPL. CONTI KWS	969574508	2310	1	504	96011801	SCHLAUCHLEITUNGEN HARN
SCHLAUCH KPL. CONTI KWS 1	96014733	2311	1	504	96011801	SCHLAUCHLEITUNGEN HARN
SCHLAUCH KPL. CONTI KWS 1	96014732	2313	1	504	96011801	SCHLAUCHLEITUNGEN HARN
SCHLAUCH KPL. CONTI KWS 1	96014734	2315	1	504	96011801	SCHLAUCHLEITUNGEN HARN
SCHLAUCH KPL. CONTI KWS	96020259	(2824)	1	426	917676208	HEIZUNG KRANFUEHRERKAB
SCHLAUCH KPL. CONTI KWS	96023301	2466	1	331	96034533	SCHLAUCHLEITUNGEN ANTR
SCHLAUCH KPL. CONTI KWS	96014060	2463	1	331	96034533	SCHLAUCHLEITUNGEN ANTR
SCHLAUCH KPL. CONTI KWS	96032574	(2802)	1	430	969085208	HEIZUNG VORM.
SCHLAUCH KPL. CONTI KWS 2	96024886	(2823)	1	426	917676208	HEIZUNG KRANFUEHRERKAB
SCHLAUCH KPL. CONTI KWS 2	96034457	(1612)	1	286	919007708	ANTRIEBSAGGREGAT VORM.
SCHLAUCH KPL. CONTI KWS 2	96034535	2451	1	331	96034533	SCHLAUCHLEITUNGEN ANTR
SCHLAUCH KPL. CONTI KWS	96031888	2450	1	331	96034533	SCHLAUCHLEITUNGEN ANTR
SCHLAUCH KPL. CONTI KWS 8	96034540	2453	1	331	96034533	SCHLAUCHLEITUNGEN ANTR
SCHLAUCH KPL. CONTI-KWS 2	96068483	(2800)	1	430	969085208	HEIZUNG VORM.
SCHLAUCH KPL. CONTI-KWS 4	96014317	844	1	99	96035799	SCHLAUCHLEITUNGEN RAUP
SCHLAUCH KPL. CONTI-KWS 4	96014317	829	1	116	96035798	SCHLAUCHLEITUNGEN RAUP
SCHLAUCH KPL. FLEXIT-1T24	965861108	340	3	597	918739608	SCHLAUCHLEITUNGEN OBER
SCHLAUCH KPL. FLEXIT-1T24	966051108	339	1	597	918739608	SCHLAUCHLEITUNGEN OBER
SCHLAUCH KPL. FLEXIT-1T24	968352108	377	1	597	918739608	SCHLAUCHLEITUNGEN OBER
SCHLAUCH KPL. FLEXIT-1T24	968151808	321	1	596	918739608	SCHLAUCHLEITUNGEN OBER
SCHLAUCH KPL. FLEXIT-1T24	968151908	322	1	596	918739608	SCHLAUCHLEITUNGEN OBER

Bezeichnung	Artikel	Pos.	Menge	Seite	Baugruppe	Bezeichnung
SCHLAUCH KPL. GH001 10X1	969041408	(1102)	1	601	918628408	KLIMAANLAGE OW
SCHLAUCH KPL. GH001 13X5	964476008	(1100)	1	601	918628408	KLIMAANLAGE OW
SCHLAUCH KPL. GH001 8X116	969637808	(1103)	1	601	918628408	KLIMAANLAGE OW
SCHLAUCH KPL. GH001 8X670	969452608	(1101)	1	601	918628408	KLIMAANLAGE OW
SCHLAUCH KPL. GH425-10 16	924496108	813	2	58	96035802	SCHLAUCHLEITUNGEN MITTE
SCHLAUCH KPL. GH425-10 16	923853008	314	1	596	918739608	SCHLAUCHLEITUNGEN OBER
SCHLAUCH KPL. GH425-10 16	96035865	816	4	58	96035802	SCHLAUCHLEITUNGEN MITTE
SCHLAUCH KPL. GH425-10 16	924134808	332	1	597	918739608	SCHLAUCHLEITUNGEN OBER
SCHLAUCH KPL. GH425-10 16	923342808	333	1	597	918739608	SCHLAUCHLEITUNGEN OBER
SCHLAUCH KPL. GH425-10 16	920715608	800	12	58	96035802	SCHLAUCHLEITUNGEN MITTE
SCHLAUCH KPL. GH425-10 16	920715608	814	4	58	96035802	SCHLAUCHLEITUNGEN MITTE
SCHLAUCH KPL. GH425-10 16	921990108	342	1	597	918739608	SCHLAUCHLEITUNGEN OBER
SCHLAUCH KPL. GH425-10 16	969935008	341	1	597	918739608	SCHLAUCHLEITUNGEN OBER
SCHLAUCH KPL. GH425-10 16X	969633008	1375	1	590	969347008	SCHLAUCHLEITUNGEN ZUSA
SCHLAUCH KPL. GH425-10 16X	925686208	1376	1	590	969347008	SCHLAUCHLEITUNGEN ZUSA
SCHLAUCH KPL. GH425-10 16X	924741208	303	1	596	918739608	SCHLAUCHLEITUNGEN OBER
SCHLAUCH KPL. GH425-10 16X	924741208	304	1	596	918739608	SCHLAUCHLEITUNGEN OBER
SCHLAUCH KPL. GH425-10 16X	926315908	815	2	58	96035802	SCHLAUCHLEITUNGEN MITTE
SCHLAUCH KPL. GH425-12 19X	925352308	360	1	597	918739608	SCHLAUCHLEITUNGEN OBER
SCHLAUCH KPL. GH425-12 19X	922068108	368	1	597	918739608	SCHLAUCHLEITUNGEN OBER
SCHLAUCH KPL. GH425-12 19X	923702508	803	1	58	96035802	SCHLAUCHLEITUNGEN MITTE
SCHLAUCH KPL. GH425-8 12X1	963170408	308	1	596	918739608	SCHLAUCHLEITUNGEN OBER
SCHLAUCH KPL. GH425-8 12X1	923343608	309	1	596	918739608	SCHLAUCHLEITUNGEN OBER
SCHLAUCH KPL. GH425-8 12X1	923343408	(1447)	1	622	969426308	ZUSATZHYDRAULIK KLAPPSPI
SCHLAUCH KPL. GH425-8 12X1	966142408	306	1	596	918739608	SCHLAUCHLEITUNGEN OBER
SCHLAUCH KPL. GH425-8 12X2	924567508	(1445)	1	622	969426308	ZUSATZHYDRAULIK KLAPPSPI
SCHLAUCH KPL. GH425-8 12X2	923087208	(1446)	1	622	969426308	ZUSATZHYDRAULIK KLAPPSPI
SCHLAUCH KPL. GH425-8 12X2	966350208	307	1	596	918739608	SCHLAUCHLEITUNGEN OBER
SCHLAUCH KPL. GH506 31X1	962913408	480	3	718	968187108	SCHLAUCHLEITUNGEN TELE
SCHLAUCH KPL. GH506-16 25	968150108	1385	1	619	968083708	SCHLAUCHLEITUNGEN HUBW
SCHLAUCH KPL. GH506-16 25	969634608	380	1	597	918739608	SCHLAUCHLEITUNGEN OBER
SCHLAUCH KPL. GH506-16 25	966145808	1270	1	619	968083708	SCHLAUCHLEITUNGEN HUBW
SCHLAUCH KPL. GH506-16 25	968150008	1384	1	619	968083708	SCHLAUCHLEITUNGEN HUBW
SCHLAUCH KPL. GH506-16 25	968149908	1269	1	619	968083708	SCHLAUCHLEITUNGEN HUBW
SCHLAUCH KPL. GH506-16 25	96040847	376	1	597	918739608	SCHLAUCHLEITUNGEN OBER
SCHLAUCH KPL. GH506-16 25	963926708	383	1	597	918739608	SCHLAUCHLEITUNGEN OBER
SCHLAUCH KPL. GH506-16 25	965155808	236	1	596	918739608	SCHLAUCHLEITUNGEN OBER
SCHLAUCH KPL. GH506-16 25	968351808	381	1	597	918739608	SCHLAUCHLEITUNGEN OBER
SCHLAUCH KPL. GH506-16 25	969634008	235	1	596	918739608	SCHLAUCHLEITUNGEN OBER
SCHLAUCH KPL. GH506-16 25	968349908	1251	1	619	968083708	SCHLAUCHLEITUNGEN HUBW
SCHLAUCH KPL. GH506-16 25	967618508	385	1	597	918739608	SCHLAUCHLEITUNGEN OBER
SCHLAUCH KPL. GH506-16 25X	969634708	382	1	597	918739608	SCHLAUCHLEITUNGEN OBER
SCHLAUCH KPL. GH506-16 25X	963337608	1372	1	590	969347008	SCHLAUCHLEITUNGEN ZUSA
SCHLAUCH KPL. GH506-16 25X	963171408	1373	1	590	969347008	SCHLAUCHLEITUNGEN ZUSA
SCHLAUCH KPL. GH506-16 25X	968352008	384	1	597	918739608	SCHLAUCHLEITUNGEN OBER
SCHLAUCH KPL. GH506-16 25X	968149608	1250	1	619	968083708	SCHLAUCHLEITUNGEN HUBW
SCHLAUCH KPL. HPC 4X1000	963560708	411	1	597	918739608	SCHLAUCHLEITUNGEN OBER
SCHLAUCH KPL. HPC 4X2850	968841908	890	1	58	96035802	SCHLAUCHLEITUNGEN MITTE
SCHLAUCH KPL. HPC 4X3800	922628908	410	1	597	918739608	SCHLAUCHLEITUNGEN OBER
SCHLAUCH KPL. HPC 4X4900	920983508	891	1	58	96035802	SCHLAUCHLEITUNGEN MITTE
SCHLAUCH KPL. KUNSTSTOF	96013988	2333	1	504	96011801	SCHLAUCHLEITUNGEN HARN
SCHLAUCHFUEHRUNG SCH	925143708	1	1	659	925141508	SCHLAUCHFUEHRUNG VORM.
SCHLAUCHFUEHRUNG VORM.	925141508	9	1	657	919028808	MECH.TEILE VERSANDMONT
SCHLAUCHLEITUNG	96050638	400	1	426	917676208	HEIZUNG KRANFUEHRERKAB
SCHLAUCHLEITUNG X300	790042214	7	1	151	919328608	WERKZEUG M.ZUBEHOER
SCHLAUCHLEITUNG X300	790042914	8	1	151	919328608	WERKZEUG M.ZUBEHOER
SCHLAUCHLEITUNGEN	96057002	10	1	159	96056969	ZUSATZHYDRAULIK
SCHLAUCHLEITUNGEN	96069293	400	1	430	969085208	HEIZUNG VORM.
SCHLAUCHLEITUNGEN ABST	968077308	10	1	132	968077208	HYDRAULIK ABSTUETZUNG
SCHLAUCHLEITUNGEN ANTR	96034533	290	1	280	918731408	ANTRIEBSAGGREGAT KPL.

Bezeichnung	Artikel	Pos.	Menge	Seite	Baugruppe	Bezeichnung
SCHLAUCHLEITUNGEN DRU	969842608	10	1	496	969763408	VERROHRUNG DRUCKLUFTA
SCHLAUCHLEITUNGEN HAR	96011801	20	1	500	918731808	HARNSTOFFANLAGE
SCHLAUCHLEITUNGEN HUBW	968083708	10	1	616	967784808	HYDRAULIK HILFSHUBWERK
SCHLAUCHLEITUNGEN KLAP	968222808	10	1	722	967785408	ZUSATZHYDRAULIK KLAPPSPI
SCHLAUCHLEITUNGEN KLAP	968223308	10	1	728	967785008	ZUSATZHYDRAULIK KLAPPSPI
SCHLAUCHLEITUNGEN KLAP	969426408	10	1	622	969426308	ZUSATZHYDRAULIK KLAPPSPI
SCHLAUCHLEITUNGEN KLIMA	96018575	500	1	601	918628408	KLIMAANLAGE OW
SCHLAUCHLEITUNGEN KRAFT	96034873	2	1	341	91002861	KRAFTSTOFFFOERDERUNG
SCHLAUCHLEITUNGEN MITTE	96035802	10	1	56	96035801	HYDRAULIK MITTELTEIL
SCHLAUCHLEITUNGEN MOTO	96034456	50	1	286	919007708	ANTRIEBSAGGREGAT VORM.
SCHLAUCHLEITUNGEN OBER	918739608	191	1	14		LIEBHERR LTR 1220
SCHLAUCHLEITUNGEN RAUP	96035798	10	1	115	96035792	HYDR.FAHRANTRIEB
SCHLAUCHLEITUNGEN RAUP	96035799	10	1	98	96035796	HYDR.FAHRANTRIEB
SCHLAUCHLEITUNGEN TELE	968187108	10	1	717	967784508	HYDRAULIK TELE
SCHLAUCHLEITUNGEN ZUSAT	969347008	10	1	552	918732808	HYDRAULIK
SCHLAUCHNIPPEL	10142668	1	1	249	10142744	KUEHLWASSERENTLUEFTUN
SCHLAUCHNIPPEL 11SMn30+	10140969	5	1	249	10142744	KUEHLWASSERENTLUEFTUN
SCHLAUCHNIPPEL CE-0, H54	9140351	6	2	232	10145173	ANSAUGSTUTZEN ANBAU
SCHLAUCHNIPPEL CE-0, H54	9140351	26	1	252	10140729	ATL-ANBAU
SCHLAUCHSCHELLE 10/9,5-10,	553102308	30	5	480	918759808	ZUSATZHEIZUNG OW
SCHLAUCHSCHELLE 10/9,5-10,	553102308	14	1	482	96020359	ZUSATZHEIZUNG VORM.
SCHLAUCHSCHELLE 115/113-	12102528	184	4	507	919674408	ABGASANLAGE
SCHLAUCHSCHELLE 120/110-	774217608	180	3	520	918731908	LUFTFILTERANLAGE
SCHLAUCHSCHELLE 140/130-	774209908	181	1	520	918731908	LUFTFILTERANLAGE
SCHLAUCHSCHELLE 169/167-	774227108	180	2	280	918731408	ANTRIEBSAGGREGAT KPL.
SCHLAUCHSCHELLE 19/17,8-	11162002	24	8	500	918731808	HARNSTOFFANLAGE
SCHLAUCHSCHELLE 21/16-27/	11118077	22	2	426	917676208	HEIZUNG KRANFUEHRERKAB
SCHLAUCHSCHELLE 21/16-27/	11118077	21	12	430	969085208	HEIZUNG VORM.
SCHLAUCHSCHELLE 21/16-27/	11118077	19	6	480	918759808	ZUSATZHEIZUNG OW
SCHLAUCHSCHELLE 21/16-27/	11118077	17	8	482	96020359	ZUSATZHEIZUNG VORM.
SCHLAUCHSCHELLE 21/16-27/	11118077	23	2	500	918731808	HARNSTOFFANLAGE
SCHLAUCHSCHELLE 26/20-32/	774215008	3	1	186	10126713	KURBELGEHAEUSEENTLUEF
SCHLAUCHSCHELLE 26/20-32/	774215008	8	4	232	10145173	ANSAUGSTUTZEN ANBAU
SCHLAUCHSCHELLE 26/20-32/	774215008	25	2	252	10140729	ATL-ANBAU
SCHLAUCHSCHELLE 32/25-40/	774208508	10	1	482	96020359	ZUSATZHEIZUNG VORM.
SCHLAUCHSCHELLE 45/30-45	10878445	20	2	415	916163008	WISCHANLAGE EINBAU
SCHLAUCHSCHELLE 50/40-60/	550838008	17	2	172	918731108	MONTAGETEILE DREHBUEHN
SCHLAUCHSCHELLE 50/40-60/	550838008	185	4	287	919007708	ANTRIEBSAGGREGAT VORM.
SCHLAUCHSCHELLE 60/50-70/	774208008	181	4	287	919007708	ANTRIEBSAGGREGAT VORM.
SCHLAUCHSCHELLE 70/60-80/	774214308	183	4	287	919007708	ANTRIEBSAGGREGAT VORM.
SCHLAUCHSCHELLE 80/70-90/	774206408	186	2	287	919007708	ANTRIEBSAGGREGAT VORM.
SCHLAUCHSCHELLE 86-91X25	774227908	180	1	287	919007708	ANTRIEBSAGGREGAT VORM.
SCHLAUCHSCHELLE 90/80-10	774218808	184	6	287	919007708	ANTRIEBSAGGREGAT VORM.
SCHLAUCHSCHELLE DIN 3017	10872024	307	1	98	96035796	HYDR.FAHRANTRIEB
SCHLAUCHSCHELLE DIN 3017	10872024	307	1	115	96035792	HYDR.FAHRANTRIEB
SCHLAUCHSCHELLE DIN 3017	10872024	302	1	616	967784808	HYDRAULIK HILFSHUBWERK
SCHLAUCHSCHELLE DIN 3017	5004929	6	2	234	10149677	VERBINDUNGSLEITUNG ANBA
SCHLAUCHSCHELLE DIN 3017	12696398	8	7	254	11420633	TAKTVENTIL
SCHLAUCHSCHELLE DIN 3017	4981029	6	4	195	10139112	OELLEITUNG VORM.
SCHLAUCHSCHUTZ DN44-65 S	10449843	300	5.2	132	968077208	HYDRAULIK ABSTUETZUNG
SCHLAUCHSCHUTZ SCHWK.	969444008	19	1	172	918731108	MONTAGETEILE DREHBUEHN
SCHLAUCHSCHUTZSPIRALE D	10870633	25	0.75	426	917676208	HEIZUNG KRANFUEHRERKAB
SCHLAUCHSCHUTZSPIRALE D	10870633	26	0.5	426	917676208	HEIZUNG KRANFUEHRERKAB
SCHLAUCHVERBINDUNGSSTU	10801609	22	2	500	918731808	HARNSTOFFANLAGE
SCHLAUCHVERSCHRAUBUNG	602440708	513	1	49	96045228	KABELSTRANG
SCHLEIFBUEGEL	691041608	19	21	52	11346779	SCHLEIFRINGUEBERTRAGER
SCHLEIFBUEGELHALTER	10359128	21	2	52	11346779	SCHLEIFRINGUEBERTRAGER
SCHLEIFBUEGELHALTER	691043108	17	35	52	11346779	SCHLEIFRINGUEBERTRAGER
SCHLEIFRING 16A	11060087	14	8	710	10354493	LEITUNGSTROMMEL
SCHLEIFRING 16A	11060088	140	8	710	10354493	LEITUNGSTROMMEL

Bezeichnung	Artikel	Pos.	Menge	Seite	Baugruppe	Bezeichnung
SCHLEIFRING 60X2 2,5²	10114843	7	21	52	11346779	SCHLEIFRINGUEBERTRAGER
SCHLEIFRINGSATZ	571851008	21	1	704	10802064	SEILLAENGENGEBER
SCHLEIFRINGUEBERTRAGER	11346779	5	1	39	96045225	ELEKTRIK MITTELSTUECK
SCHLIESSANLAGE	966230408	25	1	421	917304708	SCHIEBETUER EINBAU
SCHLIESSBOLZEN 1.4305	97019129	52	1	421	917304708	SCHIEBETUER EINBAU
SCHLUESSEL	10873434	(1)	1	551	969061708	TRAEGERBLECH SICHERUNG
SCHMIERNIPPEL DIN 71412 C	774301808	21	8	129	919644008	HYDRAULISCHE ABSTUETZUN
SCHMIERNIPPEL M16X1.5	774351714	7	1	83	11320954	LEITRADEINHEIT
SCHMIERNIPPELKAPPE	10014701	16	1	525	10327065	ELEKTROPUMPE
SCHMIEROELFILTER ANBAU	10142942	150	1	176	13455297	DIESELMOTOR
SCHMIEROELLEITUNG 10X1	10140757	3	1	252	10140729	ATL-ANBAU
SCHMIEROELLEITUNG 6X1	9080310	5	1	243	10145278	ANBAUTEILE LUFTPRESSER
SCHMIEROELPUMPE B=41,4	12438990	1	1	216	10148432	SCHMIEROELPUMPE MIT BE
SCHMIEROELPUMPE MIT BEF	10148432	140	1	175	13455297	DIESELMOTOR
SCHNAPPSCHALTER	571486808	29	1	52	11346779	SCHLEIFRINGUEBERTRAGER
SCHNAPPVERSCHLUSS ABS	10296157	(2)	3	445	96036790	DREHBUEHNENVERKLEIDUN
SCHNAPPVERSCHLUSS ABS	10296157	(2)	3	445	96036790	DREHBUEHNENVERKLEIDUN
SCHNAPPVERSCHLUSS ABS	10296157	(2)	3	445	96036790	DREHBUEHNENVERKLEIDUN
SCHNELLBEFESTIGER	704259608	57	1	421	917304708	SCHIEBETUER EINBAU
SCHNELLVERSCHLUSSKUPPL	12101183	40	1	26	96034894	SCHUTZBLECH KPL.LI.
SCHNELLVERSCHLUSSKUPPL	12101183	40	1	29	96034977	SCHUTZBLECH KPL.RE.
SCHNELLVERSCHLUSSKUPPL	12101576	40	1	94	96034962	FUEHRUNG LI.
SCHNELLVERSCHLUSSKUPPL	12101576	40	1	112	96034980	FUEHRUNG RE.
SCHOTTBLECH 4X480X167 S	97031538	5	1	455	969015908	DREHBUEHNENVERKLEIDUN
SCHOTTBLECH 4X553X352 S	97035511	(1)	1	616	967784808	HYDRAULIK HILFSHUBWERK
SCHRAFFURPLAN SPF	917258108	44	1	12		LIEBHERR LTR 1220
SCHRAUBE	570941408	2	1	725	511479408	LASTHALTEVENTIL
SCHRAUBE 25X25X65 8.8 FE//	956414208	21	4	701	966134608	ANBAUTEILE ZYLINDER
SCHRAUBE 90x297 35NICRM	970574508	11	1	677	917292108	TELESKOP 2 VORM.
SCHRAUBE 90x349 35NICRM	970545508	11	1	673	917292008	TELESKOP 1 VORM.
SCHRAUBE DIN 912 M8X25 12.	570613877	9	4	240	5700161	LUFTPRESSER
SCHRAUBE M8X30 St Rm>=80	13541106	2	1	268	10144098	BEFESTIGUNGSSCHELLE
SCHRAUBE UNF1 1/8"X12X130	485501414	(2)	288	69	917436708	BODENPLATTEN KPL.
SCHRAUBENDREHER 10 CRV	790032508	52	1	152	928569808	GRUNDWERKZEUG
SCHRAUBENDREHER 3,5 CRV	790032008	50	1	152	928569808	GRUNDWERKZEUG
SCHRAUBENDREHER 5,5 CRV	790032308	51	1	152	928569808	GRUNDWERKZEUG
SCHRAUBENSICHERUNG 10M	8655016	105	1	217	10142942	SCHMIEROELFILTER ANBAU
SCHRAUBENSICHERUNG FLA	811205708	105	1	209	10120186	MASSENAUSGLEICH ANBAU
SCHRAUBENSICHERUNG FLA	811205708	105	1	244	12418347	KLIMAKOMPRESSOR ANBAU
SCHRAUBENSICHERUNG FLA	811205708	109	1	260	9079823	TRANSPORTVORRICHTUNG
SCHRAUBENSICHERUNG FLA	811205708	109	1	267	10144227	STEUERGERAET ANBAU
SCHRAUBENSICHERUNG FLA	811205708	105	1	276	10144036	NEBENABTRIEB ANBAU
SCHRAUBKAPPE GPN 800 M1	10021410	3	2	220	12489819	ABDECKKAPPEN-KIT
SCHRAUBKARABINER OVAL	10877382	2	2	693	96013575	HUBENDSCHALTER GEWICHT
SCHRAUBKUPPLUNG EMA3 M	7406865	744	7	564	96045351	HYDRAULIK OBERWAGEN
SCHRAUBKUPPLUNG EMA3 M	7406865	642	2	617	967784808	HYDRAULIK HILFSHUBWERK
SCHRAUBSTOPFEN GPN 700	7003652	4	1	220	12489819	ABDECKKAPPEN-KIT
SCHRAUBSTOPFEN GPN 700	7011745	1	1	220	12489819	ABDECKKAPPEN-KIT
SCHRAUBSTUTZEN	12211232	3	1	501	968570808	HARNSTOFFTANK
SCHRUMPFSCHLAUCH 11,6/2	10441166	298	0.1	462	96036955	KABELSTRANG
SCHRUMPFSCHLAUCH 11,6/2	10441166	298	0.5	536	96037137	KABELSTRANG
SCHUTZ SCHWK.	96037033	8	1	500	918731808	HARNSTOFFANLAGE
SCHUTZBLECH 3X140X437 D	97032687	3	2	351	919369308	DREHWERK
SCHUTZBLECH KPL.	96004318	30	1	286	919007708	ANTRIEBSAGGREGAT VORM.
SCHUTZBLECH KPL.LI.	96034894	2	1	20	91001569	RAUPENFAHRWERK KPL.
SCHUTZBLECH KPL.RE.	96034977	10	1	20	91001569	RAUPENFAHRWERK KPL.
SCHUTZBLECH SCHWK.	96035068	2	1	511	96051842	ABGASANLAGE VORM.
SCHUTZBLECH SCHWK.	96035171	2	1	507	919674408	ABGASANLAGE
SCHUTZDECKEL NICHT LACK	12466377	738	1	502	11373478	REDUKTIONSMITTELPUMPE
SCHUTZGITTER	10872389	7	1	593	11622561	OEL-LUFTKUEHLER

Bezeichnung	Artikel	Pos.	Menge	Seite	Baugruppe	Bezeichnung
SCHUTZGITTER PA	10222686	27	2	544	969256608	GRUNDAUFBAU
SCHUTZKAPPE	610701108	525	1	535	96037136	KABELSTRANG
SCHUTZKAPPE 180°	11060618	519	3	536	96037137	KABELSTRANG
SCHUTZKAPPE 180°	11491349	522	1	536	96037137	KABELSTRANG
SCHUTZKAPPE JPT	10874331	529	1	463	96036955	KABELSTRANG
SCHUTZKAPPE JPT	10874331	521	4	535	96037136	KABELSTRANG
SCHUTZKAPPE JPT 2 POL	11647373	522	2	535	96037136	KABELSTRANG
SCHUTZKAPPE LLD-PE	789000701	34	1	367	90208882	KOMPAKTSEILWINDE
SCHUTZKAPPE M26X1,5	7013456	3	1	190	5004624	OELABLASSSCHRAUBE
SCHUTZKAPPE MCP BUCHS	10678458	504	2	535	96037136	KABELSTRANG
SCHUTZKAPPE NETZW. RJ45/	11008530	2	1	475	966979108	STECKDOSE
SCHUTZKAPPE STECKER 4-P	602339608	516	3	49	96045228	KABELSTRANG
SCHUTZKAPPE SW 24	779040801	18	2	395	917304508	KRANFUEHRERKABINE VORM.
SCHUTZKAPPE SW10	779020108	2	6	545	922648308	KLEMMBRETT VORM.
SCHUTZPOLSTER	520402808	3	1	151	919328608	WERKZEUG M.ZUBEHOER
SCHUTZRING	10152974	3	1	199	10153583	KURBELWELLENDICHTUNG
SCHUTZSCHLAUCH 30MM AL-	11118396	211	3.8	536	96037137	KABELSTRANG
SCHUTZSCHLAUCH DN16XNO	10871063	(507)	1	741	917598408	ELEKTRIK MESS-U.WARNEINR
SCHUTZSCHLAUCH DN20 NO	10870635	71	1.5	531	96045384	KABELLISTE DREHBUEHNE
SCHUTZSCHLAUCH DN20 NO	10870635	13	1.7	643	96037130	AUSRUESTUNG KAMERA DRE
SCHUTZSCHLAUCH DN20 NO	10870635	13	1.5	645	96037131	AUSRUESTUNG KAMERA WIN
SCHWEISSBUCHSE M8X17 ST	10412105	23	4	334	96023117	BATTERIEKASTEN VORM.
SCHWENKTRAVERSE	11347024	3	1	754	910836808	HAKENFLASCHE
SCHWERFOLIENMATTE 2X11	97051749	9	1	451	968977308	SCHALLDAEMMUNG
SCHWERFOLIENMATTE 2X390	97058386	10	1	451	968977308	SCHALLDAEMMUNG
SCHWERFOLIENMATTE 2X885	97058387	11	1	451	968977308	SCHALLDAEMMUNG
SCHWERSPANNSTIFT 6H12X	432310501	10	2	209	10120186	MASSENAUSGLEICH ANBAU
SCHWINGUNGSDAEMPFER 6	10287382	115	2	287	919007708	ANTRIEBSAGGREGAT VORM.
SCHWINGUNGSDAEMPFER 7	10875547	116	2	287	919007708	ANTRIEBSAGGREGAT VORM.
SCHWUNGRAD ANBAU SAE 1	9077238	530	1	179	13455297	DIESELMOTOR
SCHWUNGRAD VORM. SAE 1	12809567	1	1	266	9077238	SCHWUNGRAD ANBAU
SCHWUNGRADGEHAEUSE AN	10115829	520	1	178	13455297	DIESELMOTOR
SCHWUNGRADGEHAEUSE VO	10118148	1	1	262	10115829	SCHWUNGRADGEHAEUSE AN
SCRFILTER-BAUGRUPPE SC	11429728	101	1	511	96051842	ABGASANLAGE VORM.
SEAL-LOCK-BUNDMUTTER M1	7014529	47	1	305	11210795	VERSTELLPUMPE
SEAL-LOCK-BUNDMUTTER M	7027052	49	1	81	11161917	STEUERTEIL
SECHSKANTMUTTER AEHNL.	11004444	32	2	26	96034894	SCHUTZBLECH KPL.LI.
SECHSKANTMUTTER AEHNL.	11004444	32	2	29	96034977	SCHUTZBLECH KPL.RE.
SECHSKANTMUTTER AEHNL.	11004444	6	14	92	968420608	STAUKASTEN VORM.
SECHSKANTMUTTER AEHNL.	11004444	9	3	744	967933408	GRUNDHALTER VORM.
SECHSKANTMUTTER AEHNL.	11626393	350	4	511	96051842	ABGASANLAGE VORM.
SECHSKANTMUTTER AEHNL.	11113917	351	4	511	96051842	ABGASANLAGE VORM.
SECHSKANTMUTTER DIN 934	411514877	49	7	52	11346779	SCHLEIFRINGUEBERTRAGER
SECHSKANTMUTTER DIN 985	10197769	108	10	76	91001377	RAUPENTRAEGER VORM.LI.
SECHSKANTMUTTER DIN 985	10197769	109	10	109	91001378	RAUPENTRAEGER VORM.RE.
SECHSKANTMUTTER DIN 985	10197769	12	1	415	916163008	WISCHANLAGE EINBAU
SECHSKANTMUTTER DIN 985	10197769	27	8	668	917291908	ANLENKSTUECK VORM.
SECHSKANTMUTTER DIN 985	10197769	25	3	751	968728808	KONSOLE VORM.
SECHSKANTMUTTER DIN 985	12218127	12	8	701	966134608	ANBAUTEILE ZYLINDER
SECHSKANTMUTTER DIN 985	10875607	329	4	496	969763408	VERROHRUNG DRUCKLUFTA
SECHSKANTMUTTER DIN 985	10875607	84	6	669	917291908	ANLENKSTUECK VORM.
SECHSKANTMUTTER DIN 985	10875609	14	8	35	917511508	RAUPENMITTELTEIL VORM.
SECHSKANTMUTTER DIN 985	10875609	5	4	382	967986308	LAGERUNG EINBAU
SECHSKANTMUTTER DIN 985	10875609	25	1	492	967928508	VERRIEGELUNG
SECHSKANTMUTTER DIN 985	10875609	18	4	668	917291908	ANLENKSTUECK VORM.
SECHSKANTMUTTER DIN 985	10875610	7	1	337	917626608	KRAFTSTOFFBEHAELTER AN
SECHSKANTMUTTER DIN 985	10875610	6	1	345	917825508	OELBEHAELTER ANBAU
SECHSKANTMUTTER DIN 985	10876399	26	4	467	96053500	ELEKTRIK ANBAUTEILE KABIN
SECHSKANTMUTTER DIN 985	10875611	88	1	669	917291908	ANLENKSTUECK VORM.
SECHSKANTMUTTER DIN 985	10875611	61	1	690	917292408	TELESKOP 5 VORM.

Bezeichnung	Artikel	Pos.	Menge	Seite	Baugruppe	Bezeichnung
SECHSKANTMUTTER DIN 985	10875611	7	3	745	967936408	WINDWARNUNG VORM.
SECHSKANTMUTTER DIN 985	10301317	17	4	39	96045225	ELEKTRIK MITTELSTUECK
SECHSKANTMUTTER DIN 985	10301317	5	1	744	967933408	GRUNDHALTER VORM.
SECHSKANTMUTTER DIN 985	12102692	72	4	500	918731808	HARNSTOFFANLAGE
SECHSKANTMUTTER DIN 985	12102692	14	6	547	926891108	VERTEILER MASSE
SECHSKANTMUTTER DIN 985	12102692	304	14	561	96045351	HYDRAULIK OBERWAGEN
SECHSKANTMUTTER DIN 985	12102692	5	1	659	925141508	SCHLAUCHFUEHRUNG VORM.
SECHSKANTMUTTER DIN 985	12102692	306	2	728	967785008	ZUSATZHYDRAULIK KLAPPSPI
SECHSKANTMUTTER DIN 985	12102692	26	4	751	968728808	KONSOLE VORM.
SECHSKANTMUTTER DIN 985	411903008	49	8	35	917511508	RAUPENMITTELTEIL VORM.
SECHSKANTMUTTER DIN 985	411903008	11	1	393	968514508	SCHALTSCHRANKDECKEL EIN
SECHSKANTMUTTER DIN 985	411903008	23	4	421	917304708	SCHIEBETUER EINBAU
SECHSKANTMUTTER DIN 985	411903008	5	2	423	966230508	FUEHRUNG VORM.
SECHSKANTMUTTER DIN 985	411903008	4	4	626	917269308	LADEGERAET
SECHSKANTMUTTER DIN 985	411903008	27	2	636	968994408	KAMERAHALTER VORM.
SECHSKANTMUTTER DIN 985	411903008	25	4	637	968290608	STATIV
SECHSKANTMUTTER DIN 985	411903008	14	2	639	968993508	KAMERAHALTER VORM.
SECHSKANTMUTTER DIN 985	411903008	25	4	640	968267208	STATIV
SECHSKANTMUTTER DIN 985	10876076	11	4	604	967969608	HILFSHUBWERK WINDE 2 VO
SECHSKANTMUTTER DIN 985	10875614	9	7	94	96034962	FUEHRUNG LI.
SECHSKANTMUTTER DIN 985	10875614	9	7	112	96034980	FUEHRUNG RE.
SECHSKANTMUTTER DIN 985	10875614	350	3	294	968026308	KUPPLUNGSSTELLER
SECHSKANTMUTTER DIN 985	10875614	(7)	11	387	916177508	TRITT KPL.
SECHSKANTMUTTER DIN 985	10875614	46	1	399	917305408	INNENVERKLEIDUNG EINBAU
SECHSKANTMUTTER DIN 985	10875614	5	4	426	917676208	HEIZUNG KRANFUEHRERKAB
SECHSKANTMUTTER DIN 985	10875614	25	1	430	969085208	HEIZUNG VORM.
SECHSKANTMUTTER DIN 985	10875614	5	1	440	916049908	SPIEGELANBAU KRANFUEHR
SECHSKANTMUTTER DIN 985	10875614	4	4	476	917260408	SPIEGELANBAU DREHBUEHN
SECHSKANTMUTTER DIN 985	10875614	20	8	480	918759808	ZUSATZHEIZUNG OW
SECHSKANTMUTTER DIN 985	10875614	32	1	482	96020359	ZUSATZHEIZUNG VORM.
SECHSKANTMUTTER DIN 985	10875614	25	2	636	968994408	KAMERAHALTER VORM.
SECHSKANTMUTTER DIN 985	10875614	12	2	639	968993508	KAMERAHALTER VORM.
SECHSKANTMUTTER DIN 985	411903108	9	6	387	916177508	TRITT KPL.
SECHSKANTMUTTER DIN 985	411903108	6	12	392	916162808	RELING
SECHSKANTMUTTER DIN 985	411903108	4	4	746	967937608	HINDERNISFEUER VORM.
SECHSKANTMUTTER EN 1661	10179265	4	3	233	10147364	LUFTANSAUGUNG ANBAU
SECHSKANTMUTTER EN 1661	10179265	4	3	256	10115539	STARTER ANBAU
SECHSKANTMUTTER EN 1661	11820285	11	2	234	10149677	VERBINDUNGSLEITUNG ANBA
SECHSKANTMUTTER EN 1661	11820285	78	1	269	10151328	KABELBAUM ANBAU
SECHSKANTMUTTER ISO 403	12102695	12	2	155	91001571	BOLZENZIEHVORRICHTUNG
SECHSKANTMUTTER ISO 403	12102695	32	2	433	918810308	STEUERSTAND
SECHSKANTMUTTER ISO 403	12102695	352	5	446	96036790	DREHBUEHNENVERKLEIDUN
SECHSKANTMUTTER ISO 403	12102695	353	6	455	969015908	DREHBUEHNENVERKLEIDUN
SECHSKANTMUTTER ISO 403	12102695	354	2	511	96051842	ABGASANLAGE VORM.
SECHSKANTMUTTER ISO 403	12102695	23	2	567	96035117	MECH.BEFESTIGUNGSTEILE
SECHSKANTMUTTER ISO 403	12102695	6	7	591	917261808	OELKUEHLER EINBAU
SECHSKANTMUTTER ISO 403	12102695	19	1	643	96037130	AUSRUESTUNG KAMERA DRE
SECHSKANTMUTTER ISO 403	12102695	28	2	668	917291908	ANLENKSTUECK VORM.
SECHSKANTMUTTER ISO 403	12102695	16	2	734	917268408	MASTNASE
SECHSKANTMUTTER ISO 4032	10875616	22	32	20	91001569	RAUPENFAHRWERK KPL.
SECHSKANTMUTTER ISO 4032	10875616	30	2	31	968036408	ENDSCHALTER VORM.
SECHSKANTMUTTER ISO 4032	10875616	35	3	75	91001377	RAUPENTRAEGER VORM.LI.
SECHSKANTMUTTER ISO 4032	10875616	35	3	108	91001378	RAUPENTRAEGER VORM.RE.
SECHSKANTMUTTER ISO 4032	10875616	34	1	147	919087608	DREHDURCHFUEHRUNG
SECHSKANTMUTTER ISO 4032	10875616	23	2	761	917267508	TRANSPORTHALTERUNG DKS
SECHSKANTMUTTER ISO 403	411514608	8	1	762	929582108	HALTERUNG VORM.
SECHSKANTMUTTER ISO 4032	10875617	43	4	35	917511508	RAUPENMITTELTEIL VORM.
SECHSKANTMUTTER ISO 4032	10875617	9	1	95	96062678	HEBEL VORM.
SECHSKANTMUTTER ISO 4032	10875617	32	4	129	919644008	HYDRAULISCHE ABSTUETZUN
SECHSKANTMUTTER ISO 4032	10875617	17	1	493	967978908	VERRIEGELUNG VORM.

Bezeichnung	Artikel	Pos.	Menge	Seite	Baugruppe	Bezeichnung
SECHSKANTMUTTER ISO 4032	10875617	19	4	701	966134608	ANBAUTEILE ZYLINDER
SECHSKANTMUTTER ISO 4032	10875617	6	9	761	917267508	TRANSPORTHALTERUNG DKS
SECHSKANTMUTTER ISO 4032	10875618	48	4	20	91001569	RAUPENFAHRWERK KPL.
SECHSKANTMUTTER ISO 4032	10875618	64	1	76	91001377	RAUPENTRAEGER VORM.LI.
SECHSKANTMUTTER ISO 4032	10875618	64	1	109	91001378	RAUPENTRAEGER VORM.RE.
SECHSKANTMUTTER ISO 4032	10875618	15	8	754	910836808	HAKENFLASCHE
SECHSKANTMUTTER ISO 4032	12226068	267	2	714	968708708	KLEMMKASTEN KPL.
SECHSKANTMUTTER ISO 403	10425689	4	1	658	968068308	MONTAGEVORRICHTUNG
SECHSKANTMUTTER ISO 403	10425689	9	4	751	968728808	KONSOLE VORM.
SECHSKANTMUTTER ISO 403	10875619	30	6	157	96063087	STAUKASTEN
SECHSKANTMUTTER ISO 403	10875619	10	2	406	916162508	SCHEIBEN EINBAU
SECHSKANTMUTTER ISO 403	10875619	354	8	446	96036790	DREHBUEHNENVERKLEIDUN
SECHSKANTMUTTER ISO 403	10875620	4	4	135	917257108	ZENTRALSCHMIERUNG RAUP
SECHSKANTMUTTER ISO 403	10875620	18	6	334	96023117	BATTERIEKASTEN VORM.
SECHSKANTMUTTER ISO 403	10875620	5	4	523	917261208	ZENTRALSCHMIERANLAGE O
SECHSKANTMUTTER ISO 4032	10878117	73	2	500	918731808	HARNSTOFFANLAGE
SECHSKANTMUTTER ISO 4032	10299668	5	1	95	96062678	HEBEL VORM.
SECHSKANTMUTTER ISO 4032	10299668	38	2	701	966134608	ANBAUTEILE ZYLINDER
SECHSKANTMUTTER ISO 403	10197764	13	2	42	966167808	DECKEL KPL.
SECHSKANTMUTTER ISO 403	10197764	16	2	43	968054008	MONTAGEPLATTE VORM.
SECHSKANTMUTTER ISO 403	10197764	48	12	52	11346779	SCHLEIFRINGUEBERTRAGER
SECHSKANTMUTTER ISO 403	10197764	23	2	147	919087608	DREHDURCHFUEHRUNG
SECHSKANTMUTTER ISO 403	10197764	350	6	288	919007708	ANTRIEBSAGGREGAT VORM.
SECHSKANTMUTTER ISO 403	10197764	353	4	291	96034631	KUEHLER VORM.
SECHSKANTMUTTER ISO 403	10197764	27	4	334	96023117	BATTERIEKASTEN VORM.
SECHSKANTMUTTER ISO 403	10197764	51	2	399	917305408	INNENVERKLEIDUNG EINBAU
SECHSKANTMUTTER ISO 403	10197764	351	4	446	96036790	DREHBUEHNENVERKLEIDUN
SECHSKANTMUTTER ISO 403	10197764	350	11	455	969015908	DREHBUEHNENVERKLEIDUN
SECHSKANTMUTTER ISO 403	10197764	5	12	545	922648308	KLEMMBRETT VORM.
SECHSKANTMUTTER ISO 403	10197764	6	4	547	926891108	VERTEILER MASSE
SECHSKANTMUTTER ISO 403	10197764	310	2	616	967784808	HYDRAULIK HILFSHUBWERK
SECHSKANTMUTTER ISO 4032	411517114	350	2	507	919674408	ABGASANLAGE
SECHSKANTMUTTER ISO 4032	411517114	353	9	511	96051842	ABGASANLAGE VORM.
SECHSKANTMUTTER ISO 403	10197760	350	7	445	96036790	DREHBUEHNENVERKLEIDUN
SECHSKANTMUTTER ISO 403	10197760	351	4	455	969015908	DREHBUEHNENVERKLEIDUN
SECHSKANTMUTTER ISO 403	10197760	10	4	547	926891108	VERTEILER MASSE
SECHSKANTMUTTER ISO 403	10197760	13	6	592	967980508	OELKUEHLER VORM.
SECHSKANTMUTTER ISO 403	11693875	8	2	120	968038208	LAGERUNG VORN LI.
SECHSKANTMUTTER ISO 403	11693875	8	2	121	968038308	LAGERUNG VORN RE.
SECHSKANTMUTTER ISO 403	11693875	9	2	135	917257108	ZENTRALSCHMIERUNG RAUP
SECHSKANTMUTTER ISO 403	11693875	351	17	288	919007708	ANTRIEBSAGGREGAT VORM.
SECHSKANTMUTTER ISO 403	11693875	354	2	291	96034631	KUEHLER VORM.
SECHSKANTMUTTER ISO 403	11693875	350	3	341	91002861	KRAFTSTOFFFOERDERUNG
SECHSKANTMUTTER ISO 403	11693875	25	2	378	917259908	KRANFUEHRERKABINE ANBA
SECHSKANTMUTTER ISO 403	11693875	27	2	415	916163008	WISCHANLAGE EINBAU
SECHSKANTMUTTER ISO 403	11693875	8	4	426	917676208	HEIZUNG KRANFUEHRERKAB
SECHSKANTMUTTER ISO 403	11693875	12	2	449	968923508	KLAPPE VORM.RECHTS
SECHSKANTMUTTER ISO 403	11693875	11	2	457	969016008	KLAPPE VORM.VORN LINKS
SECHSKANTMUTTER ISO 403	11693875	70	7	500	918731808	HARNSTOFFANLAGE
SECHSKANTMUTTER ISO 403	11693875	350	2	520	918731908	LUFTFILTERANLAGE
SECHSKANTMUTTER ISO 403	11693875	70	2	544	969256608	GRUNDAUFBAU
SECHSKANTMUTTER ISO 403	11693875	337	2	562	96045351	HYDRAULIK OBERWAGEN
SECHSKANTMUTTER ISO 403	11693875	22	2	567	96035117	MECH.BEFESTIGUNGSTEILE
SECHSKANTMUTTER ISO 403	11693875	7	4	627	917269408	KONSOLE FREMDEINSPEISUN
SECHSKANTMUTTER ISO 403	11693875	55	2	690	917292408	TELESKOP 5 VORM.
SECHSKANTMUTTER ISO 403	11693875	42	2	701	966134608	ANBAUTEILE ZYLINDER
SECHSKANTMUTTER ISO 403	11693875	4	2	737	967321308	HALTERUNG 2.HUB OBEN
SECHSKANTMUTTER ISO 4032	510737408	7	2	387	916177508	TRITT KPL.
SECHSKANTMUTTER ISO 403	10411095	5	2	258	11386644	STARTER VORM.
SECHSKANTMUTTER ISO 403	10179943	355	1	294	968026308	KUPPLUNGSSTELLER

Bezeichnung	Artikel	Pos.	Menge	Seite	Baugruppe	Bezeichnung
SECHSKANTMUTTER ISO 403	4635422	24	4	20	91001569	RAUPENFAHRWERK KPL.
SECHSKANTMUTTER ISO 403	511001708	9	2	426	917676208	HEIZUNG KRANFUEHRERKAB
SECHSKANTMUTTER ISO 403	511001708	21	5	540	91000922	EINBAUTEILE SCHALTSCHRAN
SECHSKANTMUTTER ISO 403	410120308	13	2	734	917268408	MASTNASE
SECHSKANTMUTTER ISO 7040	10875629	13	4	632	96037229	ANBAUTEILE ARBEITSSCHEIN
SECHSKANTMUTTER ISO 7040	10875629	19	1	645	96037131	AUSRUESTUNG KAMERA WIN
SECHSKANTMUTTER ISO 7040	10875629	(9)	1	657	919028808	MECH.TEILE VERSANDMONT
SECHSKANTMUTTER ISO 7040	10875629	22	4	673	917292008	TELESKOP 1 VORM.
SECHSKANTMUTTER ISO 7040	10875629	22	4	677	917292108	TELESKOP 2 VORM.
SECHSKANTMUTTER ISO 7040	10875629	22	4	681	917292208	TELESKOP 3 VORM.
SECHSKANTMUTTER ISO 7040	10875629	22	4	685	917292308	TELESKOP 4 VORM.
SECHSKANTMUTTER ISO 7040	10875629	19	4	690	917292408	TELESKOP 5 VORM.
SECHSKANTMUTTER ISO 7040	11840127	31	1	94	96034962	FUEHRUNG LI.
SECHSKANTMUTTER ISO 7040	11840127	31	1	112	96034980	FUEHRUNG RE.
SECHSKANTMUTTER ISO 7040	11840127	5	4	120	968038208	LAGERUNG VORN LI.
SECHSKANTMUTTER ISO 7040	11840127	5	4	121	968038308	LAGERUNG VORN RE.
SECHSKANTMUTTER ISO 7040	11840127	51	8	124	968046208	ANBAUTEILE
SECHSKANTMUTTER ISO 7040	11840127	66	12	129	919644008	HYDRAULISCHE ABSTUETZUN
SECHSKANTMUTTER ISO 7040	11840127	3	2	747	917551608	ANBAUTEILE
SECHSKANTMUTTER ISO 7040	11840127	24	3	751	968728808	KONSOLE VORM.
SECHSKANTMUTTER ISO 7040	10875859	14	24	119	917691008	ABSTURZSICHERUNG
SECHSKANTMUTTER ISO 7040	10875859	22	40	124	968046208	ANBAUTEILE
SECHSKANTMUTTER ISO 7040	10875859	30	2	761	917267508	TRANSPORTHALTERUNG DKS
SECHSKANTMUTTER ISO 7040	10875630	51	4	673	917292008	TELESKOP 1 VORM.
SECHSKANTMUTTER ISO 7040	10875630	51	4	677	917292108	TELESKOP 2 VORM.
SECHSKANTMUTTER ISO 7040	10875630	51	4	681	917292208	TELESKOP 3 VORM.
SECHSKANTMUTTER ISO 7040	10875630	51	4	685	917292308	TELESKOP 4 VORM.
SECHSKANTMUTTER ISO 7040	10875630	51	4	690	917292408	TELESKOP 5 VORM.
SECHSKANTMUTTER ISO 7040	10415159	22	1	641	96045237	AUSRUESTUNG KAMERA KAB
SECHSKANTMUTTER ISO 704	11656734	35	4	124	968046208	ANBAUTEILE
SECHSKANTMUTTER ISO 704	11656734	36	2	668	917291908	ANLENKSTUECK VORM.
SECHSKANTMUTTER ISO 704	11656734	60	2	673	917292008	TELESKOP 1 VORM.
SECHSKANTMUTTER ISO 704	11656734	60	2	677	917292108	TELESKOP 2 VORM.
SECHSKANTMUTTER ISO 704	11656734	60	2	681	917292208	TELESKOP 3 VORM.
SECHSKANTMUTTER ISO 704	11656734	60	2	685	917292308	TELESKOP 4 VORM.
SECHSKANTMUTTER ISO 704	11656731	105	8	76	91001377	RAUPENTRAEGER VORM.LI.
SECHSKANTMUTTER ISO 704	11656731	106	8	109	91001378	RAUPENTRAEGER VORM.RE.
SECHSKANTMUTTER ISO 704	11656731	352	6	291	96034631	KUEHLER VORM.
SECHSKANTMUTTER ISO 7042	10814800	352	2	511	96051842	ABGASANLAGE VORM.
SECHSKANTMUTTER ISO 8673	10179115	53	1	421	917304708	SCHIEBETUER EINBAU
SECHSKANTMUTTER ISO 867	10875633	25	1	467	96053500	ELEKTRIK ANBAUTEILE KABIN
SECHSKANTMUTTER ISO 8675	10285016	4	2	120	968038208	LAGERUNG VORN LI.
SECHSKANTMUTTER ISO 8675	10285016	4	2	121	968038308	LAGERUNG VORN RE.
SECHSKANTMUTTER ISO 8675	10285016	360	2	294	968026308	KUPPLUNGSSTELLER
SECHSKANTMUTTER ISO 8675	411703308	3	1	379	11214363	KIPPZYLINDER
SECHSKANTMUTTER M10X1	10012557	3	2	207	11448005	KIPPHEBELBOCK VORM.
SECHSKANTMUTTER M16X1,5	602504108	15	2	41	96045226	SCHALTKASTEN VORM.
SECHSKANTMUTTER M20X1,5	602504208	18	1	41	96045226	SCHALTKASTEN VORM.
SECHSKANTMUTTER M40X1,	602504508	512	1	49	96045228	KABELSTRANG
SECHSKANTMUTTER M6 8	10411094	3	1	258	11386644	STARTER VORM.
SECHSKANTRIPPENMUTTER	7380960	6	1	255	10142863	GENERATOR VORM.
SECHSKANTRIPPENMUTTER	10003366	3	1	235	9078314	HEIZFLANSCH ANBAU
SECHSKANTRIPPENMUTTER	10003366	25	2	253	12512627	ABGASSTUTZEN ANBAU
SECHSKANTSCHRAUBE DIN 6	10009007	14	2	228	10143341	KRAFTSTOFFLEITUNGEN
SECHSKANTSCHRAUBE DIN 6	10009007	2	5	245	10142733	WASSERPUMPE MIT BEFEST.
SECHSKANTSCHRAUBE DIN 6	10009007	3	4	267	10144227	STEUERGERAET ANBAU
SECHSKANTSCHRAUBE DIN	11600960	(4)	6	210	10138230	NOCKENWELLE KPL.
SECHSKANTSCHRAUBE DIN 6	10005713	2	1	216	10148432	SCHMIEROELPUMPE MIT BE
SECHSKANTSCHRAUBE DIN 6	10016907	5	4	267	10144227	STEUERGERAET ANBAU
SECHSKANTSCHRAUBE DIN 6	11645138	3	2	216	10148432	SCHMIEROELPUMPE MIT BE

Bezeichnung	Artikel	Pos.	Menge	Seite	Baugruppe	Bezeichnung
SECHSKANTSCHRAUBE EN 1	12207562	4	8	183	10147687	AGGREGATETRAEGER ANBA
SECHSKANTSCHRAUBE EN 16	12207559	5	1	255	10142863	GENERATOR VORM.
SECHSKANTSCHRAUBE EN 1	11656153	3	2	195	10139112	OELLEITUNG VORM.
SECHSKANTSCHRAUBE EN 1	11656153	68	3	269	10151328	KABELBAUM ANBAU
SECHSKANTSCHRAUBE EN 1	11656153	58	2	271	10151329	KABELSATZ ANBAU
SECHSKANTSCHRAUBE EN 1	11656154	10	3	253	12512627	ABGASSTUTZEN ANBAU
SECHSKANTSCHRAUBE EN 16	10299564	3	2	255	10142863	GENERATOR VORM.
SECHSKANTSCHRAUBE EN 16	10299564	2	4	260	9079823	TRANSPORTVORRICHTUNG
SECHSKANTSCHRAUBE EN 1	11656155	3	3	259	10115664	VERSCHLUSSTEILE
SECHSKANTSCHRAUBE EN 1	11656155	69	1	269	10151328	KABELBAUM ANBAU
SECHSKANTSCHRAUBE EN 1	11643686	2	3	237	10127566	LUFTPRESSER ANBAU
SECHSKANTSCHRAUBE EN 1	11626068	5	6	244	12418347	KLIMAKOMPRESSOR ANBAU
SECHSKANTSCHRAUBE EN 16	10299585	6	1	183	10147687	AGGREGATETRAEGER ANBA
SECHSKANTSCHRAUBE EN 1	11656158	4	2	226	10146791	KRAFTSTOFF-FEINFILTERAN
SECHSKANTSCHRAUBE EN 1	11656158	3	4	231	10147365	LUFTANSAUGROHR ANBAU
SECHSKANTSCHRAUBE EN 1	11656158	7	2	244	12418347	KLIMAKOMPRESSOR ANBAU
SECHSKANTSCHRAUBE EN 16	10299589	5	9	183	10147687	AGGREGATETRAEGER ANBA
SECHSKANTSCHRAUBE EN 1	11656160	6	1	244	12418347	KLIMAKOMPRESSOR ANBAU
SECHSKANTSCHRAUBE EN 1	12208088	4	4	231	10147365	LUFTANSAUGROHR ANBAU
SECHSKANTSCHRAUBE EN 1	12208088	9	1	253	12512627	ABGASSTUTZEN ANBAU
SECHSKANTSCHRAUBE EN 1	11631940	7	2	276	10144036	NEBENABTRIEB ANBAU
SECHSKANTSCHRAUBE EN 16	10299565	4	1	255	10142863	GENERATOR VORM.
SECHSKANTSCHRAUBE EN 1	11656452	9	1	189	10155227	OELWANNE VORM.
SECHSKANTSCHRAUBE EN 1	12207570	2	2	261	10142864	TRANSPORTVORRICHTUNG
SECHSKANTSCHRAUBE EN 1	10875503	10	6	43	968054008	MONTAGEPLATTE VORM.
SECHSKANTSCHRAUBE EN 1	10875503	20	28	540	91000922	EINBAUTEILE SCHALTSCHRAN
SECHSKANTSCHRAUBE EN 1	10875503	48	18	544	969256608	GRUNDAUFBAU
SECHSKANTSCHRAUBE EN 1	10875503	11	6	548	968063108	MONTAGEEINHEIT VORM.
SECHSKANTSCHRAUBE EN 1	10875503	5	1	625	918462708	FREMDEINSPEISUNG
SECHSKANTSCHRAUBE EN 1	10875503	6	4	628	915432508	FUNKVORBEREITUNG OW
SECHSKANTSCHRAUBE EN 16	12207546	12	2	254	11420633	TAKTVENTIL
SECHSKANTSCHRAUBE EN 16	12207546	52	1	269	10151328	KABELBAUM ANBAU
SECHSKANTSCHRAUBE EN 16	12207546	42	1	271	10151329	KABELSATZ ANBAU
SECHSKANTSCHRAUBE EN 16	11840297	11	3	39	96045225	ELEKTRIK MITTELSTUECK
SECHSKANTSCHRAUBE EN 16	11840297	8	4	208	11358102	ZYLINDERKOPFDECKEL ANBA
SECHSKANTSCHRAUBE EN 16	11840297	21	1	229	10143342	LECKOELRUECKLAUF
SECHSKANTSCHRAUBE EN 16	11840297	13	7	254	11420633	TAKTVENTIL
SECHSKANTSCHRAUBE EN 16	11840297	54	7	269	10151328	KABELBAUM ANBAU
SECHSKANTSCHRAUBE EN 16	11840297	304	2	287	919007708	ANTRIEBSAGGREGAT VORM.
SECHSKANTSCHRAUBE EN 16	11840297	19	2	412	916168308	LUFTFUEHRUNG
SECHSKANTSCHRAUBE EN 16	11840297	24	4	415	916163008	WISCHANLAGE EINBAU
SECHSKANTSCHRAUBE EN 16	11840297	307	8	445	96036790	DREHBUEHNENVERKLEIDUN
SECHSKANTSCHRAUBE EN 16	12207548	2	4	235	9078314	HEIZFLANSCH ANBAU
SECHSKANTSCHRAUBE EN 16	12207548	301	2	445	96036790	DREHBUEHNENVERKLEIDUN
SECHSKANTSCHRAUBE EN 16	12207549	24	2	253	12512627	ABGASSTUTZEN ANBAU
SECHSKANTSCHRAUBE EN 16	12207587	3	1	232	10145173	ANSAUGSTUTZEN ANBAU
SECHSKANTSCHRAUBE EN 16	11656991	39	6	467	96053500	ELEKTRIK ANBAUTEILE KABIN
SECHSKANTSCHRAUBE EN 16	11656992	15	1	229	10143342	LECKOELRUECKLAUF
SECHSKANTSCHRAUBE EN 16	11656992	14	1	254	11420633	TAKTVENTIL
SECHSKANTSCHRAUBE EN 16	11656992	11	4	263	10116110	VERSCHLUSSTEILE
SECHSKANTSCHRAUBE EN 16	11656992	60	2	269	10151328	KABELBAUM ANBAU
SECHSKANTSCHRAUBE EN 16	11656992	3	3	272	10143707	HALTER ANBAU
SECHSKANTSCHRAUBE EN 16	11657219	12	1	228	10143341	KRAFTSTOFFLEITUNGEN
SECHSKANTSCHRAUBE EN 16	11657219	14	1	232	10145173	ANSAUGSTUTZEN ANBAU
SECHSKANTSCHRAUBE EN 16	11657219	14	2	252	10140729	ATL-ANBAU
SECHSKANTSCHRAUBE EN 16	11657219	11	2	254	11420633	TAKTVENTIL
SECHSKANTSCHRAUBE EN 16	11657219	3	1	264	10128439	VERSCHLUSSTEILE
SECHSKANTSCHRAUBE EN 16	11657219	61	14	269	10151328	KABELBAUM ANBAU
SECHSKANTSCHRAUBE EN 16	11657219	51	2	271	10151329	KABELSATZ ANBAU
SECHSKANTSCHRAUBE EN 16	11657219	4	1	272	10143707	HALTER ANBAU

Bezeichnung	Artikel	Pos.	Menge	Seite	Baugruppe	Bezeichnung
SECHSKANTSCHRAUBE EN 16	11657219	316	4	445	96036790	DREHBUEHNENVERKLEIDUN
SECHSKANTSCHRAUBE EN 16	11657219	5	4	627	917269408	KONSOLE FREMDEINSPEISUN
SECHSKANTSCHRAUBE EN 1	12215999	3	1	249	10142744	KUEHLWASSERENTLUEFTUN
SECHSKANTSCHRAUBE EN 16	11690637	308	2	445	96036790	DREHBUEHNENVERKLEIDUN
SECHSKANTSCHRAUBE EN 16	11690637	30	4	567	96035117	MECH.BEFESTIGUNGSTEILE
SECHSKANTSCHRAUBE EN 16	11826563	2	2	186	10126713	KURBELGEHAEUSEENTLUEF
SECHSKANTSCHRAUBE EN 16	11826563	6	4	226	10146791	KRAFTSTOFF-FEINFILTERAN
SECHSKANTSCHRAUBE EN 16	11826563	12	1	232	10145173	ANSAUGSTUTZEN ANBAU
SECHSKANTSCHRAUBE EN 16	11826563	63	1	269	10151328	KABELBAUM ANBAU
SECHSKANTSCHRAUBE EN 16	11826563	53	2	271	10151329	KABELSATZ ANBAU
SECHSKANTSCHRAUBE EN 1	10299604	3	14	212	10129475	OELKUEHLER ANBAU
SECHSKANTSCHRAUBE EN 16	11658660	8	2	234	10149677	VERBINDUNGSLEITUNG ANBA
SECHSKANTSCHRAUBE EN 16	11691686	5	4	213	10129474	OELKUEHLER VORM.
SECHSKANTSCHRAUBE EN 16	11691686	5	1	226	10146791	KRAFTSTOFF-FEINFILTERAN
SECHSKANTSCHRAUBE EN 16	12210060	3	28	187	10132560	OELWANNE MIT BEFEST.
SECHSKANTSCHRAUBE EN 1	12697335	2	1	216	10148432	SCHMIEROELPUMPE MIT BE
SECHSKANTSCHRAUBE EN 16	10876385	7	20	208	11358102	ZYLINDERKOPFDECKEL ANBA
SECHSKANTSCHRAUBE ISO	10875796	318	2	287	919007708	ANTRIEBSAGGREGAT VORM.
SECHSKANTSCHRAUBE ISO	10878922	16	4	334	96023117	BATTERIEKASTEN VORM.
SECHSKANTSCHRAUBE ISO 4	11631860	314	2	287	919007708	ANTRIEBSAGGREGAT VORM.
SECHSKANTSCHRAUBE ISO	10875504	330	4	496	969763408	VERROHRUNG DRUCKLUFTA
SECHSKANTSCHRAUBE ISO	11656183	327	4	496	969763408	VERROHRUNG DRUCKLUFTA
SECHSKANTSCHRAUBE ISO	4601290	32	2	75	91001377	RAUPENTRAEGER VORM.LI.
SECHSKANTSCHRAUBE ISO	4601290	32	2	108	91001378	RAUPENTRAEGER VORM.RE.
SECHSKANTSCHRAUBE ISO 4	11651578	5	1	747	917551608	ANBAUTEILE
SECHSKANTSCHRAUBE ISO 4	11658891	29	3	751	968728808	KONSOLE VORM.
SECHSKANTSCHRAUBE ISO 4	11658890	4	1	241	9072906	ZWISCHENRAD KPL.
SECHSKANTSCHRAUBE ISO 4	10875507	8	4	172	918731108	MONTAGETEILE DREHBUEHN
SECHSKANTSCHRAUBE ISO 4	10875508	43	1	75	91001377	RAUPENTRAEGER VORM.LI.
SECHSKANTSCHRAUBE ISO 4	10875508	43	1	108	91001378	RAUPENTRAEGER VORM.RE.
SECHSKANTSCHRAUBE ISO 4	10875508	57	2	668	917291908	ANLENKSTUECK VORM.
SECHSKANTSCHRAUBE ISO 4	11840139	330	4	287	919007708	ANTRIEBSAGGREGAT VORM.
SECHSKANTSCHRAUBE ISO 4	11840139	11	3	701	966134608	ANBAUTEILE ZYLINDER
SECHSKANTSCHRAUBE ISO 4	10878785	550	4	562	96045351	HYDRAULIK OBERWAGEN
SECHSKANTSCHRAUBE ISO 4	10878785	552	4	617	967784808	HYDRAULIK HILFSHUBWERK
SECHSKANTSCHRAUBE ISO	10875797	7	4	382	967986308	LAGERUNG EINBAU
SECHSKANTSCHRAUBE ISO	12223058	305	2	280	918731408	ANTRIEBSAGGREGAT KPL.
SECHSKANTSCHRAUBE ISO	10878582	35	4	35	917511508	RAUPENMITTELTEIL VORM.
SECHSKANTSCHRAUBE ISO 4	11642377	340	8	288	919007708	ANTRIEBSAGGREGAT VORM.
SECHSKANTSCHRAUBE ISO 4	10878687	20	32	124	968046208	ANBAUTEILE
SECHSKANTSCHRAUBE ISO 4	12224034	21	8	124	968046208	ANBAUTEILE
SECHSKANTSCHRAUBE ISO 4	10878688	13	24	119	917691008	ABSTURZSICHERUNG
SECHSKANTSCHRAUBE ISO 4	10178883	36	8	75	91001377	RAUPENTRAEGER VORM.LI.
SECHSKANTSCHRAUBE ISO 4	10178883	36	8	108	91001378	RAUPENTRAEGER VORM.RE.
SECHSKANTSCHRAUBE ISO 4	11656999	68	12	78	90028956	FAHRANTRIEB
SECHSKANTSCHRAUBE ISO 4	12219309	2	2	337	917626608	KRAFTSTOFFBEHAELTER AN
SECHSKANTSCHRAUBE ISO 4	12691274	18	52	75	91001377	RAUPENTRAEGER VORM.LI.
SECHSKANTSCHRAUBE ISO 4	12691274	18	52	108	91001378	RAUPENTRAEGER VORM.RE.
SECHSKANTSCHRAUBE ISO	10876069	2	2	345	917825508	OELBEHAELTER ANBAU
SECHSKANTSCHRAUBE ISO 4	10178891	69	24	76	91001377	RAUPENTRAEGER VORM.LI.
SECHSKANTSCHRAUBE ISO 4	10178891	69	24	109	91001378	RAUPENTRAEGER VORM.RE.
SECHSKANTSCHRAUBE ISO 4	10178897	70	16	76	91001377	RAUPENTRAEGER VORM.LI.
SECHSKANTSCHRAUBE ISO 4	10178897	70	16	109	91001378	RAUPENTRAEGER VORM.RE.
SECHSKANTSCHRAUBE ISO 4	11342133	19	24	75	91001377	RAUPENTRAEGER VORM.LI.
SECHSKANTSCHRAUBE ISO 4	11342133	19	24	108	91001378	RAUPENTRAEGER VORM.RE.
SECHSKANTSCHRAUBE ISO 4	406209008	20	24	75	91001377	RAUPENTRAEGER VORM.LI.
SECHSKANTSCHRAUBE ISO 4	406209008	20	24	108	91001378	RAUPENTRAEGER VORM.RE.
SECHSKANTSCHRAUBE ISO 4	406216008	5	4	695	918807308	AUSSCHUBMECHANIK
SECHSKANTSCHRAUBE ISO	12216183	5	2	749	968811608	QUERTRAEGER
SECHSKANTSCHRAUBE ISO	12216186	6	1	95	96062678	HEBEL VORM.

Bezeichnung	Artikel	Pos.	Menge	Seite	Baugruppe	Bezeichnung
SECHSKANTSCHRAUBE ISO 4	10876620	307	12	56	96035801	HYDRAULIK MITTELTEIL
SECHSKANTSCHRAUBE ISO 4	12217239	57	3	500	918731808	HARNSTOFFANLAGE
SECHSKANTSCHRAUBE ISO	11651580	306	1	294	968026308	KUPPLUNGSSTELLER
SECHSKANTSCHRAUBE ISO	11651580	21	4	455	969015908	DREHBUEHNENVERKLEIDUN
SECHSKANTSCHRAUBE ISO	12216193	59	2	500	918731808	HARNSTOFFANLAGE
SECHSKANTSCHRAUBE ISO 4	10021245	300	2	511	96051842	ABGASANLAGE VORM.
SECHSKANTSCHRAUBE ISO	12216195	300	3	342	96066379	KRAFTSTOFFFILTER VORM.
SECHSKANTSCHRAUBE ISO 4	12222989	12	4	365	917259708	HAUPTHUBWERK
SECHSKANTSCHRAUBE ISO 4	11652470	31	6	35	917511508	RAUPENMITTELTEIL VORM.
SECHSKANTSCHRAUBE ISO	10197730	66	4	76	91001377	RAUPENTRAEGER VORM.LI.
SECHSKANTSCHRAUBE ISO	10197730	66	4	109	91001378	RAUPENTRAEGER VORM.RE.
SECHSKANTSCHRAUBE ISO	10197730	18	8	119	917691008	ABSTURZSICHERUNG
SECHSKANTSCHRAUBE ISO	10197730	313	12	287	919007708	ANTRIEBSAGGREGAT VORM.
SECHSKANTSCHRAUBE ISO	10197730	4	16	382	967986308	LAGERUNG EINBAU
SECHSKANTSCHRAUBE ISO	10197730	314	1	445	96036790	DREHBUEHNENVERKLEIDUN
SECHSKANTSCHRAUBE ISO	10197730	23	1	467	96053500	ELEKTRIK ANBAUTEILE KABIN
SECHSKANTSCHRAUBE ISO	10197730	311	4	561	96045351	HYDRAULIK OBERWAGEN
SECHSKANTSCHRAUBE ISO	10197730	18	4	604	967969608	HILFSHUBWERK WINDE 2 VO
SECHSKANTSCHRAUBE ISO 4	12222996	304	7	455	969015908	DREHBUEHNENVERKLEIDUN
SECHSKANTSCHRAUBE ISO 4	12222996	20	3	567	96035117	MECH.BEFESTIGUNGSTEILE
SECHSKANTSCHRAUBE ISO 4	11631816	32	8	20	91001569	RAUPENFAHRWERK KPL.
SECHSKANTSCHRAUBE ISO 4	11631816	5	3	278	9078301	VERSCHLUSSTEILE
SECHSKANTSCHRAUBE ISO 4	11631816	2	6	332	918955408	BATTERIEKASTEN KPL.
SECHSKANTSCHRAUBE ISO 4	11631816	15	8	348	969050308	OELBEHAELTER VORM.
SECHSKANTSCHRAUBE ISO 4	11631816	318	4	445	96036790	DREHBUEHNENVERKLEIDUN
SECHSKANTSCHRAUBE ISO 4	11631816	379	4	455	969015908	DREHBUEHNENVERKLEIDUN
SECHSKANTSCHRAUBE ISO 4	11631816	11	4	632	96037229	ANBAUTEILE ARBEITSSCHEIN
SECHSKANTSCHRAUBE ISO 4	11631816	17	1	643	96037130	AUSRUESTUNG KAMERA DRE
SECHSKANTSCHRAUBE ISO 4	11631816	17	1	645	96037131	AUSRUESTUNG KAMERA WIN
SECHSKANTSCHRAUBE ISO 4	11631816	(6)	1	657	919028808	MECH.TEILE VERSANDMONT
SECHSKANTSCHRAUBE ISO 4	11631816	91	2	669	917291908	ANLENKSTUECK VORM.
SECHSKANTSCHRAUBE ISO 4	4635031	24	2	567	96035117	MECH.BEFESTIGUNGSTEILE
SECHSKANTSCHRAUBE ISO 4	11642358	305	6	445	96036790	DREHBUEHNENVERKLEIDUN
SECHSKANTSCHRAUBE ISO 4	11642358	310	2	455	969015908	DREHBUEHNENVERKLEIDUN
SECHSKANTSCHRAUBE ISO 4	11642358	58	1	500	918731808	HARNSTOFFANLAGE
SECHSKANTSCHRAUBE ISO 4	11642358	306	8	511	96051842	ABGASANLAGE VORM.
SECHSKANTSCHRAUBE ISO 4	11642358	556	2	562	96045351	HYDRAULIK OBERWAGEN
SECHSKANTSCHRAUBE ISO 4	11642358	5	6	591	917261808	OELKUEHLER EINBAU
SECHSKANTSCHRAUBE ISO 4	11642358	13	4	604	967969608	HILFSHUBWERK WINDE 2 VO
SECHSKANTSCHRAUBE ISO 4	11642358	23	3	751	968728808	KONSOLE VORM.
SECHSKANTSCHRAUBE ISO	406601008	17	6	604	967969608	HILFSHUBWERK WINDE 2 VO
SECHSKANTSCHRAUBE ISO 4	11691328	106	10	76	91001377	RAUPENTRAEGER VORM.LI.
SECHSKANTSCHRAUBE ISO 4	11691328	107	10	109	91001378	RAUPENTRAEGER VORM.RE.
SECHSKANTSCHRAUBE ISO 4	11626706	21	4	147	919087608	DREHDURCHFUEHRUNG
SECHSKANTSCHRAUBE ISO 4	11626706	301	2	280	918731408	ANTRIEBSAGGREGAT KPL.
SECHSKANTSCHRAUBE ISO 4	11626706	316	24	287	919007708	ANTRIEBSAGGREGAT VORM.
SECHSKANTSCHRAUBE ISO 4	11626706	304	4	511	96051842	ABGASANLAGE VORM.
SECHSKANTSCHRAUBE ISO 4	11626706	15	1	734	917268408	MASTNASE
SECHSKANTSCHRAUBE ISO 4	11691682	82	4	669	917291908	ANLENKSTUECK VORM.
SECHSKANTSCHRAUBE ISO 4	11642355	31	2	433	918810308	STEUERSTAND
SECHSKANTSCHRAUBE ISO	10178901	21	32	20	91001569	RAUPENFAHRWERK KPL.
SECHSKANTSCHRAUBE ISO 4	11651006	339	8	562	96045351	HYDRAULIK OBERWAGEN
SECHSKANTSCHRAUBE ISO 4	11651006	74	3	691	917292408	TELESKOP 5 VORM.
SECHSKANTSCHRAUBE ISO 4	11658892	20	4	20	91001569	RAUPENFAHRWERK KPL.
SECHSKANTSCHRAUBE ISO 4	11658892	26	3	94	96034962	FUEHRUNG LI.
SECHSKANTSCHRAUBE ISO 4	11658892	26	3	112	96034980	FUEHRUNG RE.
SECHSKANTSCHRAUBE ISO 4	11658892	325	3	287	919007708	ANTRIEBSAGGREGAT VORM.
SECHSKANTSCHRAUBE ISO 4	11658892	48	2	673	917292008	TELESKOP 1 VORM.
SECHSKANTSCHRAUBE ISO 4	11658892	48	2	677	917292108	TELESKOP 2 VORM.
SECHSKANTSCHRAUBE ISO 4	11658892	48	2	681	917292208	TELESKOP 3 VORM.

Bezeichnung	Artikel	Pos.	Menge	Seite	Baugruppe	Bezeichnung
SECHSKANTSCHRAUBE ISO 4	11658892	48	2	685	917292308	TELESKOP 4 VORM.
SECHSKANTSCHRAUBE ISO 4	11658892	28	4	751	968728808	KONSOLE VORM.
SECHSKANTSCHRAUBE ISO 4	12100096	326	8	287	919007708	ANTRIEBSAGGREGAT VORM.
SECHSKANTSCHRAUBE ISO 4	11631742	327	4	287	919007708	ANTRIEBSAGGREGAT VORM.
SECHSKANTSCHRAUBE ISO 4	11631742	305	4	507	919674408	ABGASANLAGE
SECHSKANTSCHRAUBE ISO 4	11631742	23	4	668	917291908	ANLENKSTUECK VORM.
SECHSKANTSCHRAUBE ISO 4	11642349	328	4	287	919007708	ANTRIEBSAGGREGAT VORM.
SECHSKANTSCHRAUBE ISO 4	11642349	83	4	669	917291908	ANLENKSTUECK VORM.
SECHSKANTSCHRAUBE ISO	11002727	12	5	378	917259908	KRANFUEHRERKABINE ANBA
SECHSKANTSCHRAUBE ISO 4	11645384	331	2	287	919007708	ANTRIEBSAGGREGAT VORM.
SECHSKANTSCHRAUBE ISO 4	11645384	554	12	562	96045351	HYDRAULIK OBERWAGEN
SECHSKANTSCHRAUBE ISO 4	11645384	554	4	617	967784808	HYDRAULIK HILFSHUBWERK
SECHSKANTSCHRAUBE ISO 4	11645386	35	1	147	919087608	DREHDURCHFUEHRUNG
SECHSKANTSCHRAUBE ISO 4	11645386	2	1	747	917551608	ANBAUTEILE
SECHSKANTSCHRAUBE ISO 4	11840136	27	1	94	96034962	FUEHRUNG LI.
SECHSKANTSCHRAUBE ISO 4	11840136	27	1	112	96034980	FUEHRUNG RE.
SECHSKANTSCHRAUBE ISO 4	11840136	329	1	287	919007708	ANTRIEBSAGGREGAT VORM.
SECHSKANTSCHRAUBE ISO 4	11840136	22	2	761	917267508	TRANSPORTHALTERUNG DKS
SECHSKANTSCHRAUBE ISO 4	10875517	10	4	758	917413208	SELBSTMONTAGE HILFSHU
SECHSKANTSCHRAUBE ISO 4	10878799	551	4	616	967784808	HYDRAULIK HILFSHUBWERK
SECHSKANTSCHRAUBE ISO 4	12213406	558	3	562	96045351	HYDRAULIK OBERWAGEN
SECHSKANTSCHRAUBE ISO	10875518	41	2	761	917267508	TRANSPORTHALTERUNG DKS
SECHSKANTSCHRAUBE ISO 4	12225311	16	2	761	917267508	TRANSPORTHALTERUNG DKS
SECHSKANTSCHRAUBE ISO	10179032	5	4	761	917267508	TRANSPORTHALTERUNG DKS
SECHSKANTSCHRAUBE ISO 4	4065240	335	2	288	919007708	ANTRIEBSAGGREGAT VORM.
SECHSKANTSCHRAUBE ISO 4	12100309	44	8	668	917291908	ANLENKSTUECK VORM.
SECHSKANTSCHRAUBE ISO 4	12100309	35	8	673	917292008	TELESKOP 1 VORM.
SECHSKANTSCHRAUBE ISO 4	12100309	35	8	677	917292108	TELESKOP 2 VORM.
SECHSKANTSCHRAUBE ISO 4	12100309	35	8	681	917292208	TELESKOP 3 VORM.
SECHSKANTSCHRAUBE ISO 4	12100309	35	8	685	917292308	TELESKOP 4 VORM.
SECHSKANTSCHRAUBE ISO 4	12214938	84	16	76	91001377	RAUPENTRAEGER VORM.LI.
SECHSKANTSCHRAUBE ISO 4	12214938	84	16	109	91001378	RAUPENTRAEGER VORM.RE.
SECHSKANTSCHRAUBE ISO 4	12214938	302	2	280	918731408	ANTRIEBSAGGREGAT KPL.
SECHSKANTSCHRAUBE ISO 4	12214938	5	8	458	917260108	ABSTURZSICHERUNG
SECHSKANTSCHRAUBE ISO 4	10875519	66	4	21	91001569	RAUPENFAHRWERK KPL.
SECHSKANTSCHRAUBE ISO 4	10875519	17	4	668	917291908	ANLENKSTUECK VORM.
SECHSKANTSCHRAUBE ISO 4	12100310	40	4	668	917291908	ANLENKSTUECK VORM.
SECHSKANTSCHRAUBE ISO 4	12100310	36	4	673	917292008	TELESKOP 1 VORM.
SECHSKANTSCHRAUBE ISO 4	12100310	36	4	677	917292108	TELESKOP 2 VORM.
SECHSKANTSCHRAUBE ISO 4	12100310	36	4	681	917292208	TELESKOP 3 VORM.
SECHSKANTSCHRAUBE ISO 4	12100310	36	4	685	917292308	TELESKOP 4 VORM.
SECHSKANTSCHRAUBE ISO	406603108	3	6	172	918731108	MONTAGETEILE DREHBUEHN
SECHSKANTSCHRAUBE ISO	406603108	9	9	378	917259908	KRANFUEHRERKABINE ANBA
SECHSKANTSCHRAUBE ISO	406603108	7	3	646	919617008	WIPPZYLINDER M.LAGERUNG
SECHSKANTSCHRAUBE ISO 4	10875803	26	6	147	919087608	DREHDURCHFUEHRUNG
SECHSKANTSCHRAUBE ISO 4	10875803	16	4	604	967969608	HILFSHUBWERK WINDE 2 VO
SECHSKANTSCHRAUBE ISO 4	10875803	9	8	761	917267508	TRANSPORTHALTERUNG DKS
SECHSKANTSCHRAUBE ISO 4	10875520	25	24	75	91001377	RAUPENTRAEGER VORM.LI.
SECHSKANTSCHRAUBE ISO 4	10875520	25	24	108	91001378	RAUPENTRAEGER VORM.RE.
SECHSKANTSCHRAUBE ISO 4	12100283	48	14	668	917291908	ANLENKSTUECK VORM.
SECHSKANTSCHRAUBE ISO 4	12100283	37	14	673	917292008	TELESKOP 1 VORM.
SECHSKANTSCHRAUBE ISO 4	12100283	37	12	677	917292108	TELESKOP 2 VORM.
SECHSKANTSCHRAUBE ISO 4	12100283	37	12	681	917292208	TELESKOP 3 VORM.
SECHSKANTSCHRAUBE ISO 4	12100283	37	12	685	917292308	TELESKOP 4 VORM.
SECHSKANTSCHRAUBE ISO	406608908	338	6	288	919007708	ANTRIEBSAGGREGAT VORM.
SECHSKANTSCHRAUBE ISO 4	10875804	303	1	280	918731408	ANTRIEBSAGGREGAT KPL.
SECHSKANTSCHRAUBE ISO	406603408	7	1	762	929582108	HALTERUNG VORM.
SECHSKANTSCHRAUBE ISO 4	10875521	304	1	280	918731408	ANTRIEBSAGGREGAT KPL.
SECHSKANTSCHRAUBE ISO 4	12226910	301	5	287	919007708	ANTRIEBSAGGREGAT VORM.
SECHSKANTSCHRAUBE ISO 4	12223051	7	1	761	917267508	TRANSPORTHALTERUNG DKS

Bezeichnung	Artikel	Pos.	Menge	Seite	Baugruppe	Bezeichnung
SECHSKANTSCHRAUBE ISO 4	10001467	31	4	129	919644008	HYDRAULISCHE ABSTUETZUN
SECHSKANTSCHRAUBE ISO	12225211	12	2	758	917413208	SELBSTMONTAGE HILFSHU
SECHSKANTSCHRAUBE ISO 4	10878791	35	8	648	12102921	WIPPZYLINDER
SECHSKANTSCHRAUBE ISO 4	12224035	87	2	78	90028956	FAHRANTRIEB
SECHSKANTSCHRAUBE ISO 4	4600199	27	3	147	919087608	DREHDURCHFUEHRUNG
SECHSKANTSCHRAUBE ISO 4	4065281	32	12	147	919087608	DREHDURCHFUEHRUNG
SECHSKANTSCHRAUBE ISO 4	10875805	345	4	288	919007708	ANTRIEBSAGGREGAT VORM.
SECHSKANTSCHRAUBE ISO 4	10875805	12	10	761	917267508	TRANSPORTHALTERUNG DKS
SECHSKANTSCHRAUBE ISO	406604208	27	2	75	91001377	RAUPENTRAEGER VORM.LI.
SECHSKANTSCHRAUBE ISO	406604208	27	2	108	91001378	RAUPENTRAEGER VORM.RE.
SECHSKANTSCHRAUBE ISO 4	10875422	5	1	337	917626608	KRAFTSTOFFBEHAELTER AN
SECHSKANTSCHRAUBE ISO 4	10875422	9	1	345	917825508	OELBEHAELTER ANBAU
SECHSKANTSCHRAUBE ISO	406605808	6	4	646	919617008	WIPPZYLINDER M.LAGERUNG
SECHSKANTSCHRAUBE ISO	4901595	21	4	75	91001377	RAUPENTRAEGER VORM.LI.
SECHSKANTSCHRAUBE ISO	4901595	21	4	108	91001378	RAUPENTRAEGER VORM.RE.
SECHSKANTSCHRAUBE ISO 4	406607008	3	1	658	968068308	MONTAGEVORRICHTUNG
SECHSKANTSCHRAUBE ISO 4	406607008	8	4	751	968728808	KONSOLE VORM.
SECHSKANTSCHRAUBE ISO 4	12228747	23	4	20	91001569	RAUPENFAHRWERK KPL.
SECHSKANTSCHRAUBE ISO	11690047	(3)	2	467	96053500	ELEKTRIK ANBAUTEILE KABIN
SECHSKANTSCHRAUBE ISO	12211444	(3)	2	734	917268408	MASTNASE
SECHSKANTSCHRAUBE ISO	11140402	37	8	433	918810308	STEUERSTAND
SECHSKANTSCHRAUBE ISO	11140402	310	4	561	96045351	HYDRAULIK OBERWAGEN
SECHSKANTSCHRAUBE ISO	11647548	313	2	98	96035796	HYDR.FAHRANTRIEB
SECHSKANTSCHRAUBE ISO	11647548	313	2	115	96035792	HYDR.FAHRANTRIEB
SECHSKANTSCHRAUBE ISO	4600871	11	4	43	968054008	MONTAGEPLATTE VORM.
SECHSKANTSCHRAUBE ISO	11642497	(302)	1	286	919007708	ANTRIEBSAGGREGAT VORM.
SECHSKANTSCHRAUBE ISO	11642497	41	2	378	917259908	KRANFUEHRERKABINE ANBA
SECHSKANTSCHRAUBE ISO	11642497	54	1	399	917305408	INNENVERKLEIDUNG EINBAU
SECHSKANTSCHRAUBE ISO	11642497	98	4	674	917292008	TELESKOP 1 VORM.
SECHSKANTSCHRAUBE ISO	11642497	98	4	678	917292108	TELESKOP 2 VORM.
SECHSKANTSCHRAUBE ISO	11642497	98	4	682	917292208	TELESKOP 3 VORM.
SECHSKANTSCHRAUBE ISO	11642497	98	4	686	917292308	TELESKOP 4 VORM.
SECHSKANTSCHRAUBE ISO	11642497	83	4	691	917292408	TELESKOP 5 VORM.
SECHSKANTSCHRAUBE ISO	11692824	9	12	26	96034894	SCHUTZBLECH KPL.LI.
SECHSKANTSCHRAUBE ISO	11692824	9	12	29	96034977	SCHUTZBLECH KPL.RE.
SECHSKANTSCHRAUBE ISO	11692824	318	2	56	96035801	HYDRAULIK MITTELTEIL
SECHSKANTSCHRAUBE ISO	11692824	17	4	412	916168308	LUFTFUEHRUNG
SECHSKANTSCHRAUBE ISO	11692824	313	2	445	96036790	DREHBUEHNENVERKLEIDUN
SECHSKANTSCHRAUBE ISO	11692824	14	2	449	968923508	KLAPPE VORM.RECHTS
SECHSKANTSCHRAUBE ISO	11692824	308	6	561	96045351	HYDRAULIK OBERWAGEN
SECHSKANTSCHRAUBE ISO	11692824	314	2	616	967784808	HYDRAULIK HILFSHUBWERK
SECHSKANTSCHRAUBE ISO	11657360	302	4	291	96034631	KUEHLER VORM.
SECHSKANTSCHRAUBE ISO	11657360	11	2	601	918628408	KLIMAANLAGE OW
SECHSKANTSCHRAUBE ISO	11657360	(10)	3	604	967969608	HILFSHUBWERK WINDE 2 VO
SECHSKANTSCHRAUBE ISO	11657360	3	2	753	919007108	LASTHAKEN
SECHSKANTSCHRAUBE ISO 4	10001739	46	1	421	917304708	SCHIEBETUER EINBAU
SECHSKANTSCHRAUBE ISO 4	10001739	4	2	712	966591508	ENDSCHALTER ANBAU
SECHSKANTSCHRAUBE ISO	11644899	15	1	43	968054008	MONTAGEPLATTE VORM.
SECHSKANTSCHRAUBE ISO 4	4002860	32	4	52	11346779	SCHLEIFRINGUEBERTRAGER
SECHSKANTSCHRAUBE ISO 4	10197836	11	2	547	926891108	VERTEILER MASSE
SECHSKANTSCHRAUBE ISO 4	10197836	35	2	668	917291908	ANLENKSTUECK VORM.
SECHSKANTSCHRAUBE ISO 4	10197836	59	2	673	917292008	TELESKOP 1 VORM.
SECHSKANTSCHRAUBE ISO 4	10197836	59	2	677	917292108	TELESKOP 2 VORM.
SECHSKANTSCHRAUBE ISO 4	10197836	59	2	681	917292208	TELESKOP 3 VORM.
SECHSKANTSCHRAUBE ISO 4	10197836	59	2	685	917292308	TELESKOP 4 VORM.
SECHSKANTSCHRAUBE ISO	12216201	354	2	455	969015908	DREHBUEHNENVERKLEIDUN
SECHSKANTSCHRAUBE ISO	12216201	27	4	751	968728808	KONSOLE VORM.
SECHSKANTSCHRAUBE ISO	12216202	20	2	147	919087608	DREHDURCHFUEHRUNG
SECHSKANTSCHRAUBE ISO	10181340	39	4	52	11346779	SCHLEIFRINGUEBERTRAGER
SECHSKANTSCHRAUBE ISO 4	11007009	7	1	421	917304708	SCHIEBETUER EINBAU

Bezeichnung	Artikel	Pos.	Menge	Seite	Baugruppe	Bezeichnung
SECHSKANTSCHRAUBE ISO	11690048	16	1	92	968420608	STAUKASTEN VORM.
SECHSKANTSCHRAUBE ISO	11690048	8	1	381	919010208	KRANFUEHRERKABINE VORM.
SECHSKANTSCHRAUBE ISO	11690048	14	2	387	916177508	TRITT KPL.
SECHSKANTSCHRAUBE ISO	11690048	27	2	430	969085208	HEIZUNG VORM.
SECHSKANTSCHRAUBE ISO	11690048	5	8	652	917260608	GEGENGEWICHT M.BEFESTIG
SECHSKANTSCHRAUBE ISO	11690048	54	2	690	917292408	TELESKOP 5 VORM.
SECHSKANTSCHRAUBE ISO	11690048	301	2	722	967785408	ZUSATZHYDRAULIK KLAPPSPI
SECHSKANTSCHRAUBE ISO 4	10299649	24	2	492	967928508	VERRIEGELUNG
SECHSKANTSCHRAUBE ISO	11651612	12	4	26	96034894	SCHUTZBLECH KPL.LI.
SECHSKANTSCHRAUBE ISO	11651612	12	4	29	96034977	SCHUTZBLECH KPL.RE.
SECHSKANTSCHRAUBE ISO	11651612	20	4	30	968019508	ENDSCHALTER ANBAU
SECHSKANTSCHRAUBE ISO	11651612	303	8	56	96035801	HYDRAULIK MITTELTEIL
SECHSKANTSCHRAUBE ISO	11651612	5	4	94	96034962	FUEHRUNG LI.
SECHSKANTSCHRAUBE ISO	11651612	5	4	112	96034980	FUEHRUNG RE.
SECHSKANTSCHRAUBE ISO	11651612	21	16	119	917691008	ABSTURZSICHERUNG
SECHSKANTSCHRAUBE ISO	11651612	26	8	129	919644008	HYDRAULISCHE ABSTUETZUN
SECHSKANTSCHRAUBE ISO	11651612	68	16	150	919499408	ZENTRALBALLAST
SECHSKANTSCHRAUBE ISO	11651612	16	8	172	918731108	MONTAGETEILE DREHBUEHN
SECHSKANTSCHRAUBE ISO	11651612	306	2	280	918731408	ANTRIEBSAGGREGAT KPL.
SECHSKANTSCHRAUBE ISO	11651612	304	18	291	96034631	KUEHLER VORM.
SECHSKANTSCHRAUBE ISO	11651612	15	4	365	917259708	HAUPTHUBWERK
SECHSKANTSCHRAUBE ISO	11651612	30	2	387	916177508	TRITT KPL.
SECHSKANTSCHRAUBE ISO	11651612	21	2	406	916162508	SCHEIBEN EINBAU
SECHSKANTSCHRAUBE ISO	11651612	11	4	426	917676208	HEIZUNG KRANFUEHRERKAB
SECHSKANTSCHRAUBE ISO	11651612	26	3	430	969085208	HEIZUNG VORM.
SECHSKANTSCHRAUBE ISO	11651612	312	2	445	96036790	DREHBUEHNENVERKLEIDUN
SECHSKANTSCHRAUBE ISO	11651612	22	5	480	918759808	ZUSATZHEIZUNG OW
SECHSKANTSCHRAUBE ISO	11651612	21	4	482	96020359	ZUSATZHEIZUNG VORM.
SECHSKANTSCHRAUBE ISO	11651612	22	2	493	967978908	VERRIEGELUNG VORM.
SECHSKANTSCHRAUBE ISO	11651612	322	6	561	96045351	HYDRAULIK OBERWAGEN
SECHSKANTSCHRAUBE ISO	11651612	58	2	690	917292408	TELESKOP 5 VORM.
SECHSKANTSCHRAUBE ISO	11651612	15	6	701	966134608	ANBAUTEILE ZYLINDER
SECHSKANTSCHRAUBE ISO	11651612	27	2	761	917267508	TRANSPORTHALTERUNG DKS
SECHSKANTSCHRAUBE ISO 4	406527808	24	4	421	917304708	SCHIEBETUER EINBAU
SECHSKANTSCHRAUBE ISO 4	406527808	301	3	507	919674408	ABGASANLAGE
SECHSKANTSCHRAUBE ISO 4	406527808	309	6	511	96051842	ABGASANLAGE VORM.
SECHSKANTSCHRAUBE ISO	12216205	9	4	592	967980508	OELKUEHLER VORM.
SECHSKANTSCHRAUBE ISO	11651767	9	2	155	91001571	BOLZENZIEHVORRICHTUNG
SECHSKANTSCHRAUBE ISO	11651767	307	19	287	919007708	ANTRIEBSAGGREGAT VORM.
SECHSKANTSCHRAUBE ISO	11651767	303	4	291	96034631	KUEHLER VORM.
SECHSKANTSCHRAUBE ISO	11651767	300	3	341	91002861	KRAFTSTOFFFOERDERUNG
SECHSKANTSCHRAUBE ISO	11651767	13	3	388	96025887	PEDALTRAEGER EINBAU
SECHSKANTSCHRAUBE ISO	11651767	15	4	415	916163008	WISCHANLAGE EINBAU
SECHSKANTSCHRAUBE ISO	11651767	24	1	430	969085208	HEIZUNG VORM.
SECHSKANTSCHRAUBE ISO	11651767	310	2	445	96036790	DREHBUEHNENVERKLEIDUN
SECHSKANTSCHRAUBE ISO	11651767	17	4	449	968923508	KLAPPE VORM.RECHTS
SECHSKANTSCHRAUBE ISO	11651767	306	5	455	969015908	DREHBUEHNENVERKLEIDUN
SECHSKANTSCHRAUBE ISO	11651767	21	13	480	918759808	ZUSATZHEIZUNG OW
SECHSKANTSCHRAUBE ISO	11651767	31	1	482	96020359	ZUSATZHEIZUNG VORM.
SECHSKANTSCHRAUBE ISO	11651767	301	2	511	96051842	ABGASANLAGE VORM.
SECHSKANTSCHRAUBE ISO	11651767	301	4	520	918731908	LUFTFILTERANLAGE
SECHSKANTSCHRAUBE ISO	11651767	52	1	544	969256608	GRUNDAUFBAU
SECHSKANTSCHRAUBE ISO	11651767	334	10	562	96045351	HYDRAULIK OBERWAGEN
SECHSKANTSCHRAUBE ISO	11651767	301	2	622	969426308	ZUSATZHYDRAULIK KLAPPSPI
SECHSKANTSCHRAUBE ISO	11651767	29	17	668	917291908	ANLENKSTUECK VORM.
SECHSKANTSCHRAUBE ISO	11651767	4	2	673	917292008	TELESKOP 1 VORM.
SECHSKANTSCHRAUBE ISO	11651767	4	2	677	917292108	TELESKOP 2 VORM.
SECHSKANTSCHRAUBE ISO	11651767	4	2	681	917292208	TELESKOP 3 VORM.
SECHSKANTSCHRAUBE ISO	11651767	4	2	685	917292308	TELESKOP 4 VORM.
SECHSKANTSCHRAUBE ISO	11651767	28	4	690	917292408	TELESKOP 5 VORM.

Bezeichnung	Artikel	Pos.	Menge	Seite	Baugruppe	Bezeichnung
SECHSKANTSCHRAUBE ISO	11651767	32	2	761	917267508	TRANSPORTHALTERUNG DKS
SECHSKANTSCHRAUBE ISO 4	502618908	20	2	172	918731108	MONTAGETEILE DREHBUEHN
SECHSKANTSCHRAUBE ISO 4	10197831	7	2	135	917257108	ZENTRALSCHMIERUNG RAUP
SECHSKANTSCHRAUBE ISO 4	10197831	36	4	147	919087608	DREHDURCHFUEHRUNG
SECHSKANTSCHRAUBE ISO 4	10197831	311	2	287	919007708	ANTRIEBSAGGREGAT VORM.
SECHSKANTSCHRAUBE ISO 4	10197831	311	7	445	96036790	DREHBUEHNENVERKLEIDUN
SECHSKANTSCHRAUBE ISO 4	10197831	26	2	492	967928508	VERRIEGELUNG
SECHSKANTSCHRAUBE ISO 4	10197831	53	2	500	918731808	HARNSTOFFANLAGE
SECHSKANTSCHRAUBE ISO 4	10197831	303	2	507	919674408	ABGASANLAGE
SECHSKANTSCHRAUBE ISO 4	10197831	313	2	511	96051842	ABGASANLAGE VORM.
SECHSKANTSCHRAUBE ISO 4	10197831	20	2	523	917261208	ZENTRALSCHMIERANLAGE O
SECHSKANTSCHRAUBE ISO 4	10197831	8	2	547	926891108	VERTEILER MASSE
SECHSKANTSCHRAUBE ISO 4	10197831	15	10	592	967980508	OELKUEHLER VORM.
SECHSKANTSCHRAUBE ISO 4	10197831	15	2	668	917291908	ANLENKSTUECK VORM.
SECHSKANTSCHRAUBE ISO 4	10197831	76	2	691	917292408	TELESKOP 5 VORM.
SECHSKANTSCHRAUBE ISO 4	10197831	308	2	728	967785008	ZUSATZHYDRAULIK KLAPPSPI
SECHSKANTSCHRAUBE ISO 4	10197831	26	4	734	917268408	MASTNASE
SECHSKANTSCHRAUBE ISO 4	406590105	312	6	511	96051842	ABGASANLAGE VORM.
SECHSKANTSCHRAUBE ISO 4	406590105	3	2	746	967937608	HINDERNISFEUER VORM.
SECHSKANTSCHRAUBE ISO 4	500411708	56	6	20	91001569	RAUPENFAHRWERK KPL.
SECHSKANTSCHRAUBE ISO	11826527	309	4	287	919007708	ANTRIEBSAGGREGAT VORM.
SECHSKANTSCHRAUBE ISO	11826527	305	4	291	96034631	KUEHLER VORM.
SECHSKANTSCHRAUBE ISO	11826527	305	2	294	968026308	KUPPLUNGSSTELLER
SECHSKANTSCHRAUBE ISO	11826527	24	2	378	917259908	KRANFUEHRERKABINE ANBA
SECHSKANTSCHRAUBE ISO	11826527	45	1	399	917305408	INNENVERKLEIDUNG EINBAU
SECHSKANTSCHRAUBE ISO	11826527	4	2	668	917291908	ANLENKSTUECK VORM.
SECHSKANTSCHRAUBE ISO	11692827	7	1	120	968038208	LAGERUNG VORN LI.
SECHSKANTSCHRAUBE ISO	11692827	7	1	121	968038308	LAGERUNG VORN RE.
SECHSKANTSCHRAUBE ISO	11692827	28	2	378	917259908	KRANFUEHRERKABINE ANBA
SECHSKANTSCHRAUBE ISO	11692827	22	1	482	96020359	ZUSATZHEIZUNG VORM.
SECHSKANTSCHRAUBE ISO	11692827	19	4	604	967969608	HILFSHUBWERK WINDE 2 VO
SECHSKANTSCHRAUBE ISO	11692827	302	13	728	967785008	ZUSATZHYDRAULIK KLAPPSPI
SECHSKANTSCHRAUBE ISO	11690046	11	2	690	917292408	TELESKOP 5 VORM.
SECHSKANTSCHRAUBE ISO	10875538	44	2	399	917305408	INNENVERKLEIDUNG EINBAU
SECHSKANTSCHRAUBE ISO 8	12216237	303	3	496	969763408	VERROHRUNG DRUCKLUFTA
SECHSKANTSCHRAUBE M5X1	10876387	12	6	41	96045226	SCHALTKASTEN VORM.
SECHSKANTSCHRAUBE M8X	11066521	24	4	240	5700161	LUFTPRESSER
SECHSKANTSTIFTSCHLUESS	885166108	29	1	152	928569808	GRUNDWERKZEUG
SECHSRUNDSCHRAUBE M10X	10138656	4	14	250	10140087	ABGASROHR ANBAU
SECHSRUNDSCHRAUBE M14X	10139578	6	2	209	10120186	MASSENAUSGLEICH ANBAU
SECHSRUNDSCHRAUBE M16	10125439	3	6	202	10149580	ZYLINDERKOPF ANBAU
SECHSRUNDSCHRAUBE M16	10118910	4	10	266	9077238	SCHWUNGRAD ANBAU
SECHSRUNDSCHRAUBE M16	10118912	10	6	200	10141974	KURBELWELLENANBAUTEILE
SECHSRUNDSCHRAUBE M18X	10130816	5	10	181	10154379	KURBELGEHAEUSE VORM.
SECHSRUNDSCHRAUBE M8X	13569467	11	13	253	12512627	ABGASSTUTZEN ANBAU
SECHSRUNDSCHRAUBE M8X	10118695	9	3	234	10149677	VERBINDUNGSLEITUNG ANBA
SECHSRUNDSCHRAUBE M8X	10125702	3	2	251	10144756	HITZESCHUTZ MIT BEFESTIG
SEIL 2 2,3KN EDELSTAHL	11160431	35	2	129	919644008	HYDRAULISCHE ABSTUETZUN
SEIL 2 2,3KN EDELSTAHL	11160431	9	0.3	763	923285508	KLAPPKONSOLE VORM.
SEIL 2 2,3KN EDELSTAHL	11160431	3	0.4	768	968090008	HAKENSTANGE ANBAU
SEIL 6 0,59KN PERLON	773404508	6	1.6	659	925141508	SCHLAUCHFUEHRUNG VORM.
SEIL 6 0,59KN PERLON	773404508	19	2.5	751	968728808	KONSOLE VORM.
SEIL F.WINDE 1	917259808	127	1	13		LIEBHERR LTR 1220
SEILFESTPUNKT	11347027	2	1	754	910836808	HAKENFLASCHE
SEILKLEMME DIN 1142 22 VER	773913308	6	1	657	919028808	MECH.TEILE VERSANDMONT
SEILLAENGENGEBER 15M LSB	10802064	20	1	702	966473108	GEBER ANLENKSTUECK
SEILROLLE 437X12.5 S355J2+	97027358	1	1	694	967771908	SEILROLLE KPL.
SEILROLLE D=572/506/210X63	773953608	1	1	755	925203408	SEILROLLE KPL.
SEILROLLE KPL.	967771908	78	7	691	917292408	TELESKOP 5 VORM.
SEILROLLE KPL.	967771908	27	1	734	917268408	MASTNASE

Bezeichnung	Artikel	Pos.	Menge	Seite	Baugruppe	Bezeichnung
SEILROLLE KPL. SPF	921456108	2	1	690	917292408	TELESKOP 5 VORM.
SEILROLLE KPL. SPF	921456108	1	1	739	910040808	2.NACKENROLLE EINBAU
SEILROLLE KPL. SPF	925203408	1	5	754	910836808	HAKENFLASCHE
SEILROLLE RD508X63 PA6G	288195608	1	1	692	921456108	SEILROLLE KPL.
SEILSCHUTZ KPL.	571716008	10	1	754	910836808	HAKENFLASCHE
SEILSCHUTZ KPL.	571716108	12	2	754	910836808	HAKENFLASCHE
SEILTROMMEL	939294001	1	1	606	90028852	KOMPAKTSEILWINDE
SEILTROMMEL D=490 SEIL=23	932916901	1	1	367	90208882	KOMPAKTSEILWINDE
SEITENBLECH	11658586	8	2	754	910836808	HAKENFLASCHE
SEITENBLECH SCHWK.	968981408	1	1	291	96034631	KUEHLER VORM.
SEITENBLECH SCHWK.	968981508	2	1	291	96034631	KUEHLER VORM.
SEITENSCHEIBE LI. 646.2X94X	97003560	2	1	406	916162508	SCHEIBEN EINBAU
SEITENSCHEIBE RE. 1252X12	97003561	3	1	406	916162508	SCHEIBEN EINBAU
SELBSTMONTAGE HILFSHU	917413208	334	1	14		LIEBHERR LTR 1220
SENKBREMSVENTIL	10326277	35	1	697	10876933	TELESKOPIERZYLINDER
SENKBREMSVENTIL	571413308	36	1	697	10876933	TELESKOPIERZYLINDER
SENKBREMSVENTIL SPF	10038474	150	1	560	96045351	HYDRAULIK OBERWAGEN
SENKSCHRAUBE AEHNL.ISO	12100589	45	4	433	918810308	STEUERSTAND
SENKSCHRAUBE AEHNL.ISO	12100589	13	12	449	968923508	KLAPPE VORM.RECHTS
SENKSCHRAUBE AEHNL.ISO	12100589	3	8	457	969016008	KLAPPE VORM.VORN LINKS
SENKSCHRAUBE DIN 7991 M1	10877246	15	16	690	917292408	TELESKOP 5 VORM.
SENKSCHRAUBE DIN 7991 M1	10179447	40	36	124	968046208	ANBAUTEILE
SENKSCHRAUBE DIN 7991 M	10876388	46	8	544	969256608	GRUNDAUFBAU
SENKSCHRAUBE DIN 7991 M5	408603508	33	4	433	918810308	STEUERSTAND
SENKSCHRAUBE DIN 7991 M	10875549	20	2	412	916168308	LUFTFUEHRUNG
SENKSCHRAUBE DIN 7991 M	10875550	16	8	540	91000922	EINBAUTEILE SCHALTSCHRAN
SENKSCHRAUBE DIN 7991 M	10875550	51	16	544	969256608	GRUNDAUFBAU
SENKSCHRAUBE DIN 7991 M	10875809	11	4	406	916162508	SCHEIBEN EINBAU
SENKSCHRAUBE DIN 7991 M	10875809	6	4	767	917268208	LEITER ANBAU
SENKSCHRAUBE DIN 7991 M	10875551	17	8	157	96063087	STAUKASTEN
SENKSCHRAUBE DIN 7991 M	10875551	16	6	378	917259908	KRANFUEHRERKABINE ANBA
SENKSCHRAUBE DIN 7991 M	10875551	12	8	406	916162508	SCHEIBEN EINBAU
SENKSCHRAUBE DIN 7991 M	10875551	13	8	409	966497908	FRONTSCHEIBE KPL.
SENKSCHRAUBE DIN 7991 M	10875551	18	4	421	917304708	SCHIEBETUER EINBAU
SENKSCHRAUBE DIN 7991 M	11113906	33	4	124	968046208	ANBAUTEILE
SENKSCHRAUBE DIN 7991 M	10875552	17	16	129	919644008	HYDRAULISCHE ABSTUETZUN
SENKSCHRAUBE DIN 7991 M	10875552	51	6	668	917291908	ANLENKSTUECK VORM.
SENKSCHRAUBE DIN 7991 M	10875552	57	6	673	917292008	TELESKOP 1 VORM.
SENKSCHRAUBE DIN 7991 M	10875553	64	4	21	91001569	RAUPENFAHRWERK KPL.
SENKSCHRAUBE DIN 7991 M	10875553	3	3	52	11346779	SCHLEIFRINGUEBERTRAGER
SENKSCHRAUBE DIN 7991 M	10875553	32	6	648	12102921	WIPPZYLINDER
SENKSCHRAUBE DIN 7991 M8	408606414	(4)	40	119	917691008	ABSTURZSICHERUNG
SENKSCHRAUBE DIN 7991 M	10875554	7	2	753	919007108	LASTHAKEN
SENKSCHRAUBE ISO 10642 M	12100586	10	8	654	967936908	GEGENGEWICHT KPL.
SENKSCHRAUBE ISO 10642 M	12100586	11	2	758	917413208	SELBSTMONTAGE HILFSHU
SENKSCHRAUBE ISO 10642	10878064	16	56	20	91001569	RAUPENFAHRWERK KPL.
SENKSCHRAUBE ISO 10642	12100279	10	4	410	965784408	DACHSCHEIBE VORM.
SENKSCHRAUBE ISO 14581 M	12210040	4	3	199	10153583	KURBELWELLENDICHTUNG
SENKSCHRAUBE ISO 7047 M	12216233	12	12	348	969050308	OELBEHAELTER VORM.
SENKSCHRAUBE ISO 7047 M	12100291	3	4	657	919028808	MECH.TEILE VERSANDMONT
SENSORHALTER 30X75X190 P	972261508	31	2	701	966134608	ANBAUTEILE ZYLINDER
SENSORROHR	12898856	102	1	511	96051842	ABGASANLAGE VORM.
SENSORSTEUERGERAET NI	10144039	154	1	514	96041566	ELEKTRIK ANBAUTEILE
SICHELBLECH SCHWK.	967970008	2	2	604	967969608	HILFSHUBWERK WINDE 2 VO
SICHELBLECH SCHWK. FE//ZN	968054808	5	2	365	917259708	HAUPTHUBWERK
SICHERHEITSELEMENT	10294939	3	1	521	10871700	LUFTFILTER
SICHERHEITSKLAPPSTECKER	571817208	6	1	649	10040024	TASCHENSCHLOSS
SICHERHEITSKLAPPSTECKER	10875869	34	4	129	919644008	HYDRAULISCHE ABSTUETZUN
SICHERHEITSKLAPPSTECKER	10875869	60	4	690	917292408	TELESKOP 5 VORM.
SICHERHEITSKLAPPSTECKER	10875869	7	1	737	967321308	HALTERUNG 2.HUB OBEN

Bezeichnung	Artikel	Pos.	Menge	Seite	Baugruppe	Bezeichnung
SICHERHEITSKLAPPSTECKER	10875869	(1)	2	754	910836808	HAKENFLASCHE
SICHERHEITSKLAPPSTECKER	10875870	51	4	20	91001569	RAUPENFAHRWERK KPL.
SICHERHEITSKLAPPSTECKER	10875870	35	1	378	917259908	KRANFUEHRERKABINE ANBA
SICHERHEITSWARNBLINKLEU	607106208	2	2	153	928620108	ZUBEHOER
SICHERUNG 50A 32V SPF	10023751	(20)	1	335	96023914	ELEKTRIK BATTERIEKASTEN
SICHERUNGSBOLZEN 30.0X2	97073453	103	2	76	91001377	RAUPENTRAEGER VORM.LI.
SICHERUNGSBOLZEN 30.0X2	97073453	104	2	109	91001378	RAUPENTRAEGER VORM.RE.
SICHERUNGSCLIP	11002524	1	2	488	11212257	GURTTRAGESYSTEM
SICHERUNGSCLIP FUER GRI	10678848	4	2	472	10343693	MEISTERSCHALTER
SICHERUNGSDOSE 6-POL, L	604501608	2	10	551	969061708	TRAEGERBLECH SICHERUNG
SICHERUNGSEINSATZ 100A D	10878143	(22)	1	335	96023914	ELEKTRIK BATTERIEKASTEN
SICHERUNGSEINSATZ 80A D	10878142	(21)	1	335	96023914	ELEKTRIK BATTERIEKASTEN
SICHERUNGSEINSATZ DIN 72	6905877	(1)	1	271	10151329	KABELSATZ ANBAU
SICHERUNGSFALLE	12103686	9	1	753	919007108	LASTHAKEN
SICHERUNGSFALLE	571716208	34	2	754	910836808	HAKENFLASCHE
SICHERUNGSFEDER 3X55 V	433102808	101	1	445	96036790	DREHBUEHNENVERKLEIDUN
SICHERUNGSFEDER 3X55 V	433102808	101	1	455	969015908	DREHBUEHNENVERKLEIDUN
SICHERUNGSFEDER 3X55 V	433102808	5	1	745	967936408	WINDWARNUNG VORM.
SICHERUNGSFEDER 4,5X98 IS	433100908	62	1	75	91001377	RAUPENTRAEGER VORM.LI.
SICHERUNGSFEDER 4,5X98 IS	433100908	62	1	108	91001378	RAUPENTRAEGER VORM.RE.
SICHERUNGSFEDER 4,5X98 IS	433100908	37	4	129	919644008	HYDRAULISCHE ABSTUETZUN
SICHERUNGSFEDER 4,5X98 IS	433100908	25	1	147	919087608	DREHDURCHFUEHRUNG
SICHERUNGSFEDER 4,5X98 IS	433100908	11	4	652	917260608	GEGENGEWICHT M.BEFESTIG
SICHERUNGSFEDER 4,5X98 IS	433100908	24	3	734	917268408	MASTNASE
SICHERUNGSFEDER 4,5X98 IS	433100908	44	1	761	917267508	TRANSPORTHALTERUNG DKS
SICHERUNGSFEDER 4X68 ISO	433101208	49	1	75	91001377	RAUPENTRAEGER VORM.LI.
SICHERUNGSFEDER 4X68 ISO	433101208	49	1	108	91001378	RAUPENTRAEGER VORM.RE.
SICHERUNGSFEDER 4X68 ISO	433101208	10	2	602	917267108	HILFSHUBWERK WINDE 2
SICHERUNGSFEDER 4X68 ISO	433101208	11	2	734	917268408	MASTNASE
SICHERUNGSFEDER 4X68 ISO	433101208	2	1	737	967321308	HALTERUNG 2.HUB OBEN
SICHERUNGSFEDER 4X68 ISO	433101208	13	2	758	917413208	SELBSTMONTAGE HILFSHU
SICHERUNGSFEDER 4X68 ISO	433101208	8	1	763	923285508	KLAPPKONSOLE VORM.
SICHERUNGSFEDER 5X122 IS	433102508	80	1	691	917292408	TELESKOP 5 VORM.
SICHERUNGSFEDER 5X122 IS	433102508	12	1	744	967933408	GRUNDHALTER VORM.
SICHERUNGSFEDER DIN 2194	433105008	6	1	658	968068308	MONTAGEVORRICHTUNG
SICHERUNGSFEDER DIN 2194	433105008	28	1	734	917268408	MASTNASE
SICHERUNGSHALTER RAUP	968331708	9	6	124	968046208	ANBAUTEILE
SICHERUNGSKNOPF	10470667	9	1	649	10040024	TASCHENSCHLOSS
SICHERUNGSRING	10356273	37	1	321	10872488	TRIEBWERK
SICHERUNGSRING DIN 471 21	10872700	3	2	692	921456108	SEILROLLE KPL.
SICHERUNGSRING DIN 471 21	10872700	3	2	755	925203408	SEILROLLE KPL.
SICHERUNGSRING DIN 471 21	428009008	3	2	694	967771908	SEILROLLE KPL.
SICHERUNGSRING DIN 471 22	463000003	41	3	353	90008901	DREHWERKANTRIEB
SICHERUNGSRING DIN 471 2	463000103	21	5	353	90008901	DREHWERKANTRIEB
SICHERUNGSRING DIN 471 2	463000103	43	3	370	939292201	PLANETENGETRIEBE
SICHERUNGSRING DIN 471 3	428011301	7	2	207	11448005	KIPPHEBELBOCK VORM.
SICHERUNGSRING DIN 471 3	428002908	36	1	310	10663105	TRIEBWERK
SICHERUNGSRING DIN 471 3	10171579	29	2	319	10871282	VERSTELLPUMPE
SICHERUNGSRING DIN 471 3	10171579	92	1	353	90008901	DREHWERKANTRIEB
SICHERUNGSRING DIN 471 4	400208003	33	3	372	90017588	PLANETENTRAEGER
SICHERUNGSRING DIN 471 50	10875659	36	1	321	10872488	TRIEBWERK
SICHERUNGSRING DIN 471 5	10171585	52	1	78	90028956	FAHRANTRIEB
SICHERUNGSRING DIN 471 5	400093303	8	5	370	939292201	PLANETENGETRIEBE
SICHERUNGSRING DIN 471 8X	10450160	7	1	424	966253908	WAGEN
SICHERUNGSRING DIN 471 9	12100338	21	4	387	916177508	TRITT KPL.
SICHERUNGSRING DIN 472 1	4281019	12	1	610	939294201	PLANETENGETRIEBE
SICHERUNGSRING DIN 472 1	4281048	13	1	610	939294201	PLANETENGETRIEBE
SICHERUNGSRING DIN 472 17	428105908	18	1	368	932916901	SEILTROMMEL
SICHERUNGSRING DIN 472 17	428105908	21	1	608	939294001	SEILTROMMEL
SICHERUNGSRING DIN 472 3	428100708	5	1	292	10429930	ZAHNRADMOTOR

Bezeichnung	Artikel	Pos.	Menge	Seite	Baugruppe	Bezeichnung
SICHERUNGSRING DIN 472 6	10171626	67	1	353	90008901	DREHWERKANTRIEB
SICHERUNGSRING DIN 472 7	10171628	14	1	52	11346779	SCHLEIFRINGUEBERTRAGER
SICHERUNGSRING DIN 472 8	428102508	12	1	360	570109008	TRIEBWERK
SICHERUNGSRING DIN 472 8	428102708	4	1	610	939294201	PLANETENGETRIEBE
SICHERUNGSRING DIN 472 8	10171631	4	1	370	939292201	PLANETENGETRIEBE
SICHERUNGSRING DIN 472 90	12100657	37	1	310	10663105	TRIEBWERK
SICHERUNGSSCHEIBE DIN 67	12210037	3	1	268	10144098	BEFESTIGUNGSSCHELLE
SICHERUNGSSCHEIBE RIPP	12699046	68	92	76	91001377	RAUPENTRAEGER VORM.LI.
SICHERUNGSSCHEIBE RIPP	12699046	68	92	109	91001378	RAUPENTRAEGER VORM.RE.
SICHERUNGSSCHEIBE VS 10	423901508	26	1	608	939294001	SEILTROMMEL
SICHERUNGSSCHEIBE VS 10	423901508	53	12	610	939294201	PLANETENGETRIEBE
SICHERUNGSSCHEIBE VS 10	4229913	53	12	370	939292201	PLANETENGETRIEBE
SICHERUNGSSCHEIBE VS 12	423911201	93	8	78	90028956	FAHRANTRIEB
SICHERUNGSSCHEIBE VS 20	423912001	69	12	78	90028956	FAHRANTRIEB
SICHERUNGSSCHEIBE VS 8	423910801	27	8	353	90008901	DREHWERKANTRIEB
SICHERUNGSSCHEIBE VS 8	423910801	75	8	353	90008901	DREHWERKANTRIEB
SICHERUNGSSCHRAUBE M1	10153538	2	2	211	9079870	STEUERUNGSTEILE
SICHERUNGSSTIFT FOR JPT P	602338208	503	3	464	96036956	KABELSTRANG
SICHERUNGSSTIFT FOR JPT P	602338208	520	5	542	96045387	DRAEHTE GRUNDAUFBAU KPL
SICHERUNGSSTUECK 20X5X8	11212351	4	1	753	919007108	LASTHAKEN
SICHTFENSTER	11110060	39	1	525	10327065	ELEKTROPUMPE
SIEBFILTER	10346599	(1)	1	560	96045351	HYDRAULIK OBERWAGEN
SIEBHUELSE	570066308	5	1	102	502806508	AUSGLEICHSBEHAELTER
SITZTEIL KPL.	12100570	55	1	435	10877138	FAHRERSITZ
SONNENRAD Z=21 18CrNiMo7-	927601901	25	1	370	939292201	PLANETENGETRIEBE
SONNENRAD Z=24 18CrNiMo7-	939251401	30	1	353	90008901	DREHWERKANTRIEB
SONNENRAD Z=24 18CrNiMo7-	939251601	45	1	353	90008901	DREHWERKANTRIEB
SONNENRAD Z=24 18CrNiMo7-	939251701	60	1	353	90008901	DREHWERKANTRIEB
SONNENRAD Z=28 18CrNiMo7-	927602901	35	1	370	939292201	PLANETENGETRIEBE
SONNENRAD Z=42 18CrNiMo7-	927608801	45	1	370	939292201	PLANETENGETRIEBE
SORTIMENTKASTEN FLACHSI	10877437	8	1	153	928620108	ZUBEHOER
SPANNBAND 206/206/30 ST	774211308	304	1	496	969763408	VERROHRUNG DRUCKLUFTA
SPANNBAND 240-280/260/30 S	774210508	309	1	496	969763408	VERROHRUNG DRUCKLUFTA
SPANNBAND 260X735X30XSP	774227708	310	1	496	969763408	VERROHRUNG DRUCKLUFTA
SPANNER HYDR KPL	10877686	2	1	83	11320954	LEITRADEINHEIT
SPANNSCHELLE 122,5/K1 St/I	10127984	2	1	233	10147364	LUFTANSAUGUNG ANBAU
SPANNSCHELLE 125/K1 Inox	10138826	6	1	253	12512627	ABGASSTUTZEN ANBAU
SPANNSCHELLE 129	12222896	22	1	484	10876576	WASSERHEIZGERAET
SPANNSCHELLE 150/K1 Inox	10138820	3	1	246	10148215	THERMOSTATGEHAEUSE AN
SPANNSCHELLE 73/K1 St/Inox	10122841	2	1	248	10142742	KUEHLMITTELKRUEMMER AN
SPANNSCHELLE 75/25	774209708	180	1	291	96034631	KUEHLER VORM.
SPANNSCHELLE 77/K1 St/Inox	10124798	5	2	234	10149677	VERBINDUNGSLEITUNG ANBA
SPANNSTIFT 3X10	10410651	31	1	305	11210795	VERSTELLPUMPE
SPANNSTIFT 3X10	10410651	28	2	319	10871282	VERSTELLPUMPE
SPANNSTIFT ISO 8752 12X50	432011808	13	4	654	967936908	GEGENGEWICHT KPL.
SPANNSTIFT ISO 8752 12X85 4	10875876	35	1	761	917267508	TRANSPORTHALTERUNG DKS
SPANNSTIFT ISO 8752 18X45 4	10876421	11	6	378	917259908	KRANFUEHRERKABINE ANBA
SPANNSTIFT ISO 8752 5X12 4	10875879	59	2	370	939292201	PLANETENGETRIEBE
SPANNSTIFT ISO 8752 5X28 4	12100669	6	1	477	966707708	SPIEGELHALTER VORM.
SPANNSTIFT ISO 8752 5X36 A	12102738	7	1	477	966707708	SPIEGELHALTER VORM.
SPANNSTIFT ISO 8752 5X50 A	10663567	3	1	125	968331708	SICHERUNGSHALTER
SPANNSTIFT ISO 8752 6X10 ST	10875881	25	2	406	916162508	SCHEIBEN EINBAU
SPANNSTIFT ISO 8752 6X20 4	10876162	150	2	294	968026308	KUPPLUNGSSTELLER
SPANNSTIFT ISO 8752 6X20 4	10876162	43	2	378	917259908	KRANFUEHRERKABINE ANBA
SPANNSTIFT ISO 8752 6X30 S	243034002	10	2	209	10120186	MASSENAUSGLEICH ANBAU
SPANNSTIFT ISO 8752 6X40 4	12100674	5	2	528	965281408	ENDSCHALTER ANBAU
SPANNSTIFT ISO 8752 6X50 A	432006708	11	1	636	968994408	KAMERAHALTER VORM.
SPANNSTIFT ISO 8752 6X55 St	432006801	4	1	155	91001571	BOLZENZIEHVORRICHTUNG
SPANNSTIFT ISO 8752 8X16 St	432008001	72	1	370	939292201	PLANETENGETRIEBE
SPANNSTIFT ISO 8752 8X40 St	4980376	5	1	196	10147438	KURBELWELLE MIT ZAHNRAD

Bezeichnung	Artikel	Pos.	Menge	Seite	Baugruppe	Bezeichnung
SPANNSTIFT ISO 8752 A 8X16	432007908	72	1	610	939294201	PLANETENGETRIEBE
SPANNUNGSREGLER 24V 12V	614020508	5	1	628	915432508	FUNKVORBEREITUNG OW
SPANNVORRICHTUNG	10153374	4	1	244	12418347	KLIMAKOMPRESSOR ANBAU
SPIEGELANBAU DREHBUEHN	917260408	144	1	13		LIEBHERR LTR 1220
SPIEGELANBAU KRANFUEHRE	916049908	138	1	13		LIEBHERR LTR 1220
SPIEGELGLAS 315X178	10675116	(1)	1	476	917260408	SPIEGELANBAU DREHBUEHN
SPIEGELHALTER 28X2 ST.37.4	979320608	1	1	440	916049908	SPIEGELANBAU KRANFUEHR
SPIEGELHALTER VORM.	966707708	2	1	476	917260408	SPIEGELANBAU DREHBUEHN
SPIRALBLATTFEDER	10428198	12	3	710	10354493	LEITUNGSTROMMEL
SPLINT ISO 1234 1,6X14 A2	10180340	13	1	387	916177508	TRITT KPL.
SPLINT ISO 1234 1,6X14 A2	10180340	4	1	745	967936408	WINDWARNUNG VORM.
SPLINT ISO 1234 10X100 St 480	10180377	7	2	489	918956108	HYDRAULISCHE BALLASTIER
SPLINT ISO 1234 10X80 St 480	10180375	47	8	35	917511508	RAUPENMITTELTEIL VORM.
SPLINT ISO 1234 13X125 St 480	10180381	30	2	20	91001569	RAUPENFAHRWERK KPL.
SPLINT ISO 1234 1X14 ST 480	10875872	12	1	387	916177508	TRITT KPL.
SPLINT ISO 1234 3,2X40 A4	10172636	47	4	75	91001377	RAUPENTRAEGER VORM.LI.
SPLINT ISO 1234 3,2X40 A4	10172636	47	4	108	91001378	RAUPENTRAEGER VORM.RE.
SPLINT ISO 1234 4X40 St 480H	10180354	110	2	76	91001377	RAUPENTRAEGER VORM.LI.
SPLINT ISO 1234 4X40 St 480H	10180354	111	2	109	91001378	RAUPENTRAEGER VORM.RE.
SPLINT ISO 1234 4X40 St 480H	10180354	59	3	690	917292408	TELESKOP 5 VORM.
SPLINT ISO 1234 5X40 St 480H	10180359	21	1	734	917268408	MASTNASE
SPLINT ISO 1234 5X40 St 480H	10180359	5	3	762	929582108	HALTERUNG VORM.
SPLINT ISO 1234 5X40 St 480H	10180359	5	1	765	923879808	KONSOLE VORM.
SPLINT ISO 1234 6,3X40 St 480	10180363	33	2	668	917291908	ANLENKSTUECK VORM.
SPLINT ISO 1234 6,3X50 St 480	10180364	12	1	763	923285508	KLAPPKONSOLE VORM.
SPLINT ISO 1234 6,3X63 St 480	10180365	23	1	734	917268408	MASTNASE
SPLINT ISO 1234 8X100 St 480	10180373	10	1	751	968728808	KONSOLE VORM.
SPLINT ISO 1234 8X63 ST 480	10875873	30	4	129	919644008	HYDRAULISCHE ABSTUETZUN
SPLINT ISO 1234 8X63 ST 480	10875873	24	2	147	919087608	DREHDURCHFUEHRUNG
SPLINT ISO 1234 8X80 St 480H	10180371	17	4	492	967928508	VERRIEGELUNG
SPLINT ISO 1234 8X80 St 480H	10180371	9	2	654	967936908	GEGENGEWICHT KPL.
SPLINT ISO 1234 8X80 St 480H	10180371	17	1	734	917268408	MASTNASE
SPRENGRING 45X1,75	429606201	62	1	370	939292201	PLANETENGETRIEBE
SPRENGRING 52X2 FSt	4980482	7	2	201	10146367	KOLBEN KPL.
SPRENGRING DIN 7993 16X1,6	11643655	10	1	315	10472208	VERSTELLUNG
SPRITZE	10045118	100	1	704	10802064	SEILLAENGENGEBER
SPUEL + SPEISEDRUCKVENTI	10871726	5	1	79	11182596	VERSTELLMOTOR
SPURVERSTELLZYLINDER 250	12102931	1	2	20	91001569	RAUPENFAHRWERK KPL.
STANGE 18.0X700 E235+N	978361608	30	1	294	968026308	KUPPLUNGSSTELLER
STANGE 30.0X1724 S355J2C+	97033302	1	1	493	967978908	VERRIEGELUNG VORM.
STANGE 30.0X339 S355J2C+C	97133544	3	2	94	96034962	FUEHRUNG LI.
STANGE 30.0X339 S355J2C+C	97133544	3	2	112	96034980	FUEHRUNG RE.
STANGE SCHWK.	964581908	5	4	129	919644008	HYDRAULISCHE ABSTUETZUN
STARTER ANBAU 7.8KW 24V	10115539	450	1	178	13455297	DIESELMOTOR
STARTER VORM. 7.8KW 24V	11386644	1	1	256	10115539	STARTER ANBAU
STATIV	968267208	1	1	639	968993508	KAMERAHALTER VORM.
STATIV	968290608	1	1	636	968994408	KAMERAHALTER VORM.
STATIV SCHWK.	968267308	2	1	639	968993508	KAMERAHALTER VORM.
STATIV SCHWK.	968290708	1	1	637	968290608	STATIV
STATIVFUSS SCHWK.	968267408	3	1	639	968993508	KAMERAHALTER VORM.
STATIVFUSS SCHWK.	968290908	2	1	636	968994408	KAMERAHALTER VORM.
STAUBKAPPE	11494567	513	3	532	96045385	KABELSTRANG
STAUBKAPPE	11494567	531	1	535	96037136	KABELSTRANG
STAUBKAPPE	518620608	70	1	697	10876933	TELESKOPIERZYLINDER
STAUBKAPPE POLYETHYLEN	704254808	12	4	42	966167808	DECKEL KPL.
STAUBKAPPE POLYETHYLEN	704254808	6	5	86	967972208	DECKEL VORM.
STAUBKAPPE POLYETHYLEN	704254808	6	2	87	967972308	DECKEL VORM.
STAUBKAPPE POLYETHYLEN	704254808	6	2	88	967972408	DECKEL VORM.
STAUBKAPPE POLYETHYLEN	704254808	6	2	89	968270108	DECKEL VORM.
STAUBKAPPE POLYETHYLEN	704254808	6	2	90	968274208	DECKEL VORM.

Bezeichnung	Artikel	Pos.	Menge	Seite	Baugruppe	Bezeichnung
STAUBKAPPE POLYETHYLEN	704254808	6	5	110	968055808	DECKEL VORM.
STAUBSTECKER 3/8" SPF	10031987	154	1	728	967785008	ZUSATZHYDRAULIK KLAPPSPI
STAUKASTEN	96063087	7	1	155	91001571	BOLZENZIEHVORRICHTUNG
STAUKASTEN VORM.	968420608	65	1	76	91001377	RAUPENTRAEGER VORM.LI.
STAUKASTEN VORM.	968420608	65	1	109	91001378	RAUPENTRAEGER VORM.RE.
STECKANSCHLUSS WSV 6 M1	12101832	7	11	523	917261208	ZENTRALSCHMIERANLAGE O
STECKBOLZEN	96002833	4	1	734	917268408	MASTNASE
STECKDOSE	10429057	3	1	628	915432508	FUNKVORBEREITUNG OW
STECKDOSE 2-POL	10342518	525	1	462	96036955	KABELSTRANG
STECKDOSE 2-POL	10342518	518	3	535	96037136	KABELSTRANG
STECKDOSE 2-POL	10342518	512	3	536	96037137	KABELSTRANG
STECKDOSE 3-POL	6205239	520	1	536	96037137	KABELSTRANG
STECKDOSE 8-POL	11008529	1	1	475	966979108	STECKDOSE
STECKDOSE ETHERNET	966979108	52	1	467	96053500	ELEKTRIK ANBAUTEILE KABIN
STECKDOSENGEHAEUSE 2-	6001790	524	1	462	96036955	KABELSTRANG
STECKDOSENGEHAEUSE 2-	6001790	505	4	535	96037136	KABELSTRANG
STECKDOSENKOERPER 3-PO	605212708	508	1	49	96045228	KABELSTRANG
STECKDOSENKOERPER 3-PO	605212708	519	1	535	96037136	KABELSTRANG
STECKDOSENKOERPER 4-PO	605251608	502	1	49	96045228	KABELSTRANG
STECKDOSENKOERPER 4-PO	605251608	506	1	532	96045385	KABELSTRANG
STECKDOSENKOMBINATION	605215708	1	1	625	918462708	FREMDEINSPEISUNG
STECKER	920381108	503	1	49	96045228	KABELSTRANG
STECKER	927996308	508	1	532	96045385	KABELSTRANG
STECKER	927996308	517	1	535	96037136	KABELSTRANG
STECKER 10-POLIG	11690056	4	1	376	10802061	WINDENDREHGEBER
STECKER 12-POL	10491808	(2)	1	461	96036954	KABELLISTE KRANFUEHRERK
STECKER 2	10492113	(1)	1	461	96036954	KABELLISTE KRANFUEHRERK
STECKER 2-POL SW	11342255	511	1	536	96037137	KABELSTRANG
STECKER 3-POL	6003168	516	1	536	96037137	KABELSTRANG
STECKER 4-POL 13A	6003248	503	1	536	96037137	KABELSTRANG
STECKER 4-POL SW	11342257	513	1	536	96037137	KABELSTRANG
STECKER 4-POL VIOLETT	11342259	514	1	536	96037137	KABELSTRANG
STECKER 6-POL	604508608	514	3	49	96045228	KABELSTRANG
STECKER 6-POL	604508608	508	1	538	96037133	LEITUNG
STECKER 6-POL	604508608	506	2	644	96037132	LEITUNG
STECKER 8-POL	10046999	508	10	542	96045387	DRAEHTE GRUNDAUFBAU KPL
STECKER 8-POL	10047000	515	10	542	96045387	DRAEHTE GRUNDAUFBAU KPL
STECKER 8-POL	10047001	513	10	542	96045387	DRAEHTE GRUNDAUFBAU KPL
STECKER 9-POL PVC	10301148	520	1	462	96036955	KABELSTRANG
STECKER DIN 72585 4-POL PO	692406308	505	1	532	96045385	KABELSTRANG
STECKER DIN 72585 4-POL PO	692406308	508	1	536	96037137	KABELSTRANG
STECKER DIN 72585 7-POL PO	692406708	507	1	532	96045385	KABELSTRANG
STECKER FUER DIESELHEIZ	962196208	515	1	535	96037136	KABELSTRANG
STECKER KPL. 4 POL PA66	10874178	505	1	536	96037137	KABELSTRANG
STECKER M1	10476383	524	2	49	96045228	KABELSTRANG
STECKER M1	10476383	(504)	1	741	917598408	ELEKTRIK MESS-U.WARNEINR
STECKER SCHWK. FE//ZNNI8/	968014808	13	4	129	919644008	HYDRAULISCHE ABSTUETZUN
STECKERBLECH 1.5X449X175	97010811	6	1	544	969256608	GRUNDAUFBAU
STECKERBLECH 1.5X594X283	97010812	7	1	544	969256608	GRUNDAUFBAU
STECKERBUCHSE 0,5-1,0MM2	7624353	761	2	463	96036955	KABELSTRANG
STECKERBUCHSE 0,75-1,0M	11000401	2253	3	537	96037137	KABELSTRANG
STECKERBUCHSE 0,75-2,0M	10100063	670	4	463	96036955	KABELSTRANG
STECKERBUCHSE 0,75-2,0M	10100063	670	11	535	96037136	KABELSTRANG
STECKERBUCHSE 0,75-2,0M	10100063	670	6	536	96037137	KABELSTRANG
STECKERGEHAEUSE	11822050	522	1	462	96036955	KABELSTRANG
STECKERGEHAEUSE 12-POL	10412433	512	1	535	96037136	KABELSTRANG
STECKERGEHAEUSE 14-POL	602336008	511	4	462	96036955	KABELSTRANG
STECKERGEHAEUSE 14-POL	602336008	506	6	542	96045387	DRAEHTE GRUNDAUFBAU KPL
STECKERGEHAEUSE 14-POL	602336508	3	6	547	926891108	VERTEILER MASSE
STECKERGEHAEUSE 18-POL	602300208	504	2	49	96045228	KABELSTRANG

Bezeichnung	Artikel	Pos.	Menge	Seite	Baugruppe	Bezeichnung
STECKERGEHAEUSE 18-POL	602300208	501	9	462	96036955	KABELSTRANG
STECKERGEHAEUSE 18-POL	602300208	501	6	464	96036956	KABELSTRANG
STECKERGEHAEUSE 18-POL	602300208	501	10	532	96045385	KABELSTRANG
STECKERGEHAEUSE 18-POL	602300208	501	11	535	96037136	KABELSTRANG
STECKERGEHAEUSE 18-POL	602300208	501	2	536	96037137	KABELSTRANG
STECKERGEHAEUSE 18-POL	602300208	523	1	542	96045387	DRAEHTE GRUNDAUFBAU KPL
STECKERGEHAEUSE 2 13A TH	10342517	509	2	462	96036955	KABELSTRANG
STECKERGEHAEUSE 2 13A TH	10342517	509	3	535	96037136	KABELSTRANG
STECKERGEHAEUSE 2 13A TH	10342517	502	2	536	96037137	KABELSTRANG
STECKERGEHAEUSE 2-POL	6004195	520	2	535	96037136	KABELSTRANG
STECKERGEHAEUSE 2-POL 13	10429638	530	1	535	96037136	KABELSTRANG
STECKERGEHAEUSE 2-POLE 9	602331808	509	2	464	96036956	KABELSTRANG
STECKERGEHAEUSE 4-POL	602335908	514	1	48	96045227	KABELSTRANG
STECKERGEHAEUSE 4-POL	602335908	515	4	462	96036955	KABELSTRANG
STECKERGEHAEUSE 4-POL	602335908	511	1	464	96036956	KABELSTRANG
STECKERGEHAEUSE 4-POL	602335908	516	4	542	96045387	DRAEHTE GRUNDAUFBAU KPL
STECKERGEHAEUSE 62-POL	10678453	503	1	535	96037136	KABELSTRANG
STECKERGEHAEUSE 62-POL P	10678452	514	1	535	96037136	KABELSTRANG
STECKERGEHAEUSE 8-POL	10021571	507	1	48	96045227	KABELSTRANG
STECKERGEHAEUSE D-SUB M	10355170	505	2	462	96036955	KABELSTRANG
STECKERGEHAEUSE D-SUB M	10355182	503	4	462	96036955	KABELSTRANG
STECKERGEHAEUSE HP PBT	11000394	515	1	536	96037137	KABELSTRANG
STECKERGEHAEUSE MCON M	10813633	507	2	536	96037137	KABELSTRANG
STECKERKOERPER 3-POL	605012408	517	1	49	96045228	KABELSTRANG
STECKERKOERPER 4-POL	605613908	510	1	535	96037136	KABELSTRANG
STECKERSTIFT 0,75-2,0MM2	10100062	669	2	463	96036955	KABELSTRANG
STECKERSTIFT 0,75-2,0MM2	10100062	669	4	535	96037136	KABELSTRANG
STECKHUELSE 2,8X0,3-1,5 V	602203108	67	2	464	96036956	KABELSTRANG
STECKHUELSE 4,8X1,5	602225914	703	2	464	96036956	KABELSTRANG
STECKHUELSE 5X1,5-2,5	602339108	642	4	48	96045227	KABELSTRANG
STECKHUELSE 6,3X0,5-1,0 V	11080881	758	5	48	96045227	KABELSTRANG
STECKHUELSE 6,3X0,5-1,0 V	11080881	758	18	463	96036955	KABELSTRANG
STECKHUELSE 6,3X0,5-1,0 V	11080881	758	4	464	96036956	KABELSTRANG
STECKHUELSE 6,3X0,5-1,0 V	11080881	758	4	535	96037136	KABELSTRANG
STECKHUELSE 6,3X0,5-1,5 SN	602207608	140	1	464	96036956	KABELSTRANG
STECKHUELSE 6,3X1-2,5 MES	602203408	72	6	48	96045227	KABELSTRANG
STECKHUELSE 6,3X1-2,5 MES	602203408	72	3	462	96036955	KABELSTRANG
STECKHUELSE 6,3X1-2,5 MES	602203408	72	4	464	96036956	KABELSTRANG
STECKHUELSE 9,5X1-2,5 CU	602208408	143	2	462	96036955	KABELSTRANG
STECKHUELSENGEHAEUSE	604501708	504	2	48	96045227	KABELSTRANG
STECKHUELSENGEHAEUSE 2-	602209708	516	1	48	96045227	KABELSTRANG
STECKHUELSENGEHAEUSE 2-	602209708	508	4	462	96036955	KABELSTRANG
STECKHUELSENGEHAEUSE 2-	602209708	506	2	464	96036956	KABELSTRANG
STECKHUELSENGEHAEUSE 2-	602209708	508	1	535	96037136	KABELSTRANG
STECKHUELSENGEHAEUSE 2-	602209708	501	5	542	96045387	DRAEHTE GRUNDAUFBAU KPL
STECKHUELSENGEHAEUSE	602208608	516	1	535	96037136	KABELSTRANG
STECKHUELSENGEHAEUSE	602319808	521	1	462	96036955	KABELSTRANG
STECKNUSS 1/2"-14WN	12103321	(2)	1	76	91001377	RAUPENTRAEGER VORM.LI.
STECKNUSS SW1 11/16"	890020214	11	1	151	919328608	WERKZEUG M.ZUBEHOER
STECKSCHLUESSELEINSATZ	790028508	66	1	152	928569808	GRUNDWERKZEUG
STECKSCHLUESSELEINSATZ	8008673	10	1	151	919328608	WERKZEUG M.ZUBEHOER
STECKVERBINDER GE M8X1K	12101847	8	1	523	917261208	ZENTRALSCHMIERANLAGE O
STECKVERBINDER GE M8X1K	12101847	4	1	613	921444108	ZENTRALSCHMIERANLAGE
STECKVERBINDER GERADE	11183029	2	12	138	11347500	VERTEILERKOMBINATION
STECKVERSCHRAUBUNG 8	12001446	90	1	500	918731808	HARNSTOFFANLAGE
STELLMOTOR 0,0024KW24V	10287301	13	2	428	11083498	HEIZKLIMAGERAET
STELLSTANGE	7023664	2	1	315	10472208	VERSTELLUNG
STERNGRIFFSCHRAUBE	10443625	24	2	433	918810308	STEUERSTAND
STEUERBLOCK 315BAR SPF	12100860	26	1	560	96045351	HYDRAULIK OBERWAGEN
STEUERBLOCK 320BAR SPF	11211756	21	1	560	96045351	HYDRAULIK OBERWAGEN

Bezeichnung	Artikel	Pos.	Menge	Seite	Baugruppe	Bezeichnung
STEUERBLOCK 330BAR SPF	10332882	24	1	560	96045351	HYDRAULIK OBERWAGEN
STEUERBLOCK 365BAR SPF	10413106	22	1	560	96045351	HYDRAULIK OBERWAGEN
STEUERBLOCK 380BAR SPF	11341035	27	1	560	96045351	HYDRAULIK OBERWAGEN
STEUERBLOCK 420BAR SPF	11643183	21	1	56	96035801	HYDRAULIK MITTELTEIL
STEUERBLOCK 420BAR SPF	11643184	22	1	56	96035801	HYDRAULIK MITTELTEIL
STEUERBLOCK SPF	10038509	21	1	622	969426308	ZUSATZHYDRAULIK KLAPPSPI
STEUERBUCHSE	5009648	41	1	81	11161917	STEUERTEIL
STEUERGERAET ANBAU	10144227	571	1	179	13455297	DIESELMOTOR
STEUERKOLBEN	10000796	1	1	315	10472208	VERSTELLUNG
STEUERLEITUNG 12 X 0,75 SP	600460808	5	6.6	532	96045385	KABELSTRANG
STEUERLEITUNG 4 X 0,5 SPF	600463908	9	3.13	49	96045228	KABELSTRANG
STEUERLEITUNG 4 X 0,5 SPF	600463908	10	2.63	49	96045228	KABELSTRANG
STEUERLEITUNG 4 X 0,5 SPF	600463908	16	6.06	49	96045228	KABELSTRANG
STEUERLEITUNG 4 X 0,5 SPF	600463908	17	6.06	49	96045228	KABELSTRANG
STEUERLEITUNG 5 X 0,5 SPF	600462908	(5)	1.46	741	917598408	ELEKTRIK MESS-U.WARNEINR
STEUERPLATTE	570110408	2	1	361	570109508	TRIEBWERK
STEUERSTAND	918810308	135	1	13		LIEBHERR LTR 1220
STEUERTEIL	11161917	4	1	79	11182596	VERSTELLMOTOR
STEUERTEIL	11161917	4	1	373	11182597	VERSTELLMOTOR
STEUERTEIL	11161917	4	1	605	11211058	VERSTELLMOTOR
STEUERUNGSTEILE	9079870	110	4	175	13455297	DIESELMOTOR
STEUERVENTIL	11692439	50	1	316	10871043	VERSTELLPUMPE
STICKSTOFFSPANNER KPL	10877685	3	1	83	11320954	LEITRADEINHEIT
STIFTKONTAKT 0,2-0,5MM2	10335819	689	4	463	96036955	KABELSTRANG
STIFTKONTAKT 0,2-0,5MM2	10335819	689	4	464	96036956	KABELSTRANG
STIFTKONTAKT 0,5-1,0MM2 C	7369458	740	6	537	96037137	KABELSTRANG
STIFTKONTAKT 0,5-1MM2MM2	10300944	715	2	463	96036955	KABELSTRANG
STIFTKONTAKT 0,5MM2 SILBE	10493972	719	16	49	96045228	KABELSTRANG
STIFTKONTAKT 0,5MM2 SILBE	10493972	719	6	142	96045205	KABELSTRANG
STIFTKONTAKT 0,5MM2 SILBE	10493972	(719)	2	741	917598408	ELEKTRIK MESS-U.WARNEINR
STIFTKONTAKT 0,75-1,5MM2	6202444	95	3	49	96045228	KABELSTRANG
STIFTKONTAKT 0,75-1,5MM2	6202444	95	1	532	96045385	KABELSTRANG
STIFTKONTAKT 0,75-1,5MM2	6202444	95	3	534	96037136	KABELSTRANG
STIFTKONTAKT 0,75-1MM2	604519208	628	2	538	96037133	LEITUNG
STIFTKONTAKT 0,75-1MM2	604519208	628	4	644	96037132	LEITUNG
STIFTKONTAKT 0,75-1MM2	604519208	(628)	2	741	917598408	ELEKTRIK MESS-U.WARNEINR
STIFTKONTAKT 1,5MM2	604519108	(637)	1	741	917598408	ELEKTRIK MESS-U.WARNEINR
STIFTSCHRAUBE DIN 835 M1	12210035	3	3	233	10147364	LUFTANSAUGUNG ANBAU
STIFTSCHRAUBE DIN 835 M1	10179459	3	3	256	10115539	STARTER ANBAU
STIFTSCHRAUBE DIN 939 M1	4981172	5	3	252	10140729	ATL-ANBAU
STIFTTRAEGER 6-POL 16A	604526608	509	4	49	96045228	KABELSTRANG
STIFTTRAEGER 6-POL 16A	604526608	501	1	142	96045205	KABELSTRANG
STIFTTRAEGER 6-POL 16A	604526608	503	1	538	96037133	LEITUNG
STIFTTRAEGER 6-POL 16A	604526608	501	2	644	96037132	LEITUNG
STIFTTRAEGER 6-POL 16A	604526608	(501)	1	741	917598408	ELEKTRIK MESS-U.WARNEINR
STIRNRAD D147/75X32	571819108	110	2	296	97029921	VERTEILERGETRIEBE
STOERANZEIGE	10429952	33	2	136	11347526	ELEKTROPUMPE
STOERANZEIGE	10429952	9	1	525	10327065	ELEKTROPUMPE
STOESSELSTANGE	9079131	3	2	211	9079870	STEUERUNGSTEILE
STOPFEN	511040408	(2)	3	560	96045351	HYDRAULIK OBERWAGEN
STOPFEN D10,7 LD-PE	10678375	7	2	392	916162808	RELING
STOPFEN D10,7 LD-PE	10678375	47	1	399	917305408	INNENVERKLEIDUNG EINBAU
STOPFEN VSTI G1/2A CR6-FRE	477704208	12	1	339	968999708	KRAFTSTOFFBEHAELTER VO
STOPFEN VSTI G1/2A CR6-FRE	477704208	26	2	490	10877810	BALLASTIERZYLINDER
STOPFEN VSTI G1/2A CR6-FRE	477704208	686	1	563	96045351	HYDRAULIK OBERWAGEN
STOPFEN VSTI G1/2A CR6-FRE	477704208	23	1	568	11211756	STEUERBLOCK
STOPFEN VSTI G1/2A CR6-FRE	477704208	10	2	574	10332882	STEUERBLOCK
STOPFEN VSTI G1/2A CR6-FRE	477704208	24	2	582	11341035	STEUERBLOCK
STOPFEN VSTI G1/2A CR6-FRE	477704208	110	2	624	10038509	STEUERBLOCK
STOPFEN VSTI G1/2A CR6-FRE	477704208	63	1	697	10876933	TELESKOPIERZYLINDER

Bezeichnung	Artikel	Pos.	Menge	Seite	Baugruppe	Bezeichnung
STOPFEN VSTI G1A CR6-FREI	477704608	13	2	339	968999708	KRAFTSTOFFBEHAELTER VO
STOPFEN VSTI G1A CR6-FREI	477704608	34	1	572	10413106	STEUERBLOCK
STOPFEN VSTI G3/4A CR6-FRE	477704708	741	2	564	96045351	HYDRAULIK OBERWAGEN
STOPFEN VSTI G3/4A CR6-FRE	477704708	100	2	624	10038509	STEUERBLOCK
STOPFEN VSTI M12X1,5 CR6-F	477704308	19	2	311	10008308	ANSCHLUSSPLATTE
STOPFEN VSTI M12X1,5 CR6-F	477704308	600	1	496	969763408	VERROHRUNG DRUCKLUFTA
STOPFEN VSTI1/4"ED A3P	477704077	25	2	490	10877810	BALLASTIERZYLINDER
STOPFEN VSTI1/8"ED ST CR6	510741508	32	1	572	10413106	STEUERBLOCK
STOPFEN VSTI1/8"ED ST CR6	510741508	11	2	574	10332882	STEUERBLOCK
STOPFEN VSTI1/8"ED ST CR6	510741508	80	8	577	12100860	STEUERBLOCK
STOPFEN VSTI1/8"ED ST CR6	510741508	21	5	582	11341035	STEUERBLOCK
STOPFEN VSTI11/4"ED CR6-F	477705408	31	1	572	10413106	STEUERBLOCK
STOPFEN VSTI3/4"ED A3P	477704777	70	1	577	12100860	STEUERBLOCK
STOPFEN VSTI3/8"ED CR6-FRE	477704108	617	2	563	96045351	HYDRAULIK OBERWAGEN
STOPFEN VSTI3/8"ED CR6-FRE	477704108	13	4	574	10332882	STEUERBLOCK
STOPFEN VSTI3/8"ED CR6-FRE	477704108	23	4	582	11341035	STEUERBLOCK
STOPFEN VSTI3/8"ED CR6-FRE	477704108	620	1	617	967784808	HYDRAULIK HILFSHUBWERK
STOPFEN VSTI3/8"ED CR6-FRE	477704108	120	3	624	10038509	STEUERBLOCK
STOPFEN VSTIM14X1,5ED CR6	477704908	724	4	563	96045351	HYDRAULIK OBERWAGEN
STOPFEN VSTIM16X1,5ED CR6	477704408	603	4	132	968077208	HYDRAULIK ABSTUETZUNG
STOPFEN VSTIM16X1,5ED CR6	477704408	402	2	328	96034515	AUSGLEICHSBEHAELTER VO
STOPFEN VSTIM16X1,5ED CR6	477704408	401	1	329	96034522	AUSGLEICHSBEHAELTER
STOPFEN VSTIM18X1,5ED CR6	477705108	6	1	339	968999708	KRAFTSTOFFBEHAELTER VO
STOPFEN VSTIM22X1,5ED CR6	477704508	639	2	496	969763408	VERROHRUNG DRUCKLUFTA
STOPFEN VSTIM26X1,5ED CR6	477705808	619	1	98	96035796	HYDR.FAHRANTRIEB
STOPFEN VSTIM26X1,5ED CR6	477705808	619	1	115	96035792	HYDR.FAHRANTRIEB
STOPFEN VSTIM26X1,5ED CR6	477705808	11	1	348	969050308	OELBEHAELTER VORM.
STOPFEN VSTIM26X1,5ED CR6	477705808	28	1	374	90200104	OELMESSEINRICHTUNG
STOPFEN VSTIM33X2ED CR6	477705208	730	1	564	96045351	HYDRAULIK OBERWAGEN
STOPFEN VSTIM33X2ED CR6	477705208	644	1	617	967784808	HYDRAULIK HILFSHUBWERK
STOPFEN VSTIM42X2ED CR6	477704808	151	1	287	919007708	ANTRIEBSAGGREGAT VORM.
STROMABNEHMER	10491892	15	8	710	10354493	LEITUNGSTROMMEL
STROMQUELLE LSB SPF	10027448	20	2	544	969256608	GRUNDAUFBAU
STROMTEILVENTIL 120L/MIN	511485408	164	1	560	96045351	HYDRAULIK OBERWAGEN
STUETZFLANSCH	927745901	50	1	370	939292201	PLANETENGETRIEBE
STUETZKONSOLE 3X206X185	97039156	16	2	119	917691008	ABSTURZSICHERUNG
STUETZKONSOLE 3X206X185	97039157	17	2	119	917691008	ABSTURZSICHERUNG
STUETZRING 160,1X167,9X2	7367565	5	1	85	10877686	SPANNER HYDR KPL
STUETZRING 17,5X20,9X1 PTF	571082808	(4)	1	561	96045351	HYDRAULIK OBERWAGEN
STUETZRING 20X23,5X1 PTFE	571082208	(4)	1	728	967785008	ZUSATZHYDRAULIK KLAPPSPI
STUETZRING 20X23,5X1 PTFE	571082208	(3)	1	728	967785008	ZUSATZHYDRAULIK KLAPPSPI
STUETZRING 32X37,2X1 PTFE	571077008	(3)	1	616	967784808	HYDRAULIK HILFSHUBWERK
STUETZSCHEIBE DIN 988 S 2	422001001	47	3	370	939292201	PLANETENGETRIEBE
STUTZEN 11SMnPb30+C	10130906	21	1	253	12512627	ABGASSTUTZEN ANBAU
STUTZEN ISO 8434-1 GE 22L M	10295188	403	1	328	96034515	AUSGLEICHSBEHAELTER VO
STUTZEN ISO 8434-1 GE 22L M	10295188	737	6	564	96045351	HYDRAULIK OBERWAGEN
STUTZEN ISO 8434-1 GE 22L M	10295188	632	2	617	967784808	HYDRAULIK HILFSHUBWERK
STUTZEN KPL.	96035597	3	2	328	96034515	AUSGLEICHSBEHAELTER VO
STUTZEN KPL.	96039022	2	1	329	96034522	AUSGLEICHSBEHAELTER
T-REDUZIERSTUECK 20X10 L	11626529	21	2	500	918731808	HARNSTOFFANLAGE
T-STUECK 20X20 L=90	10872612	4	1	430	969085208	HEIZUNG VORM.
T-STUECK 20X20 L=90	10872612	25	1	482	96020359	ZUSATZHEIZUNG VORM.
T-STUECK 30 G-ALMG TROW	10285701	17	1	381	919010208	KRANFUEHRERKABINE VORM.
T-STUTZEN ET 12L CR6-FREI	247105602	620	1	57	96035801	HYDRAULIK MITTELTEIL
T-STUTZEN ET 12L CR6-FREI	247105602	621	1	98	96035796	HYDR.FAHRANTRIEB
T-STUTZEN ET 12L CR6-FREI	247105602	621	1	115	96035792	HYDR.FAHRANTRIEB
T-STUTZEN ET 12L CR6-FREI	247105602	609	4	562	96045351	HYDRAULIK OBERWAGEN
T-STUTZEN ET 12L CR6-FREI	247105602	638	1	617	967784808	HYDRAULIK HILFSHUBWERK
T-STUTZEN ET 12L CR6-FREI	247105602	605	1	622	969426308	ZUSATZHYDRAULIK KLAPPSPI
T-STUTZEN ET 18L CR6-FREI	247108402	767	1	564	96045351	HYDRAULIK OBERWAGEN

Bezeichnung	Artikel	Pos.	Menge	Seite	Baugruppe	Bezeichnung
TAKTVENTIL 3.4BAR 8L/MIN 6	10149191	1	1	254	11420633	TAKTVENTIL
TAKTVENTIL 3.4BAR 8L/MIN 6	11420633	436	1	178	13455297	DIESELMOTOR
TANKSENSOR L=1450 24V SP	10290070	2	1	339	968999708	KRAFTSTOFFBEHAELTER VO
TANKVERSCHLUSS 40	10870226	4	1	501	968570808	HARNSTOFFTANK
TASCHE KUNSTSTOFF	740300008	22	1	399	917305408	INNENVERKLEIDUNG EINBAU
TASCHENSCHLOSS 23-26 SPF	10040024	122	2	13		LIEBHERR LTR 1220
TASTATUREINHEIT LSB-TE PR	96052297	3	2	467	96053500	ELEKTRIK ANBAUTEILE KABIN
TASTATUREINHEIT LSB-TE-B	12101942	(80)	1	467	96053500	ELEKTRIK ANBAUTEILE KABIN
TASTATUREINHEIT SPF	10816196	2	1	470	96030724	ELEKTRIK ARMATURENKONS
TASTATUREINHEIT SPF	10874785	31	1	467	96053500	ELEKTRIK ANBAUTEILE KABIN
TASTE	606144008	15	2	471	96022872	ARMATURENBRETT DACH
TASTERKAPPE FLACH GRUE	606145108	11	1	551	969061708	TRAEGERBLECH SICHERUNG
TASTERKAPPE FLACH KLAR	606144408	17	1	471	96022872	ARMATURENBRETT DACH
TASTKONTAKTGEBER 1OE+1	11100197	(3)	1	470	96030724	ELEKTRIK ARMATURENKONS
TASTKONTAKTGEBER 1OE+1	606143208	16	1	471	96022872	ARMATURENBRETT DACH
TASTKONTAKTGEBER 1OE+1	606143408	5	1	551	969061708	TRAEGERBLECH SICHERUNG
TASTKONTAKTGEBER 2OE+2	606144608	6	1	551	969061708	TRAEGERBLECH SICHERUNG
TAUCHHEIZER 120V 1KW	10025057	1	1	629	918377508	KUEHLWASSERVORWAERM
TEFLONSCHLAUCH DN16 750	510500508	300	1	496	969763408	VERROHRUNG DRUCKLUFTA
TELESKOP 1 SCHWK. RAL 701	917292708	1	1	673	917292008	TELESKOP 1 VORM.
TELESKOP 1 VORM.	917292008	2	1	663	918804808	TELESKOPAUSLEGER KPL.
TELESKOP 2 SCHWK. RAL 701	917292808	1	1	677	917292108	TELESKOP 2 VORM.
TELESKOP 2 VORM.	917292108	3	1	663	918804808	TELESKOPAUSLEGER KPL.
TELESKOP 3 SCHWK. RAL 701	917292908	1	1	681	917292208	TELESKOP 3 VORM.
TELESKOP 3 VORM.	917292208	4	1	663	918804808	TELESKOPAUSLEGER KPL.
TELESKOP 4 SCHWK. RAL 701	917293008	1	1	685	917292308	TELESKOP 4 VORM.
TELESKOP 4 VORM.	917292308	5	1	663	918804808	TELESKOPAUSLEGER KPL.
TELESKOP 5 SCHWK. RAL 701	917293108	1	1	690	917292408	TELESKOP 5 VORM.
TELESKOP 5 VORM.	917292408	6	1	663	918804808	TELESKOPAUSLEGER KPL.
TELESKOPAUSLEGER KPL. SP	918804808	201	1	14		LIEBHERR LTR 1220
TELESKOPIERZYLINDER 225/	10876933	1	1	695	918807308	AUSSCHUBMECHANIK
TELLERBEFESTIGUNG	10100621	20	4	455	969015908	DREHBUEHNENVERKLEIDUN
TELLERFEDER	570110908	7	4	361	570109508	TRIEBWERK
TELLERFEDER 80X41X4	272012502	4	130	751	968728808	KONSOLE VORM.
TELLERFEDER DIN 2093 40X2	720801908	25	4	433	918810308	STEUERSTAND
TELLERFEDERSAEULE	570033608	11	1	321	10872488	TRIEBWERK
TEMPERATURFUEHLER	10290126	23	1	484	10876576	WASSERHEIZGERAET
TEMPERATURFUEHLER	10290126	(5)	1	484	10876576	WASSERHEIZGERAET
TEMPERATURFUEHLER	10299987	(1)	1	626	917269308	LADEGERAET
TEMPERATURFUEHLER	966181208	8	1	527	919410708	EL.ANLAGE DREHBUEHNE
TEMPERATURFUEHLER -30°C	10424276	7	1	467	96053500	ELEKTRIK ANBAUTEILE KABIN
TEMPERATURFUEHLER -40°C	10493625	(1)	1	273	12583633	MOTORREGELUNGSENSORIK
TEMPERATURFUEHLER -50/+	10800266	(150)	1	527	919410708	EL.ANLAGE DREHBUEHNE
TEMPERATURFUEHLER KPL. -	10152036	40	1	273	12583633	MOTORREGELUNGSENSORIK
TEMPERATURFUEHLER KPL. -	13410342	30	2	273	12583633	MOTORREGELUNGSENSORIK
TEMPERATURGEBER -30/+13	691183108	65	1	560	96045351	HYDRAULIK OBERWAGEN
TEMPERATURSENSOR	11826650	21	1	484	10876576	WASSERHEIZGERAET
TEMPERATURSENSOR	11826650	(4)	1	484	10876576	WASSERHEIZGERAET
TEMPERATURSENSOR -40°C B	12889334	156	1	514	96041566	ELEKTRIK ANBAUTEILE
TEMPERATURSENSOR -40°C	11349182	151	2	514	96041566	ELEKTRIK ANBAUTEILE
THERMOSCHALTER BERUEHR	11080088	62	1	468	96053500	ELEKTRIK ANBAUTEILE KABIN
THERMOSTAT	10154798	2	1	246	10148215	THERMOSTATGEHAEUSE AN
THERMOSTAT	571867708	44	1	428	11083498	HEIZKLIMAGERAET
THERMOSTATGEHAEUSE AN	10148215	380	1	177	13455297	DIESELMOTOR
THERMOUEBERDRUCKVENTIL	10326278	38	1	697	10876933	TELESKOPIERZYLINDER
THERMOVENTIL pv=2BAR	11490271	4	1	593	11622561	OEL-LUFTKUEHLER
TRAEGER MESS-U.WARNEINR	917379608	285	1	14		LIEBHERR LTR 1220
TRAEGER SCHWK.	968050708	1	2	124	968046208	ANBAUTEILE
TRAEGER SCHWK. T ZN O	968710308	2	2	124	968046208	ANBAUTEILE
TRAEGERBLECH 1.5X442X181	979295008	(1)	1	551	969061708	TRAEGERBLECH SICHERUNG

Bezeichnung	Artikel	Pos.	Menge	Seite	Baugruppe	Bezeichnung
TRAEGERBLECH SICHERUN	969061708	12	1	540	91000922	EINBAUTEILE SCHALTSCHRAN
TRAEGERBLECH VORM.	965807808	1	1	551	969061708	TRAEGERBLECH SICHERUNG
TRAGARM SCHWK. T ZN O	96035067	1	1	511	96051842	ABGASANLAGE VORM.
TRAGRAHMEN RAL 7016 LAC	967986408	1	1	382	967986308	LAGERUNG EINBAU
TRAGROLLE 80/5/20X700 GALV	749011408	47	1	685	917292308	TELESKOP 4 VORM.
TRAGROLLE 80/5/20X795 GALV	749010808	47	1	681	917292208	TELESKOP 3 VORM.
TRAGROLLE 80/5/20X850 GALV	749009408	47	1	677	917292108	TELESKOP 2 VORM.
TRAGROLLE 80/5/20X950 GALV	749010208	21	2	668	917291908	ANLENKSTUECK VORM.
TRAGROLLE 80/5/20X950 GALV	749010208	47	1	673	917292008	TELESKOP 1 VORM.
TRAGROLLE 90/7/40X1015 GA	749014908	3	1	365	917259708	HAUPTHUBWERK
TRAGROLLE 90/7/40X1015 GA	749014908	20	1	604	967969608	HILFSHUBWERK WINDE 2 VO
TRAGROLLE D8KX165	10877342	8	2	75	91001377	RAUPENTRAEGER VORM.LI.
TRAGROLLE D8KX165	10877342	8	2	108	91001378	RAUPENTRAEGER VORM.RE.
TRAGSCHIENE X0	954117308	24	1	334	96023117	BATTERIEKASTEN VORM.
TRAGSCHIENE X0	954128608	69	1	668	917291908	ANLENKSTUECK VORM.
TRAGSCHIENENMUTTER DIN 3	602018008	313	61	56	96035801	HYDRAULIK MITTELTEIL
TRAGSCHIENENMUTTER DIN 3	602018008	28	4	334	96023117	BATTERIEKASTEN VORM.
TRAGSCHIENENMUTTER DIN 3	602018008	308	6	496	969763408	VERROHRUNG DRUCKLUFTA
TRAGSCHIENENMUTTER DIN 3	602018008	330	2	562	96045351	HYDRAULIK OBERWAGEN
TRAGSCHIENENMUTTER DIN 3	602018008	70	4	669	917291908	ANLENKSTUECK VORM.
TRANSPONDER SPF	10354922	11	6	30	968019508	ENDSCHALTER ANBAU
TRANSPONDER SPF	11060128	57	2	468	96053500	ELEKTRIK ANBAUTEILE KABIN
TRANSPORTHALTERUNG DKS	917267508	350	1	14		LIEBHERR LTR 1220
TRANSPORTKONSOLE S355J0	9078849	1	1	260	9079823	TRANSPORTVORRICHTUNG
TRANSPORTVORRICHTUNG	10142864	481	1	178	13455297	DIESELMOTOR
TRANSPORTVORRICHTUNG	9079823	480	1	178	13455297	DIESELMOTOR
TRAVERSE	11212353	10	1	753	919007108	LASTHAKEN
TRAVERSE 20X61X37 S355J2+	979620608	16	4	511	96051842	ABGASANLAGE VORM.
TRAVERSE 30X161X190 S690Q	955552508	20	1	761	917267508	TRANSPORTHALTERUNG DKS
TRAVERSE SCHWK. LMZ-70T	968497408	1	1	752	917531708	BALLASTTRAVERSE
TRENNRING	10114850	8	15	52	11346779	SCHLEIFRINGUEBERTRAGER
TREPPE 5-631X0,754M ALMG3	11213246	4	2	119	917691008	ABSTURZSICHERUNG
TREPPE 5-631X0,754M ALMG3	11213247	5	2	119	917691008	ABSTURZSICHERUNG
TRIEBWELLE	10663120	14	1	310	10663105	TRIEBWERK
TRIEBWELLE	570109608	2	1	360	570109008	TRIEBWERK
TRIEBWELLE	571907508	14	1	321	10872488	TRIEBWERK
TRIEBWERK	10663105	1	1	309	11210798	VERSTELLPUMPE
TRIEBWERK	10871713	1	1	305	11210795	VERSTELLPUMPE
TRIEBWERK	10872488	1	1	319	10871282	VERSTELLPUMPE
TRIEBWERK	11066818	2	1	79	11182596	VERSTELLMOTOR
TRIEBWERK	11643393	2	1	373	11182597	VERSTELLMOTOR
TRIEBWERK	11643393	2	1	605	11211058	VERSTELLMOTOR
TRIEBWERK	11690584	1	1	297	11182708	VERSTELLPUMPE
TRIEBWERK	11690584	1	1	300	10871017	VERSTELLPUMPE
TRIEBWERK	570109008	1	1	359	510229408	HYDROMOTOR
TRIEBWERK	570109508	1	1	360	570109008	TRIEBWERK
TRITT 1818X290X43 ALMG3 SP	966270208	(1)	1	387	916177508	TRITT KPL.
TRITT KPL.	916177508	3	1	381	919010208	KRANFUEHRERKABINE VORM.
TRITT SEITLICH	966269808	2	1	387	916177508	TRITT KPL.
TRITT VORN SPF	966270808	1	1	387	916177508	TRITT KPL.
TROCKNER	571489008	105	1	291	96034631	KUEHLER VORM.
TROMMELACHSE	12100076	2	1	710	10354493	LEITUNGSTROMMEL
TUELLE	971565208	9	1	395	917304508	KRANFUEHRERKABINE VORM.
TUELLE 6,5/6,5/2 GUMMI	591055508	3	2	416	966408908	WASSERBEHAELTER KPL.
TUERFESTSTELLER	704277508	113	2	445	96036790	DREHBUEHNENVERKLEIDUN
TUERKONTAKTSCHALTER	606020708	12	1	467	96053500	ELEKTRIK ANBAUTEILE KABIN
TUERSCHEIBE 4X1161X 950	97000274	2	1	421	917304708	SCHIEBETUER EINBAU
TUERVERKLEIDUNG 880X390	97000275	3	1	421	917304708	SCHIEBETUER EINBAU
TURBOLADER HE300	10139626	1	1	252	10140729	ATL-ANBAU
U-PROFIL 1X1000X74 DC01 FE	953714108	65	2	668	917291908	ANLENKSTUECK VORM.

Bezeichnung	Artikel	Pos.	Menge	Seite	Baugruppe	Bezeichnung
U-PROFIL 1X1000X98 DC01 FE	955927208	67	13	668	917291908	ANLENKSTUECK VORM.
U-PROFIL 1X500X74 DC01 FE//	953713908	10	1	690	917292408	TELESKOP 5 VORM.
U-PROFIL 1X500X89 DC01 FE//	97042011	22	4	135	917257108	ZENTRALSCHMIERUNG RAUP
U-PROFIL 1X500X98 DC01 FE//	956572408	63	2	668	917291908	ANLENKSTUECK VORM.
UEBERDRUCKVENTIL	571328408	12	2	136	11347526	ELEKTROPUMPE
UEBERDRUCKVENTIL	571328408	14	1	525	10327065	ELEKTROPUMPE
UEBERDRUCKVENTIL pmax=9	10152592	12	1	213	10129474	OELKUEHLER VORM.
UEBERHITZUNGSSCHUTZ	10290127	24	1	484	10876576	WASSERHEIZGERAET
UEBERHITZUNGSSCHUTZ	10290127	(6)	1	484	10876576	WASSERHEIZGERAET
UEBERWURFMUTTER AL6 A3	477401308	14	22	135	917257108	ZENTRALSCHMIERUNG RAUP
UEBERWURFMUTTER AL8 CR6	477401408	4	1	330	96039022	STUTZEN KPL.
UEBERWURFMUTTER AL8 CR6	477401408	37	1	480	918759808	ZUSATZHEIZUNG OW
UEBERWURFMUTTER AL8 CR6	477401408	37	1	500	918731808	HARNSTOFFANLAGE
UEBERWURFMUTTER DIN 38	477401508	33	1	500	918731808	HARNSTOFFANLAGE
UEBERWURFMUTTER DIN 38	477401608	660	2	563	96045351	HYDRAULIK OBERWAGEN
UEBERWURFMUTTER DIN 38	477402608	(3)	1	328	96034515	AUSGLEICHSBEHAELTER VO
UEBERWURFMUTTER DIN 38	477402608	849	1	565	96045351	HYDRAULIK OBERWAGEN
UEBERWURFMUTTER DIN 38	477401708	795	2	564	96045351	HYDRAULIK OBERWAGEN
UEBERWURFMUTTER DIN 38	477400308	679	2	563	96045351	HYDRAULIK OBERWAGEN
UEBERWURFMUTTER DIN 38	477400608	700	1	563	96045351	HYDRAULIK OBERWAGEN
UMLENKROLLE	571851208	12	1	704	10802064	SEILLAENGENGEBER
UMLENKROLLE VORM.	10149360	3	2	244	12418347	KLIMAKOMPRESSOR ANBAU
UMWAELZPUMPE	11622224	20	1	430	969085208	HEIZUNG VORM.
UMWAELZPUMPE	11622224	26	1	484	10876576	WASSERHEIZGERAET
UMWAELZPUMPE	11622224	(7)	1	484	10876576	WASSERHEIZGERAET
UNIVERSAL EIN-AUSGANGS	968253608	5	5	540	91000922	EINBAUTEILE SCHALTSCHRAN
UNTERBAU	11171274	60	1	435	10877138	FAHRERSITZ
UNTERLAGE 1X200X70 DC01	949361408	18	1	761	917267508	TRANSPORTHALTERUNG DKS
UNTERLAGE 2X200X70 DC01	949362208	19	1	761	917267508	TRANSPORTHALTERUNG DKS
UNTERLAGE 4X53X28 S315MC	97048341	21	1	493	967978908	VERRIEGELUNG VORM.
UNTERLEGSCHEIBE	10293786	5	1	360	570109008	TRIEBWERK
V-RING 350 NBR,60 SHORE	710908701	12	1	370	939292201	PLANETENGETRIEBE
VENTIL	10011832	13	1	183	10147687	AGGREGATETRAEGER ANBA
VENTIL	10011832	1	1	214	9078233	VENTIL
VENTIL	10011832	31	1	253	12512627	ABGASSTUTZEN ANBAU
VENTIL	11979976	29	1	435	10877138	FAHRERSITZ
VENTIL	7622478	16	1	428	11083498	HEIZKLIMAGERAET
VENTIL M14X1,5	9078233	6	1	213	10129474	OELKUEHLER VORM.
VENTILBLOCK 420BAR ZNNI	10877433	25	1	560	96045351	HYDRAULIK OBERWAGEN
VENTILBRUECKE	10119695	2	2	206	10148438	KIPPHEBELBOCK KPL.
VENTILDECKEL 45 PA6.6	12101064	6	1	328	96034515	AUSGLEICHSBEHAELTER VO
VENTILDECKEL 45 PA6.6	12101064	3	1	329	96034522	AUSGLEICHSBEHAELTER
VENTILFUEHRUNG NOVOFER	10150204	4	4	205	10149578	ZYLINDERKOPF
VENTILKEGELSTUECK MK9	11357514	8	8	204	10149579	ZYLINDERKOPF VORM.
VENTILSCHAFTDICHTRING	10120334	(5)	4	202	10149580	ZYLINDERKOPF ANBAU
VENTILSCHAFTDICHTRING	10120334	5	4	204	10149579	ZYLINDERKOPF VORM.
VENTILSITZ	511015408	10	1	588	511419608	DRUCKBEGRENZUNGSVENTI
VENTILSITZ	570063208	10	1	585	511433908	DRUCKBEGRENZUNGSVENTI
VENTILSITZRING AUSLASS PL	10128680	7	2	205	10149578	ZYLINDERKOPF
VENTILSITZRING EINLASS PL	10149739	6	2	205	10149578	ZYLINDERKOPF
VERBANDSKASTEN DIN 13164	789000308	5	1	153	928620108	ZUBEHOER
VERBINDER AL	11002980	10	1	637	968290608	STATIV
VERBINDER AL	11002980	10	1	640	968267208	STATIV
VERBINDUNGSKABEL 4M	11692299	4	1	47	10450273	ANTENNE
VERBINDUNGSLEITUNG 7X0,2	10472995	30	1	540	91000922	EINBAUTEILE SCHALTSCHRAN
VERBINDUNGSLEITUNG ANBA	10149677	230	1	176	13455297	DIESELMOTOR
VERBINDUNGSLEITUNG R-MO	10141549	1	1	233	10147364	LUFTANSAUGUNG ANBAU
VERBINDUNGSMITTEL EN 358	12102869	3	1	167	916959808	PERSOENLICHE SCHUTZAUS
VERBINDUNGSROHR 0	11000700	101	2	280	918731408	ANTRIEBSAGGREGAT KPL.
VERBINDUNGSROHR 0	11000700	21	2	426	917676208	HEIZUNG KRANFUEHRERKAB

Bezeichnung	Artikel	Pos.	Menge	Seite	Baugruppe	Bezeichnung
VERBINDUNGSROHR 0	11000700	5	1	430	969085208	HEIZUNG VORM.
VERBINDUNGSROHR 0	11000700	11	1	480	918759808	ZUSATZHEIZUNG OW
VERBINDUNGSROHR 0	11000700	61	1	482	96020359	ZUSATZHEIZUNG VORM.
VERBINDUNGSSTUECK Al Rm	10121666	1	1	191	10121667	VERBINDUNGSSTUECK M.O-R
VERBINDUNGSSTUECK M.O-R	10121667	4	1	187	10132560	OELWANNE MIT BEFEST.
VERDAMPFER	10874825	15	1	428	11083498	HEIZKLIMAGERAET
VERDRAHTUNGSKANAL 80X4	638109101	30	0.28	544	969256608	GRUNDAUFBAU
VERKLEIDUNG A-SAEULE LI. 1	97002207	18	1	399	917305408	INNENVERKLEIDUNG EINBAU
VERKLEIDUNG A-SAEULE RE.	97002209	19	1	399	917305408	INNENVERKLEIDUNG EINBAU
VERKLEIDUNG ABLAGE 82X59	97001553	17	1	399	917305408	INNENVERKLEIDUNG EINBAU
VERKLEIDUNG HOLM LI. 84X1	97001015	3	1	399	917305408	INNENVERKLEIDUNG EINBAU
VERKLEIDUNG HOLM RE. 65X2	979206708	8	1	399	917305408	INNENVERKLEIDUNG EINBAU
VERKLEIDUNG LI.	966282308	1	1	399	917305408	INNENVERKLEIDUNG EINBAU
VERKLEIDUNG LI. 130X832X1	97001013	1	1	401	966282308	VERKLEIDUNG LI.
VERKLEIDUNG MONITORGEH	979207008	3	1	383	96015921	BEDIENELEMENTE EINBAU
VERKLEIDUNG OBEN RECHTS	97001589	4	1	399	917305408	INNENVERKLEIDUNG EINBAU
VERKLEIDUNG PEDALE 258X	97105652	3	1	388	96025887	PEDALTRAEGER EINBAU
VERKLEIDUNG PEDALE 315X	97089358	4	1	388	96025887	PEDALTRAEGER EINBAU
VERKLEIDUNG RE.	966282408	2	1	399	917305408	INNENVERKLEIDUNG EINBAU
VERKLEIDUNG RE. 120X526X	97138958	21	1	399	917305408	INNENVERKLEIDUNG EINBAU
VERKLEIDUNG RE. 127X1598	97001014	1	1	402	966282408	VERKLEIDUNG RE.
VERKLEIDUNG ROLLO 96X81	97001048	6	1	399	917305408	INNENVERKLEIDUNG EINBAU
VERKLEIDUNG RUECKWAND	97001404	5	1	399	917305408	INNENVERKLEIDUNG EINBAU
VERKLEIDUNG VORN 201X84	97006863	16	1	399	917305408	INNENVERKLEIDUNG EINBAU
VERKLEIDUNG ZWANGSENT	979206908	20	1	399	917305408	INNENVERKLEIDUNG EINBAU
VERLAENGERUNG B DIN 3123	790026408	65	1	152	928569808	GRUNDWERKZEUG
VERLAENGERUNG B DIN 3123	790026308	64	1	152	928569808	GRUNDWERKZEUG
VERLAENGERUNG M8X1	774374508	38	8	129	919644008	HYDRAULISCHE ABSTUETZUN
VERRIEGELUNG	967928508	2	1	489	918956108	HYDRAULISCHE BALLASTIER
VERRIEGELUNG VORM.	967978908	20	1	489	918956108	HYDRAULISCHE BALLASTIER
VERRIEGELUNGSZYLINDER 3	10870204	44	4	35	917511508	RAUPENMITTELTEIL VORM.
VERRIEGELUNGSZYLINDER 80	12106173	2	1	155	91001571	BOLZENZIEHVORRICHTUNG
VERROHRUNG DRUCKLUFTA	969763408	4	1	494	917676308	DRUCKLUFTANLAGE OW
VERSCHLUSS HAKEN	704230208	8	2	157	96063087	STAUKASTEN
VERSCHLUSS HAKEN	704230208	25	2	334	96023117	BATTERIEKASTEN VORM.
VERSCHLUSSDECKEL 60	9144757	5	1	208	11358102	ZYLINDERKOPFDECKEL ANBA
VERSCHLUSSDECKEL DIN 443	12209779	2	4	180	11389608	KURBELGEHAEUSE KPL. MIT
VERSCHLUSSDECKEL DIN 443	12209781	10	3	205	10149578	ZYLINDERKOPF
VERSCHLUSSDECKEL DIN 443	12209783	3	7	180	11389608	KURBELGEHAEUSE KPL. MIT
VERSCHLUSSKAPPE	7619068	4	1	521	10871700	LUFTFILTER
VERSCHLUSSKAPPE M 1-K	604508508	515	5	49	96045228	KABELSTRANG
VERSCHLUSSKAPPE M 1-K	604508508	507	1	538	96037133	LEITUNG
VERSCHLUSSKAPPE M 1-K	604508508	503	2	644	96037132	LEITUNG
VERSCHLUSSKAPPE M 1-K	604508508	(503)	1	741	917598408	ELEKTRIK MESS-U.WARNEINR
VERSCHLUSSKAPPE M1-D	604512108	523	4	49	96045228	KABELSTRANG
VERSCHLUSSKAPPE M1-D	604512108	502	1	142	96045205	KABELSTRANG
VERSCHLUSSKAPPE M1-D	604512108	517	1	532	96045385	KABELSTRANG
VERSCHLUSSKAPPE M1-D	604512108	505	1	538	96037133	LEITUNG
VERSCHLUSSKAPPE M1-D	604512108	504	1	644	96037132	LEITUNG
VERSCHLUSSKAPPE M1-D	604512108	153	1	714	968708708	KLEMMKASTEN KPL.
VERSCHLUSSKAPPE M1-D	604512108	(510)	1	741	917598408	ELEKTRIK MESS-U.WARNEINR
VERSCHLUSSKEGEL VKA 22L	4772028	12	2	189	10155227	OELWANNE VORM.
VERSCHLUSSMUTTER RD32X	10466914	177	2	561	96045351	HYDRAULIK OBERWAGEN
VERSCHLUSSMUTTER RD36X	10466915	150	3	728	967785008	ZUSATZHYDRAULIK KLAPPSPI
VERSCHLUSSMUTTER RD54X	10466916	159	2	616	967784808	HYDRAULIK HILFSHUBWERK
VERSCHLUSSMUTTER RD79X	10466917	154	2	616	967784808	HYDRAULIK HILFSHUBWERK
VERSCHLUSSRING	10803065	14	1	359	510229408	HYDROMOTOR
VERSCHLUSSRING	570109808	4	1	360	570109008	TRIEBWERK
VERSCHLUSSSCHRAUBE	10324900	4	1	317	11692439	STEUERVENTIL
VERSCHLUSSSCHRAUBE	10650014	49	1	697	10876933	TELESKOPIERZYLINDER

Bezeichnung	Artikel	Pos.	Menge	Seite	Baugruppe	Bezeichnung
VERSCHLUSSSCHRAUBE	11182678	53	1	697	10876933	TELESKOPIERZYLINDER
VERSCHLUSSSCHRAUBE	11690057	3	1	376	10802061	WINDENDREHGEBER
VERSCHLUSSSCHRAUBE	511025408	11	2	63	11643183	STEUERBLOCK
VERSCHLUSSSCHRAUBE	511025408	11	2	66	11643184	STEUERBLOCK
VERSCHLUSSSCHRAUBE	570579808	23	1	490	10877810	BALLASTIERZYLINDER
VERSCHLUSSSCHRAUBE	570579808	48	2	697	10876933	TELESKOPIERZYLINDER
VERSCHLUSSSCHRAUBE	7027056	44	1	81	11161917	STEUERTEIL
VERSCHLUSSSCHRAUBE 15	602425008	17	1	41	96045226	SCHALTKASTEN VORM.
VERSCHLUSSSCHRAUBE 15	602425008	197	4	714	968708708	KLEMMKASTEN KPL.
VERSCHLUSSSCHRAUBE DIN	4980712	15	1	572	10413106	STEUERBLOCK
VERSCHLUSSSCHRAUBE DIN	514584908	26	1	305	11210795	VERSTELLPUMPE
VERSCHLUSSSCHRAUBE DIN	518645408	55	1	697	10876933	TELESKOPIERZYLINDER
VERSCHLUSSSCHRAUBE DIN	11626246	19	2	323	571907208	ANSCHLUSSPLATTE
VERSCHLUSSSCHRAUBE DIN	12218194	10	1	136	11347526	ELEKTROPUMPE
VERSCHLUSSSCHRAUBE DIN	12218194	12	1	525	10327065	ELEKTROPUMPE
VERSCHLUSSSCHRAUBE DIN	10878578	27	1	240	5700161	LUFTPRESSER
VERSCHLUSSSCHRAUBE DIN	4600232	29	3	240	5700161	LUFTPRESSER
VERSCHLUSSSCHRAUBE G1/4	10470377	59	1	697	10876933	TELESKOPIERZYLINDER
VERSCHLUSSSCHRAUBE M1	7372626	32	1	305	11210795	VERSTELLPUMPE
VERSCHLUSSSCHRAUBE M1	7372626	24	4	319	10871282	VERSTELLPUMPE
VERSCHLUSSSCHRAUBE M12	11491897	(511)	1	741	917598408	ELEKTRIK MESS-U.WARNEINR
VERSCHLUSSSCHRAUBE M1	7372624	35	1	307	10873570	ANSCHLUSSPLATTE
VERSCHLUSSSCHRAUBE M1	10100429	21	2	305	11210795	VERSTELLPUMPE
VERSCHLUSSSCHRAUBE M1	7414500	16	1	81	11161917	STEUERTEIL
VERSCHLUSSSCHRAUBE M16	602424908	16	2	381	919010208	KRANFUEHRERKABINE VORM.
VERSCHLUSSSCHRAUBE M16	602424908	17	1	395	917304508	KRANFUEHRERKABINE VORM.
VERSCHLUSSSCHRAUBE M1	10220419	23	3	305	11210795	VERSTELLPUMPE
VERSCHLUSSSCHRAUBE M2	10000515	20	1	305	11210795	VERSTELLPUMPE
VERSCHLUSSSCHRAUBE M25	602425108	213	1	711	966291008	KLEMMKASTEN
VERSCHLUSSSCHRAUBE M2	560208508	27	2	319	10871282	VERSTELLPUMPE
VERSCHLUSSSCHRAUBE M2	570109408	11	2	359	510229408	HYDROMOTOR
VERSCHLUSSSCHRAUBE M30	10137918	2	1	184	10138450	ENDREGELVENTIL
VERSCHLUSSSCHRAUBE M30	10152594	2	1	215	10152592	UEBERDRUCKVENTIL
VERSCHLUSSSCHRAUBE M32	602425208	212	1	711	966291008	KLEMMKASTEN
VERSCHLUSSSCHRAUBE M33	409710601	67	4	78	90028956	FAHRANTRIEB
VERSCHLUSSSCHRAUBE M33	10289931	39	1	305	11210795	VERSTELLPUMPE
VERSCHLUSSSCHRAUBE M8X	7027497	14	4	307	10873570	ANSCHLUSSPLATTE
VERSCHLUSSSCHRAUBE M8X	7027497	20	2	311	10008308	ANSCHLUSSPLATTE
VERSCHLUSSSCHRAUBE M8X	7027497	53	1	312	10472196	REGLER
VERSCHLUSSSCHRAUBE M8X	7027497	20	2	323	571907208	ANSCHLUSSPLATTE
VERSCHLUSSSCHRAUBE RD3	10466911	152	3	728	967785008	ZUSATZHYDRAULIK KLAPPSPI
VERSCHLUSSSCHRAUBE RD5	10466912	161	2	616	967784808	HYDRAULIK HILFSHUBWERK
VERSCHLUSSSCHRAUBE RD7	10466913	157	2	616	967784808	HYDRAULIK HILFSHUBWERK
VERSCHLUSSSCHRAUBE VST	7381638	12	1	234	10149677	VERBINDUNGSLEITUNG ANBA
VERSCHLUSSSCHRAUBE VST	7381638	9	2	243	10145278	ANBAUTEILE LUFTPRESSER
VERSCHLUSSSCHRAUBE VST	7381638	10	2	262	10115829	SCHWUNGRADGEHAEUSE AN
VERSCHLUSSSCHRAUBE VST	7381638	8	1	278	9078301	VERSCHLUSSTEILE
VERSCHLUSSSCHRAUBE VSTI	477510501	82	3	370	939292201	PLANETENGETRIEBE
VERSCHLUSSSCHRAUBE VSTI	7363178	81	1	370	939292201	PLANETENGETRIEBE
VERSCHLUSSSCHRAUBE VST	7380566	6	3	180	11389608	KURBELGEHAEUSE KPL. MIT
VERSCHLUSSSCHRAUBE VST	7380566	4	1	232	10145173	ANSAUGSTUTZEN ANBAU
VERSCHLUSSSCHRAUBE VST	7380566	20	1	252	10140729	ATL-ANBAU
VERSCHLUSSSCHRAUBE VST	7382203	15	2	276	10144036	NEBENABTRIEB ANBAU
VERSCHLUSSSCHRAUBE VSTI	477511401	86	2	370	939292201	PLANETENGETRIEBE
VERSCHLUSSSCHRAUBE VSTI	7380177	10	3	180	11389608	KURBELGEHAEUSE KPL. MIT
VERSCHLUSSSCHRAUBE VSTI	7380177	14	1	263	10116110	VERSCHLUSSTEILE
VERSCHLUSSSCHRAUBE VST	10041903	10	5	183	10147687	AGGREGATETRAEGER ANBA
VERSCHLUSSSCHRAUBE VSTI	7381457	7	2	180	11389608	KURBELGEHAEUSE KPL. MIT
VERSCHLUSSSCHRAUBE VSTI	7381457	21	1	252	10140729	ATL-ANBAU
VERSCHLUSSSCHRAUBE VSTI	7382204	11	1	213	10129474	OELKUEHLER VORM.

Bezeichnung	Artikel	Pos.	Menge	Seite	Baugruppe	Bezeichnung
VERSCHLUSSSCHRAUBE VSTI	10043136	16	1	183	10147687	AGGREGATETRAEGER ANBA
VERSCHLUSSSCHRAUBE VSTI	10043136	1	1	194	10118881	VERSCHLUSSTEILE
VERSCHLUSSSCHRAUBE VSTI	10043136	6	1	208	11358102	ZYLINDERKOPFDECKEL ANBA
VERSCHLUSSSCHRAUBE VSTI	10043136	8	1	253	12512627	ABGASSTUTZEN ANBAU
VERSCHLUSSSCHRAUBE VST	7382202	1	1	274	10142747	VERSCHLUSSTEILE
VERSCHLUSSSCHRAUBE VSTI	10285724	3	1	217	10142942	SCHMIEROELFILTER ANBAU
VERSCHLUSSSTOPFEN	779012201	84	1	370	939292201	PLANETENGETRIEBE
VERSCHLUSSSTOPFEN GPN	779016201	88	1	353	90008901	DREHWERKANTRIEB
VERSCHLUSSSTOPFEN GPN 3	11698481	5	1	220	12489819	ABDECKKAPPEN-KIT
VERSCHLUSSSTOPFEN GPN 3	11835061	6	2	220	12489819	ABDECKKAPPEN-KIT
VERSCHLUSSSTOPFEN ISO 8	477700408	678	2	563	96045351	HYDRAULIK OBERWAGEN
VERSCHLUSSSTOPFEN ISO 8	477700508	659	2	563	96045351	HYDRAULIK OBERWAGEN
VERSCHLUSSSTOPFEN PE-L	7361205	10	10	395	917304508	KRANFUEHRERKABINE VORM.
VERSCHLUSSSTOPFEN PE-L	7361205	42	2	421	917304708	SCHIEBETUER EINBAU
VERSCHLUSSSTOPFEN PE-L	779016608	15	8	657	919028808	MECH.TEILE VERSANDMONT
VERSCHLUSSTEILE	10115664	452	1	178	13455297	DIESELMOTOR
VERSCHLUSSTEILE	10116110	521	1	178	13455297	DIESELMOTOR
VERSCHLUSSTEILE	10127979	526	1	178	13455297	DIESELMOTOR
VERSCHLUSSTEILE	10128439	524	1	178	13455297	DIESELMOTOR
VERSCHLUSSTEILE	10142747	630	1	179	13455297	DIESELMOTOR
VERSCHLUSSTEILE	9078301	654	1	179	13455297	DIESELMOTOR
VERSCHLUSSTEILE Al Rm>150	10128440	1	1	264	10128439	VERSCHLUSSTEILE
VERSCHLUSSTEILE M33X2-F	10118881	23	1	174	13455297	DIESELMOTOR
VERSCHMUTZUNGSANZEIGE	571356108	(4)	1	560	96045351	HYDRAULIK OBERWAGEN
VERSCHRAUBUNG	11081053	3	1	139	774375108	DURCHGANGSNIPPELBLOCK
VERSCHRAUBUNG	570066008	2	1	102	502806508	AUSGLEICHSBEHAELTER
VERSCHRAUBUNG	790065608	4	1	151	919328608	WERKZEUG M.ZUBEHOER
VERSCHRAUBUNG	790533908	5	2	151	919328608	WERKZEUG M.ZUBEHOER
VERSCHRAUBUNG	971581108	160	1	560	96045351	HYDRAULIK OBERWAGEN
VERSCHRAUBUNG BUZ 16S C	477701108	699	1	563	96045351	HYDRAULIK OBERWAGEN
VERSCHRAUBUNG BUZ 22L C	477700208	848	1	565	96045351	HYDRAULIK OBERWAGEN
VERSCHRAUBUNG BUZ 8 M14	10816958	400	8	512	96051842	ABGASANLAGE VORM.
VERSCHRAUBUNG E335	979374708	403	1	288	919007708	ANTRIEBSAGGREGAT VORM.
VERSCHRAUBUNG EGE 10L M	471903908	603	1	98	96035796	HYDR.FAHRANTRIEB
VERSCHRAUBUNG EGE 10L M	471903908	603	1	115	96035792	HYDR.FAHRANTRIEB
VERSCHRAUBUNG EGE 10S	471900408	735	1	564	96045351	HYDRAULIK OBERWAGEN
VERSCHRAUBUNG EGE 12L	471903808	667	1	563	96045351	HYDRAULIK OBERWAGEN
VERSCHRAUBUNG EGE 12S G	471900508	609	1	722	967785408	ZUSATZHYDRAULIK KLAPPSPI
VERSCHRAUBUNG EGE 18L G	471901308	646	2	57	96035801	HYDRAULIK MITTELTEIL
VERSCHRAUBUNG EGE 18L	10878394	400	1	342	96066379	KRAFTSTOFFFILTER VORM.
VERSCHRAUBUNG EGE 22L	471901408	661	1	563	96045351	HYDRAULIK OBERWAGEN
VERSCHRAUBUNG EGE 38S	10876353	626	1	98	96035796	HYDR.FAHRANTRIEB
VERSCHRAUBUNG EGE 38S	10876353	626	1	115	96035792	HYDR.FAHRANTRIEB
VERSCHRAUBUNG EGE 42L	471903608	715	2	563	96045351	HYDRAULIK OBERWAGEN
VERSCHRAUBUNG EGESD10-L	471901108	620	3	563	96045351	HYDRAULIK OBERWAGEN
VERSCHRAUBUNG EGESD10-L	471901108	621	1	617	967784808	HYDRAULIK HILFSHUBWERK
VERSCHRAUBUNG EGESD12-L	471902208	602	1	562	96045351	HYDRAULIK OBERWAGEN
VERSCHRAUBUNG EGESD12-L	471901208	648	1	563	96045351	HYDRAULIK OBERWAGEN
VERSCHRAUBUNG EGESD12-L	471901208	637	1	617	967784808	HYDRAULIK HILFSHUBWERK
VERSCHRAUBUNG EGESD16	471900608	637	6	57	96035801	HYDRAULIK MITTELTEIL
VERSCHRAUBUNG EGESD22-L	471902408	605	1	98	96035796	HYDR.FAHRANTRIEB
VERSCHRAUBUNG EGESD22-L	471902408	605	1	115	96035792	HYDR.FAHRANTRIEB
VERSCHRAUBUNG EGESD25	471900808	681	1	563	96045351	HYDRAULIK OBERWAGEN
VERSCHRAUBUNG EGESD6-L	471900108	627	2	57	96035801	HYDRAULIK MITTELTEIL
VERSCHRAUBUNG EGESD6-S	471900308	671	1	563	96045351	HYDRAULIK OBERWAGEN
VERSCHRAUBUNG EL 10L CR6	472330208	604	2	98	96035796	HYDR.FAHRANTRIEB
VERSCHRAUBUNG EL 10L CR6	472330208	604	2	115	96035792	HYDR.FAHRANTRIEB
VERSCHRAUBUNG EL 10L CR6	472330208	614	8	562	96045351	HYDRAULIK OBERWAGEN
VERSCHRAUBUNG EL 10L CR6	472330208	616	2	617	967784808	HYDRAULIK HILFSHUBWERK
VERSCHRAUBUNG EL 10L CR6	472330208	604	3	717	967784508	HYDRAULIK TELE

Bezeichnung	Artikel	Pos.	Menge	Seite	Baugruppe	Bezeichnung
VERSCHRAUBUNG EL 12S C	7617461	619	1	56	96035801	HYDRAULIK MITTELTEIL
VERSCHRAUBUNG EL 12S C	7617461	602	4	132	968077208	HYDRAULIK ABSTUETZUNG
VERSCHRAUBUNG EL 12S C	7617461	605	1	722	967785408	ZUSATZHYDRAULIK KLAPPSPI
VERSCHRAUBUNG EL 15L CR6	472300414	841	1	565	96045351	HYDRAULIK OBERWAGEN
VERSCHRAUBUNG EL 16S C	7407098	656	5	563	96045351	HYDRAULIK OBERWAGEN
VERSCHRAUBUNG EL 20S C	7407107	822	2	564	96045351	HYDRAULIK OBERWAGEN
VERSCHRAUBUNG EL 25S C	7407118	808	2	564	96045351	HYDRAULIK OBERWAGEN
VERSCHRAUBUNG EL 25S C	7407118	610	1	617	967784808	HYDRAULIK HILFSHUBWERK
VERSCHRAUBUNG EL 28L CR6	7407120	814	2	564	96045351	HYDRAULIK OBERWAGEN
VERSCHRAUBUNG EL 42L CR6	7367986	612	1	56	96035801	HYDRAULIK MITTELTEIL
VERSCHRAUBUNG EL 42L CR6	7367986	781	5	564	96045351	HYDRAULIK OBERWAGEN
VERSCHRAUBUNG EL 42L CR6	472332008	192	1	561	96045351	HYDRAULIK OBERWAGEN
VERSCHRAUBUNG EL 6S CR6	472331208	604	5	562	96045351	HYDRAULIK OBERWAGEN
VERSCHRAUBUNG EL 6S CR6	472331208	607	1	617	967784808	HYDRAULIK HILFSHUBWERK
VERSCHRAUBUNG ET 25S C	7367774	635	1	57	96035801	HYDRAULIK MITTELTEIL
VERSCHRAUBUNG ET 25S C	7367774	712	2	563	96045351	HYDRAULIK OBERWAGEN
VERSCHRAUBUNG ET 25S C	7367774	623	1	617	967784808	HYDRAULIK HILFSHUBWERK
VERSCHRAUBUNG ET 28L M36	7407122	633	1	57	96035801	HYDRAULIK MITTELTEIL
VERSCHRAUBUNG ET 28L M36	7407122	829	1	564	96045351	HYDRAULIK OBERWAGEN
VERSCHRAUBUNG EV 12L M18	10410305	601	5	562	96045351	HYDRAULIK OBERWAGEN
VERSCHRAUBUNG EV 15L C	10222436	423	1	288	919007708	ANTRIEBSAGGREGAT VORM.
VERSCHRAUBUNG EV 22L C	10410771	404	1	328	96034515	AUSGLEICHSBEHAELTER VO
VERSCHRAUBUNG EV 22L C	10410771	835	2	565	96045351	HYDRAULIK OBERWAGEN
VERSCHRAUBUNG EV 42L M52	10651363	759	6	564	96045351	HYDRAULIK OBERWAGEN
VERSCHRAUBUNG EV16S CR6	10410770	810	2	564	96045351	HYDRAULIK OBERWAGEN
VERSCHRAUBUNG EV16S CR6	10410770	616	1	622	969426308	ZUSATZHYDRAULIK KLAPPSPI
VERSCHRAUBUNG EV38S M52	10467292	650	1	57	96035801	HYDRAULIK MITTELTEIL
VERSCHRAUBUNG EV38S M52	10467292	617	1	98	96035796	HYDR.FAHRANTRIEB
VERSCHRAUBUNG EV38S M52	10467292	617	1	115	96035792	HYDR.FAHRANTRIEB
VERSCHRAUBUNG EV38S M52	10467292	757	1	564	96045351	HYDRAULIK OBERWAGEN
VERSCHRAUBUNG EVL16-SR3	472004008	4	2	374	90200104	OELMESSEINRICHTUNG
VERSCHRAUBUNG EW 10L M	7403569	644	2	159	96056969	ZUSATZHYDRAULIK
VERSCHRAUBUNG EW 10L M	7403569	638	2	496	969763408	VERROHRUNG DRUCKLUFTA
VERSCHRAUBUNG EW 10L M	7403569	616	3	562	96045351	HYDRAULIK OBERWAGEN
VERSCHRAUBUNG EW 10L M	7403569	615	1	617	967784808	HYDRAULIK HILFSHUBWERK
VERSCHRAUBUNG EW 10L M	7403569	603	6	717	967784508	HYDRAULIK TELE
VERSCHRAUBUNG EW 10S C	7617268	659	2	57	96035801	HYDRAULIK MITTELTEIL
VERSCHRAUBUNG EW 10S C	7617268	805	2	564	96045351	HYDRAULIK OBERWAGEN
VERSCHRAUBUNG EW 12S C	7617354	638	4	57	96035801	HYDRAULIK MITTELTEIL
VERSCHRAUBUNG EW 12S C	7617354	621	2	563	96045351	HYDRAULIK OBERWAGEN
VERSCHRAUBUNG EW 12S C	7617354	604	2	722	967785408	ZUSATZHYDRAULIK KLAPPSPI
VERSCHRAUBUNG EW 15L C	7615379	424	1	288	919007708	ANTRIEBSAGGREGAT VORM.
VERSCHRAUBUNG EW 15L C	7615379	648	1	496	969763408	VERROHRUNG DRUCKLUFTA
VERSCHRAUBUNG EW 15L C	7615379	833	2	565	96045351	HYDRAULIK OBERWAGEN
VERSCHRAUBUNG EW 16S C	7617460	641	2	57	96035801	HYDRAULIK MITTELTEIL
VERSCHRAUBUNG EW 16S C	7617460	658	11	563	96045351	HYDRAULIK OBERWAGEN
VERSCHRAUBUNG EW 16S C	7617460	601	4	728	967785008	ZUSATZHYDRAULIK KLAPPSPI
VERSCHRAUBUNG EW 18L ST	10815664	633	3	496	969763408	VERROHRUNG DRUCKLUFTA
VERSCHRAUBUNG EW 20S M	7407108	640	2	57	96035801	HYDRAULIK MITTELTEIL
VERSCHRAUBUNG EW 20S M	7407108	635	1	563	96045351	HYDRAULIK OBERWAGEN
VERSCHRAUBUNG EW 25S C	7407119	604	2	56	96035801	HYDRAULIK MITTELTEIL
VERSCHRAUBUNG EW 28L C	7617494	731	4	564	96045351	HYDRAULIK OBERWAGEN
VERSCHRAUBUNG EW 6S M14	472531508	11	2	135	917257108	ZENTRALSCHMIERUNG RAUP
VERSCHRAUBUNG EW 6S M14	472531508	726	1	564	96045351	HYDRAULIK OBERWAGEN
VERSCHRAUBUNG EWSD22-L	472530608	625	13	563	96045351	HYDRAULIK OBERWAGEN
VERSCHRAUBUNG EWSD22-L	472530608	643	3	617	967784808	HYDRAULIK HILFSHUBWERK
VERSCHRAUBUNG EWSD38-S	472531808	605	6	56	96035801	HYDRAULIK MITTELTEIL
VERSCHRAUBUNG EWSD38-S	472531808	602	2	98	96035796	HYDR.FAHRANTRIEB
VERSCHRAUBUNG EWSD38-S	472531808	602	2	115	96035792	HYDR.FAHRANTRIEB
VERSCHRAUBUNG EWSD38-S	472531808	653	5	563	96045351	HYDRAULIK OBERWAGEN

Bezeichnung	Artikel	Pos.	Menge	Seite	Baugruppe	Bezeichnung
VERSCHRAUBUNG G 24 M30x	9273271	2	2	217	10142942	SCHMIEROELFILTER ANBAU
VERSCHRAUBUNG GE 10L 3/8	471035208	641	2	159	96056969	ZUSATZHYDRAULIK
VERSCHRAUBUNG GE 10L M	471030508	628	1	563	96045351	HYDRAULIK OBERWAGEN
VERSCHRAUBUNG GE 10L M	471030508	624	1	617	967784808	HYDRAULIK HILFSHUBWERK
VERSCHRAUBUNG GE 10L M	7021521	2	1	503	969904608	DRUCKBEGRENZUNGSVENTI
VERSCHRAUBUNG GE 10L M	471039808	623	1	496	969763408	VERROHRUNG DRUCKLUFTA
VERSCHRAUBUNG GE 12 M1	11002988	5	1	228	10143341	KRAFTSTOFFLEITUNGEN
VERSCHRAUBUNG GE 12L G1	471034808	662	4	563	96045351	HYDRAULIK OBERWAGEN
VERSCHRAUBUNG GE 12L G1	471034808	605	4	717	967784508	HYDRAULIK TELE
VERSCHRAUBUNG GE 12L M	7405399	746	2	564	96045351	HYDRAULIK OBERWAGEN
VERSCHRAUBUNG GE 12L M	471039908	720	3	563	96045351	HYDRAULIK OBERWAGEN
VERSCHRAUBUNG GE 12S G1/	471032608	608	3	56	96035801	HYDRAULIK MITTELTEIL
VERSCHRAUBUNG GE 12S G1/	471032608	622	1	98	96035796	HYDR.FAHRANTRIEB
VERSCHRAUBUNG GE 12S G1/	471032608	622	1	115	96035792	HYDR.FAHRANTRIEB
VERSCHRAUBUNG GE 12S G1/	471032608	606	4	722	967785408	ZUSATZHYDRAULIK KLAPPSPI
VERSCHRAUBUNG GE 12S G3/	471032708	618	10	56	96035801	HYDRAULIK MITTELTEIL
VERSCHRAUBUNG GE 12S G3/	471032708	618	3	563	96045351	HYDRAULIK OBERWAGEN
VERSCHRAUBUNG GE 12S G3/	471032708	613	1	617	967784808	HYDRAULIK HILFSHUBWERK
VERSCHRAUBUNG GE 12S M	471032908	601	12	132	968077208	HYDRAULIK ABSTUETZUNG
VERSCHRAUBUNG GE 12S M	471032908	725	2	563	96045351	HYDRAULIK OBERWAGEN
VERSCHRAUBUNG GE 14,15,1	10813942	8	1	228	10143341	KRAFTSTOFFLEITUNGEN
VERSCHRAUBUNG GE 15L M	471035508	11	2	339	968999708	KRAFTSTOFFBEHAELTER VO
VERSCHRAUBUNG GE 15L M	471035508	636	2	496	969763408	VERROHRUNG DRUCKLUFTA
VERSCHRAUBUNG GE 18L M	471031108	602	1	496	969763408	VERROHRUNG DRUCKLUFTA
VERSCHRAUBUNG GE 18L M	471031108	749	3	564	96045351	HYDRAULIK OBERWAGEN
VERSCHRAUBUNG GE 18L M2	10815662	644	4	496	969763408	VERROHRUNG DRUCKLUFTA
VERSCHRAUBUNG GE 20S G1/	7410451	745	1	564	96045351	HYDRAULIK OBERWAGEN
VERSCHRAUBUNG GE 22L M	10036896	771	1	564	96045351	HYDRAULIK OBERWAGEN
VERSCHRAUBUNG GE 22L M2	471001308	3	2	374	90200104	OELMESSEINRICHTUNG
VERSCHRAUBUNG GE 28L G1	471031608	754	4	564	96045351	HYDRAULIK OBERWAGEN
VERSCHRAUBUNG GE 28L G3/	7410441	692	1	563	96045351	HYDRAULIK OBERWAGEN
VERSCHRAUBUNG GE 28L M	7403925	770	1	564	96045351	HYDRAULIK OBERWAGEN
VERSCHRAUBUNG GE 42L G1	471034708	610	1	56	96035801	HYDRAULIK MITTELTEIL
VERSCHRAUBUNG GE 42L G1	471034708	672	8	563	96045351	HYDRAULIK OBERWAGEN
VERSCHRAUBUNG GE 6LL M	774374808	19	16	135	917257108	ZENTRALSCHMIERUNG RAUP
VERSCHRAUBUNG GE 6S G1/	471032108	3	3	613	921444108	ZENTRALSCHMIERANLAGE
VERSCHRAUBUNG GE 6S G1/	471032108	640	1	617	967784808	HYDRAULIK HILFSHUBWERK
VERSCHRAUBUNG GE 6S G1/	471032108	600	1	717	967784508	HYDRAULIK TELE
VERSCHRAUBUNG GE 8 M12	10801399	29	2	253	12512627	ABGASSTUTZEN ANBAU
VERSCHRAUBUNG GE 8L M16	7618383	2	1	330	96039022	STUTZEN KPL.
VERSCHRAUBUNG GE 8L M18	471039308	36	1	480	918759808	ZUSATZHEIZUNG OW
VERSCHRAUBUNG GEF.A M2	10493479	61	1	697	10876933	TELESKOPIERZYLINDER
VERSCHRAUBUNG GEO 8L M	10872598	3	1	503	969904608	DRUCKBEGRENZUNGSVENTI
VERSCHRAUBUNG GR 20/12S	475004108	747	1	564	96045351	HYDRAULIK OBERWAGEN
VERSCHRAUBUNG GR 20/16S	475033608	639	6	57	96035801	HYDRAULIK MITTELTEIL
VERSCHRAUBUNG GR 22/18L	475030708	643	2	57	96035801	HYDRAULIK MITTELTEIL
VERSCHRAUBUNG GZ 15L C	470011208	840	1	565	96045351	HYDRAULIK OBERWAGEN
VERSCHRAUBUNG ISO 8434	482430314	639	2	617	967784808	HYDRAULIK HILFSHUBWERK
VERSCHRAUBUNG ISO 8434	482430314	607	1	717	967784508	HYDRAULIK TELE
VERSCHRAUBUNG ISO 8434	482431314	836	1	565	96045351	HYDRAULIK OBERWAGEN
VERSCHRAUBUNG ISO 8434	482431414	648	1	57	96035801	HYDRAULIK MITTELTEIL
VERSCHRAUBUNG ISO 8434	482431514	660	2	57	96035801	HYDRAULIK MITTELTEIL
VERSCHRAUBUNG ISO 8434	482431514	612	2	622	969426308	ZUSATZHYDRAULIK KLAPPSPI
VERSCHRAUBUNG ISO 8434	482431614	633	2	563	96045351	HYDRAULIK OBERWAGEN
VERSCHRAUBUNG ISO 8434	482430614	606	1	98	96035796	HYDR.FAHRANTRIEB
VERSCHRAUBUNG ISO 8434	482430614	606	1	115	96035792	HYDR.FAHRANTRIEB
VERSCHRAUBUNG ISO 8434	482430614	624	4	563	96045351	HYDRAULIK OBERWAGEN
VERSCHRAUBUNG ISO 8434	482430614	635	1	617	967784808	HYDRAULIK HILFSHUBWERK
VERSCHRAUBUNG ISO 8434	482431814	826	1	564	96045351	HYDRAULIK OBERWAGEN
VERSCHRAUBUNG ISO 8434	482431114	611	1	56	96035801	HYDRAULIK MITTELTEIL

Bezeichnung	Artikel	Pos.	Menge	Seite	Baugruppe	Bezeichnung
VERSCHRAUBUNG ISO 8434	482530814	615	2	56	96035801	HYDRAULIK MITTELTEIL
VERSCHRAUBUNG ISO 8434	482530814	777	3	564	96045351	HYDRAULIK OBERWAGEN
VERSCHRAUBUNG ISO 8434 G	471004514	743	5	564	96045351	HYDRAULIK OBERWAGEN
VERSCHRAUBUNG ISO 8434	471008214	764	1	564	96045351	HYDRAULIK OBERWAGEN
VERSCHRAUBUNG ISO 8434-1	7362091	600	1	98	96035796	HYDR.FAHRANTRIEB
VERSCHRAUBUNG ISO 8434-1	7362091	600	1	115	96035792	HYDR.FAHRANTRIEB
VERSCHRAUBUNG ISO 8434-1	7362091	608	6	562	96045351	HYDRAULIK OBERWAGEN
VERSCHRAUBUNG ISO 8434-1	7362091	641	1	617	967784808	HYDRAULIK HILFSHUBWERK
VERSCHRAUBUNG ISO 8434-1	7362091	602	5	717	967784508	HYDRAULIK TELE
VERSCHRAUBUNG ISO 8434-1	471039708	642	2	159	96056969	ZUSATZHYDRAULIK
VERSCHRAUBUNG ISO 8434-1	471039708	605	1	496	969763408	VERROHRUNG DRUCKLUFTA
VERSCHRAUBUNG ISO 8434-1	471039708	619	5	563	96045351	HYDRAULIK OBERWAGEN
VERSCHRAUBUNG ISO 8434-1	471039708	614	1	617	967784808	HYDRAULIK HILFSHUBWERK
VERSCHRAUBUNG ISO 8434-1	4981235	3	1	192	10150934	OELMESSSTAB KPL.
VERSCHRAUBUNG ISO 8434-1	4981235	19	2	252	10140729	ATL-ANBAU
VERSCHRAUBUNG ISO 8434-1	471032808	655	8	57	96035801	HYDRAULIK MITTELTEIL
VERSCHRAUBUNG ISO 8434-1	471032808	651	3	563	96045351	HYDRAULIK OBERWAGEN
VERSCHRAUBUNG ISO 8434-1	471032808	608	1	722	967785408	ZUSATZHYDRAULIK KLAPPSPI
VERSCHRAUBUNG ISO 8434-1	471030708	650	5	563	96045351	HYDRAULIK OBERWAGEN
VERSCHRAUBUNG ISO 8434-1	7362515	3	1	242	10145176	ROHRLEITUNG ANBAU
VERSCHRAUBUNG ISO 8434-1	4981233	6	1	243	10145278	ANBAUTEILE LUFTPRESSER
VERSCHRAUBUNG NACHARB	971774408	194	1	561	96045351	HYDRAULIK OBERWAGEN
VERSCHRAUBUNG RED 18/15L	475435608	727	1	564	96045351	HYDRAULIK OBERWAGEN
VERSCHRAUBUNG RED 25/1	475432208	831	1	565	96045351	HYDRAULIK OBERWAGEN
VERSCHRAUBUNG RED 42/18L	475431708	845	1	565	96045351	HYDRAULIK OBERWAGEN
VERSCHRAUBUNG RED 42/22L	475431608	789	2	564	96045351	HYDRAULIK OBERWAGEN
VERSCHRAUBUNG RED 42/28L	475431308	609	2	56	96035801	HYDRAULIK MITTELTEIL
VERSCHRAUBUNG RED 42/28L	475431308	674	2	563	96045351	HYDRAULIK OBERWAGEN
VERSCHRAUBUNG RED 42/35L	475436708	803	1	564	96045351	HYDRAULIK OBERWAGEN
VERSCHRAUBUNG REDSD12/	475431408	620	1	98	96035796	HYDR.FAHRANTRIEB
VERSCHRAUBUNG REDSD12/	475431408	620	1	115	96035792	HYDR.FAHRANTRIEB
VERSCHRAUBUNG REDSD12/	475431408	758	1	564	96045351	HYDRAULIK OBERWAGEN
VERSCHRAUBUNG REDSD12/	475431408	610	4	717	967784508	HYDRAULIK TELE
VERSCHRAUBUNG REDSD12/	475433408	610	1	722	967785408	ZUSATZHYDRAULIK KLAPPSPI
VERSCHRAUBUNG REDSD12/6	475432908	603	4	722	967785408	ZUSATZHYDRAULIK KLAPPSPI
VERSCHRAUBUNG REDSD16/	475433508	824	4	564	96045351	HYDRAULIK OBERWAGEN
VERSCHRAUBUNG REDSD16/	475433508	614	2	622	969426308	ZUSATZHYDRAULIK KLAPPSPI
VERSCHRAUBUNG REDSD16/6	475433108	661	2	57	96035801	HYDRAULIK MITTELTEIL
VERSCHRAUBUNG REDSD22/	475430808	827	1	564	96045351	HYDRAULIK OBERWAGEN
VERSCHRAUBUNG REDSD22/	475436108	610	1	98	96035796	HYDR.FAHRANTRIEB
VERSCHRAUBUNG REDSD22/	475436108	610	1	115	96035792	HYDR.FAHRANTRIEB
VERSCHRAUBUNG REDSD22/	475436108	740	1	564	96045351	HYDRAULIK OBERWAGEN
VERSCHRAUBUNG REDSD22/	475436108	611	1	617	967784808	HYDRAULIK HILFSHUBWERK
VERSCHRAUBUNG REDSD22/	475435508	756	3	564	96045351	HYDRAULIK OBERWAGEN
VERSCHRAUBUNG REDSD28/	475430908	819	1	564	96045351	HYDRAULIK OBERWAGEN
VERSCHRAUBUNG REDSD28/	475430908	615	1	622	969426308	ZUSATZHYDRAULIK KLAPPSPI
VERSCHRAUBUNG REDSD28/	475430508	647	2	57	96035801	HYDRAULIK MITTELTEIL
VERSCHRAUBUNG REDSD28/	475430508	687	1	563	96045351	HYDRAULIK OBERWAGEN
VERSCHRAUBUNG REDSD35/	475430408	632	3	57	96035801	HYDRAULIK MITTELTEIL
VERSCHRAUBUNG REDSD38/	475434208	698	1	563	96045351	HYDRAULIK OBERWAGEN
VERSCHRAUBUNG REDSD38/6	475408108	734	1	564	96045351	HYDRAULIK OBERWAGEN
VERSCHRAUBUNG REDSDN10	475432008	601	1	722	967785408	ZUSATZHYDRAULIK KLAPPSPI
VERSCHRAUBUNG REDSDN12	475430208	846	1	565	96045351	HYDRAULIK OBERWAGEN
VERSCHRAUBUNG REDSDN2	475432108	701	2	563	96045351	HYDRAULIK OBERWAGEN
VERSCHRAUBUNG REDSDN2	475433608	622	1	563	96045351	HYDRAULIK OBERWAGEN
VERSCHRAUBUNG REDSDN2	475433608	622	1	617	967784808	HYDRAULIK HILFSHUBWERK
VERSCHRAUBUNG REDSDN2	475432308	634	2	57	96035801	HYDRAULIK MITTELTEIL
VERSCHRAUBUNG REDSDN2	475432308	711	1	563	96045351	HYDRAULIK OBERWAGEN
VERSCHRAUBUNG REDSDN2	475435408	828	1	564	96045351	HYDRAULIK OBERWAGEN
VERSCHRAUBUNG REDSDN3	475435308	844	1	565	96045351	HYDRAULIK OBERWAGEN

Bezeichnung	Artikel	Pos.	Menge	Seite	Baugruppe	Bezeichnung
VERSCHRAUBUNG REDSDN4	475407208	613	1	56	96035801	HYDRAULIK MITTELTEIL
VERSCHRAUBUNG REDSDN4	475407208	780	1	564	96045351	HYDRAULIK OBERWAGEN
VERSCHRAUBUNG RI M22X1,	7381363	4	2	238	9080294	LUFTPRESSER VORM.
VERSCHRAUBUNG RSWS10-L	473230508	664	2	563	96045351	HYDRAULIK OBERWAGEN
VERSCHRAUBUNG RSWS10-S	473210508	600	1	722	967785408	ZUSATZHYDRAULIK KLAPPSPI
VERSCHRAUBUNG RSWS10-S	473231008	658	4	57	96035801	HYDRAULIK MITTELTEIL
VERSCHRAUBUNG RSWS10-S	473231008	843	1	565	96045351	HYDRAULIK OBERWAGEN
VERSCHRAUBUNG RSWS22-L	473331308	801	1	564	96045351	HYDRAULIK OBERWAGEN
VERSCHRAUBUNG RSWS6-S	473230608	645	2	57	96035801	HYDRAULIK MITTELTEIL
VERSCHRAUBUNG S235JR	10145589	11	1	276	10144036	NEBENABTRIEB ANBAU
VERSCHRAUBUNG SNV10-L C	470010108	640	2	159	96056969	ZUSATZHYDRAULIK
VERSCHRAUBUNG SNV10-L C	470010108	612	1	717	967784508	HYDRAULIK TELE
VERSCHRAUBUNG SNV10-L C	470010108	603	1	728	967785008	ZUSATZHYDRAULIK KLAPPSPI
VERSCHRAUBUNG SNV10-S C	470010208	825	1	564	96045351	HYDRAULIK OBERWAGEN
VERSCHRAUBUNG SNV12-L C	470011308	611	1	98	96035796	HYDR.FAHRANTRIEB
VERSCHRAUBUNG SNV12-L C	470011308	611	1	115	96035792	HYDR.FAHRANTRIEB
VERSCHRAUBUNG SNV12-L C	470011308	666	2	563	96045351	HYDRAULIK OBERWAGEN
VERSCHRAUBUNG SNV22-L C	470010908	733	1	564	96045351	HYDRAULIK OBERWAGEN
VERSCHRAUBUNG SNV25-S C	470011008	830	1	565	96045351	HYDRAULIK OBERWAGEN
VERSCHRAUBUNG SNV25-S C	470011008	629	1	617	967784808	HYDRAULIK HILFSHUBWERK
VERSCHRAUBUNG SNV28-L C	470010608	821	2	564	96045351	HYDRAULIK OBERWAGEN
VERSCHRAUBUNG SNV38-S C	470010708	713	1	563	96045351	HYDRAULIK OBERWAGEN
VERSCHRAUBUNG SNV38-S C	470010708	631	1	617	967784808	HYDRAULIK HILFSHUBWERK
VERSCHRAUBUNG SNV42-L C	470011408	802	1	564	96045351	HYDRAULIK OBERWAGEN
VERSCHRAUBUNG SV 18L C	474030708	751	1	564	96045351	HYDRAULIK OBERWAGEN
VERSCHRAUBUNG SV 25S C	474032808	636	1	57	96035801	HYDRAULIK MITTELTEIL
VERSCHRAUBUNG SV 25S C	474032808	628	1	617	967784808	HYDRAULIK HILFSHUBWERK
VERSCHRAUBUNG T 10S CR6	470402208	657	4	57	96035801	HYDRAULIK MITTELTEIL
VERSCHRAUBUNG T 22L	470400708	8	1	374	90200104	OELMESSEINRICHTUNG
VERSCHRAUBUNG VSTI G1/4	7361553	8	3	568	11211756	STEUERBLOCK
VERSCHRAUBUNG W 6L	470200108	17	14	135	917257108	ZENTRALSCHMIERUNG RAUP
VERSCHRAUBUNG WE 6LL M1	774373808	1	1	138	11347500	VERTEILERKOMBINATION
VERSCHRAUBUNG WE 6LL M1	774373808	2	1	526	11002916	VERTEILERKOMBINATION
VERSCHRAUBUNG WSV 20S C	474232808	623	4	57	96035801	HYDRAULIK MITTELTEIL
VERSCHRAUBUNG XG10-L C	470030308	608	1	717	967784508	HYDRAULIK TELE
VERSCHRAUBUNG XG10-S C	470032408	669	3	563	96045351	HYDRAULIK OBERWAGEN
VERSCHRAUBUNG XG12-L C	470030408	600	1	622	969426308	ZUSATZHYDRAULIK KLAPPSPI
VERSCHRAUBUNG XG16-S C	470032708	670	1	563	96045351	HYDRAULIK OBERWAGEN
VERSCHRAUBUNG XG16-S C	470032708	601	2	622	969426308	ZUSATZHYDRAULIK KLAPPSPI
VERSCHRAUBUNG XG38-S C	470033108	627	1	98	96035796	HYDR.FAHRANTRIEB
VERSCHRAUBUNG XG38-S C	470033108	627	1	115	96035792	HYDR.FAHRANTRIEB
VERSCHRAUBUNG XG42-L C	470030908	804	1	564	96045351	HYDRAULIK OBERWAGEN
VERSCHRAUBUNG XG6-L CR6	470030108	15	10	135	917257108	ZENTRALSCHMIERUNG RAUP
VERSCHRAUBUNG XGAI6-SR	470700208	606	5	562	96045351	HYDRAULIK OBERWAGEN
VERSCHRAUBUNG XGAI6-SR	470700208	608	1	617	967784808	HYDRAULIK HILFSHUBWERK
VERSCHRAUBUNG XGE10-LR-	471039608	611	6	562	96045351	HYDRAULIK OBERWAGEN
VERSCHRAUBUNG XGE10-LR-	471039608	625	1	617	967784808	HYDRAULIK HILFSHUBWERK
VERSCHRAUBUNG XGE12-LM-	471039408	798	1	564	96045351	HYDRAULIK OBERWAGEN
VERSCHRAUBUNG XGE12-LR-	471030808	617	1	56	96035801	HYDRAULIK MITTELTEIL
VERSCHRAUBUNG XGE12-LR-	471030808	610	7	562	96045351	HYDRAULIK OBERWAGEN
VERSCHRAUBUNG XGE12-LR-	471030808	612	2	617	967784808	HYDRAULIK HILFSHUBWERK
VERSCHRAUBUNG XGE12-LR-	471035308	616	2	98	96035796	HYDR.FAHRANTRIEB
VERSCHRAUBUNG XGE12-LR-	471035308	616	2	115	96035792	HYDR.FAHRANTRIEB
VERSCHRAUBUNG XGE12-LR-	471035308	643	4	563	96045351	HYDRAULIK OBERWAGEN
VERSCHRAUBUNG XGE15-LR-	471031008	651	1	57	96035801	HYDRAULIK MITTELTEIL
VERSCHRAUBUNG XGE16-SR-	471033208	657	13	563	96045351	HYDRAULIK OBERWAGEN
VERSCHRAUBUNG XGE16-SR-	471033208	609	3	622	969426308	ZUSATZHYDRAULIK KLAPPSPI
VERSCHRAUBUNG XGE16-SR-	471033208	601	1	717	967784508	HYDRAULIK TELE
VERSCHRAUBUNG XGE16-SR-	471033208	600	2	728	967785008	ZUSATZHYDRAULIK KLAPPSPI
VERSCHRAUBUNG XGE16-SR-	471033108	696	4	563	96045351	HYDRAULIK OBERWAGEN

Bezeichnung	Artikel	Pos.	Menge	Seite	Baugruppe	Bezeichnung
VERSCHRAUBUNG XGE18-LM	476607608	634	1	496	969763408	VERROHRUNG DRUCKLUFTA
VERSCHRAUBUNG XGE18-LR-	471031208	611	1	622	969426308	ZUSATZHYDRAULIK KLAPPSPI
VERSCHRAUBUNG XGE18-LR-	471037508	402	3	342	96066379	KRAFTSTOFFFILTER VORM.
VERSCHRAUBUNG XGE20-SM-	471033308	634	4	563	96045351	HYDRAULIK OBERWAGEN
VERSCHRAUBUNG XGE20-SM-	471034308	425	2	288	919007708	ANTRIEBSAGGREGAT VORM.
VERSCHRAUBUNG XGE20-SR-	471033408	607	28	56	96035801	HYDRAULIK MITTELTEIL
VERSCHRAUBUNG XGE20-SR-	471033408	682	4	563	96045351	HYDRAULIK OBERWAGEN
VERSCHRAUBUNG XGE22-LM-	471031308	600	4	562	96045351	HYDRAULIK OBERWAGEN
VERSCHRAUBUNG XGE22-LM-	471031308	636	1	617	967784808	HYDRAULIK HILFSHUBWERK
VERSCHRAUBUNG XGE22-LR-	471031408	683	4	563	96045351	HYDRAULIK OBERWAGEN
VERSCHRAUBUNG XGE25-SR-	471033608	603	2	56	96035801	HYDRAULIK MITTELTEIL
VERSCHRAUBUNG XGE35-LR-	471034508	602	3	56	96035801	HYDRAULIK MITTELTEIL
VERSCHRAUBUNG XGE35-LR-	471034508	624	1	98	96035796	HYDR.FAHRANTRIEB
VERSCHRAUBUNG XGE35-LR-	471034508	624	1	115	96035792	HYDR.FAHRANTRIEB
VERSCHRAUBUNG XGE6-LM-	471030108	16	8	135	917257108	ZENTRALSCHMIERUNG RAUP
VERSCHRAUBUNG XGE6-LR-	471030008	13	2	523	917261208	ZENTRALSCHMIERANLAGE O
VERSCHRAUBUNG XGE6-LR-	471030008	607	1	722	967785408	ZUSATZHYDRAULIK KLAPPSPI
VERSCHRAUBUNG XGE8-SM-	471032208	738	3	564	96045351	HYDRAULIK OBERWAGEN
VERSCHRAUBUNG XGE8-SM-	471032208	634	1	617	967784808	HYDRAULIK HILFSHUBWERK
VERSCHRAUBUNG XGEV38-S	471034408	606	9	56	96035801	HYDRAULIK MITTELTEIL
VERSCHRAUBUNG XGR12/6-L	475030108	625	2	57	96035801	HYDRAULIK MITTELTEIL
VERSCHRAUBUNG XGR15/12	475031708	714	1	563	96045351	HYDRAULIK OBERWAGEN
VERSCHRAUBUNG XGR35/22	475031208	607	1	98	96035796	HYDR.FAHRANTRIEB
VERSCHRAUBUNG XGR35/22	475031208	607	1	115	96035792	HYDR.FAHRANTRIEB
VERSCHRAUBUNG XSV10-L C	474030308	752	1	564	96045351	HYDRAULIK OBERWAGEN
VERSCHRAUBUNG XSV12-L C	474000408	621	1	57	96035801	HYDRAULIK MITTELTEIL
VERSCHRAUBUNG XSV12-S C	474032408	601	10	56	96035801	HYDRAULIK MITTELTEIL
VERSCHRAUBUNG XSV15-L C	474030508	753	1	564	96045351	HYDRAULIK OBERWAGEN
VERSCHRAUBUNG XSV20-S C	474032708	624	8	57	96035801	HYDRAULIK MITTELTEIL
VERSCHRAUBUNG XSV28-L C	474001008	600	3	56	96035801	HYDRAULIK MITTELTEIL
VERSCHRAUBUNG XSV38-S C	474033008	630	1	617	967784808	HYDRAULIK HILFSHUBWERK
VERSCHRAUBUNG XT10-L C	470430308	606	1	717	967784508	HYDRAULIK TELE
VERSCHRAUBUNG XT20-S C	470432608	702	1	563	96045351	HYDRAULIK OBERWAGEN
VERSCHRAUBUNG XT25-S C	470432708	832	1	565	96045351	HYDRAULIK OBERWAGEN
VERSCHRAUBUNG XT38-S C	470433008	791	1	564	96045351	HYDRAULIK OBERWAGEN
VERSCHRAUBUNG XW10-L C	470230308	602	1	728	967785008	ZUSATZHYDRAULIK KLAPPSPI
VERSCHRAUBUNG XW18-L C	470230608	645	1	496	969763408	VERROHRUNG DRUCKLUFTA
VERSCHRAUBUNG XW38-S C	470233408	799	1	564	96045351	HYDRAULIK OBERWAGEN
VERSCHRAUBUNG XWSV12-L	474200408	601	1	98	96035796	HYDR.FAHRANTRIEB
VERSCHRAUBUNG XWSV12-L	474200408	601	1	115	96035792	HYDR.FAHRANTRIEB
VERSCHRAUBUNG XWSV18-L	474231508	649	1	496	969763408	VERROHRUNG DRUCKLUFTA
VERSTELLMOTOR A6VE 170	11182596	3	1	75	91001377	RAUPENTRAEGER VORM.LI.
VERSTELLMOTOR A6VE 170	11182596	3	1	108	91001378	RAUPENTRAEGER VORM.RE.
VERSTELLMOTOR A6VM 150	11182597	2	1	365	917259708	HAUPTHUBWERK
VERSTELLMOTOR A6VM 150	11211058	9	1	604	967969608	HILFSHUBWERK WINDE 2 VO
VERSTELLPUMPE A10VNO SP	10871043	3	1	303	10871047	DREIFACHPUMPE
VERSTELLPUMPE A11V0 SPF	11210798	2	1	303	10871047	DREIFACHPUMPE
VERSTELLPUMPE A11VLO SP	10871282	108	1	287	919007708	ANTRIEBSAGGREGAT VORM.
VERSTELLPUMPE A4VG SPF	10871017	104	1	286	919007708	ANTRIEBSAGGREGAT VORM.
VERSTELLPUMPE A4VG SPF	11182708	103	1	286	919007708	ANTRIEBSAGGREGAT VORM.
VERSTELLPUMPE A4VG SPF	11210793	1	1	301	11182664	ZWEIFACHPUMPE
VERSTELLPUMPE A4VG SPF	11210794	2	1	301	11182664	ZWEIFACHPUMPE
VERSTELLPUMPE A4VG SPF	11210795	1	1	303	10871047	DREIFACHPUMPE
VERSTELLUNG	10326925	2	1	305	11210795	VERSTELLPUMPE
VERSTELLUNG	10472208	4	1	309	11210798	VERSTELLPUMPE
VERSTELLUNG	11690585	2	1	297	11182708	VERSTELLPUMPE
VERSTELLUNG	11690585	2	1	300	10871017	VERSTELLPUMPE
VERSTELLUNG HYDRAULISC	7023643	5	1	309	11210798	VERSTELLPUMPE
VERTEILER MASSE	926891108	25	1	544	969256608	GRUNDAUFBAU
VERTEILERBLOCK	12511916	1	1	228	10143341	KRAFTSTOFFLEITUNGEN

Bezeichnung	Artikel	Pos.	Menge	Seite	Baugruppe	Bezeichnung
VERTEILERBLOCK G1 1/2 /8 C	11214049	156	4	56	96035801	HYDRAULIK MITTELTEIL
VERTEILERGETRIEBE SPF	97029921	100	1	286	919007708	ANTRIEBSAGGREGAT VORM.
VERTEILERKASTEN 65X94X57	11114556	1	1	630	917368108	EL.KUEHLWASSERVORWAE
VERTEILERKOMBINATION 3/6	11002916	2	1	523	917261208	ZENTRALSCHMIERANLAGE O
VERTEILERKOMBINATION 4/7	774387208	3	1	523	917261208	ZENTRALSCHMIERANLAGE O
VERTEILERKOMBINATION MX	11347500	2	2	135	917257108	ZENTRALSCHMIERUNG RAUP
VISKOSEDAEMPFER D934 L	10118526	8	1	200	10141974	KURBELWELLENANBAUTEILE
VORHAENGESCHLOSS	885252008	4	1	767	917268208	LEITER ANBAU
VORHAENGESCHLOSS ABUS	885251508	11	1	92	968420608	STAUKASTEN VORM.
VORHAENGESCHLOSS ABUS	885251508	2	1	152	928569808	GRUNDWERKZEUG
VORHAENGESCHLOSS ABUS	885251508	7	1	157	96063087	STAUKASTEN
VORREIBER	10650295	4	4	393	968514508	SCHALTSCHRANKDECKEL EIN
VORSPANNVENTIL 25BAR	511322808	152	4	132	968077208	HYDRAULIK ABSTUETZUNG
WAELZLAGER 150X210X80	746506608	2	1	692	921456108	SEILROLLE KPL.
WAELZLAGER 150X210X80	746506608	2	1	694	967771908	SEILROLLE KPL.
WAELZLAGER 150X210X80	746506608	2	1	755	925203408	SEILROLLE KPL.
WAERMETAUSCHER ALU	10801858	14	1	428	11083498	HEIZKLIMAGERAET
WAGEN	966253908	2	2	423	966230508	FUEHRUNG VORM.
WAGEN 68X64.5X33 G-ALSI7	97001102	1	1	424	966253908	WAGEN
WALZENDUESE	10292013	28	8	399	917305408	INNENVERKLEIDUNG EINBAU
WANNE SCHWK. RAL 7016 SP	966241008	14	1	390	916170808	KABELEINFUEHRUNG
WARNDREIECK 430X45X30	10044762	1	1	153	928620108	ZUBEHOER
WARNLEUCHTE 14W 13-36V	10340105	5	1	467	96053500	ELEKTRIK ANBAUTEILE KABIN
WARNMARKIERUNG DIN 3071	11067612	1	0.54	166	917258108	SCHRAFFURPLAN
WARNMARKIERUNG DIN 48844	11067611	2	0.239	166	917258108	SCHRAFFURPLAN
WARNMARKIERUNG DIN 48844	11067611	3	0.689	166	917258108	SCHRAFFURPLAN
WARNMARKIERUNG DIN 48844	11067611	4	0.081	166	917258108	SCHRAFFURPLAN
WARNSCHILD UNFALLVERH	9412158	35	1	164	917862808	BESCHILDERUNG GROSSBRI
WARNWESTE EN ISO 20471	872101908	6	1	153	928620108	ZUBEHOER
WARTUNGSSCHALTER 0,05	11101017	101	1	520	918731908	LUFTFILTERANLAGE
WASSERBEHAELTER 505X126	97003164	1	1	416	966408908	WASSERBEHAELTER KPL.
WASSERBEHAELTER KPL.	966408908	1	1	415	916163008	WISCHANLAGE EINBAU
WASSERHEIZGERAET 24V	10876576	1	1	482	96020359	ZUSATZHEIZUNG VORM.
WASSERPUMPE MIT BEFEST.	10142733	370	1	177	13455297	DIESELMOTOR
WASSERPUMPE VORM. R-MO	10150386	1	1	245	10142733	WASSERPUMPE MIT BEFEST.
WASSERPUMPE VORM. R-MO	12863021	1	1	245	10142733	WASSERPUMPE MIT BEFEST.
WASSERSCHLAUCH DN4-RAU	11000710	17	1.3	415	916163008	WISCHANLAGE EINBAU
WASSERSCHLAUCH DN4-RAU	11000710	18	2.8	415	916163008	WISCHANLAGE EINBAU
WASSERSTANDSSONDE L=50	10335960	450	1	328	96034515	AUSGLEICHSBEHAELTER VO
WASSERVENTIL NW12X2,5 NI	11082158	17	2	500	918731808	HARNSTOFFANLAGE
WECHSELFILTER OEL 9µm	10297295	1	2	217	10142942	SCHMIEROELFILTER ANBAU
WECHSELVENTIL	11691104	40	1	319	10871282	VERSTELLPUMPE
WECHSELVENTIL	571535008	9	1	582	11341035	STEUERBLOCK
WECHSELVENTIL 350BAR	571529508	8	2	582	11341035	STEUERBLOCK
WECHSLERRELAIS 24V 10A SP	630121508	6	2	43	968054008	MONTAGEPLATTE VORM.
WECHSLERRELAIS 24V 10A SP	630121508	9	19	540	91000922	EINBAUTEILE SCHALTSCHRAN
WEGEMAGNETVENTIL	11482347	2	1	568	11211756	STEUERBLOCK
WEGESITZVENTIL 2/2	10280211	40	1	624	10038509	STEUERBLOCK
WEGEVENTIL	10280210	20	1	624	10038509	STEUERBLOCK
WEGEVENTIL	10801532	5	1	572	10413106	STEUERBLOCK
WEGEVENTIL	10801533	6	1	572	10413106	STEUERBLOCK
WEGEVENTIL	10801549	9	1	572	10413106	STEUERBLOCK
WEGEVENTIL	10801551	10	1	572	10413106	STEUERBLOCK
WEGEVENTIL	10872796	(1)	1	572	10413106	STEUERBLOCK
WEGEVENTIL	10874213	(1)	1	572	10413106	STEUERBLOCK
WEGEVENTIL	11004126	12	1	572	10413106	STEUERBLOCK
WEGEVENTIL	12106776	90	2	577	12100860	STEUERBLOCK
WEGEVENTIL	571303008	100	1	577	12100860	STEUERBLOCK
WEGEVENTIL	571415008	8	2	572	10413106	STEUERBLOCK
WEGEVENTIL 2/2 350BAR	511464108	55	1	560	96045351	HYDRAULIK OBERWAGEN

Bezeichnung	Artikel	Pos.	Menge	Seite	Baugruppe	Bezeichnung
WEGEVENTIL 2/2 350BAR SPF	511320108	63	1	560	96045351	HYDRAULIK OBERWAGEN
WEGEVENTIL 3/2 320BAR	511493608	50	1	717	967784508	HYDRAULIK TELE
WEGEVENTIL 3/2 350BAR	511444408	50	1	56	96035801	HYDRAULIK MITTELTEIL
WEGEVENTIL 3/2 350BAR	511444408	52	1	560	96045351	HYDRAULIK OBERWAGEN
WEGEVENTIL 3/2 350BAR	511444408	50	1	616	967784808	HYDRAULIK HILFSHUBWERK
WEGEVENTIL 3/2 NG10-350BA	10449853	64	1	560	96045351	HYDRAULIK OBERWAGEN
WEGEVENTIL 4/2 NG10-320BA	571737808	2	1	574	10332882	STEUERBLOCK
WEGEVENTIL 4/2 NG6-320BAR	571634708	40	1	577	12100860	STEUERBLOCK
WEGEVENTIL 4/2 NG6-350BAR	10652724	23	1	560	96045351	HYDRAULIK OBERWAGEN
WEGEVENTIL 4/2 NG6-350BAR	10652724	21	1	616	967784808	HYDRAULIK HILFSHUBWERK
WEGEVENTIL 4/3	10874849	4	2	568	11211756	STEUERBLOCK
WEGEVENTIL 4/3	10875074	3	3	568	11211756	STEUERBLOCK
WEGEVENTIL NG6	10332397	50	1	577	12100860	STEUERBLOCK
WEITWINKELSPIEGEL 219X17	591069508	2	1	440	916049908	SPIEGELANBAU KRANFUEHR
WEITWINKELSPIEGEL 316X17	591070908	1	1	476	917260408	SPIEGELANBAU DREHBUEHN
WELLE	11006491	11	1	704	10802064	SEILLAENGENGEBER
WELLE 50.0X1020 S355J2C+C	97030028	3	1	492	967928508	VERRIEGELUNG
WELLENDICHTRING	10335855	3	1	292	10429930	ZAHNRADMOTOR
WELLENDICHTRING 35X52X6/	7022315	20	1	316	10871043	VERSTELLPUMPE
WELLENDICHTRING 35X52X6/	7022315	(14)	1	359	510229408	HYDROMOTOR
WELLENDICHTRING 35X52X6/	7022315	14	1	360	570109008	TRIEBWERK
WELLENDICHTRING 55X70X7	571907608	38	1	321	10872488	TRIEBWERK
WELLENDICHTRING BAFSL 45	7021600	38	1	310	10663105	TRIEBWERK
WELLROHR DN10 PA 6	10475426	160	3.4	46	966204108	ANTENNE KPL.
WERKZEUG KLAPPSPITZE	917268108	352	1	14		LIEBHERR LTR 1220
WERKZEUG M.ZUBEHOER	919328608	24	1	12		LIEBHERR LTR 1220
WETTERKAPPE 114,3 EDELST	12100105	106	1	507	919674408	ABGASANLAGE
WINDENDREHGEBER 655360	10802061	5	1	375	966631008	ELEKTRIK WINDE 1
WINDENDREHGEBER 655360	10802061	(5)	1	604	967969608	HILFSHUBWERK WINDE 2 VO
WINDGESCHWINDIGKEITSGE	11482252	2	1	741	917598408	ELEKTRIK MESS-U.WARNEINR
WINDWARNUNG VORM.	967936408	2	1	743	968412508	MECHANIK MESS-U.WARNEI
WINKEL	571687808	18	1	699	571928508	ZYLINDERKOPF KPL.
WINKEL 4X150X118 S315MC	97031752	4	4	652	917260608	GEGENGEWICHT M.BEFESTIG
WINKEL SCHWK. FE//ZNNI8//C	968036508	1	1	31	968036408	ENDSCHALTER VORM.
WINKELGEBER 360° LSB PL:D	10802057	10	1	702	966473108	GEBER ANLENKSTUECK
WINKELGEBER 360° LSB PL:D	10802057	1	1	705	966200208	GEBER KOPFSTUECK
WINKELSCHRAUBENDREHER	10043002	41	1	152	928569808	GRUNDWERKZEUG
WINKELSCHRAUBENDREHER	10471363	40	1	152	928569808	GRUNDWERKZEUG
WINKELSTUTZEN	591051008	22	2	415	916163008	WISCHANLAGE EINBAU
WINKELSTUTZEN EW 12L M18	247117702	616	1	56	96035801	HYDRAULIK MITTELTEIL
WINKELSTUTZEN EW 12L M18	247117702	612	2	98	96035796	HYDR.FAHRANTRIEB
WINKELSTUTZEN EW 12L M18	247117702	612	2	115	96035792	HYDR.FAHRANTRIEB
WINKELSTUTZEN EW 12L M18	247117702	607	15	562	96045351	HYDRAULIK OBERWAGEN
WINKELSTUTZEN EW 12L M18	247117702	609	1	717	967784508	HYDRAULIK TELE
WINKELSTUTZEN EW 18L M26	247108302	644	2	57	96035801	HYDRAULIK MITTELTEIL
WINKELSTUTZEN EW 18L M26	247108302	401	2	342	96066379	KRAFTSTOFFFILTER VORM.
WINKELSTUTZEN EW 18L M26	247108302	635	1	496	969763408	VERROHRUNG DRUCKLUFTA
WINKELSTUTZEN EW 18L M26	247108302	710	2	563	96045351	HYDRAULIK OBERWAGEN
WINKELSTUTZEN EW 18L M26	247108302	610	1	622	969426308	ZUSATZHYDRAULIK KLAPPSPI
WINKELSTUTZEN EW 22L CR6	247126202	2	1	242	10145176	ROHRLEITUNG ANBAU
WINKELSTUTZEN EW 6L CR6-F	247021702	626	2	57	96035801	HYDRAULIK MITTELTEIL
WINKELSTUTZEN EW 6L CR6-F	247021702	18	2	135	917257108	ZENTRALSCHMIERUNG RAUP
WINKELSTUTZEN EW 8L CR6-F	247021802	35	1	500	918731808	HARNSTOFFANLAGE
WINKELVERSCHRAUBUNG	12433377	204	2	561	96045351	HYDRAULIK OBERWAGEN
WINKELVERSCHRAUBUNG G 1	11989723	840	1	296	97029921	VERTEILERGETRIEBE
WIPPZYLINDER 400/370-3305	12102921	1	1	646	919617008	WIPPZYLINDER M.LAGERUNG
WIPPZYLINDER M.LAGERUNG	919617008	111	1	12		LIEBHERR LTR 1220
WISCHANLAGE EINBAU	916163008	5	1	395	917304508	KRANFUEHRERKABINE VORM.
WISCHERARM 650MM	10292014	3	1	415	916163008	WISCHANLAGE EINBAU
WISCHERARM 900MM	10292015	22	1	409	966497908	FRONTSCHEIBE KPL.

Bezeichnung	Artikel	Pos.	Menge	Seite	Baugruppe	Bezeichnung
WISCHERBLATT 1000	10292017	23	1	409	966497908	FRONTSCHEIBE KPL.
WISCHERBLATT 700	10292016	5	1	415	916163008	WISCHANLAGE EINBAU
WISCHERGESTAENGE	10292018	7	1	415	916163008	WISCHANLAGE EINBAU
WISCHERGESTAENGE	10870968	8	1	415	916163008	WISCHANLAGE EINBAU
WISCHERMOTOR 55NM 24V	10292021	2	2	415	916163008	WISCHANLAGE EINBAU
WISCHLAGER ST	11001115	16	1	409	966497908	FRONTSCHEIBE KPL.
ZAHNRAD	10872521	80	1	428	11083498	HEIZKLIMAGERAET
ZAHNRAD 2,25	10133692	4	1	210	10138230	NOCKENWELLE KPL.
ZAHNRAD 2,5	10139764	4	1	209	10120186	MASSENAUSGLEICH ANBAU
ZAHNRAD 2,5	10139765	5	1	209	10120186	MASSENAUSGLEICH ANBAU
ZAHNRAD 2,5	9072834	3	1	196	10147438	KURBELWELLE MIT ZAHNRAD
ZAHNRAD 2,5	9073343	2	1	238	9080294	LUFTPRESSER VORM.
ZAHNRAD 2,75	10137602	(2)	1	210	10138230	NOCKENWELLE KPL.
ZAHNRAD VORM.	10138447	3	1	210	10138230	NOCKENWELLE KPL.
ZAHNRAD VORM.	10145049	(1)	1	210	10138230	NOCKENWELLE KPL.
ZAHNRADMOTOR AZMF 16CM	10429930	102	1	291	96034631	KUEHLER VORM.
ZAHNRADPUMPE FP12	10870965	110	1	287	919007708	ANTRIEBSAGGREGAT VORM.
ZAHNRADPUMPE WP09 SPF	10870964	109	1	287	919007708	ANTRIEBSAGGREGAT VORM.
ZAHNRADPUMPE WP09 SPF	11210201	106	1	286	919007708	ANTRIEBSAGGREGAT VORM.
ZAHNRIEMEN	11083453	1	1	428	11083498	HEIZKLIMAGERAET
ZAHNSCHEIBE 12X99/17RD S	938996501	90	1	353	90008901	DREHWERKANTRIEB
ZAHNSCHEIBE DIN 6797 A 2,7	425100408	24	4	540	91000922	EINBAUTEILE SCHALTSCHRAN
ZAHNSCHEIBE DIN 6797 A 3,2	425100508	269	2	714	968708708	KLEMMKASTEN KPL.
ZEIGER 3X146X110 DC01 FE//	97033038	9	1	363	917259608	DREHBUEHNENARRETIERUN
ZEITRELAIS 10 H 24V	10876716	8	1	540	91000922	EINBAUTEILE SCHALTSCHRAN
ZEITRELAIS 60S 24V	10877999	3	1	540	91000922	EINBAUTEILE SCHALTSCHRAN
ZELLGUMMI 20X12 CR SCHW	262104308	5	1.08	42	966167808	DECKEL KPL.
ZELLGUMMI 6X3X10000 CELL	262108908	4	0.5	450	964093408	DECKEL KPL.
ZENTRALBALLAST	919499408	22	1	12		LIEBHERR LTR 1220
ZENTRALBALLAST SCHWK. SP	96045601	50	1	150	919499408	ZENTRALBALLAST
ZENTRALBALLAST SCHWK. SP	96045603	51	1	150	919499408	ZENTRALBALLAST
ZENTRALSCHMIERANLAGE	921444108	200	1	604	967969608	HILFSHUBWERK WINDE 2 VO
ZENTRALSCHMIERANLAGE O	917261208	169	1	13		LIEBHERR LTR 1220
ZENTRALSCHMIERUNG RAUP	917257108	20	1	12		LIEBHERR LTR 1220
ZENTRALSTECKER 4-POL	602225508	518	1	462	96036955	KABELSTRANG
ZENTRALSTECKER 6-POL	602225608	519	1	462	96036955	KABELSTRANG
ZENTRIERFLANSCH 42CrMo4+	10142170	2	1	200	10141974	KURBELWELLENANBAUTEILE
ZIEHPILZ 90.0X16 4 35NICRM	973292708	26	1	690	917292408	TELESKOP 5 VORM.
ZIEHPILZ 90.0X21 0 35NICRM	973259708	11	1	685	917292308	TELESKOP 4 VORM.
ZIEHPILZ 90.0X25 5 35NICRM	973253908	11	1	681	917292208	TELESKOP 3 VORM.
ZUBEHOER	928620108	2	1	151	919328608	WERKZEUG M.ZUBEHOER
ZUENDSTARTSCHALTER 3S	10335557	50	1	467	96053500	ELEKTRIK ANBAUTEILE KABIN
ZUGGURT 47X2220	10334488	100	1	445	96036790	DREHBUEHNENVERKLEIDUN
ZUGGURT 47X2220	10334488	100	1	455	969015908	DREHBUEHNENVERKLEIDUN
ZUGSTANGE	10099209	25	4	136	11347526	ELEKTROPUMPE
ZUGSTANGE	10099209	28	4	525	10327065	ELEKTROPUMPE
ZUNGE	570340077	5	4	393	968514508	SCHALTSCHRANKDECKEL EIN
ZUNGE	704253708	5	5	86	967972208	DECKEL VORM.
ZUNGE	704253708	5	2	89	968270108	DECKEL VORM.
ZUNGE	704253708	5	2	90	968274208	DECKEL VORM.
ZUNGE	704253708	5	5	110	968055808	DECKEL VORM.
ZUNGE	704254008	9	1	92	968420608	STAUKASTEN VORM.
ZUNGE	704256708	8	4	42	966167808	DECKEL KPL.
ZUNGE	704259308	3	1	450	964093408	DECKEL KPL.
ZUNGE 45X19 STAHL VERZ	704259008	5	2	87	967972308	DECKEL VORM.
ZUNGE 45X19 STAHL VERZ	704259008	5	2	88	967972408	DECKEL VORM.
ZUNGE 45X19 STAHL VERZ	704259008	5	2	91	968709108	DECKEL VORM.
ZUNGE 45X19 STAHL VERZ	704259008	15	1	334	96023117	BATTERIEKASTEN VORM.
ZURRGURT 0,35MX18MM	7621780	5	1	741	917598408	ELEKTRIK MESS-U.WARNEINR
ZURRGURT 0,75MX18MM	10020520	120	4	287	919007708	ANTRIEBSAGGREGAT VORM.

Bezeichnung	Artikel	Pos.	Menge	Seite	Baugruppe	Bezeichnung
ZURRGURT 1,25MX25MM PO	11492423	12	1	767	917268208	LEITER ANBAU
ZURRGURT 1MX35MM POLYTE	11481963	78	1	150	919499408	ZENTRALBALLAST
ZURRGURT 4MX35MM POLYTE	10491593	79	2	150	919499408	ZENTRALBALLAST
ZURRGURT EN 12195-2 6MX3	779034708	3	1	752	917531708	BALLASTTRAVERSE
ZUSATZBALLAST	917404008	148	1	13		LIEBHERR LTR 1220
ZUSATZBESCHILD.CALIFORN	919553608	78	1	12		LIEBHERR LTR 1220
ZUSATZBESCHILDERUNG FA	916283508	40	1	12		LIEBHERR LTR 1220
ZUSATZHEIZUNG OW	918759808	145	1	13		LIEBHERR LTR 1220
ZUSATZHEIZUNG VORM.	96020359	1	1	480	918759808	ZUSATZHEIZUNG OW
ZUSATZHYDRAULIK	96056969	14	1	155	91001571	BOLZENZIEHVORRICHTUNG
ZUSATZHYDRAULIK KLAPPSPI	917262508	229	1	14		LIEBHERR LTR 1220
ZUSATZHYDRAULIK KLAPPSPI	917265308	302	1	14		LIEBHERR LTR 1220
ZUSATZHYDRAULIK KLAPPSPI	967785008	4	1	726	917265308	ZUSATZHYDRAULIK KLAPPSPI
ZUSATZHYDRAULIK KLAPPSPI	967785408	4	1	720	917262508	ZUSATZHYDRAULIK KLAPPSPI
ZUSATZHYDRAULIK KLAPPSP	917966708	364	1	15		LIEBHERR LTR 1220
ZUSATZHYDRAULIK KLAPPSP	969426308	4	1	620	917966708	ZUSATZHYDRAULIK KLAPPSPI
ZUSATZTEILE DREHBUEHNV	917610208	141	1	13		LIEBHERR LTR 1220
ZUSATZTEILE STUFE 5	919373908	164	1	13		LIEBHERR LTR 1220
ZUSATZTEILE VERKLEIDUNG	96039752	1	1	517	919373908	ZUSATZTEILE STUFE 5
ZWEIFACHPUMPE A4VG+A4V	11182664	105	1	286	919007708	ANTRIEBSAGGREGAT VORM.
ZWILLINGSMAGNET	10114441	8	1	63	11643183	STEUERBLOCK
ZWILLINGSMAGNET	10114441	8	1	66	11643184	STEUERBLOCK
ZWISCHENPLATTENVENTIL	571414608	3	1	572	10413106	STEUERBLOCK
ZWISCHENPLATTENVENTIL	571562408	4	1	572	10413106	STEUERBLOCK
ZWISCHENRAD KPL.	9072906	331	1	177	13455297	DIESELMOTOR
ZWISCHENRAD VORM.	9072904	1	1	241	9072906	ZWISCHENRAD KPL.
ZWISCHENRADACHSE 42CrM	9072907	2	1	241	9072906	ZWISCHENRAD KPL.
ZWISCHENRING	10014730	8	1	136	11347526	ELEKTROPUMPE
ZWISCHENRING	10014730	8	1	525	10327065	ELEKTROPUMPE
ZWISCHENSTUECK 11SMnPb3	10132935	16	1	229	10143342	LECKOELRUECKLAUF
ZWOELFKANTSCHRAUBE M1	12475399	4	1	252	10140729	ATL-ANBAU
ZYLINDER	570110308	1	1	361	570109508	TRIEBWERK
ZYLINDER R-MOTORXD944/D9	10154458	80	4	180	11389608	KURBELGEHAEUSE KPL. MIT
ZYLINDERBUCHSE R-MOTORX	10153973	1	1	182	10154458	ZYLINDER
ZYLINDERBUCHSE R-MOTORX	12898375	1	1	182	10154458	ZYLINDER
ZYLINDERGRIFF	704004608	120	1	294	968026308	KUPPLUNGSSTELLER
ZYLINDERKOPF	7025732	23	1	240	5700161	LUFTPRESSER
ZYLINDERKOPF ANBAU R-MO	10149580	80	4	175	13455297	DIESELMOTOR
ZYLINDERKOPF KPL.	571928508	4	1	697	10876933	TELESKOPIERZYLINDER
ZYLINDERKOPF R-MOTOR	10145862	1	1	205	10149578	ZYLINDERKOPF
ZYLINDERKOPF R-MOTOR	10149578	(1)	1	202	10149580	ZYLINDERKOPF ANBAU
ZYLINDERKOPF R-MOTOR	10149578	1	1	204	10149579	ZYLINDERKOPF VORM.
ZYLINDERKOPF VORM. R-MO	10149579	1	1	202	10149580	ZYLINDERKOPF ANBAU
ZYLINDERKOPF VORM. R-MO	13476764	1	1	202	10149580	ZYLINDERKOPF ANBAU
ZYLINDERKOPFDECKEL	10134698	3	1	208	11358102	ZYLINDERKOPFDECKEL ANBA
ZYLINDERKOPFDECKEL	10134750	1	2	208	11358102	ZYLINDERKOPFDECKEL ANBA
ZYLINDERKOPFDECKEL	12874086	2	1	208	11358102	ZYLINDERKOPFDECKEL ANBA
ZYLINDERKOPFDECKEL ANBA	11358102	82	1	175	13455297	DIESELMOTOR
ZYLINDERKOPFDICHTUNG	10133667	2	1	202	10149580	ZYLINDERKOPF ANBAU
ZYLINDERROLLE 14X14	747006101	17	114	370	939292201	PLANETENGETRIEBE
ZYLINDERROLLE 14X14	747006101	17	114	610	939294201	PLANETENGETRIEBE
ZYLINDERROLLE DIN 5402-1	747004501	3	78	78	90028956	FAHRANTRIEB
ZYLINDERROLLENLAGER	571899308	(31)	1	305	11210795	VERSTELLPUMPE
ZYLINDERROLLENLAGER	7023703	10	1	311	10008308	ANSCHLUSSPLATTE
ZYLINDERROLLENLAGER	7367374	31	1	310	10663105	TRIEBWERK
ZYLINDERROLLENLAGER 50X	571477908	31	1	321	10872488	TRIEBWERK
ZYLINDERROLLENLAGER DIN	500926208	430	2	296	97029921	VERTEILERGETRIEBE
ZYLINDERSCHRAUBE DIN 691	10875559	86	4	150	919499408	ZENTRALBALLAST
ZYLINDERSCHRAUBE DIN 691	10875559	38	6	433	918810308	STEUERSTAND
ZYLINDERSCHRAUBE DIN 691	10875561	33	20	673	917292008	TELESKOP 1 VORM.

Bezeichnung	Artikel	Pos.	Menge	Seite	Baugruppe	Bezeichnung
ZYLINDERSCHRAUBE DIN 691	10875561	33	20	677	917292108	TELESKOP 2 VORM.
ZYLINDERSCHRAUBE DIN 691	10875561	33	20	681	917292208	TELESKOP 3 VORM.
ZYLINDERSCHRAUBE DIN 691	10875561	33	20	685	917292308	TELESKOP 4 VORM.
ZYLINDERSCHRAUBE DIN 691	10875561	36	12	690	917292408	TELESKOP 5 VORM.
ZYLINDERSCHRAUBE DIN 69	571310608	113	4	76	91001377	RAUPENTRAEGER VORM.LI.
ZYLINDERSCHRAUBE DIN 69	571310608	114	4	109	91001378	RAUPENTRAEGER VORM.RE.
ZYLINDERSCHRAUBE DIN 798	4980927	9	3	210	10138230	NOCKENWELLE KPL.
ZYLINDERSCHRAUBE DIN 798	4980927	9	3	210	10138230	NOCKENWELLE KPL.
ZYLINDERSCHRAUBE DIN 79	10179392	18	4	20	91001569	RAUPENFAHRWERK KPL.
ZYLINDERSCHRAUBE DIN 798	240122602	9	3	210	10138230	NOCKENWELLE KPL.
ZYLINDERSCHRAUBE DIN 798	240122602	9	3	210	10138230	NOCKENWELLE KPL.
ZYLINDERSCHRAUBE DIN 79	10180175	332	8	288	919007708	ANTRIEBSAGGREGAT VORM.
ZYLINDERSCHRAUBE DIN 79	12691559	(3)	4	319	10871282	VERSTELLPUMPE
ZYLINDERSCHRAUBE DIN 79	12103956	20	2	31	968036408	ENDSCHALTER VORM.
ZYLINDERSCHRAUBE DIN 798	540511908	336	3	288	919007708	ANTRIEBSAGGREGAT VORM.
ZYLINDERSCHRAUBE DIN 798	12217473	45	2	699	571928508	ZYLINDERKOPF KPL.
ZYLINDERSCHRAUBE DIN 798	10876084	34	14	409	966497908	FRONTSCHEIBE KPL.
ZYLINDERSCHRAUBE DIN 798	12216054	104	4	76	91001377	RAUPENTRAEGER VORM.LI.
ZYLINDERSCHRAUBE DIN 798	12216054	105	4	109	91001378	RAUPENTRAEGER VORM.RE.
ZYLINDERSCHRAUBE DIN 798	12216054	99	9	674	917292008	TELESKOP 1 VORM.
ZYLINDERSCHRAUBE DIN 798	12216054	99	9	678	917292108	TELESKOP 2 VORM.
ZYLINDERSCHRAUBE DIN 798	12216054	99	9	682	917292208	TELESKOP 3 VORM.
ZYLINDERSCHRAUBE DIN 798	12216054	99	9	686	917292308	TELESKOP 4 VORM.
ZYLINDERSCHRAUBE DIN 798	12216056	64	12	674	917292008	TELESKOP 1 VORM.
ZYLINDERSCHRAUBE DIN 798	12216056	64	12	678	917292108	TELESKOP 2 VORM.
ZYLINDERSCHRAUBE DIN 798	12216056	64	12	682	917292208	TELESKOP 3 VORM.
ZYLINDERSCHRAUBE DIN 798	12216056	64	12	686	917292308	TELESKOP 4 VORM.
ZYLINDERSCHRAUBE DIN 798	12216056	33	20	690	917292408	TELESKOP 5 VORM.
ZYLINDERSCHRAUBE DIN 84	510797708	22	1	585	511433908	DRUCKBEGRENZUNGSVENTI
ZYLINDERSCHRAUBE DIN 84	510797708	22	1	588	511419608	DRUCKBEGRENZUNGSVENTI
ZYLINDERSCHRAUBE DIN 912	404360408	27	4	572	10413106	STEUERBLOCK
ZYLINDERSCHRAUBE DIN 912	404319708	25	4	319	10871282	VERSTELLPUMPE
ZYLINDERSCHRAUBE DIN 912	10876394	320	4	561	96045351	HYDRAULIK OBERWAGEN
ZYLINDERSCHRAUBE DIN 912	10876394	11	8	568	11211756	STEUERBLOCK
ZYLINDERSCHRAUBE ISO 12	10875564	47	2	544	969256608	GRUNDAUFBAU
ZYLINDERSCHRAUBE ISO 12	10875564	300	4	629	918377508	KUEHLWASSERVORWAERM
ZYLINDERSCHRAUBE ISO 12	10875564	47	1	690	917292408	TELESKOP 5 VORM.
ZYLINDERSCHRAUBE ISO 14	11600879	3	1	224	10135434	BEFESTIGUNG DRUCKROHR
ZYLINDERSCHRAUBE ISO 145	12219491	3	1	221	10152867	INJEKTOR MIT BEFEST.
ZYLINDERSCHRAUBE ISO 145	12219491	3	1	222	10152874	RS INJEKTOR
ZYLINDERSCHRAUBE ISO 47	10562617	317	2	287	919007708	ANTRIEBSAGGREGAT VORM.
ZYLINDERSCHRAUBE ISO 47	12208101	319	2	287	919007708	ANTRIEBSAGGREGAT VORM.
ZYLINDERSCHRAUBE ISO 47	12208101	41	2	699	571928508	ZYLINDERKOPF KPL.
ZYLINDERSCHRAUBE ISO 476	11320344	71	12	370	939292201	PLANETENGETRIEBE
ZYLINDERSCHRAUBE ISO 476	11320344	71	12	610	939294201	PLANETENGETRIEBE
ZYLINDERSCHRAUBE ISO 47	10876074	320	2	287	919007708	ANTRIEBSAGGREGAT VORM.
ZYLINDERSCHRAUBE ISO 476	12222407	20	16	129	919644008	HYDRAULISCHE ABSTUETZUN
ZYLINDERSCHRAUBE ISO 476	12222407	312	2	287	919007708	ANTRIEBSAGGREGAT VORM.
ZYLINDERSCHRAUBE ISO 476	12222407	301	2	291	96034631	KUEHLER VORM.
ZYLINDERSCHRAUBE ISO 476	12219296	32	8	35	917511508	RAUPENMITTELTEIL VORM.
ZYLINDERSCHRAUBE ISO 47	404293213	11	1	381	919010208	KRANFUEHRERKABINE VORM.
ZYLINDERSCHRAUBE ISO 47	10650720	2	2	275	10125687	NEBENABTRIEB ANBAU
ZYLINDERSCHRAUBE ISO 476	10415162	21	4	30	968019508	ENDSCHALTER ANBAU
ZYLINDERSCHRAUBE ISO 476	10415162	315	1	287	919007708	ANTRIEBSAGGREGAT VORM.
ZYLINDERSCHRAUBE ISO 476	10415162	52	12	370	939292201	PLANETENGETRIEBE
ZYLINDERSCHRAUBE ISO 476	10415162	12	12	489	918956108	HYDRAULISCHE BALLASTIER
ZYLINDERSCHRAUBE ISO 476	10415162	52	12	610	939294201	PLANETENGETRIEBE
ZYLINDERSCHRAUBE ISO 47	404230108	30	12	124	968046208	ANBAUTEILE
ZYLINDERSCHRAUBE ISO 47	11002743	4	4	276	10144036	NEBENABTRIEB ANBAU
ZYLINDERSCHRAUBE ISO 476	10875571	58	2	75	91001377	RAUPENTRAEGER VORM.LI.

Bezeichnung	Artikel	Pos.	Menge	Seite	Baugruppe	Bezeichnung
ZYLINDERSCHRAUBE ISO 476	10875571	58	2	108	91001378	RAUPENTRAEGER VORM.RE.
ZYLINDERSCHRAUBE ISO 476	10875571	6	6	363	917259608	DREHBUEHNENARRETIERUN
ZYLINDERSCHRAUBE ISO 476	10875571	18	4	365	917259708	HAUPTHUBWERK
ZYLINDERSCHRAUBE ISO 476	10875571	14	2	493	967978908	VERRIEGELUNG VORM.
ZYLINDERSCHRAUBE ISO 476	10875571	555	14	562	96045351	HYDRAULIK OBERWAGEN
ZYLINDERSCHRAUBE ISO 47	10468820	19	6	365	917259708	HAUPTHUBWERK
ZYLINDERSCHRAUBE ISO 476	10875572	5	8	351	919369308	DREHWERK
ZYLINDERSCHRAUBE ISO 476	10875572	23	8	673	917292008	TELESKOP 1 VORM.
ZYLINDERSCHRAUBE ISO 476	10875572	23	8	677	917292108	TELESKOP 2 VORM.
ZYLINDERSCHRAUBE ISO 476	10875572	23	8	681	917292208	TELESKOP 3 VORM.
ZYLINDERSCHRAUBE ISO 476	10875572	23	8	685	917292308	TELESKOP 4 VORM.
ZYLINDERSCHRAUBE ISO 476	10875572	18	8	690	917292408	TELESKOP 5 VORM.
ZYLINDERSCHRAUBE ISO 47	404309408	62	24	78	90028956	FAHRANTRIEB
ZYLINDERSCHRAUBE ISO 476	11657000	56	12	370	939292201	PLANETENGETRIEBE
ZYLINDERSCHRAUBE ISO 476	11657000	335	2	562	96045351	HYDRAULIK OBERWAGEN
ZYLINDERSCHRAUBE ISO 476	11657000	56	12	610	939294201	PLANETENGETRIEBE
ZYLINDERSCHRAUBE ISO 47	11008297	2	4	218	10150741	HOCHDRUCKPUMPE MIT BEFE
ZYLINDERSCHRAUBE ISO 476	240186402	23	4	572	10413106	STEUERBLOCK
ZYLINDERSCHRAUBE ISO 476	240186402	29	4	572	10413106	STEUERBLOCK
ZYLINDERSCHRAUBE ISO 476	12223034	25	1	608	939294001	SEILTROMMEL
ZYLINDERSCHRAUBE ISO 476	11321144	7	15	262	10115829	SCHWUNGRADGEHAEUSE AN
ZYLINDERSCHRAUBE ISO 47	4043006	5	2	206	10148438	KIPPHEBELBOCK KPL.
ZYLINDERSCHRAUBE ISO 47	10875574	14	4	701	966134608	ANBAUTEILE ZYLINDER
ZYLINDERSCHRAUBE ISO 476	12223057	6	4	351	919369308	DREHWERK
ZYLINDERSCHRAUBE ISO 476	12223057	2	2	638	968267108	ANBAUTEILE KAMERA
ZYLINDERSCHRAUBE ISO 47	11321126	11	8	299	11631893	LAGERFLANSCH
ZYLINDERSCHRAUBE ISO 47	404294613	17	4	387	916177508	TRITT KPL.
ZYLINDERSCHRAUBE ISO 476	10875578	76	8	78	90028956	FAHRANTRIEB
ZYLINDERSCHRAUBE ISO 476	10875578	64	12	150	919499408	ZENTRALBALLAST
ZYLINDERSCHRAUBE ISO 476	4980012	6	2	262	10115829	SCHWUNGRADGEHAEUSE AN
ZYLINDERSCHRAUBE ISO 476	10875565	92	8	78	90028956	FAHRANTRIEB
ZYLINDERSCHRAUBE ISO 476	10875565	77	8	370	939292201	PLANETENGETRIEBE
ZYLINDERSCHRAUBE ISO 476	10875565	20	8	492	967928508	VERRIEGELUNG
ZYLINDERSCHRAUBE ISO 476	10875565	553	12	562	96045351	HYDRAULIK OBERWAGEN
ZYLINDERSCHRAUBE ISO 476	10875565	77	8	610	939294201	PLANETENGETRIEBE
ZYLINDERSCHRAUBE ISO 476	10875565	555	4	617	967784808	HYDRAULIK HILFSHUBWERK
ZYLINDERSCHRAUBE ISO 476	4980257	12	12	210	10138230	NOCKENWELLE KPL.
ZYLINDERSCHRAUBE ISO 47	404312108	338	4	562	96045351	HYDRAULIK OBERWAGEN
ZYLINDERSCHRAUBE ISO 476	11840140	50	8	124	968046208	ANBAUTEILE
ZYLINDERSCHRAUBE ISO 476	11840140	33	14	129	919644008	HYDRAULISCHE ABSTUETZUN
ZYLINDERSCHRAUBE ISO 476	11840140	39	4	668	917291908	ANLENKSTUECK VORM.
ZYLINDERSCHRAUBE ISO 476	11840140	46	4	673	917292008	TELESKOP 1 VORM.
ZYLINDERSCHRAUBE ISO 476	11840140	46	4	677	917292108	TELESKOP 2 VORM.
ZYLINDERSCHRAUBE ISO 476	11840140	46	4	681	917292208	TELESKOP 3 VORM.
ZYLINDERSCHRAUBE ISO 476	11840140	46	4	685	917292308	TELESKOP 4 VORM.
ZYLINDERSCHRAUBE ISO 476	11840140	10	7	701	966134608	ANBAUTEILE ZYLINDER
ZYLINDERSCHRAUBE ISO 476	10876374	31	48	20	91001569	RAUPENFAHRWERK KPL.
ZYLINDERSCHRAUBE ISO 47	11320850	66	24	78	90028956	FAHRANTRIEB
ZYLINDERSCHRAUBE ISO 476	12100905	20	12	572	10413106	STEUERBLOCK
ZYLINDERSCHRAUBE ISO 47	10353713	303	4	511	96051842	ABGASANLAGE VORM.
ZYLINDERSCHRAUBE ISO 47	10663388	4	48	351	919369308	DREHWERK
ZYLINDERSCHRAUBE ISO 476	10876373	552	32	56	96035801	HYDRAULIK MITTELTEIL
ZYLINDERSCHRAUBE ISO 476	10876373	551	8	98	96035796	HYDR.FAHRANTRIEB
ZYLINDERSCHRAUBE ISO 476	10876373	551	8	115	96035792	HYDR.FAHRANTRIEB
ZYLINDERSCHRAUBE ISO 476	10876373	552	12	562	96045351	HYDRAULIK OBERWAGEN
ZYLINDERSCHRAUBE ISO 476	10876373	550	4	616	967784808	HYDRAULIK HILFSHUBWERK
ZYLINDERSCHRAUBE ISO 476	10876373	550	12	717	967784508	HYDRAULIK TELE
ZYLINDERSCHRAUBE ISO 476	10878821	557	25	562	96045351	HYDRAULIK OBERWAGEN
ZYLINDERSCHRAUBE ISO 476	10001080	21	24	370	939292201	PLANETENGETRIEBE
ZYLINDERSCHRAUBE ISO 476	404318008	21	24	610	939294201	PLANETENGETRIEBE

Bezeichnung	Artikel	Pos.	Menge	Seite	Baugruppe	Bezeichnung
ZYLINDERSCHRAUBE ISO 47	12209898	7	1	95	96062678	HEBEL VORM.
ZYLINDERSCHRAUBE ISO 476	4042302	66	4	674	917292008	TELESKOP 1 VORM.
ZYLINDERSCHRAUBE ISO 476	4042302	66	4	678	917292108	TELESKOP 2 VORM.
ZYLINDERSCHRAUBE ISO 476	4042302	66	4	682	917292208	TELESKOP 3 VORM.
ZYLINDERSCHRAUBE ISO 476	4042302	66	4	686	917292308	TELESKOP 4 VORM.
ZYLINDERSCHRAUBE ISO 476	4042302	66	4	691	917292408	TELESKOP 5 VORM.
ZYLINDERSCHRAUBE ISO 47	404317008	11	28	365	917259708	HAUPTHUBWERK
ZYLINDERSCHRAUBE ISO 47	404317008	14	28	604	967969608	HILFSHUBWERK WINDE 2 VO
ZYLINDERSCHRAUBE ISO 476	12224014	337	3	288	919007708	ANTRIEBSAGGREGAT VORM.
ZYLINDERSCHRAUBE ISO 476	12224014	17	4	365	917259708	HAUPTHUBWERK
ZYLINDERSCHRAUBE ISO 47	10001077	31	4	608	939294001	SEILTROMMEL
ZYLINDERSCHRAUBE ISO 47	10001074	5	4	673	917292008	TELESKOP 1 VORM.
ZYLINDERSCHRAUBE ISO 47	10001074	5	4	677	917292108	TELESKOP 2 VORM.
ZYLINDERSCHRAUBE ISO 47	10001074	5	4	681	917292208	TELESKOP 3 VORM.
ZYLINDERSCHRAUBE ISO 47	10001074	5	4	685	917292308	TELESKOP 4 VORM.
ZYLINDERSCHRAUBE ISO 47	10001074	29	4	690	917292408	TELESKOP 5 VORM.
ZYLINDERSCHRAUBE ISO 476	12692012	15	32	20	91001569	RAUPENFAHRWERK KPL.
ZYLINDERSCHRAUBE ISO 47	4000521	6	24	367	90208882	KOMPAKTSEILWINDE
ZYLINDERSCHRAUBE ISO 476	10878829	13	4	348	969050308	OELBEHAELTER VORM.
ZYLINDERSCHRAUBE ISO 476	12692008	10	4	767	917268208	LEITER ANBAU
ZYLINDERSCHRAUBE ISO 47	404320908	11	12	78	90028956	FAHRANTRIEB
ZYLINDERSCHRAUBE ISO 476	12691987	14	4	348	969050308	OELBEHAELTER VORM.
ZYLINDERSCHRAUBE ISO 47	10293537	23	1	75	91001377	RAUPENTRAEGER VORM.LI.
ZYLINDERSCHRAUBE ISO 47	10293537	23	1	108	91001378	RAUPENTRAEGER VORM.RE.
ZYLINDERSCHRAUBE ISO 476	10878580	34	14	20	91001569	RAUPENFAHRWERK KPL.
ZYLINDERSCHRAUBE ISO 47	11691539	15	4	381	919010208	KRANFUEHRERKABINE VORM.
ZYLINDERSCHRAUBE ISO 47	11691539	36	8	433	918810308	STEUERSTAND
ZYLINDERSCHRAUBE ISO 47	11691539	89	1	669	917291908	ANLENKSTUECK VORM.
ZYLINDERSCHRAUBE ISO 47	10876395	7	4	63	11643183	STEUERBLOCK
ZYLINDERSCHRAUBE ISO 47	10876395	15	4	63	11643183	STEUERBLOCK
ZYLINDERSCHRAUBE ISO 47	10876395	15	4	66	11643184	STEUERBLOCK
ZYLINDERSCHRAUBE ISO 47	10876395	45	16	544	969256608	GRUNDAUFBAU
ZYLINDERSCHRAUBE ISO 47	10875815	6	3	745	967936408	WINDWARNUNG VORM.
ZYLINDERSCHRAUBE ISO 476	4901531	7	3	66	11643184	STEUERBLOCK
ZYLINDERSCHRAUBE ISO 476	4901531	19	4	570	10342823	DRUCKREGELVENTIL
ZYLINDERSCHRAUBE ISO 47	11690042	10	2	426	917676208	HEIZUNG KRANFUEHRERKAB
ZYLINDERSCHRAUBE ISO 47	11690042	34	24	433	918810308	STEUERSTAND
ZYLINDERSCHRAUBE ISO 47	11690042	12	4	602	917267108	HILFSHUBWERK WINDE 2
ZYLINDERSCHRAUBE ISO 47	11690042	15	4	758	917413208	SELBSTMONTAGE HILFSHU
ZYLINDERSCHRAUBE ISO 47	10875582	62	2	400	917305408	INNENVERKLEIDUNG EINBAU
ZYLINDERSCHRAUBE ISO 47	10875582	4	4	625	918462708	FREMDEINSPEISUNG
ZYLINDERSCHRAUBE ISO 47	10875582	3	4	627	917269408	KONSOLE FREMDEINSPEISUN
ZYLINDERSCHRAUBE ISO 47	10875582	4	2	627	917269408	KONSOLE FREMDEINSPEISUN
ZYLINDERSCHRAUBE ISO 47	10875583	47	4	310	10663105	TRIEBWERK
ZYLINDERSCHRAUBE ISO 47	10875583	20	11	387	916177508	TRITT KPL.
ZYLINDERSCHRAUBE ISO 47	10875584	18	4	39	96045225	ELEKTRIK MITTELSTUECK
ZYLINDERSCHRAUBE ISO 47	10875584	63	1	400	917305408	INNENVERKLEIDUNG EINBAU
ZYLINDERSCHRAUBE ISO 47	12204614	3	4	135	917257108	ZENTRALSCHMIERUNG RAUP
ZYLINDERSCHRAUBE ISO 47	12204614	3	5	339	968999708	KRAFTSTOFFBEHAELTER VO
ZYLINDERSCHRAUBE ISO 47	12204614	4	4	523	917261208	ZENTRALSCHMIERANLAGE O
ZYLINDERSCHRAUBE ISO 47	12203070	37	2	428	11083498	HEIZKLIMAGERAET
ZYLINDERSCHRAUBE ISO 47	404361208	9	16	568	11211756	STEUERBLOCK
ZYLINDERSCHRAUBE ISO 47	404361208	4	4	570	10342823	DRUCKREGELVENTIL
ZYLINDERSCHRAUBE ISO 476	10181382	302	4	561	96045351	HYDRAULIK OBERWAGEN
ZYLINDERSCHRAUBE ISO 476	10181382	303	4	616	967784808	HYDRAULIK HILFSHUBWERK
ZYLINDERSCHRAUBE ISO 47	12216217	40	4	433	918810308	STEUERSTAND
ZYLINDERSCHRAUBE ISO 47	404364108	10	4	568	11211756	STEUERBLOCK
ZYLINDERSCHRAUBE ISO 47	11690044	10	3	375	966631008	ELEKTRIK WINDE 1
ZYLINDERSCHRAUBE ISO 47	11690044	33	6	378	917259908	KRANFUEHRERKABINE ANBA
ZYLINDERSCHRAUBE ISO 47	11690044	300	2	520	918731908	LUFTFILTERANLAGE

Bezeichnung	Artikel	Pos.	Menge	Seite	Baugruppe	Bezeichnung
ZYLINDERSCHRAUBE ISO 476	12100256	311	2	98	96035796	HYDR.FAHRANTRIEB
ZYLINDERSCHRAUBE ISO 476	12100256	311	2	115	96035792	HYDR.FAHRANTRIEB
ZYLINDERSCHRAUBE ISO 47	10875586	12	8	35	917511508	RAUPENMITTELTEIL VORM.
ZYLINDERSCHRAUBE ISO 47	10875586	13	4	63	11643183	STEUERBLOCK
ZYLINDERSCHRAUBE ISO 47	10875586	13	4	66	11643184	STEUERBLOCK
ZYLINDERSCHRAUBE ISO 47	10875586	3	1	265	10127979	VERSCHLUSSTEILE
ZYLINDERSCHRAUBE ISO 47	10875586	(3)	1	273	12583633	MOTORREGELUNGSENSORIK
ZYLINDERSCHRAUBE ISO 47	10875586	(2)	1	273	12583633	MOTORREGELUNGSENSORIK
ZYLINDERSCHRAUBE ISO 47	10875586	14	2	410	965784408	DACHSCHEIBE VORM.
ZYLINDERSCHRAUBE ISO 47	10875586	4	1	659	925141508	SCHLAUCHFUEHRUNG VORM.
ZYLINDERSCHRAUBE ISO 476	404250914	51	1	421	917304708	SCHIEBETUER EINBAU
ZYLINDERSCHRAUBE ISO 476	12224196	316	2	561	96045351	HYDRAULIK OBERWAGEN
ZYLINDERSCHRAUBE ISO 47	11140465	332	4	562	96045351	HYDRAULIK OBERWAGEN
ZYLINDERSCHRAUBE ISO 476	12225935	41	4	433	918810308	STEUERSTAND
ZYLINDERSCHRAUBE ISO 47	10875588	310	27	56	96035801	HYDRAULIK MITTELTEIL
ZYLINDERSCHRAUBE ISO 47	10875588	6	3	136	11347526	ELEKTROPUMPE
ZYLINDERSCHRAUBE ISO 47	10875588	47	4	321	10872488	TRIEBWERK
ZYLINDERSCHRAUBE ISO 47	10875588	(1)	2	381	919010208	KRANFUEHRERKABINE VORM.
ZYLINDERSCHRAUBE ISO 47	10875588	6	3	525	10327065	ELEKTROPUMPE
ZYLINDERSCHRAUBE ISO 47	10875588	329	2	562	96045351	HYDRAULIK OBERWAGEN
ZYLINDERSCHRAUBE ISO 47	10875588	309	2	616	967784808	HYDRAULIK HILFSHUBWERK
ZYLINDERSCHRAUBE ISO 47	404291213	14	4	63	11643183	STEUERBLOCK
ZYLINDERSCHRAUBE ISO 47	404291213	14	4	66	11643184	STEUERBLOCK
ZYLINDERSCHRAUBE ISO 47	4901159	3	4	317	11692439	STEUERVENTIL
ZYLINDERSCHRAUBE ISO 47	11820284	23	2	387	916177508	TRITT KPL.
ZYLINDERSCHRAUBE ISO 47	11820284	11	4	390	916170808	KABELEINFUEHRUNG
ZYLINDERSCHRAUBE ISO 47	11820284	307	6	496	969763408	VERROHRUNG DRUCKLUFTA
ZYLINDERSCHRAUBE ISO 47	11820284	73	4	669	917291908	ANLENKSTUECK VORM.
ZYLINDERSCHRAUBE ISO 47	11820284	34	4	701	966134608	ANBAUTEILE ZYLINDER
ZYLINDERSCHRAUBE ISO 47	10875590	31	4	334	96023117	BATTERIEKASTEN VORM.
ZYLINDERSCHRAUBE ISO 47	10875590	9	2	390	916170808	KABELEINFUEHRUNG
ZYLINDERSCHRAUBE ISO 476	10022183	305	4	511	96051842	ABGASANLAGE VORM.
ZYLINDERSCHRAUBE ISO 476	12223035	30	4	624	10038509	STEUERBLOCK
ZYLINDERSCHRAUBE ISO 47	10875591	316	20	56	96035801	HYDRAULIK MITTELTEIL
ZYLINDERSCHRAUBE ISO 47	10875591	302	4	287	919007708	ANTRIEBSAGGREGAT VORM.
ZYLINDERSCHRAUBE ISO 47	10875591	4	4	574	10332882	STEUERBLOCK
ZYLINDERSCHRAUBE ISO 47	10875591	37	2	701	966134608	ANBAUTEILE ZYLINDER
ZYLINDERSCHRAUBE ISO 476	404230308	45	1	421	917304708	SCHIEBETUER EINBAU
ZYLINDERSCHRAUBE ISO 47	4002698	12	4	63	11643183	STEUERBLOCK
ZYLINDERSCHRAUBE ISO 47	4002698	12	4	66	11643184	STEUERBLOCK
ZYLINDERSCHRAUBE ISO 47	10875592	56	4	500	918731808	HARNSTOFFANLAGE
ZYLINDERSCHRAUBE ISO 47	12203634	311	22	56	96035801	HYDRAULIK MITTELTEIL
ZYLINDERSCHRAUBE ISO 47	12203634	38	3	428	11083498	HEIZKLIMAGERAET
ZYLINDERSCHRAUBE ISO 47	12203634	305	4	561	96045351	HYDRAULIK OBERWAGEN
ZYLINDERSCHRAUBE ISO 476	11088382	11	2	744	967933408	GRUNDHALTER VORM.
ZYLINDERSCHRAUBE ISO 47	12202784	31	2	26	96034894	SCHUTZBLECH KPL.LI.
ZYLINDERSCHRAUBE ISO 47	12202784	31	2	29	96034977	SCHUTZBLECH KPL.RE.
ZYLINDERSCHRAUBE ISO 47	12202784	328	2	561	96045351	HYDRAULIK OBERWAGEN
ZYLINDERSCHRAUBE ISO 47	12202784	303	2	728	967785008	ZUSATZHYDRAULIK KLAPPSPI
ZYLINDERSCHRAUBE ISO 47	10876361	327	2	561	96045351	HYDRAULIK OBERWAGEN
ZYLINDERSCHRAUBE ISO 47	12215338	326	6	561	96045351	HYDRAULIK OBERWAGEN
ZYLINDERSCHRAUBE ISO 476	10539468	302	4	511	96051842	ABGASANLAGE VORM.
ZYLINDERSCHRAUBE ISO 47	12203635	312	2	98	96035796	HYDR.FAHRANTRIEB
ZYLINDERSCHRAUBE ISO 47	12203635	312	2	115	96035792	HYDR.FAHRANTRIEB
ZYLINDERSCHRAUBE ISO 476	10539471	325	4	561	96045351	HYDRAULIK OBERWAGEN
ZYLINDERSCHRAUBE ISO 47	10875593	6	1	423	966230508	FUEHRUNG VORM.
ZYLINDERSCHRAUBE ISO 47	10875597	16	1	492	967928508	VERRIEGELUNG
ZYLINDERSCHRAUBE ISO 47	10875597	29	4	701	966134608	ANBAUTEILE ZYLINDER
ZYLINDERSCHRAUBE ISO 476	4901881	302	4	507	919674408	ABGASANLAGE
ZYLINDERSCHRAUBE ISO 476	4901881	310	2	511	96051842	ABGASANLAGE VORM.

Bezeichnung	Artikel	Pos.	Menge	Seite	Baugruppe	Bezeichnung
ZYLINDERSCHRAUBE ISO 47	10875598	7	2	359	510229408	HYDROMOTOR
ZYLINDERSCHRAUBE ISO 47	10875598	22	5	387	916177508	TRITT KPL.
ZYLINDERSCHRAUBE ISO 47	10875598	17	6	701	966134608	ANBAUTEILE ZYLINDER
ZYLINDERSCHRAUBE ISO 476	10007677	4	12	392	916162808	RELING
ZYLINDERSCHRAUBE ISO 476	240049702	7	5	209	10120186	MASSENAUSGLEICH ANBAU
ZYLINDERSCHRAUBE ISO 47	10875599	33	32	35	917511508	RAUPENMITTELTEIL VORM.
ZYLINDERSCHRAUBE ISO 47	10875599	308	4	287	919007708	ANTRIEBSAGGREGAT VORM.
ZYLINDERSCHRAUBE ISO 47	10875599	26	8	353	90008901	DREHWERKANTRIEB
ZYLINDERSCHRAUBE ISO 47	10875599	3	4	476	917260408	SPIEGELANBAU DREHBUEHN
ZYLINDERSCHRAUBE ISO 47	10875599	18	6	673	917292008	TELESKOP 1 VORM.
ZYLINDERSCHRAUBE ISO 47	10875599	18	8	677	917292108	TELESKOP 2 VORM.
ZYLINDERSCHRAUBE ISO 47	10875599	18	10	681	917292208	TELESKOP 3 VORM.
ZYLINDERSCHRAUBE ISO 47	10875599	18	10	685	917292308	TELESKOP 4 VORM.
ZYLINDERSCHRAUBE ISO 47	10875599	17	8	690	917292408	TELESKOP 5 VORM.
ZYLINDERSCHRAUBE ISO 476	10007205	5	12	392	916162808	RELING
ZYLINDERSCHRAUBE ISO 47	12208098	12	13	668	917291908	ANLENKSTUECK VORM.
ZYLINDERSCHRAUBE ISO 476	404230208	8	2	387	916177508	TRITT KPL.
ZYLINDERSCHRAUBE ISO 47	11691424	74	8	353	90008901	DREHWERKANTRIEB
ZYLINDERSCHRAUBE ISO 47	12202976	34	32	35	917511508	RAUPENMITTELTEIL VORM.
ZYLINDERSCHRAUBE ISO 47	12202976	324	24	56	96035801	HYDRAULIK MITTELTEIL
ZYLINDERSCHRAUBE ISO 47	4600335	84	12	78	90028956	FAHRANTRIEB
ZYLINDERSCHRAUBE ISO 47	12206699	50	5	312	10472196	REGLER
ZYLINDERSCHRAUBE ISO 47	12206699	50	5	324	10292801	REGLER
ZYLINDERSCHRAUBE ISO 47	12206699	3	4	574	10332882	STEUERBLOCK
ZYLINDERSCHRAUBE ISO 47	10875601	10	4	359	510229408	HYDROMOTOR
ZYLINDERSCHRAUBE ISO 47	10875601	4	1	440	916049908	SPIEGELANBAU KRANFUEHR
ZYLINDERSCHRAUBE ISO 47	10875570	61	2	400	917305408	INNENVERKLEIDUNG EINBAU
ZYLINDERSCHRAUBE ISO 47	12201166	7	4	94	96034962	FUEHRUNG LI.
ZYLINDERSCHRAUBE ISO 47	12201166	7	4	112	96034980	FUEHRUNG RE.
ZYLINDERSCHRAUBE ISO 47	12203451	22	1	368	932916901	SEILTROMMEL
ZYLINDERSCHRAUBE ISO 47	12203451	41	2	701	966134608	ANBAUTEILE ZYLINDER
ZYLINDERSCHRAUBE ISO 47	12203167	336	2	562	96045351	HYDRAULIK OBERWAGEN
ZYLINDERSCHRAUBE ISO 47	12213825	86	10	353	90008901	DREHWERKANTRIEB
ZYLINDERSTIFT DIN 6325 10	430706808	13	2	323	571907208	ANSCHLUSSPLATTE
ZYLINDERSTIFT DIN 6325 10	430707208	8	2	490	10877810	BALLASTIERZYLINDER
ZYLINDERSTIFT DIN 6325 12	430709608	32	1	764	512363708	HYDROZYLINDER
ZYLINDERSTIFT DIN 6325 4m6	4601499	20	1	81	11161917	STEUERTEIL
ZYLINDERSTIFT DIN 6325 8M6	430704808	13	2	311	10008308	ANSCHLUSSPLATTE
ZYLINDERSTIFT ISO 2338 10M	430608708	86	8	76	91001377	RAUPENTRAEGER VORM.LI.
ZYLINDERSTIFT ISO 2338 10M	430608708	86	8	109	91001378	RAUPENTRAEGER VORM.RE.
ZYLINDERSTIFT ISO 2338 12H	430611008	3	1	673	917292008	TELESKOP 1 VORM.
ZYLINDERSTIFT ISO 2338 12H	430611008	3	1	677	917292108	TELESKOP 2 VORM.
ZYLINDERSTIFT ISO 2338 12H	430611008	3	1	681	917292208	TELESKOP 3 VORM.
ZYLINDERSTIFT ISO 2338 12H	430611008	3	1	685	917292308	TELESKOP 4 VORM.
ZYLINDERSTIFT ISO 2338 12H	430611008	23	1	690	917292408	TELESKOP 5 VORM.
ZYLINDERSTIFT ISO 2338 4M	570109308	5	1	359	510229408	HYDROMOTOR
ZYLINDERSTIFT ISO 8734 5M	514588908	14	1	311	10008308	ANSCHLUSSPLATTE
ZYLINDERSTIFT ISO 8734 6m	4980000	9	1	209	10120186	MASSENAUSGLEICH ANBAU
ZYLINDERSTIFT ISO 8734 6m	4980000	(5)	1	210	10138230	NOCKENWELLE KPL.
ZYLINDERSTIFT ISO 8734 6m	4980736	5	1	210	10138230	NOCKENWELLE KPL.