Ersatzteilkatalog
Spare parts catalogue
Catalogue de pièces de rechange
Catálogue de repuestos
Каталог запасных частей

LIEBHERR

VORBEMERKUNGEN
Dieser Ersatzteilkatalog soll Ihnen die Ermittlung und Bestellung von Ersatzteilen für die Wartung bzw. Reparatur Ihres Liebherr-Kranes erleichtern.
Zum schnelleren Auffinden der Ersatzteile sind im Inhaltsverzeichnis die in Ihrem Kran verwendeten Baugruppen aufgeführt.

Inhaltsverzeichnis
Im Inhaltsverzeichnis verweist der Pfeil (⇨) in der zweiten Textzeile der Baugruppenartikelnr. auf die Artikel-Nr. hin.
Bild und Textseiten
Die Bild- und Textseiten für die Baugruppen und Einzelteile sind sortiert nach Unterwagen, Oberwagen und Ausleger. Ein Artikel kann aus einer oder mehreren Bild- und/oder Textseiten bestehen.
Durch die Symbolik der entsprechenden Bildseiten, wird auf weitere dazugehörige Artikel verwiesen. Das Symbol verweist auf den Artikel Rohr- und/oder Schlauchleitungen im jeweiligen Kranabteil, Unterwagen, Oberwagen oder Ausleger.
Jeder weitere Pfeil (⇨) führt zu einer detaillierten Bild- und/oder Textseite des Artikels, sind Positionsnummern in Klammern (x) gesetzt, handelt es sich um Einzelteile des vorangegangenen Artikels.
Numerischer Index
Der numerische Index ist sortiert nach Artikel-Nr. mit Hinweisen auf die Baugruppen-Nr. und Position-Nr.
Alphabetischer Index
Der alphabetische Index ist sortiert nach Bezeichnung mit Hinweisen auf Artikel-Nr., Position-Nr. und Baugruppen-Nr.

Für die sachliche Richtigkeit des Kataloges ist ausschließlich der deutsche Text maßgebend.

PRELIMINARY REMARKS
This spare parts catalogue should make it easier for you to identify and order spare parts for the maintenance and repair of your Liebherr crane.
In order to find the spare parts faster, the assemblies used in your crane are listed in the table of contents.

Table of contents
In the table of contents, the arrow (⇨) in the second text row of the assembly article no. refers to the article no.
Figure and text pages
The figure and text pages for the assemblies and individual parts are sorted according to chassis, superstructure and boom. An article can consist of one or multiple figure and / or text pages.
The symbols on the corresponding figure pages refer to additional related articles. The symbol refers to the pipelines and / or hose lines in the respective crane partition, chassis, superstructure or boom.
Each additional arrow (⇨) leads to a more detailed figure and / or text page of the article, if there are position numbers between parentheses (x), then it is an individual part of the previous article.
Numerical index
The numerical index is sorted according to the article no. with references to the assembly no. and the position no.
Alphabetic index
The alphabetic index is sorted according to the designation with references to the article no., position no. and assembly no.

For the factual accuracy of the catalogue, only the German text is applicable.

REMARQUES PREALABLES

Ce catalogue de pièces de rechange est conçu pour faciliter la sélection et la commande des pièces de rechange pour les opérations de maintenance et de réparation sur votre grue Liebherr.
Les groupes de composants utilisés sur votre grue sont énumérés dans la table des matières, pour en faciliter la recherche.

Table des matières

Dans la table des matières, la flèche (⇨), dans la deuxième ligne de texte de la référence des groupes de composants, renvoie à la référence de chaque article.

Pages d'illustrations et de texte

Les pages d'illustrations et de texte dédiées aux groupes de composants et aux pièces de rechange sont triées selon le châssis, la partie tournante et la flèche. Un article peut être constitué d'une ou plusieurs pages d'illustrations et de texte.
Les symboles correspondant aux pages d'illustrations renvoient à d'autres articles. Le symbole renvoie à l'article Tuyaux et/ou flexibles dans la section correspondante de la grue, le châssis, la partie tournante ou la flèche.
Chaque flèche additionnelle (⇨) mène à une page d'illustrations et/ou de texte détaillée de l'article ; lorsque les numéros de position sont mis entre parenthèses (x), il s'agit des différentes pièces de l'article.

Index numérique

L'index numérique est trié selon la référence article avec des indications sur le numéro de groupe de composants et le numéro de position.

Index alphabétique

L'index alphabétique est trié selon la désignation de l'article avec des indications sur la référence article, le numéro de position et le numéro de groupe de composants.
Seul le texte en langue allemande est déterminant pour la fiabilité du catalogue.

OBSERVACIONES PREVIAS

Este catálogo de piezas de repuesto debe servir para facilitarle la labor de encontrar y pedir las piezas de repuesto que necesita para el mantenimiento o la reparación de su grúa Liebherr.
Para que encuentre más rápido las piezas de repuesto, en el índice se enumeran los grupos constructivos usados en su grúa.

Índice

En el índice, la flecha (⇨) que hay en la segunda línea de texto del n.º de artículo del grupo constructivo se refiere al n.º de artículo.

Páginas de imagen y de texto

Las páginas de imagen y de texto para los grupos constructivos y las piezas individuales están clasificadas según el chasis inferior, la superestructura y la pluma. Un artículo puede constar de una o varias páginas de imagen y/o de texto.
Mediante los símbolos de las correspondientes páginas de imágenes se alude a otros artículos relacionados. El símbolo se refiere al artículo «Conexiones de tubo y/o de manguera» en la respectiva sección de la grúa, es decir, chasis inferior, superestructura o pluma.
Cada una de las demás flechas (⇨) conduce a una página de imagen y/o de texto detallada del artículo y, si hay puestos números de posición entre paréntesis (x), se trata de piezas individuales del artículo precedente.

Índice numérico

El índice numérico está clasificado según el n.º de artículo, con alusiones al n.º de grupo constructivo y el n.º de posición.

Índice alfabético

El índice alfabético está clasificado según la denominación, con alusiones al n.º de artículo, el n.º de posición y el n.º de grupo constructivo.

La versión correcta determinante del catálogo es exclusivamente el texto en alemán.

ПРЕДВАРИТЕЛЬНЫЕ ЗАМЕЧАНИЯ

Этот каталог запасных частей поможет легче определить и заказать запасные части для техобслуживания или ремонта крана Liebherr.
Чтобы можно было быстрее найти запасные части, используемые в вашем кране конструктивные узлы, приведены в перечне.

Перечень

В перечне стрелка (⇨) во второй текстовой строке номера артикула конструктивного узла указывает на номер артикула.

Страницы с рисунками и описанием

Страницы с рисунками и описанием конструктивных узлов и отдельных частей рассортированы согласно их принадлежности ходовому устройству, поворотной платформе и стреле. Один артикул может включать одну или несколько страниц с рисунками и/или описанием.
Символы соответствующих страниц с рисунками содержат ссылки на другие относящиеся к нему артикулы. Символ указывает на артикул «Трубопроводы и/или шлангопроводы» в соответствующей части крана, в ходовом устройстве, поворотной платформе или стреле.
Каждая следующая стрелка (⇨) ведет к странице с подробным рисунком и/или описанием артикула; если номера позиций указываются в скобках (x), речь идет об отдельной части из предыдущего артикула.

Числовой индекс

Числовой индекс сортирует по номеру артикула с указанием номера конструктивного узла и позиции.

Алфавитный индекс

Алфавитный индекс сортирует по названию со указанием номера артикула, позиции и узла.

Определяющим для правильности предметной классификации каталога является исключительно немецкий текст.

WIE BESTELLE ICH EIN ERSATZTEIL
Prüfen Sie zunächst, ob der Kran-Typ und die Werk-Nr. auf dem Typenschild Ihres Liebherr-Kranes mit dem Kran-Typ und der Werk-Nr. im Ersatzteilkatalog übereinstimmen.

Ihre Bestellung muss folgende Angaben enthalten:

anzugeben:	**zu ersehen:**	**Beispiel:**
Krantyp	Typenschild	LTM 1070-4.2
Werk-Nr.	Typenschild	060647
Bestellmenge	Ihr Bedarf	1 Stück
Artikel-Nr.	Bildseite/Textseite	938587501
Bezeichnung	Bildseite/Textseite	Seilwinde
Versandanschrift		
Versandart		

ACHTUNG:
Bei Aggregaten, für die auch Einzelteile bestellt werden können, weist der Pfeil (⇨) in der zweiten Textzeile der Bezeichnung auf die entsprechende Artikelnummer hin.
Bildseiten der Leitungssysteme (Hydraulik, Pneumatik, Elektrik) beinhalten nicht alle Aggregate.
Diese Aggregate sind auf den Bildseiten zu sehen, die die Einbaulage darstellen.

Für die Lieferung von Ersatzteilen gelten unsere Lieferungs- und Zahlungsbedingungen.

HOW DO I ORDER A SPARE PART
First check if the crane type and the plant no. on the data tag of your Liebherr crane comply with the crane type and plant number in the spare parts catalogue.

Your order must include the following data:

indicate:	**refer to:**	**Example:**
Crane type	Data tag	LTM 1070-4.2
Factory No.	Data tag	060647
Order amount	Your requirement	1 item
Article no.	Figure page / text page	938587501
Designation	Figure page / text page	Rope winch
Shipping address		
Shipping method		

NOTICE:
In the case of aggregates for which individual parts can also be ordered, the arrow (⇨) in the second line of text of the designation refers to the corresponding article number.
Figure pages for the hydraulic, pneumatic and electrical lines do not contain all aggregates.
These aggregates can be seen on the figure pages that represent the installation position.

For the delivery of the spare parts, our delivery and payment conditions apply.

COMMENT COMMANDER UNE PIECE DE RECHANGE

Commencer par vérifier si le type de grue et le numéro d'usine sur la plaque signalétique de votre grue Liebherr correspondent bien au type de grue et au numéro d'usine dans le catalogue des pièces de rechange.

Votre commande doit contenir les informations suivantes :

A indiquer :	Information disponible :	Exemple :
Type de grue	Plaque signalétique	LTM 1070-4.2
Numéro d'usine	Plaque signalétique	060647
Quantité commandée	Votre besoin	1 pce
Référence	Page d'illustrations / de texte	938587501
Désignation	Page d'illustrations / de texte	Treuil à câble
Adresse d'expédition		
Mode d'expédition		

ATTENTION :

Pour les groupes comportant des pièces pouvant être commandées séparément, la flèche (⇨), dans la deuxième ligne de texte de la désignation, indique la référence de l'article.
Les pages d'illustration des systèmes de conduites (hydraulique, pneumatique, électrique) ne détaillent pas tous les groupes disponibles.
Ces groupes sont détaillés sur les pages d'illustration représentant la position de montage.

La livraison des pièces de rechange est régie par nos conditions générales de vente.

CÓMO PEDIR UNA PIEZA DE REPUESTO

Compruebe primero si el modelo de grúa y el n.º de fábrica que hay en la placa de características de su grúa Liebherr coinciden con el modelo de grúa y el n.º de fábrica indicados en el catálogo de piezas de repuesto.

Su pedido debe contener los siguientes datos:

Qué indicar:	Dónde consultarlo:	Ejemplo:
Modelo de grúa	Placa de características	LTM 1070-4.2
N.º de fábrica	Placa de características	060647
Cantidad de pedido	Según su demanda	1 unidad
N.º de artículo	Página de imagen/Página de texto	938587501
Denominación	Página de imagen/Página de texto	Cabrestante
Dirección de envío		
Forma de envío		

ATENCIÓN:

En el caso de agregados para los que también se pueden pedir piezas individuales, la flecha (⇨) de la segunda línea de texto de la denominación alude al número de artículo correspondiente.
Las páginas de imagen de los sistemas de control (sistema hidráulico, sistema neumático, sistema eléctrico) no incluyen todos los agregados.
Estos agregados se pueden ver en las páginas de imagen que representan la posición de montaje.

Para el suministro de piezas de repuesto son válidas nuestras condiciones de envío y de pago.

КАК ЗАКАЗАТЬ ЗАПАСНУЮ ЧАСТЬ

Сначала проверьте, совпадает ли тип и заводской номер крана, указанные на заводской табличке данного крана Liebherr, с типом и заводским номером крана в каталоге запасных частей.

Ваш заказ должен содержать следующую информацию:

Следует указать:	**Следует смотреть:**	**Пример:**
Тип крана	Заводская табличка	LTM 1070-4.2
Заводской номер	Заводская табличка	060647
Объём заказа	По потребности	1 шт.
Номер артикула	Страницы с рисунками / страницы с описанием	938587501
Название	Страницы с рисунками / страницы с описанием	Канатная лебёдка
Адрес отправки		
Способ отправки		

ВНИМАНИЕ!

В агрегатах, для которых также можно заказать отдельные части, стрелка (⇨) во второй текстовой строке названия указывает на соответствующий номер артикула.
Страницы с рисунками модульного размера трубопроводов и каналов (гидравлических, пневматических, электрических) охватывают не все агрегаты.
Эти агрегаты можно найти на страницах с рисунками, представляющих монтажное положение.

На поставку запасных частей распространяются наши Условия поставки и оплаты.

Pos.	Item	Quantity	Description	Bezeichnung
2	919617108	1	CRAWLER TRACK TRAVEL GEAR CPL. ⇨ ❑ 13	RAUPENFAHRWERK KPL.
4	919499308	1	CENTRAL SECTION CRAWLER COMPL. ⇨ ❑ 27	RAUPENMITTELTEIL KPL.
6	918925508	2	CROSS BEAM CPL. ⇨ ❑ 63	QUERTRAEGER KPL.
8	917436708	2	FLOOR SHEET COMPL. 1.0M ⇨ ❑ 64	BODENPLATTEN KPL.
10	919254108	1	CRAWLER TRACK CARRIER LEFT CPL ⇨ ❑ 65	RAUPENTRAEGER KPL.LI.
11	919254208	1	CRAWLER CARRIER RIGHT CPL ⇨ ❑ 95	RAUPENTRAEGER KPL.RE.
13	917691008	1	FALL PROTECTION ⇨ ❑ 109	ABSTURZSICHERUNG
14	919644008	1	HYDRAULIC SUPPORT ⇨ ❑ 118	HYDRAULISCHE ABSTUETZUN
20	917257108	1	CENTRALIZED LUBRICATION SYSTEM ⇨ ❑ 125	ZENTRALSCHMIERUNG RAUPE
22	919499408	1	CENTRAL BALLAST ⇨ ❑ 135	ZENTRALBALLAST
23	919499508	1	BALLAST MONITORING ⇨ ❑ 138	BALLASTUEBERWACHUNG
24	919328608	1	TOOLS AND ACCESSORIES ⇨ ❑ 143	WERKZEUG M.ZUBEHOER
30	919087608	1	ROTARY FEED THROUGH ⇨ ❑ 132	DREHDURCHFUEHRUNG
39	915731908	2	EL.COMP. DISPATCH ASSEMBLY ⇨ ❑ 146	EL.TEILE VERSANDMONTAGE
40	916283508	1	PLATING FABRIKDATEN ⇨ ❑ 147	ZUSATZBESCHILDERUNG
42	917862808	1	LABELLING GREAT BRITAIN ⇨ ❑ 148	BESCHILDERUNG GROSSBRITA
44	917258108	1	HATCHING PLAN SPF ⇨ ❑ 151	SCHRAFFURPLAN
46	916959808	1	PERSONAL PROTECTION EQUIPMENT ⇨ ❑ 153	PERSOENLICHE SCHUTZAUSRU
78	919553608	1	ADDITIONAL SIGNAGE CALIFORNIA ⇨ ❑ 154	ZUSATZBESCHILD.CALIFORNIE
103	918731108	1	ASSEMBLY PARTS F.SLEWING PLTF. ⇨ ❑ 156	MONTAGETEILE DREHBUEHNE
104	919371808	1	DIESEL ENGINE PURCHASED PARTS ⇨ ❑ 159	DIESELMOTOR KAUFTEIL
105	918731408	1	DRIVE ASSEMBLY CPL. ⇨ ❑ 268	ANTRIEBSAGGREGAT KPL.
107	918955408	1	BATTERY BOX CPL. ⇨ ❑ 318	BATTERIEKASTEN KPL.
108	917626608	1	FUEL TANK ADD-ON UNIT ⇨ ❑ 322	KRAFTSTOFFBEHAELTER ANBA
109	919231108	1	FUEL FEED ⇨ ❑ 326	KRAFTSTOFFFOERDERUNG
110	917825508	1	OIL RESERVOIR, EXTENSION ⇨ ❑ 331	OELBEHAELTER ANBAU
111	919617008	1	LUFFING RAM W. PIVOT ⇨ ❑ 619	WIPPZYLINDER M.LAGERUNG
117	917259408	1	ROLLER SLEWING RING ⇨ ❑ 336	ROLLENDREHVERBINDUNG
119	919369308	1	SLEWING GEAR ⇨ ❑ 338	DREHWERK
121	917259608	1	ROTATING PLATFORM LOCK ⇨ ❑ 349	DREHBUEHNENARRETIERUNG

Pos.	Item	Quantity	Description	Bezeichnung
122	10040024	2	POUCH SOCKET 23-26 SPF ⇨ ❑ 620	TASCHENSCHLOSS
125	917259708	1	MAIN HOIST GEAR ⇨ ❑ 351	HAUPTHUBWERK
127	917259808	1	ROPE WITH ACCESSORIES 1 ⇨ ❑ 621	SEIL F.WINDE 1
129	917259908	1	CRANE DRIVER CAB ADDITION ⇨ ❑ 364	KRANFUEHRERKABINE ANBAU
130	919010208	1	CRANE OPERATOR CABIN PREASS 2 ⇨ ❑ 367	KRANFUEHRERKABINE VORM.2
131	917304508	1	CRANE OPERATOR CABIN PREASS 1 ⇨ ❑ 379	KRANFUEHRERKABINE VORM.1
132	917304608	1	CRANE DRIVER CABIN, UNFINISHED ⇨ ❑ 401	KRANFUEHRERKABINE ROH
133	917304708	1	SLIDING DOOR INSTALLATION SPF ⇨ ❑ 402	SCHIEBETUER EINBAU
134	917676208	1	HEATING CRANE DRIVER'S CABIN MIT KLI ⇨ ❑ 409	HEIZUNG KRANFUEHRERKABIN
135	918810308	1	CONTROL STAND ⇨ ❑ 415	STEUERSTAND
138	916049908	1	MIRROR ATTACHM.IN CRANE CABIN ⇨ ❑ 424	SPIEGELANBAU KRANFUEHRER
139	918731508	1	TURNTABLE PANELLING ⇨ ❑ 425	DREHBUEHNENVERKLEIDUNG
140	917260108	1	FALL PROTECTION ⇨ ❑ 442	ABSTURZSICHERUNG
141	917610208	1	ADDITIONAL PARTS DREHBUEHNVERKL. ⇨ ❑ 443	ZUSATZTEILE
143	918731608	1	EL.INSTRUMENTS F.CRANE DRIV.CA ⇨ ❑ 444	ELEKTRIK KRANFUEHRERKABIN
144	917260408	1	MIRROR ATTACHM.AT SLEW.PLATFOR ⇨ ❑ 458	SPIEGELANBAU DREHBUEHNE
145	918759808	1	ADD HEATING SUPERSTRUCTURE ⇨ ❑ 460	ZUSATZHEIZUNG OW
146	917260608	1	COUNTERWEIGHT WITH CLAMP ⇨ ❑ 622	GEGENGEWICHT M.BEFESTIG
147	917404508	1	BALLAST DREHBUEHNE 4X10T ⇨ ❑ 626	BALLAST
148	917404008	1	ADDITIONAL BALLAST ⇨ ❑ 627	ZUSATZBALLAST
150	917618608	1	ADD-ON PARTS BTT ⇨ ❑ 469	ANBAUTEILE
153	918956108	1	HYDRAULIC BALLASTING ⇨ ❑ 471	HYDRAULISCHE BALLASTIERUN
155	917676308	1	COMPRESSED-AIR SYST.SUPERSTR. ⇨ ❑ 476	DRUCKLUFTANLAGE OW
162	918484108	1	UREA PLANT ⇨ ❑ 480	HARNSTOFFANLAGE
163	919372008	1	EXHAUST SYSTEM ⇨ ❑ 489	ABGASANLAGE
164	919371908	1	ADDITIONAL PART LEVEL IV ⇨ ❑ 496	ZUSATZTEILE STUFE IV
165	918731908	1	AIR FILTER UNIT ⇨ ❑ 498	LUFTFILTERANLAGE
169	917261208	1	CENT. LUBRIC. SYSTEM SUPERST. ⇨ ❑ 501	ZENTRALSCHMIERANLAGE OW
175	919028808	1	DISPATCH ASSY.MECH.PARTS ⇨ ❑ 628	MECH.TEILE VERSANDMONTAG
179	919410708	1	ELECTR. SYSTEM F.SLEWING PLATF ⇨ ❑ 506	EL.ANLAGE DREHBUEHNE

Pos.	Item	Quantity	Description	Bezeichnung
181	919503008	1	SWITCHBOX MOUNTING PARTS ⇨ ❑ 517	EINBAUTEILE SCHALTSCHRAN
185	918732808	1	HYDRAULICS ⇨ ❑ 530	HYDRAULIK
187	917261808	1	OIL COOLER INSTALLATION ⇨ ❑ 564	OELKUEHLER EINBAU
191	918739608	1	HOSE LINES SUPERSTRUCTURE STUFE 5 ⇨ ❑ 568	SCHLAUCHLEITUNGEN OBER
193	918956208	1	PIPELINES SUPERSTRUCTURE ⇨ ❑ 571	ROHRLEITUNGEN OBERWAGE
195	918802108	2	BALLAST MONITORING ENCODER ⇨ ❑ 631	GEBER BALLASTUEBERWACH
199	916166208	1	CAR RADIO ⇨ ❑ 632	AUTORADIO
201	918804808	1	TELESCOPIC BOOM CPL. SPF ⇨ ❑ 634	TELESKOPAUSLEGER KPL.
203	917262208	1	ELECTR. SYSTEM F. BOOM ⇨ ❑ 677	EL.ANLAGE AUSLEGER
217	917262408	1	HYDR.F.TELESCOPIC BOOM ⇨ ❑ 686	HYDRAULIK TELE
229	917262508	1	ADDNL.HYDR. FOLDING JIB ⇨ ❑ 691	ZUSATZHYDRAULIK KLAPPSPI
285	917379608	1	CARRIER, MEAS. & WARN. DEVICE WW+HF ⇨ ❑ 710	TRAEGER MESS-U.WARNEINRI
286	917551608	1	ADD-ON PARTS TELE ⇨ ❑ 717	ANBAUTEILE
299	917611508	1	SLINGING MEAN ⇨ ❑ 718	ANSCHLAGMITTEL
301	918628408	1	AIR COND. UNIT SUPERSTRUCTURE ⇨ ❑ 573	KLIMAANLAGE OW
302	917265308	1	ADDNL.HYDR. FOLDING JIB ⇨ ❑ 697	ZUSATZHYDRAULIK KLAPPSPI
304	917531708	1	BALLAST TRAVERSE 70T ⇨ ❑ 722	BALLASTTRAVERSE
310	919007108	1	LOAD HOOK 12.5E SPF ⇨ ❑ 723	LASTHAKEN
316	910836808	1	HOOK BLOCK 125DM SPF ⇨ ❑ 724	HAKENFLASCHE
321	918124908	1	A-HEADL.SEARCHLIGHT PIVOT SEC. EL.VE ⇨ ❑ 702	A-SCHEINWERFER ANLENKSTU
330	917267108	1	AUXILIARY HOISTING GEAR 2 ⇨ ❑ 575	HILFSHUBWERK WINDE 2
332	917267208	1	AUXILIARY HOIST.ROPE W.ACCESSO ⇨ ❑ 726	HILFSHUBSEIL M.ZUBEHOER
333	917267308	1	HYDR.AUXILIARY HOISTING ⇨ ❑ 587	HYDRAULIK HILFSHUBWERK
334	917413208	1	SELF-ERECT. AUX. HOIST GEAR ⇨ ❑ 727	SELBSTMONTAGE HILFSHUBW
350	917267508	1	TRANSPORT MOUNTING ⇨ ❑ 729	TRANSPORTHALTERUNG DKS
352	917268108	1	TOOLS ⇨ ❑ 736	WERKZEUG KLAPPSPITZE
356	917268408	1	BOOM NOSE ⇨ ❑ 704	MASTNASE
362	918197708	1	EL.2 HOISTING LIMIT SWITCH ⇨ ❑ 706	ELEKTRIK 2.HUBENDSCHALTE
363	910040808	1	2nd NECK PULLEY INSTALLATION ⇨ ❑ 709	2.NACKENROLLE EINBAU
364	917966708	1	ADDNL.HYDR. FOLDING JIB DB ⇨ ❑ 593	ZUSATZHYDRAULIK KLAPPSPI

Pos.	Item	Quantity	Description	Bezeichnung
381	918462708	1	EXTERNAL FEED 230V-110V ⇨ ❑ 598	FREMDEINSPEISUNG
383	917269308	1	CHARGER 110V ⇨ ❑ 599	LADEGERAET
389	917269408	1	CONSOLE AUX. REPLENISHING ⇨ ❑ 600	KONSOLE FREMDEINSPEISUN
391	915432508	1	RADIO PREPARATION UPPER CARRIA ⇨ ❑ 601	FUNKVORBEREITUNG OW
401	918377508	1	COOLING WATER PRE-HEATING 110V ⇨ ❑ 602	KUEHLWASSERVORWAERMUN
417	918462408	1	SIGN EXTERNAL SUPPLY 110V ⇨ ❑ 739	BESCHILDERUNG FREMDEINSP
421	919127808	1	SIGN TRANSPORT HOLDER ⇨ ❑ 740	BESCHILDERUNG TRANSPOR
438	918989008	1	A-HEADLIGHT SLEWING PLATFORM ⇨ ❑ 604	A-SCHEINWERFER DREHBUEHN
440	915037208	1	AUXILIARY REEVING CABLE, COMPL 16X18 ⇨ ❑ 741	HILFSEINSCHERSEIL KPL.
491	918992008	1	CAMERA MONITOR OW ⇨ ❑ 606	KAMERAUEBERWACHUNG OW

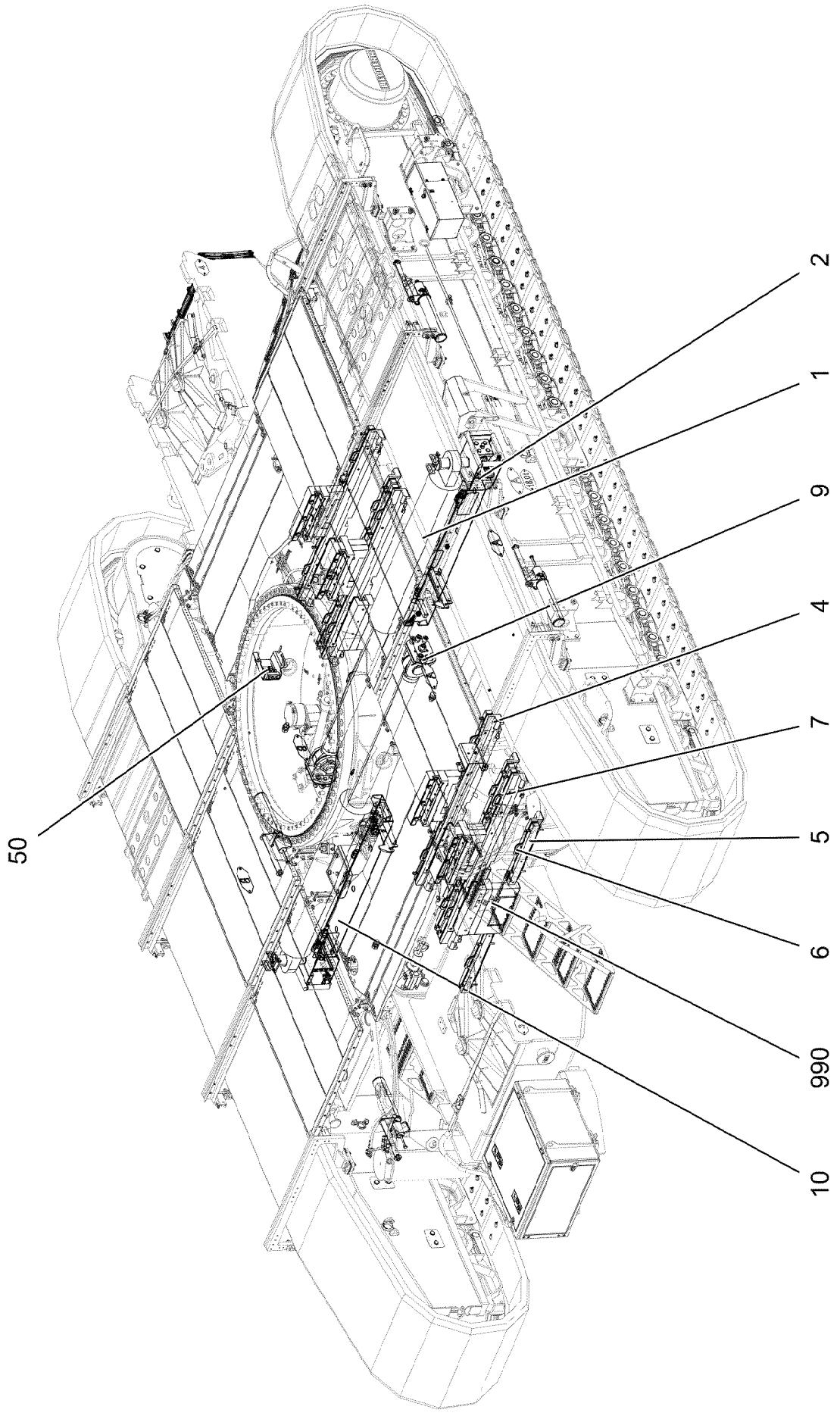
50
2
1
9
4
7
5
6
990
10

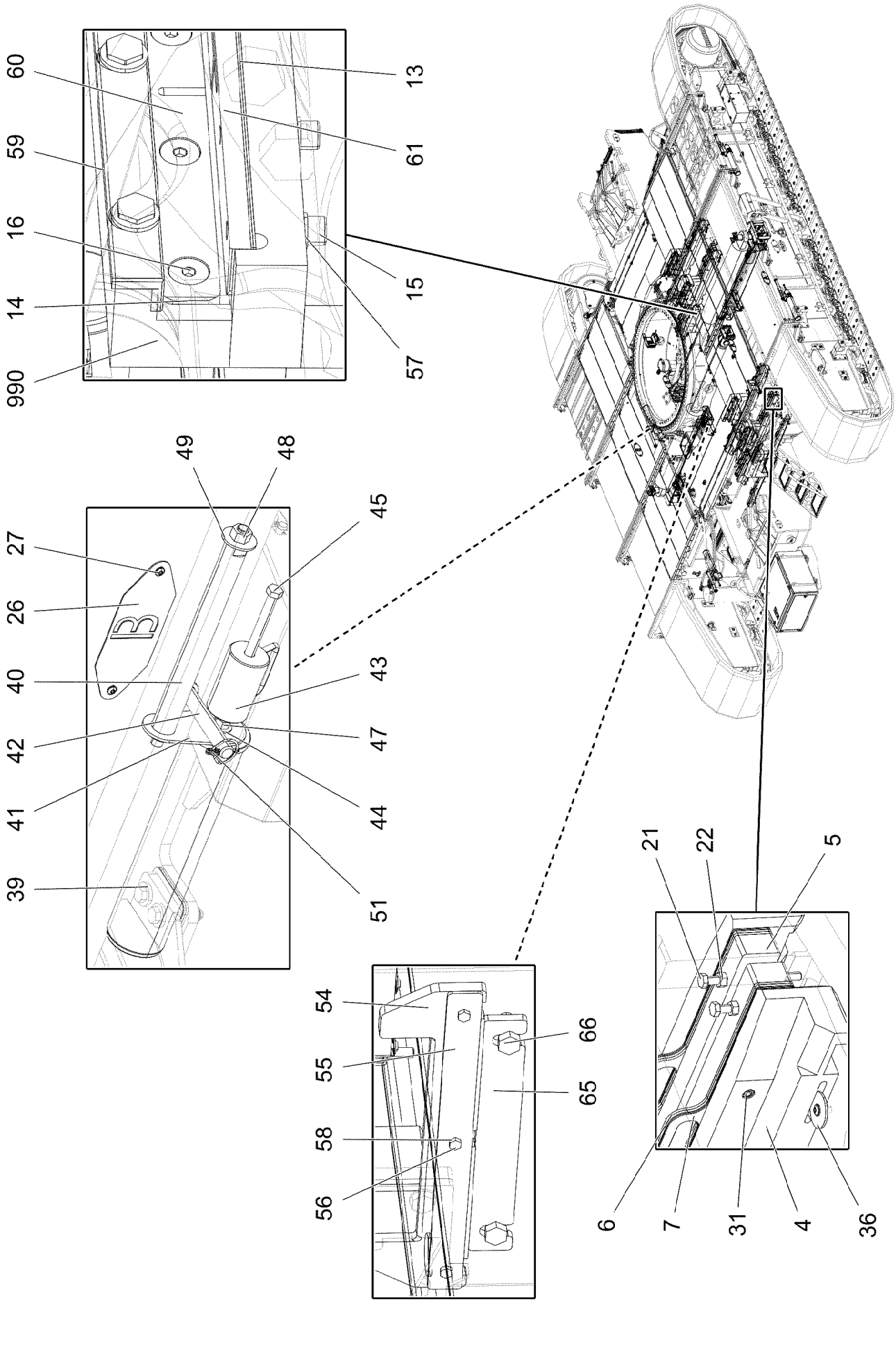
60
59
16
14
990
13
61
15
57
49
48
45
27
26
40
42
41
39
43
47
44
51
54
55
58
56
66
65
21
22
5
6
7
31
4
36

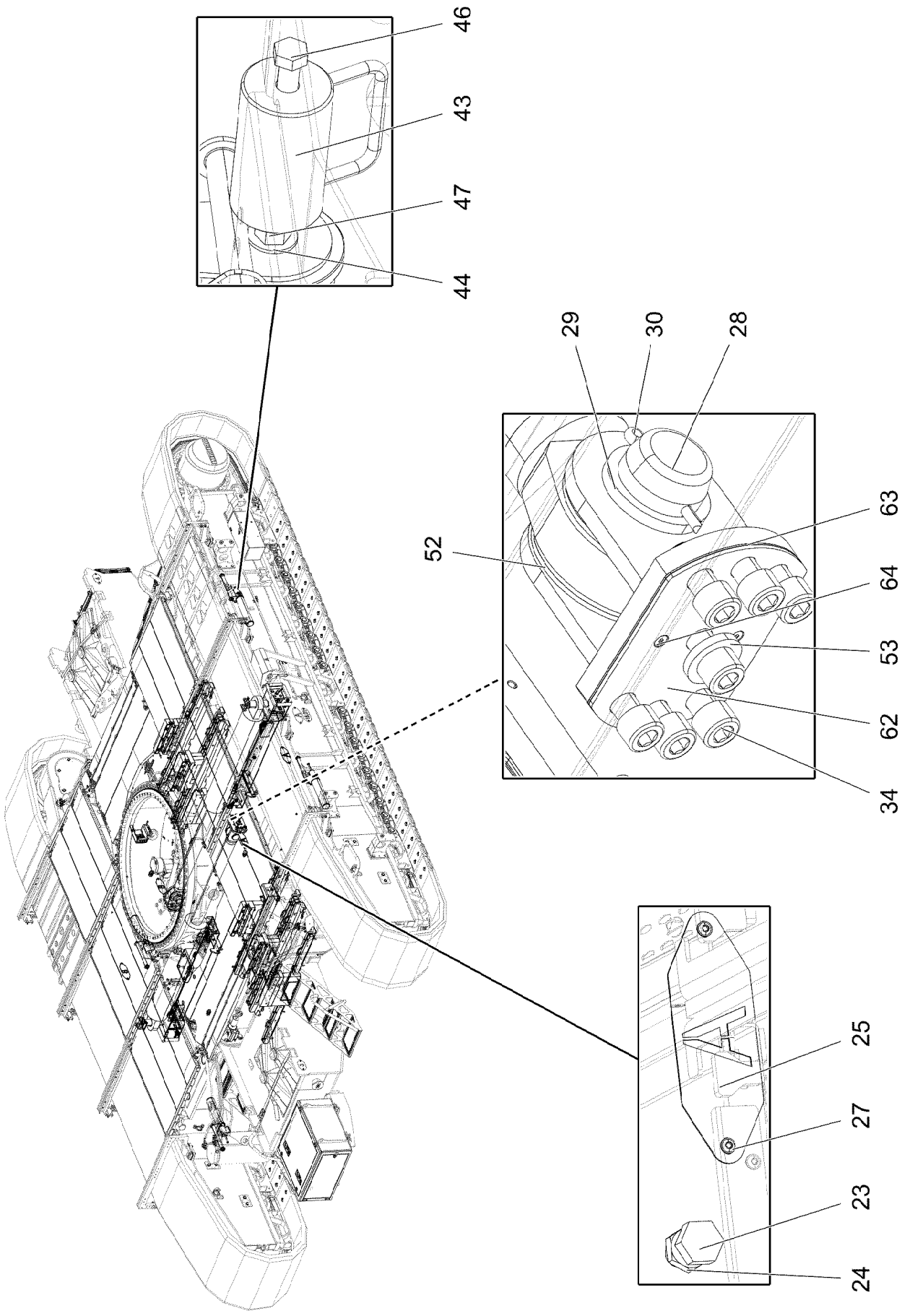

4.12.2020 006546 LIEBHERR	**etk_en_de 047580 LTR 1220** **CRAWLER TRACK TRAVEL GEAR CPL.** **RAUPENFAHRWERK KPL.**	❑ 15 (3/6) **919617108**

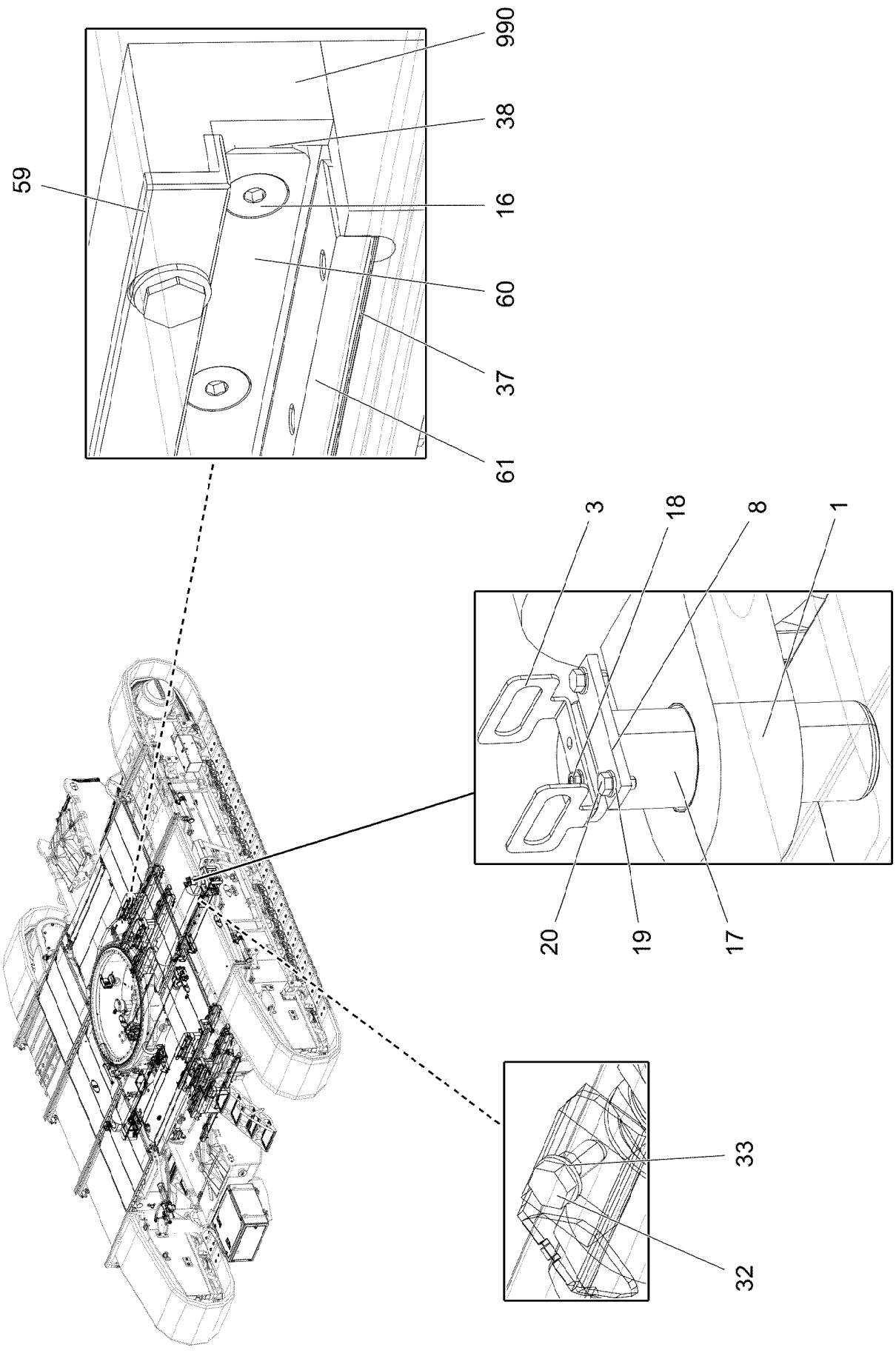
990
38
59
16
60
37
61
3
18
8
1
20
19
17
33
32

Pos.	Item	Quantity	Description	Bezeichnung
1	12102931	2	TRACK WIDTH ADJUSTING CYLINDER 250/1	SPURVERSTELLZYLINDER
2	96034894	1	PROTECTION PLATE CPL. ⇨ ❑ 19	SCHUTZBLECH KPL.LI.
3	97100419	2	GRIP 4X110X245 S315MC	GRIFF
4	97031639	8	SLIDE PLATE 120X100X2090 PA6G+OEL	GLEITPLATTE
5	97031640	16	DISTANCE PLATE 60X37X730 PA6G+OEL	DISTANZPLATTE
6	97031641	32	PLATE 4X730X110 ALMG3 H111	BLECH
7	97031642	32	PLATE 2X730X110 ALMG3 H111	BLECH
8	942164608	2	AXLE HOLDER 10X140X40 S355MC FE//ZNNI	ACHSHALTER
9	967996008	2	BRACKET WELDED CONST.	KONSOLE SCHWK.
10	96034977	1	PROTECTION PLATE ⇨ ❑ 22	SCHUTZBLECH KPL.RE.
13	97031991	40	PLATE 2X516X55 DC01 FE//ZNNI8//CN//T0	BLECH
14	97031992	16	PLATE 2X516X48 DC01 FE//ZNNI8//CN//T0	BLECH
15	12692012	32	SOCKET HEAD SCREW ISO 4762 M16X65 8	ZYLINDERSCHRAUBE
16	10878064	56	COUNTERSUNK SCREW ISO 10642 M16X30	SENKSCHRAUBE
17	97032012	2	PIN 110.0X277 35NICRMOV125 SPF	BOLZEN
18	10179392	4	SOCKET HEAD SCREW DIN 7984 M10X20 08	ZYLINDERSCHRAUBE
19	10289804	4	WASHER ISO 7089 12 300HV FLZN SPF	SCHEIBE
20	11658892	4	HEX SCREW ISO 4017 M12X25 8.8 FLZN SP	SECHSKANTSCHRAUBE
21	10178901	32	HEX SCREW ISO 4017 M12X150 8.8 FLZN SP	SECHSKANTSCHRAUBE
22	10875616	32	HEX NUT ISO 4032 M12 8 FLZN SPF	SECHSKANTMUTTER
23	12228747	4	HEX SCREW ISO 4017 M30X60 8.8 FLZN SP	SECHSKANTSCHRAUBE
24	4635422	4	HEX NUT ISO 4035 M30 05 FLZN SPF	SECHSKANTMUTTER
25	97037945	2	PLATE 2X290X100 DC01 FE//ZNNI8//CN//T0	BLECH
26	97011478	2	PLATE 2X100X290 DC01 FE//ZNNI8//CN//T0	BLECH
27	12102696	24	BUTTON HEAD SCREW ISO7380-2 M8X10 0	HALBRUNDKOPFSCHRAUBE
28	951111408	2	PIN RD100X193 35NICRMOV125	BOLZEN
29	421104208	2	WASHER DIN 1440 100 ST VERZ	SCHEIBE
30	10180381	2	SPLIT PIN ISO 1234 13X125 St 480H SPF	SPLINT
31	10876374	48	SOCKET HEAD SCREW ISO 4762 M12X60 8	ZYLINDERSCHRAUBE
32	11631816	8	HEX SCREW ISO 4017 M10X25 8.8 FLZN SP	SECHSKANTSCHRAUBE
33	10289795	12	WASHER ISO 7089 10 300HV FLZN SPF	SCHEIBE
34	10878580	14	SOCKET HEAD SCREW ISO 4762 M30X70 8	ZYLINDERSCHRAUBE
36	97017499	16	WASHER 3X54X54 X5CRNI18-10	SCHEIBE
37	97035163	8	PLATE 1X516X55 DC01 FE//ZNNI8//CN//T0	BLECH
38	97035164	8	PLATE 1X516X48 DC01 FE//ZNNI8//CN//T0	BLECH
39	97061385	4	PIN 110.0X451 35NICRMOV125 SPF	BOLZEN
40	97036914	4	GUIDING ROD 45.0X455 35NICRMOV125 SP	FUEHRUNGSSTANGE
41	97061426	4	PLATE 5X90X189 S355MC FE//ZNNI8//CN//T	BLECH
42	97036916	4	PIN WITH HEAD 45.0X167 35NICRMOV125	BOLZEN MIT KOPF
43	965921308	4	PIN EXTRACTOR T ZN O	BOLZENZIEHER
44	973485408	4	WASHER 3X38X38 DC01 FE//ZNNI8//CN//T0	SCHEIBE
45	10878582	3	HEX SCREW ISO 4014 M16X300 8.8 FLZN SP	SECHSKANTSCHRAUBE
46	12224045	1	HEX SCREW ISO 4014 M16X200 8.8 FLZN SP	SECHSKANTSCHRAUBE
47	10875617	4	HEX NUT ISO 4032 M16 8 FLZN SPF	SECHSKANTMUTTER
48	10875618	4	HEX NUT ISO 4032 M20 8 FLZN SPF	SECHSKANTMUTTER
49	4600328	4	WASHER ISO 7093-1 20 300HV FLZN SPF	SCHEIBE
50	968019508	1	LIMIT SWITCH ADD-ON ⇨ ❑ 25	ENDSCHALTER ANBAU
51	10875870	4	SAFETY PLUG W HINGE-LID 6X42X5,5X32 4	SICHERHEITSKLAPPSTECKER
52	935508808	8	COVER RD190X6 S355MC FE//ZNNI8//CN//T	DECKEL
53	12226080	2	WASHER DIN 7349 31 FLZN SPF	SCHEIBE
54	97038559	2	SLIDE PLATE 15X120X450 PA6G+OEL	GLEITPLATTE
55	97038560	2	PLATE 4X450X40 S315MC FE//ZNNI8//CN//T	BLECH
56	500411708	6	HEX SCREW ISO 4017 M8X28 8.8	SECHSKANTSCHRAUBE
57	10289806	32	WASHER ISO 7089 16 300HV FLZN SPF	SCHEIBE
58	420060705	6	WASHER ISO 7089 8 200HV-A2	SCHEIBE
59	97049098	8	SLIDE SHEET 560X46X 35 CUZN25AL5	GLEITBLECH
60	97043682	8	SLIDE SHEET 520X50X 13 CUZN25AL5	GLEITBLECH

Pos.	Item	Quantity	Description	Bezeichnung
61	97043683	8	SLIDE SHEET 520X57X 18 CUZN25AL5	GLEITBLECH
62	97039973	2	PLATE 5X280X200 S355MC FE//ZNNI8//CN//T	BLECH
63	97039974	4	PLATE 2X200X280 DC01 FE//ZNNI8//CN//T0	BLECH
64	10875553	4	COUNTERSUNK SCREW DIN 7991 M8X25 8	SENKSCHRAUBE
65	97050776	2	PLATE 10X50X350 S355MC	BLECH
66	10875519	4	HEX SCREW ISO 4017 M16X40 8.8 FLZN SP	SECHSKANTSCHRAUBE

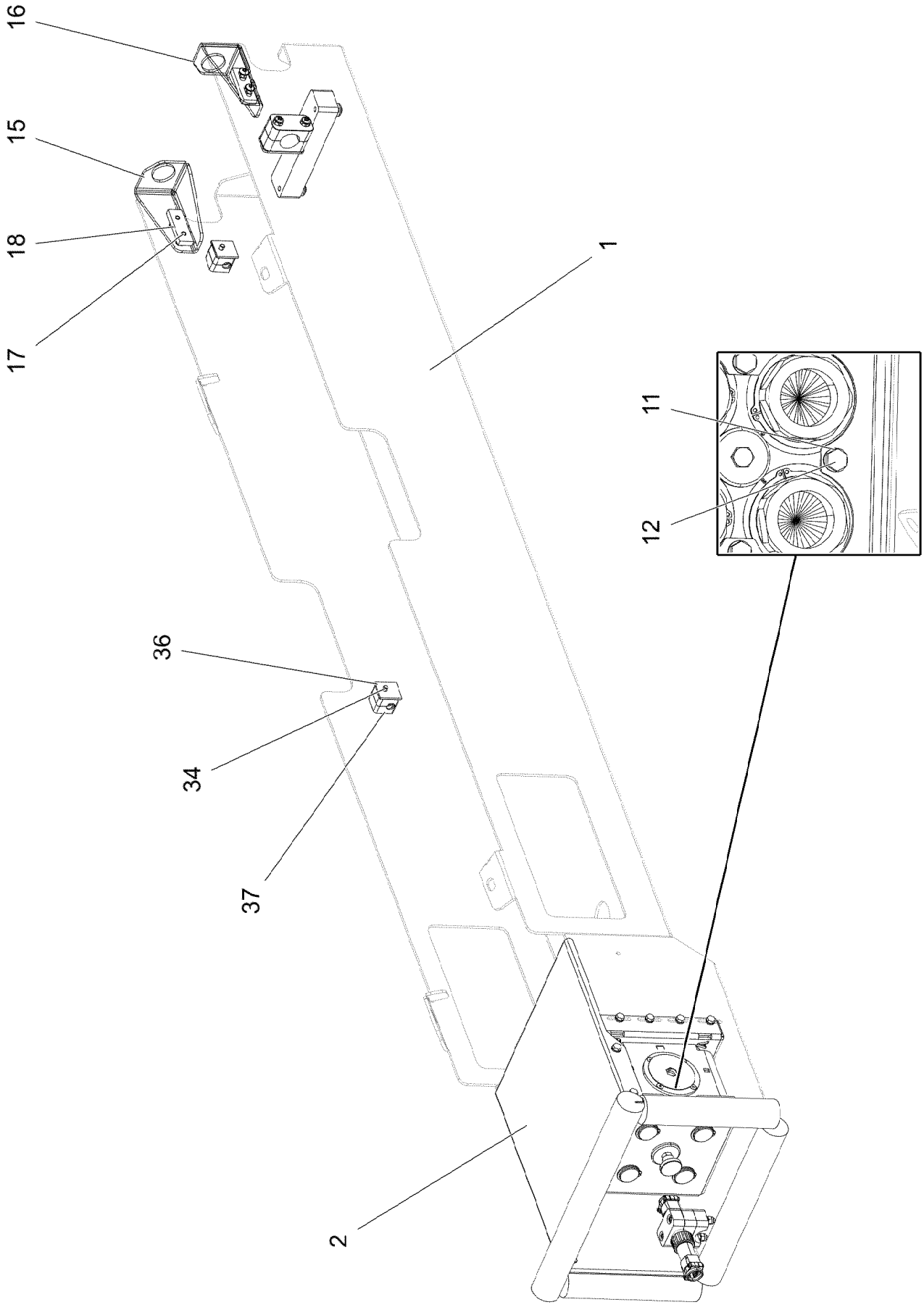

4.12.2020 004551 LIEBHERR	**etk_en_de 047580 LTR 1220** **PROTECTION PLATE CPL.** **SCHUTZBLECH KPL.LI.**	❑ 19 (1/3) **96034894**

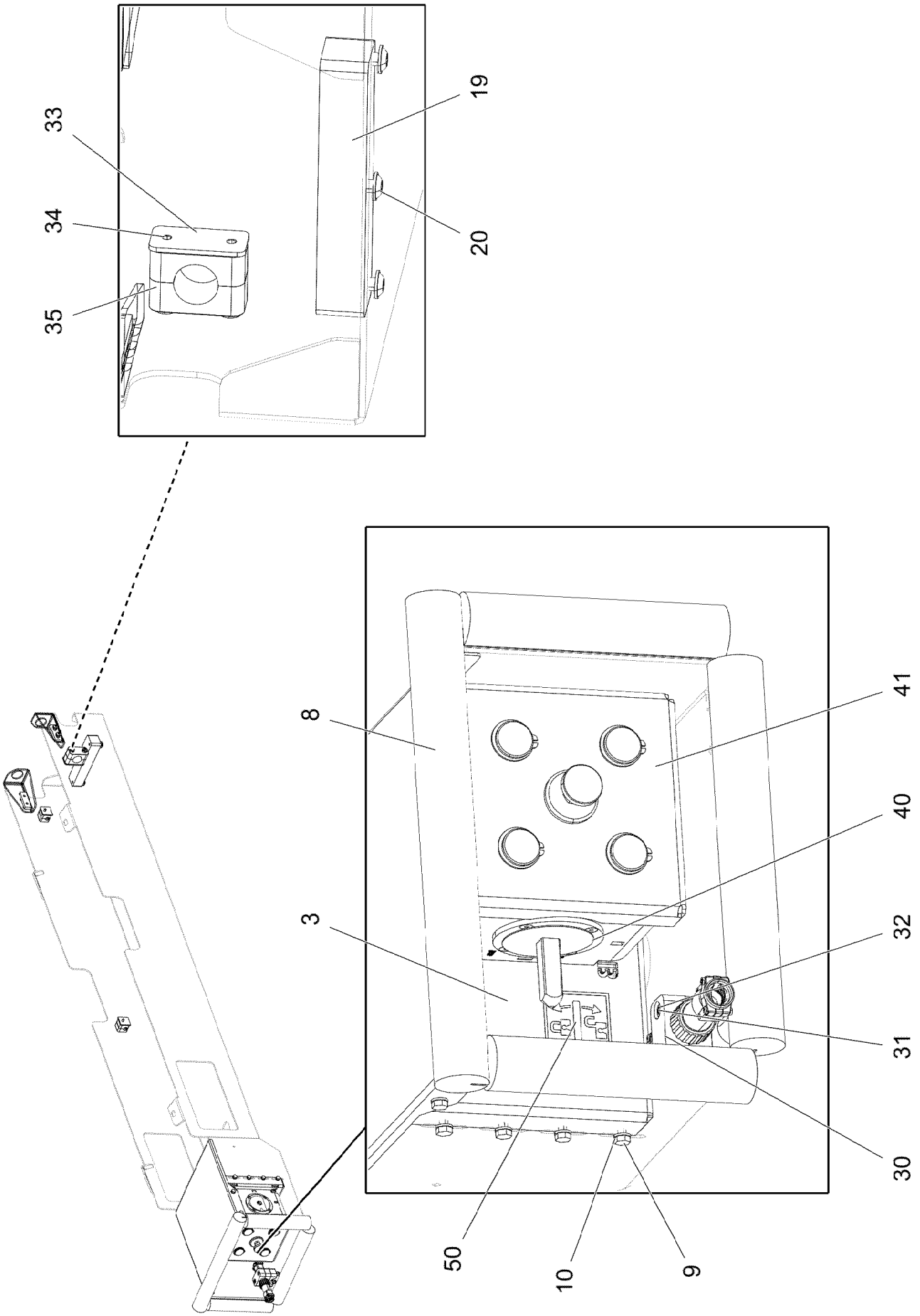

4.12.2020 004552 LIEBHERR	**etk_en_de 047580 LTR 1220** **PROTECTION PLATE CPL.** **SCHUTZBLECH KPL.LI.**	❑ 20 (2/3) **96034894**

Pos.	Item	Quantity	Description	Bezeichnung
1	97093430	1	PLATE 4X2114X788 S315MC FE//ZNNI8//CN/	BLECH
2	97103093	1	PLATE 2X368X357 DC01 FE//ZNNI8//CN//T0	BLECH
3	97093429	1	PLATE 4X348X241 S315MC FE//ZNNI8//CN//T	BLECH
8	7014524	1	CLAMPING PROFILE 40X1M PUR-HAUT	KLEMMPROFIL
9	11692824	12	HEX SCREW ISO 4017 M6X12 8.8 480H SPF	SECHSKANTSCHRAUBE
10	10197771	12	WASHER ISO 7089 6 200HV ZNNI-480H SPF	SCHEIBE
11	10289803	4	WASHER ISO 7089 8 300HV 480H SPF	SCHEIBE
12	11651612	4	HEX SCREW ISO 4017 M8X16 8.8 480H SPF	SECHSKANTSCHRAUBE
15	97033935	1	PLATE 4X168X113 S315MC FE//ZNNI8//CN//T	BLECH
16	97033897	1	PLATE 4X168X113 S315MC FE//ZNNI8//CN//T	BLECH
17	10412851	4	BUTTON HEAD SCREW AEHNL.ISO 7380-2	HALBRUNDKOPFSCHRAUBE
18	953695308	2	THREADED PLATE 8X20X60 S235JR FE//ZN	GEWINDEPLATTE
19	97033902	1	HOLDER 40X30X175 PA6G+OEL	HALTER
20	10875485	3	BUTTON HEAD SCREW AEHNL.ISO 7380-2	HALBRUNDKOPFSCHRAUBE
30	7005052	3	CLAMP-HALF DIN 3015-1 L 3 R 25 PP SW	KLEMMHAELFTE
31	12202784	2	SOCKET HEAD SCREW ISO 4762 M6X60 8.8	ZYLINDERSCHRAUBE
32	11004444	2	HEX NUT AEHNL.ISO 7040 M6 A2-70	SECHSKANTMUTTER
33	10802205	1	WELD PLATE DIN 3015-1 L-AP-K 4 W1 ZNNI	ANSCHWEISSPLATTE
34	11161571	4	BUTTON HEAD SCREW AEHNL.ISO 7380-2	HALBRUNDKOPFSCHRAUBE
35	602008808	2	CLAMP-HALF DIN 3015-1 L 4 R 28 PP SW	KLEMMHAELFTE
36	602015408	2	WELD PLATE DIN 3015-1 L-AP-K 0 W1	ANSCHWEISSPLATTE
37	7365090	4	CLAMP-HALF DIN 3015-1 L 0 R 12 PP SW	KLEMMHAELFTE
40	12101183	1	QUICK RELEASE FITTING	SCHNELLVERSCHLUSSKUPPL
41	10551191	1	LID CPL	DECKEL KPL
50	97133618	1	INFORMATION SIGN 70X50 KLEBEFOLIE	HINWEISSCHILD

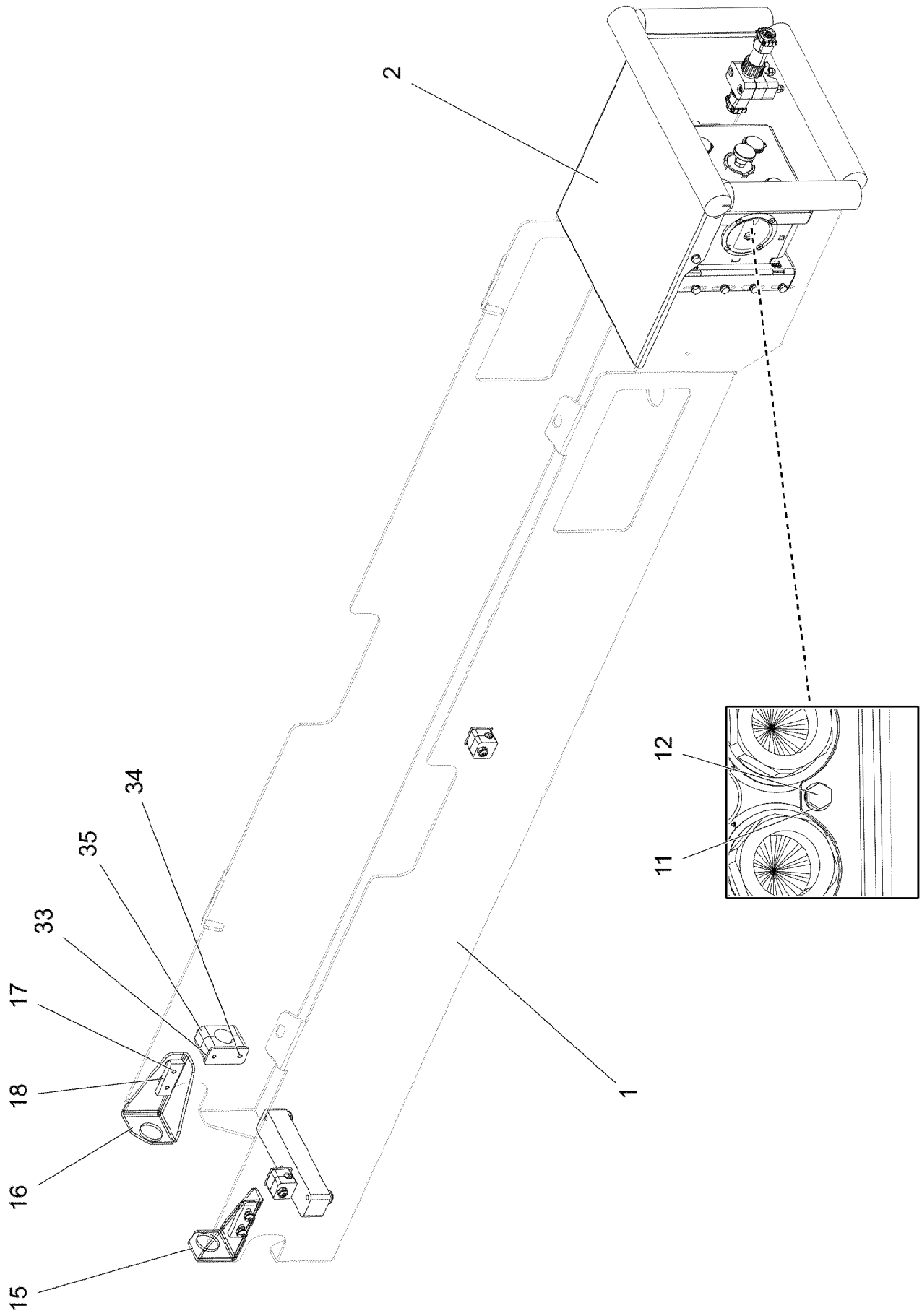

4.12.2020 004553 LIEBHERR	**etk_en_de 047580 LTR 1220** **PROTECTION PLATE** **SCHUTZBLECH KPL.RE.**	❑ 22 (1/3) **96034977**

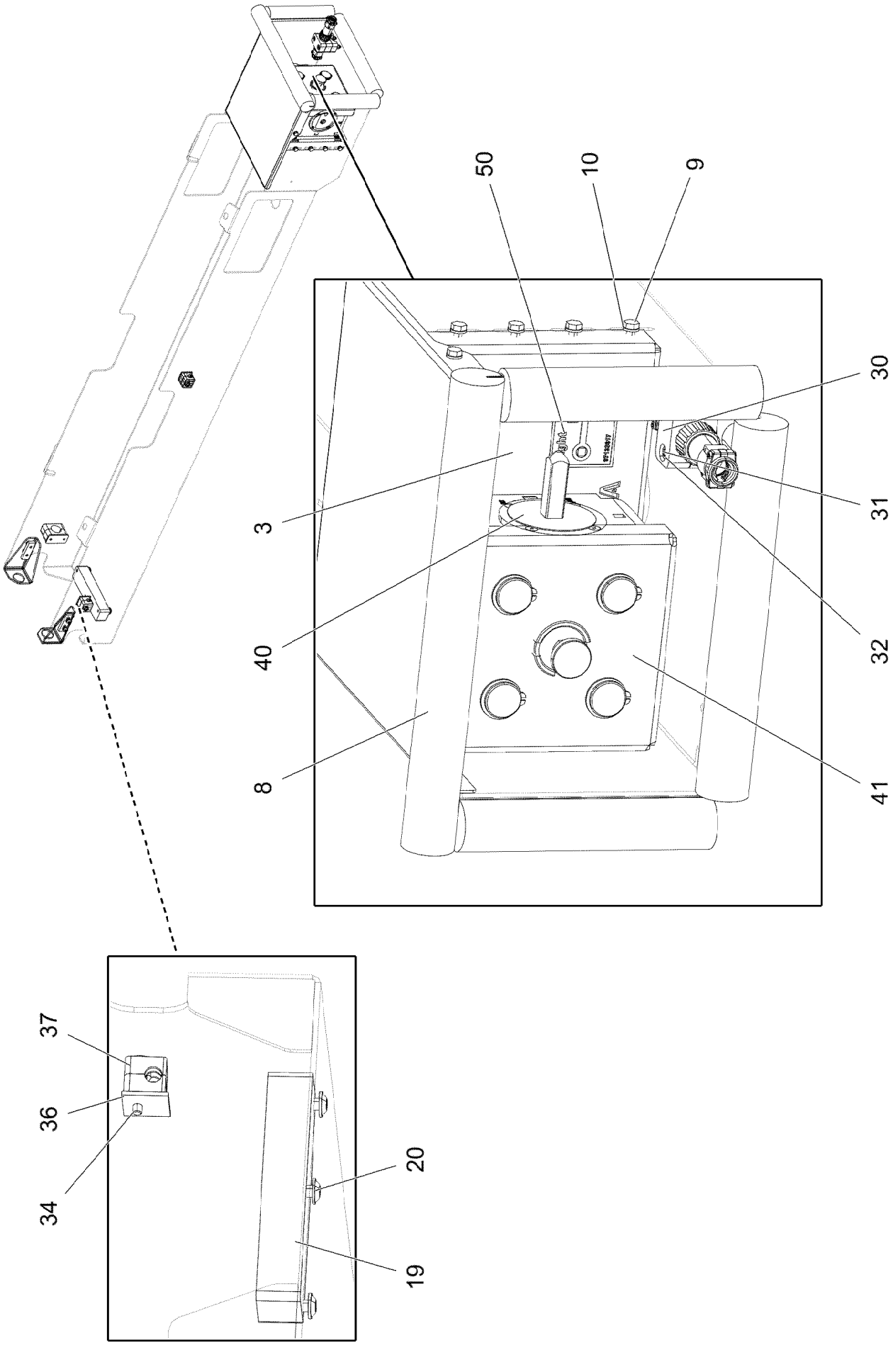
50
10
9
30
3
31
40
32
8
41
37
36
34
20
19

Pos.	Item	Quantity	Description	Bezeichnung
1	97093430	1	PLATE 4X2114X788 S315MC FE//ZNNI8//CN/	BLECH
2	97103093	1	PLATE 2X368X357 DC01 FE//ZNNI8//CN//T0	BLECH
3	97118611	1	PLATE 4X348X241 S315MC FE//ZNNI8//CN//T	BLECH
8	7014524	1	CLAMPING PROFILE 40X1M PUR-HAUT	KLEMMPROFIL
9	11692824	12	HEX SCREW ISO 4017 M6X12 8.8 480H SPF	SECHSKANTSCHRAUBE
10	10197771	12	WASHER ISO 7089 6 200HV ZNNI-480H SPF	SCHEIBE
11	10289803	4	WASHER ISO 7089 8 300HV 480H SPF	SCHEIBE
12	11651612	4	HEX SCREW ISO 4017 M8X16 8.8 480H SPF	SECHSKANTSCHRAUBE
15	97033935	1	PLATE 4X168X113 S315MC FE//ZNNI8//CN//T	BLECH
16	97033897	1	PLATE 4X168X113 S315MC FE//ZNNI8//CN//T	BLECH
17	10412851	4	BUTTON HEAD SCREW AEHNL.ISO 7380-2	HALBRUNDKOPFSCHRAUBE
18	953695308	2	THREADED PLATE 8X20X60 S235JR FE//ZN	GEWINDEPLATTE
19	97033902	1	HOLDER 40X30X175 PA6G+OEL	HALTER
20	10875485	3	BUTTON HEAD SCREW AEHNL.ISO 7380-2	HALBRUNDKOPFSCHRAUBE
30	7005052	3	CLAMP-HALF DIN 3015-1 L 3 R 25 PP SW	KLEMMHAELFTE
31	12202784	2	SOCKET HEAD SCREW ISO 4762 M6X60 8.8	ZYLINDERSCHRAUBE
32	11004444	2	HEX NUT AEHNL.ISO 7040 M6 A2-70	SECHSKANTMUTTER
33	10802205	1	WELD PLATE DIN 3015-1 L-AP-K 4 W1 ZNNI	ANSCHWEISSPLATTE
34	11161571	4	BUTTON HEAD SCREW AEHNL.ISO 7380-2	HALBRUNDKOPFSCHRAUBE
35	602008808	2	CLAMP-HALF DIN 3015-1 L 4 R 28 PP SW	KLEMMHAELFTE
36	602015408	2	WELD PLATE DIN 3015-1 L-AP-K 0 W1	ANSCHWEISSPLATTE
37	7365090	4	CLAMP-HALF DIN 3015-1 L 0 R 12 PP SW	KLEMMHAELFTE
40	12101183	1	QUICK RELEASE FITTING	SCHNELLVERSCHLUSSKUPPL
41	10551191	1	LID CPL	DECKEL KPL
50	97133617	1	INFORMATION SIGN 70X50 KLEBEFOLIE SP	HINWEISSCHILD

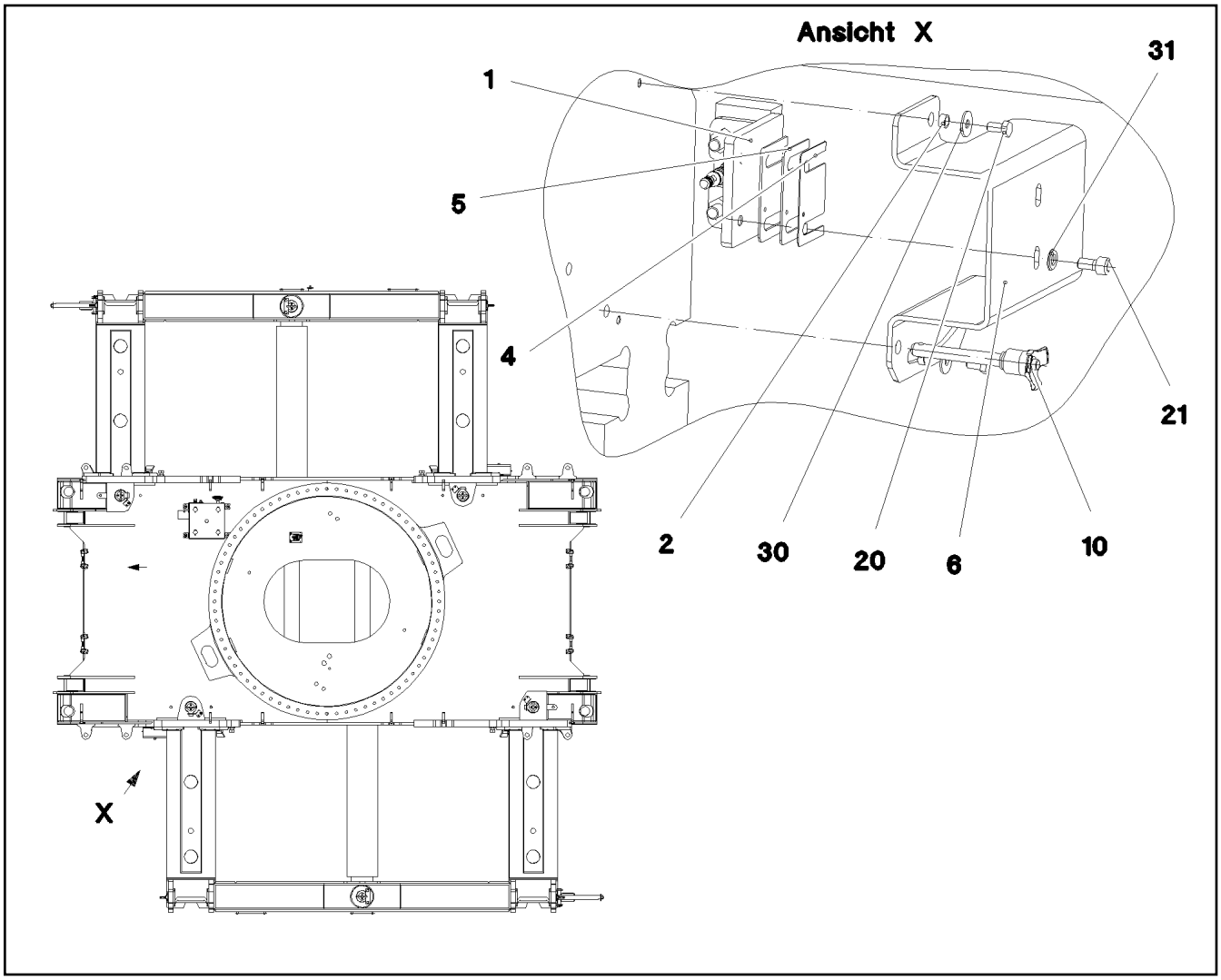

Pos.	Item	Quantity	Description	Bezeichnung
1	968036408	2	LIMIT SWITCH, PRE-ASSEMBLED ⇨ ❑ 26	ENDSCHALTER VORM.
2	97032611	4	SLEEVE 12.0X6 E235+N FE//ZN20//F	HUELSE
4	97032616	6	PLATE 1X90X60 DC01 FE//ZNNI8//CN//T0	BLECH
5	97032617	8	PLATE 2X90X60 DC01 FE//ZNNI8//CN//T0	BLECH
6	97032619	2	HOOD 5X220X434 S355MC FE//ZNNI8//CN//T	HAUBE
10	704008508	2	QUICK RELEASE PIN NIROSTA	KUGELSPERRBOLZEN
11	10354922	6	TRANSPONDER SPF	TRANSPONDER
20	11651612	4	HEX SCREW ISO 4017 M8X16 8.8 480H SPF	SECHSKANTSCHRAUBE
21	10415162	4	SOCKET HEAD SCREW ISO 4762 M10X25 8	ZYLINDERSCHRAUBE
30	11140469	4	WASHER ISO 7093-1 8 200HV 480H SPF	SCHEIBE
31	10289795	4	WASHER ISO 7089 10 300HV FLZN SPF	SCHEIBE

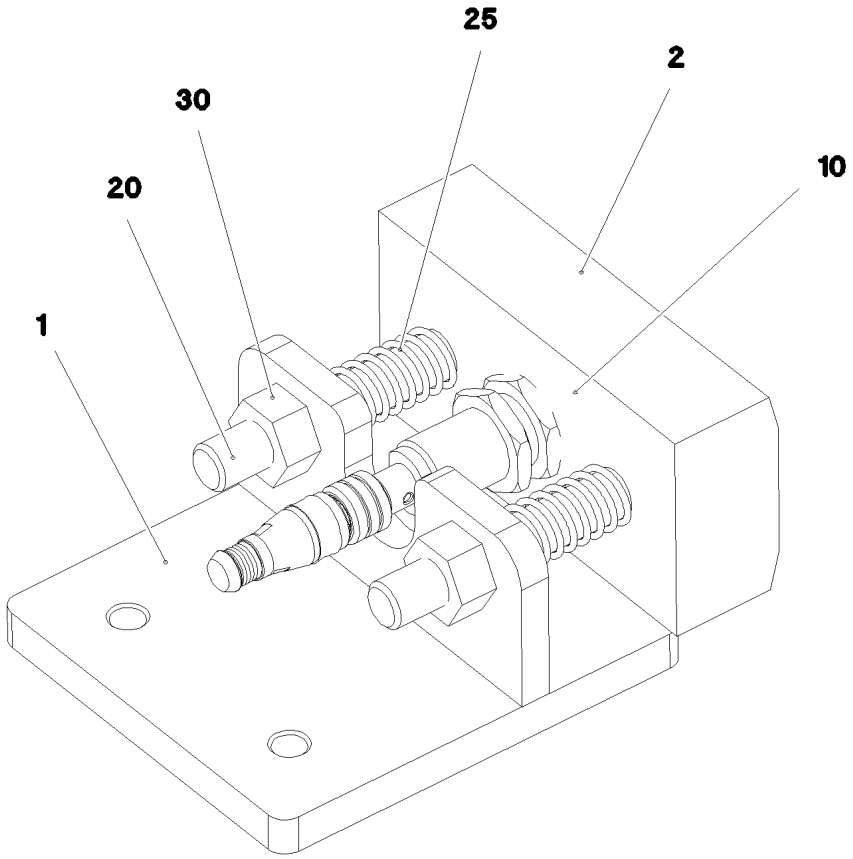

Pos.	Item	Quantity	Description	Bezeichnung
1	968036508	1	ANGLE FE//ZNNI8//CN//T0	WINKEL SCHWK.
2	97032618	1	SLIDER 110X56X30 PA6G	GLEITBLOCK
10	10354584	1	INDUCTIVE SENSOR BERUEHRUNGSLOS	INDUKTIVSENSOR
20	12103956	2	SOCKET HEAD SCREW DIN 7984 M12X80 08	ZYLINDERSCHRAUBE
25	12101506	2	PRESSURE SPRING 1,6X14,4X59,3 EN 1027	DRUCKFEDER
30	10875616	2	HEX NUT ISO 4032 M12 8 FLZN SPF	SECHSKANTMUTTER

Pos.	Item	Quantity	Description	Bezeichnung
1	917511508	1	CRAWLER CENTRE PART PREASS ⇨ ❑ 28	RAUPENMITTELTEIL VORM.
2	919510708	1	ELECTR.FOR CRAWLER CARRIER ⇨ ❑ 32	ELEKTRIK RAUPE
3	919296608	1	HYDRAULIC EQUIPM.CENTER PART ⇨ ❑ 48	HYDRAULIK MITTELTEIL

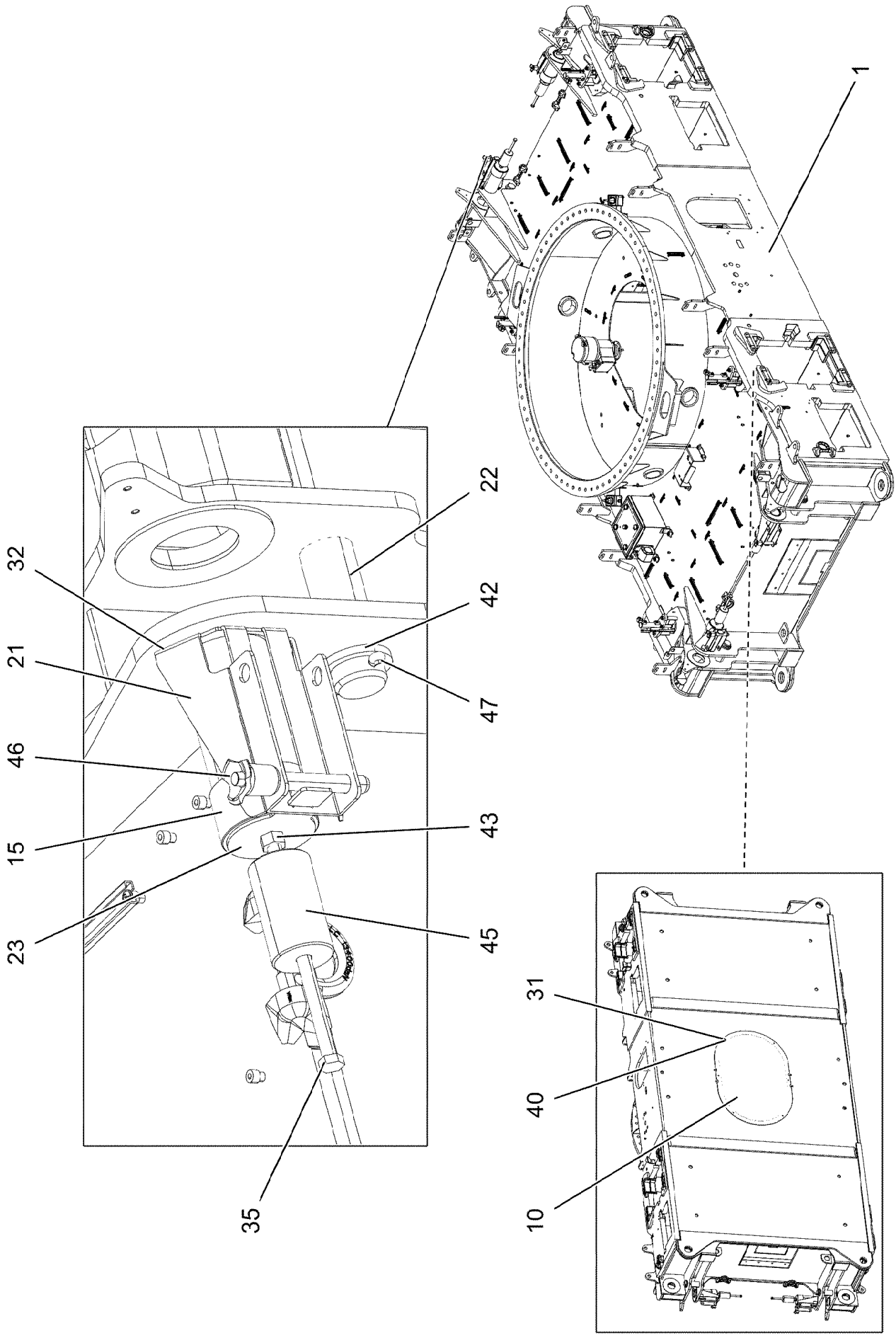

4.12.2020 077643 LIEBHERR	**etk_en_de 047580 LTR 1220** **CRAWLER CENTRE PART PREASS** **RAUPENMITTELTEIL VORM.**	❑ 28 (1/3) **917511508**

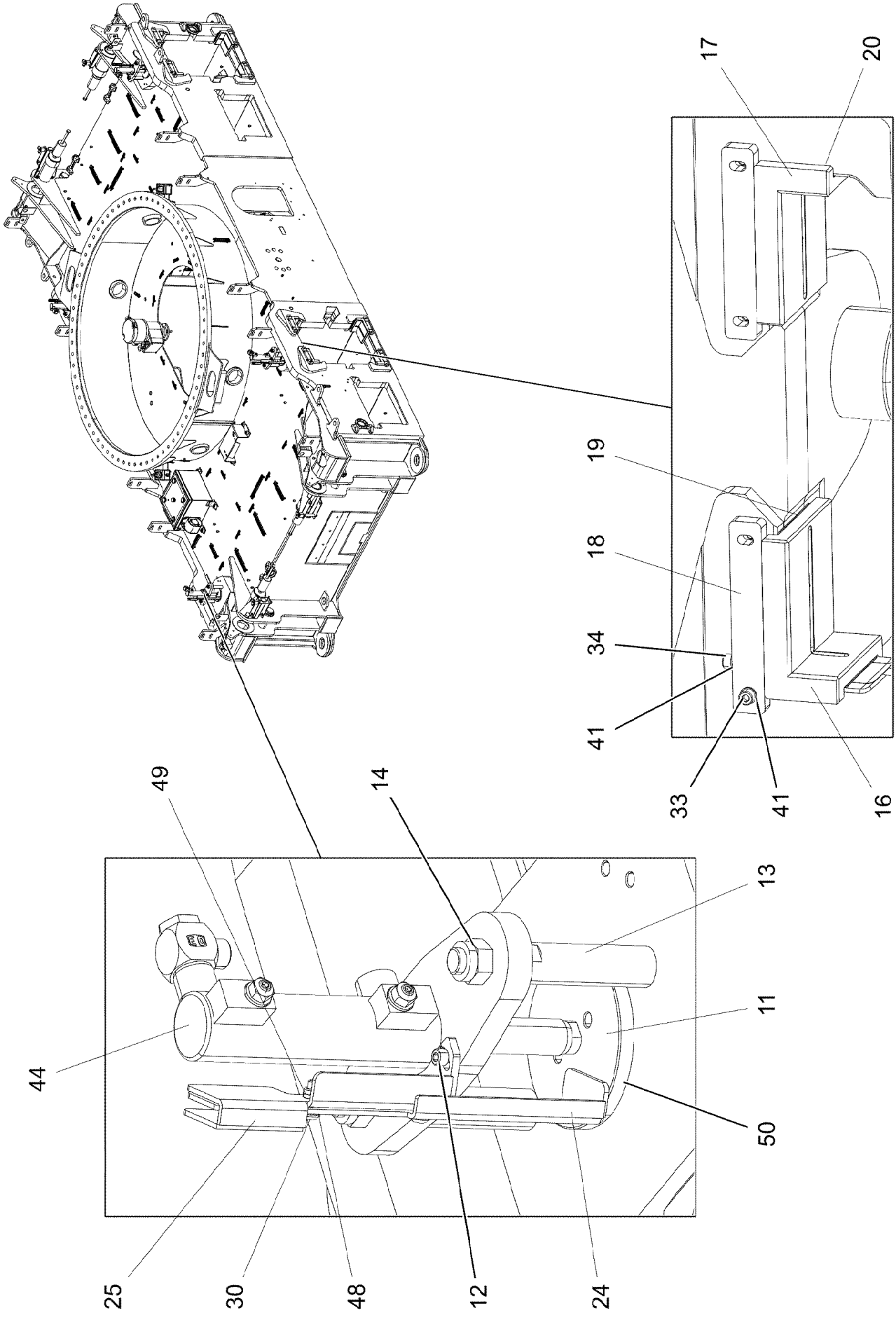
17
20
19
18
34
41
33
41
16
49
14
13
11
44
50
25
30
48
12
24

Pos.	Item	Quantity	Description	Bezeichnung
1	917511608	1	CENTRAL SECTION CRAWLER	RAUPENMITTELTEIL
10	97031860	1	COVER 4X1260X860 ALMG3 H111	DECKEL
11	97043050	4	PIN 110.0X170 35NICRMOV125 SPF	BOLZEN
12	10875586	8	SOCKET HEAD SCREW ISO 4762 M6X16 8.8	ZYLINDERSCHRAUBE
13	97043051	8	THREADED PIN 25.0X160 S355J2G3 FE//ZN	GEWINDEBOLZEN
14	10875609	8	HEX NUT DIN 985 M16 8 FLZN SPF	SECHSKANTMUTTER
15	97039932	4	PIN 110.0X245 35NICRMOV125 SPF	BOLZEN
16	97039611	8	SLIDER 150X130X70 CUZN25AL5	GLEITSTUECK
17	97039612	8	SLIDER 150X130X70 CUZN25AL5	GLEITSTUECK
18	97039613	16	RETAINING STRIP 15X180X30 S355MC FE//	HALTELEISTE
19	97042769	16	PLATE 1X133X94 DC01 FE//ZNNI8//CN//T0	BLECH
20	97042770	16	PLATE 1X65X94 DC01 FE//ZNNI8//CN//T0	BLECH
21	97032133	4	PLATE 4X499X309 S315MC FE//ZNNI8//CN//T	BLECH
22	97033301	4	PIN 65.0X225 35NICRMOV125 SPF	BOLZEN
23	97053626	4	PLATE 4X155X100 S315MC FE//ZNNI8//CN//T	BLECH
24	97043049	4	PLATE 3X286X61 X5CRNI18-10	BLECH
25	968765608	4	CLAMP WELDED CONST. FE//ZNNI8//CN//T0	HALTER SCHWK.
30	10412852	8	BUTTON HEAD SCREW AEHNL.ISO 7380-2	HALBRUNDKOPFSCHRAUBE
31	11652470	6	HEX SCREW ISO 4017 M10X16 8.8 FLZN SP	SECHSKANTSCHRAUBE
32	12219296	8	SOCKET HEAD SCREW ISO 4762 M10X20 8	ZYLINDERSCHRAUBE
33	10875599	32	SOCKET HEAD SCREW ISO 4762 M8X25 8.8	ZYLINDERSCHRAUBE
34	12202976	32	SOCKET HEAD SCREW ISO 4762 M8X40 8.8	ZYLINDERSCHRAUBE
35	10878582	4	HEX SCREW ISO 4014 M16X300 8.8 FLZN SP	SECHSKANTSCHRAUBE
40	10289795	6	WASHER ISO 7089 10 300HV FLZN SPF	SCHEIBE
41	10299679	64	WASHER ISO 7092 8 200HV 480H SPF	SCHEIBE
42	10179340	8	WASHER DIN 1440 60 -St FLZN SPF	SCHEIBE
43	10875617	4	HEX NUT ISO 4032 M16 8 FLZN SPF	SECHSKANTMUTTER
44	10870204	4	LATCHING ACTUATOR 32/22-65 SPF ⇨ ❑ 31	VERRIEGELUNGSZYLINDER
45	979443608	4	SLEEVE 70.0X120 S355J2G3 FE//ZNNI8//CN/	HUELSE
46	11320194	4	QUICK RELEASE PIN 20X171,2X100 NIROST	KUGELSPERRBOLZEN
47	10180375	8	SPLIT PIN ISO 1234 10X80 St 480H SPF	SPLINT
48	420010405	16	WASHER AEHNL.ISO 7089 6 PA6.6	SCHEIBE
49	411903008	8	HEX NUT DIN 985 M6 A2-70	SECHSKANTMUTTER
50	726433408	4	O-RING 94X3 NBR70	O-RING

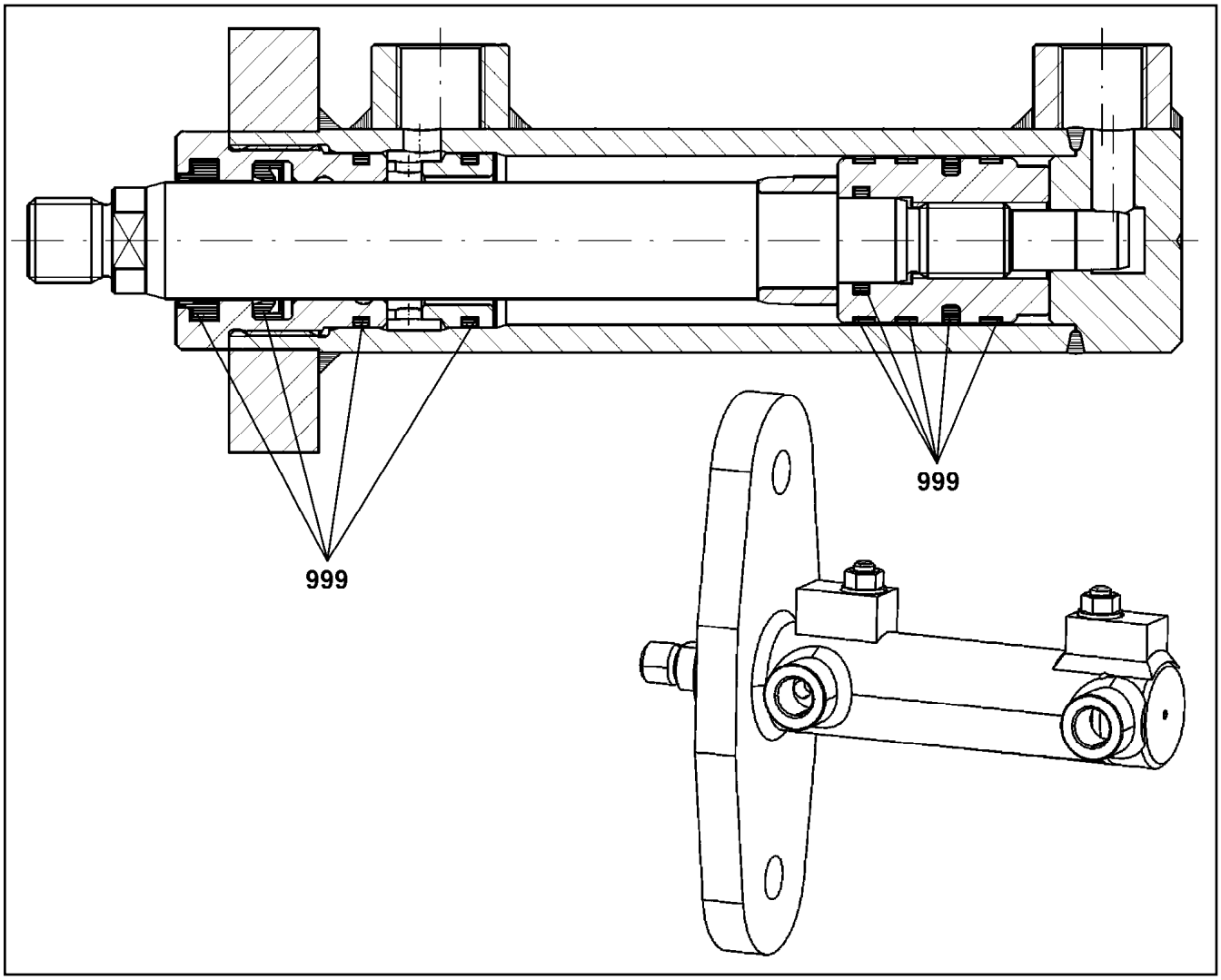

Pos.	Item	Quantity	Description	Bezeichnung
999	11621953	1	SEAL KIT CYLINDER	DS ZYLINDER

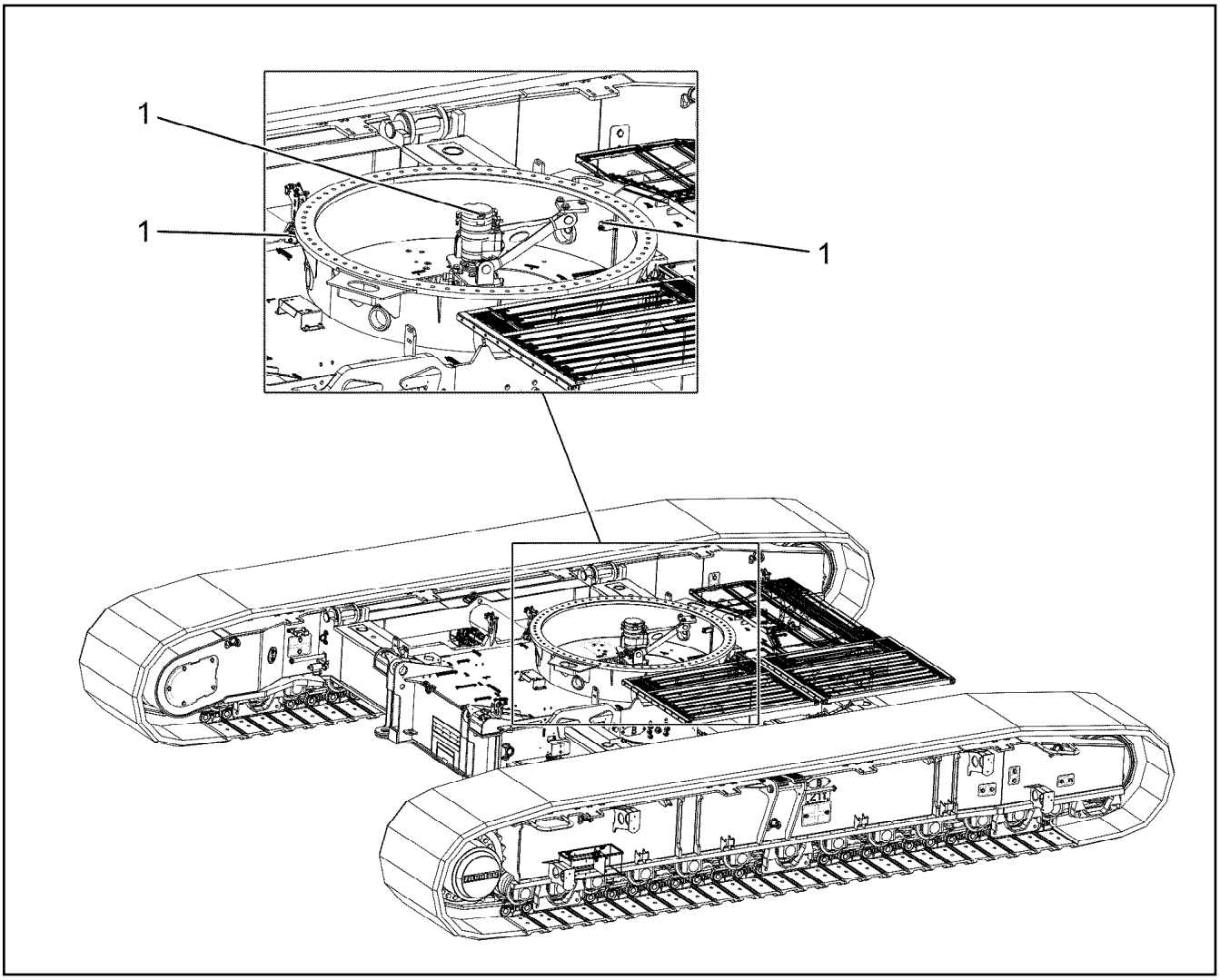

Pos.	Item	Quantity	Description	Bezeichnung
1	96045225	1	ELECTR.FOR CENTER SECTION ⇨ ❑ 33	ELEKTRIK MITTELSTUECK

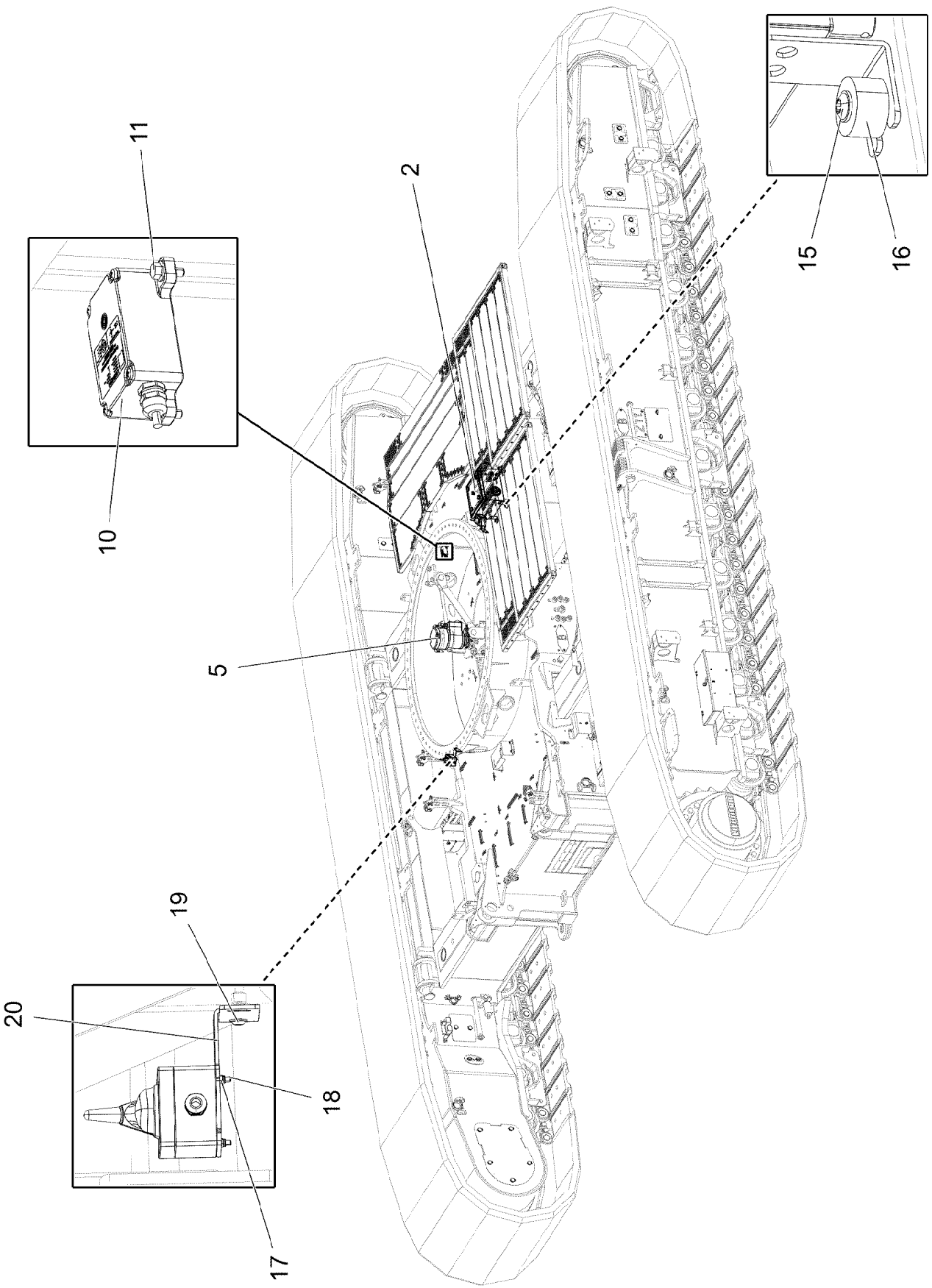
11
2
15
16
10
5
19
20
18
17

Pos.	Item	Quantity	Description	Bezeichnung
2	96045226	1	SWITCH BOX COMPL. S200 ⇨ ❑ 35	SCHALTKASTEN VORM.
5	11346779	1	SLIP RING TRANSMITTER 21X16A/24V SPF ⇨ ❑ 46	SCHLEIFRINGUEBERTRAGER
10	11001194	1	INCLINATION SENSOR +/-25° ALU SPF	NEIGUNGSGEBER
11	11840297	3	HEX SCREW EN 1665 M6X16 8.8 480H SPF	SECHSKANTSCHRAUBE
15	10875485	4	BUTTON HEAD SCREW AEHNL.ISO 7380-2	HALBRUNDKOPFSCHRAUBE
16	978787708	4	SLEEVE 33.0X19 FE//ZNNI8//CN//T0	HUELSE
17	10301317	4	HEX NUT DIN 985 M5 A2-70	SECHSKANTMUTTER
18	10875584	4	SOCKET HEAD SCREW ISO 4762 M5X25 8.8	ZYLINDERSCHRAUBE
19	12102696	4	BUTTON HEAD SCREW ISO7380-2 M8X10 0	HALBRUNDKOPFSCHRAUBE
20	97037626	2	PLATE 4X125X178 S315MC FE//ZNNI8//CN//T	BLECH

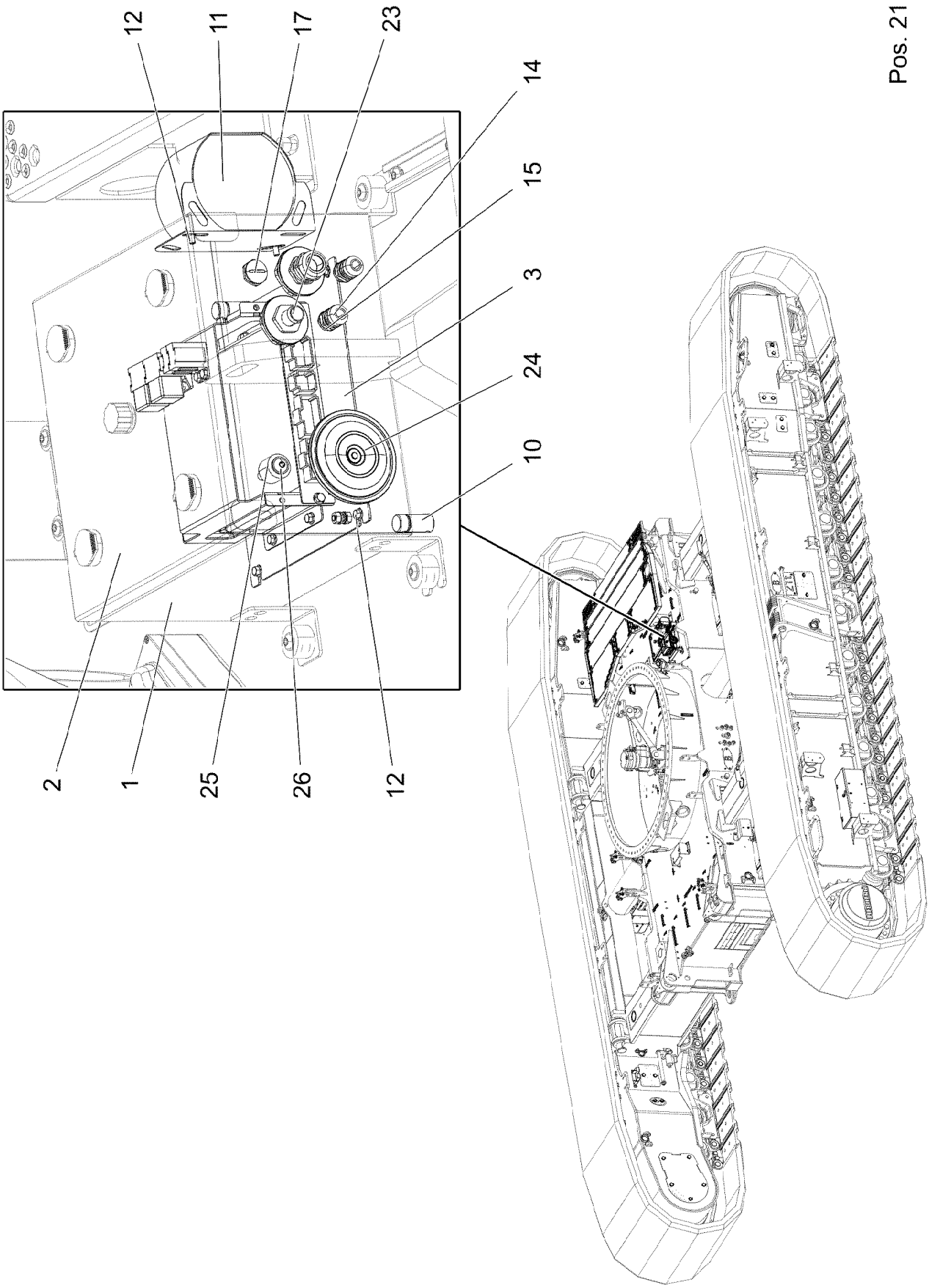
12
11
17
23
14
15
3
24
10
2
1
25
26
12
Pos. 21

Pos.	Item	Quantity	Description	Bezeichnung
1	968049608	1	SWITCH BOX WELDED RAL 7037 SPF	SCHALTKASTEN SCHWK.
2	966167808	1	COVER COMPL. ⇨ ❑ 37	DECKEL KPL.
3	968054008	1	MOUNTING PLATE PRE-ASS. ⇨ ❑ 38	MONTAGEPLATTE VORM.
4	966204108	2	ANTENNA CPL. ⇨ ❑ 41	ANTENNE KPL.
10	602501208	2	WATER DRAIN PLUG M12 PA6G SPF	ENTWAESSERUNGSSTOPFEN
11	614009908	1	FALL-BACK GUARD 12-36V 82-107DBA	RUECKFAHRWARNUNG
12	10876387	6	HEX SCREW M5X16 10.9 480H SPF	SECHSKANTSCHRAUBE
14	602424108	2	CABLE GLAND M16X1,5X4-11 MS	KABELVERSCHRAUBUNG
15	602504108	2	HEX NUT M16X1,5 MS	SECHSKANTMUTTER
17	602425008	1	SCREW PLUG 15 M20X 1,5 MS	VERSCHLUSSSCHRAUBE
18	602504208	1	HEX NUT M20X1,5 MS	SECHSKANTMUTTER
21	96045227	1	WIRING HARNESS W200 ⇨ ❑ 43	KABELSTRANG
23	96045228	1	WIRING HARNESS W202 ⇨ ❑ 44	KABELSTRANG
24	614003108	1	HORN 24V	HORN
25	953873408	1	SLEEVE 25X20 11SMN37 FE//ZNNI8//CN//T0	HUELSE
26	12100221	1	BUTTON HEAD SCREW ISO 7380-2 M8X40	HALBRUNDKOPFSCHRAUBE

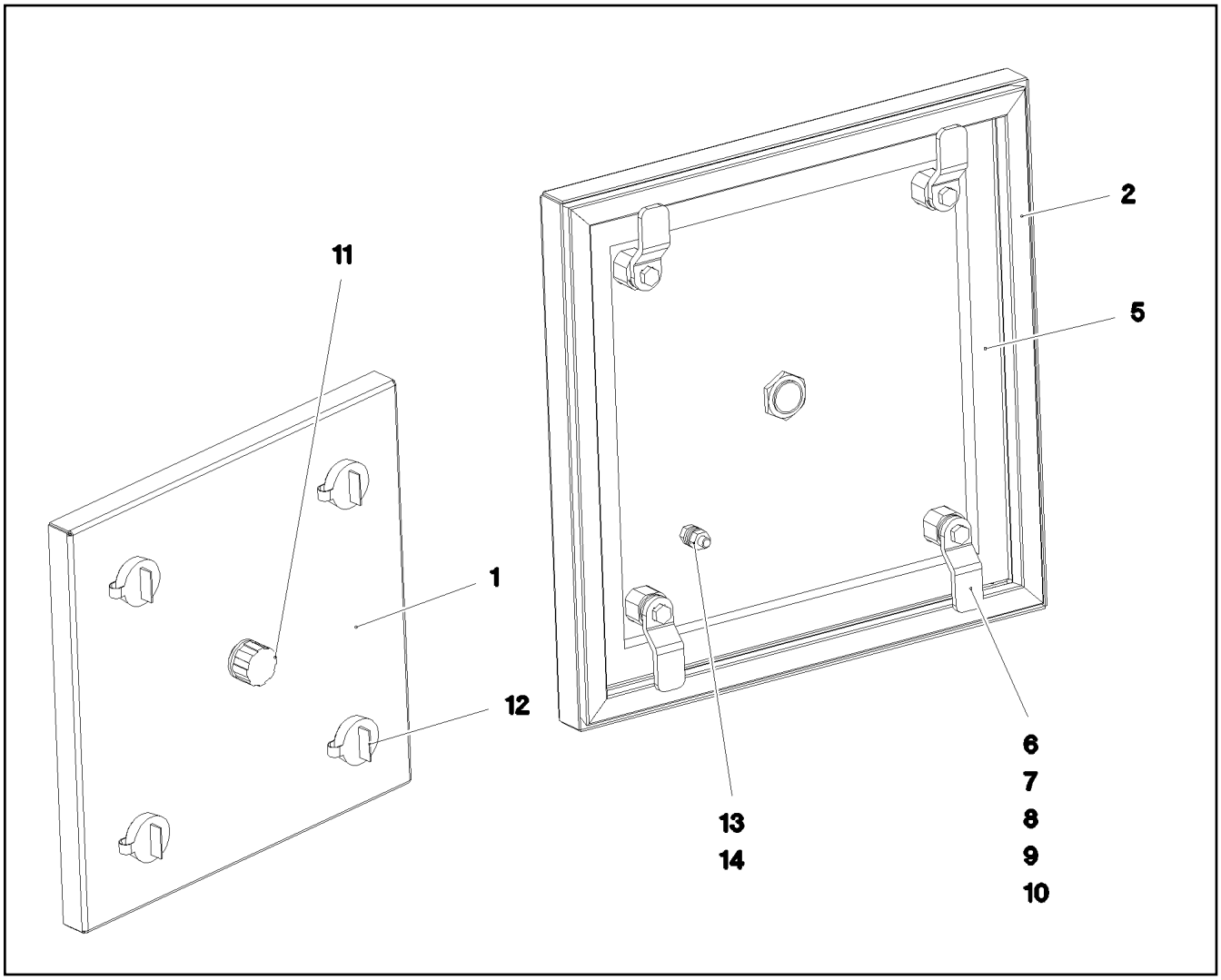

Pos.	Item	Quantity	Description	Bezeichnung
1	966189708	1	COVER GLUED	DECKEL GEKLEBT
2	979896308	1	SEALING PROFILE	ABDICHTPROFIL
5	262104308	1.08	CELL RUBBER 20X12 CR SCHWARZ	ZELLGUMMI
6	704253308	4	HOUSING GD-ZN SW GEPULVERT	GEHAEUSE
7	704253408	4	ACTUATION SPIKE GD-ZN SW GEPULVERT	BETAETIGUNGSDORN
8	704256708	4	TONGUE	ZUNGE
9	704274808	4	O-RING 12X2 NBR70	O-RING
10	704274908	4	FLAT GASKET	FLACHDICHTUNG
11	602501308	1	VENTILATION SCREW G1/2"X30 POLYAMID	ENTLUEFTUNGSSCHRAUBE
12	704254808	4	DUST CAP POLYETHYLEN SCHWARZ	STAUBKAPPE
13	10197764	2	HEX NUT ISO 4032 M6 10 ZNNI-480H SPF	SECHSKANTMUTTER
14	10197771	2	WASHER ISO 7089 6 200HV ZNNI-480H SPF	SCHEIBE

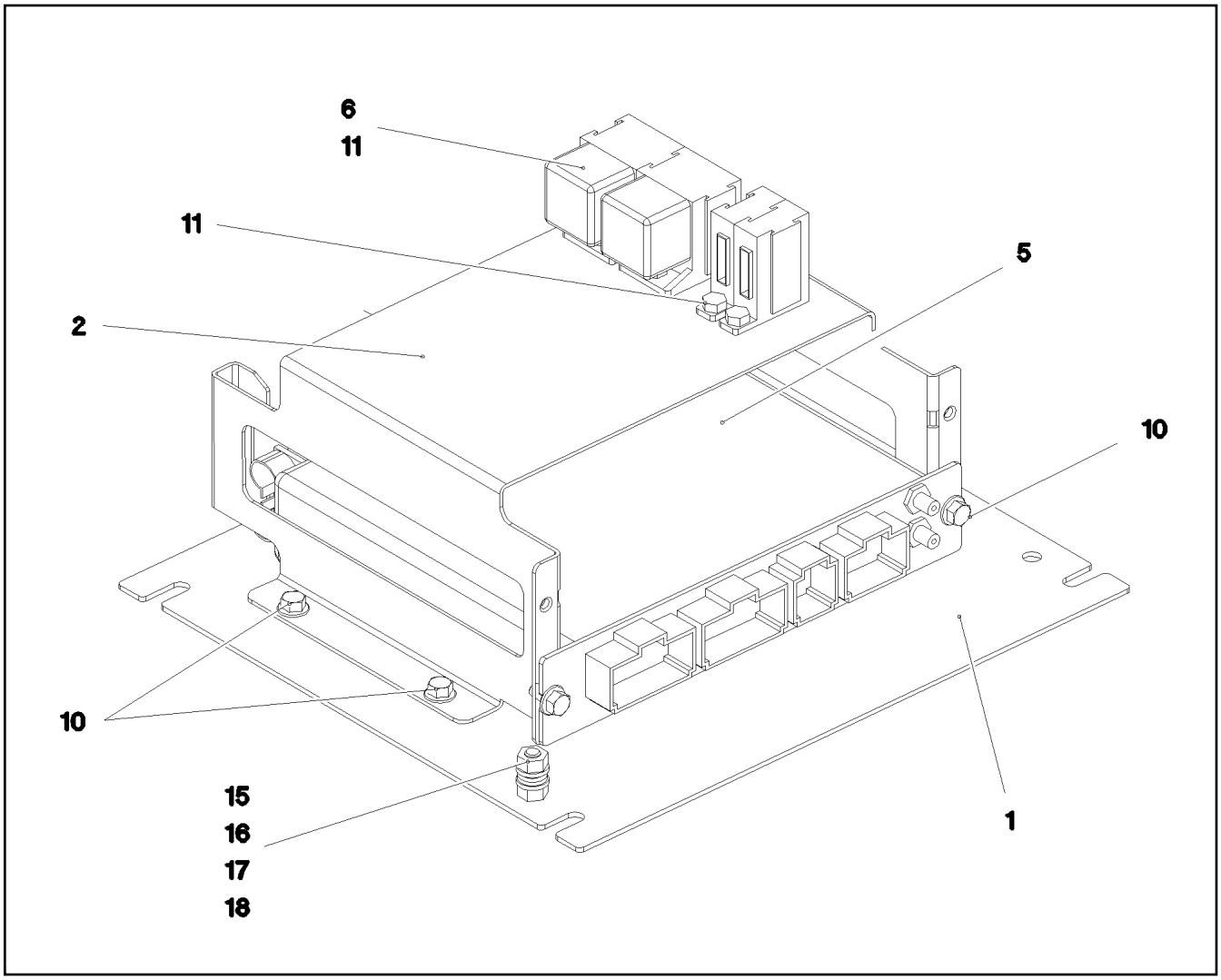

Pos.	Item	Quantity	Description	Bezeichnung
1	97032989	1	SUBPLATE 2X275X250 DC01 FE//ZNNI8//CN/	MONTAGEPLATTE
2	97032990	1	PLATE 1.5X404X230 DC01 FE//ZNNI8//CN//T	BLECH
5	968252908	1	BTB PROGRAMMED ⇨ ❑ 39	BTB PROGRAMMIERT
6	630121508	2	CENTER-ZERO RELAY 24V 10A SPF	WECHSLERRELAIS
10	10875503	6	HEX SCREW EN 1665 M5X10 10.9 480H SPF	SECHSKANTSCHRAUBE
11	4600871	4	HEX SCREW ISO 4017 M5X8 8.8 A2C	SECHSKANTSCHRAUBE
15	11644899	1	HEX SCREW ISO 4017 M6X20 8.8 480H SPF	SECHSKANTSCHRAUBE
16	10197764	2	HEX NUT ISO 4032 M6 10 ZNNI-480H SPF	SECHSKANTMUTTER
17	10197771	2	WASHER ISO 7089 6 200HV ZNNI-480H SPF	SCHEIBE
18	12102694	1	SERRATED LOCK WASHER DIN 6798 A 6.4	FAECHERSCHEIBE

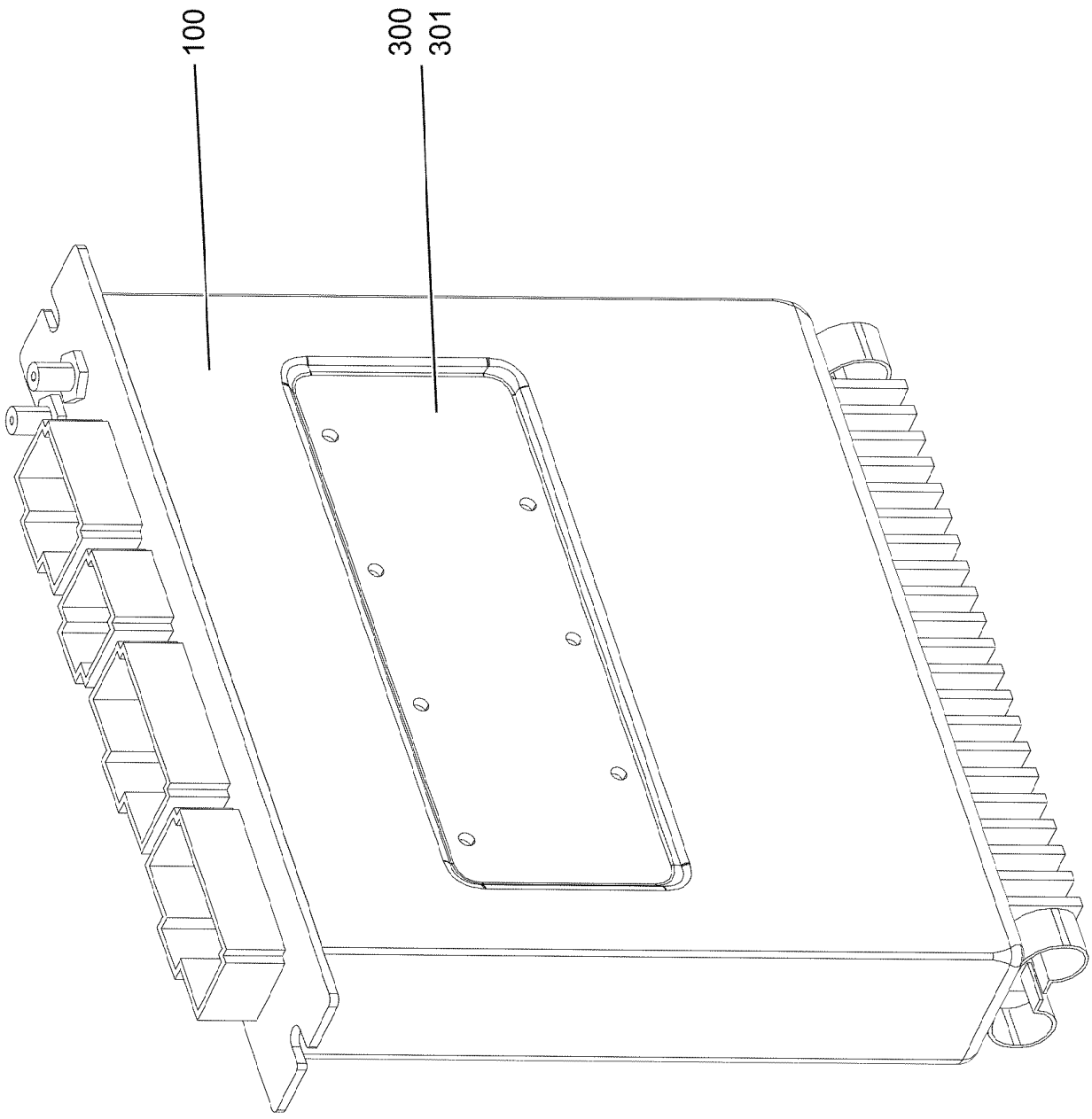
100
300
301

Pos.	Item	Quantity	Description	Bezeichnung
100	11212256	1	REMOTE CONTROL APPARATUS LSB-BTB-	FERNSTEUEREMPFAENGER
300	10288121	1	NAME PLATE 70X40 POLYESTER SPF	BEZEICHNUNGSSCHILD
301	11007853	1	LABELS 10X90 POLYESTER	ETIKETTEN

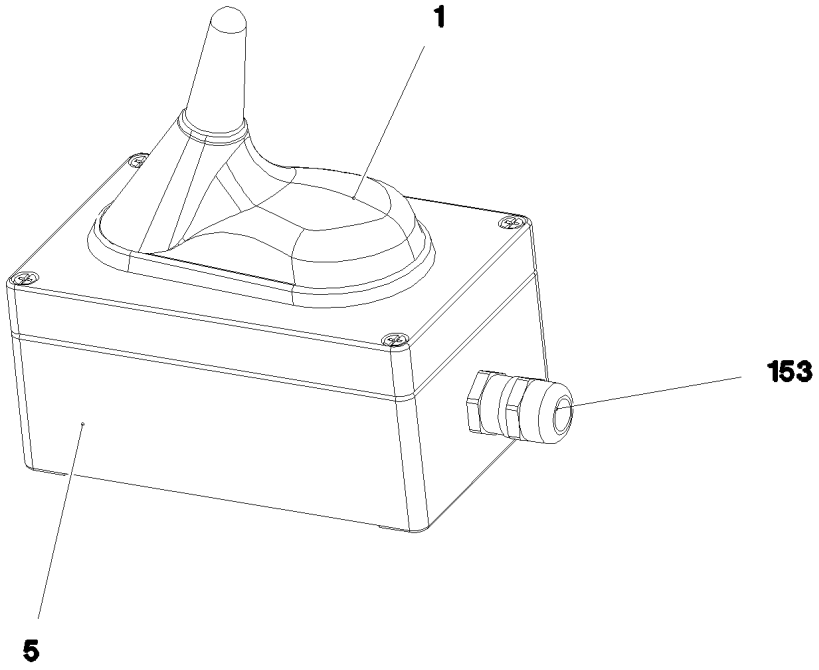

Pos.	Item	Quantity	Description	Bezeichnung
4	10450273	1	ANTENNA ⇨ ❑ 42	ANTENNE
5	979204408	1	EMPTY CASING 80.0X0 AL	LEERGEHAEUSE
153	602424108	1	CABLE GLAND M16X1,5X4-11 MS	KABELVERSCHRAUBUNG
160	10475426	3.4	CORRUGATED PIPE DN10 PA 6	WELLROHR

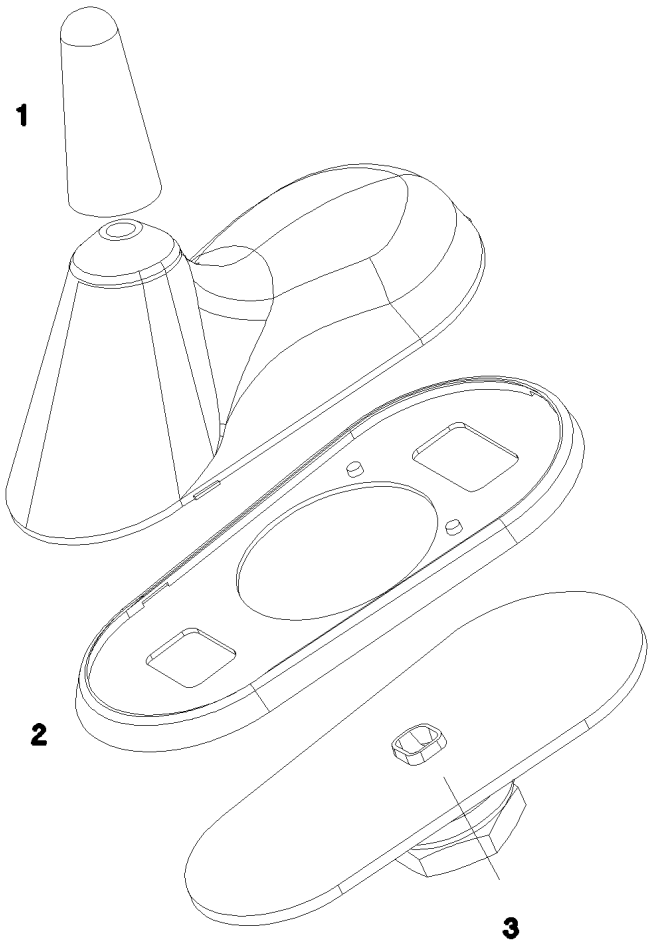

Pos.	Item	Quantity	Description	Bezeichnung
1	10815004	1	ANTENNA ROD	ANTENNENSTAB
2	10815005	1	SEAL	DICHTUNG
3	10815006	1	SLEEVE	HUELSE
4	11692299	1	CONNECTING CABLE 4M	VERBINDUNGSKABEL

Pos.	Item	Quantity	Description	Bezeichnung
5	12100217	0.4	DATA LINE 2 X 1 FEP SPF	DATENLEITUNG
6	12100217	0.4	DATA LINE 2 X 1 FEP SPF	DATENLEITUNG
7	11840113	0.3	BUS LINE 2 X 0,5	BUSLEITUNG
8	11840113	0.4	BUS LINE 2 X 0,5	BUSLEITUNG
9	11840113	0.45	BUS LINE 2 X 0,5	BUSLEITUNG
34	602217908	5	CABLE LUG DIN 46237 M6/1-2,5mm²	KABELSCHUH
39	602213308	1	CABLE LUG DIN 46237 6/6mm² VERZINNT	KABELSCHUH
72	602203408	6	RECEPTACLE 6,3X1-2,5 TIN-PLATED	STECKHUELSE
75	602203908	2	FLAT PLUG 6,3X1-2,5 SN	FLACHSTECKER
120	602323208	21	FLAT PLUG 1,0-2,5MM2	FLACHSTECKER
121	602300108	14	CONTACT 1-2,5MM2	KONTAKT
124	602323508	34	FLAT PLUG 2,8X0,5-1 VERZ	FLACHSTECKER
125	602300308	35	CONTACT 0,5-1MM2	KONTAKT
305	10870540	25.99	ELECTR.CABLE 1,0	KFZ-LEITUNG
500	923512208	18	CABLE MARKER	KABELMARKER
501	10099856	2	HOUSING 21-POLE	GEHAEUSE
502	10099868	2	CONTACT RETAINING PIN JPT 21 POL	KONTAKTSICHERUNGSSTIFT
503	602323308	3	FLAT PLUG HOUSING 18-POL	FLACHSTECKERGEHAEUSE
504	604501708	2	ATTACHABLE SLEEVE HOUSING	STECKHUELSENGEHAEUSE
505	604007008	1	FLAT FUSE LINK 7,5A	FLACHSICHERUNGSEINSATZ
506	630122908	2	PLUG BASE 9-POLE	RELAISSTECKSOCKEL
507	10021571	1	PLUG SHELL 8-POL	STECKERGEHAEUSE
508	10099860	1	HOUSING 9-POL	GEHAEUSE
509	10045101	1	CONTACT RETAINING PIN 9POL GELB	KONTAKTSICHERUNGSSTIFT
510	10099861	1	HOUSING 12-POL	GEHAEUSE
511	10099866	1	CONTACT RETAINING PIN JPT 12 POL	KONTAKTSICHERUNGSSTIFT
512	10099863	1	HOUSING 15-POLE	GEHAEUSE
513	10099867	1	CONTACT RETAINING PIN JPT 15 POLE	KONTAKTSICHERUNGSSTIFT
514	602335908	1	PLUG SHELL 4-POL	STECKERGEHAEUSE
515	604006908	1	FLAT FUSE LINK 5A 32	FLACHSICHERUNGSEINSATZ
516	602209708	1	ATTACHABLE SLEEVE HOUSING 2-POL	STECKHUELSENGEHAEUSE
517	602305908	1	FLAT PLUG HOUSING FASTIN-FASTON	FLACHSTECKERGEHAEUSE
642	602339108	4	RECEPTACLE 5X1,5-2,5	STECKHUELSE
758	11080881	5	RECEPTACLE 6,3X0,5-1,0 VERZINNT	STECKHUELSE
996	965622108	20	LETTERING WIRE	BESCHRIFTUNG ADER
998	965622208	1	LETTERING WIRING HARNESS	BESCHRIFTUNG KABELBAUM

Pos.	Item	Quantity	Description	Bezeichnung
5	680001408	1	COUPLING SOCKET 4-POL SPF	KUPPLUNGSDOSE
6	10678491	1	COUPLING SOCKET 4-POL SPF	KUPPLUNGSDOSE
7	11840113	1.63	BUS LINE 2 X 0,5	BUSLEITUNG
8	11840113	4.66	BUS LINE 2 X 0,5	BUSLEITUNG
9	600463908	3.13	CONTROL LEAD 4 X 0,5 SPF	STEUERLEITUNG
10	600463908	2.63	CONTROL LEAD 4 X 0,5 SPF	STEUERLEITUNG
11	10815830	4.96	LEAD 2 X 0,5	LEITUNG
12	10815830	4.96	LEAD 2 X 0,5	LEITUNG
13	10815830	4.16	LEAD 2 X 0,5	LEITUNG
14	10815830	4.16	LEAD 2 X 0,5	LEITUNG
15	11620017	2.63	LEAD 2 X 1	LEITUNG
16	600463908	6.06	CONTROL LEAD 4 X 0,5 SPF	STEUERLEITUNG
17	600463908	6.06	CONTROL LEAD 4 X 0,5 SPF	STEUERLEITUNG
18	10871285	1.8	LEAD 7 G 1	LEITUNG
86	602307708	2	WIRED END FERRULE DIN 46228-1 A1X5 V	ADERENDHUELSE
95	6202444	3	PIN CONTACT 0,75-1,5MM2	STIFTKONTAKT
96	6202434	4	SLEEVE CONTACT 0,75-1,5MM2	BUCHSENKONTAKT
114	602307808	8	WIRED END FERRULE DIN 46228-1 A0,5X5 E	ADERENDHUELSE
121	602300108	1	CONTACT 1-2,5MM2	KONTAKT
125	602300308	19	CONTACT 0,5-1MM2	KONTAKT
134	602303308	2	RECEPTACLE FOR TABS 6,3X0,5-1,5	FLACHSTECKHUELSE
202	11082602	2.31	INSULATING HOSE DN6X0,5 PUR SPF	ISOLIERSCHLAUCH
203	11082603	2.41	INSULATING HOSE DN8X0,65 PUR SPF	ISOLIERSCHLAUCH
204	11082604	4.29	INSULATING HOSE DN10X0,65 PUR SPF	ISOLIERSCHLAUCH
209	11082609	1.23	INSULATING HOSE DN20X0,85 PUR SPF	ISOLIERSCHLAUCH
226	11124209	0.35	CABLE CONDUIT DN30X0,6 PUR SPF	KABELSCHLAUCH
261	603200308	2	CABLE TIE 3,6X140-SCHWARZ PA66	KABELBINDER
305	10870540	36.53	ELECTR.CABLE 1,0	KFZ-LEITUNG
500	923512208	26	CABLE MARKER	KABELMARKER
501	602301408	1	HOUSING 8-POL	GEHAEUSE
502	605251608	1	PLUG SOCKET BODY 4-POLE AL	STECKDOSENKOERPER
503	920381108	1	PLUG	STECKER
504	602300208	2	PLUG SHELL 18-POL	STECKERGEHAEUSE
505	605007908	3	APPLIANCE SOCKET 3-POL	GERAETESTECKDOSE
506	604526508	5	BUSHING SUPPORT 6-POL 16A	BUCHSENTRAEGER
507	602339308	3	HOUSING 4-POL	GEHAEUSE
508	605212708	1	PLUG SOCKET BODY 3-POL	STECKDOSENKOERPER
509	604526608	4	PIN CARRIER 6-POL 16A	STIFTTRAEGER
510	605006608	2	DEVICE PLUG DIN 43650 4-POLE	GERAETESTECKER
511	604509408	1	CABLE SLEEVE 8-10	KABELTUELLE
512	602504508	1	HEX NUT M40X1,50 MS	SECHSKANTMUTTER
513	602440708	1	HOSE UNION JOINT 0 MS	SCHLAUCHVERSCHRAUBUNG
514	604508608	3	PLUG 6-POL	STECKER
515	604508508	5	SEALING PLUG M 1-K	VERSCHLUSSKAPPE
516	602339608	3	PROTECTING CAP STECKER 4-POL ELAST	SCHUTZKAPPE
517	605012408	1	PLUG BODY 3-POL	STECKERKOERPER
518	605215508	2	CLAMP SURE-SEAL	KLAMMER
519	605212808	3	MOULDING 317-1397-000 SUR	FORMTEIL
520	602704808	6	CABLE SLEEVE 4-6	KABELTUELLE
521	967709108	1	WIRING HARNESS WRCAN	KABELSTRANG
522	604505508	4	CABLE SOCKET M11-Z	KABELDOSE
523	604512108	4	SEALING PLUG M1-D	VERSCHLUSSKAPPE
524	10476383	2	PLUG M1	STECKER
525	602421908	2	INSERT M20X1,5 NBR	MEHRFACHDICHTEINSATZ
526	602441001	2	CABLE GLAND M20X1,5X5-10 MS	KABELVERSCHRAUBUNG
527	602424108	4	CABLE GLAND M16X1,5X4-11 MS	KABELVERSCHRAUBUNG
617	602329108	12	CONTACT 0,5-1MM2	KONTAKT
629	604519308	6	SLEEVE CONTACT 0,75-1,0MM2	BUCHSENKONTAKT
690	10335820	14	SLEEVE CONTACT 0,2-0,5MM2	BUCHSENKONTAKT
719	10493972	16	PIN CONTACT 0,5MM2 SILBER	STIFTKONTAKT

Pos.	Item	Quantity	Description	Bezeichnung
721	10493970	16	SLEEVE CONTACT 0,5MM2 SILBER	BUCHSENKONTAKT
802	602330808	12	SINGLE STRAND SEALING 1,2-2,1MM BLAU	EINZELADERABDICHTUNG
811	692404908	3	STOPPER PLUG	BLINDSTOPFEN
812	604518908	25	STOPPER PLUG BAUREIHE_M1	BLINDSTOPFEN
813	605619708	1	SINGLE STRAND SEALING 2	EINZELADERABDICHTUNG
996	965622108	20	LETTERING WIRE	BESCHRIFTUNG ADER
998	965622208	1	LETTERING WIRING HARNESS	BESCHRIFTUNG KABELBAUM

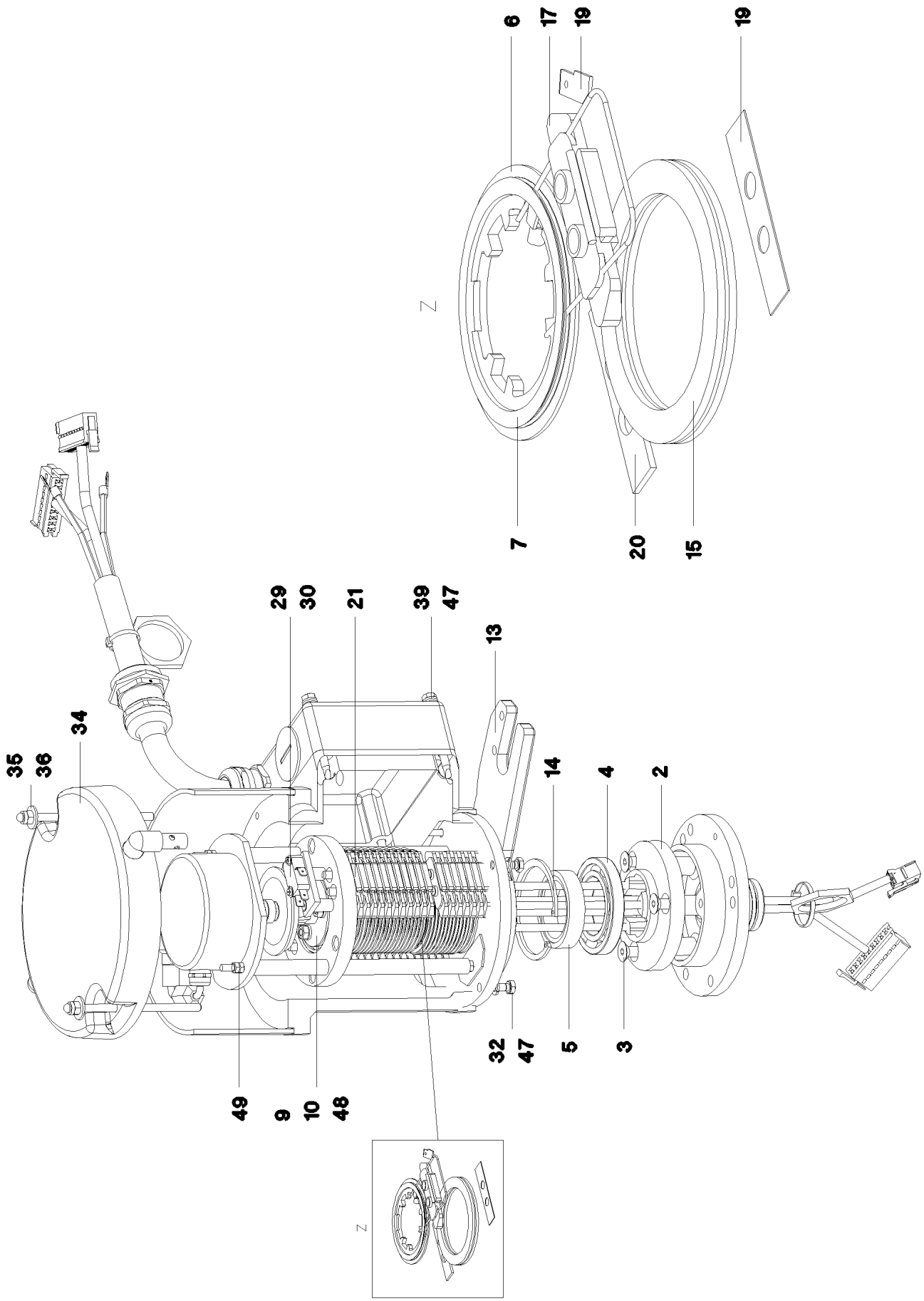
6
17
19
19
Z
7
20
15
29
30
21
39
47
13
34
35
36
14
4
2
32
47
5
3
49
9
10
48
Z

Pos.	Item	Quantity	Description	Bezeichnung
2	11007300	1	ADAPTER RING	ADAPTERRING
3	10875553	3	COUNTERSUNK SCREW DIN 7991 M8X25 8	SENKSCHRAUBE
4	10114839	1	DEEP GROOVE BALL BEARING	RILLENKUGELLAGER
5	11181884	1	SPACER RING	ABSTANDSRING
6	691041708	37	INSULATING RING	ISOLIERRING
7	10114843	21	SLIP RING 60X2 2,5²	SCHLEIFRING
8	10114850	15	SEPARATING RING	TRENNRING
9	11181885	1	BEARING STUB SHAFT	LAGERZAPFEN
10	10114838	1	DEEP GROOVE BALL BEARING 50X65X7	RILLENKUGELLAGER
12	11181886	1	TRIP CAM	SCHALTNOCKE
13	11100949	1	BEARING MOUNT	LAGERAUFNAHME
14	10171628	1	LOCKING RING DIN 472 72X2,5 FLZNNC-120	SICHERUNGSRING
17	691043108	35	CONTACT BOW HOLDER	SCHLEIFBUEGELHALTER
18	10115155	4	EQUALIZER PLATE	AUSGLEICHSPLATTE
19	691041608	21	CONTACT BOW	SCHLEIFBUEGEL
20	10359124	2	EQUALIZER PLATE	AUSGLEICHSPLATTE
21	10359128	2	CONTACT BOW HOLDER	SCHLEIFBUEGELHALTER
29	571486808	1	SNAP SWITCH	SCHNAPPSCHALTER
30	570824177	2	SPRING WASHER DIN 137 B 3 VERZ	FEDERSCHEIBE
32	4002860	4	HEX SCREW ISO 4017 M6X20 A2-70	SECHSKANTSCHRAUBE
34	11181887	1	HOOD COVER	HAUBENDECKEL
35	10540500	2	WASHER ISO 7093-1 6 200HV-A4	SCHEIBE
36	691035008	2	CAP NUT DIN 986 M6	HUTMUTTER
39	10181340	4	HEX SCREW ISO 4017 M6X60 8.8 480H SPF	SECHSKANTSCHRAUBE
47	425050608	11	SPRING WASHER DIN 137 B 6 A3C	FEDERSCHEIBE
48	10197764	12	HEX NUT ISO 4032 M6 10 ZNNI-480H SPF	SECHSKANTMUTTER
49	411514877	7	HEX NUT DIN 934 M5 8 VERZ	SECHSKANTMUTTER
50	12104246	1	LEAD	LEITUNG

Pos.	Item	Quantity	Description	Bezeichnung
4	96035801	1	HYDRAULIC EQUIPM.CENTER PART ⇨ ❑ 49	HYDRAULIK MITTELTEIL

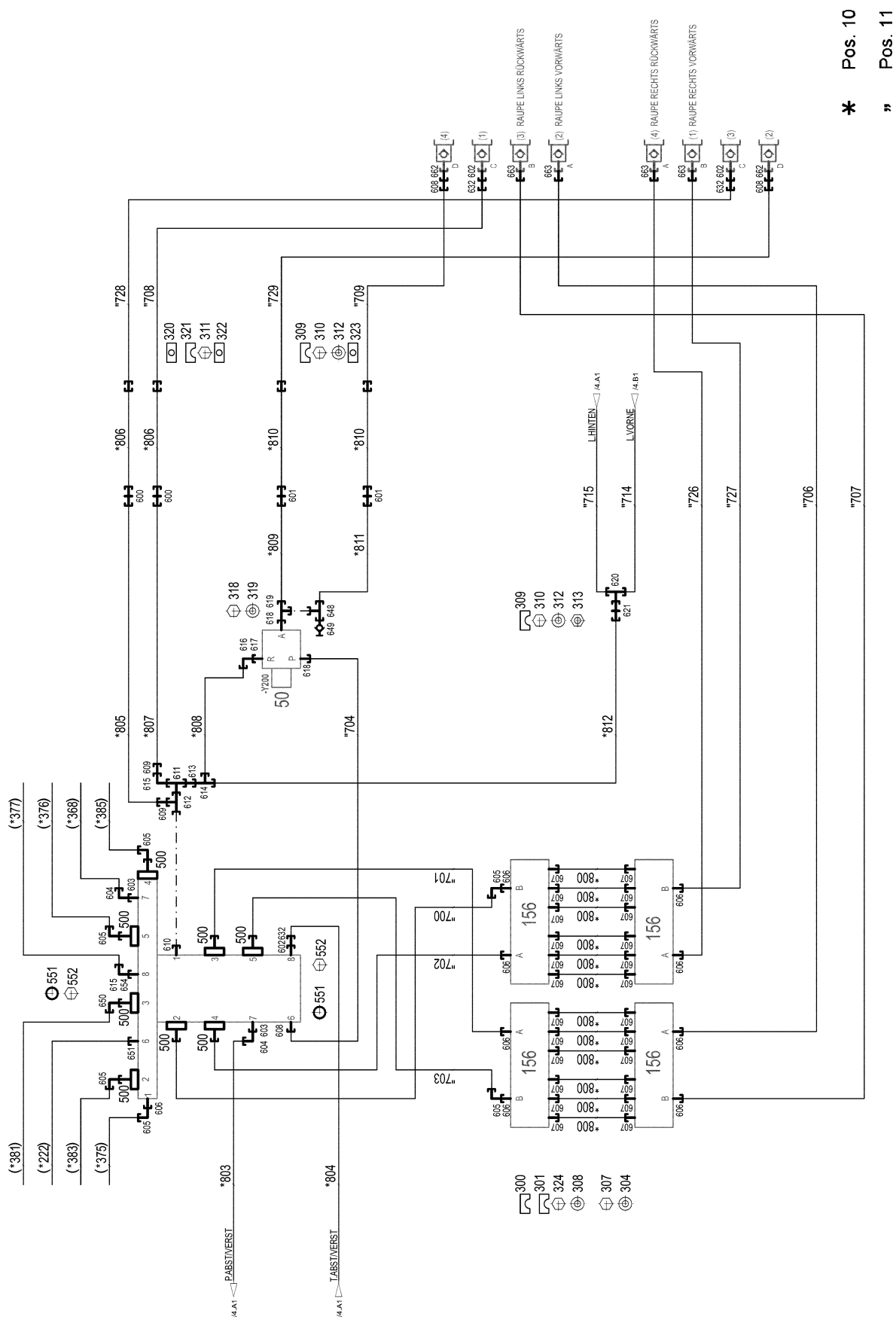
* Pos. 10
" Pos. 11
(4) RAUPE RECHTS RÜCKWÄRTS
(1) RAUPE RECHTS VORWÄRTS
(3) RAUPE LINKS RÜCKWÄRTS
(2) RAUPE LINKS VORWÄRTS
LHINTEN
LVORNE
P-ABSTVERST
T-ABSTVERST
50
156

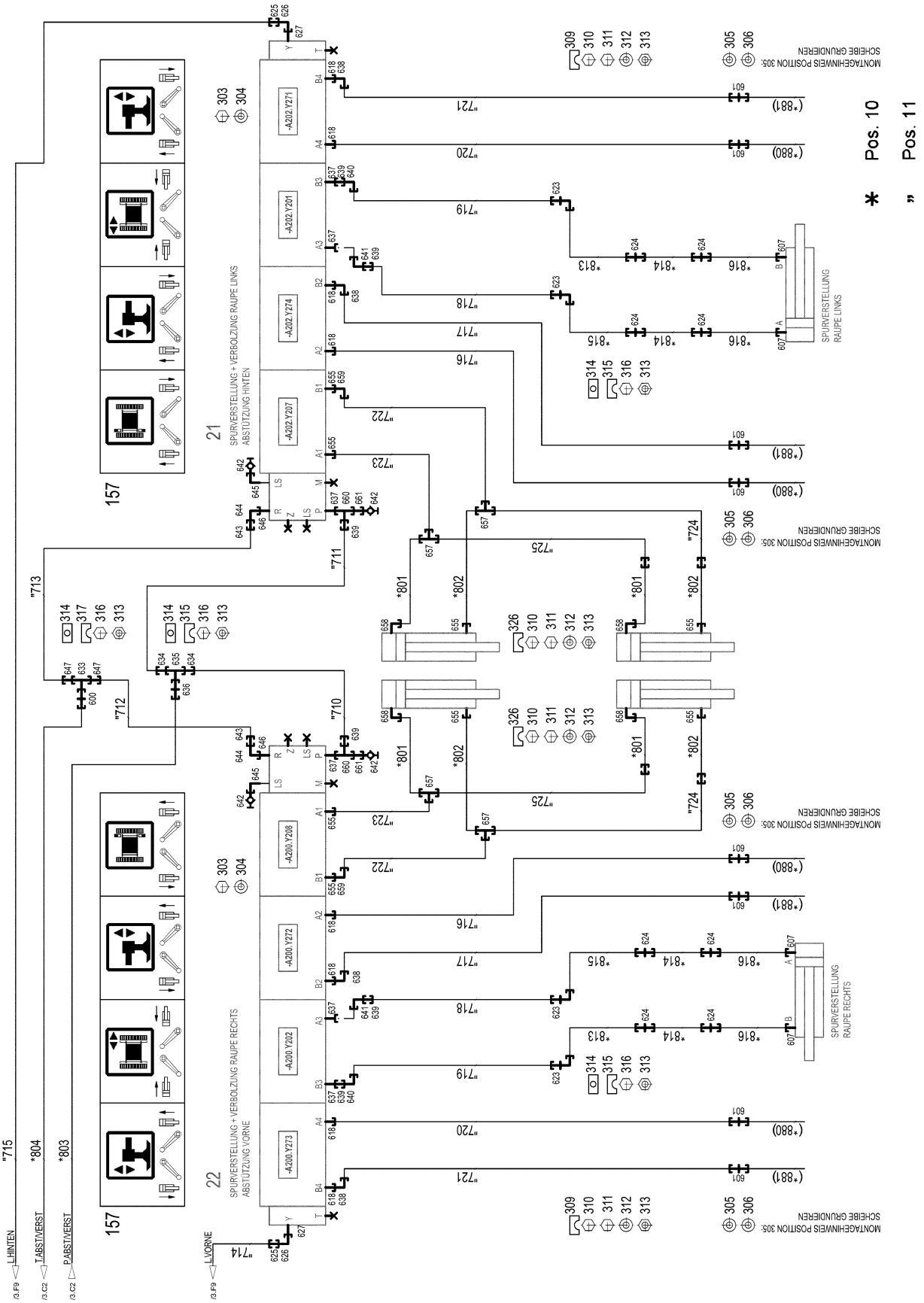
Pos. 10
* Pos. 11
SPURVERSTELLUNG + VERBOLZUNG RAUPE LINKS
ABSTÜTZUNG HINTEN
SPURVERSTELLUNG + VERBOLZUNG RAUPE RECHTS
ABSTÜTZUNG VORNE
SPURVERSTELLUNG RAUPE LINKS
SPURVERSTELLUNG RAUPE RECHTS
MONTAGEHINWEIS POSITION 305: SCHEIBE GRUNDIEREN
L HINTEN
T ABST/VERST
P ABST/VERST
L VORNE

Pos.	Item	Quantity	Description	Bezeichnung
10	96035802	1	HOSE LINES CENTRE SECTION ⇨ ❑ 53	SCHLAUCHLEITUNGEN MITTELT
11	96035803	1	PIPELINES CENTER PART ⇨ ❑ 54	ROHRLEITUNGEN MITTELTEIL
21	11643183	1	CONTROL BLOCK 420BAR SPF ⇨ ❑ 56	STEUERBLOCK
22	11643184	1	CONTROL BLOCK 420BAR SPF ⇨ ❑ 59	STEUERBLOCK
50	511444408	1	DIRECTIONAL CONTROL VALVE 3/2 350BA ⇨ ❑ 62	WEGEVENTIL
156	11214049	4	DISTRIBUTOR BLOCK G1 1/2 /8 C45+C VER	VERTEILERBLOCK
157	97044048	2	SIGN 158X33X1 AL-BL	SCHILD
300	97037153	6	PIPE CLAMP PART 26X50X332 PA6G	ROHRSCHELLENTEIL
301	97037154	6	PIPE CLAMP PART 26X50X332 PA6G	ROHRSCHELLENTEIL
303	11651612	8	HEX SCREW ISO 4017 M8X16 8.8 480H SPF	SECHSKANTSCHRAUBE
304	11840501	20	WASHER DIN 7349 8,4 200HV 480H SPF	SCHEIBE
305	10179985	8	WASHER DIN 6340 21 FLZN SPF	SCHEIBE
306	10875637	4	WASHER DIN 1441 21 ST FLZN SPF	SCHEIBE
307	10876620	12	HEX SCREW ISO 4014 M8X100 8.8 480H SP	SECHSKANTSCHRAUBE
308	10289803	24	WASHER ISO 7089 8 300HV 480H SPF	SCHEIBE
309	7365090	62	CLAMP-HALF DIN 3015-1 L 0 R 12 PP SW	KLEMMHAELFTE
310	10875588	27	SOCKET HEAD SCREW ISO 4762 M6X25 8.8	ZYLINDERSCHRAUBE
311	12203634	22	SOCKET HEAD SCREW ISO 4762 M6X50 8.8	ZYLINDERSCHRAUBE
312	10197771	45	WASHER ISO 7089 6 200HV ZNNI-480H SPF	SCHEIBE
313	602018008	61	CARRIER RAIL NUT DIN 3015-1 L TM M6 W1	TRAGSCHIENENMUTTER
314	7005053	10	LID PLATE DIN 3015-1 L-DP 3 W1-ZN	DECKPLATTE
315	602008408	14	CLAMP-HALF DIN 3015-1 L 3 G 20 PP SW	KLEMMHAELFTE
316	10875591	20	SOCKET HEAD SCREW ISO 4762 M6X40 8.8	ZYLINDERSCHRAUBE
317	602008508	6	CLAMP-HALF DIN 3015-1 L 3 R 22 PP SW	KLEMMHAELFTE
318	11692824	2	HEX SCREW ISO 4017 M6X12 8.8 480H SPF	SECHSKANTSCHRAUBE
319	11693878	2	WASHER DIN 7349 6,4 200HV 480H SPF	SCHEIBE
320	7008583	2	LID PLATE DIN 3015-1 L-DP 4 W1-ZN	DECKPLATTE
321	602008808	4	CLAMP-HALF DIN 3015-1 L 4 R 28 PP SW	KLEMMHAELFTE
322	10802205	2	WELD PLATE DIN 3015-1 L-AP-K 4 W1 ZNNI	ANSCHWEISSPLATTE
323	602015408	4	WELD PLATE DIN 3015-1 L-AP-K 0 W1	ANSCHWEISSPLATTE
324	12202976	24	SOCKET HEAD SCREW ISO 4762 M8X40 8.8	ZYLINDERSCHRAUBE
326	602007808	64	CLAMP-HALF DIN 3015-1 L 0 G 10 PP SW	KLEMMHAELFTE
500	511517808	8	FLANGE STUB PIPE AFG 38S G1 1/4 CR6-F	FLANSCHSTUTZEN
551	510586708	8	O-RING ARP 568 37,69X3,53 NBR90	O-RING
552	10876373	32	SOCKET HEAD SCREW ISO 4762 M14X45 8	ZYLINDERSCHRAUBE
600	474001008	3	FITTING XSV28-L CFX	VERSCHRAUBUNG
601	474032408	10	FITTING XSV12-S A3P	VERSCHRAUBUNG
602	471034508	3	FITTING XGE35-LR-ED A3P	VERSCHRAUBUNG
603	471033608	2	FITTING XGE25-SR-ED A3P	VERSCHRAUBUNG
604	7407119	2	FITTING EW 25S CR6-FREI	VERSCHRAUBUNG
605	472531808	6	FITTING EWSD38-S A3P	VERSCHRAUBUNG
606	471034408	9	FITTING XGEV38-SR-WD A3P	VERSCHRAUBUNG
607	471033408	28	FITTING XGE20-SR-ED A3P	VERSCHRAUBUNG
608	471032608	3	FITTING GE 12S G1/2A CR6-FREI	VERSCHRAUBUNG
609	475431308	2	FITTING RED 42/28L CR6-FREI	VERSCHRAUBUNG
610	471034708	1	FITTING GE 42L G1 1/2 CR6-FREI	VERSCHRAUBUNG
611	482431114	1	FITTING ISO 8434 ET 42L CR6-FREI	VERSCHRAUBUNG
612	7367986	1	FITTING EL 42L CR6-FREI	VERSCHRAUBUNG
613	475407208	1	FITTING REDSDN42/12-L A3P	VERSCHRAUBUNG
614	247128602	1	FITTING EL 12L M18X1,5 CR6-FREI	VERSCHRAUBUNG
615	482530814	2	FITTING ISO 8434 EW 42L CR6-FREI	VERSCHRAUBUNG
616	247117702	1	FITTING EW 12L M18X1,5 CR6-FREI	VERSCHRAUBUNG
617	471030808	1	FITTING XGE12-LR-ED A3P	VERSCHRAUBUNG
618	471032708	10	FITTING GE 12S G3/8A CR6-FREI	VERSCHRAUBUNG
619	7617461	1	FITTING EL 12S CR6-FREI	VERSCHRAUBUNG

Pos.	Item	Quantity	Description	Bezeichnung
620	247105602	1	FITTING ET 12L M18X1,5 CR6-FREI	VERSCHRAUBUNG
621	474000408	1	FITTING XSV12-L A3P	VERSCHRAUBUNG
623	474232808	4	FITTING WSV 20S A3C	VERSCHRAUBUNG
624	474032708	8	FITTING XSV20-S A3P	VERSCHRAUBUNG
625	475030108	2	FITTING XGR12/6-L A3P	VERSCHRAUBUNG
626	247021702	2	FITTING EW 6L CR6-FREI	VERSCHRAUBUNG
627	471900108	2	FITTING EGESD6-LR-WD CFX	VERSCHRAUBUNG
632	475430408	3	FITTING REDSD35/28-L CFX	VERSCHRAUBUNG
633	7407122	1	FITTING ET 28L M36X2 CR6-FREI	VERSCHRAUBUNG
634	475432308	2	FITTING REDSDN25/20-S A3P	VERSCHRAUBUNG
635	7367774	1	FITTING ET 25S CR6-FREI	VERSCHRAUBUNG
636	474032808	1	FITTING SV 25S A3C	VERSCHRAUBUNG
637	471900608	6	FITTING EGESD16-SR-WD A3P	VERSCHRAUBUNG
638	7617354	4	FITTING EW 12S CR6-FREI	VERSCHRAUBUNG
639	475033608	6	FITTING GR 20/16S A3P	VERSCHRAUBUNG
640	7407108	2	FITTING EW 20S M30X2 CR6-FREI	VERSCHRAUBUNG
641	7617460	2	FITTING EW 16S CR6-FREI	VERSCHRAUBUNG
642	475601508	4	TEST POINT FITTING BMA3 6S	MESSANSCHLUSS
643	475030708	2	FITTING GR 22/18L CR6-FREI	VERSCHRAUBUNG
644	247108302	2	FITTING EW 18L M26X1,5 CR6-FREI	VERSCHRAUBUNG
645	473230608	2	FITTING RSWS6-SR-WD A3P	VERSCHRAUBUNG
646	471901308	2	FITTING EGESD18-LR-WD A3P	VERSCHRAUBUNG
647	475430508	2	FITTING REDSD28/22-L A3P	VERSCHRAUBUNG
648	482431414	1	FITTING ISO 8434 ET 12S CR6-FREI	VERSCHRAUBUNG
649	7409922	1	GAUGE CONNECTION 12S M20X1,5 CR6-F	MESSSTUTZEN
650	10467292	1	FITTING EV38S M52X2 A3C	VERSCHRAUBUNG
651	471031008	1	FITTING XGE15-LR-ED A3P	VERSCHRAUBUNG
654	10476913	1	PIPE UNION GE 42L G11/4A CR6-FREI	EINSCHRAUBVERSCHRAUBUN
655	471032808	8	FITTING ISO 8434-1 GE 10S G3/8A CR6-FRE	VERSCHRAUBUNG
657	470402208	4	FITTING T 10S A3C	VERSCHRAUBUNG
658	473231008	4	FITTING RSWS10-SR-WD A3P	VERSCHRAUBUNG
659	7617268	2	FITTING EW 10S CR6-FREI	VERSCHRAUBUNG
660	482431514	2	FITTING ISO 8434 ET 16S CR6-FREI	VERSCHRAUBUNG
661	475433108	2	FITTING REDSD16/6-S CFX	VERSCHRAUBUNG
662	475501108	2	ADAPTOR RI11/4-EDX1/2 A3P	ADAPTER
663	7410455	4	SCREW-ON CONNECTION GE 38S G1 1/4A	EINSCHRAUBSTUTZEN

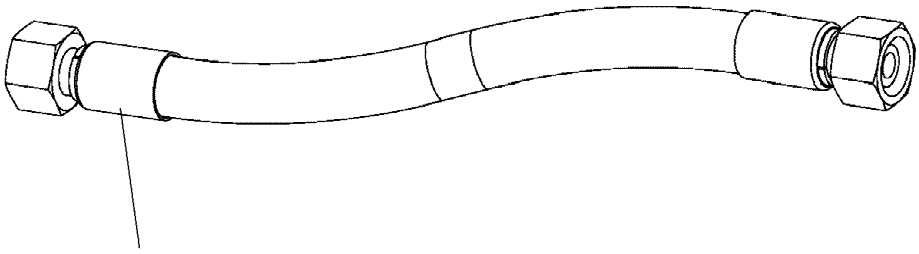

Schlauchnummer
Hose number
Numéro de flexible
Número de flexible
Номера шланга

Die Schlauchnummern auf den Schläuchen entsprechen den Positionen in der Schlauchliste.

The hose numbers from the hoses are in accordance with the items in the hose list.

Les numéros indiqués sur les flexibles correspondent aux repères de la nomenclature des flexibles.

Los números indicados en los flexibles corresponden a las posiciones de la lista de flexibles.

Нанесенные на шлангах номера соответствуют позициям в перечне.

Pos.	Item	Quantity	Description	Bezeichnung
800	920715608	12	HOSE CPL. GH425-10 16X1750	SCHLAUCH KPL.
801	928874708	4	HOSE CPL. 2SN 8X400	SCHLAUCH KPL.
802	968585908	4	HOSE CPL. 2SN 8X320	SCHLAUCH KPL.
803	923702508	1	HOSE CPL. GH425-12 19X960	SCHLAUCH KPL.
804	968144708	1	HOSE CPL.	SCHLAUCH KPL.
805	968144208	1	HOSE CPL. 1SN 25X1900	SCHLAUCH KPL.
806	928033508	2	HOSE CPL. 1SN 25X1750	SCHLAUCH KPL.
807	968144308	1	HOSE CPL. 1SN 25X1300	SCHLAUCH KPL.
808	926465408	1	HOSE CPL. 2TE 10X1000	SCHLAUCH KPL.
809	929752308	1	HOSE CPL. 2TE 10X600	SCHLAUCH KPL.
810	928865508	2	HOSE CPL. 2SN 10X1700	SCHLAUCH KPL.
811	968144408	1	HOSE CPL. 2TE 10X1900	SCHLAUCH KPL.
812	926041708	1	HOSE CPL. 2TE 10X500	SCHLAUCH KPL.
813	924496108	2	HOSE CPL. GH425-10 16X1160	SCHLAUCH KPL.
814	920715608	4	HOSE CPL. GH425-10 16X1750	SCHLAUCH KPL.
815	926315908	2	HOSE CPL.	SCHLAUCH KPL.
816	96035865	4	HOSE CPL. GH425-10 16X1520	SCHLAUCH KPL.
890	968841908	1	HOSE CPL. HPC 4X2850	SCHLAUCH KPL.
891	920983508	1	HOSE CPL. HPC 4X4900	SCHLAUCH KPL.

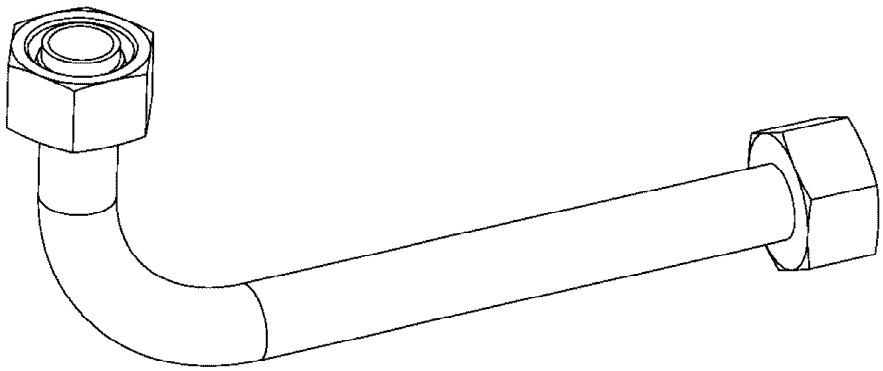

Die Positionsnummern der Rohre auf den Bildtafeln entsprechen den Positionen in der Rohrliste.

The pipe numbers from the illustrations are in accordance with the items in the pipe list.

Les numéros des tuyaux sur les illustrations correspondent aux repères de la nomenclature des tuyaux.

Los números de tubos en las ilustraciones corresponden a las posiciones de la lista de tubos.

Номера позиций труб на изображениях соответствуют позициям в перечне труб.

Pos.	Item	Quantity	Description	Bezeichnung
700	968166708	1	PIPE COMPL. 38X5	ROHR KPL.
701	968166808	1	PIPE COMPL. 38X5	ROHR KPL.
702	968166908	1	PIPE COMPL. 38X5	ROHR KPL.
703	968167008	1	PIPE COMPL. 38X5	ROHR KPL.
704	968167108	1	PIPE COMPL. 12X1.5	ROHR KPL.
706	96035905	1	PIPE COMPL. 38X5	ROHR KPL.
707	96035906	1	PIPE COMPL. 38X5	ROHR KPL.
708	96035907	1	PIPE COMPL. 28X2	ROHR KPL.
709	96035909	1	PIPE COMPL. 12X1.5	ROHR KPL.
710	969165508	1	PIPE COMPL. 20X2.5	ROHR KPL.
711	969165608	1	PIPE COMPL. 20X2.5	ROHR KPL.
712	968167808	1	PIPE COMPL. 22X2.5	ROHR KPL.
713	968167908	1	PIPE COMPL. 22X2.5	ROHR KPL.
714	968168008	1	PIPE COMPL. 12X1.5	ROHR KPL.
715	968168108	1	PIPE COMPL. 12X1.5	ROHR KPL.
716	968168208	2	PIPE COMPL. 12X1.5	ROHR KPL.
717	968168308	2	PIPE COMPL. 12X1.5	ROHR KPL.
718	968168408	2	PIPE COMPL. 20X2.5	ROHR KPL.
719	968168508	2	PIPE COMPL. 20X2.5	ROHR KPL.
720	968168608	2	PIPE COMPL. 12X1.5	ROHR KPL.
721	968168708	2	PIPE COMPL. 12X1.5	ROHR KPL.
722	968593808	2	PIPE COMPL. 10X1.5	ROHR KPL.
723	968593908	2	PIPE COMPL. 10X1.5	ROHR KPL.
724	968594008	2	PIPE COMPL. 10X1.5	ROHR KPL.
725	968594108	2	PIPE COMPL. 10X1.5	ROHR KPL.
726	96035910	1	PIPE COMPL. 38X5	ROHR KPL.
727	96035911	1	PIPE COMPL. 38X5	ROHR KPL.
728	96035912	1	PIPE COMPL. 28X2	ROHR KPL.
729	96035913	1	PIPE COMPL. 12X1.5	ROHR KPL.
770	968205108	4	PIPE COMPL. 6X1X327	ROHR KPL.
771	968205208	4	PIPE COMPL. 6X1X327	ROHR KPL.
772	97039386	4	TUBE 6X1X132 E235+N	ROHR
773	97039387	4	TUBE 6X1X132 E235+N	ROHR
774	97039388	4	TUBE 6X1X1161 E235+N	ROHR
775	97039389	4	TUBE 6X1X1169 E235+N	ROHR

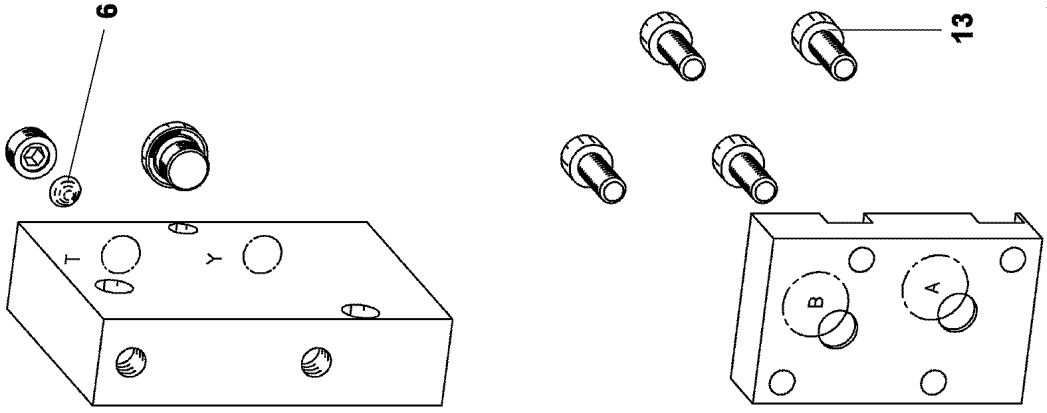
6
13
T
Y
B
A

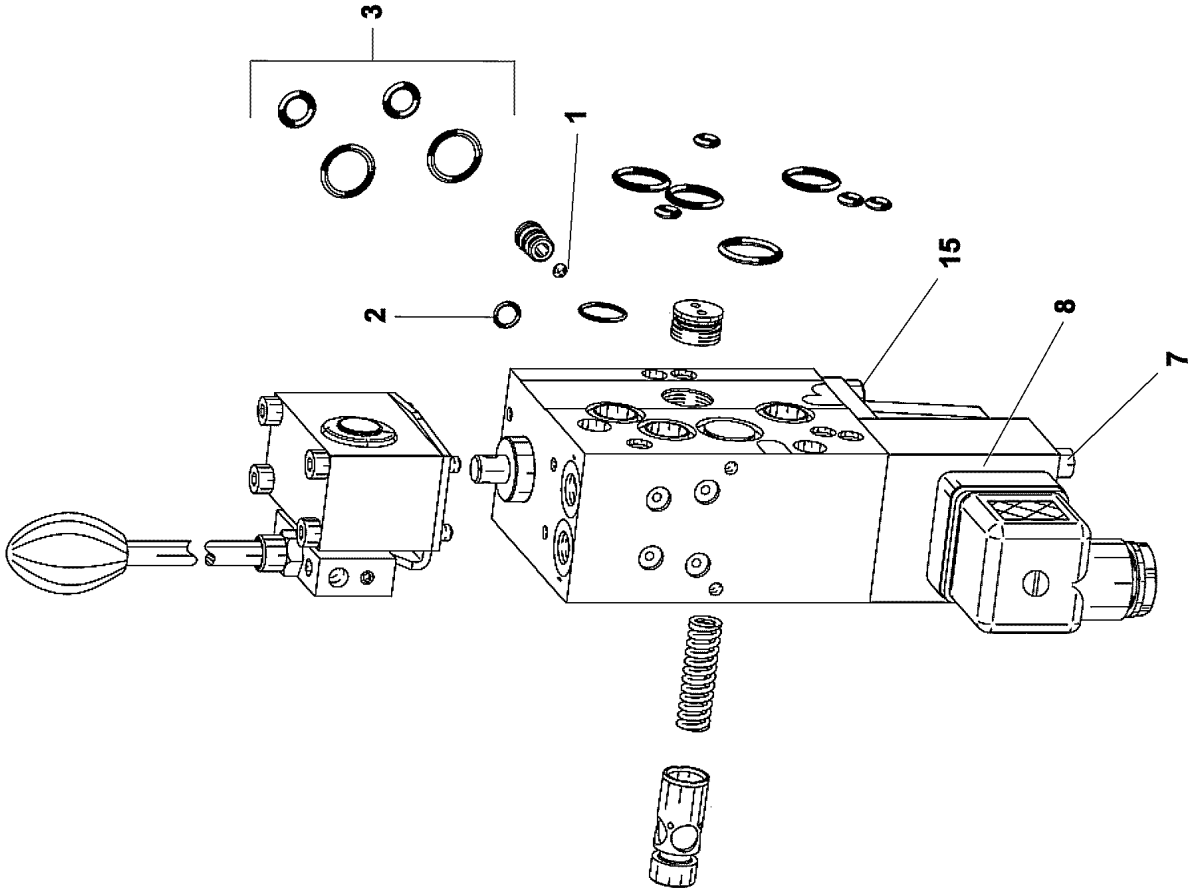
3
1
2
15
8
7

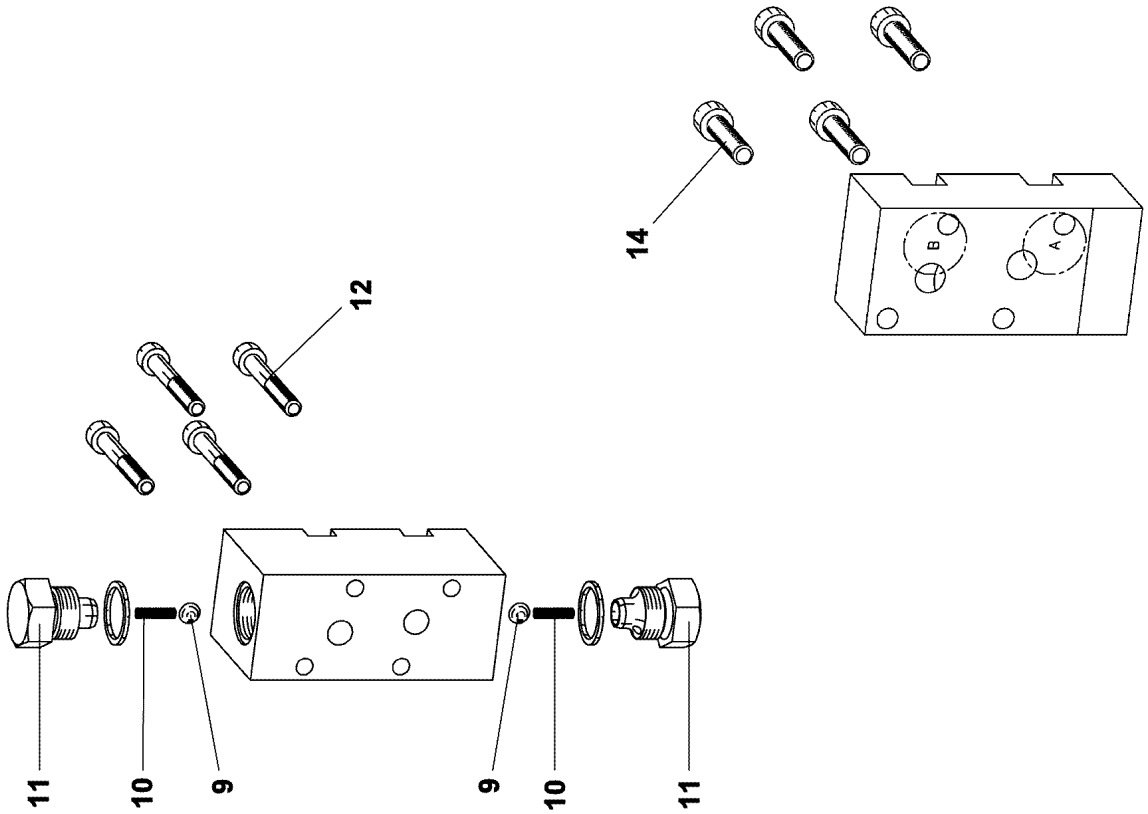
14
12
11
10
9
9
10
11

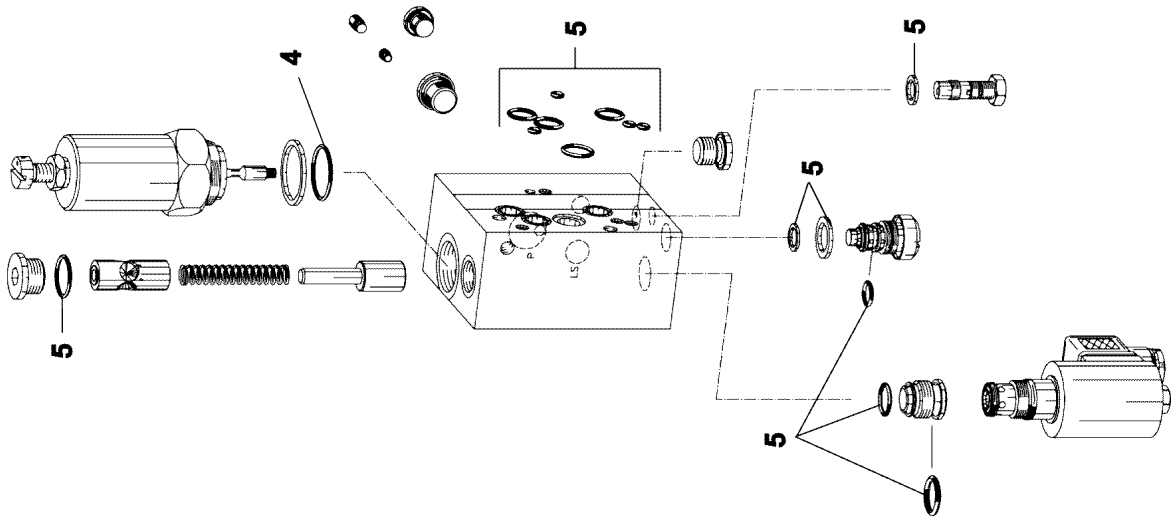
4
5
5
5
5
5

Pos.	Item	Quantity	Description	Bezeichnung
1	511036508	1	BALL DIN 5401 3,5	KUGEL
2	553136608	2	O-RING 5X1 NBR70	O-RING
3	11691956	1	SEAL KIT	DICHTSATZ
4	514611808	1	O-RING 23,52X1,78 NBR90	O-RING
5	11220418	1	SEAL KIT CONNECTING BLOCK	DS ANSCHLUSSBLOCK
6	570862108	1	BALL DIN 5401 7	KUGEL
7	10876395	4	SOCKET HEAD SCREW ISO 4762 M4X12 8.8	ZYLINDERSCHRAUBE
8	10114441	1	TWIN MAGNET	ZWILLINGSMAGNET
9	518512408	2	BALL DIN 5401 7,5	KUGEL
10	511025508	2	PRESSURE SPRING	DRUCKFEDER
11	511025408	2	SCREW PLUG	VERSCHLUSSSCHRAUBE
12	4002698	4	SOCKET HEAD SCREW ISO 4762 M6X45 10.	ZYLINDERSCHRAUBE
13	10875586	4	SOCKET HEAD SCREW ISO 4762 M6X16 8.8	ZYLINDERSCHRAUBE
14	404291213	4	SOCKET HEAD SCREW ISO 4762 M6X25 A 2	ZYLINDERSCHRAUBE
15	10876395	4	SOCKET HEAD SCREW ISO 4762 M4X12 8.8	ZYLINDERSCHRAUBE
20	12102524	2	CONNECTOR PLUG A	ANSCHLUSSSTECKER

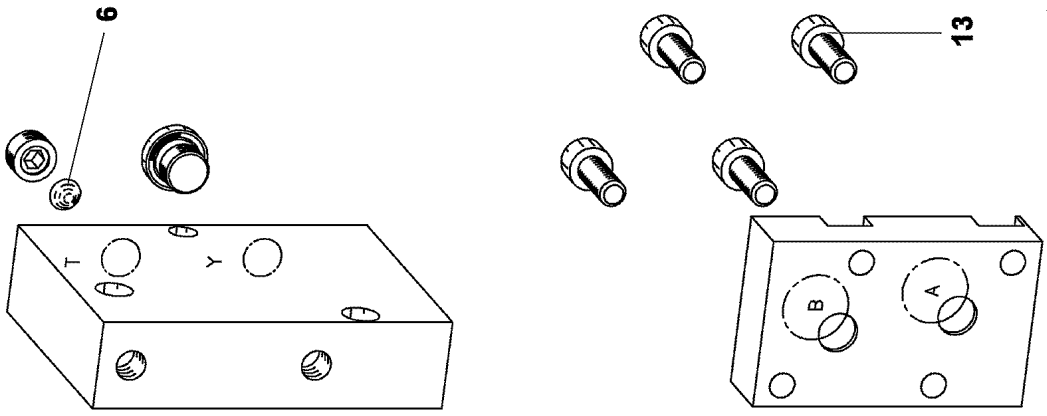
6
13
T
Y
B
A

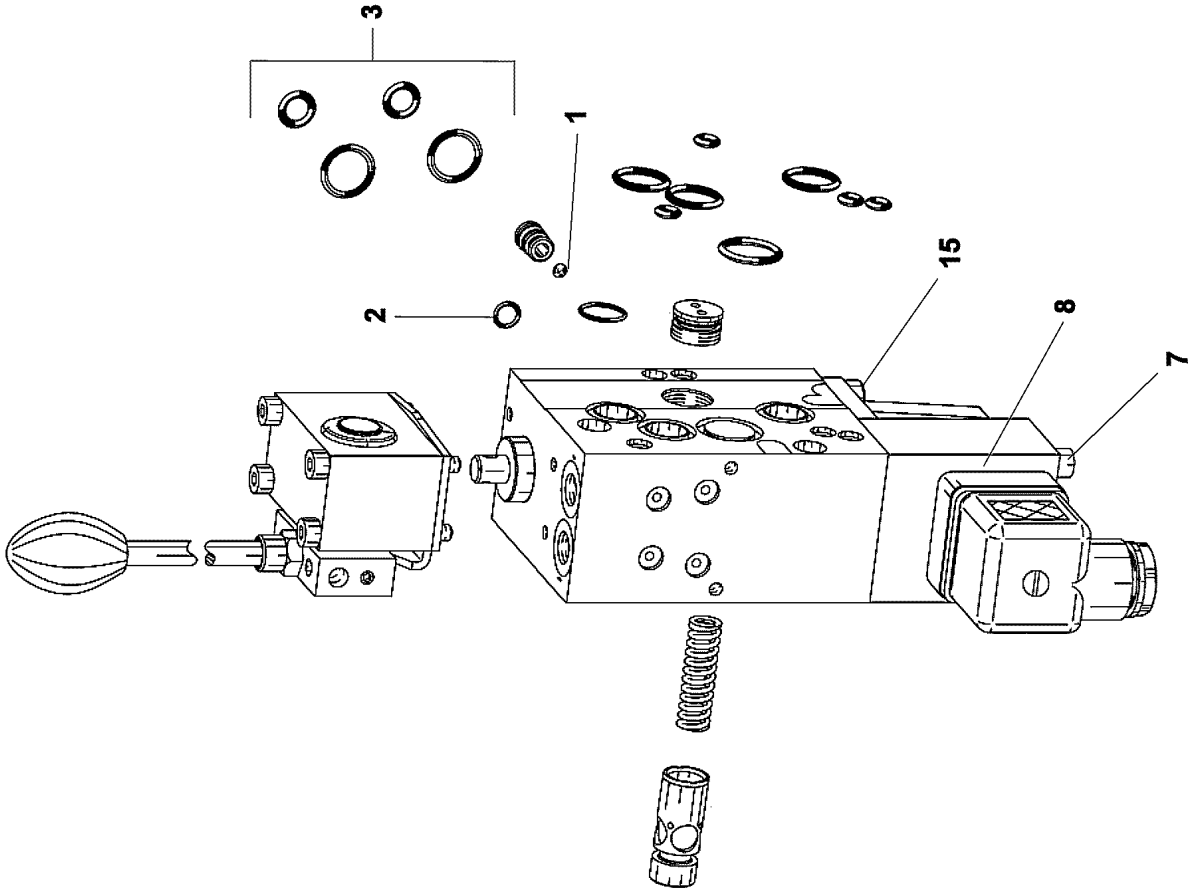
3
1
2
15
8
7

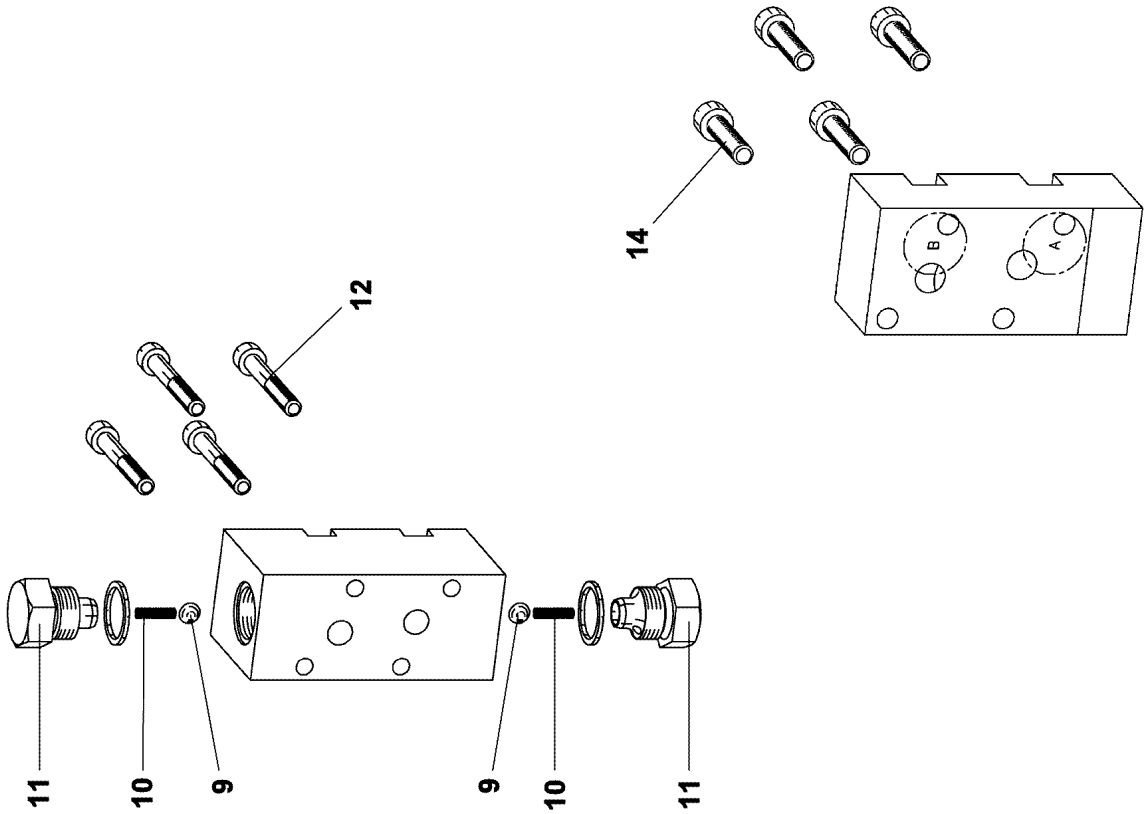
14
12
11
10
9
9
10
11

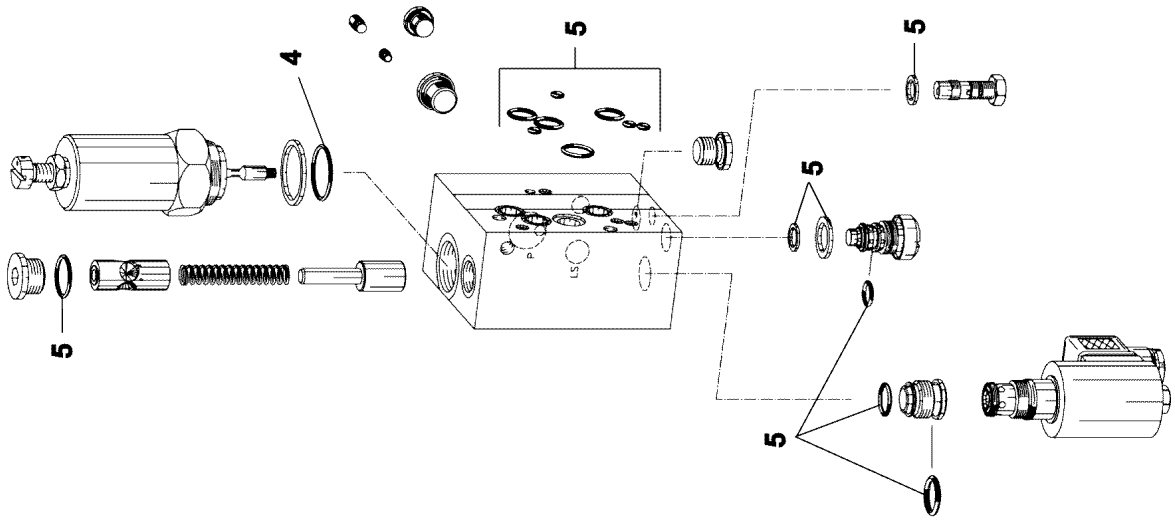
4
5
5
5
5
5

Pos.	Item	Quantity	Description	Bezeichnung
1	511036508	1	BALL DIN 5401 3,5	KUGEL
2	553136608	2	O-RING 5X1 NBR70	O-RING
3	11691956	1	SEAL KIT	DICHTSATZ
4	514611808	1	O-RING 23,52X1,78 NBR90	O-RING
5	11220418	1	SEAL KIT CONNECTING BLOCK	DS ANSCHLUSSBLOCK
6	570862108	1	BALL DIN 5401 7	KUGEL
7	4901531	3	SOCKET HEAD SCREW ISO 4762 M4X50 8.8	ZYLINDERSCHRAUBE
8	10114441	1	TWIN MAGNET	ZWILLINGSMAGNET
9	518512408	2	BALL DIN 5401 7,5	KUGEL
10	511025508	2	PRESSURE SPRING	DRUCKFEDER
11	511025408	2	SCREW PLUG	VERSCHLUSSSCHRAUBE
12	4002698	4	SOCKET HEAD SCREW ISO 4762 M6X45 10.	ZYLINDERSCHRAUBE
13	10875586	4	SOCKET HEAD SCREW ISO 4762 M6X16 8.8	ZYLINDERSCHRAUBE
14	404291213	4	SOCKET HEAD SCREW ISO 4762 M6X25 A 2	ZYLINDERSCHRAUBE
15	10876395	4	SOCKET HEAD SCREW ISO 4762 M4X12 8.8	ZYLINDERSCHRAUBE

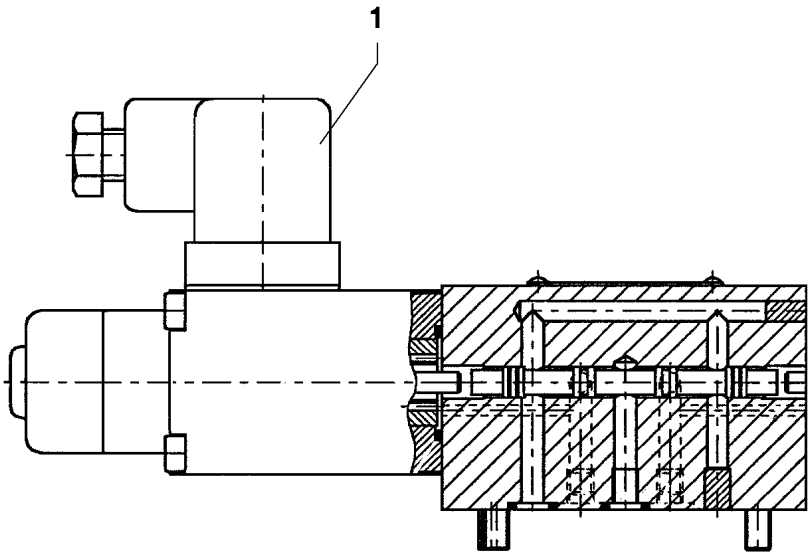

Pos.	Item	Quantity	Description	Bezeichnung
1	570827808	1	MAGNET 24V	MAGNET

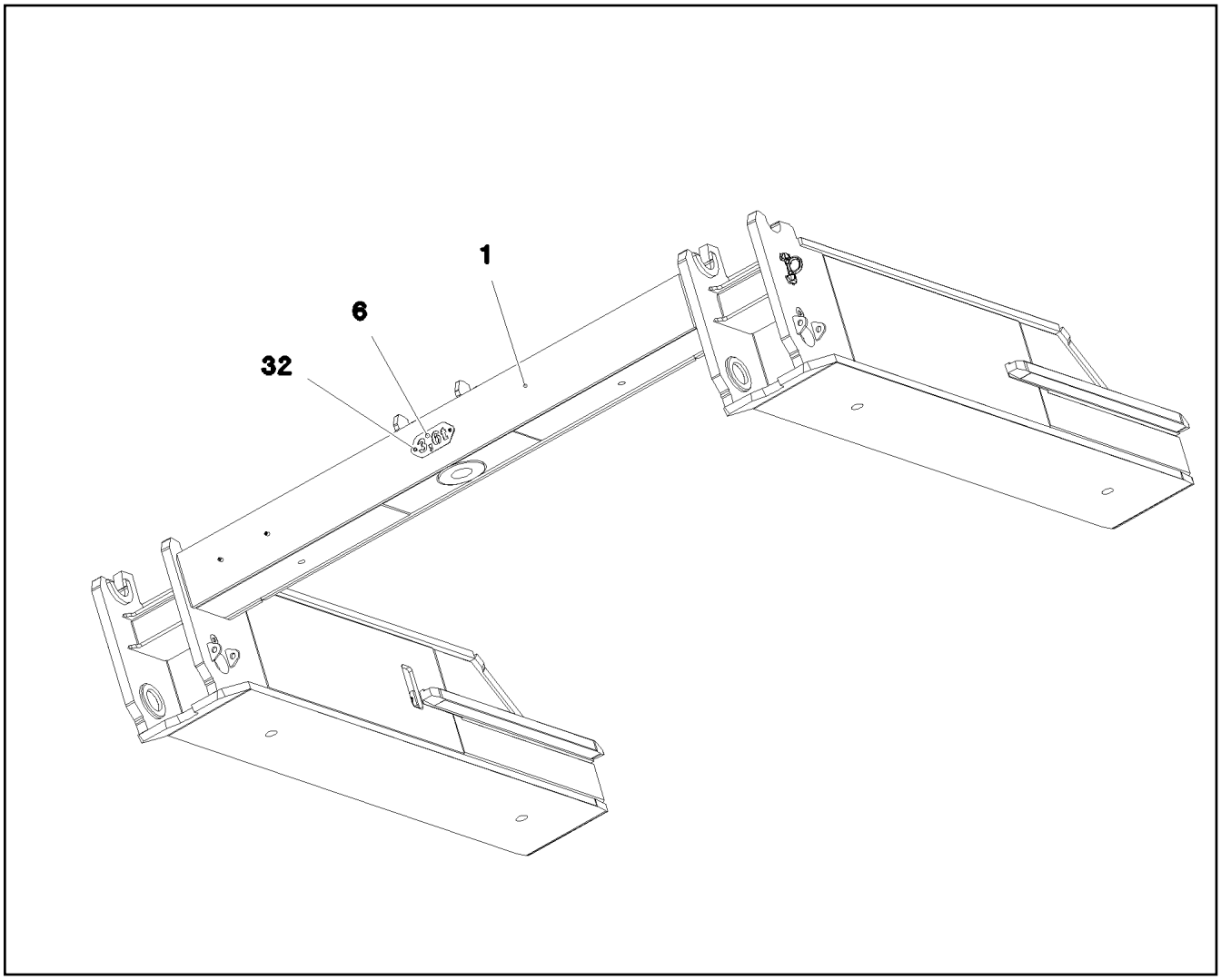

Pos.	Item	Quantity	Description	Bezeichnung
1	96023109	1	CROSS MEMBER STEEL CONSTRUCT.	QUERTRAEGER STAHLBAU
6	975231708	1	SIGN 4X228X100 S315MC FE//ZNNI8//CN//T0	SCHILD
32	12102696	2	BUTTON HEAD SCREW ISO7380-2 M8X10 0	HALBRUNDKOPFSCHRAUBE

Pos.	Item	Quantity	Description	Bezeichnung
1	11695999	1	CRAWLER CHAIN CPL.	RAUPENKETTE KPL.
(1)	790202814	288	NUT UNF1 1/8X12 12	MUTTER
(2)	485501414	288	SCREW UNF1 1/8"X12X130 12.9	SCHRAUBE
(3)	10224095	72	FLOOR PLATE B9HDS 983593114 LH-GRAU	BODENPLATTE
(997)	11658888	1	REPAIR SEGMENT 1-FACH	REPARATURSEGMENT

Pos.	Item	Quantity	Description	Bezeichnung
1	919254308	1	CRAWLER SUPPORT PREASS LS ⇨ ❑ 66	RAUPENTRAEGER VORM.LI.
4	919296508	1	HYDR.TRAVEL DRIVE ⇨ ❑ 88	HYDR.FAHRANTRIEB

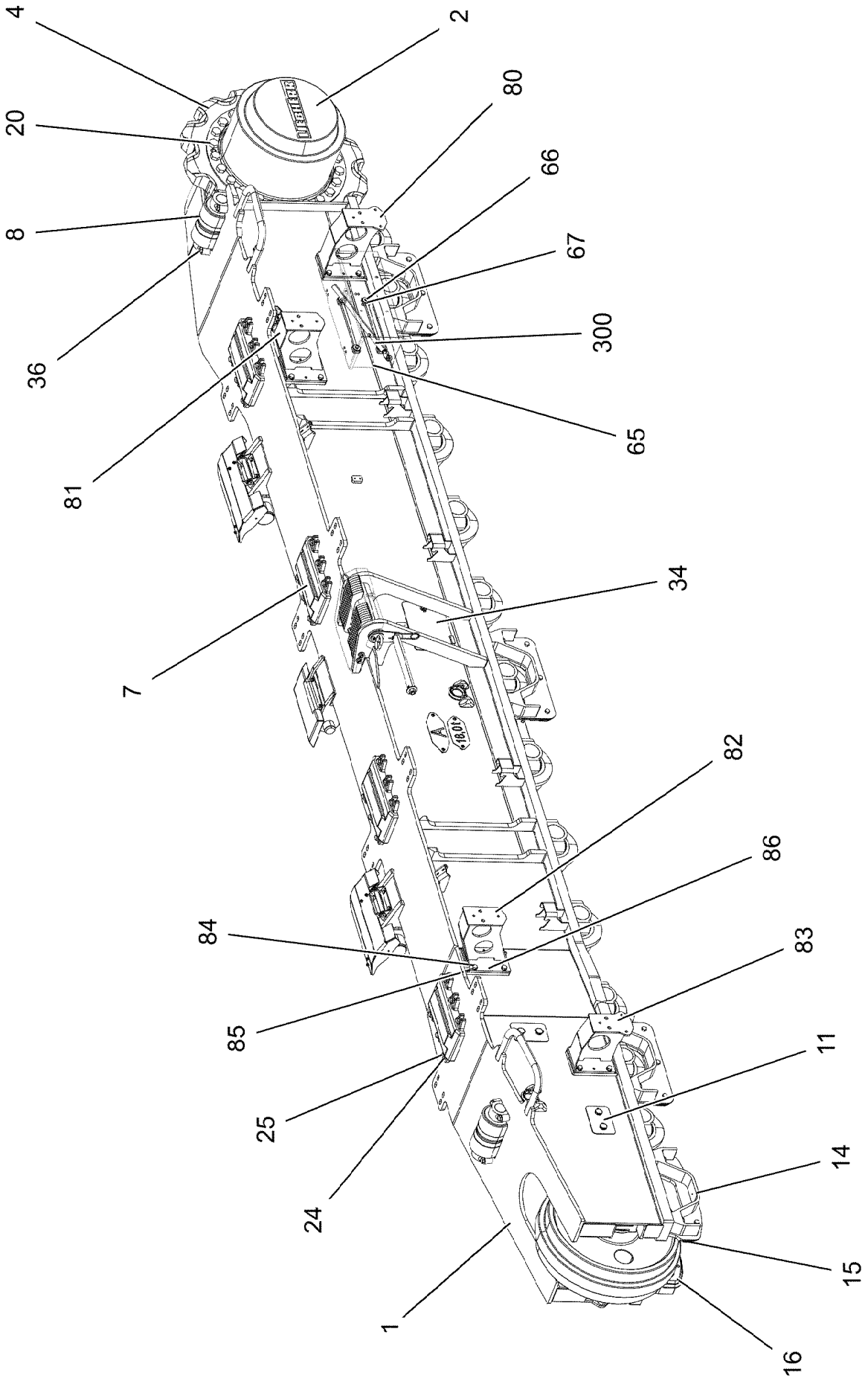
4
2
20
80
66
8
67
36
300
81
65
7
34
82
86
84
83
85
11
25
14
24
15
1
16

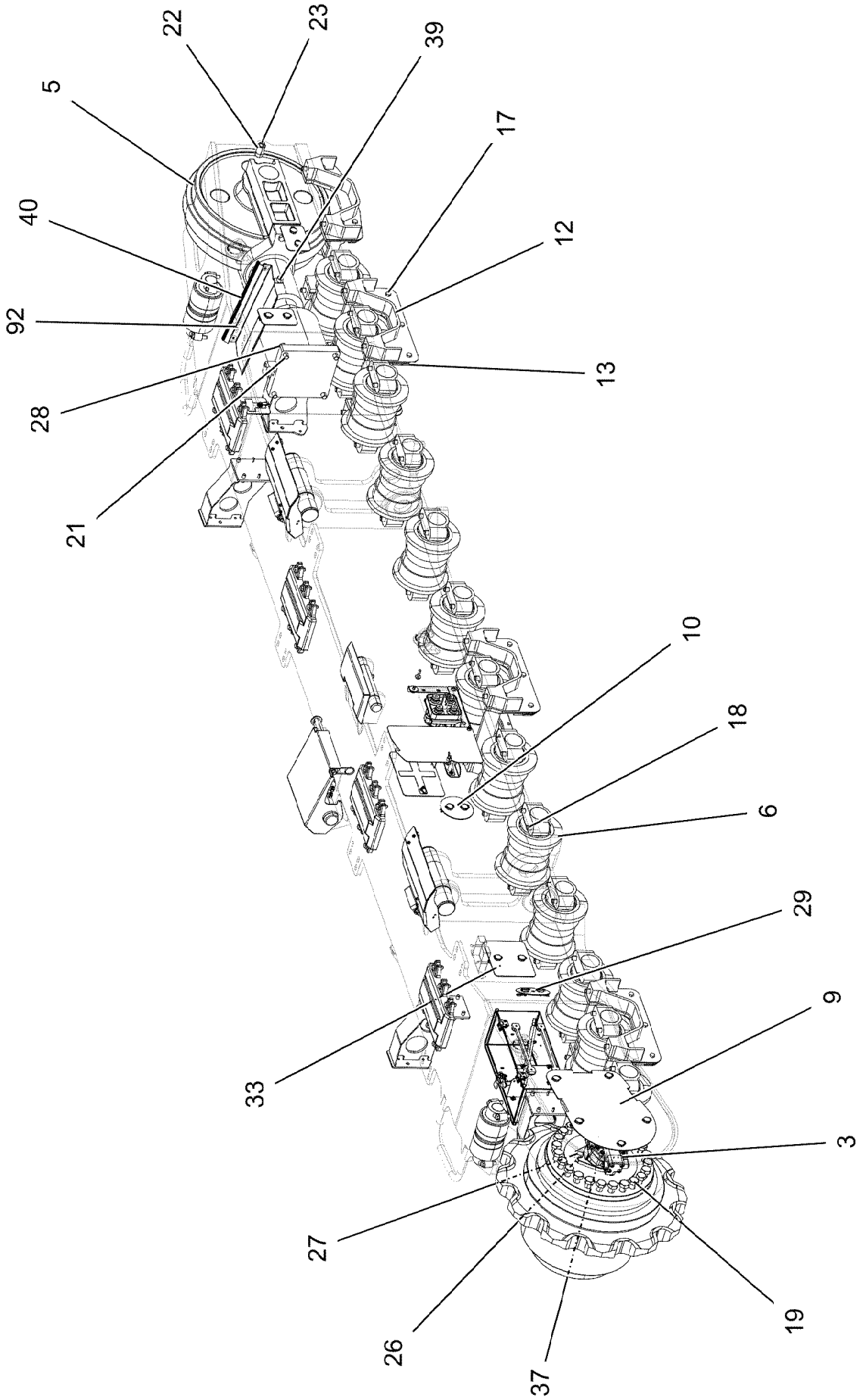
22
23
39
5
17
40
12
92
13
28
21
10
18
6
29
9
33
3
27
19
26
37

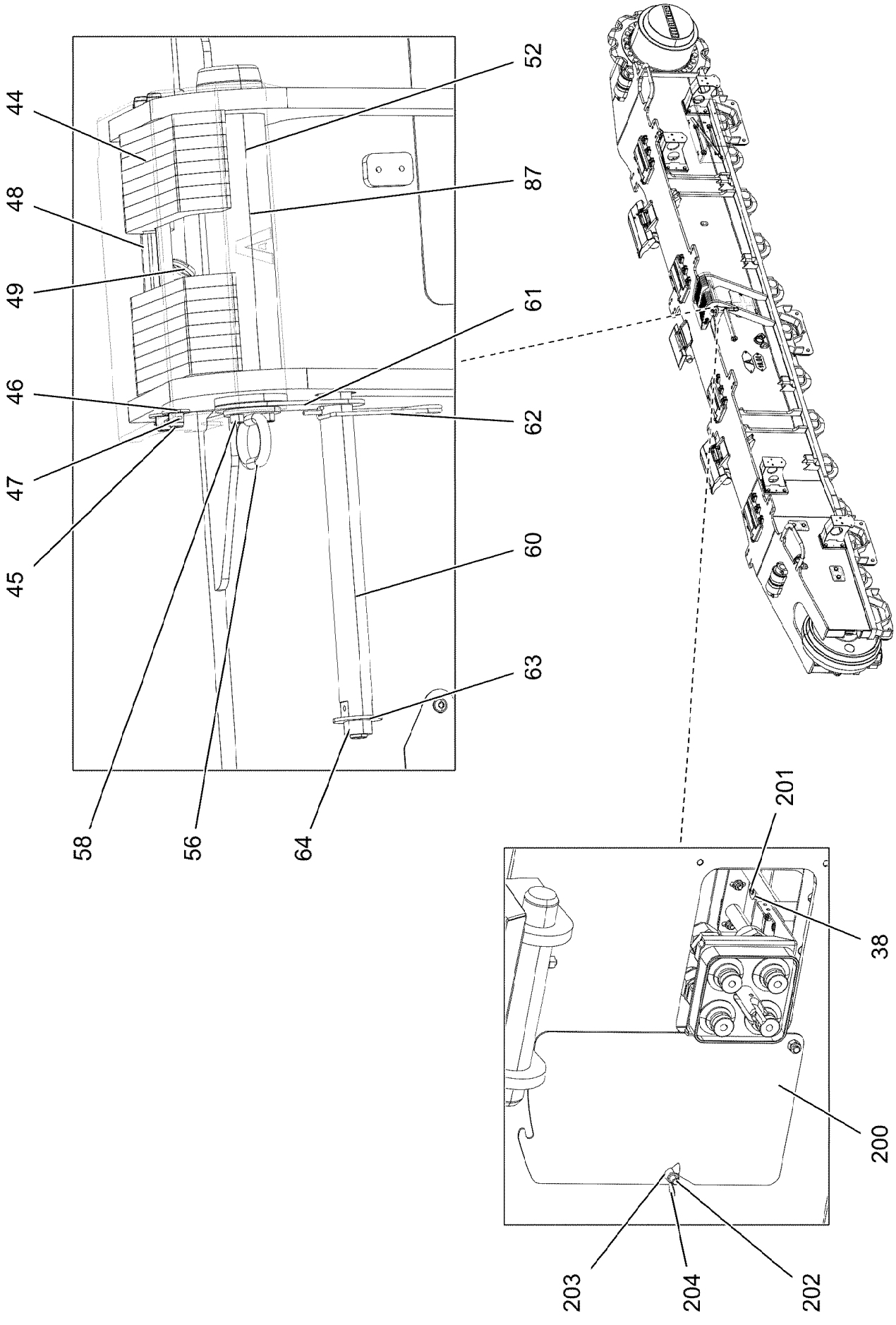
44
48
49
46
47
45
52
87
61
62
60
63
58
56
64
201
38
200
203
204
202

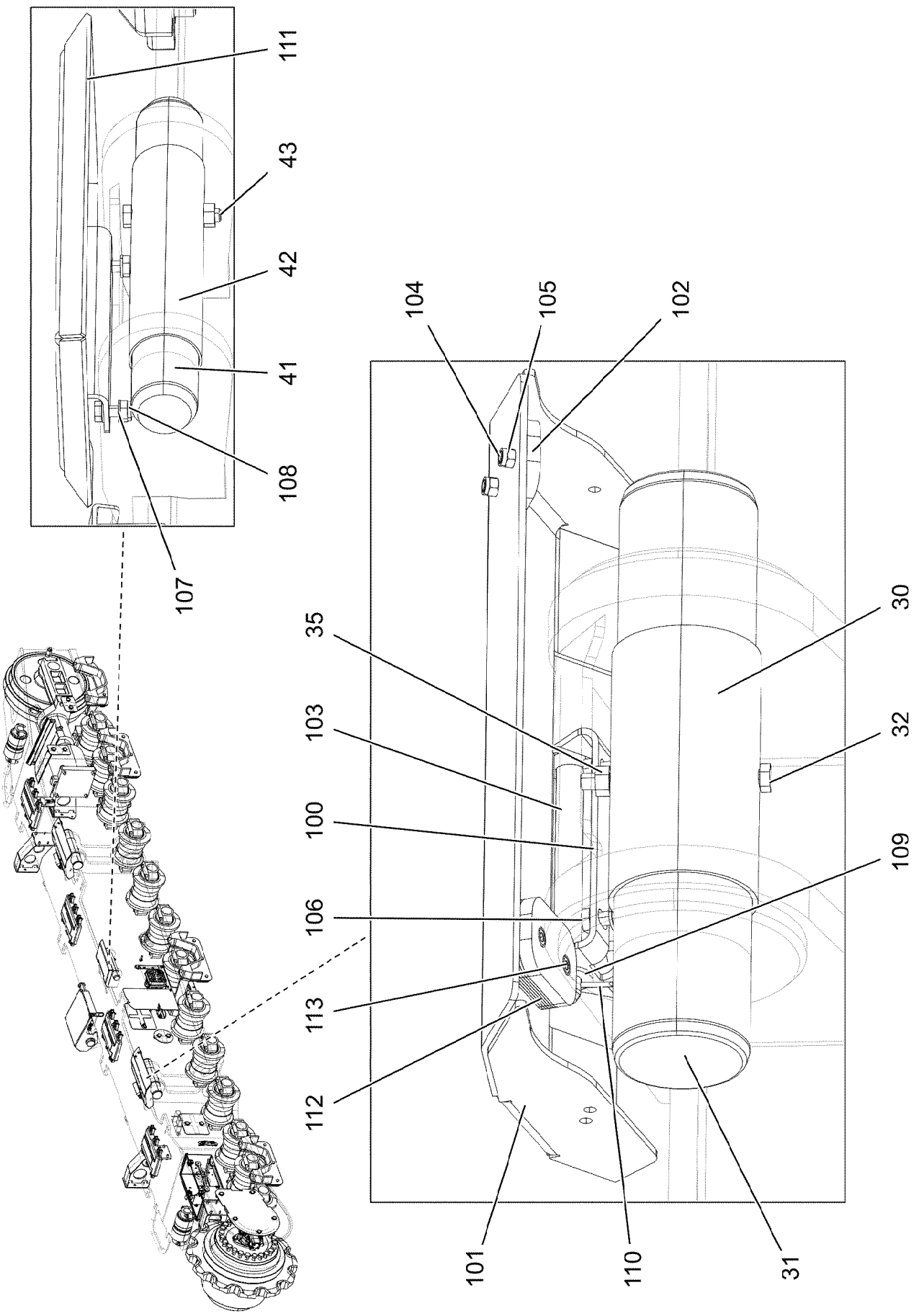
111
43
42
41
108
107
104
105
102
35
103
100
106
113
112
30
32
109
101
110
31

Pos.	Item	Quantity	Description	Bezeichnung
1	96018230	1	CRAWLER CARRIER STEEL CONSTR.	RAUPENTRAEGER STAHLBAU LI
2	90028956	1	TRACTION DRIVE FAT 600P049 ⇨ ❑ 72	FAHRANTRIEB
3	11182596	1	VARIABLE DISPLACEMENT MOTOR A6VE 1 ⇨ ❑ 74	VERSTELLMOTOR
4	749056414	1	DRIVE WHEEL 12XB9SX260,35 LH-GRAU	ANTRIEBSRAD
5	11320954	1	GUIDE WHEEL UNIT B9HDSX740 ⇨ ❑ 75	LEITRADEINHEIT
6	11320962	13	TRACK ROLLER 250X250	LAUFROLLE
7	308115114	4	SLIPPER 65X340X450 GS-CK 45 983593114	GLEITSCHUH
8	10877342	2	CARRYING ROLLER D8KX165	TRAGROLLE
9	967972208	1	COVER PRE-ASSY. ⇨ ❑ 79	DECKEL VORM.
10	967972308	1	COVER PRE-ASSY. ⇨ ❑ 80	DECKEL VORM.
11	967972408	4	COVER PRE-ASSY. ⇨ ❑ 81	DECKEL VORM.
12	968170308	3	TRACK GUIDE WELDMENT	KETTENFUEHRUNG SCHWK.
13	97035737	6	PLATE 20X570X133 S355J2+N	BLECH
14	968170708	1	TRACK GUIDE WELDMENT	KETTENFUEHRUNG SCHWK.
15	97035748	1	PLATE 20X590X125 S355J2+N	BLECH
16	97035749	1	PLATE 20X590X125 S355J2+N	BLECH
17	10875519	22	HEX SCREW ISO 4017 M16X40 8.8 FLZN SP	SECHSKANTSCHRAUBE
18	4062145	68	HEX SCREW ISO 4014 M24X110 10.9 FLZN	SECHSKANTSCHRAUBE
19	11342133	24	HEX SCREW ISO 4014 M30X110 12.9 FLZN	SECHSKANTSCHRAUBE
20	406209008	24	HEX SCREW ISO 4014 M30X120 10.9 FLZN	SECHSKANTSCHRAUBE
21	4901595	4	HEX SCREW ISO 4017 M24X80 10.9 FLZN SP	SECHSKANTSCHRAUBE
22	956078908	1	SLEEVE RD40X50 42CRMO4+QT GASN. SP	HUELSE
23	10293537	1	SOCKET HEAD SCREW ISO 4762 M24X70 10	ZYLINDERSCHRAUBE
24	4600021	24	WASHER DIN 7349 17 200HV FLZN SPF	SCHEIBE
25	10875520	24	HEX SCREW ISO 4017 M16X50 8.8 FLZN SP	SECHSKANTSCHRAUBE
26	4600222	2	WASHER EN 14399-6 20 300-370HV FLZN SP	SCHEIBE
27	406604208	2	HEX SCREW ISO 4017 M20X60 10.9 FLZN SP	SECHSKANTSCHRAUBE
28	10289810	4	WASHER ISO 7089 24 300HV FLZN SPF	SCHEIBE
29	968270108	1	COVER PRE-ASSY. ⇨ ❑ 82	DECKEL VORM.
30	97031480	2	SLEEVE 108.0X196 S235JRH FE//ZNNI8//CN/	HUELSE
31	97031481	2	PIN 105.0X452 35NICRMOV125 SPF	BOLZEN
32	4601290	2	HEX SCREW ISO 4014 M12X130 10.9 A3C SP	SECHSKANTSCHRAUBE
33	968274208	1	COVER PRE-ASSY. ⇨ ❑ 83	DECKEL VORM.
34	968709108	1	COVER PRE-ASSY. ⇨ ❑ 84	DECKEL VORM.
35	10875616	3	HEX NUT ISO 4032 M12 8 FLZN SPF	SECHSKANTMUTTER
36	10178883	8	HEX SCREW ISO 4014 M18X70 8.8 FLZN SP	SECHSKANTSCHRAUBE
37	11493868	1	O-RING 192X4 SPF	O-RING
38	978787708	6	SLEEVE 33.0X19 FE//ZNNI8//CN//T0	HUELSE
39	12102696	4	BUTTON HEAD SCREW ISO7380-2 M8X10 0	HALBRUNDKOPFSCHRAUBE
40	262105508	0.56	SEALING PROFILE 1-4X21,5X10	DICHTPROFIL
41	97100242	1	PIN 70.0X390 35NICRMOV125	BOLZEN
42	97100243	1	SLEEVE 65.0X248 E235+N	HUELSE
43	10875509	1	HEX SCREW ISO 4014 M12X85 8.8 FLZN SP	SECHSKANTSCHRAUBE
44	97040155	16	SPACER PIECE PA6G	DISTANZSTUECK
45	97032409	2	PIN 18.0X410 S355J2C+C FE//ZNNI8//CN//T0	BOLZEN
46	10289807	4	WASHER ISO 7089 18 300HV FLZN SPF	SCHEIBE
47	10172636	4	SPLIT PIN ISO 1234 3,2X40 A4	SPLINT
48	97032370	1	PLATE 2.5X73X78 DC01 FE//ZNNI8//CN//T0	BLECH
49	433101208	1	RETAINING SPRING 4X68 ISO 2081 FE/ZN8/	SICHERUNGSFEDER
52	97032383	1	PIN 90.0X415 35NICRMOV125 SPF	BOLZEN
56	962963808	1	HANDLE WELD.CONST. FE//ZNNI8//CN//T0	GRIFF SCHWK.

Pos.	Item	Quantity	Description	Bezeichnung
58	10875571	2	SOCKET HEAD SCREW ISO 4762 M10X30 8	ZYLINDERSCHRAUBE
60	97037244	1	GUIDING ROD 45.0X445 35NICRMOV125 SP	FUEHRUNGSSTANGE
61	97034262	1	PLATE 5X190X90 S355MC FE//ZNNI8//CN//T	BLECH
62	433100908	1	RETAINING SPRING 4,5X98 ISO 2081 FE/ZN	SICHERUNGSFEDER
63	4600328	1	WASHER ISO 7093-1 20 300HV FLZN SPF	SCHEIBE
64	10875618	1	HEX NUT ISO 4032 M20 8 FLZN SPF	SECHSKANTMUTTER
65	968420608	1	STORAGE BOX ⇨ ❑ 85	STAUKASTEN VORM.
66	10197730	4	HEX SCREW ISO 4017 M10X20 8.8 ZNNI-480	SECHSKANTSCHRAUBE
67	940116008	4	WASHER 4X40X40 S315MC FE//ZNNI8//CN//T	SCHEIBE
80	96000309	1	BRACKET WELDED CONST.	KONSOLE SCHWK.
81	96000310	1	BRACKET WELDED CONST.	KONSOLE SCHWK.
82	96000311	1	BRACKET WELDED CONST.	KONSOLE SCHWK.
83	96000312	1	BRACKET WELDED CONST.	KONSOLE SCHWK.
84	12214938	16	HEX SCREW ISO 4017 M16X35 8.8 FLZN SP	SECHSKANTSCHRAUBE
85	10289806	16	WASHER ISO 7089 16 300HV FLZN SPF	SCHEIBE
86	430608708	8	PARALLEL PIN ISO 2338 10M6X36 ST	ZYLINDERSTIFT
87	97066482	1	HOOD/BONNET LEFT 4X585X711 S315MC	HAUBE LI.
92	97092913	1	PLATE 2X666X382 DC01	BLECH
100	97103682	2	PLATE 5X86X267 S355MC FE//ZNNI8//CN//T	BLECH
101	97103683	2	PLATE 5X649X337 S355MC FE//ZNNI8//CN//T	BLECH
102	97070985	4	LIMIT STOP 90X60X10 PA6G NATUR	ANSCHLAG
103	97073453	2	LOCKING BOLT 30.0X200 35NICRMOV125	SICHERUNGSBOLZEN
104	12216054	4	SOCKET HEAD SCREW DIN 7984 M8X20 08	ZYLINDERSCHRAUBE
105	11656731	8	HEX NUT ISO 7040 M8 8 480H SPF	SECHSKANTMUTTER
106	11691328	10	HEX SCREW ISO 4017 M10X35 8.8 FLZN SP	SECHSKANTSCHRAUBE
107	10289795	20	WASHER ISO 7089 10 300HV FLZN SPF	SCHEIBE
108	10197769	10	HEX NUT DIN 985 M10 8 ZNNI-480H SPF	SECHSKANTMUTTER
109	10289808	2	WASHER ISO 7089 20 300HV FLZN SPF	SCHEIBE
110	10180354	2	SPLIT PIN ISO 1234 4X40 St 480H SPF	SPLINT
111	97104844	1	PLATE 5X443X254 S355MC FE//ZNNI8//CN//T	BLECH
112	97104898	12	PLATE 2X90X60 DC01 FE//ZNNI8//CN//T0	BLECH
113	571310608	4	SOCKET HEAD SCREW DIN 6912 M8X35 08.	ZYLINDERSCHRAUBE
200	96034962	1	GUIDE LEFT ⇨ ❑ 86	FUEHRUNG LI.
201	10876082	2	BUTTON HEAD SCREW AEHNL.ISO 7380-2	HALBRUNDKOPFSCHRAUBE
202	4600612	2	WING SCREW DIN 316 M12X20 4.6 FLZN SP	FLUEGELSCHRAUBE
300	96050169	1	LEVER PRE-ASSY.	HEBEL VORM.
(1)	12103320	1	FEINZAHNKNARRE DIN 3120-A 12,5	FEINZAHNKNARRE
(2)	12103321	1	WRENCH SOCKET 1/2"-14WN	STECKNUSS

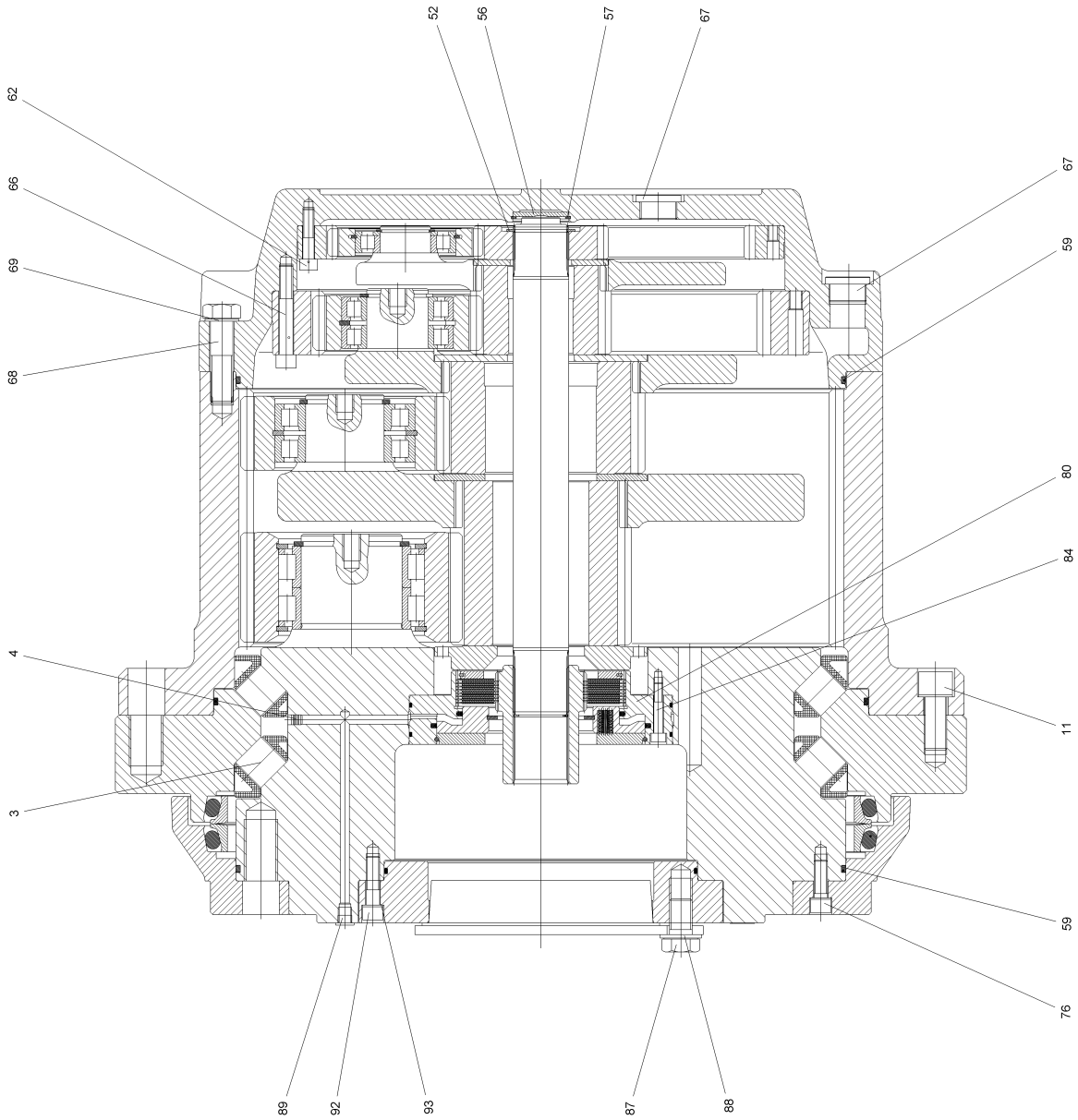
52
56
57
67
62
66
69
68
67
59
80
84
4
11
3
59
76
89
92
93
87
88

Pos.	Item	Quantity	Description	Bezeichnung
3	747004501	78	CYL.ROLLER DIN 5402-1 32X32	ZYLINDERROLLE
8	761081903	1	SEALING PLUG 9	DICHTSTOPFEN
11	404320908	12	SOCKET HEAD SCREW ISO 4762 M20X50 10	ZYLINDERSCHRAUBE
52	10171585	1	LOCKING RING DIN 471 50X2 FLZNNC-120H	SICHERUNGSRING
56	944303303	1	RETAINING DISK 50X4	HALTESCHEIBE
57	429612001	1	L RING 50X2	L-RING
59	761035303	2	O-RING 530X5 NBR 70	O-RING
62	404309408	24	SOCKET HEAD SCREW ISO 4762 M10X45 10	ZYLINDERSCHRAUBE
66	4902244	24	SOCKET HEAD SCREW ISO 4762 M12X75 1	ZYLINDERSCHRAUBE
67	409710601	4	SCREW PLUG M33X2 ST Fe//ZnNi5//Cn//T0	VERSCHLUSSSCHRAUBE
68	11656999	12	HEX SCREW ISO 4014 M20X75 8.8 FLZN SP	SECHSKANTSCHRAUBE
69	423912001	12	LOCK WASHER VS 20 ZN8M+PASSIVIERUN	SICHERUNGSSCHEIBE
76	10875578	8	SOCKET HEAD SCREW ISO 4762 M12X35 8	ZYLINDERSCHRAUBE
80	502037001	1	SPRING LOADED MULTI-DISC BRAKE	FEDERDRUCKLAMELLENBREMS
(4)	737350603	9	OUTER MULTI-DISC	AUSSENLAMELLE
(5)	737350503	8	INTERNAL MULTI-DISC	INNENLAMELLE
(999)	969997708	1	SEAL KIT F.BRAKE	DS BREMSE
84	4600335	12	SOCKET HEAD SCREW ISO 4762 M8X45 10.	ZYLINDERSCHRAUBE
87	12224035	2	HEX SCREW ISO 4017 M20X30 8.8 FLZN SP	SECHSKANTSCHRAUBE
88	420002101	2	WASHER ISO 7089 20 200HV A3C	SCHEIBE
92	10875565	8	SOCKET HEAD SCREW ISO 4762 M12X40 8	ZYLINDERSCHRAUBE
93	423911201	8	LOCK WASHER VS 12 ZN8M+PASSIVIERUN	SICHERUNGSSCHEIBE

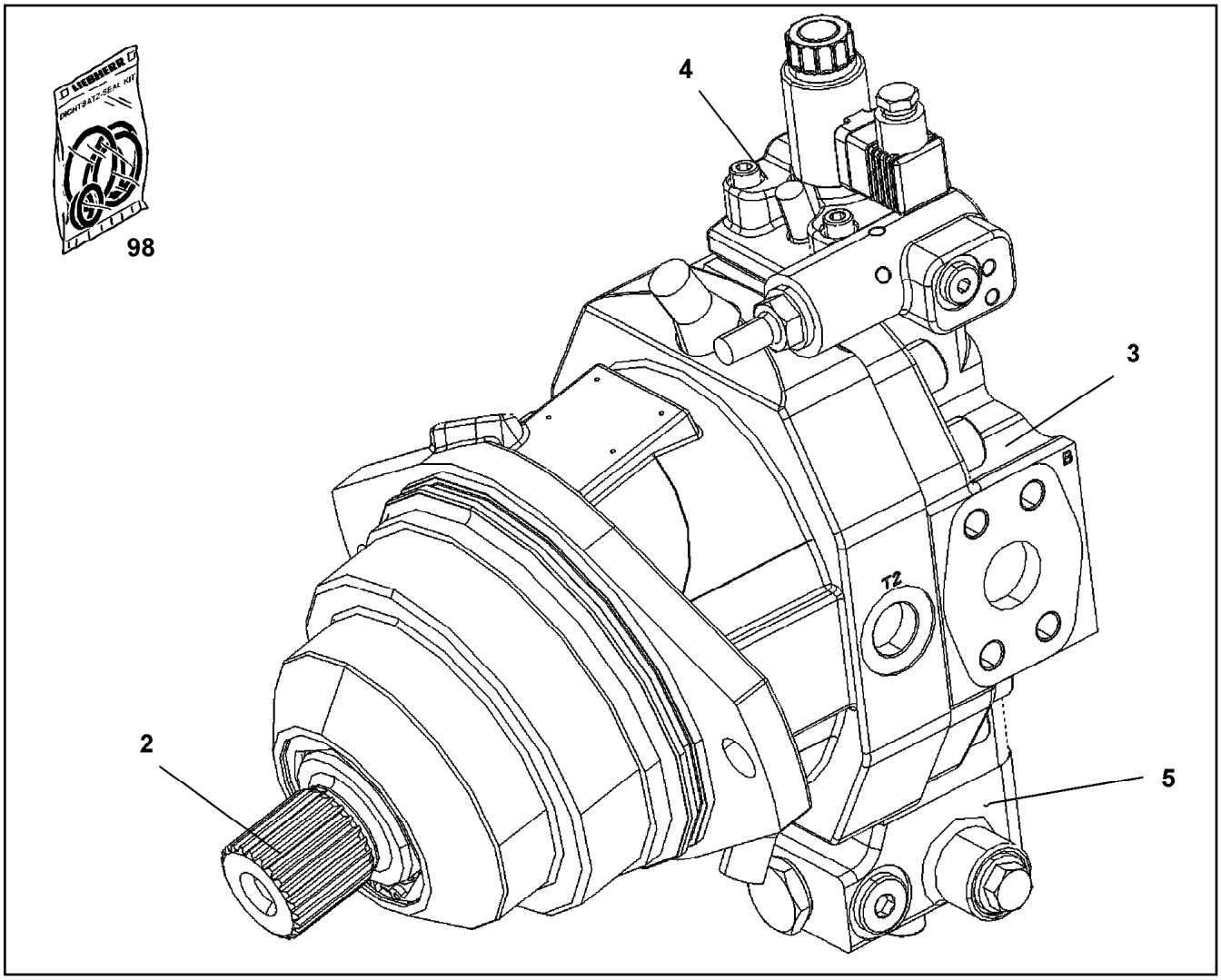

Pos.	Item	Quantity	Description	Bezeichnung
2	11066818	1	DRIVING GEAR	TRIEBWERK
3	11066829	1	NON-RETURN VALVE	RUECKSCHLAGVENTIL
4	11161917	1	CONTROL ELEMENT	STEUERTEIL
(27)	11161919	1	PROPORTIONAL MAGNET	PROPORTIONALMAGNET
5	10871726	1	FLUSH-/FEED PRESSURE VALVE	SPUEL + SPEISEDRUCKVENTIL

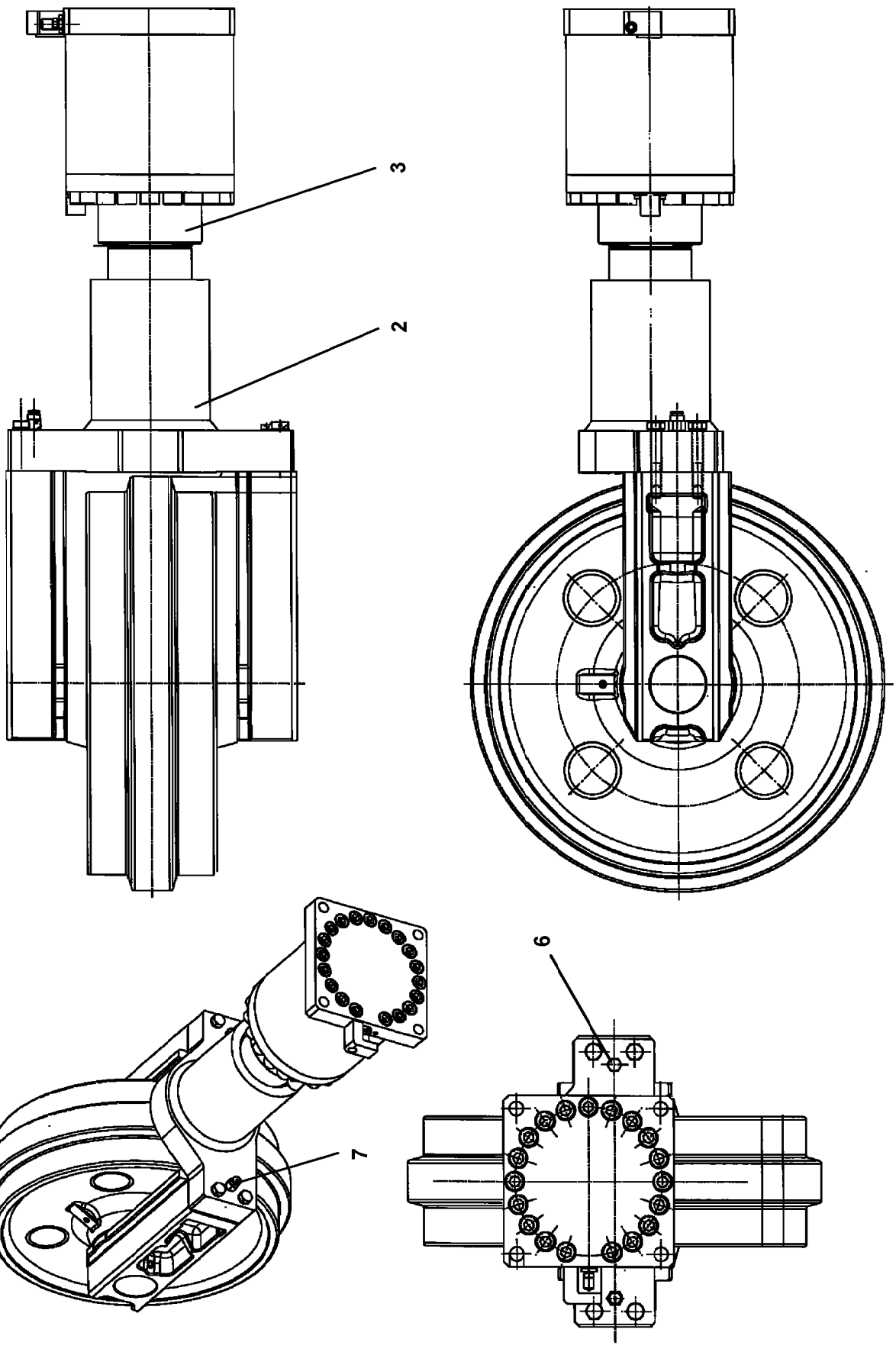
3
2
6
7
6

Pos.	Item	Quantity	Description	Bezeichnung
2	10877686	1	TENSION JACK HYDR CPL ⇨ ❑ 77	SPANNER HYDR KPL
3	10877685	1	NITROGEN TENSIONER CPL	STICKSTOFFSPANNER KPL
(999)	12102278	1	SEAL KIT	DICHTSATZ
6	710121114	2	FLAT SEALING RING 17,4X24X1,5	FLACHDICHTRING
7	774351714	1	GREASE NIPPLE M16X1.5	SCHMIERNIPPEL

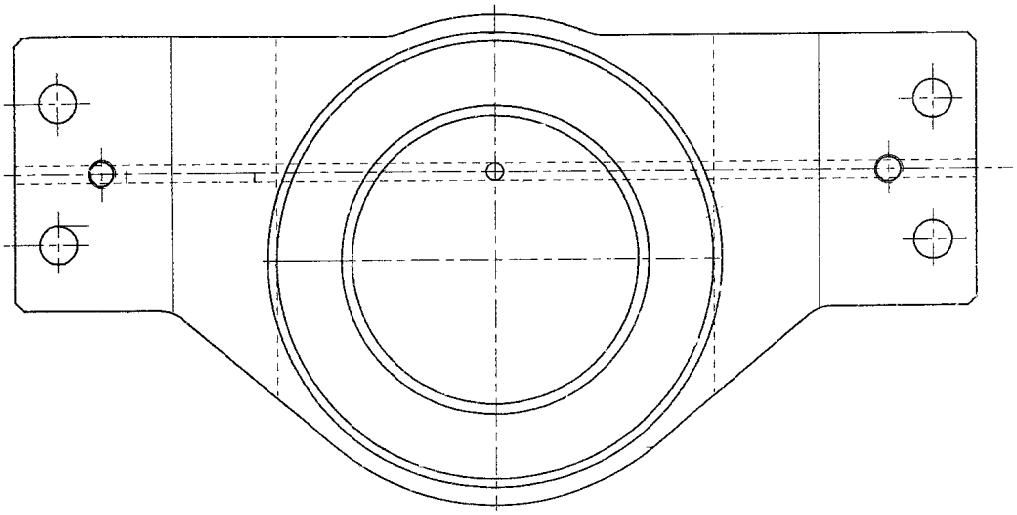

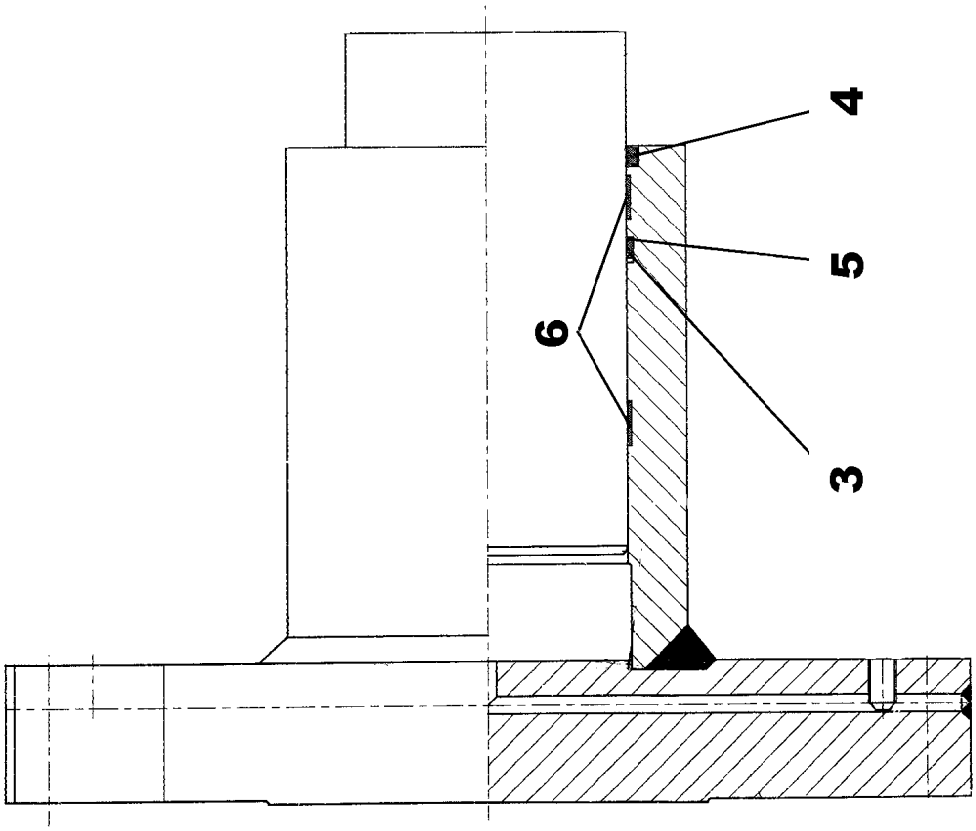
4
5
6
3

Pos.	Item	Quantity	Description	Bezeichnung
3	7367566	1	ROD SEAL 160X168X11,5	NUTRING
4	7367567	1	SCRAPER 160X175X9	ABSTREIFER
5	7367565	1	SUPPORTING RING	STUETZRING
6	7367564	2	GUIDING TAPE 160X25	FUEHRUNGSBAND

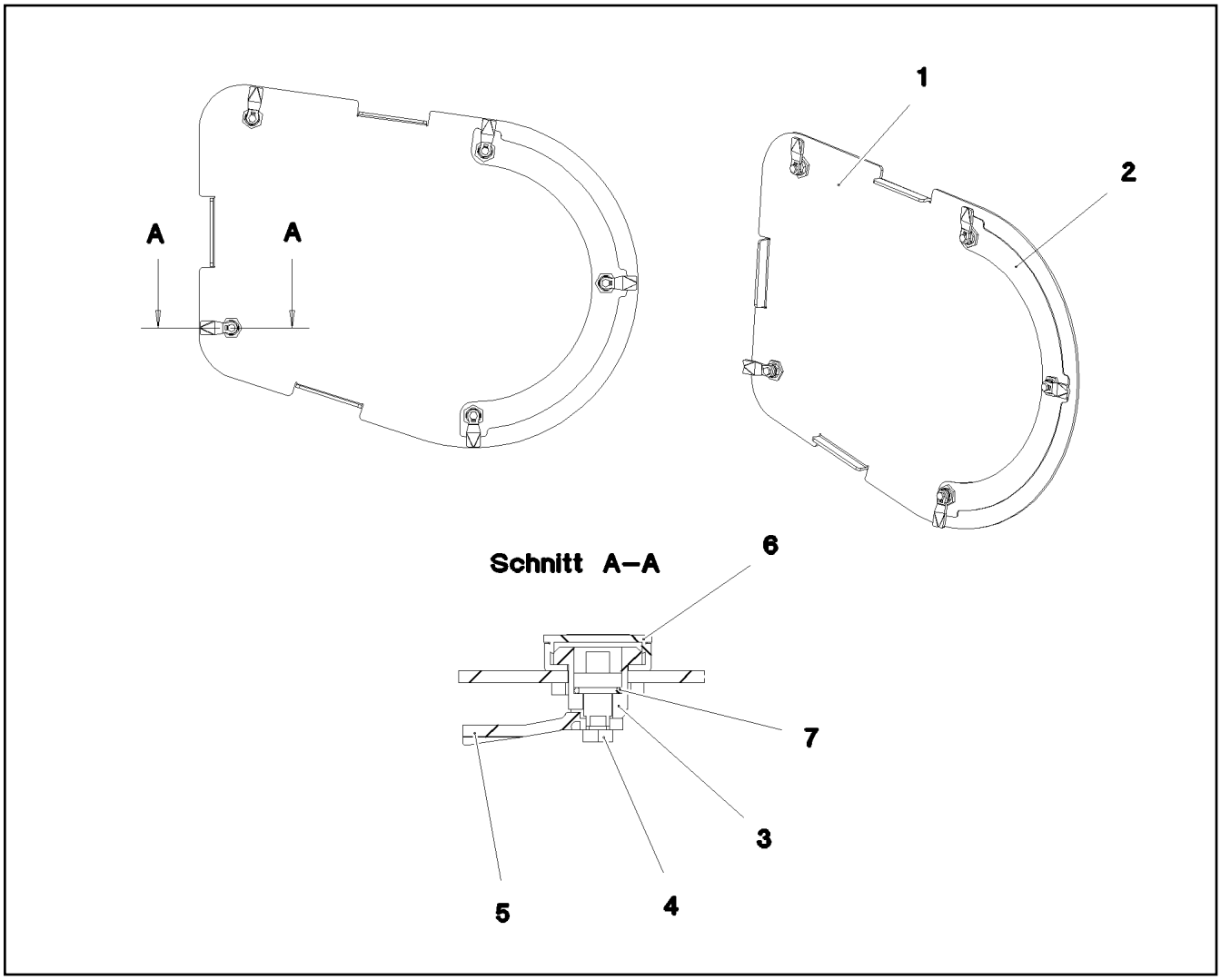

Pos.	Item	Quantity	Description	Bezeichnung
1	97031266	1	PLATE 4X668X480 ALMG3 H111 SPF	BLECH
2	97031267	1	PLATE 2X244X449 ALMG3 H111 SPF	BLECH
3	704253308	5	HOUSING GD-ZN SW GEPULVERT	GEHAEUSE
4	704253408	5	ACTUATION SPIKE GD-ZN SW GEPULVERT	BETAETIGUNGSDORN
5	704253708	5	TONGUE	ZUNGE
6	704254808	5	DUST CAP POLYETHYLEN SCHWARZ	STAUBKAPPE
7	704274808	5	O-RING 12X2 NBR70	O-RING

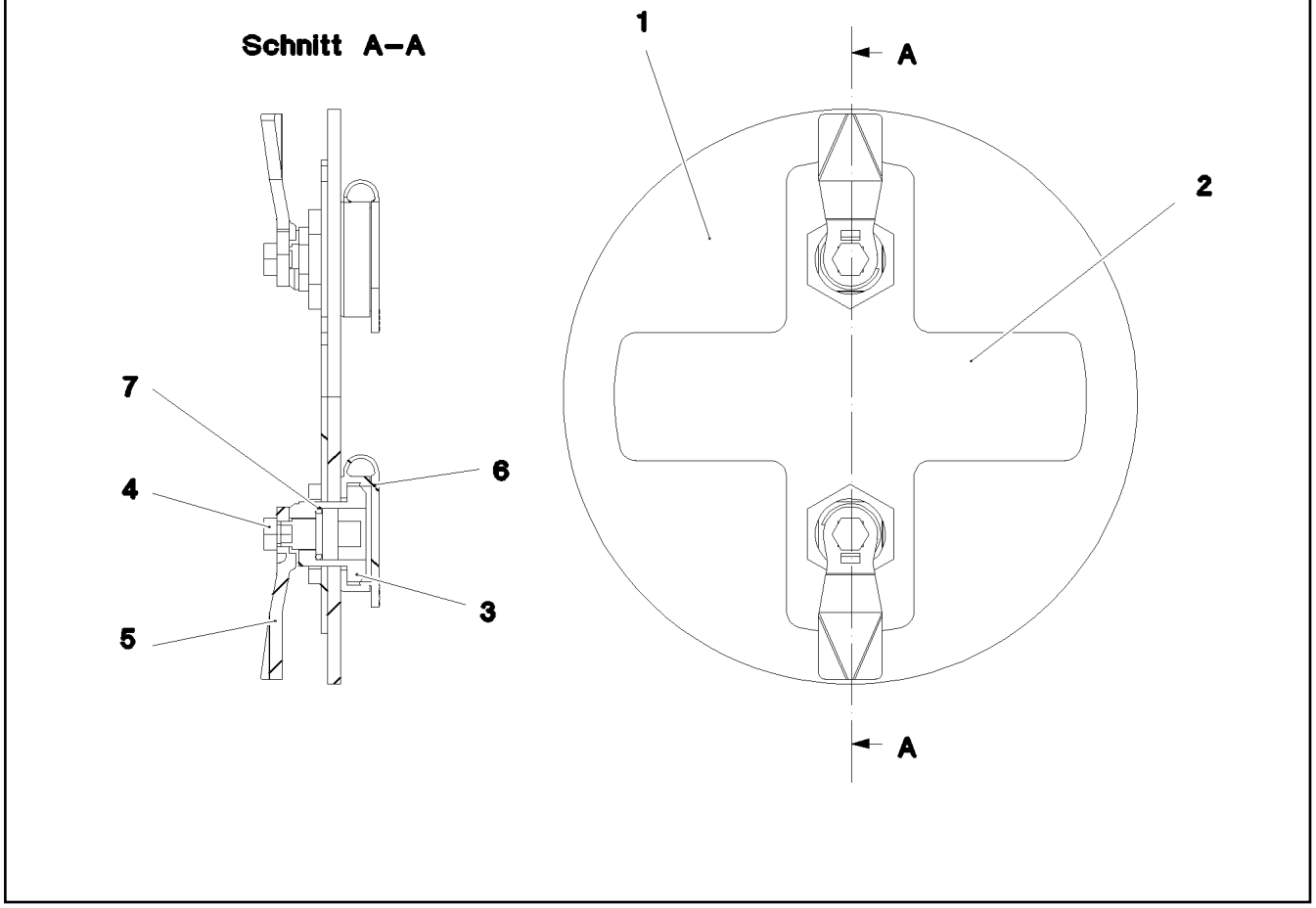

Pos.	Item	Quantity	Description	Bezeichnung
1	97031271	1	PLATE 4X180X180 ALMG3 H111 SPF	BLECH
2	97031272	1	PLATE 2X148X148 ALMG3 H111 SPF	BLECH
3	704253308	2	HOUSING GD-ZN SW GEPULVERT	GEHAEUSE
4	704253408	2	ACTUATION SPIKE GD-ZN SW GEPULVERT	BETAETIGUNGSDORN
5	704259008	2	TONGUE 45X19 STAHL VERZ	ZUNGE
6	704254808	2	DUST CAP POLYETHYLEN SCHWARZ	STAUBKAPPE
7	704274808	2	O-RING 12X2 NBR70	O-RING

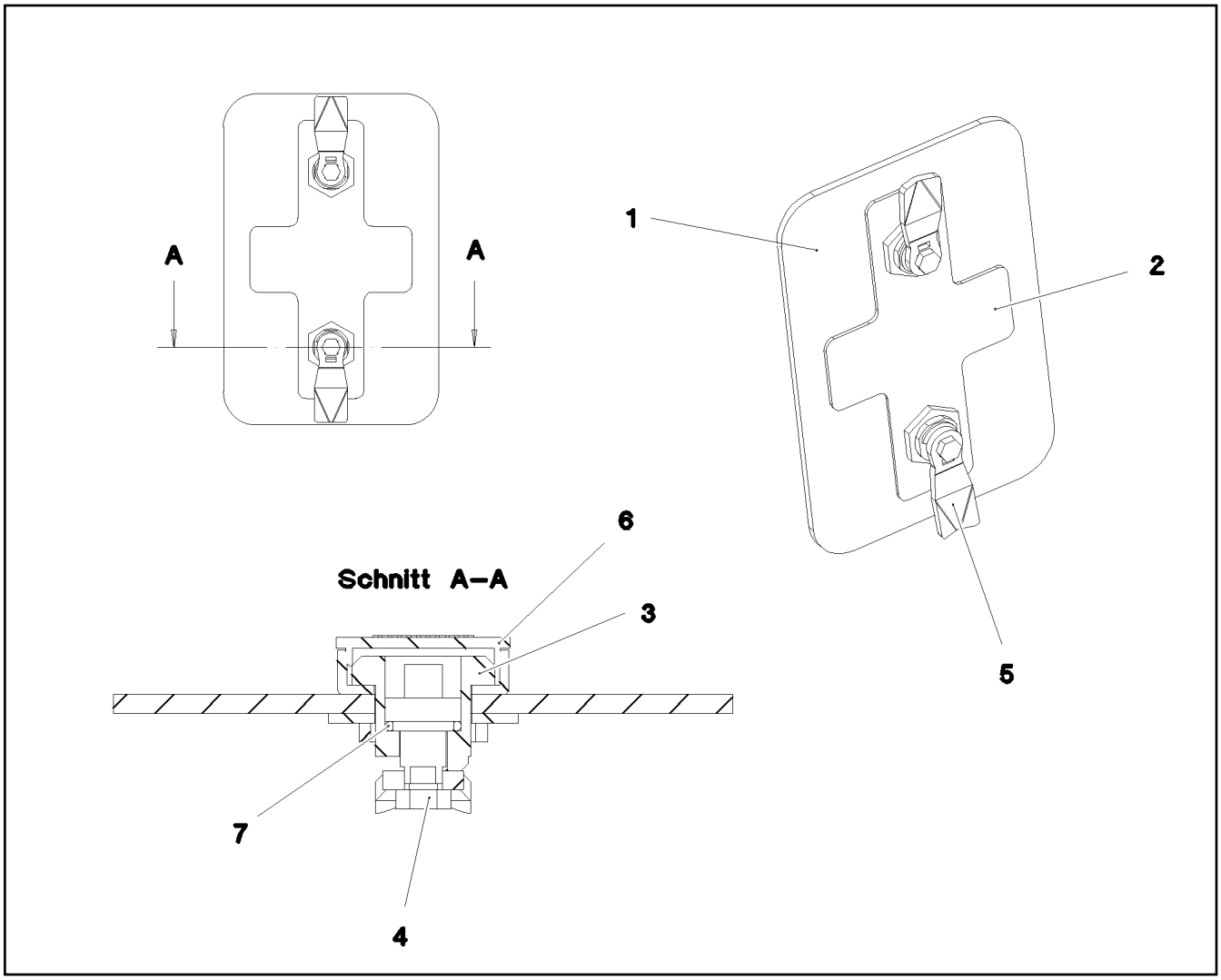

Pos.	Item	Quantity	Description	Bezeichnung
1	97031273	1	PLATE 4X130X200 ALMG3 H111 SPF	BLECH
2	97031274	1	PLATE 2X98X168 ALMG3 H111 SPF	BLECH
3	704253308	2	HOUSING GD-ZN SW GEPULVERT	GEHAEUSE
4	704253408	2	ACTUATION SPIKE GD-ZN SW GEPULVERT	BETAETIGUNGSDORN
5	704259008	2	TONGUE 45X19 STAHL VERZ	ZUNGE
6	704254808	2	DUST CAP POLYETHYLEN SCHWARZ	STAUBKAPPE
7	704274808	2	O-RING 12X2 NBR70	O-RING

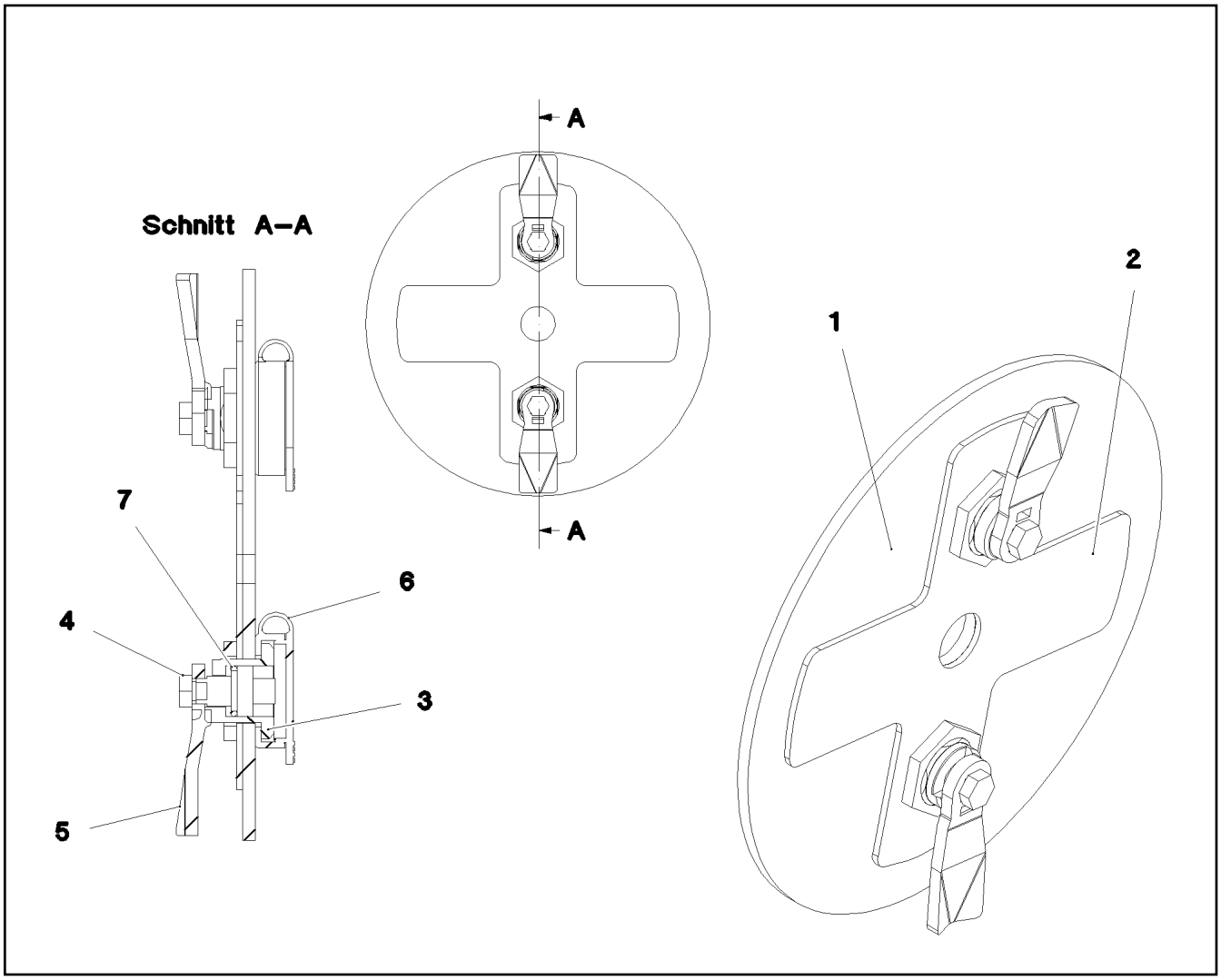

Pos.	Item	Quantity	Description	Bezeichnung
1	97037975	1	PLATE 4X180X180 ALMG3 H111 SPF	BLECH
2	97031272	1	PLATE 2X148X148 ALMG3 H111 SPF	BLECH
3	704253308	2	HOUSING GD-ZN SW GEPULVERT	GEHAEUSE
4	704253408	2	ACTUATION SPIKE GD-ZN SW GEPULVERT	BETAETIGUNGSDORN
5	704253708	2	TONGUE	ZUNGE
6	704254808	2	DUST CAP POLYETHYLEN SCHWARZ	STAUBKAPPE
7	704274808	2	O-RING 12X2 NBR70	O-RING

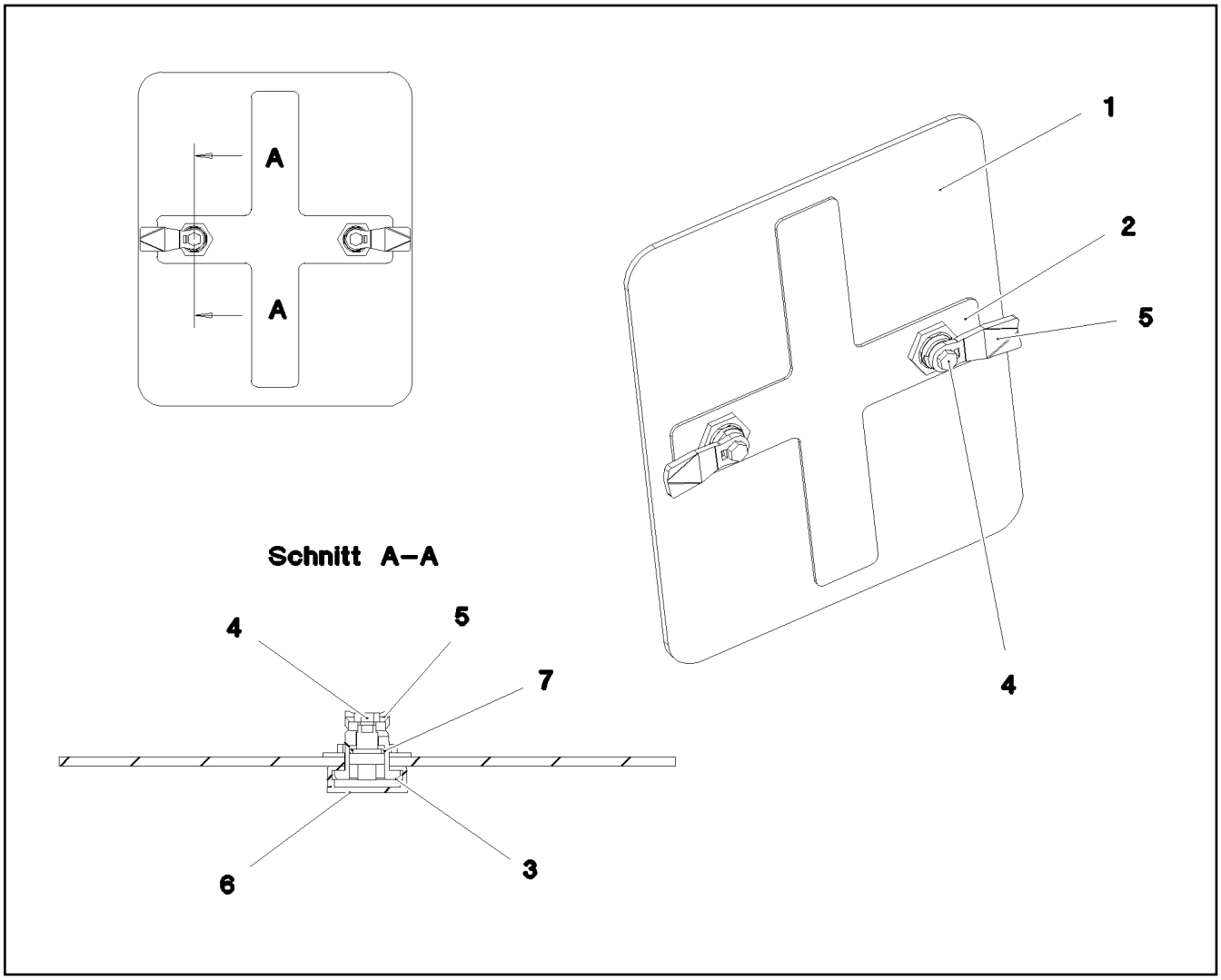

Pos.	Item	Quantity	Description	Bezeichnung
1	97038088	1	PLATE 4X230X280 ALMG3 H111 SPF	BLECH
2	97038089	1	PLATE 2X198X248 ALMG3 H111 SPF	BLECH
3	704253308	2	HOUSING GD-ZN SW GEPULVERT	GEHAEUSE
4	704253408	2	ACTUATION SPIKE GD-ZN SW GEPULVERT	BETAETIGUNGSDORN
5	704253708	2	TONGUE	ZUNGE
6	704254808	2	DUST CAP POLYETHYLEN SCHWARZ	STAUBKAPPE
7	704274808	2	O-RING 12X2 NBR70	O-RING

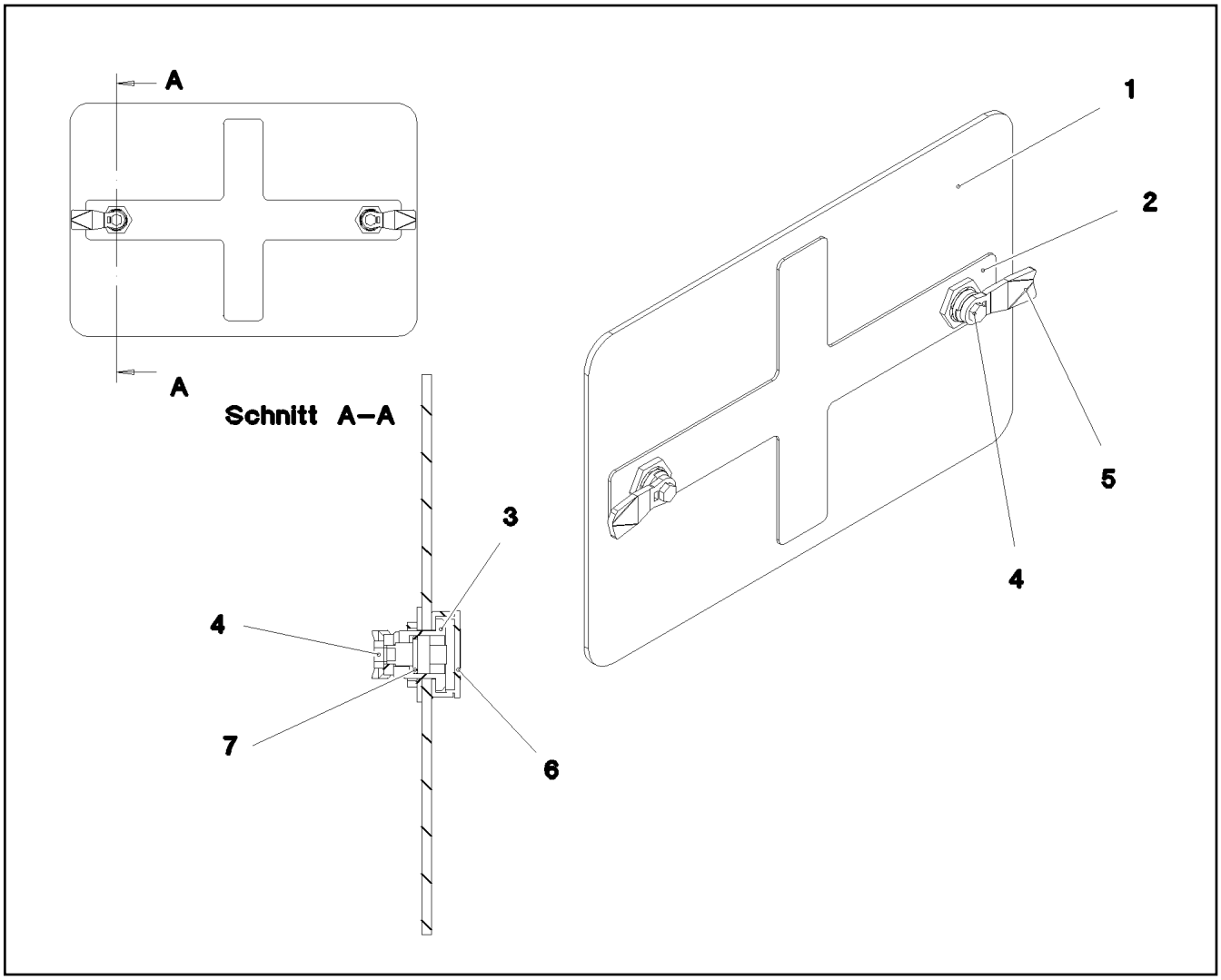

Pos.	Item	Quantity	Description	Bezeichnung
1	97045974	1	PLATE 4X350X235 ALMG3 H111 SPF	BLECH
2	97045975	1	PLATE 2X203X318 ALMG3 H111 SPF	BLECH
4	704278708	2	LATCH GD-ZN SW GEPULVERT	KNEBELVORREIBER
5	704259008	2	TONGUE 45X19 STAHL VERZ	ZUNGE

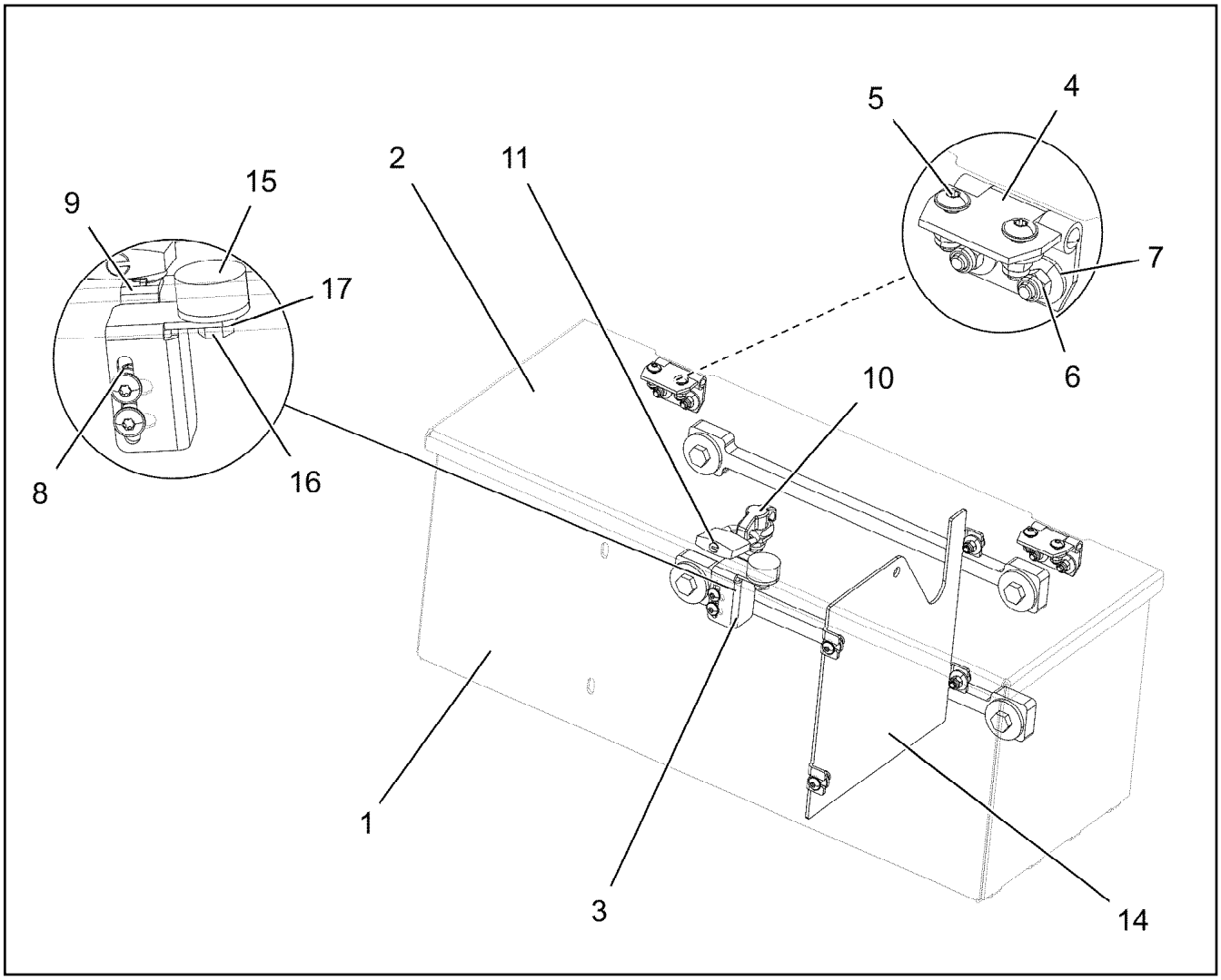

Pos.	Item	Quantity	Description	Bezeichnung
1	97040643	1	PLATE 3X1101X716 DC01	BLECH
2	97040644	1	PLATE 3X678X272 DC01	BLECH
3	97040645	1	PLATE 3X80X55 DC01	BLECH
4	10294684	2	HINGE 35X35X50/180° NIROSTA ROHBLANK	SCHARNIER
5	10412852	14	BUTTON HEAD SCREW AEHNL.ISO 7380-2	HALBRUNDKOPFSCHRAUBE
6	11004444	14	HEX NUT AEHNL.ISO 7040 M6 A2-70	SECHSKANTMUTTER
7	429900308	12	SHEET GASKET 7X19X4 A2	DICHTSCHEIBE
8	420000414	2	WASHER ISO 7089 6 200HV-A4	SCHEIBE
9	704254008	1	TONGUE	ZUNGE
10	704278708	1	LATCH GD-ZN SW GEPULVERT	KNEBELVORREIBER
11	885251508	1	PADLOCK ABUS-64TI/40 TITALIUM	VORHAENGESCHLOSS
14	97041755	1	PLATE 3X231X267 DC01	BLECH
15	10030440	1	MEGI BUFFER 30X17 M8 75°SHORE	MEGIPUFFER
16	11690048	1	HEX SCREW ISO 4017 M8X12 8.8 480H SPF	SECHSKANTSCHRAUBE
17	10289803	1	WASHER ISO 7089 8 300HV 480H SPF	SCHEIBE

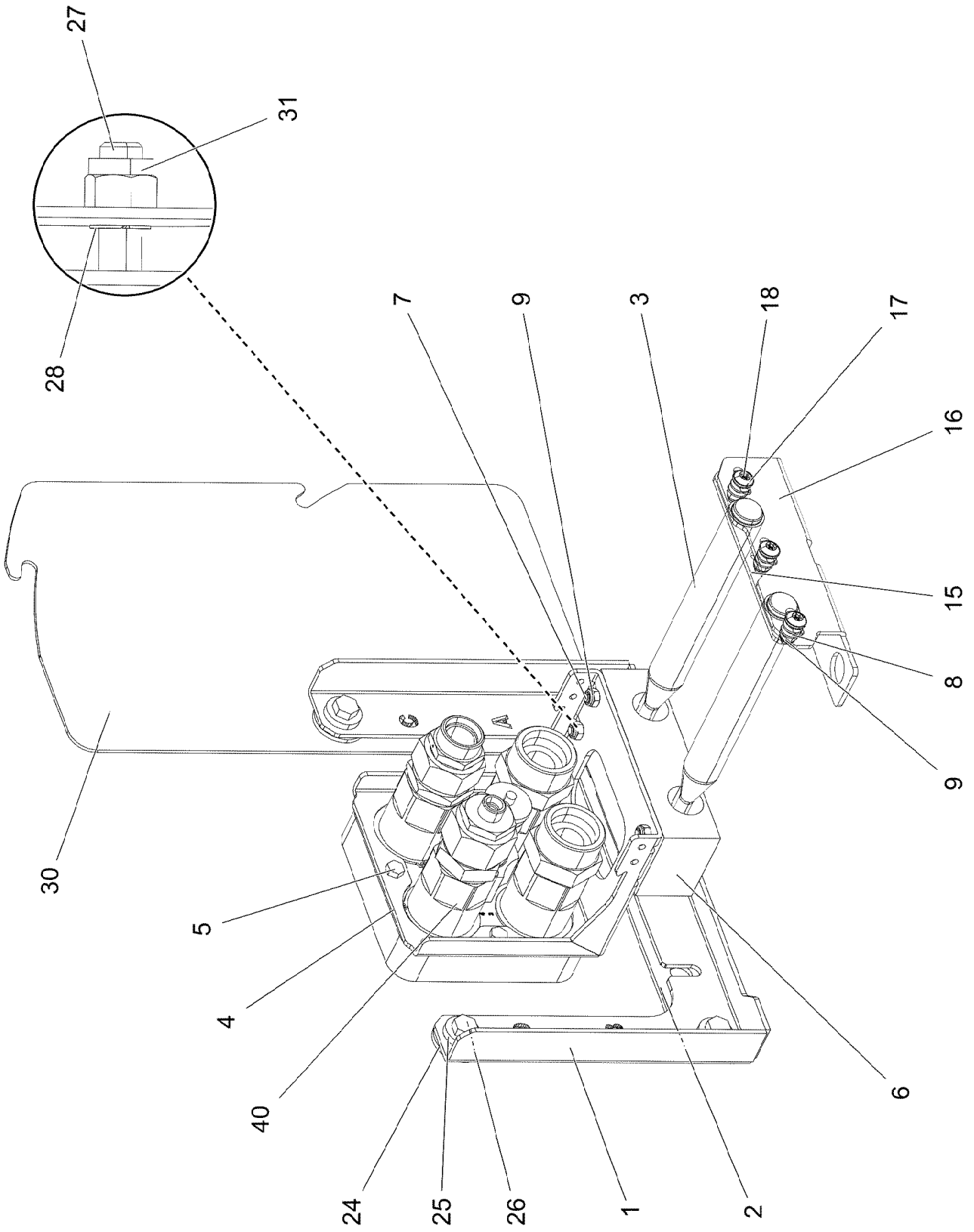

4.12.2020 004578 LIEBHERR	**etk_en_de 047580 LTR 1220** **GUIDE LEFT** **FUEHRUNG LI.**	86 (1/2) **96034962**

Pos.	Item	Quantity	Description	Bezeichnung
1	97093427	1	PLATE 4X463X307 S315MC FE//ZNNI8//CN//T	BLECH
2	97097713	1	PLATE 4X383X50 S315MC FE//ZNNI8//CN//T	BLECH
3	97133544	2	ROD 30.0X339 S355J2C+C FE//ZNNI8//CN//T	STANGE
4	97093428	1	PLATE 4X239X313 S315MC FE//ZNNI8//CN//T	BLECH
5	11651612	4	HEX SCREW ISO 4017 M8X16 8.8 480H SPF	SECHSKANTSCHRAUBE
6	97093433	1	GUIDE 180X70X 50 PA6G	FUEHRUNG
7	12201166	4	SOCKET HEAD SCREW ISO 4762 M8X60 8.8	ZYLINDERSCHRAUBE
8	10289803	7	WASHER ISO 7089 8 300HV 480H SPF	SCHEIBE
9	10875614	7	HEX NUT DIN 985 M8 8 480H SPF	SECHSKANTMUTTER
15	97093426	1	PLATE 4X180X40 S315MC FE//ZNNI8//CN//T	BLECH
16	97093425	1	PLATE 4X223X107 S315MC FE//ZNNI8//CN//T	BLECH
17	10166990	6	WASHER AEHNL.ISO 7089 8 PA 6.6	SCHEIBE
18	10875486	3	BUTTON HEAD SCREW AEHNL.ISO 7380-2	HALBRUNDKOPFSCHRAUBE
24	10875639	2	WASHER DIN 440 13,5 ST FLZN SPF	SCHEIBE
25	10006370	4	WASHER DIN 7349 13 200HV FLZN SPF	SCHEIBE
26	11658892	3	HEX SCREW ISO 4017 M12X25 8.8 FLZN SP	SECHSKANTSCHRAUBE
27	11840136	1	HEX SCREW ISO 4017 M12X50 8.8 FLZN	SECHSKANTSCHRAUBE
28	12209429	1	BEARING 12X17X4,6	LAGER
30	97118618	1	PLATE 3X286X480 ALMG3 H111 PULVERBE	BLECH
31	11840127	1	HEX NUT ISO 7040 M12 8 FLZN SPF	SECHSKANTMUTTER
40	12101576	1	QUICK RELEASE FITTING	SCHNELLVERSCHLUSSKUPPL

Pos.	Item	Quantity	Description	Bezeichnung
4	96035796	1	HYDR.TRAVEL DRIVE ⇨ ❑ 89	HYDR.FAHRANTRIEB

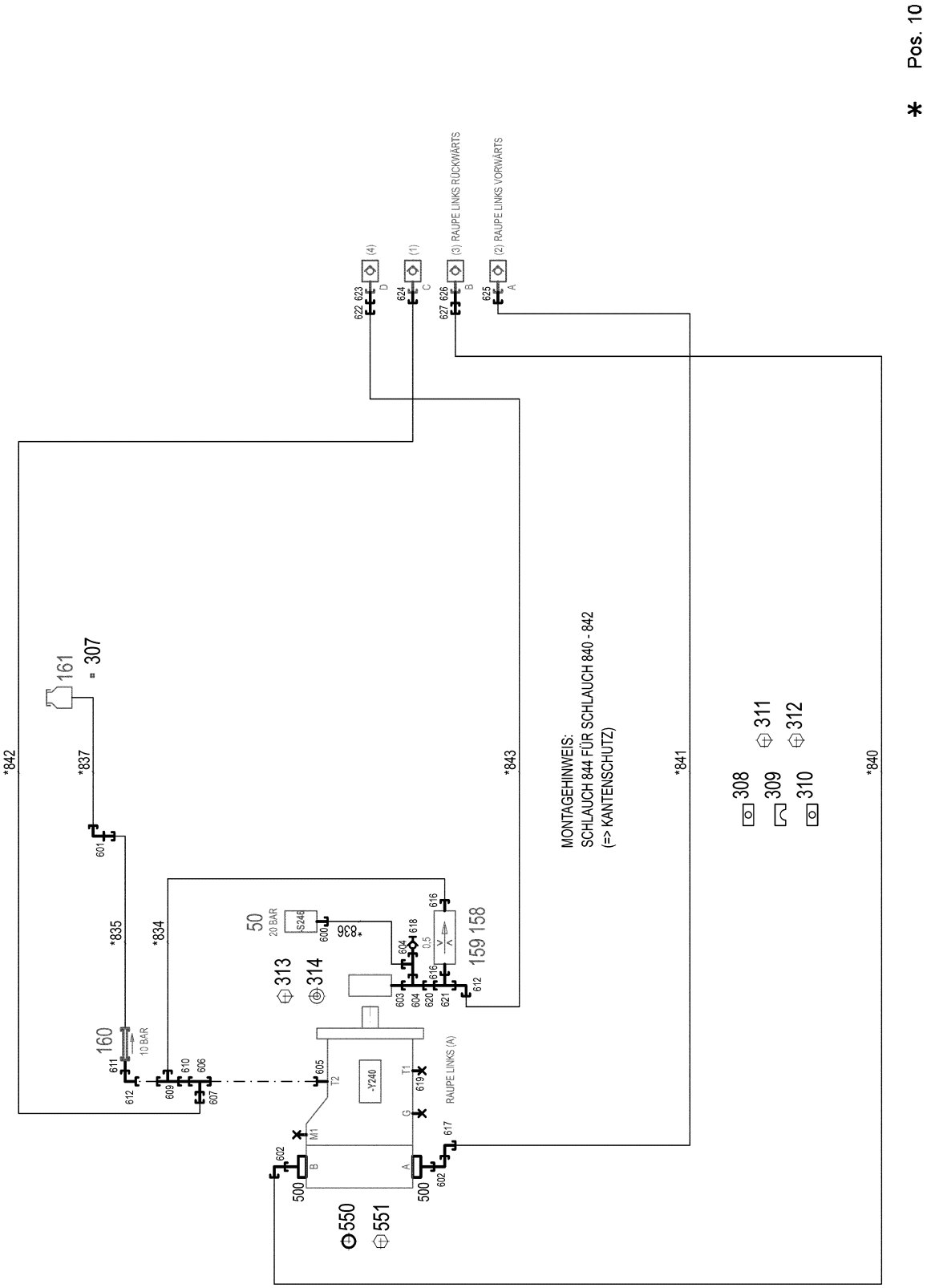

* Pos. 10
(4)
(1)
(3) RAUPE LINKS RÜCKWÄRTS
(2) RAUPE LINKS VORWÄRTS
MONTAGEHINWEIS:
SCHLAUCH 844 FÜR SCHLAUCH 840 - 842
(=> KANTENSCHUTZ)
RAUPE LINKS (A)
10 BAR
20 BAR
-Y240

Pos.	Item	Quantity	Description	Bezeichnung
10	96035799	1	HOSE LINES CRAWLER ⇨ ❑ 91	SCHLAUCHLEITUNGEN RAUPE
50	510676908	1	PRESSURE SWITCH 10-100/400 BAR	DRUCKSCHALTER
158	510671108	1	FILTER CARTRIDGE 0,005m³/min 25µm	FILTERPATRONE
159	511062708	1	NOZZLE 0,5 M5X9 MS	DUESE
160	511481508	1	NON-RETURN VALVE 250BAR CR6-FREI SP	RUECKSCHLAGVENTIL
161	96028333	1	EXPANSION TANK CPL. ⇨ ❑ 92	AUSGLEICHSBEHAELTER KPL.
307	10872024	1	HOSE CLAMP DIN 3017-1 8-16/9 W3	SCHLAUCHSCHELLE
308	12102954	2	LID PLATE DIN 3015-1 L-DP 6 W1-ZN	DECKPLATTE
309	602010108	6	CLAMP-HALF DIN 3015-1 L 6 R 44,5 PP SW	KLEMMHAELFTE
310	11008020	2	WELD PLATE DIN 3015-1 L-AP-K 6 W1 ZNNI	ANSCHWEISSPLATTE
311	12100256	2	SOCKET HEAD SCREW ISO 4762 M6X150 8	ZYLINDERSCHRAUBE
312	12203635	2	SOCKET HEAD SCREW ISO 4762 M6X90 8.8	ZYLINDERSCHRAUBE
313	11647548	2	HEX SCREW ISO 4017 M5X16 8.8 480H SPF	SECHSKANTSCHRAUBE
314	11140403	2	WASHER ISO 7089 5 200HV 480H SPF	SCHEIBE
500	511517808	2	FLANGE STUB PIPE AFG 38S G1 1/4 CR6-F	FLANSCHSTUTZEN
550	510586708	2	O-RING ARP 568 37,69X3,53 NBR90	O-RING
551	10876373	8	SOCKET HEAD SCREW ISO 4762 M14X45 8	ZYLINDERSCHRAUBE
600	7362091	1	FITTING ISO 8434-1 GE 10L G1/4A CR6-FREI	VERSCHRAUBUNG
601	474200408	1	FITTING XWSV12-L A3P	VERSCHRAUBUNG
602	472531808	2	FITTING EWSD38-S A3P	VERSCHRAUBUNG
603	471903908	1	FITTING EGE 10L M12X1,5 CR6-FREI	VERSCHRAUBUNG
604	472330208	2	FITTING EL 10L CR6-FREI	VERSCHRAUBUNG
605	471902408	1	FITTING EGESD22-LM-WD A3P	VERSCHRAUBUNG
606	482430614	1	FITTING ISO 8434 ET 22L CR6-FREI	VERSCHRAUBUNG
607	475031208	1	FITTING XGR35/22-L A3C	VERSCHRAUBUNG
609	247128602	1	FITTING EL 12L M18X1,5 CR6-FREI	VERSCHRAUBUNG
610	475436108	1	FITTING REDSD22/12-L A3P	VERSCHRAUBUNG
611	470011308	1	FITTING SNV12-L A3P	VERSCHRAUBUNG
612	247117702	2	FITTING EW 12L M18X1,5 CR6-FREI	VERSCHRAUBUNG
616	471035308	2	FITTING XGE12-LR-ED1/4" A3P	VERSCHRAUBUNG
617	10467292	1	FITTING EV38S M52X2 A3C	VERSCHRAUBUNG
618	510629008	1	TEST POINT FITTING VKA3 10LM16X1,5 CR6	MESSANSCHLUSS
619	477705808	1	STOP PLUG VSTIM26X1,5ED A3P	STOPFEN
620	475431408	1	FITTING REDSD12/10-L A3P	VERSCHRAUBUNG
621	247105602	1	FITTING ET 12L M18X1,5 CR6-FREI	VERSCHRAUBUNG
622	471032608	1	FITTING GE 12S G1/2A CR6-FREI	VERSCHRAUBUNG
623	475501108	1	ADAPTOR RI11/4-EDX1/2 A3P	ADAPTER
624	471034508	1	FITTING XGE35-LR-ED A3P	VERSCHRAUBUNG
625	7410455	1	SCREW-ON CONNECTION GE 38S G1 1/4A	EINSCHRAUBSTUTZEN
626	10876353	1	FITTING EGE 38S G1 1/4 CR6-FREI	VERSCHRAUBUNG
627	470033108	1	FITTING XG38-S A3P	VERSCHRAUBUNG

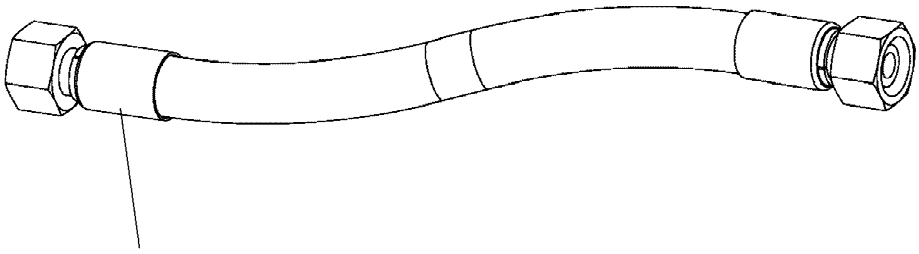

Schlauchnummer
Hose number
Numéro de flexible
Número de flexible
Номера шланга

Die Schlauchnummern auf den Schläuchen entsprechen den Positionen in der Schlauchliste.

The hose numbers from the hoses are in accordance with the items in the hose list.

Les numéros indiqués sur les flexibles correspondent aux repères de la nomenclature des flexibles.

Los números indicados en los flexibles corresponden a las posiciones de la lista de flexibles.

Нанесенные на шлангах номера соответствуют позициям в перечне.

Pos.	Item	Quantity	Description	Bezeichnung
834	926120008	1	HOSE CPL. 2TE 10X600	SCHLAUCH KPL.
835	926976308	1	HOSE CPL. 2TE 10X1060	SCHLAUCH KPL.
836	928023108	1	HOSE CPL. 2TE 8X460	SCHLAUCH KPL.
837	968143708	1	HOSE CPL. 2TE 8X700	SCHLAUCH KPL.
840	96035888	1	HOSE CPL. 4ST+ 31X3550	SCHLAUCH KPL.
841	96035889	1	HOSE CPL. 4ST+ 31X3450	SCHLAUCH KPL.
842	968148408	1	HOSE CPL. 1SN 32X3500	SCHLAUCH KPL.
843	96035894	1	HOSE CPL. 2SN 10X3550	SCHLAUCH KPL.
844	96014317	1	HOSE CPL. L6254.11 42X500	SCHLAUCH KPL.

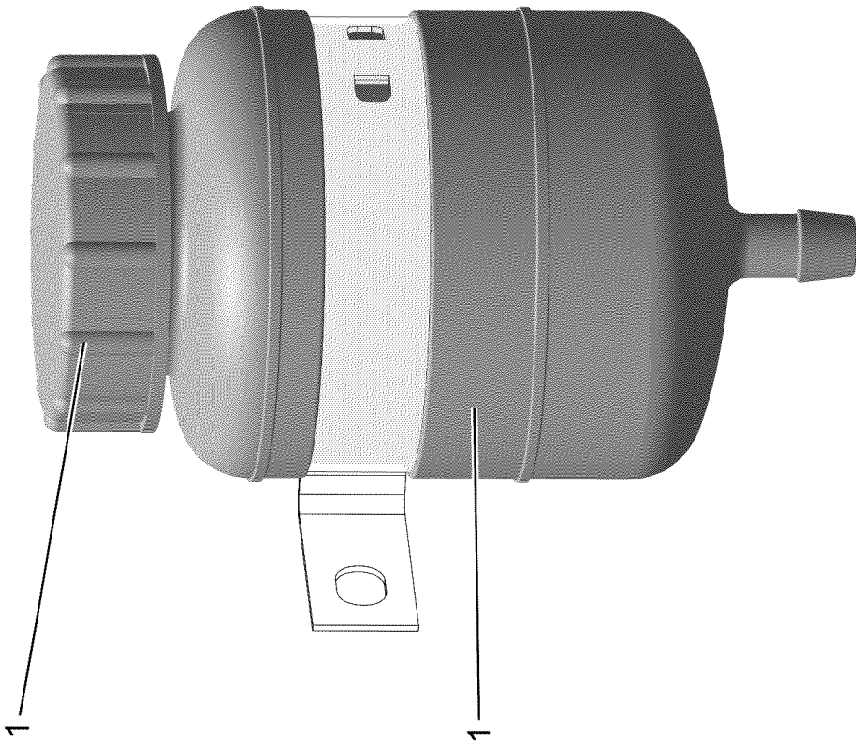
1
1

Pos.	Item	Quantity	Description	Bezeichnung
1	502806508	1	EQUALIZING RESERVOIR 1L ⇨ ❑ 94	AUSGLEICHSBEHAELTER
2	10878281	1	CONTAINER SCREW JOINT	BEHAELTERVERSCHRAUBUNG

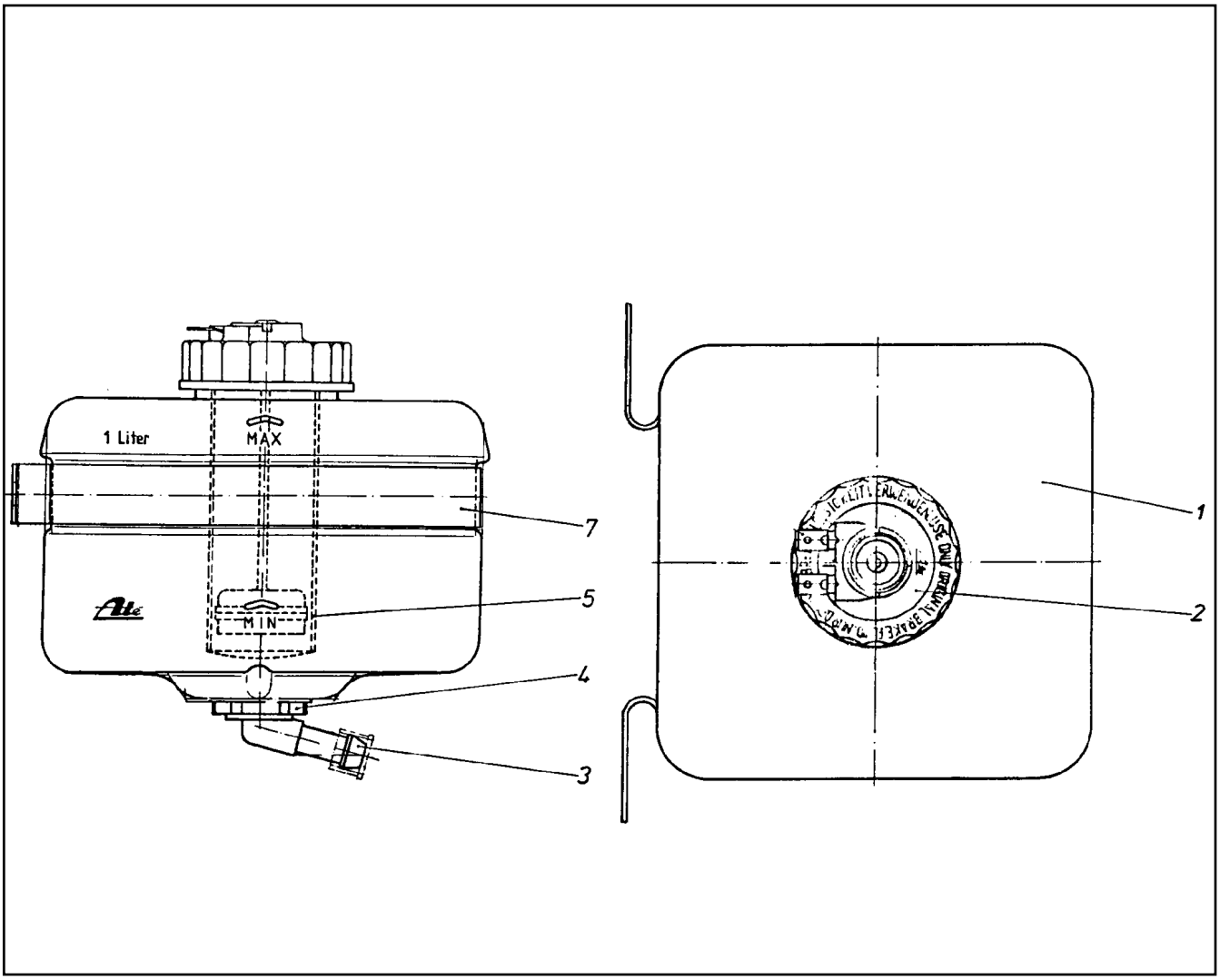

Pos.	Item	Quantity	Description	Bezeichnung
1	570065908	1	EQUALIZING RESERVOIR	AUSGLEICHSBEHAELTER
2	570066008	1	FITTING	VERSCHRAUBUNG
3	570066108	1	PIPE ELBOW	KNIESTUECK
4	570066208	1	CONTAINER PLUG	BEHAELTERSTOPFEN
5	570066308	1	SIEVE SLEEVE	SIEBHUELSE
7	570066408	1	FASTENING CLAMP	BEFESTIGUNGSSCHELLE

Pos.	Item	Quantity	Description	Bezeichnung
1	919254408	1	CRAWLER SUPPORT PREASS RS ⇨ ❑ 96	RAUPENTRAEGER VORM.RE.
4	919296408	1	HYDR.TRAVEL DRIVE ⇨ ❑ 105	HYDR.FAHRANTRIEB

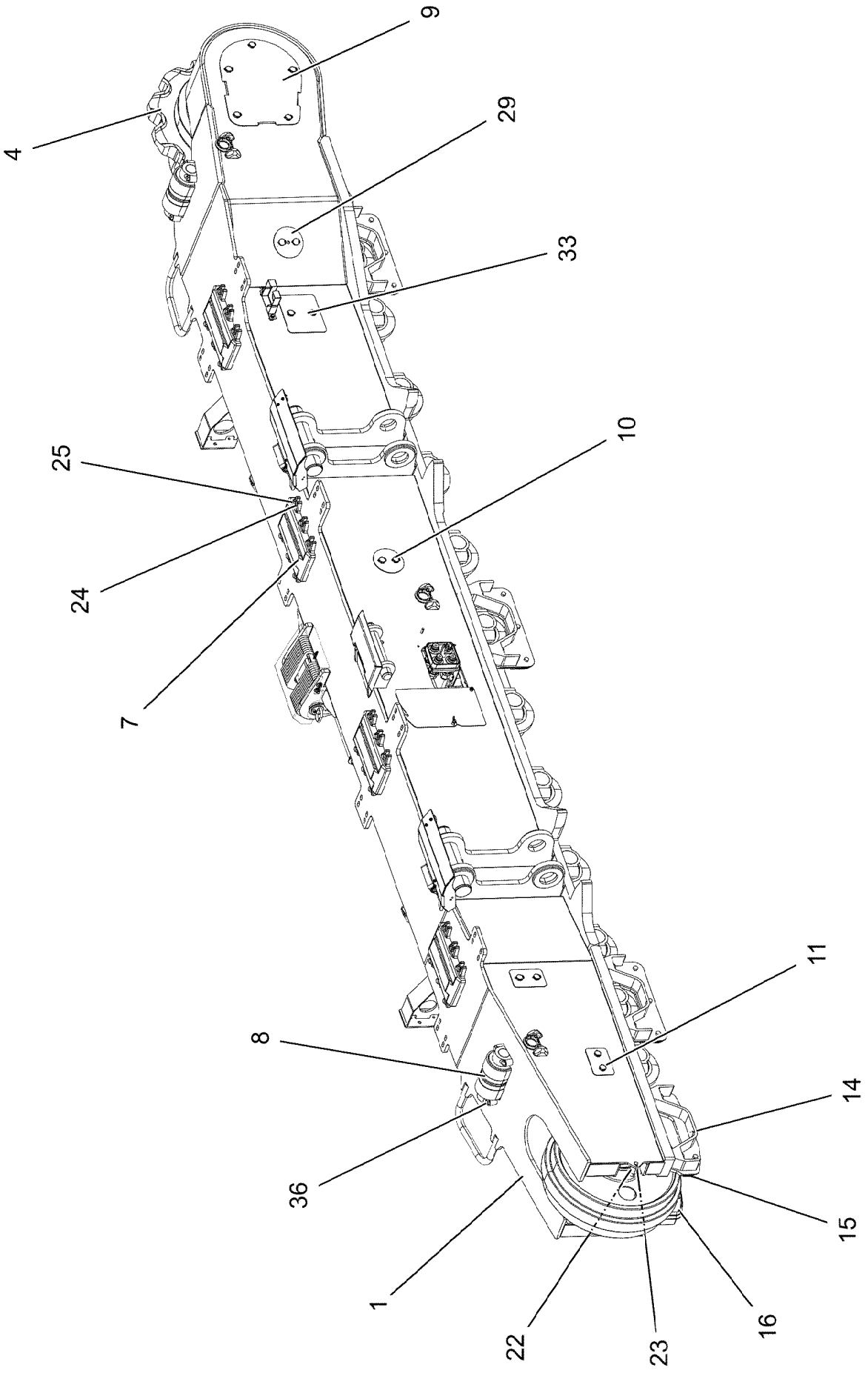
9
4
29
33
10
25
24
7
11
8
14
36
15
1
22
23
16

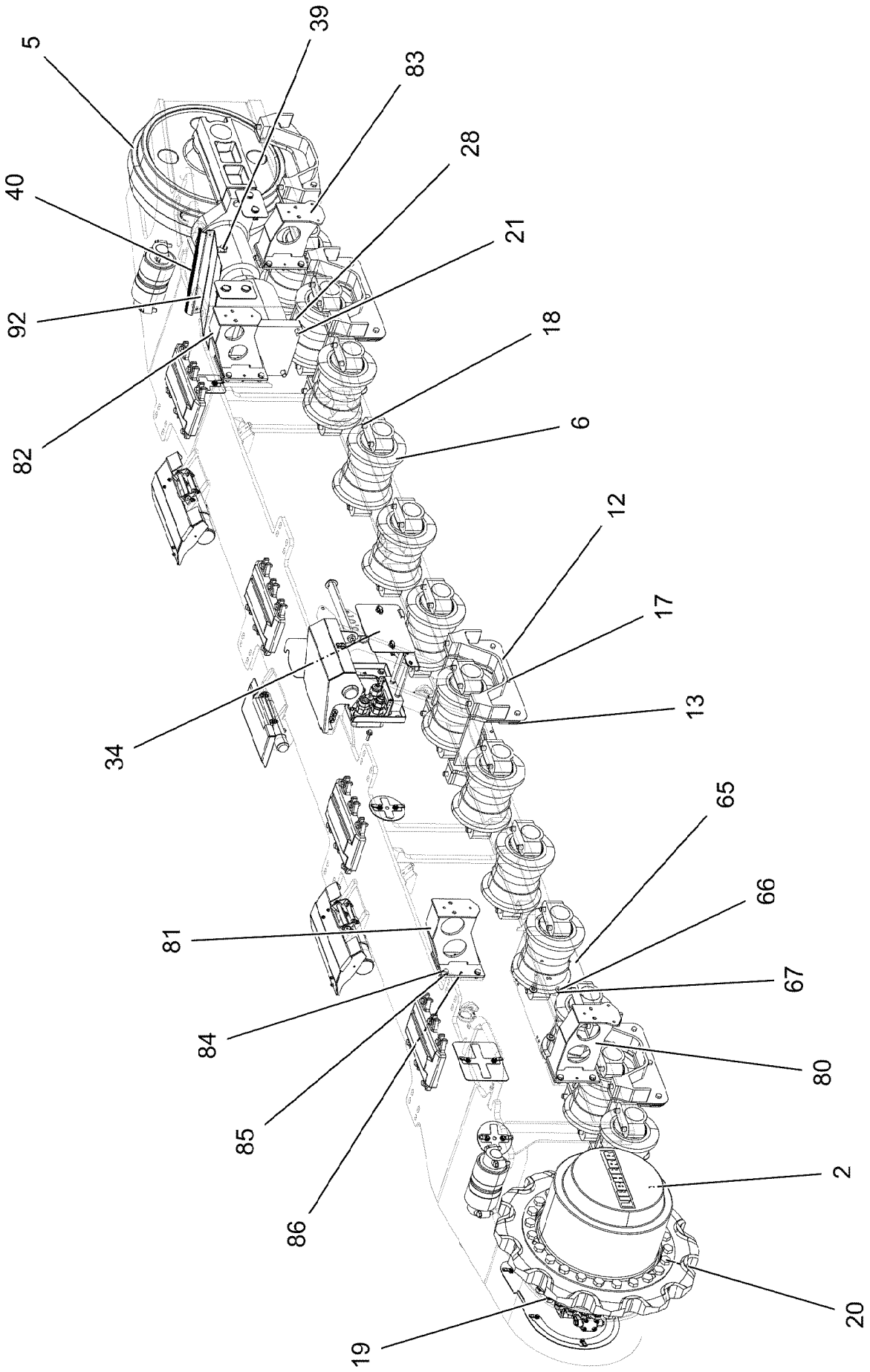
5
39
83
28
40
21
92
18
82
6
12
17
34
13
65
66
81
67
84
80
85
2
86
20
19

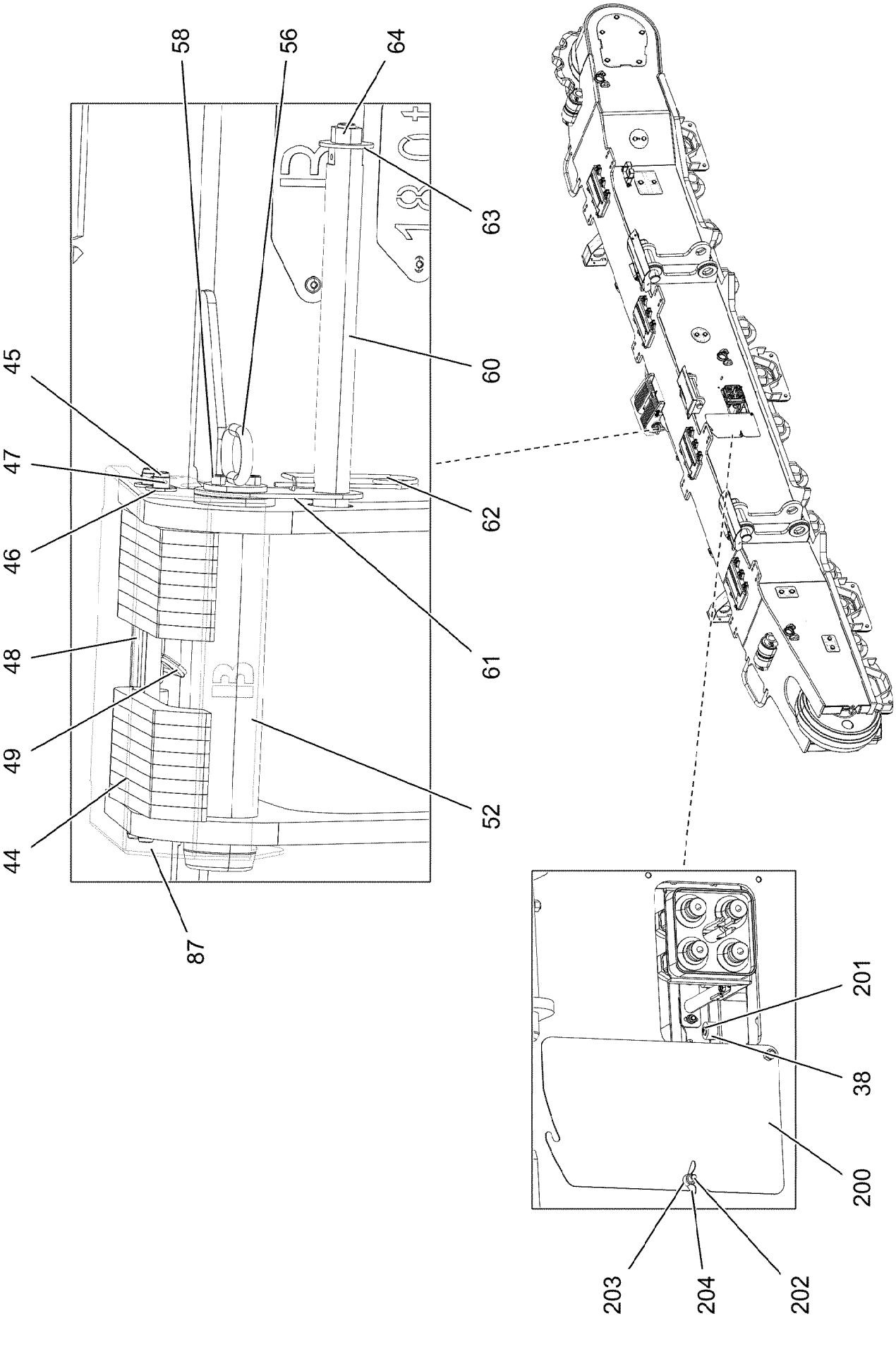

4.12.2020 004818	**etk_en_de 047580 LTR 1220**	❑ 98 (3/6)
LIEBHERR	**CRAWLER SUPPORT PREASS RS** **RAUPENTRAEGER VORM.RE.**	**919254408**

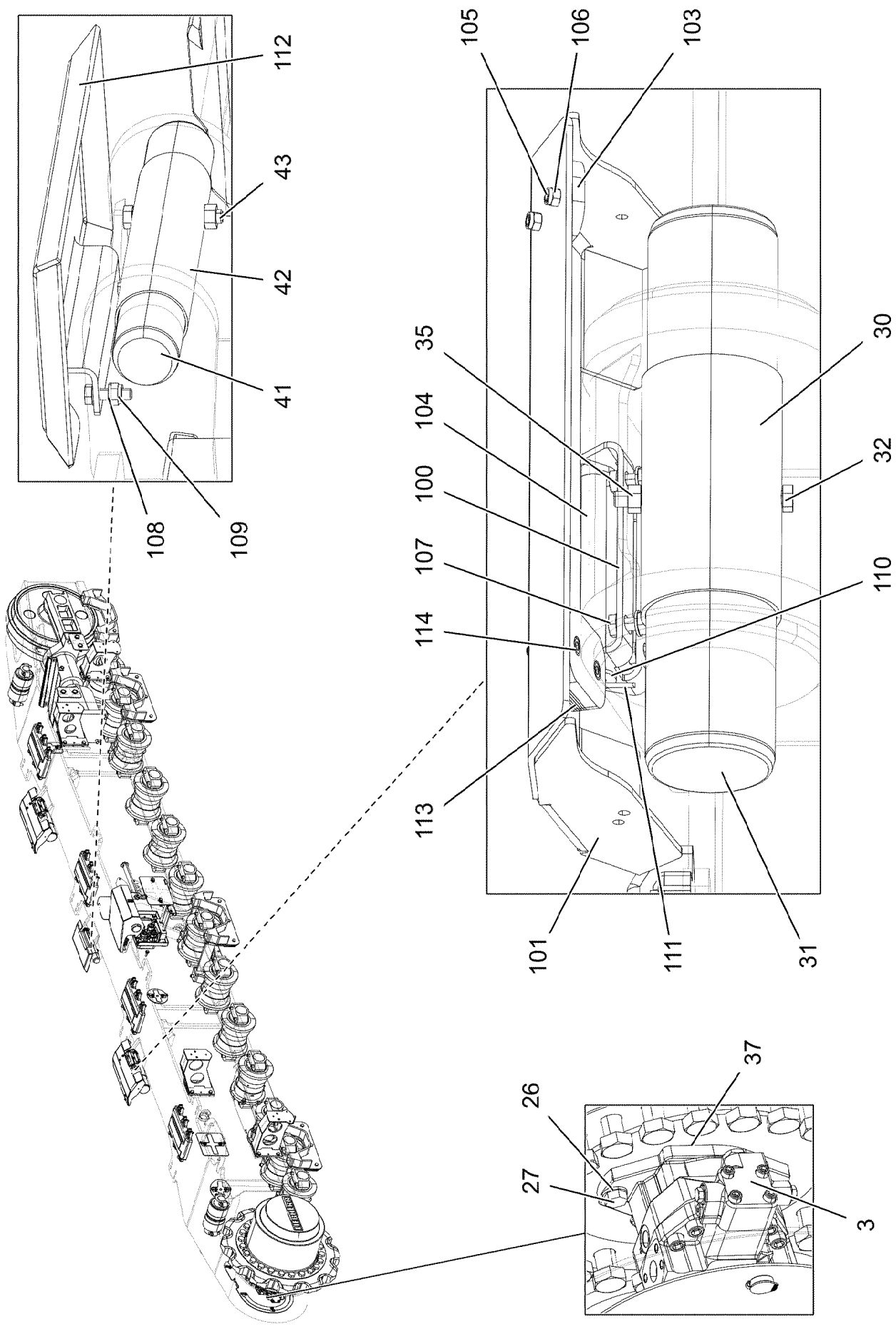
112
43
42
41
108
109
105
106
103
35
104
100
107
114
113
30
32
110
101
111
31
37
26
27
3

Pos.	Item	Quantity	Description	Bezeichnung
1	96019396	1	CRAWLER CARRIER STEEL CONTSR.	RAUPENTRAEGER STAHLBAU
2	90028956	1	TRACTION DRIVE FAT 600P049 ⇨ ❑ 72	FAHRANTRIEB
3	11182596	1	VARIABLE DISPLACEMENT MOTOR A6VE 1 ⇨ ❑ 74	VERSTELLMOTOR
4	749056414	1	DRIVE WHEEL 12XB9SX260,35 LH-GRAU	ANTRIEBSRAD
5	11320954	1	GUIDE WHEEL UNIT B9HDSX740 ⇨ ❑ 75	LEITRADEINHEIT
6	11320962	13	TRACK ROLLER 250X250	LAUFROLLE
7	308115114	4	SLIPPER 65X340X450 GS-CK 45 983593114	GLEITSCHUH
8	10877342	2	CARRYING ROLLER D8KX165	TRAGROLLE
9	968055808	1	COVER PRE-ASSY. ⇨ ❑ 102	DECKEL VORM.
10	967972308	1	COVER PRE-ASSY. ⇨ ❑ 80	DECKEL VORM.
11	967972408	4	COVER PRE-ASSY. ⇨ ❑ 81	DECKEL VORM.
12	968170308	3	TRACK GUIDE WELDMENT	KETTENFUEHRUNG SCHWK.
13	97035737	6	PLATE 20X570X133 S355J2+N	BLECH
14	968170708	1	TRACK GUIDE WELDMENT	KETTENFUEHRUNG SCHWK.
15	97035748	1	PLATE 20X590X125 S355J2+N	BLECH
16	97035749	1	PLATE 20X590X125 S355J2+N	BLECH
17	10875519	22	HEX SCREW ISO 4017 M16X40 8.8 FLZN SP	SECHSKANTSCHRAUBE
18	4062145	68	HEX SCREW ISO 4014 M24X110 10.9 FLZN	SECHSKANTSCHRAUBE
19	11342133	24	HEX SCREW ISO 4014 M30X110 12.9 FLZN	SECHSKANTSCHRAUBE
20	406209008	24	HEX SCREW ISO 4014 M30X120 10.9 FLZN	SECHSKANTSCHRAUBE
21	4901595	4	HEX SCREW ISO 4017 M24X80 10.9 FLZN SP	SECHSKANTSCHRAUBE
22	956078908	1	SLEEVE RD40X50 42CRMO4+QT GASN. SP	HUELSE
23	10293537	1	SOCKET HEAD SCREW ISO 4762 M24X70 10	ZYLINDERSCHRAUBE
24	4600021	24	WASHER DIN 7349 17 200HV FLZN SPF	SCHEIBE
25	10875520	24	HEX SCREW ISO 4017 M16X50 8.8 FLZN SP	SECHSKANTSCHRAUBE
26	4600222	2	WASHER EN 14399-6 20 300-370HV FLZN SP	SCHEIBE
27	406604208	2	HEX SCREW ISO 4017 M20X60 10.9 FLZN SP	SECHSKANTSCHRAUBE
28	10289810	4	WASHER ISO 7089 24 300HV FLZN SPF	SCHEIBE
29	968270108	1	COVER PRE-ASSY. ⇨ ❑ 82	DECKEL VORM.
30	97031480	2	SLEEVE 108.0X196 S235JRH FE//ZNNI8//CN/	HUELSE
31	97031481	2	PIN 105.0X452 35NICRMOV125 SPF	BOLZEN
32	4601290	2	HEX SCREW ISO 4014 M12X130 10.9 A3C SP	SECHSKANTSCHRAUBE
33	968274208	1	COVER PRE-ASSY. ⇨ ❑ 83	DECKEL VORM.
34	968709108	1	COVER PRE-ASSY. ⇨ ❑ 84	DECKEL VORM.
35	10875616	3	HEX NUT ISO 4032 M12 8 FLZN SPF	SECHSKANTMUTTER
36	10178883	8	HEX SCREW ISO 4014 M18X70 8.8 FLZN SP	SECHSKANTSCHRAUBE
37	11493868	1	O-RING 192X4 SPF	O-RING
38	978787708	6	SLEEVE 33.0X19 FE//ZNNI8//CN//T0	HUELSE
39	12102696	4	BUTTON HEAD SCREW ISO7380-2 M8X10 0	HALBRUNDKOPFSCHRAUBE
40	262105508	0.56	SEALING PROFILE 1-4X21,5X10	DICHTPROFIL
41	97100242	1	PIN 70.0X390 35NICRMOV125	BOLZEN
42	97100243	1	SLEEVE 65.0X248 E235+N	HUELSE
43	10875509	1	HEX SCREW ISO 4014 M12X85 8.8 FLZN SP	SECHSKANTSCHRAUBE
44	97040155	16	SPACER PIECE PA6G	DISTANZSTUECK
45	97032409	2	PIN 18.0X410 S355J2C+C FE//ZNNI8//CN//T0	BOLZEN
46	10289807	4	WASHER ISO 7089 18 300HV FLZN SPF	SCHEIBE
47	10172636	4	SPLIT PIN ISO 1234 3,2X40 A4	SPLINT
48	97032370	1	PLATE 2.5X73X78 DC01 FE//ZNNI8//CN//T0	BLECH
49	433101208	1	RETAINING SPRING 4X68 ISO 2081 FE/ZN8/	SICHERUNGSFEDER
52	97032383	1	PIN 90.0X415 35NICRMOV125 SPF	BOLZEN
56	962963808	1	HANDLE WELD.CONST. FE//ZNNI8//CN//T0	GRIFF SCHWK.

Pos.	Item	Quantity	Description	Bezeichnung
58	10875571	2	SOCKET HEAD SCREW ISO 4762 M10X30 8	ZYLINDERSCHRAUBE
60	97037244	1	GUIDING ROD 45.0X445 35NICRMOV125 SP	FUEHRUNGSSTANGE
61	97034262	1	PLATE 5X190X90 S355MC FE//ZNNI8//CN//T	BLECH
62	433100908	1	RETAINING SPRING 4,5X98 ISO 2081 FE/ZN	SICHERUNGSFEDER
63	4600328	1	WASHER ISO 7093-1 20 300HV FLZN SPF	SCHEIBE
64	10875618	1	HEX NUT ISO 4032 M20 8 FLZN SPF	SECHSKANTMUTTER
65	968420608	1	STORAGE BOX ⇨ ❑ 85	STAUKASTEN VORM.
66	10197730	4	HEX SCREW ISO 4017 M10X20 8.8 ZNNI-480	SECHSKANTSCHRAUBE
67	940116008	4	WASHER 4X40X40 S315MC FE//ZNNI8//CN//T	SCHEIBE
80	96000309	1	BRACKET WELDED CONST.	KONSOLE SCHWK.
81	96000310	1	BRACKET WELDED CONST.	KONSOLE SCHWK.
82	96000311	1	BRACKET WELDED CONST.	KONSOLE SCHWK.
83	96000312	1	BRACKET WELDED CONST.	KONSOLE SCHWK.
84	12214938	16	HEX SCREW ISO 4017 M16X35 8.8 FLZN SP	SECHSKANTSCHRAUBE
85	10289806	16	WASHER ISO 7089 16 300HV FLZN SPF	SCHEIBE
86	430608708	8	PARALLEL PIN ISO 2338 10M6X36 ST	ZYLINDERSTIFT
87	97066483	1	HOOD RIGHT 4X585X711 S315MC FE//ZNNI	HAUBE RE.
92	97094056	1	PLATE 2X666X382 DC01	BLECH
100	97103682	2	PLATE 5X86X267 S355MC FE//ZNNI8//CN//T	BLECH
101	97103683	2	PLATE 5X649X337 S355MC FE//ZNNI8//CN//T	BLECH
103	97070985	4	LIMIT STOP 90X60X10 PA6G NATUR	ANSCHLAG
104	97073453	2	LOCKING BOLT 30.0X200 35NICRMOV125	SICHERUNGSBOLZEN
105	12216054	4	SOCKET HEAD SCREW DIN 7984 M8X20 08	ZYLINDERSCHRAUBE
106	11656731	8	HEX NUT ISO 7040 M8 8 480H SPF	SECHSKANTMUTTER
107	11691328	10	HEX SCREW ISO 4017 M10X35 8.8 FLZN SP	SECHSKANTSCHRAUBE
108	10289795	20	WASHER ISO 7089 10 300HV FLZN SPF	SCHEIBE
109	10197769	10	HEX NUT DIN 985 M10 8 ZNNI-480H SPF	SECHSKANTMUTTER
110	10289808	2	WASHER ISO 7089 20 300HV FLZN SPF	SCHEIBE
111	10180354	2	SPLIT PIN ISO 1234 4X40 St 480H SPF	SPLINT
112	97104844	1	PLATE 5X443X254 S355MC FE//ZNNI8//CN//T	BLECH
113	97104898	12	PLATE 2X90X60 DC01 FE//ZNNI8//CN//T0	BLECH
114	571310608	4	SOCKET HEAD SCREW DIN 6912 M8X35 08.	ZYLINDERSCHRAUBE
200	96034980	1	GUIDE RIGHT ⇨ ❑ 103	FUEHRUNG RE.
201	10876082	2	BUTTON HEAD SCREW AEHNL.ISO 7380-2	HALBRUNDKOPFSCHRAUBE
202	4600612	2	WING SCREW DIN 316 M12X20 4.6 FLZN SP	FLUEGELSCHRAUBE

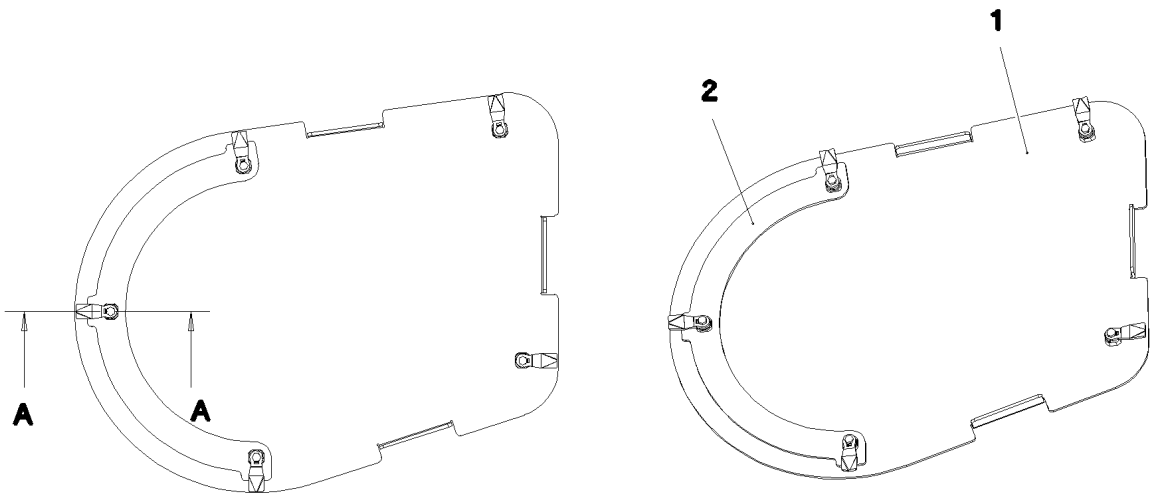

Schnitt A–A

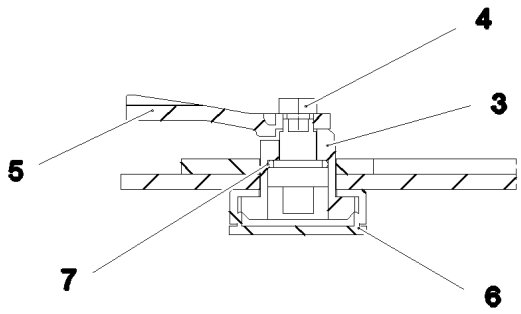

Pos.	Item	Quantity	Description	Bezeichnung
1	97033100	1	PLATE 4X668X480 ALMG3 H111 SPF	BLECH
2	97031267	1	PLATE 2X244X449 ALMG3 H111 SPF	BLECH
3	704253308	5	HOUSING GD-ZN SW GEPULVERT	GEHAEUSE
4	704253408	5	ACTUATION SPIKE GD-ZN SW GEPULVERT	BETAETIGUNGSDORN
5	704253708	5	TONGUE	ZUNGE
6	704254808	5	DUST CAP POLYETHYLEN SCHWARZ	STAUBKAPPE
7	704274808	5	O-RING 12X2 NBR70	O-RING

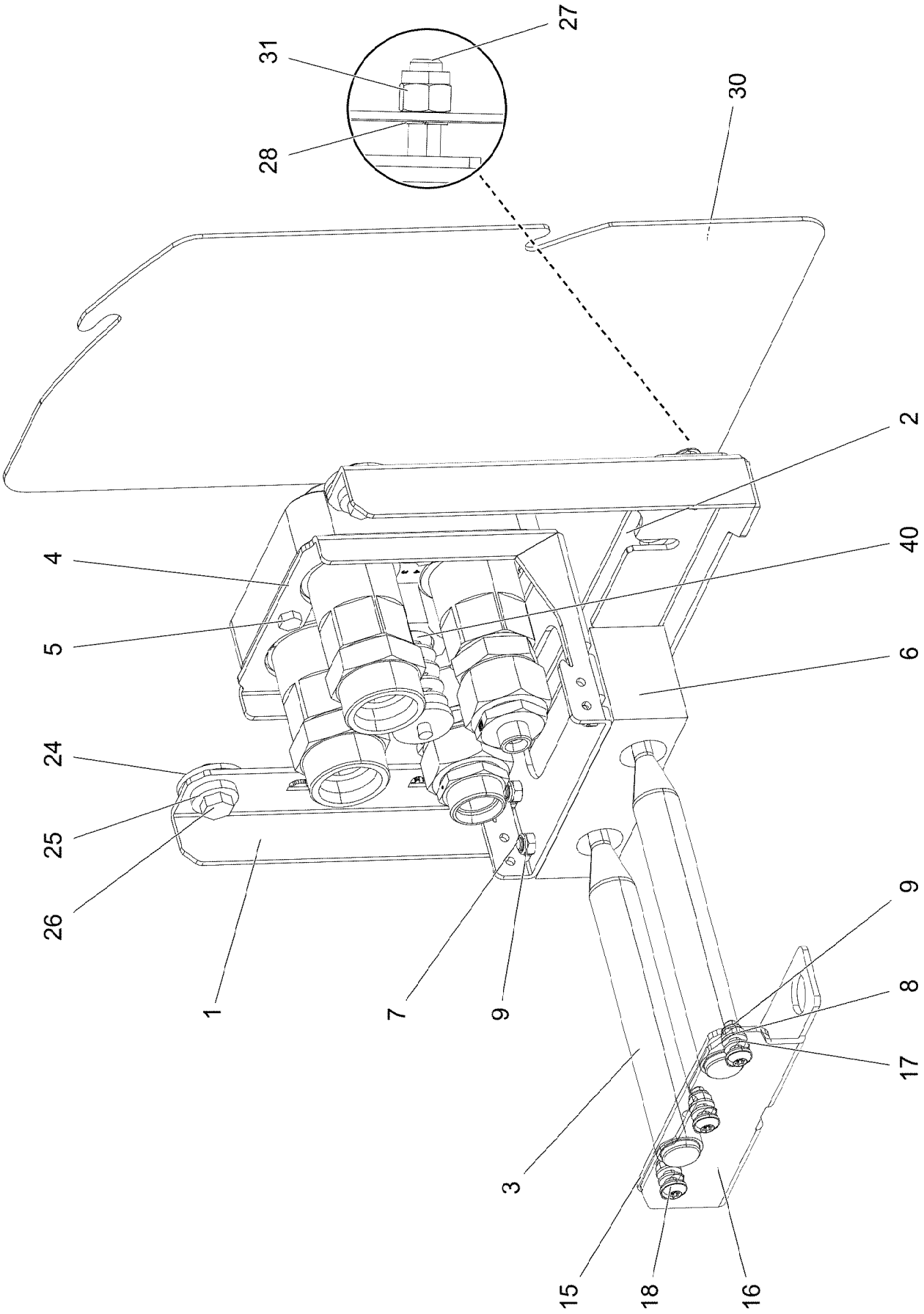

4.12.2020 004577 LIEBHERR	**etk_en_de 047580 LTR 1220** **GUIDE RIGHT** **FUEHRUNG RE.**	❑ 103 (1/2) **96034980**

Pos.	Item	Quantity	Description	Bezeichnung
1	97093427	1	PLATE 4X463X307 S315MC FE//ZNNI8//CN//T	BLECH
2	97097713	1	PLATE 4X383X50 S315MC FE//ZNNI8//CN//T	BLECH
3	97133544	2	ROD 30.0X339 S355J2C+C FE//ZNNI8//CN//T	STANGE
4	97093428	1	PLATE 4X239X313 S315MC FE//ZNNI8//CN//T	BLECH
5	11651612	4	HEX SCREW ISO 4017 M8X16 8.8 480H SPF	SECHSKANTSCHRAUBE
6	97093433	1	GUIDE 180X70X 50 PA6G	FUEHRUNG
7	12201166	4	SOCKET HEAD SCREW ISO 4762 M8X60 8.8	ZYLINDERSCHRAUBE
8	10289803	7	WASHER ISO 7089 8 300HV 480H SPF	SCHEIBE
9	10875614	7	HEX NUT DIN 985 M8 8 480H SPF	SECHSKANTMUTTER
15	97093426	1	PLATE 4X180X40 S315MC FE//ZNNI8//CN//T	BLECH
16	97118621	1	PLATE 4X223X107 S315MC FE//ZNNI8//CN//T	BLECH
17	10166990	6	WASHER AEHNL.ISO 7089 8 PA 6.6	SCHEIBE
18	10875486	3	BUTTON HEAD SCREW AEHNL.ISO 7380-2	HALBRUNDKOPFSCHRAUBE
24	10875639	2	WASHER DIN 440 13,5 ST FLZN SPF	SCHEIBE
25	10006370	4	WASHER DIN 7349 13 200HV FLZN SPF	SCHEIBE
26	11658892	3	HEX SCREW ISO 4017 M12X25 8.8 FLZN SP	SECHSKANTSCHRAUBE
27	11840136	1	HEX SCREW ISO 4017 M12X50 8.8 FLZN	SECHSKANTSCHRAUBE
28	12209429	1	BEARING 12X17X4,6	LAGER
30	97118618	1	PLATE 3X286X480 ALMG3 H111 PULVERBE	BLECH
31	11840127	1	HEX NUT ISO 7040 M12 8 FLZN SPF	SECHSKANTMUTTER
40	12101576	1	QUICK RELEASE FITTING	SCHNELLVERSCHLUSSKUPPL

Pos.	Item	Quantity	Description	Bezeichnung
4	96035792	1	HYDR.TRAVEL DRIVE ⇨ ❑ 106	HYDR.FAHRANTRIEB

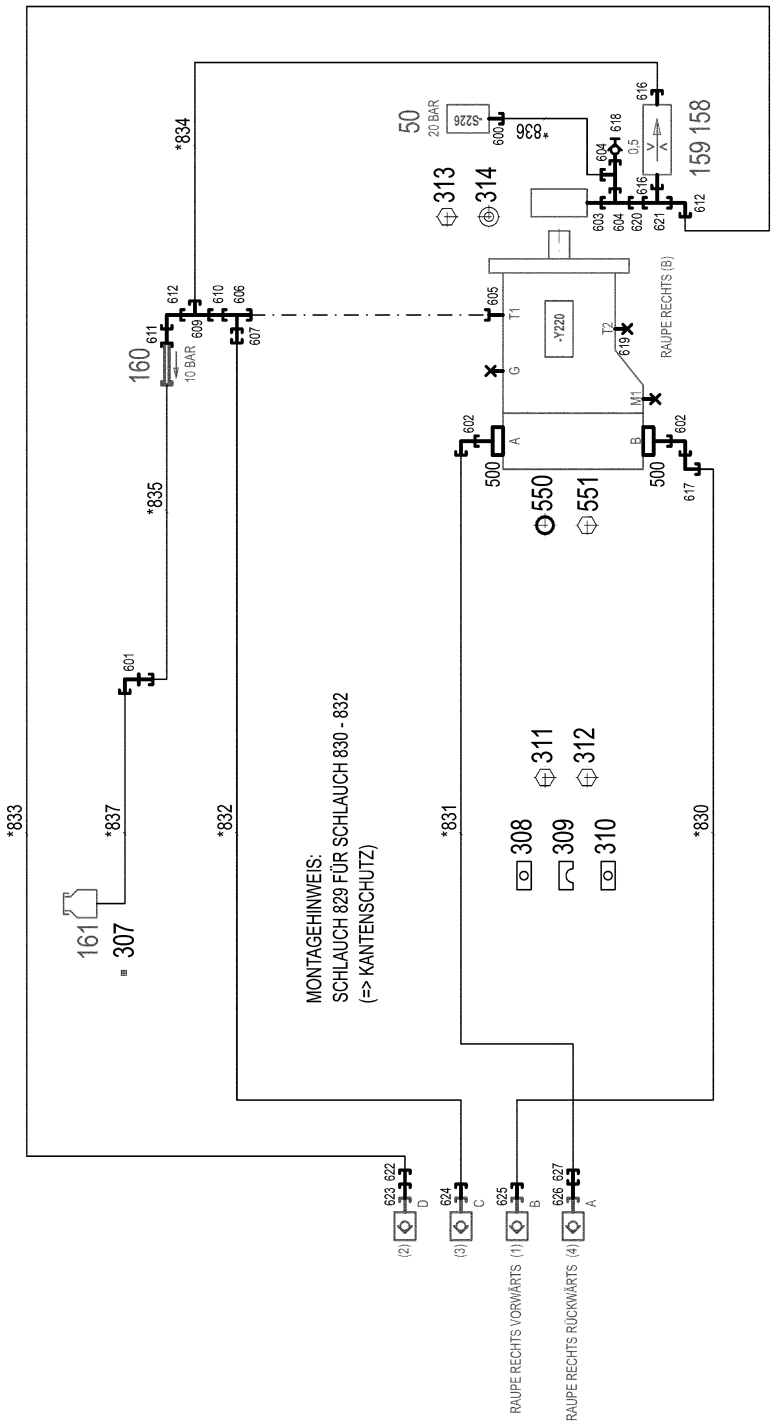
MONTAGEHINWEIS:
SCHLAUCH 829 FÜR SCHLAUCH 830 - 832
(=> KANTENSCHUTZ)
RAUPE RECHTS VORWÄRTS (1)
RAUPE RECHTS RÜCKWÄRTS (4)
RAUPE RECHTS (B)
-Y220
-S226
20 BAR
10 BAR
*833
*837
*832
*831
*830
*835
*834
*836
161
307
160
500
550
551
308
309
310
311
312
313
314
50
159 158

* Pos. 10

Pos.	Item	Quantity	Description	Bezeichnung
10	96035798	1	HOSE LINES CRAWLER ⇨ ❑ 108	SCHLAUCHLEITUNGEN RAUPE
50	510676908	1	PRESSURE SWITCH 10-100/400 BAR	DRUCKSCHALTER
158	510671108	1	FILTER CARTRIDGE 0,005m³/min 25µm	FILTERPATRONE
159	511062708	1	NOZZLE 0,5 M5X9 MS	DUESE
160	511481508	1	NON-RETURN VALVE 250BAR CR6-FREI SP	RUECKSCHLAGVENTIL
161	96028333	1	EXPANSION TANK CPL. ⇨ ❑ 92	AUSGLEICHSBEHAELTER KPL.
307	10872024	1	HOSE CLAMP DIN 3017-1 8-16/9 W3	SCHLAUCHSCHELLE
308	12102954	2	LID PLATE DIN 3015-1 L-DP 6 W1-ZN	DECKPLATTE
309	602010108	6	CLAMP-HALF DIN 3015-1 L 6 R 44,5 PP SW	KLEMMHAELFTE
310	11008020	2	WELD PLATE DIN 3015-1 L-AP-K 6 W1 ZNNI	ANSCHWEISSPLATTE
311	12100256	2	SOCKET HEAD SCREW ISO 4762 M6X150 8	ZYLINDERSCHRAUBE
312	12203635	2	SOCKET HEAD SCREW ISO 4762 M6X90 8.8	ZYLINDERSCHRAUBE
313	11647548	2	HEX SCREW ISO 4017 M5X16 8.8 480H SPF	SECHSKANTSCHRAUBE
314	11140403	2	WASHER ISO 7089 5 200HV 480H SPF	SCHEIBE
500	511517808	2	FLANGE STUB PIPE AFG 38S G1 1/4 CR6-F	FLANSCHSTUTZEN
550	510586708	2	O-RING ARP 568 37,69X3,53 NBR90	O-RING
551	10876373	8	SOCKET HEAD SCREW ISO 4762 M14X45 8	ZYLINDERSCHRAUBE
600	7362091	1	FITTING ISO 8434-1 GE 10L G1/4A CR6-FREI	VERSCHRAUBUNG
601	474200408	1	FITTING XWSV12-L A3P	VERSCHRAUBUNG
602	472531808	2	FITTING EWSD38-S A3P	VERSCHRAUBUNG
603	471903908	1	FITTING EGE 10L M12X1,5 CR6-FREI	VERSCHRAUBUNG
604	472330208	2	FITTING EL 10L CR6-FREI	VERSCHRAUBUNG
605	471902408	1	FITTING EGESD22-LM-WD A3P	VERSCHRAUBUNG
606	482430614	1	FITTING ISO 8434 ET 22L CR6-FREI	VERSCHRAUBUNG
607	475031208	1	FITTING XGR35/22-L A3C	VERSCHRAUBUNG
609	247128602	1	FITTING EL 12L M18X1,5 CR6-FREI	VERSCHRAUBUNG
610	475436108	1	FITTING REDSD22/12-L A3P	VERSCHRAUBUNG
611	470011308	1	FITTING SNV12-L A3P	VERSCHRAUBUNG
612	247117702	2	FITTING EW 12L M18X1,5 CR6-FREI	VERSCHRAUBUNG
616	471035308	2	FITTING XGE12-LR-ED1/4" A3P	VERSCHRAUBUNG
617	10467292	1	FITTING EV38S M52X2 A3C	VERSCHRAUBUNG
618	510629008	1	TEST POINT FITTING VKA3 10LM16X1,5 CR6	MESSANSCHLUSS
619	477705808	1	STOP PLUG VSTIM26X1,5ED A3P	STOPFEN
620	475431408	1	FITTING REDSD12/10-L A3P	VERSCHRAUBUNG
621	247105602	1	FITTING ET 12L M18X1,5 CR6-FREI	VERSCHRAUBUNG
622	471032608	1	FITTING GE 12S G1/2A CR6-FREI	VERSCHRAUBUNG
623	475501108	1	ADAPTOR RI11/4-EDX1/2 A3P	ADAPTER
624	471034508	1	FITTING XGE35-LR-ED A3P	VERSCHRAUBUNG
625	7410455	1	SCREW-ON CONNECTION GE 38S G1 1/4A	EINSCHRAUBSTUTZEN
626	10876353	1	FITTING EGE 38S G1 1/4 CR6-FREI	VERSCHRAUBUNG
627	470033108	1	FITTING XG38-S A3P	VERSCHRAUBUNG

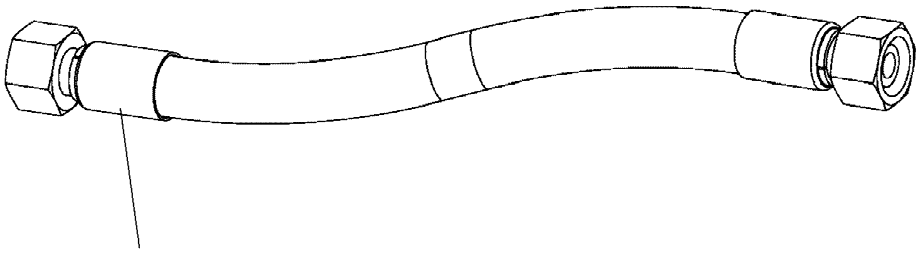

Schlauchnummer
Hose number
Numéro de flexible
Número de flexible
Номера шланга

Die Schlauchnummern auf den Schläuchen entsprechen den Positionen in der Schlauchliste.

The hose numbers from the hoses are in accordance with the items in the hose list.

Les numéros indiqués sur les flexibles correspondent aux repères de la nomenclature des flexibles.

Los números indicados en los flexibles corresponden a las posiciones de la lista de flexibles.

Нанесенные на шлангах номера соответствуют позициям в перечне.

Pos.	Item	Quantity	Description	Bezeichnung
829	96014317	1	HOSE CPL. L6254.11 42X500	SCHLAUCH KPL.
830	96035890	1	HOSE CPL. 4ST+ 31X4100	SCHLAUCH KPL.
831	96035891	1	HOSE CPL. 4ST+ 31X4200	SCHLAUCH KPL.
832	96035892	1	HOSE CPL. 1SN 32X4250	SCHLAUCH KPL.
833	96035893	1	HOSE CPL. 2SN 10X4050	SCHLAUCH KPL.
834	926120008	1	HOSE CPL. 2TE 10X600	SCHLAUCH KPL.
835	926976308	1	HOSE CPL. 2TE 10X1060	SCHLAUCH KPL.
836	928023108	1	HOSE CPL. 2TE 8X460	SCHLAUCH KPL.
837	968143708	1	HOSE CPL. 2TE 8X700	SCHLAUCH KPL.

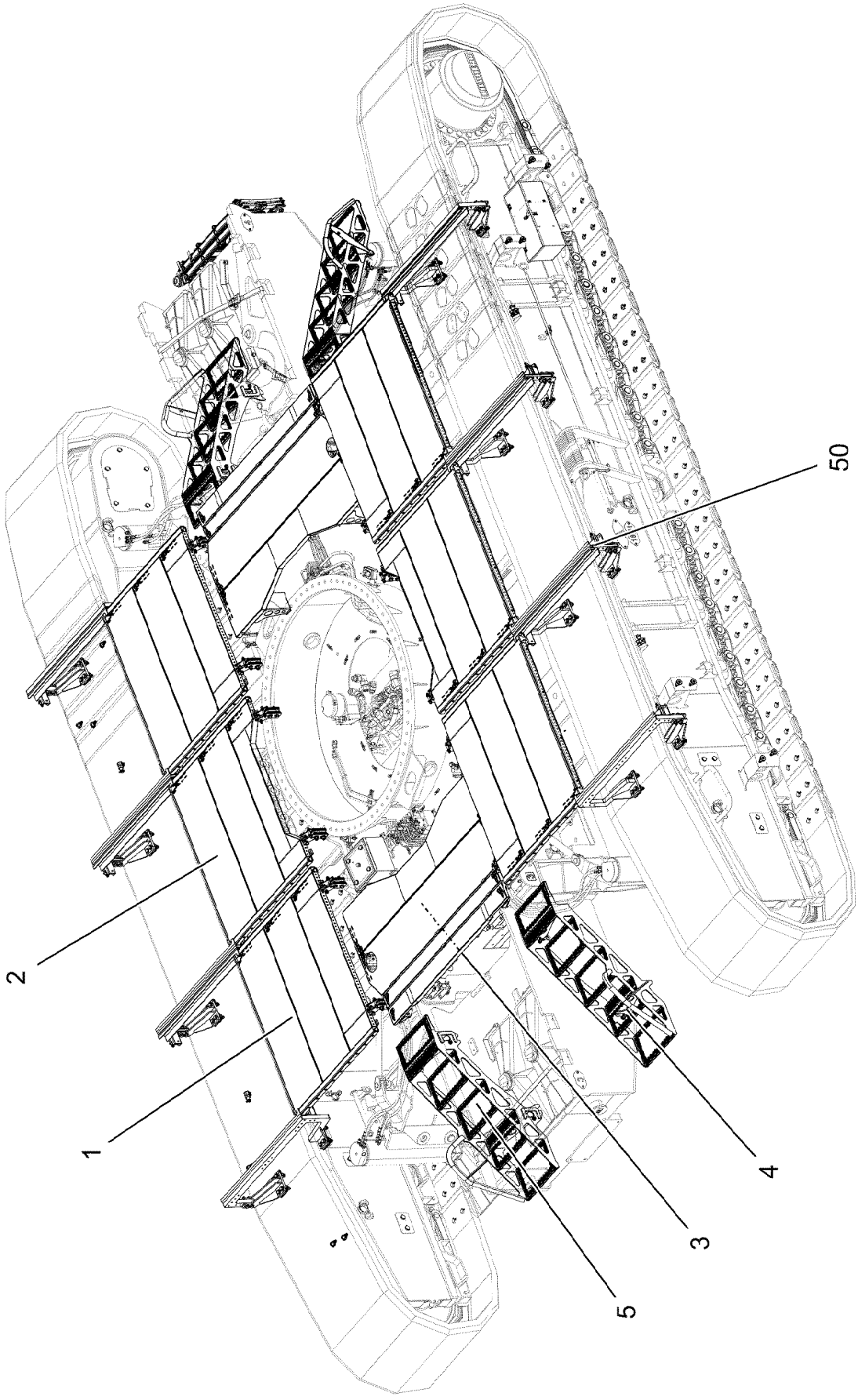
50
2
1
4
3
5

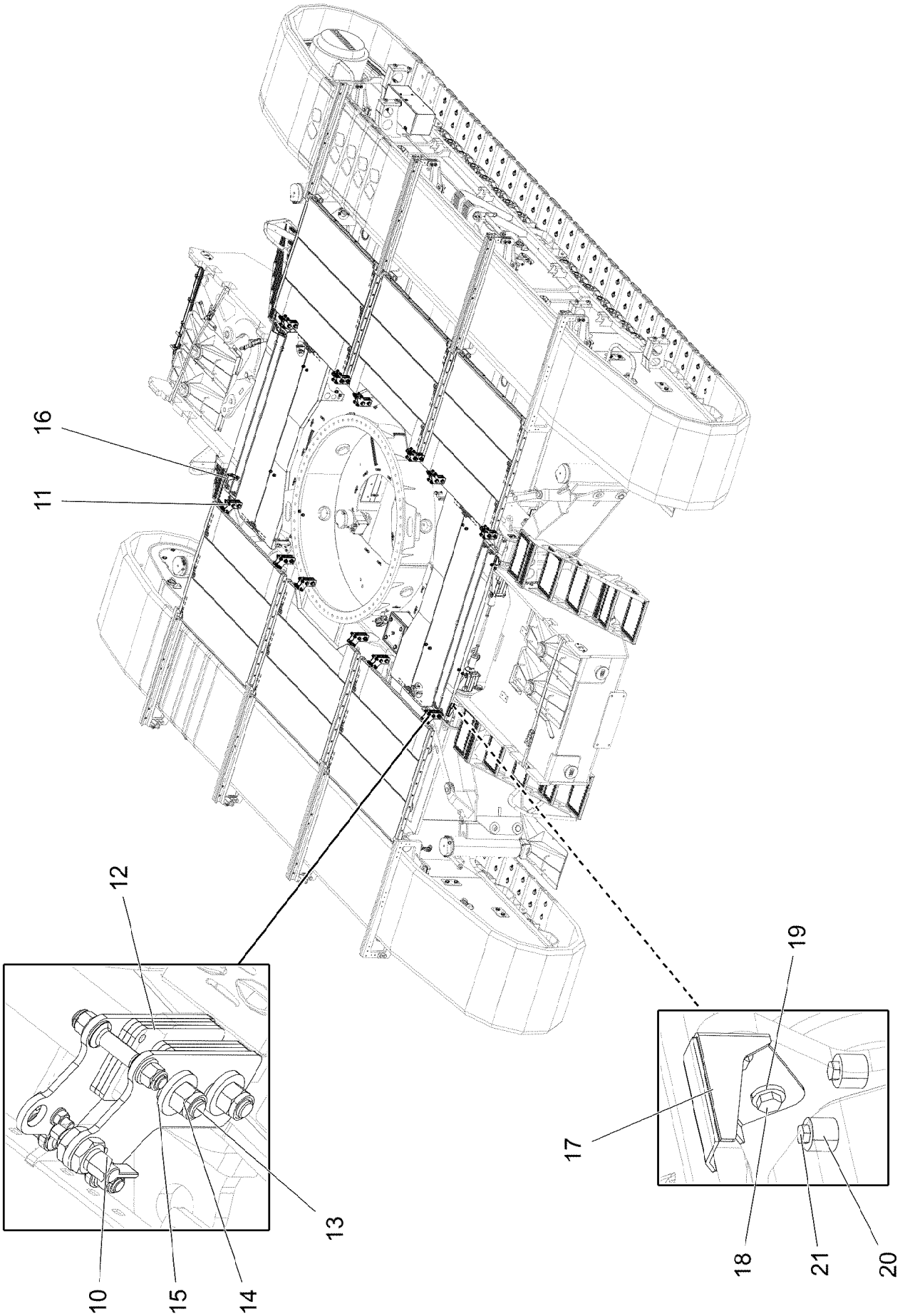
16
11
12
13
10
15
14
19
17
18
21
20

Pos.	Item	Quantity	Description	Bezeichnung
1	11346547	4	PEDESTAL 50X1350X1610 STAHL T ZN O	PODEST
2	11346548	2	PEDESTAL 50X1350X1610 T ZN O	PODEST
3	11346549	2	PEDESTAL 50X1166X2200 STAHL T ZN O	PODEST
4	11213246	2	STAIR 5-631X0,754M ALMG3 ELOXIERT SPF	TREPPE
5	11213247	2	STAIR 5-631X0,754M ALMG3 ELOXIERT SPF	TREPPE
10	968038208	6	BEARING AHEAD LEFT SIDE ⇨ ❑ 112	LAGERUNG VORN LI.
11	968038308	6	BEARING AHEAD RIGHT SIDE ⇨ ❑ 113	LAGERUNG VORN RE.
12	97032691	72	PLATE 5X70X130 S355MC FE//ZNNI8//CN//T	BLECH
13	10878688	24	HEX SCREW ISO 4014 M16X95 8.8 FLZN SP	SECHSKANTSCHRAUBE
14	10875859	24	HEX NUT ISO 7040 M16 8 FLZN SPF	SECHSKANTMUTTER
15	4600021	48	WASHER DIN 7349 17 200HV FLZN SPF	SCHEIBE
16	97039156	2	SUPPORTING BRACKET 3X206X185 S355M	STUETZKONSOLE
17	97039157	2	SUPPORTING BRACKET 3X206X185 S355M	STUETZKONSOLE
18	10197730	8	HEX SCREW ISO 4017 M10X20 8.8 ZNNI-480	SECHSKANTSCHRAUBE
19	4902172	8	WASHER DIN 7349 10,5 140HV-A4	SCHEIBE
20	953873408	16	SLEEVE 25X20 11SMN37 FE//ZNNI8//CN//T0	HUELSE
21	11651612	16	HEX SCREW ISO 4017 M8X16 8.8 480H SPF	SECHSKANTSCHRAUBE
50	968046208	2	ADD-ON PARTS RAUPENTRAEGER ⇨ ❑ 114	ANBAUTEILE

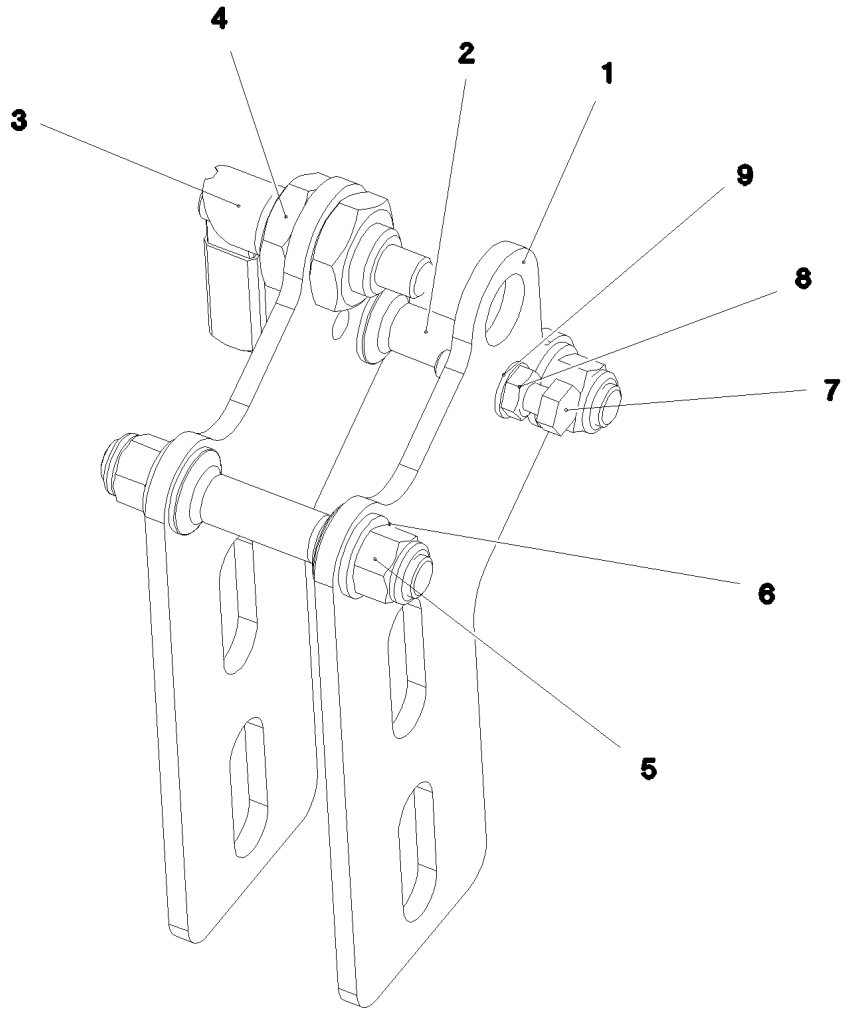

Pos.	Item	Quantity	Description	Bezeichnung
1	97032646	2	BEARING 6X129X209 S355MC FE//ZNNI8//C	LAGERUNG
2	97032647	2	PIN 25.0X100 S355J2G3C+C FE//ZNNI8//CN/	BOLZEN
3	10010025	1	SNAP-IN LOCK NIROSTA	RASTRIEGEL
4	10285016	2	HEX NUT ISO 8675 M20X1,5 A2-035	SECHSKANTMUTTER
5	11840127	4	HEX NUT ISO 7040 M12 8 FLZN SPF	SECHSKANTMUTTER
6	10410178	4	WASHER ISO 7089 12 200HV-A2	SCHEIBE
7	11692827	1	HEX SCREW ISO 4017 M8X35 8.8 480H SPF	SECHSKANTSCHRAUBE
8	11693875	2	HEX NUT ISO 4032 M8 8 480H SPF	SECHSKANTMUTTER
9	10289803	2	WASHER ISO 7089 8 300HV 480H SPF	SCHEIBE

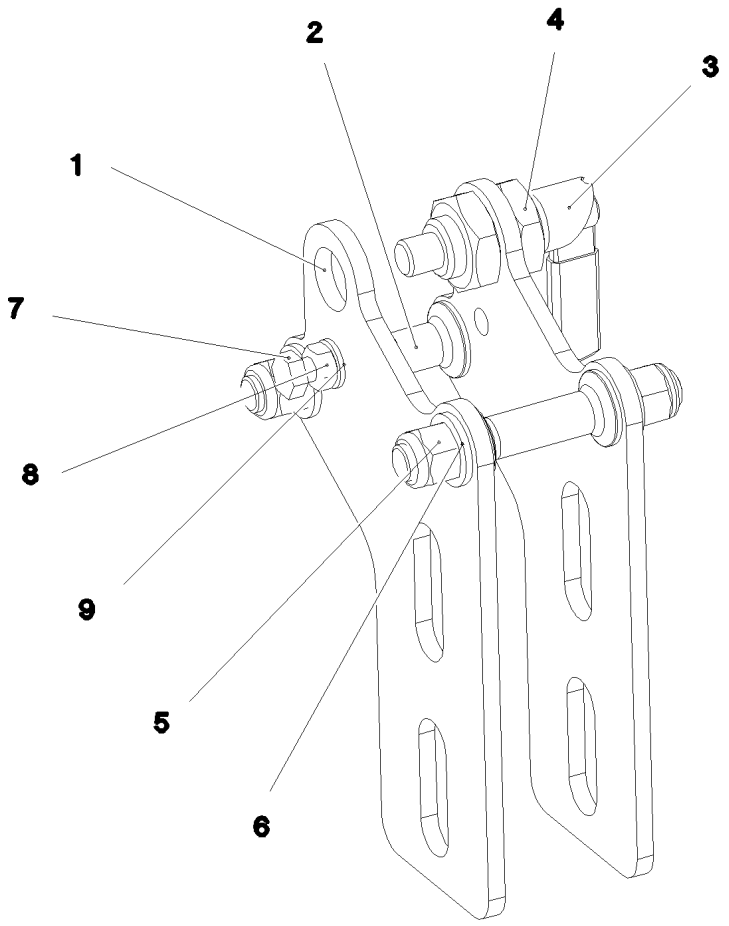

Pos.	Item	Quantity	Description	Bezeichnung
1	97032646	2	BEARING 6X129X209 S355MC FE//ZNNI8//C	LAGERUNG
2	97032647	2	PIN 25.0X100 S355J2G3C+C FE//ZNNI8//CN/	BOLZEN
3	10010025	1	SNAP-IN LOCK NIROSTA	RASTRIEGEL
4	10285016	2	HEX NUT ISO 8675 M20X1,5 A2-035	SECHSKANTMUTTER
5	11840127	4	HEX NUT ISO 7040 M12 8 FLZN SPF	SECHSKANTMUTTER
6	10410178	4	WASHER ISO 7089 12 200HV-A2	SCHEIBE
7	11692827	1	HEX SCREW ISO 4017 M8X35 8.8 480H SPF	SECHSKANTSCHRAUBE
8	11693875	2	HEX NUT ISO 4032 M8 8 480H SPF	SECHSKANTMUTTER
9	10289803	2	WASHER ISO 7089 8 300HV 480H SPF	SCHEIBE

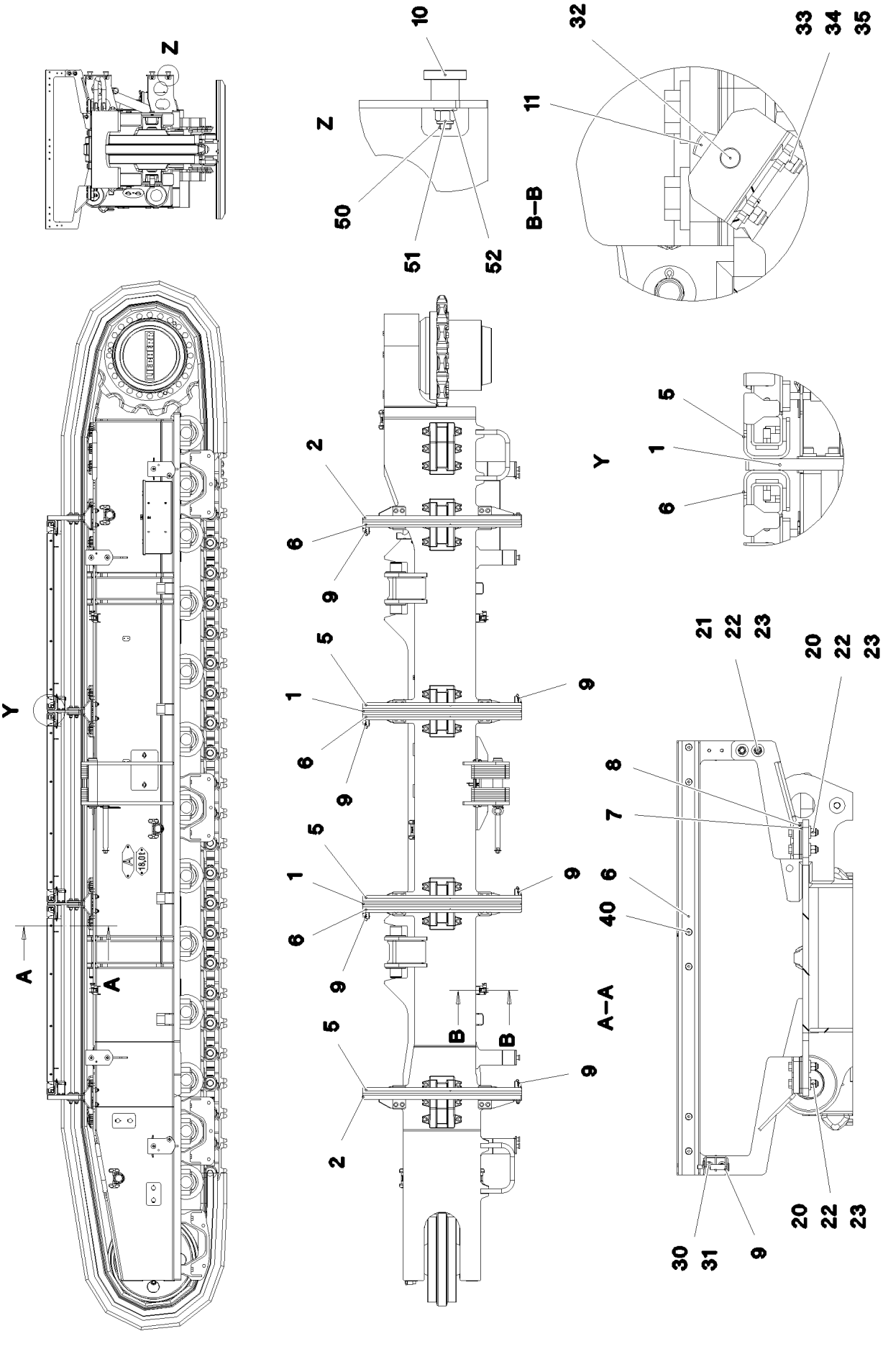
Z
10
Z
50
51
52
32
33
34
35
11
B–B
Y
5
1
6
2
6
9
5
1
6
9
9
5
1
6
9
9
5
2
9
B
B
A
A
21
22
23
20
22
23
8
7
6
40
A–A
30
31
9
20
22
23

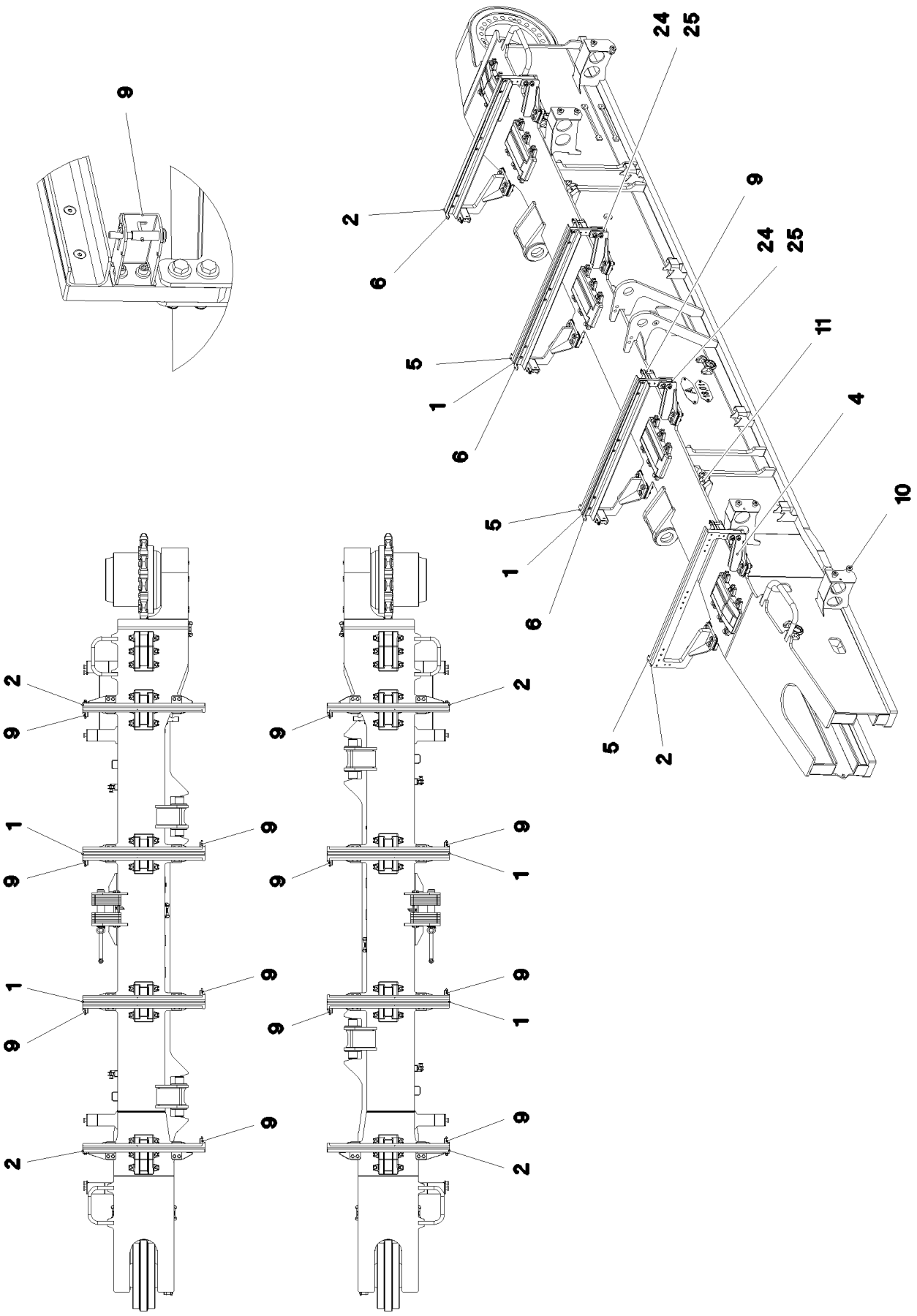
9
24
25
2
6
9
24
25
5
1
6
11
4
10
5
1
6
5
2
2
9
1
9
9
1
9
2
2
9
9
1
9
9
1
9
2

Pos.	Item	Quantity	Description	Bezeichnung
1	968050708	2	CARRIER	TRAEGER SCHWK.
2	968710308	2	CARRIER T ZN O	TRAEGER SCHWK.
4	968052308	4	BEARING WELDED	LAGERUNG SCHWK.
5	97032836	3	GUIDING RAIL 5X1380X184 S700MC FLZN	FUEHRUNGSSCHIENE
6	97032837	3	GUIDING RAIL 5X1380X184 S700MC FLZN	FUEHRUNGSSCHIENE
7	97032838	32	PLATE 4X60X115 S315MC FE//ZNNI8//CN//T	BLECH
8	97032839	32	PLATE 1X60X115 DC01 FE//ZNNI8//CN//T0	BLECH
9	968331708	6	FUSE HOLDER RAUPENTRAEGER ⇨ ❑ 117	SICHERUNGSHALTER
10	97032692	8	BUSHING 45.0X32 35NICRMOV125 SPF	BUCHSE
11	97039576	2	PLATE 3X70X105 S355MC FE//ZNNI8//CN//T	BLECH
20	10878687	32	HEX SCREW ISO 4014 M16X85 8.8 FLZN SP	SECHSKANTSCHRAUBE
21	12224034	8	HEX SCREW ISO 4014 M16X90 8.8 FLZN SP	SECHSKANTSCHRAUBE
22	10875859	40	HEX NUT ISO 7040 M16 8 FLZN SPF	SECHSKANTMUTTER
23	4600021	80	WASHER DIN 7349 17 200HV FLZN SPF	SCHEIBE
24	97033383	4	DISTANCE PLATE 8X60X120 S355MC FE//ZN	DISTANZBLECH
25	97033390	4	DISTANCE PLATE 1X60X120 DC01 FE//ZNNI	DISTANZBLECH
30	404230108	12	SOCKET HEAD SCREW ISO 4762 M10X25 A2	ZYLINDERSCHRAUBE
31	11658580	12	WASHER DIN 7349 10,5 200HV-St FLZN SPF	SCHEIBE
32	10490116	2	QUICK RELEASE PIN 12X90X40 NIROSTA	KUGELSPERRBOLZEN
33	11113906	4	COUNTERSUNK SCREW DIN 7991 M6X20 A	SENKSCHRAUBE
34	10540500	4	WASHER ISO 7093-1 6 200HV-A4	SCHEIBE
35	11656734	4	HEX NUT ISO 7040 M6 8 480H SPF	SECHSKANTMUTTER
40	10179447	36	COUNTERSUNK SCREW DIN 7991 M10X20 8	SENKSCHRAUBE
50	11840140	8	SOCKET HEAD SCREW ISO 4762 M12X50 8	ZYLINDERSCHRAUBE
51	11840127	8	HEX NUT ISO 7040 M12 8 FLZN SPF	SECHSKANTMUTTER
52	10410178	8	WASHER ISO 7089 12 200HV-A2	SCHEIBE

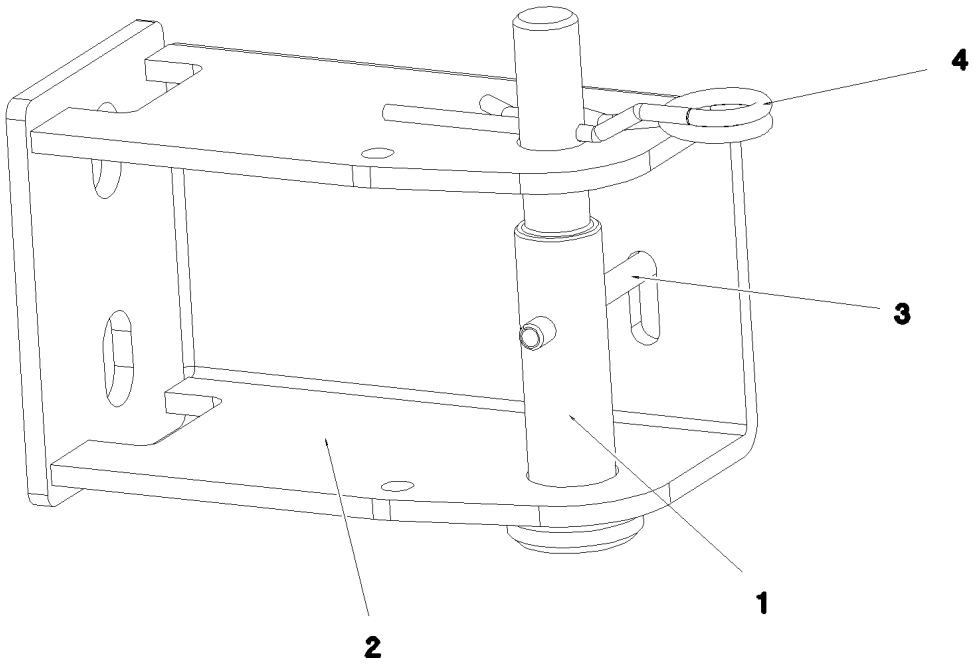

Pos.	Item	Quantity	Description	Bezeichnung
1	97039420	1	PIN 25.0X100 S355J2G3C+C FE//ZNNI8//CN/	BOLZEN
2	97032840	1	HOLDER 4X173X175 X5CRNI18-10	HALTER
3	10663567	1	DOWEL PIN ISO 8752 5X50 A2	SPANNSTIFT
4	10875868	1	SPRING PLUG 3-3,5-62 480H SPF	FEDERSTECKER

Pos. 100

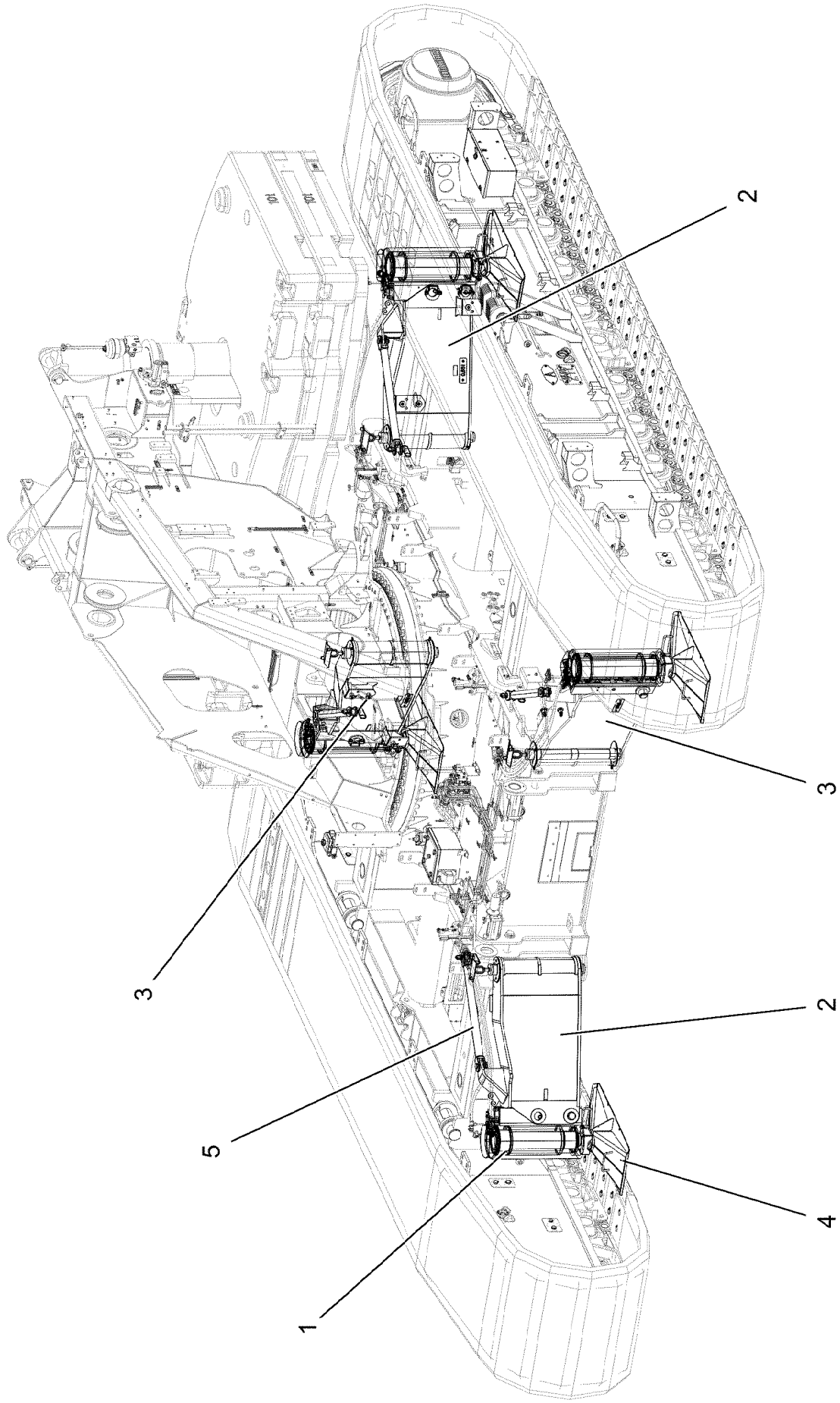

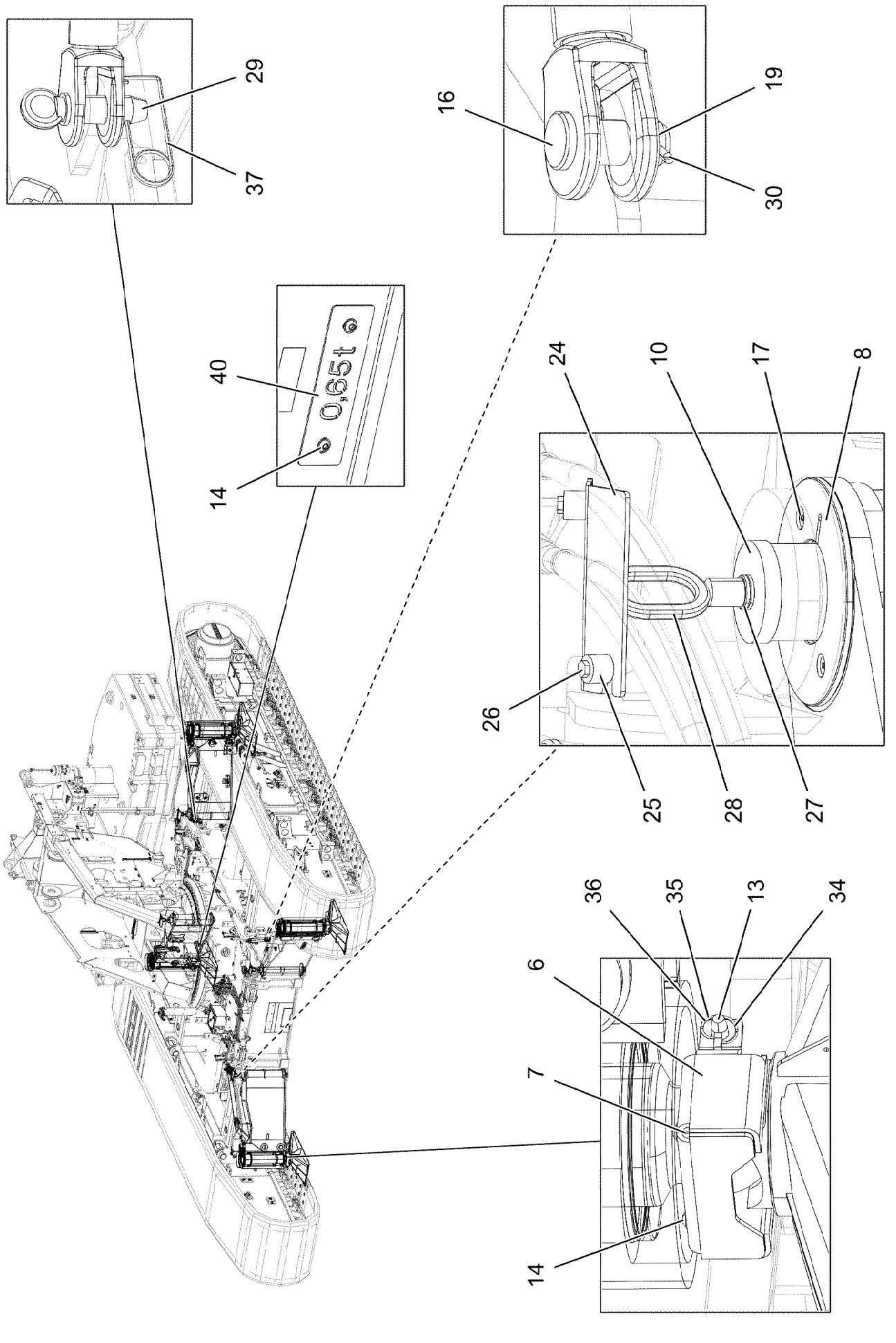
29
37
16
19
30
40
14
0,65t
24
10
17
8
26
25
28
27
36
35
13
34
6
7
14

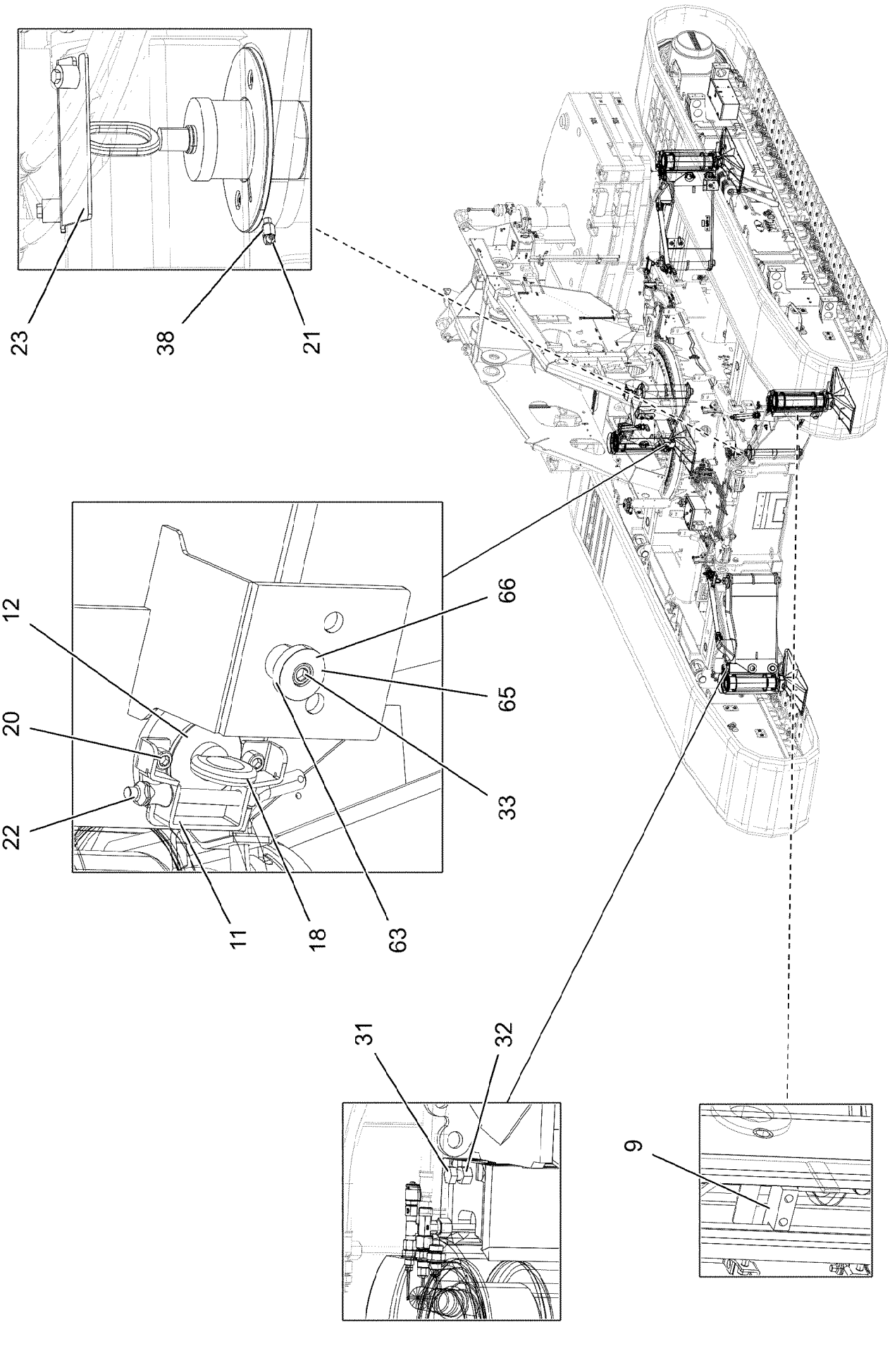
23
38
21
12
20
22
66
65
33
11
18
63
31
32
9

Pos.	Item	Quantity	Description	Bezeichnung
1	11182950	4	SUPPORT CYLINDER 240/210-860 SPF	ABSTUETZZYLINDER
(1)	11214357	1	CARTRIDGE FOR BRAKE VALVE 600BAR G	BREMSVENTILPATRONE
(999)	10878366	1	DS SUPPORT CYLINDER	DS ABSTUETZZYLINDER
2	96049688	2	BRACKET WELDED CONST.	KONSOLE SCHWK.
3	96049689	2	BRACKET WELDED CONST.	KONSOLE SCHWK.
4	967996608	4	SUPPORT PLATE ST.CONST.	ABSTUETZPLATTE SCHWK.
5	964581908	4	ROD ST.CONST.	STANGE SCHWK.
6	968014908	4	BRACKET WELDED CONST. FE//ZNNI8//CN/	KONSOLE SCHWK.
7	97032167	4	INSERT PART 10X91X152 PA6G+OEL	EINLEGETEIL
8	97032155	8	THRUST WASHER 200X7 GZ-CUZN25AL5	ANLAUFSCHEIBE
9	97052637	4	PLATE 25X107X49 S690QL	BLECH
10	97032093	4	PIN 90.0X785 35NICRMOV125 SPF	BOLZEN
11	969168408	8	BRACKET WELDED CONST. FE//ZNNI8//CN/	KONSOLE SCHWK.
12	97032197	4	PIN 70.0X283 35NICRMOV125 SPF	BOLZEN
13	968014808	4	COTTER PIN FE//ZNNI8//CN//T0	STECKER SCHWK.
14	10875485	16	BUTTON HEAD SCREW AEHNL.ISO 7380-2	HALBRUNDKOPFSCHRAUBE
16	10027134	4	PIN DIN 1436 35X82X72 35NICRMOV125 GA	BOLZEN
17	10875552	16	COUNTERSUNK SCREW DIN 7991 M8X16 8	SENKSCHRAUBE
18	10179932	8	RING BOLT DIN 580 M12 C15E FLZN	RINGSCHRAUBE
19	948717708	4	WASHER RD60X2 ALMG3 H111	SCHEIBE
20	12222407	16	SOCKET HEAD SCREW ISO 4762 M10X16 8	ZYLINDERSCHRAUBE
21	774301808	8	GREASE NIPPLE DIN 71412 C M10X1	SCHMIERNIPPEL
22	11160586	4	QUICK RELEASE PIN 12X115X80 NIROSTA	KUGELSPERRBOLZEN
23	97033009	2	PLATE 4X180X143 S700MC	BLECH
24	97033010	2	PLATE 4X180X145 S700MC	BLECH
25	953873408	8	SLEEVE 25X20 11SMN37 FE//ZNNI8//CN//T0	HUELSE
26	11651612	8	HEX SCREW ISO 4017 M8X16 8.8 480H SPF	SECHSKANTSCHRAUBE
27	421500201	8	WASHER EN 14399-6 16 300-370HV-ST A3B	SCHEIBE
28	925642908	4	HANDLE GRIP WELDED FE//ZNNI8//CN//T0	GEWINDEGRIFF SCHWK.
29	97032320	4	PIN 45.0X105 35NICRMOV125 SPF	BOLZEN
30	10875873	4	SPLIT PIN ISO 1234 8X63 ST 480H SPF	SPLINT
31	10001467	4	HEX SCREW ISO 4017 M16X80 8.8 FLZN SP	SECHSKANTSCHRAUBE
32	10875617	4	HEX NUT ISO 4032 M16 8 FLZN SPF	SECHSKANTMUTTER
33	11840140	14	SOCKET HEAD SCREW ISO 4762 M12X50 8	ZYLINDERSCHRAUBE
34	10875869	4	SAFETY PLUG W HINGE-LID 5X29X4,7X25 4	SICHERHEITSKLAPPSTECKER
35	11160431	2	ROPE 2 2,3KN EDELSTAHL	SEIL
36	11170565	8	FERRULE 2 CU	PRESSKLEMME
37	433100908	4	RETAINING SPRING 4,5X98 ISO 2081 FE/ZN	SICHERUNGSFEDER
38	774374508	8	EXTENSION M8X1	VERLAENGERUNG
40	97046465	4	PLATE 2X200X60 DC01 FE//ZNNI8//CN//T0	BLECH
63	97032692	12	BUSHING 45.0X32 35NICRMOV125 SPF	BUCHSE
65	10410178	12	WASHER ISO 7089 12 200HV-A2	SCHEIBE
66	11840127	12	HEX NUT ISO 7040 M12 8 FLZN SPF	SECHSKANTMUTTER
100	917430308	1	HYDRAULIC SUPPORT ⇨ ❑ 122	HYDRAULIK ABSTUETZUNG

Pos.	Item	Quantity	Description	Bezeichnung
4	968077208	1	HYDRAULIC SUPPORT ⇨ ❑ 123	HYDRAULIK ABSTUETZUNG

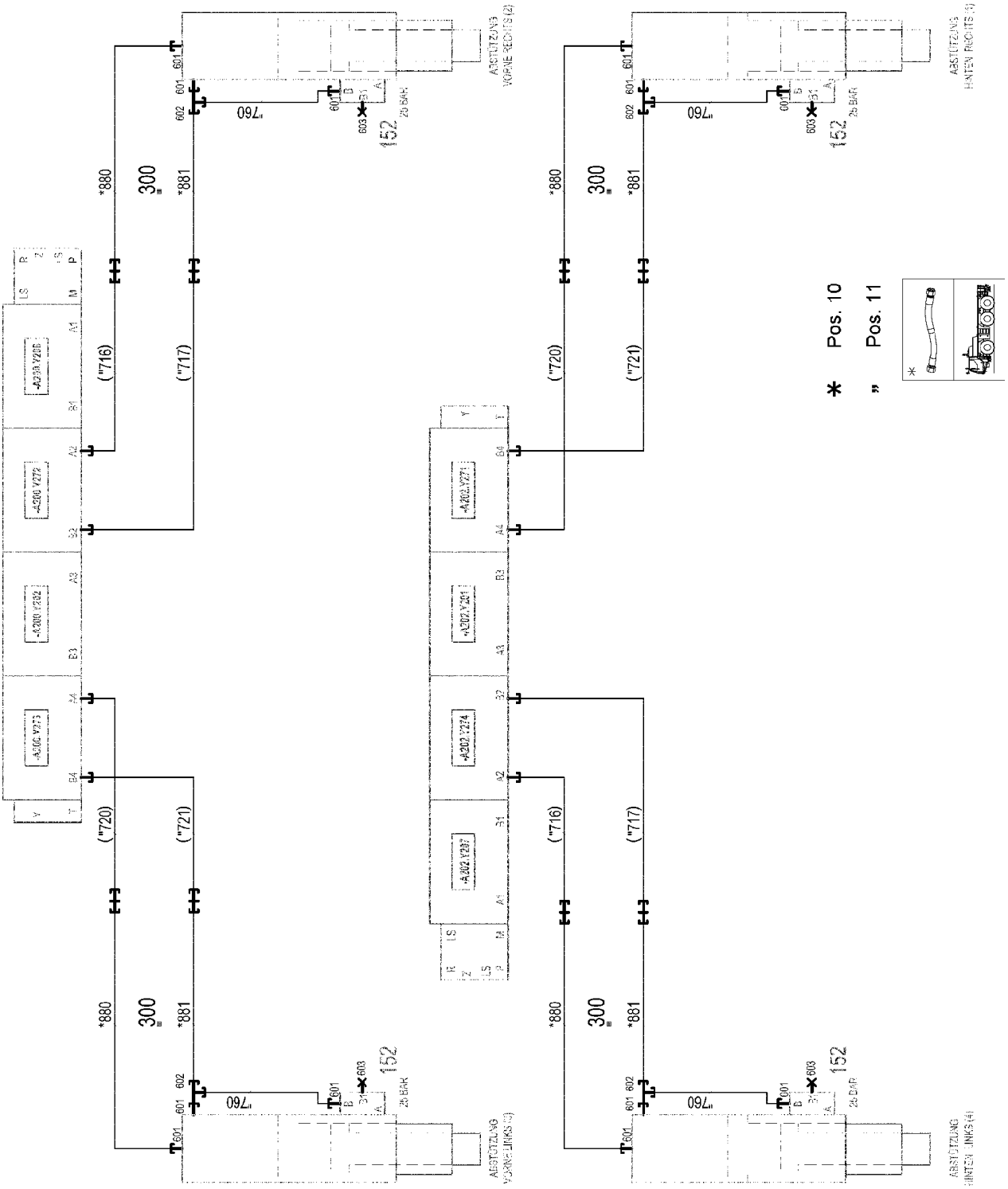
Pos. 10
Pos. 11

Pos.	Item	Quantity	Description	Bezeichnung
10	968077308	1	HOSE LINES SUPPORT SYSTEM	SCHLAUCHLEITUNGEN ABSTUE
(880)	929310208	4	HOSE CPL. 2SN 10X1500	SCHLAUCH KPL.
(881)	926555408	4	HOSE CPL. 2SN 10X1460	SCHLAUCH KPL.
11	968078808	1	PIPELINE SUPPORT	ROHRLEITUNGEN ABSTUETZUN
(760)	968168808	4	PIPE COMPL. 12X1.5	ROHR KPL.
152	511322808	4	PRETENSIONING VALVE 25BAR	VORSPANNVENTIL
(14)	11659651	1	HOLDING RING	HALTERING
(15)	11493963	1	HOLLOW SCREW M18X1,5 C 45K	HOHLSCHRAUBE
(99)	10802870	1	SEALING SET VALVE	DS VENTIL
300	10449843	5.2	HOSE GUARD DN44-65 SGX50 PE	SCHLAUCHSCHUTZ
601	471032908	12	FITTING GE 12S M18X1,5 CR6-FREI	VERSCHRAUBUNG
602	7617461	4	FITTING EL 12S CR6-FREI	VERSCHRAUBUNG
603	477704408	4	STOP PLUG VSTIM16X1,5ED A3P	STOPFEN

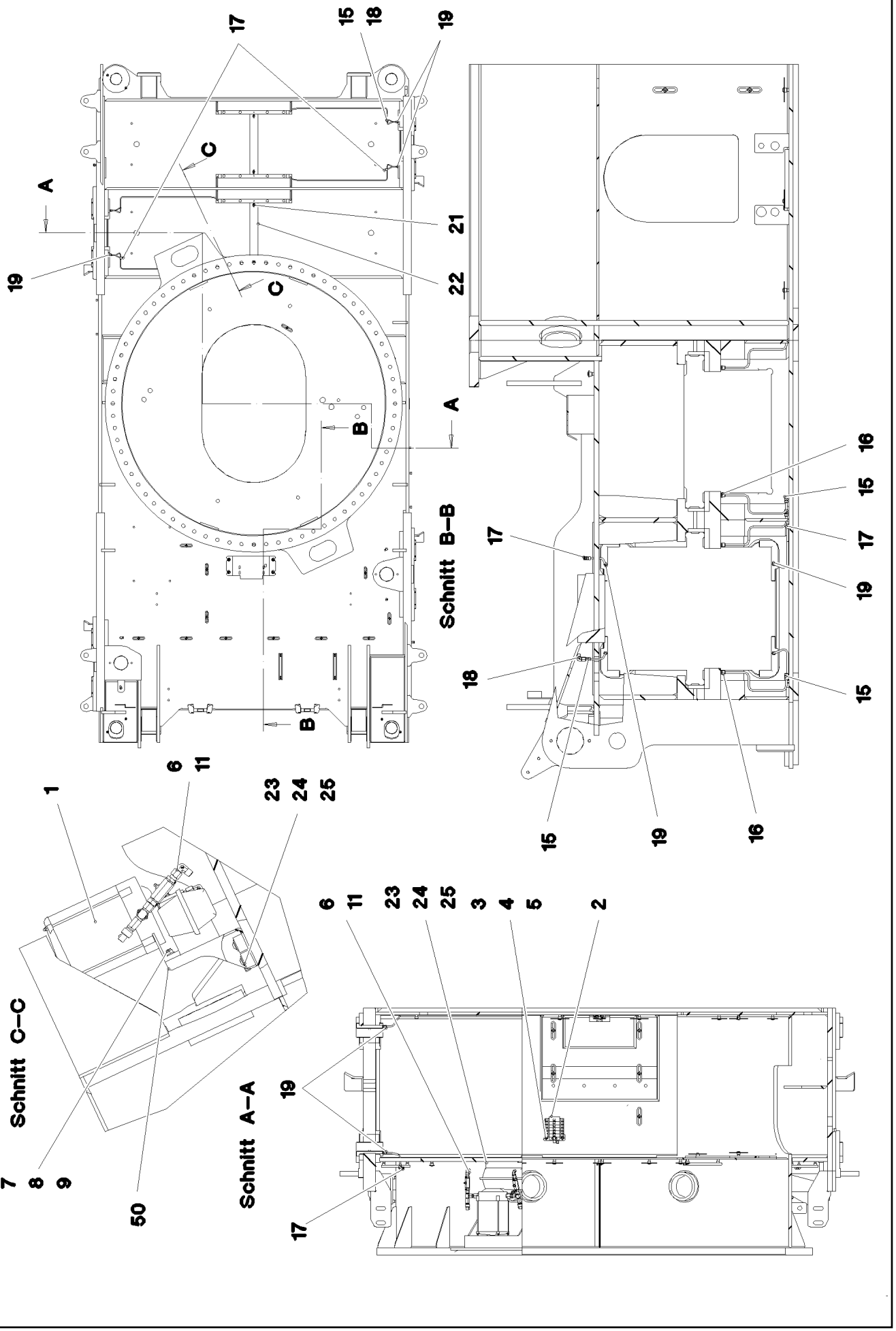
17
15
18
19
A
C
21
22
19
C
B
A
B
Schnitt B–B
16
15
17
17
19
18
15
15
19
16
6
11
23
24
25
1
Schnitt C–C
7
8
9
50
Schnitt A–A
6
11
23
24
25
3
4
5
2
19
17

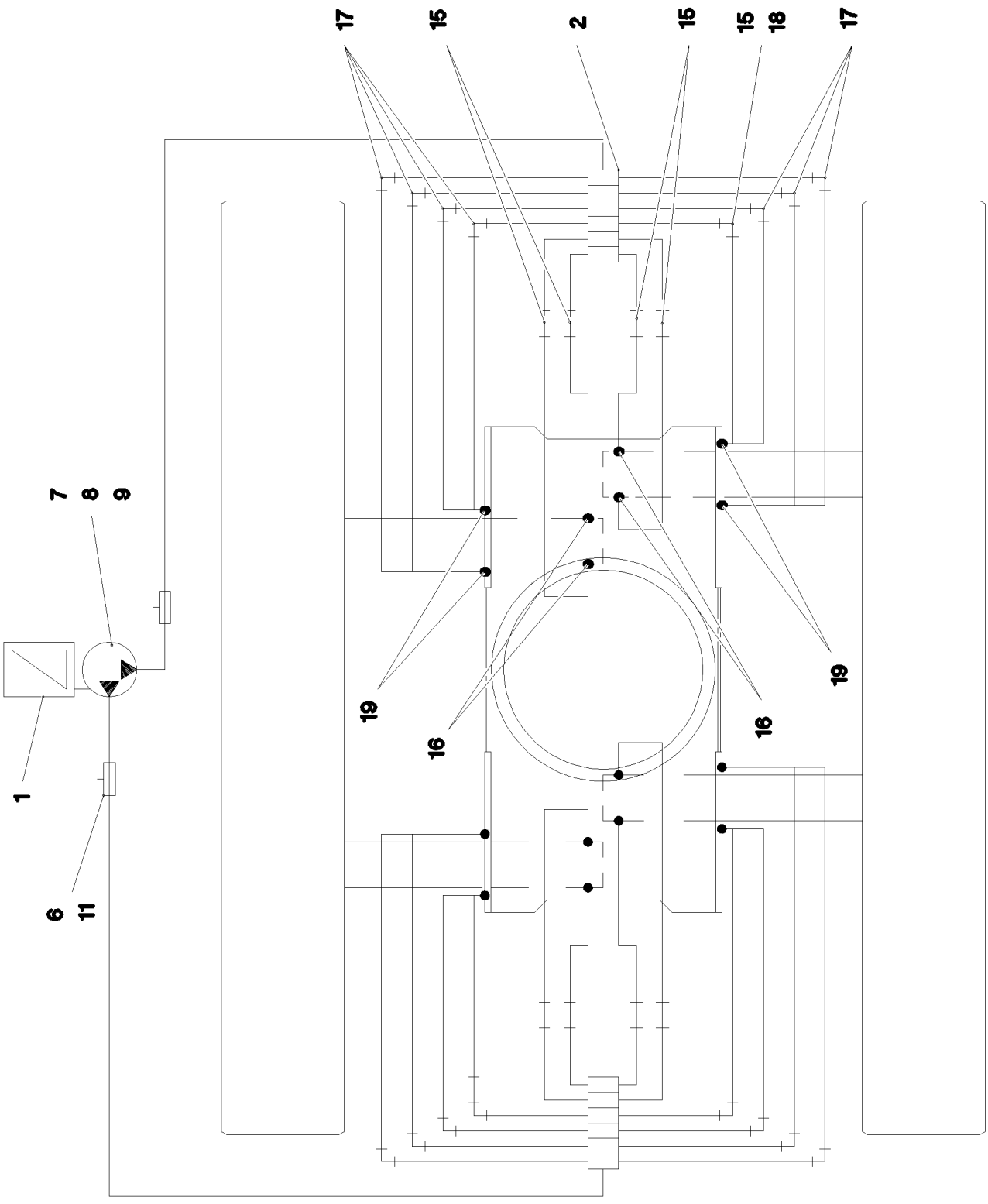
17
15
2
15
15
18
17
7
8
9
19
16
16
19
1
6
11

Pos.	Item	Quantity	Description	Bezeichnung
1	11347526	1	ELECTRIC PUMP EP-1 ⇨ ❑ 128	ELEKTROPUMPE
2	11347500	2	DISTRIBUTION BLOCK MX-F 6/12 ⇨ ❑ 129	VERTEILERKOMBINATION
3	12204614	4	SOCKET HEAD SCREW ISO 4762 M5X35 8.8	ZYLINDERSCHRAUBE
4	10875620	4	HEX NUT ISO 4032 M5 8 480H SPF	SECHSKANTMUTTER
5	11140403	4	WASHER ISO 7089 5 200HV 480H SPF	SCHEIBE
6	774375108	2	PASSAGE NIPPLE BLOCK ⇨ ❑ 131	DURCHGANGSNIPPELBLOCK
7	10197831	2	HEX SCREW ISO 4017 M8X25 8.8 ZNNI-480	SECHSKANTSCHRAUBE
8	10289803	2	WASHER ISO 7089 8 300HV 480H SPF	SCHEIBE
9	11693875	2	HEX NUT ISO 4032 M8 8 480H SPF	SECHSKANTMUTTER
11	472531508	2	FITTING EW 6S M14X1,5 CR6-FREI	VERSCHRAUBUNG
13	477101408	22	PROFILE RING PR6-S/L A3P	PROFILRING
14	477401308	22	BOX NUT AL6 A3P	UEBERWURFMUTTER
15	470030108	10	FITTING XG6-L A3P	VERSCHRAUBUNG
16	471030108	8	FITTING XGE6-LM-ED A3P	VERSCHRAUBUNG
17	470200108	14	FITTING W 6L	VERSCHRAUBUNG
18	247021702	2	FITTING EW 6L CR6-FREI	VERSCHRAUBUNG
19	774374808	16	FITTING GE6-LM8X1K	VERSCHRAUBUNG
21	12102696	8	BUTTON HEAD SCREW ISO7380-2 M8X10 0	HALBRUNDKOPFSCHRAUBE
22	97042011	4	U-PROFILE 1X500X89 DC01 FE//ZNNI8//CN/	U-PROFIL
23	10875485	3	BUTTON HEAD SCREW AEHNL.ISO 7380-2	HALBRUNDKOPFSCHRAUBE
24	11140469	3	WASHER ISO 7093-1 8 200HV 480H SPF	SCHEIBE
25	978787708	3	SLEEVE 33.0X19 FE//ZNNI8//CN//T0	HUELSE
26	774383508	10	TUBING COIL 9	ROHRWENDEL
27	10873149	50	POLYAMID PIPE DIN 73378 6X1,5 PA 12-HL	POLYAMIDROHR
50	97047676	1	HOLDER 4X337X245 S315MC	HALTER

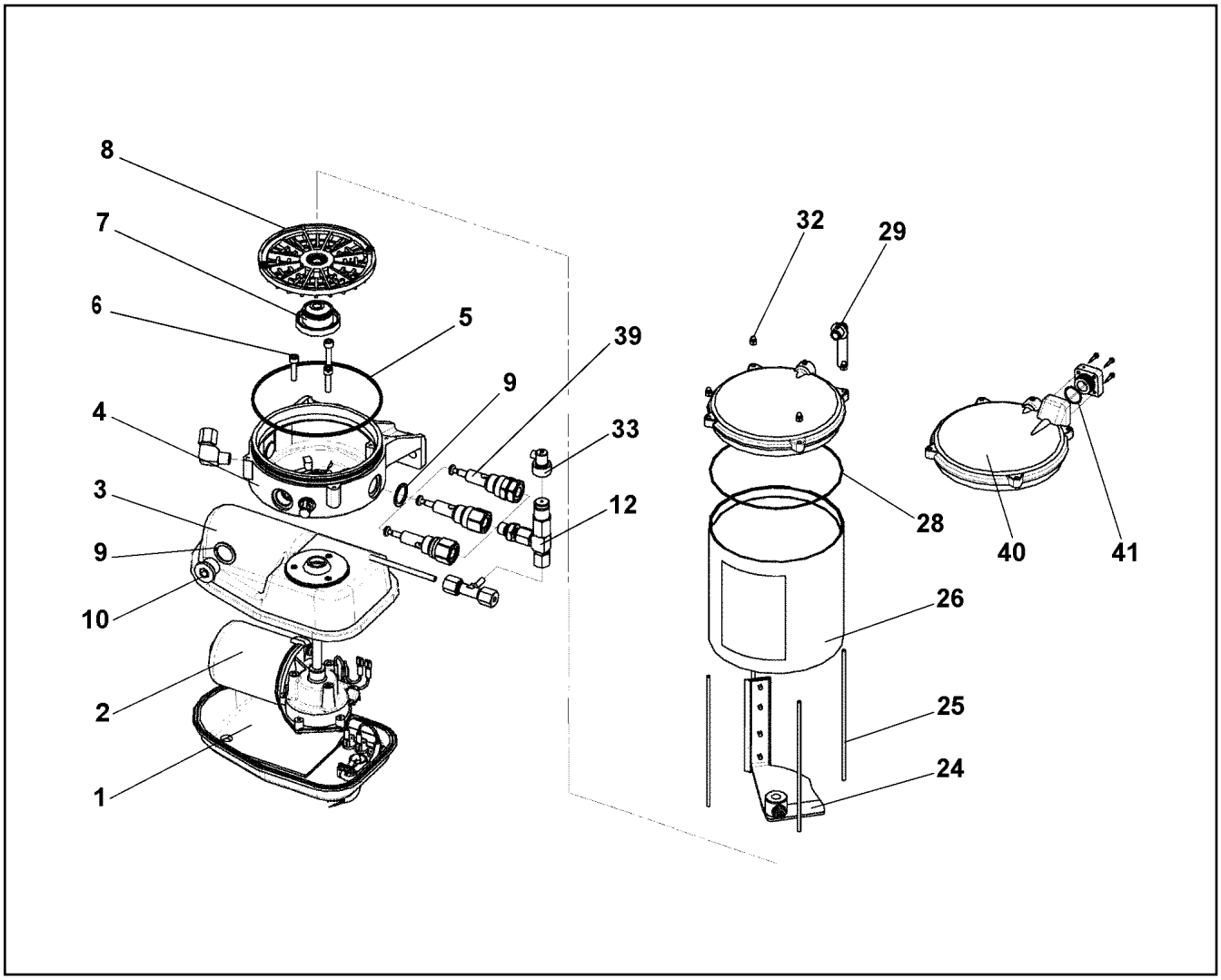

Pos.	Item	Quantity	Description	Bezeichnung
1	10675728	1	MOTOR HOUSING UNTEN	MOTORGEHAEUSE
2	10355140	1	TRANSMISSION MOTOR 24V	GLEICHSTROMGETRIEBEMOTO
3	10014692	1	MOTOR HOUSING	MOTORGEHAEUSE
4	10014693	1	PUMP HOUSING	PUMPENGEHAEUSE
5	726452801	1	O-RING 135X3 NBR 70 SPF	O-RING
6	10875588	3	SOCKET HEAD SCREW ISO 4762 M6X25 8.8	ZYLINDERSCHRAUBE
7	10014729	1	DRIVER	MITNEHMER
8	10014730	1	INTERMEDIATE RING	ZWISCHENRING
9	10014697	3	SEALING RING 27X20X1,5 CU	DICHTRING
10	12218194	1	SCREW PLUG DIN 908 M20X1,5 St FLZN SP	VERSCHLUSSSCHRAUBE
12	571328408	2	PRESSURE RELIEF VALVE	UEBERDRUCKVENTIL
24	10664141	1	AGITATOR PADDLE	RUEHRFLUEGEL
25	10099209	4	PULL ROD	ZUGSTANGE
26	10038271	1	CONTAINER 2,5 KG	BEHAELTER
27	967421808	1	STICKER BEHAELTER 2,5KG	AUFKLEBER
(1)	10663909	1	STICKER	AUFKLEBER
(2)	11494432	1	SIGN	SCHILD
(3)	11494581	1	SIGN	SCHILD
28	10099208	1	O-RING 133,07X1,78 NBR 70	O-RING
29	10292724	1	VENTILATION TUBE	ENTLUEFTUNGSROHR
32	4002886	4	CAP NUT DIN 986 M4 A2-70	HUTMUTTER
33	10429952	2	FAULT INDICATOR	STOERANZEIGE
39	11001770	2	PUMP ELEMENT	PUMPENELEMENT
40	12102477	1	COVER	BEHAELTERDECKEL
41	502624508	1	O-RING 19X1,5 NBR70	O-RING

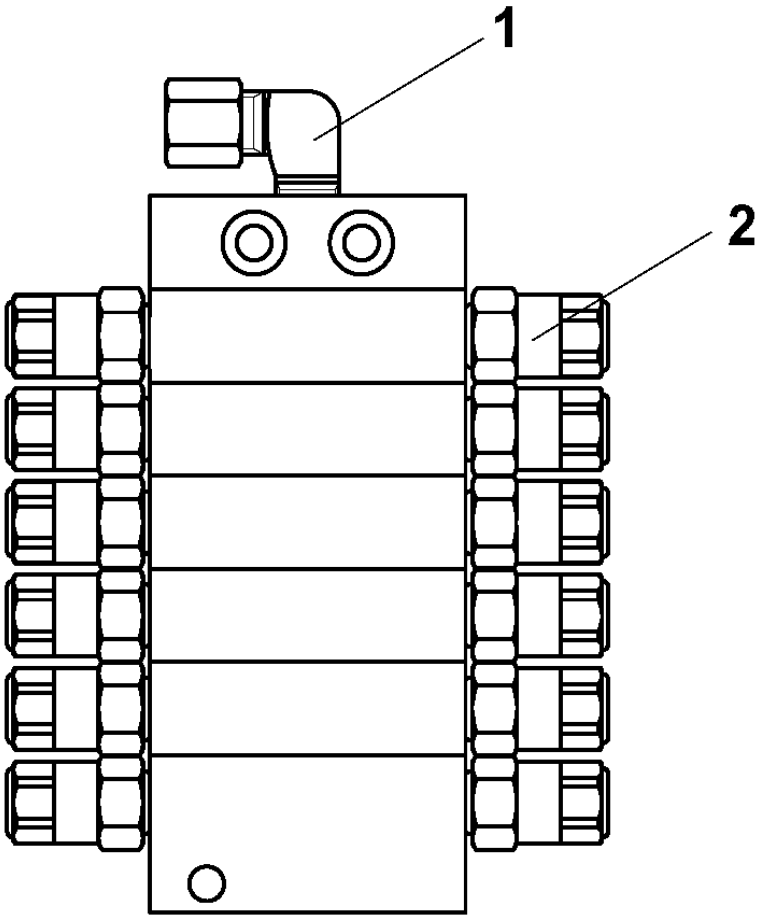
1
2

Pos.	Item	Quantity	Description	Bezeichnung
1	774373808	1	FITTING WE 6LL M10x1	VERSCHRAUBUNG
2	11183029	12	PLUG-IN CONNECTOR GERADE 6MM	STECKVERBINDER

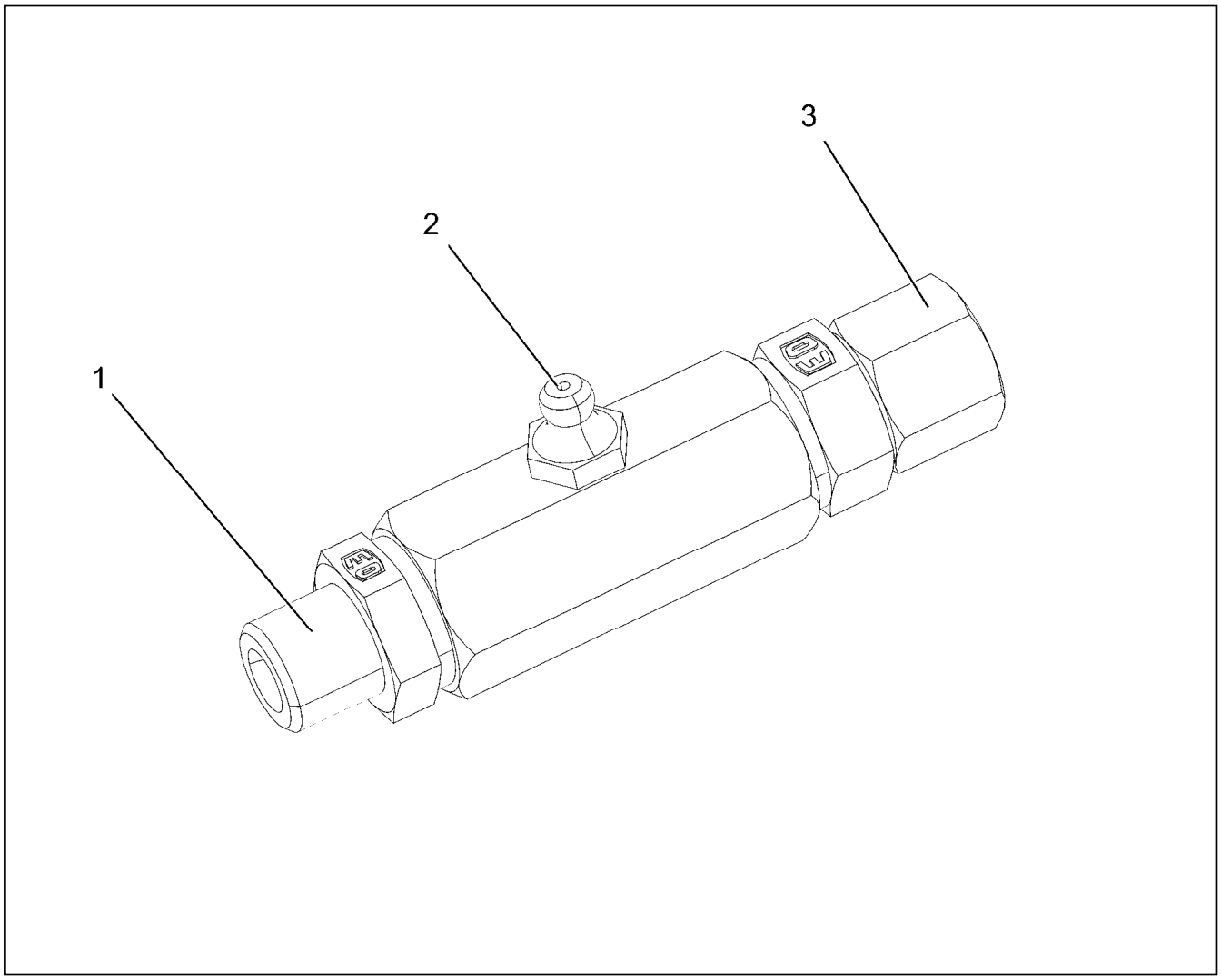

Pos.	Item	Quantity	Description	Bezeichnung
1	10014698	1	PIPE SOCKET R1/4"	ROHRSTUTZEN
2	571578608	1	HYDRAULIC-TYPE LUBRICAT.NIPPLE DIN 71	KEGELSCHMIERNIPPEL
3	11081053	1	FITTING	VERSCHRAUBUNG

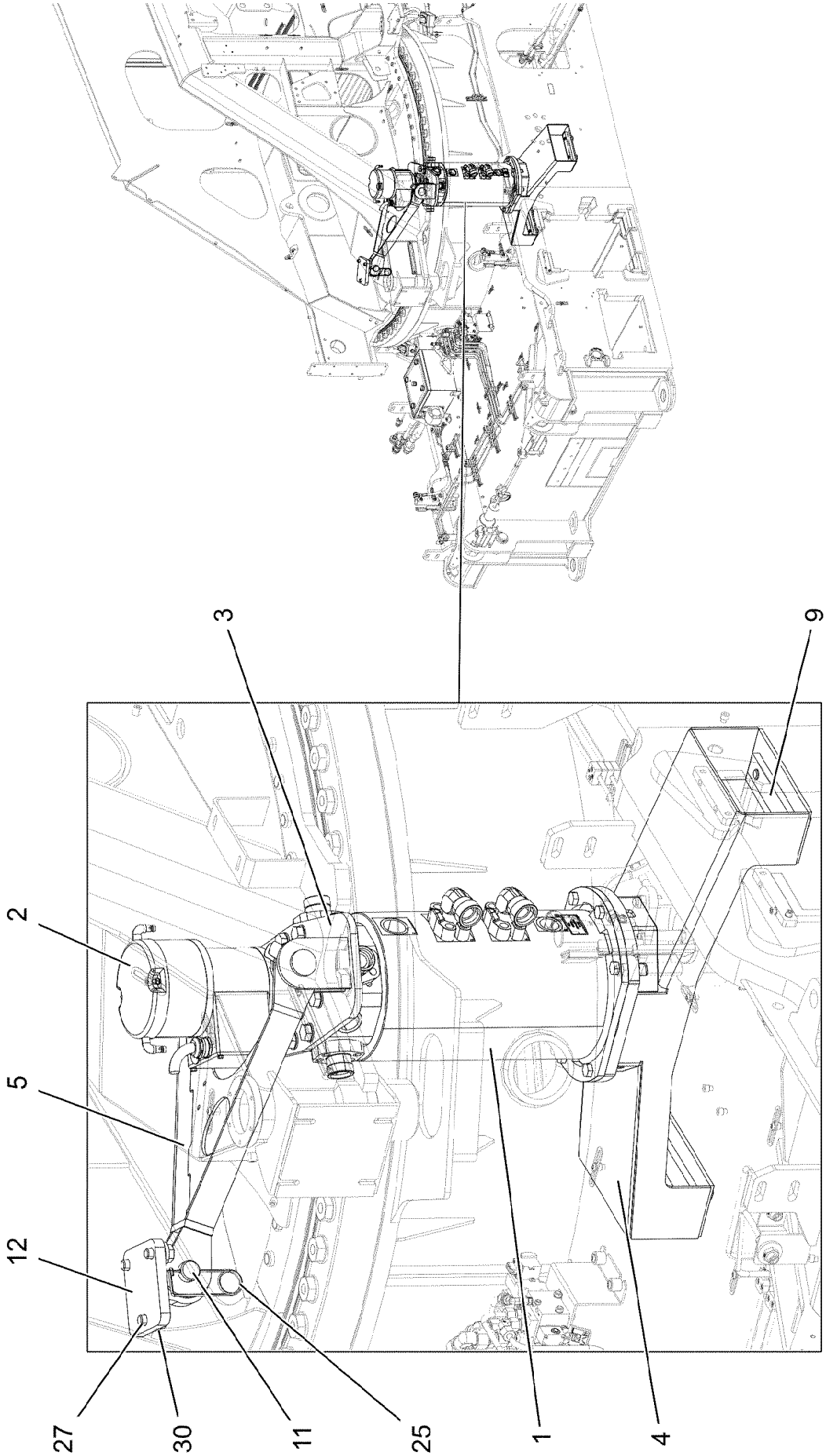
3
9
2
5
12
27
30
11
25
1
4

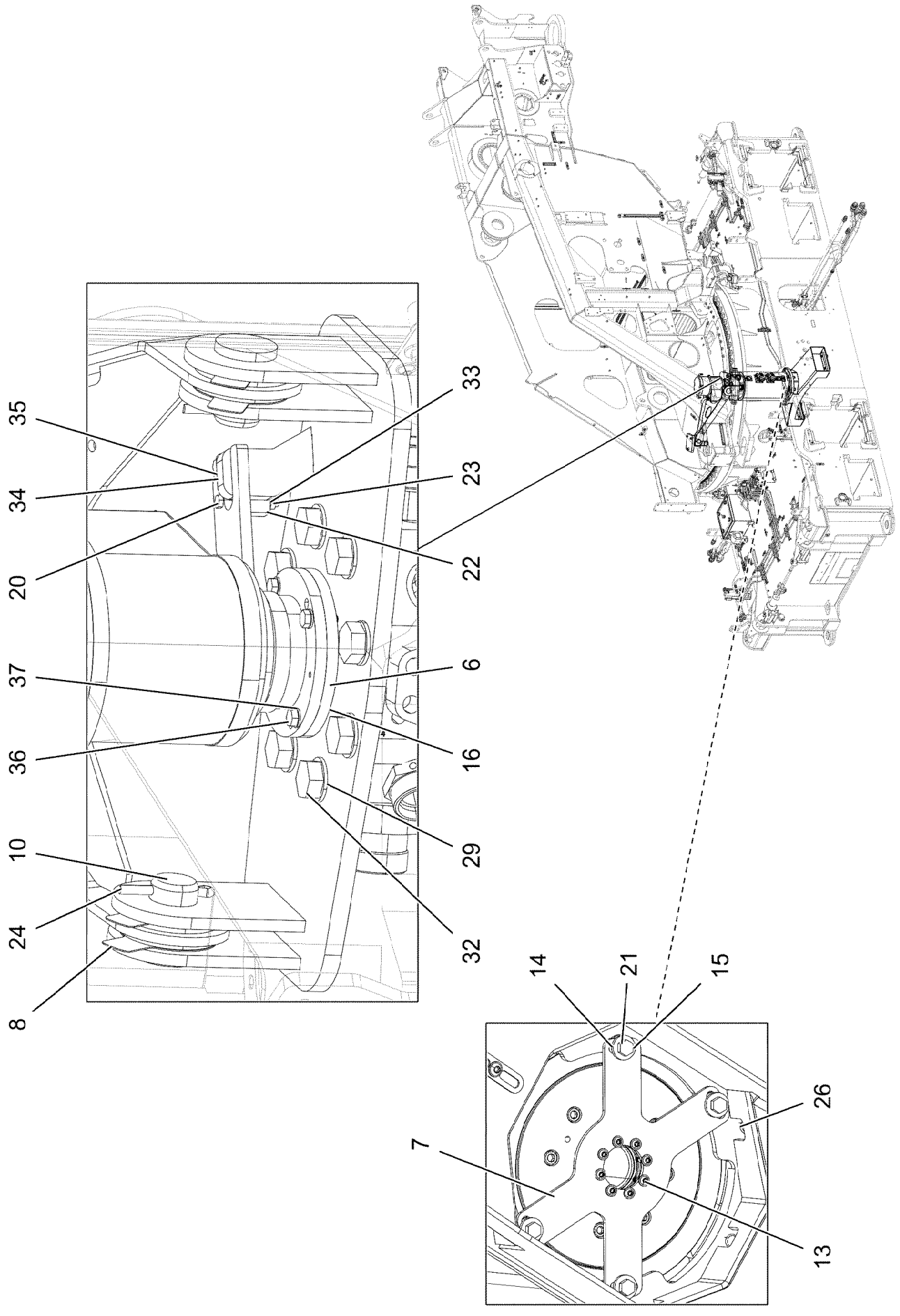
35
34
20
37
36
10
24
8
33
23
22
6
16
29
32
14
21
15
26
7
13

Pos.	Item	Quantity	Description	Bezeichnung
1	11182736	1	ROTARY FEED THROUGH SPF	DREHDURCHFUEHRUNG
(23)	10873566	2	SEALINGSET ROTARY TRANSMISSION	DS DREHDURCHFUEHRUNG
3	967996108	1	ACTUATOR WELDED	MITNEHMER SCHWK.
4	968011508	1	BRACKET WELDED CONST.	KONSOLE SCHWK.
5	961727008	1	DRAWBAR WELDED	DEICHSEL SCHWK.
6	968011608	1	PIPE WELDED	ROHR SCHWK.
7	97032020	1	PLATE 5X269X181 S355MC FE//ZNNI8//CN//T	BLECH
8	970904808	8	PLATE 1X80X110 DC01 FE//ZNNI8//CN//T0	BLECH
9	953608508	2	PLATE 20X45X230 S690QL	BLECH
10	451237208	2	PIN 40X60X50 S355J2C+C FE//ZN20//F	BOLZEN
11	451237508	1	PIN DIN 1435 40X80X68 S355J2C+C FE//ZN	BOLZEN
12	96036907	1	BRACKET WELDED CONST.	KONSOLE SCHWK.
13	10875468	8	BUTTON HEAD SCREW AEHNL.ISO 7380-2	HALBRUNDKOPFSCHRAUBE
14	421300208	8	WASHER DIN 6340 10,5 C35	SCHEIBE
15	941530008	4	SLEEVE RD20X15 S355J2G3 FE//ZNNI8//CN/	HUELSE
16	97038484	2	HALF SHELL 80X25 PA6G + OEL	HALBSCHALE
20	12216202	2	HEX SCREW ISO 4017 M6X50 8.8 480H SPF	SECHSKANTSCHRAUBE
21	11626706	4	HEX SCREW ISO 4017 M10X40 8.8 FLZN SP	SECHSKANTSCHRAUBE
22	288176208	1	SHEET 15X30X50 PA6G	PLATTE
23	10197764	2	HEX NUT ISO 4032 M6 10 ZNNI-480H SPF	SECHSKANTMUTTER
24	10875873	2	SPLIT PIN ISO 1234 8X63 ST 480H SPF	SPLINT
25	433100908	1	RETAINING SPRING 4,5X98 ISO 2081 FE/ZN	SICHERUNGSFEDER
26	10875803	6	HEX SCREW ISO 4017 M16X45 8.8 FLZN SP	SECHSKANTSCHRAUBE
27	4600199	3	HEX SCREW ISO 4017 M20X40 8.8 FLZN SP	SECHSKANTSCHRAUBE
29	10289808	12	WASHER ISO 7089 20 300HV FLZN SPF	SCHEIBE
30	4600604	3	WASHER DIN 7349 21 100HV FLZN SPF	SCHEIBE
32	4065281	12	HEX SCREW ISO 4017 M20X45 8.8 FLZN SP	SECHSKANTSCHRAUBE
33	10197771	2	WASHER ISO 7089 6 200HV ZNNI-480H SPF	SCHEIBE
34	10875616	1	HEX NUT ISO 4032 M12 8 FLZN SPF	SECHSKANTMUTTER
35	11645386	1	HEX SCREW ISO 4017 M12X45 8.8 FLZN SP	SECHSKANTSCHRAUBE
36	10197831	4	HEX SCREW ISO 4017 M8X25 8.8 ZNNI-480	SECHSKANTSCHRAUBE
37	10289803	4	WASHER ISO 7089 8 300HV 480H SPF	SCHEIBE

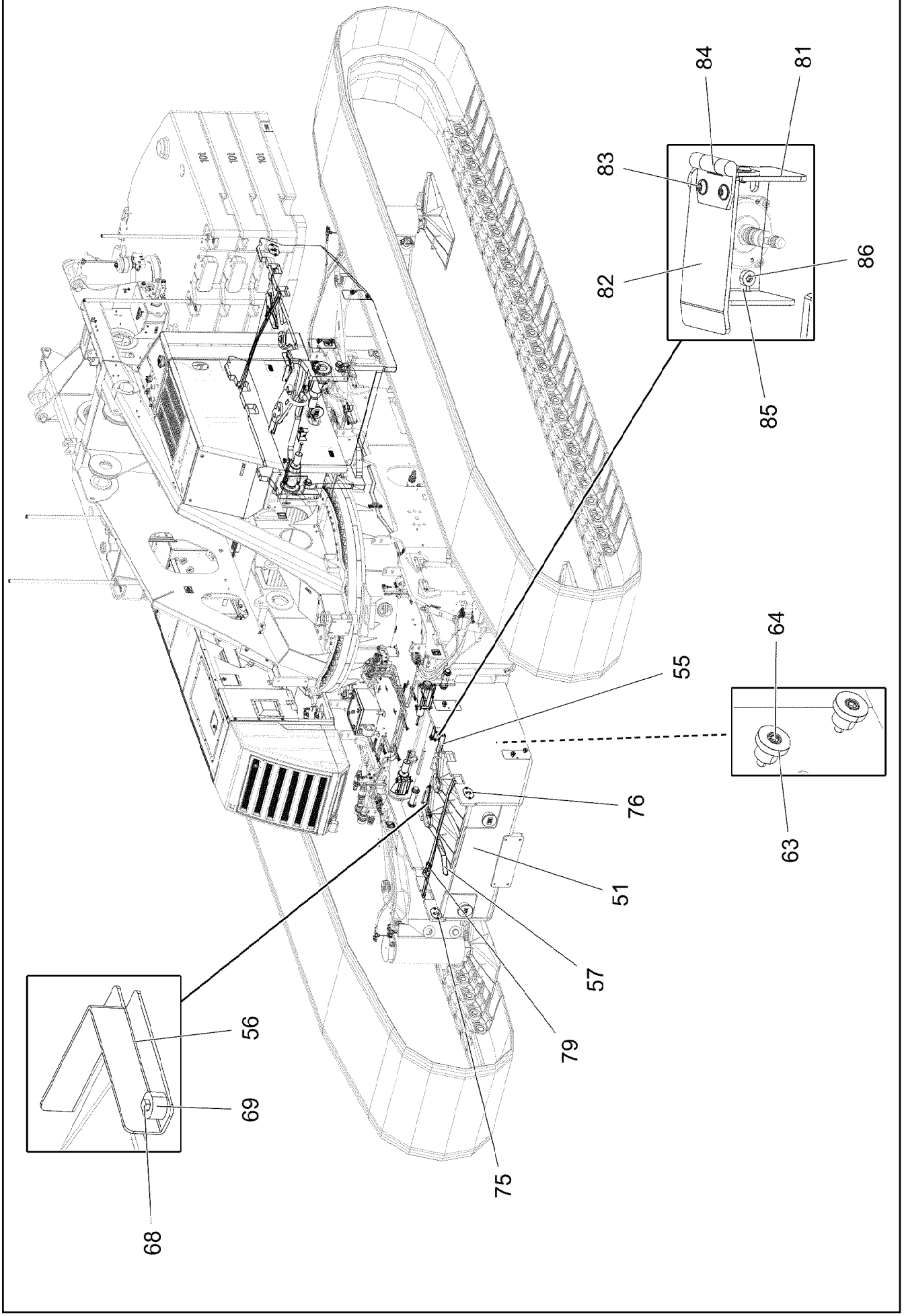
84
81
83
86
82
85
64
55
76
63
51
57
56
79
69
75
68

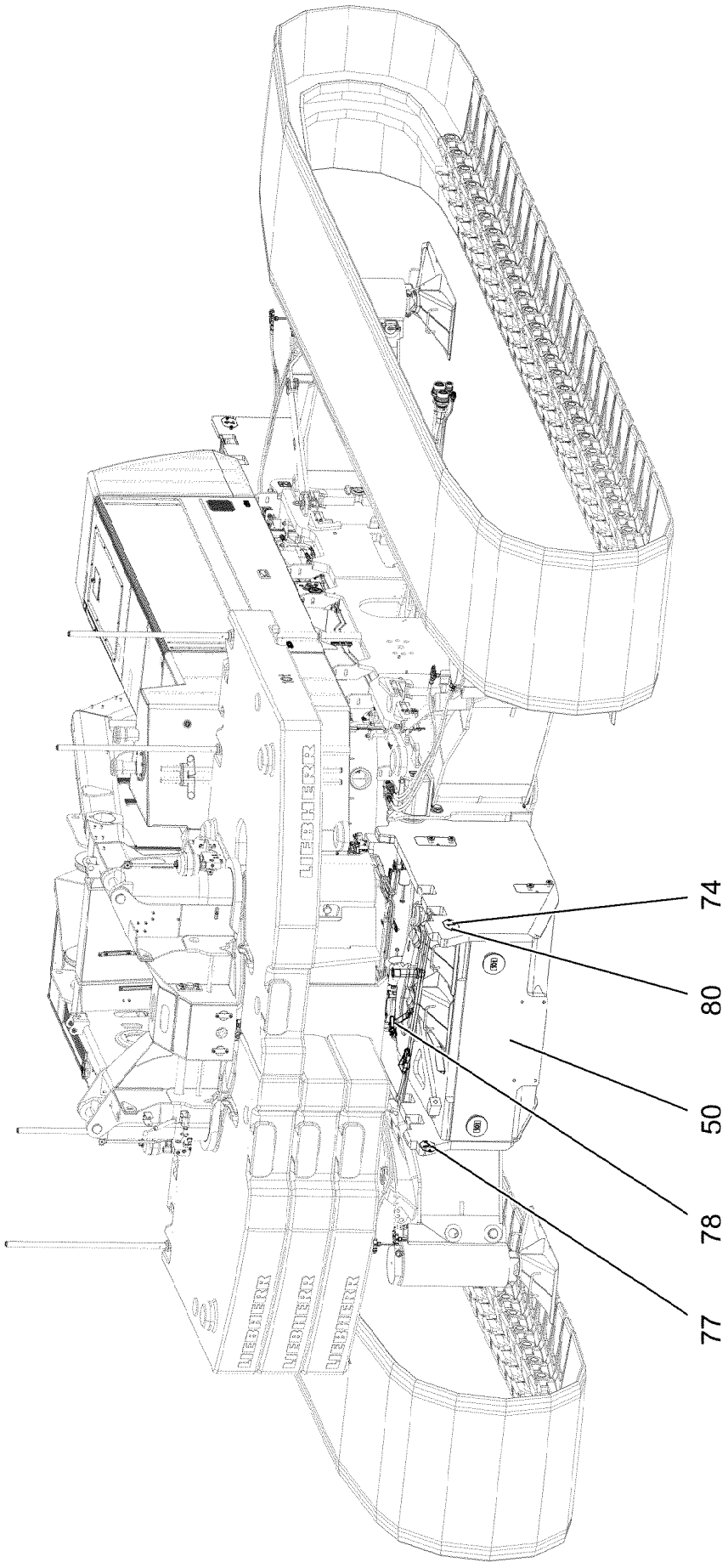
74
80
50
78
77

Pos.	Item	Quantity	Description	Bezeichnung
50	96045601	1	CENTRAL COUNTERWEIGHT WELDED	ZENTRALBALLAST SCHWK.
51	96045603	1	CENTRAL COUNTERWEIGHT WELDED	ZENTRALBALLAST SCHWK.
55	97015127	2	PLATE 4X210X88 S315MC FE//ZNNI8//CN//T	BLECH
56	97033250	2	PLATE 4X396X88 S315MC FE//ZNNI8//CN//T	BLECH
57	97033251	2	PLATE 4X449X88 S315MC FE//ZNNI8//CN//T	BLECH
63	97032692	16	BUSHING 45.0X32 35NICRMOV125 SPF	BUCHSE
64	10875578	12	SOCKET HEAD SCREW ISO 4762 M12X35 8	ZYLINDERSCHRAUBE
68	11651612	16	HEX SCREW ISO 4017 M8X16 8.8 480H SPF	SECHSKANTSCHRAUBE
69	978787708	12	SLEEVE 33.0X19 FE//ZNNI8//CN//T0	HUELSE
74	97011112	1	PLATE 2X180X100 DC01 FE//ZNNI8//CN//T0	BLECH
75	97011113	1	PLATE 2X180X100 DC01 FE//ZNNI8//CN//T0	BLECH
76	97011114	1	PLATE 2X180X100 DC01 FE//ZNNI8//CN//T0	BLECH
77	97011115	1	PLATE 2X180X100 DC01 FE//ZNNI8//CN//T0	BLECH
78	11481963	1	LASHING STRAP 1MX35MM POLYTEX SPF	ZURRGURT
79	10491593	2	LASHING STRAP 4MX35MM POLYTEX SPF	ZURRGURT
80	12102696	8	BUTTON HEAD SCREW ISO7380-2 M8X10 0	HALBRUNDKOPFSCHRAUBE
81	97132168	2	PLATE 4X74X219 S315MC FE//ZNNI8//CN//T	BLECH
82	97132169	2	PLATE 4X62X134 S315MC	BLECH
83	10813359	8	BUTTON HEAD SCREW AEHNL.ISO 7380-2	HALBRUNDKOPFSCHRAUBE
84	704228108	2	HINGE 35X35X50/180° ST FE//ZN12//B	SCHARNIER
85	953873408	4	SLEEVE 25X20 11SMN37 FE//ZNNI8//CN//T0	HUELSE
86	10875559	4	SOCKET HEAD SCREW DIN 6912 M8X16 08	ZYLINDERSCHRAUBE

Pos.	Item	Quantity	Description	Bezeichnung
10	96045204	1	CABLE LIST ⇨ ❑ 139	KABELLISTE
30	96045206	1	MECHANICAL AUXILIARIES ⇨ ❑ 141	MECHANISCHE ANBAUTEILE

Pos.	Item	Quantity	Description	Bezeichnung
30	96045205	1	WIRING HARNESS W227 ⇨ ❑ 140	KABELSTRANG

Pos.	Item	Quantity	Description	Bezeichnung
5	10871126	1	COUPLING SOCKET 4-POL SPF	KUPPLUNGSDOSE
6	10873383	1	COUPLING SOCKET 4-POL SPF	KUPPLUNGSDOSE
500	923512208	3	CABLE MARKER	KABELMARKER
501	604526608	1	PIN CARRIER 6-POL 16A	STIFTTRAEGER
502	604512108	1	SEALING PLUG M1-D	VERSCHLUSSKAPPE
503	10476382	1	CABLE SOCKET M1	KABELDOSE
504	602421908	1	INSERT M20X1,5 NBR	MEHRFACHDICHTEINSATZ
505	602441001	1	CABLE GLAND M20X1,5X5-10 MS	KABELVERSCHRAUBUNG
719	10493972	6	PIN CONTACT 0,5MM2 SILBER	STIFTKONTAKT
812	604518908	1	STOPPER PLUG BAUREIHE_M1	BLINDSTOPFEN
998	965622208	3	LETTERING WIRING HARNESS	BESCHRIFTUNG KABELBAUM

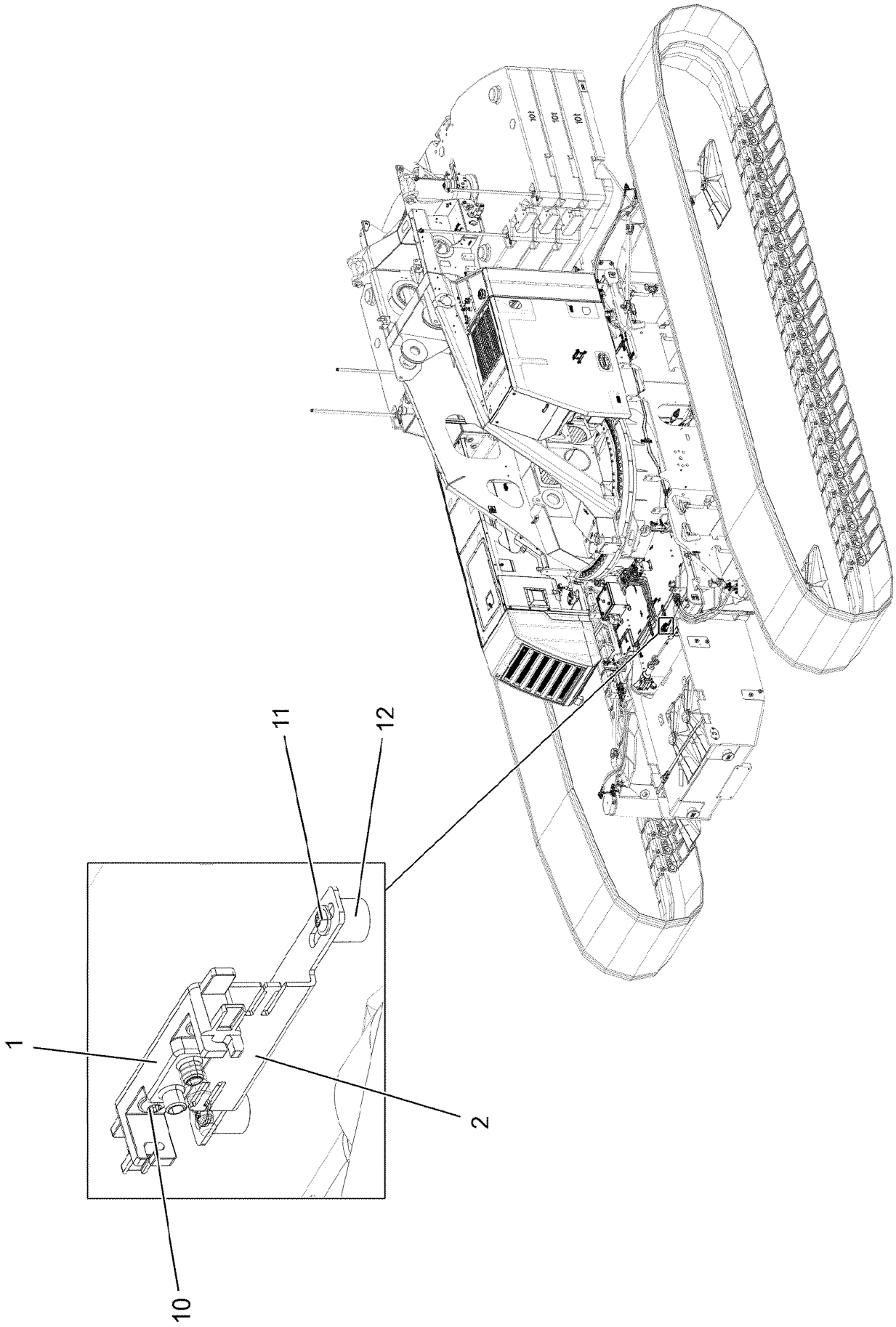
101
101
101
11
12
1
2
10

Pos.	Item	Quantity	Description	Bezeichnung
1	97098446	2	HOLDER PA6MDGF30 SPF	HALTER
2	97132207	2	PLATE 3X240X109 S355MC FE//ZNNI8//CN//T	BLECH
10	10875471	4	BUTTON HEAD SCREW AEHNL.ISO 7380-2	HALBRUNDKOPFSCHRAUBE
11	10876082	4	BUTTON HEAD SCREW AEHNL.ISO 7380-2	HALBRUNDKOPFSCHRAUBE
12	953873408	4	SLEEVE 25X20 11SMN37 FE//ZNNI8//CN//T0	HUELSE

Pos.	Item	Quantity	Description	Bezeichnung
1	928569808	1	MAIN TOOLS ⇨ ❑ 144	GRUNDWERKZEUG
2	928620108	1	ACCESSORIES ⇨ ❑ 145	ZUBEHOER
3	520402808	1	PROTECTIVE PADDING	SCHUTZPOLSTER
4	790065608	1	FITTING	VERSCHRAUBUNG
5	790533908	2	FITTING	VERSCHRAUBUNG
6	885602114	1	HAND LEVER PRESS	HANDHEBELPRESSE
7	790042214	1	HOSE LINE X300	SCHLAUCHLEITUNG
8	790042914	1	HOSE LINE X300	SCHLAUCHLEITUNG
9	790042708	1	QUICK ACTING COUPLING	SCHIEBEKUPPLUNG
10	8008673	1	SOCKET FOR SPANNER SW46	STECKSCHLUESSELEINSATZ
11	890020214	1	WRENCH SOCKET SW1 11/16"	STECKNUSS
21	97126865	1	GAUGE 1.5X130X25 X5CRNI18-10	LEHRE
100	966796408	1	CLUTCH WRENCH 90MM	KUPPLUNGSSCHLUESSEL

Pos.	Item	Quantity	Description	Bezeichnung
1	790045408	1	ASSEMBLY TOOL BOX	MONTAGEWERKZEUGKASTEN
2	885251508	1	PADLOCK ABUS-64TI/40 TITALIUM	VORHAENGESCHLOSS
10	790001708	1	DOUBLE-HEADED SPANNER DIN 3110 SW8	DOPPELMAULSCHLUESSEL
11	790003308	1	DOUBLE-HEADED SPANNER DIN 3110 SW10	DOPPELMAULSCHLUESSEL
12	790002208	1	DOUBLE-HEADED SPANNER DIN 3110 SW12	DOPPELMAULSCHLUESSEL
13	790002408	1	DOUBLE-HEADED SPANNER DIN 3110 SW14	DOPPELMAULSCHLUESSEL
14	10652772	1	DOUBLE-HEADED SPANNER SW16X18 CRV-	DOPPELMAULSCHLUESSEL
15	790003608	1	DOUBLE-HEADED SPANNER DIN 3110 SW17	DOPPELMAULSCHLUESSEL
16	790002508	1	DOUBLE-HEADED SPANNER DIN 3110 SW19	DOPPELMAULSCHLUESSEL
17	790002608	1	DOUBLE-HEADED SPANNER DIN 3110 SW24	DOPPELMAULSCHLUESSEL
18	790002808	1	DOUBLE-HEADED SPANNER DIN 3110 SW30	DOPPELMAULSCHLUESSEL
19	790002908	1	DOUBLE-HEADED SPANNER DIN 3110 SW36	DOPPELMAULSCHLUESSEL
20	790003908	1	DOUBLE-HEADED SPANNER DIN 3110 46X5	DOPPELMAULSCHLUESSEL
21	885132208	1	SINGLE-END SPANNER DIN 894 55	EINMAULSCHLUESSEL
22	790004608	1	SINGLE-END SPANNER DIN 894 60	EINMAULSCHLUESSEL
29	885166108	1	ALLEN KEY GR.3	SECHSKANTSTIFTSCHLUESSE
30	790021608	1	HEXAGON KEY DIN 911 4 GLANZVERN.	INBUSSCHLUESSEL
31	790020008	1	HEXAGON KEY DIN 911 5 GLANZVERN.	INBUSSCHLUESSEL
32	790020108	1	HEXAGON KEY DIN 911 6 GLANZVERN.	INBUSSCHLUESSEL
33	790021008	1	HEXAGON KEY DIN 911 GR.8 GLANZVERN.	INBUSSCHLUESSEL
34	790021208	1	HEXAGON KEY DIN 911 10 GLANZVERN.	INBUSSCHLUESSEL
35	790021308	1	HEXAGON KEY DIN 911 12 GLANZVERN.	INBUSSCHLUESSEL
40	10471363	1	ANGLE SCREW DRIVER TX30 PHOSPHATI	WINKELSCHRAUBENDREHER
41	10043002	1	ANGLE SCREW DRIVER TX 40 BRUENIERT	WINKELSCHRAUBENDREHER
50	790032008	1	SCREWDRIVER 3,5 CRV-VERNICKELT	SCHRAUBENDREHER
51	790032308	1	SCREWDRIVER 5,5 CRV-VERNICKELT	SCHRAUBENDREHER
52	790032508	1	SCREWDRIVER 10 CRV-VERNICKELT	SCHRAUBENDREHER
53	790033208	1	SCREWDRIVER 2 CRV-VERNICKELT	KREUZSCHL.SCHR.DREHER
60	790030008	1	HAND HAMMER DIN 1041 800G	HANDHAMMER
61	790031108	1	LUMP HAMMER DIN 6475 3000	FAEUSTEL
62	790031508	1	COMBI PLIERS DIN 5244 180	KOMBIZANGE
63	790026208	1	GRIP DIN 3122 A 3/4"	GRIFF
64	790026308	1	EXTENSION DIN 3123 400X3/4"	VERLAENGERUNG B
65	790026408	1	EXTENSION DIN 3123 200X3/4"	VERLAENGERUNG B
66	790028508	1	SOCKET FOR SPANNER DIN 3129 32X3/4" C	STECKSCHLUESSELEINSATZ
67	520190408	1	TYRE INFLATING HOSE	REIFENFUELLSCHLAUCH
68	10032297	1	OIL DRAINING HOSE COMPL. 1,5M	OELABLASSSCHLAUCH KPL.
70	790042008	1	HAND LEVER PRESS VERZ.	HANDHEBELPRESSE
71	790042908	1	REINFORCED RUBBER HOSE 300 RH-30 M1	GUMMIPANZERSCHLAUCH

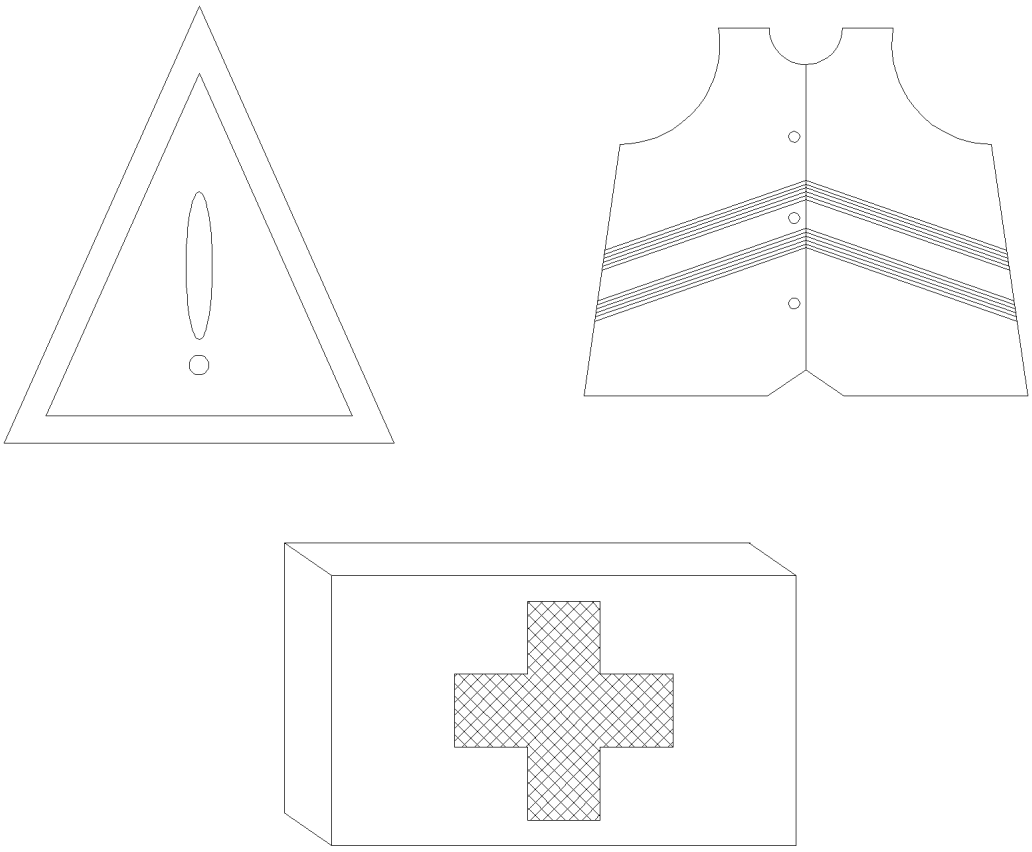

Pos.	Item	Quantity	Description	Bezeichnung
1	10044762	1	WARNING TRIANGLE 430X45X30	WARNDREIECK
2	607106208	2	HAZARD WARNING FLASHER 2,4W 6V WEI	SICHERHEITSWARNBLINKLEUC
(1)	607011108	2	LIGHT BULB DIN 49848 2,4W 6V	GLUEHLAMPE
3	613200608	10	BATTERY 1.5V 16.5AH	BATTERIE
4	12101159	1	FIRE EXTINGUISHER DIN EN 3	FEUERLOESCHER
5	789000308	1	FIRST AID KIST DIN 13164 260X170X80	VERBANDSKASTEN
6	872101908	1	SAFETY JACKET EN ISO 20471 GR.ONESIZE	WARNWESTE
7	704271108	2	HOLLOW KEY	HOHLSCHLUESSEL
8	10877437	1	ASSORTMENT BOX FLACHSICHERUNG	SORTIMENTKASTEN

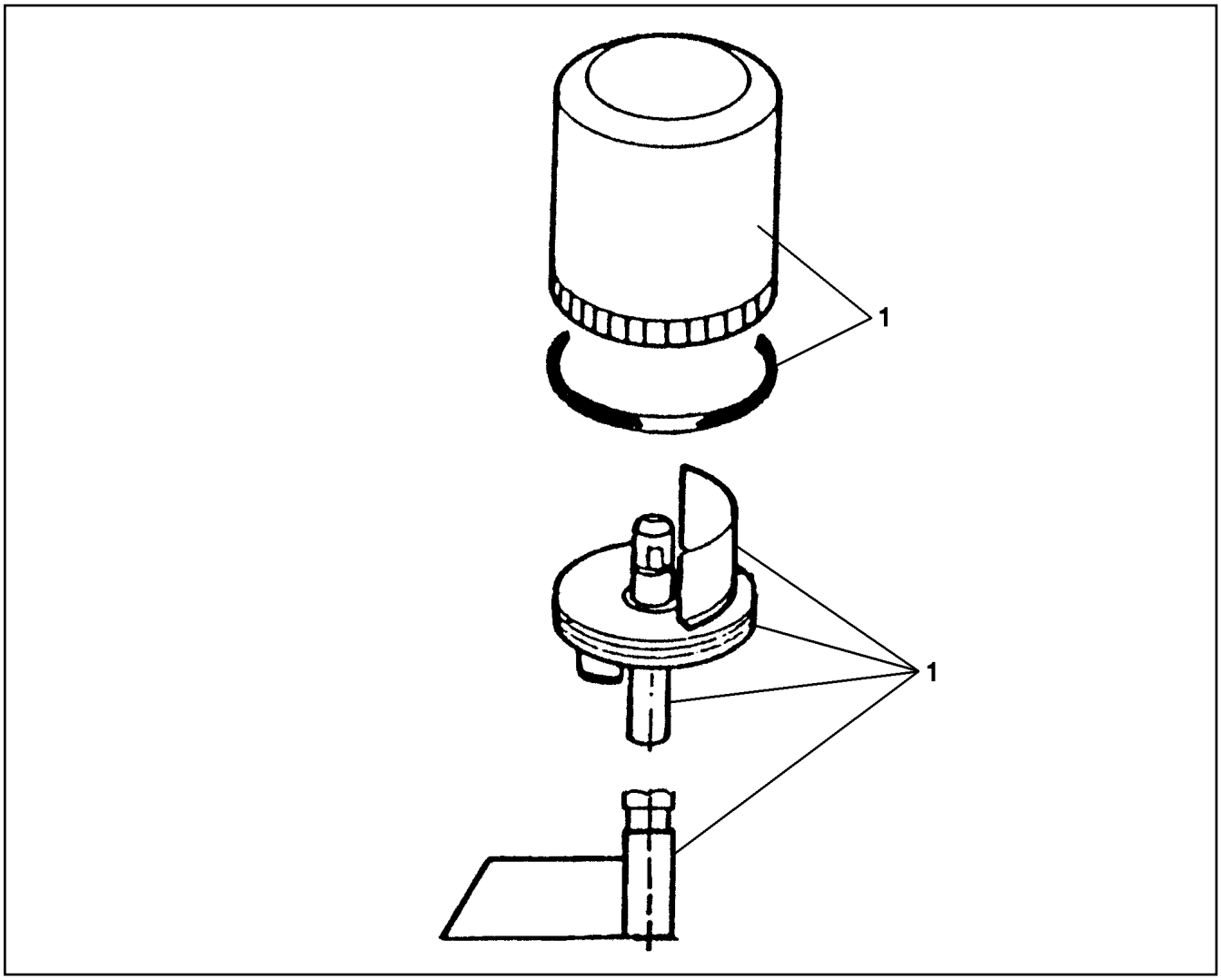

Pos.	Item	Quantity	Description	Bezeichnung
1	10470032	1	ROTATING BEACON 55W 24V	RUNDUMKENNLEUCHTE
(1)	11346616	1	FLASHING LIGHT GLASS	LICHTHAUBE
2	607023708	1	LIGHT BULB DIN 72601 70W 24V	GLUEHLAMPE

Pos.	Item	Quantity	Description	Bezeichnung
1	772624608	1	SIGN 6X107X237 G-ALSI12	SCHILD

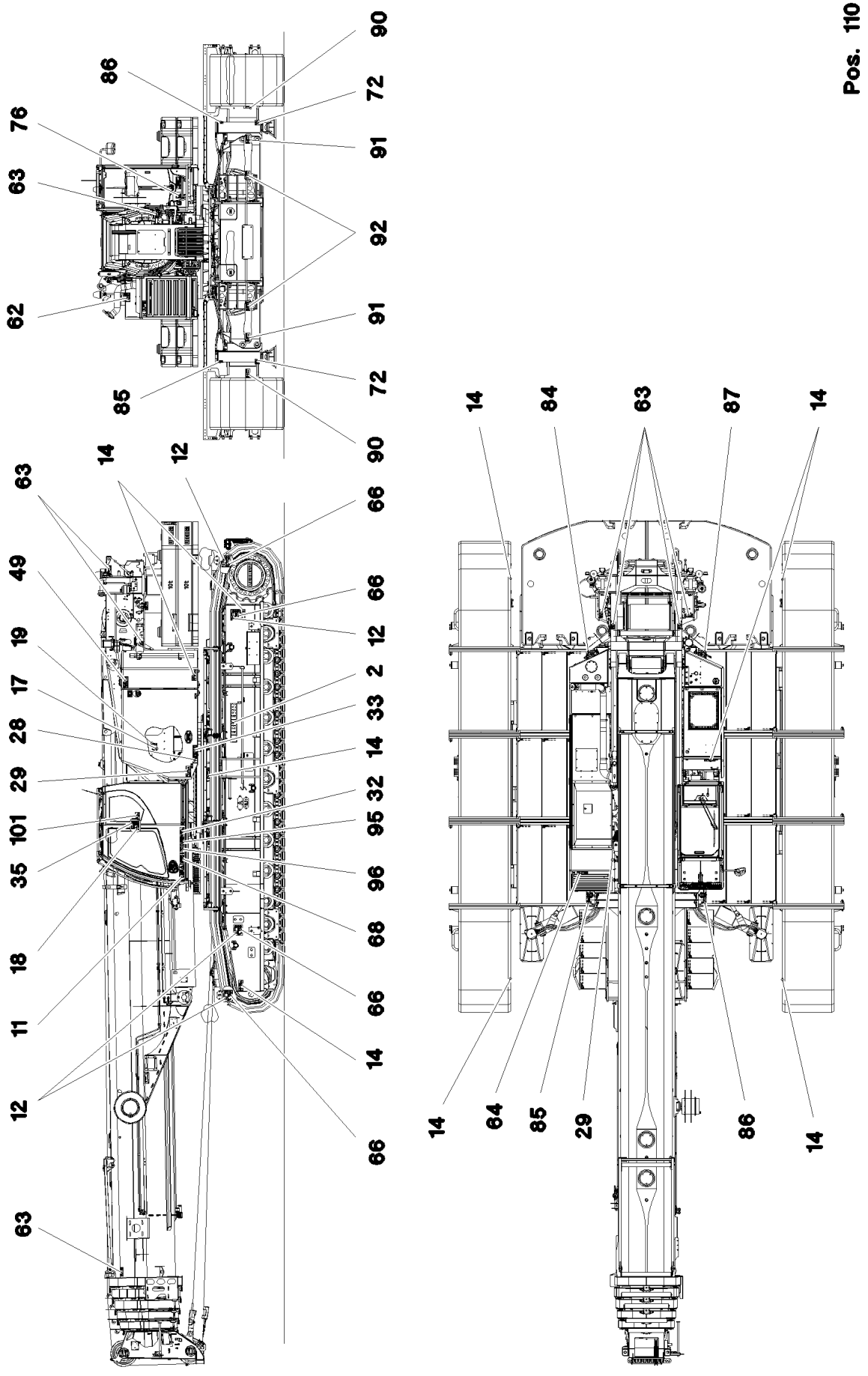
Pos. 110
86
76
63
62
85
90
72
91
92
91
72
90
14
12
63
49
19
17
28
29
101
35
18
11
12
63
66
66
12
2
33
14
32
95
96
68
66
14
66
14
84
63
87
14
14
84
85
29
86
14

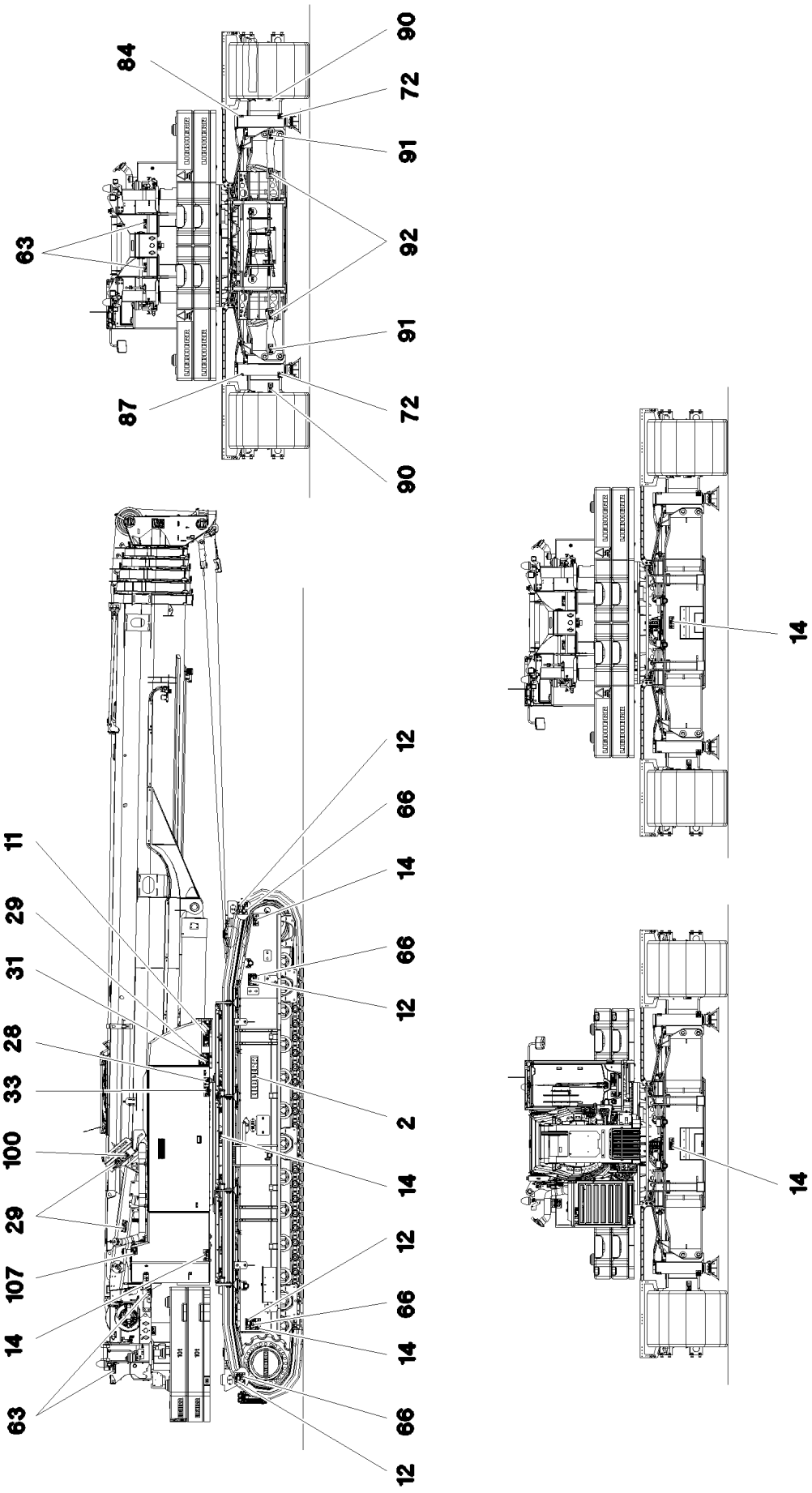
84
90
72
91
63
92
91
87
72
90
11
29
31
28
33
100
29
107
14
63
12
66
14
66
12
2
14
12
66
14
66
12
14
14

Pos.	Item	Quantity	Description	Bezeichnung
2	971749908	2	SIGN	SCHILD
11	978673908	2	SIGN 208X88 KLEBEFOLIE SPF	SCHILD
12	978674008	8	SIGN 208X88 KLEBEFOLIE SPF	SCHILD
14	978674108	15	SIGN 208X88 KLEBEFOLIE SPF	SCHILD
17	97135430	1	INFORMATION SIGN 60X90 KLEBEFOLIE SP	HINWEISSCHILD
18	97037952	1	SIGN 168X88 KLEBEFOLIE SPF	SCHILD
19	97135431	1	INFORMATION SIGN 60X90 KLEBEFOLIE SP	HINWEISSCHILD
28	978674308	2	SIGN 168X88 KLEBEFOLIE SPF	SCHILD
29	978674408	5	SIGN 208X88 KLEBEFOLIE SPF	SCHILD
31	978674508	1	SIGN 208X88 KLEBEFOLIE SPF	SCHILD
32	978674608	1	SIGN 208X88 KLEBEFOLIE SPF	SCHILD
33	978867108	2	SIGN 168X88 KLEBEFOLIE SPF	SCHILD
35	9412158	1	CAUTION DECAL ACCID.PREVENTION 60X	WARNSCHILD UNFALLVERHUET
49	97016304	1	SIGN 208X88 KLEBEFOLIE SPF	SCHILD
62	979383308	1	SIGN 168X88 KLEBEFOLIE SPF	SCHILD
63	978674808	12	SIGN 168X62 KLEBEFOLIE SPF	SCHILD
64	978674908	1	SIGN 208X88 KLEBEFOLIE SPF	SCHILD
66	978675008	8	SIGN 208X88 KLEBEFOLIE SPF	SCHILD
68	97036732	1	SIGN 168X88 KLEBEFOLIE SPF	SCHILD
72	97016392	4	SIGN 208X88 KLEBEFOLIE SPF	SCHILD
76	971693508	1	SIGN 108DBA/100X90 KLEBEFOLIE SPF	SCHILD
84	974150408	2	SIGN 1X80X80 KLEBEFOLIE SPF	SCHILD
85	974150508	2	SIGN 1X80X80 KLEBEFOLIE SPF	SCHILD
86	974150608	2	SIGN 1X80X80 KLEBEFOLIE SPF	SCHILD
87	974150708	2	SIGN 1X80X80 KLEBEFOLIE SPF	SCHILD
90	97043334	4	SIGN 168X88 KLEBEFOLIE SPF	SCHILD
91	97043335	4	SIGN 168X88 KLEBEFOLIE SPF	SCHILD
92	97043336	4	SIGN 168X88 KLEBEFOLIE SPF	SCHILD
95	97011689	1	SIGN 168X88 KLEBEFOLIE SPF	SCHILD
96	97011690	1	SIGN 168X88 KLEBEFOLIE SPF	SCHILD
100	97060689	1	SIGN 168X88 KLEBEFOLIE SPF	SCHILD
101	97009799	1	SIGN 168X88 KLEBEFOLIE SPF	SCHILD
107	97094940	1	INFORMATION SIGN 120X80 KLEBEFOLIE	HINWEISSCHILD
110	97131530	1	INFORMATION SIGN 208X100 KLEBEFOLIE	HINWEISSCHILD
200	704207708	4	MANDRIL RIVET 4X15	DORNNIET

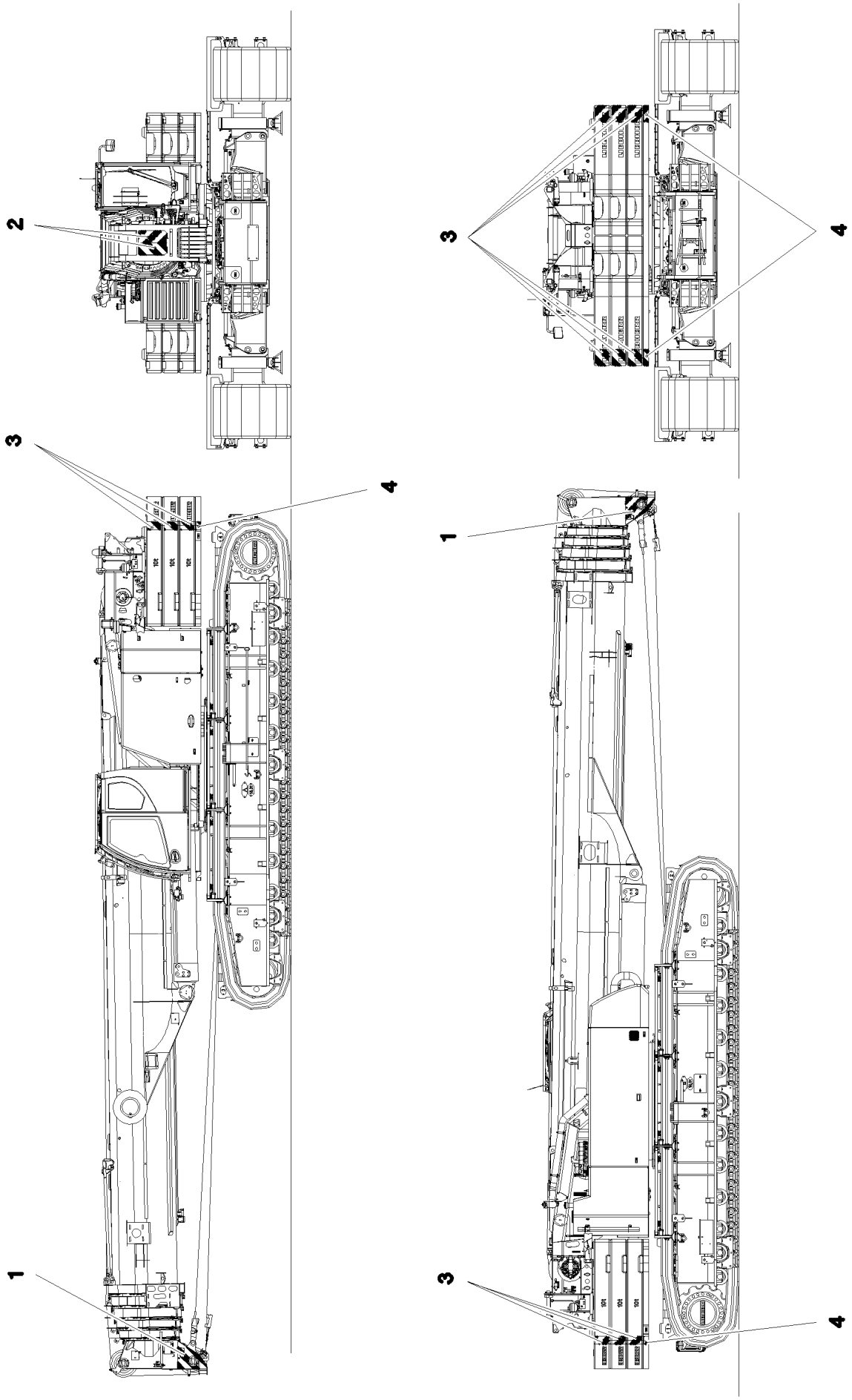
2
3
4
3
4
1
1
3
4

Pos.	Item	Quantity	Description	Bezeichnung
1	11067612	0.54	WARNING DESIGNATION DIN 30710 TYP 1	WARNMARKIERUNG
2	11067611	0.239	WARNING DESIGNATION DIN 48844-01 LAMI	WARNMARKIERUNG
3	11067611	0.689	WARNING DESIGNATION DIN 48844-01 LAMI	WARNMARKIERUNG
4	11067611	0.081	WARNING DESIGNATION DIN 48844-01 LAMI	WARNMARKIERUNG

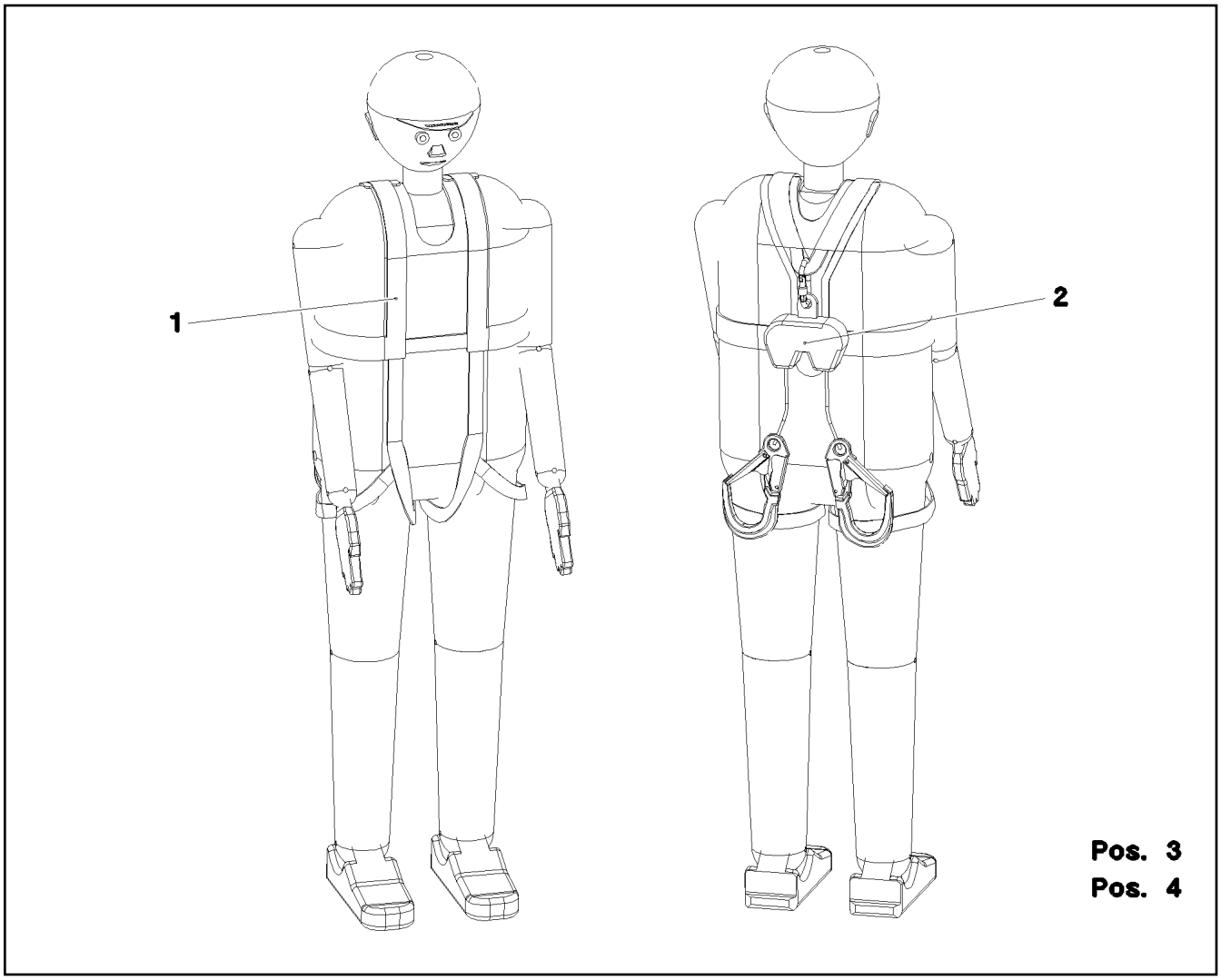

Pos.	Item	Quantity	Description	Bezeichnung
1	11007305	1	SAFETY HARNESS EN 361 IK G 2 BLH	AUFFANGGURT
(1)	11320720	1	BAG	BEUTEL
2	11007309	1	FALL PROTECTION EN 360 HWB 2 RLH	HOEHENSICHERUNGSGERAET
3	12102869	1	CONNECTING DEVICE EN 358 45-IK30 B70 A	VERBINDUNGSMITTEL

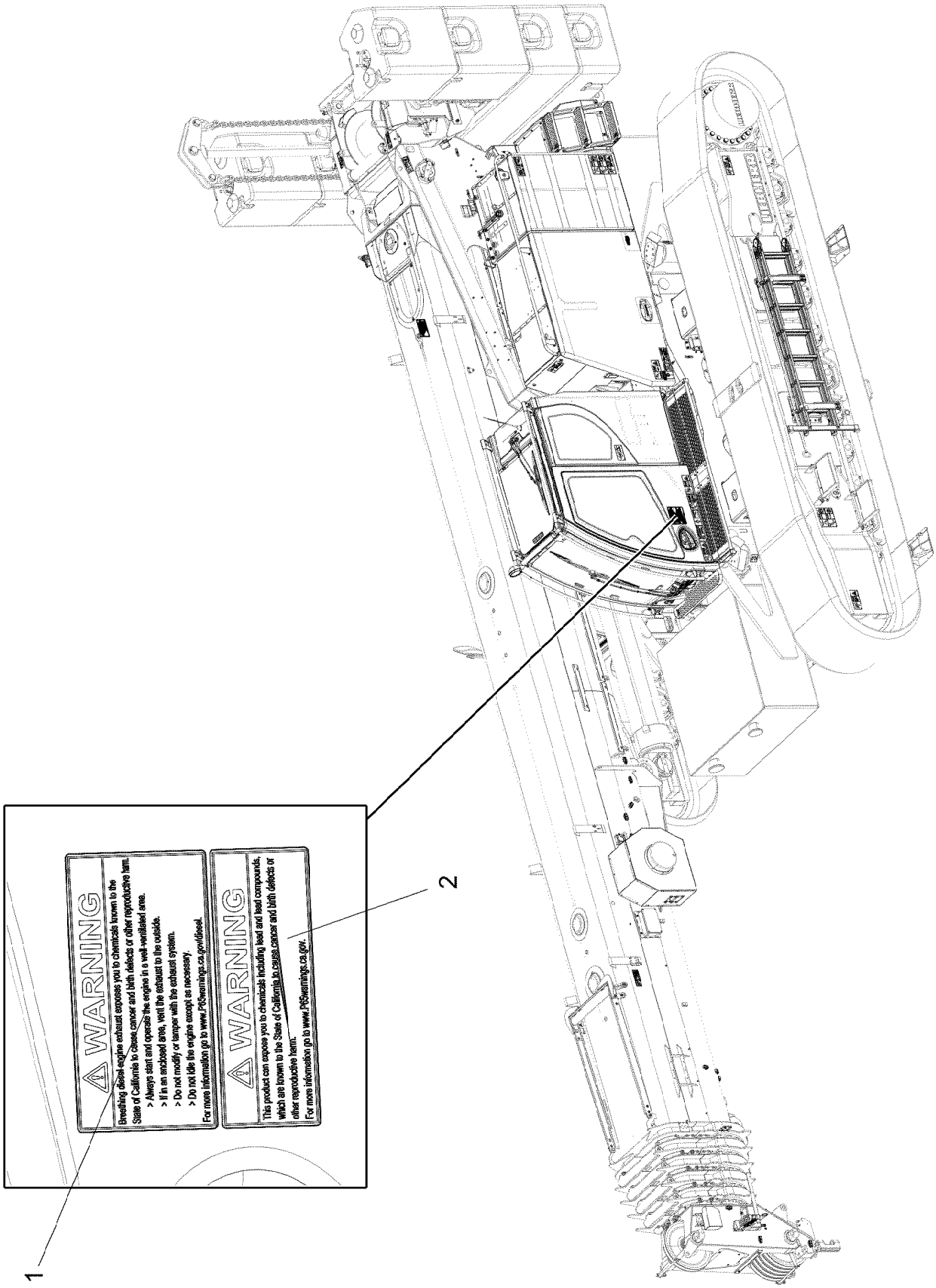
1
2
WARNING
Breathing diesel engine exhaust exposes you to chemicals known to the State of California to cause cancer and birth defects or other reproductive harm.
> Always start and operate the engine in a well-ventilated area.
> If in an enclosed area, vent the exhaust to the outside.
> Do not modify or tamper with the exhaust system.
> Do not idle the engine except as necessary.
For more information go to www.P65warnings.ca.gov/diesel.
WARNING
This product can expose you to chemicals including lead and lead compounds, which are known to the State of California to cause cancer and birth defects or other reproductive harm.
For more information go to www.P65warnings.ca.gov.

Pos.	Item	Quantity	Description	Bezeichnung
1	11952500	2	SIGN 100X184X0,1 KLEBEFOLIE SPF	SCHILD
2	13187353	1	SIGN 70X184X0,1 KLEBEFOLIE	SCHILD

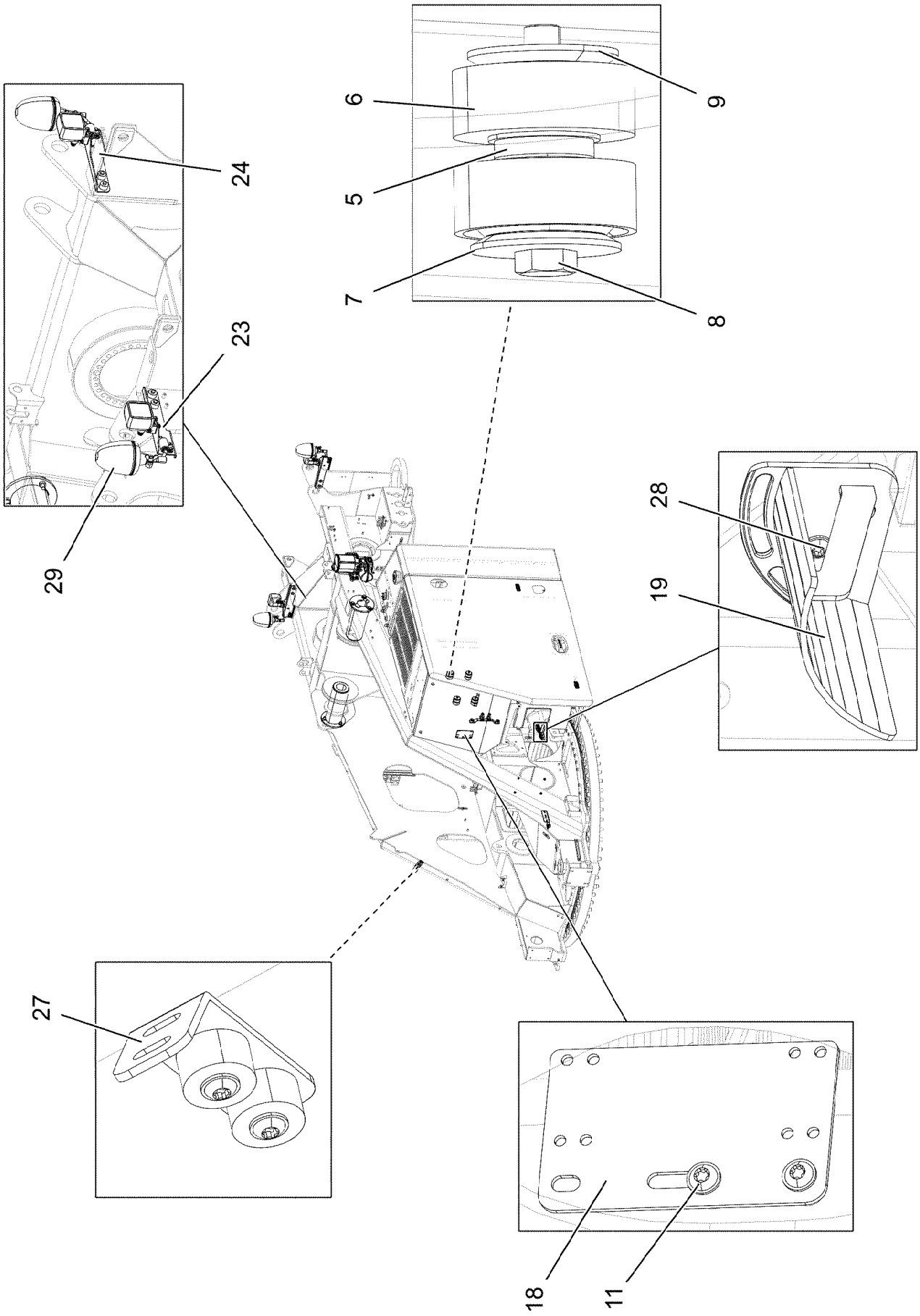
6
9
5
7
8
24
23
29
28
19
27
18
11

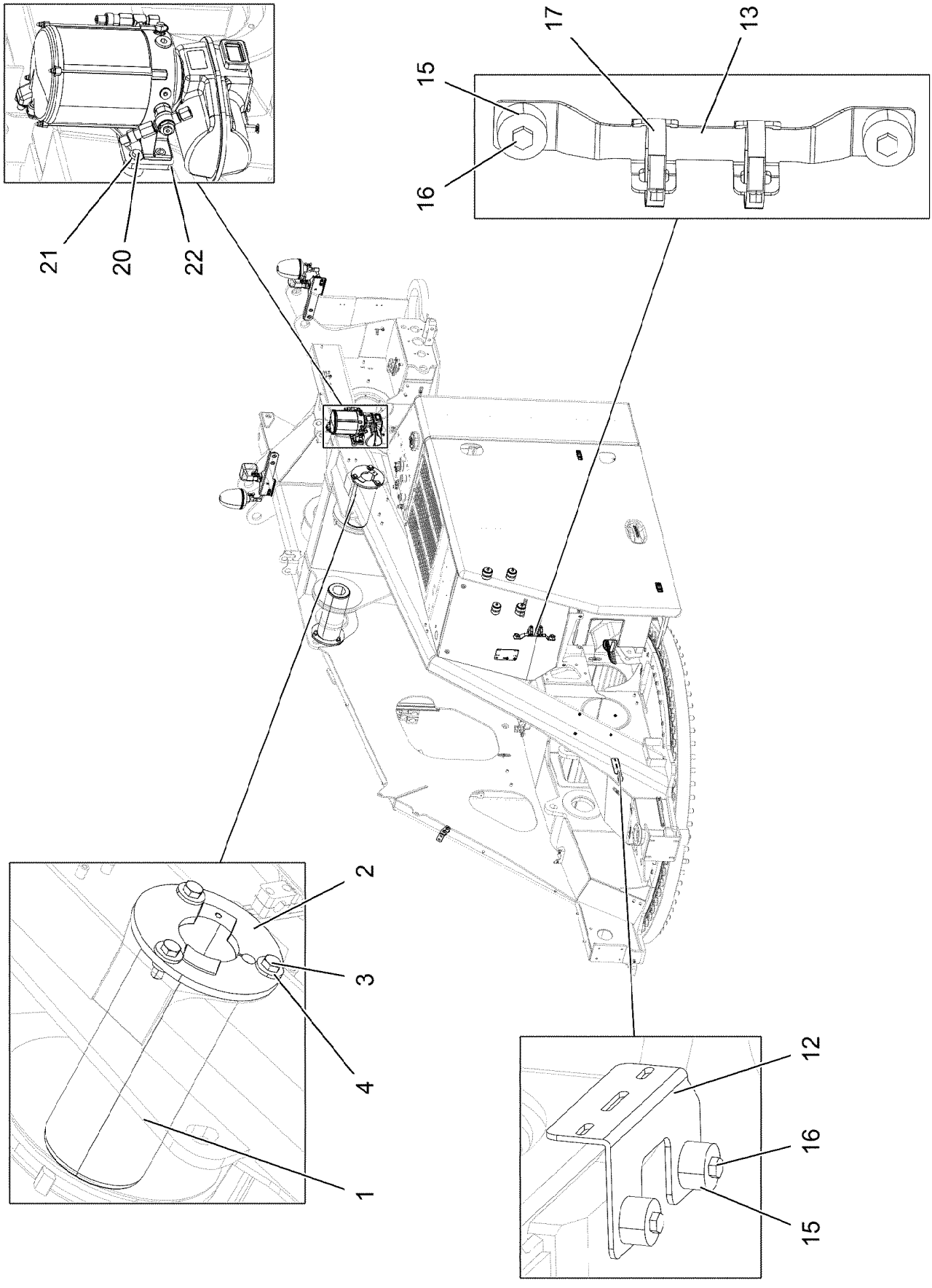
17
13
15
16
21
20
22
2
3
4
1
12
16
15

Pos.	Item	Quantity	Description	Bezeichnung
1	973411808	2	PIN 160.0X394 35NICRMOV125	BOLZEN
2	970591108	2	AXLE HOLDER 12X222X222 S960QL	ACHSHALTER
3	406603108	6	HEX SCREW ISO 4017 M16X45 10.9 FLZN SP	SECHSKANTSCHRAUBE
4	953504308	6	BUSHING RD40X27 35NICRMOV125 GASN.	BUCHSE
5	550640608	4	RUBBER BEARING 13,51/47,75X19,8	GUMMILAGER
6	970689108	8	BUSHING 60.3X24 S355J2H FE//ZNNI8//CN//T	BUCHSE
7	970689208	4	WASHER 50.0x9 S355J2C+C FE//ZNNI8//CN/	SCHEIBE
8	10875507	4	HEX SCREW ISO 4014 M12X75 8.8 FLZN SP	SECHSKANTSCHRAUBE
9	970821508	4	WASHER 50X5 S355J2C+C	SCHEIBE
11	12102696	6	BUTTON HEAD SCREW ISO7380-2 M8X10 0	HALBRUNDKOPFSCHRAUBE
12	97039694	1	PLATE 4X178X133 S315MC FE//ZNNI8//CN//T	BLECH
13	97037936	1	PLATE 3X300X84 DC01 FE//ZNNI8//CN//T0	BLECH
15	978787708	12	SLEEVE 33.0X19 FE//ZNNI8//CN//T0	HUELSE
16	11651612	8	HEX SCREW ISO 4017 M8X16 8.8 480H SPF	SECHSKANTSCHRAUBE
17	550838008	2	HOSE CLAMP 50/40-60/12 W3	SCHLAUCHSCHELLE
18	979672708	1	PLATE 3X150X90 S355MC FE//ZNNI8//CN//T	BLECH
19	969444008	1	HOSE PROTECTION WELDMENT FE//ZNNI8/	SCHLAUCHSCHUTZ SCHWK.
20	502618908	2	HEX SCREW ISO 4017 M8X22 8.8	SECHSKANTSCHRAUBE
21	11140469	2	WASHER ISO 7093-1 8 200HV 480H SPF	SCHEIBE
22	97053069	1	PLATE 10X170X79 S355MC FE//ZNNI8//CN//T	BLECH
23	97126204	1	BLUB HOLDER LEFT 4X163X370 S315MC FE	LAMPENHALTER LI.
24	97126205	1	LAMP SUPPORT 4X163X370 S315MC FE//ZN	LAMPENHALTER RE.
28	10875485	4	BUTTON HEAD SCREW AEHNL.ISO 7380-2	HALBRUNDKOPFSCHRAUBE
29	591070408	2	HOLDER	HALTER

Pos.	Item	Quantity	Description	Bezeichnung
1	12856862	1	DIESEL ENGINE D944 A7-04 SPF ⇨ ❑ 160	DIESELMOTOR

10 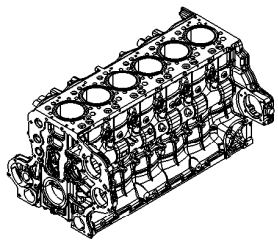	12 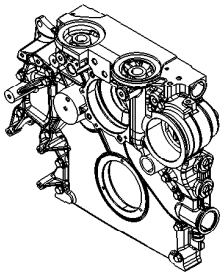	14 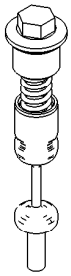	15 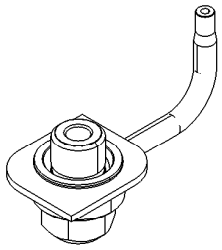
16 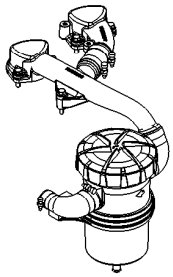	20 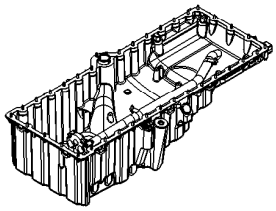	21	22 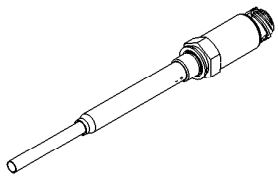
25 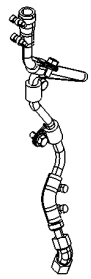	50 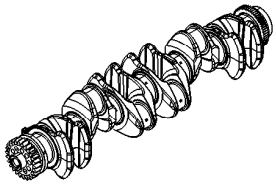	51 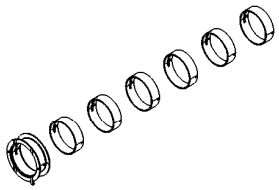	

Pos.	Item	Quantity	Description	Bezeichnung
10	11389608	1	CRANKCASE CPL. WITH CYLINDER R-MOT ⇨ ❑ 167	KURBELGEHAEUSE KPL. MIT ZY
12	10147687	1	POWER UNIT SUPPORT ATTACHMENT ⇨ ❑ 170	AGGREGATETRAEGER ANBAU
14	10138450	1	FINAL CONTROL VALVE pmax=4.5BAR ⇨ ❑ 171	ENDREGELVENTIL
15	10142749	4	PISTON COOLING ⇨ ❑ 172	KOLBENKUEHLUNG
16	10126713	1	CRANKCASE BREATHER ASSEMBLY ⇨ ❑ 173	KURBELGEHAEUSEENTLUEFT.
20	10132560	1	OIL SUMP WITH FASTENING R-MOTOR/D93 ⇨ ❑ 175	OELWANNE MIT BEFEST.
21	10150934	1	OIL DIPSTICK CPL. ⇨ ❑ 180	OELMESSSTAB KPL.
22	10130406	1	LEVEL SENSOR L=115 24V ⇨ ❑ 181	NIVEAUGEBER
25	10139112	1	OIL LINE PRE-ASSEMBLY 10X1 ⇨ ❑ 182	OELLEITUNG VORM.
50	10147438	1	CRANKSHAFT WITH GEAR R-MOTORXD934/ ⇨ ❑ 183	KURBELWELLE MIT ZAHNRAD
51	9076457	1	SET MAIN BEARINGS ⇨ ❑ 184	KURBELWELLENLAGERSATZ
52	10153583	1	CRANKSHAFT SEALING ⇨ ❑ 186	KURBELWELLENDICHTUNG
53	10141974	1	CRANKSHAFT ADD-ON PARTS ⇨ ❑ 187	KURBELWELLENANBAUTEILE

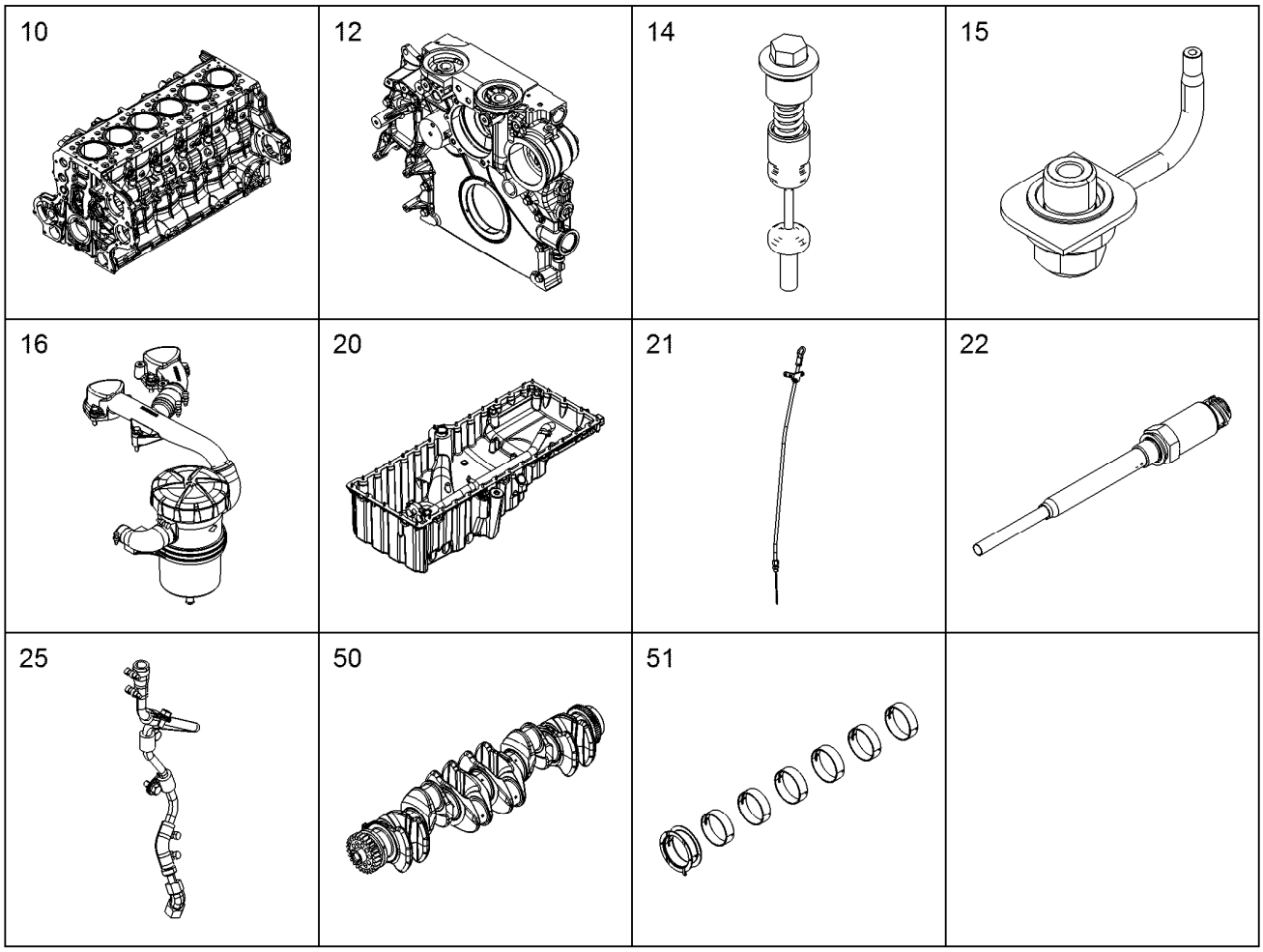

Pos.	Item	Quantity	Description	Bezeichnung
60	11348072	4	CONROD R-MOTORX88	PLEUELSTANGE
(2)	9075607	1	CONNECTING ROD BEARING 88/92/38 MIBA	PLEUELLAGER
(2)	10145100	1	CONNECTING ROD BEARING 88/92/38	PLEUELLAGER
(3)	9073699	1	CONNECTING ROD BEARING 88/92/38 Glyco	PLEUELLAGER
(3)	10145101	1	CONNECTING ROD BEARING 88/92/38	PLEUELLAGER
70	10146367	4	PISTON CPL. R-MOTORX130 ⇨ ❑ 188	KOLBEN KPL.
80	10149580	4	CYLINDER HEAD ASSEMBLY R-MOTOR ⇨ ❑ 189	ZYLINDERKOPF ANBAU
81	10148438	4	ROCKER ARM BRACKET CPL. NEIN ⇨ ❑ 193	KIPPHEBELBOCK KPL.
82	11358102	1	CYLINDER HEAD COVER ASSEMBLY ⇨ ❑ 195	ZYLINDERKOPFDECKEL ANBAU
90	10120186	1	BALANCER ASSEMBLY ⇨ ❑ 196	MASSENAUSGLEICH ANBAU
100	10138230	1	CAMSHAFT CPL. R-MOTORXD934 ⇨ ❑ 197	NOCKENWELLE KPL.
110	9079870	4	CONTROL PARTS ⇨ ❑ 198	STEUERUNGSTEILE
130	10129475	1	OIL COOLER ADD-ON ⇨ ❑ 199	OELKUEHLER ANBAU
140	10148432	1	LUBE OIL PUMP WITH FASTENING B=50 ⇨ ❑ 203	SCHMIEROELPUMPE MIT BEFE
150	10142942	1	LUBE OIL FILTER ASSEMBLY ⇨ ❑ 204	SCHMIEROELFILTER ANBAU

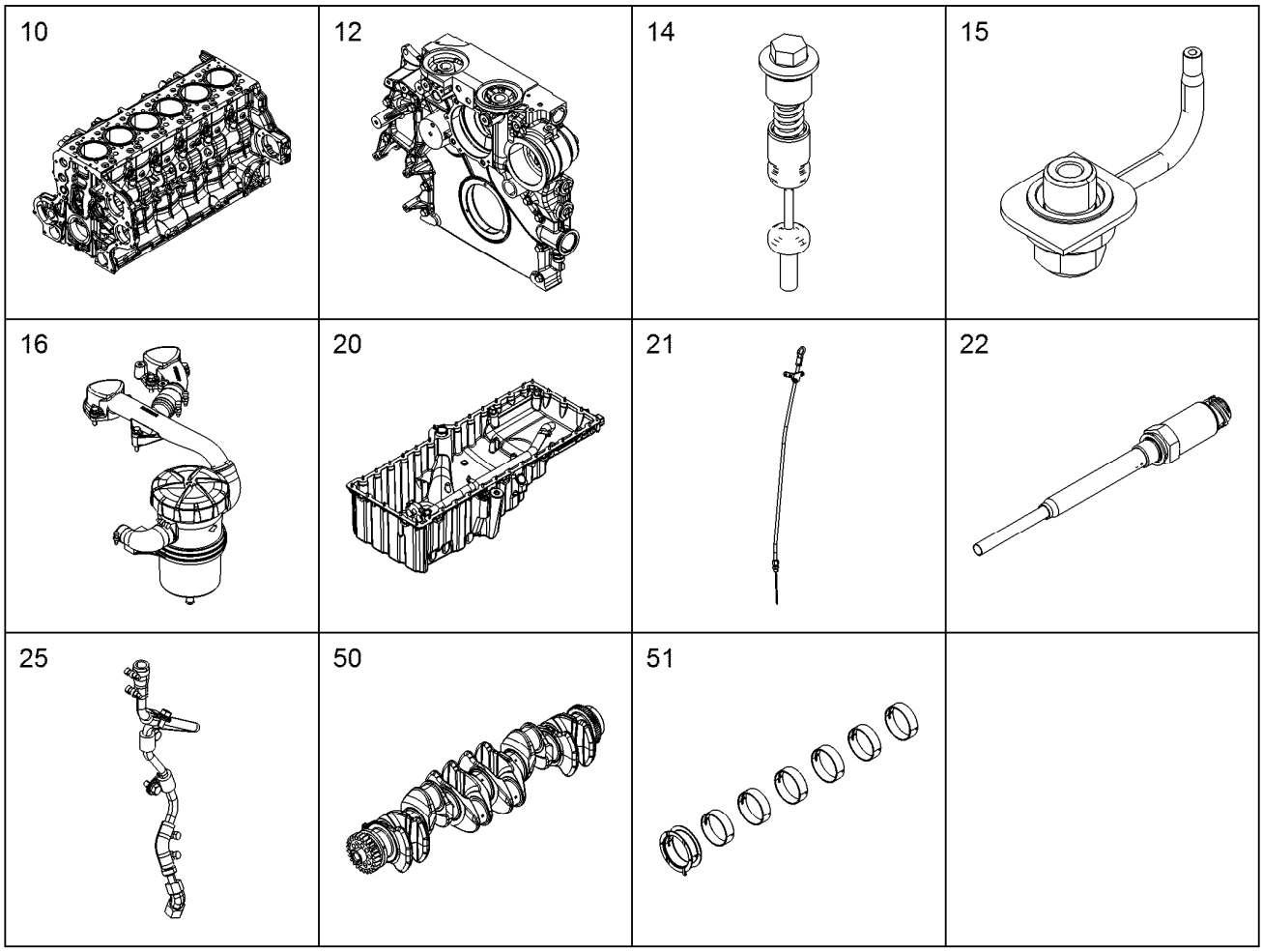

Pos.	Item	Quantity	Description	Bezeichnung
171	10150741	1	HIGH PRESSURE PUMP W.FASTENING R-M ⇨ ❑ 205	HOCHDRUCKPUMPE MIT BEFE
180	11407917	1	DRIVE FOR HIGH PRESSURE PUMP	ANTRIEB FUER HOCHDRUCKPU
190	10152867	4	INJECTOR WITH FASTENING LI2.7-20-SF-95 ⇨ ❑ 209	INJEKTOR MIT BEFEST.
191	10153151	4	HIGH PRESS.CONNECTOR W.FASTEN. ⇨ ❑ 210	DRUCKROHRSTUTZEN MIT BE
201	10146791	1	FUEL FINE-FILTER ASSEMBLY ⇨ ❑ 212	KRAFTSTOFF-FEINFILTERANBA
212	10143341	1	FUEL LINES ⇨ ❑ 214	KRAFTSTOFFLEITUNGEN
214	10143342	1	LEAK OIL RETURN LINE ⇨ ❑ 215	LECKOELRUECKLAUF
215	10143825	1	INJECTION LINES R-MOTORXD934 ⇨ ❑ 216	EINSPRITZLEITUNGEN
217	10141790	1	CONNECTING PIECE PRE-ASS.	ANSCHLUSSSTUECK VORM.
220	10147365	1	AIR INTAKE PIPE ASS. R-MOTORXD934/D94 ⇨ ❑ 217	LUFTANSAUGROHR ANBAU
221	10145173	1	INTAKE STACK ASSEMBLY R-MOTORXD93 ⇨ ❑ 218	ANSAUGSTUTZEN ANBAU
224	10147364	1	AIR INTAKE ASSEMBLY R-MOTORXD934/D9 ⇨ ❑ 219	LUFTANSAUGUNG ANBAU
230	10149677	1	CONNECTING LINE ADD-ON R-MOTOR ⇨ ❑ 220	VERBINDUNGSLEITUNG ANBAU
260	9078314	1	HEATING FLANGE ADD-ON ⇨ ❑ 221	HEIZFLANSCH ANBAU

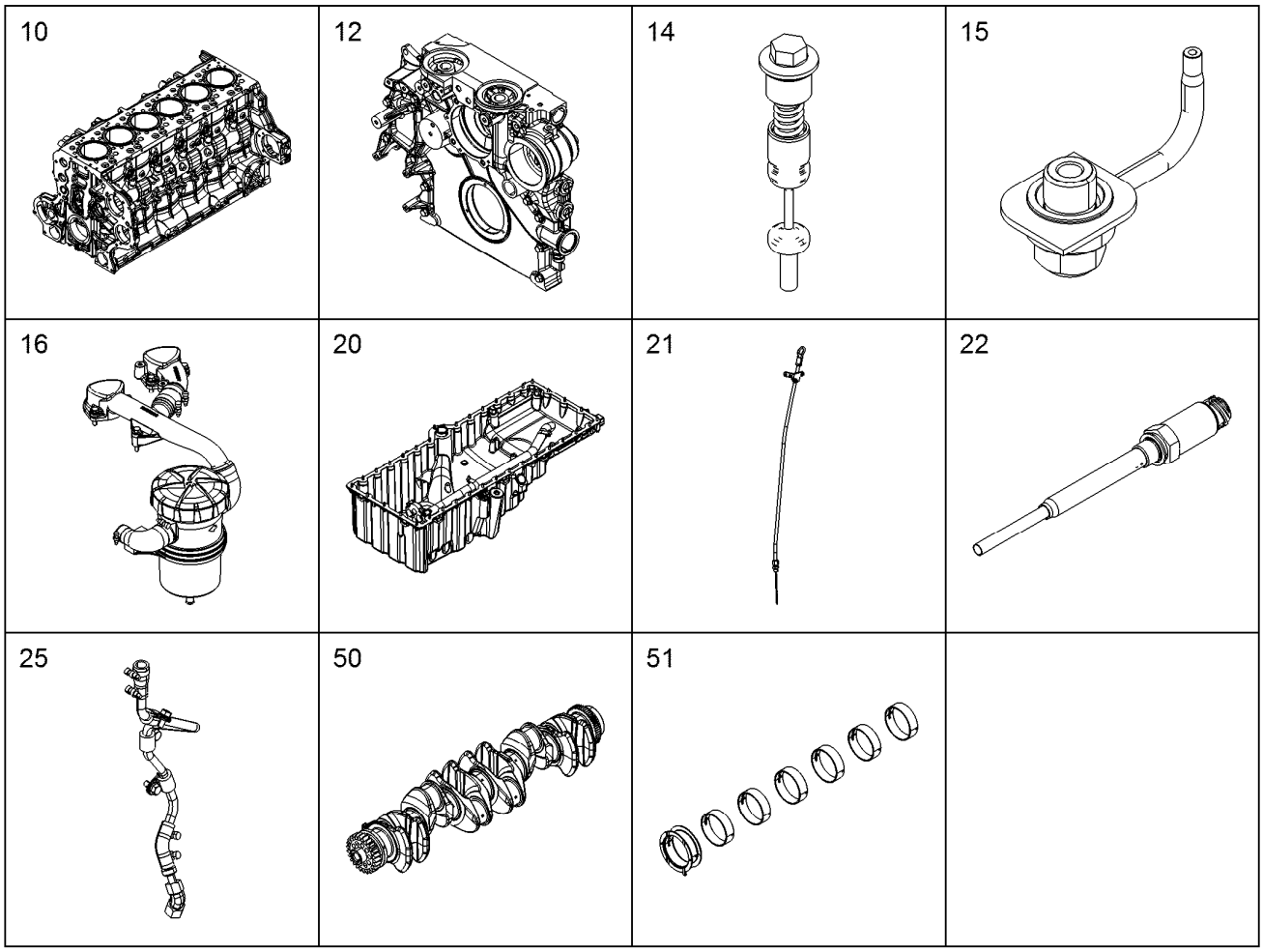

Pos.	Item	Quantity	Description	Bezeichnung
330	10127566	1	INSTALLATION BRAKE COMPRESSOR ⇨ ❑ 223	LUFTPRESSER ANBAU
331	9072906	1	INTERMEDIATE GEAR CPL. ⇨ ❑ 227	ZWISCHENRAD KPL.
333	10145176	1	PIPELINE INSTALLATION ⇨ ❑ 228	ROHRLEITUNG ANBAU
334	10145278	1	ACCESSORIES AIR COMPRESSOR ⇨ ❑ 229	ANBAUTEILE LUFTPRESSER
340	12418347	1	AIR COND. COMPRESSOR ADD-ON ⇨ ❑ 230	KLIMAKOMPRESSOR ANBAU
370	10142733	1	WATER PUMP WITH FASTENING R-MOTOR ⇨ ❑ 231	WASSERPUMPE MIT BEFEST.
380	10148215	1	THERMOSTAT HOUSING ASSEMBLY ⇨ ❑ 232	THERMOSTATGEHAEUSE ANBA
381	10148216	1	PIPELINE INSTALLATION ⇨ ❑ 233	ROHRLEITUNG ANBAU
382	10142742	1	COOLANT PIPE BEND ADD-ON ⇨ ❑ 234	KUEHLMITTELKRUEMMER ANBA
387	10142744	1	COOLING WATER AIR BLEEDING ⇨ ❑ 235	KUEHLWASSERENTLUEFTUNG
410	10140087	1	EXHAUST PIPE ASSEMBLY R-MOTORXD93 ⇨ ❑ 236	ABGASROHR ANBAU
415	10144756	1	HEAT PROTECTION W.FASTENING ⇨ ❑ 237	HITZESCHUTZ MIT BEFESTIGUN
430	10140729	1	EXHAUST TC MOUNTING ⇨ ❑ 238	ATL-ANBAU

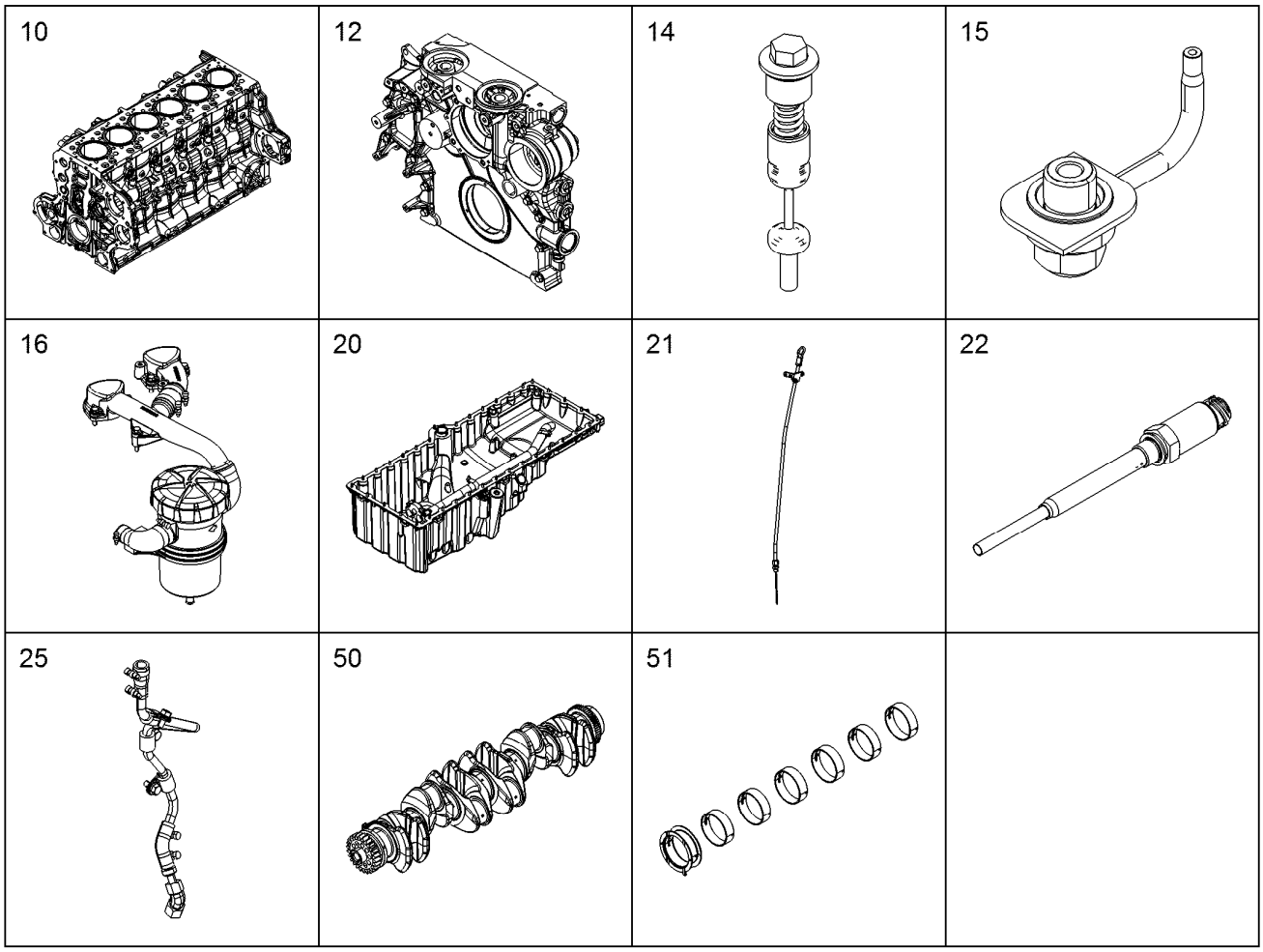

Pos.	Item	Quantity	Description	Bezeichnung
432	12512627	1	EXHAUST NOZZLE ATTACHMENT R-MOTOR	ABGASSTUTZEN ANBAU
436	11420633	1	CYCLE VALVE 3.4BAR 8L/MIN 6m	TAKTVENTIL
(1)	10149191	1	CYCLE VALVE 3.4BAR 8L/MIN 6m	TAKTVENTIL
(2)	12429351	1	HOLDER S235JR	HALTER
(3)	11420632	1	PIPELINE 6X1	ROHRLEITUNG
(4)	12429430	1	PIPELINE 6X1	ROHRLEITUNG
(5)	10011864	2	SEALING RING 10,7X16X1,5 St/FPM1-80	DICHTRING
(6)	12210010	1	HOLLOW SCREW DIN 7643 6-3-M10X1 480H	HOHLSCHRAUBE
(7)	10128228	3	RUBBER CONNECTION Silicone	GUMMIMUFFE
(8)	11005281	7	HOSE CLAMP DIN 3017-2 12/11,5-12,5/9 W1-	SCHLAUCHSCHELLE
(9)	7381292	6	CLAMP DIN 3016-1 6X15XD1 W1-2-MVQ	SCHELLE
(10)	11000593	2	CLAMP DIN 3016-1 6X20XA1 W4	SCHELLE
(11)	11656992	2	HEX SCREW EN 1665 M8X16 8.8 480H SPF	SECHSKANTSCHRAUBE
(12)	12207546	2	HEX SCREW EN 1665 M5X10 8.8 480H	SECHSKANTSCHRAUBE
(13)	11840297	7	HEX SCREW EN 1665 M6X16 8.8 480H SPF	SECHSKANTSCHRAUBE
(14)	11656992	1	HEX SCREW EN 1665 M8X16 8.8 480H SPF	SECHSKANTSCHRAUBE
(15)	10145373	1	HOLDER	HALTER
(16)	10126119	1	RUBBER CONNECTION 06-12X45 SILIKON	GUMMIMUFFE
440	10142863	1	GENERATOR, PRE-ASSEMBLED 4.32KW 24 ⇨ ❑ 239	GENERATOR VORM.
450	10115539	1	STARTER INSTALLATION 7.8KW 24V ⇨ ❑ 240	STARTER ANBAU
452	10115664	1	LOCKING PIECES ⇨ ❑ 244	VERSCHLUSSTEILE
480	9079823	1	TRANSPORT DEVICE ATTACHEMENT ⇨ ❑ 245	TRANSPORTVORRICHTUNG AN

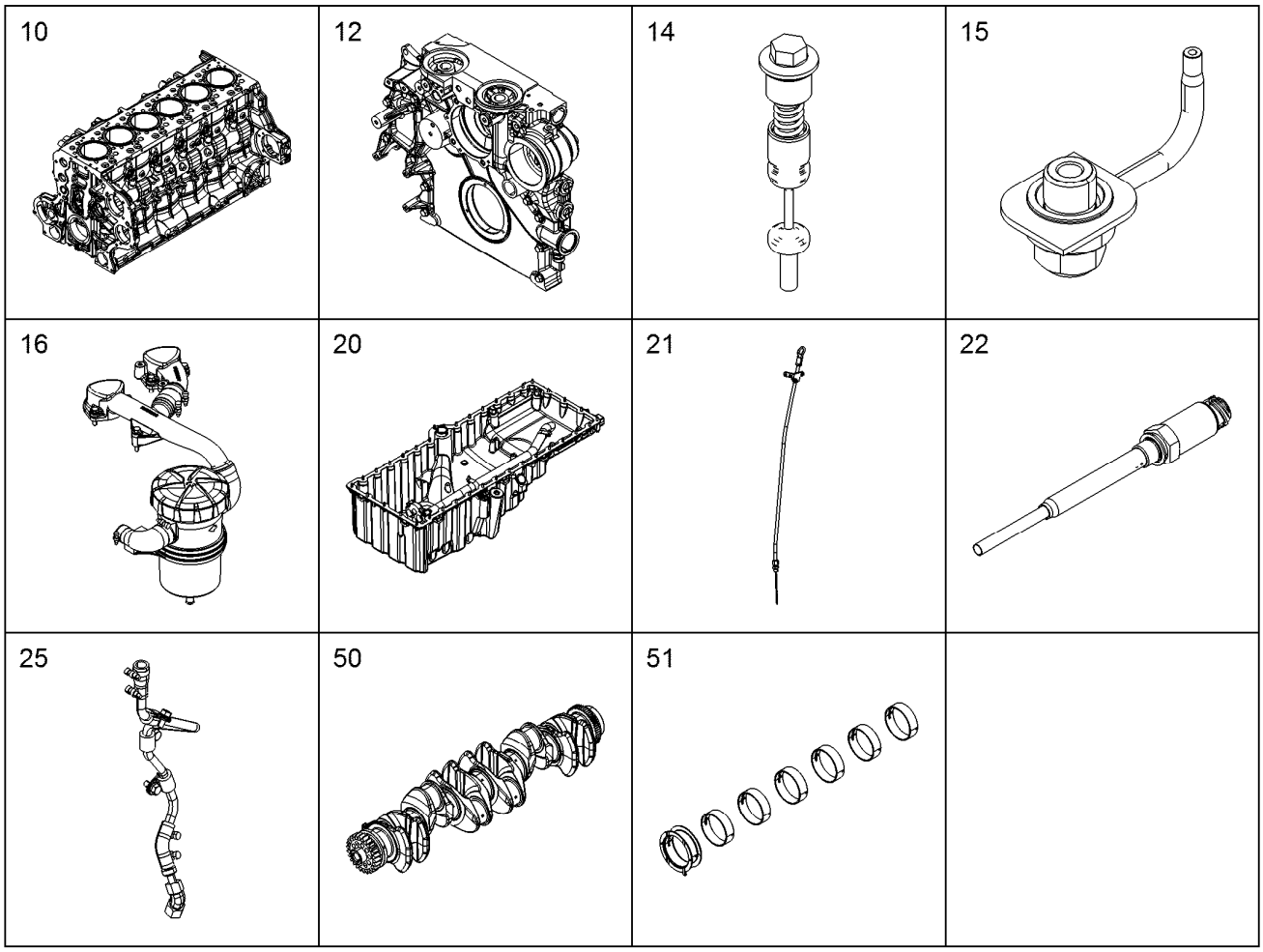

Pos.	Item	Quantity	Description	Bezeichnung
481	10142864	1	TRANSPORT DEVICE ATTACHEMENT ⇨ ❑ 246	TRANSPORTVORRICHTUNG AN
520	10115829	1	FLYWHEEL HOUSING MOUNTING SAE 1 ⇨ ❑ 247	SCHWUNGRADGEHAEUSE AN
521	10116110	1	LOCKING PIECES ⇨ ❑ 248	VERSCHLUSSTEILE
524	10128439	1	LOCKING PIECES ⇨ ❑ 249	VERSCHLUSSTEILE
526	10127979	1	LOCKING PIECES ⇨ ❑ 250	VERSCHLUSSTEILE
530	9077238	1	FLYWHEEL ASSEMBLY SAE 1X1,68 ⇨ ❑ 251	SCHWUNGRAD ANBAU
570	12869773	1	MOTOR CONTROL DEVICE ECU2	MOTORSTEUERGERAET
571	10144227	1	CONTROL BOX ANNEXE ⇨ ❑ 252	STEUERGERAET ANBAU
580	10151328	1	CABLE HARNESS MOUNTING ⇨ ❑ 254	KABELBAUM ANBAU
581	12583633	1	ENGINE CONTROL SENSORS D936 A7 ⇨ ❑ 258	MOTORREGELUNGSENSORIK
630	10142747	1	LOCKING PIECES ⇨ ❑ 259	VERSCHLUSSTEILE
650	10125687	1	POWER TAKE-OFF ADD-ON ⇨ ❑ 260	NEBENABTRIEB ANBAU
652	10144036	1	POWER TAKE-OFF ADD-ON ⇨ ❑ 261	NEBENABTRIEB ANBAU

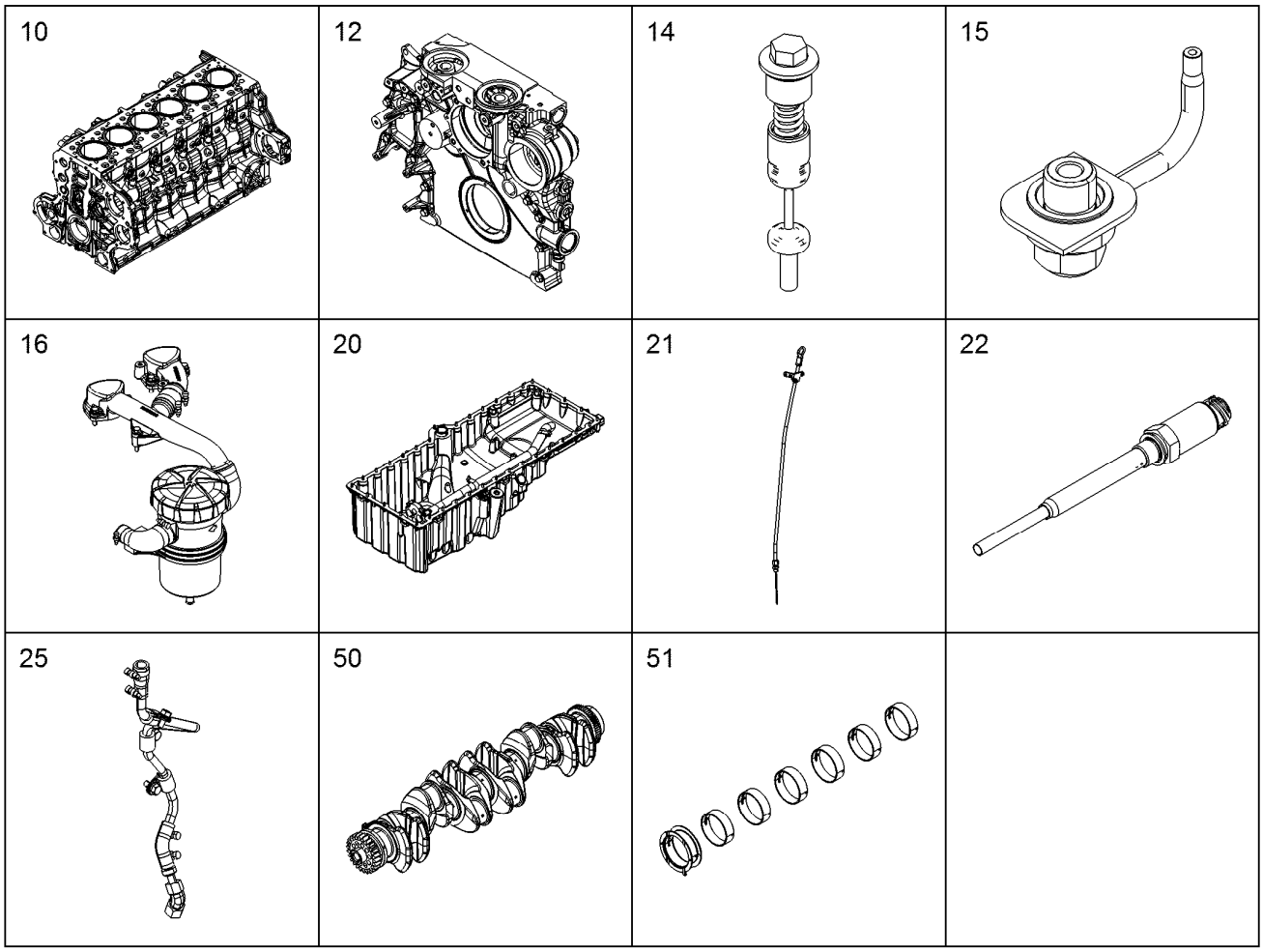

Pos.	Item	Quantity	Description	Bezeichnung
654	9078301	1	LOCKING PIECES ⇨ ❑ 263	VERSCHLUSSTEILE
939	10148366	1	SEAL KIT DIESEL ENGINE ⇨ ❑ 264	DS DIESELMOTOR

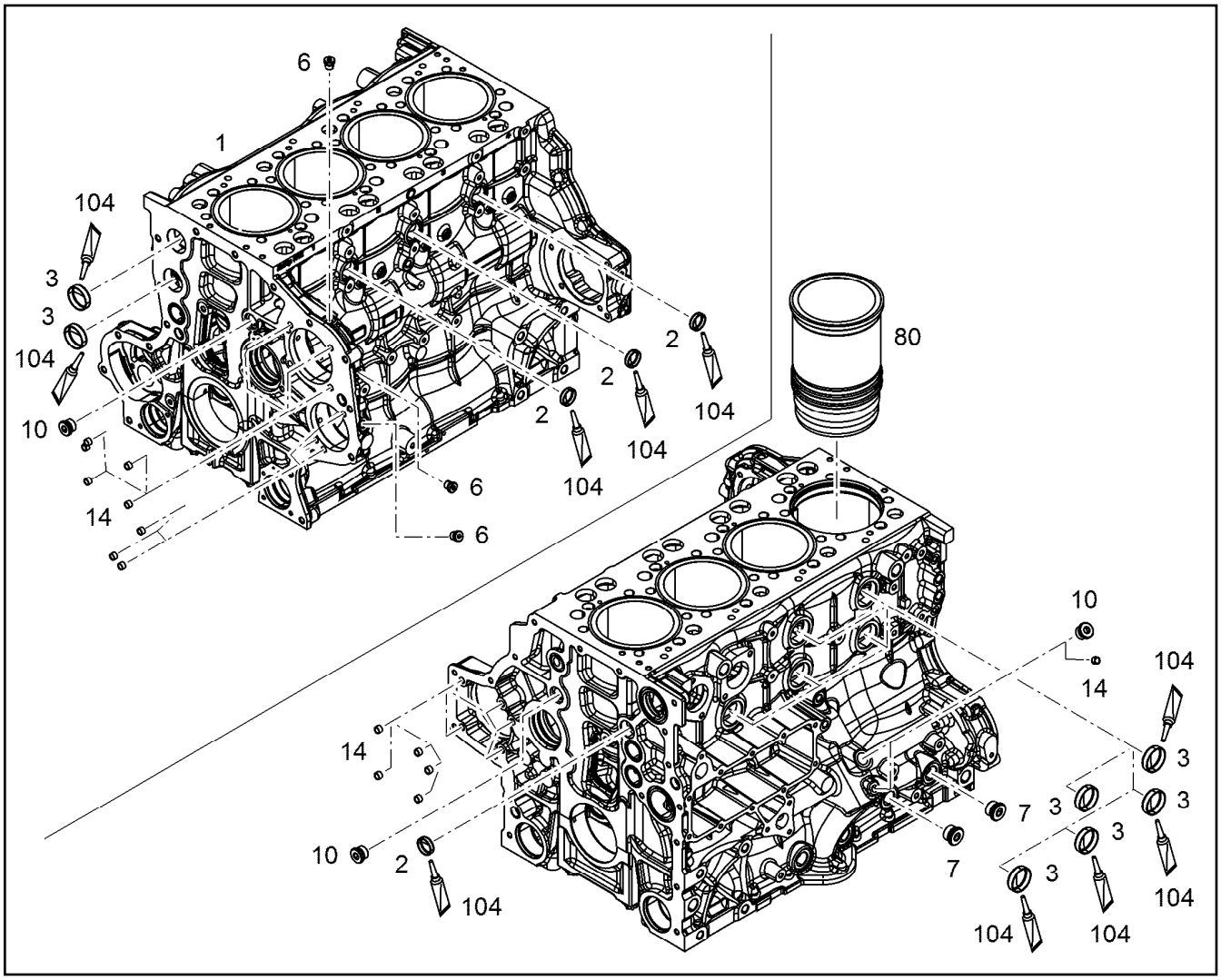

Pos.	Item	Quantity	Description	Bezeichnung
1	10154379	1	CRANKCASE PRE-ASSY. R-MOTORXD944 ⇨ ❑ 168	KURBELGEHAEUSE VORM.
2	12209779	4	END COVER DIN 443 B 480H	VERSCHLUSSDECKEL
3	12209783	7	END COVER DIN 443 B 480H	VERSCHLUSSDECKEL
6	7380566	3	SCREW PLUG VSTI M14X1,5	VERSCHLUSSSCHRAUBE
7	7381457	2	SCREW PLUG VSTI M26X1,5 CR6-FREI	VERSCHLUSSSCHRAUBE
10	7380177	3	SCREW PLUG VSTI M22X1,5 CR6-FREI	VERSCHLUSSSCHRAUBE
14	10030837	14	SEALING PLUG LK 950	DICHTSTOPFEN
80	10154458	4	CYLINDER R-MOTORXD944/D94 ⇨ ❑ 169	ZYLINDER
104	8655032	1	GLUE 10ML FLASCHE -50/+175 °C	KLEBSTOFF

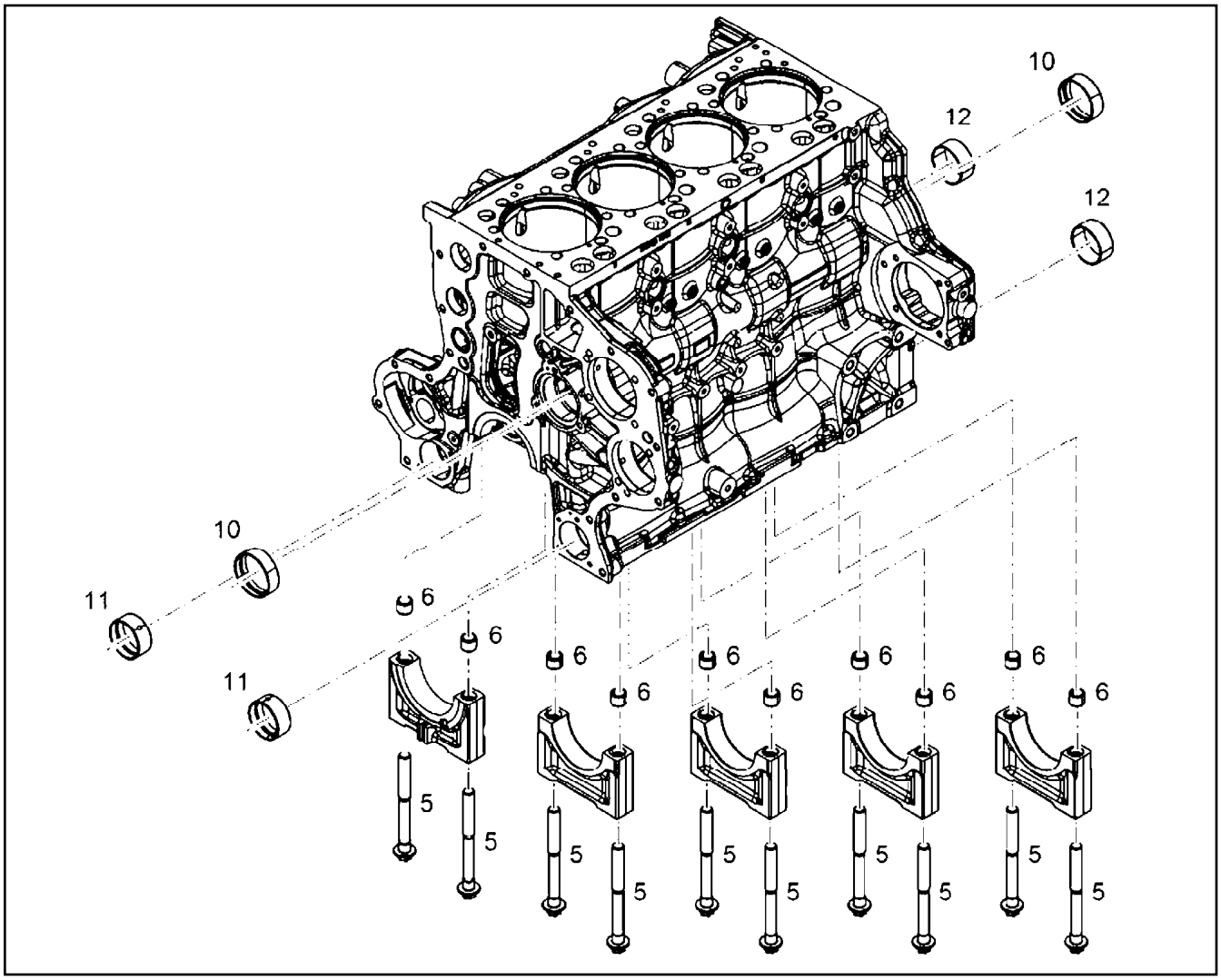

Pos.	Item	Quantity	Description	Bezeichnung
5	10130816	10	HEXALOBULAR HEAD SCREW M18X2X181	SECHSRUNDSCHRAUBE
6	9177636	10	TIGHT FIT SLEEVE 15,5X19,5X24	PASSHUELSE
10	9274859	5	CAMS SHAFT BUSHING	NOCKENWELLENBUCHSE
11	9132281	2	CAMS SHAFT BUSHING	NOCKENWELLENBUCHSE
12	9888259	6	BEARING BUSH 60X65X28 GLYCO 48	LAGERBUCHSE

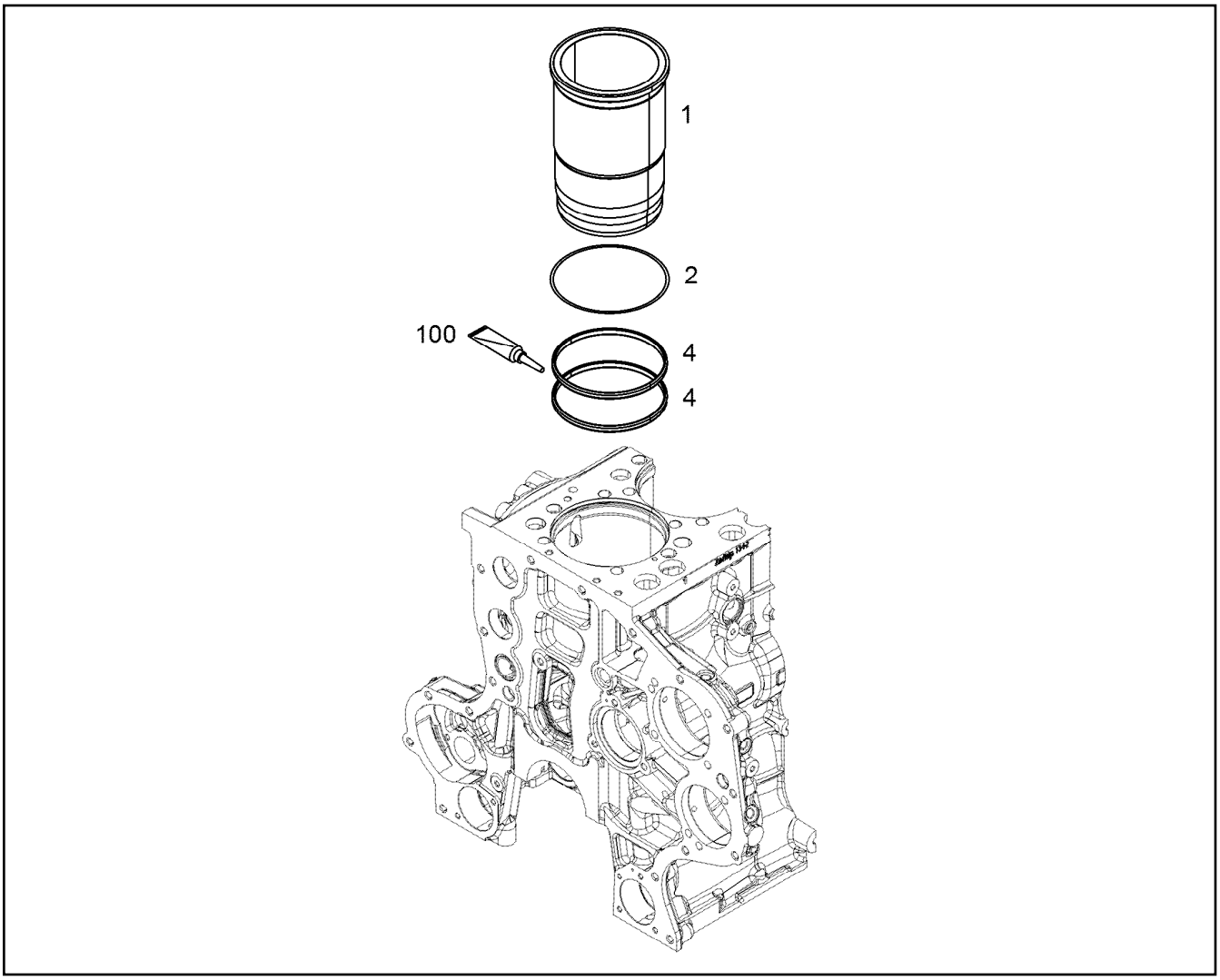

Pos.	Item	Quantity	Description	Bezeichnung
1	10153973	1	CYLINDER BUSHING E2728-MO	ZYLINDERBUCHSE
2	10154459	1	SHEET GASKET 150X158X0,10 CuZn30	DICHTSCHEIBE
4	10282774	2	O-RING 145 75 FKM 17939	O-RING
100	10285708	1	GREASE NBU 30 1KG DOSE	FETT

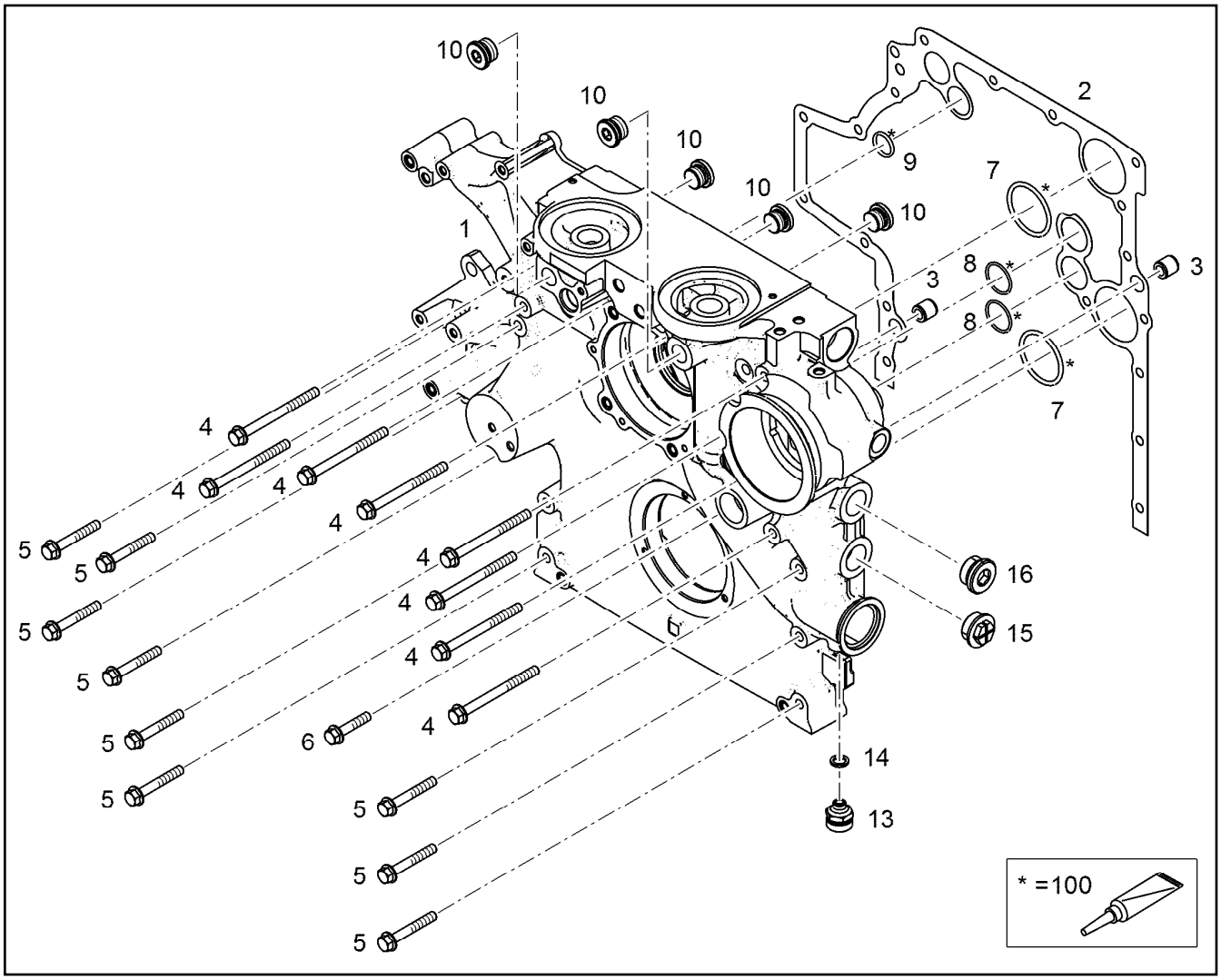

Pos.	Item	Quantity	Description	Bezeichnung
1	11359503	1	RK AGGREGATE SUPPORT PRE-ASS.	RS AGGREGATETRAEGER VO
1	12835708	1	AGGREGATE SUPPORT PRE-ASS.	AGGREGATETRAEGER VORM.
2	10126738	1	SEAL 0,33 METALOSEAL 1	DICHTUNG
3	10134348	2	TIGHT FIT SLEEVE 12X20X20 100Cr6	PASSHUELSE
4	12207562	8	HEX SCREW EN 1665 M10X120 10.9 FLZN	SECHSKANTSCHRAUBE
5	10299589	9	HEX SCREW EN 1665 M10X70 10.9 FLZN	SECHSKANTSCHRAUBE
6	10299585	1	HEX SCREW EN 1665 M10X50 10.9 FLZN	SECHSKANTSCHRAUBE
7	7381779	2	O-RING DIN 3771 59,92X3,53 HNBR 70 A	O-RING
8	7380653	2	O-RING ISO 3601-1 34,59X2,62 FKM 90 A,BK	O-RING
9	10004261	1	O-RING 26X3 HNBR 70	O-RING
10	10041903	5	SCREW PLUG VSTI M24X1,5	VERSCHLUSSSCHRAUBE
13	10011832	1	VALVE	VENTIL
14	7381225	1	SEALING RING DIN 7603 A14X20X2,5 Cu	DICHTRING
15	10465711	2	SEALING PLUG GPN 735 M33X2 PA 6	DICHTSTOPFEN
16	10043136	1	SCREW PLUG VSTI M33X2 CR6-FREI	VERSCHLUSSSCHRAUBE
100	10285708	1	GREASE NBU 30 1KG DOSE	FETT

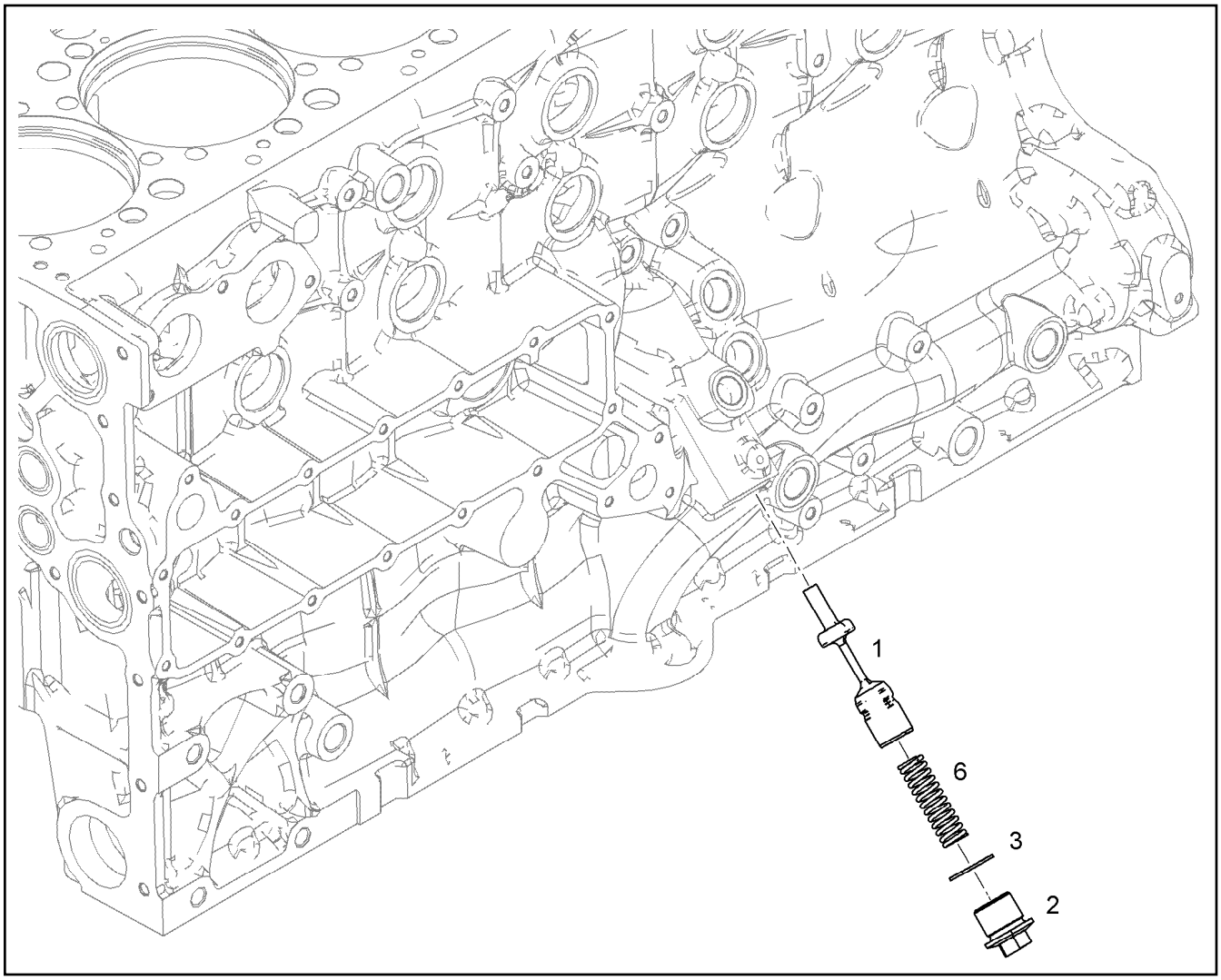

Pos.	Item	Quantity	Description	Bezeichnung
1	10149655	1	PISTON 31CrMoV9	KOLBEN
2	10137918	1	SCREW PLUG M30X1,5 11SMnPb30+C VER	VERSCHLUSSSCHRAUBE
3	710106508	1	SEALING RING DIN 7603 A30X36X2 CU	DICHTRING
6	11118160	1	PRESSURE SPRING 3X17X74,67 OTEVA 70	DRUCKFEDER

Pos.	Item	Quantity	Description	Bezeichnung
1	10151634	1	PISTON COOLING PRE-ASS.	KOLBENKUEHLUNG VORM.

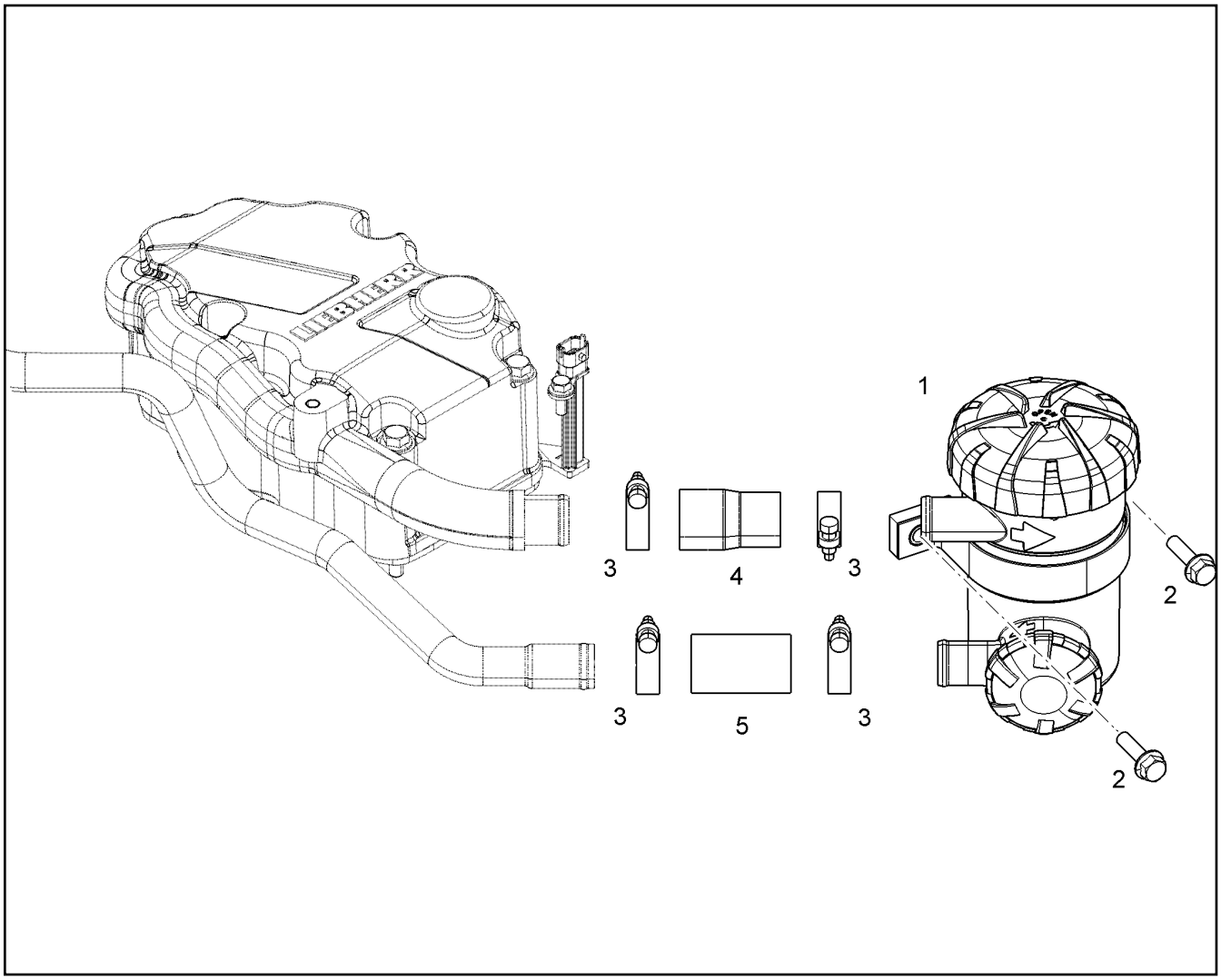

Pos.	Item	Quantity	Description	Bezeichnung
1	10136798	1	CRANKCASE BREATHER ⇨ ❑ 174	KURBELGEHAEUSEENTLUEFT
2	11826563	2	HEX SCREW EN 1665 M8X30 8.8 480H	SECHSKANTSCHRAUBE
3	774215008	4	HOSE CLAMP 26/20-32/12 W3	SCHLAUCHSCHELLE
4	10126417	1	RUBBER CONNECTION Rubber	GUMMIMUFFE
5	9271340	1	RUBBER CONNECTION 25 X35/33X56 L.	GUMMIMUFFE

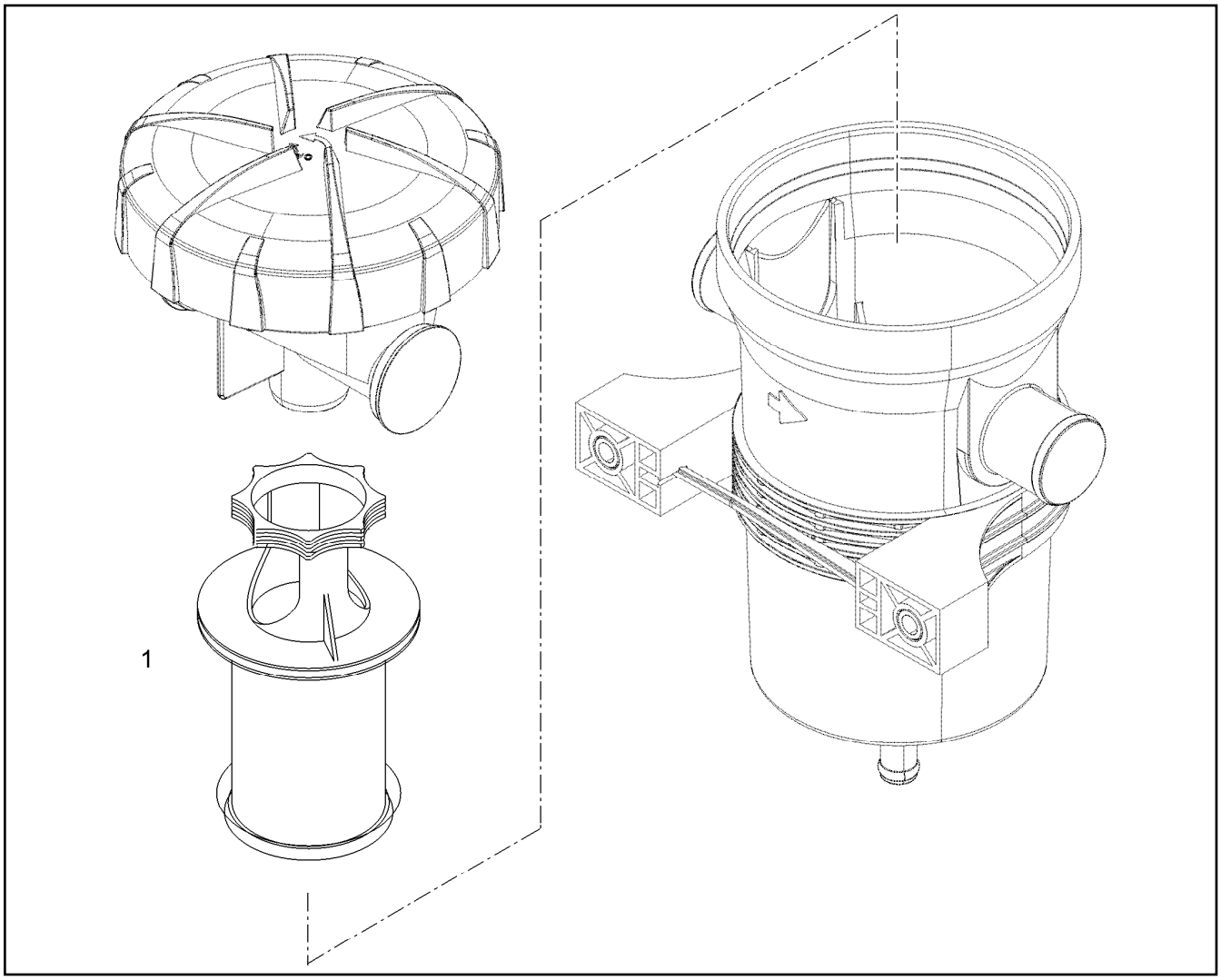

Pos.	Item	Quantity	Description	Bezeichnung
1	10136799	1	SPARE ELEMENT OEL	ERSATZELEMENT

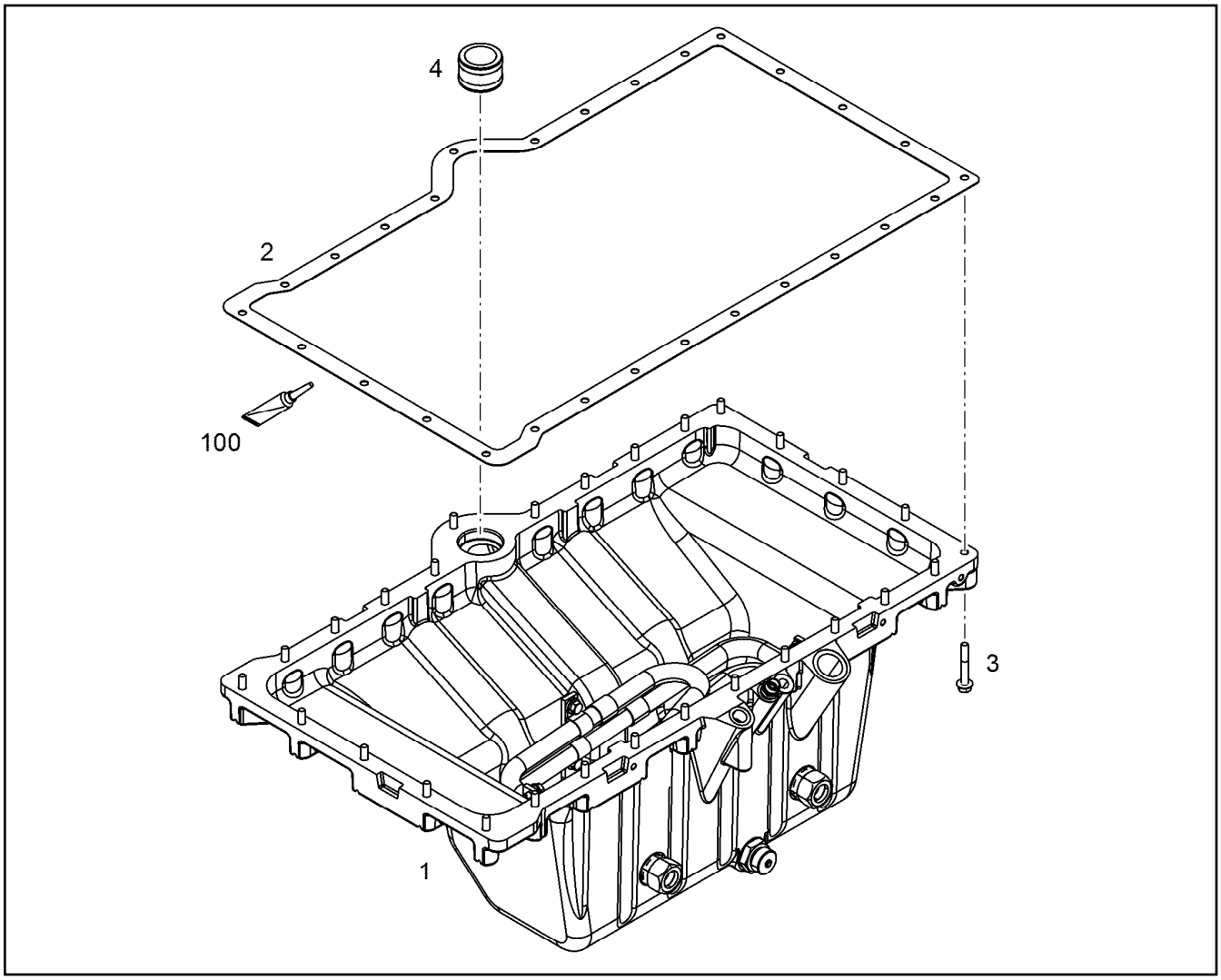

Pos.	Item	Quantity	Description	Bezeichnung
1	10133837	1	OIL SUMP PRE-ASS. R-MOTOR/D934 ⇨ ❑ 176	OELWANNE VORM.
2	10128516	1	SEAL AFM 30	DICHTUNG
3	12210060	28	HEX SCREW EN 1665 M8X55 8.8 480H	SECHSKANTSCHRAUBE
4	10121667	1	CONNECTING PIECE W.O-RING ⇨ ❑ 179	VERBINDUNGSSTUECK M.O-RIN
100	10354595	1	SURFACE SEALING 300ML KARTUSCHE BI	FLAECHENDICHTUNG

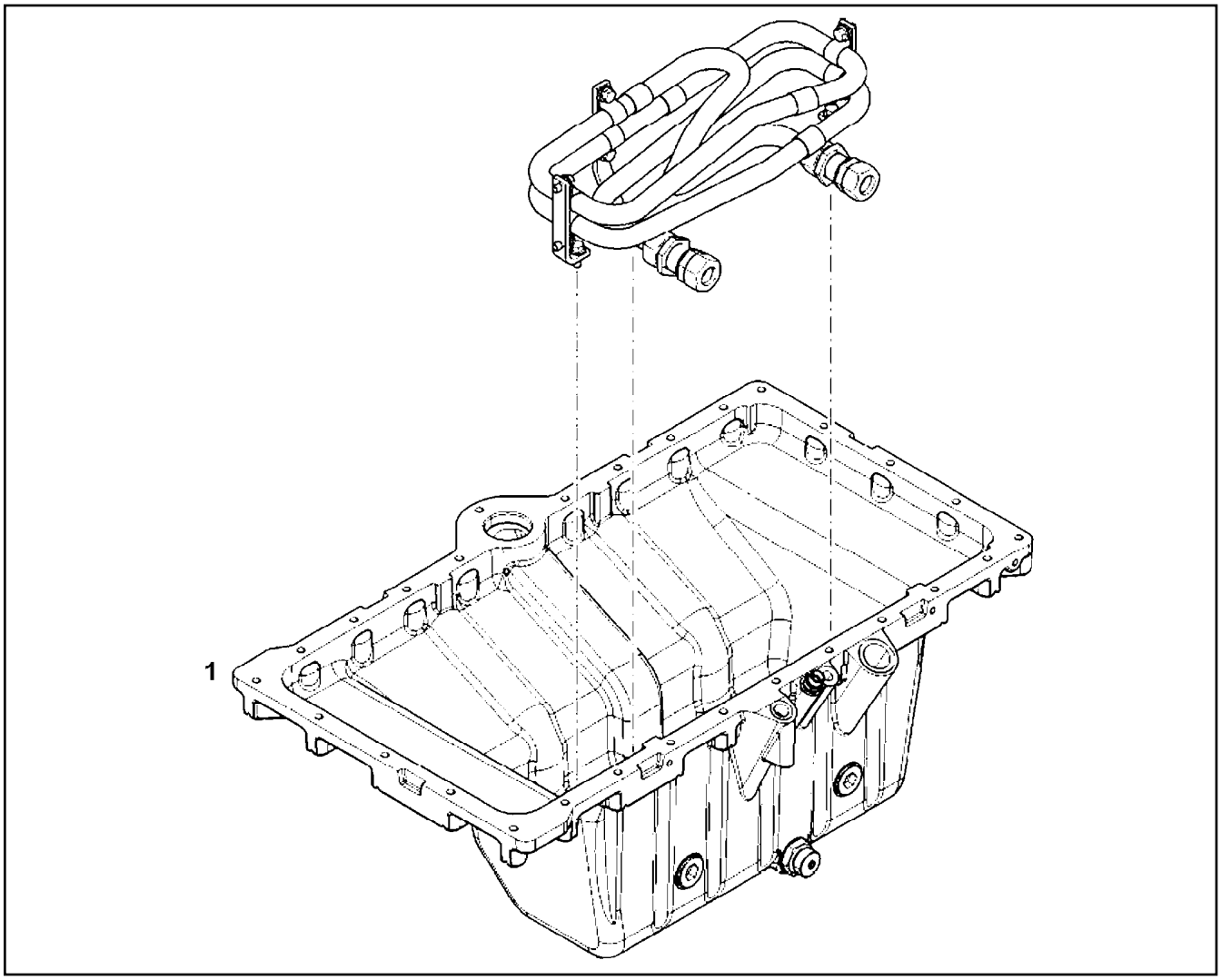

Pos.	Item	Quantity	Description	Bezeichnung
1	10155227	1	OIL SUMP PRE-ASS. R-MOTOR ⇨ ❑ 177	OELWANNE VORM.

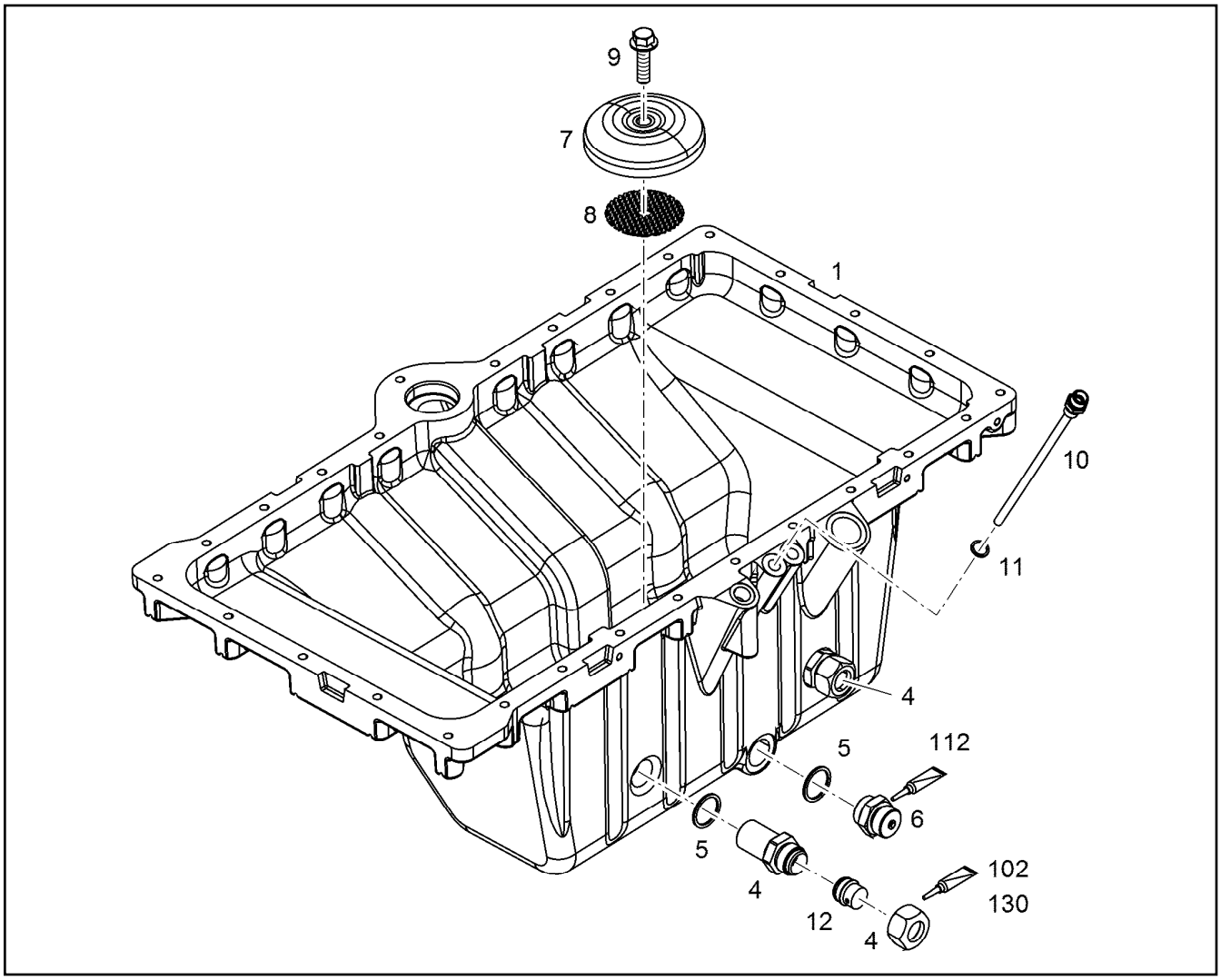

Pos.	Item	Quantity	Description	Bezeichnung
5	710106508	3	SEALING RING DIN 7603 A30X36X2 CU	DICHTRING
6	5004624	1	OIL DRAIN PLUG M 30 1,5 ⇨ ❑ 178	OELABLASSSCHRAUBE
7	10115832	1	COVER LID 112,7 PPA	ABDECKKAPPE
8	9080377	1	PERFORATED PLATE	LOCHBLECH
9	11656452	1	HEX SCREW EN 1665 M12X45 8.8 FLZN SPF	SECHSKANTSCHRAUBE
10	9080660	1	TUBE	ROHR
11	710102508	1	SEALING RING DIN 7603 A14X18X1,5 CU	DICHTRING
12	4772028	2	TAPER COLLET VKA 22L CR6-FREI	VERSCHLUSSKEGEL
102	811208001	1	THREAD LOCK 50ML FLASCHE	GEWINDESICHERUNG
112	8627609	1	SEALANT 90G TUBE	DICHTUNGSMITTEL

Pos.	Item	Quantity	Description	Bezeichnung
2	7011131	1	SEAL	DICHTUNG
3	7013456	1	PROTECTING CAP M26X1,5	SCHUTZKAPPE

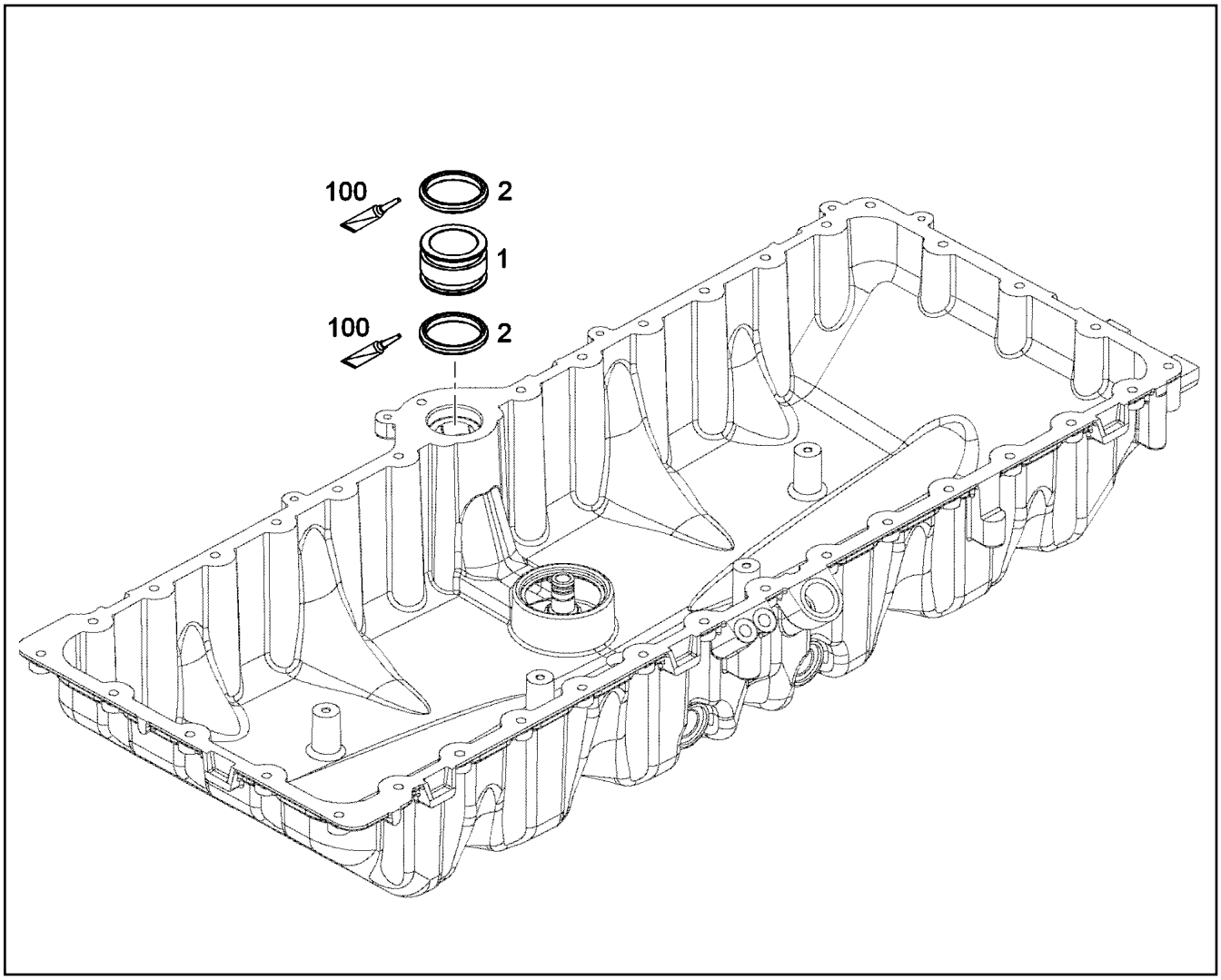

Pos.	Item	Quantity	Description	Bezeichnung
1	10121666	1	CONNECTING PIECE Al Rm>200N/m	VERBINDUNGSSTUECK
2	7381566	2	O-RING DIN 3771 40,64X5,33 FKM 70	O-RING
100	10282622	1	GREASE STABURAGS NBU 30 0.010KG	FETT

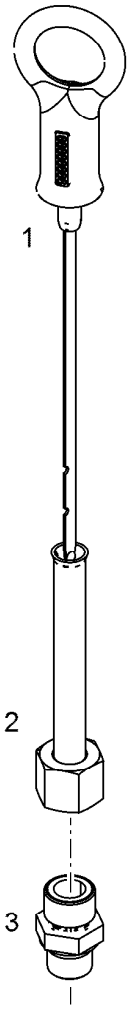

Pos.	Item	Quantity	Description	Bezeichnung
1	10150935	1	OIL DIPSTICK	OELMESSSTAB MIT RING
2	9079532	1	GUIDING PIPE	FUEHRUNGSROHR
3	4981235	1	FITTING ISO 8434-1 GE 10L M14X1,5 CR6-F	VERSCHRAUBUNG

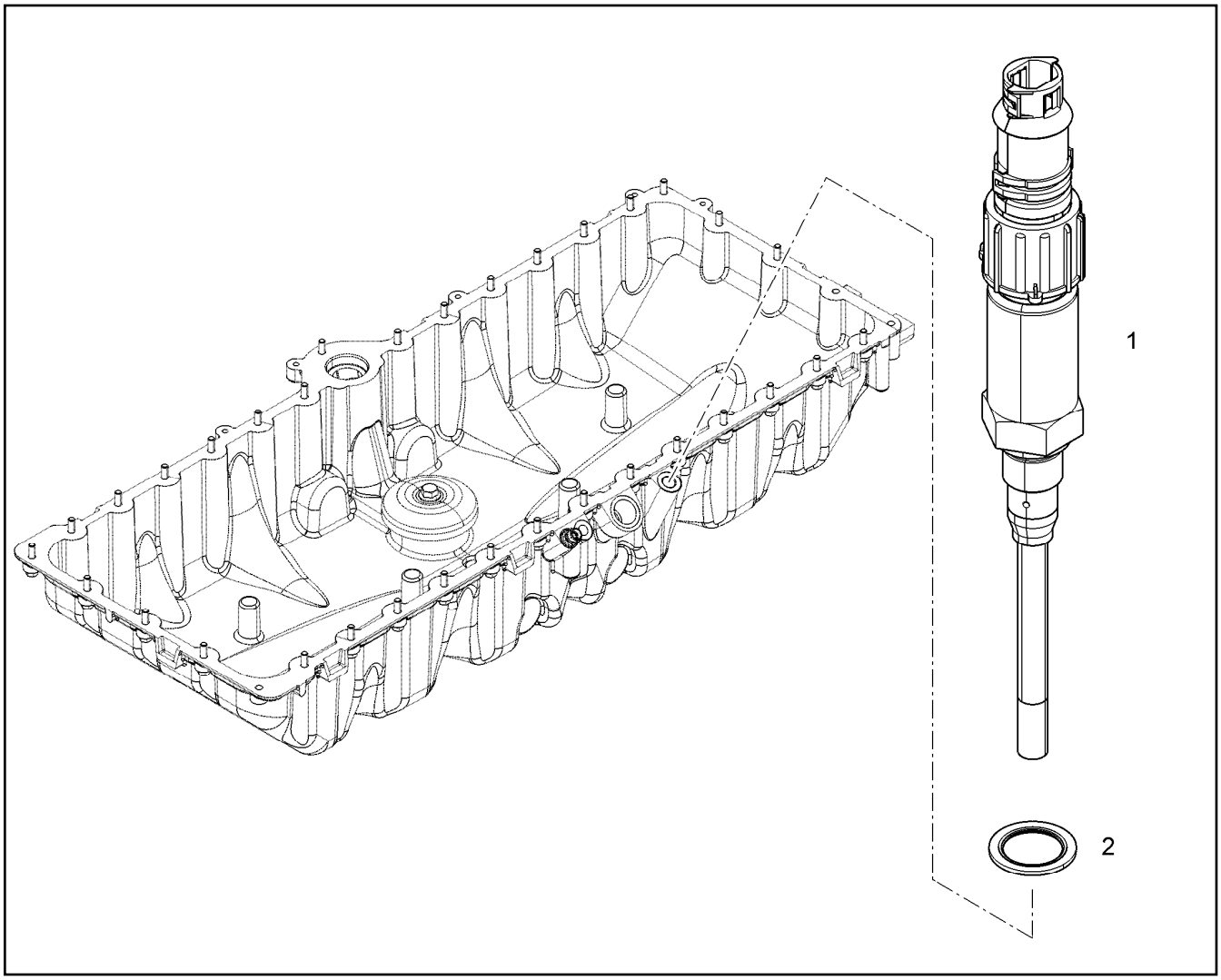

Pos.	Item	Quantity	Description	Bezeichnung
1	10816943	1	LEVEL SENSOR L=115 24V	NIVEAUGEBER
2	10011868	1	SEALING RING 18,7X26X1,5 St/FPM1-80	DICHTRING

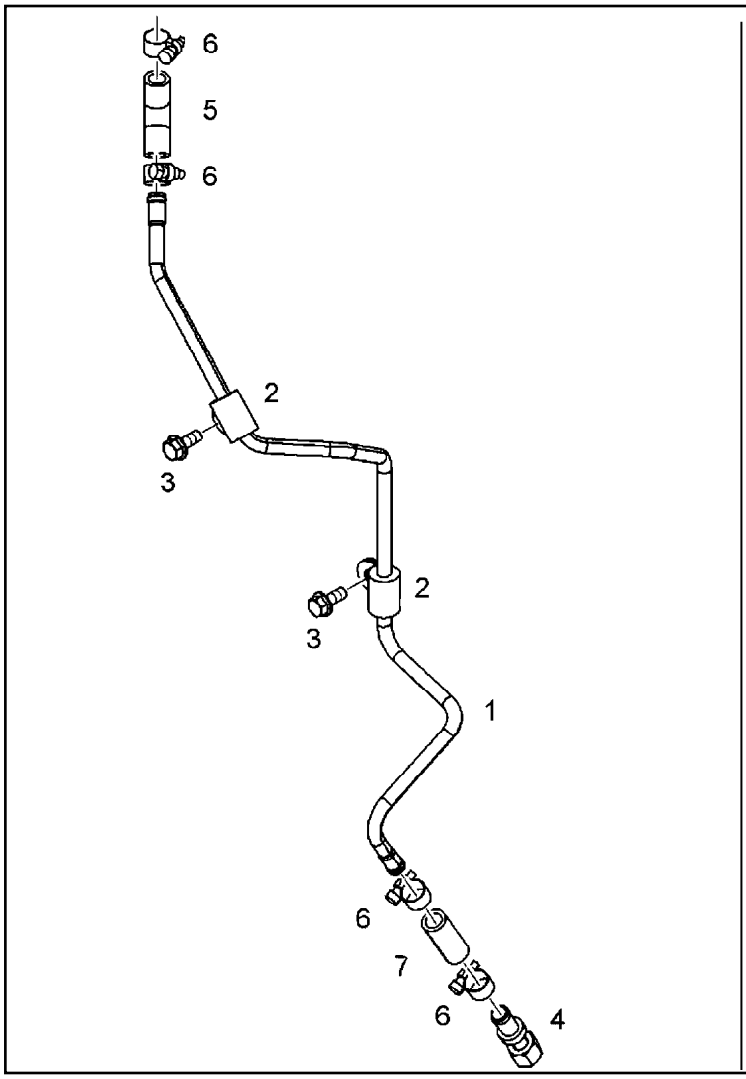

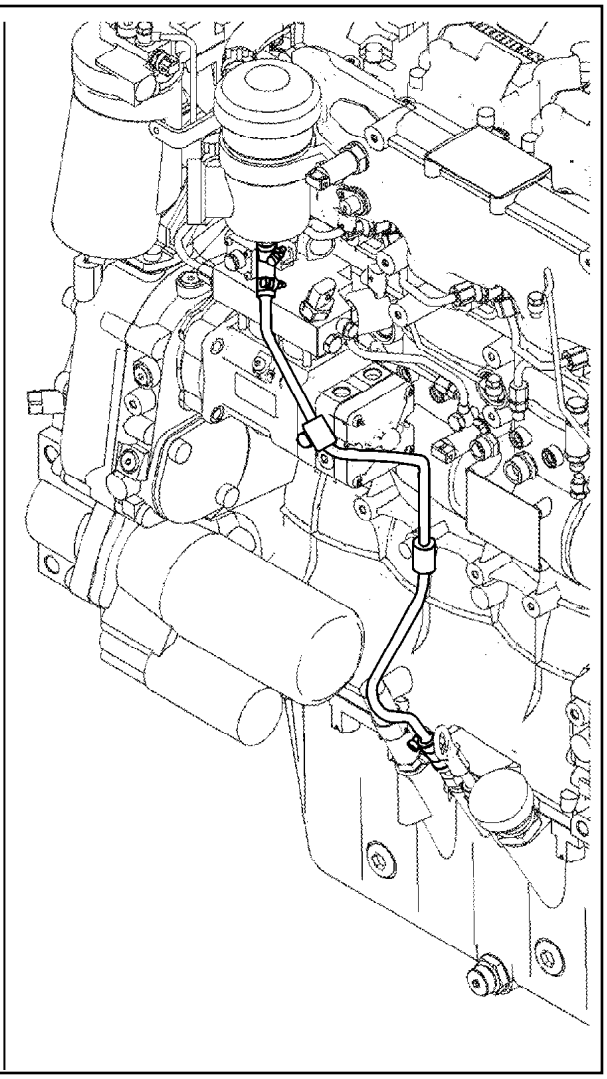

Pos.	Item	Quantity	Description	Bezeichnung
1	10139111	1	OIL RETURN PIPE 10X1	OELRUECKLAUFLEITUNG
2	7382092	2	CLAMP DIN 3016-1 10X25XD1 W1-2-MVQ	SCHELLE
3	11656153	2	HEX SCREW EN 1665 M10X20 8.8 FLZN SPF	SECHSKANTSCHRAUBE
4	10119971	1	NON-RETURN VALVE	RUECKSCHLAGVENTIL
5	10126317	1	RUBBER CONNECTION GUMMI	GUMMIMUFFE
6	4981029	4	HOSE CLAMP DIN 3017-2 17/16 - 18/12 W1-2	SCHLAUCHSCHELLE
6	4601105	1	CLAMP DIN 3017-1 16/12-20/9 W2-2	SCHELLE
7	9079603	1	RUBBER CONNECTION 12 X 18 X 45 GUMMI	GUMMIMUFFE

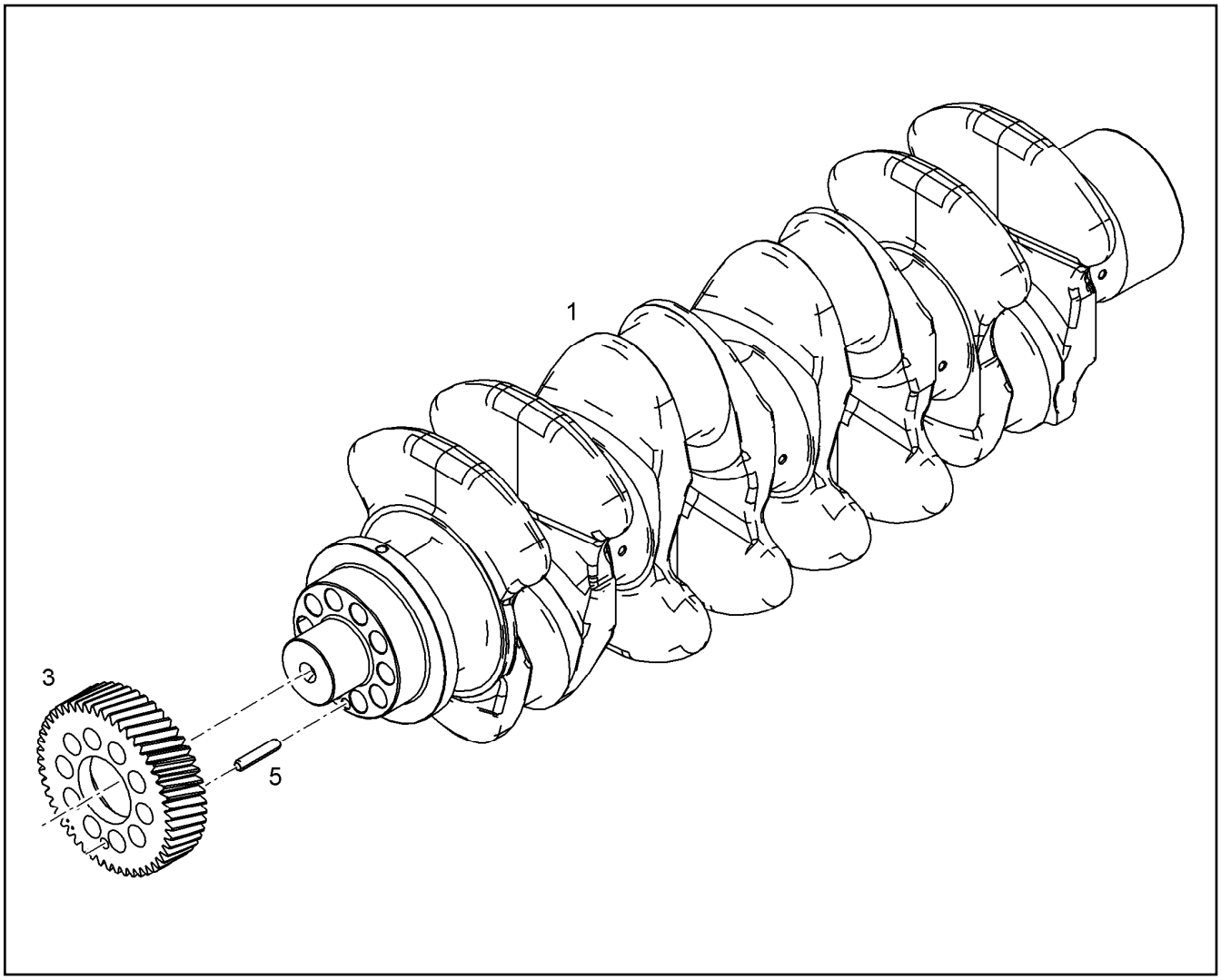

Pos.	Item	Quantity	Description	Bezeichnung
1	10131177	1	CRANKSHAFT R-MOTORXD934 C38 mod BY	KURBELWELLE
3	9072834	1	GEAR WHEEL Z=50 M=2,5	ZAHNRAD
5	4980376	1	DOWEL PIN ISO 8752 8X40 St	SPANNSTIFT

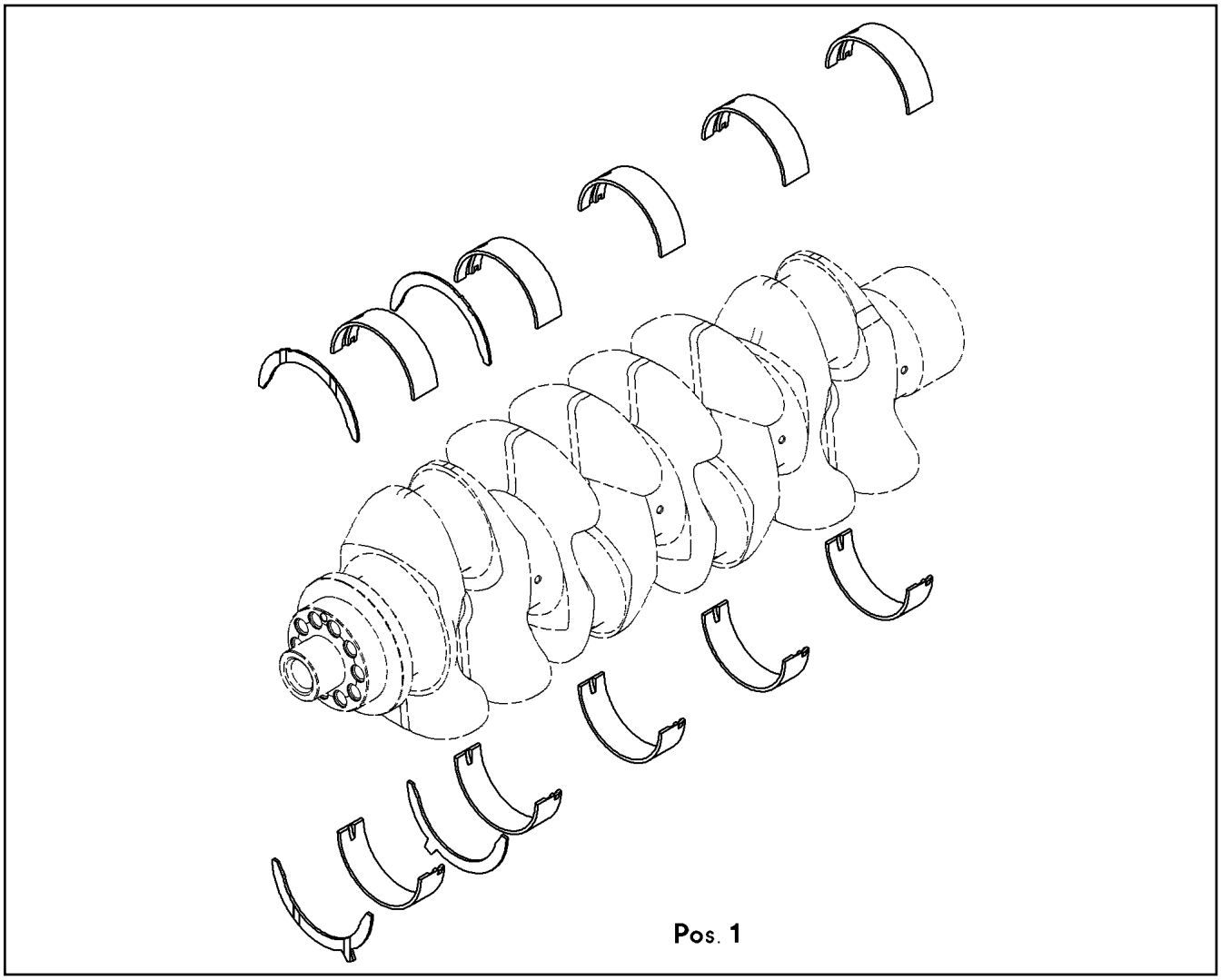

Pos.	Item	Quantity	Description	Bezeichnung
1	10116939	1	RS CRANKSHAFT BEARING KPL. D934 ⇨ ❑ 185	RS KURBELWELLENLAGERUNG

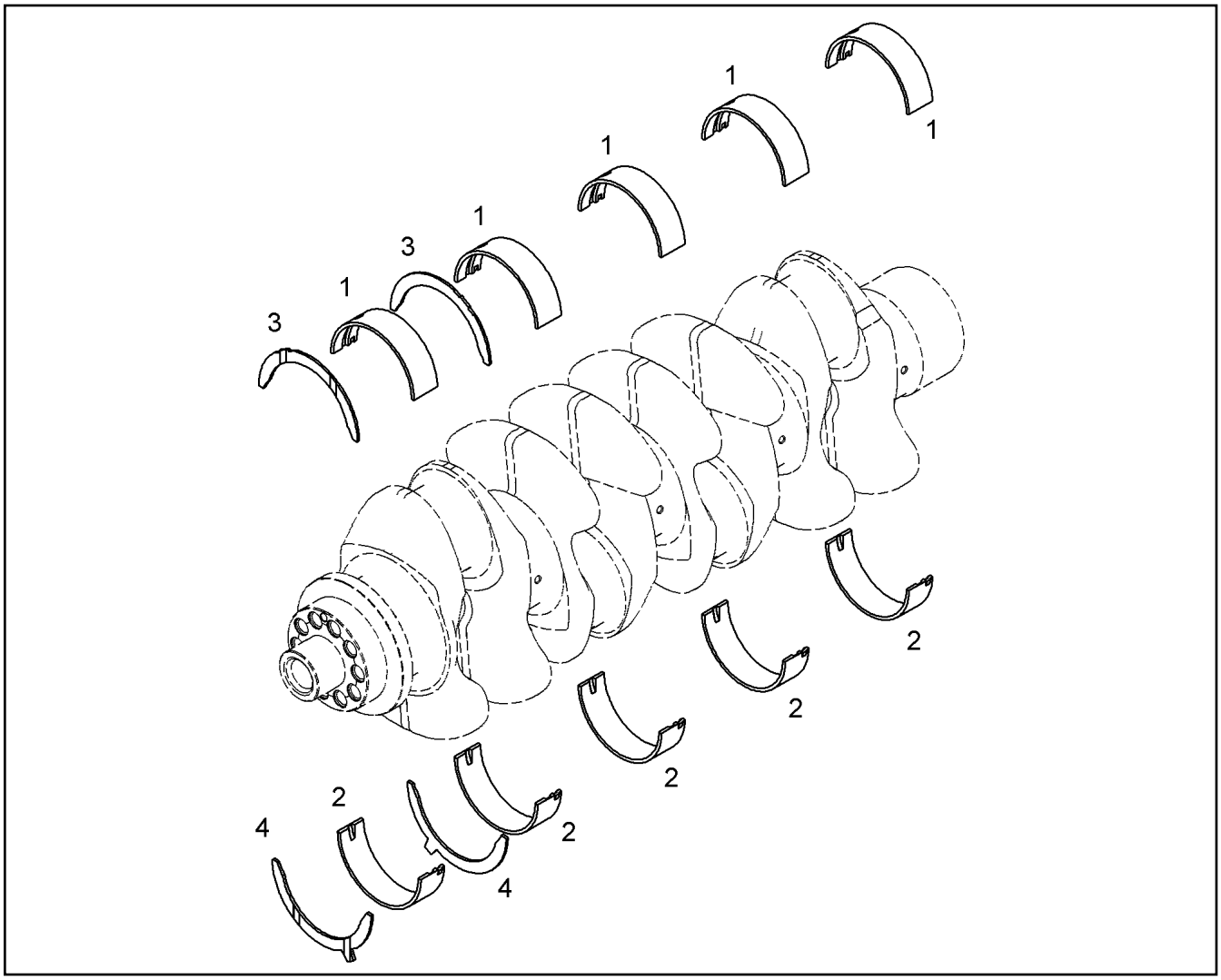

Pos.	Item	Quantity	Description	Bezeichnung
1	9073734	5	MAIN BEARING 104/111/32	HAUPTLAGER
2	9075606	5	MAIN BEARING 104/111/32 MIBA	HAUPTLAGER
3	10119927	2	THRUST WASHER 112X138X3	ANLAUFSCHEIBE
4	10119928	2	THRUST WASHER 112X138X3	ANLAUFSCHEIBE

Pos.	Item	Quantity	Description	Bezeichnung
1	10121952	1	RK CRANKSHAFT SEAL 110 VORNE	RS KURBELWELLENDICHTUNG
2	10121335	1	RK CRANKSHAFT SEAL 115 HINTEN	RS KURBELWELLENDICHTUNG
3	10152974	1	GUARD RING	SCHUTZRING
4	12210040	3	COUNTERSUNK SCREW ISO 14581 M8X20 8	SENKSCHRAUBE
160	12694669	1	ASSEMBLY GEL 1KG DOSE	MONTAGE-GEL

Pos.	Item	Quantity	Description	Bezeichnung
1	10146185	1	BELT PULLEY 31.5X8PKX215	RIEMENSCHEIBE
2	10142170	1	CENTERING FLANGE 42CrMo4+N	ZENTRIERFLANSCH
8	10118526	1	VISCOSE DAMPER D934 L	VISKOSEDAEMPFER
10	10118912	6	HEXALOBULAR HEAD SCREW M16X1,5X88	SECHSRUNDSCHRAUBE
11	10144311	1	WASHER 52,2X107X3 -S355J2G3	SCHEIBE

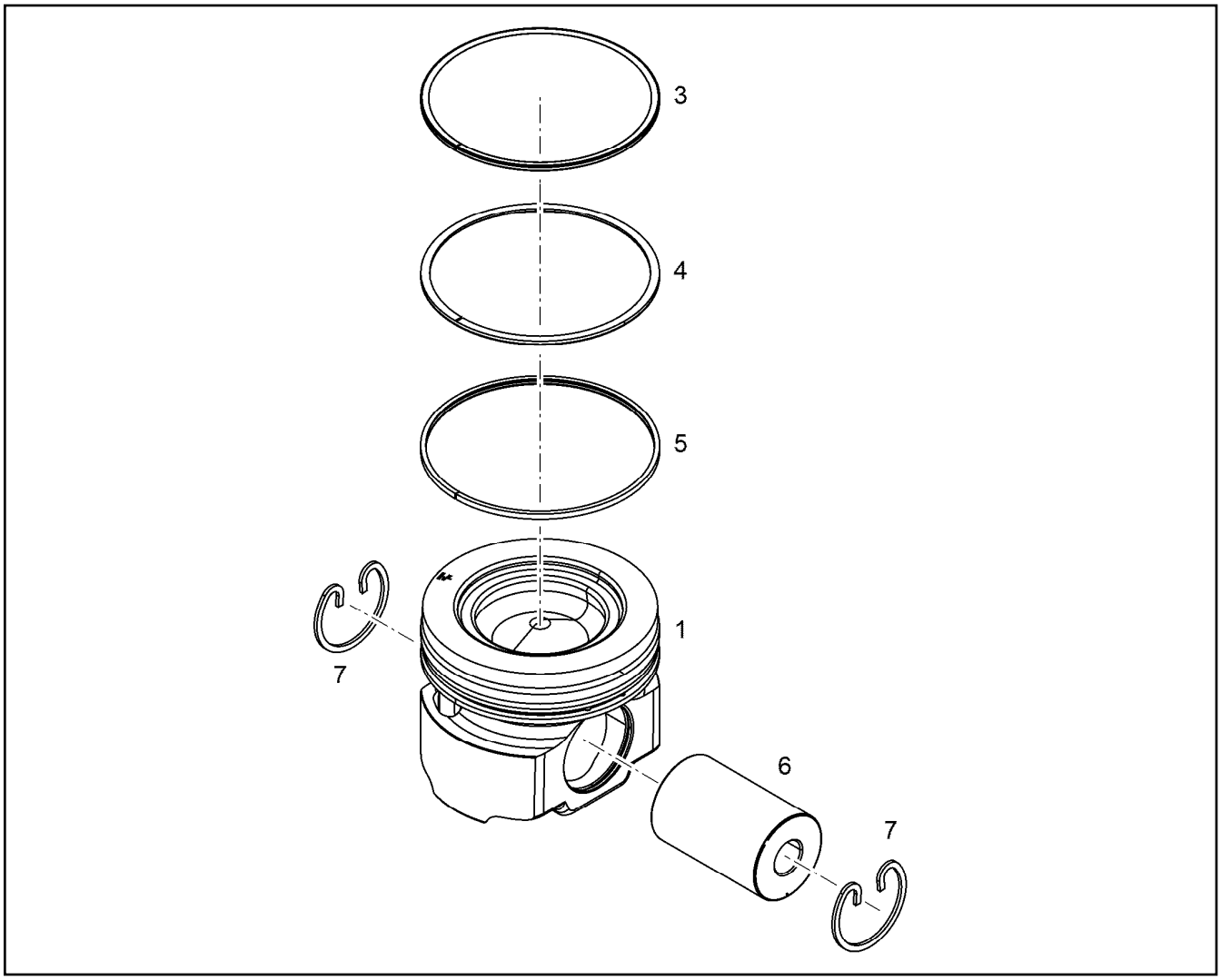

Pos.	Item	Quantity	Description	Bezeichnung
3	11351303	1	KBA-RING 130X121,1X3,5	KBA-RING
4	12476138	1	PISTON RING MG 130X120,5X2,5 F14	M-RING
5	12478647	1	DSF RING 130X121,9X3,5	DSF-RING
7	4980482	2	SNAP RING 52X2 FSt	SPRENGRING

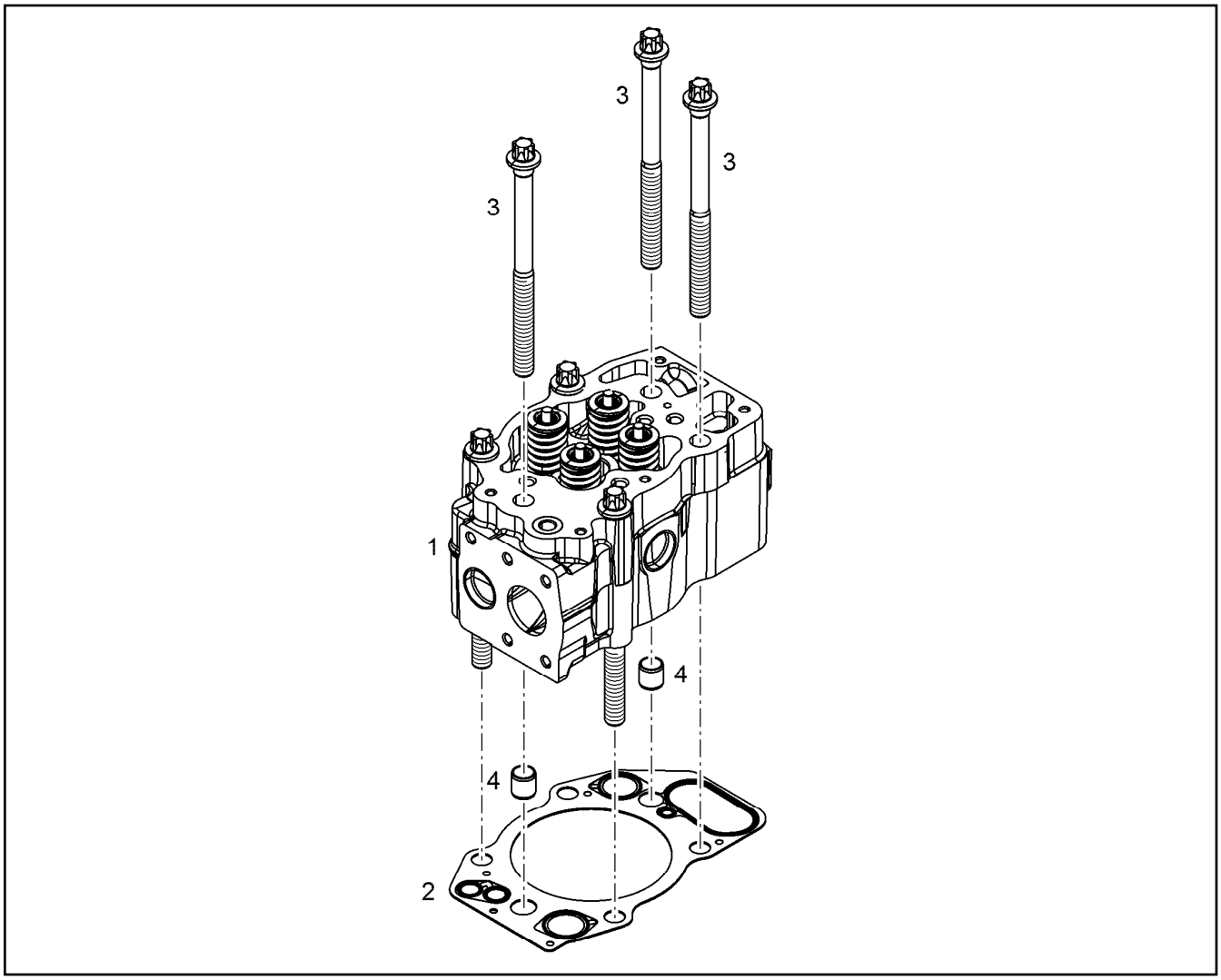

Pos.	Item	Quantity	Description	Bezeichnung
1	10149579	1	CYLINDER HEAD PRE-ASSY. R-MOTOR ⇨ ❑ 190	ZYLINDERKOPF VORM.
2	10133667	1	CYLINDER HEAD GASKET	ZYLINDERKOPFDICHTUNG
3	10125439	6	HEXALOBULAR HEAD SCREW M16X1,5X210	SECHSRUNDSCHRAUBE
4	9074798	2	TIGHT FIT SLEEVE 16X20X20 S235JR	PASSHUELSE

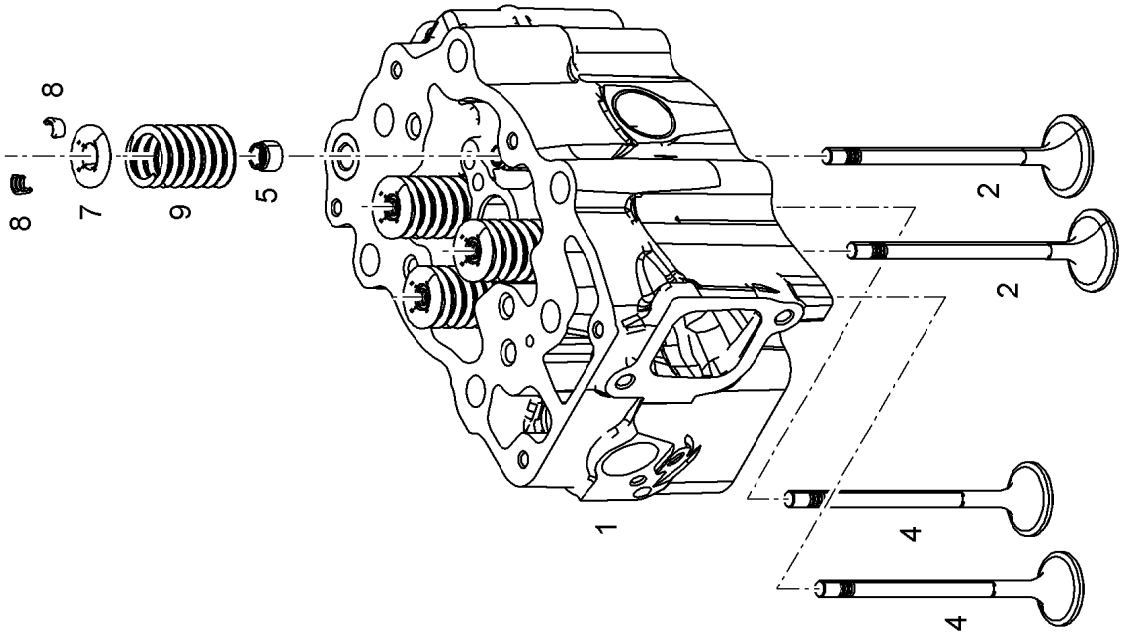
8
8
7
9
5
1
2
2
4
4

Pos.	Item	Quantity	Description	Bezeichnung
1	10149578	1	CYLINDER HEAD R-MOTOR ⇨ ❑ 192	ZYLINDERKOPF
2	10144556	2	INLET VALVE	EINLASSVENTIL
4	10136751	2	OUTLET VALVE	AUSLASSVENTIL
5	10120334	4	VALVE STEM SEAL RING	VENTILSCHAFTDICHTRING
7	9074480	4	SPRING CUP ABOVE 41Cr4	FEDERTELLER OBEN
8	10004331	8	VALVE COLLET MK9	VENTILKEGELSTUECK
8	11357514	8	VALVE COLLET MK9	VENTILKEGELSTUECK
9	9074481	4	PRESSURE SPRING 4,60X28,40X62,70 Otev	DRUCKFEDER

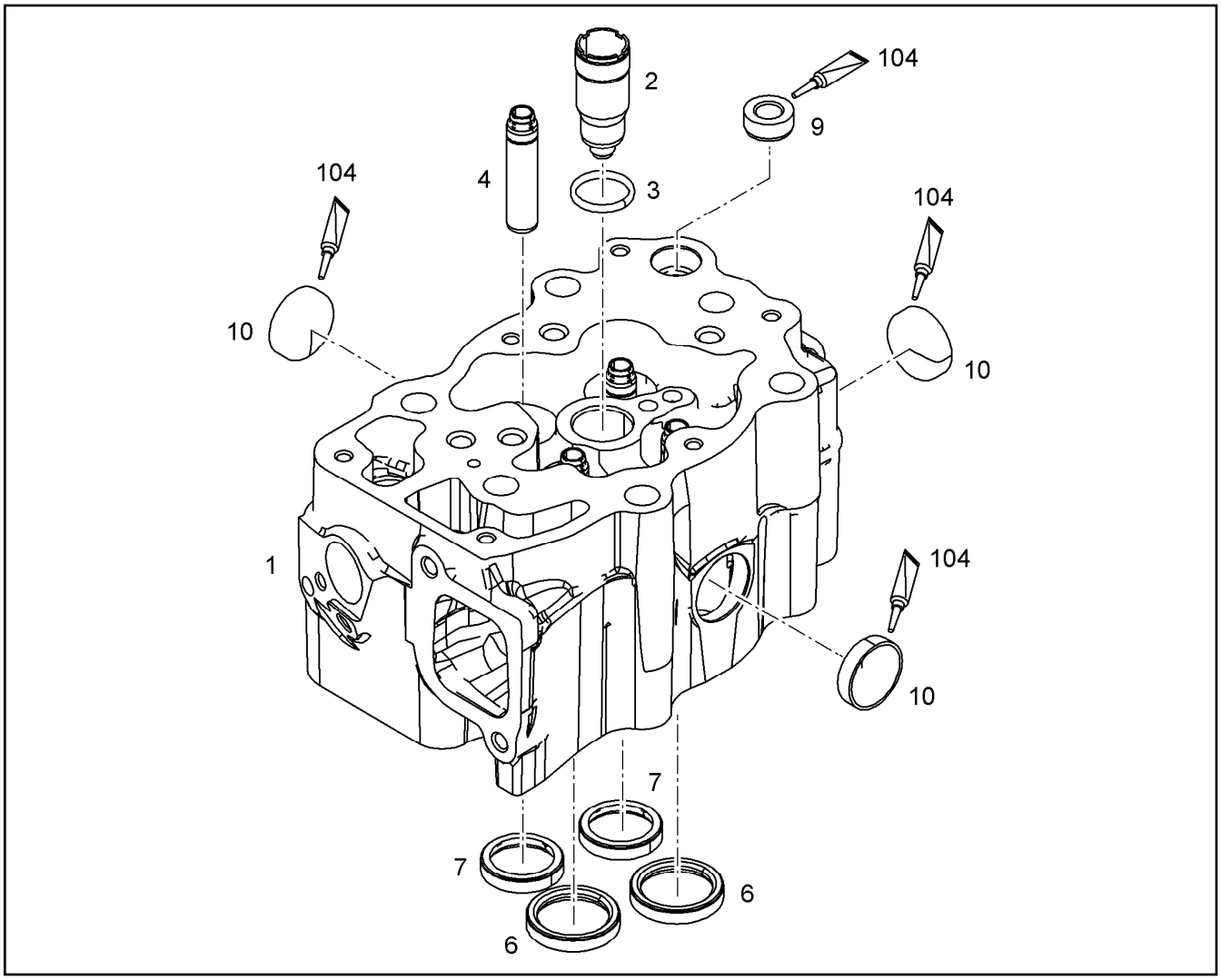

Pos.	Item	Quantity	Description	Bezeichnung
1	10145862	1	CYLINDER HEAD R-MOTOR	ZYLINDERKOPF
2	10152168	1	SLEEVE X46Cr13	HUELSE
3	10342770	1	O-RING AEHNL.ISO 3601-1 25X3 FKM 75	O-RING
4	10139064	4	VALVE STEM GUIDE	VENTILFUEHRUNG
6	10149739	2	INLET VALVE SEAT INSERT	VENTILSITZRING EINLASS
7	10128680	2	EXHAUST VALVE SEAT INSERT PL 510	VENTILSITZRING AUSLASS
9	9079078	1	THREADED BUSHING	GEWINDEBUCHSE
10	12209781	3	END COVER DIN 443 B 480H	VERSCHLUSSDECKEL
104	8655023	1	GLUE 250ML FLASCHE -50/+175 °C	KLEBSTOFF

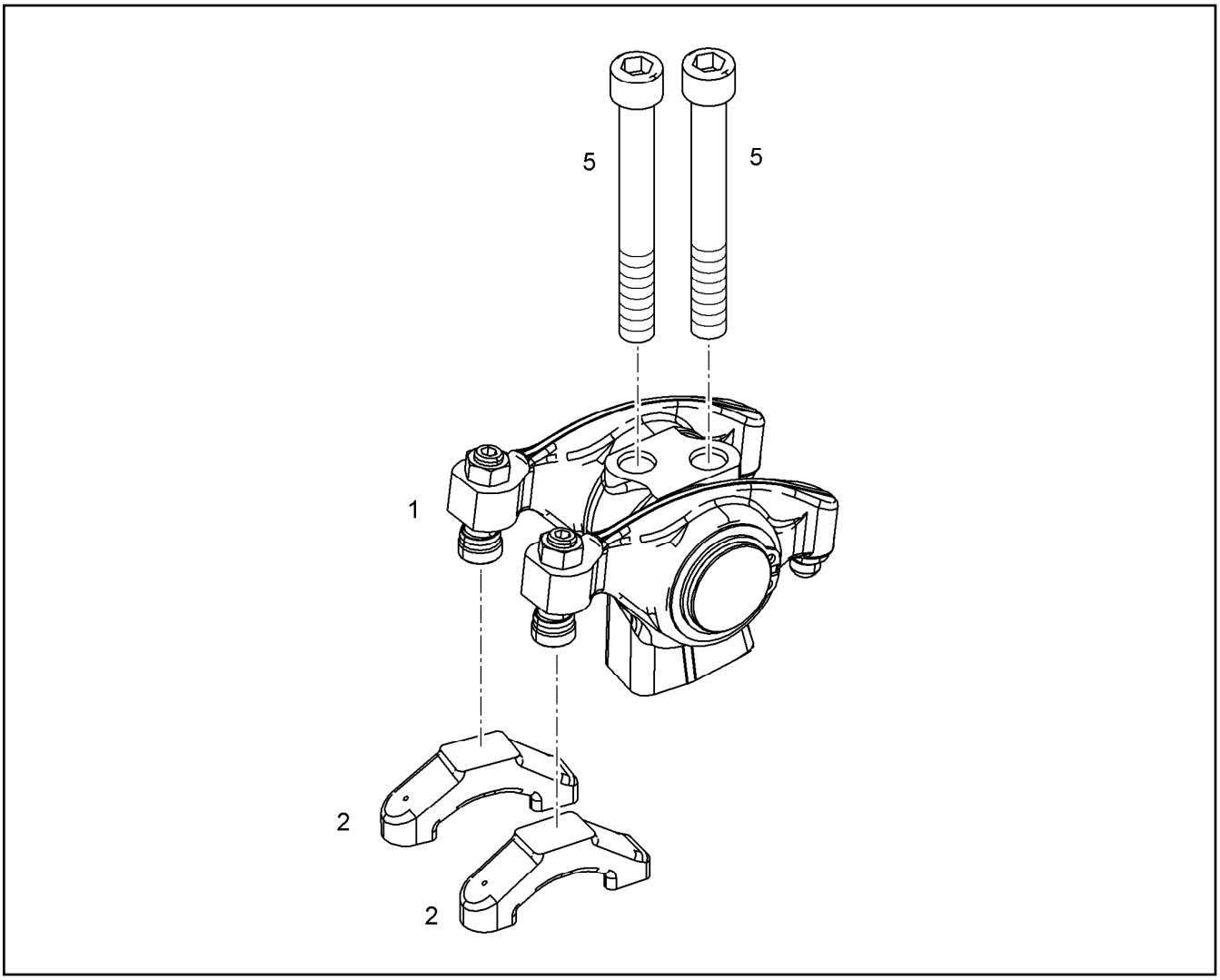

Pos.	Item	Quantity	Description	Bezeichnung
1	11448005	1	ROCKER ARM BRACKET PRE-ASS. ⇨ ❑ 194	KIPPHEBELBOCK VORM.
1	12549825	1	ROCKER ARM BRACKET PRE-ASS.	KIPPHEBELBOCK VORM.
2	10119695	2	VALVE BRIDGE	VENTILBRUECKE
5	4043006	2	SOCKET HEAD SCREW ISO 4762 M12X100 1	ZYLINDERSCHRAUBE

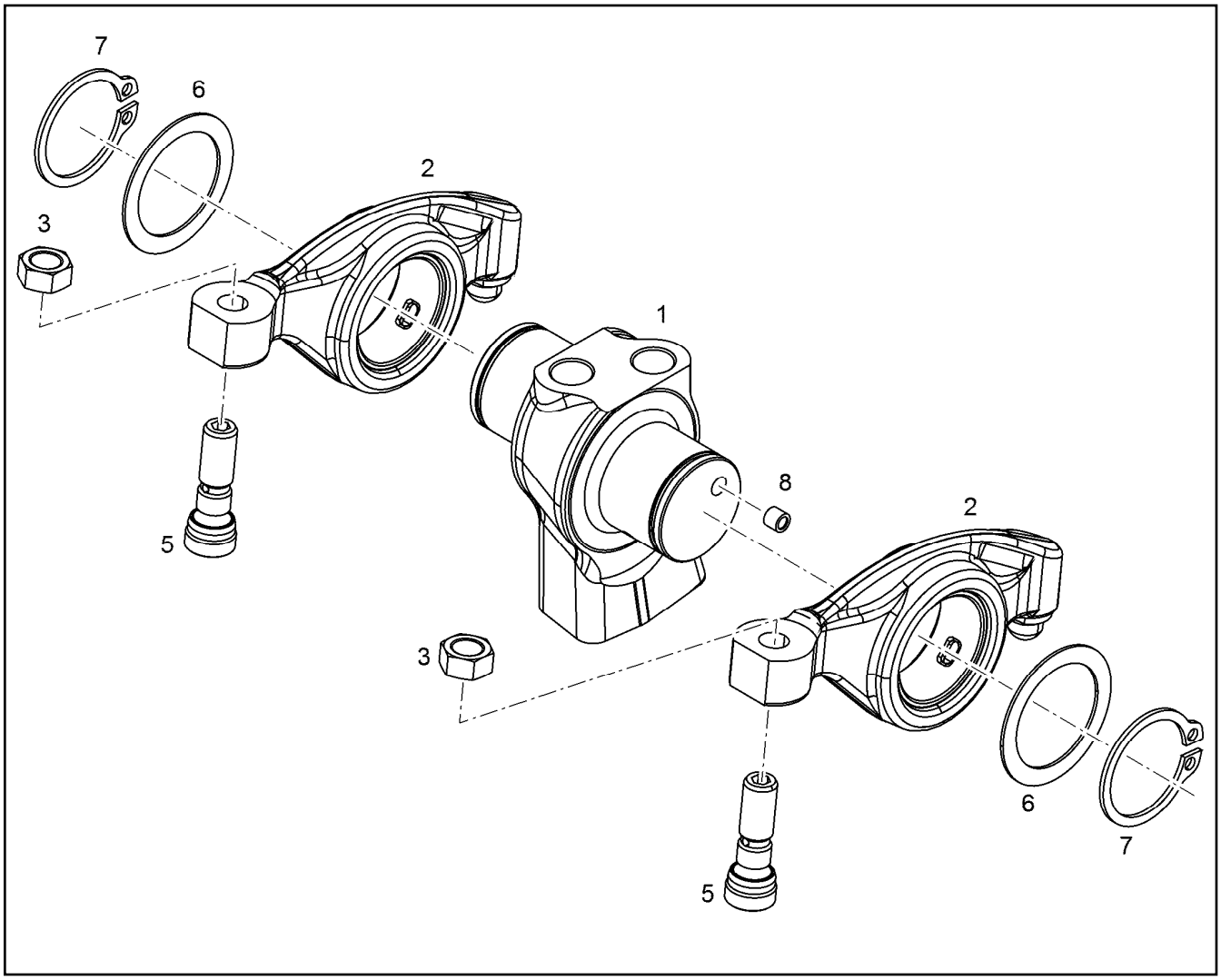

Pos.	Item	Quantity	Description	Bezeichnung
1	11448002	1	ROCKER ARM SUPPORT	KIPPHEBELBOCK
2	11448000	2	ROCKER ARM PRE-ASSY.	KIPPHEBEL VORM.
3	10012557	2	HEX NUT M10X1	SECHSKANTMUTTER
5	10012225	2	ADJUSTING SCREW M10X1	EINSTELLSCHRAUBE
6	9078522	2	WASHER 34X45X1	SCHEIBE
7	428011301	2	LOCKING RING DIN 471 34X1,5	SICHERUNGSRING
8	10036325	1	SEALING PLUG LK 950	DICHTSTOPFEN

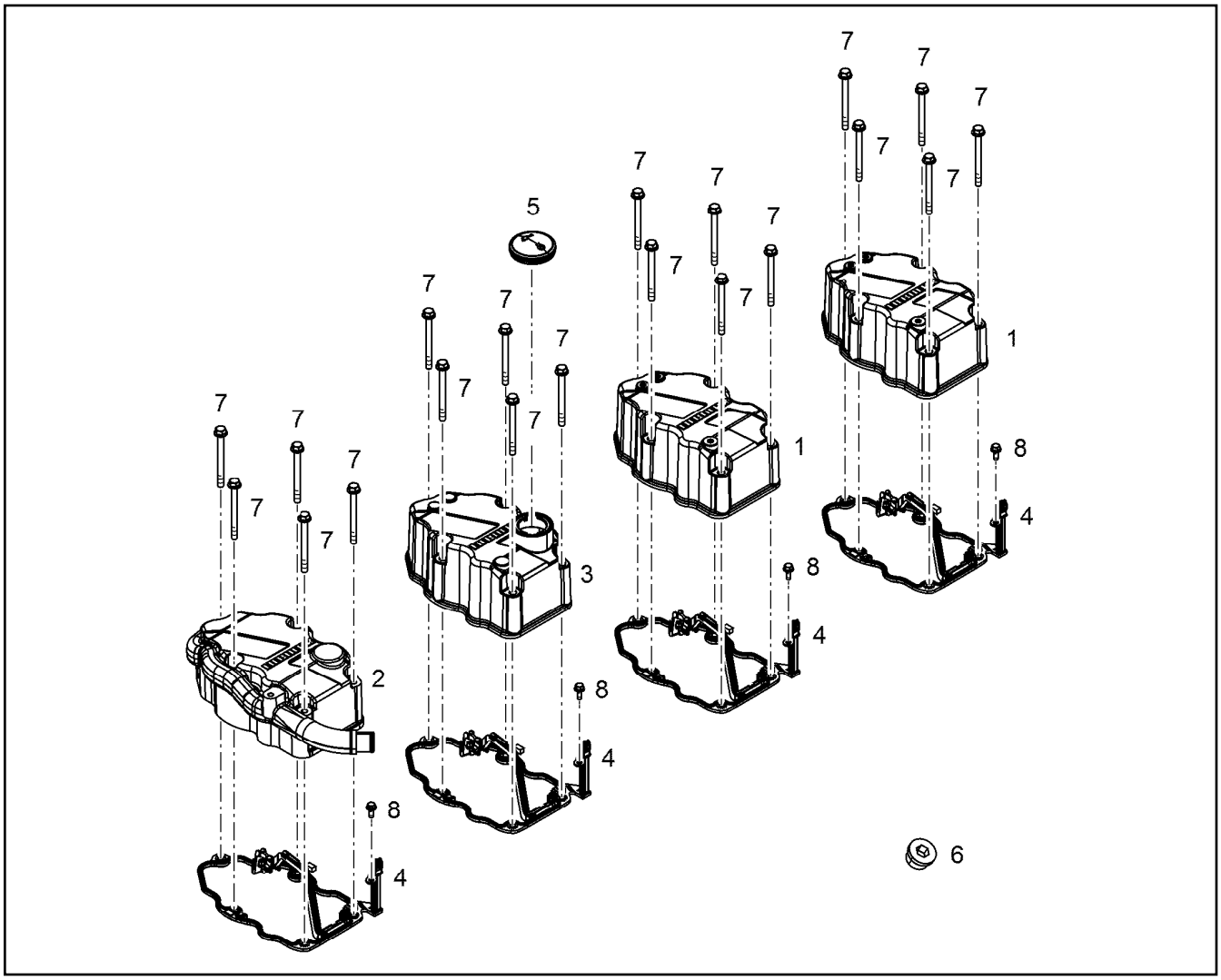

Pos.	Item	Quantity	Description	Bezeichnung
1	10134750	2	CYLINDER HEAD COVER	ZYLINDERKOPFDECKEL
2	12874086	1	CYLINDER HEAD COVER	ZYLINDERKOPFDECKEL
3	10134698	1	CYLINDER HEAD COVER	ZYLINDERKOPFDECKEL
4	12565355	4	SEAL	DICHTUNG
5	9144757	1	END COVER 60	VERSCHLUSSDECKEL
(3)	9144762	1	SEAL	DICHTUNG
6	10043136	1	SCREW PLUG VSTI M33X2 CR6-FREI	VERSCHLUSSSCHRAUBE
7	10876385	20	HEX SCREW EN 1665 M8X90 8.8 480H SPF	SECHSKANTSCHRAUBE
8	11840297	4	HEX SCREW EN 1665 M6X16 8.8 480H SPF	SECHSKANTSCHRAUBE

Pos.	Item	Quantity	Description	Bezeichnung
1	10152441	2	BALANCER SHAFT PRE-ASS.	AUSGLEICHWELLE VORM.
2	12408221	1	FLANGE PRE-ASS.	FLANSCH VORM.
3	12400857	1	FLANGE	FLANSCH
4	10139764	1	GEAR WHEEL	ZAHNRAD
5	10139765	1	GEAR WHEEL	ZAHNRAD
6	10139578	2	HEXALOBULAR HEAD SCREW M14X50 32C	SECHSRUNDSCHRAUBE
7	240049702	5	SOCKET HEAD SCREW ISO 4762 M8X25 8.8	ZYLINDERSCHRAUBE
8	7381685	1	O-RING DIN 3771 7,00X1,5 FKM 90 A,BK	O-RING
9	4980000	1	PARALLEL PIN ISO 8734 6m6X14 St	ZYLINDERSTIFT
10	243034002	2	DOWEL PIN ISO 8752 6X30 ST	SPANNSTIFT
10	432310501	2	TENSION PIN 6H12X30 51CrV4	SCHWERSPANNSTIFT
100	10285708	1	GREASE NBU 30 1KG DOSE	FETT
105	811205708	1	SCREW LOCKING 50ML FLASCHE 150 °C	SCHRAUBENSICHERUNG

Pos.	Item	Quantity	Description	Bezeichnung
1	10125742	1	CAMSHAFT R-MOTORXD934/D94	NOCKENWELLE
3	10138447	1	GEARWHEEL PRE-ASS.	ZAHNRAD VORM.
(1)	10145049	1	GEARWHEEL PRE-ASS.	ZAHNRAD VORM.
(2)	10137602	1	GEAR WHEEL	ZAHNRAD
(4)	11600960	6	HEX SCREW DIN 6921 M8X40 10.9	SECHSKANTSCHRAUBE
(5)	4980000	1	PARALLEL PIN ISO 8734 6m6X14 St	ZYLINDERSTIFT
4	10133692	1	GEAR WHEEL	ZAHNRAD
5	4980736	1	PARALLEL PIN ISO 8734 6m6X22 St	ZYLINDERSTIFT
6	10133693	2	WEARING RING AlSn20Cu	ANLAUFRING
6	11348100	2	WEARING RING AlSn20Cu	ANLAUFRING
8	10145815	1	RS FLANGE	RS FLANSCH
8	10152832	1	FLANGE PRE-ASS.	FLANSCH VORM.
8	10145815	1	RS FLANGE	RS FLANSCH
8	10152832	1	FLANGE PRE-ASS.	FLANSCH VORM.
8	11348648	1	FLANGE PRE-ASS.	FLANSCH VORM.
9	4980927	3	SOCKET HEAD SCREW DIN 7984 M10X18 0	ZYLINDERSCHRAUBE
9	240122602	3	SOCKET HEAD SCREW DIN 7984 M10X25 0	ZYLINDERSCHRAUBE
9	4980927	3	SOCKET HEAD SCREW DIN 7984 M10X18 0	ZYLINDERSCHRAUBE
9	240122602	3	SOCKET HEAD SCREW DIN 7984 M10X25 0	ZYLINDERSCHRAUBE
12	4980257	12	SOCKET HEAD SCREW ISO 4762 M12X45 1	ZYLINDERSCHRAUBE
14	7381685	1	O-RING DIN 3771 7,00X1,5 FKM 90 A,BK	O-RING
100	10282622	1	GREASE STABURAGS NBU 30 0.010KG	FETT

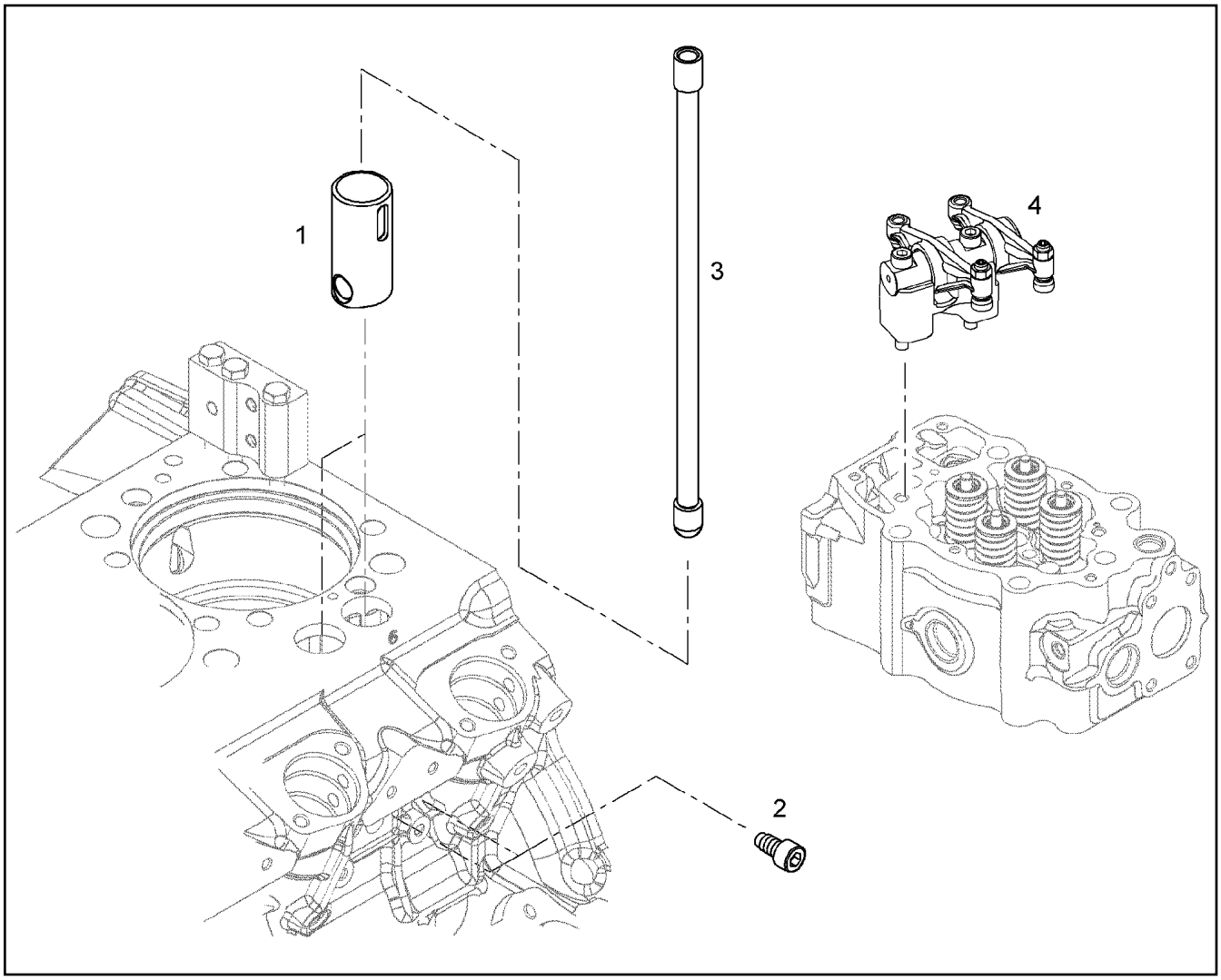

Pos.	Item	Quantity	Description	Bezeichnung
1	10153536	2	ROLLER TAPPET	ROLLENSTOESSEL
2	10153538	2	LOCKING SCREW M10X19 10.9	SICHERUNGSSCHRAUBE
3	9079131	2	TAPPET PUSH ROD	STOESSELSTANGE

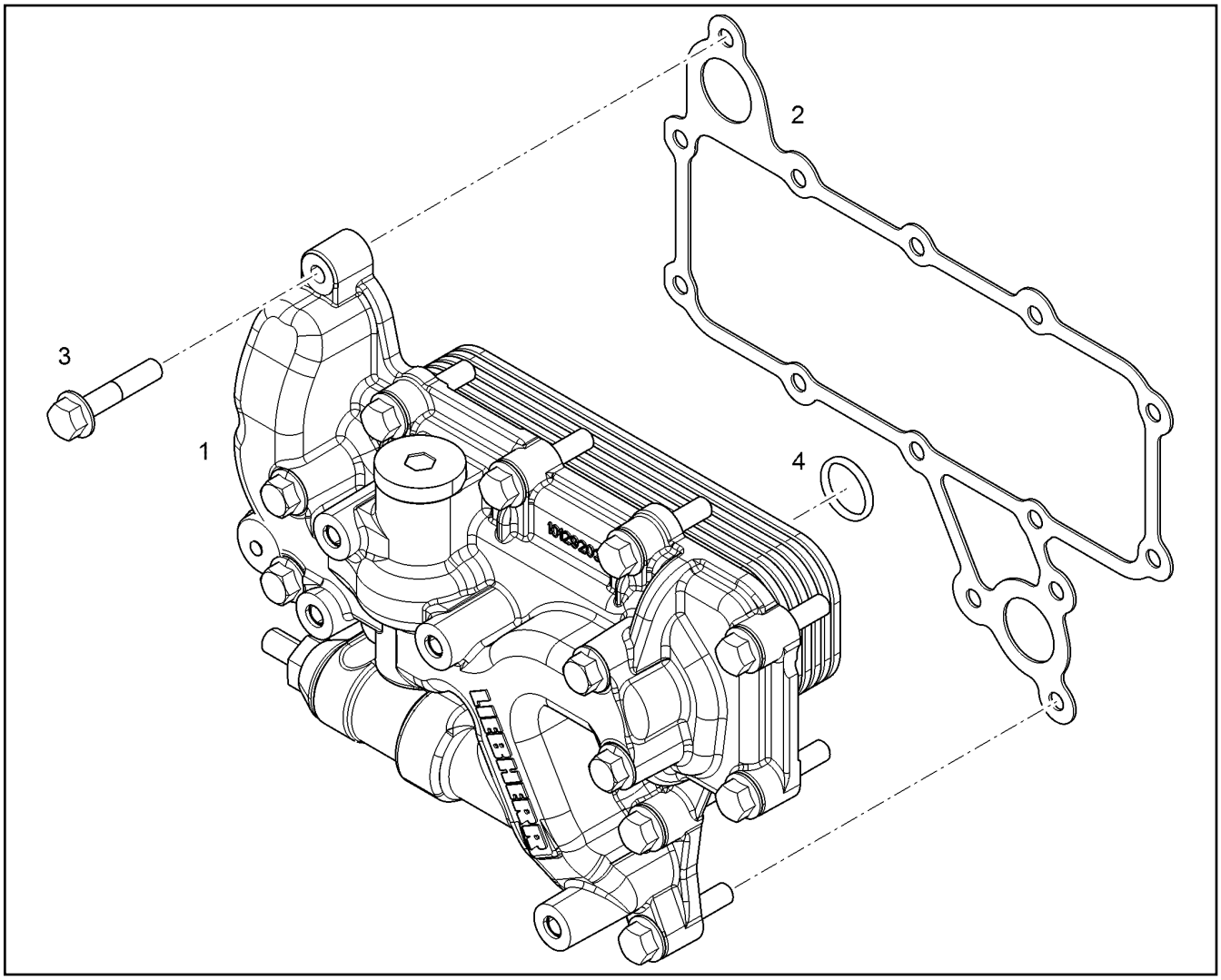

Pos.	Item	Quantity	Description	Bezeichnung
1	10129474	1	OIL COOLER, PRE-ASSEMBLED ⇨ ❑ 200	OELKUEHLER VORM.
2	10117709	1	SEAL AFM 30	DICHTUNG
3	10299604	14	HEX SCREW EN 1665 M8X40 10.9 480H	SECHSKANTSCHRAUBE
4	10004261	1	O-RING 26X3 HNBR 70	O-RING

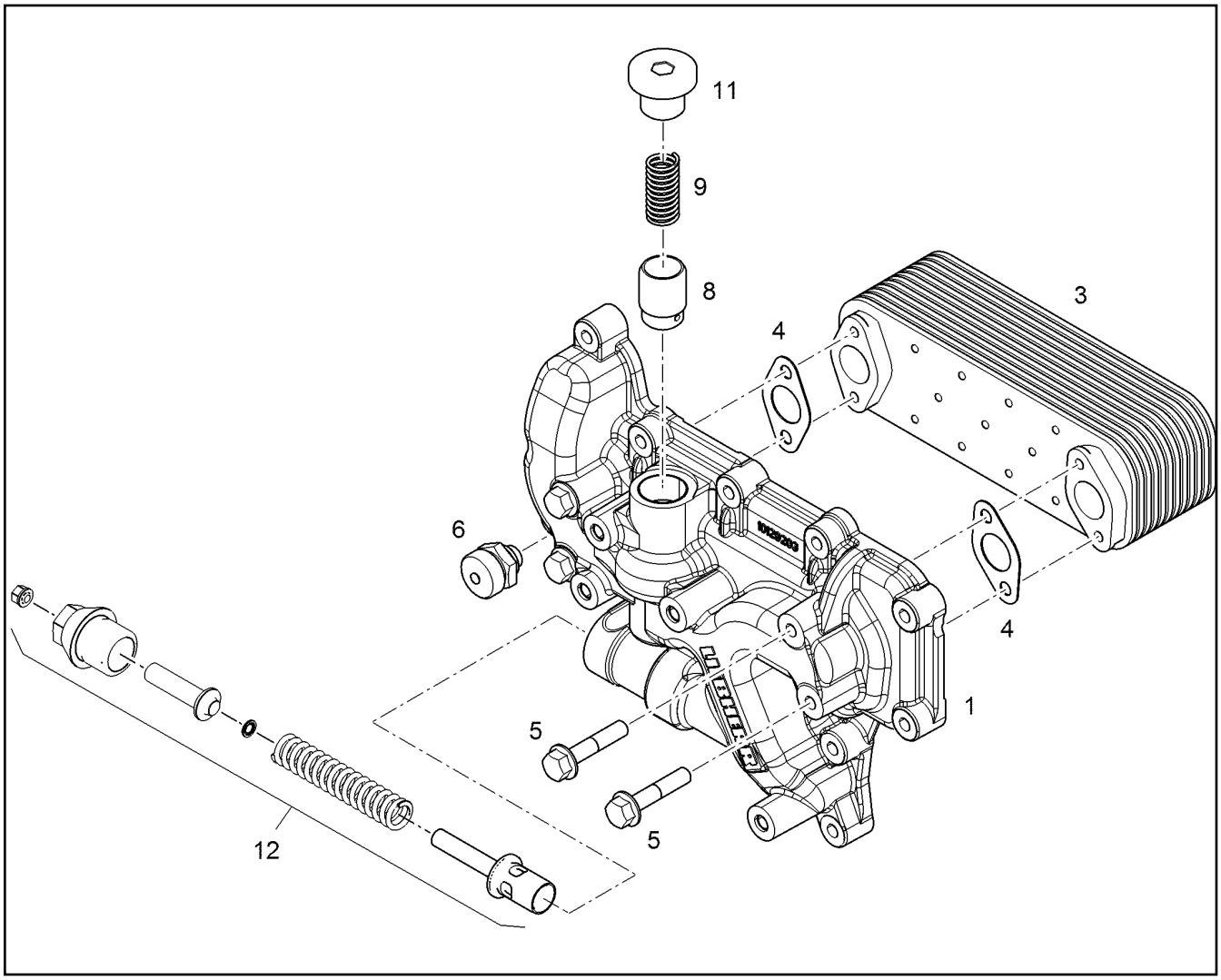

Pos.	Item	Quantity	Description	Bezeichnung
1	10146722	1	OIL COOLER HOUSING	OELKUEHLERGEHAEUSE
3	10325001	1	OIL COOLER	OELKUEHLER
4	4980359	2	SEAL DIN 71511 1,5X25X48 AFM 30	DICHTUNG
5	11691686	4	HEX SCREW EN 1665 M8X50 8.8 480H SPF	SECHSKANTSCHRAUBE
6	9078233	1	VALVE M14X1,5 ⇨ ❑ 201	VENTIL
8	9886591	1	PISTON	KOLBEN
9	9886756	1	PRESSURE SPRING 2,10X17,80X75,00	DRUCKFEDER
11	7382204	1	SCREW PLUG VSTI M30X1,5 St Rm>500N/m	VERSCHLUSSSCHRAUBE
12	10152592	1	PRESSURE RELIEF VALVE pmax=9BAR ⇨ ❑ 202	UEBERDRUCKVENTIL

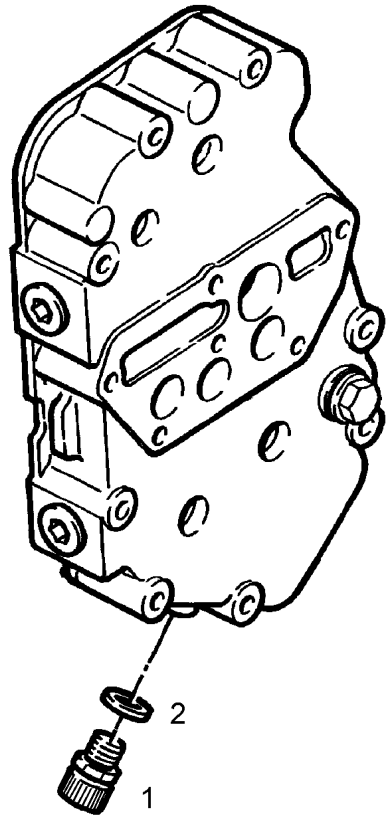

Pos.	Item	Quantity	Description	Bezeichnung
1	10011832	1	VALVE	VENTIL
2	738122523	1	SEALING RING DIN 7603 A14X20X2 CU	DICHTRING

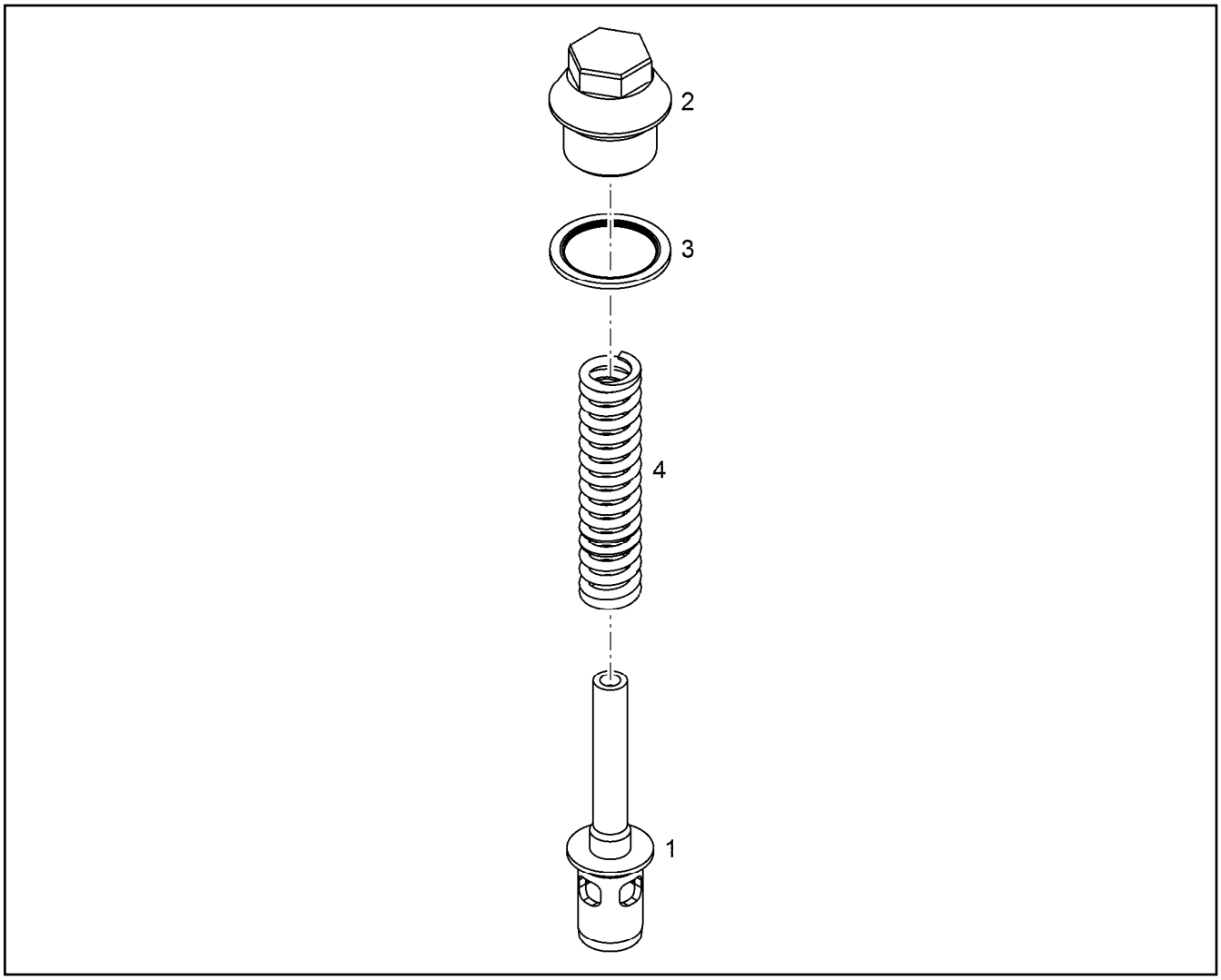

Pos.	Item	Quantity	Description	Bezeichnung
1	10152593	1	PISTON	KOLBEN
2	10152594	1	SCREW PLUG M30X1,5X40 ETG 100	VERSCHLUSSSCHRAUBE
3	10113731	1	SEALING RING 30,7X39X2 St/FPM1-80	DICHTRING
4	10129501	1	PRESSURE SPRING 3,2X16,8X100,7 OTEVA	DRUCKFEDER

Pos.	Item	Quantity	Description	Bezeichnung
1	12438990	1	LUBRICATING OIL PUMP B=41.4	SCHMIEROELPUMPE
2	10005713	1	HEX SCREW DIN 6921 M8X45 8.8	SECHSKANTSCHRAUBE
3	11645138	2	HEX SCREW DIN 6921 M8X80 8.8	SECHSKANTSCHRAUBE
4	11066168	1	O-RING 43X2 FKM 70	O-RING
5	7382059	1	O-RING ISO 3601-1 34,59X2,62 FKM 70 A,GN	O-RING
100	10285708	1	GREASE NBU 30 1KG DOSE	FETT

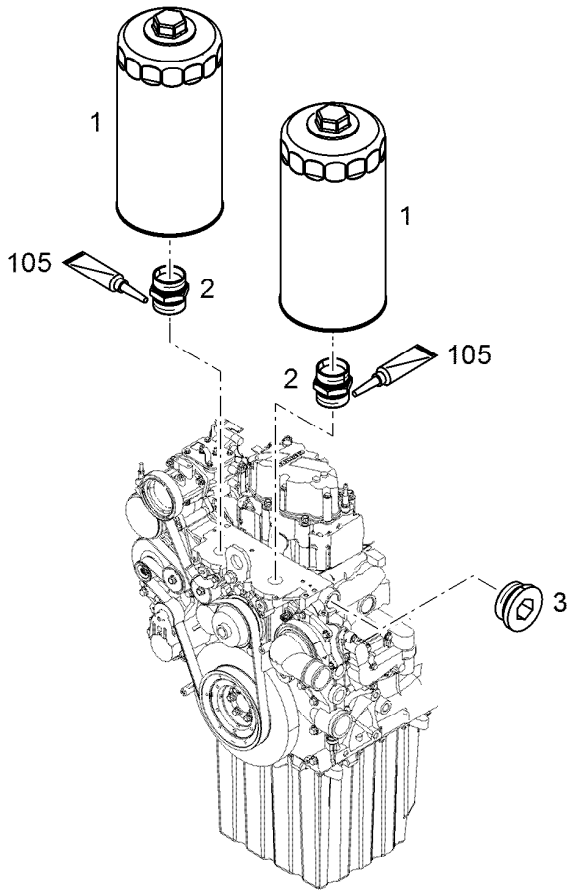

Pos.	Item	Quantity	Description	Bezeichnung
1	10297295	2	EASY-CHANGE FILTER OEL 9µm	WECHSELFILTER
2	9273271	2	FITTINGS	STUTZEN
3	10285724	1	SCREW PLUG VSTI M42X2 CR6-FREI	VERSCHLUSSSCHRAUBE
105	8655016	1	SCREW LOCKING 10ML -50/+150 °C	SCHRAUBENSICHERUNG

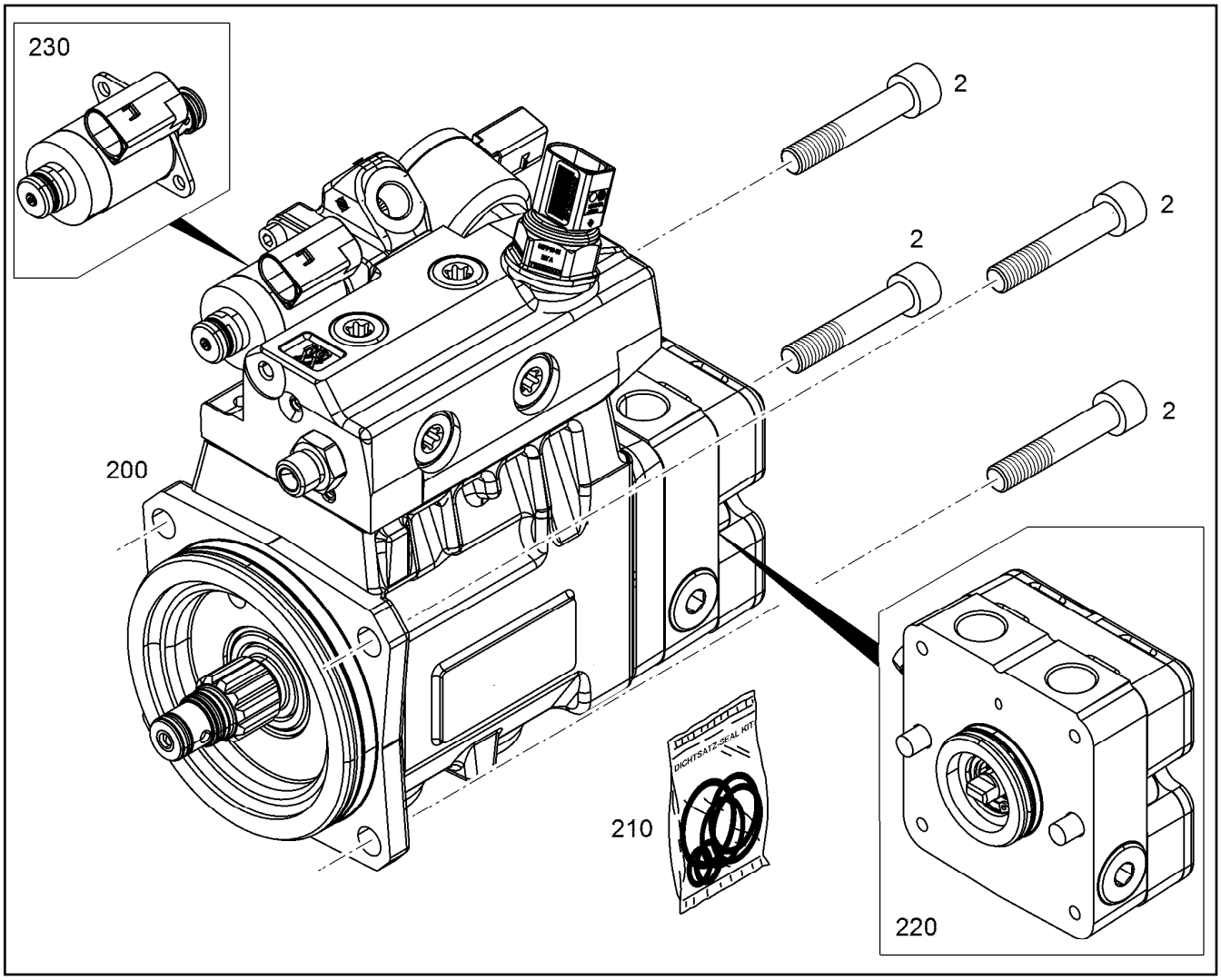

Pos.	Item	Quantity	Description	Bezeichnung
1	10146658	1	HIGH PRESSURE PUMP R-MOTORXD934 A7 ⇨ ❑ 206	HOCHDRUCKPUMPE
2	4001622	4	SOCKET HEAD SCREW ISO 4762 M10X55 1	ZYLINDERSCHRAUBE

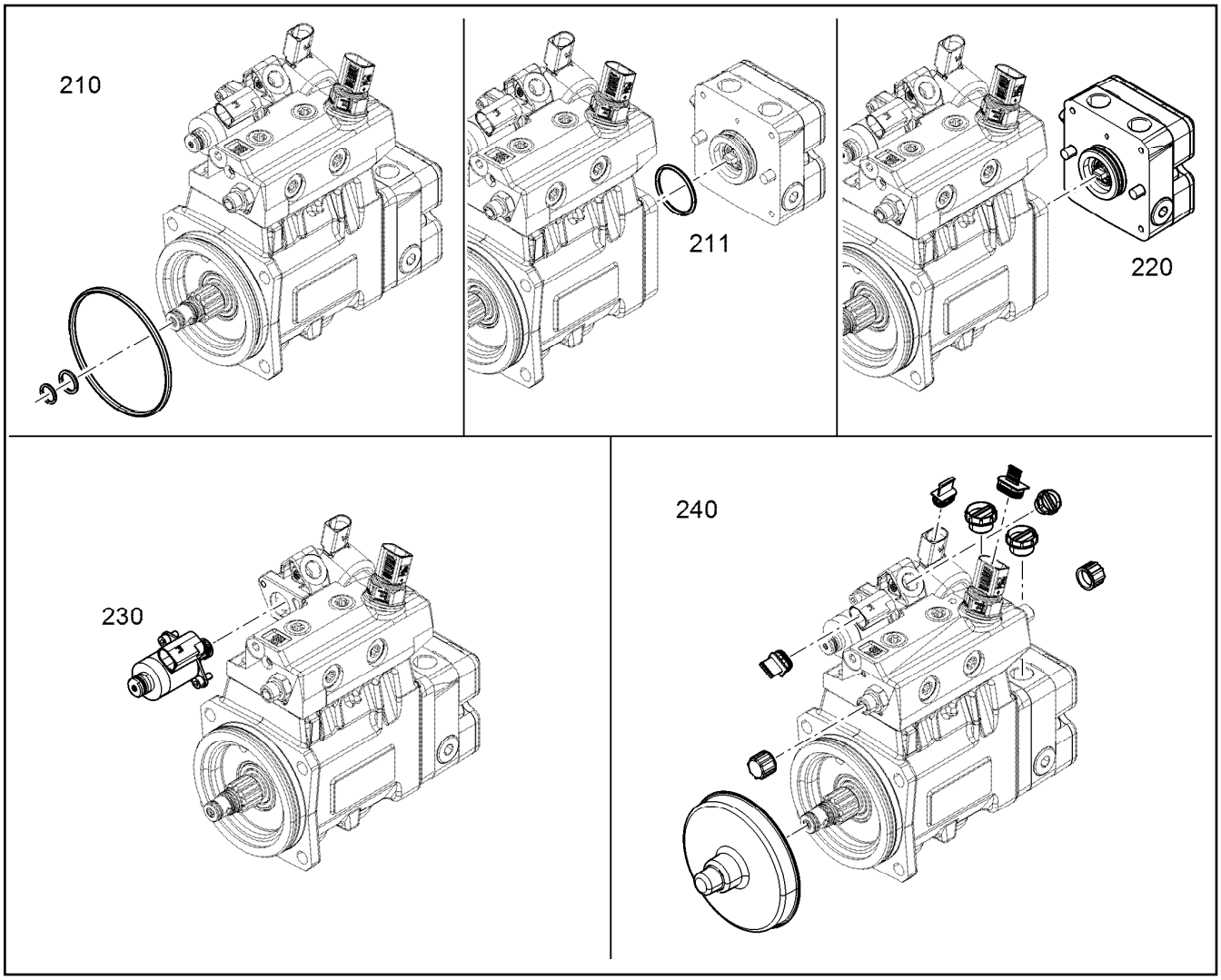

Pos.	Item	Quantity	Description	Bezeichnung
210	10152787	1	SEAL KIT HIGH PRESSURE PUMP	DS HOCHDRUCKPUMPE
211	12424993	1	SEAL KIT PREFEEDING PUMP	DS VORFOERDERPUMPE
220	10149198	1	RK PRE-FEED PUMP ⇨ ❑ 207	RS VORFOERDERPUMPE
230	12490199	1	RK VOLUME CONTROL VALVE	RS SAUGDROSSELVENTIL
240	12489819	1	COVERING CAPS - KIT ⇨ ❑ 208	ABDECKKAPPEN-KIT

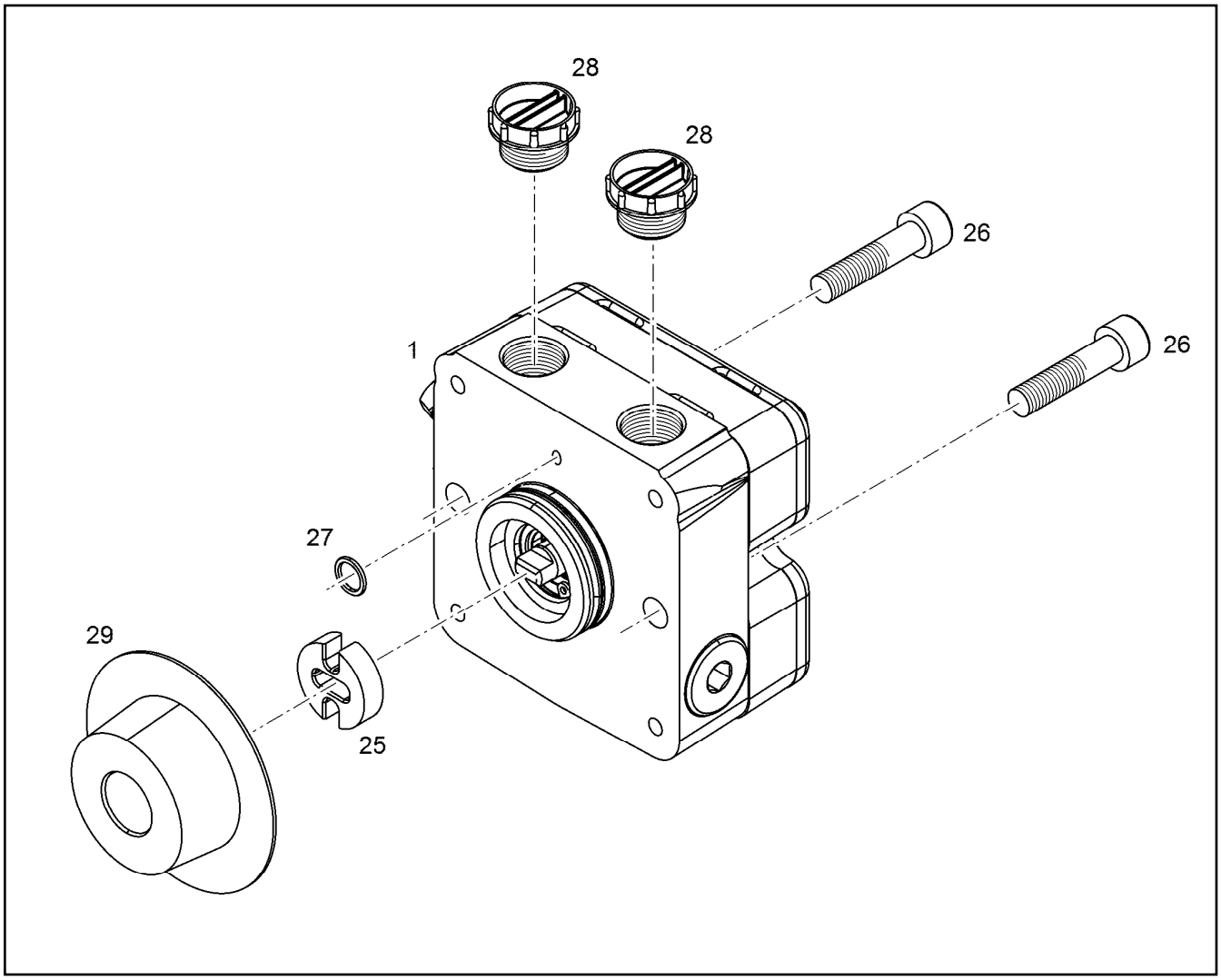

Pos.	Item	Quantity	Description	Bezeichnung
1	12873083	1	PREFEEDING PUMP	VORFOERDERPUMPE
25	12861845	1	COUPLING 16MnCrS5	KUPPLUNG
26	11691424	2	SOCKET HEAD SCREW ISO 4762 M8X35 8.8	ZYLINDERSCHRAUBE
27	11659846	1	O-RING 8X1,5 FKM 70	O-RING
28	10129392	2	COVER LID 700 M18X1,5 PA 6	ABDECKKAPPE
29	10145185	1	UNIVERSAL PROTECTION GPN 620 39,5-43	UNIVERSALSCHUTZ

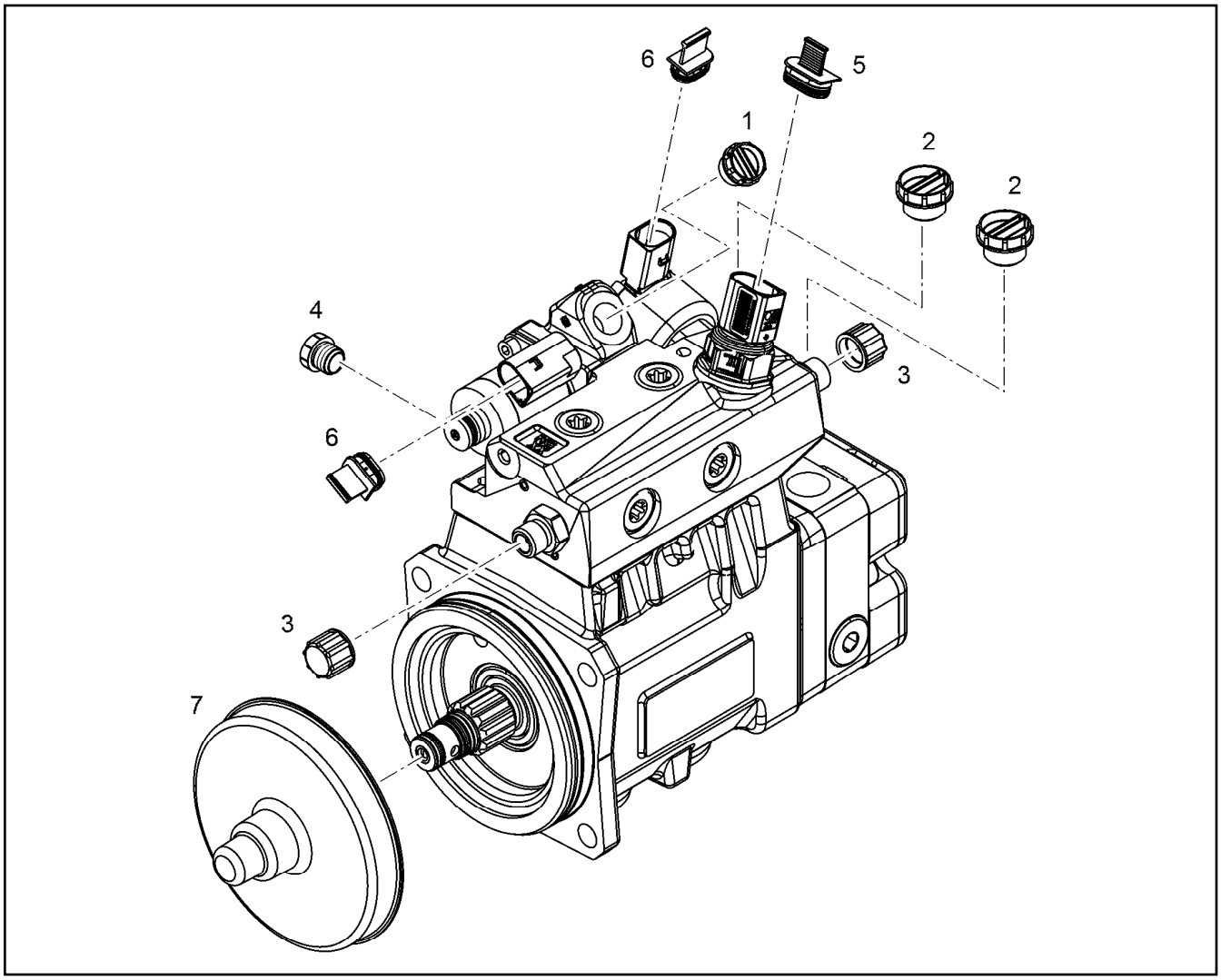

Pos.	Item	Quantity	Description	Bezeichnung
1	7011745	1	SCREW STOPPER GPN 700 M14X1,5 PE-HD	SCHRAUBSTOPFEN
2	10129392	2	COVER LID 700 M18X1,5 PA 6	ABDECKKAPPE
3	10021410	2	SCREW CAP GPN 800 M14X1,5	SCHRAUBKAPPE
4	7003652	1	SCREW STOPPER GPN 700 M12X1,5 PE-HD	SCHRAUBSTOPFEN
5	11698481	1	BLANKING PLUG GPN 360 PE-LLD	VERSCHLUSSSTOPFEN
6	11835061	2	BLANKING PLUG GPN 360 PE-LLD	VERSCHLUSSSTOPFEN
7	10129394	1	COVER LID PP	ABDECKKAPPE

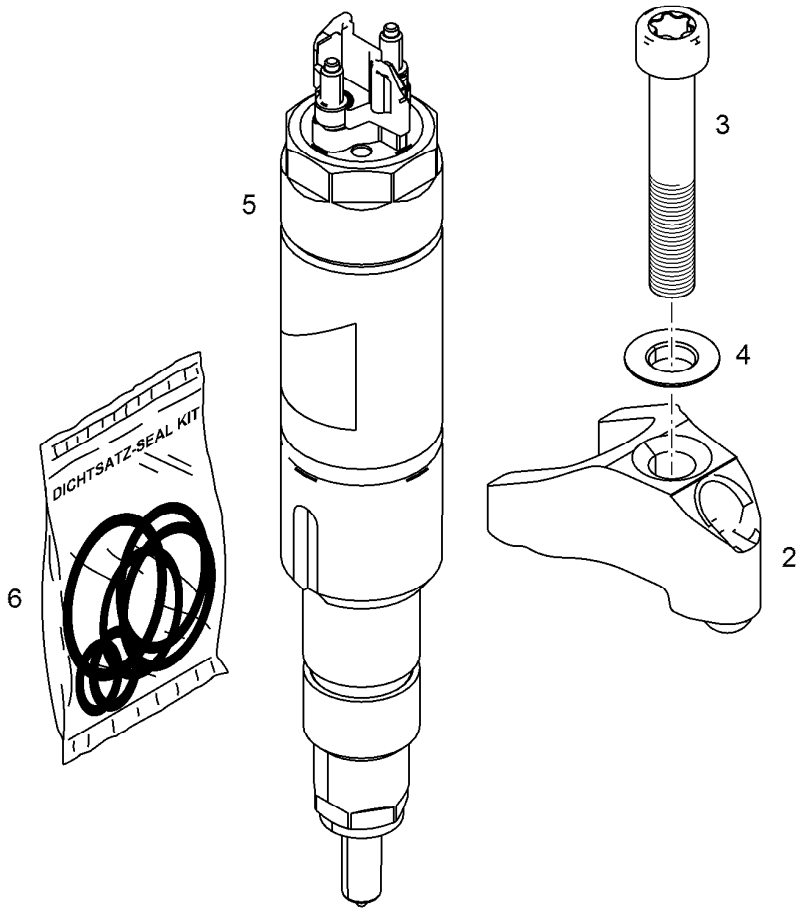

Pos.	Item	Quantity	Description	Bezeichnung
1	10147680	1	INJECTOR LI2.7-20-SF-950	INJEKTOR
2	11403994	1	JAW 42CrMoS4+QT	PRATZE
3	12219491	1	SOCKET HEAD SCREW ISO 14580 M8X80 1	ZYLINDERSCHRAUBE
4	11622278	1	SPHERICAL WASHER DIN 6319 C 8,4X17X3	KUGELSCHEIBE
5	12843150	1	DISTANCE SLEEVE 9X15X30 42CrMo4+N	DISTANZHUELSE
200	10152874	1	RK INJECTOR 950ML	RS INJEKTOR
210	10141215	1	SEAL KIT INJECTOR	DS INJEKTOR

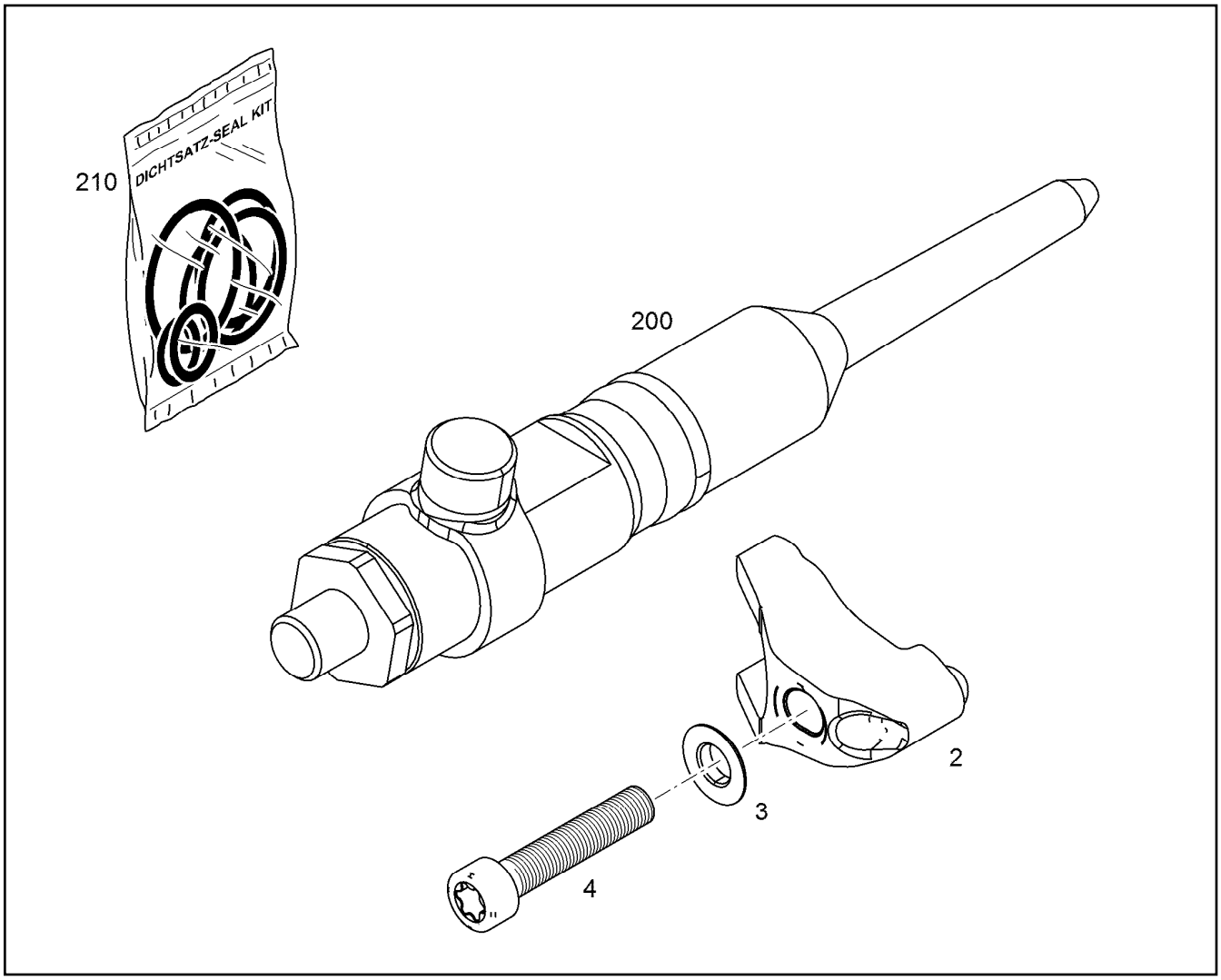

Pos.	Item	Quantity	Description	Bezeichnung
200	10141140	1	RK HIGH PRESSURE CONNECTOR	RS DRUCKROHRSTUTZEN
(2)	11622278	1	SPHERICAL WASHER DIN 6319 C 8,4X17X3	KUGELSCHEIBE
(12)	10141216	1	SEAL KIT HIGH PRESS.CONNECTOR	DS DRUCKROHRSTUTZEN
210	10141216	1	SEAL KIT HIGH PRESS.CONNECTOR	DS DRUCKROHRSTUTZEN
220	10135434	1	PRESSURE ADAPTER FASTENING ⇨ ❑ 211	BEFESTIGUNG DRUCKROHRST

Pos.	Item	Quantity	Description	Bezeichnung
1	10150144	1	JAW 42CrMoS4+QT	PRATZE
2	11622278	1	SPHERICAL WASHER DIN 6319 C 8,4X17X3	KUGELSCHEIBE
3	11600879	1	SOCKET HEAD SCREW ISO 14579 M8X40 10	ZYLINDERSCHRAUBE

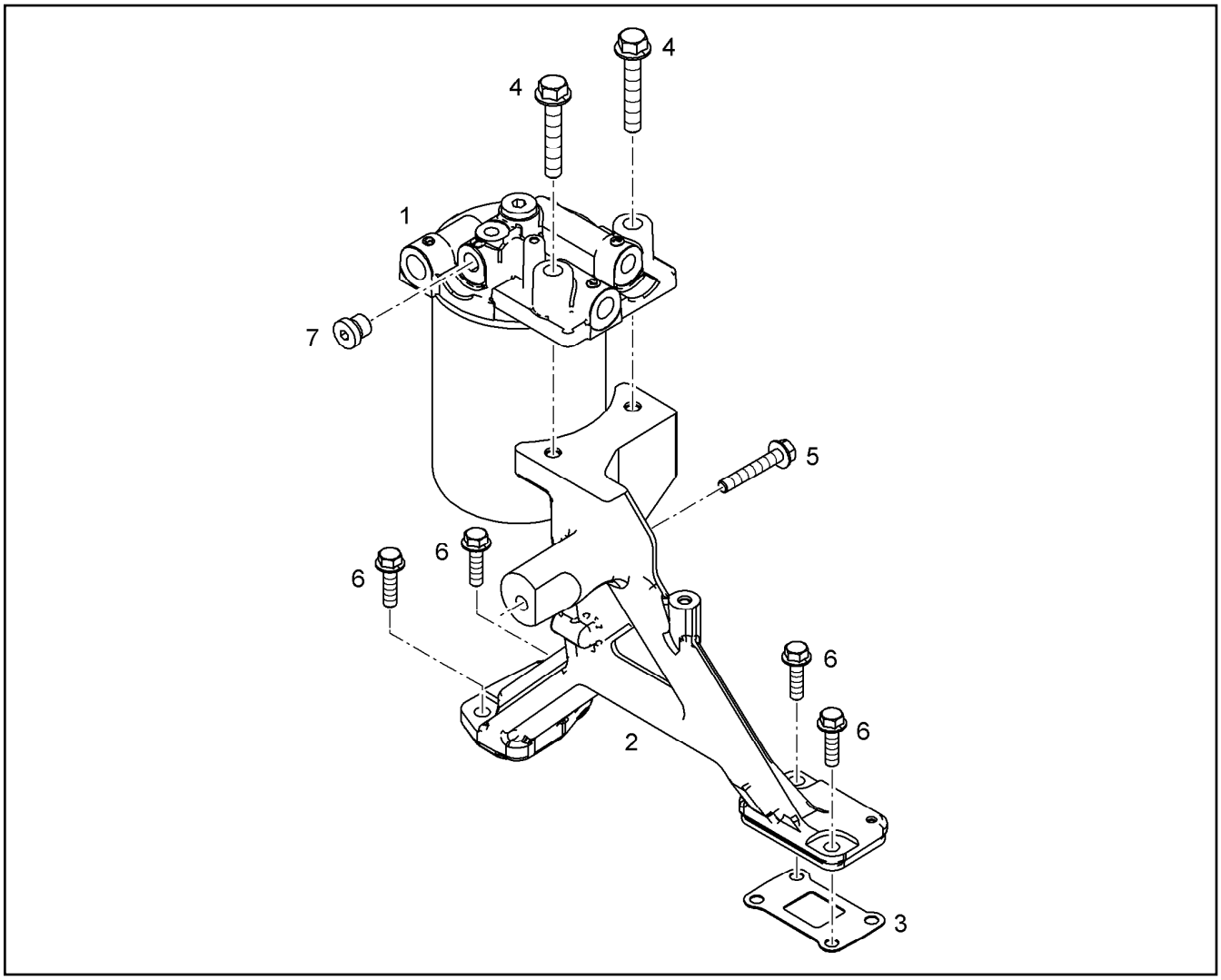

Pos.	Item	Quantity	Description	Bezeichnung
1	10133928	1	CONSOLE FOR FILTER PRE-ASS. ⇨ ❑ 213	FILTERKONSOLE VORM.
2	10146789	1	HOLDER	HALTER
3	9079130	1	SEAL 1	DICHTUNG
4	11656158	2	HEX SCREW EN 1665 M10X60 8.8 FLZN	SECHSKANTSCHRAUBE
5	11691686	1	HEX SCREW EN 1665 M8X50 8.8 480H SPF	SECHSKANTSCHRAUBE
6	11826563	4	HEX SCREW EN 1665 M8X30 8.8 480H	SECHSKANTSCHRAUBE
7	7380566	1	SCREW PLUG VSTI M14X1,5	VERSCHLUSSSCHRAUBE

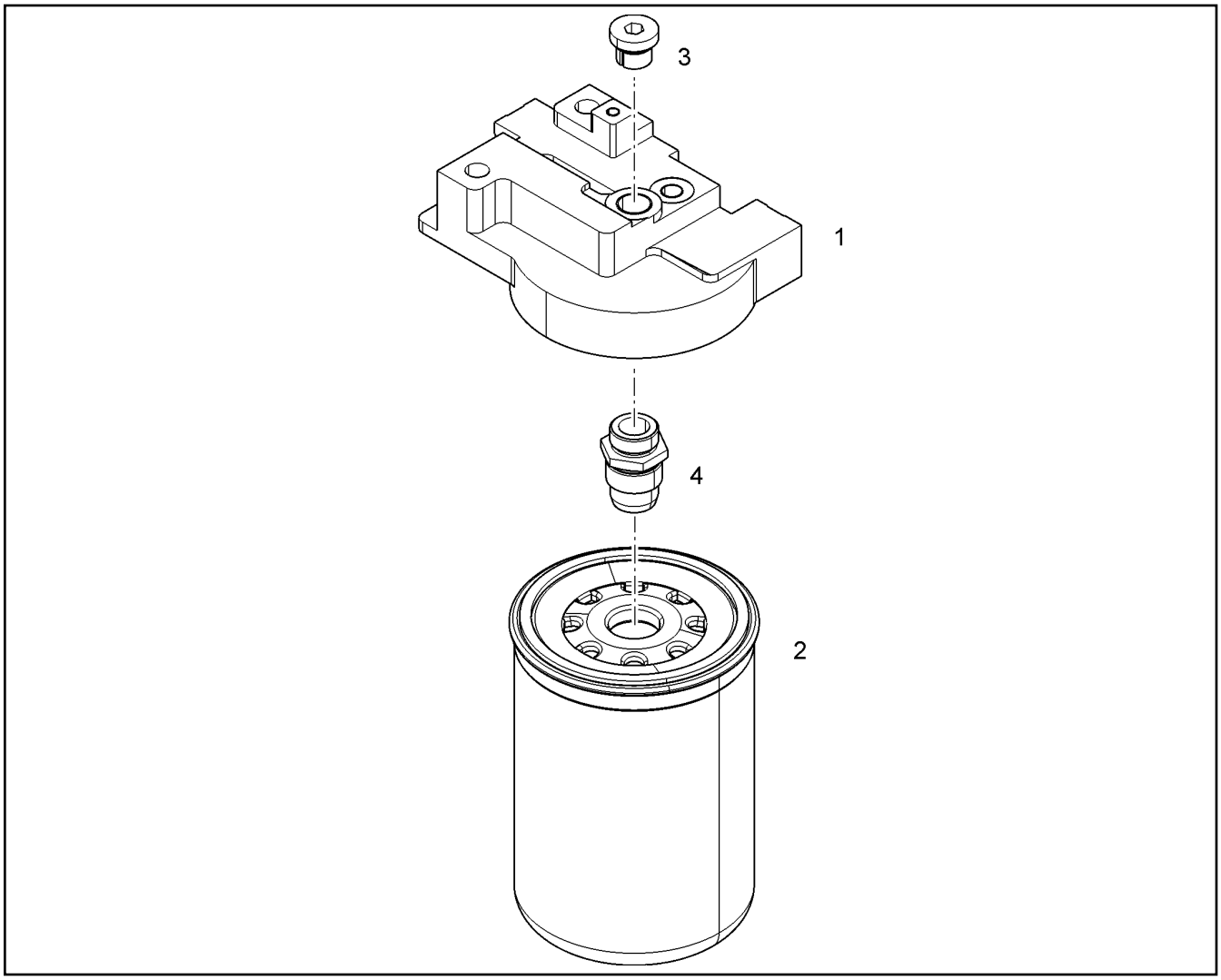

Pos.	Item	Quantity	Description	Bezeichnung
1	12455699	1	FILTER BRACKET	FILTERKONSOLE
2	12820742	1	FUEL FINE FILTER KRAFTSTOFF 3µm	KRAFTSTOFFFEINFILTER
3	7382203	1	SCREW PLUG VSTI M16X1,5	VERSCHLUSSSCHRAUBE

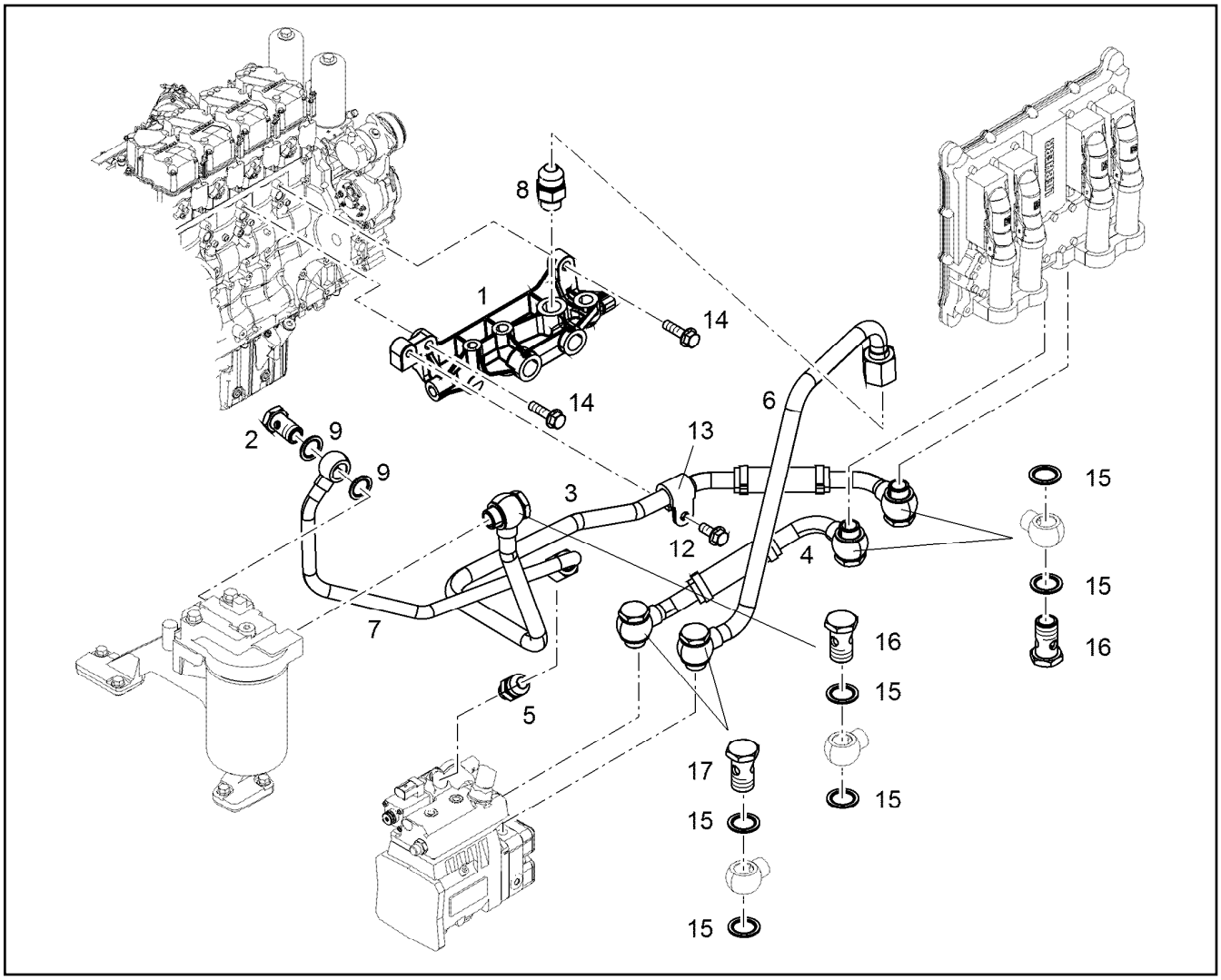

Pos.	Item	Quantity	Description	Bezeichnung
1	12511916	1	DISTRIBUTOR BLOCK	VERTEILERBLOCK
2	11002995	1	HOLLOW SCREW DIN 7643 12-3-M16X1,5 X5	HOHLSCHRAUBE
3	10143543	1	PIPELINE	ROHRLEITUNG
4	10143542	1	PIPELINE	ROHRLEITUNG
5	11002988	1	FITTING GE 12 M14X1,5/3/ INOX	VERSCHRAUBUNG
6	10130104	1	PIPELINE 15X1,5	ROHRLEITUNG
7	10143240	1	FUEL LINE 12X1	KRAFTSTOFFLEITUNG
8	10813942	1	FITTING GE 14,15,16 M18X CR6-FREI	VERSCHRAUBUNG
9	10011867	2	SEALING RING 16,7X24X1,5 St/FPM1-80	DICHTRING
12	11657219	1	HEX SCREW EN 1665 M8X20 8.8 480H SPF	SECHSKANTSCHRAUBE
13	7382085	1	CLAMP DIN 3016-1 16X20XD1 W1-2-MVQ	SCHELLE
14	10009007	2	HEX SCREW DIN 6921 M8X25 8.8 A2C	SECHSKANTSCHRAUBE
15	10011868	10	SEALING RING 18,7X26X1,5 St/FPM1-80	DICHTRING
16	4981226	3	HOLLOW SCREW DIN 7643 15--M18X1,5 A3	HOHLSCHRAUBE
17	11443132	2	HOLLOW SCREW 15-3-32	HOHLSCHRAUBE

Pos.	Item	Quantity	Description	Bezeichnung
1	10143251	1	PIPELINE 8X2	ROHRLEITUNG
2	12210024	1	HOLLOW SCREW DIN 7643 8-3-M12X1,5 480	HOHLSCHRAUBE
3	10132170	1	PIPELINE 6X1	ROHRLEITUNG
4	9078935	1	FUEL LINE	KRAFTSTOFFLEITUNG
5	10011864	15	SEALING RING 10,7X16X1,5 St/FPM1-80	DICHTRING
6	12210010	6	HOLLOW SCREW DIN 7643 6-3-M10X1 480H	HOHLSCHRAUBE
7	10011865	2	SEALING RING 12,7X18X1,5 St/FPM1-80	DICHTRING
8	10141846	1	PIPELINE 6X1	ROHRLEITUNG
9	10813933	1	FITTING GE 6 M10X1,0/7/1 CR6-FREI	VERSCHRAUBUNG
10	10813935	2	FITTING GE 8 M12X1,5/1/2 CR6-FREI	VERSCHRAUBUNG
11	10011866	3	SEALING RING 14,7X22X1,5 St/FPM1-80	DICHTRING
12	12210029	1	DOUBLE BANJO BOLT 6-6-M10X1X42,5 11S	DOPPELHOHLSCHRAUBE
13	10133607	1	PIPELINE 6X1	ROHRLEITUNG
14	7382088	1	CLAMP DIN 3016-1 6X20XD1 W1-2-MVQ	SCHELLE
15	11656992	1	HEX SCREW EN 1665 M8X16 8.8 480H SPF	SECHSKANTSCHRAUBE
16	10132935	1	INTERMEDIATE PART 11SMnPb30+C	ZWISCHENSTUECK
17	12210013	1	HOLLOW SCREW DIN 7643 10-3-M14X1,5 4	HOHLSCHRAUBE
19	10132180	1	PIPELINE 8X1	ROHRLEITUNG
20	7381292	1	CLAMP DIN 3016-1 6X15XD1 W1-2-MVQ	SCHELLE
21	11840297	1	HEX SCREW EN 1665 M6X16 8.8 480H SPF	SECHSKANTSCHRAUBE
22	10011871	2	SEALING RING 8,7X14X1 St/FPM1-80	DICHTRING
23	4789210	1	HOLLOW SCREW DIN 7643 4-3-M8X1 A3C	HOHLSCHRAUBE

Pos.	Item	Quantity	Description	Bezeichnung
1	10143826	1	INJECTION LINE R-MOTORXD934	EINSPRITZLEITUNG
2	10143827	3	INJECTION LINE R-MOTORXD934	EINSPRITZLEITUNG
3	10134753	1	SEALING PLUG	DICHTSTOPFEN
3	11389287	1	SEALING PLUG	DICHTSTOPFEN

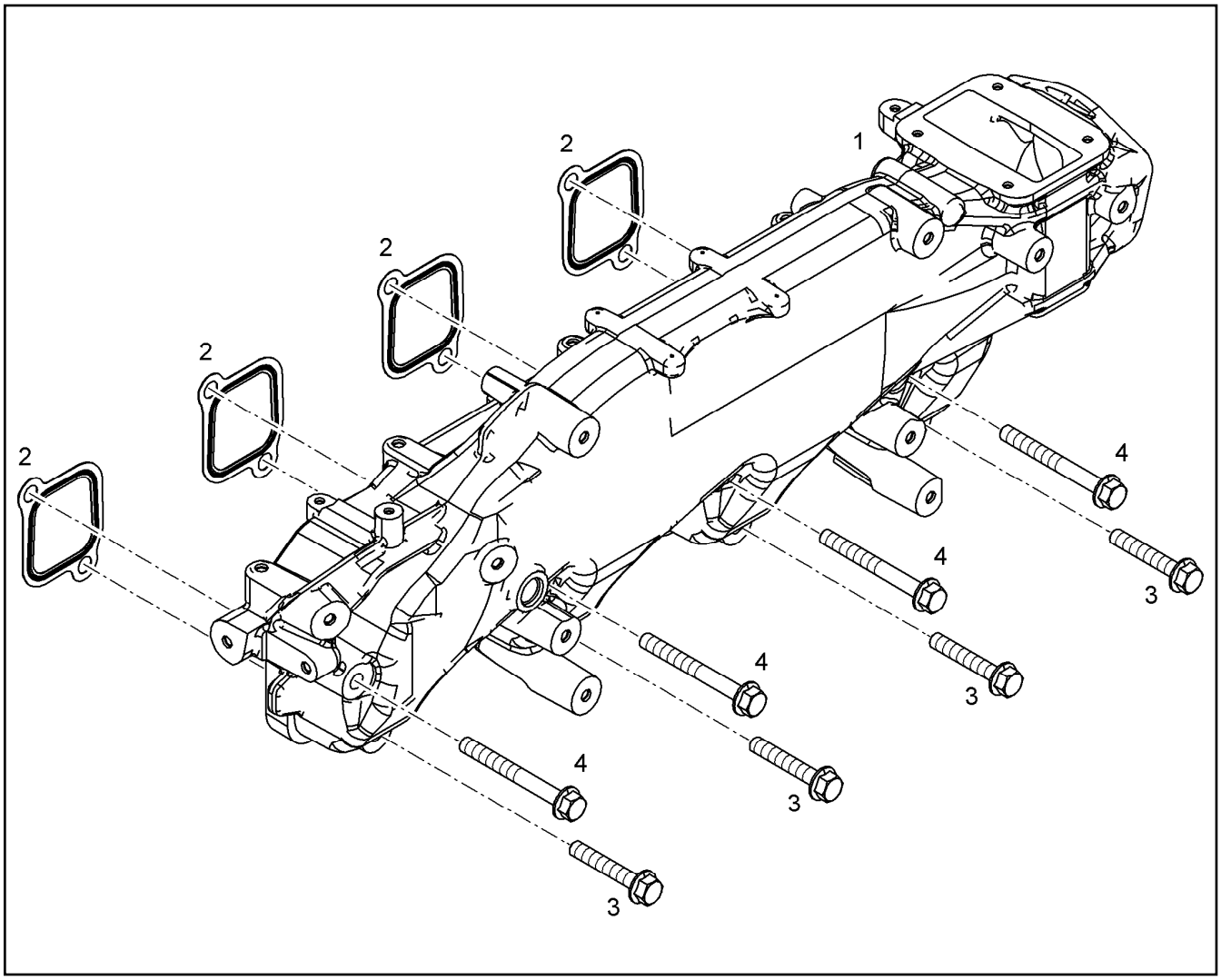

Pos.	Item	Quantity	Description	Bezeichnung
1	11415774	1	AIR SUCTION PIPE R-MOTORXD934D944	LUFTANSAUGROHR
2	10118556	4	SEAL S235JR	DICHTUNG
3	11656158	4	HEX SCREW EN 1665 M10X60 8.8 FLZN	SECHSKANTSCHRAUBE
4	12208088	4	HEX SCREW EN 1665 M10X90 8.8 FLZN	SECHSKANTSCHRAUBE

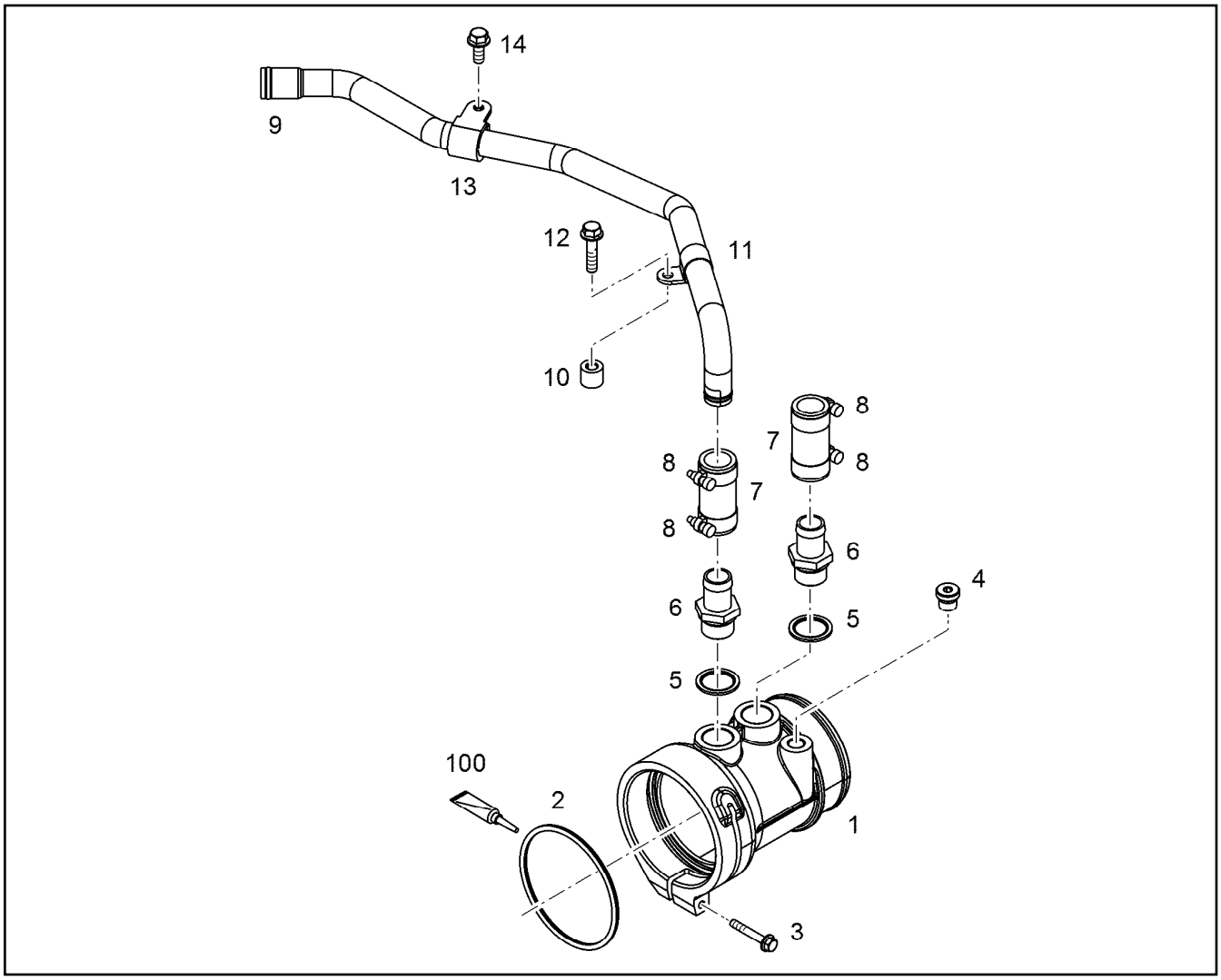

Pos.	Item	Quantity	Description	Bezeichnung
1	11444999	1	INTAKE STACK R-MOTORXD934/D94	ANSAUGSTUTZEN
2	11008055	1	O-RING 100X5 FKM 70	O-RING
3	12207587	1	HEX SCREW EN 1665 M6X40 8.8 480H	SECHSKANTSCHRAUBE
4	7380566	1	SCREW PLUG VSTI M14X1,5	VERSCHLUSSSCHRAUBE
5	10011870	2	SEALING RING 26,7X34,93X2 St/FPM1-80	DICHTRING
6	9140351	2	HOSE NIPPLE CE-0, H54	SCHLAUCHNIPPEL
7	9273161	2	RUBBER CONNECTION 22X30X65L.	GUMMIMUFFE
8	774215008	4	HOSE CLAMP 26/20-32/12 W3	SCHLAUCHSCHELLE
9	10140732	1	PIPELINE 22X1,5	ROHRLEITUNG
10	9177776	1	WASHER 8,4X18X15 -	SCHEIBE
11	7381286	1	CLAMP DIN 3016-1 22X20XA1 W1-2	SCHELLE
12	11826563	1	HEX SCREW EN 1665 M8X30 8.8 480H	SECHSKANTSCHRAUBE
13	7381630	1	CLAMP DIN 3016-1 22X20XD1 W1-2-MVQ	SCHELLE
14	11657219	1	HEX SCREW EN 1665 M8X20 8.8 480H SPF	SECHSKANTSCHRAUBE
100	10285708	1	GREASE NBU 30 1KG DOSE	FETT

Pos.	Item	Quantity	Description	Bezeichnung
1	10141549	1	CONNECTING LINE R-MOTORXD936 A7	VERBINDUNGSLEITUNG
2	10127984	1	RETAINER CLIP 122,5/K1 St/Inox	SPANNSCHELLE
3	12210035	3	DOUBLE-ENDED STUD DIN 835 M10X25 8.8	STIFTSCHRAUBE
4	10179265	3	HEX NUT EN 1661 M10 8 FLZN	SECHSKANTMUTTER
5	7380605	1	O-RING ISO 3601-1 101,27X2,62 FKM 70 A,B	O-RING

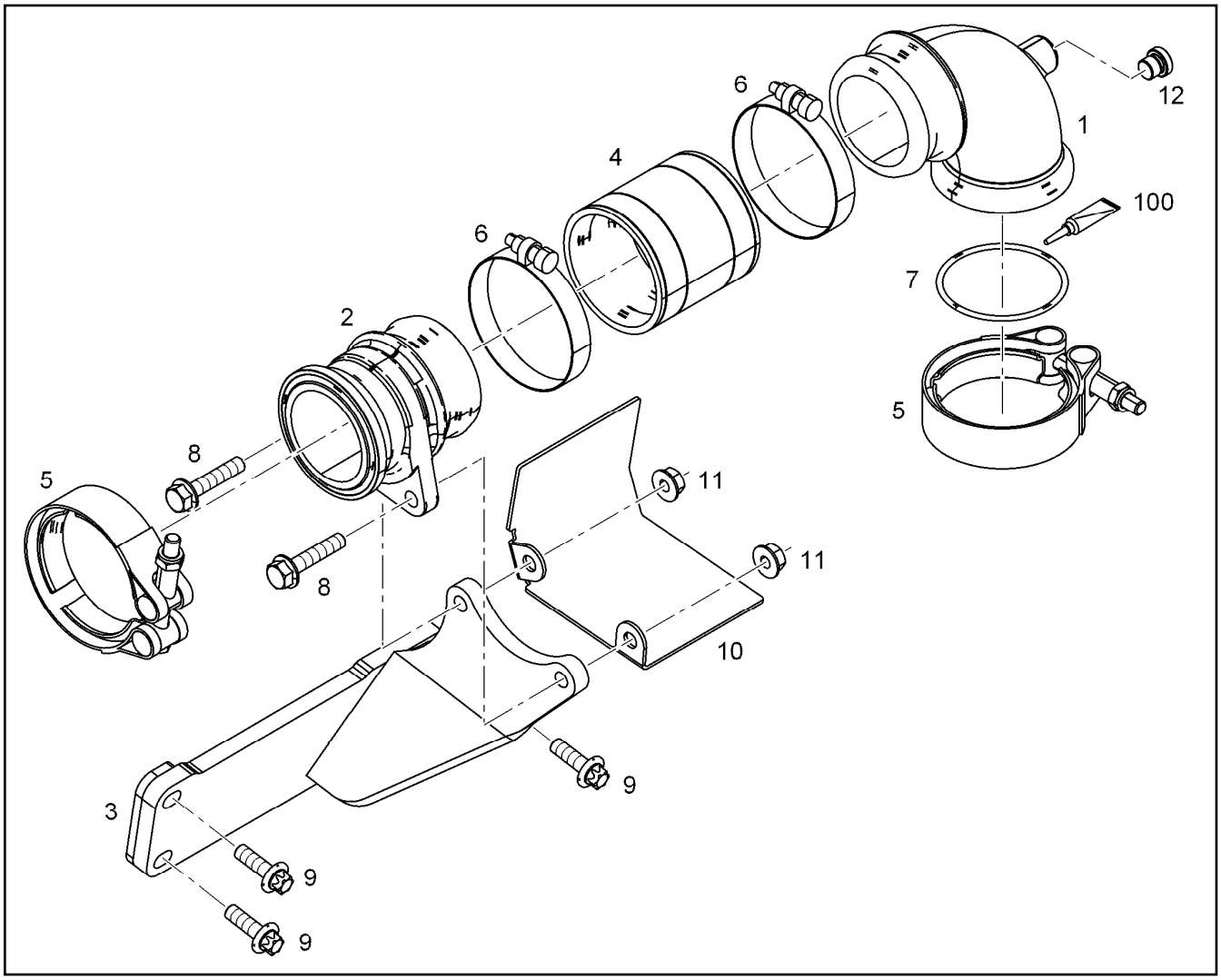

Pos.	Item	Quantity	Description	Bezeichnung
1	10143612	1	CHARGE AIR LINE	LADELUFTLEITUNG
2	10143614	1	CHARGE AIR LINE	LADELUFTLEITUNG
3	10149679	1	CONSOLE X5CrNi18-10	KONSOLE
4	10129904	1	RUBBER CONNECTION	GUMMIMUFFE
5	10124798	2	RETAINER CLIP 77/K1 St/Inox	SPANNSCHELLE
6	5004929	2	HOSE CLAMP DIN 3017-1 70/60-80/13 W2-2	SCHLAUCHSCHELLE
7	7380970	1	O-RING 63,17X2,62 FKM 70 A,GN	O-RING
8	11658660	2	HEX SCREW EN 1665 M8X40 8.8 480H SPF	SECHSKANTSCHRAUBE
9	10118695	3	HEXALOBULAR HEAD SCREW M8X22 X5NiC	SECHSRUNDSCHRAUBE
10	11382888	1	HEAT PROTECTION SHEET S355JR	HITZESCHUTZBLECH
10	12428325	1	HEAT PROTECTION SHEET S355JR	HITZESCHUTZBLECH
11	11820285	2	HEX NUT EN 1661 M8 8 480H SPF	SECHSKANTMUTTER
12	7381638	1	SCREW PLUG VSTI M10X1	VERSCHLUSSSCHRAUBE
100	10285708	1	GREASE NBU 30 1KG DOSE	FETT

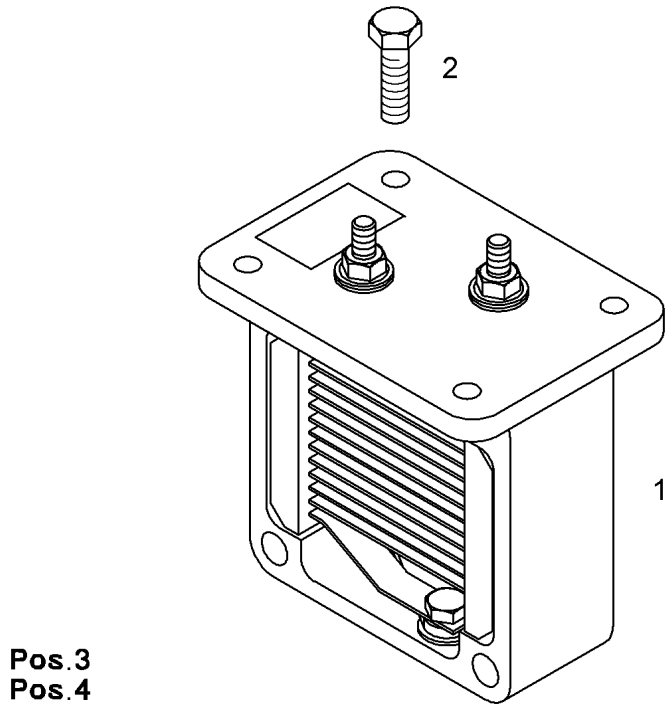

Pos.	Item	Quantity	Description	Bezeichnung
1	10299988	1	HEATING FLANGE PRE.ASS. 24V 1,9KW ⇨ ❑ 222	HEIZFLANSCH VORM.
2	12207548	4	HEX SCREW EN 1665 M6X20 8.8 480H SPF	SECHSKANTSCHRAUBE
3	10003366	1	RIBBED HEX NUT M6 10	SECHSKANTRIPPENMUTTER
4	9080911	1	EARTH CONNECTION PLATE Cu	MASSEVERBINDUNGSBLECH

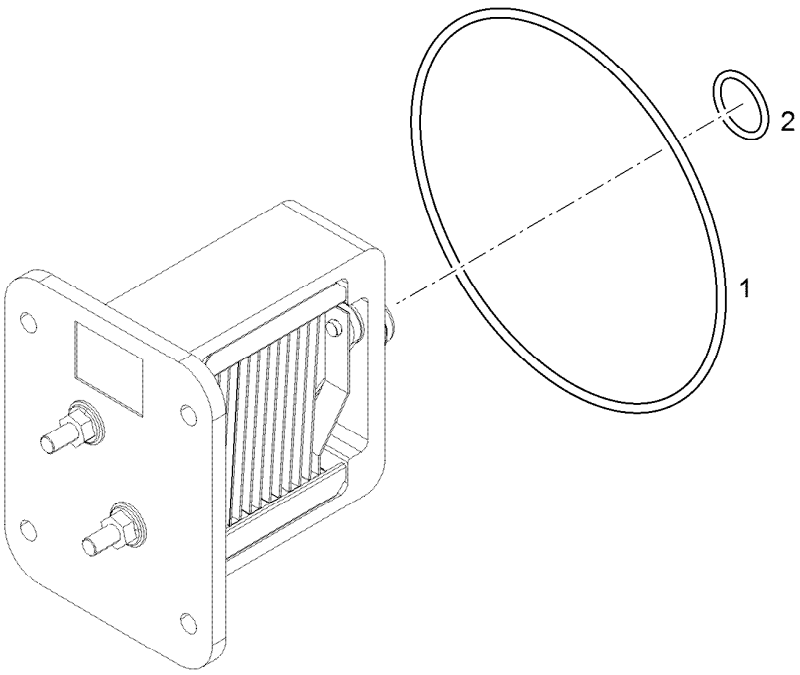

Pos.	Item	Quantity	Description	Bezeichnung
1	10116255	1	O-RING DIN 3771 94,50X3,00 FKM 80	O-RING
2	7380935	1	O-RING ISO 3601-1 12,37X2,62 FKM 90 A,GN	O-RING

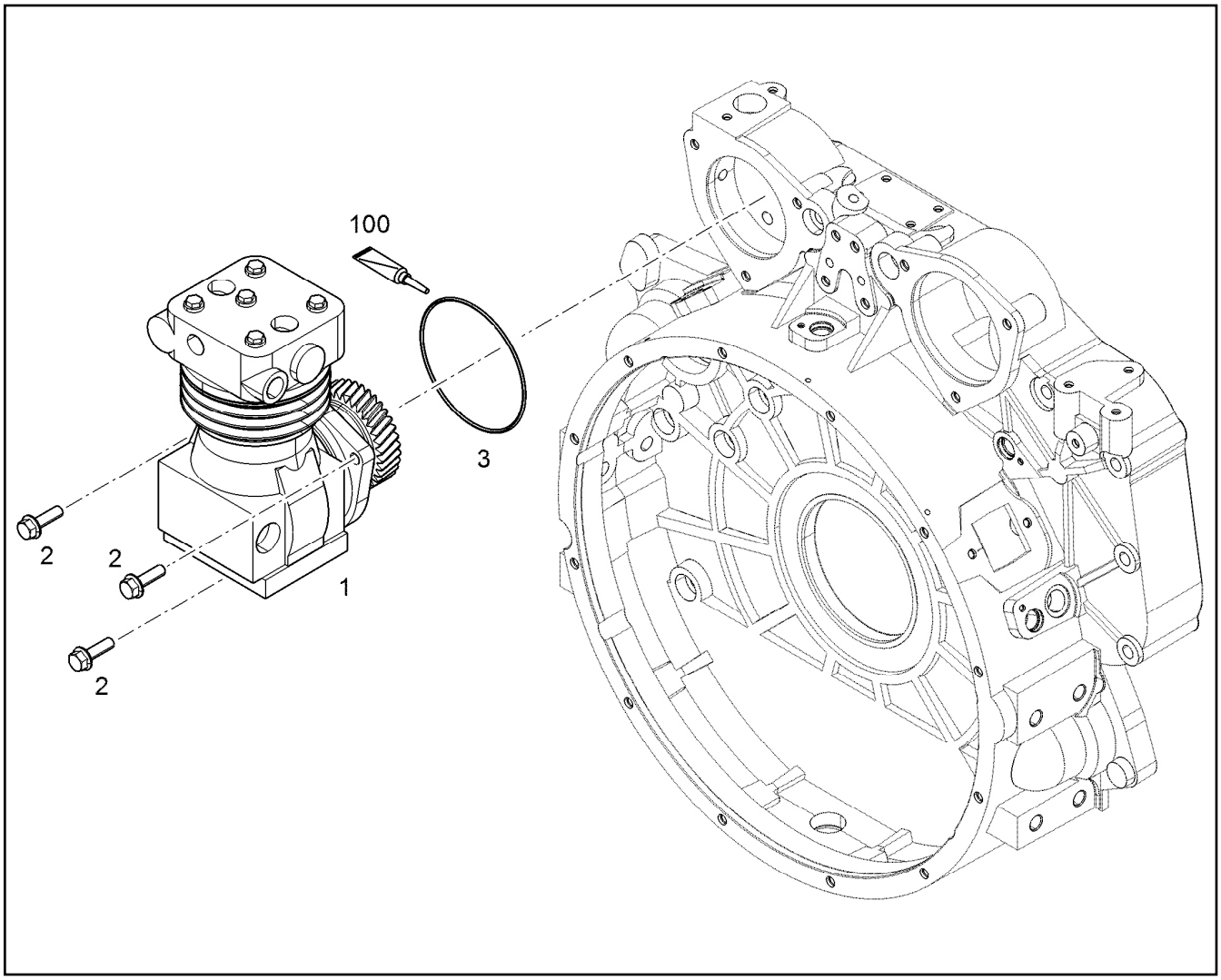

Pos.	Item	Quantity	Description	Bezeichnung
1	9080294	1	AIR COMPRESSOR PRE-ASSY. 300CM3 ⇨ ❑ 224	LUFTPRESSER VORM.
2	11643686	3	HEX SCREW EN 1665 M10X35 8.8 FLZN SPF	SECHSKANTSCHRAUBE
3	10002310	1	O-RING 125X2 VMQ 70	O-RING
100	10285708	1	GREASE NBU 30 1KG DOSE	FETT

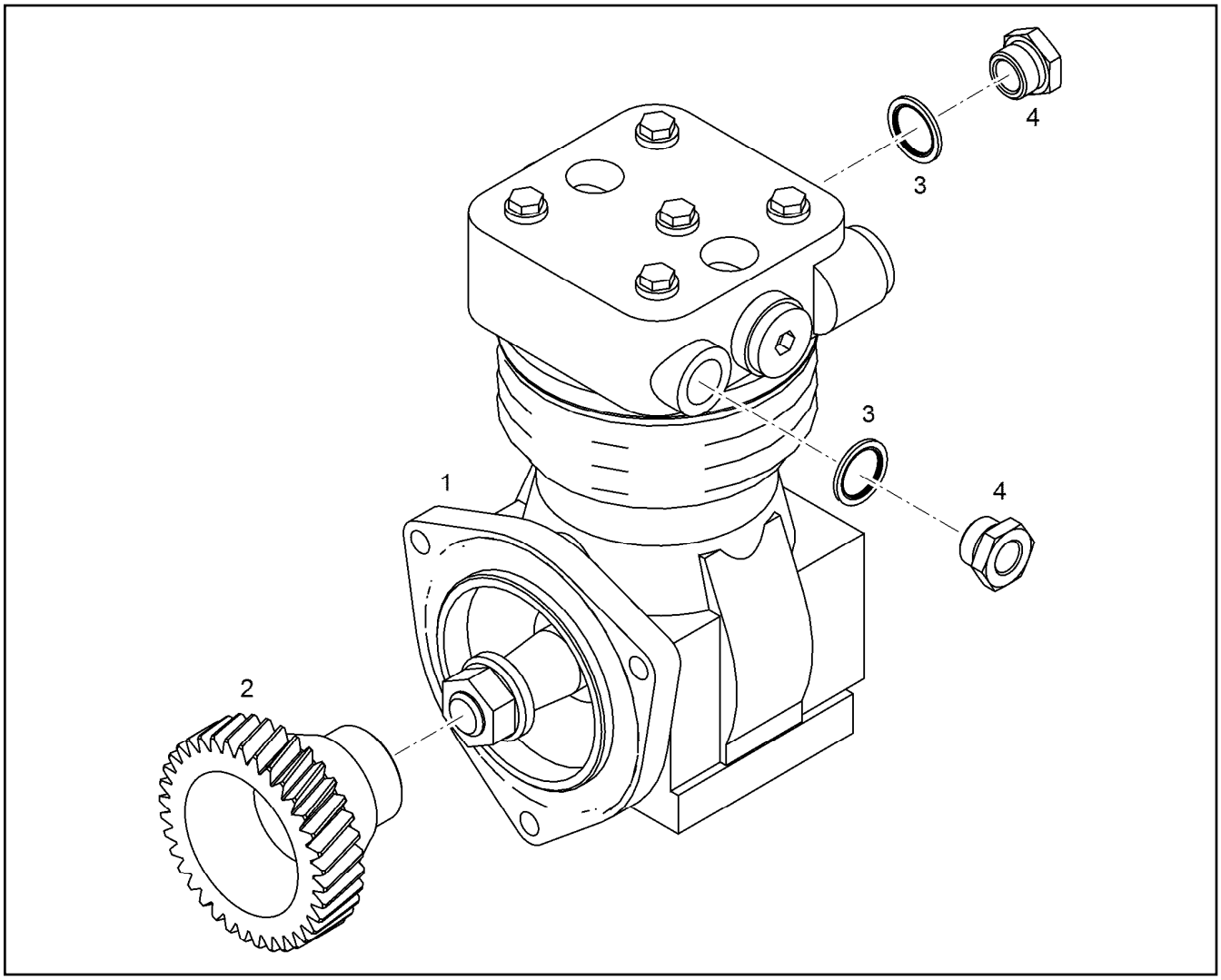

Pos.	Item	Quantity	Description	Bezeichnung
1	5700161	1	AIR COMPRESSOR 293CM3 ⇨ ❑ 225	LUFTPRESSER
2	9073343	1	GEAR WHEEL Z=36 M=2,5	ZAHNRAD
3	10011869	2	SEALING RING 22,7X30X2 St/FPM1-80	DICHTRING
4	7381363	2	FITTING RI M22X1,5/M16X CR6-FREI	VERSCHRAUBUNG

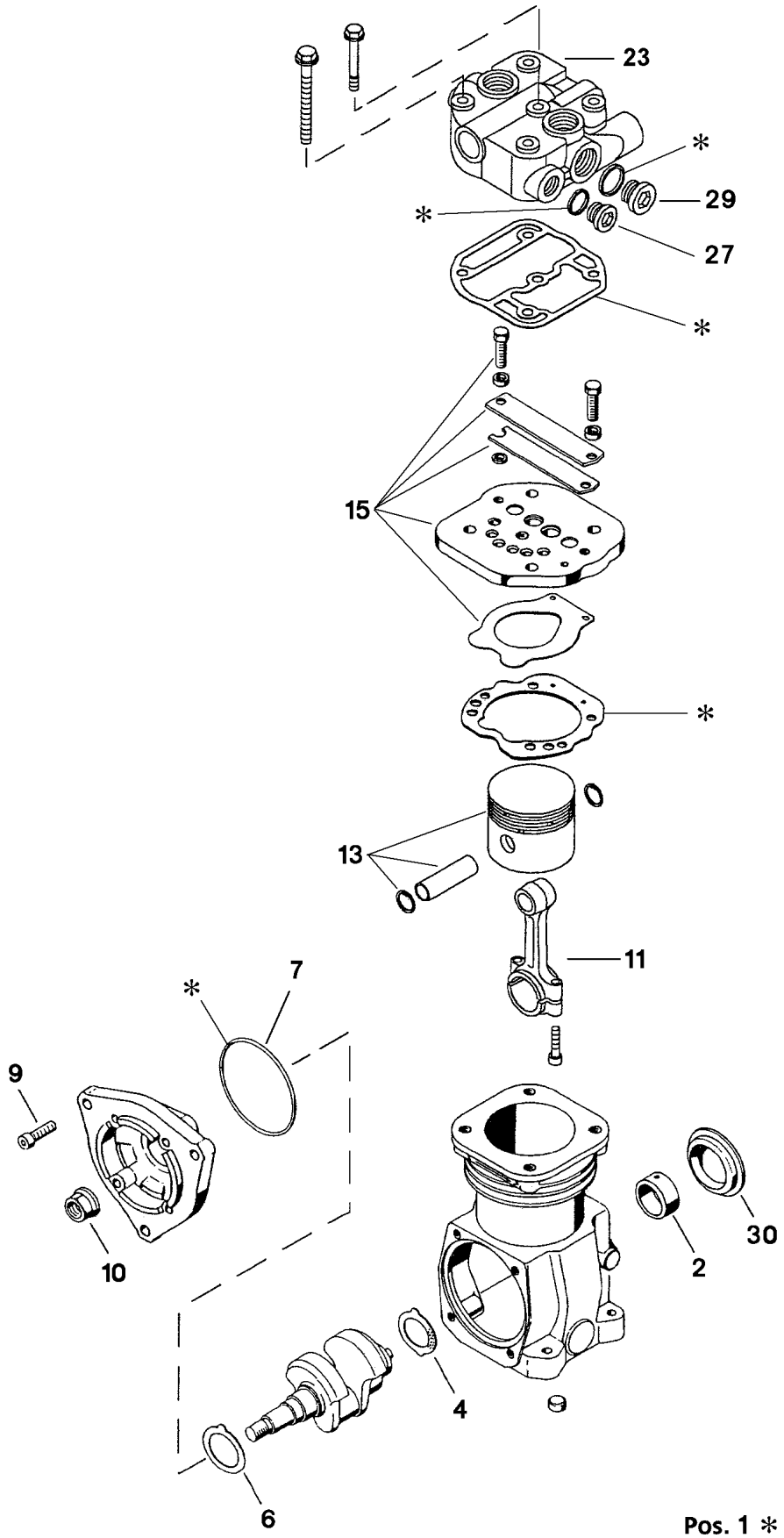
23
*
29
*
27
*
15
*
13
11
7
*
9
10
30
2
4
6
Pos. 1 *

Pos.	Item	Quantity	Description	Bezeichnung
1	571582108	1	REPAIR KIT	REPARATURSATZ
2	571582208	1	BUSHING	BUCHSE
4	571582308	1	THRUST WASHER	ANLAUFSCHEIBE
6	571582408	1	THRUST WASHER	ANLAUFSCHEIBE
7	570979708	1	O-RING 88X3 ACM70	O-RING
9	570613877	4	SCREW DIN 912 M8X25 12.9	SCHRAUBE
10	520303308	1	WHEEL NUT DIN 74361 M20X1,5 8 A2K	RADMUTTER
11	571582508	1	CONROD	PLEUELSTANGE
13	571582608	1	PISTON	KOLBEN
15	571582708	1	REPAIR KIT	REPARATURSATZ
23	7025732	1	CYLINDER HEAD	ZYLINDERKOPF
27	10878578	1	SCREW PLUG DIN 908 M22X1,5X18 ST 480H	VERSCHLUSSSCHRAUBE
29	4600232	3	SCREW PLUG DIN 908 M26X1,5 ST A3C	VERSCHLUSSSCHRAUBE
30	571582808	1	CAP	KAPPE

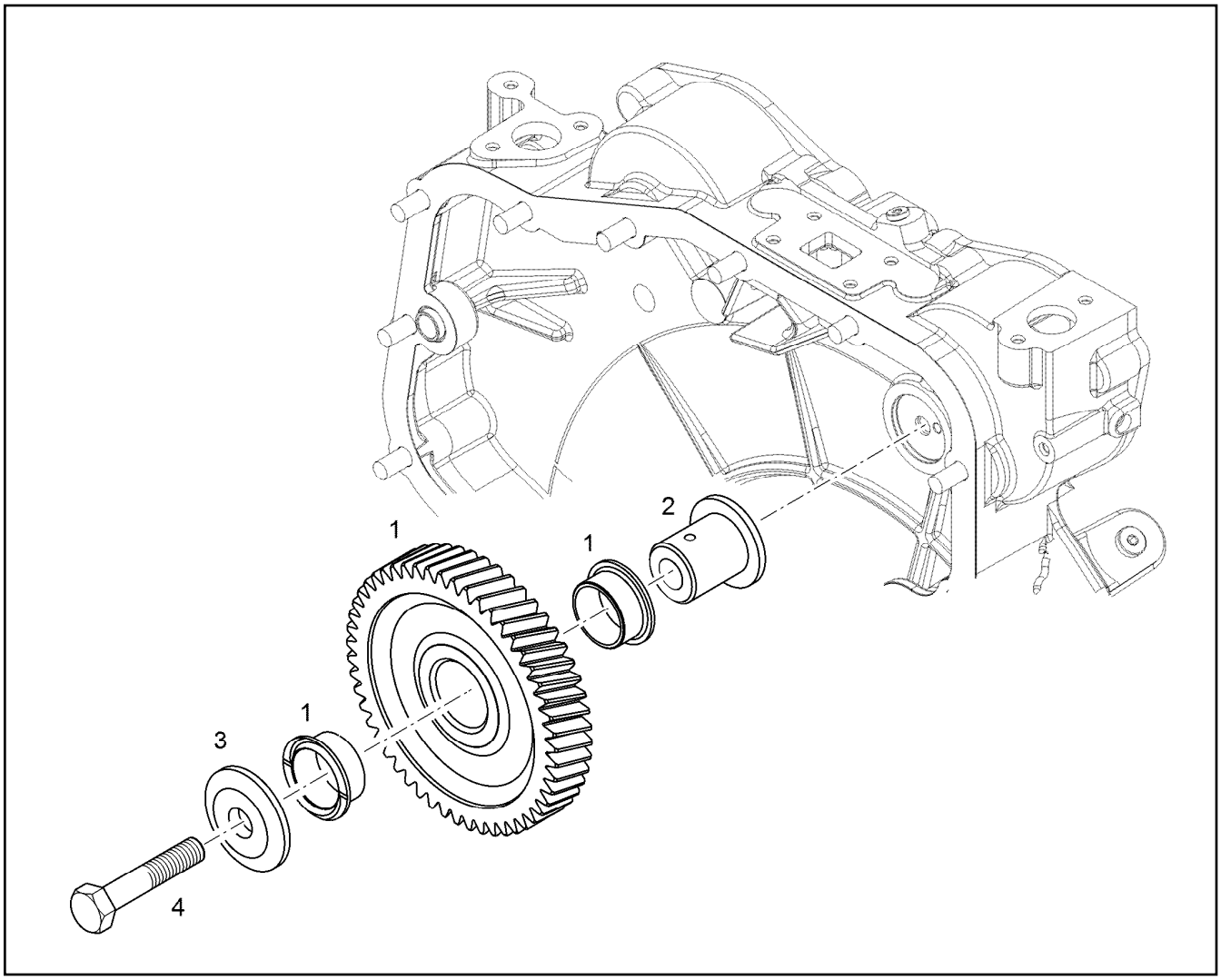

Pos.	Item	Quantity	Description	Bezeichnung
1	9072904	1	INTERMEDIATE GEAR PRE-ASSY.	ZWISCHENRAD VORM.
(2)	9889290	2	PLAIN BEARING BUSHING 30X34X16 G-CuS	GLEITLAGERBUCHSE
2	9072907	1	INTERMEDIATE WHEEL AXLE 42CrMo4+QT	ZWISCHENRADACHSE
3	9072908	1	BEARING COVER 31CrMoV9	LAGERDECKEL
4	11658890	1	HEX SCREW ISO 4014 M12X65 8.8 FLZN SP	SECHSKANTSCHRAUBE

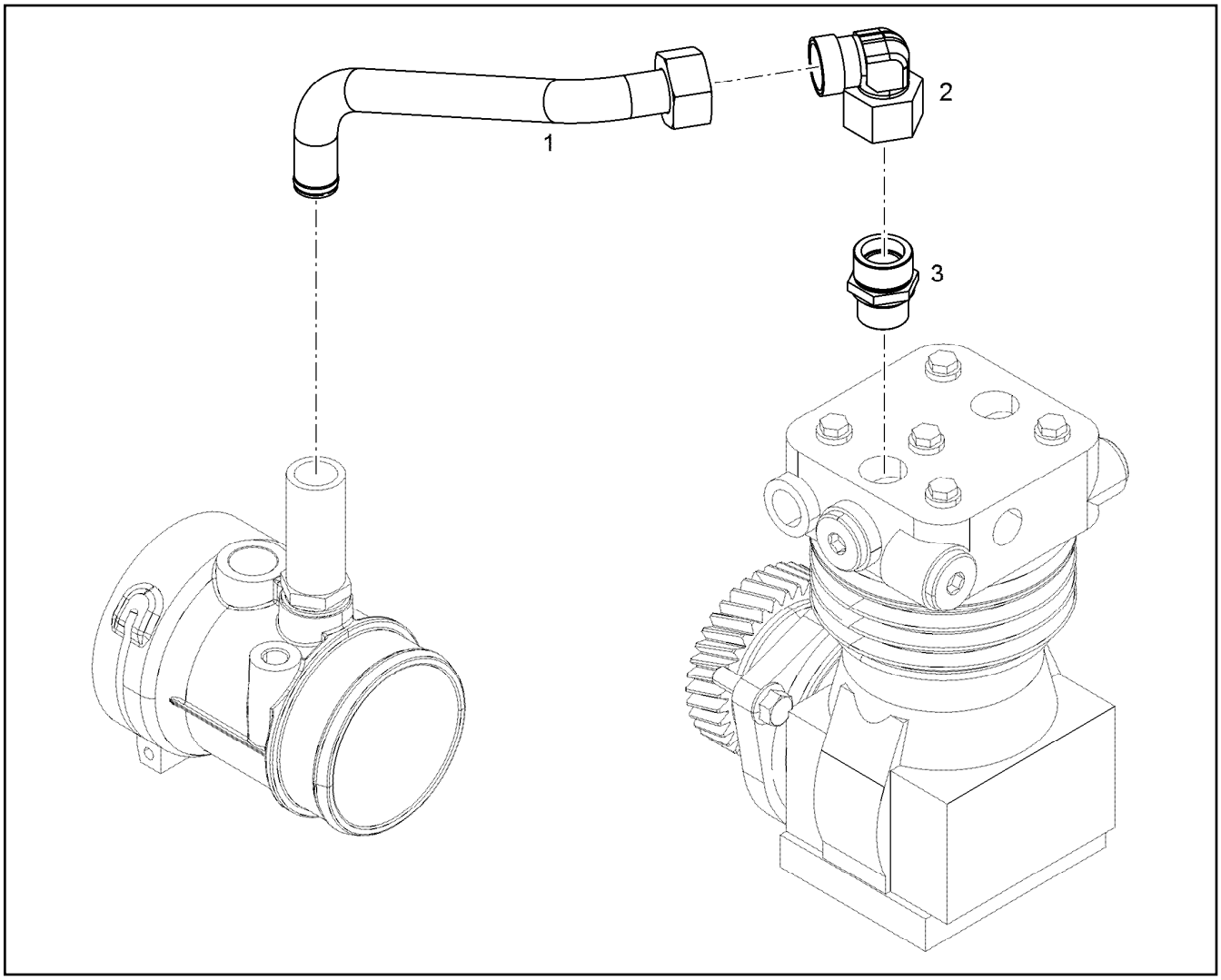

Pos.	Item	Quantity	Description	Bezeichnung
1	10145175	1	PIPELINE 22X1,5	ROHRLEITUNG
2	247126202	1	FITTING EW 22L CR6-FREI	VERSCHRAUBUNG
3	7362515	1	FITTING ISO 8434-1 GE 22L M26X1,5 CR6-F	VERSCHRAUBUNG

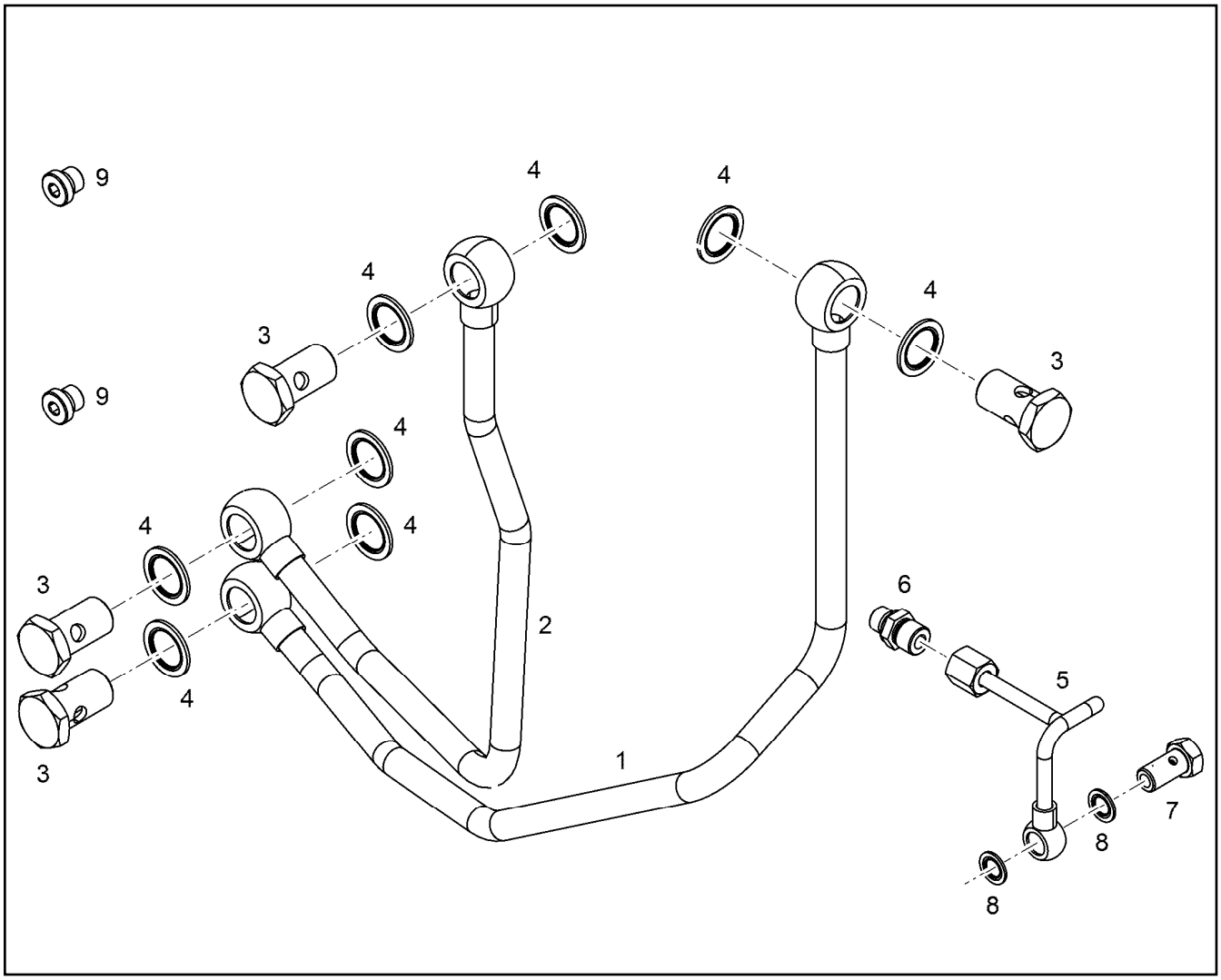

Pos.	Item	Quantity	Description	Bezeichnung
1	10145177	1	COOLING WATER LINE 12X1	KUEHLWASSERLEITUNG
2	10145178	1	COOLING WATER LINE 12X1	KUEHLWASSERLEITUNG
3	12210025	4	HOLLOW SCREW DIN 7643 12-3-M16X1,5 4	HOHLSCHRAUBE
4	10011867	8	SEALING RING 16,7X24X1,5 St/FPM1-80	DICHTRING
5	9080310	1	LUBRICATING OIL LINE 6X1	SCHMIEROELLEITUNG
6	4981233	1	FITTING ISO 8434-1 GE 6L M10X1 CR6-FREI	VERSCHRAUBUNG
7	12210010	1	HOLLOW SCREW DIN 7643 6-3-M10X1 480H	HOHLSCHRAUBE
8	10011864	2	SEALING RING 10,7X16X1,5 St/FPM1-80	DICHTRING
9	7381638	2	SCREW PLUG VSTI M10X1	VERSCHLUSSSCHRAUBE

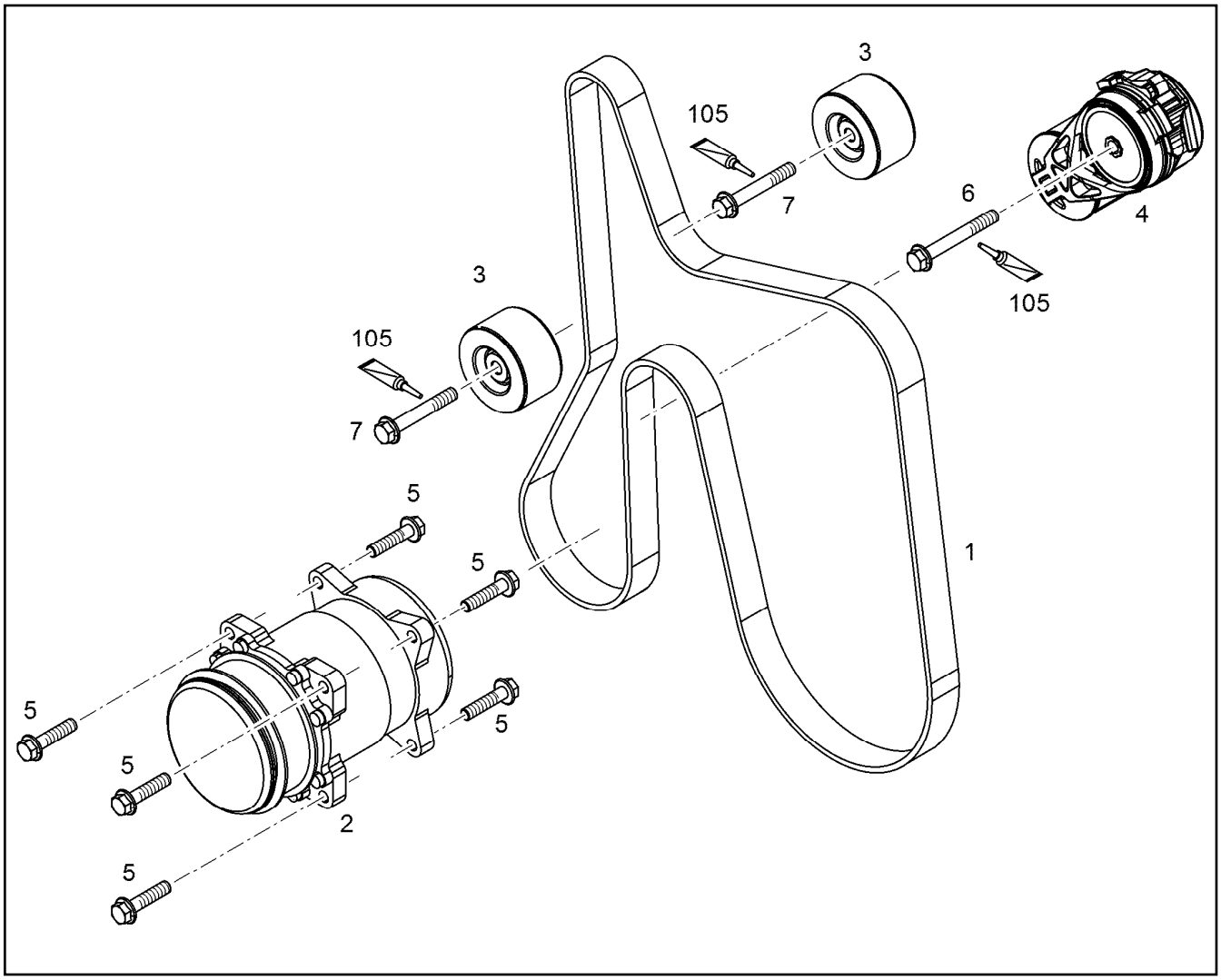

Pos.	Item	Quantity	Description	Bezeichnung
1	11482426	1	V-RIPPED BELT 8XPKX2152 EPDM2	KEILRIPPENRIEMEN
2	10148036	1	AIR CONDITIONING COMPRESSOR D=119-	KLIMAKOMPRESSOR
3	10149360	2	GUIDE PULLEY COMPL.	UMLENKROLLE VORM.
4	10153374	1	FASTENING DEVICE	SPANNVORRICHTUNG
5	11626068	6	HEX SCREW EN 1665 M10X40 8.8 FLZN SPF	SECHSKANTSCHRAUBE
6	11656160	1	HEX SCREW EN 1665 M10X80 8.8 FLZN	SECHSKANTSCHRAUBE
7	11656158	2	HEX SCREW EN 1665 M10X60 8.8 FLZN	SECHSKANTSCHRAUBE
105	811205708	1	SCREW LOCKING 50ML FLASCHE 150 °C	SCHRAUBENSICHERUNG

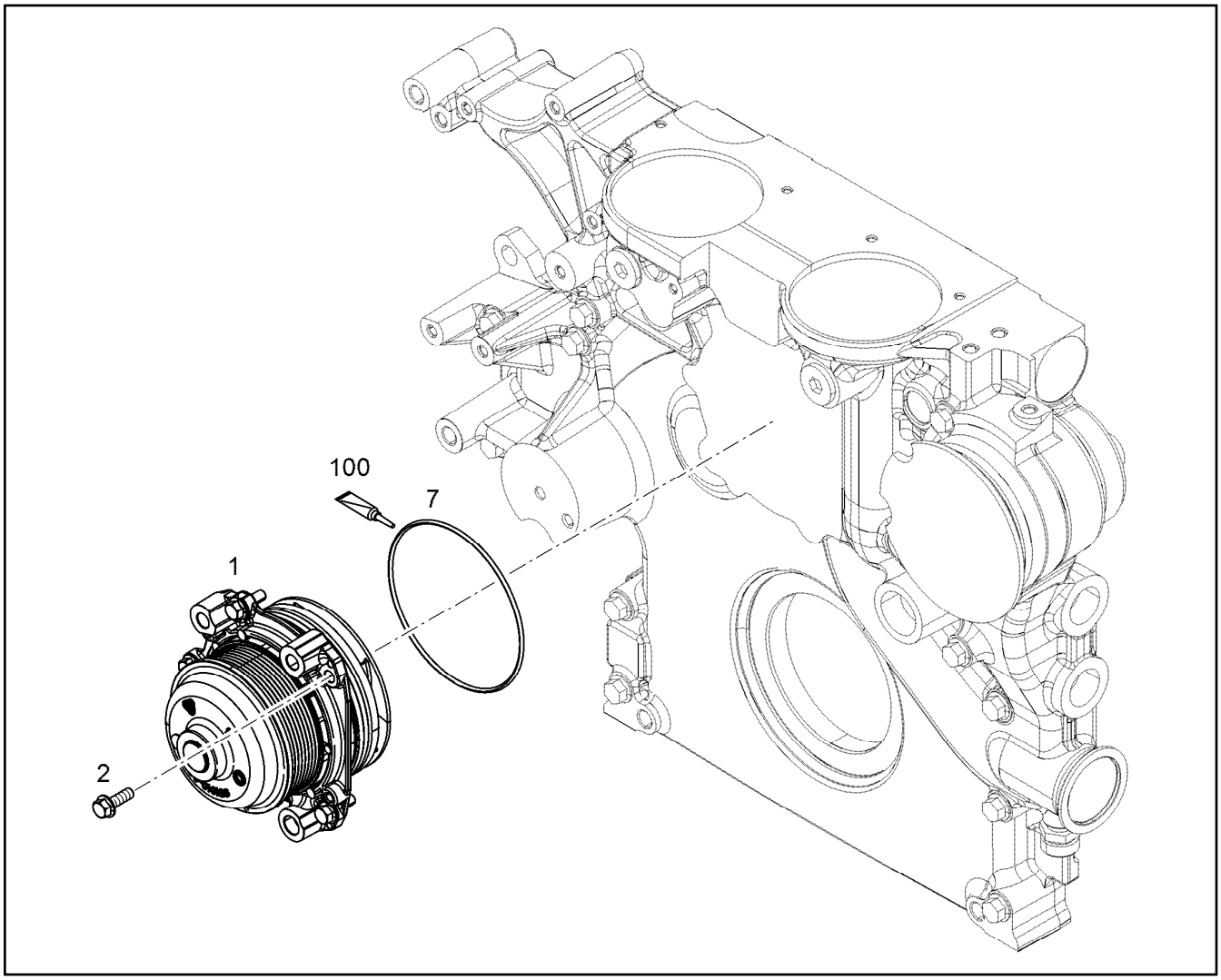

Pos.	Item	Quantity	Description	Bezeichnung
1	10150386	1	WATER PUMP, PRE-ASSEMBLED R-MOTOR	WASSERPUMPE VORM.
1	12863021	1	WATER PUMP, PRE-ASSEMBLED R-MOTOR	WASSERPUMPE VORM.
(1)	7016016	1	O-RING ISO 3601-1 132,94X3,53 FKM 70	O-RING
(7)	7016016	1	O-RING ISO 3601-1 132,94X3,53 FKM 70	O-RING
2	10009007	5	HEX SCREW DIN 6921 M8X25 8.8 A2C	SECHSKANTSCHRAUBE
7	7016016	1	O-RING ISO 3601-1 132,94X3,53 FKM 70	O-RING
100	10285708	1	GREASE NBU 30 1KG DOSE	FETT

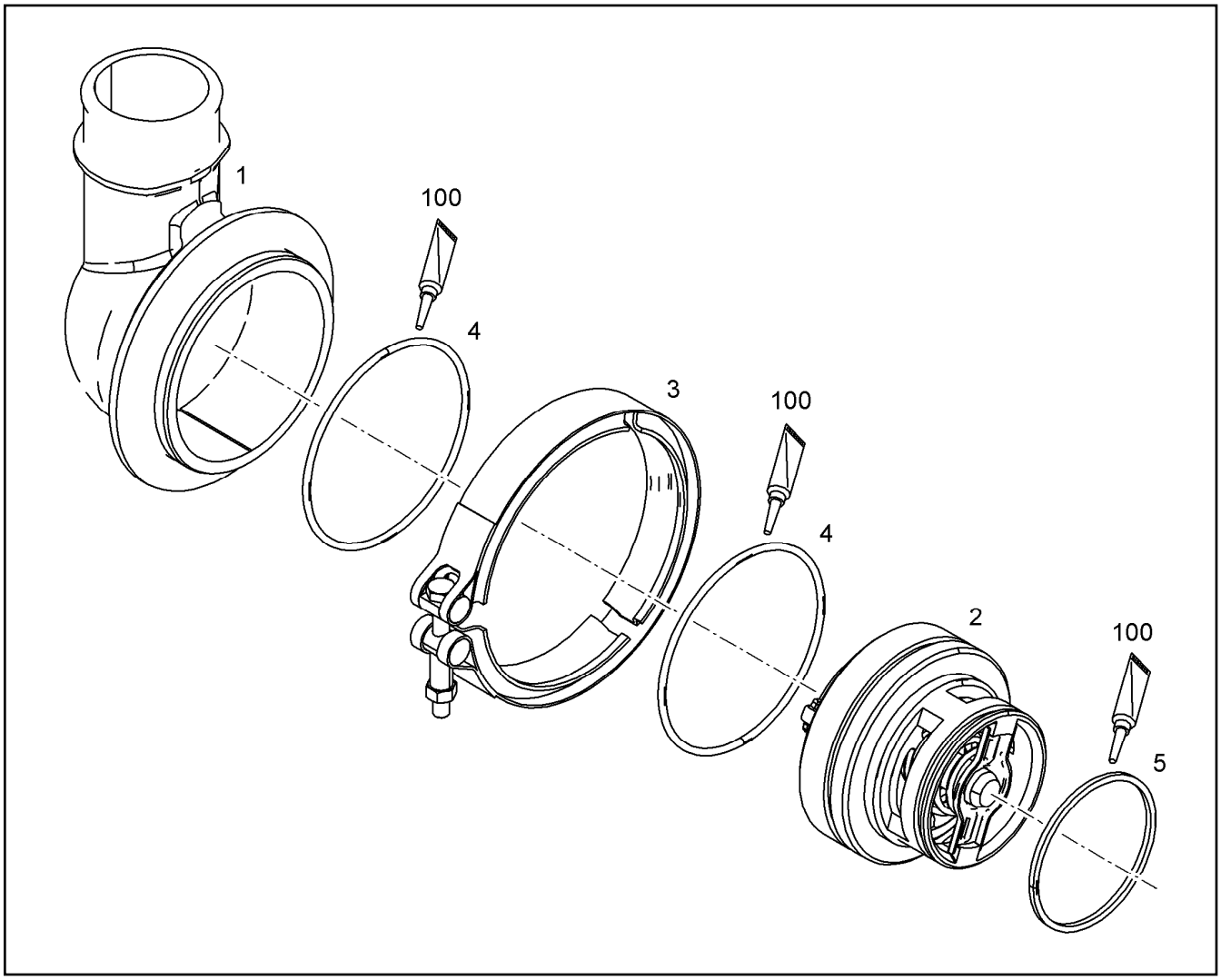

Pos.	Item	Quantity	Description	Bezeichnung
2	10154798	1	THERMOSTAT	THERMOSTAT
3	10138820	1	RETAINER CLIP 150/K1 Inox	SPANNSCHELLE
4	10002167	2	O-RING ISO 3601-1 107,54X3,53 FKM 70	O-RING
5	7009080	1	O-RING DIN 3771 75,79X3,53 MVQ,70 SHOR	O-RING
100	10285708	1	GREASE NBU 30 1KG DOSE	FETT

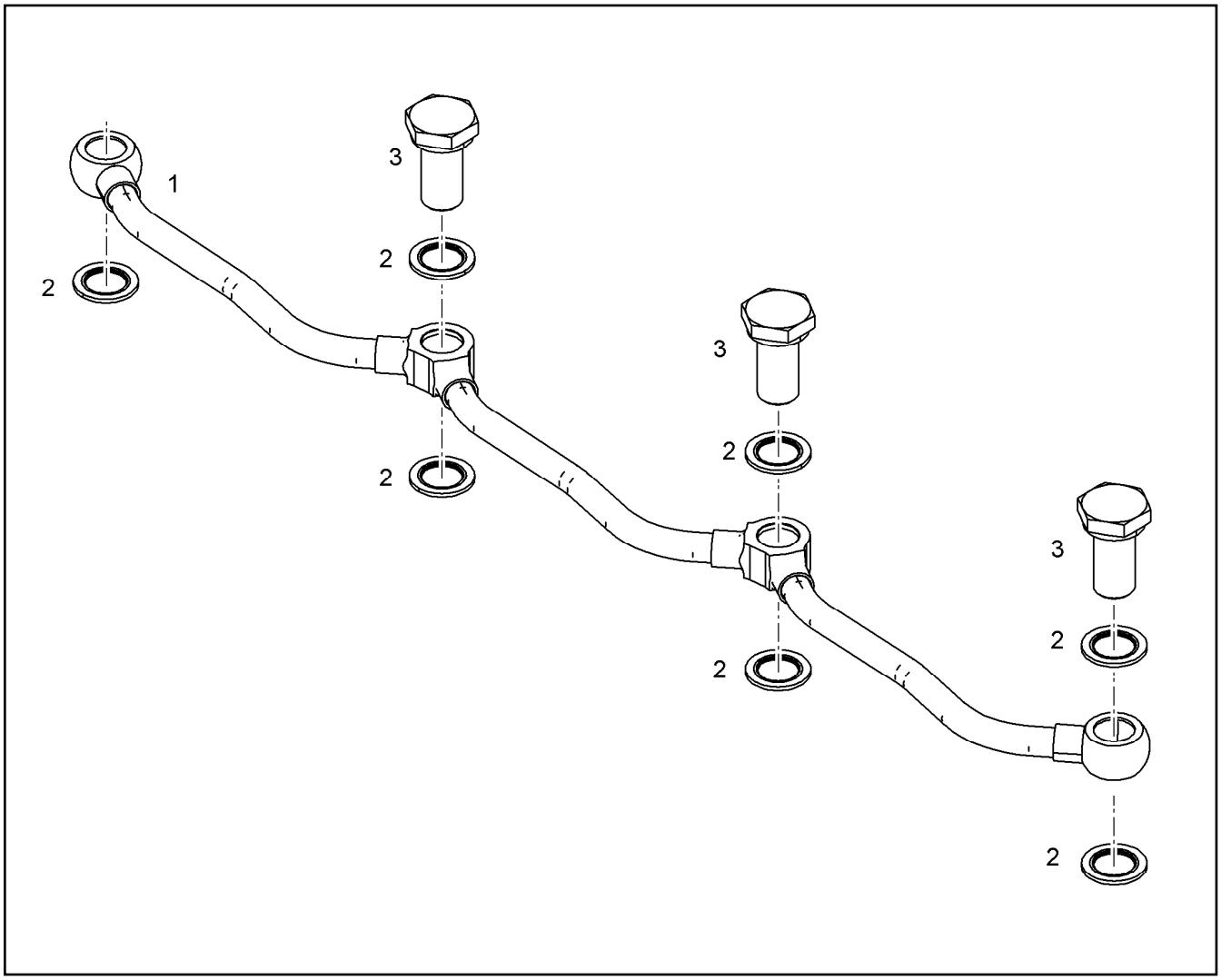

Pos.	Item	Quantity	Description	Bezeichnung
2	10011866	7	SEALING RING 14,7X22X1,5 St/FPM1-80	DICHTRING
3	9080466	3	HOLLOW SCREW 10X1X27 11SMn30+C FE/	HOHLSCHRAUBE

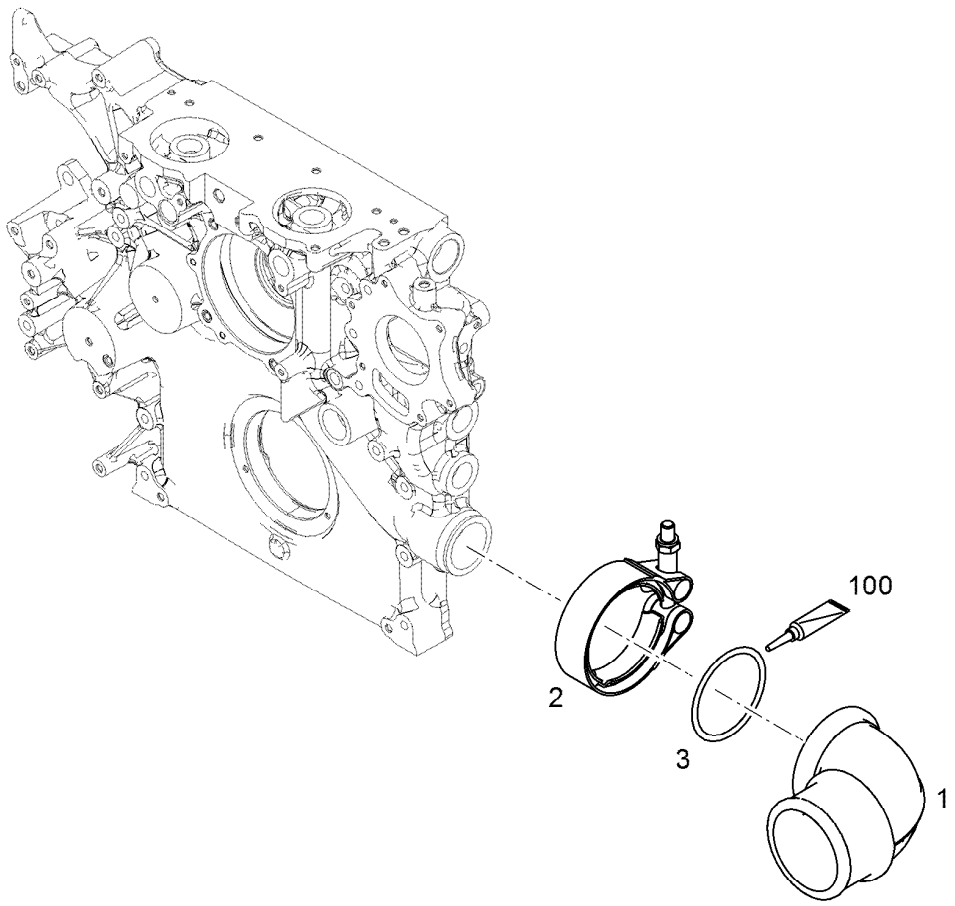

Pos.	Item	Quantity	Description	Bezeichnung
1	10142671	1	ELBOW	KRUEMMER
2	10122841	1	RETAINER CLIP 73/K1 St/Inox	SPANNSCHELLE
3	7380083	1	O-RING ISO 3601-1 55,25X2,62 NBR 70 A,BK	O-RING
100	10285708	1	GREASE NBU 30 1KG DOSE	FETT

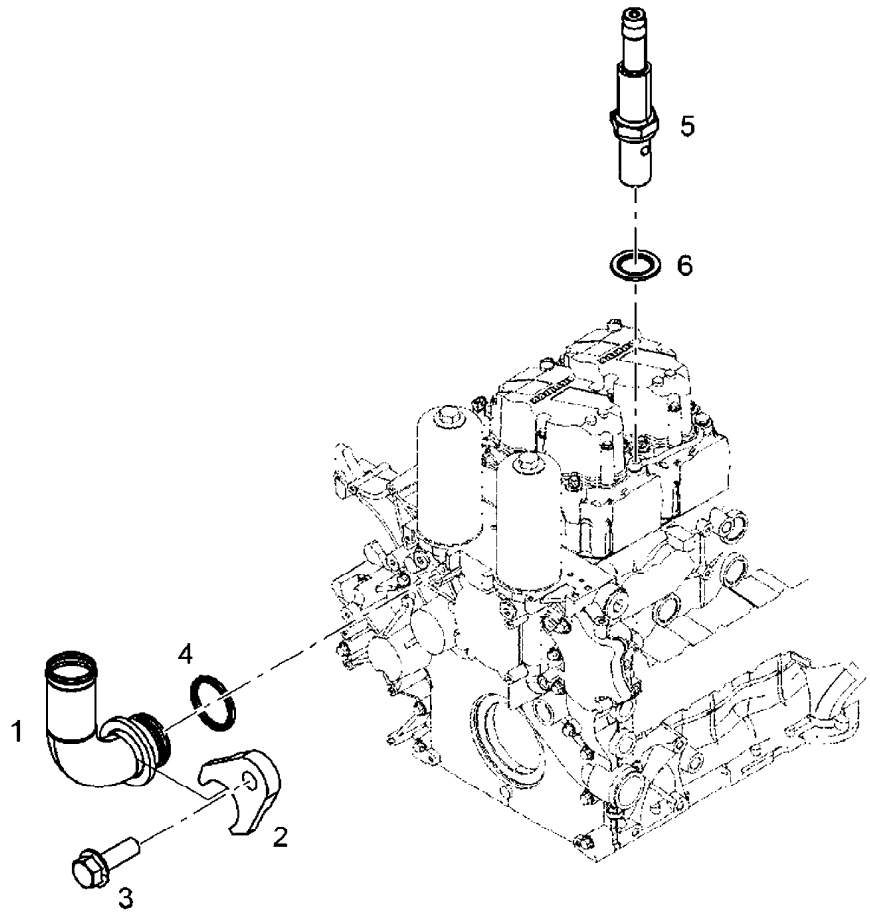

Pos.	Item	Quantity	Description	Bezeichnung
1	10142668	1	HOSE NIPPLE	SCHLAUCHNIPPEL
2	10142763	1	PLATE	BLECH
3	12215999	1	HEX SCREW EN 1665 M8X25 10.9 480H	SECHSKANTSCHRAUBE
4	7381526	1	O-RING 21,30X2,4 V70GA	O-RING
5	10140969	1	HOSE NIPPLE 11SMn30+C	SCHLAUCHNIPPEL
6	10011866	1	SEALING RING 14,7X22X1,5 St/FPM1-80	DICHTRING

Pos.	Item	Quantity	Description	Bezeichnung
1	10145524	1	EXHAUST PIPE R-MOTORXD934	ABGASROHR
3	10135885	4	SEAL	DICHTUNG
4	10138656	14	HEXALOBULAR HEAD SCREW M10X70 21C	SECHSRUNDSCHRAUBE
7	10138657	14	DISTANCE SLEEVE 11X20X25 42CrMo4	DISTANZHUELSE

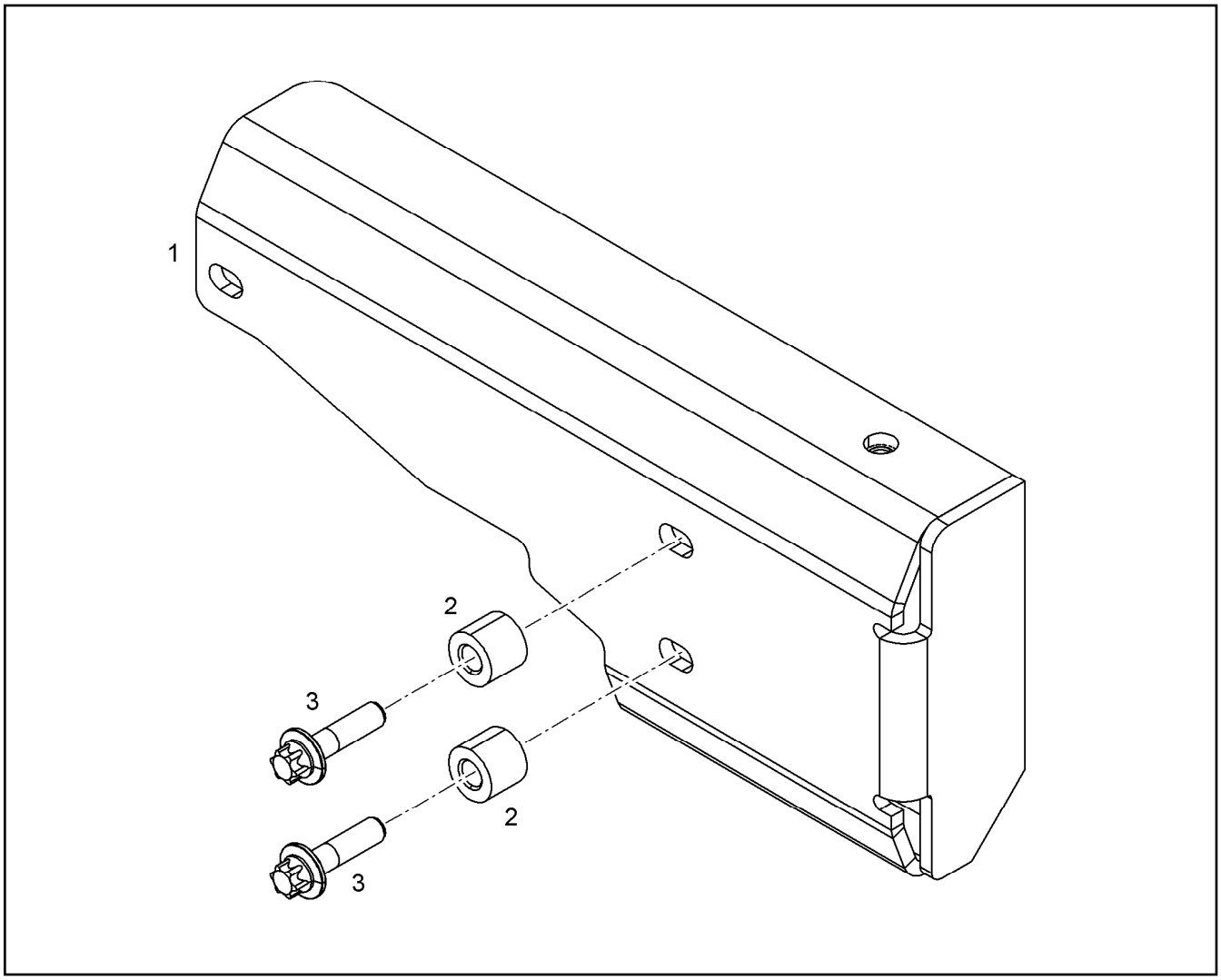

Pos.	Item	Quantity	Description	Bezeichnung
1	10144755	1	HEAT PROTECTION SHEET	HITZESCHUTZBLECH
2	9177776	2	WASHER 8,4X18X15 -	SCHEIBE
3	10125702	2	HEXALOBULAR HEAD SCREW M8X30 21CrM	SECHSRUNDSCHRAUBE

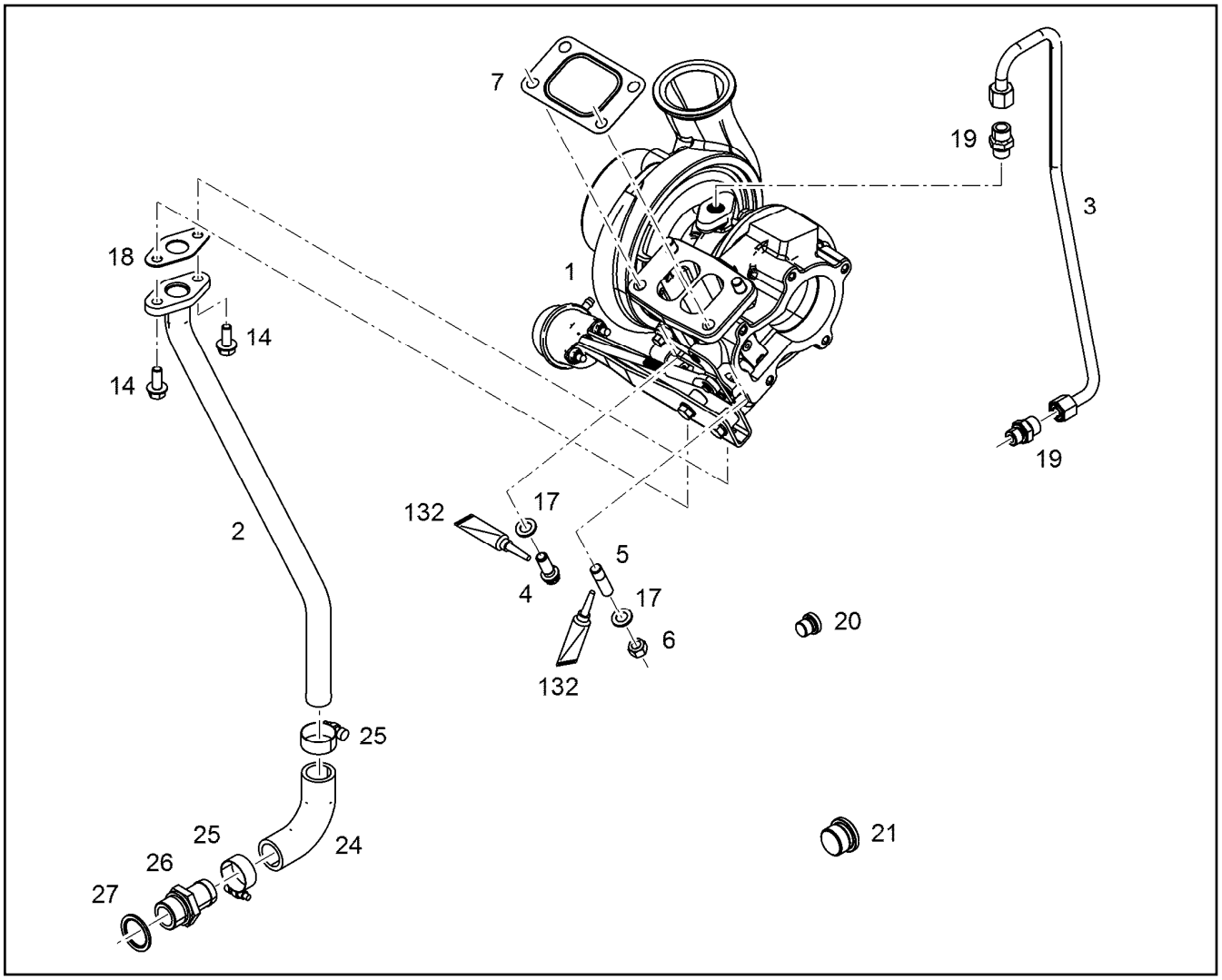

Pos.	Item	Quantity	Description	Bezeichnung
1	10139626	1	TURBOCHARGER HE300	TURBOLADER
2	12847441	1	OIL RETURN PIPE 22X1,5	OELRUECKLAUFLEITUNG
3	10140757	1	LUBRICATING OIL LINE 10X1	SCHMIEROELLEITUNG
4	12475399	1	12-SIDED SCREW M10X25 X5NiCrTi26-1	ZWOELFKANTSCHRAUBE
5	4981172	3	DOUBLE-ENDED STUD DIN 939 M10X25 X5N	STIFTSCHRAUBE
6	10120639	3	NUT M10X1,5 X5NiCrTi26-1	MUTTER
7	10125739	1	SEAL X15CrNiSi20-	DICHTUNG
14	10030519	2	HEX SCREW DIN 6921 M8X20 8.8	SECHSKANTSCHRAUBE
17	9076638	4	WASHER 10,5X18,5X2 -	SCHEIBE
18	9268131	1	SEAL 1,5 AFM 32/2	DICHTUNG
19	4981235	2	FITTING ISO 8434-1 GE 10L M14X1,5 CR6-F	VERSCHRAUBUNG
20	7380566	1	SCREW PLUG VSTI M14X1,5	VERSCHLUSSSCHRAUBE
21	7381457	1	SCREW PLUG VSTI M26X1,5 CR6-FREI	VERSCHLUSSSCHRAUBE
24	10116310	1	RUBBER CONNECTION	GUMMIMUFFE
25	774215008	2	HOSE CLAMP 26/20-32/12 W3	SCHLAUCHSCHELLE
26	9140351	1	HOSE NIPPLE CE-0, H54	SCHLAUCHNIPPEL
27	10011870	1	SEALING RING 26,7X34,93X2 St/FPM1-80	DICHTRING
132	10002552	1	COPPER PASTE 850g	KUPFERPASTE

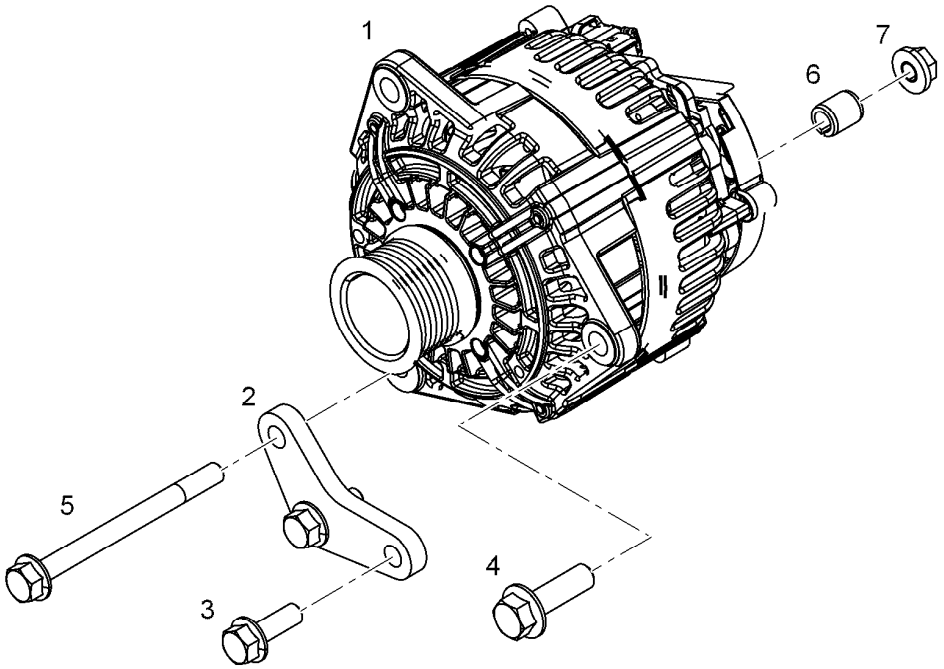

Pos.	Item	Quantity	Description	Bezeichnung
1	10142606	1	THREE PHASE CURRENT GENERATOR 5.0	DREHSTROMGENERATOR
2	10142670	1	MOUNTING SHEET	BEFESTIGUNGSBLECH
3	10299564	2	HEX SCREW EN 1665 M10X30 10.9 FLZN SP	SECHSKANTSCHRAUBE
4	10299565	1	HEX SCREW EN 1665 M12X40 10.9 FLZN	SECHSKANTSCHRAUBE
5	12207559	1	HEX SCREW EN 1665 M10X120 8.8 FLZN	SECHSKANTSCHRAUBE
6	7380960	1	RIBBED HEX NUT M10 10	SECHSKANTRIPPENMUTTER

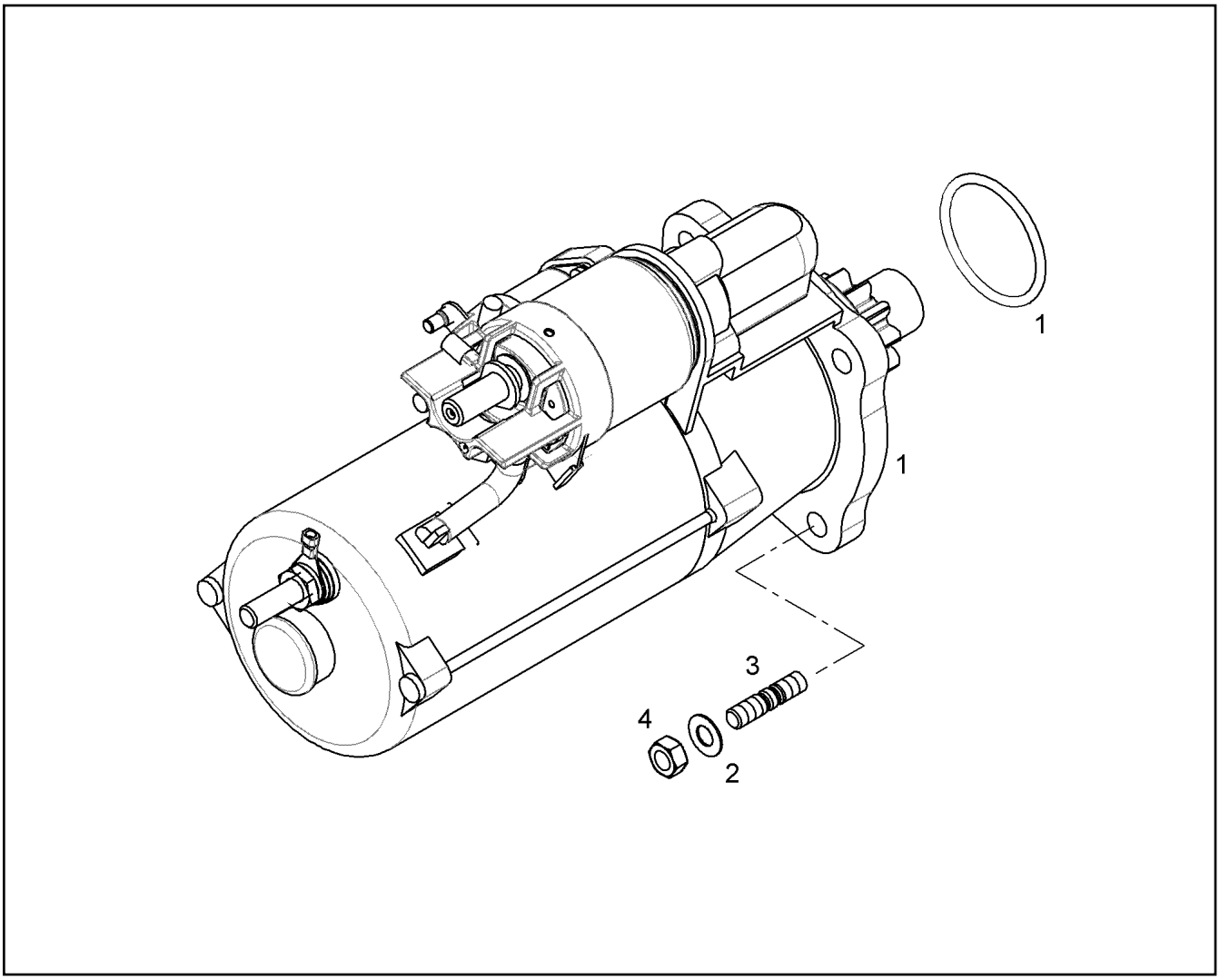

Pos.	Item	Quantity	Description	Bezeichnung
1	10219978	1	STARTER 7.8KW 24V ⇨ ❑ 241	STARTER
1	11386644	1	STARTER PRE-ASSY. 7.8KW 24V ⇨ ❑ 242	STARTER VORM.
3	10179459	3	DOUBLE-ENDED STUD DIN 835 M10X30 8.8	STIFTSCHRAUBE
4	10179265	3	HEX NUT EN 1661 M10 8 FLZN	SECHSKANTMUTTER

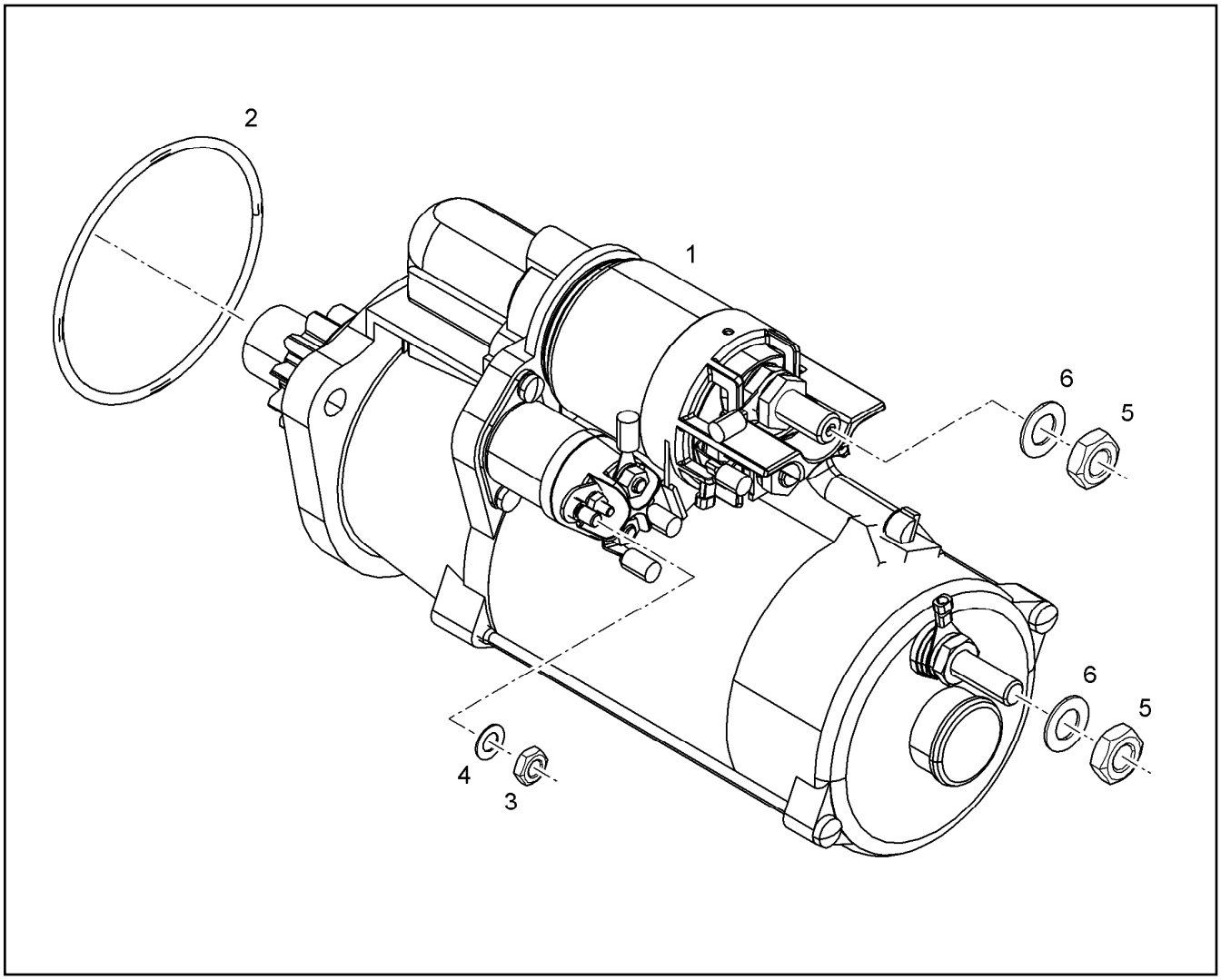

Pos.	Item	Quantity	Description	Bezeichnung
2	10218370	1	O-RING 85X2 HNBR 70	O-RING
3	10411094	1	HEX NUT M6 8	SECHSKANTMUTTER
4	10411092	1	SPRING WASHER DIN 137 6 X10CrNi18-8	FEDERSCHEIBE
5	10411095	2	HEX NUT ISO 4035 M10X1,5 04 ZnNi	SECHSKANTMUTTER
6	10411093	2	SPRING WASHER DIN 137 10 X10CrNi18-8	FEDERSCHEIBE

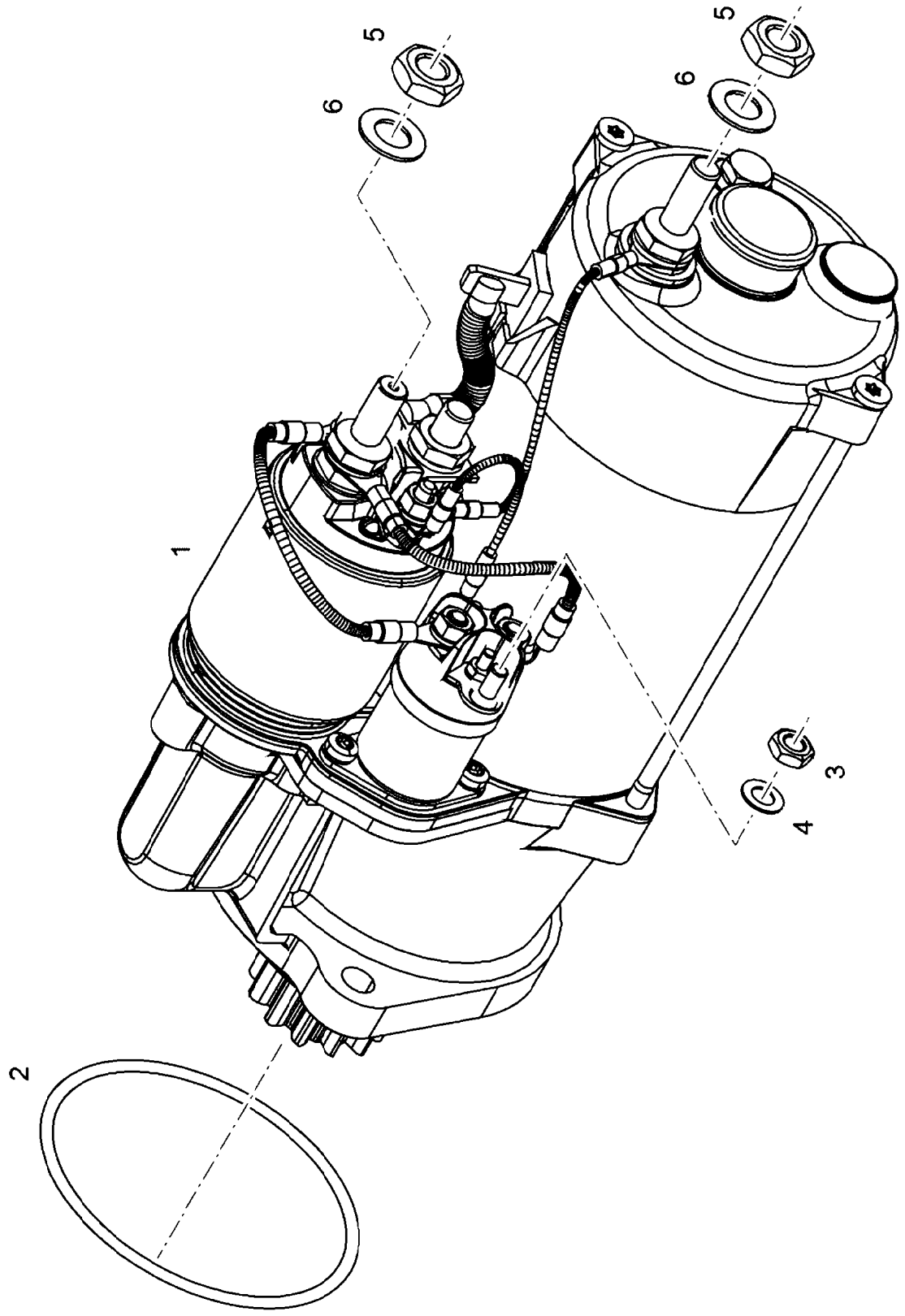
1
2
3
4
5
6
5
6

Pos.	Item	Quantity	Description	Bezeichnung
2	10218370	1	O-RING 85X2 HNBR 70	O-RING
3	10411094	1	HEX NUT M6 8	SECHSKANTMUTTER
4	10411092	1	SPRING WASHER DIN 137 6 X10CrNi18-8	FEDERSCHEIBE
5	10411095	2	HEX NUT ISO 4035 M10X1,5 04 ZnNi	SECHSKANTMUTTER
6	10411093	2	SPRING WASHER DIN 137 10 X10CrNi18-8	FEDERSCHEIBE

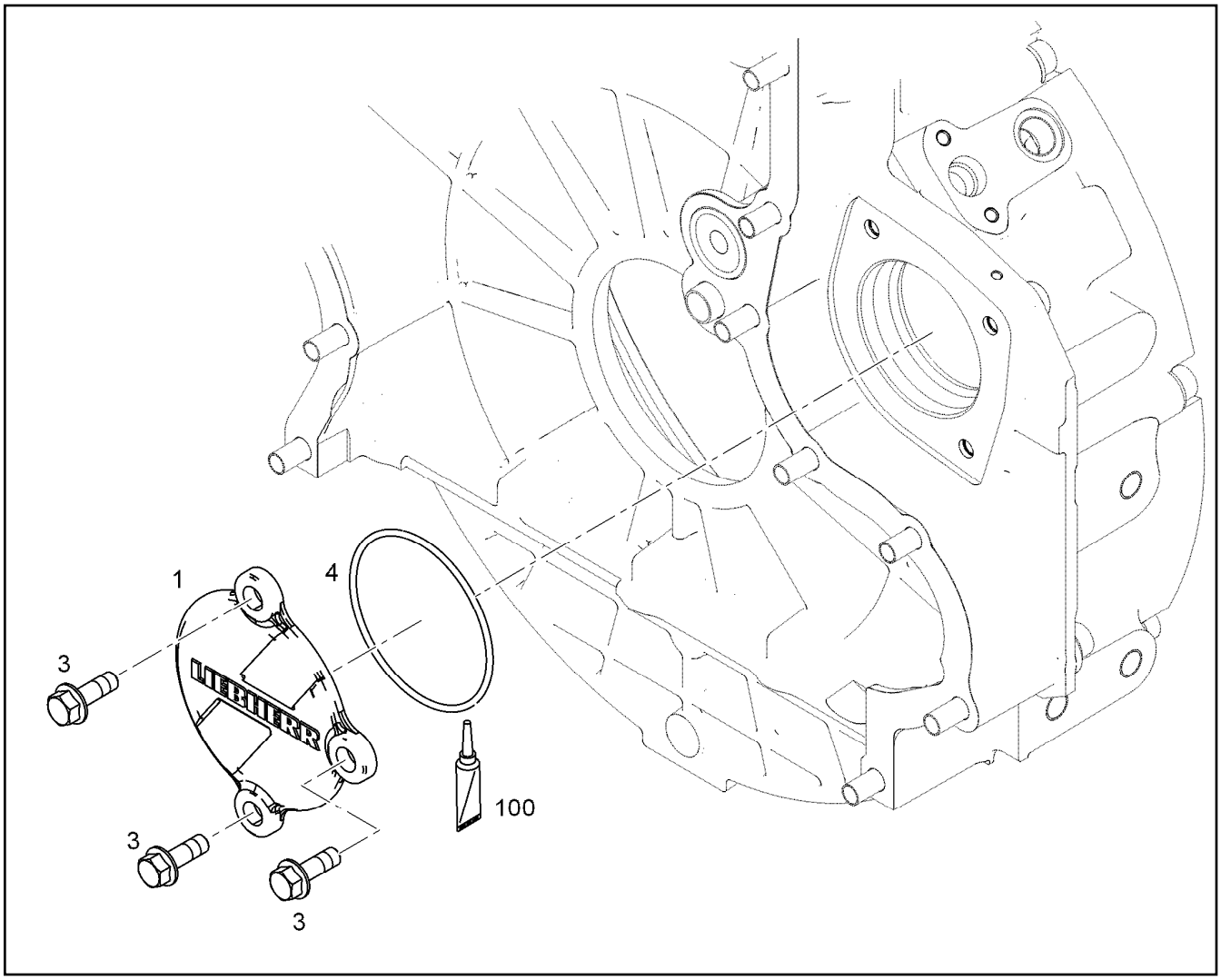

Pos.	Item	Quantity	Description	Bezeichnung
1	10124116	1	COVER EN AC-Al Si8	DECKEL
3	11656155	3	HEX SCREW EN 1665 M10X30 8.8 FLZN SPF	SECHSKANTSCHRAUBE
4	7381995	1	O-RING DIN 3771 98,02X3,53 HNBR 70 A,BK	O-RING
100	10282622	1	GREASE STABURAGS NBU 30 0.010KG	FETT

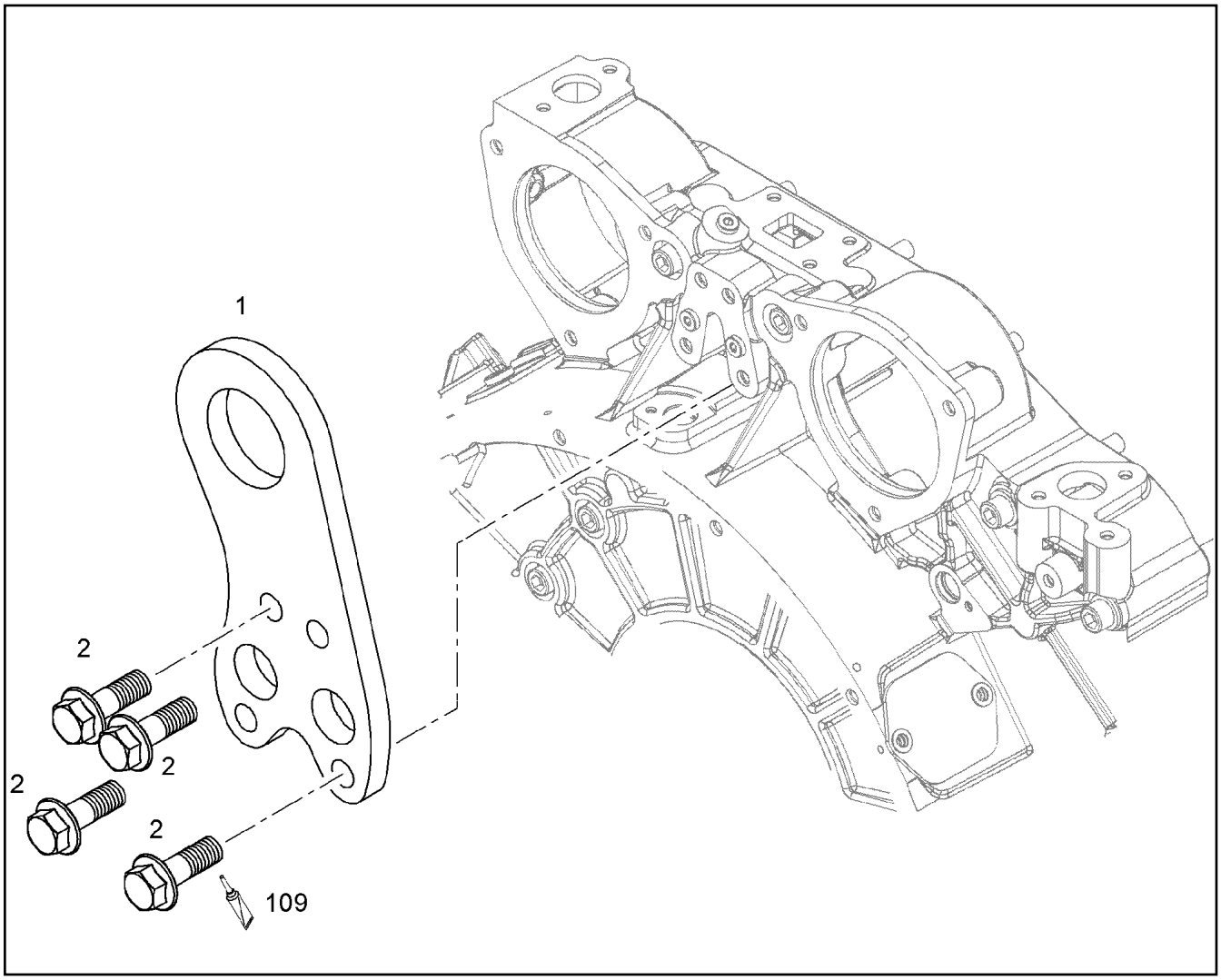

Pos.	Item	Quantity	Description	Bezeichnung
1	9078849	1	TRANSPORTER CONSOLE S355J0	TRANSPORTKONSOLE
2	10299564	4	HEX SCREW EN 1665 M10X30 10.9 FLZN SP	SECHSKANTSCHRAUBE
109	811205708	1	SCREW LOCKING 50ML FLASCHE 150 °C	SCHRAUBENSICHERUNG

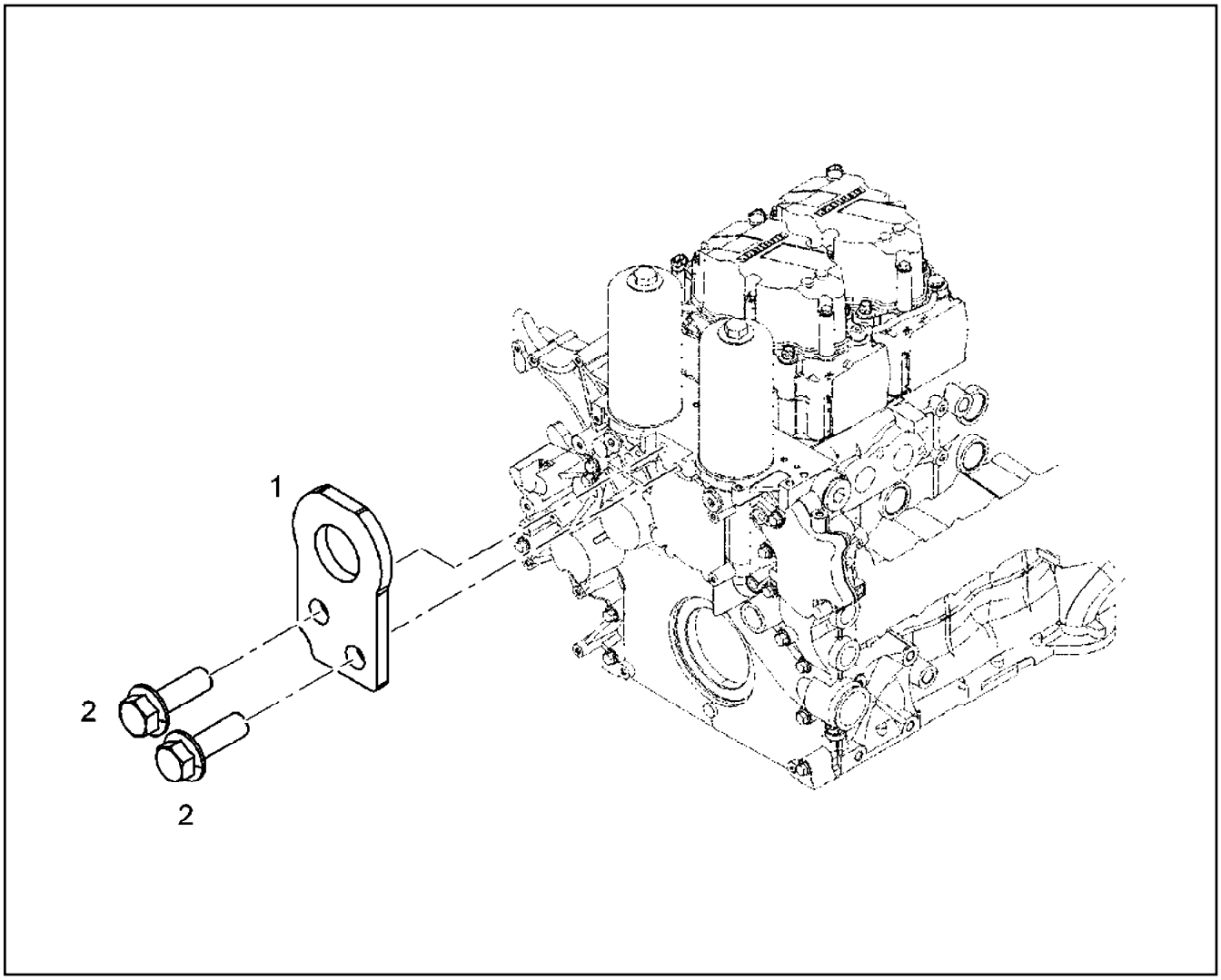

Pos.	Item	Quantity	Description	Bezeichnung
2	12207570	2	HEX SCREW EN 1665 M16X50 8.8 FLZN SPF	SECHSKANTSCHRAUBE

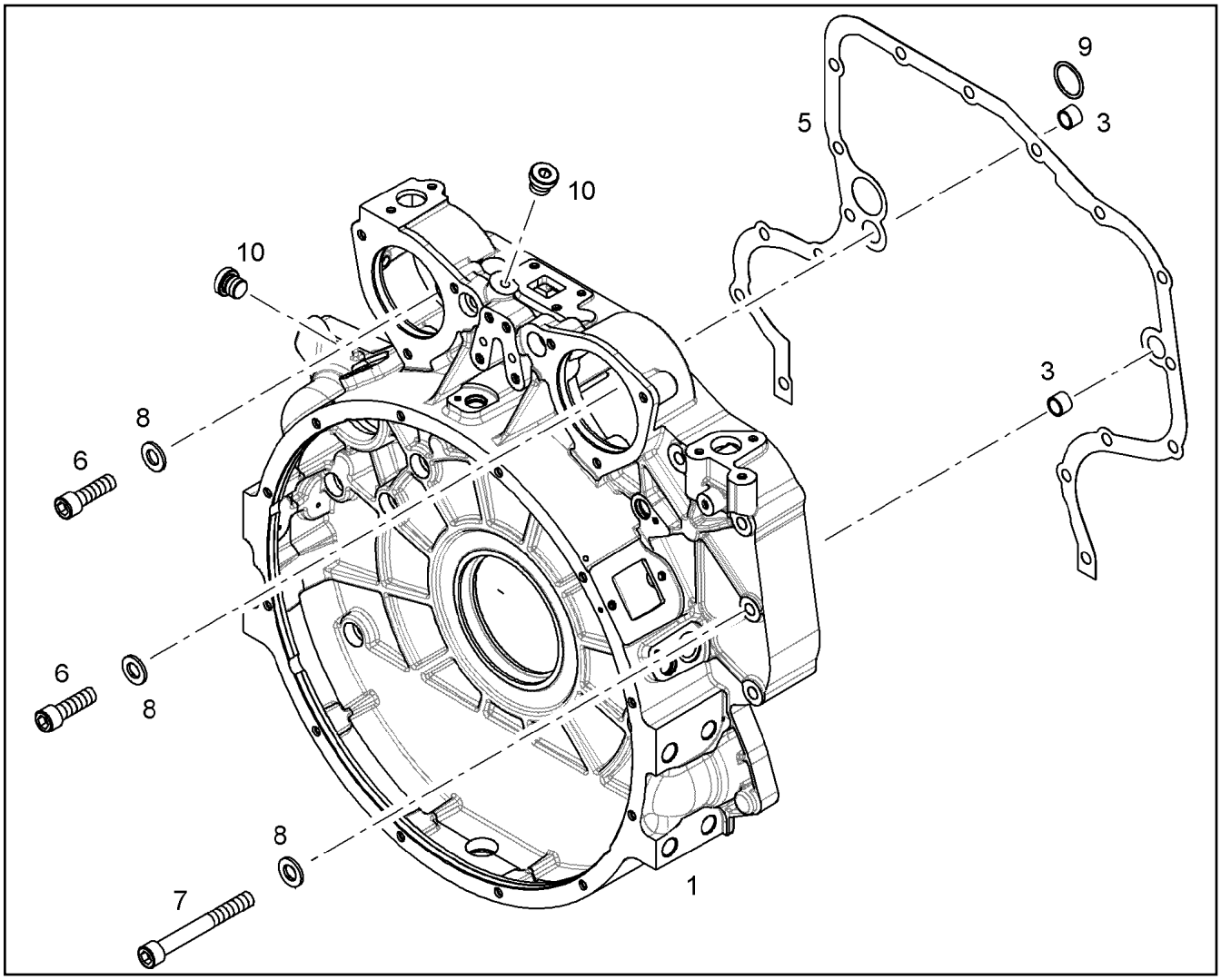

Pos.	Item	Quantity	Description	Bezeichnung
1	10118148	1	FLYWHEEL HOUSING PRE-ASS. SAE 1	SCHWUNGRADGEHAEUSE VO
3	10134348	2	TIGHT FIT SLEEVE 12X20X20 100Cr6	PASSHUELSE
5	10137721	1	SEAL 0,33 METALOSEAL 1	DICHTUNG
6	4980012	2	SOCKET HEAD SCREW ISO 4762 M12X40 1	ZYLINDERSCHRAUBE
7	11321144	15	SOCKET HEAD SCREW ISO 4762 M12X100	ZYLINDERSCHRAUBE
8	10289804	17	WASHER ISO 7089 12 300HV FLZN SPF	SCHEIBE
9	7380653	1	O-RING ISO 3601-1 34,59X2,62 FKM 90 A,BK	O-RING
10	7381638	2	SCREW PLUG VSTI M10X1	VERSCHLUSSSCHRAUBE
100	10285708	1	GREASE NBU 30 1KG DOSE	FETT

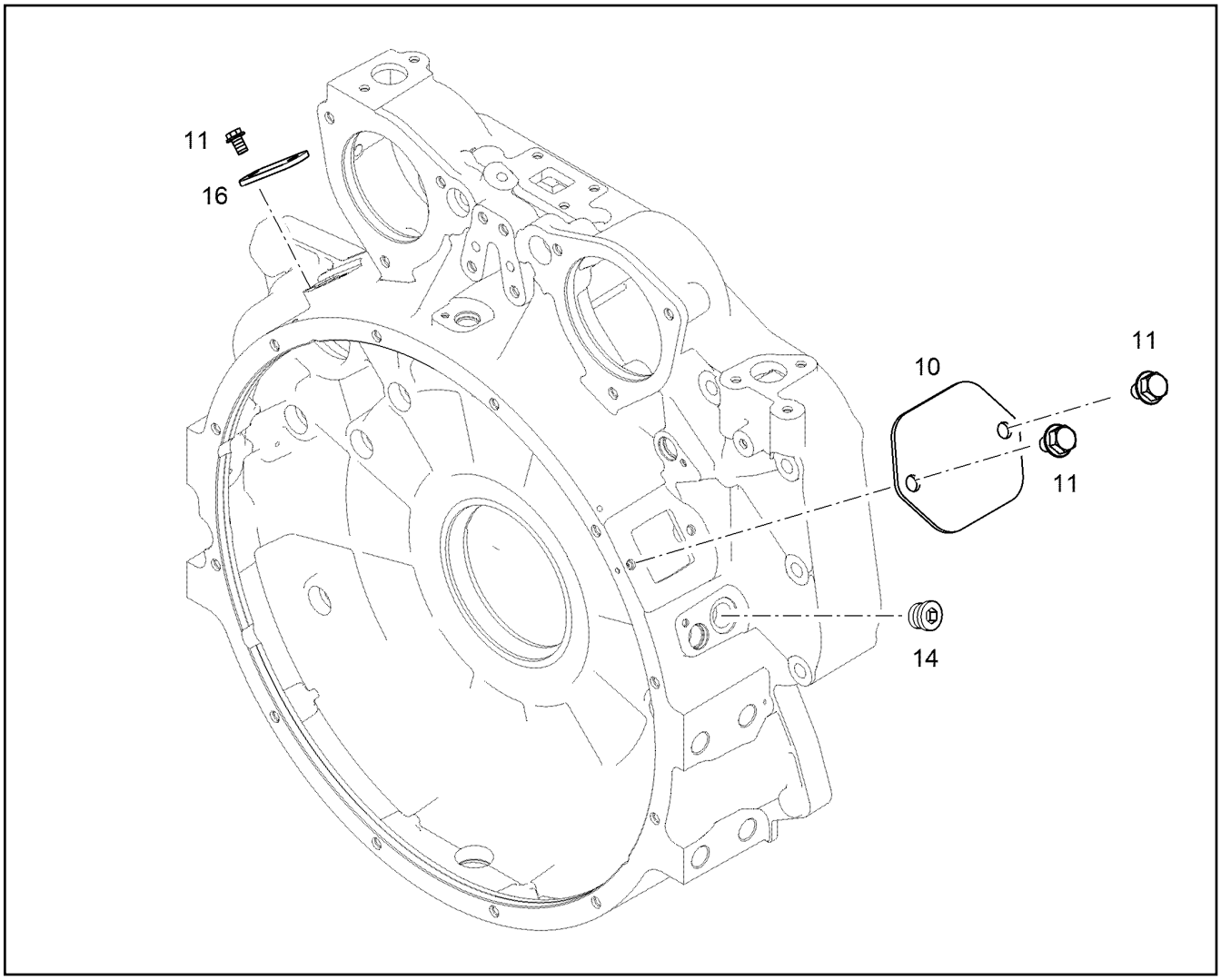

Pos.	Item	Quantity	Description	Bezeichnung
10	10117094	1	COVER S235JR	DECKEL
11	11656992	4	HEX SCREW EN 1665 M8X16 8.8 480H SPF	SECHSKANTSCHRAUBE
14	7380177	1	SCREW PLUG VSTI M22X1,5 CR6-FREI	VERSCHLUSSSCHRAUBE
16	9275826	1	SHEET S235JR	PLATTE

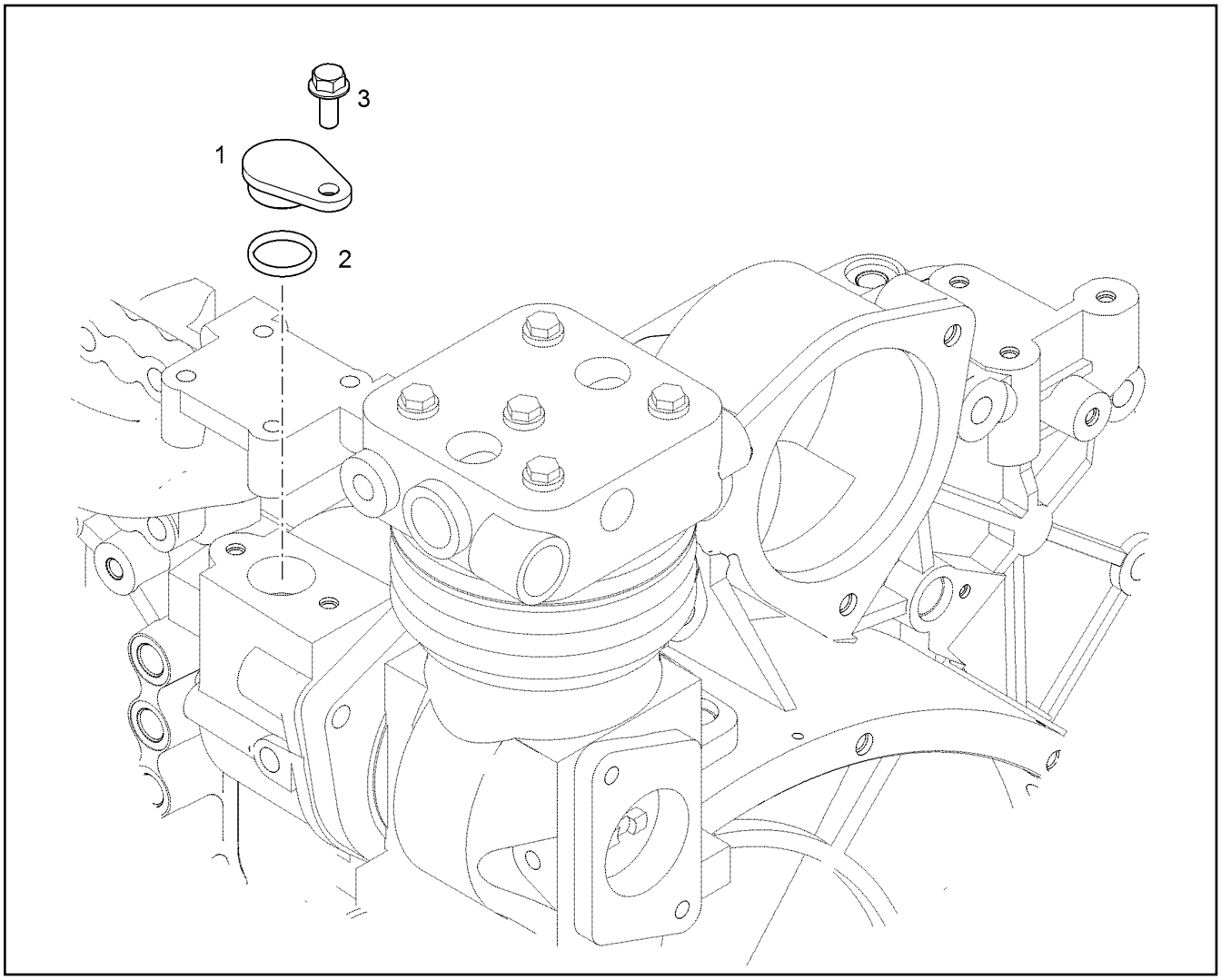

Pos.	Item	Quantity	Description	Bezeichnung
1	10128440	1	LOCKING PIECES Al Rm>150N/m	VERSCHLUSSTEILE
2	10217777	1	O-RING 24X3 FKM 70	O-RING
3	11657219	1	HEX SCREW EN 1665 M8X20 8.8 480H SPF	SECHSKANTSCHRAUBE

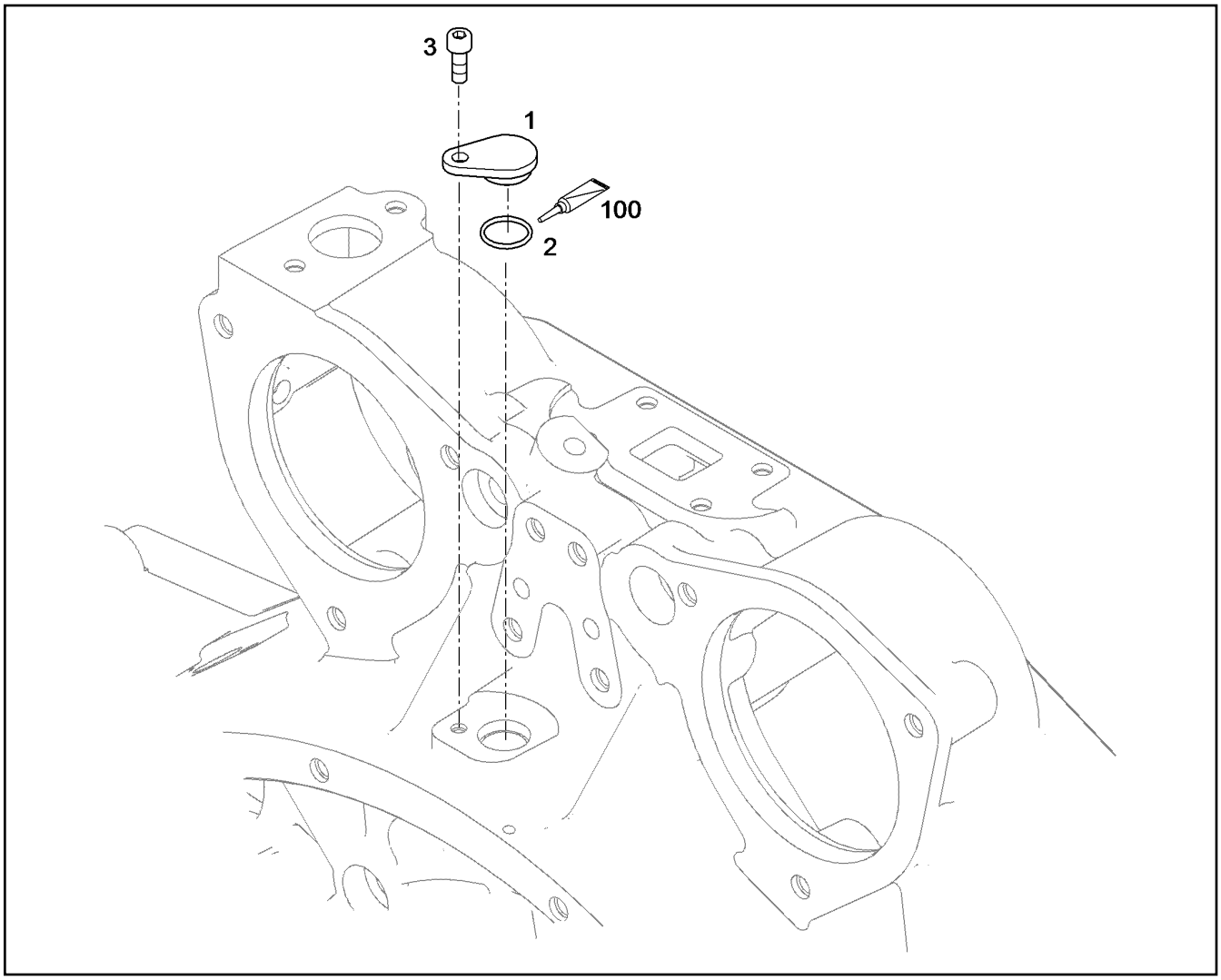

Pos.	Item	Quantity	Description	Bezeichnung
1	10127967	1	COVER Al Rm>200N/m	DECKEL
2	7381103	1	O-RING ISO 3601-1 17,17X1,78 FKM 70 A,GN	O-RING
3	10875586	1	SOCKET HEAD SCREW ISO 4762 M6X16 8.8	ZYLINDERSCHRAUBE
100	10285708	1	GREASE NBU 30 1KG DOSE	FETT

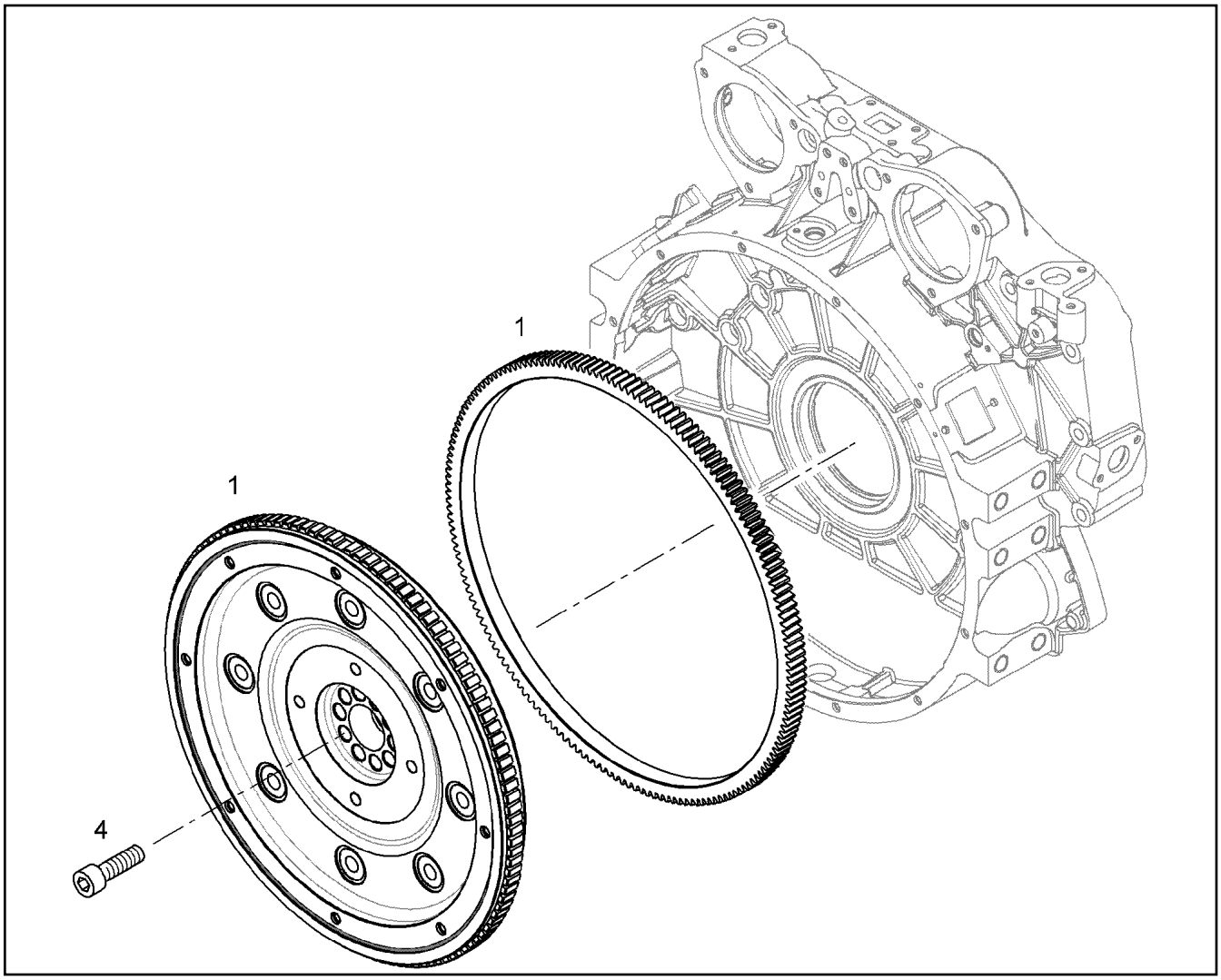

Pos.	Item	Quantity	Description	Bezeichnung
1	12809567	1	FLYWHEEL PRE-ASS. SAE 1X1,67	SCHWUNGRAD VORM.
4	10118910	10	HEXALOBULAR HEAD SCREW M16X1,5X72	SECHSRUNDSCHRAUBE

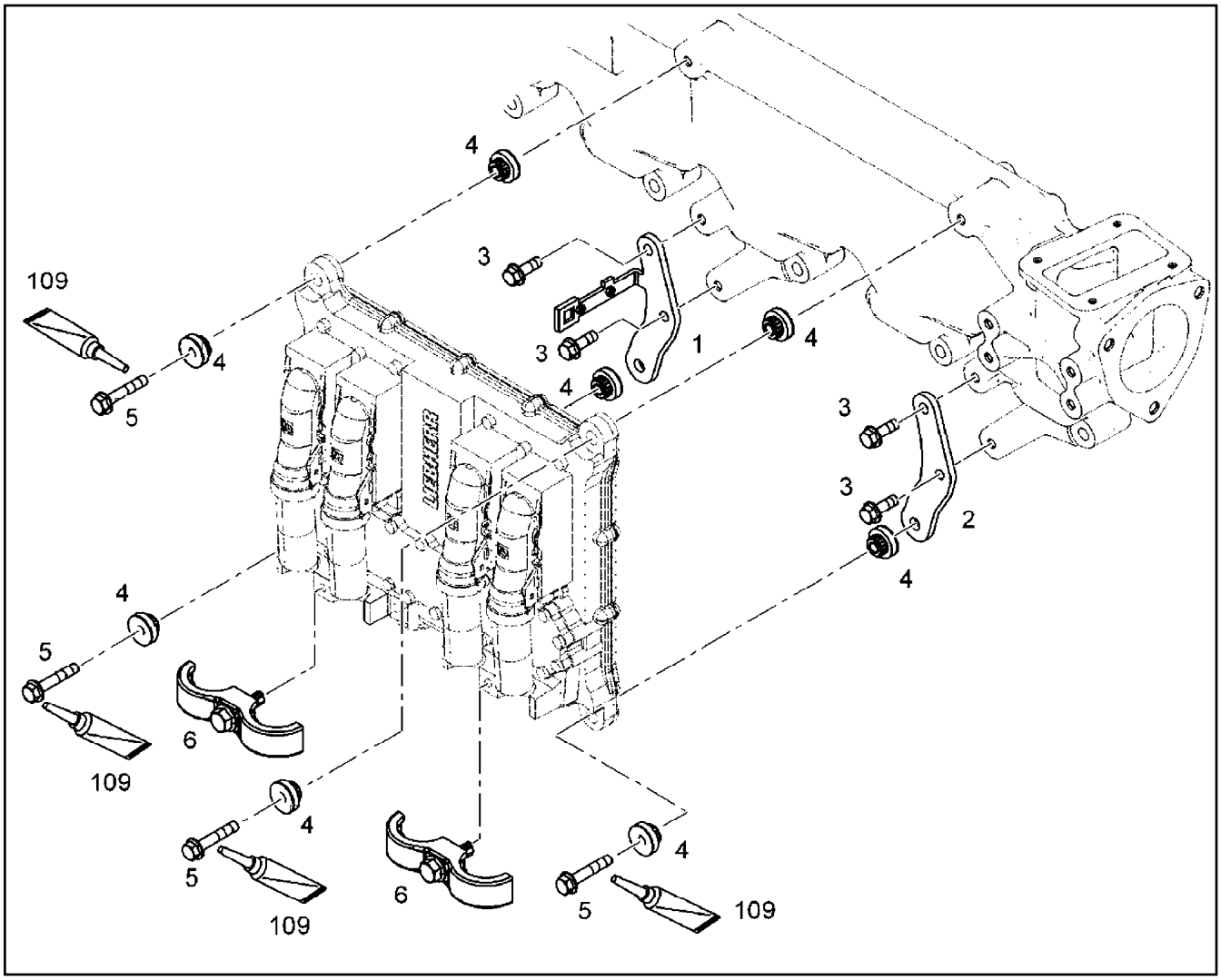

Pos.	Item	Quantity	Description	Bezeichnung
1	10143454	1	RETAINER CPL.	HALTER KPL.
2	10127689	1	RETAINER CPL.	HALTER KPL.
3	10009007	4	HEX SCREW DIN 6921 M8X25 8.8 A2C	SECHSKANTSCHRAUBE
4	10116274	8	RUBBER BUFFER 8,3/26X7,2 30 VMQ 21577	GUMMIPUFFER
5	10016907	4	HEX SCREW DIN 6921 M8X45 8.8 A2C	SECHSKANTSCHRAUBE
6	10144098	2	FASTENING CLAMP 34X34 ⇨ ❑ 253	BEFESTIGUNGSSCHELLE
109	811205708	1	SCREW LOCKING 50ML FLASCHE 150 °C	SCHRAUBENSICHERUNG

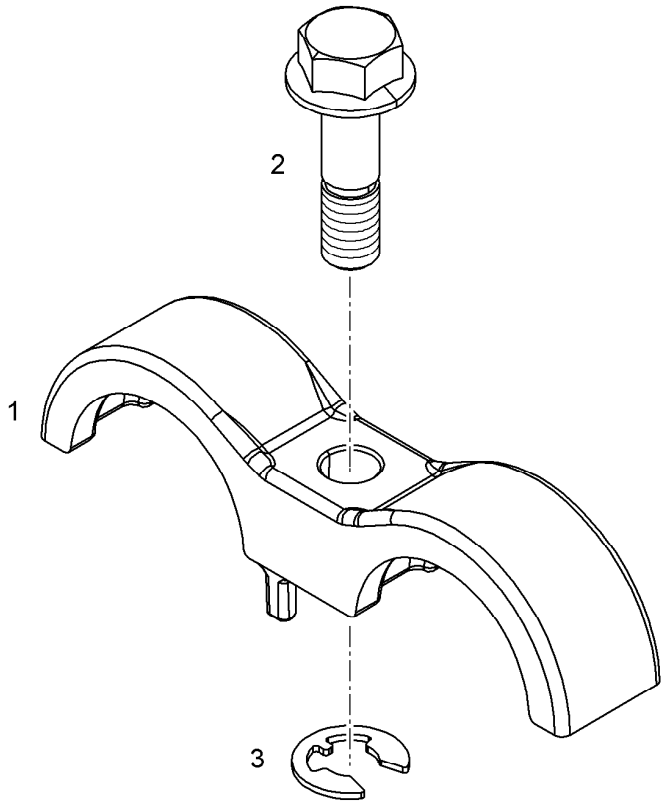

Pos.	Item	Quantity	Description	Bezeichnung
1	10123304	1	FASTENING CLAMP 34 EN AC-AlSi10	BEFESTIGUNGSSCHELLE
2	10141111	1	SCREW M8X30 St Rm>800N/m	SCHRAUBE
3	12210037	1	LOCK WASHER DIN 6799 7X0,9 480H	SICHERUNGSSCHEIBE

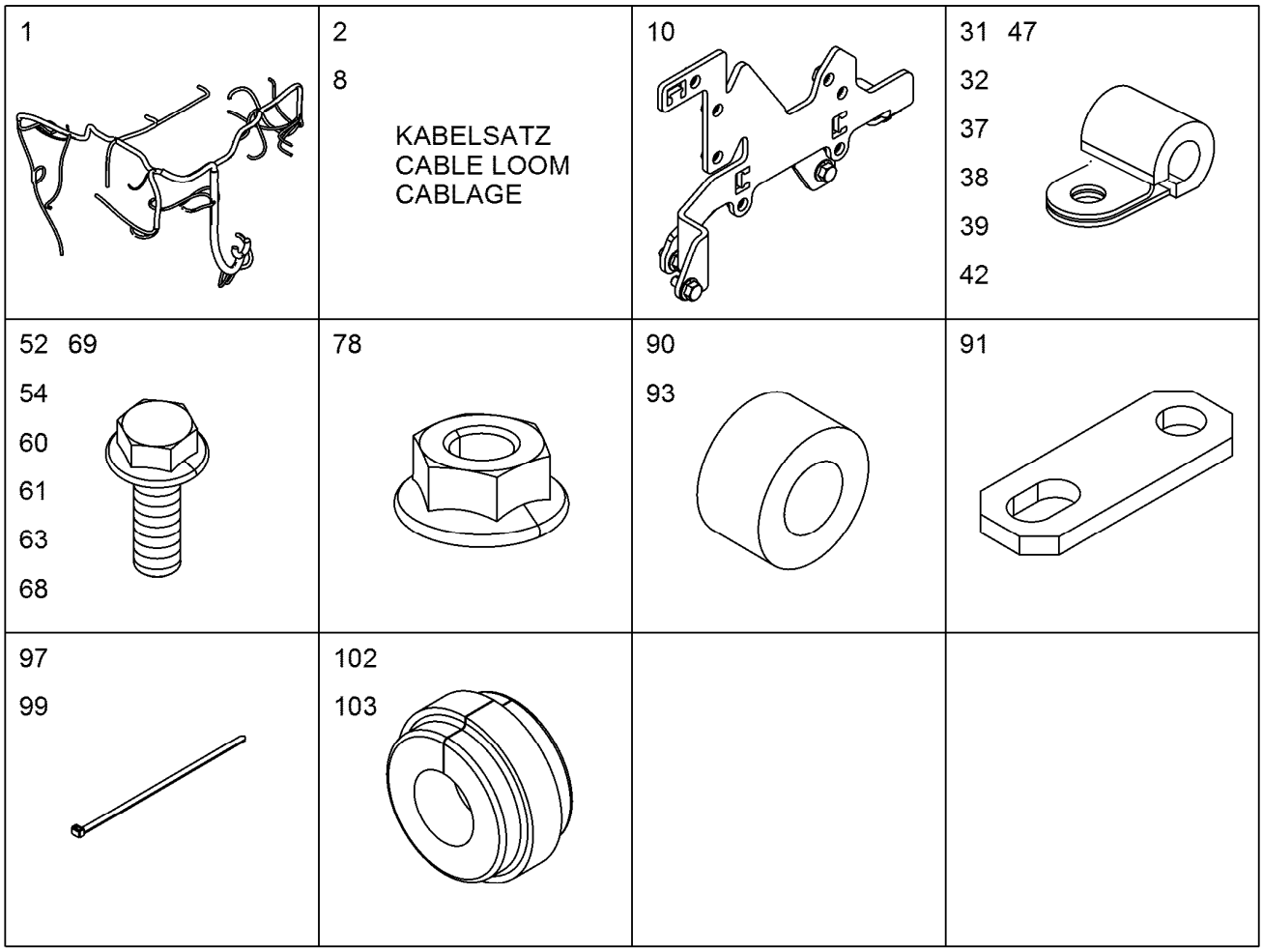

Pos.	Item	Quantity	Description	Bezeichnung
1	10153987	1	CABLE HARNESS W700	KABELBAUM
2	10151329	1	WIRING HARNESS ASSEMBLY ⇨ ❑ 256	KABELSATZ ANBAU
8	10151390	1	WIRING HARNESS ASSEMBLY	KABELSATZ ANBAU
10	10143707	1	CLAMP - ADD-ON UNIT ⇨ ❑ 257	HALTER ANBAU
31	7381771	1	CLAMP DIN 3016-1 8X15XD1 W1-2-MVQ	SCHELLE
32	7381770	6	CLAMP DIN 3016-1 10X15XD1 W1-2-MVQ	SCHELLE
37	7382090	4	CLAMP DIN 3016-1 8X20XD1 W1-2-MVQ	SCHELLE
38	7381628	2	CLAMP DIN 3016-1 10X20XD1 W1-2-MVQ	SCHELLE
39	7381629	5	CLAMP DIN 3016-1 12X20XD1 W1-2-MVQ	SCHELLE
42	7381630	3	CLAMP DIN 3016-1 22X20XD1 W1-2-MVQ	SCHELLE
47	7382092	4	CLAMP DIN 3016-1 10X25XD1 W1-2-MVQ	SCHELLE
52	12207546	1	HEX SCREW EN 1665 M5X10 8.8 480H	SECHSKANTSCHRAUBE
54	11840297	7	HEX SCREW EN 1665 M6X16 8.8 480H SPF	SECHSKANTSCHRAUBE
60	11656992	2	HEX SCREW EN 1665 M8X16 8.8 480H SPF	SECHSKANTSCHRAUBE
61	11657219	14	HEX SCREW EN 1665 M8X20 8.8 480H SPF	SECHSKANTSCHRAUBE
63	11826563	1	HEX SCREW EN 1665 M8X30 8.8 480H	SECHSKANTSCHRAUBE
68	11656153	3	HEX SCREW EN 1665 M10X20 8.8 FLZN SPF	SECHSKANTSCHRAUBE
69	11656155	1	HEX SCREW EN 1665 M10X30 8.8 FLZN SPF	SECHSKANTSCHRAUBE
78	11820285	1	HEX NUT EN 1661 M8 8 480H SPF	SECHSKANTMUTTER
90	9076588	1	DISTANCE SLEEVE 11X24X10,5 St Rm>=50	DISTANZHUELSE
91	9275178	1	HOLDER S235JR	HALTER
93	9132577	1	DISTANCE SLEEVE 8,5X18X10 11SMnPb30	DISTANZHUELSE
97	11691013	2	CABLE TIE 4,6X200-SW/GR PA66HS	KABELBINDER
99	10874588	3	CABLE TIE 4,8X292-SCHWARZ PA66 SPF	KABELBINDER

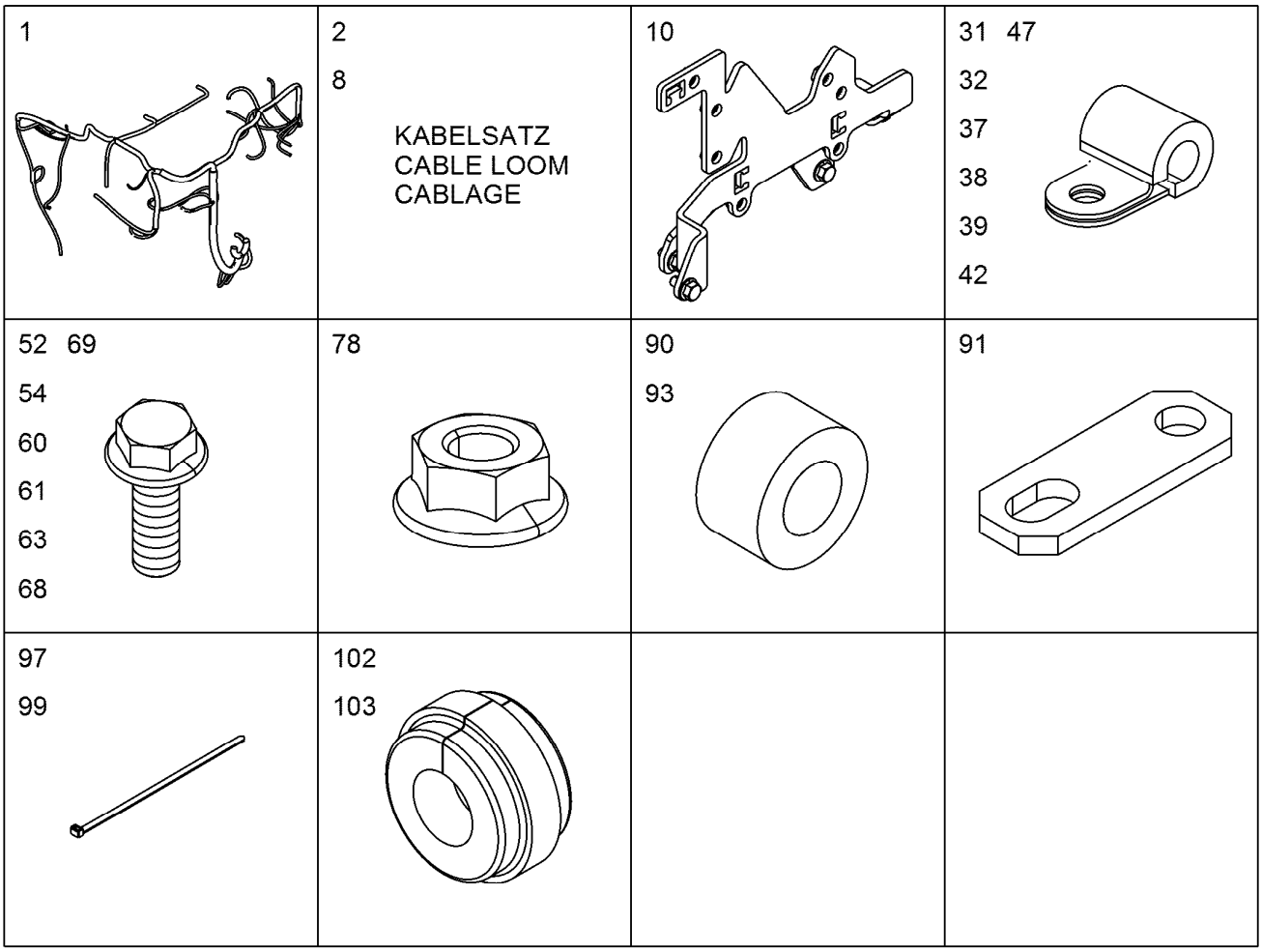

Pos.	Item	Quantity	Description	Bezeichnung
102	10133991	1	RUBBER RING X12	GUMMIRING
103	10123876	1	RUBBER RING X16	GUMMIRING

1 KABELSATZ CABLE LOOM CABLAGE	10 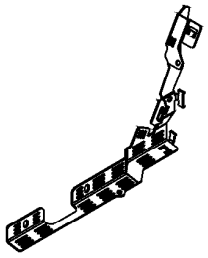	13 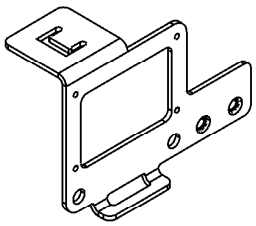	39 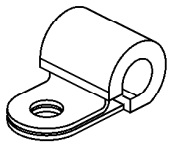
42 51 53 58 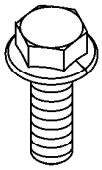	77 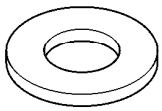	100 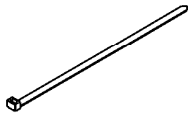	

Pos.	Item	Quantity	Description	Bezeichnung
1	10151164	1	CABLE LOOM WL705	KABELSATZ
(1)	6905877	1	FUSE CARTRIDGE DIN 72581 1A DC32	SICHERUNGSEINSATZ
10	10150252	1	HOLDER S235JR	HALTER
13	10150838	1	HOLDER S235JR	HALTER
39	7382086	1	CLAMP DIN 3016-1 18X25XD1 W1-2-MVQ	SCHELLE
42	12207546	1	HEX SCREW EN 1665 M5X10 8.8 480H	SECHSKANTSCHRAUBE
51	11657219	2	HEX SCREW EN 1665 M8X20 8.8 480H SPF	SECHSKANTSCHRAUBE
53	11826563	2	HEX SCREW EN 1665 M8X30 8.8 480H	SECHSKANTSCHRAUBE
58	11656153	2	HEX SCREW EN 1665 M10X20 8.8 FLZN SPF	SECHSKANTSCHRAUBE
77	11658580	1	WASHER DIN 7349 10,5 200HV-St FLZN SPF	SCHEIBE
100	10874588	8	CABLE TIE 4,8X292-SCHWARZ PA66 SPF	KABELBINDER

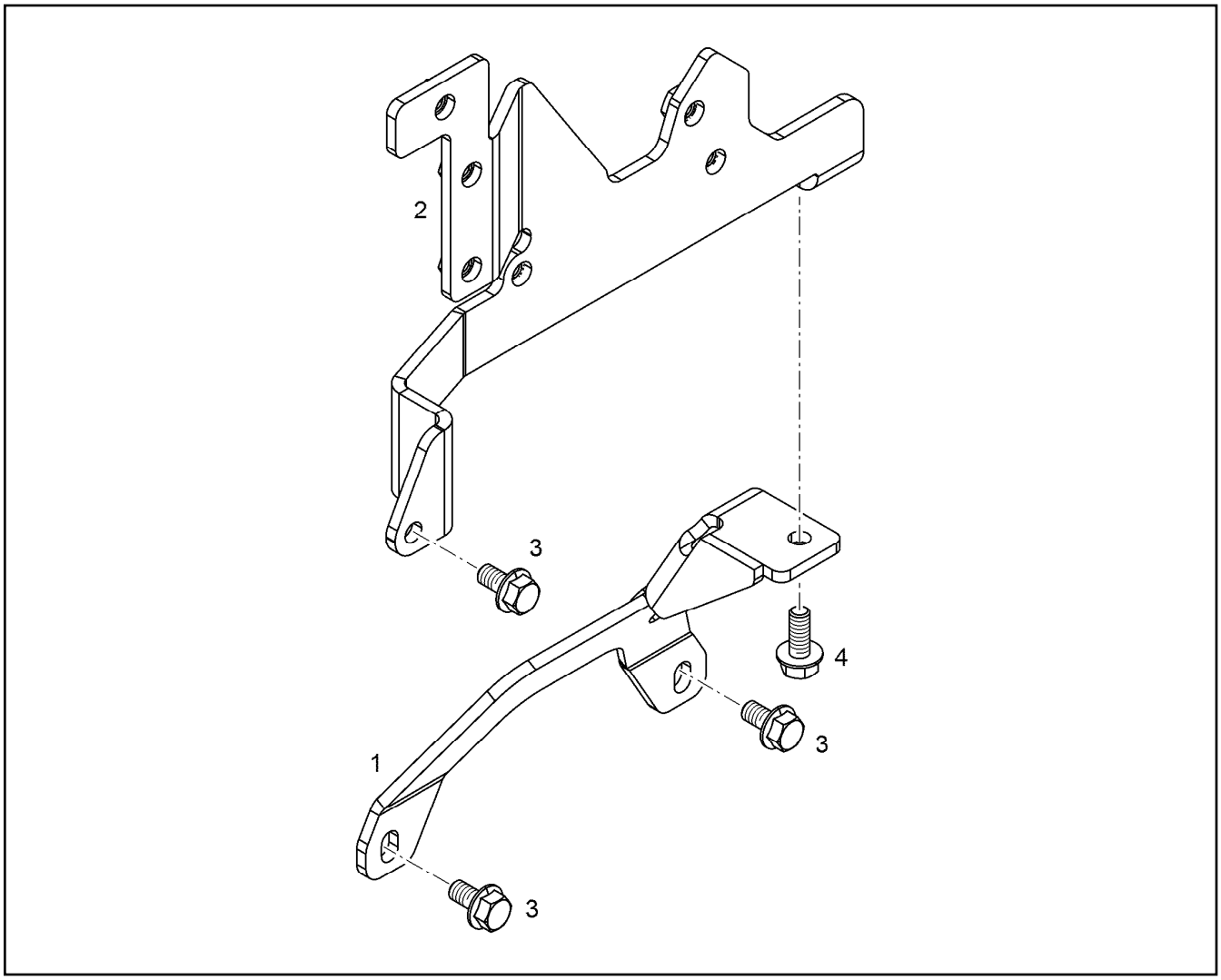

Pos.	Item	Quantity	Description	Bezeichnung
1	12978423	1	RETAINER CPL. S235JR	HALTER KPL.
2	10145371	1	RETAINER CPL. S235JR	HALTER KPL.
3	11656992	3	HEX SCREW EN 1665 M8X16 8.8 480H SPF	SECHSKANTSCHRAUBE
4	11657219	1	HEX SCREW EN 1665 M8X20 8.8 480H SPF	SECHSKANTSCHRAUBE

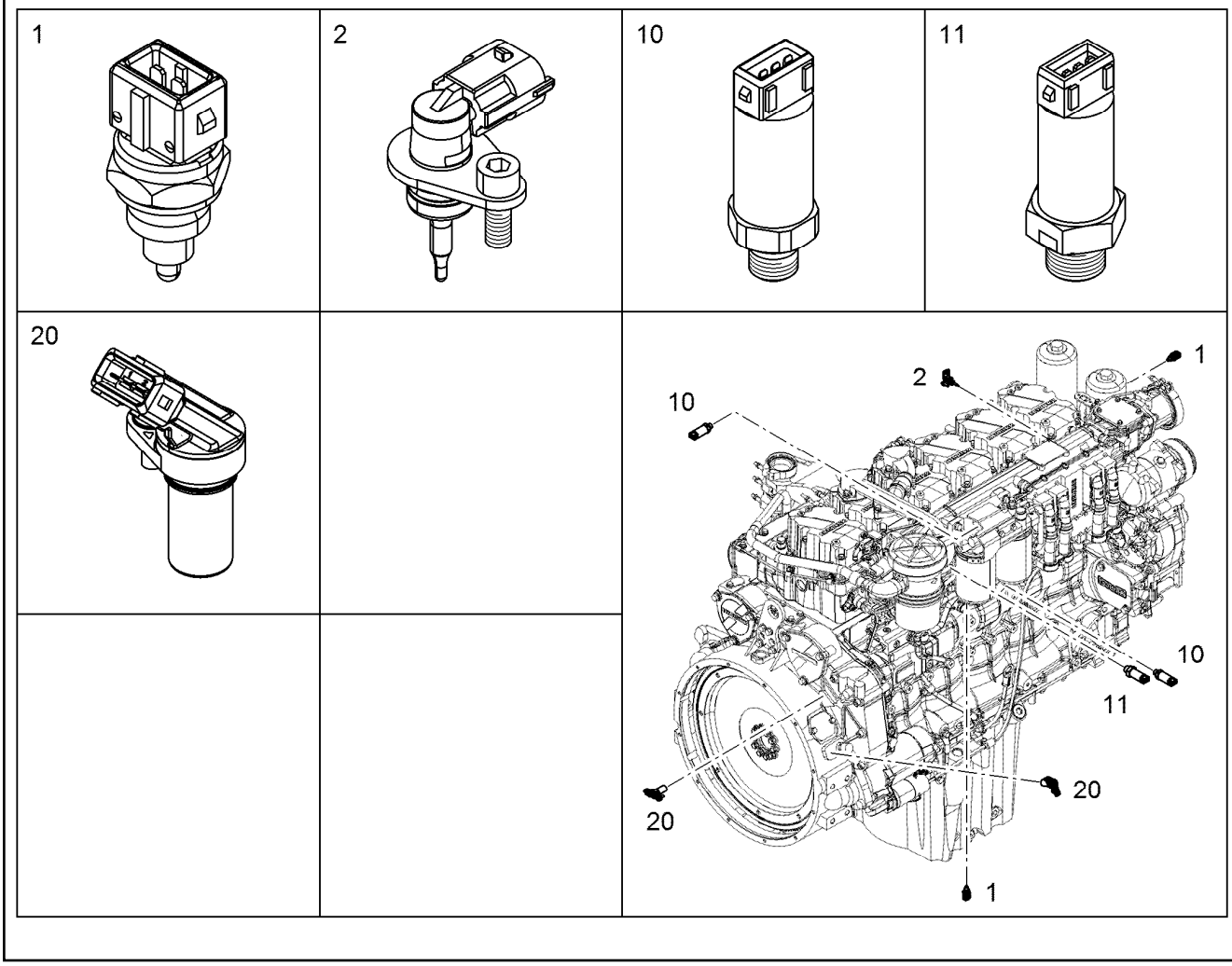

Pos.	Item	Quantity	Description	Bezeichnung
1	13410342	2	TEMPERATURE PROBE CPL. -40°C BIS +15	TEMPERATURFUEHLER KPL.
2	10152036	1	TEMPERATURE PROBE CPL. -40°C BIS +15	TEMPERATURFUEHLER KPL.
(1)	10493625	1	TEMPERATURE SENSOR -40°C BIS +150°C	TEMPERATURFUEHLER
(2)	10875586	1	SOCKET HEAD SCREW ISO 4762 M6X16 8.8	ZYLINDERSCHRAUBE
(100)	10285708	1	GREASE NBU 30 1KG DOSE	FETT
10	9076531	2	PRESSURE TRANSMITTER CPL. 0-10 BAR	DRUCKGEBER KPL.
(1)	12907001	1	PRESSURE TRANSMITTER 0-10 BAR	DRUCKGEBER
(2)	10040984	1	PROFILE PACKING DIN 3869 14X11,6 FKM 8	PROFILDICHTRING
11	9076550	1	PRESSURE TRANSMITTER CPL. 0,5-4,5 BA	DRUCKGEBER KPL.
(1)	10100781	1	PRESSURE TRANSMITTER 0,5-4,5 BAR	DRUCKGEBER
(1)	12907020	1	PRESSURE TRANSMITTER 0,5-4,5 BAR	DRUCKGEBER
(2)	10113975	1	O-RING 15,50X2,00 FKM 80	O-RING
20	12544505	2	ROTATIONAL SPEED SENSOR CPL. 10-1000	DREHZAHLGEBER KPL.
(1)	12977971	1	ROTATIONAL SPEED SENSOR 10-10000HZ	DREHZAHLGEBER
(2)	7381103	1	O-RING ISO 3601-1 17,17X1,78 FKM 70 A,GN	O-RING
(3)	10875586	1	SOCKET HEAD SCREW ISO 4762 M6X16 8.8	ZYLINDERSCHRAUBE
(100)	10285708	1	GREASE NBU 30 1KG DOSE	FETT

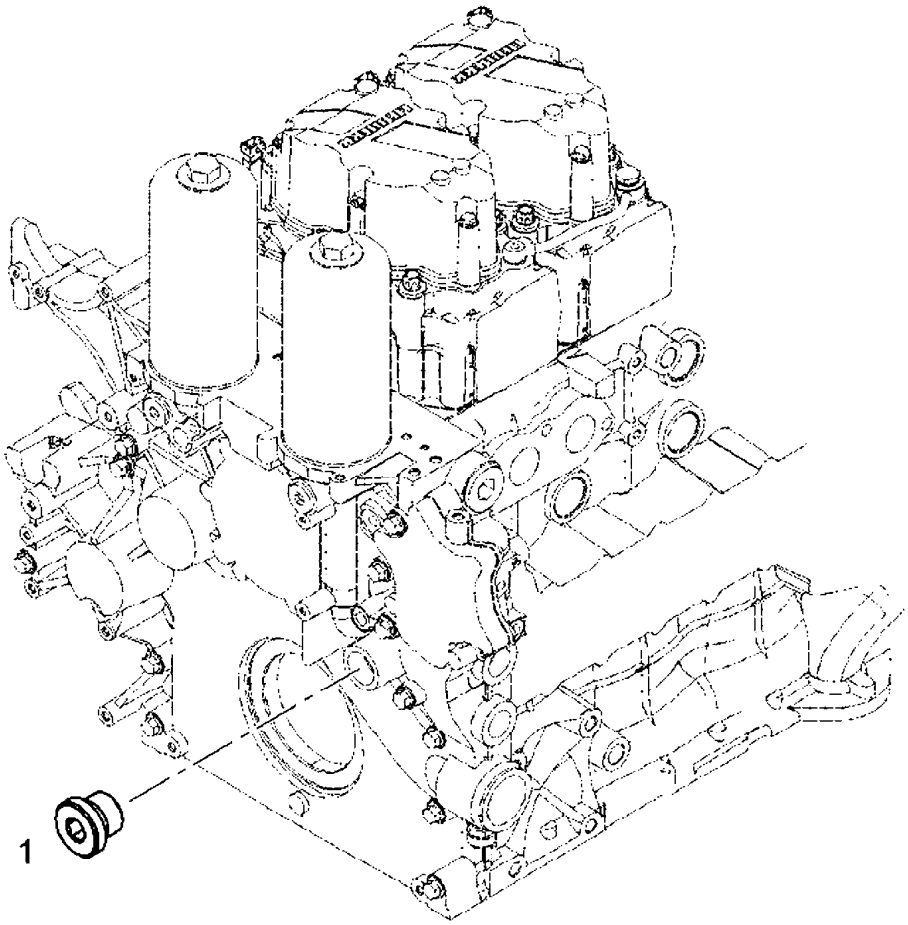

Pos.	Item	Quantity	Description	Bezeichnung
1	7382202	1	SCREW PLUG VSTI M38X1,5	VERSCHLUSSSCHRAUBE

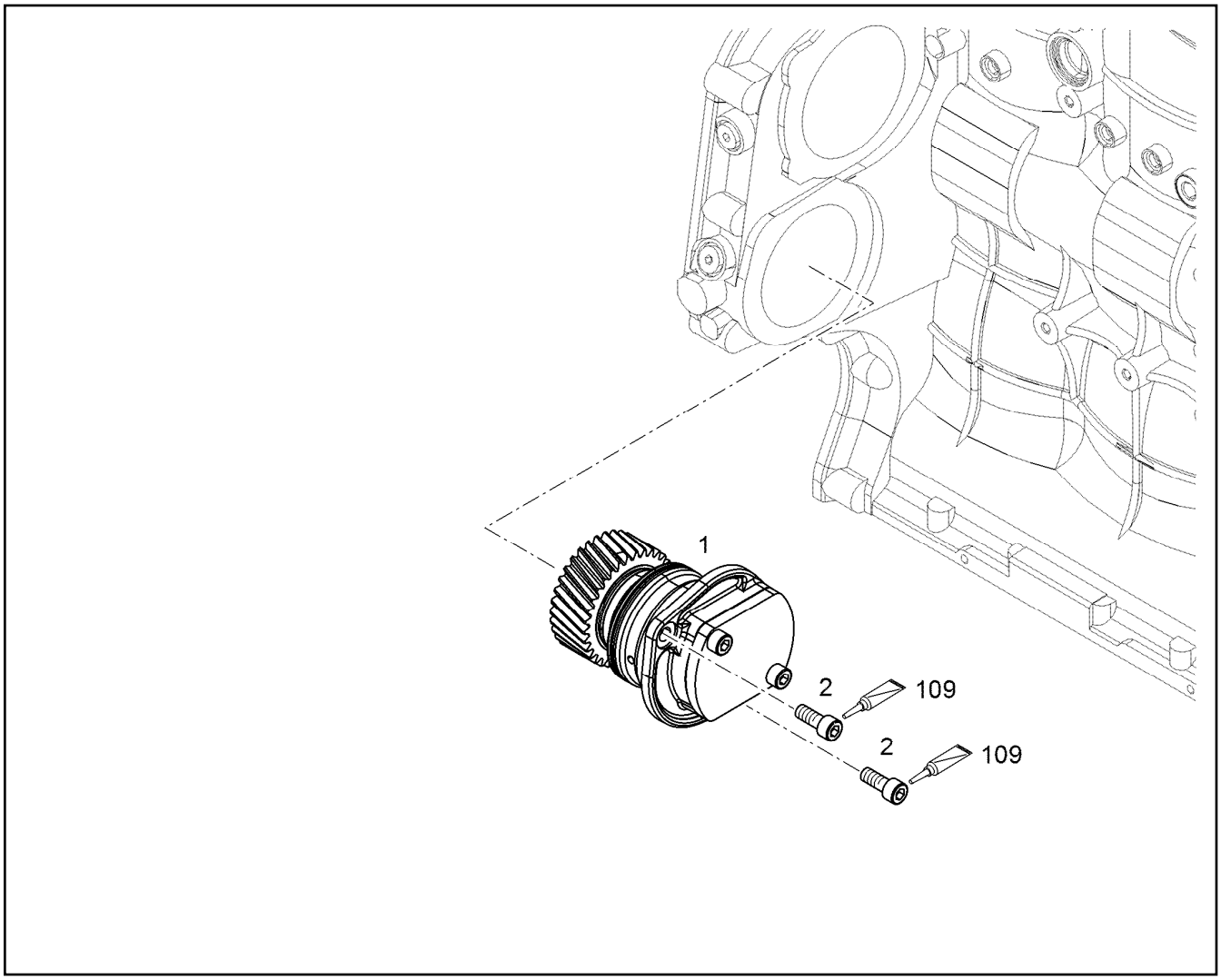

Pos.	Item	Quantity	Description	Bezeichnung
1	10125688	1	AUXILIARY DRIVE PRE-ASS.	NEBENABTRIEB VORM.
(4)	7381361	2	O-RING ISO 3601-1 85,32X3,53 FKM 70 A,GN	O-RING
(5)	9885529	1	SEAL	DICHTUNG
(6)	9178294	1	COVER	DECKEL
(100)	10285708	1	GREASE NBU 30 1KG DOSE	FETT
2	10650720	2	SOCKET HEAD SCREW ISO 4762 M10X25 10	ZYLINDERSCHRAUBE

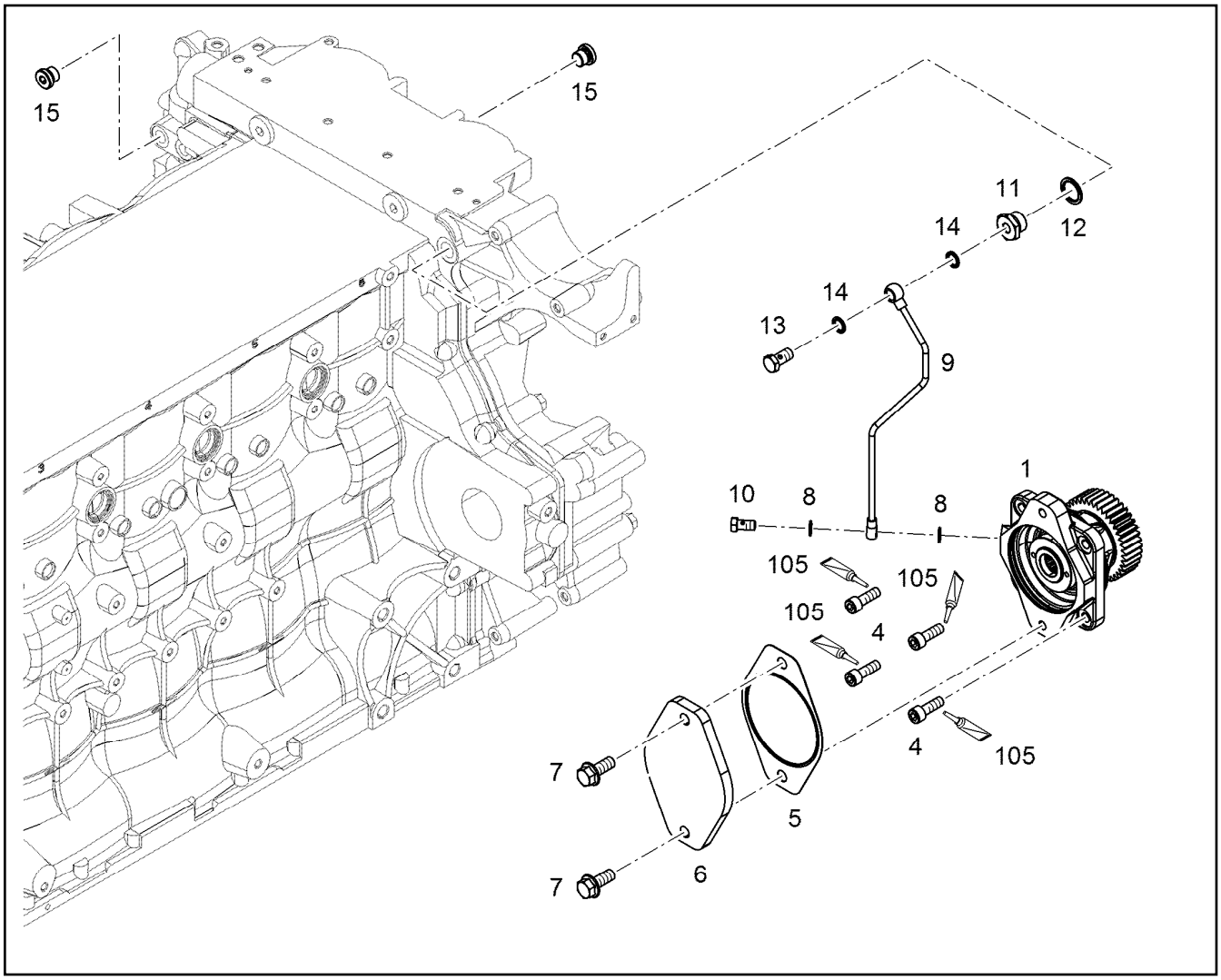

Pos.	Item	Quantity	Description	Bezeichnung
1	9077386	1	AUXILIARY DRIVE PRE-ASS. ⇨ ❑ 262	NEBENABTRIEB VORM.
4	11002743	4	SOCKET HEAD SCREW ISO 4762 M10X30 10	ZYLINDERSCHRAUBE
5	9273691	1	SEAL	DICHTUNG
6	9273690	1	COVER	DECKEL
7	11631940	2	HEX SCREW EN 1665 M12X30 8.8 FLZN SPF	SECHSKANTSCHRAUBE
8	10011864	2	SEALING RING 10,7X16X1,5 St/FPM1-80	DICHTRING
9	10145838	1	PIPELINE 6X1	ROHRLEITUNG
10	12210010	1	HOLLOW SCREW DIN 7643 6-3-M10X1 480H	HOHLSCHRAUBE
11	10145589	1	FITTING S235JR	VERSCHRAUBUNG
12	10011869	1	SEALING RING 22,7X30X2 St/FPM1-80	DICHTRING
13	12210024	1	HOLLOW SCREW DIN 7643 8-3-M12X1,5 480	HOHLSCHRAUBE
14	10011865	2	SEALING RING 12,7X18X1,5 St/FPM1-80	DICHTRING
15	7382203	2	SCREW PLUG VSTI M16X1,5	VERSCHLUSSSCHRAUBE
105	811205708	1	SCREW LOCKING 50ML FLASCHE 150 °C	SCHRAUBENSICHERUNG

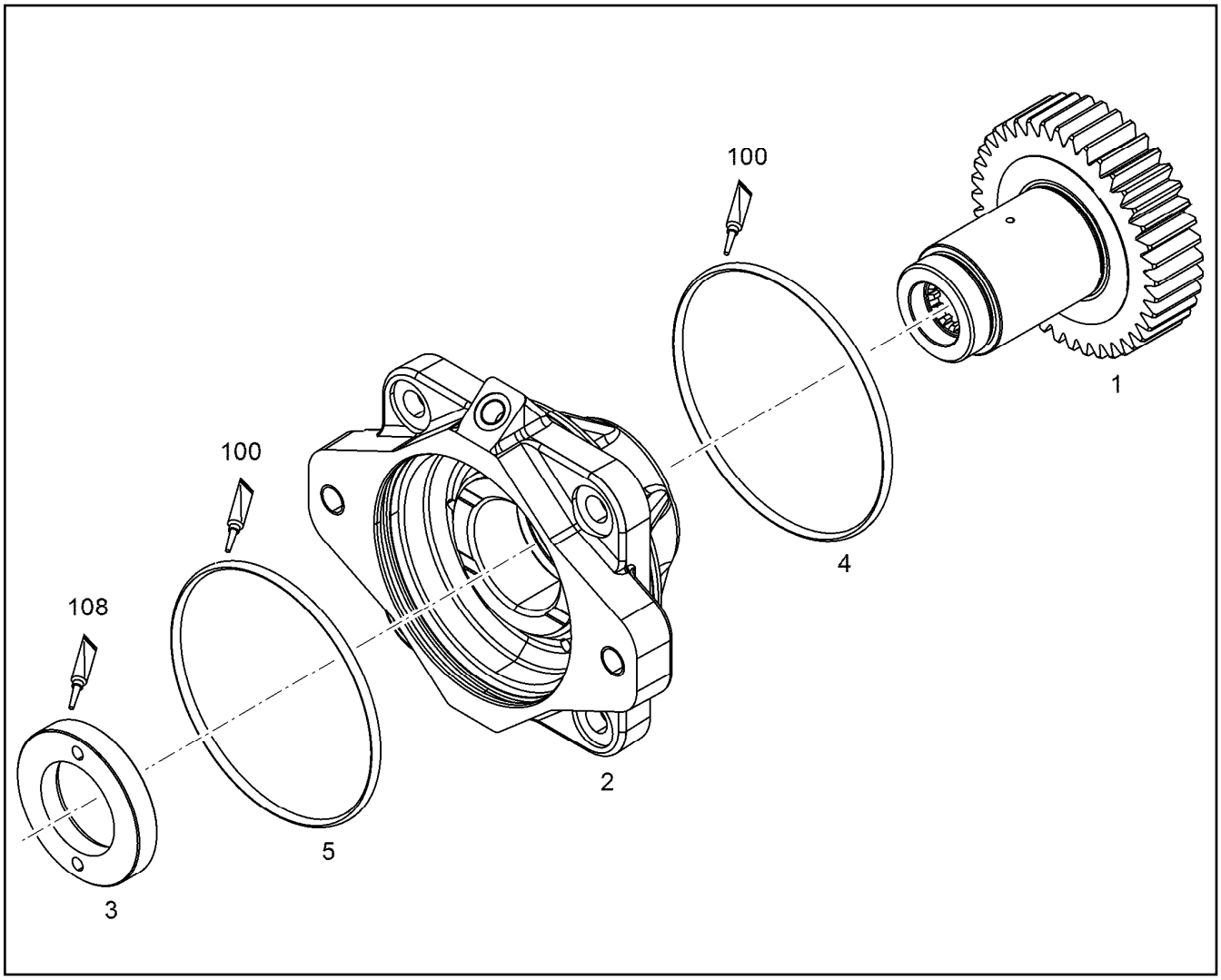

Pos.	Item	Quantity	Description	Bezeichnung
1	9077327	1	PUMP SHAFT Z=40 M=2,25	PUMPENWELLE
2	9077384	1	BEARING HOUSING, PRE-ASSEMBLED	LAGERGEHAEUSE VORM.
(2)	9888448	2	FLANGE SLEEVE 45X50X25 G-CuSn7ZnPb	BUNDLAGER
3	9077612	1	WEARING RING M 40X1,5	ANLAUFRING
4	7380520	1	O-RING DIN 3771 104,37X3,53 VMQ 70 A,RD	O-RING
5	7380401	1	O-RING DIN 3771 101,20X3,53 NBR 70 A,BK	O-RING
100	10285708	1	GREASE NBU 30 1KG DOSE	FETT
108	811201314	1	SEALING COMPOUND 50ML TUBE -55/+150 °	DICHTUNGSMASSE

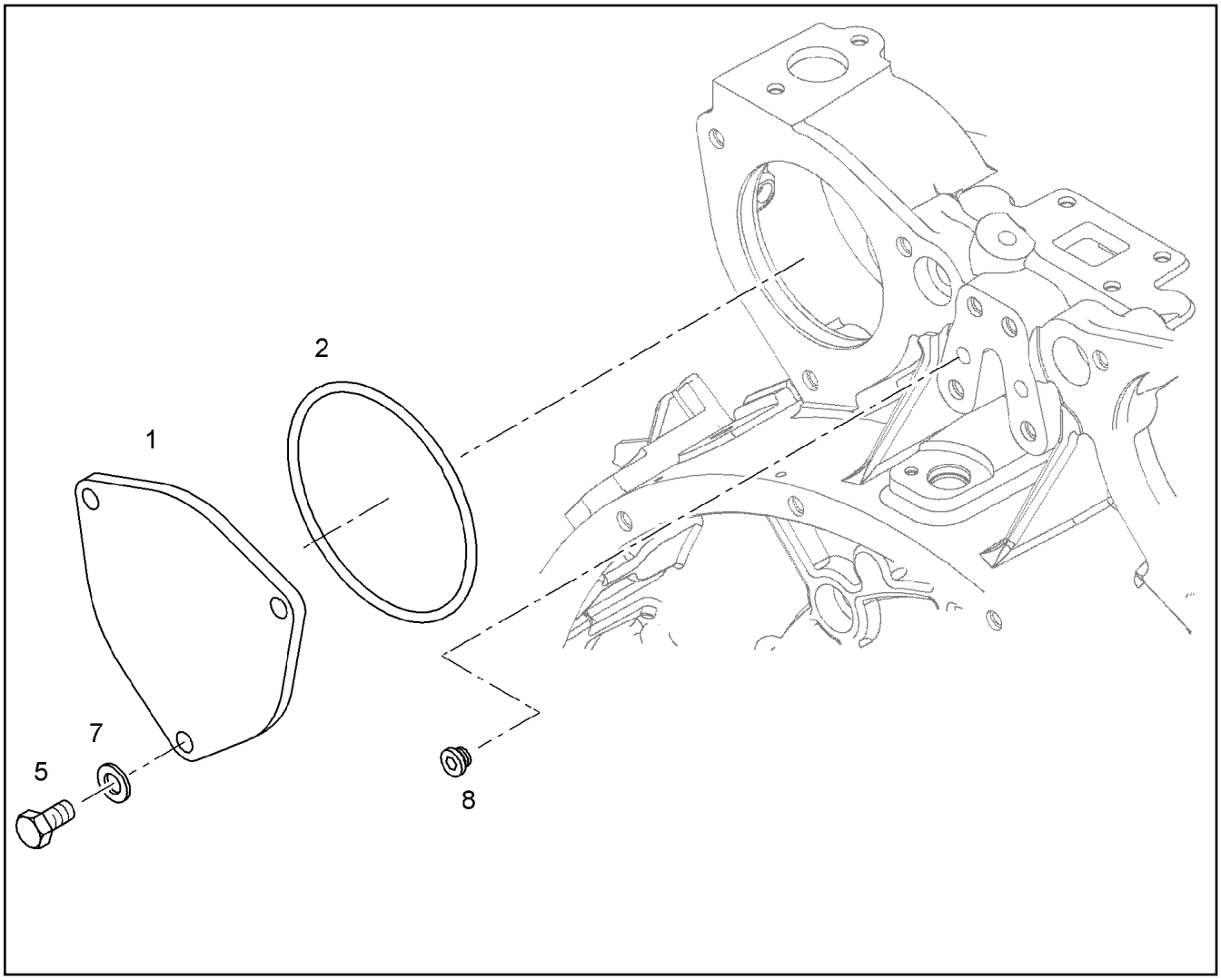

Pos.	Item	Quantity	Description	Bezeichnung
1	10122319	1	COVER	DECKEL
2	9177948	1	O-RING DIN 3771 120X3 VMQ 70 A,RD	O-RING
5	11631816	3	HEX SCREW ISO 4017 M10X25 8.8 FLZN SP	SECHSKANTSCHRAUBE
7	425050908	3	SPRING WASHER DIN 137 B 10 FST A3C	FEDERSCHEIBE
8	7381638	1	SCREW PLUG VSTI M10X1	VERSCHLUSSSCHRAUBE

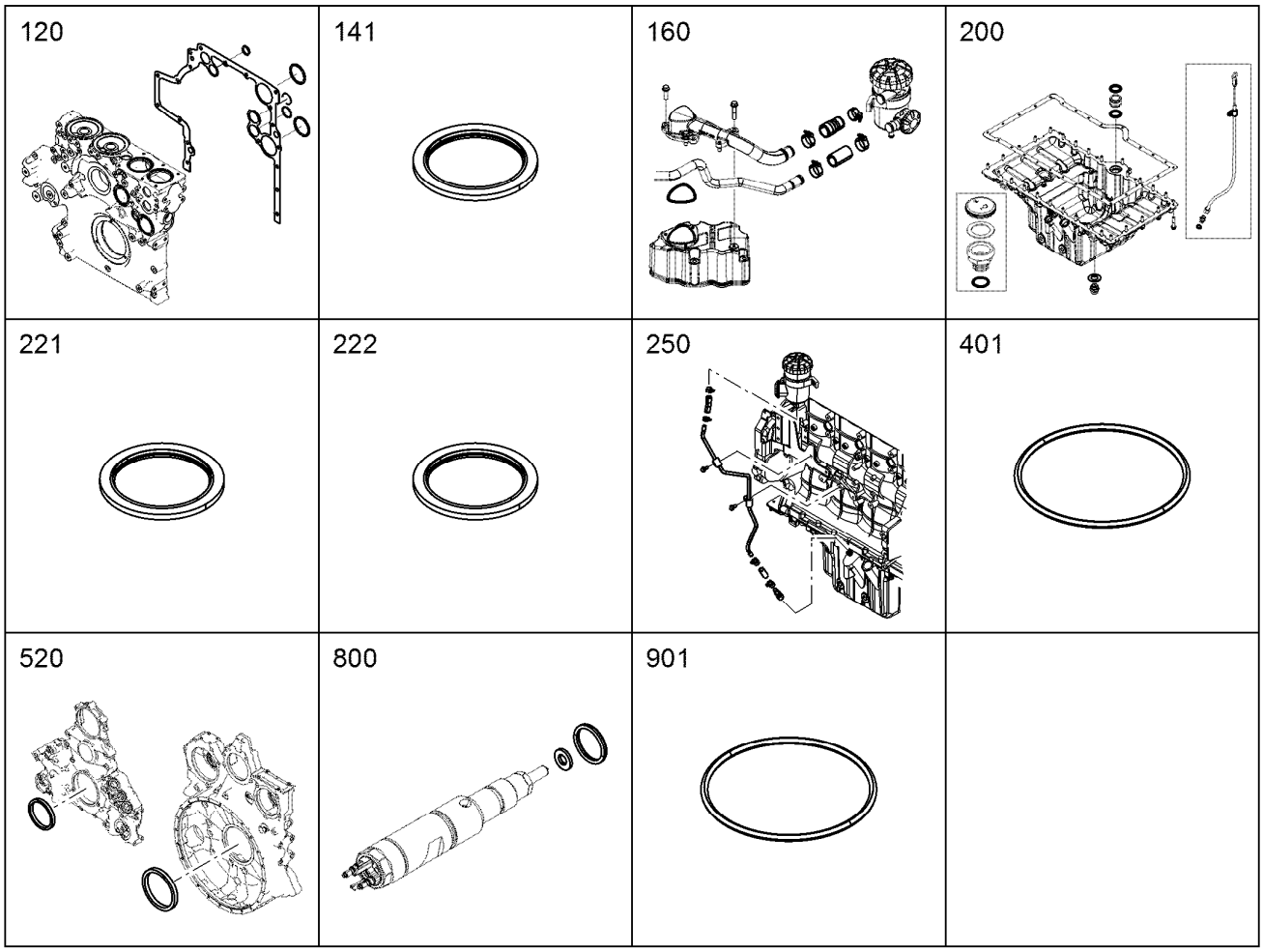

Pos.	Item	Quantity	Description	Bezeichnung
120	10141157	1	SEAL KIT AGGREGATE CARRIER	DS AGGREGATETRAEGER
141	710106508	1	SEALING RING DIN 7603 A30X36X2 CU	DICHTRING
160	10141165	1	SEAL KIT CRANKCASE BREATHER	DS KURBELGEHAEUSEENTLUE
200	10141167	1	SEAL KIT OIL SUMP	DS OELWANNE
			⇨ ❑ 267	
221	10011868	1	SEALING RING 18,7X26X1,5 St/FPM1-80	DICHTRING
222	10011870	1	SEALING RING 26,7X34,93X2 St/FPM1-80	DICHTRING
250	10141169	1	SEAL KIT OIL LINE	DS OELLEITUNG
(2)	10126317	1	RUBBER CONNECTION GUMMI	GUMMIMUFFE
(3)	4601105	4	CLAMP DIN 3017-1 16/12-20/9 W2-2	SCHELLE
(4)	9079603	1	RUBBER CONNECTION 12 X 18 X 45 GUMMI	GUMMIMUFFE
401	10282774	8	O-RING 145 75 FKM 17939	O-RING
520	10141178	1	RK CRANKSHAFT SEAL D934/936A7	RS KURBELWELLENDICHTUNG
800	10141181	4	SEAL KIT ZYLINDER HEAD CPL.	DS ZYLINDERKOPF KPL.
901	7381685	1	O-RING DIN 3771 7,00X1,5 FKM 90 A,BK	O-RING
1001	7381685	1	O-RING DIN 3771 7,00X1,5 FKM 90 A,BK	O-RING
1300	10141182	1	SEALING SET OIL COOLER	DS OELKUEHLER
1400	11351510	1	SEAL KIT LUBRICATING OIL PUMP	DS SCHMIEROELPUMPE
1710	10141214	1	SEAL KIT HIGH PRESSURE PUMP	DS HOCHDRUCKPUMPE
1801	10128671	2	O-RING 98,02X3,53 FKM 70 MoS2	O-RING
1911	10130757	4	O-RING ISO 3601-1 23,47X2,62 FKM 70 MoS	O-RING
2011	9079130	1	SEAL 1	DICHTUNG
2120	10141217	1	SEAL KIT FUEL LINE	DS KRAFTSTOFFLEITUNG
2140	11351500	1	SEAL KIT LEAKAGE-OIL RET. LINE	DS LECKOELRUECKLAUF
2151	11389287	1	SEALING PLUG	DICHTSTOPFEN
2201	10118556	4	SEAL S235JR	DICHTUNG

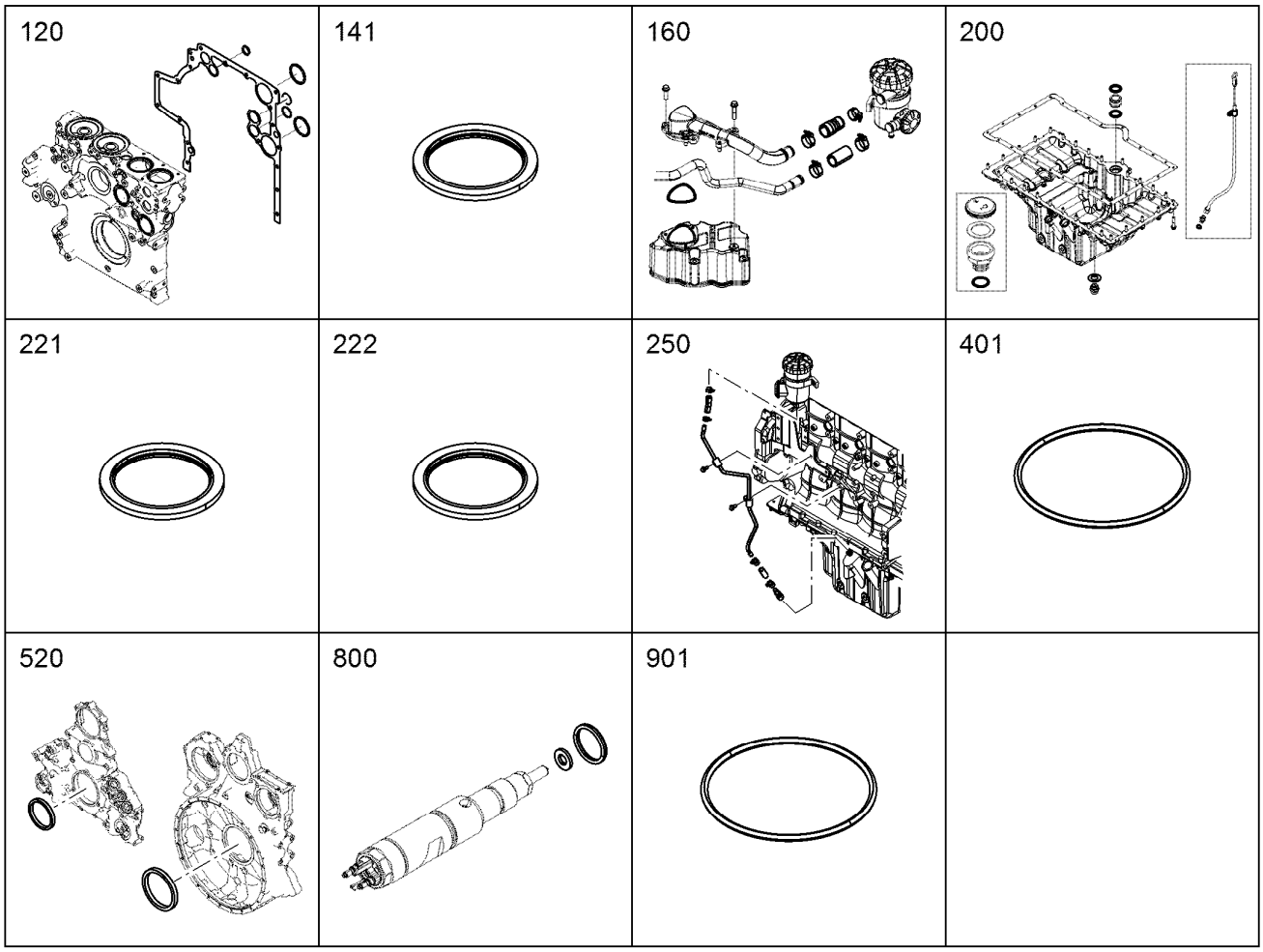

Pos.	Item	Quantity	Description	Bezeichnung
2210	11351429	1	SEAL KIT INTAKE NOZZLE	DS ANSAUGSTUTZEN
2240	11351430	1	SEAL KIT AIR INTAKE	DS LUFTANSAUGUNG
2300	11351425	1	SEAL KIT CONNECTING LINE	DS VERBINDUNGSLEITUNG
3800	11351503	1	SEAL KIT THERMOSTAT HOUSING	DS THERMOSTATGEHAEUSE
3811	10011866	7	SEALING RING 14,7X22X1,5 St/FPM1-80	DICHTRING
3820	11351432	1	SEAL KIT COOLANT PIPE BEND	DS KUEHLMITTELKRUEMMER
3871	7381526	1	O-RING 21,30X2,4 V70GA	O-RING
3872	10011866	1	SEALING RING 14,7X22X1,5 St/FPM1-80	DICHTRING
4101	10135885	1	SEAL	DICHTUNG
4300	11351313	1	SEAL KIT TURBOCHARGER MOUNTING	DS ATL-ANBAU
4320	11351426	1	SEAL KIT EXHAUST ADAPTER	DS ABGASSTUTZEN
4360	11351427	1	SEAL KIT CYCLE VALVE	DS TAKTVENTIL
4521	7381995	1	O-RING DIN 3771 98,02X3,53 HNBR 70 A,BK	O-RING
5200	11351428	1	SEAL KIT FLYWHEEL HOUSING	DS SCHWUNGRADGEHAEUSE
5241	10217777	1	O-RING 24X3 FKM 70	O-RING
5261	7381103	1	O-RING ISO 3601-1 17,17X1,78 FKM 70 A,GN	O-RING
6501	7381361	2	O-RING ISO 3601-1 85,32X3,53 FKM 70 A,GN	O-RING
6502	9885529	1	SEAL	DICHTUNG
6521	7380520	1	O-RING DIN 3771 104,37X3,53 VMQ 70 A,RD	O-RING
6522	7380401	1	O-RING DIN 3771 101,20X3,53 NBR 70 A,BK	O-RING
6523	9273691	1	SEAL	DICHTUNG
6524	10011864	1	SEALING RING 10,7X16X1,5 St/FPM1-80	DICHTRING
6525	10011869	1	SEALING RING 22,7X30X2 St/FPM1-80	DICHTRING
6526	10011865	1	SEALING RING 12,7X18X1,5 St/FPM1-80	DICHTRING
6541	10011864	2	SEALING RING 10,7X16X1,5 St/FPM1-80	DICHTRING
6542	7382158	2	O-RING DIN 3771 101,20X3,53 FKM 70 A,GN	O-RING

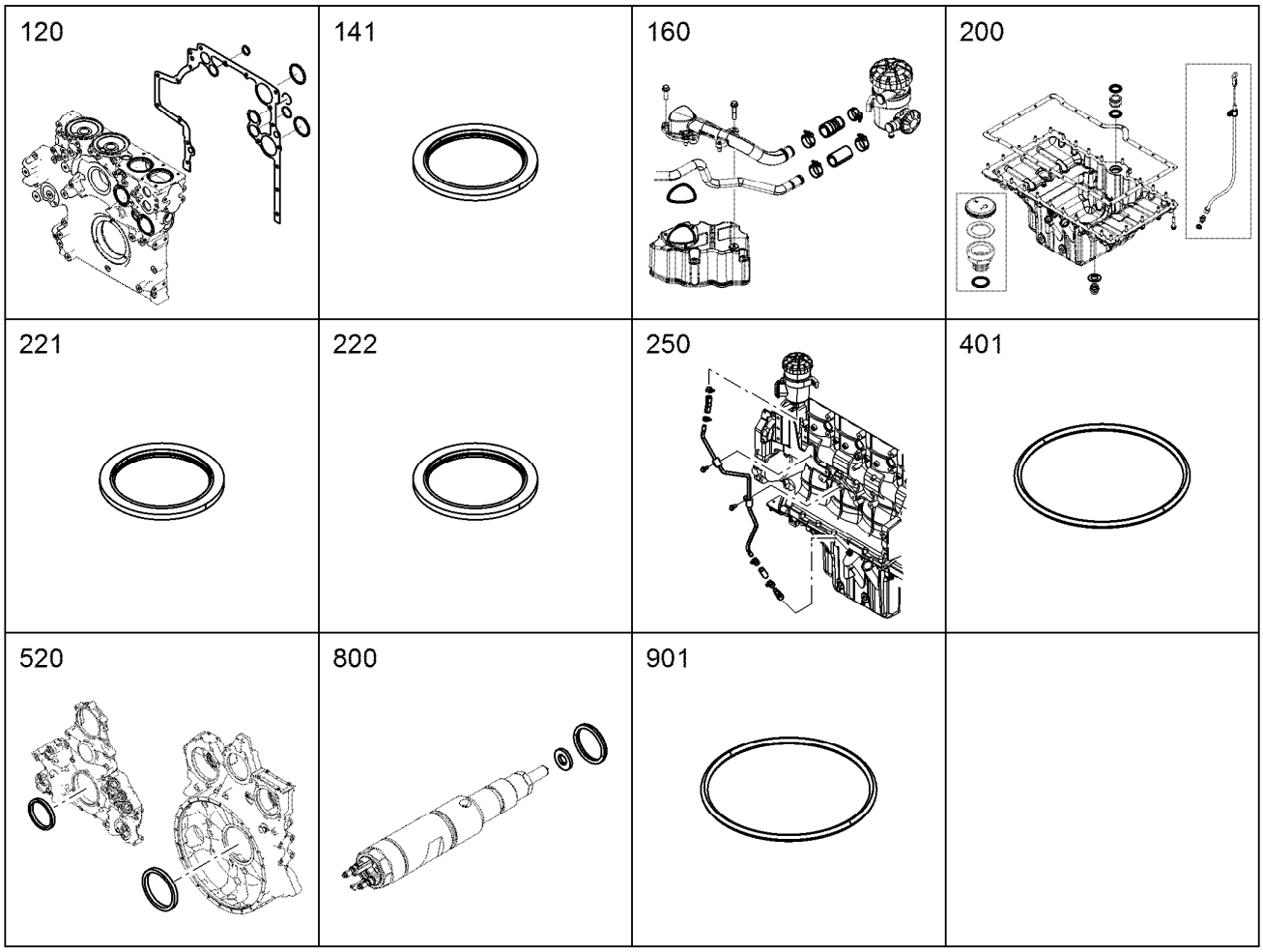

Pos.	Item	Quantity	Description	Bezeichnung
6543	9273691	1	SEAL	DICHTUNG
6561	7380657	1	O-RING ISO 3601-1 91,67X3,53 FKM 70 A,BK	O-RING

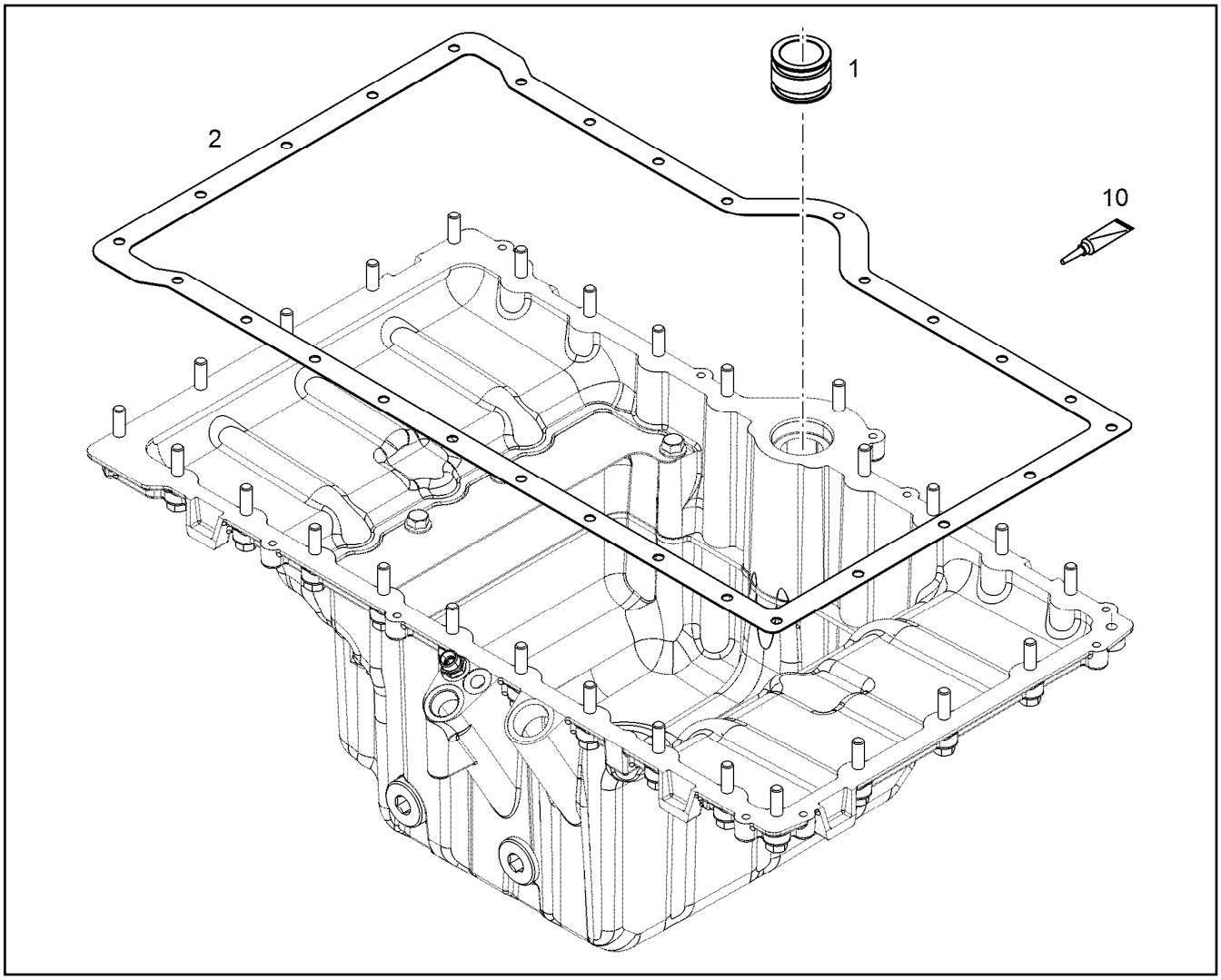

Pos.	Item	Quantity	Description	Bezeichnung
1	10121667	1	CONNECTING PIECE W.O-RING ⇨ ❑ 179	VERBINDUNGSSTUECK M.O-RIN
2	10128516	1	SEAL AFM 30	DICHTUNG
10	10354595	1	SURFACE SEALING 300ML KARTUSCHE BI	FLAECHENDICHTUNG

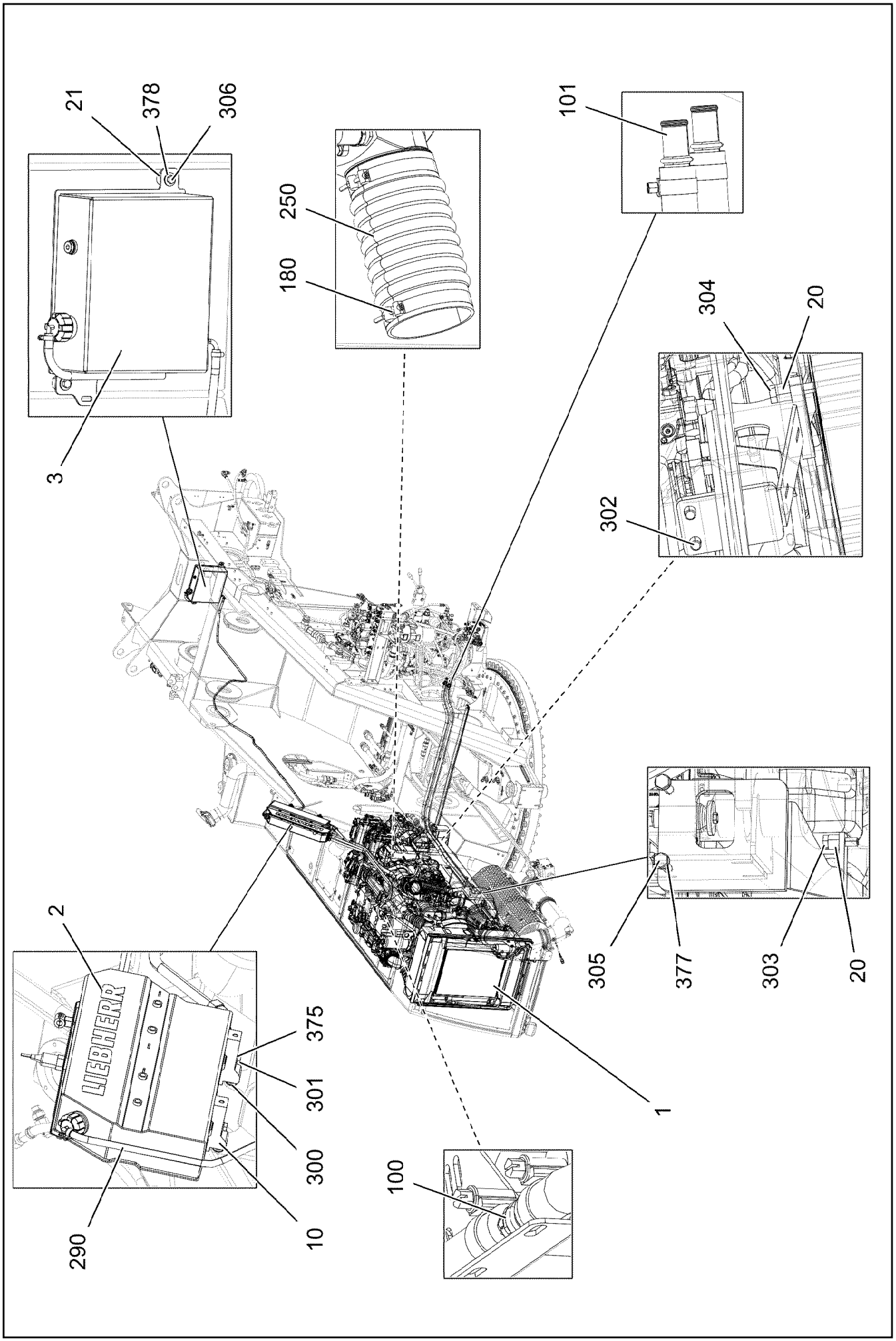

4.12.2020 004811 LIEBHERR	**etk_en_de 047580 LTR 1220** **DRIVE ASSEMBLY CPL.** **ANTRIEBSAGGREGAT KPL.**	❑ 268 (1/2) **918731408**

Pos.	Item	Quantity	Description	Bezeichnung
1	919007708	1	DRIVE ASSEMBLY, PRE-ASSEMBLED ⇨ ❑ 270	ANTRIEBSAGGREGAT VORM.
2	96034515	1	EXPANSION TANK PRE-ASS. ⇨ ❑ 314	AUSGLEICHSBEHAELTER VORM
3	96034522	1	EQUALIZING RESERVOIR ⇨ ❑ 315	AUSGLEICHSBEHAELTER
10	970365108	2	BEARING BLOCK 40x115x42	LAGERBOCK
20	952177008	2	DISTANCE SLEEVE 30.0 X0 42CRMO4+QT	DISTANZHUELSE
21	953873408	2	SLEEVE 25X20 11SMN37 FE//ZNNI8//CN//T0	HUELSE
100	11839607	1	NON-RETURN VALVE 2.5BAR PA 66-GF30	RUECKSCHLAGVENTIL
101	11000700	2	CONNECTING PIPE 0	VERBINDUNGSROHR
180	774227108	2	HOSE CLAMP 169/167-175/25 ST	SCHLAUCHSCHELLE
250	970658608	1	SIPHON PIPE SPF	SAUGSCHLAUCH
290	96034533	1	HOSE LINES DRIVE UNIT ⇨ ❑ 317	SCHLAUCHLEITUNGEN ANTRIE
300	10875448	2	BUTTON HEAD SCREW ISO 7380-2 M10X25	HALBRUNDKOPFSCHRAUBE
301	11626706	2	HEX SCREW ISO 4017 M10X40 8.8 FLZN SP	SECHSKANTSCHRAUBE
302	12214938	2	HEX SCREW ISO 4017 M16X35 8.8 FLZN SP	SECHSKANTSCHRAUBE
303	10875804	1	HEX SCREW ISO 4017 M16X55 8.8 FLZN SP	SECHSKANTSCHRAUBE
304	10875521	1	HEX SCREW ISO 4017 M16X60 8.8 FLZN SP	SECHSKANTSCHRAUBE
305	12223058	2	HEX SCREW ISO 4014 M16X120 8.8 FLZN SP	SECHSKANTSCHRAUBE
306	11651612	2	HEX SCREW ISO 4017 M8X16 8.8 480H SPF	SECHSKANTSCHRAUBE
375	10289795	2	WASHER ISO 7089 10 300HV FLZN SPF	SCHEIBE
377	10289806	4	WASHER ISO 7089 16 300HV FLZN SPF	SCHEIBE
378	11140469	2	WASHER ISO 7093-1 8 200HV 480H SPF	SCHEIBE

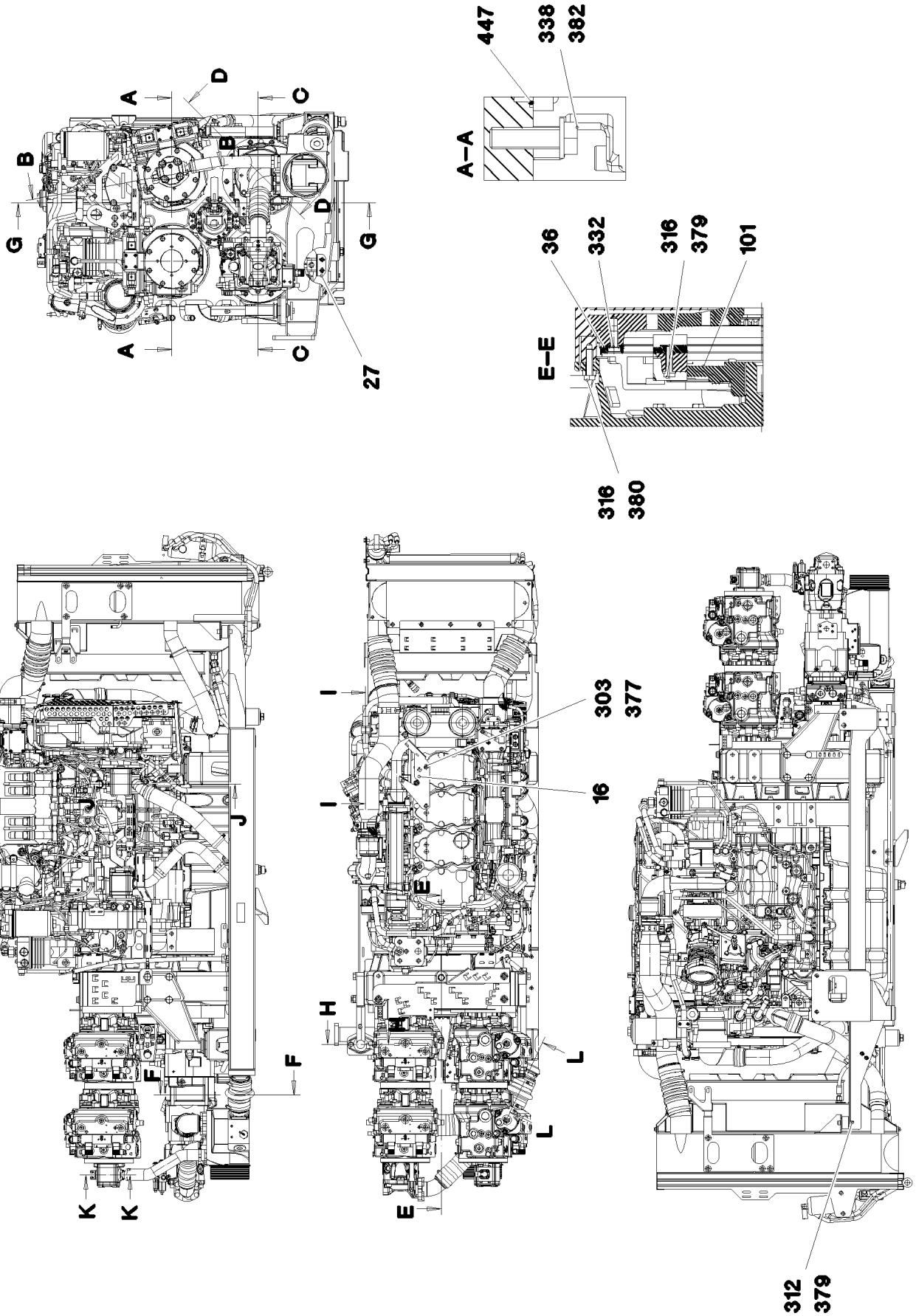

4.12.2020 004806 LIEBHERR	**etk_en_de 047580 LTR 1220** **DRIVE ASSEMBLY, PRE-ASSEMBLED** **ANTRIEBSAGGREGAT VORM.**	❑ 270 (1/8) **919007708**

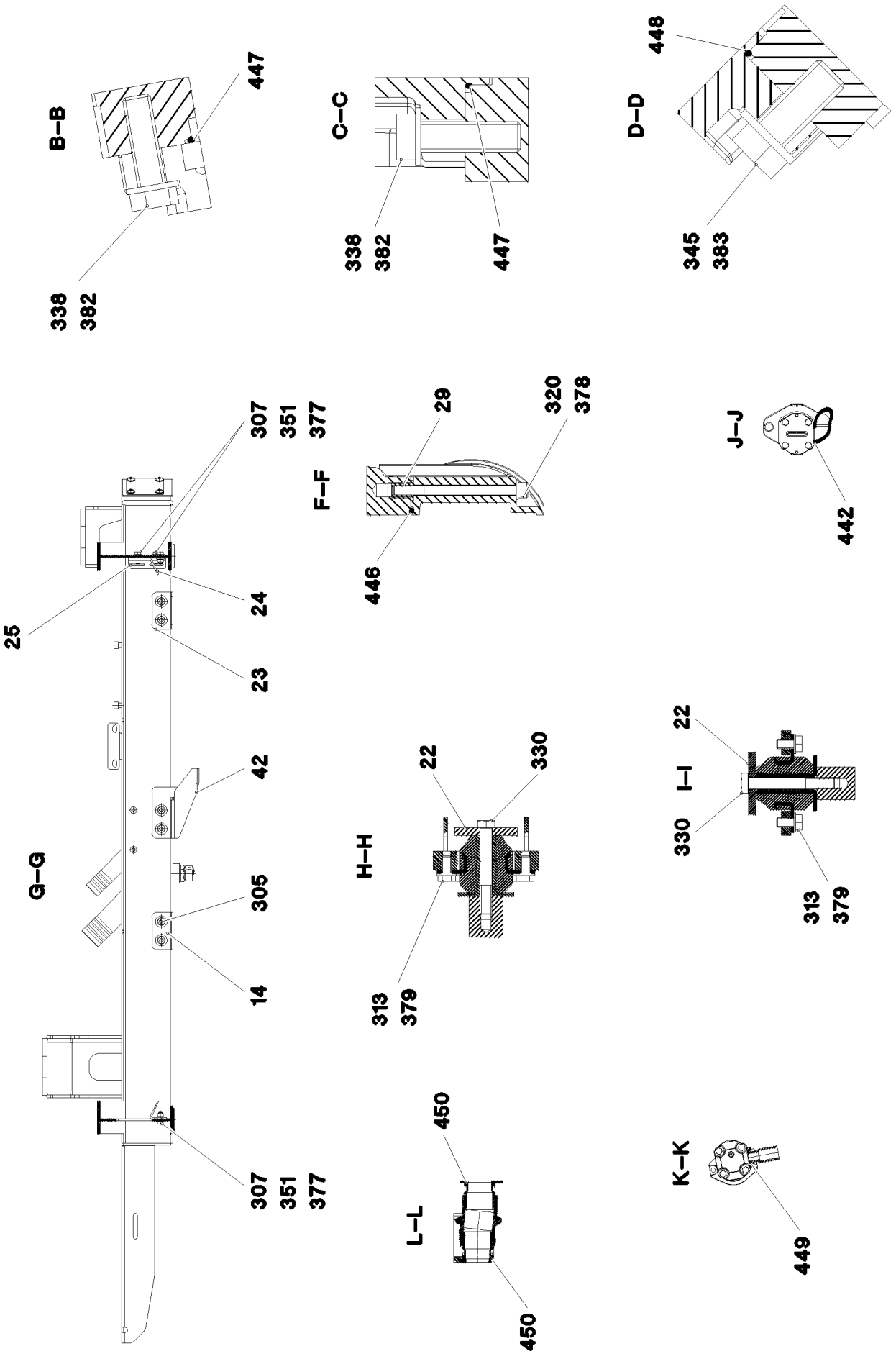
B–B
447
338
382
C–C
338
382
447
D–D
448
345
383
F–F
29
320
378
446
J–J
442
G–G
307
351
377
25
24
23
42
305
14
307
351
377
H–H
22
330
313
379
I–I
22
330
313
379
L–L
450
450
K–K
449

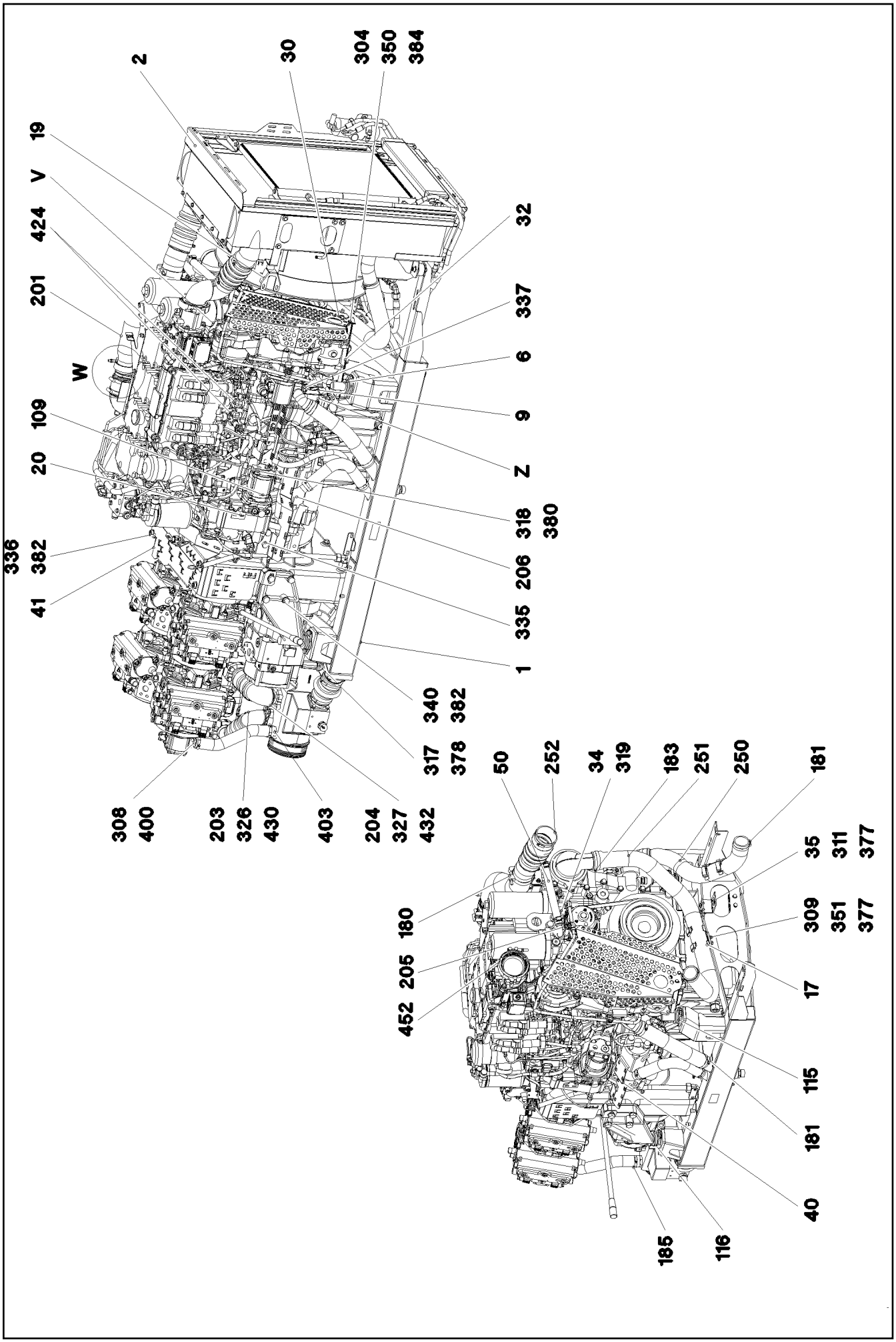

4.12.2020 004808 LIEBHERR	**etk_en_de 047580 LTR 1220** **DRIVE ASSEMBLY, PRE-ASSEMBLED** **ANTRIEBSAGGREGAT VORM.**	❑ 272 (3/8) **919007708**

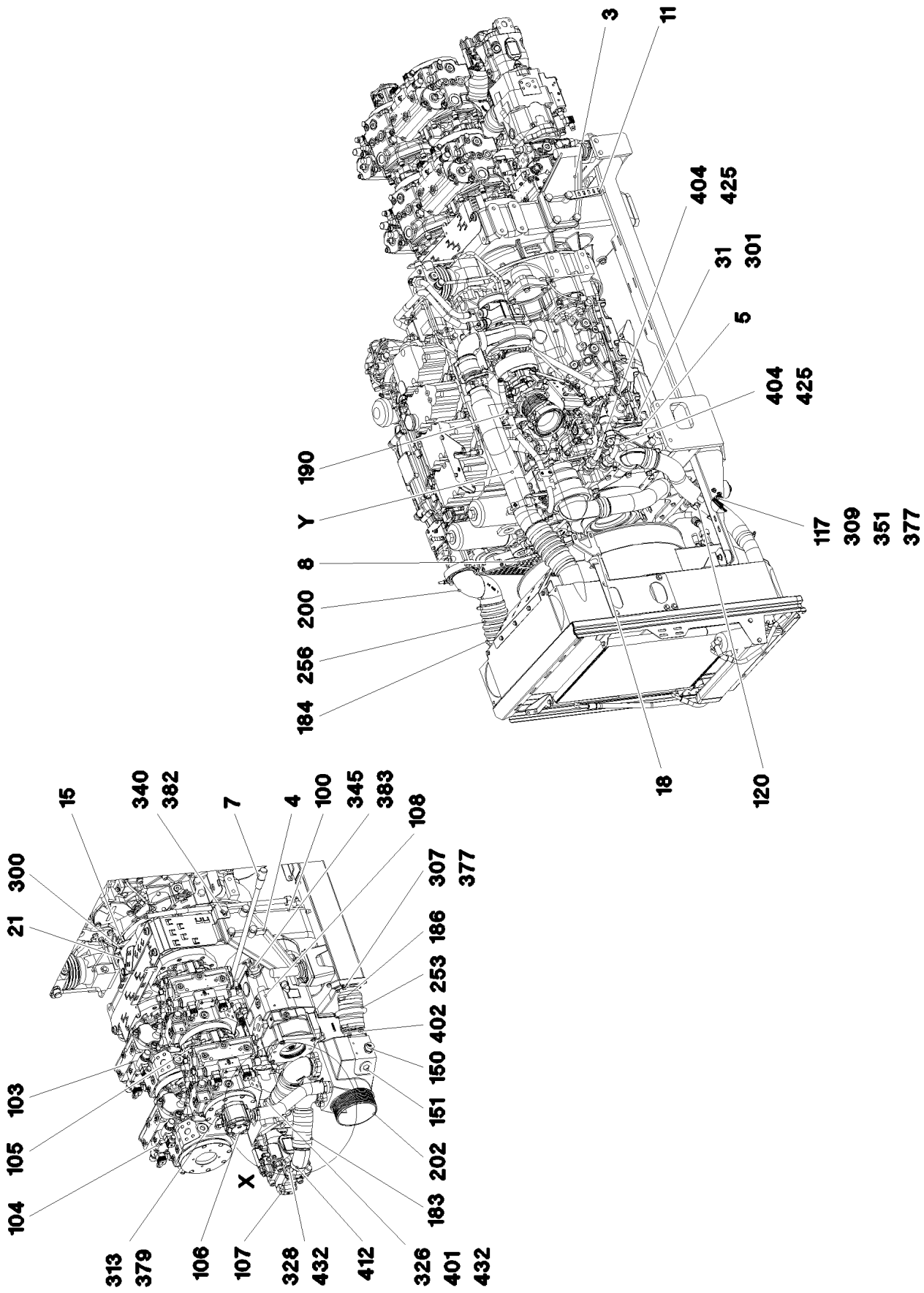

4.12.2020 004809 LIEBHERR	**etk_en_de 047580 LTR 1220** **DRIVE ASSEMBLY, PRE-ASSEMBLED** **ANTRIEBSAGGREGAT VORM.**	❑ 273 (4/8) **919007708**

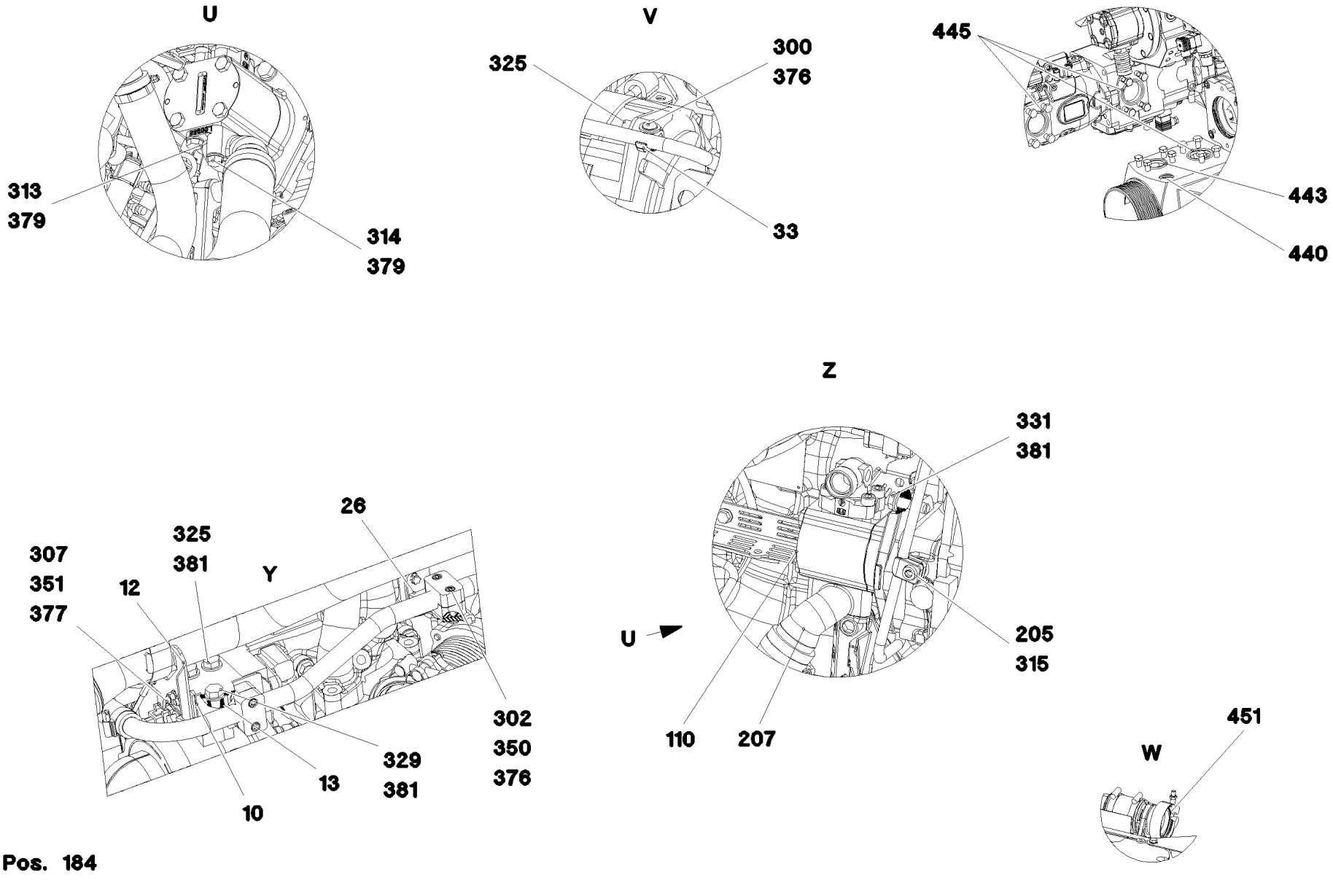
U
313
379
314
379
V
325
300
376
33
X
445
443
440
Z
331
381
U
205
315
110
207
451
W
Y
307
351
377
12
325
381
26
302
350
376
329
381
13
10

Pos. 184

Pos.	Item	Quantity	Description	Bezeichnung
1	968918808	1	EQUIPMENT CARRIER WELDED SPF	AGGREGATETRAEGER SCHWK.
2	96034631	1	RADIATOR, PRE-ASSEMBLED ⇨ ❑ 278	KUEHLER VORM.
3	968025208	1	ENGINE BRACKET WELDED	MOTORKONSOLE SCHWK.
4	968025308	1	ENGINE BRACKET WELDED	MOTORKONSOLE SCHWK.
5	97061150	1	ENGINE BRACKET LEFT G28MN6 +QT1	MOTORKONSOLE LI.
6	97061151	1	ENGINE BRACKET RIGHT G28MN6 +QT1	MOTORKONSOLE RE.
7	968026308	1	CLUTCH ACTUATOR ⇨ ❑ 283	KUPPLUNGSSTELLER
8	968986008	1	PIPELINES DRIVE ASSEMBLY	ROHRLEITUNGEN ANTRIEBSAG
(1)	96045838	1	PIPE COMPL. 22X2.5	ROHR KPL.
(2)	96045839	1	PIPE COMPL. 12X1.5	ROHR KPL.
9	97061320	1	PLATE 2X158X79 DC01 FE//ZNNI8//CN//T0	BLECH
10	97050881	1	PLATE 3X185X122 DC01 FE//ZNNI8//CN//T0	BLECH
11	97101894	1	PLATE 3X30X156 DC01 FE//ZNNI8//CN//T0	BLECH
12	97050879	1	PLATE 3X120X95 DC01 FE//ZNNI8//CN//T0	BLECH
13	97047984	1	DISTANCE SLEEVE 18.0X26 E235+N	DISTANZHUELSE
14	953873408	6	SLEEVE 25X20 11SMN37 FE//ZNNI8//CN//T0	HUELSE
15	964813808	1	THREADED CARRIER FE//ZNNI8//CN//T0	GEWINDETRAEGER
16	97045050	1	PLATE 2X300X125 DC01 FE//ZNNI8//CN//T0	BLECH
17	97050880	2	PLATE 3X98X74 DC01 FE//ZNNI8//CN//T0	BLECH
18	97032982	1	PLATE 2X173X139 DC01 FE//ZNNI8//CN//T0	BLECH
19	97059337	1	PLATE 2X138X117 DC01 FE//ZNNI8//CN//T0	BLECH
20	975614108	1	PLATE 4X60X50 S315MC FE//ZNNI8//CN//T0	BLECH
21	97033889	1	PLATE 1X252X83 DC01 FE//ZNNI8//CN//T0	BLECH
22	97038431	4	WASHER 8X65X65 S355MC FE//ZNNI8//CN//T	SCHEIBE
23	97038475	2	PLATE 3X190X80 DC01 FE//ZNNI8//CN//T0	BLECH
24	97039936	2	PLATE 3X140X72 DC01 FE//ZNNI8//CN//T0	BLECH
25	973717308	1	PLATE 3X80X68 DC01 FE//ZNNI8//CN//T0	BLECH
26	97041747	1	PLATE 4X132X73 S315MC FE//ZNNI8//CN//T	BLECH
27	973717208	1	PLATE 3X60X80 DC01 FE//ZNNI8//CN//T0	BLECH
29	972698608	4	ADAPTOR M16-M10 ST.60-2K	ADAPTER
30	96004318	1	PROTECTING SHEET CPL.	SCHUTZBLECH KPL.
(1)	97072923	1	PLATE 2X377X579 X5CRNI18-10	BLECH
(2)	97077309	3	HOLDER GX5CRNI19-10	HALTER
(300)	10813359	2	BUTTON HEAD SCREW AEHNL.ISO 7380-2	HALBRUNDKOPFSCHRAUBE
(301)	510762108	3	GRUB SCREW DIN 913 M5X6 45H A2	GEWINDESTIFT
(302)	11642497	1	HEX SCREW ISO 4017 M6X10 8.8 480H SPF	SECHSKANTSCHRAUBE
31	952177008	5	DISTANCE SLEEVE 30.0 X0 42CRMO4+QT	DISTANZHUELSE
32	97072959	1	PLATE 2X361X79 DC01 FE//ZNNI8//CN//T0	BLECH
33	97077297	1	HOLDER GX5CRNI19-10	HALTER
34	946104608	2	TUBE 16X2X70 E235+N VERZ	ROHR
35	97045111	1	PLATE 4X60X163 S315MC FE//ZNNI8//CN//T	BLECH
36	97061080	1	PLATE 20X490X490 S690QL FE/FLZN10/NC	BLECH
40	97053103	1	PLATE 3X646X519 S355MC FE//ZNNI8//CN//T	BLECH
41	97053104	1	PLATE 3X926X218 S355MC FE//ZNNI8//CN//T	BLECH
42	97065229	1	CONSOLE 4X277X179 S315MC FE//ZNNI8//C	KONSOLE
50	96034456	1	HOSE LINES ENGINE PREASSEMBLY	SCHLAUCHLEITUNGEN MOTOR
(1612)	96034457	1	HOSE CPL. CONTI KWS 22X280	SCHLAUCH KPL.
100	97029921	1	DISTRIBUTOR GEARBOX SPF ⇨ ❑ 284	VERTEILERGETRIEBE
101	97066819	1	COUPLING	KUPPLUNG
103	11182708	1	VARIABLE PUMP A4VG SPF ⇨ ❑ 286	VERSTELLPUMPE
104	10871017	1	VARIABLE PUMP A4VG SPF ⇨ ❑ 289	VERSTELLPUMPE
105	11182664	1	TWO-STAGE PUMP A4VG+A4VG SPF ⇨ ❑ 290	ZWEIFACHPUMPE
106	11210201	1	GEAR PUMP WP09 SPF ⇨ ❑ 291	ZAHNRADPUMPE

Pos.	Item	Quantity	Description	Bezeichnung
107	10871047	1	TRIPLE PUMP A4VG+A11VO+A10VN SPF ⇨ ❑ 292	DREIFACHPUMPE
108	10871282	1	VARIABLE PUMP A11VLO SPF ⇨ ❑ 304	VERSTELLPUMPE
109	10870964	1	GEAR PUMP WP09 SPF ⇨ ❑ 312	ZAHNRADPUMPE
110	10870965	1	GEAR PUMP FP12 ⇨ ❑ 313	ZAHNRADPUMPE
115	10287382	2	VIBRATION DAMPER 60NR39	SCHWINGUNGSDAEMPFER
116	10875547	2	VIBRATION DAMPER 72NR39	SCHWINGUNGSDAEMPFER
117	10117226	4	DISTANCE SLEEVE 11X18X10 St Rm>350N	DISTANZHUELSE
120	10020520	4	LASHING STRAP 0,75MX18MM	ZURRGURT
150	789011908	2	OIL DRAIN PLUG M26X1,5	OELABLASSSCHRAUBE
151	477704808	1	STOP PLUG VSTIM42X2ED A3P	STOPFEN
180	774227908	1	HOSE CLAMP 86-91X25 ST	SCHLAUCHSCHELLE
181	774208008	4	HOSE CLAMP 60/50-70/12 W3	SCHLAUCHSCHELLE
183	774214308	4	HOSE CLAMP 70/60-80/12 W3	SCHLAUCHSCHELLE
184	774218808	6	HOSE CLAMP 90/80-100/12 W3	SCHLAUCHSCHELLE
185	550838008	4	HOSE CLAMP 50/40-60/12 W3	SCHLAUCHSCHELLE
186	774206408	2	HOSE CLAMP 80/70-90/12 W3	SCHLAUCHSCHELLE
190	11160668	4	CLAMP-HALF L 3 R 22 AL	KLEMMHAELFTE
200	97055159	1	CHARGE AIR PIPE G-ALST10MG SPF	LADELUFTROHR
201	97050878	1	CHARGE AIR PIPE DN85 STAHL SPF	LADELUFTROHR
202	97053616	1	SUCTION PIPE OIL G-ALSI10MG SPF	SAUGROHR-OEL
203	97032263	1	SUCTION PIPE OIL G-ALSI10MG SPF	SAUGROHR-OEL
204	976388708	1	SUCTION PIPE OIL SPF	SAUGROHR-OEL
205	380057108	6	CLAMPING PIECE 12 G20MN5 FE//ZN20//C	KLEMMSTUECK
206	10871016	1	FLANGE FITTING FLK40-35-40,H78 ST A3C	FLANSCHARMATUR
207	97065544	1	SUCTION PIPE OIL G-ALSI10MG SPF	SAUGROHR-OEL
250	97050893	1	COOLING WATER HOSE 55/65X653 PER-E	KUEHLWASSERSCHLAUCH
251	97050894	1	COOLING WATER HOSE 55/65X1240 PER-E	KUEHLWASSERSCHLAUCH
252	551710608	1	HOSE 85X200 SILIKON	SCHLAUCH
253	973519308	1	SHAPED HOSE-OIL NBR	FORMSCHLAUCH OEL
256	97032592	1	CHARGE AIR CORRUGATED HOSE	LADELUFTWELLSCHLAUCH
300	10875488	3	BUTTON HEAD SCREW ISO 7380-2 M6X12 0	HALBRUNDKOPFSCHRAUBE
301	12226910	5	HEX SCREW ISO 4017 M16X65 8.8 FLZN SP	SECHSKANTSCHRAUBE
302	10875591	4	SOCKET HEAD SCREW ISO 4762 M6X40 8.8	ZYLINDERSCHRAUBE
303	10876067	2	BUTTON HEAD SCREW AEHNL.ISO 7380-2	HALBRUNDKOPFSCHRAUBE
304	11840297	2	HEX SCREW EN 1665 M6X16 8.8 480H SPF	SECHSKANTSCHRAUBE
305	10875485	6	BUTTON HEAD SCREW AEHNL.ISO 7380-2	HALBRUNDKOPFSCHRAUBE
307	11651767	19	HEX SCREW ISO 4017 M8X20 8.8 480H SPF	SECHSKANTSCHRAUBE
308	10875599	4	SOCKET HEAD SCREW ISO 4762 M8X25 8.8	ZYLINDERSCHRAUBE
309	11826527	4	HEX SCREW ISO 4017 M8X30 8.8 480H SPF	SECHSKANTSCHRAUBE
311	10197831	2	HEX SCREW ISO 4017 M8X25 8.8 ZNNI-480	SECHSKANTSCHRAUBE
312	12222407	2	SOCKET HEAD SCREW ISO 4762 M10X16 8	ZYLINDERSCHRAUBE
313	10197730	12	HEX SCREW ISO 4017 M10X20 8.8 ZNNI-480	SECHSKANTSCHRAUBE
314	11631860	2	HEX SCREW ISO 4014 M10X50 8.8 FLZN SP	SECHSKANTSCHRAUBE
315	10415162	1	SOCKET HEAD SCREW ISO 4762 M10X25 8	ZYLINDERSCHRAUBE
316	11626706	24	HEX SCREW ISO 4017 M10X40 8.8 FLZN SP	SECHSKANTSCHRAUBE
317	10562617	2	SOCKET HEAD SCREW ISO 4762 M10X100 8	ZYLINDERSCHRAUBE
318	10875796	2	HEX SCREW ISO 4014 M10X120 8.8 FLZN SP	SECHSKANTSCHRAUBE
319	12208101	2	SOCKET HEAD SCREW ISO 4762 M10X120 8	ZYLINDERSCHRAUBE
320	10876074	2	SOCKET HEAD SCREW ISO 4762 M10X130 8	ZYLINDERSCHRAUBE
325	11658892	3	HEX SCREW ISO 4017 M12X25 8.8 FLZN SP	SECHSKANTSCHRAUBE
326	12100096	8	HEX SCREW ISO 4017 M12X28 8.8 FLZN SP	SECHSKANTSCHRAUBE
327	11631742	4	HEX SCREW ISO 4017 M12X30 8.8 FLZN SP	SECHSKANTSCHRAUBE
328	11642349	4	HEX SCREW ISO 4017 M12X35 8.8 FLZN SP	SECHSKANTSCHRAUBE
329	11840136	1	HEX SCREW ISO 4017 M12X50 8.8 FLZN	SECHSKANTSCHRAUBE
330	11840139	4	HEX SCREW ISO 4014 M12X90 8.8 FLZN SP	SECHSKANTSCHRAUBE
331	11645384	2	HEX SCREW ISO 4017 M12X40 8.8 FLZN SP	SECHSKANTSCHRAUBE

Pos.	Item	Quantity	Description	Bezeichnung
332	10180175	8	SOCKET HEAD SCREW DIN 7984 M12X25 08	ZYLINDERSCHRAUBE
335	4065240	2	HEX SCREW ISO 4017 M16X20 8.8 FLZN SP	SECHSKANTSCHRAUBE
336	540511908	3	SOCKET HEAD SCREW DIN 7984 M16X35 0	ZYLINDERSCHRAUBE
337	12224014	3	SOCKET HEAD SCREW ISO 4762 M16X45 8	ZYLINDERSCHRAUBE
338	406608908	6	HEX SCREW ISO 4017 M16X55 10.9 FLZN SP	SECHSKANTSCHRAUBE
340	11642377	8	HEX SCREW ISO 4014 M16X70 8.8 FLZN SP	SECHSKANTSCHRAUBE
345	10875805	4	HEX SCREW ISO 4017 M20X50 8.8 FLZN SP	SECHSKANTSCHRAUBE
350	10197764	6	HEX NUT ISO 4032 M6 10 ZNNI-480H SPF	SECHSKANTMUTTER
351	11693875	17	HEX NUT ISO 4032 M8 8 480H SPF	SECHSKANTMUTTER
376	10875648	5	WASHER ISO 7093-1 6 200HV 480H SPF	SCHEIBE
377	10289803	44	WASHER ISO 7089 8 300HV 480H SPF	SCHEIBE
378	420001114	4	WASHER ISO 7089 10 200HV-A4	SCHEIBE
379	10289795	28	WASHER ISO 7089 10 300HV FLZN SPF	SCHEIBE
380	12214460	14	WASHER DIN 7989-2 A 10 100HV FLZN SPF	SCHEIBE
381	10289804	5	WASHER ISO 7089 12 300HV FLZN SPF	SCHEIBE
382	10289806	18	WASHER ISO 7089 16 300HV FLZN SPF	SCHEIBE
383	4600222	4	WASHER EN 14399-6 20 300-370HV FLZN SP	SCHEIBE
384	10197771	2	WASHER ISO 7089 6 200HV ZNNI-480H SPF	SCHEIBE
400	953661008	1	INTAKE 50.0X78 S355J2C+C FE//ZNNI8//CN/	SAUGSTUTZEN
401	976490008	1	INTAKE 82.5X87 S355J2H FE//ZNNI8//CN//T0	SAUGSTUTZEN
402	97053934	2	FLANGE FITTING 101.6X71 S355J2H FE//ZN	FLANSCHVERSCHRAUBUNG
403	979374708	1	FITTING E335	VERSCHRAUBUNG
404	968661408	2	PIPE COMPL.	ROHR KPL.
412	11491125	1	FLANGE FITTING SFL60-50-45 SPF	FLANSCHARMATUR
424	7615379	2	FITTING EW 15L CR6-FREE	VERSCHRAUBUNG
425	471034308	2	FITTING XGE20-SM-ED M33X2 A3P	VERSCHRAUBUNG
430	511502608	2	SAE FLANGE 11/2"	SAE-FLANSCH
(1)	510587908	1	O-RING ARP 568 47,22X3,53 NBR90	O-RING
432	510598408	6	SAE-FLANGE HALF FHS 2 CR6-FREI	SAE-FLANSCHHAELFTE
440	501201708	1	O-RING ARP 568 28,17X3,53 NBR70	O-RING
442	726405908	1	O-RING DIN 3771 44X3 NBR70	O-RING
443	571898008	1	SEALING RING	DICHTRING
445	726421608	3	O-RING ARP 568 56,74X3,53 NBR70	O-RING
446	7381361	1	O-RING ISO 3601-1 85,32X3,53 FKM 70 A,GN	O-RING
447	726426008	3	O-RING 125X3 NBR70	O-RING
448	518578108	1	O-RING 150X3 NBR70	O-RING
449	502933508	1	O-RING 24X2,5 NBR70	O-RING
450	726412308	2	O-RING 65X3 NBR70	O-RING
451	7380970	1	O-RING 63,17X2,62 FKM 70 A,GN	O-RING
452	7380605	1	O-RING ISO 3601-1 101,27X2,62 FKM 70 A,B	O-RING

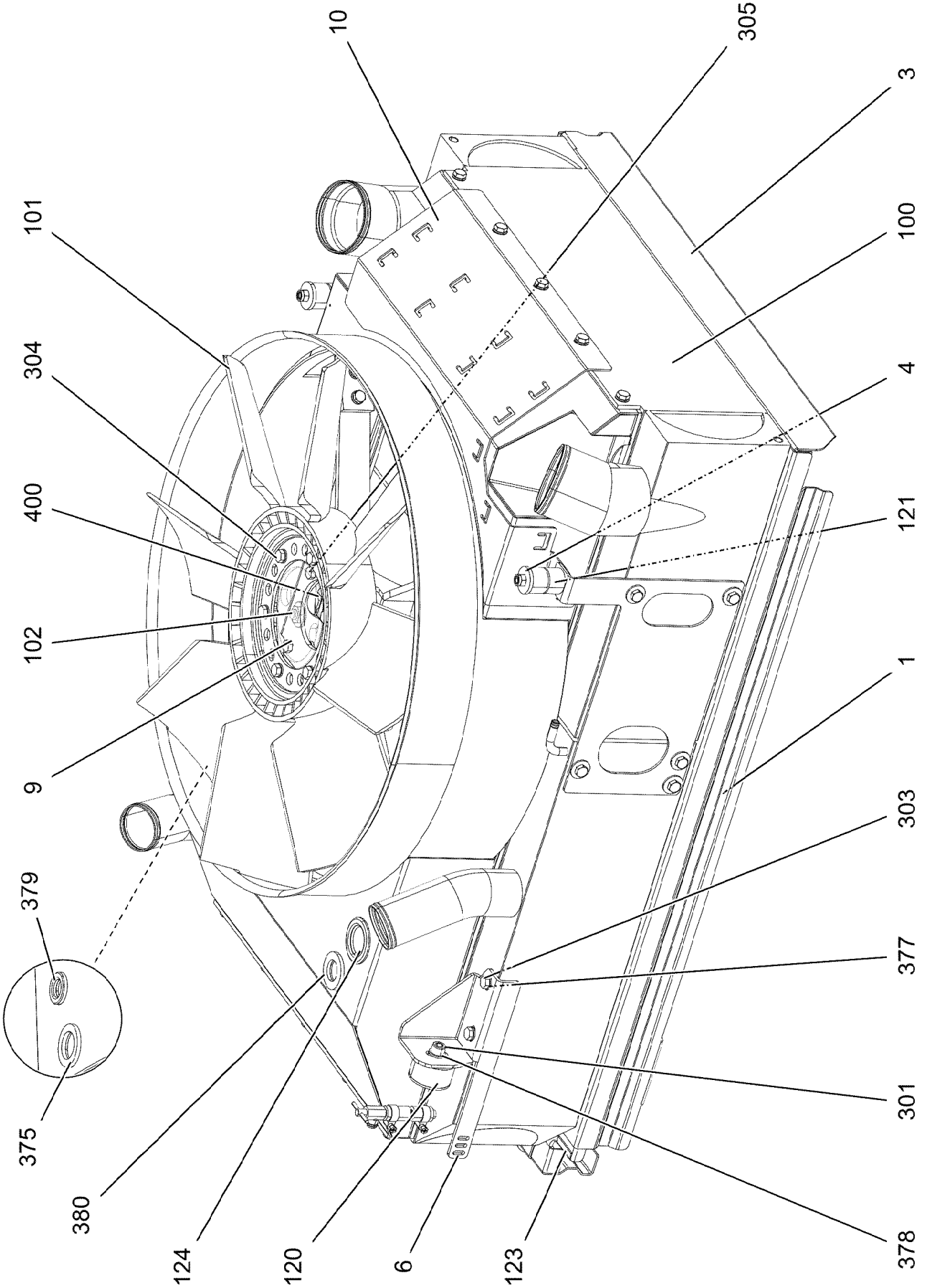
10
305
3
101
100
304
4
400
121
102
1
9
303
379
377
375
301
380
378
124
120
6
123

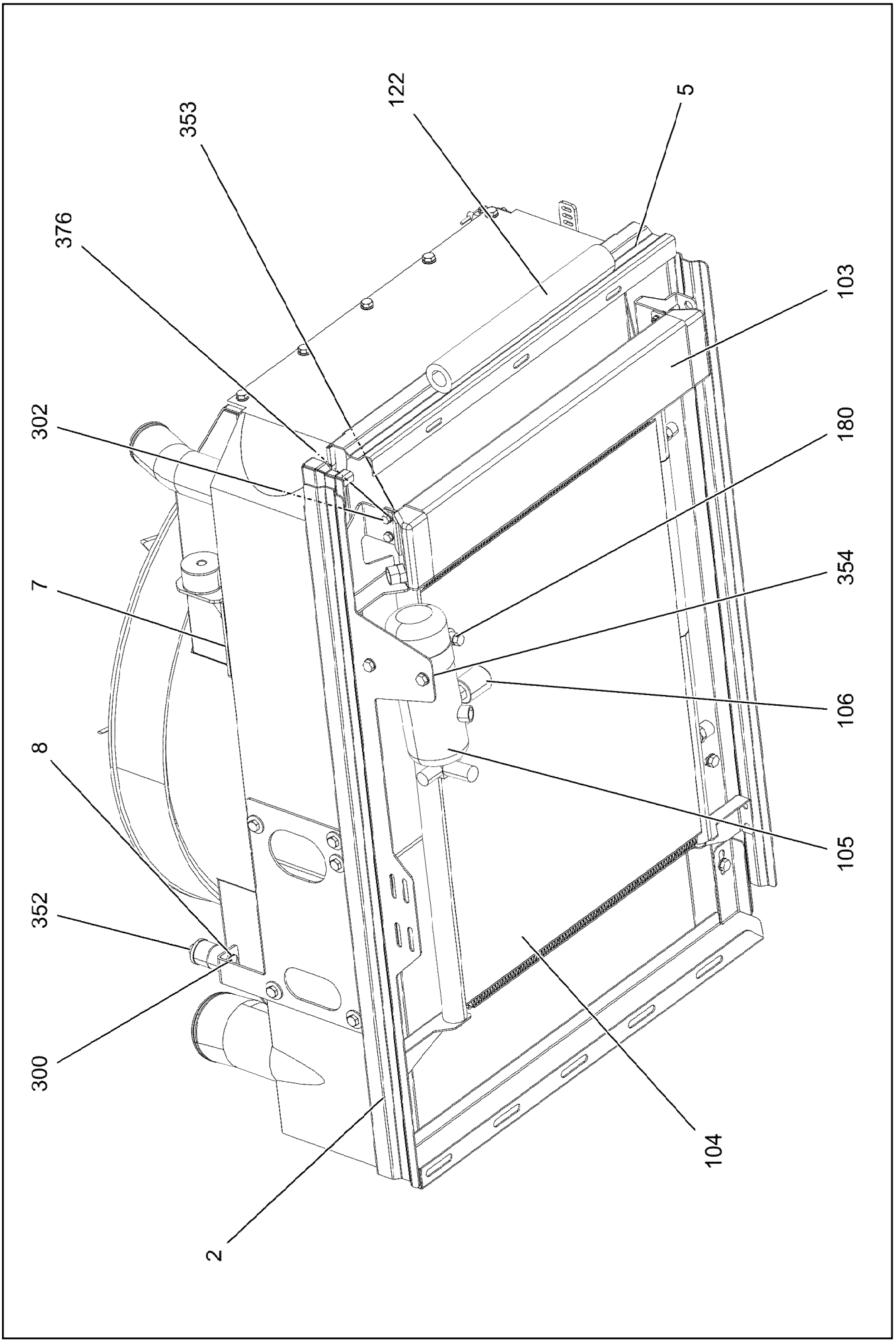
122
5
353
376
103
302
180
354
7
106
8
105
352
300
104
2

Pos.	Item	Quantity	Description	Bezeichnung
1	968981408	1	SIDE PANEL WELDED	SEITENBLECH SCHWK.
2	968981508	1	SIDE PANEL WELDED	SEITENBLECH SCHWK.
3	97059376	1	PLATE 2X779X198 ALMG3 H111 SPF	BLECH
4	972353808	2	PLATE 4X32X32 ALMG3 H111	BLECH
5	97050762	1	PLATE 2X771X357 ALMG3 H111	BLECH
6	97050763	1	PLATE 4X215X208 S315MC FE//ZNNI8//CN//T	BLECH
7	97050764	1	PLATE 4X117X158 S315MC FE//ZNNI8//CN//T	BLECH
8	973618208	2	WASHER 3X21X21 DC01 FE//ZNNI8//CN//T0	SCHEIBE
9	970003708	1	FLANGE 25.0X16 9 42CRMO4+QT	FLANSCH
10	97050960	1	PLATE 2X601X334 ALMG3 H111	BLECH
100	97118133	1	COMBINATED RADIATOR	KOMBIKUEHLER
101	550639508	1	RING FAN D=654	RINGLUEFTER
102	10429930	1	GEAR WHEEL MOTOR AZMF 16CM³/U SPF ⇨ ❑ 281	ZAHNRADMOTOR
103	550628308	1	OIL AIR COOLER	OEL-LUFTKUEHLER
104	10815368	1	CAPACITOR	KONDENSATOR
105	571489008	1	DRYER	TROCKNER
106	571489108	1	PRESSURE SWITCH 1,5-26 BAR	DRUCKSCHALTER
120	726905008	2	CIRCULAR BEARING C50X30XM10	RUNDLAGER
121	97025484	4	BUFFER 30X20 GUMMI 50SH	PUFFER
122	11006584	4	INSULATING HOSE ISO 3302-1 E3 DN40 10 E	ISOLIERSCHLAUCH
123	262103908	0.5	EDGE PROTECTION 1-2X9,5X6,5	KANTENSCHUTZ
124	602717308	1	DIAPHRAGM GROMMET 35,5/47/53 TPE SC	MEMBRAN-DURCHFUEHRUNG
180	774209708	1	RETAINER CLIP 75/25	SPANNSCHELLE
300	10181375	2	CUP HEAD SQUARE NECK BOLT DIN 603 M8	FLACHRUNDSCHRAUBE
301	12222407	2	SOCKET HEAD SCREW ISO 4762 M10X16 8	ZYLINDERSCHRAUBE
302	11657360	4	HEX SCREW ISO 4017 M6X16 8.8 480H SPF	SECHSKANTSCHRAUBE
303	11651767	4	HEX SCREW ISO 4017 M8X20 8.8 480H SPF	SECHSKANTSCHRAUBE
304	11651612	18	HEX SCREW ISO 4017 M8X16 8.8 480H SPF	SECHSKANTSCHRAUBE
305	11826527	4	HEX SCREW ISO 4017 M8X30 8.8 480H SPF	SECHSKANTSCHRAUBE
352	11656731	6	HEX NUT ISO 7040 M8 8 480H SPF	SECHSKANTMUTTER
353	10197764	4	HEX NUT ISO 4032 M6 10 ZNNI-480H SPF	SECHSKANTMUTTER
354	11693875	2	HEX NUT ISO 4032 M8 8 480H SPF	SECHSKANTMUTTER
375	10179376	1	WASHER DIN 1441 26 -St FLZN SPF	SCHEIBE
376	10197771	8	WASHER ISO 7089 6 200HV ZNNI-480H SPF	SCHEIBE
377	10289803	28	WASHER ISO 7089 8 300HV 480H SPF	SCHEIBE
378	10289795	2	WASHER ISO 7089 10 300HV FLZN SPF	SCHEIBE
379	10180180	1	WASHER EN 14399-6 16 300-370HV-ST FLZ	SCHEIBE
380	10289810	1	WASHER ISO 7089 24 300HV FLZN SPF	SCHEIBE
400	510146208	1	SUCTION FLANGE	SAUGFLANSCH
(1)	570322408	1	O-RING ARP 568 23,47x2,62 NBR70	O-RING

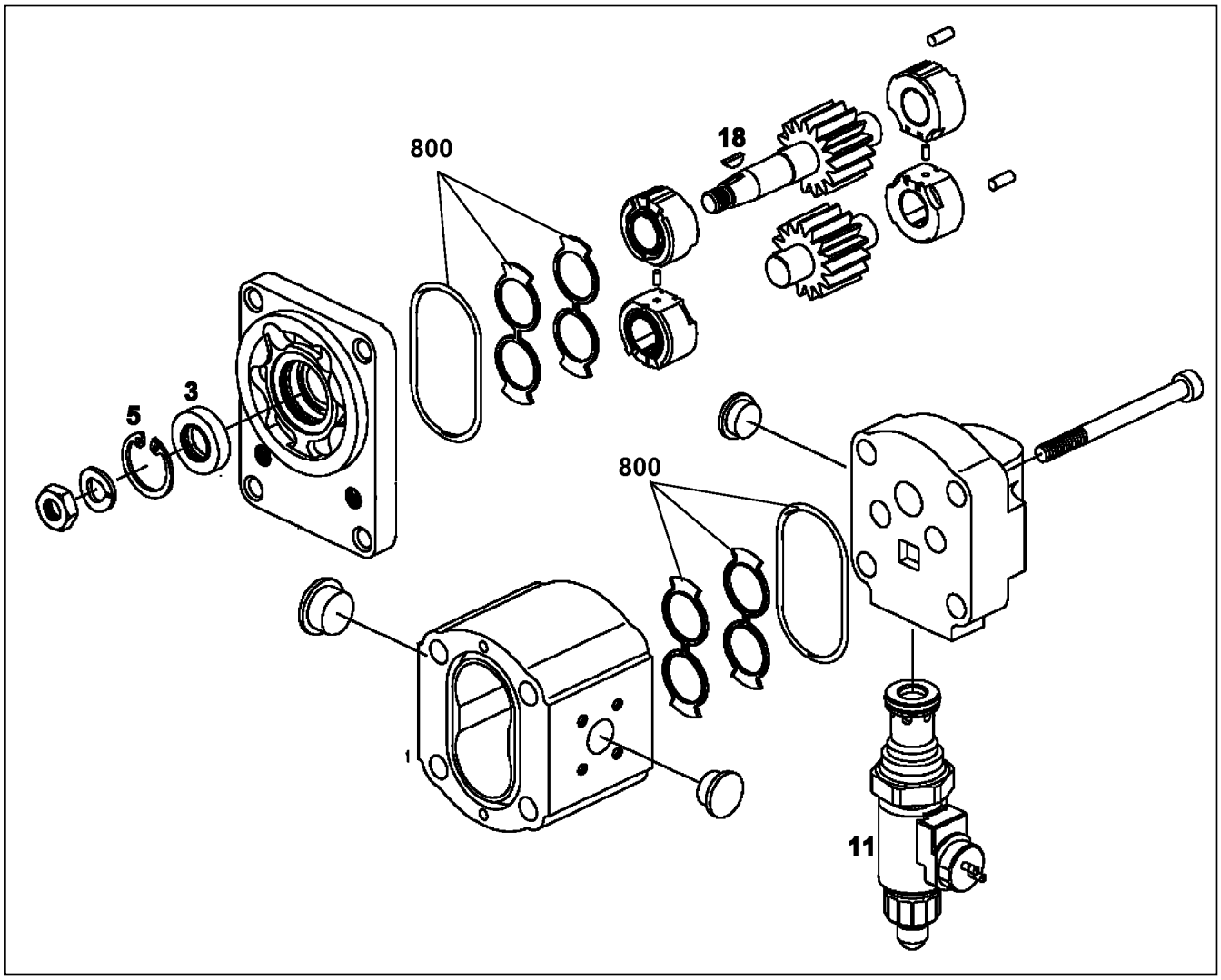

Pos.	Item	Quantity	Description	Bezeichnung
3	10335855	1	SHAFT SEAL	WELLENDICHTRING
5	428100708	1	LOCKING RING DIN 472 30X1,2	SICHERUNGSRING
11	10492431	1	PRESSURE LIMITING VALVE ⇨ ❑ 282	DRUCKBEGRENZUNGSVENTIL
18	570435508	1	WOODRUFF KEY DIN 6888 3X5 ST.60-2K	SCHEIBENFEDER
800	10331947	1	SEAL KIT	DICHTUNGSSATZ

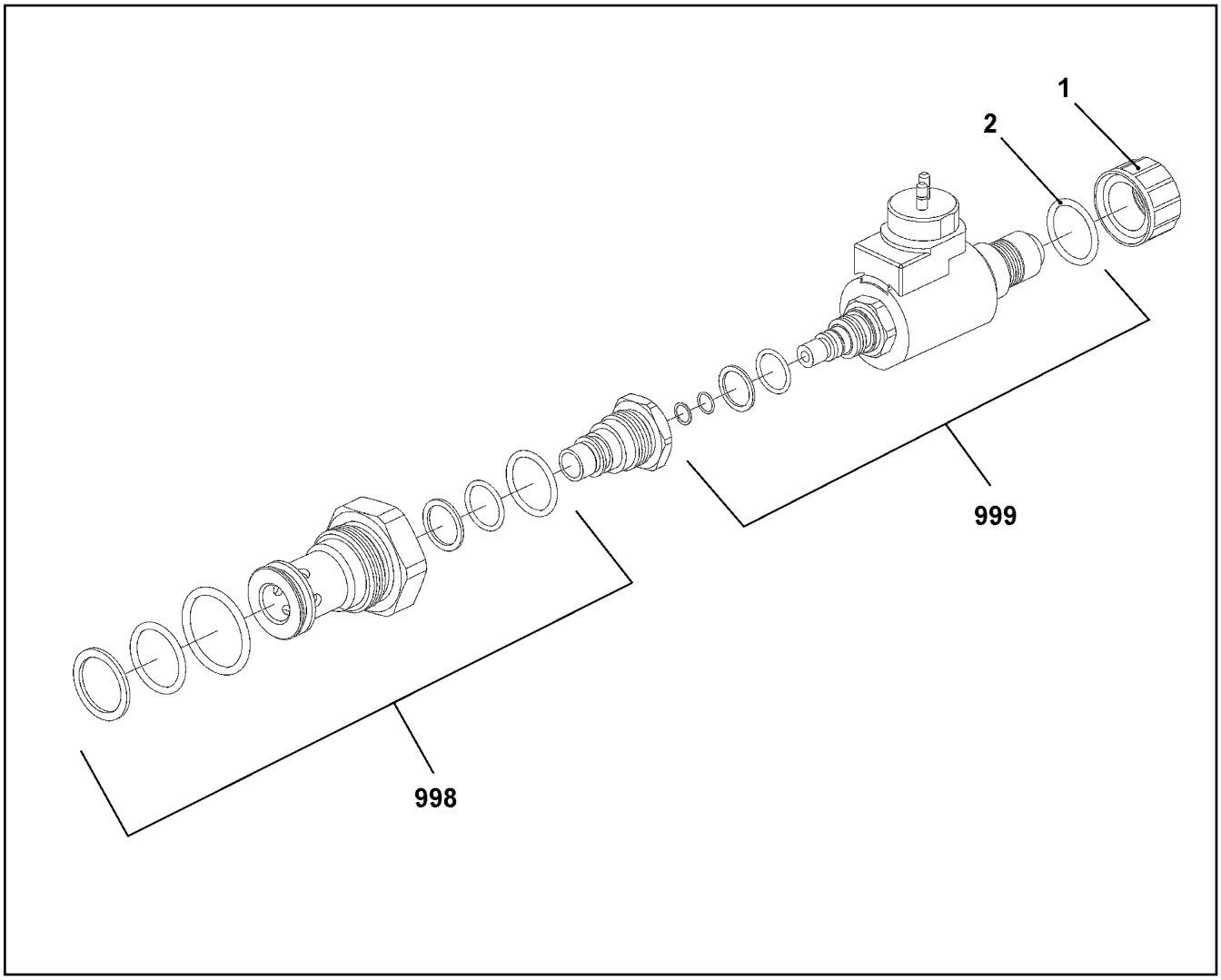

Pos.	Item	Quantity	Description	Bezeichnung
1	10219618	1	NUT	MUTTER
2	10219619	1	O-RING 19X2,5 FKM80	O-RING
998	10331946	1	SEAL KIT	DICHTSATZ
999	10219620	1	SEAL KIT	DICHTSATZ

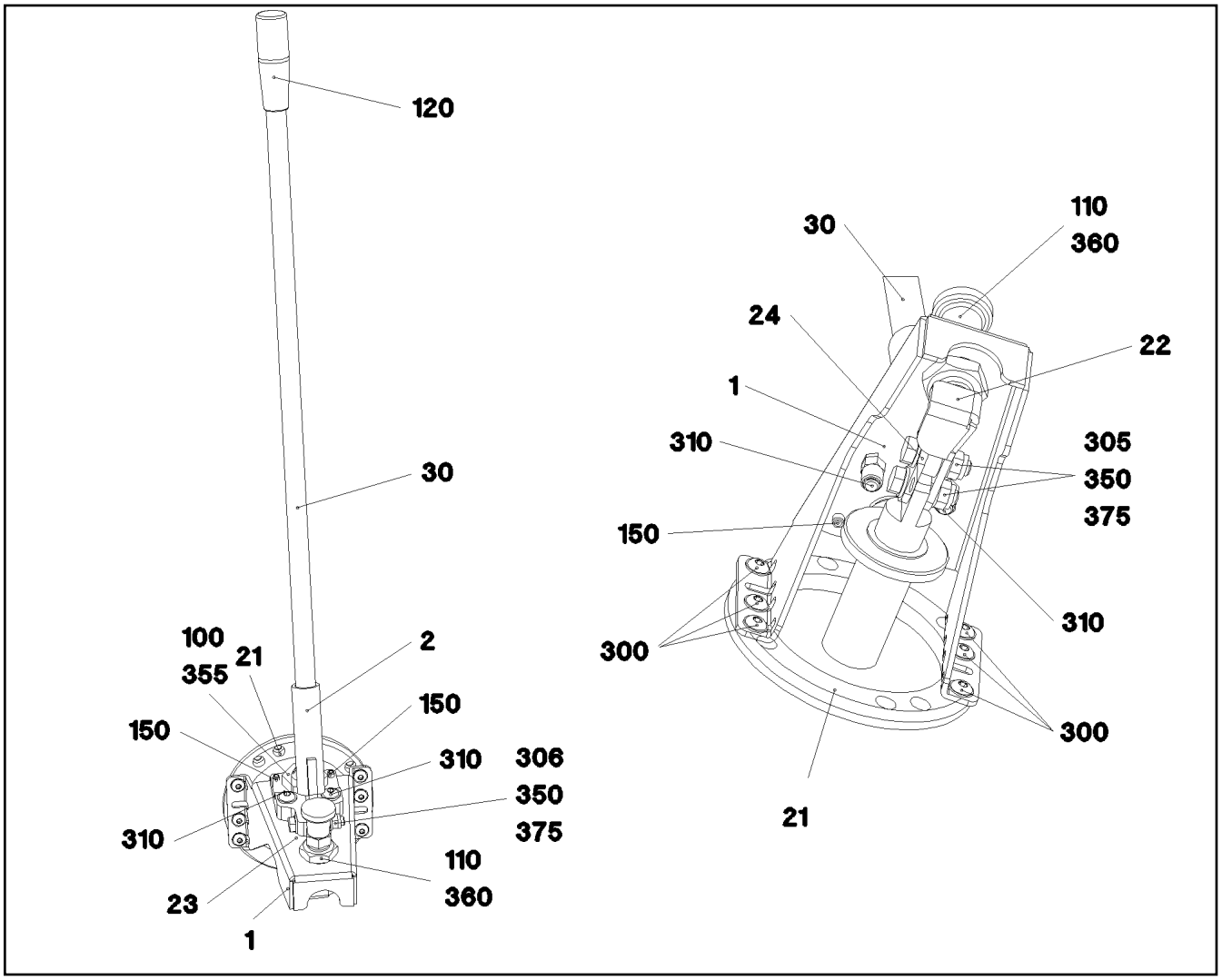

Pos.	Item	Quantity	Description	Bezeichnung
1	965426208	1	CLAMP WELDED CONST. FE//ZNNI8//CN//T0	HALTER SCHWK.
2	965426308	1	LEVER WELDED FE//ZNNI8//CN//T0	HEBEL SCHWK.
21	97032260	1	FLANGE 10X137X137 S355MC FE//ZNNI8//C	FLANSCH
22	978554708	1	BUTT STRAP 4X95X52 S315MC FE//ZNNI8//C	LASCHE
23	978361308	1	PLATE 15X90X60 S355MC FE//ZNNI8//CN//T	BLECH
24	978361008	1	BUTT STRAP 4X40X20 S315MC FE//ZNNI8//C	LASCHE
30	978361608	1	ROD 18.0X700 E235+N	STANGE
100	240191502	1	THRUST PIECE	DRUCKSTUECK
110	11001935	1	STOP BOLT 12-15-CK NIROSTA	RASTBOLZEN
120	704004608	1	CYLINDER HANDLE	ZYLINDERGRIFF
150	10876162	2	DOWEL PIN ISO 8752 6X20 480H SPF	SPANNSTIFT
300	10875488	6	BUTTON HEAD SCREW ISO 7380-2 M6X12 0	HALBRUNDKOPFSCHRAUBE
305	11826527	2	HEX SCREW ISO 4017 M8X30 8.8 480H SPF	SECHSKANTSCHRAUBE
306	11651580	1	HEX SCREW ISO 4014 M8X45 8.8 480H SPF	SECHSKANTSCHRAUBE
310	10182032	2	BUTTON HEAD SCREW ISO 7380-2 M8X35 0	HALBRUNDKOPFSCHRAUBE
350	10875614	3	HEX NUT DIN 985 M8 8 480H SPF	SECHSKANTMUTTER
355	10179943	1	HEX NUT ISO 4035 M24 05 FLZN SPF	SECHSKANTMUTTER
360	10285016	2	HEX NUT ISO 8675 M20X1,5 A2-035	SECHSKANTMUTTER
375	10289803	6	WASHER ISO 7089 8 300HV 480H SPF	SCHEIBE

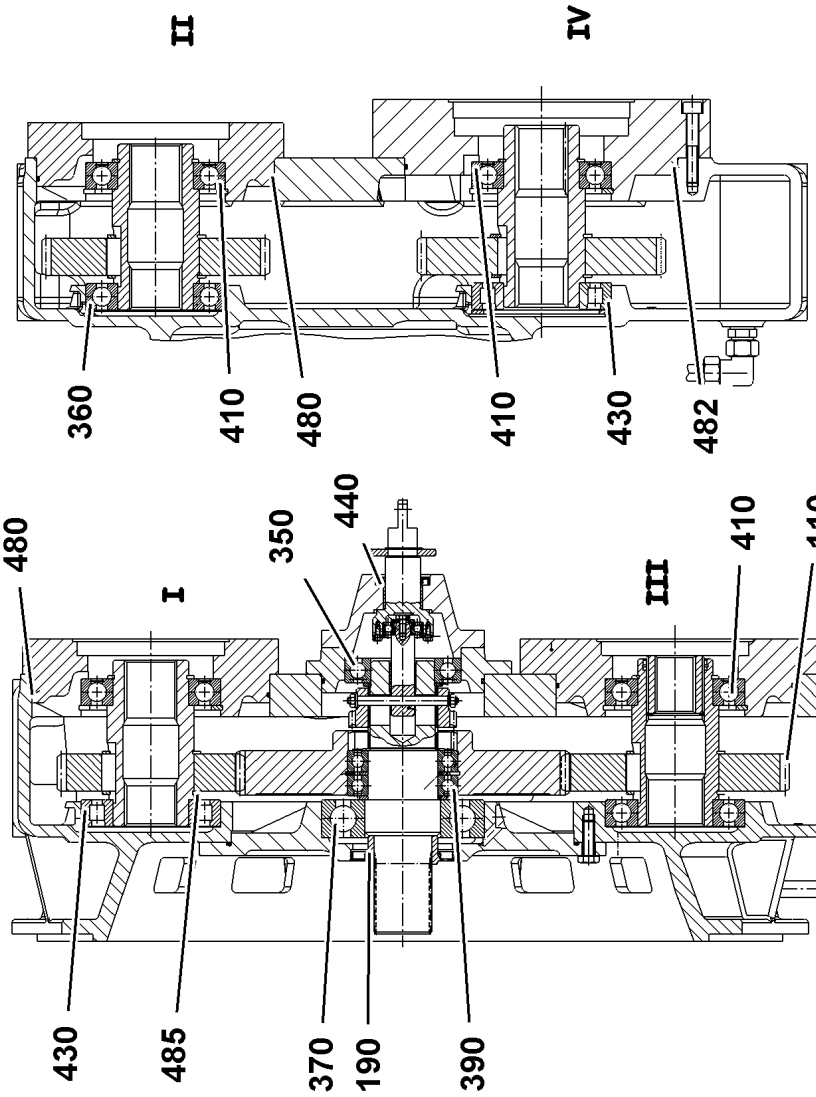
II
IV
360
410
480
410
430
482
480
I
350
440
III
410
110
430
485
370
190
390
Schnitt A–A

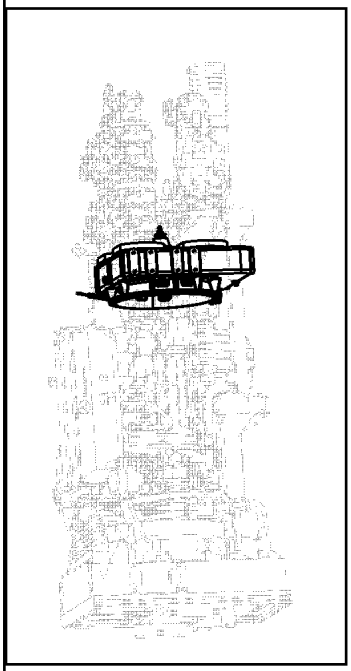

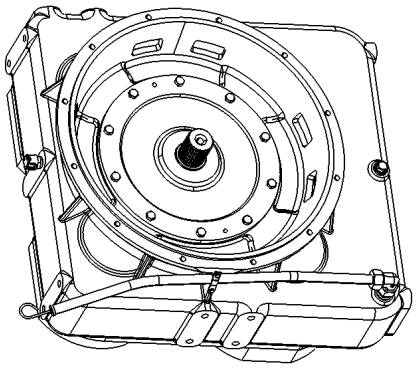

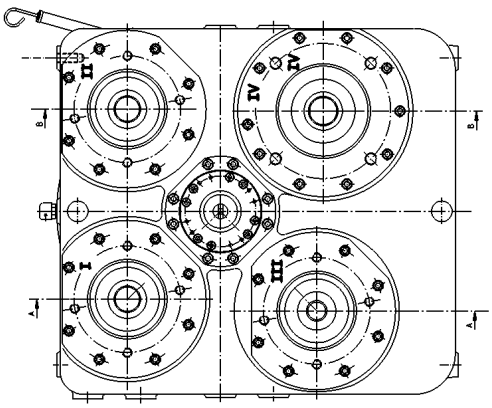
II
IV
I
III
B
A

Pos.	Item	Quantity	Description	Bezeichnung
110	571819108	2	SPUR WHEEL D147/75X32	STIRNRAD
190	571819708	1	SLEEVE D60/50X25	LAUFRING
350	10169236	1	DEEP GROOVE BALL BEARING DIN 625 620	RILLENKUGELLAGER
360	571819808	2	DEEP GROOVE BALL BEARING DIN 625 621	RILLENKUGELLAGER
370	745165608	1	DEEP GROOVE BALL BEARING DIN 625 63	RILLENKUGELLAGER
390	745129508	2	DEEP GROOVE BALL BEARING DIN 625 60	RILLENKUGELLAGER
410	745145308	4	DEEP GROOVE BALL BEARING DIN 625 62	RILLENKUGELLAGER
430	500926208	2	CYLINDRICAL ROLLER BEARING DIN 5412	ZYLINDERROLLENLAGER
440	710035001	1	ROTARY SHAFT LIP SEAL DIN 3760 AS 30X	RADIALWELLENDICHTRING
450	10359142	1	ROTARY SHAFT LIP SEAL DIN 3760 A 60X90	RADIALWELLENDICHTRING
470	7264141	1	O-RING 132X3 NBR 70	O-RING
480	726421501	3	O-RING 200X3 NBR 70	O-RING
482	726429008	1	O-RING 230X3 NBR70	O-RING
485	726417708	1	O-RING 280X3 NBR70	O-RING

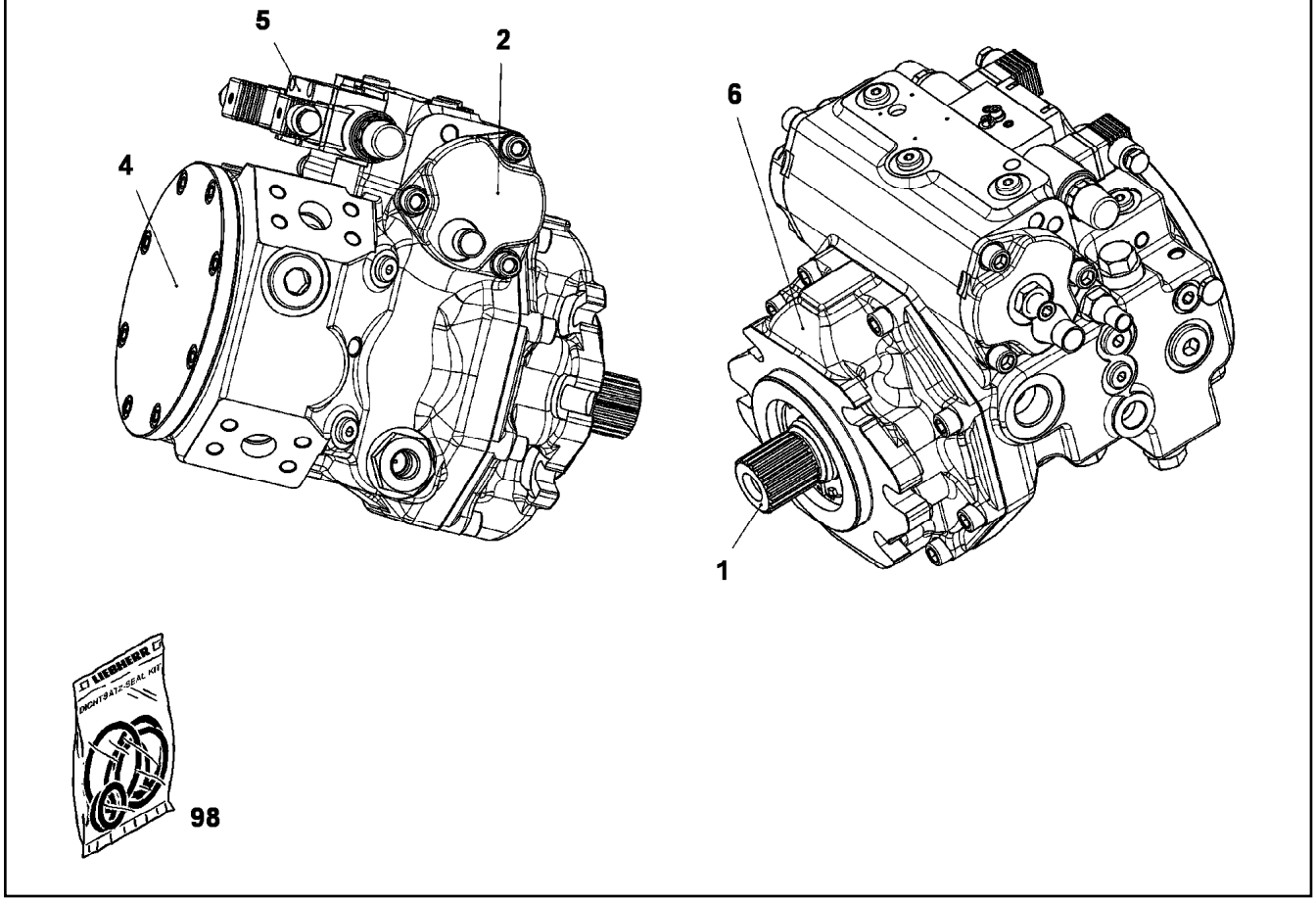

Pos.	Item	Quantity	Description	Bezeichnung
1	11690584	1	DRIVING GEAR	TRIEBWERK
(999)	11600280	1	SEAL KIT	DICHTSATZ
2	11690585	1	ADJUSTMENT	VERSTELLUNG
4	11003121	1	O-RING 127,76X2,62 NBR 70	O-RING
5	11690588	1	CONTROL UNIT ⇨ ❑ 287	ANSTEUERGERAET
6	11631893	1	BEARING FLANGE ⇨ ❑ 288	LAGERFLANSCH
98	11690589	1	SEAL KIT REGULATING VALVE	DS VERSTELLPUMPE

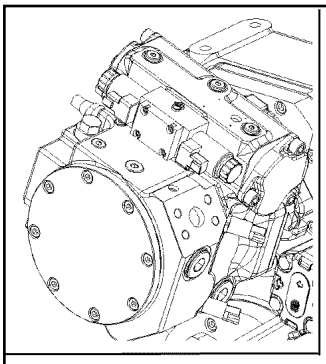

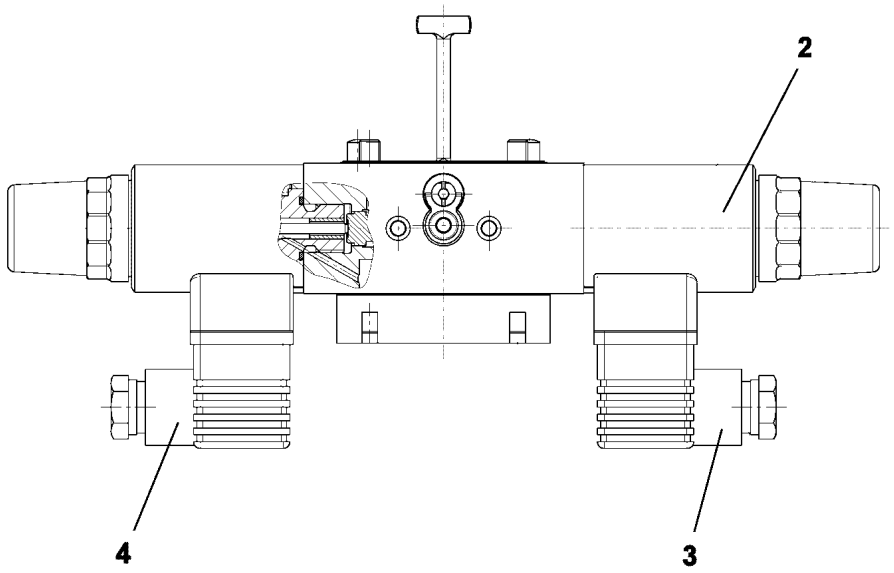

Pos.	Item	Quantity	Description	Bezeichnung
2	10471437	2	PROPORTIONAL MAGNET 24V	PROPORTIONALMAGNET
(1)	10663825	1	RETAINING NUT	BEFESTIGUNGSMUTTER
3	11450030	1	DIE PLUG	LEITUNGSDOSE
4	11450029	1	DIE PLUG	LEITUNGSDOSE

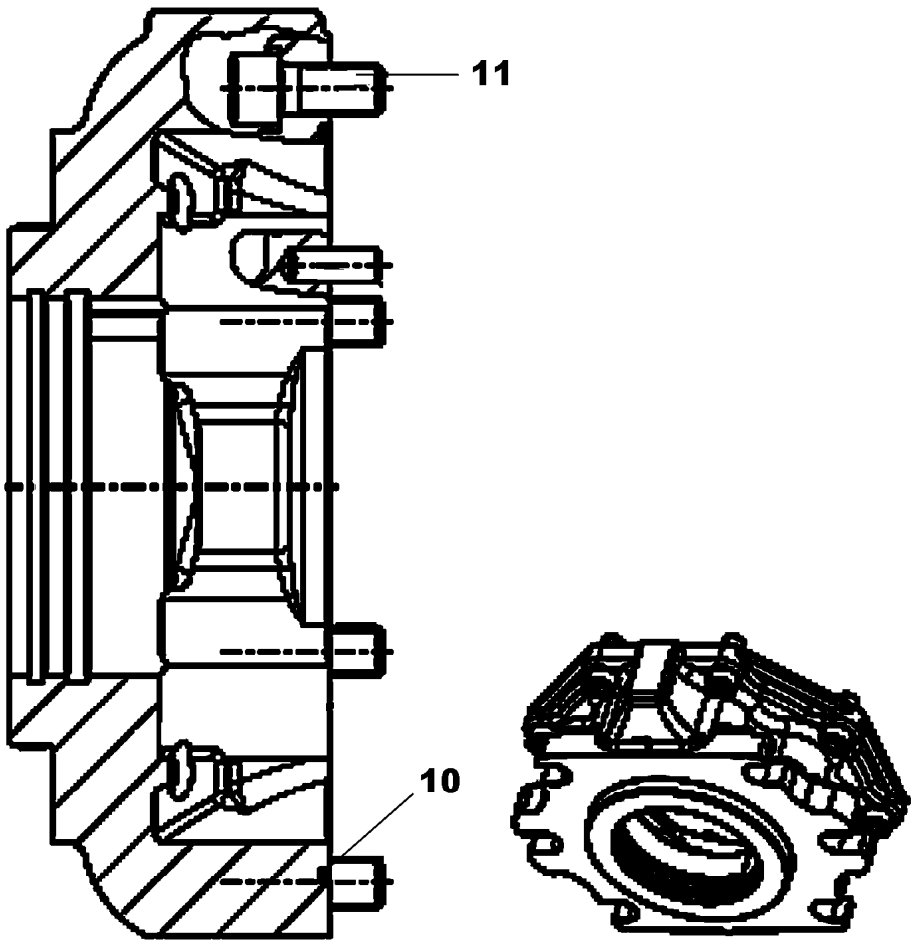

Pos.	Item	Quantity	Description	Bezeichnung
10	571307708	1	O-RING ARP 568 202,79X3,53 NBR70	O-RING
11	11321126	8	SOCKET HEAD SCREW ISO 4762 M12X30 10	ZYLINDERSCHRAUBE

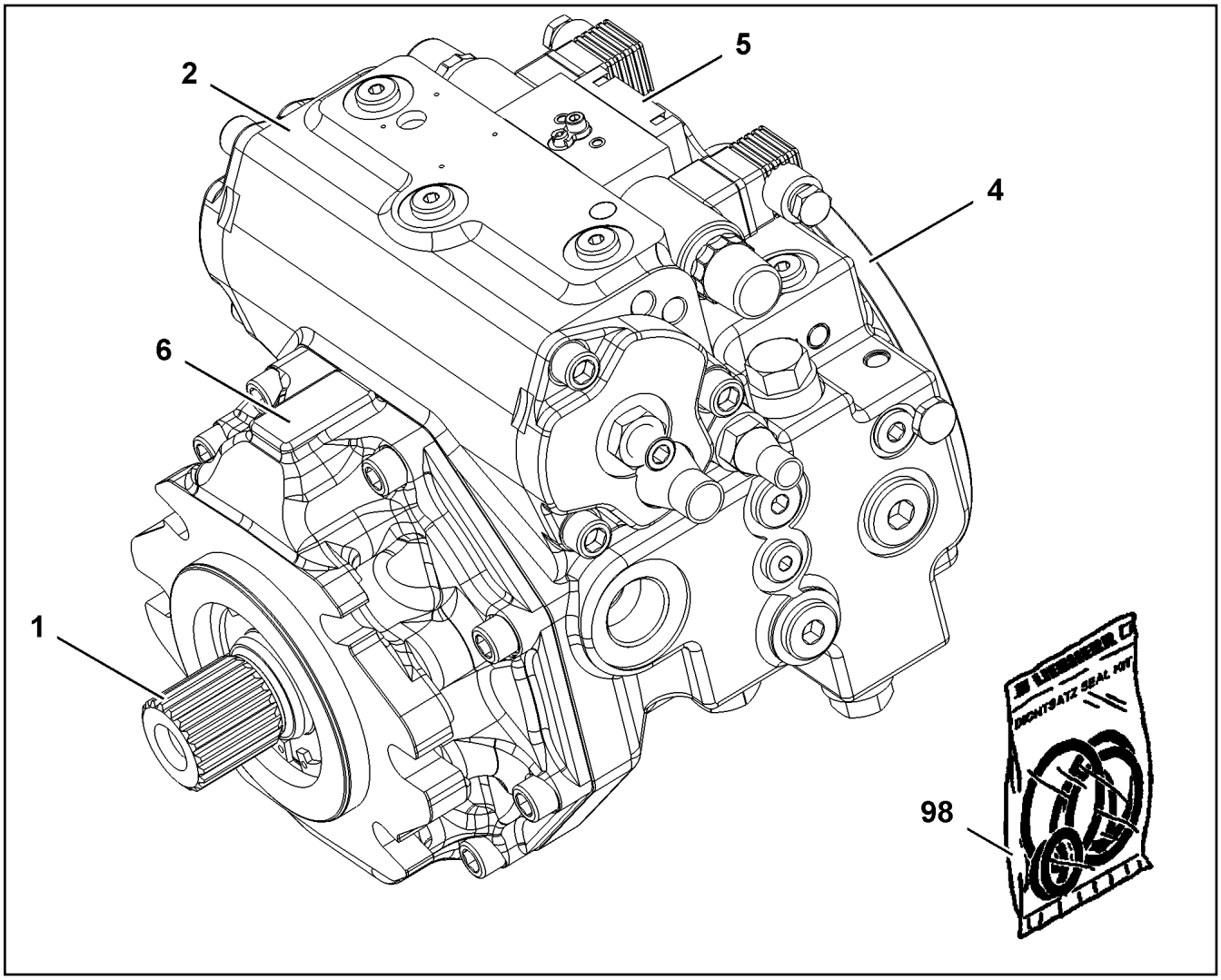

Pos.	Item	Quantity	Description	Bezeichnung
1	11690584	1	DRIVING GEAR	TRIEBWERK
2	11690585	1	ADJUSTMENT	VERSTELLUNG
4	11690587	1	PUMP COVER	PUMPENDECKEL
5	11690588	1	CONTROL UNIT ⇨ ❑ 287	ANSTEUERGERAET
6	11631893	1	BEARING FLANGE ⇨ ❑ 288	LAGERFLANSCH
98	11690589	1	SEAL KIT REGULATING VALVE	DS VERSTELLPUMPE

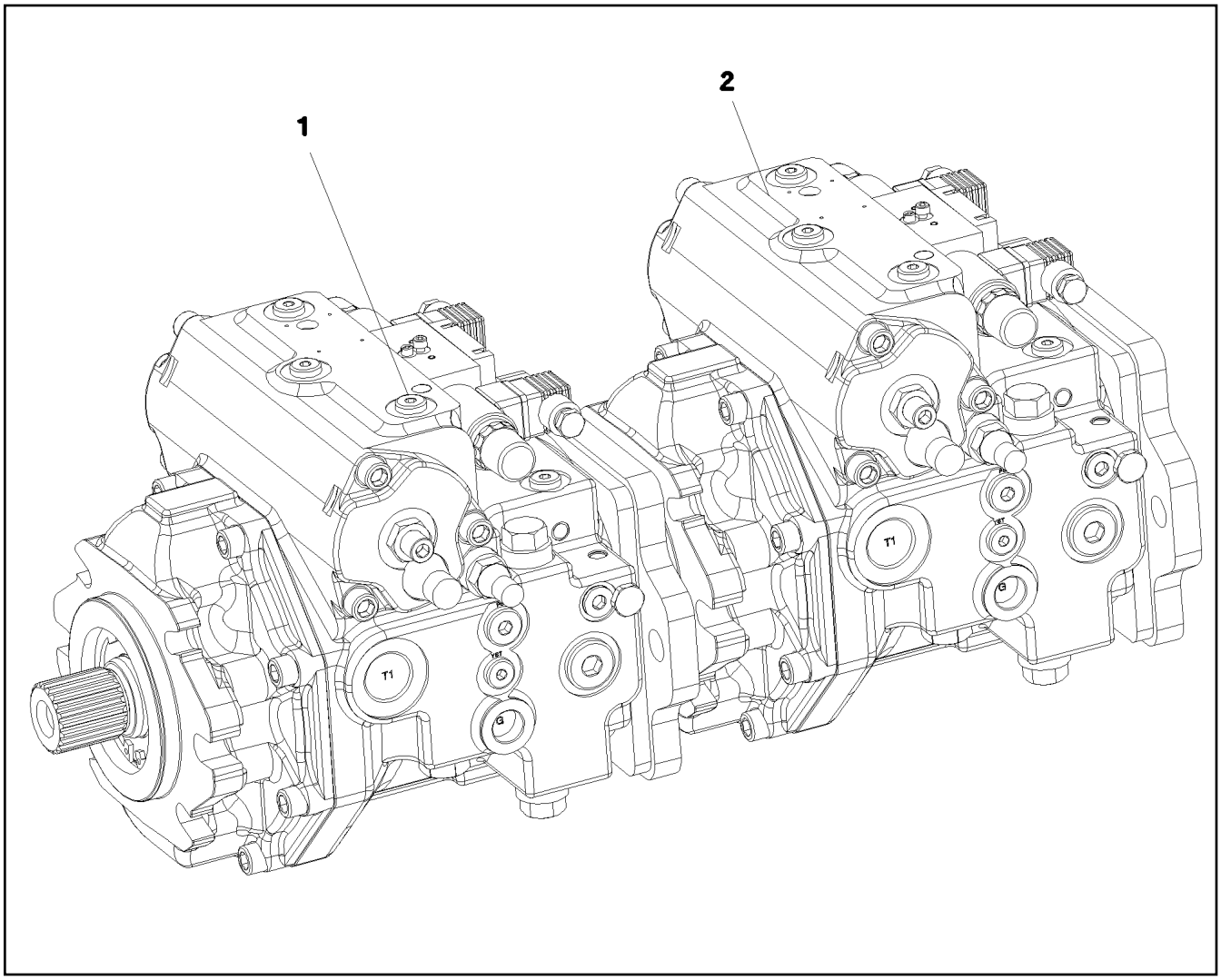

Pos.	Item	Quantity	Description	Bezeichnung
1	11210793	1	VARIABLE PUMP A4VG SPF	VERSTELLPUMPE
(5)	10471437	2	PROPORTIONAL MAGNET 24V	PROPORTIONALMAGNET
2	11210794	1	VARIABLE PUMP A4VG SPF	VERSTELLPUMPE
(5)	10471437	2	PROPORTIONAL MAGNET 24V	PROPORTIONALMAGNET

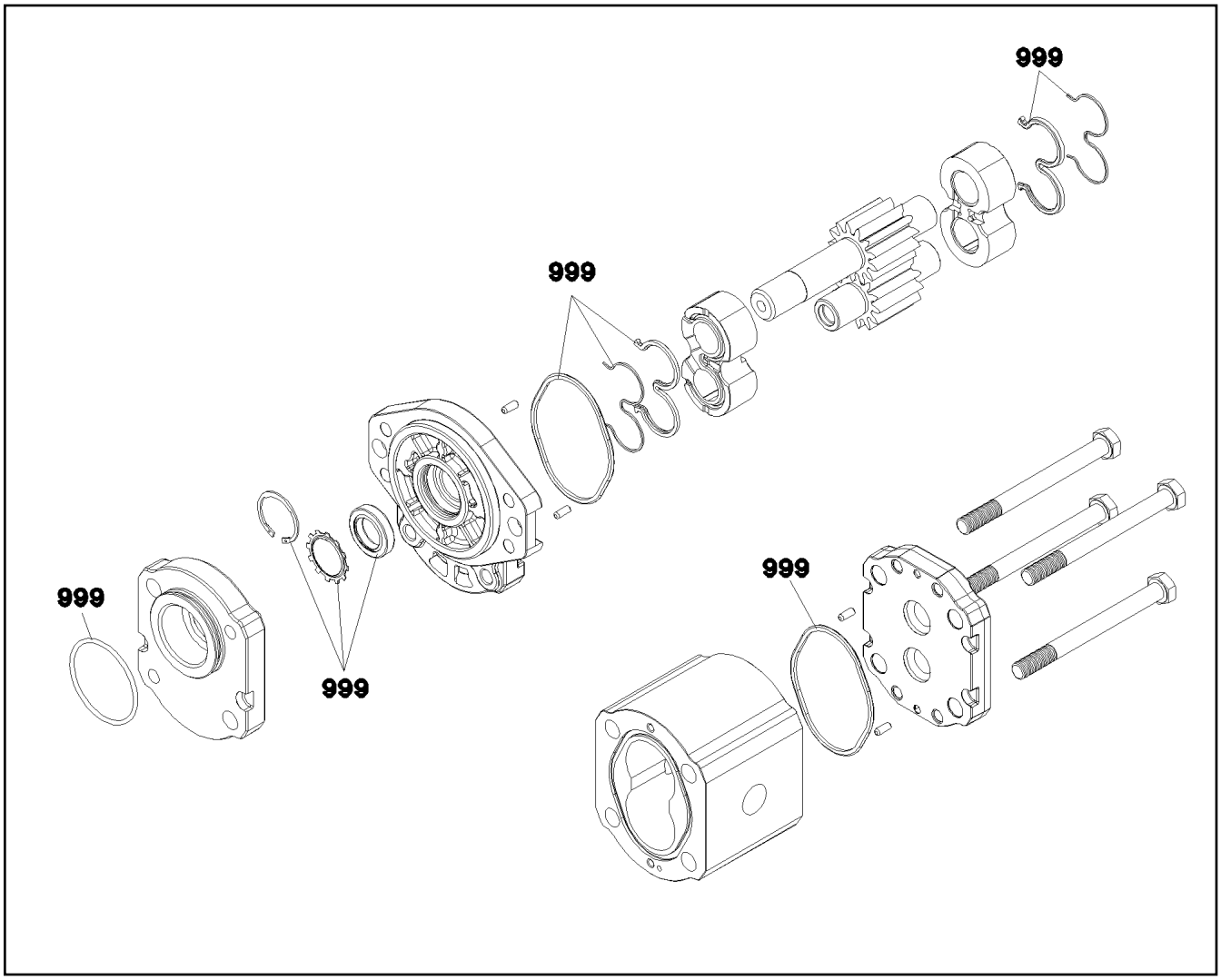

Pos.	Item	Quantity	Description	Bezeichnung
999	10492710	1	SEAL KIT GEAR PUMP	DS ZAHNRADPUMPE

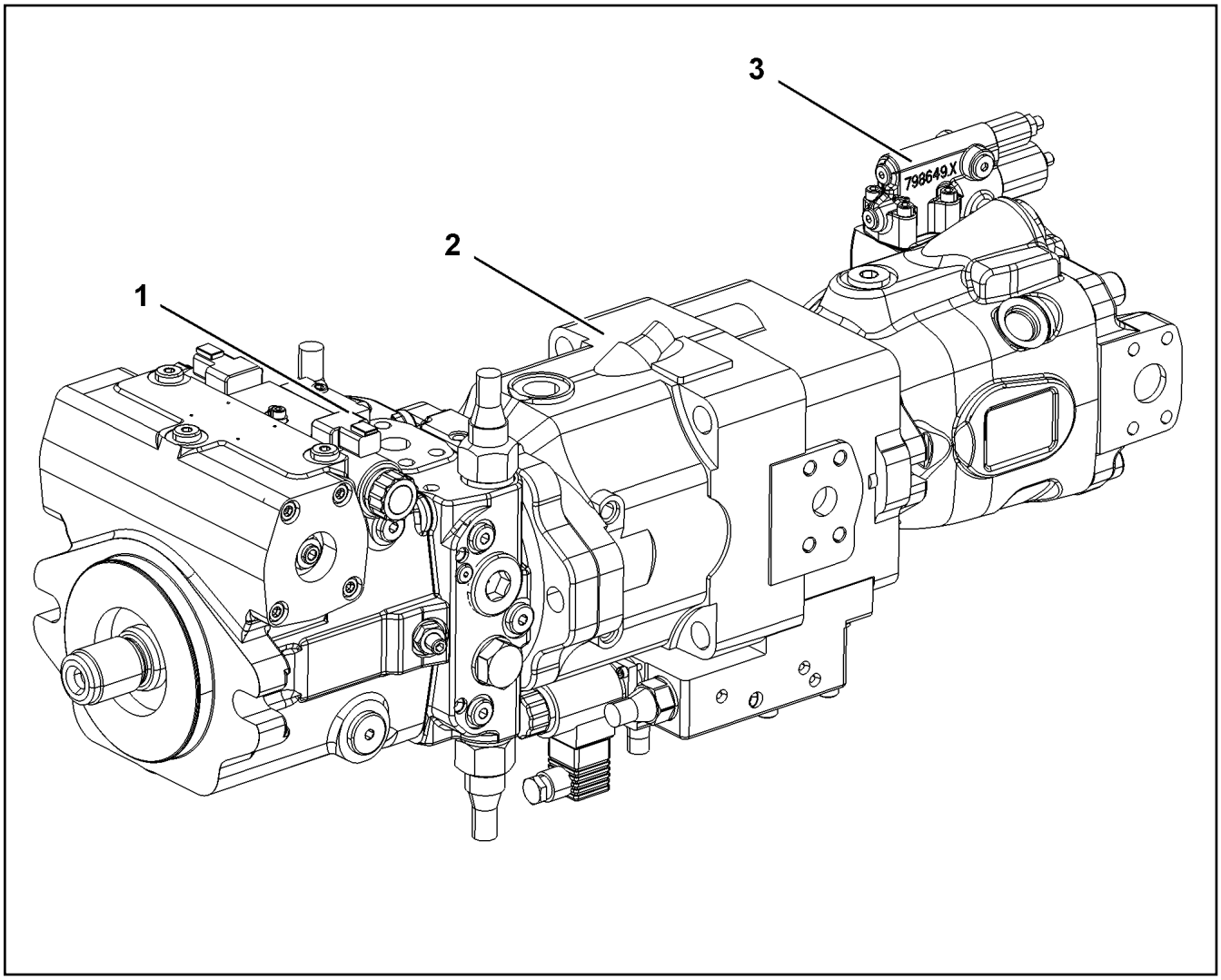

Pos.	Item	Quantity	Description	Bezeichnung
1	11210795	1	VARIABLE PUMP A4VG SPF ⇨ ❑ 293	VERSTELLPUMPE
2	11210798	1	VARIABLE PUMP A11V0 SPF ⇨ ❑ 295	VERSTELLPUMPE
3	10871043	1	VARIABLE PUMP A10VNO SPF ⇨ ❑ 302	VERSTELLPUMPE

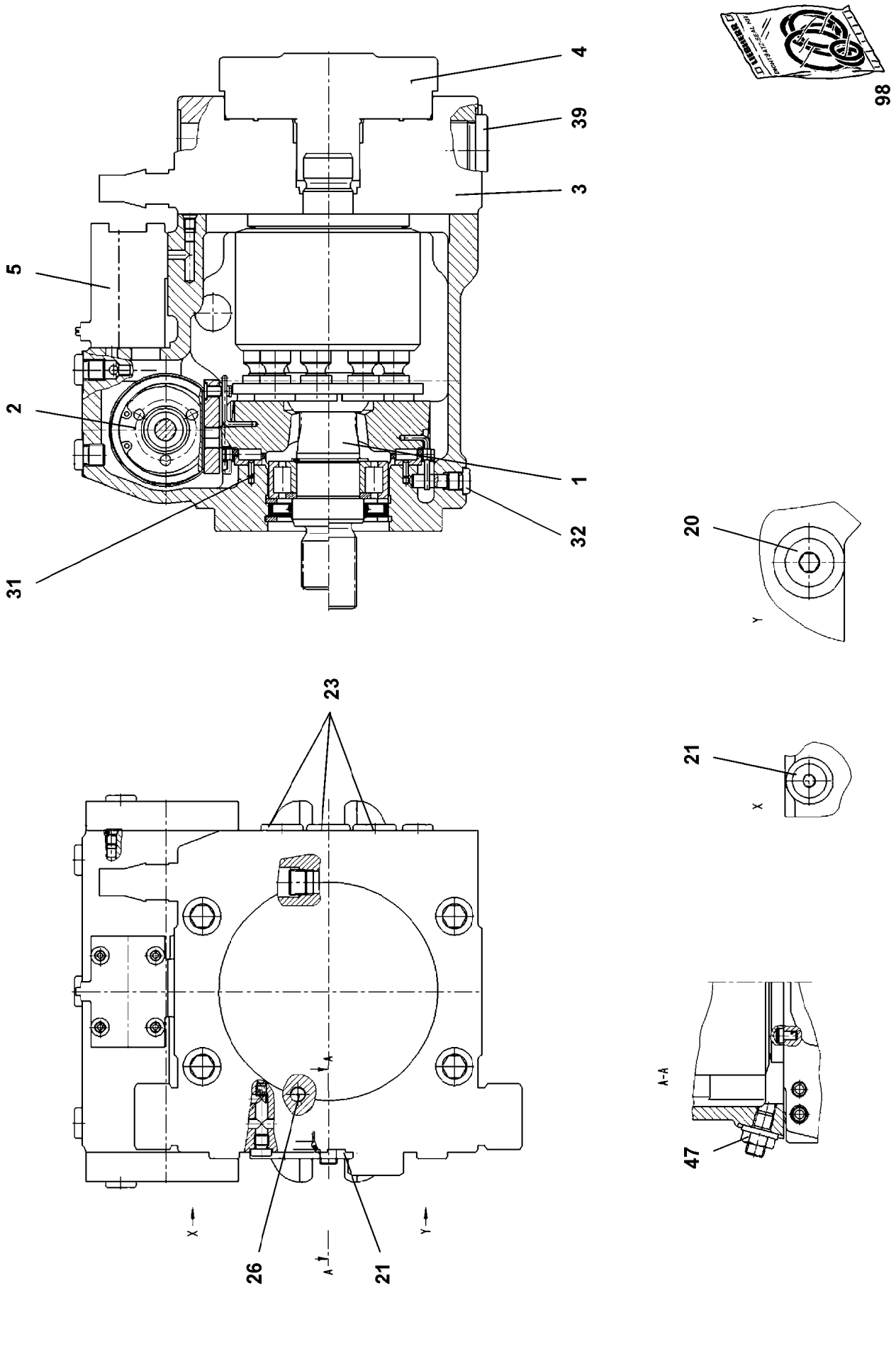
98
4
39
3
5
2
1
32
31
20
Y
23
21
X
A-A
47
26
21
X
Y
A
A

Pos.	Item	Quantity	Description	Bezeichnung
1	10871713	1	DRIVING GEAR	TRIEBWERK
(31)	571899308	1	CYLINDRICAL ROLLER BEARING	ZYLINDERROLLENLAGER
(98)	11494585	1	RADIAL PACKING SET DRIVE SHAFT	DS TRIEBWELLE
2	10326925	1	ADJUSTMENT	VERSTELLUNG
(98)	11494337	1	SEAL KIT	DICHTSATZ
3	10873570	1	CONNECTING PLATE	ANSCHLUSSPLATTE
(1)	571899408	1	PRESSURE LIMITING VALVE	DRUCKBEGRENZUNGSVENTIL
(3)	571899508	1	SHUTDOWN VALVE	ABSCHALTVENTIL
(11)	7022127	1	DOUBLE PLUG	DOPPELABREISSSTOPFEN
(13)	7012971	2	DOUBLE PLUG	DOPPELABREISSSTOPFEN
(14)	7027497	4	SCREW PLUG M8X1	VERSCHLUSSSCHRAUBE
(35)	7372624	1	SCREW PLUG M12X1,5	VERSCHLUSSSCHRAUBE
4	10873571	1	PUMP SUPPORT	PUMPENTRAEGER
5	10471384	1	CONTROL UNIT	ANSTEUERGERAET
(2)	10471437	2	PROPORTIONAL MAGNET 24V	PROPORTIONALMAGNET
(98)	10471439	1	SEALING SET CONTROL UNITS	DS ANSTEUERGERAET
20	10000515	1	SCREW PLUG M22X1,5	VERSCHLUSSSCHRAUBE
21	10100429	2	SCREW PLUG M14X1,5	VERSCHLUSSSCHRAUBE
23	10220419	3	SCREW PLUG M18X1,5	VERSCHLUSSSCHRAUBE
26	514584908	1	SCREW PLUG DIN 906 M8X1 5.8	VERSCHLUSSSCHRAUBE
31	10410651	1	DOWEL PIN 3X10	SPANNSTIFT
32	7372626	1	SCREW PLUG M10X1	VERSCHLUSSSCHRAUBE
39	10289931	1	SCREW PLUG M33X2,00	VERSCHLUSSSCHRAUBE
47	7014529	1	SEAL-LOCK-SHOULDER NUT M10X1	SEAL-LOCK-BUNDMUTTER
98	10488696	1	SEAL KIT REGULATING VALVE	DS VERSTELLPUMPE

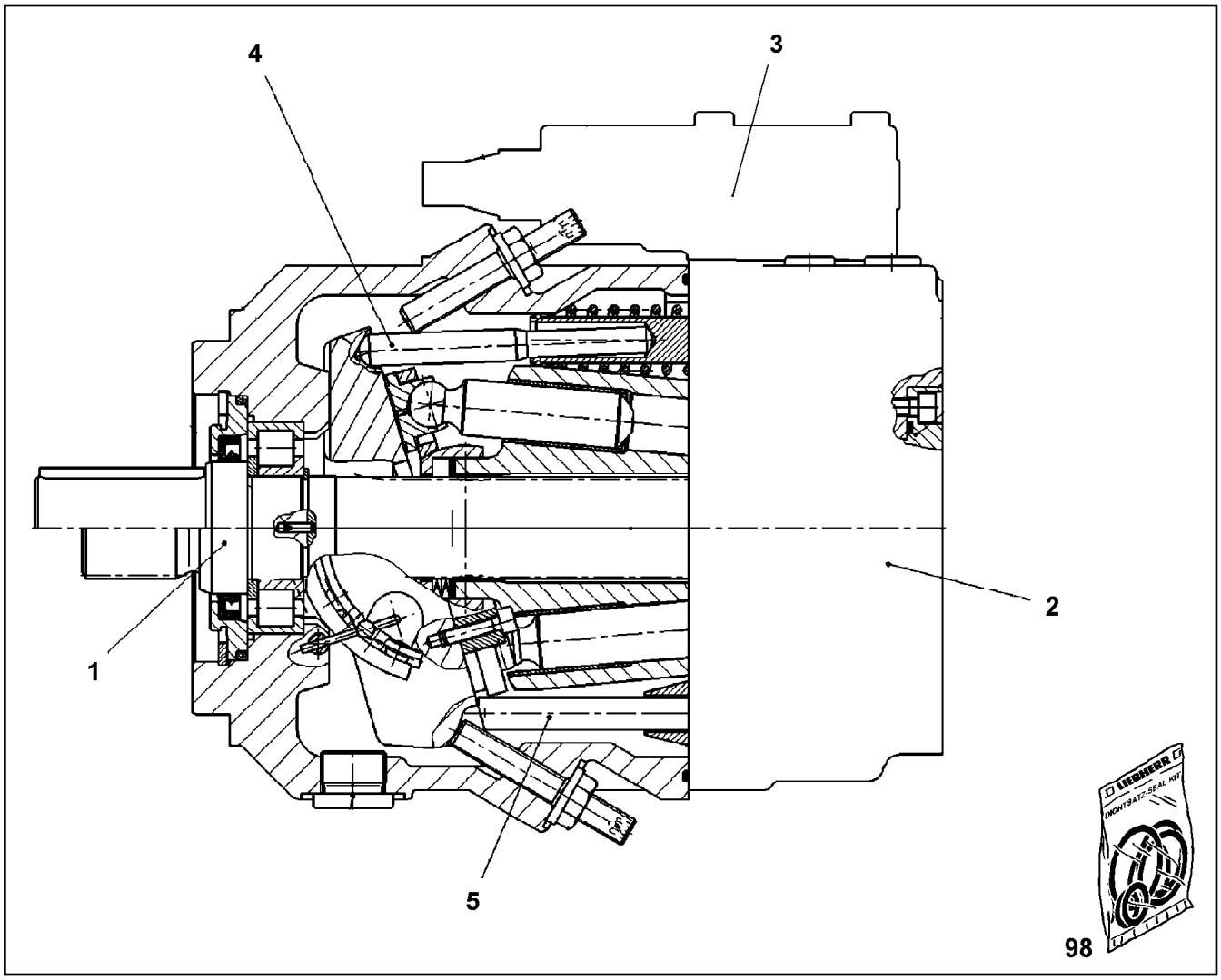

Pos.	Item	Quantity	Description	Bezeichnung
1	10663105	1	DRIVING GEAR ⇨ ❑ 296	TRIEBWERK
2	10008308	1	CONNECTING PLATE ⇨ ❑ 297	ANSCHLUSSPLATTE
3	10472196	1	REGULATOR ⇨ ❑ 298	REGLER
4	10472208	1	ADJUSTMENT ⇨ ❑ 301	VERSTELLUNG
5	7023643	1	REGULATION HYDRAULIC	VERSTELLUNG HYDRAULISCH
98	10663107	1	SEAL KIT REGULATING VALVE	DS VERSTELLPUMPE

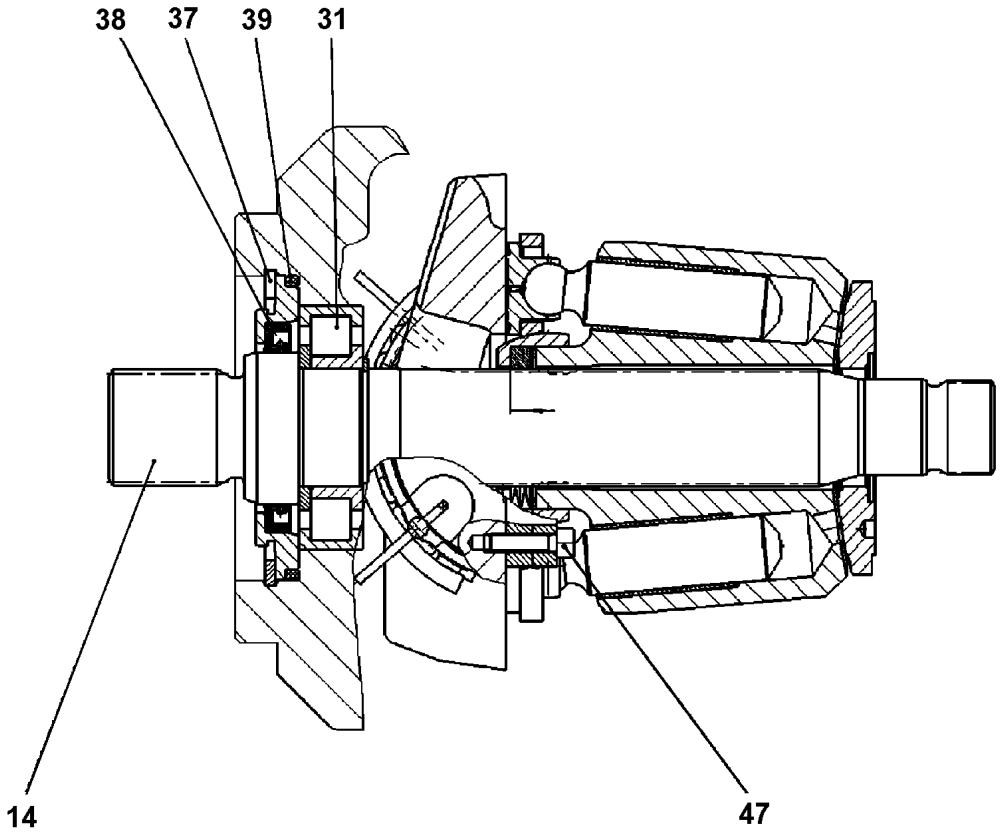

Pos. 999

Pos.	Item	Quantity	Description	Bezeichnung
14	10663120	1	DRIVE SHAFT	TRIEBWELLE
31	7367374	1	CYLINDRICAL ROLLER BEARING	ZYLINDERROLLENLAGER
36	428002908	1	LOCKING RING DIN 471 35X1,5	SICHERUNGSRING
37	12100657	1	LOCKING RING DIN 472 90X3 480H SPF	SICHERUNGSRING
38	7021600	1	SHAFT SEAL BAFSL 45X62X7 FPM	WELLENDICHTRING
39	518623608	1	O-RING ARP 568 82,14X3,53 NBR70	O-RING
47	10875583	4	SOCKET HEAD SCREW ISO 4762 M5X20 8.8	ZYLINDERSCHRAUBE
999	10424726	1	SEAL KIT	DICHTSATZ

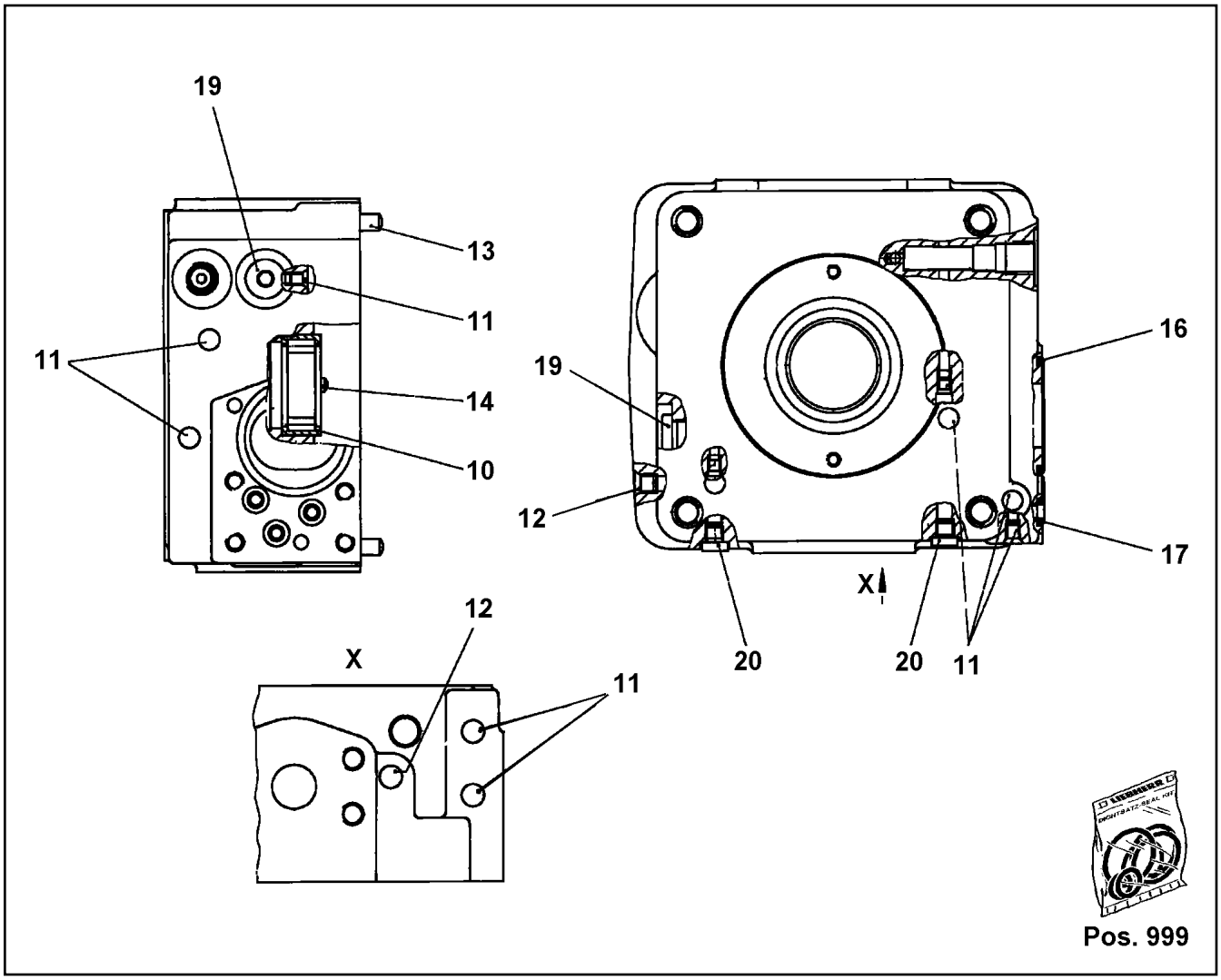

Pos.	Item	Quantity	Description	Bezeichnung
10	7023703	1	CYLINDRICAL ROLLER BEARING	ZYLINDERROLLENLAGER
11	7022127	4	DOUBLE PLUG	DOPPELABREISSSTOPFEN
12	514539308	1	PLUG M8	ABREISSSTOPFEN
13	430704808	2	PARALLEL PIN DIN 6325 8M6X20	ZYLINDERSTIFT
14	514588908	1	PARALLEL PIN ISO 8734 5M6X12 ST	ZYLINDERSTIFT
16	514507808	1	O-RING ARP 568 45,69X2,62 NBR90	O-RING
17	10303270	3	EDGE SEALING RING	DICHTKANTENRING
19	477704308	2	STOP PLUG VSTI M12X1,5 A3P	STOPFEN
20	7027497	2	SCREW PLUG M8X1	VERSCHLUSSSCHRAUBE
999	10472219	1	GASKET KIT INT.FLANGE	DS ANSCHLUSSPLATTE

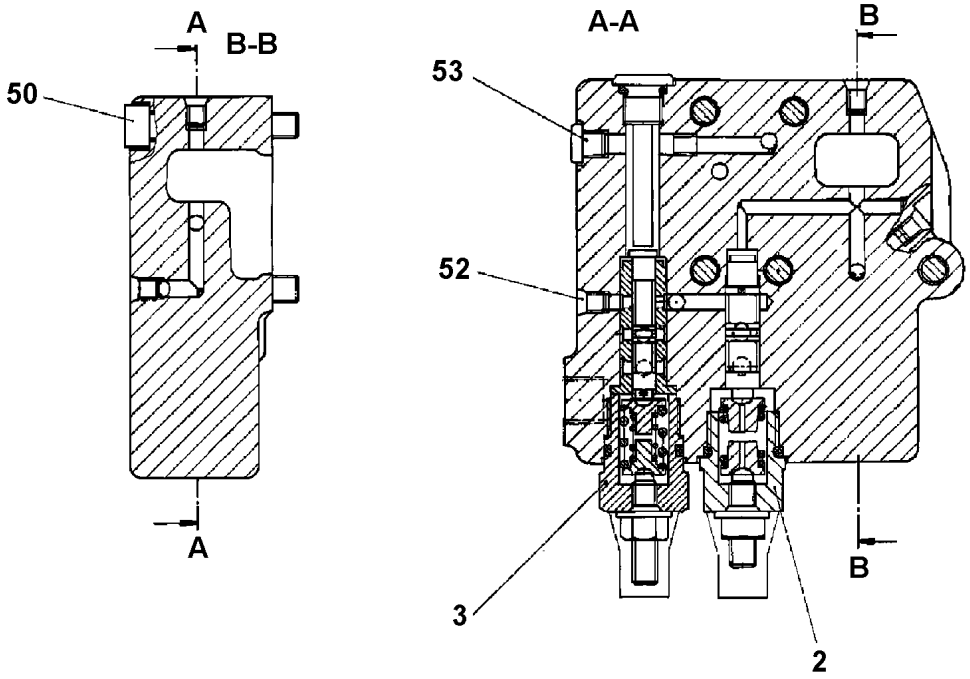

Pos. 999

Pos.	Item	Quantity	Description	Bezeichnung
2	571900808	1	REGULATOR ELEMENT ⇨ ❑ 299	REGLERELEMENT
3	10472202	1	REGULATOR ELEMENT ⇨ ❑ 300	REGLERELEMENT
50	12206699	5	SOCKET HEAD SCREW ISO 4762 M8X45 8.8	ZYLINDERSCHRAUBE
52	7022127	7	DOUBLE PLUG	DOPPELABREISSSTOPFEN
53	7027497	1	SCREW PLUG M8X1	VERSCHLUSSSCHRAUBE
999	10440976	1	SEAL KIT F.REGULATOR	DS REGLER

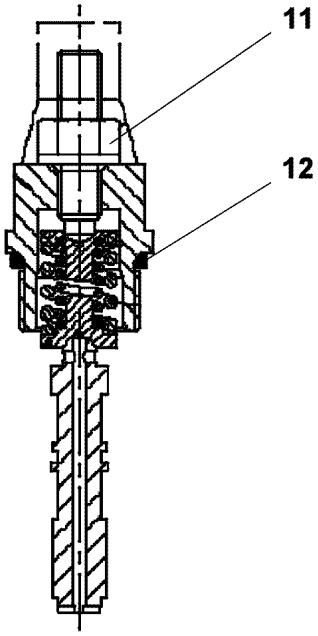

Pos.	Item	Quantity	Description	Bezeichnung
11	7005071	1	SEAL-LOCK-SHOULDER NUT M8	SEAL-LOCK-BUNDMUTTER
12	510738308	1	O-RING ARP 568 18,72X2,62 NBR90	O-RING

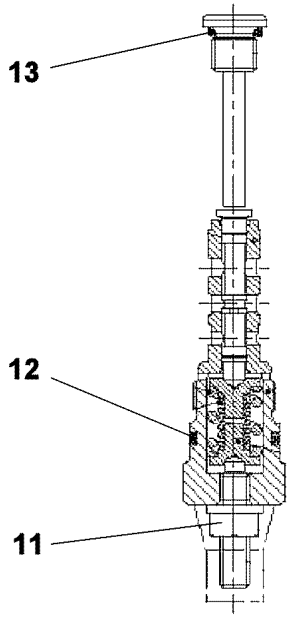

Pos.	Item	Quantity	Description	Bezeichnung
11	7005071	1	SEAL-LOCK-SHOULDER NUT M8	SEAL-LOCK-BUNDMUTTER
12	510738308	1	O-RING ARP 568 18,72X2,62 NBR90	O-RING
13	514589108	1	O-RING ARP 568 9,19X2,62 NBR90	O-RING

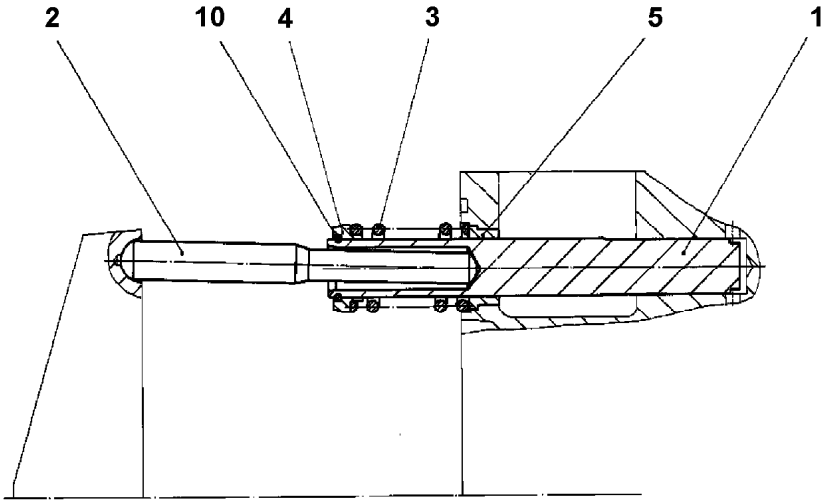

Pos.	Item	Quantity	Description	Bezeichnung
1	10000796	1	SPOOL	STEUERKOLBEN
2	7023664	1	SETTING ROD	STELLSTANGE
3	7023659	1	PRESSURE SPRING	DRUCKFEDER
4	7023666	1	SPRING SUPPORT	FEDERTELLER
5	10000794	1	BUSHING	BUCHSE
10	11643655	1	SNAP RING DIN 7993 16X1,6	SPRENGRING

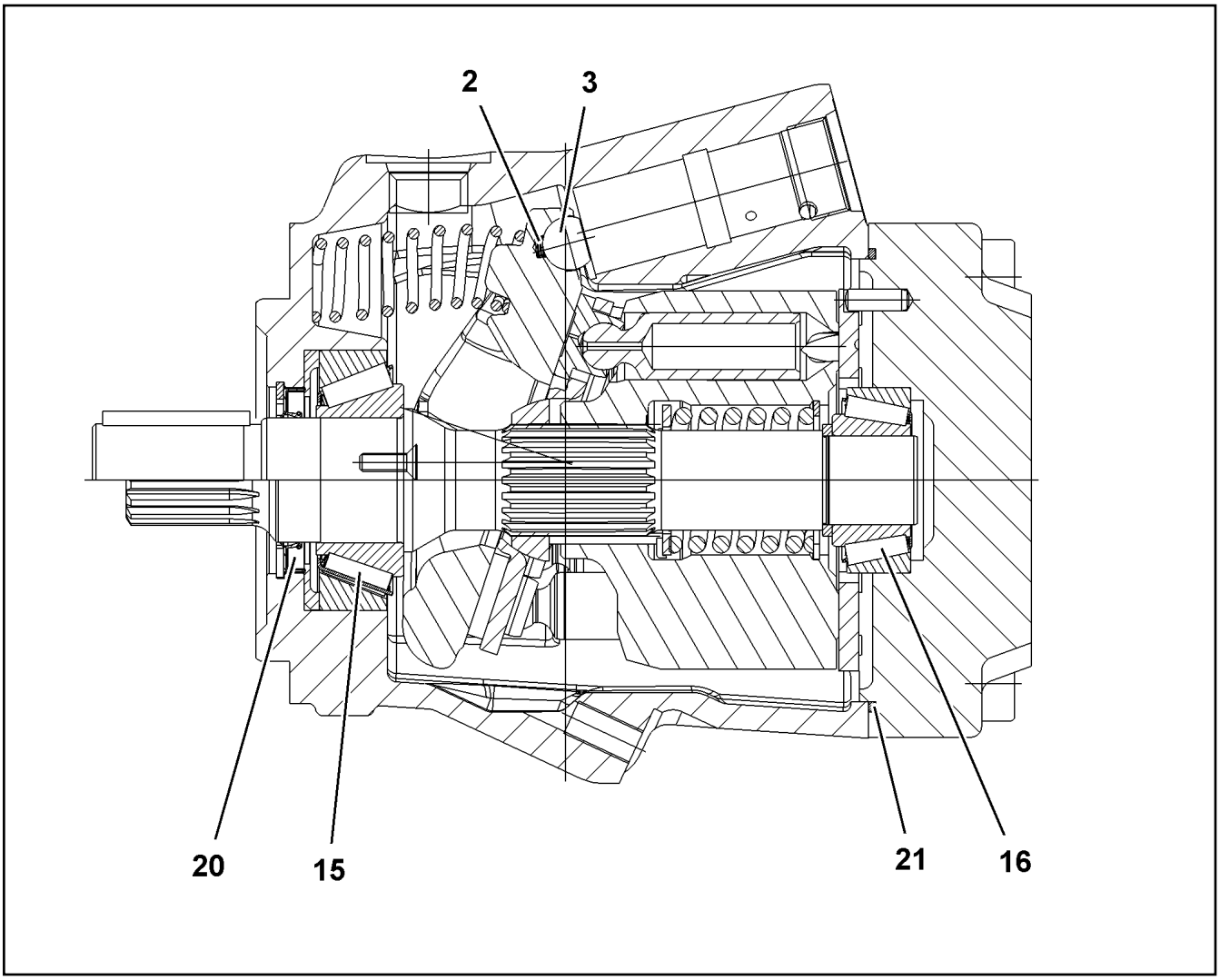

Pos.	Item	Quantity	Description	Bezeichnung
2	11340583	1	PRESSURE SPRING 0,6X5,1X4	DRUCKFEDER
3	11485426	1	LIMIT STOP	ANSCHLAG
15	570951508	1	TAPERED ROLLER BEARING	KEGELROLLENLAGER
16	10001107	1	TAPERED ROLLER BEARING	KEGELROLLENLAGER
20	7022315	1	SHAFT SEAL 35X52X6/5 FKM	WELLENDICHTRING
21	10001111	1	O-RING	O-RING
50	11692439	1	CONTROL VALVE ⇨ ❑ 303	STEUERVENTIL

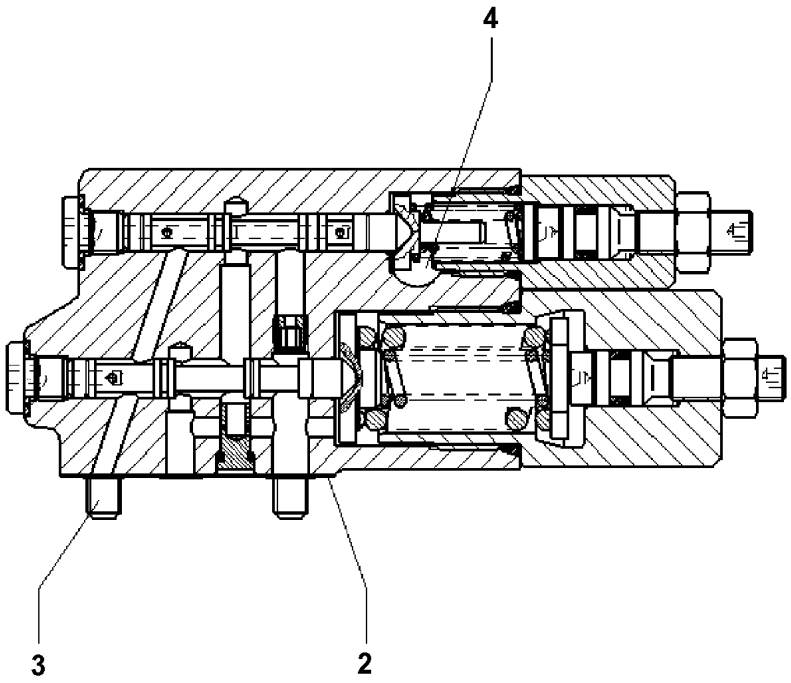

Pos.	Item	Quantity	Description	Bezeichnung
2	10297876	1	SEAL	DICHTUNG
3	4901159	4	SOCKET HEAD SCREW ISO 4762 M6X30 10.	ZYLINDERSCHRAUBE
4	10324900	1	SCREW PLUG	VERSCHLUSSSCHRAUBE

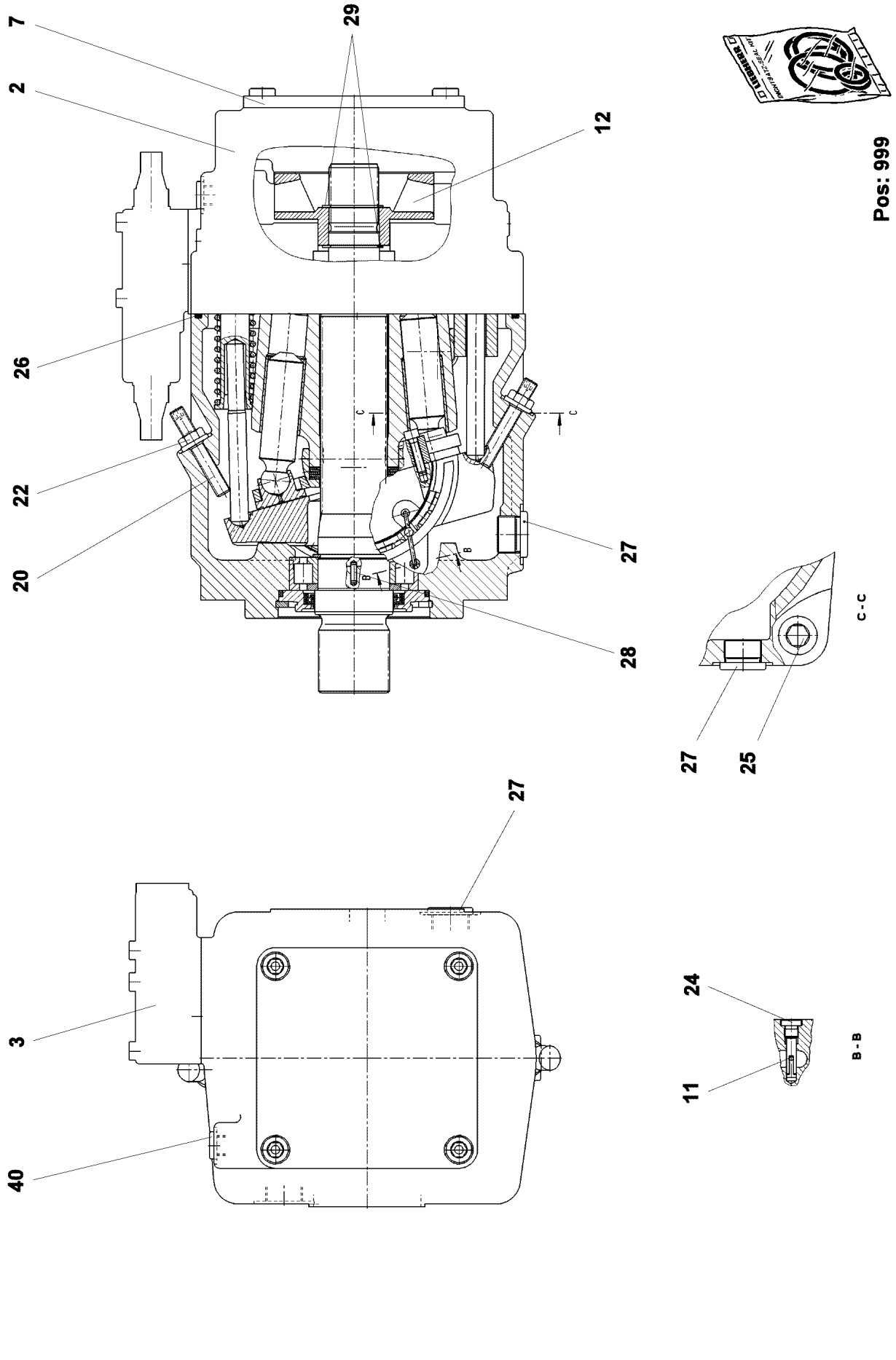
7
2
29
12
26
22
20
27
28
C - C
27
25
27
3
40
24
11
B - B
Pos: 999

Pos.	Item	Quantity	Description	Bezeichnung
1	10872488	1	DRIVING GEAR ⇨ ❑ 306	TRIEBWERK
2	571907208	1	CONNECTING PLATE ⇨ ❑ 308	ANSCHLUSSPLATTE
3	10292801	1	REGULATOR ⇨ ❑ 310	REGLER
7	10663059	1	COVER	DECKEL
(3)	12691559	4	SOCKET HEAD SCREW DIN 7984 M12X30 08	ZYLINDERSCHRAUBE
(5)	571233308	1	O-RING ARP 568 107,62X2,62 NBR90	O-RING
11	10475198	4	PIVOT PIN	GELENKSTIFT
12	10342478	1	TRAVEL WHEEL	LAUFRAD
20	7623427	2	GRUB SCREW DIN 913 M10X68	GEWINDESTIFT
22	7361602	2	COLLAR NUT M10X1,5	BUNDMUTTER
24	7372626	4	SCREW PLUG M10X1	VERSCHLUSSSCHRAUBE
25	404319708	4	SOCKET HEAD SCREW DIN 912 M18X75 10.	ZYLINDERSCHRAUBE
26	10342479	1	O-RING 209,14X3,53 NBR70	O-RING
27	560208508	2	SCREW PLUG M26X1,5	VERSCHLUSSSCHRAUBE
28	10410651	2	DOWEL PIN 3X10	SPANNSTIFT
29	10171579	2	LOCKING RING DIN 471 35X1,5 FLZNNC-120	SICHERUNGSRING
40	11691104	1	SHUTTLE VALVE	WECHSELVENTIL
(5)	7373052	1	PROFILE SEALING	PROFILDICHTUNG
999	10342480	1	SEAL KIT	DICHTSATZ

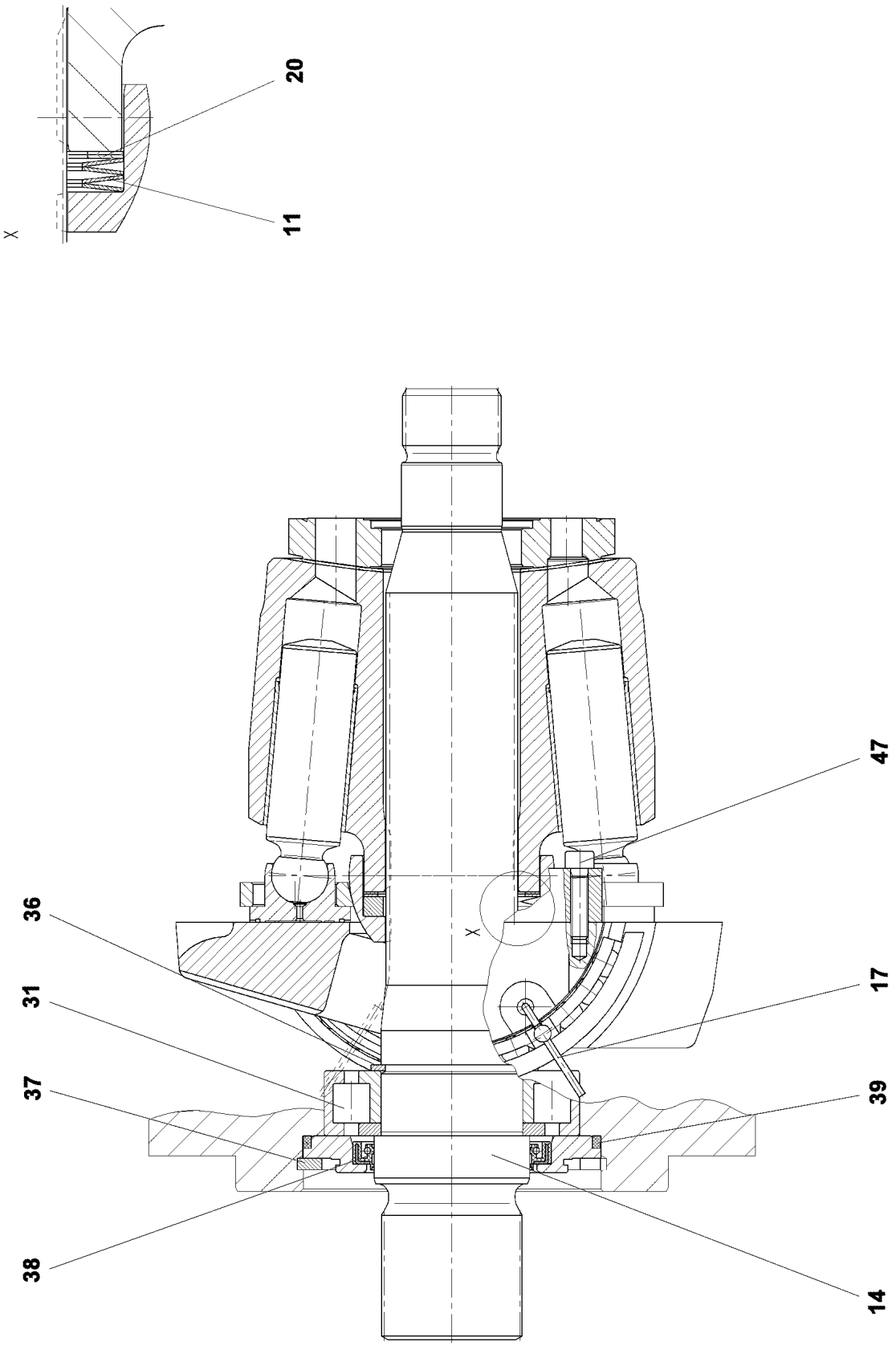
20
11
X
47
36
31
37
38
17
39
14
X

Pos.	Item	Quantity	Description	Bezeichnung
11	570033608	1	CUP SPRING PILLAR	TELLERFEDERSAEULE
14	571907508	1	DRIVE SHAFT	TRIEBWELLE
17	7624238	4	WIRE	DRAHT
20	7369933	1	SHIM RING	PASSSCHEIBE
31	571477908	1	CYLINDRICAL ROLLER BEARING 50X90X23	ZYLINDERROLLENLAGER
36	10875659	1	LOCKING RING DIN 471 50X2 480H SPF	SICHERUNGSRING
37	10356273	1	LOCKING RING	SICHERUNGSRING
38	571907608	1	SHAFT SEAL 55X70X7 FPM	WELLENDICHTRING
39	514613208	1	O-RING ARP 568 98,02X3,53 NBR70	O-RING
47	10875588	4	SOCKET HEAD SCREW ISO 4762 M6X25 8.8	ZYLINDERSCHRAUBE

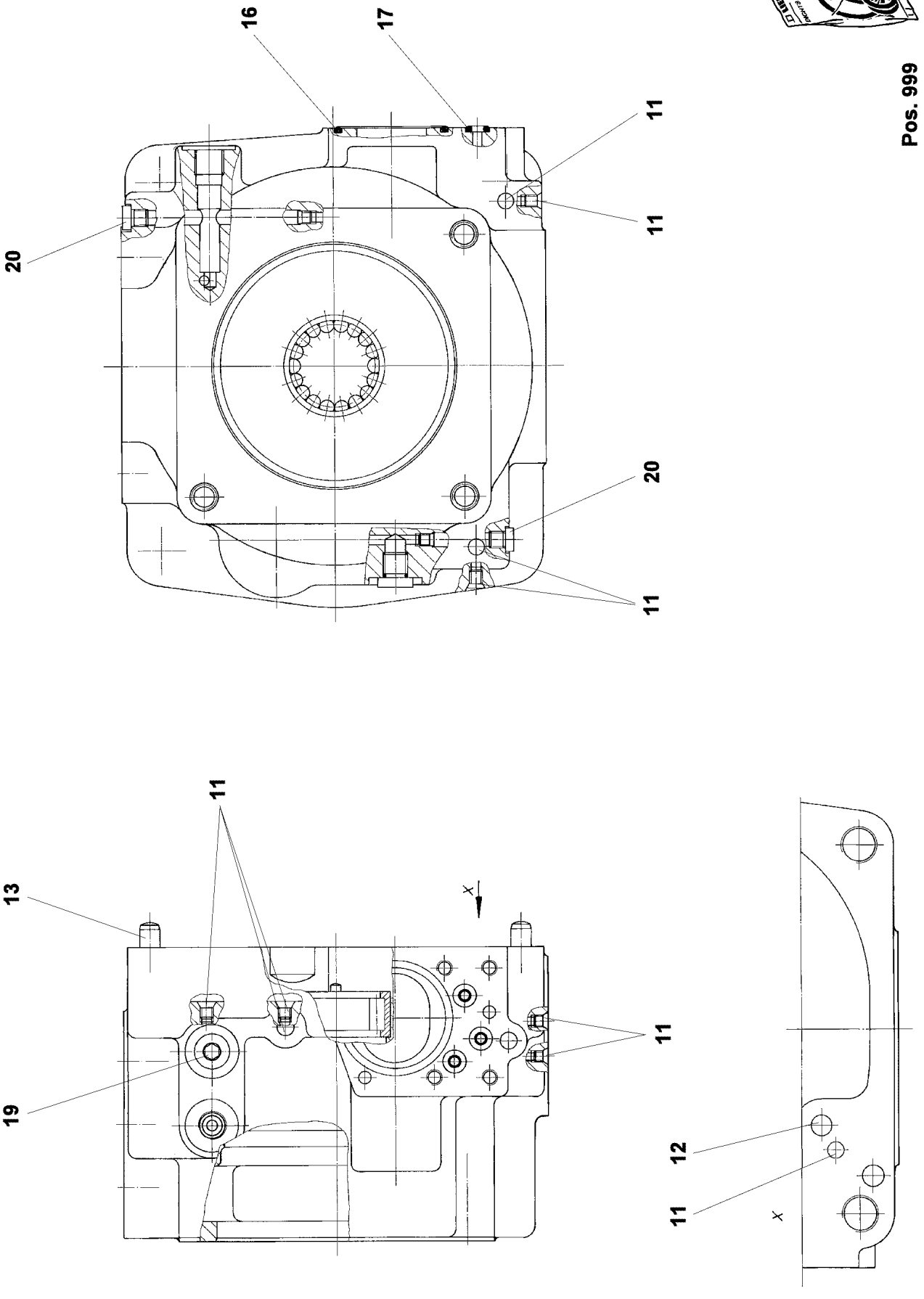

Pos. 999

4.12.2020 099150	**etk_en_de 047580 LTR 1220**	308 (1/2)
LIEBHERR	**CONNECTING PLATE** **ANSCHLUSSPLATTE**	**571907208**

Pos.	Item	Quantity	Description	Bezeichnung
11	7022127	6	DOUBLE PLUG	DOPPELABREISSSTOPFEN
12	7012971	1	DOUBLE PLUG	DOPPELABREISSSTOPFEN
13	430706808	2	PARALLEL PIN DIN 6325 10M6X24	ZYLINDERSTIFT
16	570054708	1	O-RING ARP 568 50,47X2,62 NBR90	O-RING
17	10303270	3	EDGE SEALING RING	DICHTKANTENRING
19	11626246	2	SCREW PLUG DIN 908 M12X1,5 ST FLZN SP	VERSCHLUSSSCHRAUBE
20	7027497	2	SCREW PLUG M8X1	VERSCHLUSSSCHRAUBE
999	10872487	1	GASKET KIT INT.FLANGE	DS ANSCHLUSSPLATTE

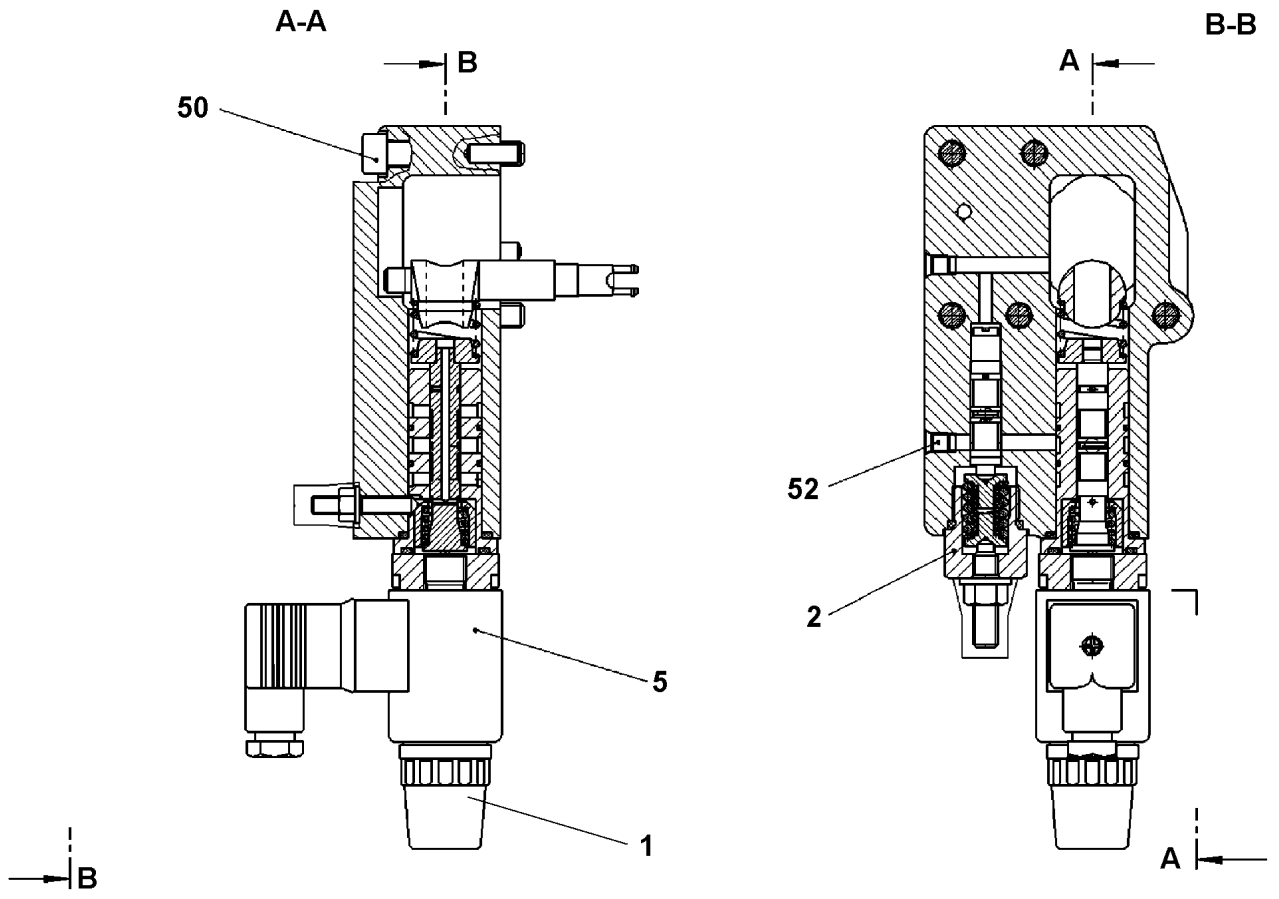

Pos.	Item	Quantity	Description	Bezeichnung
1	10663825	1	RETAINING NUT	BEFESTIGUNGSMUTTER
2	571900808	1	REGULATOR ELEMENT ⇨ ❑ 299	REGLERELEMENT
5	10292815	1	REGULATOR ELEMENT ⇨ ❑ 311	REGLERELEMENT
50	12206699	5	SOCKET HEAD SCREW ISO 4762 M8X45 8.8	ZYLINDERSCHRAUBE
52	7022127	5	DOUBLE PLUG	DOPPELABREISSSTOPFEN
999	10663065	1	SEAL KIT F.REGULATOR	DS REGLER

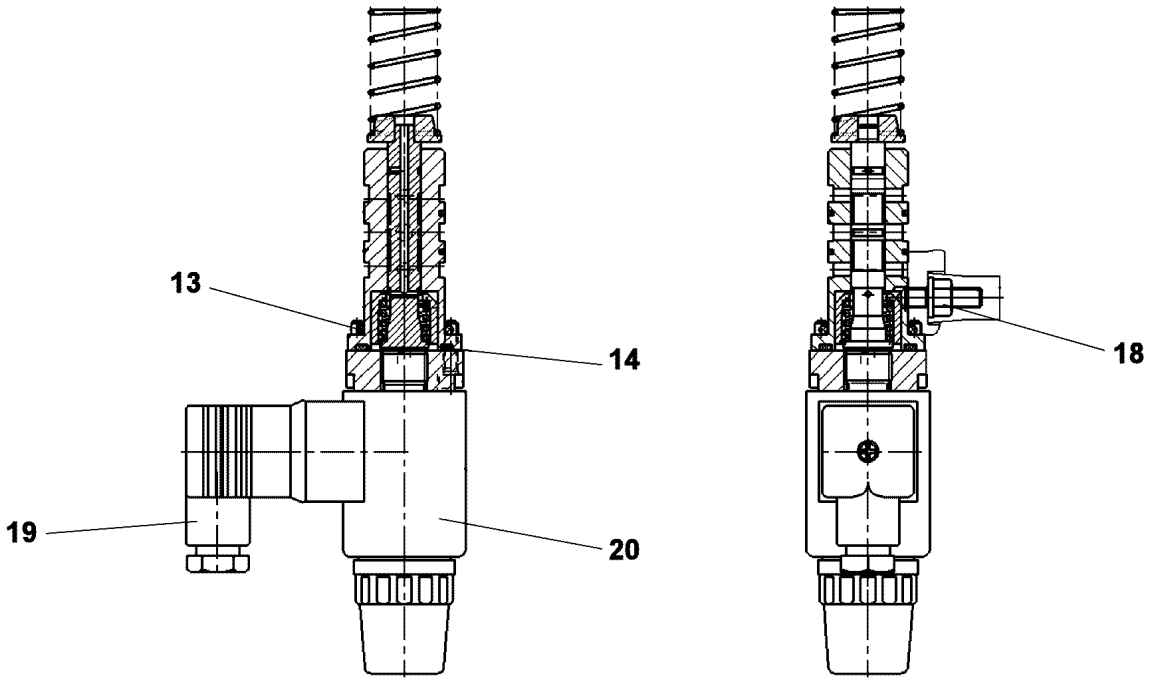

Pos.	Item	Quantity	Description	Bezeichnung
13	571058608	1	O-RING ARP 568 25,07X2,62 NBR90	O-RING
14	510776608	1	O-RING ARP 568 23,47X2,62 NBR90	O-RING
18	7361600	1	GROMMET NUT M6	DICHTUNGSMUTTER
19	11450030	1	DIE PLUG	LEITUNGSDOSE
20	571911708	1	PROPORTIONAL MAGNET 24V	PROPORTIONALMAGNET
(1)	10663825	2	RETAINING NUT	BEFESTIGUNGSMUTTER

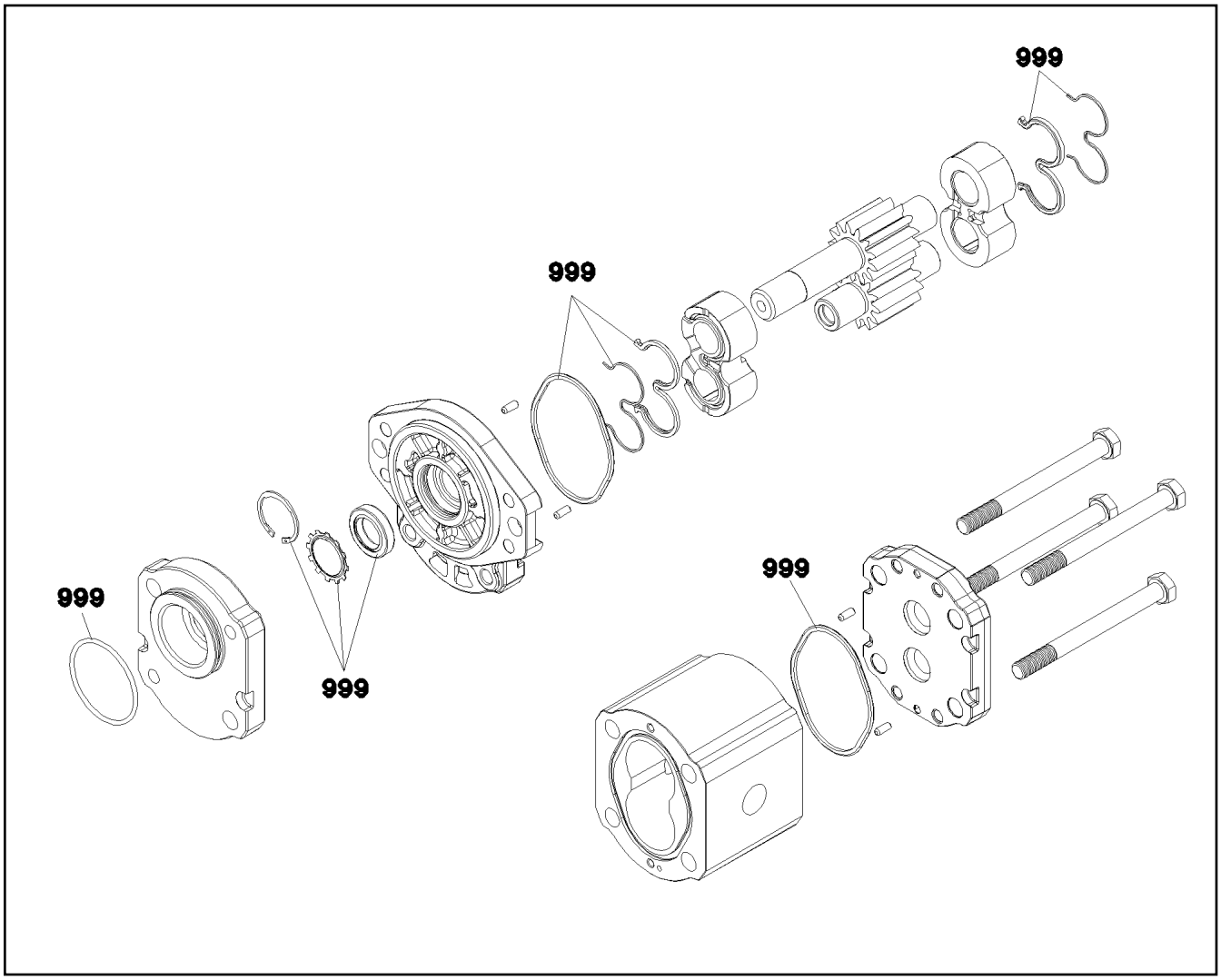

Pos.	Item	Quantity	Description	Bezeichnung
999	10492710	1	SEAL KIT GEAR PUMP	DS ZAHNRADPUMPE

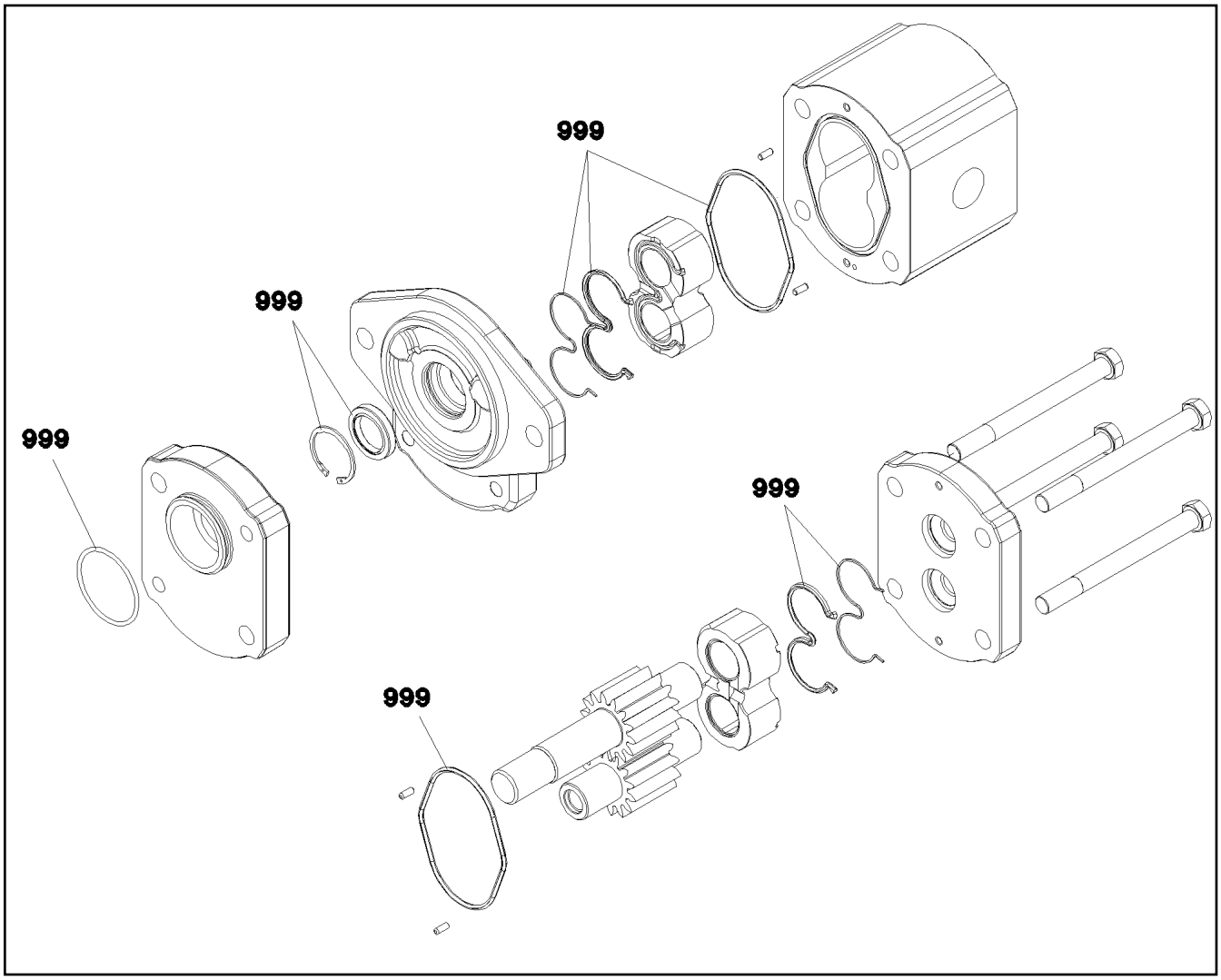

Pos.	Item	Quantity	Description	Bezeichnung
999	11494341	1	SEAL KIT GEAR PUMP	DS ZAHNRADPUMPE

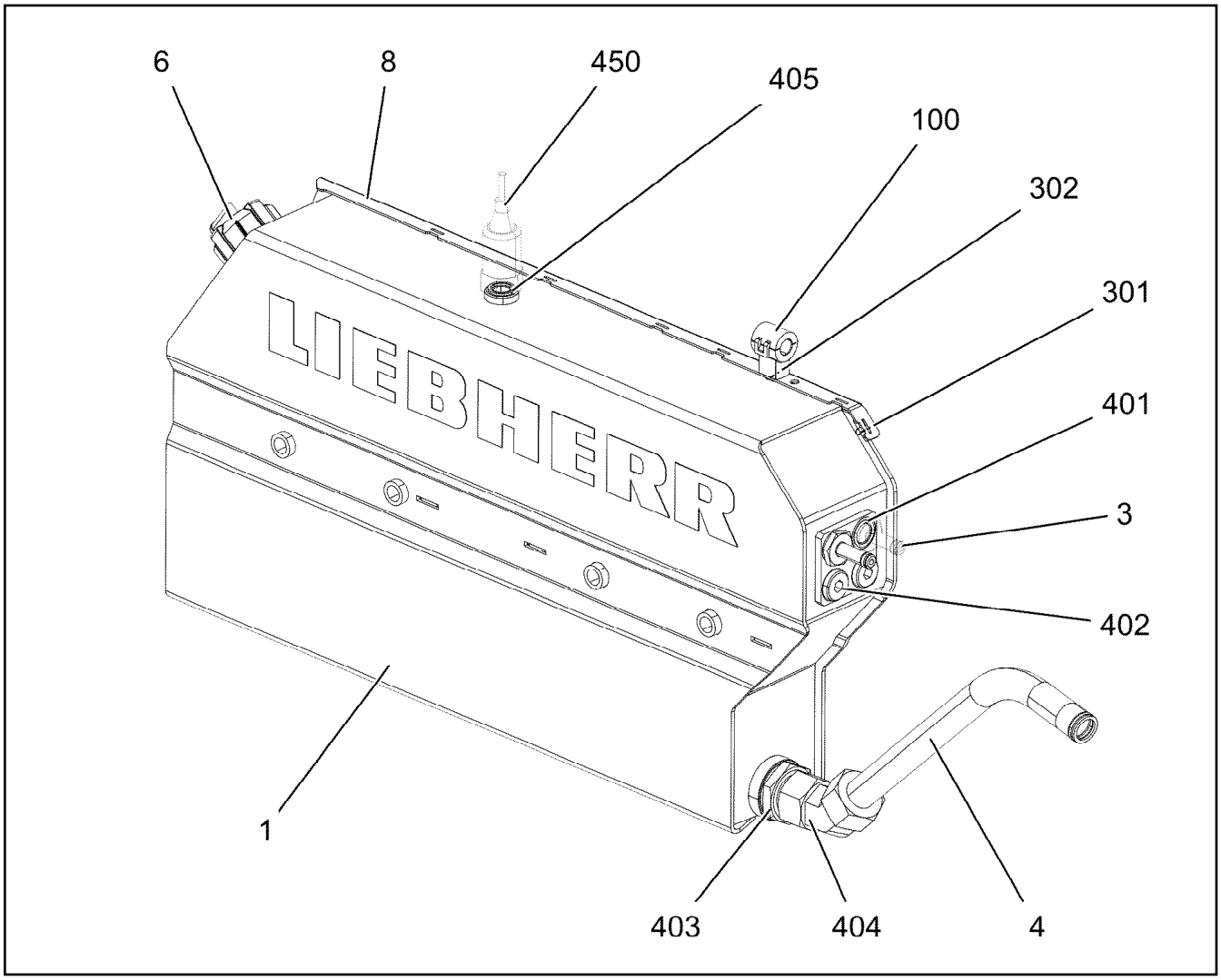

Pos.	Item	Quantity	Description	Bezeichnung
1	96035326	1	EXPANSION TANK WELDED ALMG3	AUSGLEICHSBEHAELTER SCH
3	96035597	2	CONNECTION PIECE	STUTZEN KPL.
4	969939408	1	PIPE COMPL.	ROHR KPL.
(1)	97064857	1	TUBE 22.0X319 X6CRNITI1810	ROHR
(2)	477102808	1	PROFILE RING PR22-L A3P	PROFILRING
(3)	477402608	1	BOX NUT DIN 3870 AL22 A3P	UEBERWURFMUTTER
6	12101064	1	VALVE COVER 45 PA6.6	VENTILDECKEL
8	97091350	1	PLATE 1.5X560X43 DC01 FE//ZNNI8//CN//T0	BLECH
100	6202909	1	CLAMP	KLAMMER
301	11160744	2	BUTTON HEAD SCREW AEHNL.ISO 7380-2	HALBRUNDKOPFSCHRAUBE
302	10875468	1	BUTTON HEAD SCREW AEHNL.ISO 7380-2	HALBRUNDKOPFSCHRAUBE
401	726407908	2	O-RING 16X2 NBR70	O-RING
402	477704408	2	STOP PLUG VSTIM16X1,5ED A3P	STOPFEN
403	10295188	1	FITTINGS ISO 8434-1 GE 22L M33X2 CR6-F	STUTZEN
404	10410771	1	FITTING EV 22L M30X2 CR6-FREI	VERSCHRAUBUNG
405	570116908	1	USIT RING U 14X19,5X1,5	USIT-RING
450	10335960	1	WATER LEVEL SENSOR L=50 5V CuZnN38	WASSERSTANDSSONDE

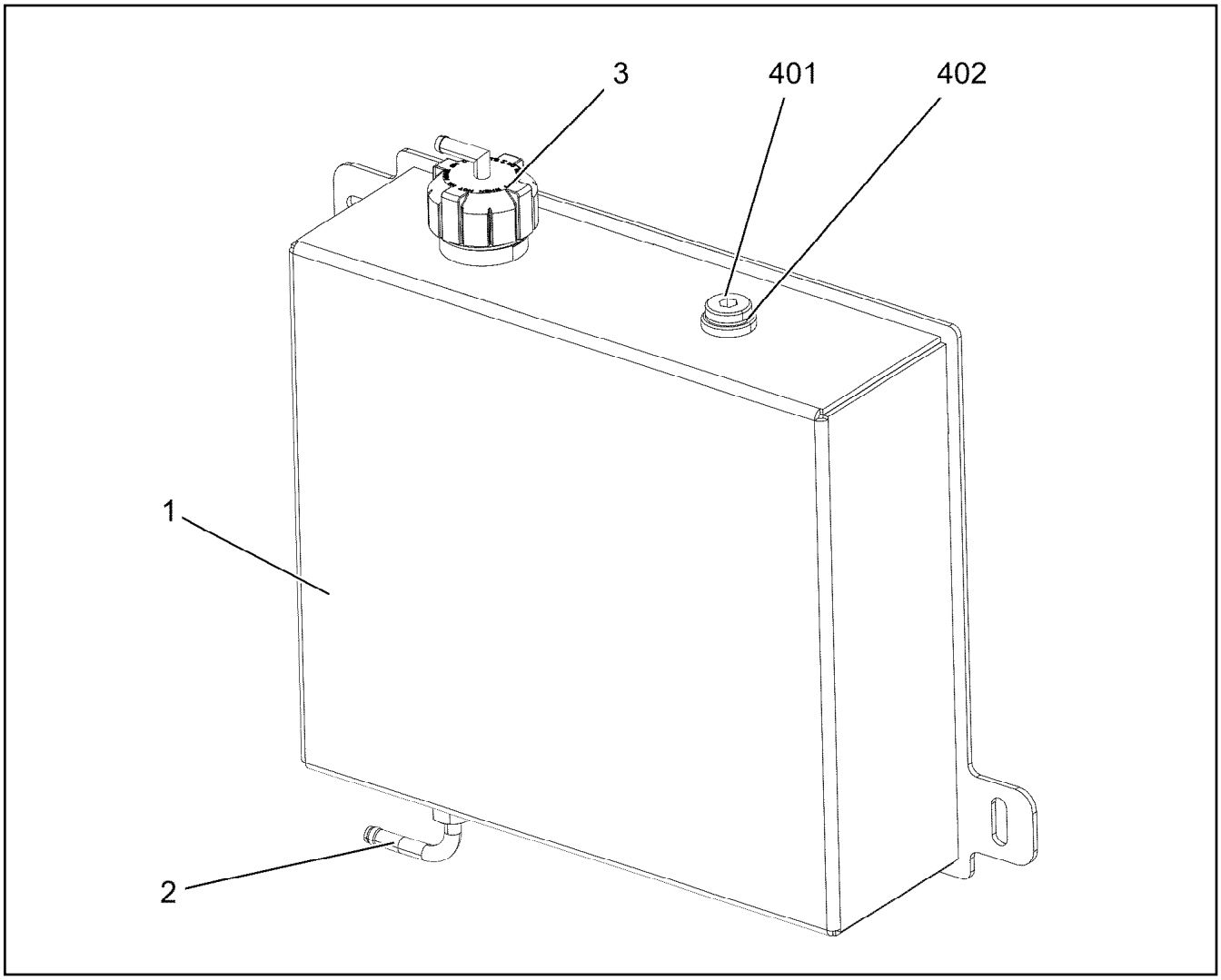

Pos.	Item	Quantity	Description	Bezeichnung
1	96035739	1	EXPANSION TANK WELDED	AUSGLEICHSBEHAELTER SCH
2	96039022	1	CONNECTION PIECE ⇨ ❑ 316	STUTZEN KPL.
3	12101064	1	VALVE COVER 45 PA6.6	VENTILDECKEL
401	477704408	1	STOP PLUG VSTIM16X1,5ED A3P	STOPFEN
402	710103708	1	SEALING RING DIN 7603 A16X22X1,5 CU	DICHTRING

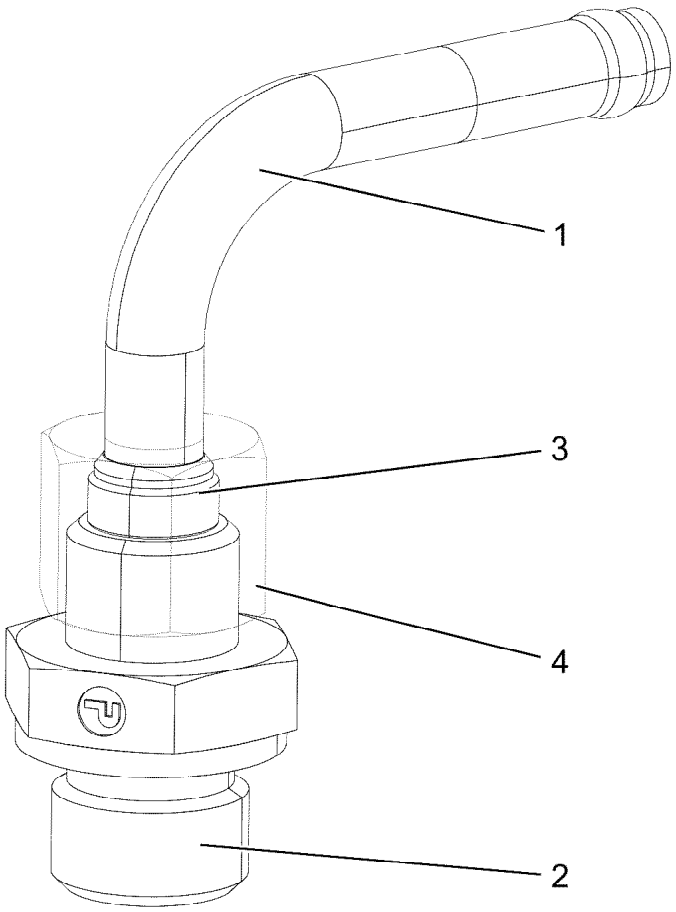

Pos.	Item	Quantity	Description	Bezeichnung
1	97124033	1	TUBE 8.0X80 X5CRNI18-10	ROHR
2	7618383	1	FITTING GE 8L M16X1,5 CR6-FREI	VERSCHRAUBUNG
3	477100208	1	PROFILE RING P-R8-L/S A2GS	PROFILRING
4	477401408	1	BOX NUT AL8 CR6-FREI	UEBERWURFMUTTER

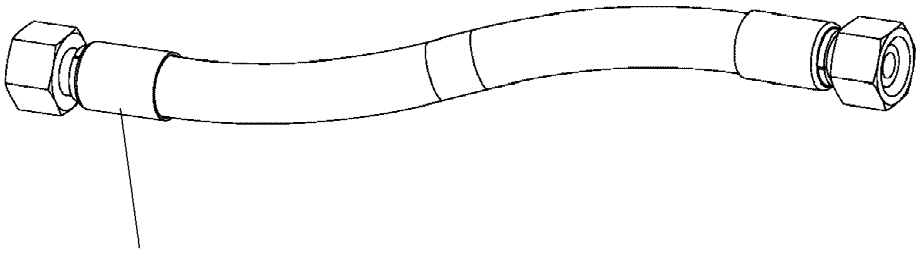

Schlauchnummer
Hose number
Numéro de flexible
Número de flexible
Номера шланга

Die Schlauchnummern auf den Schläuchen entsprechen den Positionen in der Schlauchliste.

The hose numbers from the hoses are in accordance with the items in the hose list.

Les numéros indiqués sur les flexibles correspondent aux repères de la nomenclature des flexibles.

Los números indicados en los flexibles corresponden a las posiciones de la lista de flexibles.

Нанесенные на шлангах номера соответствуют позициям в перечне.

Pos.	Item	Quantity	Description	Bezeichnung
2450	96031888	1	HOSE CPL. CONTI KWS 8X300	SCHLAUCH KPL.
2451	96034535	1	HOSE CPL. CONTI KWS 22X700	SCHLAUCH KPL.
2453	96034540	1	HOSE CPL. CONTI KWS 8X4400	SCHLAUCH KPL.
2455	96023967	1	HOSE CPL. CONTI KWS 10X1450	SCHLAUCH KPL.
2456	96014023	1	HOSE CPL. CONTI KWS 10X1360	SCHLAUCH KPL.
2457	96032358	1	HOSE CPL. CONTI KWS 10X1520	SCHLAUCH KPL.
2463	96014060	1	HOSE CPL. CONTI KWS 20X3000	SCHLAUCH KPL.
2466	96023301	1	HOSE CPL. CONTI KWS 20X2200	SCHLAUCH KPL.

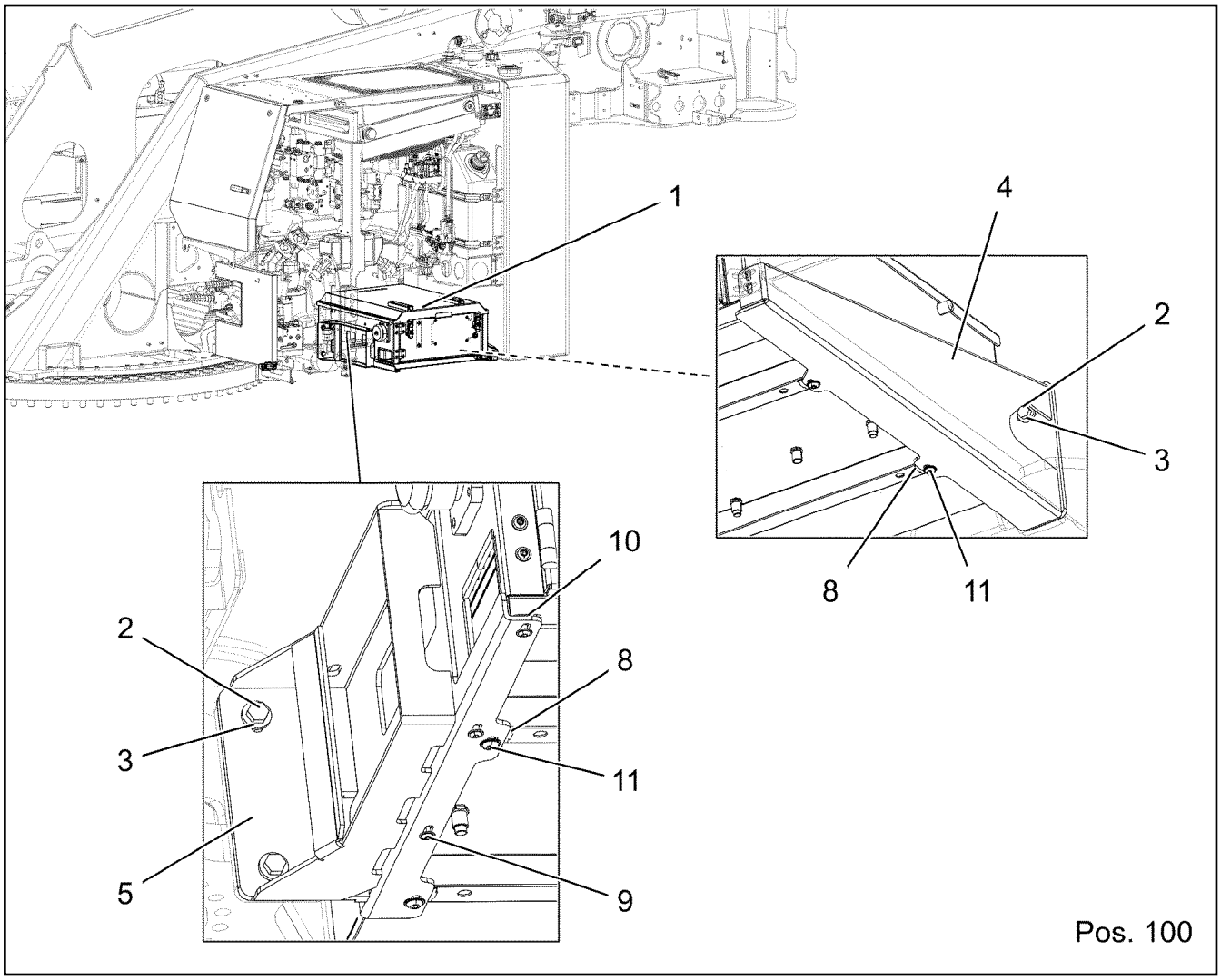

Pos.	Item	Quantity	Description	Bezeichnung
1	96023117	1	BATTERY BOX, PRE-ASSEMBLED ⇨ ❑ 319	BATTERIEKASTEN VORM.
2	11631816	6	HEX SCREW ISO 4017 M10X25 8.8 FLZN SP	SECHSKANTSCHRAUBE
3	11658580	6	WASHER DIN 7349 10,5 200HV-St FLZN SPF	SCHEIBE
4	96036998	1	BRACKET RIGHT FE//ZNNI8//CN//T0	KONSOLE RECHTS
5	96037000	1	BRACKET,LEFT WELDED FE//ZNNI8//CN//T0	KONSOLE SCHWK.LI.
8	12100332	4	SHEET METAL NUT M8 480H SPF	BLECHMUTTER
9	10874884	3	BUTTON HEAD SCREW ISO 7380-2 M6X12 0	HALBRUNDKOPFSCHRAUBE
10	97127026	1	PLATE 2X580X25 DC01	BLECH
11	408650608	4	BUTTON HEAD SCREW ISO 7380-2 M8X20 A	HALBRUNDKOPFSCHRAUBE
100	96023914	1	ELECTRIC FOR BATTERY BOX ⇨ ❑ 321	ELEKTRIK BATTERIEKASTEN

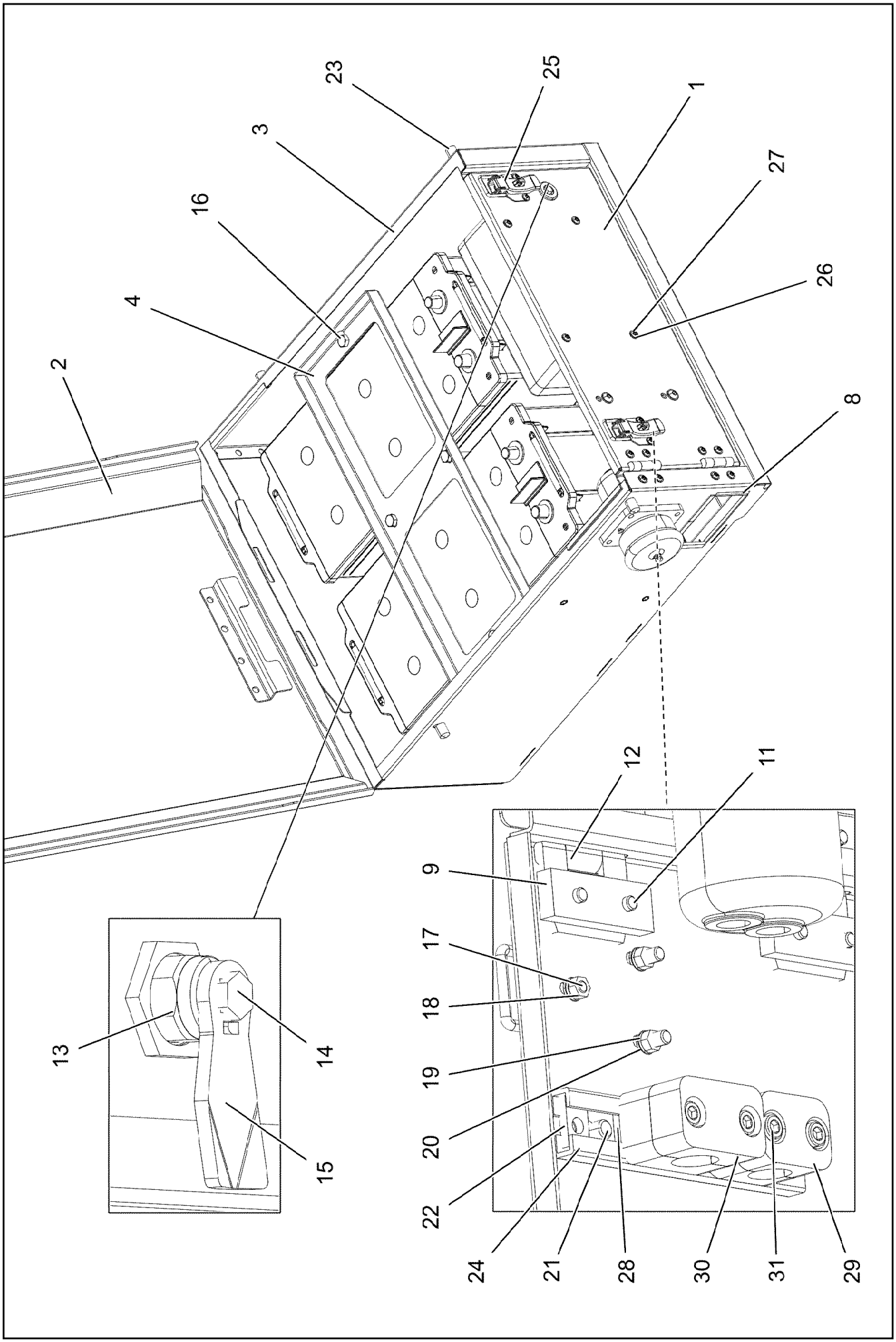

4.12.2020 098809	**etk_en_de 047580 LTR 1220**	❑ 319 (1/2)
LIEBHERR	**BATTERY BOX, PRE-ASSEMBLED** **BATTERIEKASTEN VORM.**	**96023117**

Pos.	Item	Quantity	Description	Bezeichnung
1	97100598	1	PLATE 2X550X297 DC01	BLECH
2	96028313	1	SHEET CPL. RAL 7037,SDGL,GT SPF	BLECH KPL.
3	96023028	1	BATTERY BOX ST.CONST. SPF	BATTERIEKASTEN SCHWK.
4	97100731	1	PLATE 2.5X235X575 DC01 FE//ZNNI8//CN//T	BLECH
8	262103908	1.6	EDGE PROTECTION 1-2X9,5X6,5	KANTENSCHUTZ
9	953695308	4	THREADED PLATE 8X20X60 S235JR FE//ZN	GEWINDEPLATTE
11	10875468	12	BUTTON HEAD SCREW AEHNL.ISO 7380-2	HALBRUNDKOPFSCHRAUBE
12	704228108	2	HINGE 35X35X50/180° ST FE//ZN12//B	SCHARNIER
13	704253308	1	HOUSING GD-ZN SW GEPULVERT	GEHAEUSE
14	704253408	1	ACTUATION SPIKE GD-ZN SW GEPULVERT	BETAETIGUNGSDORN
15	704259008	1	TONGUE 45X19 STAHL VERZ	ZUNGE
16	10878922	4	HEX SCREW ISO 4014 M10X220 8.8 FLZN SP	SECHSKANTSCHRAUBE
17	10875483	6	BUTTON HEAD SCREW ISO 7380-2 M5X10 0	HALBRUNDKOPFSCHRAUBE
18	10875620	6	HEX NUT ISO 4032 M5 8 480H SPF	SECHSKANTMUTTER
19	12227697	6	WASHER SPRING DIN 128 A 5 FST 480H SP	FEDERRING
20	11140403	6	WASHER ISO 7089 5 200HV 480H SPF	SCHEIBE
21	10353737	4	BUTTON HEAD SCREW ISO 7380-2 M8X10 A	HALBRUNDKOPFSCHRAUBE
22	704262608	2	THREADED PLATE M8	GEWINDEPLATTE
23	10412105	4	WELDING SLEEVE M8X17 ST37-3K A3K	SCHWEISSBUCHSE
24	954117308	1	MOUNTING RAIL X0	TRAGSCHIENE
25	704230208	2	LOCK PIECE HAKEN	VERSCHLUSS
26	10197771	4	WASHER ISO 7089 6 200HV ZNNI-480H SPF	SCHEIBE
27	10197764	4	HEX NUT ISO 4032 M6 10 ZNNI-480H SPF	SECHSKANTMUTTER
28	602018008	4	CARRIER RAIL NUT DIN 3015-1 L TM M6 W1	TRAGSCHIENENMUTTER
29	602008308	2	CLAMP-HALF DIN 3015-1 L 2 R 18 PP SW	KLEMMHAELFTE
30	602008408	2	CLAMP-HALF DIN 3015-1 L 3 G 20 PP SW	KLEMMHAELFTE
31	10875590	4	SOCKET HEAD SCREW ISO 4762 M6X35 8.8	ZYLINDERSCHRAUBE

Pos.	Item	Quantity	Description	Bezeichnung
5	10664204	2	BATTERY 12V 180AH	BATTERIE
10	96023930	1	LEAD W593	LEITUNG
11	96023931	1	LEAD W591	LEITUNG
14	96023932	1	LEAD W592	LEITUNG
19	96023960	1	BATTERY MAIN SWITCH	BATTERIEHAUPTSCHALTER
(10)	10878680	1	HIGH CURRENT DISTRIBUTOR	HOCHSTROMVERTEILER
(20)	10023751	1	FUSE 50A 32V SPF	SICHERUNG
(21)	10878142	1	FUSE CARTRIDGE 80A DC32 MIDI FUSE	SICHERUNGSEINSATZ
(22)	10878143	1	FUSE CARTRIDGE 100A DC32 MIDI FUSE	SICHERUNGSEINSATZ
21	613206608	2	BATTERY TERMINAL CLAMP 15,9MM² VERZI	BATTERIEKLEMME
22	613206508	2	BATTERY TERMINAL CLAMP 17,5MM² VERZI	BATTERIEKLEMME
30	965356108	1	ADDITIONAL KIT	NACHRUESTSATZ

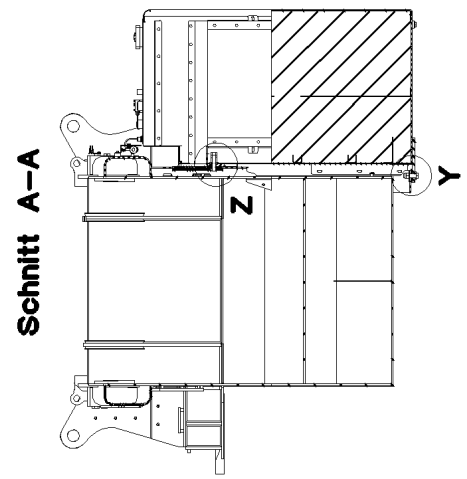
Schnitt A–A
Z
Y

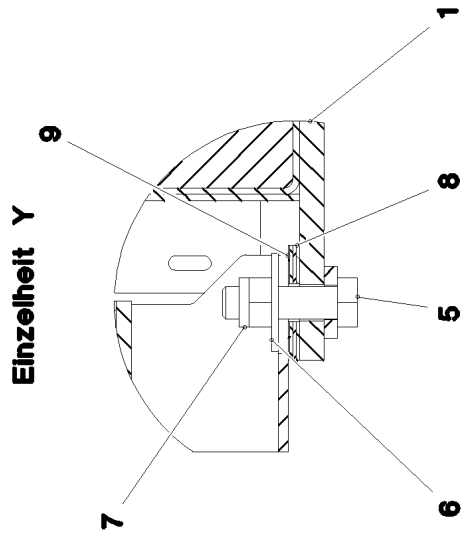
Einzelheit Y
1
9
8
5
7
6

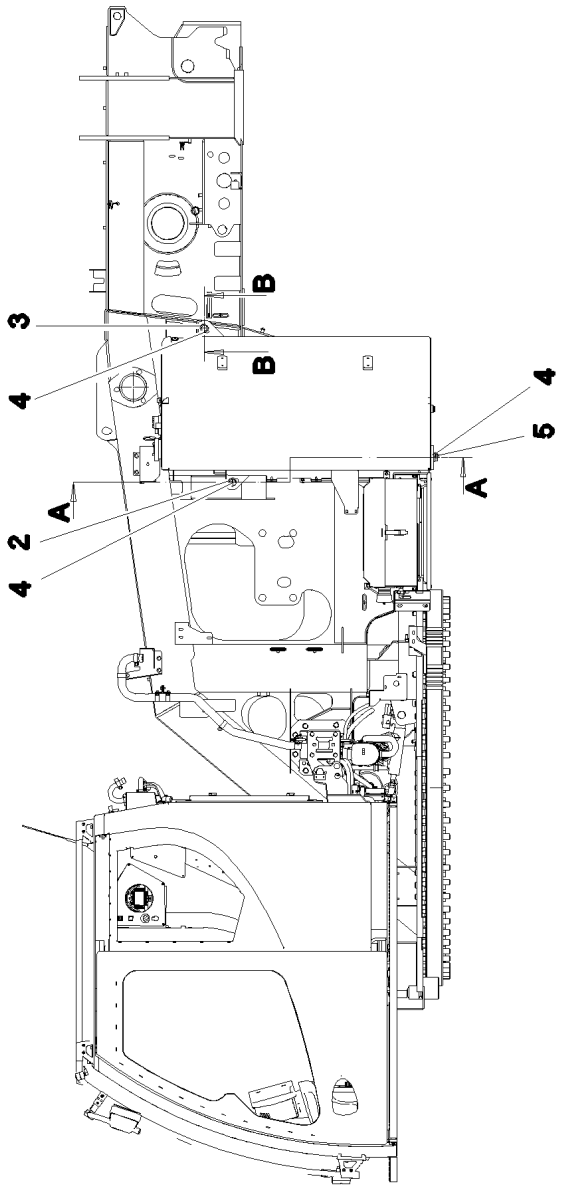
B
B
3
4
4
5
4
A
2
4
A

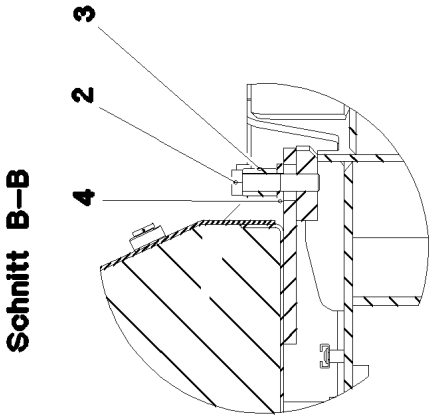
Schnitt B–B
3
2
4

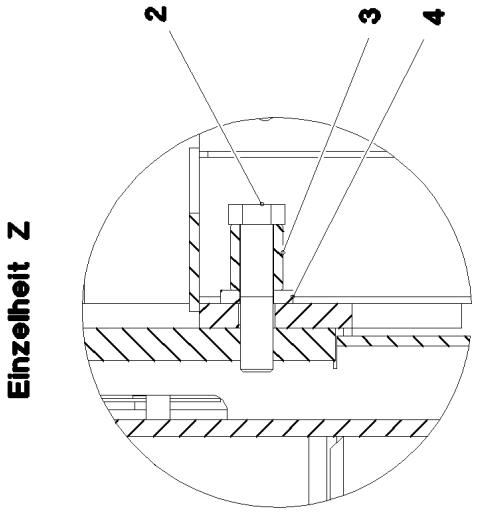
Einzelheit Z
2
3
4

Pos.	Item	Quantity	Description	Bezeichnung
1	968999708	1	FUEL TANK, PRE-ASSEMBLED ⇨ ❑ 324	KRAFTSTOFFBEHAELTER VO
2	12219309	2	HEX SCREW ISO 4014 M20X90 8.8 FLZN SP	SECHSKANTSCHRAUBE
3	970780908	2	DISTANCE SLEEVE 35.0X40 35NICRMOV12	DISTANZHUELSE
4	4600604	3	WASHER DIN 7349 21 100HV FLZN SPF	SCHEIBE
5	10875422	1	HEX SCREW ISO 4017 M20X70 8.8 FLZN SP	SECHSKANTSCHRAUBE
6	4600328	1	WASHER ISO 7093-1 20 300HV FLZN SPF	SCHEIBE
7	10875610	1	HEX NUT DIN 985 M20 10 FLZN SPF	SECHSKANTMUTTER
8	953515408	3	PLATE 2X70X80 DC01	BLECH
9	953515508	1	PLATE 1X70X80 DC01 FE//ZNNI8//CN//T0	BLECH

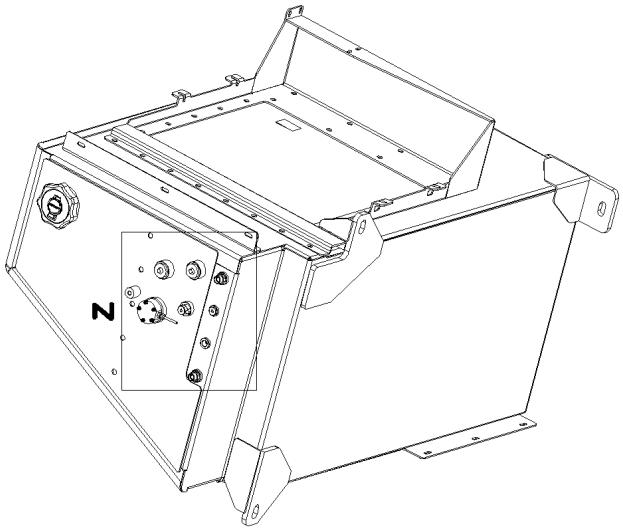
Z

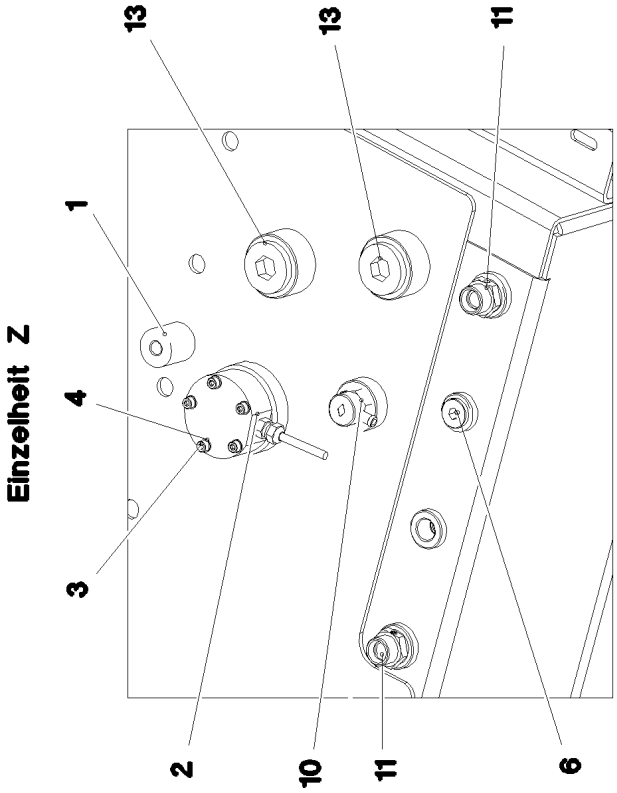
Einzelheit Z
13
13
11
1
4
3
2
10
11
6

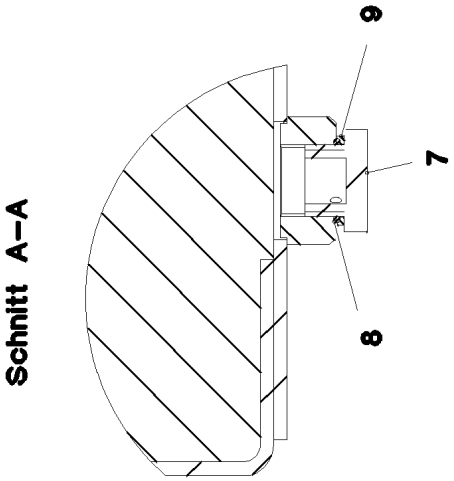
Schnitt A–A
9
7
8

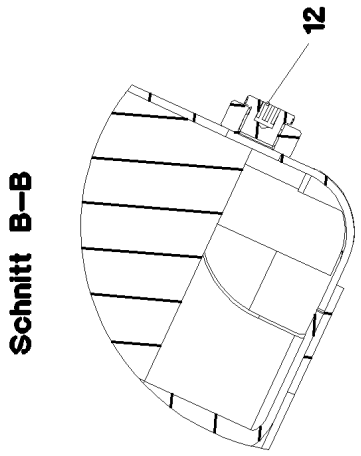
Schnitt B–B
12

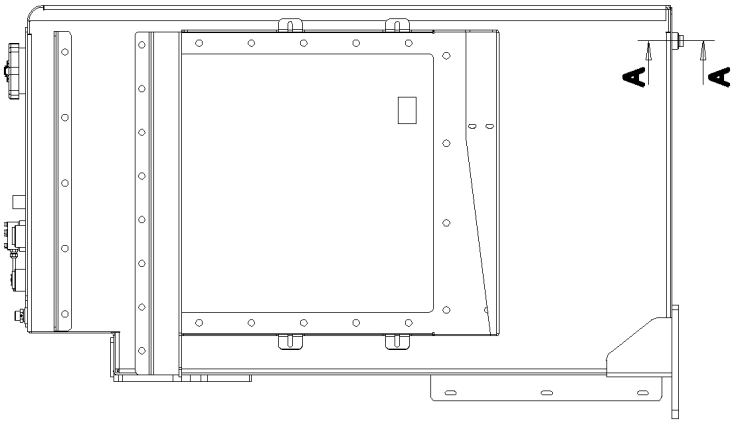
A
A

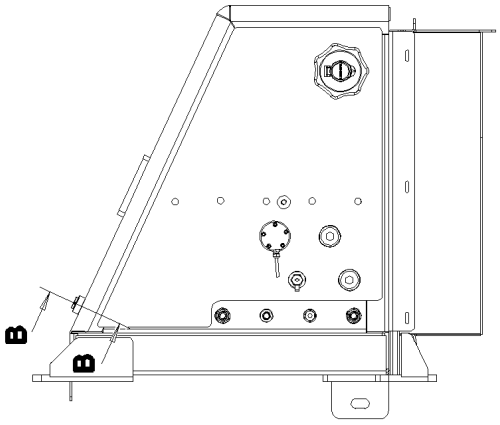
B
B

Pos.	Item	Quantity	Description	Bezeichnung
1	969072608	1	FUEL TANK WELDED CONSTR. 650-680L A	KRAFTSTOFFBEHAELTER SCH
2	10290070	1	TANK SENSOR L=1450 24V SPF	TANKSENSOR
3	12204614	5	SOCKET HEAD SCREW ISO 4762 M5X35 8.8	ZYLINDERSCHRAUBE
4	11140403	5	WASHER ISO 7089 5 200HV 480H SPF	SCHEIBE
6	477705108	1	STOP PLUG VSTIM18X1,5ED A3P	STOPFEN
7	502940108	1	HOLLOW SCREW DIN 74305 22-1-M22X1,5 4	HOHLSCHRAUBE
8	502932908	1	O-RING 20,3X2,4 NBR70	O-RING
9	502932508	1	COMPRESSION RING DR/R22X27	DRUCKRING
10	10097910	1	VENTILATION VALVE	ENTLUEFTUNGSVENTIL
11	471035508	2	FITTING XGE15-LM-ED M22X1,5 A3P	VERSCHRAUBUNG
12	477704208	1	STOP PLUG VSTI1/2"ED A3P	STOPFEN
13	477704608	2	STOP PLUG VSTI1"ED A3P	STOPFEN

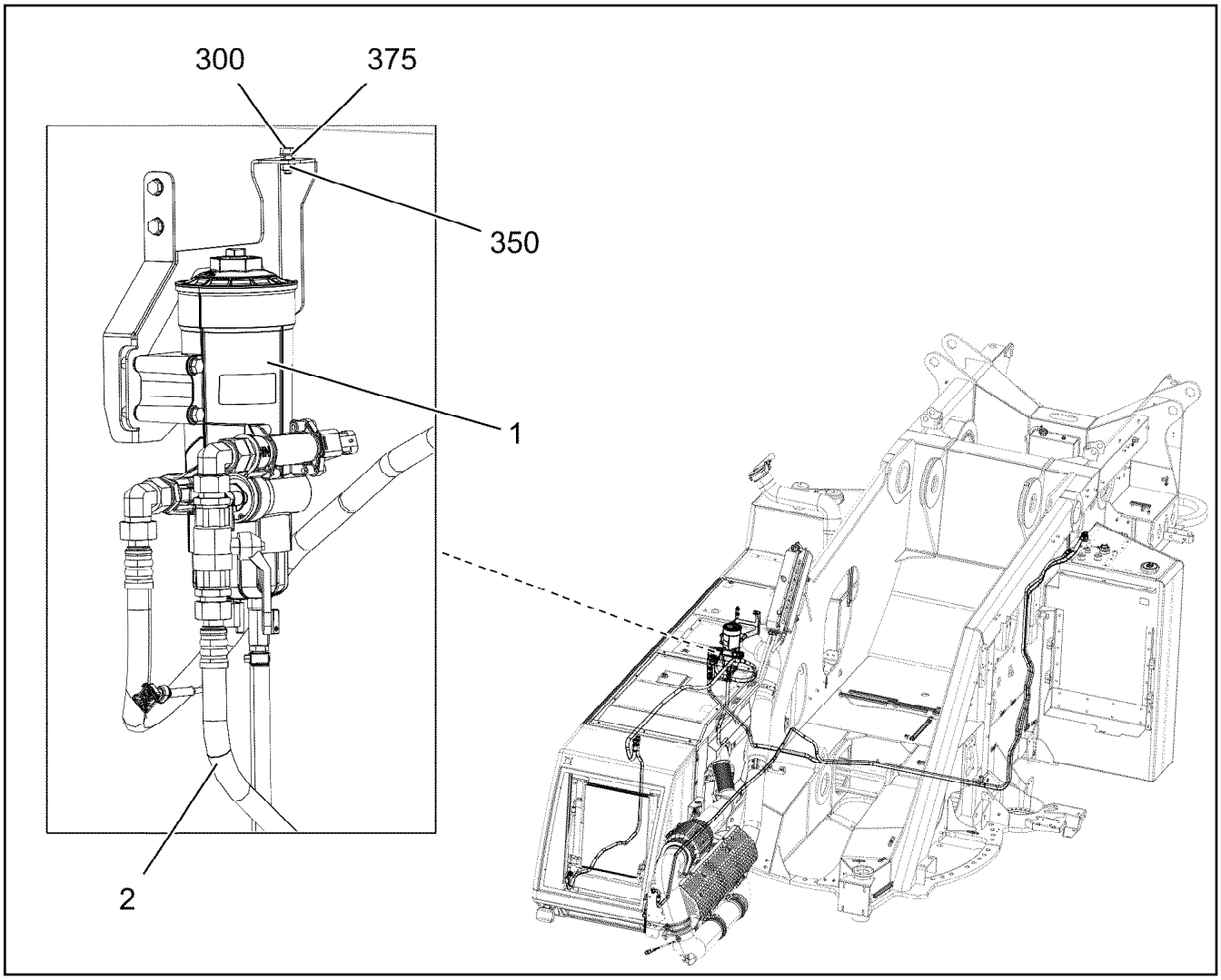

Pos.	Item	Quantity	Description	Bezeichnung
1	96034868	1	PREMOUNTED FUEL FILTER ⇨ ❑ 327	KRAFTSTOFFFILTER VORM.
2	96034873	1	HOSE LINES FUEL	SCHLAUCHLEITUNGEN KRAFT
(2390)	920978208	1	HOSE CPL. 2TE 16X4700	SCHLAUCH KPL.
(2391)	96034858	1	HOSE CPL. 2TE 16X2800	SCHLAUCH KPL.
(2393)	969034108	1	HOSE CPL. 2TE 12X1900	SCHLAUCH KPL.
(2394)	965946108	1	HOSE CPL. 2TE 12X6400	SCHLAUCH KPL.
(2395)	96033235	1	HOSE CPL. 2TE 12X650	SCHLAUCH KPL.
300	11651767	3	HEX SCREW ISO 4017 M8X20 8.8 480H SPF	SECHSKANTSCHRAUBE
350	11693875	3	HEX NUT ISO 4032 M8 8 480H SPF	SECHSKANTMUTTER
375	10289803	6	WASHER ISO 7089 8 300HV 480H SPF	SCHEIBE

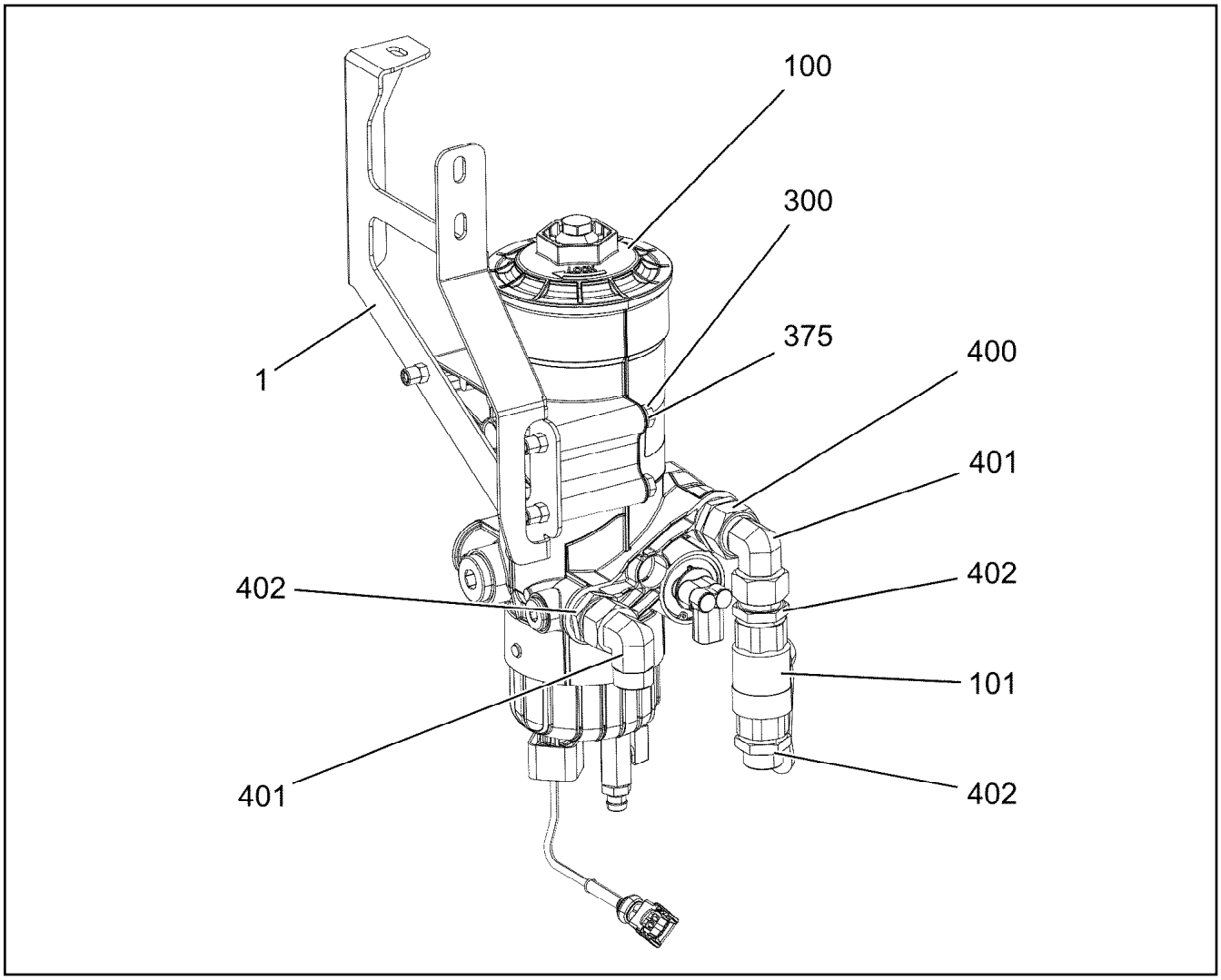

Pos.	Item	Quantity	Description	Bezeichnung
1	96034872	1	RETAINER CPL. FE//ZNNI8//CN//T0 ⇨ ❑ 328	HALTER KPL.
100	10878502	1	FUEL FILTER ⇨ ❑ 329	KRAFTSTOFFFILTER
101	10044661	1	BALL VALVE DN20-G 3/4	KUGELHAHN
300	12216195	3	HEX SCREW ISO 4014 M8X90 8.8 480H SPF	SECHSKANTSCHRAUBE
375	10289803	3	WASHER ISO 7089 8 300HV 480H SPF	SCHEIBE
400	10878394	1	FITTING EGE 18L G3/4 CR6-FREI	VERSCHRAUBUNG
401	247108302	2	FITTING EW 18L M26X1,5 CR6-FREI	VERSCHRAUBUNG
402	471037508	3	FITTING XGE18-LR-ED3/4" A3P	VERSCHRAUBUNG
(1)	726407908	1	O-RING 16X2 NBR70	O-RING

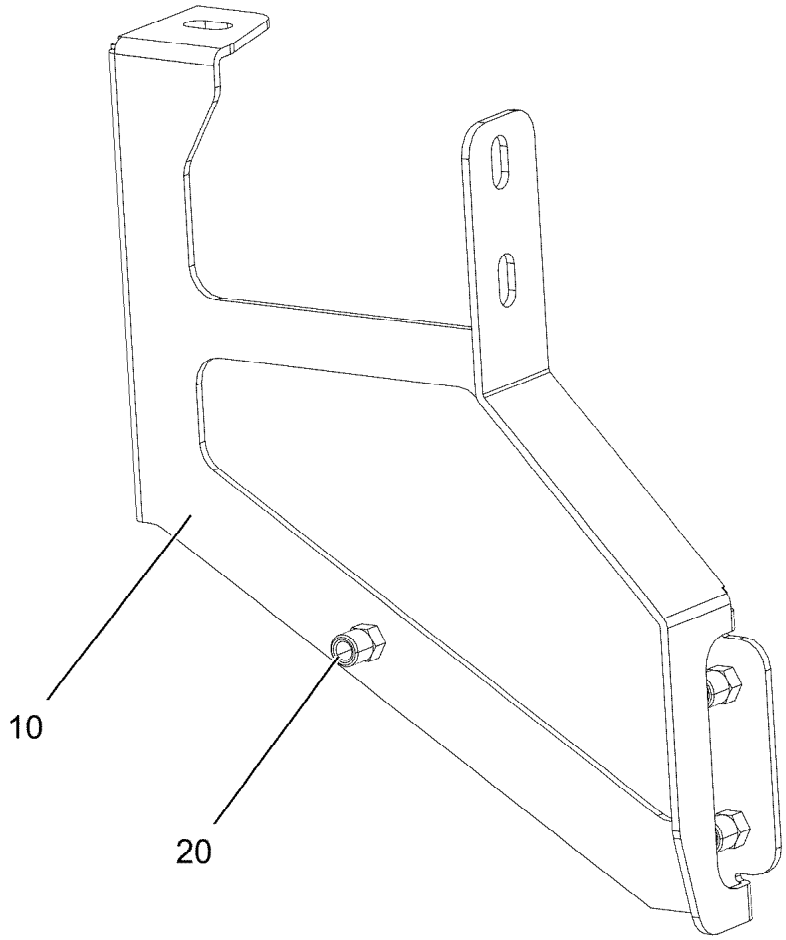

Pos.	Item	Quantity	Description	Bezeichnung
10	97118534	1	PLATE 3X324X319 DC01	BLECH
20	12100289	3	BLIND RIVET NUT M8 K=1,8-5 480H SPF	BLINDNIETMUTTER

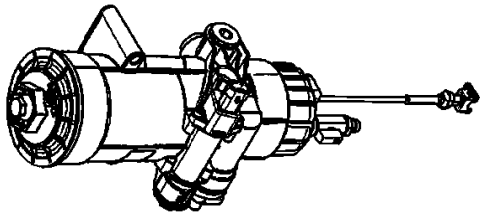

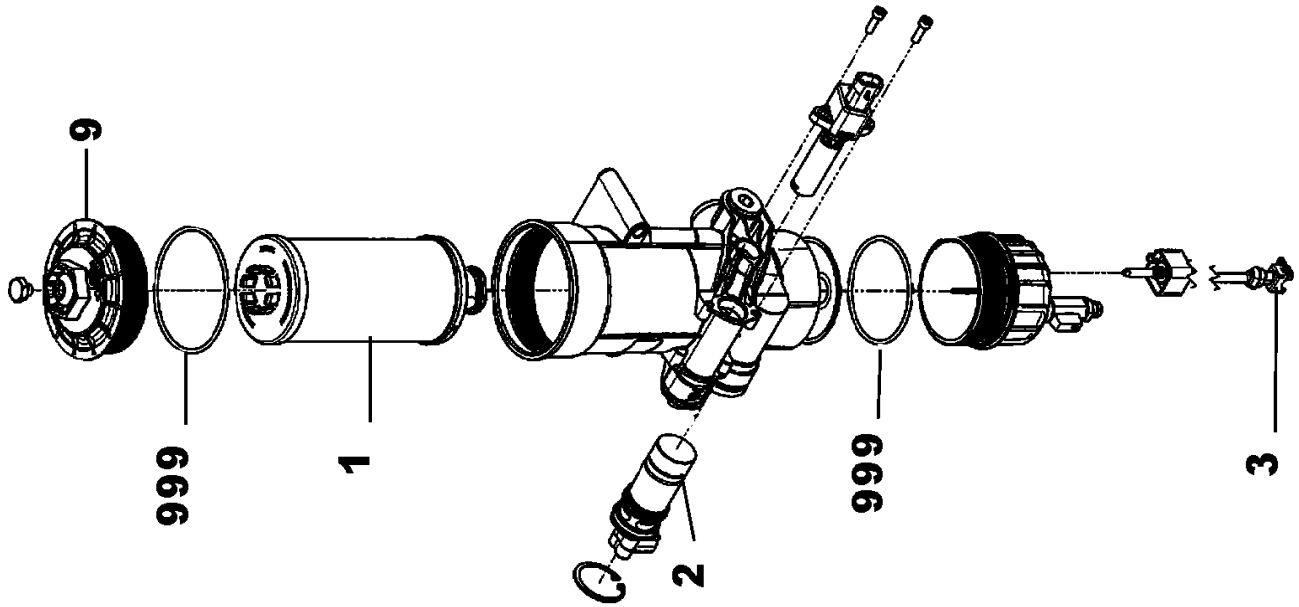
9
999
1
2
999
3

Pos.	Item	Quantity	Description	Bezeichnung
1	10149977	1	FUEL FILTER ELEMENT KRAFTSTOFF 7µm	KRAFTSTOFFFILTEREINSATZ
2	12101888	1	FUEL PUMP	KRAFTSTOFFPUMPE
3	11370365	1	WATER SENSOR 5V	WASSERSONDE
9	11368890	1	COVER	DECKEL
999	12101886	1	SEAL KIT	DICHTSATZ

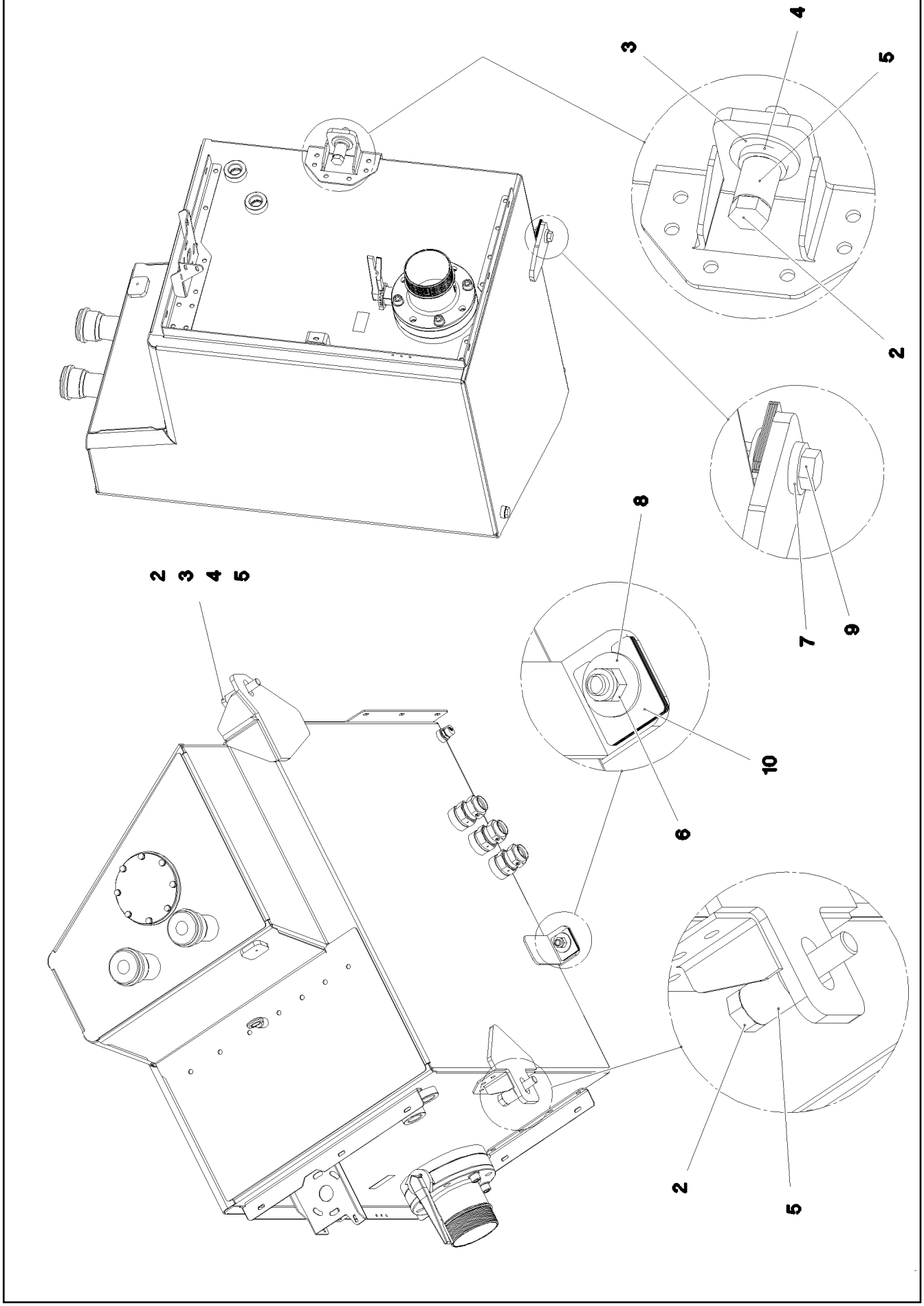

4.12.2020 083905 LIEBHERR	**etk_en_de 047580 LTR 1220** **OIL RESERVOIR, EXTENSION** **OELBEHAELTER ANBAU**	❑ 331 (1/2) **917825508**

Pos.	Item	Quantity	Description	Bezeichnung
1	969050308	1	OIL TANK PRE-ASS. ⇨ ❑ 333	OELBEHAELTER VORM.
2	10876069	2	HEX SCREW ISO 4014 M24X120 8.8 FLZN SP	SECHSKANTSCHRAUBE
3	10179463	2	WASHER ISO 7093-1 24 300HV FLZN SPF	SCHEIBE
4	12220085	2	WASHER DIN 7349 25 FLZN SPF	SCHEIBE
5	956078908	2	SLEEVE RD40X50 42CRMO4+QT GASN. SP	HUELSE
6	10875610	1	HEX NUT DIN 985 M20 10 FLZN SPF	SECHSKANTMUTTER
7	4600604	1	WASHER DIN 7349 21 100HV FLZN SPF	SCHEIBE
8	4600328	1	WASHER ISO 7093-1 20 300HV FLZN SPF	SCHEIBE
9	10875422	1	HEX SCREW ISO 4017 M20X70 8.8 FLZN SP	SECHSKANTSCHRAUBE
10	953515508	8	PLATE 1X70X80 DC01 FE//ZNNI8//CN//T0	BLECH

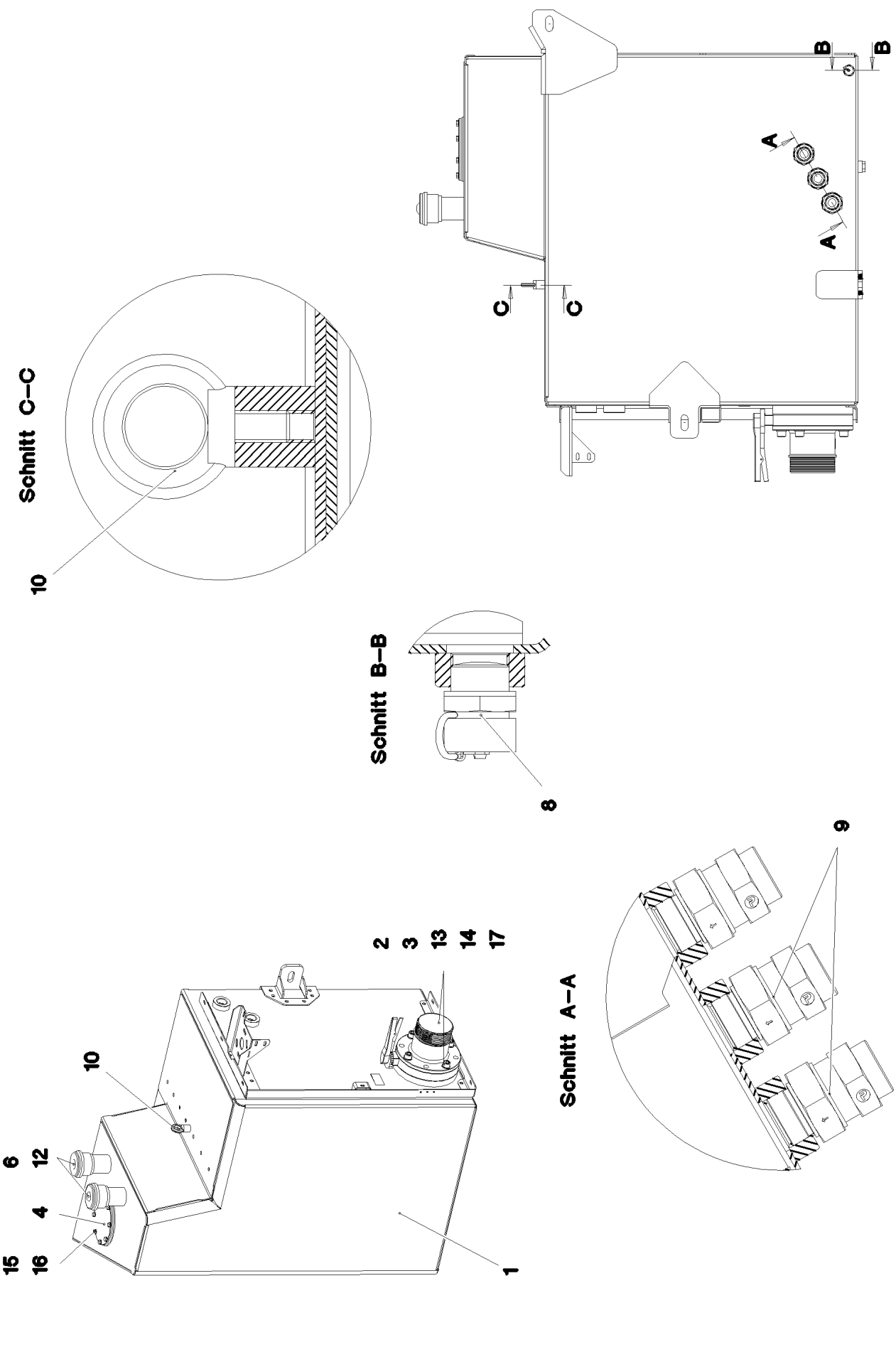

4.12.2020 083516	**etk_en_de 047580 LTR 1220**	❑ 333 (1/3)
LIEBHERR	**OIL TANK PRE-ASS.** **OELBEHAELTER VORM.**	**969050308**

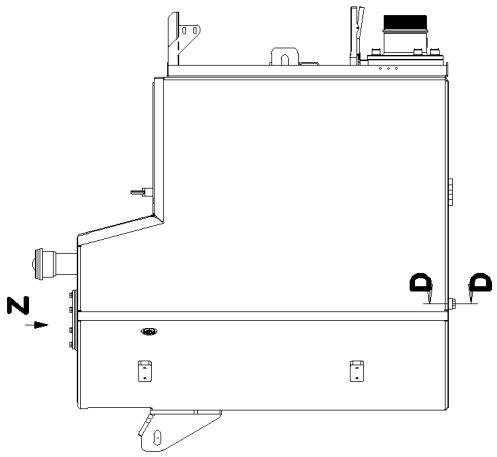
Z
D
D

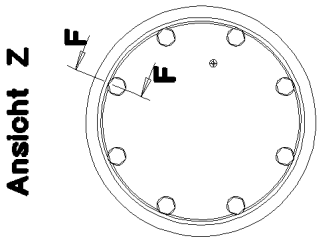
Ansicht Z
F
F

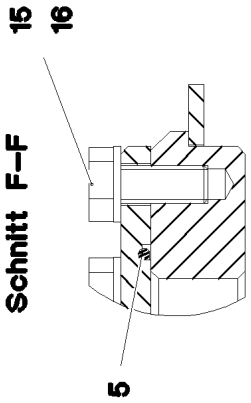
15
16
Schnitt F–F
5

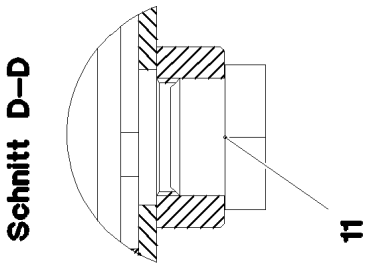
Schnitt D–D
11

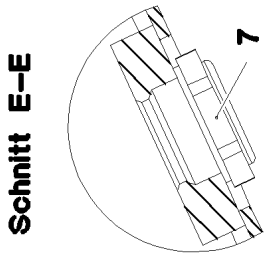
Schnitt E–E
7

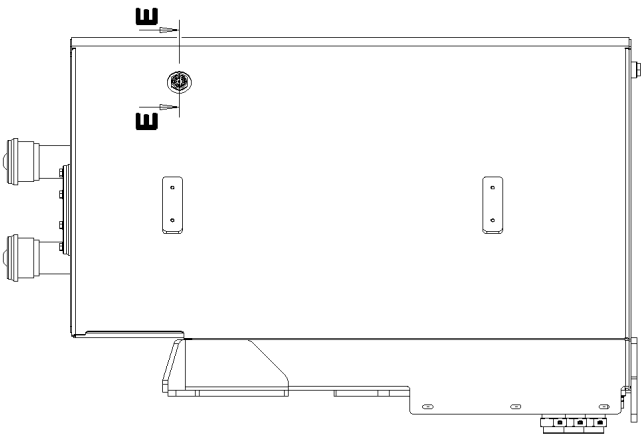
E
E

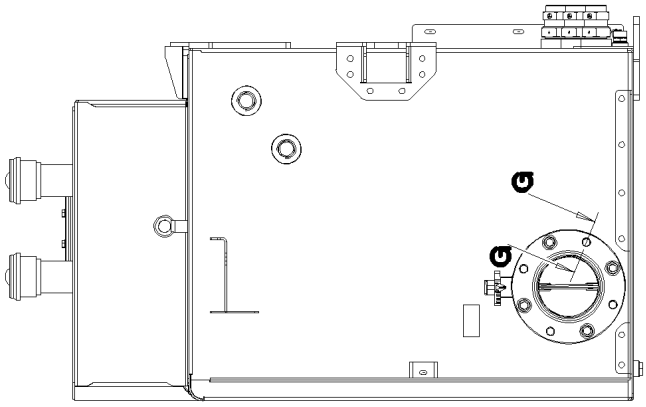
G
G

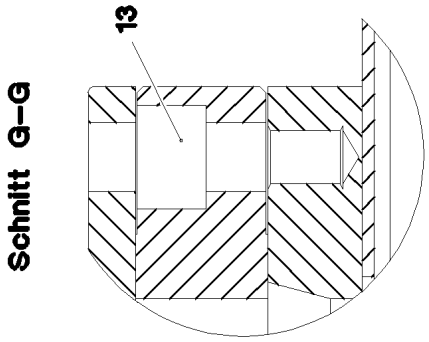
Schnitt G–G
13

Pos.	Item	Quantity	Description	Bezeichnung
1	969050408	1	OIL TANK ST.CONST. ALMG3 SPF	OELBEHAELTER SCHWK.
2	11212467	1	SHUT OFF DEVICE DN150-FLANSCH SPF	ABSPERRORGAN
(8)	704274808	2	O-RING 12X2 NBR70	O-RING
(9)	726407908	2	O-RING 16X2 NBR70	O-RING
3	97032261	1	SUCTION PIPE OIL G-ALSI10MG SPF	SAUGROHR-OEL
4	972272908	1	COVER 10X220X220 ALMG3 F23	DECKEL
5	726204008	1	O-RING 160X3 NBR70	O-RING
6	510667308	2	AERATION FILTER	BELUEFTUNGSFILTER
(1)	510671808	1	FILTER INSERT 1m³/min 10µm	FILTEREINSATZ
7	774320108	1	OIL SIGHT GLASS G1" ALU	OELSTANDSAUGE
8	789011908	1	OIL DRAIN PLUG M26X1,5	OELABLASSSCHRAUBE
9	511457808	3	NON-RETURN VALVE 250BAR CR6-FREI	RUECKSCHLAGVENTIL
10	10179932	1	RING BOLT DIN 580 M12 C15E FLZN	RINGSCHRAUBE
11	477705808	1	STOP PLUG VSTIM26X1,5ED A3P	STOPFEN
12	12216233	12	COUNTERSUNK SCREW ISO 7047 M5X16 4	SENKSCHRAUBE
13	10878829	4	SOCKET HEAD SCREW ISO 4762 M20X35 8	ZYLINDERSCHRAUBE
14	12691987	4	SOCKET HEAD SCREW ISO 4762 M20X80 8	ZYLINDERSCHRAUBE
15	11631816	8	HEX SCREW ISO 4017 M10X25 8.8 FLZN SP	SECHSKANTSCHRAUBE
16	10289795	8	WASHER ISO 7089 10 300HV FLZN SPF	SCHEIBE
17	10353689	4	WASHER ISO 7089 20 200HV-A2	SCHEIBE

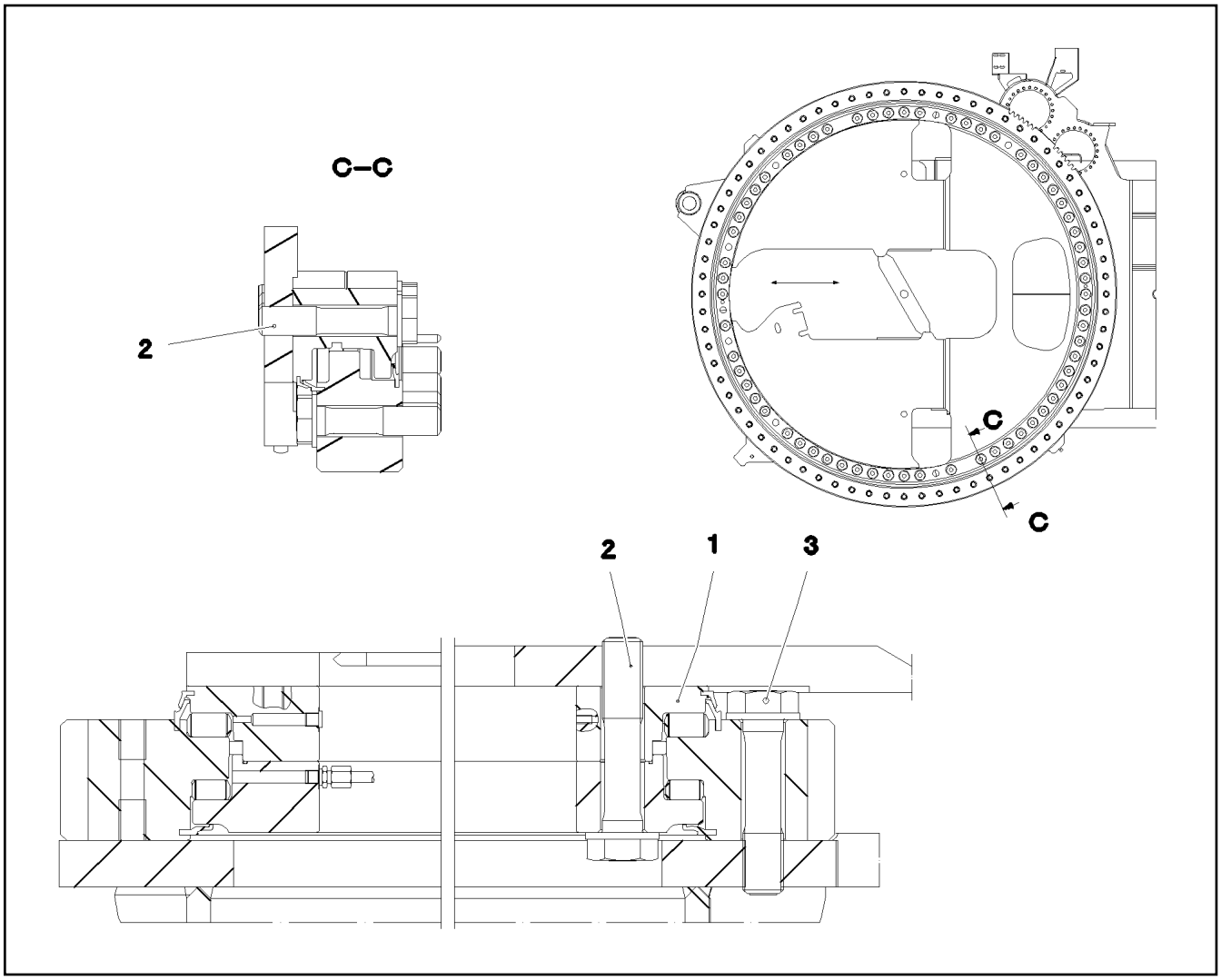

Pos.	Item	Quantity	Description	Bezeichnung
1	90025640	1	ROLLER SLEWING RING 1792-115 42CrMo4 ⇨ ❑ 337	ROLLENDREHVERBINDUNG
2	970447008	62	EXPANSION BOLT M30X145 10.9 SPF	DEHNSCHRAUBE
3	970611208	72	EXPANSION BOLT 55.0X152 35NICRMOV12	DEHNSCHRAUBE

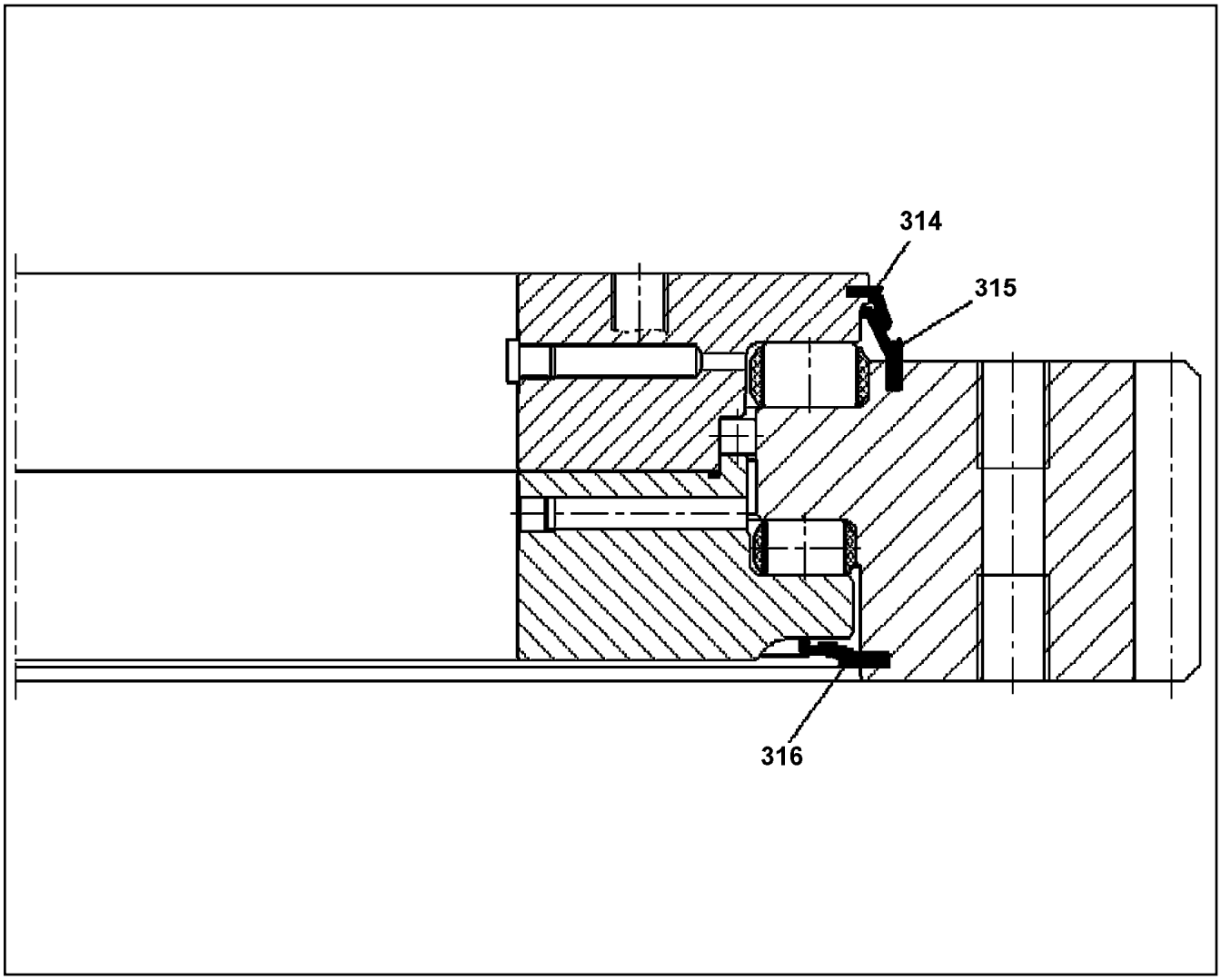

Pos.	Item	Quantity	Description	Bezeichnung
314	262183501	6.26	SEALING PROFILE	DICHTPROFIL
315	262181001	6.29	SEALING PROFILE NBR 70 4833	DICHTPROFIL
316	262181001	6.24	SEALING PROFILE NBR 70 4833	DICHTPROFIL

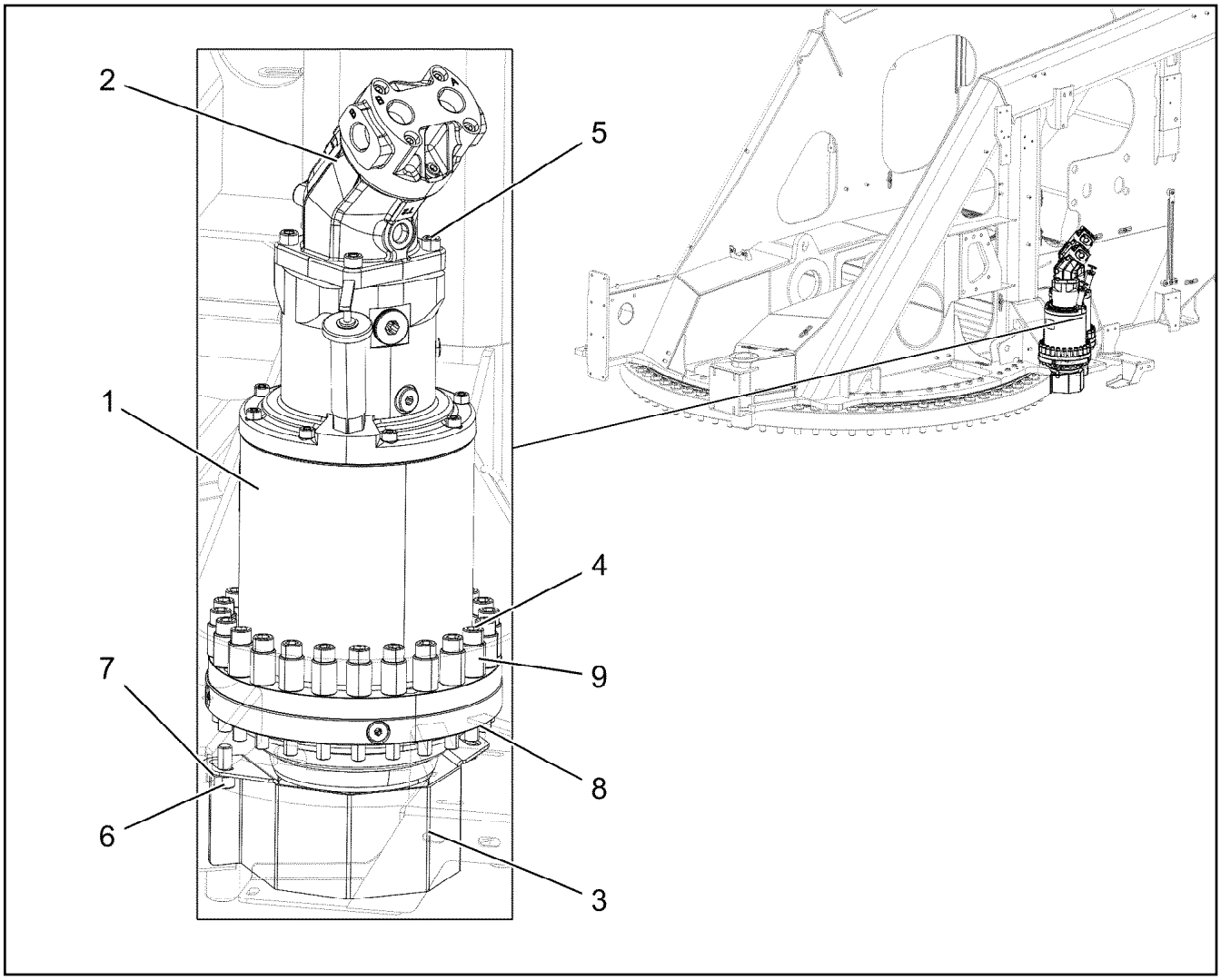

Pos.	Item	Quantity	Description	Bezeichnung
1	90008901	2	SLEWING GEAR DRIVE DAT 225/1462 01 ⇨ ❑ 339	DREHWERKANTRIEB
2	510229408	2	HYDRO MOTOR A2FM 23CM³/U ⇨ ❑ 346	HYDROMOTOR
3	97032687	2	PROTECTION GUARD 3X140X437 DC01 FE//	SCHUTZBLECH
4	10663388	48	SOCKET HEAD SCREW ISO 4762 M12X90 10	ZYLINDERSCHRAUBE
5	10875572	8	SOCKET HEAD SCREW ISO 4762 M10X35 8	ZYLINDERSCHRAUBE
6	12223057	4	SOCKET HEAD SCREW ISO 4762 M12X25 8	ZYLINDERSCHRAUBE
7	10289804	4	WASHER ISO 7089 12 300HV FLZN SPF	SCHEIBE
8	97116895	6	FRICTION PLATE 3M TYP35	REIBPLATTE
9	97114100	48	SLEEVE 25.0X30 35NICRMOV125 SCHWAR	HUELSE

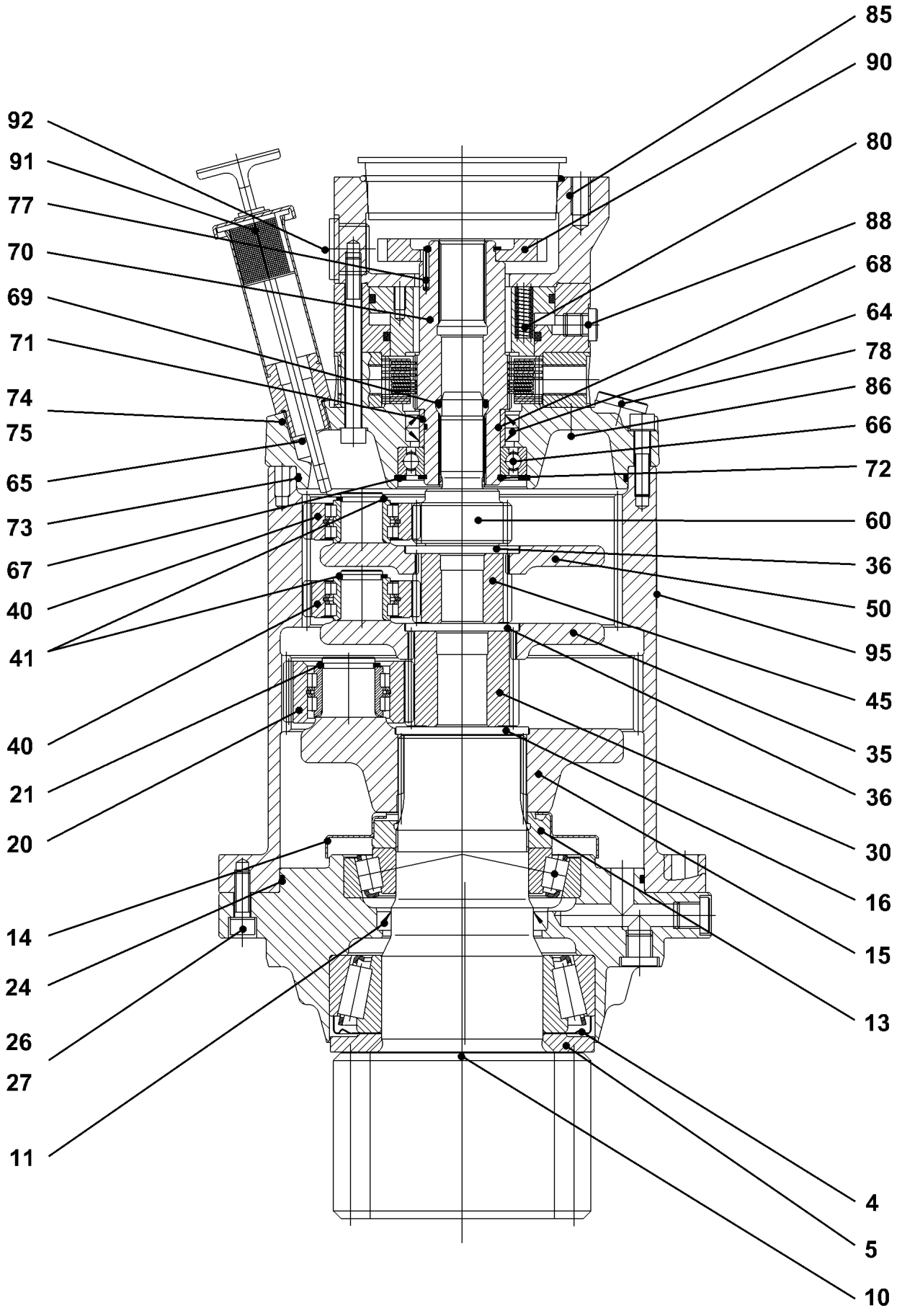
85
90
92
80
91
88
77
68
70
64
69
78
71
86
74
66
75
72
65
60
73
36
67
50
40
95
41
45
40
35
21
36
20
30
16
14
15
24
13
26
27
4
11
5
10

Pos.	Item	Quantity	Description	Bezeichnung
4	747258401	1	BEARING COVER RING 33117 AV	LAGERABDECKRING
5	931807501	1	WASHER 85,2X139X9,5	SCHEIBE
10	90010683	1	OUTPUT SHAFT 135,9 18CrNiMo7-6	ABTRIEBSWELLE
11	710059301	1	ROTARY SHAFT LIP SEAL DIN 3760 A 75X9	RADIALWELLENDICHTRING
13	927530201	1	SLOTTED NUT M70X2 C45	NUTMUTTER
14	927530301	1	PLATE	BLECH
15	939250301	1	PLANETARY CARRIER 170 42CrMo4	PLANETENTRAEGER
16	927531901	1	RETAINING DISK 70	HALTESCHEIBE
20	939251101	5	PLANET WHEEL	PLANETENRAD
21	463000103	5	LOCKING RING DIN 471 28X2	SICHERUNGSRING
24	726453601	1	O-RING 175X3 NBR 70	O-RING
26	10875599	8	SOCKET HEAD SCREW ISO 4762 M8X25 8.8	ZYLINDERSCHRAUBE
27	423910801	8	LOCK WASHER VS 8 ZN8M+PASSIVIERUNG	SICHERUNGSSCHEIBE
30	939251401	1	SUN WHEEL Z=24 18CrNiMo7-6	SONNENRAD
35	939251501	1	PLANETARY CARRIER 150 42CrMo4+QT	PLANETENTRAEGER
36	944134103	1	RETAINING DISK 4X60X4	HALTESCHEIBE
40	927530801	3	PLANET WHEEL	PLANETENRAD
41	463000003	3	LOCKING RING DIN 471 22X1,75	SICHERUNGSRING
45	939251601	1	SUN WHEEL Z=24 18CrNiMo7-6	SONNENRAD
50	939257301	1	PLANETARY CARRIER 150 42CrMo4+QT	PLANETENTRAEGER
60	939251701	1	SUN WHEEL Z=24 18CrNiMo7-6	SONNENRAD
64	10167462	2	ROTARY SHAFT LIP SEAL DIN 3760 A 45X60	RADIALWELLENDICHTRING
65	939251801	1	GEARBOX COVER	GETRIEBEDECKEL
66	745139101	1	DEEP GROOVE BALL BEARING DIN 625 60	RILLENKUGELLAGER
67	10171626	1	LOCKING RING DIN 472 68X2,5 FLZNNC-120	SICHERUNGSRING
69	726414901	1	O-RING 20X4 NBR 70	O-RING
70	927716701	1	MULTI-DISC CARRIER 51,6 42CrMo4+QT	LAMELLENTRAEGER
71	747404001	1	INNER RING 40X45X20	INNENRING
73	726440001	1	O-RING 165X3 FKM 70	O-RING
74	11691424	8	SOCKET HEAD SCREW ISO 4762 M8X35 8.8	ZYLINDERSCHRAUBE
75	423910801	8	LOCK WASHER VS 8 ZN8M+PASSIVIERUNG	SICHERUNGSSCHEIBE
77	927554301	1	VENTILATION CONNECTING PIECE ⇨ ❑ 341	ENTLUEFTUNGSSTUTZEN
80	10176328	1	SPRING LOADED MULTI-DISC BRAKE	FEDERDRUCKLAMELLENBREMS
85	938996401	1	MOTOR FLANGE EN-GJL-250	MOTORFLANSCH
86	12213825	10	SOCKET HEAD SCREW ISO 4762 M8X90 8.8	ZYLINDERSCHRAUBE
88	779016201	1	BLANKING PLUG GPN 300 LD-PE	VERSCHLUSSSTOPFEN
90	938996501	1	TOOTH LOCK WASHER 12X99/17RD S355J	ZAHNSCHEIBE
91	431200501	3	CORE PIN ISO 8740 3X20	KERBSTIFT
92	10171579	1	LOCKING RING DIN 471 35X1,5 FLZNNC-120	SICHERUNGSRING
960	90025781	1	BRAKE MULTI-DISC SET ⇨ ❑ 342	BREMSLAMELLENSATZ
970	90025782	1	BRAKE SPRING SET ⇨ ❑ 344	BREMSFEDERSATZ

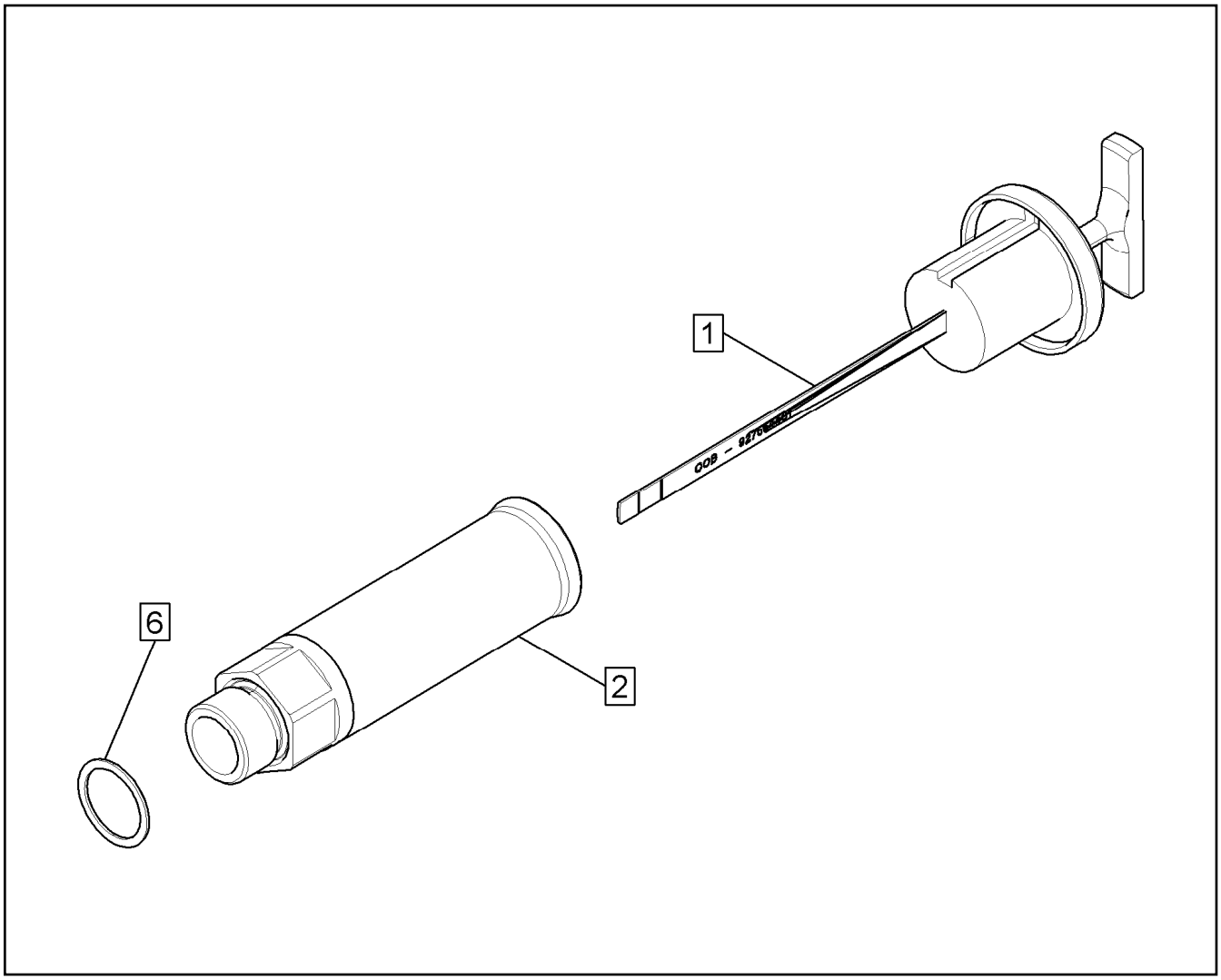

Pos.	Item	Quantity	Description	Bezeichnung
1	927554401	1	OIL DIPSTICK 1 1/8"	OELMESSSTAB
2	927501901	1	VENTILATION CONNECTING PIECE	ENTLUEFTUNGSSTUTZEN
6	761022503	1	SEALING RING 19,6X24,3X1,5	DICHTRING

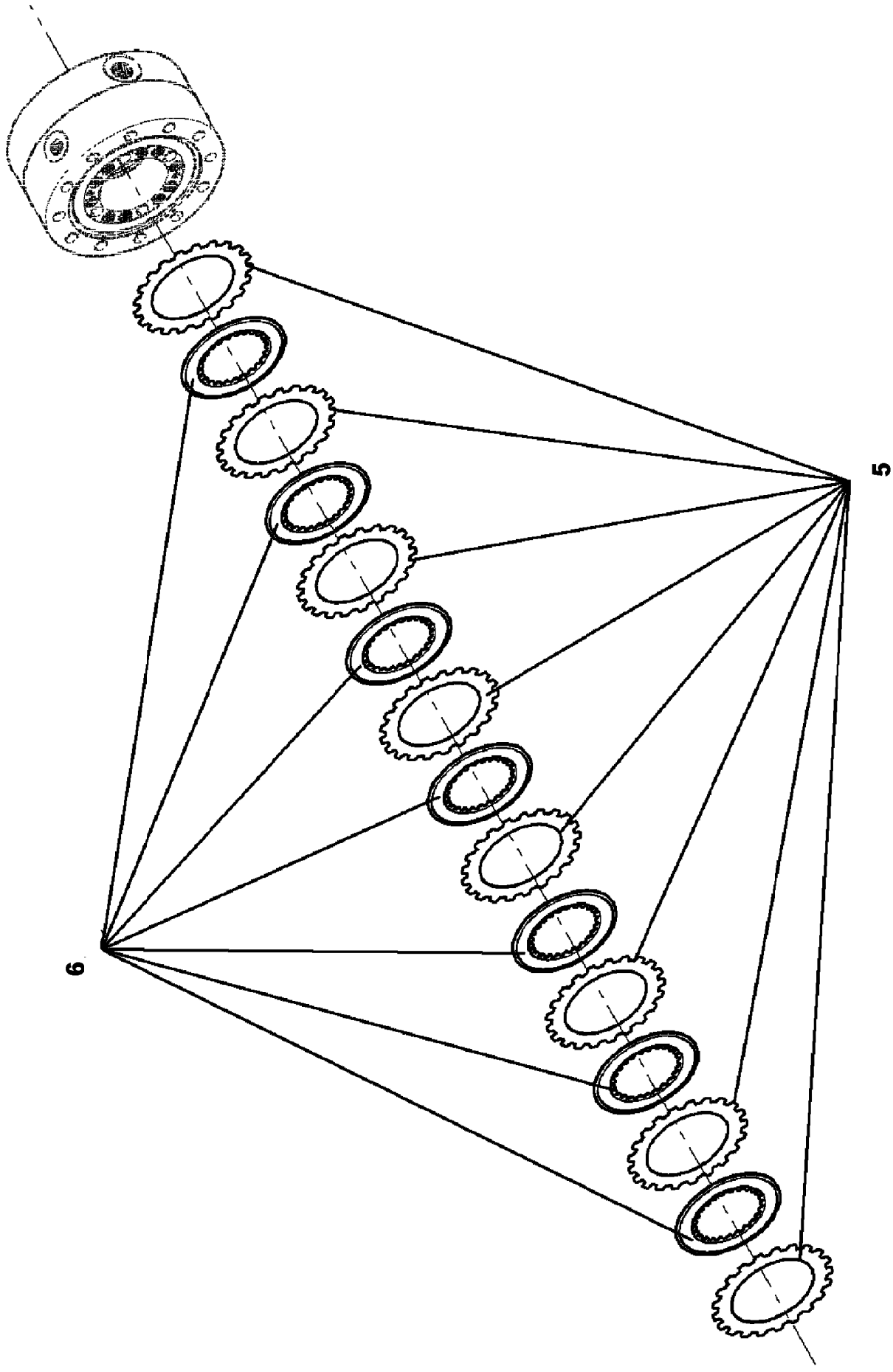
5
6

Pos.	Item	Quantity	Description	Bezeichnung
5	10175221	8	OUTER MULTI-DISC	AUSSENLAMELLE
6	10175222	7	INTERNAL MULTI-DISC	INNENLAMELLE

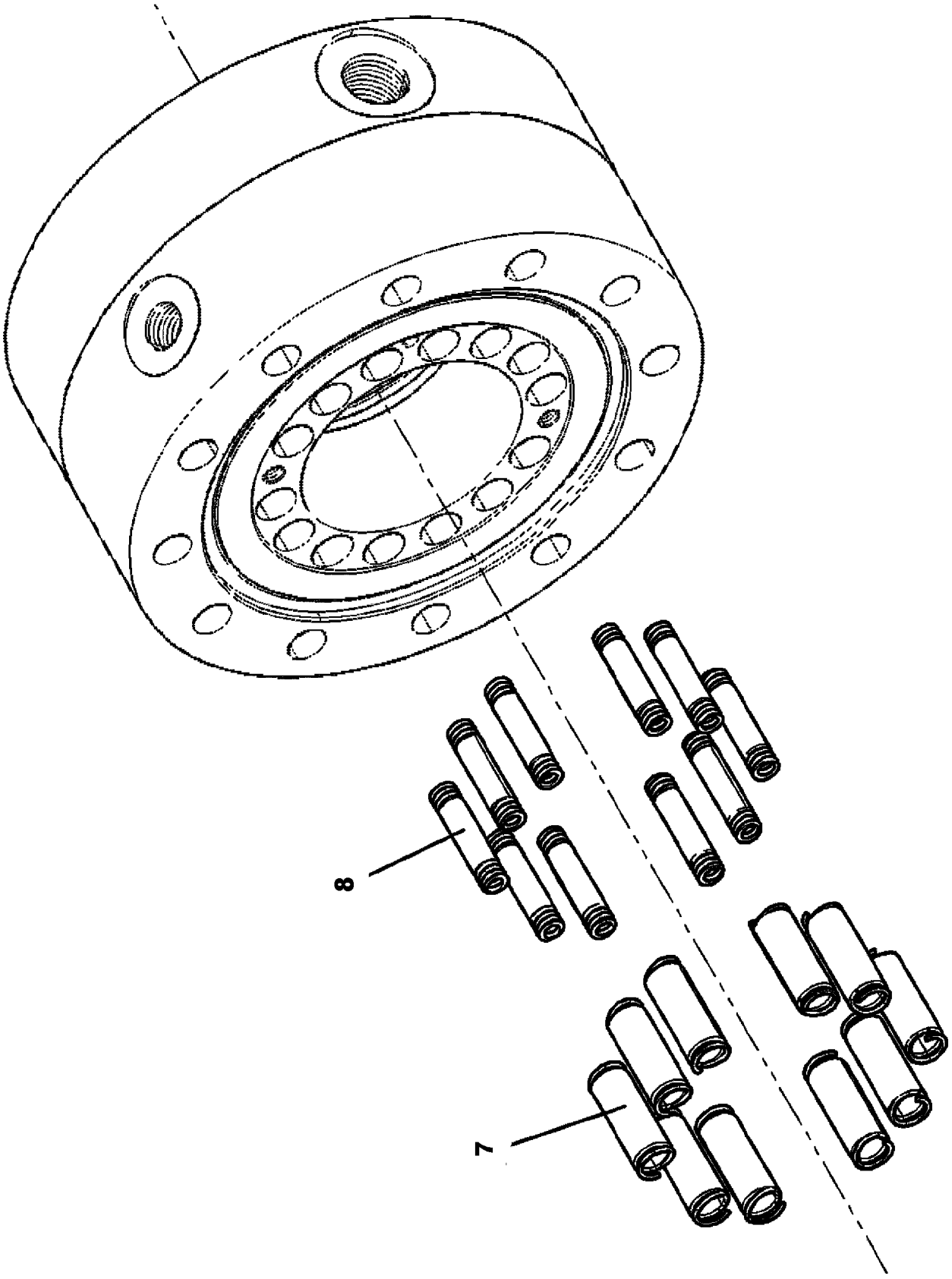
8
7

Pos.	Item	Quantity	Description	Bezeichnung
7	10176329	10	PRESSURE SPRING 1,8X7,3X40,5	DRUCKFEDER
8	10176330	10	PRESSURE SPRING 1X4,1X41,3	DRUCKFEDER

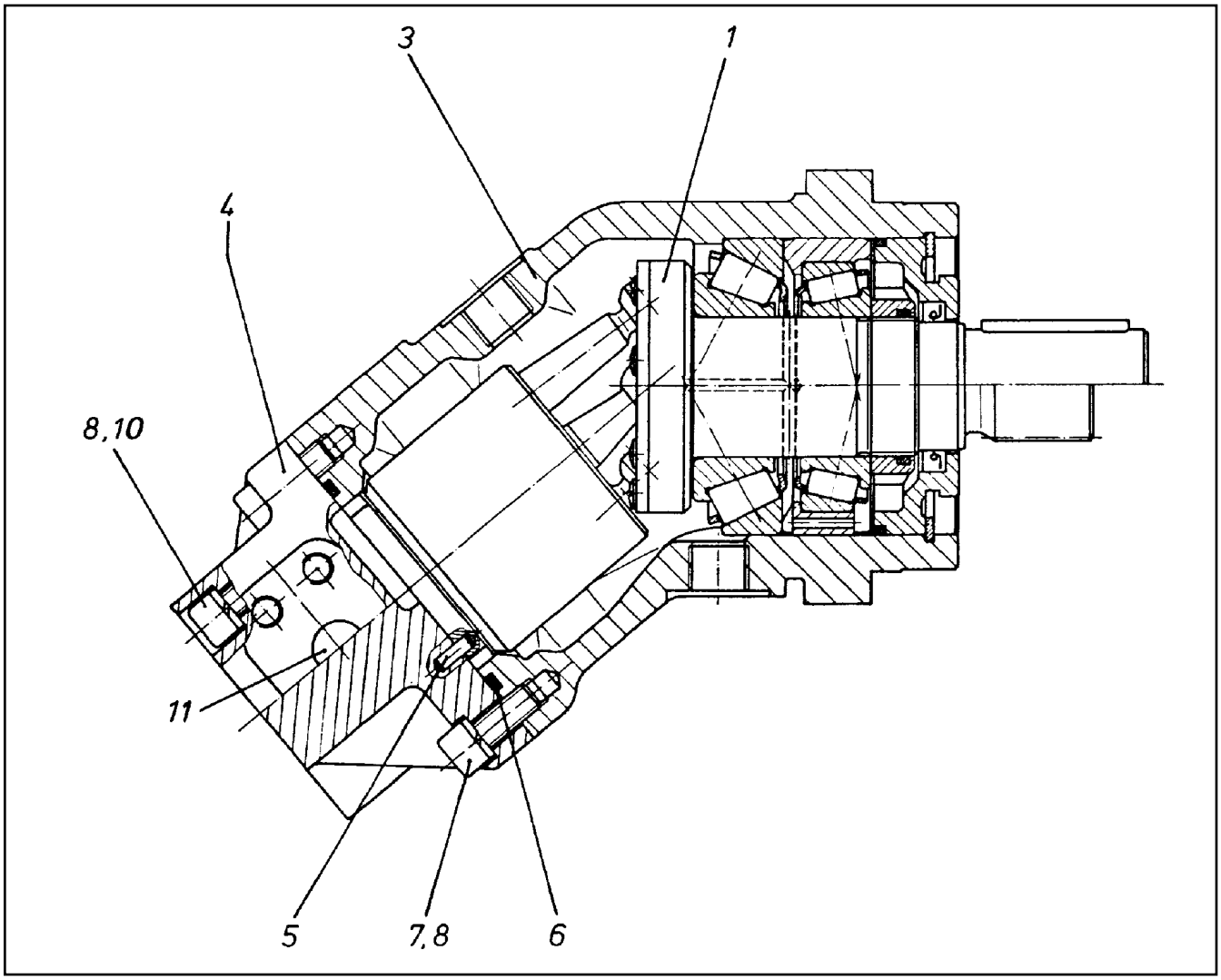

Pos.	Item	Quantity	Description	Bezeichnung
1	570109008	1	DRIVING GEAR ⇨ ❑ 347	TRIEBWERK
3	570109108	1	HOUSING	GEHAEUSE
4	570109208	1	CONNECTING PLATE	ANSCHLUSSPLATTE
5	570109308	1	PARALLEL PIN ISO 2338 4M6X10 ST	ZYLINDERSTIFT
6	518648508	1	O-RING ARP 568 66,27X3,53 NBR70	O-RING
7	10875598	2	SOCKET HEAD SCREW ISO 4762 M8X20 8.8	ZYLINDERSCHRAUBE
8	424100708	6	WASHER SPRING DIN 7980 8 FST VERZ	FEDERRING
10	10875601	4	SOCKET HEAD SCREW ISO 4762 M8X50 8.8	ZYLINDERSCHRAUBE
11	570109408	2	SCREW PLUG M27X2	VERSCHLUSSSCHRAUBE
14	10803065	1	CLOSING RING	VERSCHLUSSRING
(14)	7022315	1	SHAFT SEAL 35X52X6/5 FKM	WELLENDICHTRING

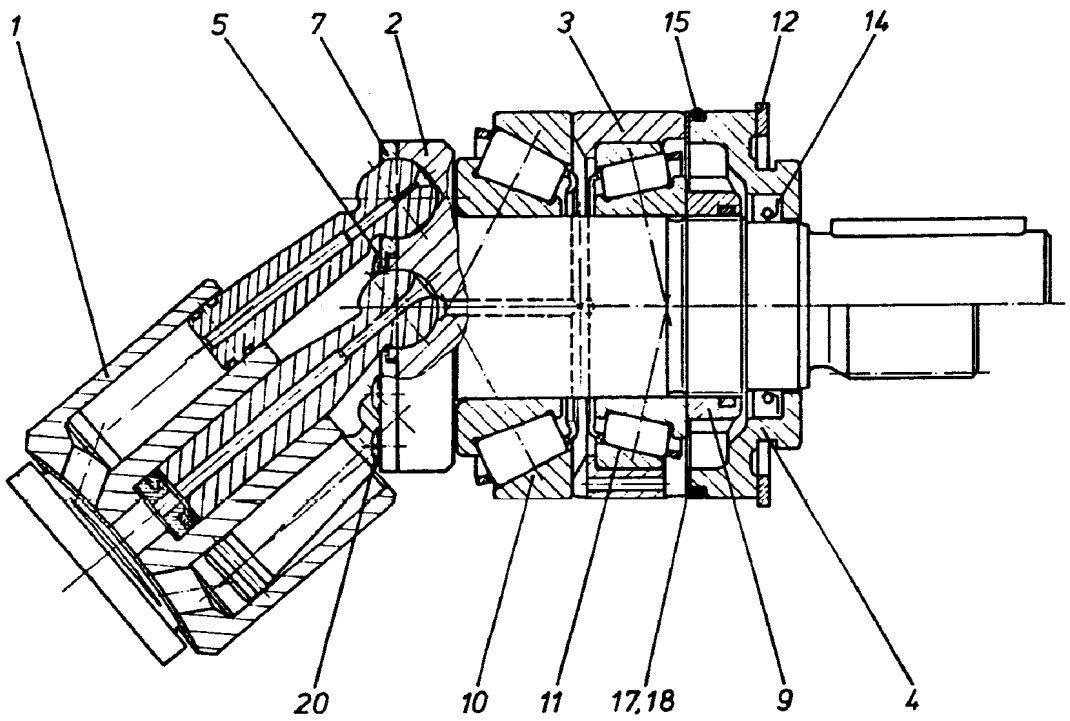

Pos.	Item	Quantity	Description	Bezeichnung
1	570109508	1	DRIVING GEAR ⇨ ❑ 348	TRIEBWERK
2	570109608	1	DRIVE SHAFT	TRIEBWELLE
3	570109708	1	BEARING RING	LAGERRING
4	570109808	1	CLOSING RING	VERSCHLUSSRING
5	570109908	1	WASHER	SCHEIBE
7	570110008	1	PULL-BACK PLATE	RUECKZUGPLATTE
9	570110108	1	SLOTTED NUT M38X1,5	NUTMUTTER
10	10293775	1	TAPERED ROLLER BEARING	KEGELROLLENLAGER
11	746221908	1	TAPERED ROLLER BEARING DIN 720 32008	KEGELROLLENLAGER
12	428102508	1	LOCKING RING DIN 472 80X2,5	SICHERUNGSRING
14	7022315	1	SHAFT SEAL 35X52X6/5 FKM	WELLENDICHTRING
15	514530408	1	O-RING ARP 568 75,87X2,62 NBR90	O-RING
17	421000408	2	SHIM RING DIN 988 63X80X0,1	PASSSCHEIBE
18	421000508	1	SHIM RING DIN 988 63X80X0,3	PASSSCHEIBE
20	514525208	7	OVAL SCREW M4X12 10.9	LINSENSCHRAUBE

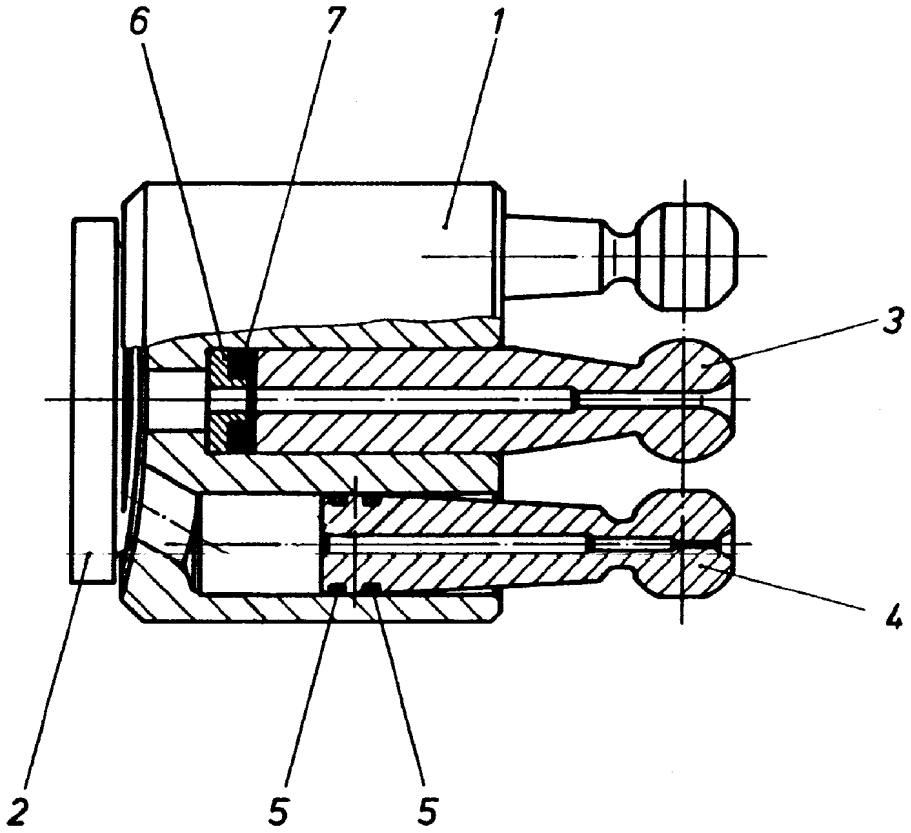

Pos.	Item	Quantity	Description	Bezeichnung
1	570110308	1	CYLINDER	ZYLINDER
2	570110408	1	GUIDE PLATE	STEUERPLATTE
3	570110508	1	CENTER STUD	MITTELZAPFEN
4	570110608	7	PISTON	KOLBEN
5	570110708	14	RING	RING
6	570110808	1	SPRING SUPPORT	FEDERTELLER
7	570110908	4	DISC SPRING	TELLERFEDER

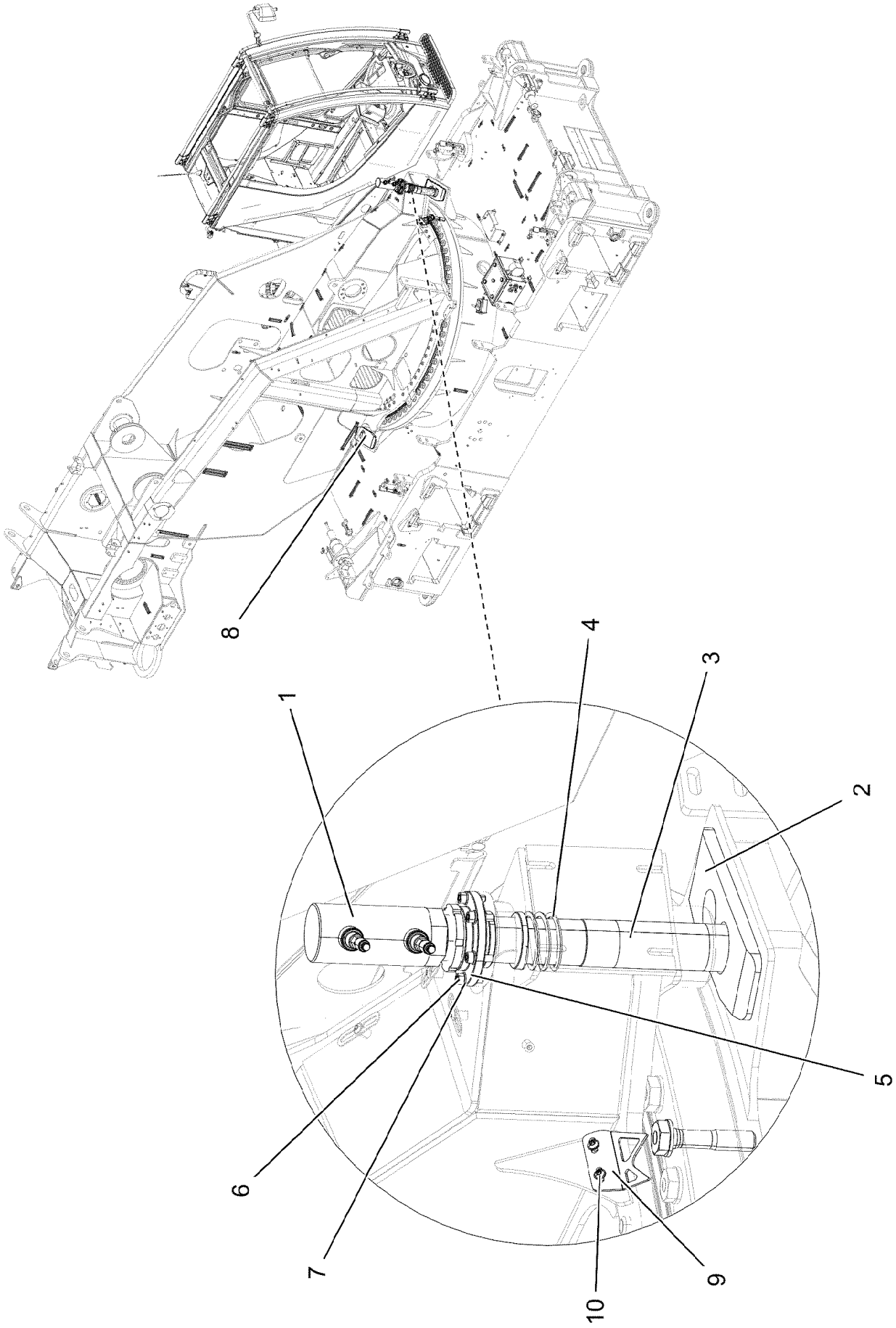
8
4
3
1
2
5
6
7
9
10

Pos.	Item	Quantity	Description	Bezeichnung
1	10443748	1	HYDRO CYLINDER 70/45-50 SPF	HYDROZYLINDER
(999)	10490901	1	DS HYDRO CYLINDER	DS HYDROZYLINDER
2	97032051	1	PLATE 20X375X135 S960QL	BLECH
3	97034096	1	PIN 85.0X350 35NICRMOV125 SPF	BOLZEN
4	720011408	1	PRESSURE SPRING 6,3X80X145	DRUCKFEDER
5	972140108	1	SLEEVE 140.0X25 35NICRMOV125	MUFFE
6	10875571	6	SOCKET HEAD SCREW ISO 4762 M10X30 8	ZYLINDERSCHRAUBE
7	10289795	6	WASHER ISO 7089 10 300HV FLZN SPF	SCHEIBE
8	97034837	1	PLATE 20X375X135 S960QL	BLECH
9	97033038	1	POINTER 3X146X110 DC01 FE//ZNNI8//CN//T	ZEIGER
10	12102696	2	BUTTON HEAD SCREW ISO7380-2 M8X10 0	HALBRUNDKOPFSCHRAUBE

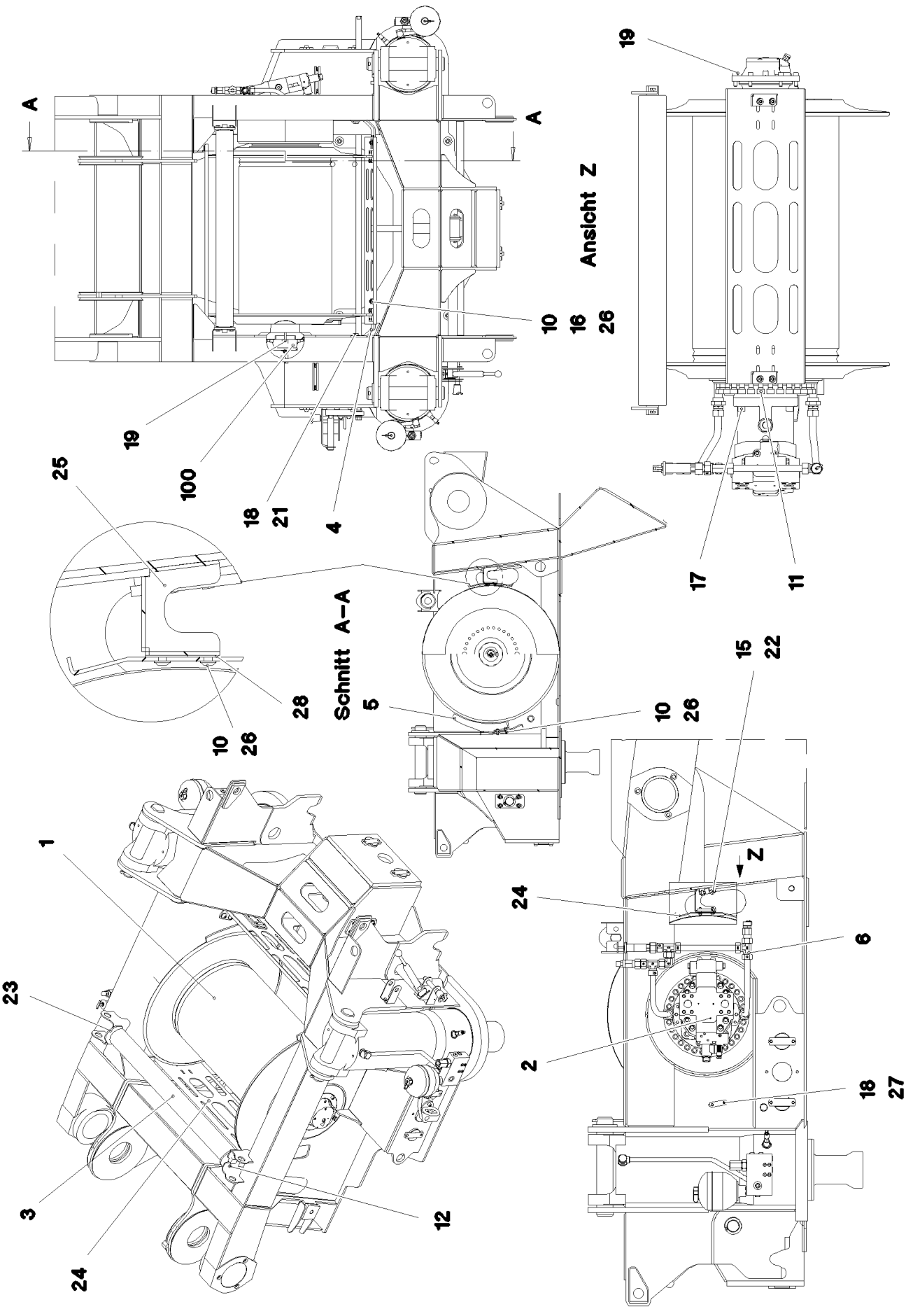
A
A
19
10
16
26
100
18
21
4
25
28
10
26
Schnitt A–A
5
Ansicht Z
19
17
11
15
22
10
26
Z
24
6
2
18
27
1
23
3
24
12

Pos.	Item	Quantity	Description	Bezeichnung
1	90208882	1	COMPACT ROPE WINCH KSW 400/2719 ⇨ ❑ 353	KOMPAKTSEILWINDE
2	11182597	1	VARIABLE DISPLACEMENT MOTOR A6VM 1 ⇨ ❑ 360	VERSTELLMOTOR
3	749014908	1	CARRYING ROLLER 90/7/40X1015 GASN. SP	TRAGROLLE
4	97033021	2	PLATE 6X312X90 S355MC FE//ZNNI8//CN//T	BLECH
5	968054808	2	PLATE FE//ZNNI8//CN//T0	SICHELBLECH SCHWK.
6	90200104	1	OIL-GAUGING INSTRUMENT ⇨ ❑ 361	OELMESSEINRICHTUNG
10	10875486	12	BUTTON HEAD SCREW AEHNL.ISO 7380-2	HALBRUNDKOPFSCHRAUBE
11	404317008	28	SOCKET HEAD SCREW ISO 4762 M16X45 10	ZYLINDERSCHRAUBE
12	12222989	4	HEX SCREW ISO 4017 M10X12 8.8 FLZN SP	SECHSKANTSCHRAUBE
15	11651612	4	HEX SCREW ISO 4017 M8X16 8.8 480H SPF	SECHSKANTSCHRAUBE
16	11140469	4	WASHER ISO 7093-1 8 200HV 480H SPF	SCHEIBE
17	12224014	4	SOCKET HEAD SCREW ISO 4762 M16X45 8	ZYLINDERSCHRAUBE
18	10875571	4	SOCKET HEAD SCREW ISO 4762 M10X30 8	ZYLINDERSCHRAUBE
19	10468820	6	SOCKET HEAD SCREW ISO 4762 M10X35 10	ZYLINDERSCHRAUBE
21	11491889	4	WASHER ISO 7093-1 10 300HV FLZN SPF	SCHEIBE
22	953873408	4	SLEEVE 25X20 11SMN37 FE//ZNNI8//CN//T0	HUELSE
23	956474508	2	PLATE 8X84X108 S355MC FE//ZNNI8//CN//T	BLECH
24	972357608	2	PLATE 4X965X279 ALMG3 H111 SPF	BLECH
25	97047272	2	PLATE 4X159X133 S315MC FE//ZNNI8//CN//T	BLECH
26	97045387	6	THREADED PLATE 8X70X20 S355MC	GEWINDEPLATTE
27	97045388	2	THREADED PLATE 10X70X20 S355MC FE//	GEWINDEPLATTE
28	97047274	2	PLATE 2X25X80 DC01 FE//ZNNI8//CN//T0	BLECH
100	966631008	1	ELECTRIC FOR WINCH 1 ⇨ ❑ 362	ELEKTRIK WINDE 1

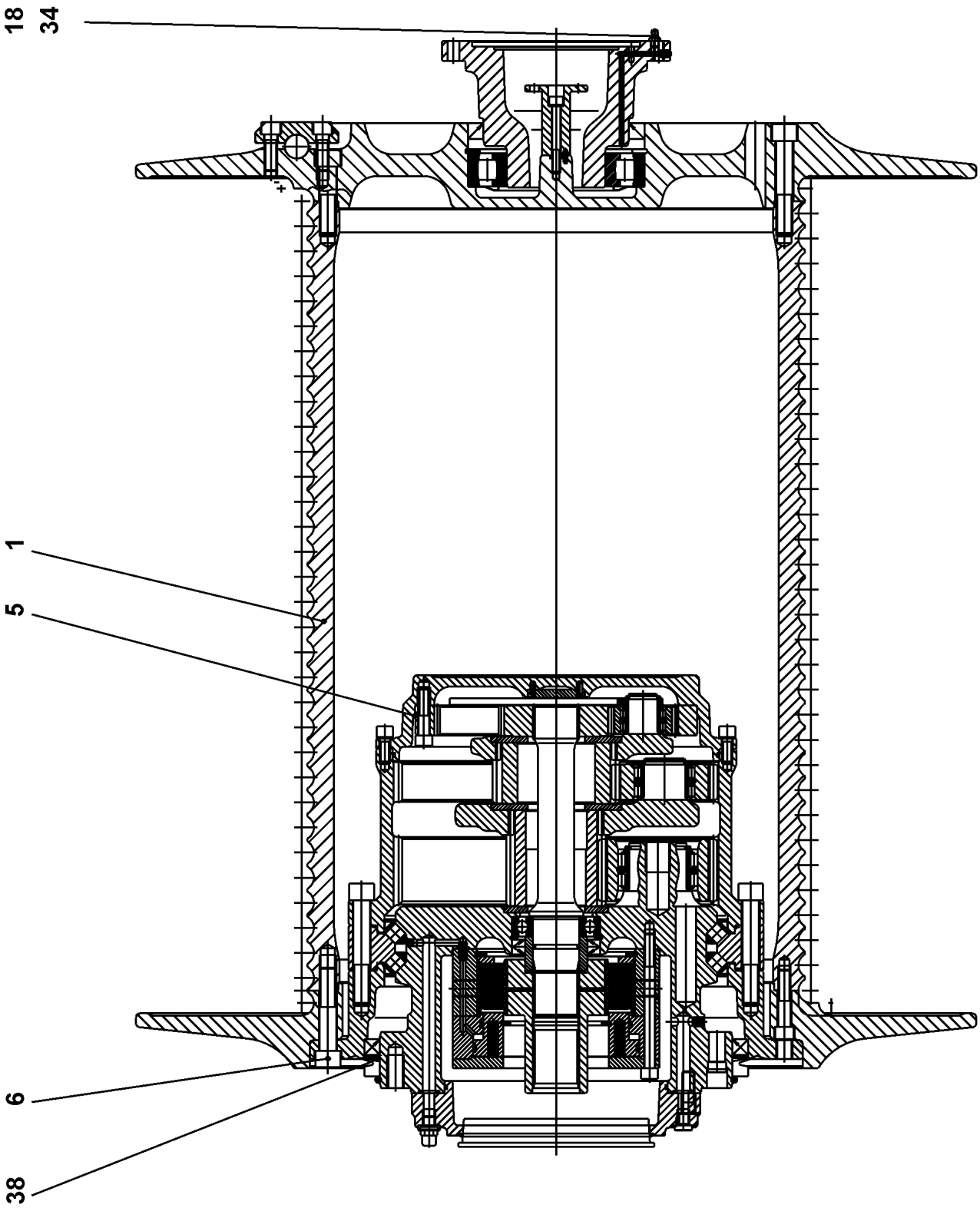
18
34
1
5
6
38

Pos.	Item	Quantity	Description	Bezeichnung
1	932916901	1	ROPE DRUM D=490 SEIL=23 ⇨ ❑ 355	SEILTROMMEL
5	939292201	1	PLANETARY GEARBOX 3-STUFIG ⇨ ❑ 356	PLANETENGETRIEBE
6	4000521	24	SOCKET HEAD SCREW ISO 4762 M16X80 10	ZYLINDERSCHRAUBE
18	774301101	1	HYDRAULIC-TYPE LUBRICAT.NIPPLE DIN 7	KEGELSCHMIERNIPPEL
34	789000701	1	PROTECTING CAP LLD-PE	SCHUTZKAPPE
38	861303501	0.1	GREASE CTK 668190 50KG	FETT
50	90208884	1	OIL-GAUGING INSTRUMENT	OELMESSEINRICHTUNG

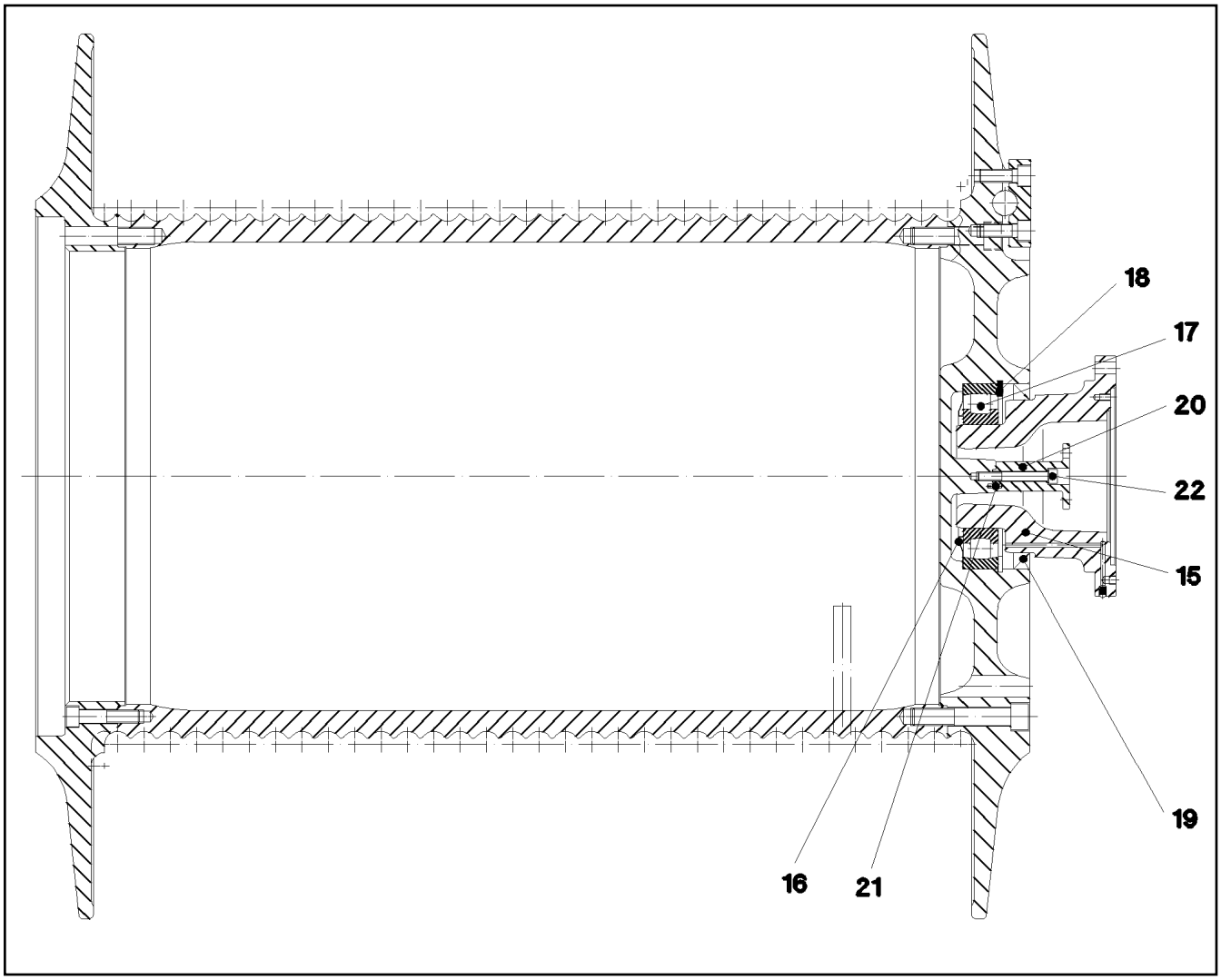

Pos.	Item	Quantity	Description	Bezeichnung
15	939637901	1	BEARING FLANGE EN-GJS-400-1	LAGERFLANSCH
16	747272501	1	BEARING COVER RING 6219 JV	LAGERABDECKRING
17	540509008	1	SWIVEL-JOINT ROLLER BEARING DIN 635 2	TONNENLAGER
18	428105908	1	LOCKING RING DIN 472 170X4	SICHERUNGSRING
19	710032508	1	ROTARY SHAFT LIP SEAL DIN 3760 A 140X1	RADIALWELLENDICHTRING
20	931549101	1	DRIVER	MITNEHMER
21	431100201	1	CORE PIN DIN 1472 4X12	KERBSTIFT
22	12203451	1	SOCKET HEAD SCREW ISO 4762 M8X65 8.8	ZYLINDERSCHRAUBE

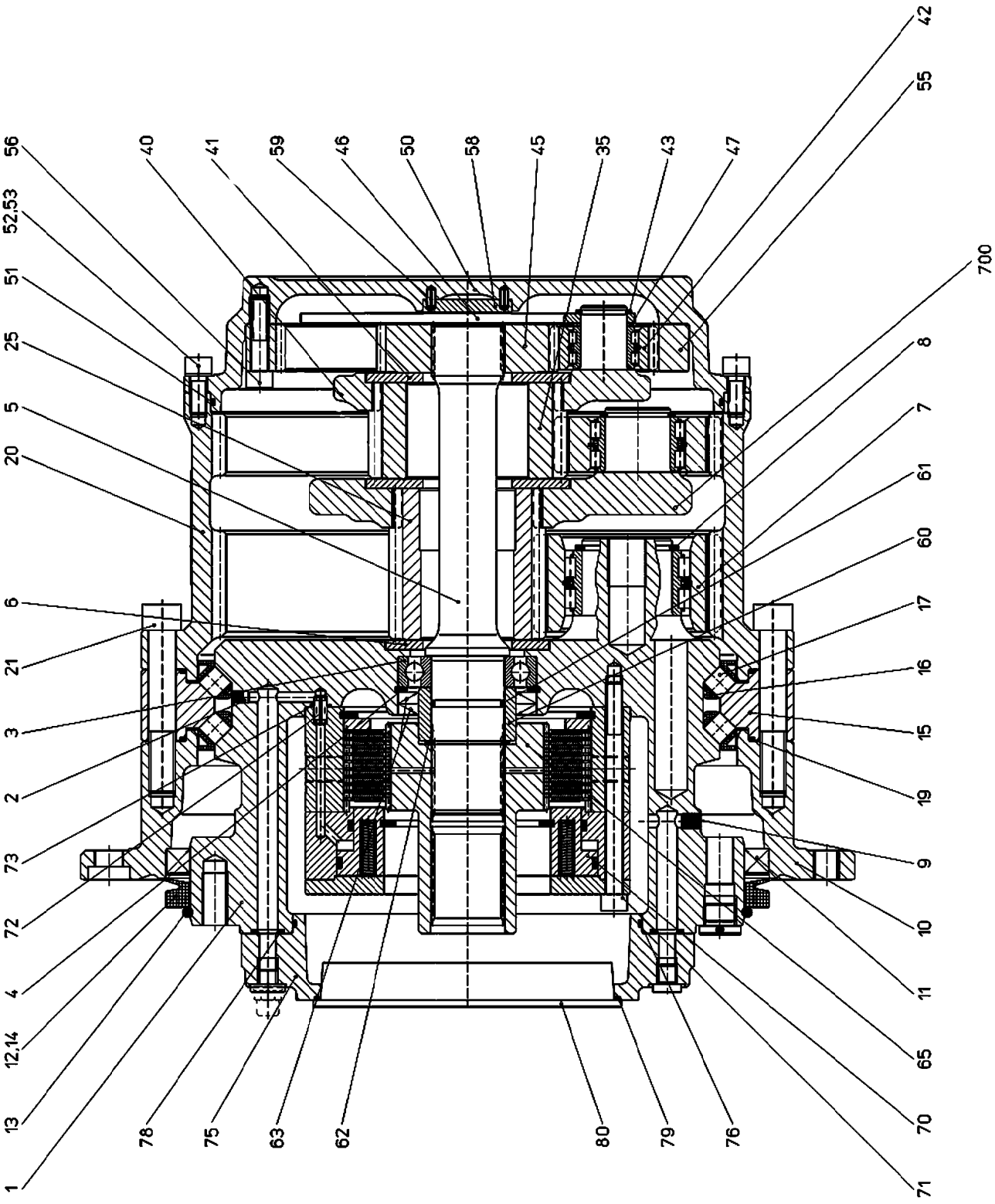
56
52,53
51
25
5
20
6
21
3
2
73
72
4
12,14
13
1
40
41
59
46
50
58
45
35
43
47
42
55
700
8
7
61
60
17
16
15
19
9
10
11
65
70
71
78
75
63
62
80
79
76

Pos.	Item	Quantity	Description	Bezeichnung
1	927745001	1	CONNECTION CARRIER 42CrMo4+QT	ANSCHLUSSTRAEGER
2	738048003	1	SEALING PLUG	DICHTSTOPFEN
3	745159301	1	DEEP GROOVE BALL BEARING DIN 625 62	RILLENKUGELLAGER
4	10171631	1	LOCKING RING DIN 472 85X3 FLZNNC-120H	SICHERUNGSRING
5	927745101	1	DRIVE SHAFT	ANTRIEBSWELLE
6	927601301	1	RETAINING DISK 100X55X6	HALTESCHEIBE
7	927601401	5	PLANET WHEEL	PLANETENRAD
8	400093303	5	LOCKING RING DIN 471 55X3	SICHERUNGSRING
9	761081903	3	SEALING PLUG 9	DICHTSTOPFEN
10	939292301	1	POWER TAKE-OFF FLANGE	ABTRIEBSFLANSCH
11	710054601	1	ROTARY SHAFT LIP SEAL DIN 3760 AS 340X	RADIALWELLENDICHTRING
12	710908701	1	V-RING 350 NBR,60 SHORE	V-RING
13	726458401	1	O-RING 300X6 EPDM 70	O-RING
15	927745301	1	BEARING RING	LAGERRING
16	927514301	38	ROLLER CAGE	ROLLENKAEFIG
17	747006101	114	CYL.ROLLER 14X14	ZYLINDERROLLE
19	726429901	2	O-RING 330X3 NBR 70	O-RING
20	927745401	1	INNER WHEEL Z=74	INNENRAD
21	10001080	24	SOCKET HEAD SCREW ISO 4762 M16X100	ZYLINDERSCHRAUBE
25	927601901	1	SUN WHEEL Z=21 18CrNiMo7-6	SONNENRAD
35	927602901	1	SUN WHEEL Z=28 18CrNiMo7-6	SONNENRAD
40	927608501	1	PLANETARY CARRIER 225 42CrMo4	PLANETENTRAEGER
41	927602801	1	RETAINING DISK 125X55X6	HALTESCHEIBE
42	927608601	3	PLANET WHEEL	PLANETENRAD
43	463000103	3	LOCKING RING DIN 471 28X2	SICHERUNGSRING
45	927608801	1	SUN WHEEL Z=42 18CrNiMo7-6	SONNENRAD
46	927602301	1	THRUST WASHER 205	ANLAUFSCHEIBE
47	422001001	3	SUPPORTING WASHER DIN 988 S 28X40X2	STUETZSCHEIBE
50	927745901	1	SUPPORT FLANGE	STUETZFLANSCH
51	502319101	1	O-RING 300X3 NBR 70	O-RING
52	10415162	12	SOCKET HEAD SCREW ISO 4762 M10X25 8	ZYLINDERSCHRAUBE
53	4229913	12	LOCK WASHER VS 10 ZN8M+PASSIVIERUN	SICHERUNGSSCHEIBE
55	927746101	1	INNER WHEEL Z=90 42CrMo4	INNENRAD
56	11657000	12	SOCKET HEAD SCREW ISO 4762 M10X45 8	ZYLINDERSCHRAUBE
58	927742801	1	WASHER	SCHEIBE
59	10875879	2	DOWEL PIN ISO 8752 5X12 480H SPF	SPANNSTIFT
60	927602501	1	SLEEVE 60X45X33	LAUFRING
61	726455301	1	O-RING 38X3 NBR 70	O-RING
62	429606201	1	SNAP RING 45X1,75	SPRENGRING
63	710062601	2	ROTARY SHAFT LIP SEAL BAB 60X85X7 N	RADIALWELLENDICHTRING
65	927602601	1	MULTI-DISC CARRIER 100	LAMELLENTRAEGER
70	502037201	1	SPRING LOADED MULTI-DISC BRAKE	FEDERDRUCKLAMELLENBREMS
(1)	502807501	1	BRAKE ACTUATING UNIT	BREMSBETAETIGUNGSEINHEIT
(997)	939589501	1	BRAKE MULTI-DISC SET	BREMSLAMELLENSATZ
(998)	939589601	1	BRAKE PACKING SET	BREMSE-DICHTUNGSSATZ
(999)	939589701	1	BRAKE SPRING SET	BREMSFEDERSATZ
71	11320344	12	SOCKET HEAD SCREW ISO 4762 M10X130	ZYLINDERSCHRAUBE
72	432008001	1	DOWEL PIN ISO 8752 8X16 St 480H	SPANNSTIFT
73	10166157	1	O-RING 8X2 NBR90	O-RING
75	927746301	1	MOTOR FLANGE	MOTORFLANSCH
76	761021703	1	O-RING 195X3 NBR 70	O-RING
77	10875565	8	SOCKET HEAD SCREW ISO 4762 M12X40 8	ZYLINDERSCHRAUBE
78	726403401	6	O-RING 15X3 NBR 70	O-RING
79	726453601	1	O-RING 175X3 NBR 70	O-RING
80	779010901	1	CONICAL PLUG	KEGELSTOPFEN
81	7363178	1	SCREW PLUG VSTI M12X1,5 CR6-FREI	VERSCHLUSSSCHRAUBE
82	477510501	3	SCREW PLUG VSTI M10X1 CR6-FREI	VERSCHLUSSSCHRAUBE
83	721114701	1	VENTILATION VALVE	ENTLUEFTUNGSVENTIL
84	779012201	1	BLANKING PLUG	VERSCHLUSSSTOPFEN
86	477511401	2	SCREW PLUG VSTI M20X1,5 CR6-FREI	VERSCHLUSSSCHRAUBE

Pos.	Item	Quantity	Description	Bezeichnung
87	7101030	1	SEALING RING DIN 7603 A12X15,5 Cu	DICHTRING
700	90017588	1	PLANETARY CARRIER ⇨ ❑ 359	PLANETENTRAEGER

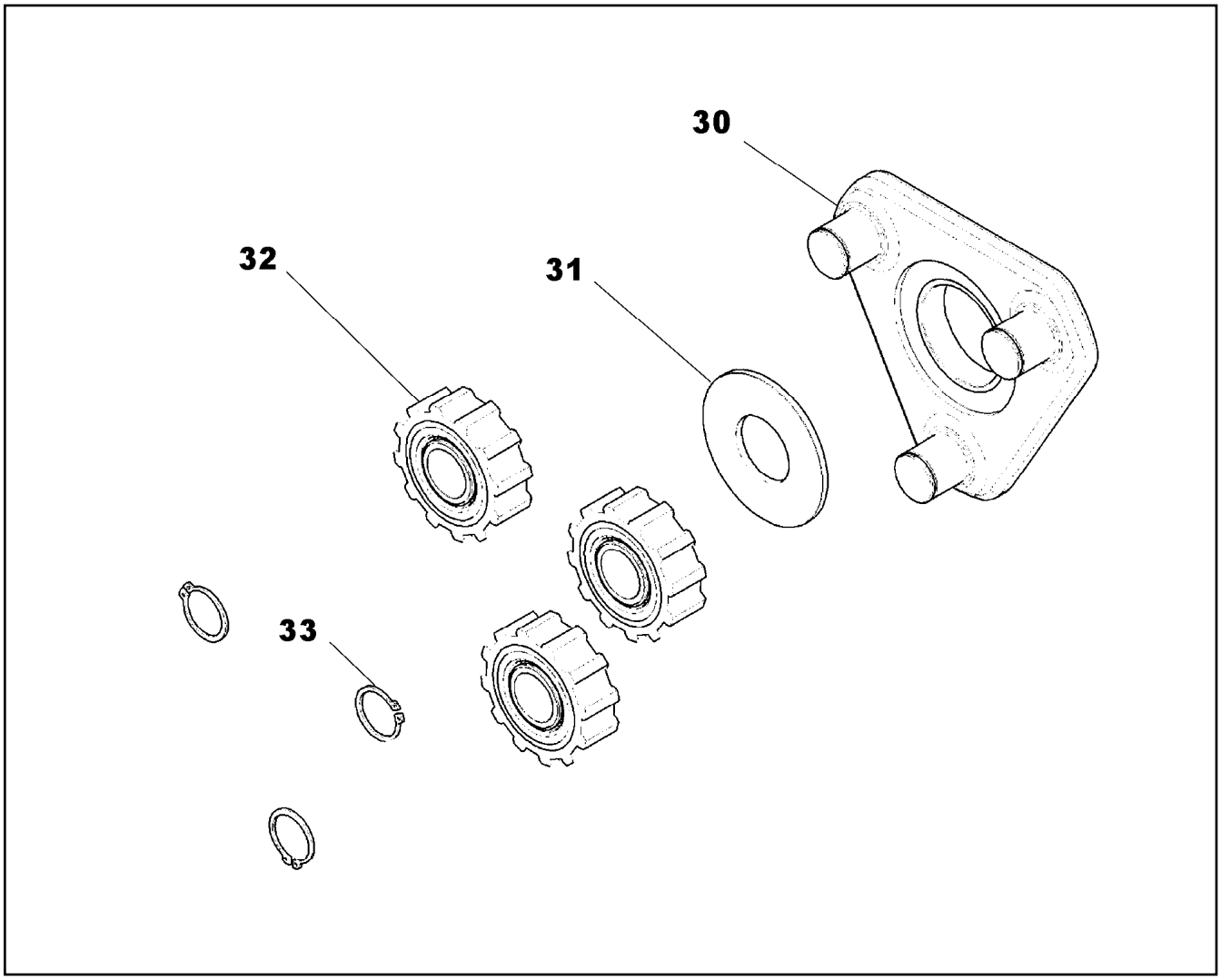

Pos.	Item	Quantity	Description	Bezeichnung
30	927602001	1	PLANETARY CARRIER 275 42CrMo4+QT	PLANETENTRAEGER
31	927602801	1	RETAINING DISK 125X55X6	HALTESCHEIBE
32	927602101	3	PLANET WHEEL	PLANETENRAD
33	400208003	3	LOCKING RING DIN 471 40X2,5	SICHERUNGSRING

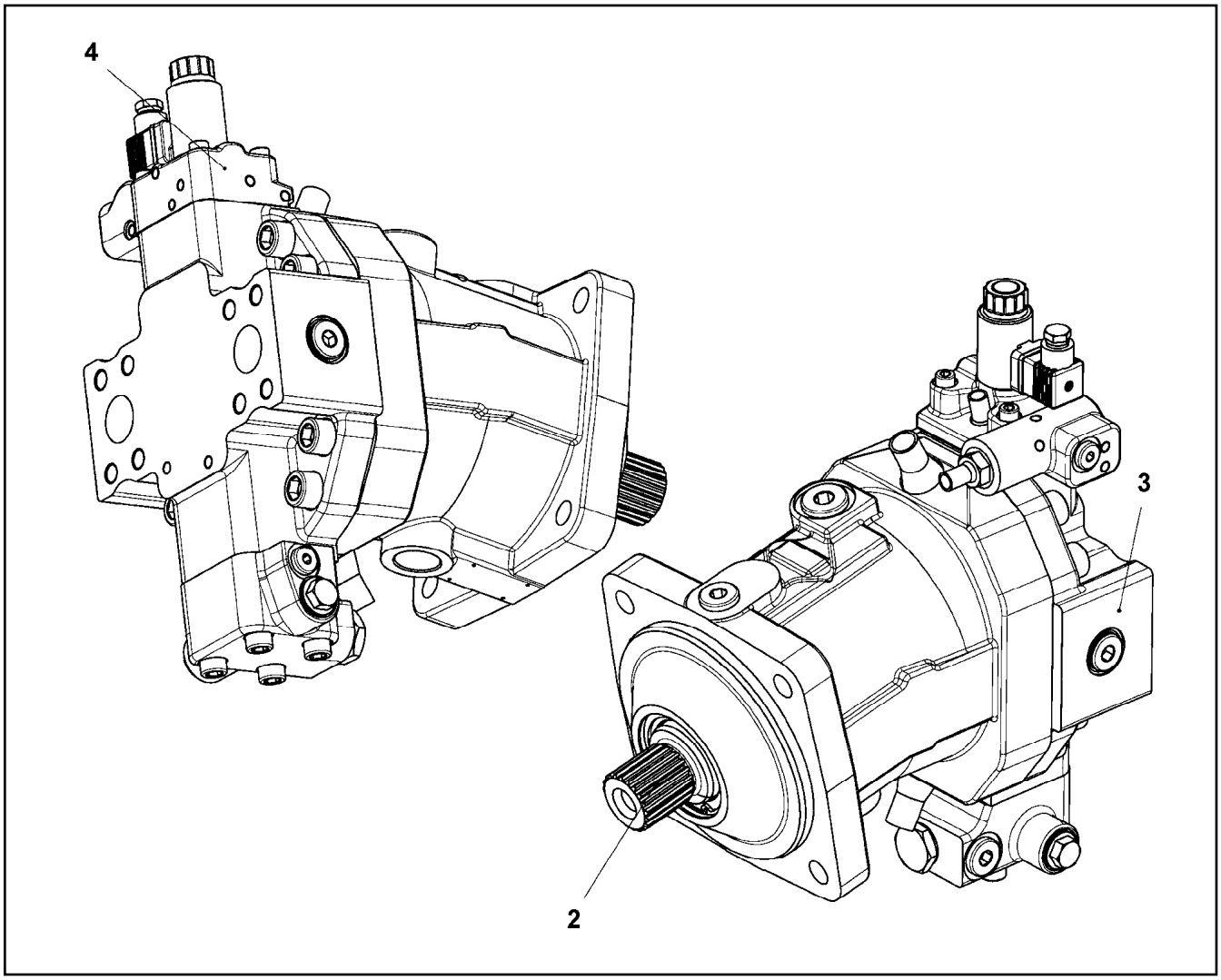

Pos.	Item	Quantity	Description	Bezeichnung
2	11643393	1	DRIVING GEAR	TRIEBWERK
(999)	11643397	1	SEAL KIT	DICHTSATZ
3	11643394	1	CLOSING PLATE	ABSCHLUSSPLATTE
4	11161917	1	CONTROL ELEMENT	STEUERTEIL

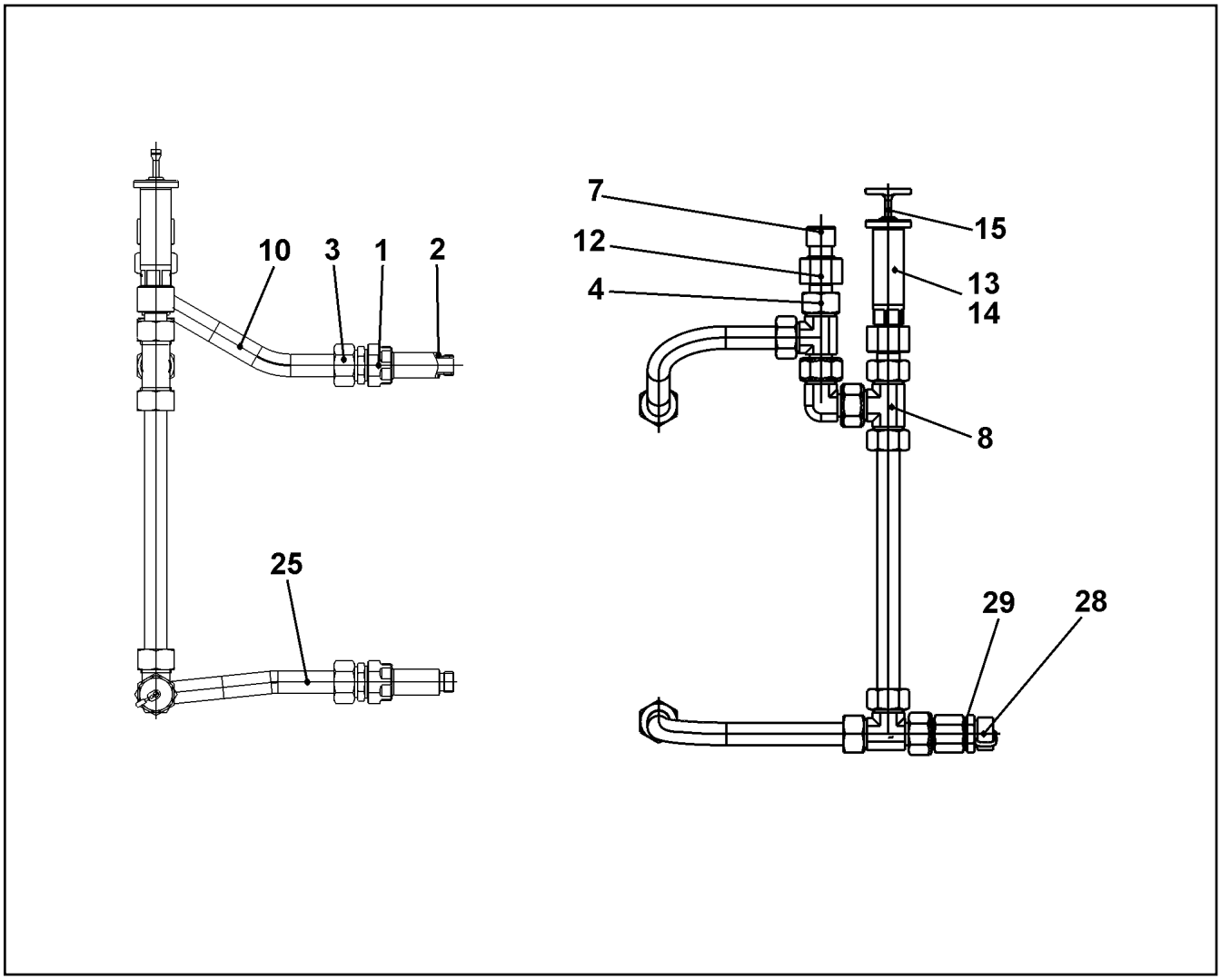

Pos.	Item	Quantity	Description	Bezeichnung
1	939599301	2	THREADED CONNECTION PIECE	GEWINDEANSCHLUSSSTUTZE
2	761022903	2	SEALING RING DIN 3869 20X17,8 NBR	DICHTRING
3	471001308	2	FITTING GE 22L M26X1,5	VERSCHRAUBUNG
4	472004008	2	FITTING EVL16-SR3/4"	VERSCHRAUBUNG
7	7002458	1	VENTILATION UNIT CR6-FREI	BE- UND ENTLUEFTUNGSFILTE
8	470400708	1	FITTING T 22L	VERSCHRAUBUNG
10	968021508	1	PIPE COMPL. 22X2,5X307	ROHR KPL.
12	927586201	2	CONNECTION STUB 11SMnPb30+C	ANSCHLUSSSTUTZEN
13	927501901	1	VENTILATION CONNECTING PIECE	ENTLUEFTUNGSSTUTZEN
14	761022503	1	SEALING RING 19,6X24,3X1,5	DICHTRING
15	927610201	1	OIL DIPSTICK 1 1/8"	OELMESSSTAB
25	968021608	1	PIPE COMPL. 22X2,5X357	ROHR KPL.
28	477705808	1	STOP PLUG VSTIM26X1,5ED A3P	STOPFEN
29	710105908	1	SEALING RING DIN 7603 A27X32X2 CU	DICHTRING

Pos.	Item	Quantity	Description	Bezeichnung
5	10802061	1	WINCH REVOLUTION TRANSDUCER 655360 ⇨ ❑ 363	WINDENDREHGEBER
6	606012608	1	DRIVE FLANGE EDELSTAHL	ANTRIEBSFLANSCH
10	11690044	3	SOCKET HEAD SCREW ISO 4762 M6X12 8.8	ZYLINDERSCHRAUBE

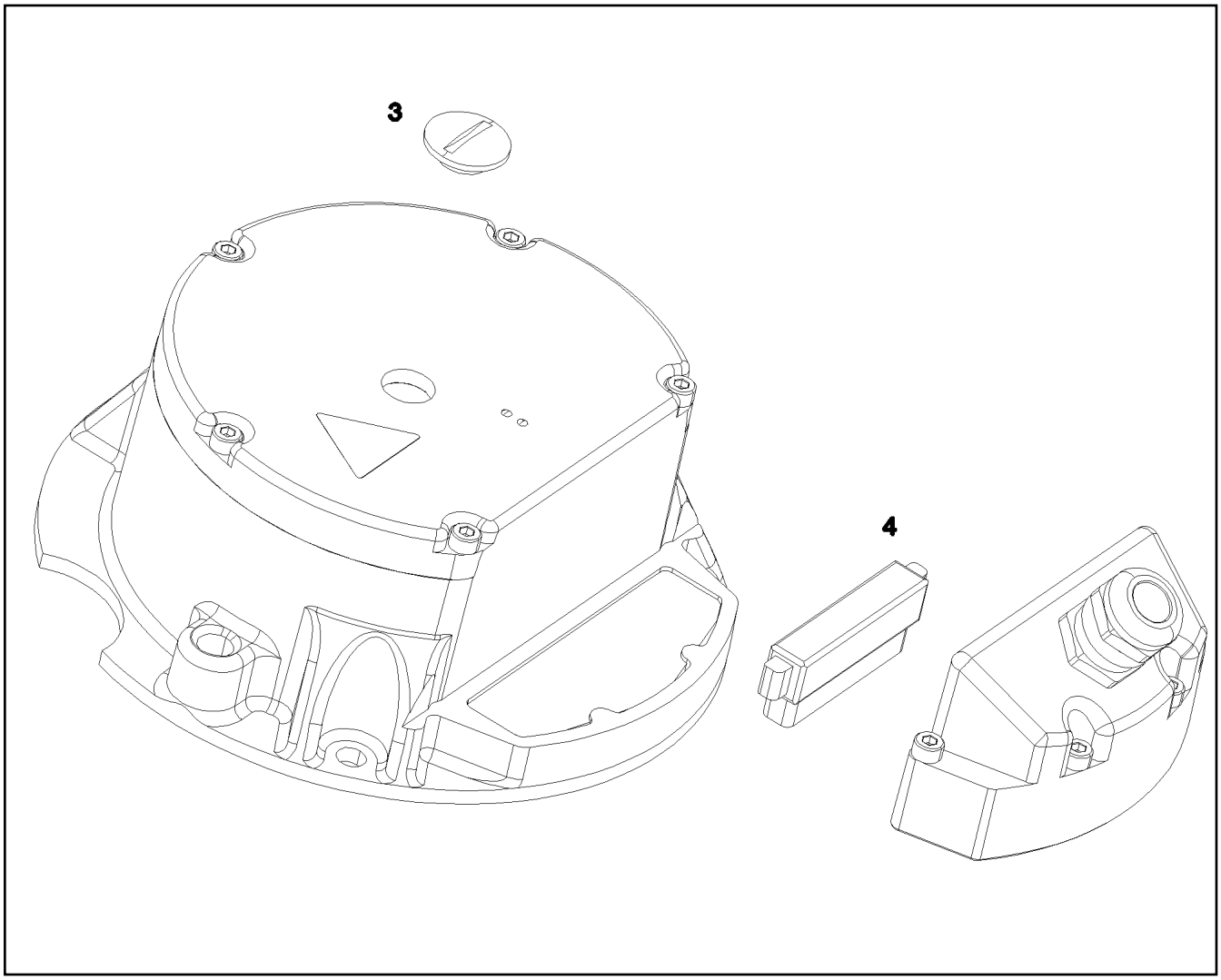

Pos.	Item	Quantity	Description	Bezeichnung
3	11690057	1	SCREW PLUG	VERSCHLUSSSCHRAUBE
4	11690056	1	PLUG 10-POLIG	STECKER

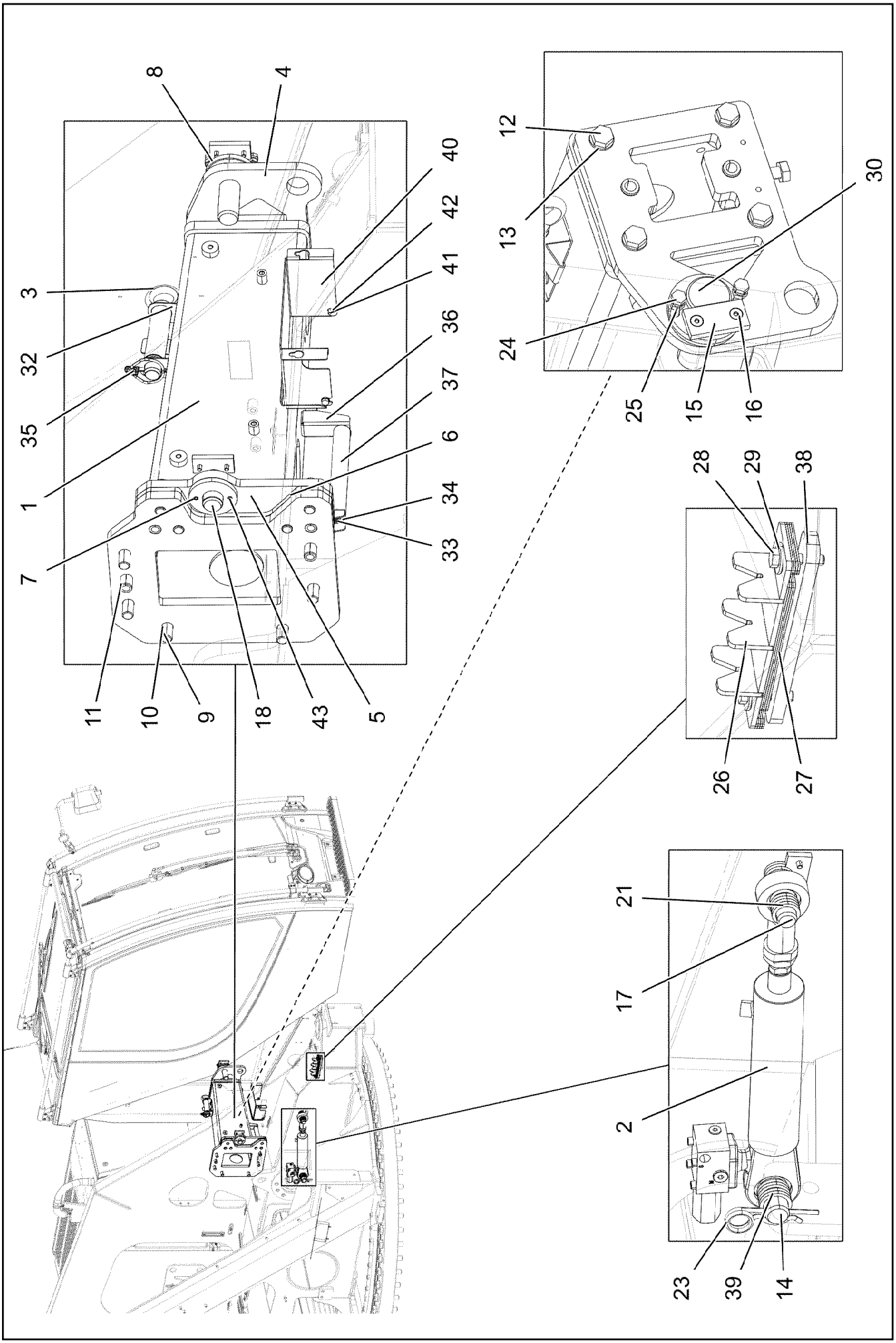

4.12.2020 078257	**etk_en_de 047580 LTR 1220**	❑ 364 (1/2)
LIEBHERR	**CRANE DRIVER CAB ADDITION** **KRANFUEHRERKABINE ANBAU**	**917259908**

Pos.	Item	Quantity	Description	Bezeichnung
1	967985808	1	ARM WELDED RAL 7016 LACKIERT SPF	KABINENARM SCHWK.
2	11214363	1	TILT CYLINDER 50/28-135 SPF ⇨ ❑ 366	KIPPZYLINDER
3	967850808	1	PIN W. HANDLE RAL 3020,SDGL,GT SPF	BOLZEN MIT GRIFF
4	97031535	1	PLATE 15X260X203 S355MC FE//ZNNI8//CN/	BLECH
5	97031536	1	PLATE 15X105X290 S355MC FE//ZNNI8//CN/	BLECH
6	97031537	1	PLATE 8X82X290 S355MC FE//ZNNI8//CN//T	BLECH
7	97028395	2	THRUST WASHER 8X70X70 PA6G	ANLAUFSCHEIBE
8	97028396	1	ADJUSTING DISK 8X74X74 S355MC FE//ZN	EINSTELLSCHEIBE
9	406603108	9	HEX SCREW ISO 4017 M16X45 10.9 FLZN SP	SECHSKANTSCHRAUBE
10	10180180	9	WASHER EN 14399-6 16 300-370HV-ST FLZ	SCHEIBE
11	10876421	6	DOWEL PIN ISO 8752 18X45 480H SPF	SPANNSTIFT
12	11002727	5	HEX SCREW ISO 4017 M12X40 10.9 FLZN SP	SECHSKANTSCHRAUBE
13	10289804	4	WASHER ISO 7089 12 300HV FLZN SPF	SCHEIBE
14	453032708	1	PIN ISO 2341 B30X95X85 35NICRMOV125	BOLZEN
15	931185608	3	AXLE HOLDER 8X30X60 S235JR	ACHSHALTER
16	10875551	6	COUNTERSUNK SCREW DIN 7991 M6X16 8	SENKSCHRAUBE
17	97032162	1	PIN 35.0X92 35NICRMOV125 SPF	BOLZEN
18	97008063	1	PIN 35.0X65 35NICRMOV125 GASN. SPF	BOLZEN
21	97040355	8	WASHER 5X35X35 S355MC FE//ZNNI8//CN//T	SCHEIBE
23	433206408	1	SPRING PLUG 6 ZINC COATED	FEDERSTECKER
24	11826527	2	HEX SCREW ISO 4017 M8X30 8.8 480H SPF	SECHSKANTSCHRAUBE
25	11693875	2	HEX NUT ISO 4032 M8 8 480H SPF	SECHSKANTMUTTER
26	965255408	1	SUPPORT TRESTLE FE//ZNNI8//CN//T0	AUFLAGEBOCK
27	976673908	4	PLATE 1.5X170X50 DC01 FE//ZNNI8//CN//T0	BLECH
28	11692827	2	HEX SCREW ISO 4017 M8X35 8.8 480H SPF	SECHSKANTSCHRAUBE
29	11140469	2	WASHER ISO 7093-1 8 200HV 480H SPF	SCHEIBE
30	97031434	1	PIN 45.0X121 35NICRMOV125 SPF	BOLZEN
32	97031454	1	PLATE 1.5X219X129 DC01 FE//ZNNI8//CN//T	BLECH
33	11690044	6	SOCKET HEAD SCREW ISO 4762 M6X12 8.8	ZYLINDERSCHRAUBE
34	10875648	6	WASHER ISO 7093-1 6 200HV 480H SPF	SCHEIBE
35	10875870	1	SAFETY PLUG W HINGE-LID 6X42X5,5X32 4	SICHERHEITSKLAPPSTECKER
36	97031462	2	PLATE 2X77X96 DC01 FE//ZNNI8//CN//T0	BLECH
37	97031463	1	ROLLER 25X180 ALCUMGPB	ROLLE
38	97051989	1	THREADED PLATE 10X180X30 S355MC FE//	GEWINDEPLATTE
39	97040356	6	WASHER 5X40X40 S355MC FE//ZNNI8//CN//T	SCHEIBE
40	97033190	1	PLATE 1.5X322X156 DC01 RAL 7016,SDGL,G	BLECH
41	11642497	2	HEX SCREW ISO 4017 M6X10 8.8 480H SPF	SECHSKANTSCHRAUBE
42	10197771	2	WASHER ISO 7089 6 200HV ZNNI-480H SPF	SCHEIBE
43	10876162	2	DOWEL PIN ISO 8752 6X20 480H SPF	SPANNSTIFT

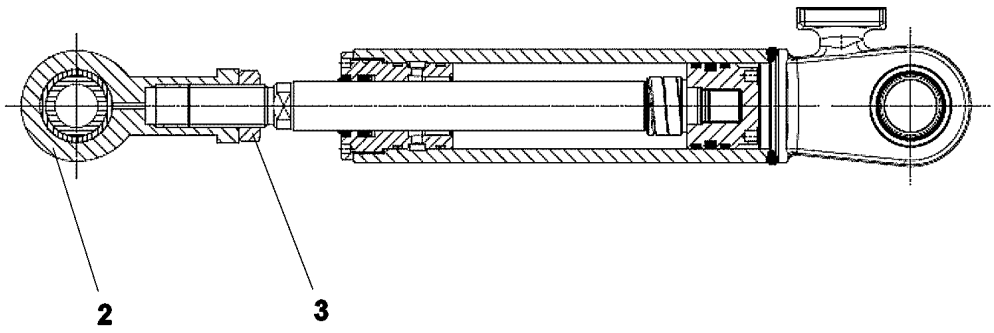

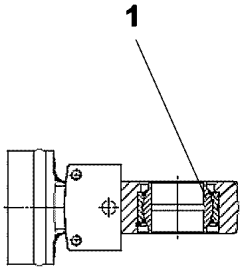

Pos. 999

Pos.	Item	Quantity	Description	Bezeichnung
1	11691375	1	SPHERICAL BEARING	GELENKLAGER
2	11691377	1	PIVOT HEAD	GELENKKOPF
3	411703308	1	HEX NUT ISO 8675 M24X2 05 A3C	SECHSKANTMUTTER
999	10491695	1	DS HYDRO CYLINDER	DS HYDROZYLINDER

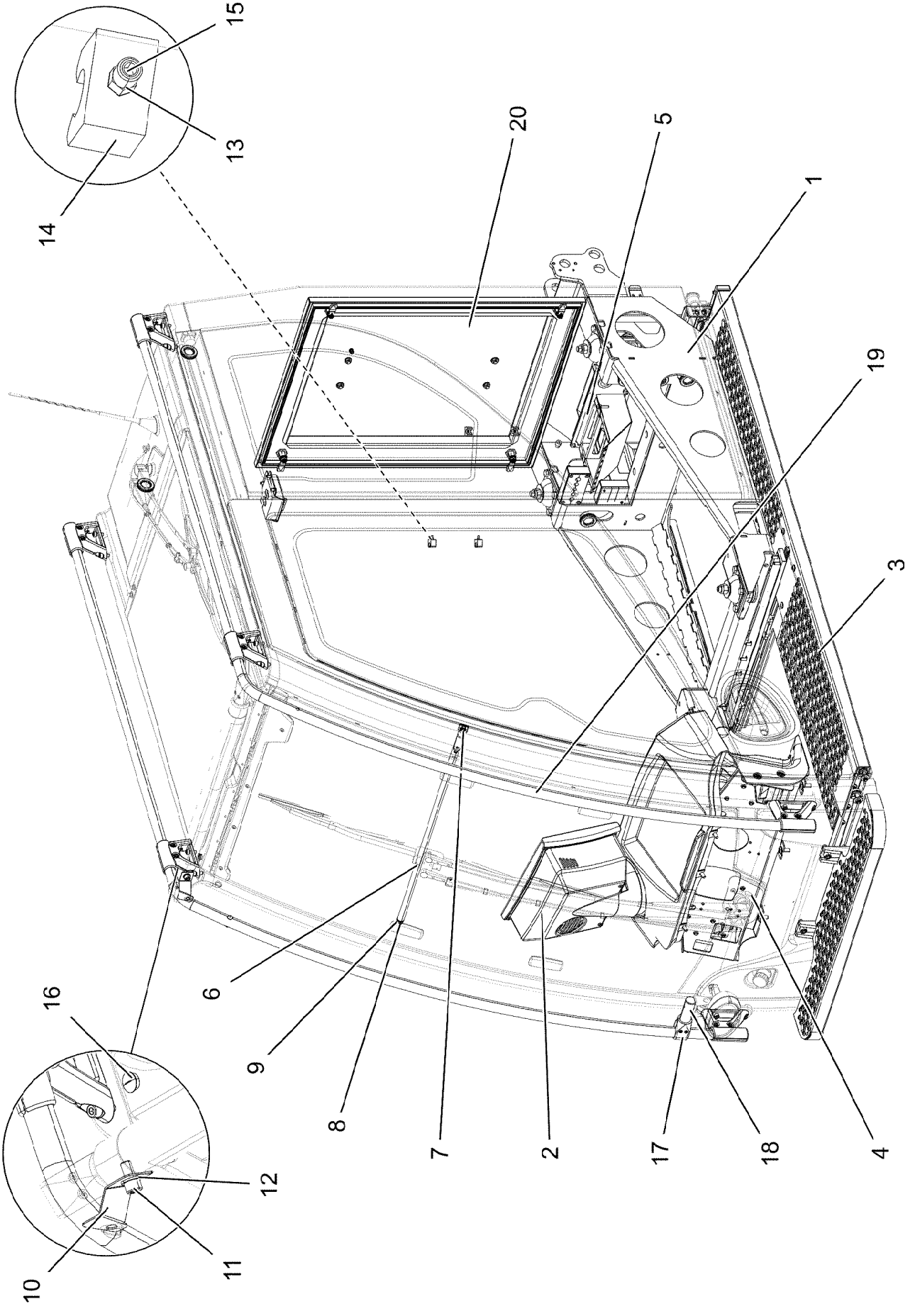
15
13
14
20
5
1
19
3
6
9
8
7
2
17
18
4
16
12
11
10

Pos.	Item	Quantity	Description	Bezeichnung
1	967986308	1	BEARING INSTALLATION ⇨ ❑ 369	LAGERUNG EINBAU
2	96015921	1	OPERATING ELEMENT INSTALLATION ⇨ ❑ 370	BEDIENELEMENTE EINBAU
3	916177508	1	STEP CPL. ⇨ ❑ 371	TRITT KPL.
4	96025887	1	PEDAL CANTILEVER INSTALLATION ⇨ ❑ 373	PEDALTRAEGER EINBAU
5	916170808	1	CABLE INLET ⇨ ❑ 374	KABELEINFUEHRUNG
6	966662508	1	PIPE WELDED SCHWARZ PULVERB.	ROHR SCHWK.
7	10429635	1	BUTTON HEAD SCREW ISO 7380-2 M8X16	HALBRUNDKOPFSCHRAUBE
8	11690048	1	HEX SCREW ISO 4017 M8X12 8.8 480H SPF	SECHSKANTSCHRAUBE
9	10289803	1	WASHER ISO 7089 8 300HV 480H SPF	SCHEIBE
10	97015722	1	PLATE 1.5X44X97 X5CRNI18-10	BLECH
11	404293213	1	SOCKET HEAD SCREW ISO 4762 M10X20 A2	ZYLINDERSCHRAUBE
12	420001114	1	WASHER ISO 7089 10 200HV-A4	SCHEIBE
13	413006208	4	BLIND RIVET NUT M4 K=1,0-3,0	BLINDNIETMUTTER
14	602116008	4	LATCH CLAMP	RIEGELKLEMME
15	11691539	4	SOCKET HEAD SCREW ISO 4762 M4X10 8.8	ZYLINDERSCHRAUBE
16	602424908	2	SCREW PLUG M16X1,5 MS	VERSCHLUSSSCHRAUBE
17	10285701	1	TEE 30 G-ALMG TROWALPOLIERT	T-STUECK
(1)	10875588	2	SOCKET HEAD SCREW ISO 4762 M6X25 8.8	ZYLINDERSCHRAUBE
18	97011246	1	AXLE 30.0X95 S355J2C+C FE//ZNNI8//CN//T	ACHSE
19	916162808	1	RELING ⇨ ❑ 376	RELING
20	968514508	1	INSTALLATION SWITCH CAB. COVER ⇨ ❑ 378	SCHALTSCHRANKDECKEL EIN

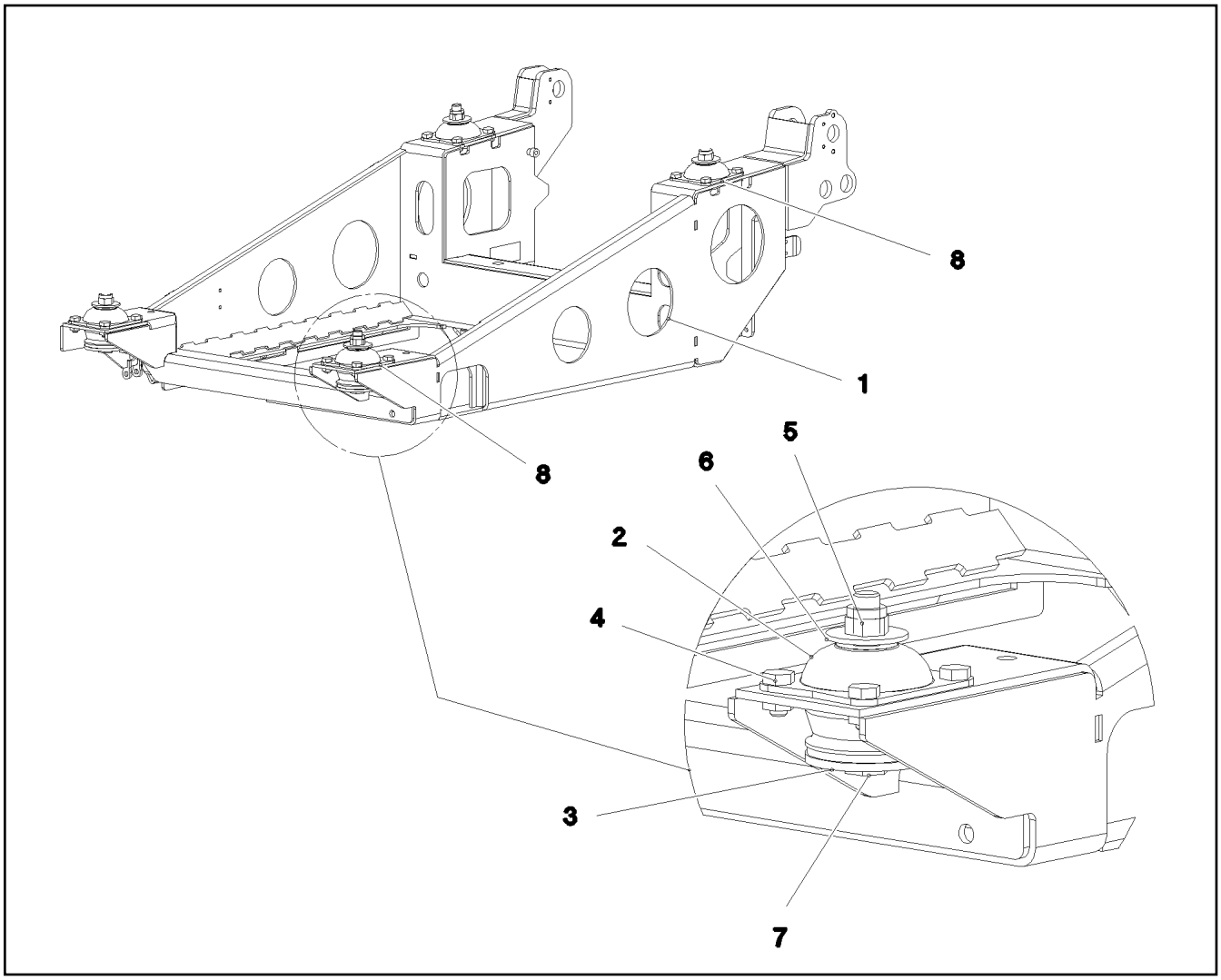

Pos.	Item	Quantity	Description	Bezeichnung
1	967986408	1	SUPPORT FRAME RAL 7016 LACKIERT SPF	TRAGRAHMEN
2	10291989	4	CONICAL MOUNT 70NR11	KONUSLAGER
3	10875905	4	LIMIT STOP RING 16,5X75X5 ST FLZN SPF	ANSCHLAGSCHEIBE
4	10197730	16	HEX SCREW ISO 4017 M10X20 8.8 ZNNI-480	SECHSKANTSCHRAUBE
5	10875609	4	HEX NUT DIN 985 M16 8 FLZN SPF	SECHSKANTMUTTER
6	4000809	4	WASHER ISO 7093-1 16 300HV FLZN	SCHEIBE
7	10875797	4	HEX SCREW ISO 4014 M16X100 8.8 FLZN SP	SECHSKANTSCHRAUBE
8	97081505	2	PLATE 3X105X91 X5CRNI18-10	BLECH

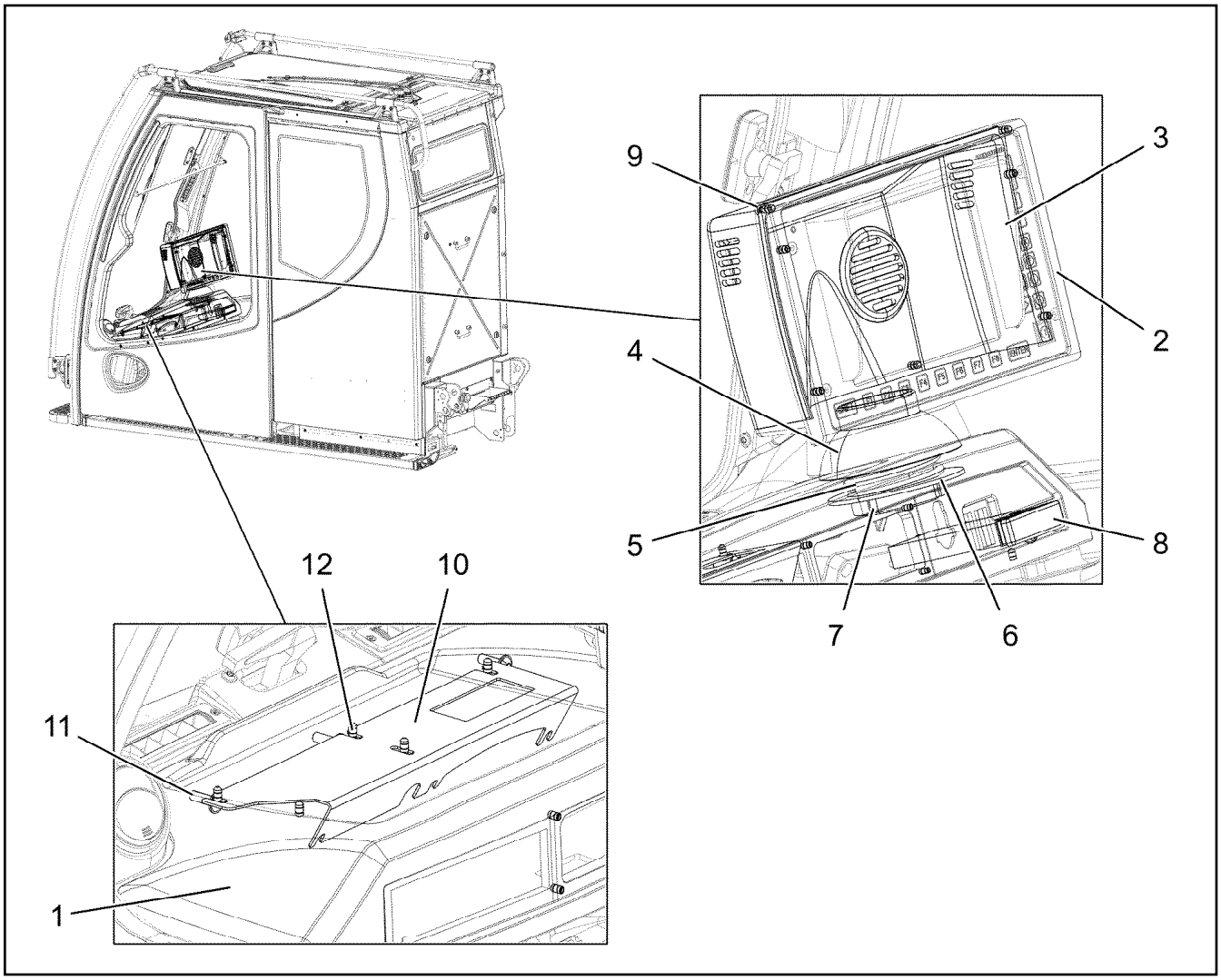

Pos.	Item	Quantity	Description	Bezeichnung
1	96015926	1	MONITOR SUPPORT 162X765X328 PUR SP	MONITORTRAEGER
2	963257908	1	MONITOR HOUSING GLUED SPF	MONITORGEHAEUSE GEKLEBT
3	979207008	1	PANELLING MONITOR HOUSING ABS SPF	VERKLEIDUNG MONITORGEHAE
4	975040308	1	BALL ELEMENT PA6G SPF	KUGELELEMENT
5	10297691	1	PRESSURE SPRING 8X92X50 FEDERSTAHL	DRUCKFEDER
6	975208408	1	PLATE 4X138X138 S315MC FE//ZNNI8//CN//T	BLECH
7	241047802	1	SLOTTED NUT DIN 1804 M80X2 H	NUTMUTTER
8	10291999	1	CUP HOLDER	BECHERHALTER
9	11658059	4	PAN-HEAD SCREW ISO 7045 M5X12 4.8 480	FLACHKOPFSCHRAUBE
10	97003805	1	PLATE 2X381X148 DC01 FE//ZNNI8//CN//T0	BLECH
11	10301319	5	BUTTON HEAD SCREW ISO 7380-2 M8X25 A	HALBRUNDKOPFSCHRAUBE
12	11697855	4	BUTTON HEAD SCREW ISO 7380-2 M5X8 0	HALBRUNDKOPFSCHRAUBE

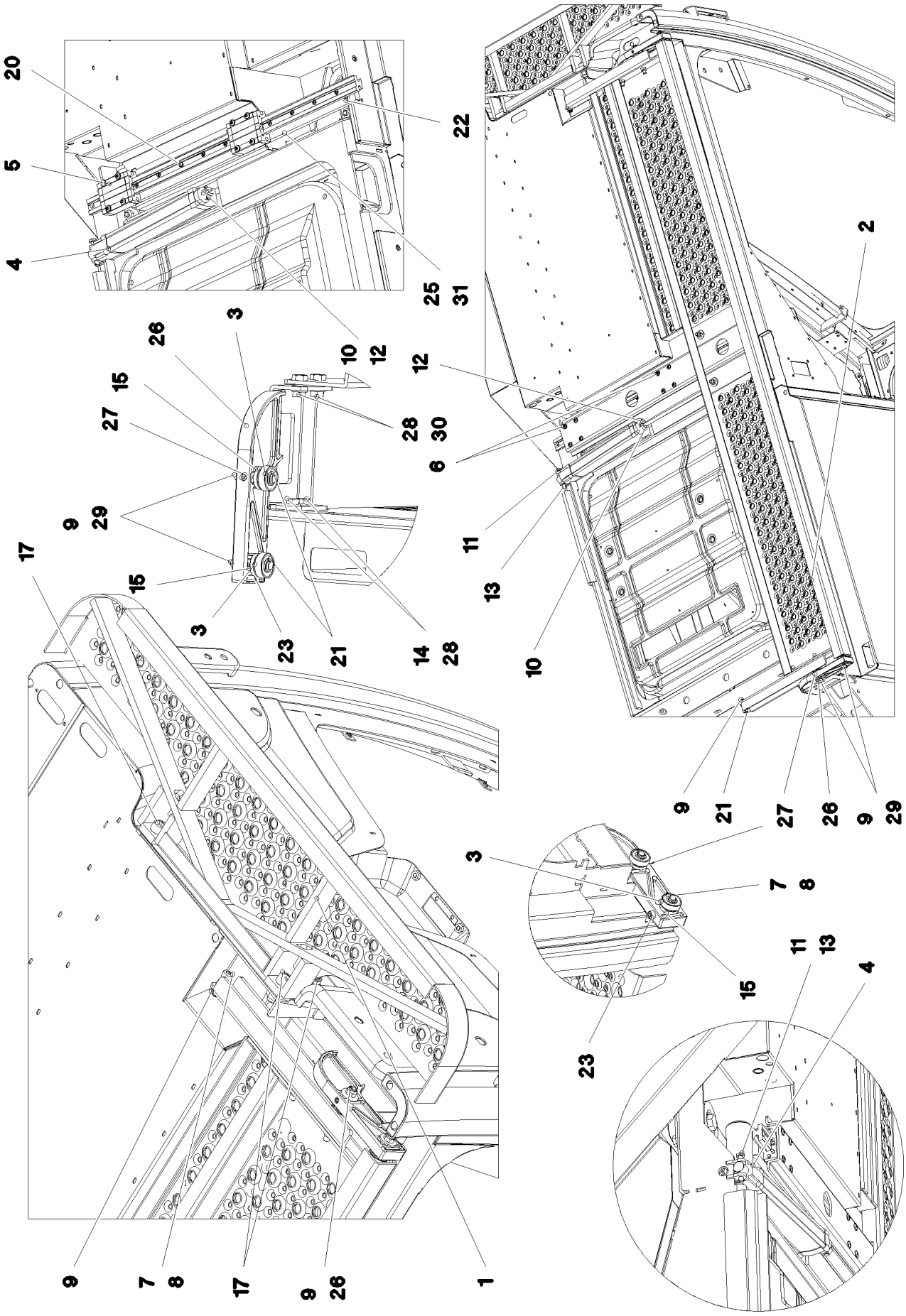

4.12.2020 068847 LIEBHERR	**etk_en_de 047580 LTR 1220** **STEP CPL.** **TRITT KPL.**	❑ 371 (1/2) **916177508**

Pos.	Item	Quantity	Description	Bezeichnung
1	966270808	1	TREAD IN FRONT SPF	TRITT VORN
2	966269808	1	SIDE STEP 1818X747X45	TRITT SEITLICH
(1)	966270208	1	TREAD 1818X290X43 SPF	TRITT
(2)	97001318	1	PLATE 4X713X228 X5CRNI18-10	BLECH
(3)	975685808	1	PLATE 5X380X79 X5CRNI18-10	BLECH
(4)	975683808	1	PLATE 5X380X79 X5CRNI18-10	BLECH
(5)	11140469	4	WASHER ISO 7093-1 8 200HV 480H SPF	SCHEIBE
(6)	10875486	11	BUTTON HEAD SCREW AEHNL.ISO 7380-2	HALBRUNDKOPFSCHRAUBE
(7)	10875614	11	HEX NUT DIN 985 M8 8 480H SPF	SECHSKANTMUTTER
3	10294494	4	DEEP GROOVE BALL BEARING DIN 625 S6	RILLENKUGELLAGER
4	10292008	1	ELECTRIC CYLINDER 24V	ELEKTROZYLINDER
5	11007589	1	LINEAR SLIDEWAY SYSTEM	LINEARGLEITFUEHRUNGSSYS
6	10412853	8	BUTTON HEAD SCREW AEHNL.ISO 7380-2	HALBRUNDKOPFSCHRAUBE
7	510737408	2	HEX NUT ISO 4032 M8 A2-70	SECHSKANTMUTTER
8	404230208	2	SOCKET HEAD SCREW ISO 4762 M8X30 A2	ZYLINDERSCHRAUBE
9	411903108	6	HEX NUT DIN 985 M8 A2-70	SECHSKANTMUTTER
10	10875678	1	PIN ISO 2341 B6X25X22 ST 480H SPF	BOLZEN
11	451210308	1	PIN DIN 1435 8X50X47 ST.50 FE//ZN20//C	BOLZEN
12	10875872	1	SPLIT PIN ISO 1234 1X14 ST 480H SPF	SPLINT
13	10180340	1	SPLIT PIN ISO 1234 1,6X14 A2	SPLINT
14	11690048	2	HEX SCREW ISO 4017 M8X12 8.8 480H SPF	SECHSKANTSCHRAUBE
15	974922808	4	PIN 25.0X50 42CRMO4+QT	BOLZEN
17	404294613	4	SOCKET HEAD SCREW ISO 4762 M12X30 A2	ZYLINDERSCHRAUBE
20	10875583	11	SOCKET HEAD SCREW ISO 4762 M5X20 8.8	ZYLINDERSCHRAUBE
21	12100338	4	LOCKING RING DIN 471 9X1 480H SPF	SICHERUNGSRING
22	10875598	5	SOCKET HEAD SCREW ISO 4762 M8X20 8.8	ZYLINDERSCHRAUBE
23	11820284	2	SOCKET HEAD SCREW ISO 4762 M6X30 8.8	ZYLINDERSCHRAUBE
25	97001317	1	PROFILE 667X50X12 ALMGSI0.5	PROFIL
26	967307008	1	PLATFORM HOLDING REAR RAL 7016,SDGL	PODESTHALTERUNG HINTEN
27	510753308	2	GRUB SCREW ISO 4026 M6X35 45H	GEWINDESTIFT
28	10289803	4	WASHER ISO 7089 8 300HV 480H SPF	SCHEIBE
29	421861405	4	WASHER ISO 7093-1 8 200HV-A2	SCHEIBE
30	11651612	2	HEX SCREW ISO 4017 M8X16 8.8 480H SPF	SECHSKANTSCHRAUBE
31	97016752	1	PLATE 2X50X559 X5CRNI18-10	BLECH

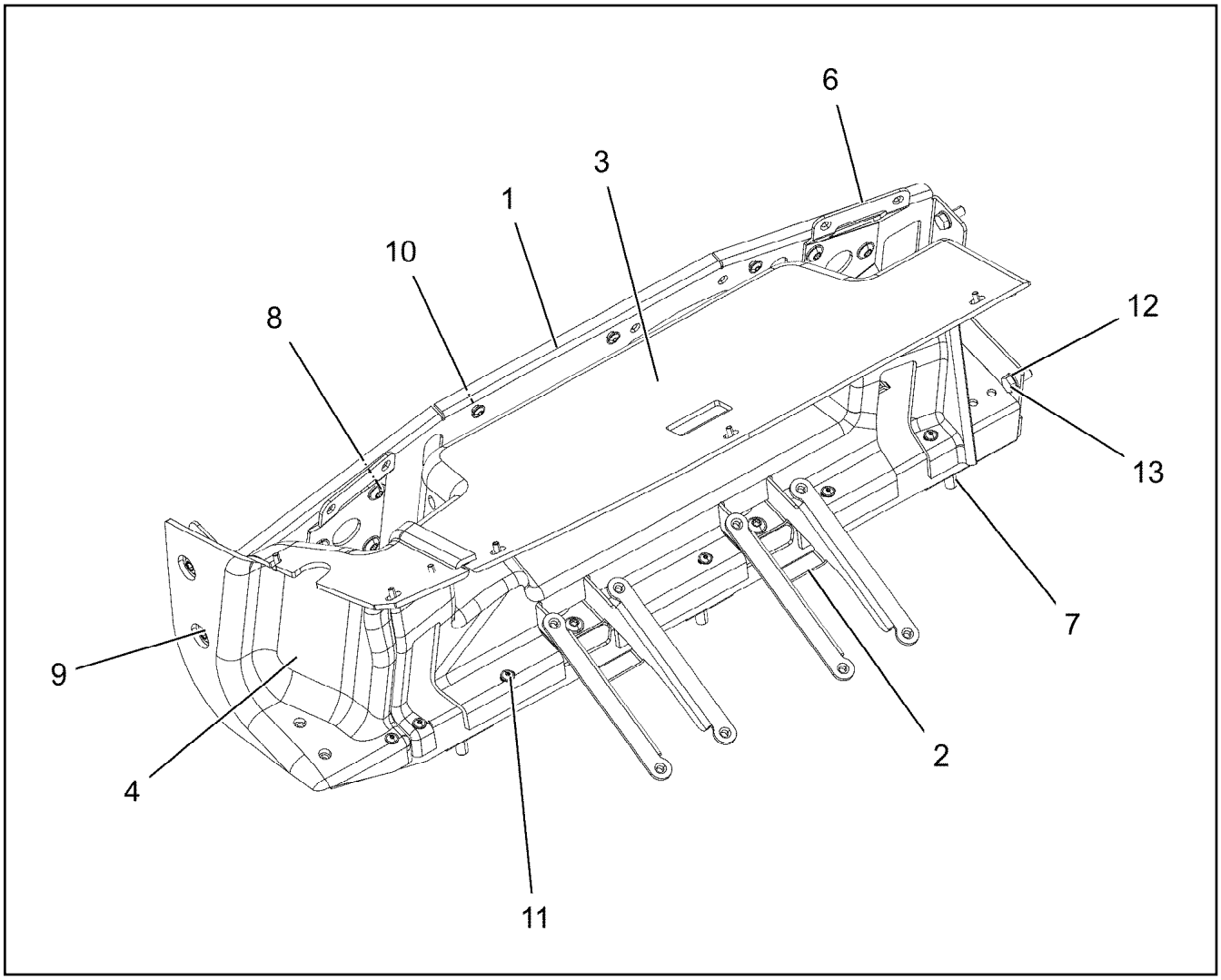

Pos.	Item	Quantity	Description	Bezeichnung
1	966629308	1	PLATE WELDED FE//ZNNI8//CN//T0	BLECH SCHWK.
2	974680008	2	PLATE 3X295X159 S355MC FE//ZNNI8//CN//T	BLECH
3	97105652	1	PANELLING PEDAL 258X599X279 ABS SPF	VERKLEIDUNG PEDALE
4	97089358	1	PANELLING PEDAL 315X118X279 ABS SPF	VERKLEIDUNG PEDALE
6	97081862	2	PLATE 3X193X93 S355MC FE//ZNNI8//CN//T	BLECH
7	10875448	3	BUTTON HEAD SCREW ISO 7380-2 M10X25	HALBRUNDKOPFSCHRAUBE
8	12102696	10	BUTTON HEAD SCREW ISO7380-2 M8X10 0	HALBRUNDKOPFSCHRAUBE
9	10875475	2	BUTTON HEAD SCREW AEHNL.ISO 7380-2	HALBRUNDKOPFSCHRAUBE
10	10875468	3	BUTTON HEAD SCREW AEHNL.ISO 7380-2	HALBRUNDKOPFSCHRAUBE
11	12229337	14	BUTTON HEAD SCREW ISO 7380-2 M5X12	HALBRUNDKOPFSCHRAUBE
12	10289803	3	WASHER ISO 7089 8 300HV 480H SPF	SCHEIBE
13	11651767	3	HEX SCREW ISO 4017 M8X20 8.8 480H SPF	SECHSKANTSCHRAUBE

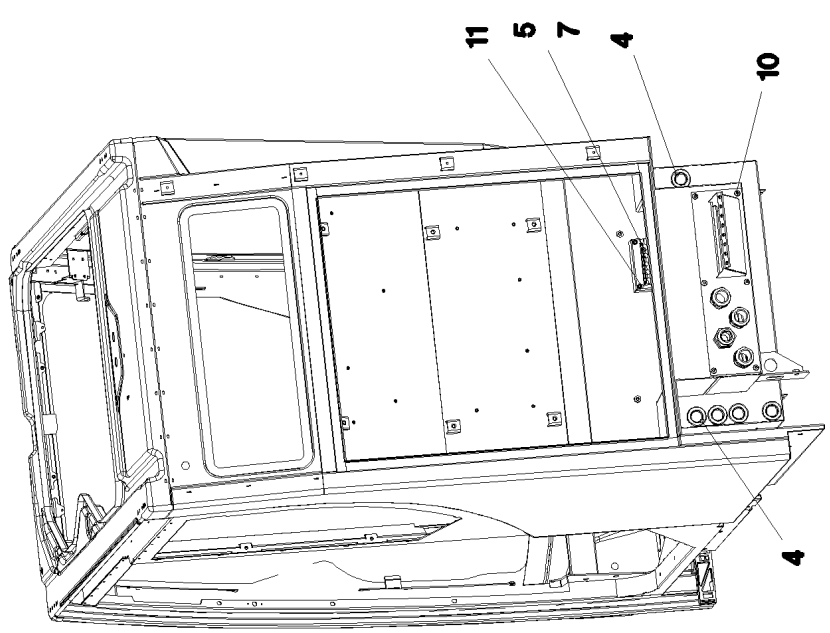
11
5
7
4
10
4

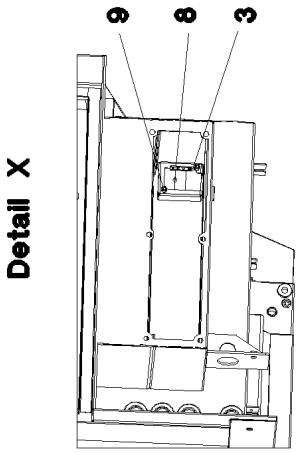
Detail X
9
8
3

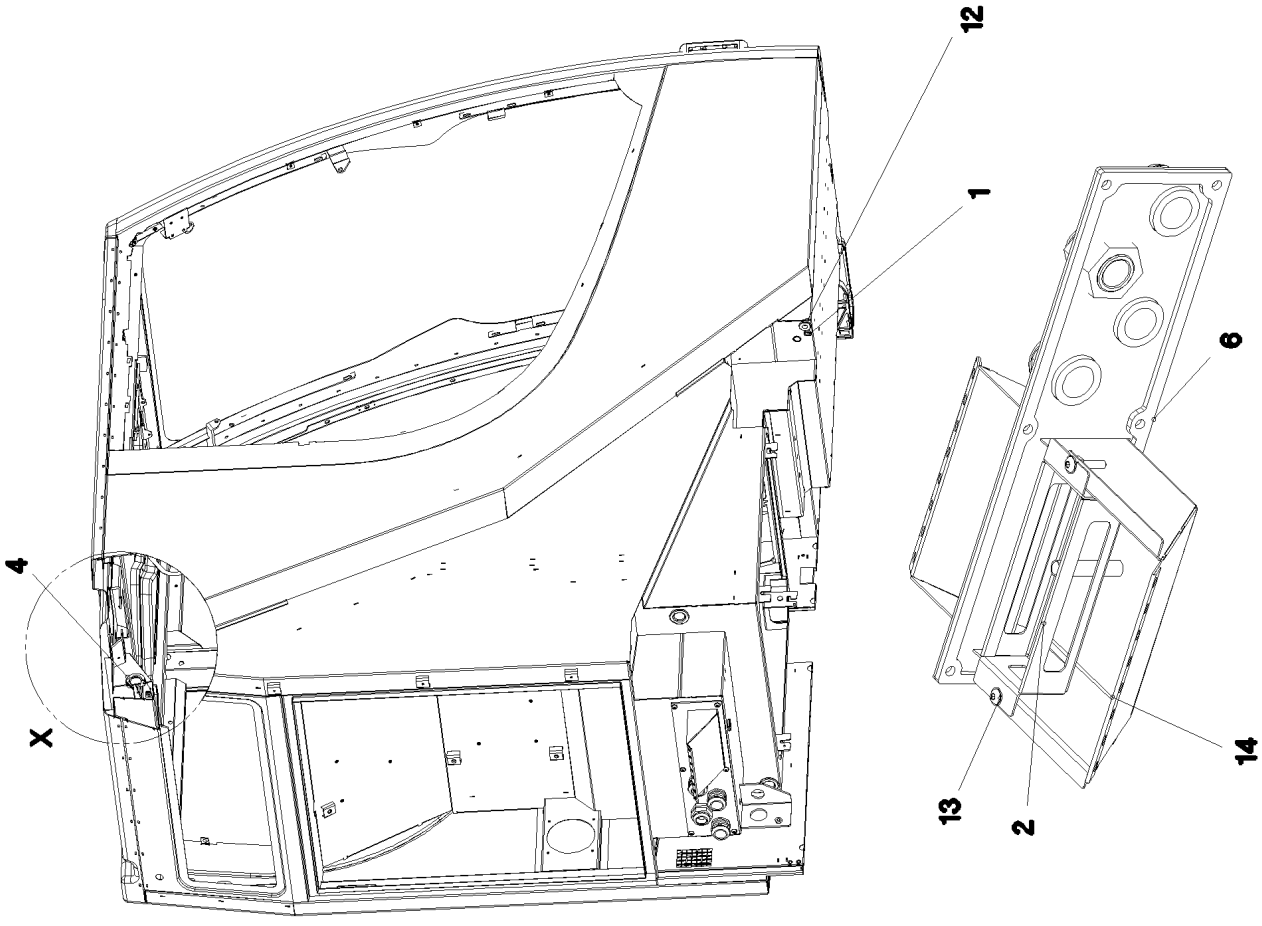
12
1
6
4
X
14
13
2

Pos.	Item	Quantity	Description	Bezeichnung
1	602701308	1	GROMMET 10/12/17,5 PVC BK	DURCHFUEHRUNGSTUELLE
2	97000735	1	PLATE 1.5X290X162 DC01 FE//ZNNI8//CN//T	BLECH
3	97002645	1	PLATE 1.5X131X117 DC01 FE//ZNNI8//CN//T	BLECH
4	553027808	7	DIAPHRAGM SOCKET 29/37/44	MEMBRANTUELLE
5	976094108	1	PLATE 1.5X174X114 DC01 RAL 7037 SPF	BLECH
6	97012288	1	SEAL 439X120X5 POLYALEFIN	DICHTUNG
7	976094308	1	SEAL 120X60X 30 SCHWARZ	DICHTUNG
8	976193208	1	SEAL 78X64 30	DICHTUNG
9	10875590	2	SOCKET HEAD SCREW ISO 4762 M6X35 8.8	ZYLINDERSCHRAUBE
10	10412851	6	BUTTON HEAD SCREW AEHNL.ISO 7380-2	HALBRUNDKOPFSCHRAUBE
11	11820284	4	SOCKET HEAD SCREW ISO 4762 M6X30 8.8	ZYLINDERSCHRAUBE
12	602600808	2	CABLE COUPLING BOX 12/21/25 EDPM 60	KABELMUFFE
13	10410198	2	BUTTON HEAD SCREW ISO 7380-2 M6X30 A	HALBRUNDKOPFSCHRAUBE
14	966241008	1	TRAY RAL 7016 SPF	WANNE SCHWK.
15	97071962	1	PLATE 2X156X137 DC01 RAL 7037 SPF	BLECH
16	97071963	1	SEAL 85.5X89X30 ZP-30 S	DICHTUNG
17	10875488	3	BUTTON HEAD SCREW ISO 7380-2 M6X12 0	HALBRUNDKOPFSCHRAUBE

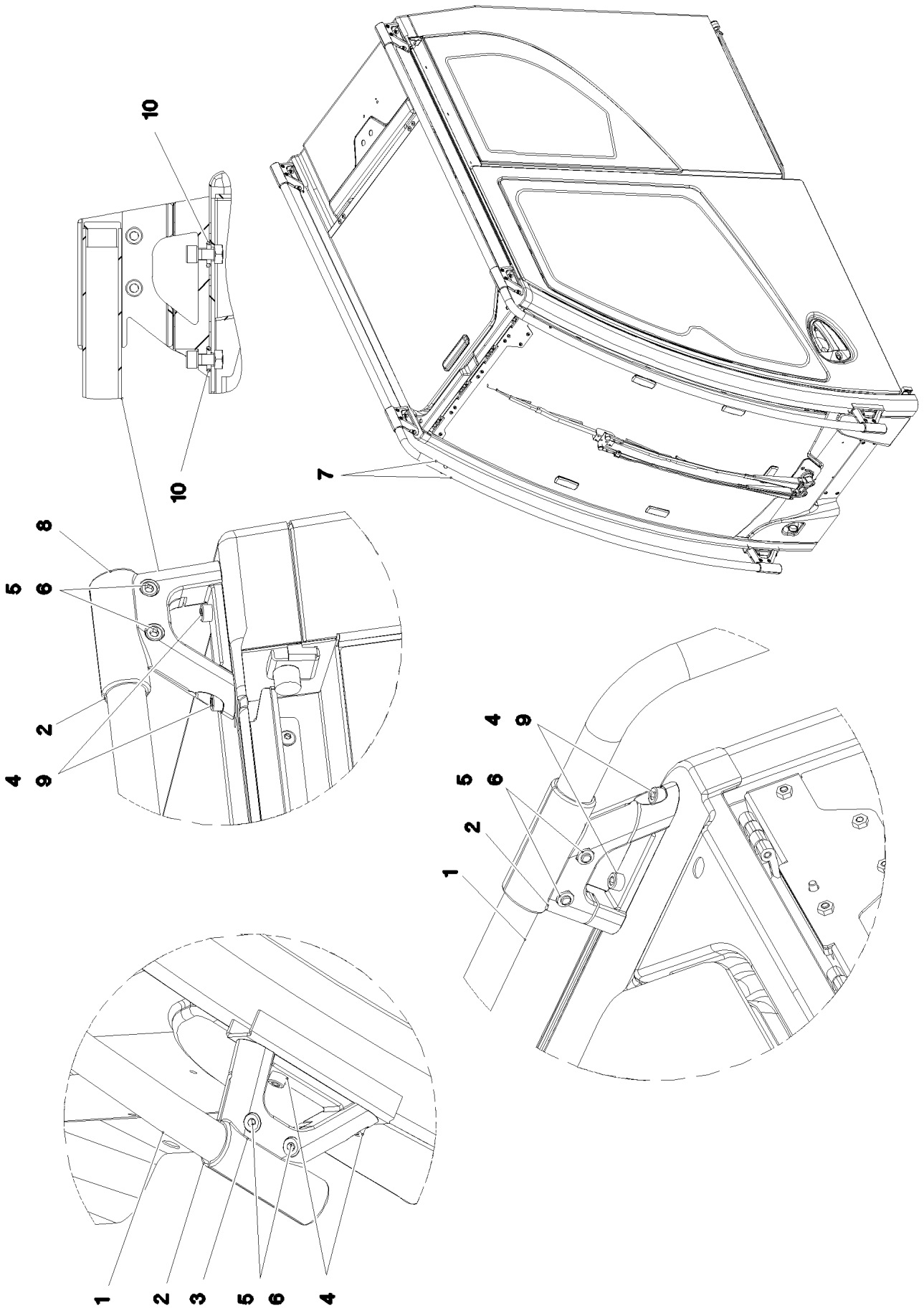
10
10
7
8
5
6
2
4
9
4
9
5
6
2
1
1
2
3
5
6
4

Pos.	Item	Quantity	Description	Bezeichnung
1	975218508	2	TUBE 1959X1553X30 X5CRNI18-10	ROHR
2	975218608	6	HOLDER 1.4308	HALTER
3	975384508	6	HOLDER 1.4308	HALTER
4	10007677	12	SOCKET HEAD SCREW ISO 4762 M8X20 A2	ZYLINDERSCHRAUBE
5	10007205	12	SOCKET HEAD SCREW ISO 4762 M8X25 A2	ZYLINDERSCHRAUBE
6	411903108	12	HEX NUT DIN 985 M8 A2-70	SECHSKANTMUTTER
7	10678375	2	STOP PLUG D10,7 LD-PE	STOPFEN
8	10678377	2	MULTI-PLATE PLUG 28MM PE-LLD	LAMELLENSTOPFEN
9	710100708	8	SEALING RING DIN 7603 A8X12X1 CU	DICHTRING
10	726405608	12	O-RING 14X3 NBR70	O-RING

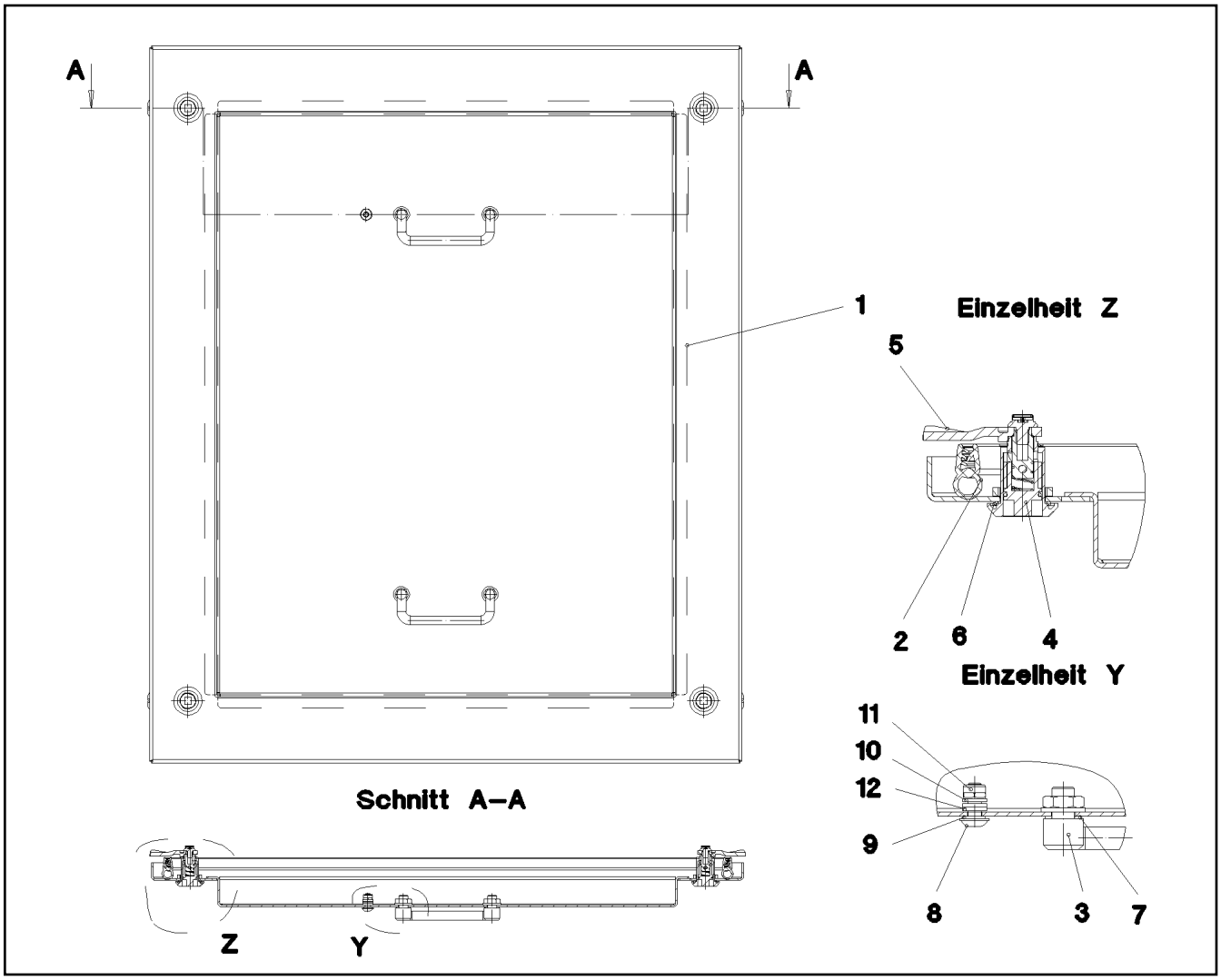

Pos.	Item	Quantity	Description	Bezeichnung
1	968075708	1	COVER WELDED RAL 7016,SDGL,GT SPF	DECKEL SCHWK.
2	97007649	1	SEAL 645X786 EPDM	DICHTUNG
3	10870376	2	POIGNEE 118X18X43	KLAPPGRIFF
4	10650295	4	SASH LOCK	VORREIBER
5	570340077	4	TONGUE	ZUNGE
7	710101408	4	SEALING RING DIN 7603 A10X16X1 CU	DICHTRING
8	10412851	1	BUTTON HEAD SCREW AEHNL.ISO 7380-2	HALBRUNDKOPFSCHRAUBE
9	710100408	1	SEALING RING DIN 7603 A6,5X9,5X1 CU	DICHTRING
10	10035694	2	WASHER ISO 7092 6 200HV-A2	SCHEIBE
11	411903008	1	HEX NUT DIN 985 M6 A2-70	SECHSKANTMUTTER
12	12102694	1	SERRATED LOCK WASHER DIN 6798 A 6.4	FAECHERSCHEIBE

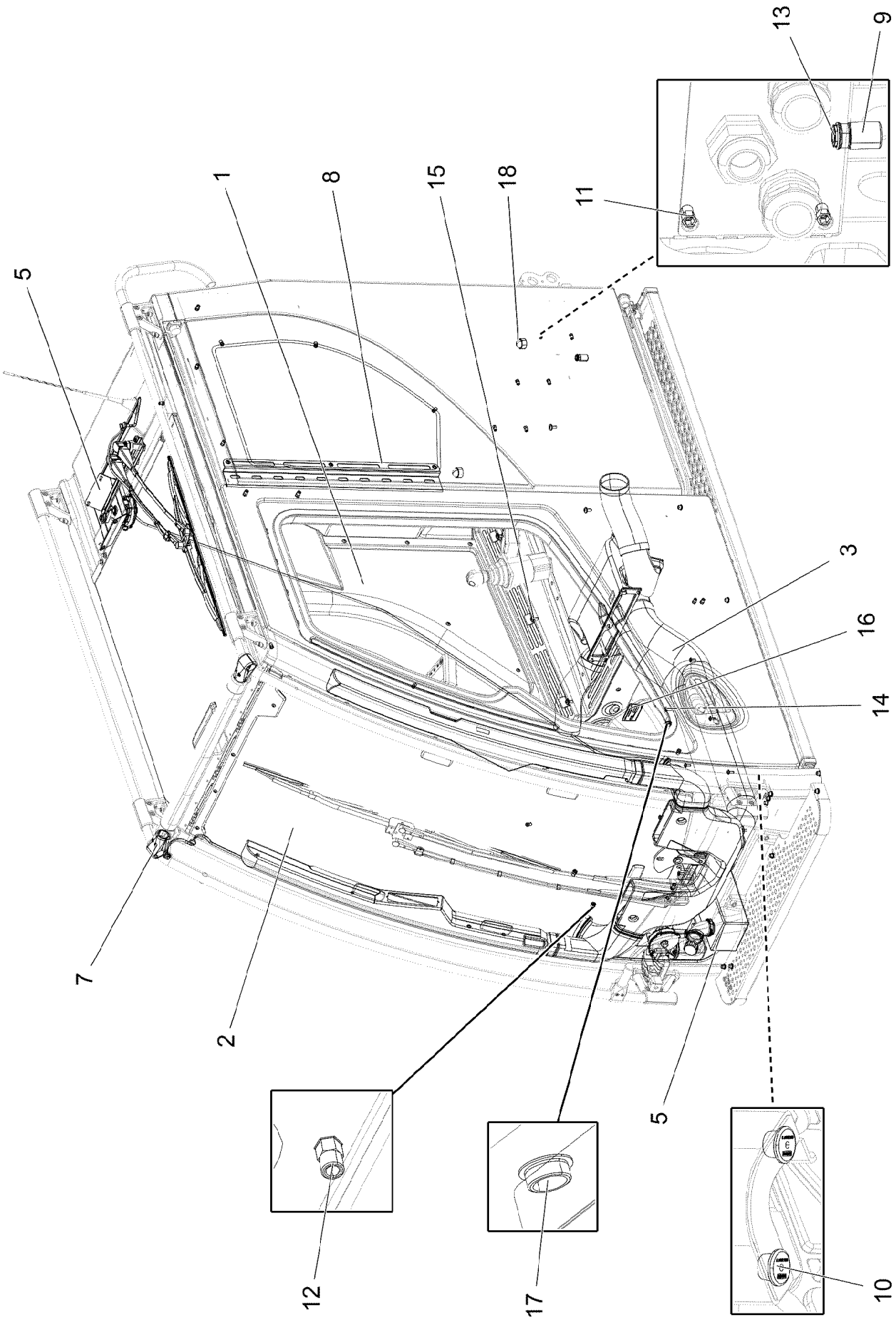
13
9
1
8
15
18
11
5
3
16
14
7
2
5
12
17
10

Pos.	Item	Quantity	Description	Bezeichnung
1	917305408	1	INTERNAL PANELLING INSTALLATIO ⇨ ❑ 381	INNENVERKLEIDUNG EINBAU
2	916162508	1	WINDOW ASSEMBLY SPF ⇨ ❑ 388	SCHEIBEN EINBAU
3	916168308	1	AIR DUCT ⇨ ❑ 395	LUFTFUEHRUNG
5	916163008	1	WIPERS INSTALLATION ⇨ ❑ 397	WISCHANLAGE EINBAU
7	97009160	2	HOLDER 44X88.5X40 G-ALSIMG	HALTER
8	97025690	1	PLATE 2X700X115 DC01 FE//ZNNI8//CN//T0	BLECH
9	971565208	1	SPOUT	TUELLE
10	7361205	10	BLANKING PLUG PE-LD	VERSCHLUSSSTOPFEN
11	10042593	19	BLIND RIVET NUT M6 K=1,5-3,5 ST CR6-FRE	BLINDNIETMUTTER
12	12100289	9	BLIND RIVET NUT M8 K=1,8-5 480H SPF	BLINDNIETMUTTER
13	12100265	1	BLIND RIVET NUT M10 K=1,5-5,5 480H SPF	BLINDNIETMUTTER
14	10875468	12	BUTTON HEAD SCREW AEHNL.ISO 7380-2	HALBRUNDKOPFSCHRAUBE
15	10875485	6	BUTTON HEAD SCREW AEHNL.ISO 7380-2	HALBRUNDKOPFSCHRAUBE
16	97038433	1	SIGN 1X75X45 ALUMINIUM	SCHILD
17	602424908	1	SCREW PLUG M16X1,5 MS	VERSCHLUSSSCHRAUBE
18	779040801	2	PROTECTING CAP SW 24	SCHUTZKAPPE

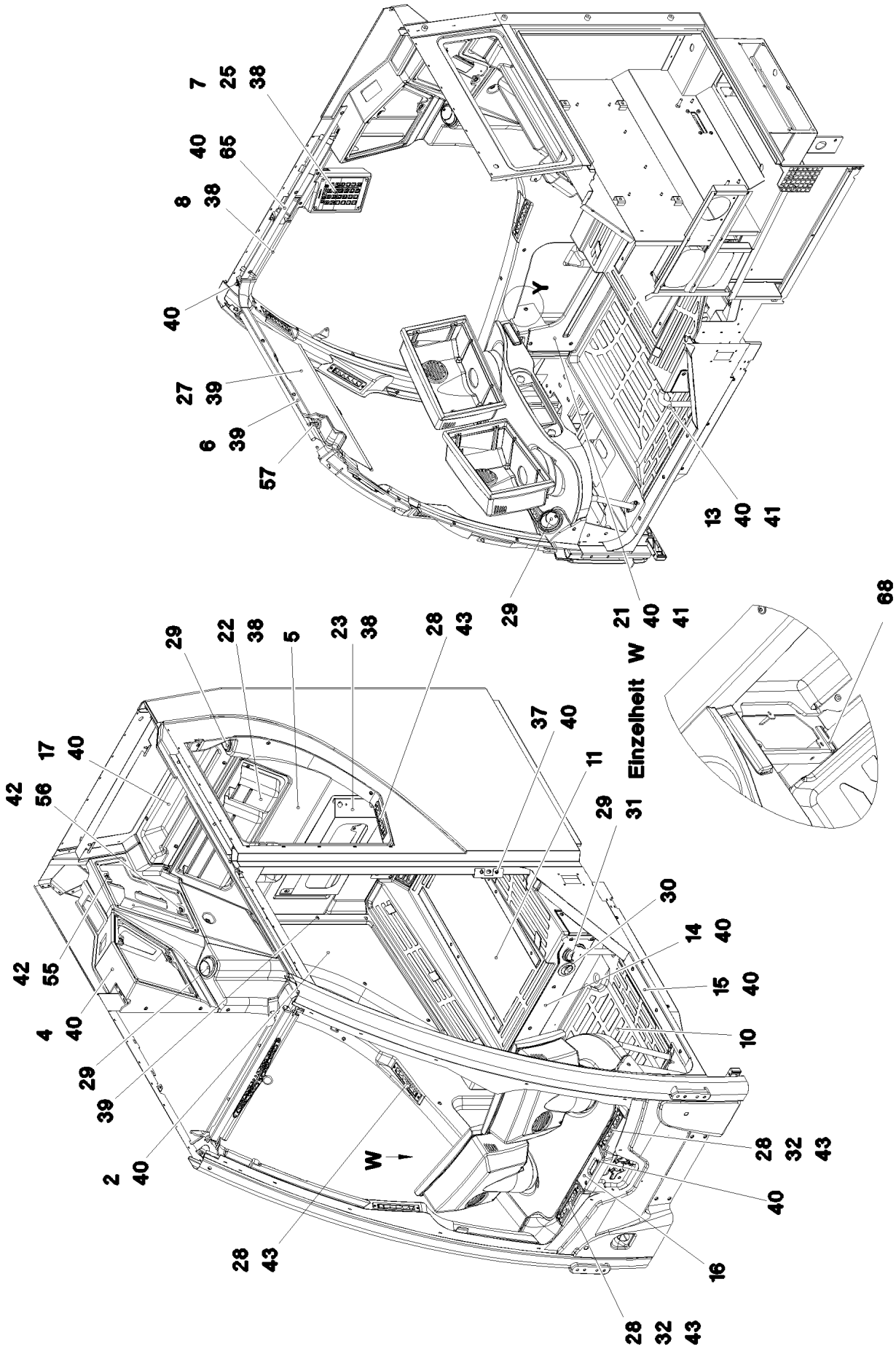

4.12.2020 073075	**etk_en_de 047580 LTR 1220**	❑ 381 (1/4)
LIEBHERR	**INTERNAL PANELLING INSTALLATIO** **INNENVERKLEIDUNG EINBAU**	**917305408**

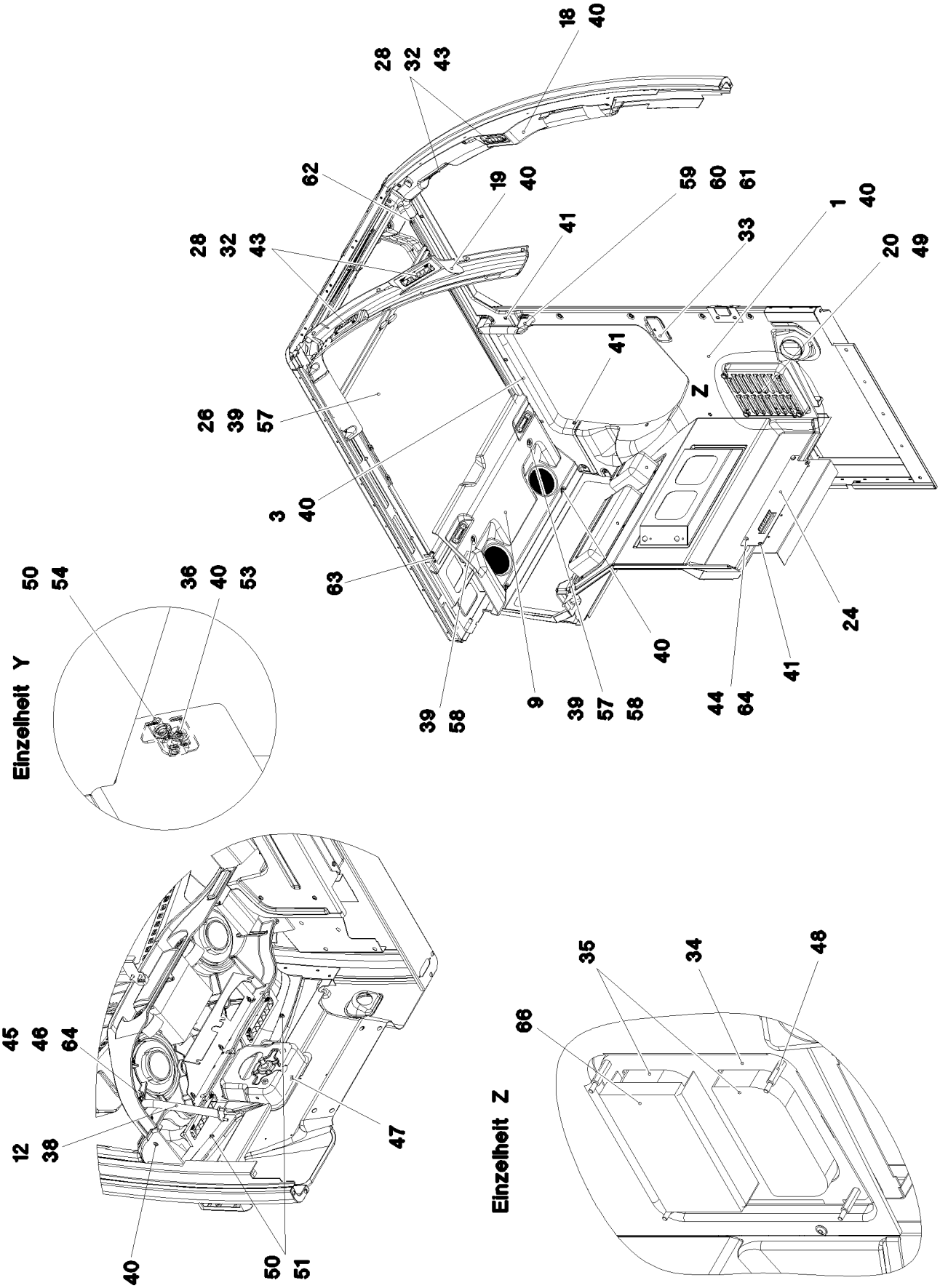
18 40
28 32 43
62
19 40
59 60 61
1 40
28 32 43
41
33
20 49
41
Z
26 39 57
3 40
63
50 54
36 40 53
Einzelheit Y
39 58
9
39 57 58
40
44 64
41
24
45 46 64
12 38
47
40
50 51
35 34 48
66
Einzelheit Z

Pos.	Item	Quantity	Description	Bezeichnung
1	966282308	1	PANELLING,LEFT ⇨ ❑ 385	VERKLEIDUNG LI.
2	966282408	1	PANELLING ⇨ ❑ 386	VERKLEIDUNG RE.
3	97001015	1	PANELLING,STRUT LEFT 84X1361X160 ABS	VERKLEIDUNG HOLM LI.
4	97001589	1	PANELLING ABOVE RIGHT 188X647X441 AB	VERKLEIDUNG OBEN RECHTS
5	97001404	1	CLADDING REAR PANEL 193X729X817 PP/G	VERKLEIDUNG RUECKWAND
6	97001048	1	PANELLING ROLLER BLIND 96X818X144 AB	VERKLEIDUNG ROLLO
7	975850708	1	HOUSING PUR SPF	GEHAEUSE
8	979206708	1	SMALL HILL COVERING 65X292X46 ABS SP	VERKLEIDUNG HOLM RE.
9	965763608	1	ROOF COVERING COMPL.	DACHVERKLEIDUNG KPL.
10	97000466	1	FLOOR MAT 61X753X552 PU-SCHAUM SPF	BODENMATTE
11	97000467	1	FLOOR MAT 227X798X849 PU-SCHAUM SP	BODENMATTE
12	966621108	1	PIPE WELDED RAL 9005,M,GT SPF	ROHR SCHWK.
13	966620008	1	PIPE WELDED RAL 9005,M,GT, SPF	ROHR SCHWK.
14	97000470	1	PLATE 2X810X132 DC01 RAL 7016,SDGL,GT	BLECH
15	97000469	1	PLATE 1.5X72X538 X5CRNI18-10	BLECH
16	97006863	1	PANELLING 201X846X165 ABS SPF	VERKLEIDUNG VORN
17	97001553	1	PANELLING REST 82X599X144 ABS SPF	VERKLEIDUNG ABLAGE
18	97002207	1	A COLUMN CLADDING LEFT 117X508X1174	VERKLEIDUNG A-SAEULE LI.
19	97002209	1	A COLUMN CLADDING RIGHT 134X494X115	VERKLEIDUNG A-SAEULE RE.
20	979206908	1	PANELLING FORCED AERATION 45.2X225X	VERKLEIDUNG ZWANGSENTL
21	97138958	1	PANELLING 120X526X308 ABS SPF	VERKLEIDUNG RE.
22	740300008	1	POCKET KUNSTSTOFF	TASCHE
23	97002609	1	PLATE 1.5X551X299 DC01 RAL 9005,M,GT	BLECH
24	97003298	1	PLATE 1.5X436X90 DC01 RAL 7016,SDGL,G	BLECH
25	10354670	2	RUBBER BUFFER 19X9,6 PU SCHWARZ	GUMMIPUFFER
26	11002447	1	BLIND ⇨ ❑ 387	ROLLO
27	11002446	1	BLIND	ROLLO
28	10292013	8	ROLLING NOZZLE	WALZENDUESE
29	553193208	6	OUTLET JET D=82 T=5 PA	AUSSTROEMDUESE
30	10301409	2	OUTLET JET D=63 ABS	AUSSTROEMDUESE
31	518629608	2	O-RING ARP 568 72,62X3,53 NBR70	O-RING
32	97006874	6	SEAL 7X182X51 POLYOLEFIN	DICHTUNG
33	10291997	1	ASH TRAY KUNSTSTOFF	ASCHENBECHER
34	967775308	1	PLATE WELDED FE//ZNNI8//CN//T0	BLECH SCHWK.
35	10292000	2	VENTILATION	ENTLUEFTUNG
36	97006875	1	PLATE 1.5X25X47 DC01 RAL 7016 SPF	BLECH
37	97006876	1	PLATE 1.5X107X120 DC01 RAL 9005,M,GT	BLECH
38	10875474	16	BUTTON HEAD SCREW ISO 7380-2 M5X16 0	HALBRUNDKOPFSCHRAUBE
39	10874884	13	BUTTON HEAD SCREW ISO 7380-2 M6X12 0	HALBRUNDKOPFSCHRAUBE
40	10875468	73	BUTTON HEAD SCREW AEHNL.ISO 7380-2	HALBRUNDKOPFSCHRAUBE
41	10875469	10	BUTTON HEAD SCREW ISO 7380-2 M6X30 0	HALBRUNDKOPFSCHRAUBE
42	10875470	2	BUTTON HEAD SCREW ISO 7380-2 M6X40 0	HALBRUNDKOPFSCHRAUBE
43	10876382	16	SHEET-METAL SCREW ISO 7050 ST3,5X16 4	BLECHSCHRAUBE
44	10875538	2	HEX SCREW ISO 4017 M8X50 8.8 480H SPF	SECHSKANTSCHRAUBE
45	11826527	1	HEX SCREW ISO 4017 M8X30 8.8 480H SPF	SECHSKANTSCHRAUBE
46	10875614	1	HEX NUT DIN 985 M8 8 480H SPF	SECHSKANTMUTTER
47	10678375	1	STOP PLUG D10,7 LD-PE	STOPFEN
48	97028159	4	DISTANCE STUD M5X30 11SMN30+C FE//ZN	ABSTANDSBOLZEN
49	10800916	4	KNURLED BUTTON PA	RAENDELKNOPF
50	10197771	3	WASHER ISO 7089 6 200HV ZNNI-480H SPF	SCHEIBE
51	10197764	2	HEX NUT ISO 4032 M6 10 ZNNI-480H SPF	SECHSKANTMUTTER
53	413002808	1	CAGE NUT M6	KAEFIGMUTTER
54	11642497	1	HEX SCREW ISO 4017 M6X10 8.8 480H SPF	SECHSKANTSCHRAUBE
55	10441664	1	DISTANCE SLEEVE 15X6,3X25 PA66	DISTANZHUELSE
56	10354375	1	DISTANCE SLEEVE 10X6,2X10 PA66	DISTANZHUELSE
57	11001955	3	DISTANCE STUD M6X30 ST VERZ	ABSTANDSBOLZEN
58	10875447	2	DISTANCE STUD M6X50 STAHL 480H SPF	ABSTANDSBOLZEN

Pos.	Item	Quantity	Description	Bezeichnung
59	10443309	1	HANDGRIP 215X25X59,2X169	HALTEGRIFF
60	97007597	4	PLATE 4X48X29 S315MC RAL 9005,M,GT SP	BLECH
61	10875570	2	SOCKET HEAD SCREW ISO 4762 M8X55 8.8	ZYLINDERSCHRAUBE
62	10875582	2	SOCKET HEAD SCREW ISO 4762 M5X18 8.8	ZYLINDERSCHRAUBE
63	10875584	1	SOCKET HEAD SCREW ISO 4762 M5X25 8.8	ZYLINDERSCHRAUBE
64	10289803	4	WASHER ISO 7089 8 300HV 480H SPF	SCHEIBE
65	97027494	1	PLATE 1.5X832X41 DC01 RAL 7016,SDGL,G	BLECH
66	11182242	1	FILTER SYNFASAN	FILTER
67	97037477	2	ANTI-SLIP SURFACE 1.6X25X170 3M TYP4	ANTIRUTSCHBELAG
68	262101308	0.04	CLAMP FITTING 1-3X21X9,3 ZELLGUMMI	KLEMMBAND

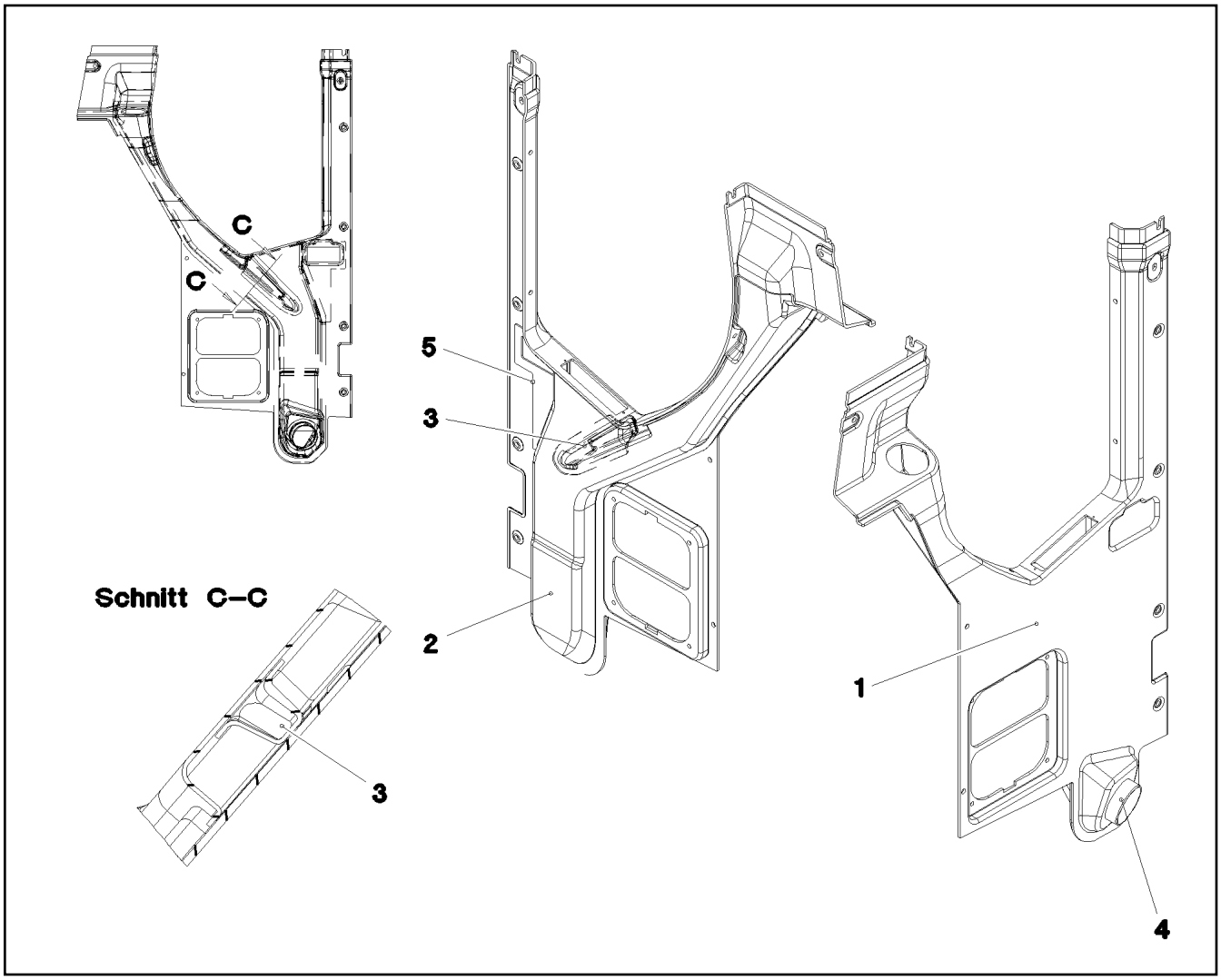

Pos.	Item	Quantity	Description	Bezeichnung
1	97001013	1	PANELLING,LEFT 130X832X1260 ABS SPF	VERKLEIDUNG LI.
2	97001699	1	AIR GUIDE L 113X705X1091 ABS SPF	LUFTFUEHRUNG LI.
3	97004696	1	AIR GUIDE CHANNEL 39X75X227 ABS SPF	LUFTLEITKANAL
4	97005143	1	TUBE 100X33 ABS	ROHR
5	97045292	1	PLATE 3X135X251 ALMG3 H111 ELOXIERT	BLECH

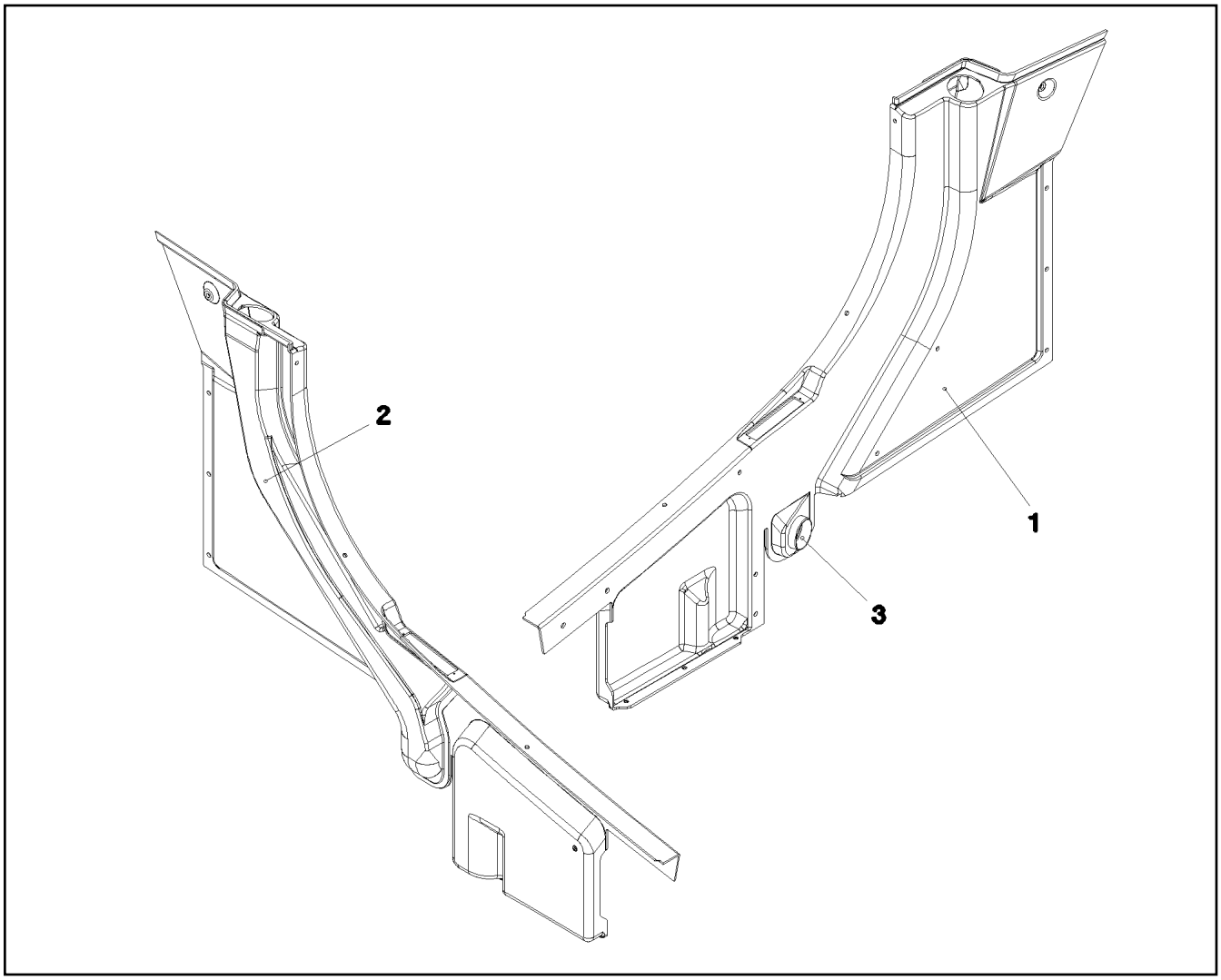

Pos.	Item	Quantity	Description	Bezeichnung
1	97001014	1	PANELLING 127X1598X1088 ABS SPF	VERKLEIDUNG RE.
2	97001700	1	AIR GUIDE R 100X714X953 ABS SPF	LUFTFUEHRUNG RE.
3	97005144	1	TUBE 85X27 ABS	ROHR

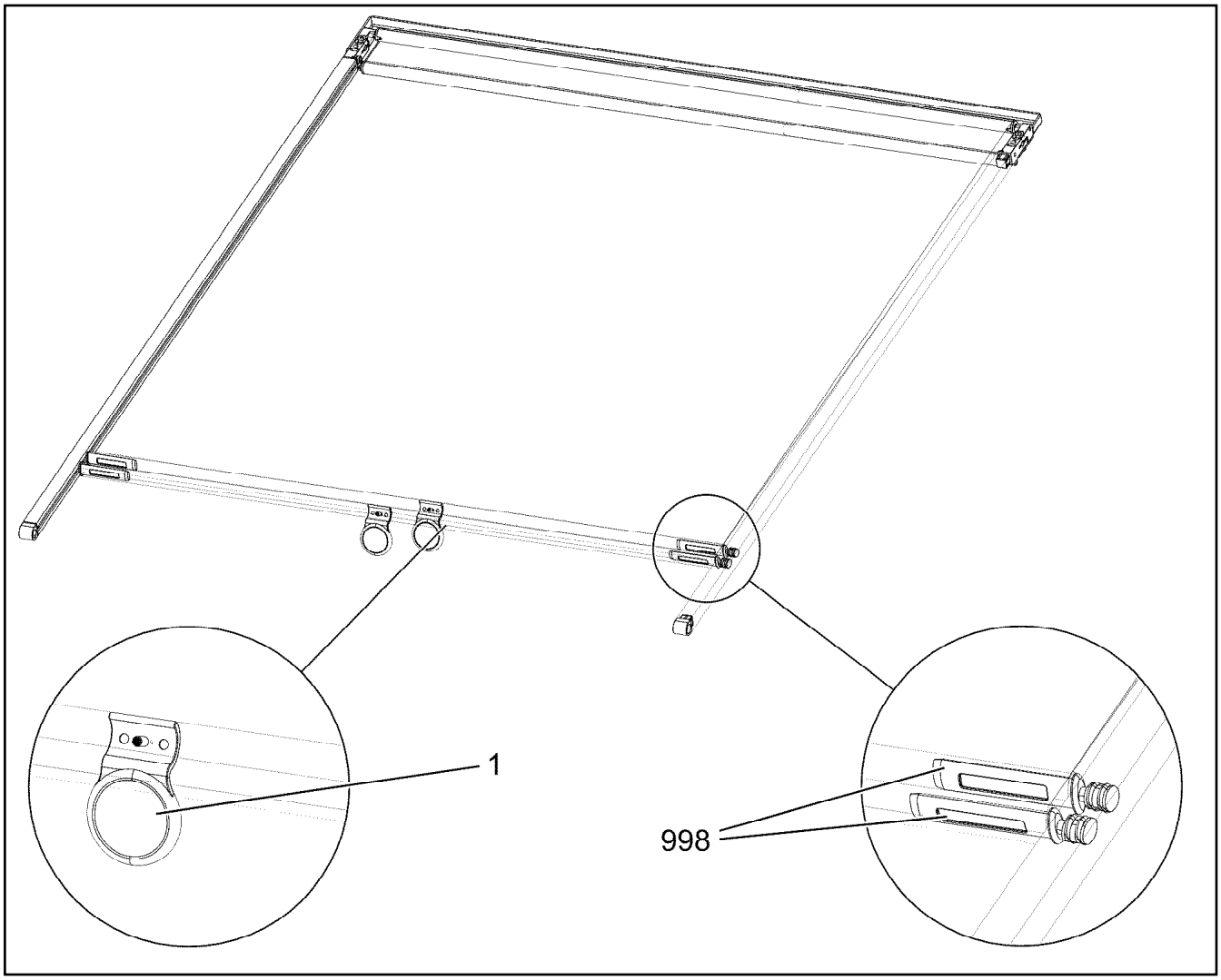

Pos.	Item	Quantity	Description	Bezeichnung
1	12100622	1	REPAIR KIT HANDLE	RS GRIFF
998	10872672	1	REGULATION REPAIR KIT	RS VERSTELLUNG

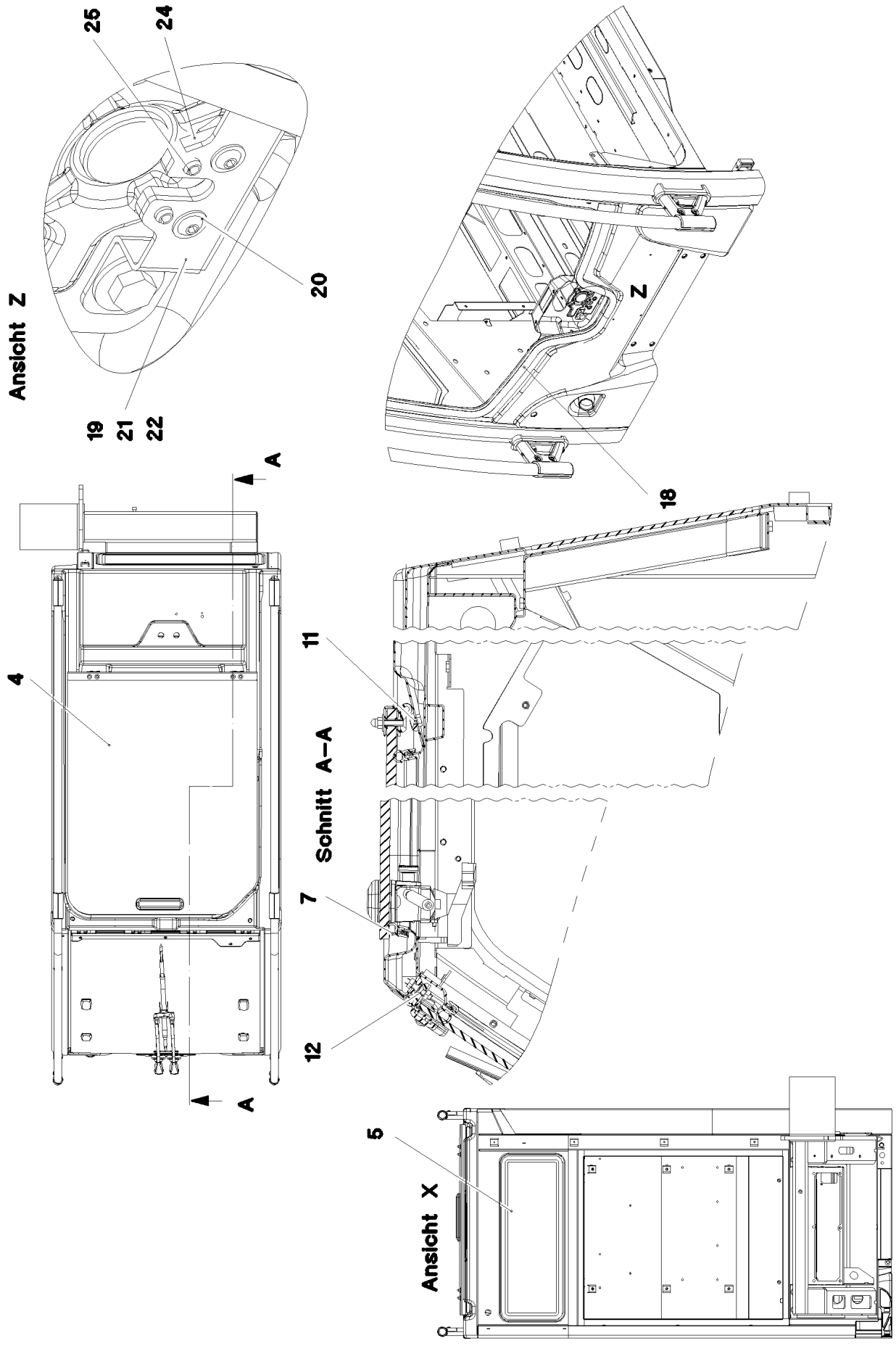
25
24
20
Ansicht Z
19
21
22
Z
18
A
4
11
Schnitt A–A
7
12
A
5
Ansicht X

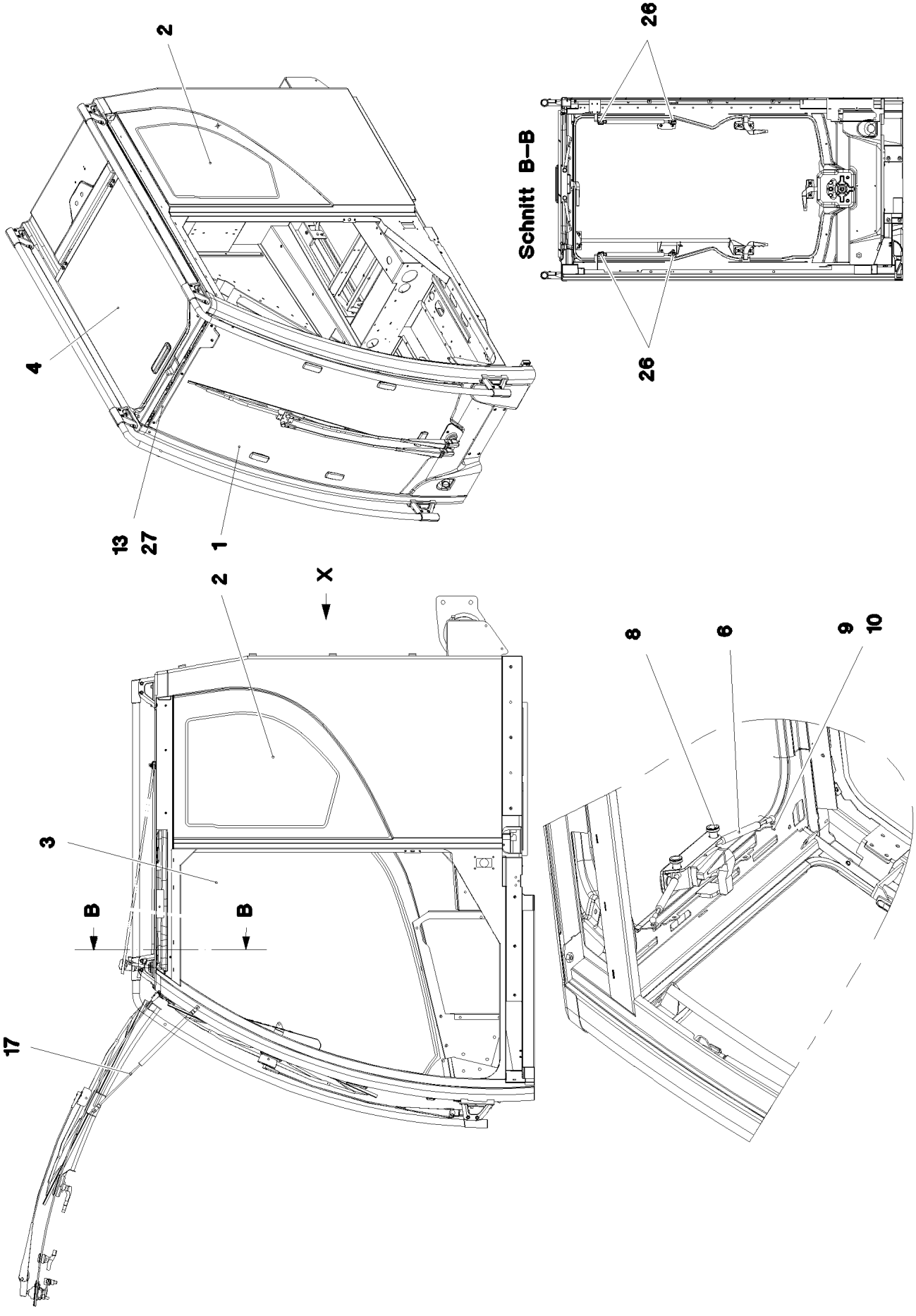

4.12.2020 083026	**etk_en_de 047580 LTR 1220**	❑ 389 (2/3)
LIEBHERR	**WINDOW ASSEMBLY** **SCHEIBEN EINBAU**	**916162508**

Pos.	Item	Quantity	Description	Bezeichnung
1	966497908	1	FRONT WINDOW CPL. ⇨ ❑ 391	FRONTSCHEIBE KPL.
2	97003560	1	SIDE WINDOW LEFT 646.2X94X4 ESG SPF	SEITENSCHEIBE LI.
3	97003561	1	SIDE WINDOW RIGHT 1252X125X4 ESG SP	SEITENSCHEIBE RE.
4	965784408	1	ROOF WINDOW PRE-ASS. ⇨ ❑ 394	DACHSCHEIBE VORM.
5	97000279	1	REAR WINDOW ESG SPF	HECKSCHEIBE
6	10476211	2	GAS SPRING 12X80-100N ST	GASFEDER
7	97033487	1	SEAL 25X892X720 EPDM	DICHTUNG
8	10652206	2	KNURLED BUTTON 21-M4 PA	RAENDELKNOPF
9	10875645	2	WASHER ISO 7089 4 200HV 480H SPF	SCHEIBE
10	10875619	2	HEX NUT ISO 4032 M4 8 480H SPF	SECHSKANTMUTTER
11	10875809	4	COUNTERSUNK SCREW DIN 7991 M6X12 8	SENKSCHRAUBE
12	10875551	8	COUNTERSUNK SCREW DIN 7991 M6X16 8	SENKSCHRAUBE
13	97008572	1	COVER 8X735X83 PE SCHWARZ	ABDECKUNG
14	10815283	1	ACTIVATOR 250ML DOSE	AKTIVATOR
15	811203308	1	ADHESIVE 600ML FC-BEUTEL	KLEBER
16	811203108	1	TOOLING AGENT KANISTER5L +5/+35 °C	ABGLAETTMITTEL
17	11003837	2	GAS SPRING 23X251-550N ST	GASFEDER
18	97046043	1	SEAL 25X14X4080 EPDM	DICHTUNG
19	97024781	1	PLATE 2X170X51 DC01 FE//ZNNI8//CN//T0	BLECH
21	11651612	2	HEX SCREW ISO 4017 M8X16 8.8 480H SPF	SECHSKANTSCHRAUBE
22	11140469	2	WASHER ISO 7093-1 8 200HV 480H SPF	SCHEIBE
23	870004108	1	ACTIVATOR 1000ML	AKTIVATOR
24	97024783	1	PLATE 4X52X32 S315MC FE//ZNNI8//CN//T0	BLECH
25	10875881	2	DOWEL PIN ISO 8752 6X10 ST 480H SPF	SPANNSTIFT
26	97072035	4	BUSHING RD20X7.5 X5CRNI18-10	BUCHSE
27	11697855	7	BUTTON HEAD SCREW ISO 7380-2 M5X8 0	HALBRUNDKOPFSCHRAUBE

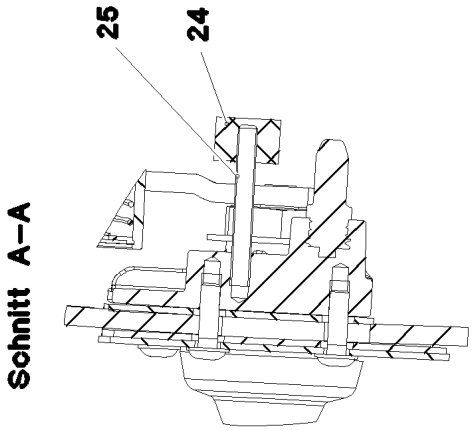
Schnitt A–A
25
24

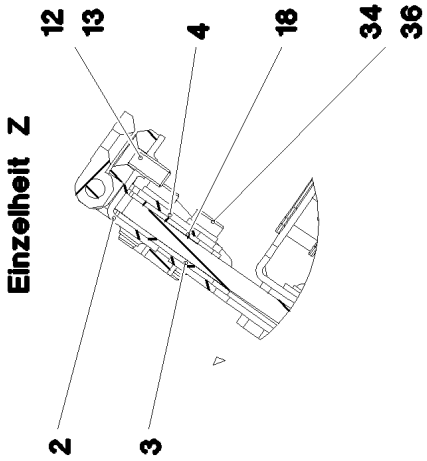
Einzelheit Z
12
13
4
18
34
36
2
3

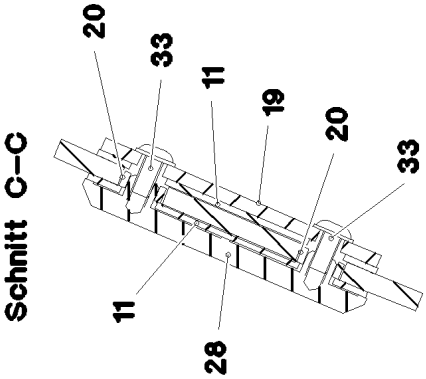
Schnitt C–C
20
33
11
19
20
33
11
28

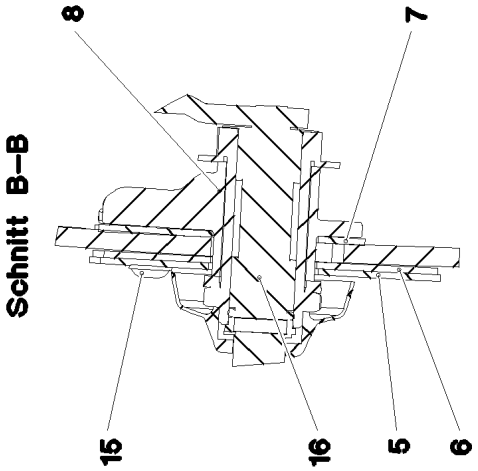
Schnitt B–B
8
7
15
16
5
6

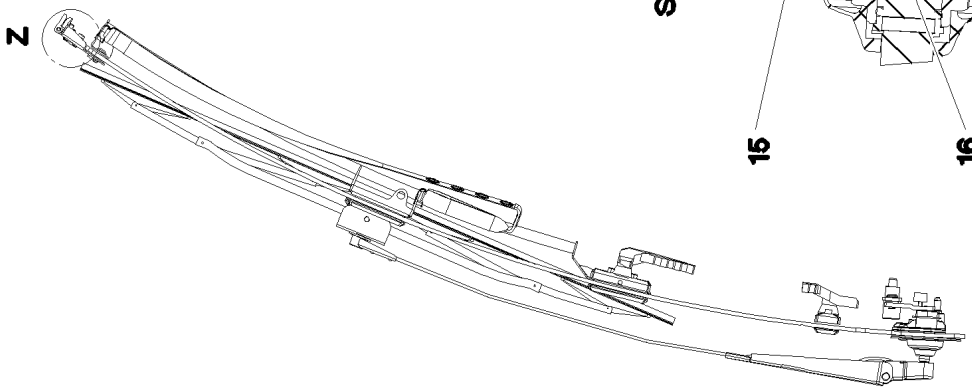
Z

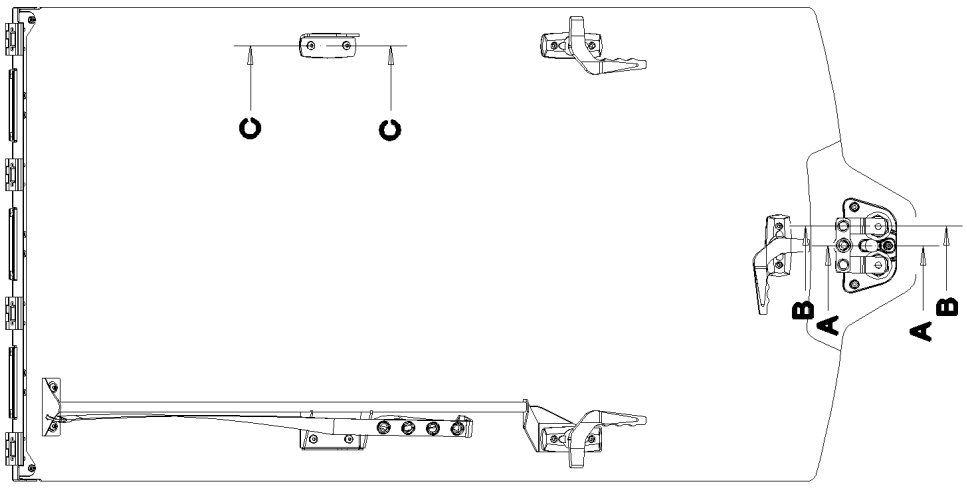
C
C
B
A
A
B

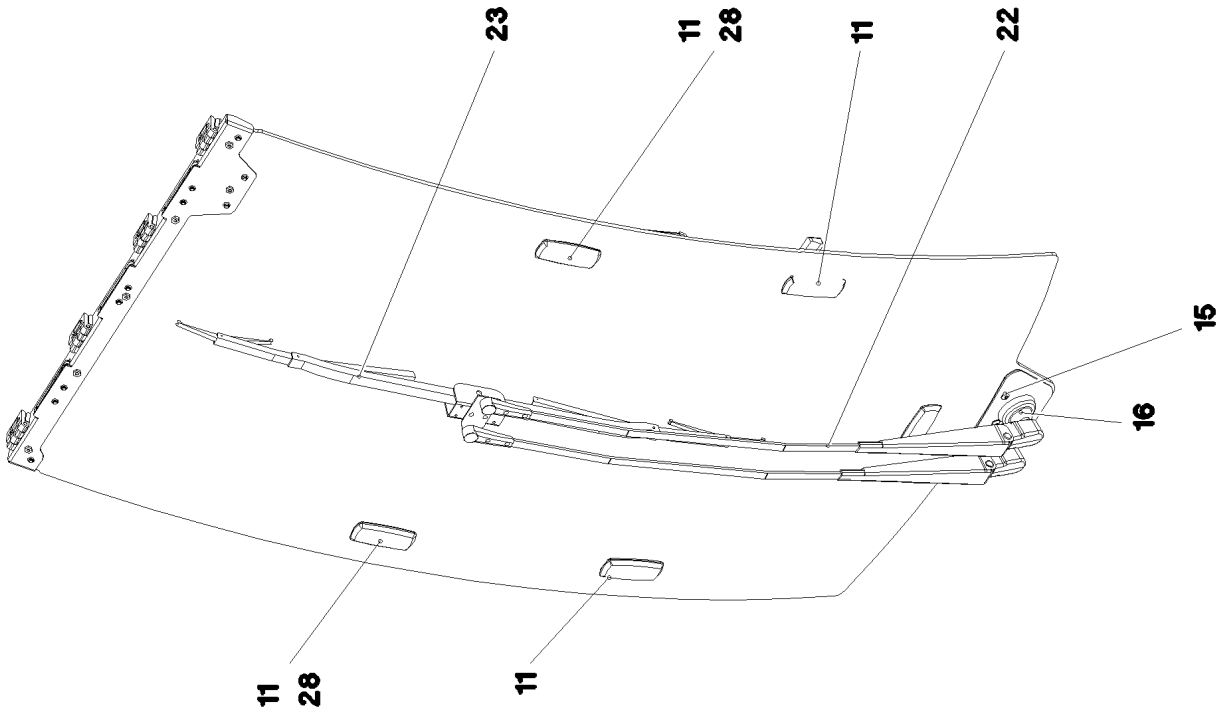
23
11
28
11
22
15
16
11
28
11

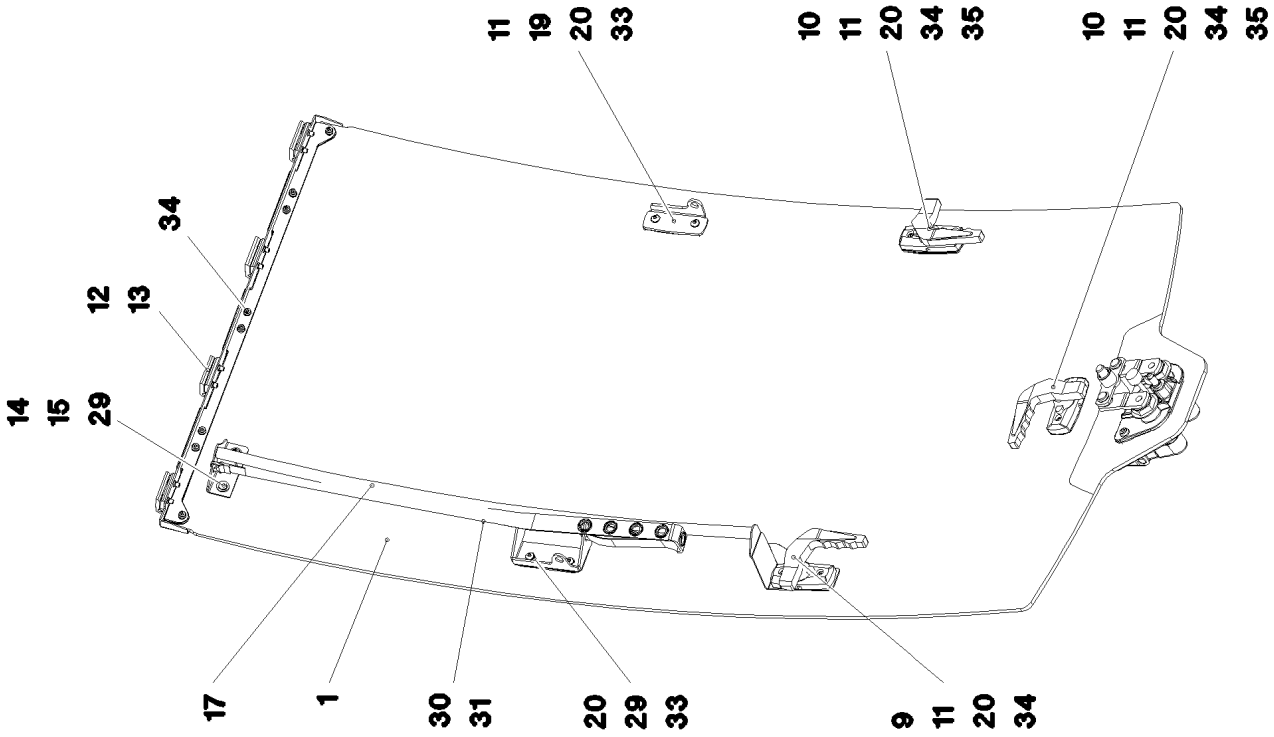
11
19
20
33
10
11
20
34
35
10
11
20
34
35
34
12
13
14
15
29
17
1
30
31
20
29
33
9
11
20
34

Pos.	Item	Quantity	Description	Bezeichnung
1	97003558	1	FRONT WINDOW 6X735X1506 ESG SPF	FRONTSCHEIBE
2	966497808	1	PLATE WELDED FE//ZNNI8//FN//T2	BLECH SCHWK.
3	97005272	1	SEAL 1.5X721X86 EPDM	DICHTUNG
4	97005273	1	PLATE 2X719X40 DC01 FE//ZNNI8//FN//T2	BLECH
5	97005289	1	PLATE 2X227X109 DC01 FE//ZNNI8//CN//T0	BLECH
6	97005290	1	SEAL 2X225X107 EPDM	DICHTUNG
7	97005291	1	SEAL 2X148X84 EPDM	DICHTUNG
8	97052119	1	BEARING WIPERS UNIT 50X146X82	LAGER FRONTWISCHANLAGE
9	704232208	1	HAND GRIP CPL. DREH KUNSTSTOFF	HANDGRIFF KPL.
10	591066808	2	HANDLE	HANDGRIFF
11	97005309	9	SEAL 2X94X39 EPDM	DICHTUNG
12	10871177	4	SCREW-ON HINGE 25X25X50/180° AISI 316	ANSCHRAUBSCHARNIER
13	10875551	8	COUNTERSUNK SCREW DIN 7991 M6X16 8	SENKSCHRAUBE
14	421801708	2	WASHER ISO 7093-1 6 200HV-A2	SCHEIBE
15	10412852	6	BUTTON HEAD SCREW AEHNL.ISO 7380-2	HALBRUNDKOPFSCHRAUBE
16	11001115	1	WIPER BEARING ST	WISCHLAGER
17	966513708	1	PIPE WELDED SCHWARZ PULVERB.	ROHR SCHWK.
18	97006055	1	SEAL 721X43X 1.5 EPDM	DICHTUNG
19	97006057	1	PLATE 4X93X68 S315MC RAL 9005,M,GT SP	BLECH
20	97094637	10	BUSHING 14X14X5 PA6 SCHWARZ	BUCHSE
22	10292015	1	WIPER ARM 900MM	WISCHERARM
23	10292017	1	WIPER BLADE 1000	WISCHERBLATT
24	726617408	1	MEGI BUFFER	MEGIPUFFER
25	10450694	1	GRUB SCREW M6X50 A2-70	GEWINDESTIFT
28	11004117	2	THREADED PLATE M6 PA6GF30	GEWINDEPLATTE
29	97012017	2	SEAL 2X86X28 EPDM	DICHTUNG
30	591063808	1	RETAINING STRAP 25X795 POLYESTER	HALTEGURT
31	10300552	2	SHACKLE 0,08T NG4 STAINLESS ST	SCHAEKEL
33	10875488	4	BUTTON HEAD SCREW ISO 7380-2 M6X12 0	HALBRUNDKOPFSCHRAUBE
34	10876084	14	SOCKET HEAD SCREW DIN 7984 M6X18 08	ZYLINDERSCHRAUBE
35	97025127	3	PLATE 1.5X95X40 DC01 RAL 9005,M,GT SPF	BLECH
36	10035694	8	WASHER ISO 7092 6 200HV-A2	SCHEIBE

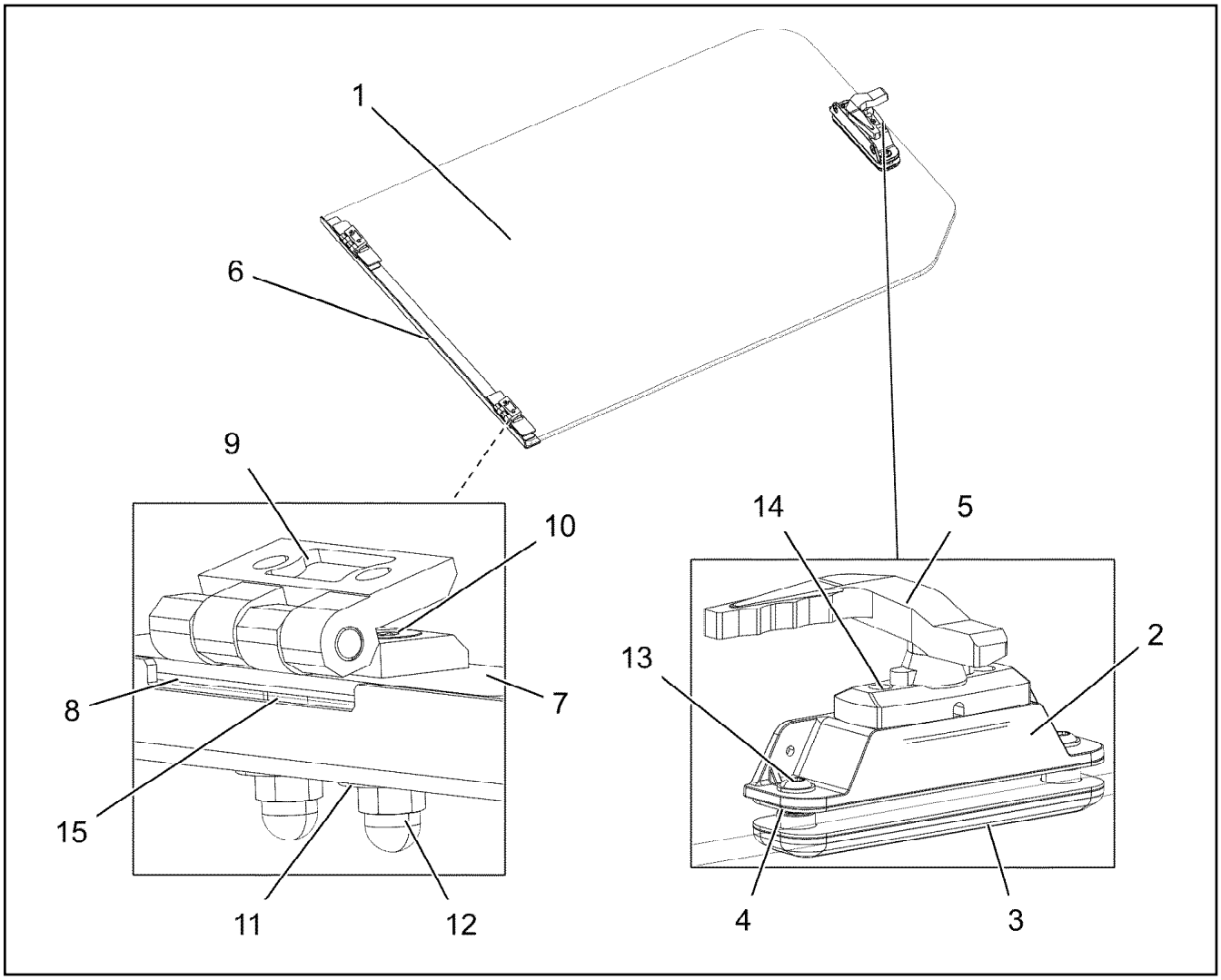

Pos.	Item	Quantity	Description	Bezeichnung
1	979240608	1	ROOF WINDOW 10.28X941X740 VSG SPF	DACHSCHEIBE
2	979243408	1	ADAPTOR 32X185X45 PAGF30 SPF	ADAPTER
3	979243508	1	THREADED PLATE 20X185X45 PAGF30 SPF	GEWINDEPLATTE
4	979243608	2	RUBBER PLATE 1.5X185X45 EPDM	GUMMIPLATTE
5	591066808	1	HANDLE	HANDGRIFF
6	979022508	1	PLATE 2X737X46 DC01 RAL 9005,M,GT SPF	BLECH
7	979022608	2	PLATE 2.5X130X28 DC01 RAL 9005,M,GT SP	BLECH
8	979142208	4	SHEET 126X24X1.5 EPDM 80	PLATTE
9	10871177	2	SCREW-ON HINGE 25X25X50/180° AISI 316	ANSCHRAUBSCHARNIER
10	12100279	4	COUNTERSUNK SCREW ISO 10642 M6X30	SENKSCHRAUBE
11	10875648	4	WASHER ISO 7093-1 6 200HV 480H SPF	SCHEIBE
12	10219361	4	CAP NUT DIN 1587 M6 A2-70	HUTMUTTER
13	10875471	2	BUTTON HEAD SCREW AEHNL.ISO 7380-2	HALBRUNDKOPFSCHRAUBE
14	10875586	2	SOCKET HEAD SCREW ISO 4762 M6X16 8.8	ZYLINDERSCHRAUBE
15	11082602	0.04	INSULATING HOSE DN6X0,5 PUR SPF	ISOLIERSCHLAUCH

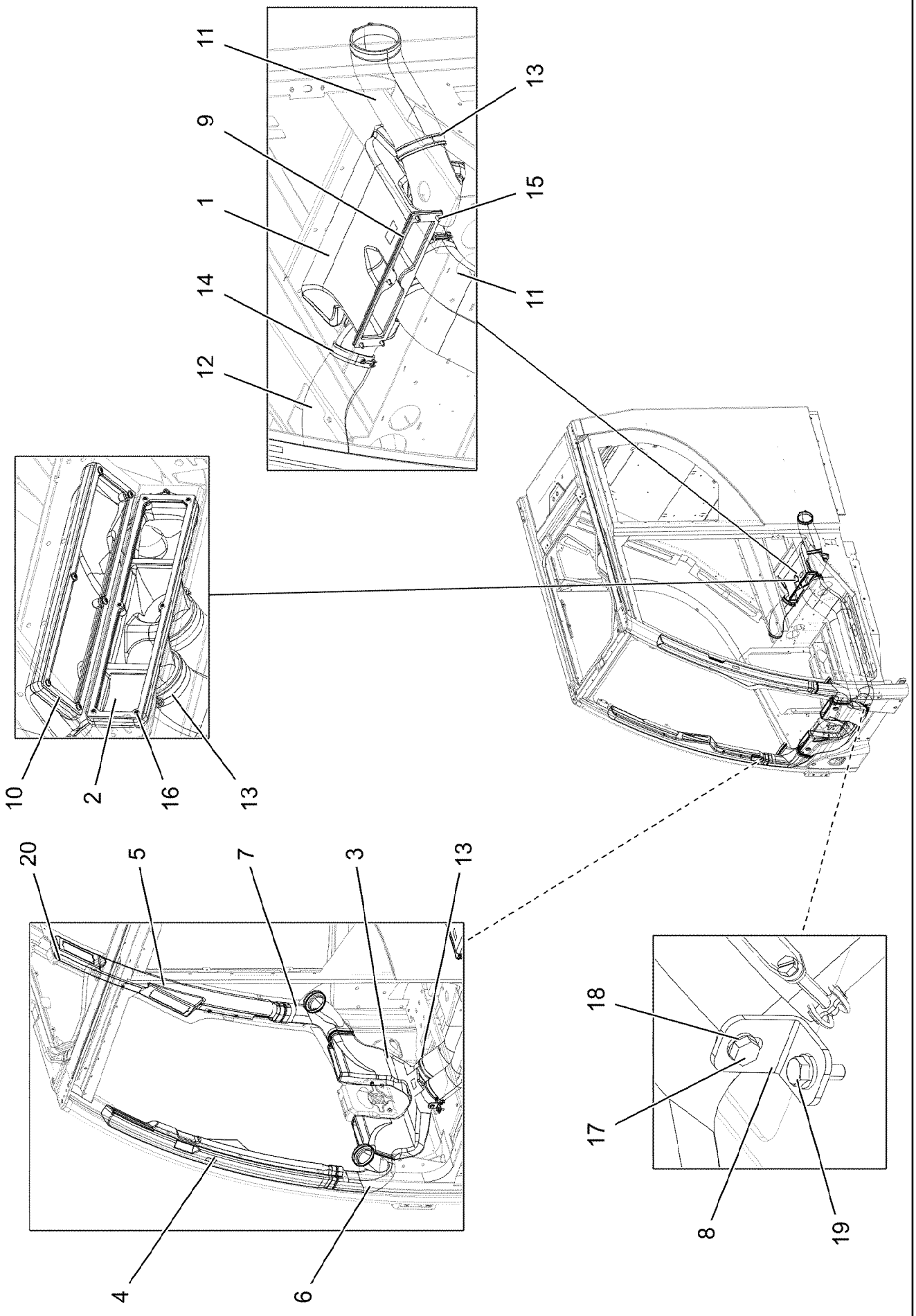

4.12.2020 067368	**etk_en_de 047580 LTR 1220**	❑ 395 (1/2)
LIEBHERR	**AIR DUCT** **LUFTFUEHRUNG**	**916168308**

Pos.	Item	Quantity	Description	Bezeichnung
1	97000436	1	AIR DUCT 81X233X419 PP SPF	LUFTFUEHRUNG
2	97000437	1	AIR DUCT 128X523X170 PP SPF	LUFTFUEHRUNG
3	97000438	1	AIR DUCT 152X627X339 PP SPF	LUFTFUEHRUNG
4	97000440	1	AIR GUIDE L 107X394X947 PP SPF	LUFTFUEHRUNG LI.
5	97000442	1	AIR GUIDE R 109X391X941 PP SPF	LUFTFUEHRUNG RE.
6	97001248	1	AIR GUIDE L 144X143X275 PVC SPF	LUFTFUEHRUNG LI.
7	97001249	1	AIR GUIDE R 143X150X273 PVC SPF	LUFTFUEHRUNG RE.
8	97001250	2	PLATE 3X60X25 DC01 FE//ZNNI8//CN//T0	BLECH
9	97005040	1	SEAL 4X322X62 EPDM 20SHORE	DICHTUNG
10	97005042	2	SEAL 4X407X85 EPDM 20SHORE	DICHTUNG
11	11000901	2.15	HOSE DN82-UNIE13 SCHWARZ	SCHLAUCH
12	553181208	0.25	HEATING HOSE 70/PRIMAFLEX	HEIZUNGSSCHLAUCH
13	11000903	6	WIRE HOSE CLAMP 79-85	DRAHTSCHLAUCHKLEMME
14	11000902	2	WIRE HOSE CLAMP 70-75	DRAHTSCHLAUCHKLEMME
15	10875474	5	BUTTON HEAD SCREW ISO 7380-2 M5X16 0	HALBRUNDKOPFSCHRAUBE
16	10875483	14	BUTTON HEAD SCREW ISO 7380-2 M5X10 0	HALBRUNDKOPFSCHRAUBE
17	11692824	4	HEX SCREW ISO 4017 M6X12 8.8 480H SPF	SECHSKANTSCHRAUBE
18	10197771	4	WASHER ISO 7089 6 200HV ZNNI-480H SPF	SCHEIBE
19	11840297	2	HEX SCREW EN 1665 M6X16 8.8 480H SPF	SECHSKANTSCHRAUBE
20	10875549	2	COUNTERSUNK SCREW DIN 7991 M5X10 8	SENKSCHRAUBE

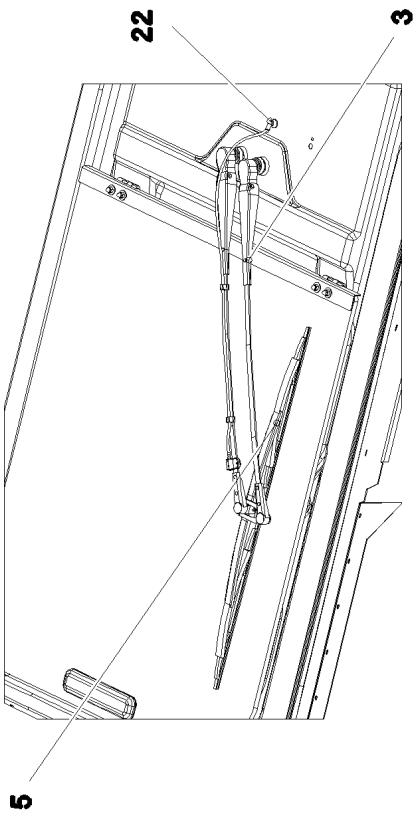

Einzelheit A

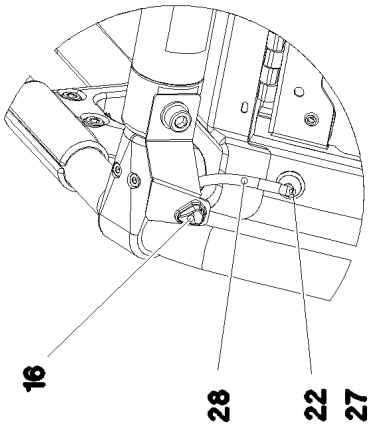

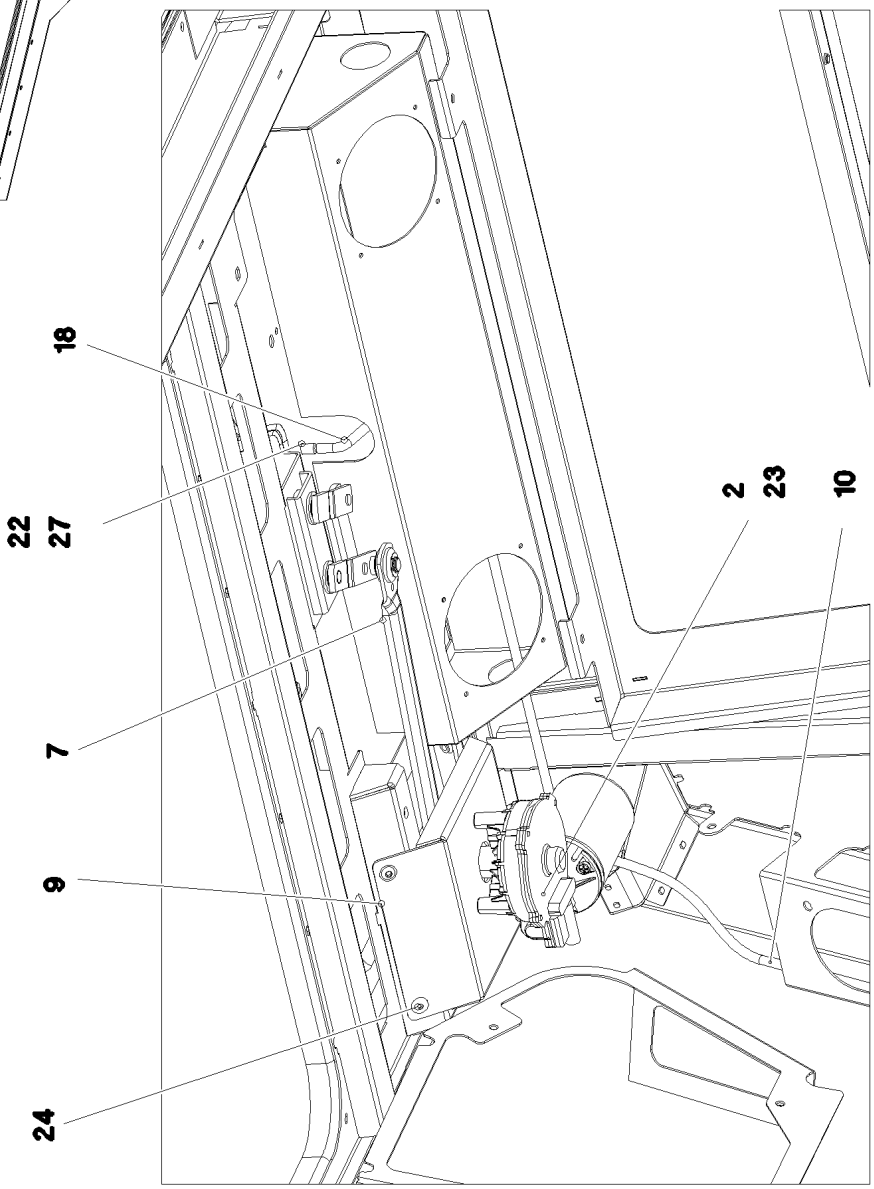

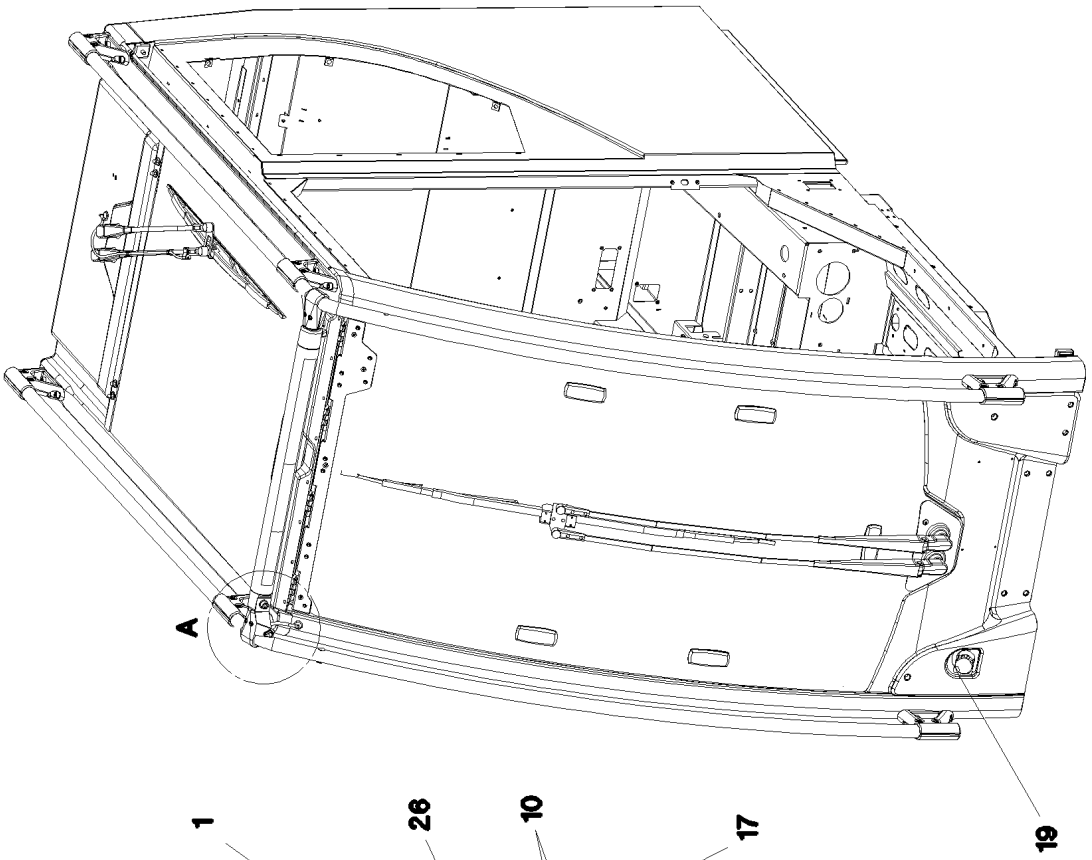
A
19

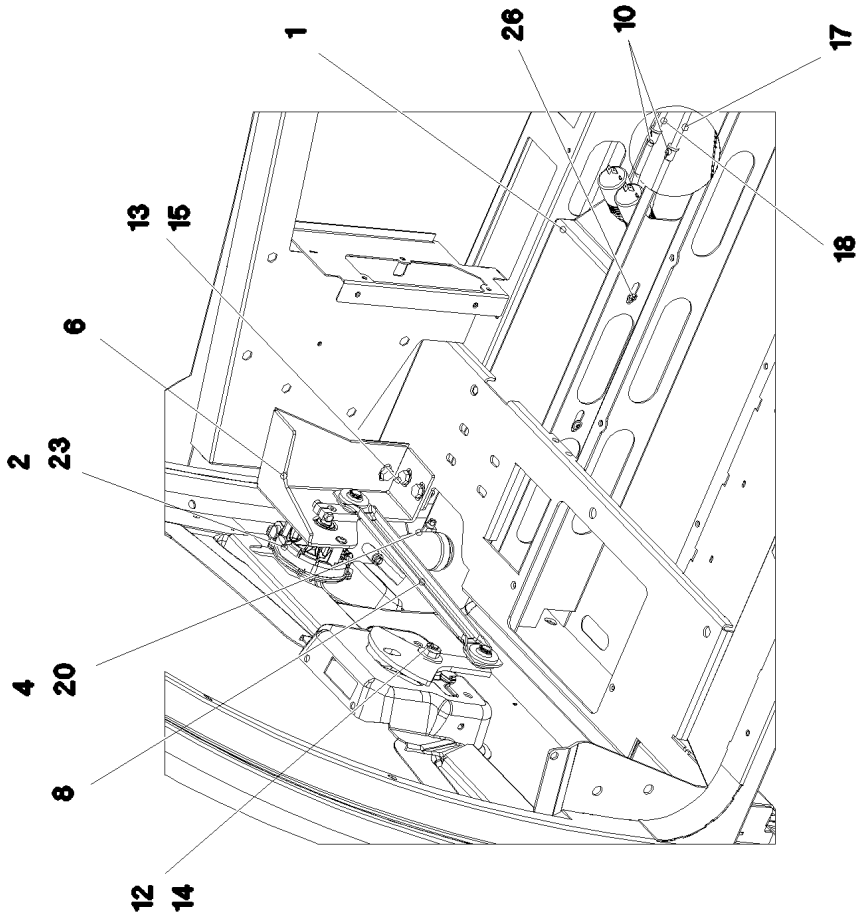
1
26
10
17
18
13
15
6
2
23
4
20
8
12
14

Pos.	Item	Quantity	Description	Bezeichnung
1	966408908	1	WATER CONTAINER CPL ⇨ ❑ 400	WASSERBEHAELTER KPL.
2	10292021	2	WIPER MOTOR 55NM 24V SPF	WISCHERMOTOR
3	10292014	1	WIPER ARM 650MM	WISCHERARM
4	97006624	1	TUBE 49X68X78 EPDM	ROHR
5	10292016	1	WIPER BLADE 700	WISCHERBLATT
6	97000389	1	PLATE 4X347X222 S315MC FE//ZNNI8//CN//T	BLECH
7	10292018	1	WIPER FRAME	WISCHERGESTAENGE
8	10870968	1	WIPER FRAME	WISCHERGESTAENGE
9	97006461	1	PLATE 2X177X240 DC01 FE//ZNNI8//CN//T0	BLECH
10	591055608	2	NON-RETURN VALVE	RUECKSCHLAGVENTIL
12	10197769	1	HEX NUT DIN 985 M10 8 ZNNI-480H SPF	SECHSKANTMUTTER
13	10289803	4	WASHER ISO 7089 8 300HV 480H SPF	SCHEIBE
14	421802108	1	WASHER ISO 7093-1 10 A2	SCHEIBE
15	11651767	4	HEX SCREW ISO 4017 M8X20 8.8 480H SPF	SECHSKANTSCHRAUBE
16	10815496	1	NOZZLE SET PA	DUESENSATZ
17	11000710	1.3	WATER HOSE DN4-RAUCLAIR-E PVC TRAN	WASSERSCHLAUCH
18	11000710	2.8	WATER HOSE DN4-RAUCLAIR-E PVC TRAN	WASSERSCHLAUCH
19	10815416	1	FILLER CAP 42 PA	EINFUELLDECKEL
20	10878445	2	HOSE CLAMP 45/30-45/9 W3	SCHLAUCHSCHELLE
22	591051008	2	SWIVEL ELBOW	WINKELSTUTZEN
23	10875468	6	BUTTON HEAD SCREW AEHNL.ISO 7380-2	HALBRUNDKOPFSCHRAUBE
24	11840297	4	HEX SCREW EN 1665 M6X16 8.8 480H SPF	SECHSKANTSCHRAUBE
26	10875483	2	BUTTON HEAD SCREW ISO 7380-2 M5X10 0	HALBRUNDKOPFSCHRAUBE
27	11693875	2	HEX NUT ISO 4032 M8 8 480H SPF	SECHSKANTMUTTER
28	591080608	0.25	HOSE DN3,5-GU23725 GUMMI	SCHLAUCH

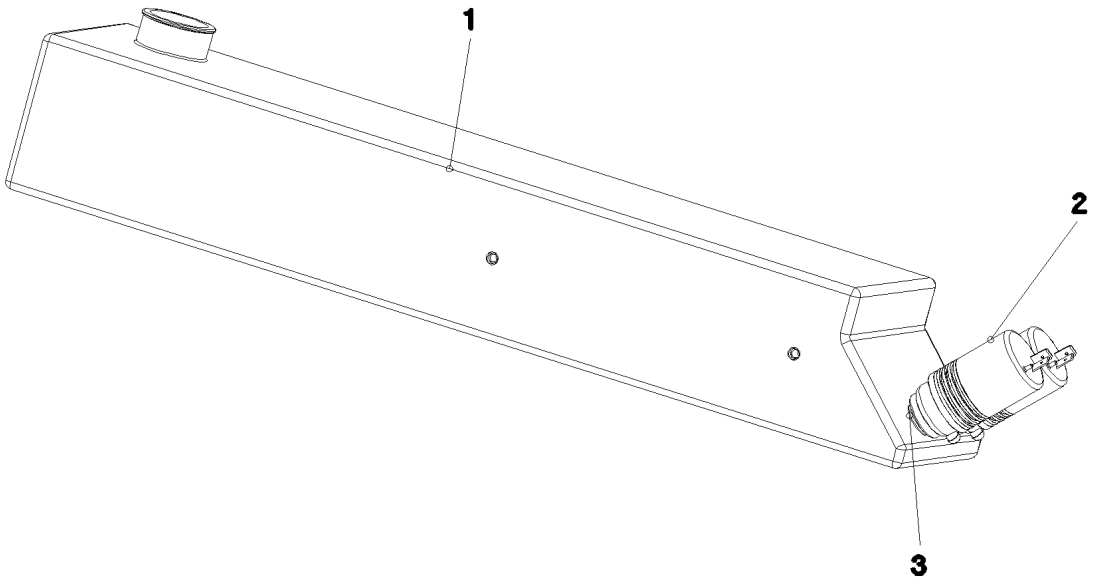

Pos.	Item	Quantity	Description	Bezeichnung
1	97003164	1	WATER BASIN 505X126X100 PE SPF	WASSERBEHAELTER
2	591055408	2	PUMP MP41 SPF	PUMPE
3	591055508	2	SPOUT 6,5/6,5/2 GUMMI	TUELLE

Pos.	Item	Quantity	Description	Bezeichnung
1	916165808	1	CRANE DRIVER'S CABIN PUR.PARTS RAL 7	KRANFUEHRERKABINE KAUFT

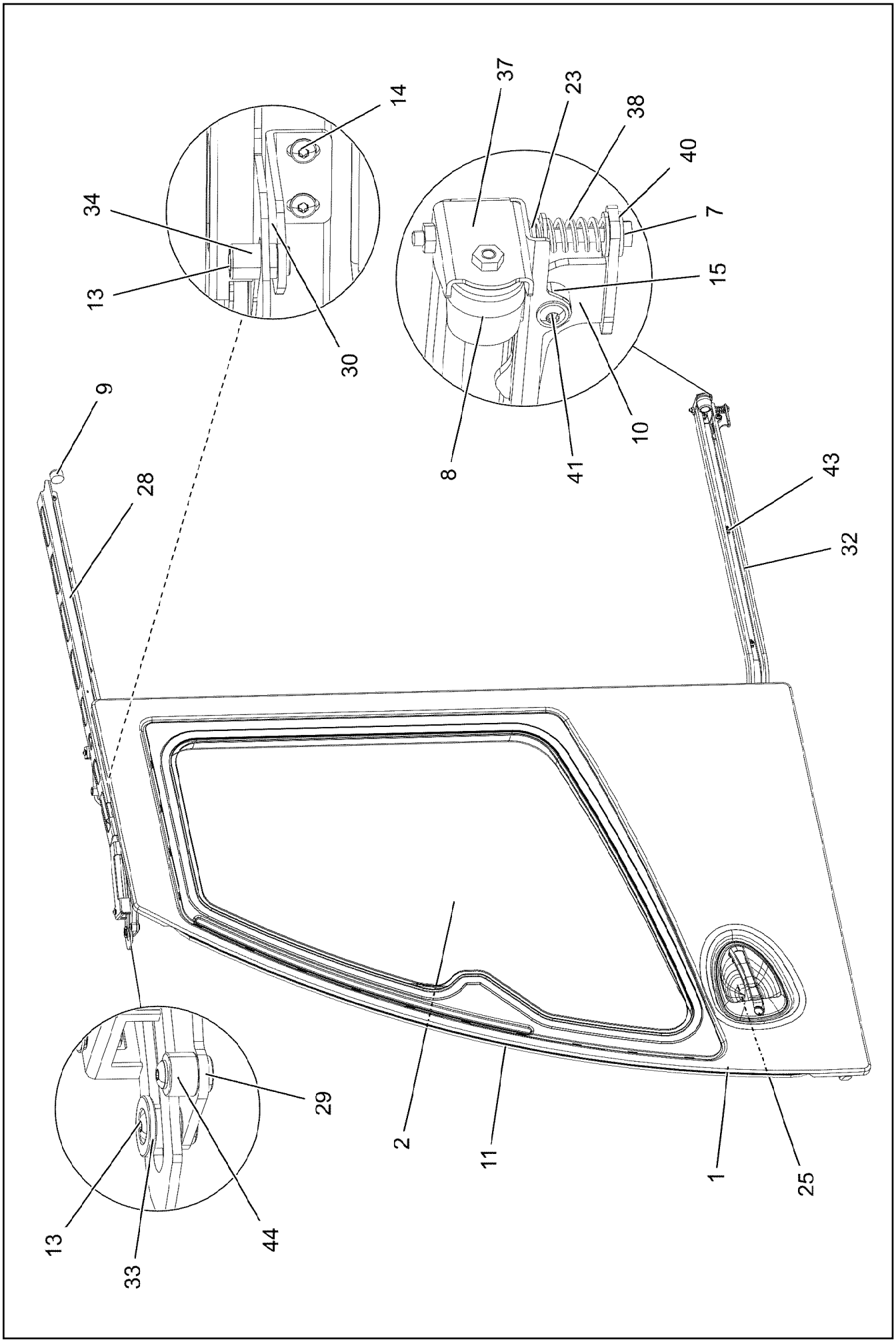
14
37
23
38
40
34
7
13
15
30
9
8
41
10
43
28
32
29
2
11
1
25
13
44
33

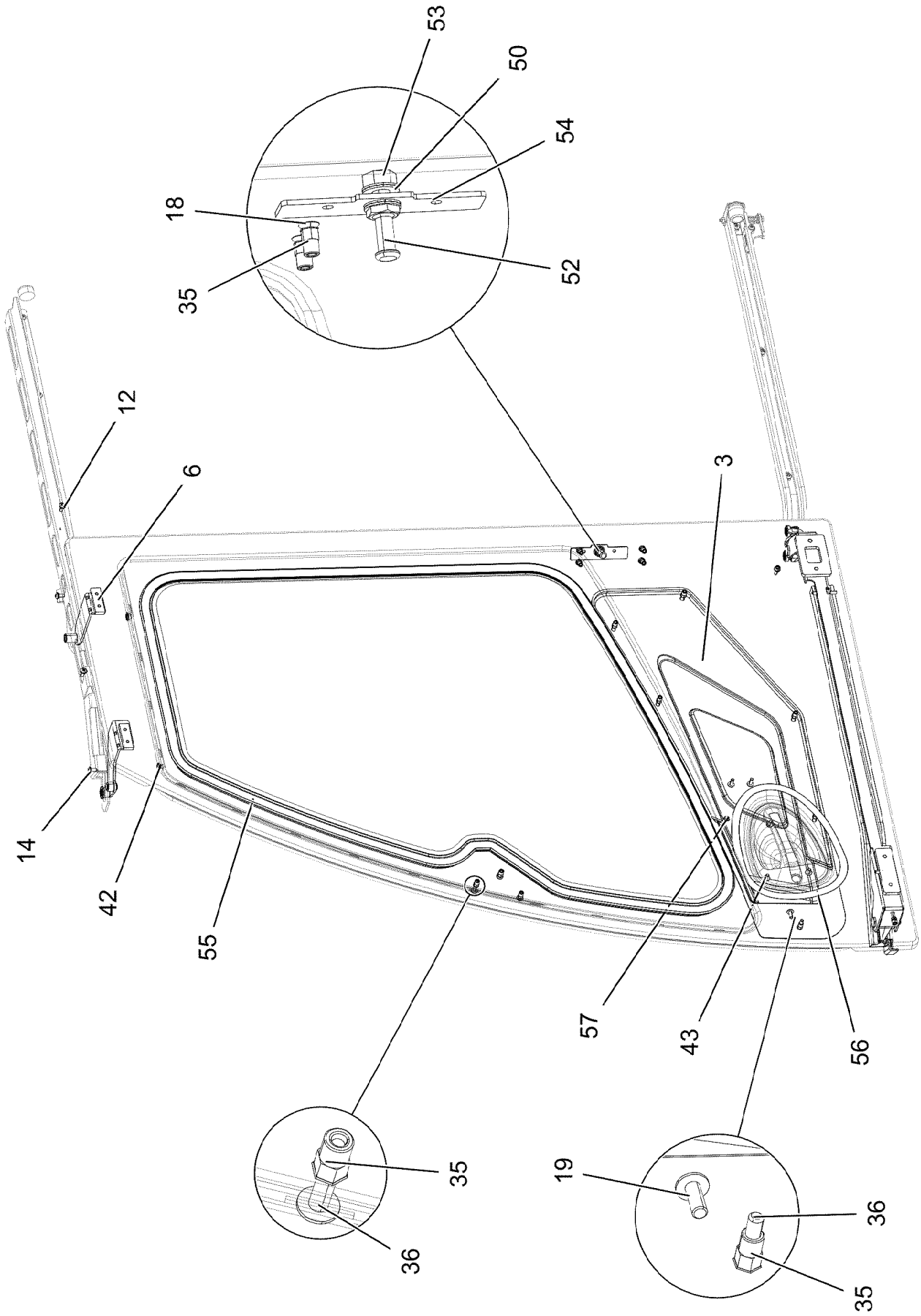
53
50
54
18
52
35
12
6
3
14
42
55
57
43
56
35
36
19
36
35

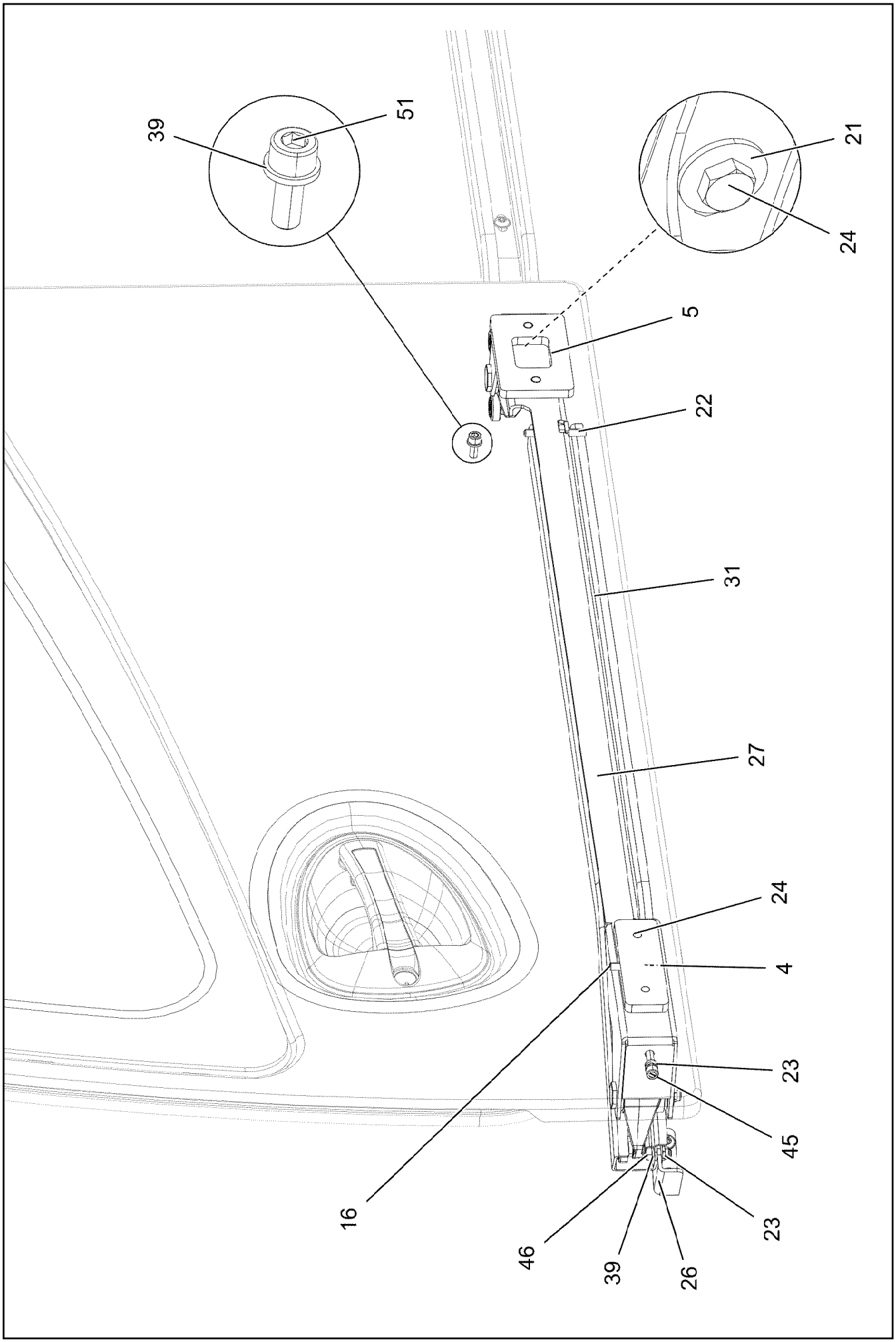
39
51
21
24
5
22
31
27
24
4
23
45
16
23
46
39
26

Pos.	Item	Quantity	Description	Bezeichnung
2	97000274	1	DOOR PANE 4X1161X 950 ESG SPF	TUERSCHEIBE
3	97000275	1	DOOR COVERING 880X390X28 ABS SPF	TUERVERKLEIDUNG
4	97000276	1	THREADED PLATE 8X110X35 S355MC FE//	GEWINDEPLATTE
5	97000277	1	THREADED PLATE 8X98X60 S355MC FE//ZN	GEWINDEPLATTE
6	953695308	2	THREADED PLATE 8X20X60 S235JR FE//ZN	GEWINDEPLATTE
7	11007009	1	HEX SCREW ISO 4017 M6X85 A2-70	SECHSKANTSCHRAUBE
8	10472890	1	RUBBER BUFFER 32X32XM6 ELASTOMER	GUMMIPUFFER
9	10030440	1	MEGI BUFFER 30X17 M8 75°SHORE	MEGIPUFFER
10	966825408	1	LOCKING BAR WELDMENT	RIEGEL SCHWK.
11	10300600	4.2	CLAMPING PROFILE 2X13,5X20 EPDM/MOO	KLEMMPROFIL
12	10412851	4	BUTTON HEAD SCREW AEHNL.ISO 7380-2	HALBRUNDKOPFSCHRAUBE
13	11160744	3	BUTTON HEAD SCREW AEHNL.ISO 7380-2	HALBRUNDKOPFSCHRAUBE
14	10475893	10	BUTTON HEAD SCREW AEHNL.ISO 7380-2	HALBRUNDKOPFSCHRAUBE
15	97002990	1	BUSHING 16X12 1.4301	BUCHSE
16	404400508	1	GRUB SCREW DIN 913 M6X25 45H VERZ	GEWINDESTIFT
18	10875551	4	COUNTERSUNK SCREW DIN 7991 M6X16 8	SENKSCHRAUBE
19	10875468	5	BUTTON HEAD SCREW AEHNL.ISO 7380-2	HALBRUNDKOPFSCHRAUBE
21	10540510	4	WASHER ISO 7093-1 8 200HV-A4	SCHEIBE
22	10450694	1	GRUB SCREW M6X50 A2-70	GEWINDESTIFT
23	411903008	4	HEX NUT DIN 985 M6 A2-70	SECHSKANTMUTTER
24	406527808	4	HEX SCREW ISO 4017 M8X16 A2-70	SECHSKANTSCHRAUBE
25	966230408	1	CLOSING DEVICE ⇨ ❑ 406	SCHLIESSANLAGE
26	97000492	1	PLATE 3X75X61 X5CRNI18-10	BLECH
27	966230508	1	GUIDE PRE-ASS. ⇨ ❑ 407	FUEHRUNG VORM.
28	966230608	1	GUIDE WELDED GLASPERLENGESTRAHLT	FUEHRUNG SCHWK.
29	966230708	1	CLAMP WELDED CONST.	HALTER SCHWK.
30	966230808	1	CLAMP WELDED CONST.	HALTER SCHWK.
31	97000516	1	FRONT PROFILE 803X122X44 1.4305	PROFIL VORN
32	97000517	1	REAR PROFILE 820X125X72.6 1.4305	PROFIL HINTEN
33	97001711	1	SLEEVE 25X15 PA 12	HUELSE
34	97001760	1	SLEEVE 18X24 PA12	HUELSE
35	10042593	13	BLIND RIVET NUT M6 K=1,5-3,5 ST CR6-FRE	BLINDNIETMUTTER
36	10875469	7	BUTTON HEAD SCREW ISO 7380-2 M6X30 0	HALBRUNDKOPFSCHRAUBE
37	966363808	1	PLATE WELDED	BLECH SCHWK.
38	11067867	1	PRESSURE SPRING 2X12X41,73 EN10270-3	DRUCKFEDER
39	420060201	2	WASHER ISO 7089 6 200HV-A2	SCHEIBE
40	10540500	4	WASHER ISO 7093-1 6 200HV-A4	SCHEIBE
41	10412853	1	BUTTON HEAD SCREW AEHNL.ISO 7380-2	HALBRUNDKOPFSCHRAUBE
42	7361205	2	BLANKING PLUG PE-LD	VERSCHLUSSSTOPFEN
43	10813359	7	BUTTON HEAD SCREW AEHNL.ISO 7380-2	HALBRUNDKOPFSCHRAUBE
44	97012184	1	SLEEVE 18X12 PA 12	HUELSE
45	404230308	1	SOCKET HEAD SCREW ISO 4762 M6X40 A2	ZYLINDERSCHRAUBE
46	10001739	1	HEX SCREW ISO 4017 M6X16 A2-70	SECHSKANTSCHRAUBE
47	811205108	1	ADHESIVE CLEANER 250ML	HAFTREINIGER
48	811203308	1	ADHESIVE 600ML FC-BEUTEL	KLEBER
49	811203108	1	TOOLING AGENT KANISTER5L +5/+35 °C	ABGLAETTMITTEL
50	7015814	2	WEDGE LOCK WASHER NORD-LOCK 10SP	KEILSICHERUNGSSCHEIBE
51	404250914	1	SOCKET HEAD SCREW ISO 4762 M6X16 A4	ZYLINDERSCHRAUBE
52	97019129	1	CLOSING PIN 1.4305	SCHLIESSBOLZEN
53	10179115	1	HEX NUT ISO 8673 M10X1 8 FLZN SPF	SECHSKANTMUTTER
54	97026779	1	PLATE 3X30X119 X5CRNI18-10	BLECH
55	10876056	3.4	CLAMPING PROFILE 25,7X21,5 EPDM	KLEMMPROFIL
56	97088496	1	ADHESIVE FOIL OUTSIDE HANDLE 240X319	KLEBEFOLIE AUSSENGRIFF
57	704259608	1	RAPID FIXING	SCHNELLBEFESTIGER

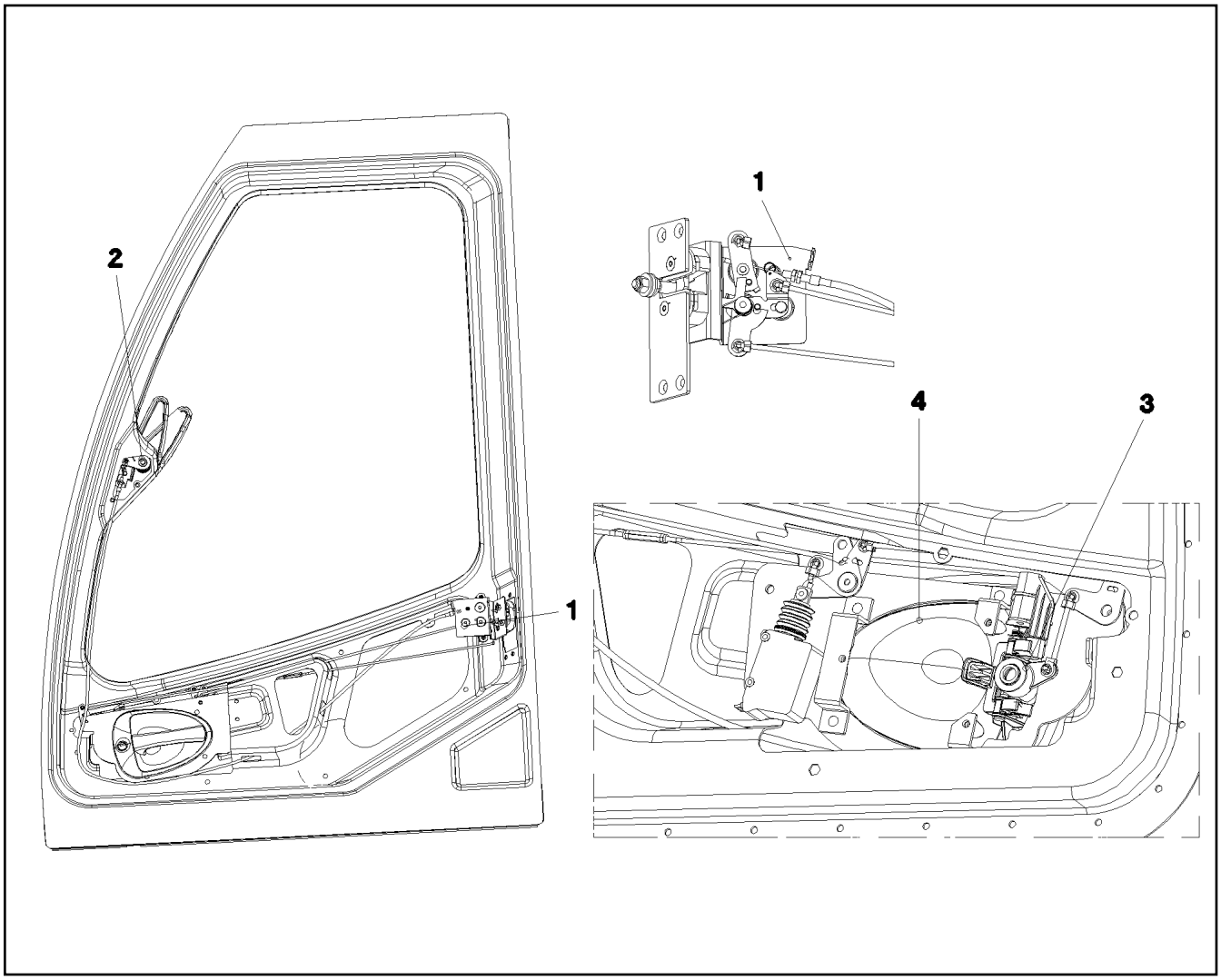

Pos.	Item	Quantity	Description	Bezeichnung
1	11005985	1	LOCK WITH FALLING LATCH LINKS	DREHFALLENSCHLOSS
2	11005984	1	INSIDE HANDLE ZUG	INNENGRIFF
3	11005983	1	HANDLEADAPTER	GRIFFADAPTION
4	11005987	1	OUTSIDE HANDLE ZUG	AUSSENGRIFF

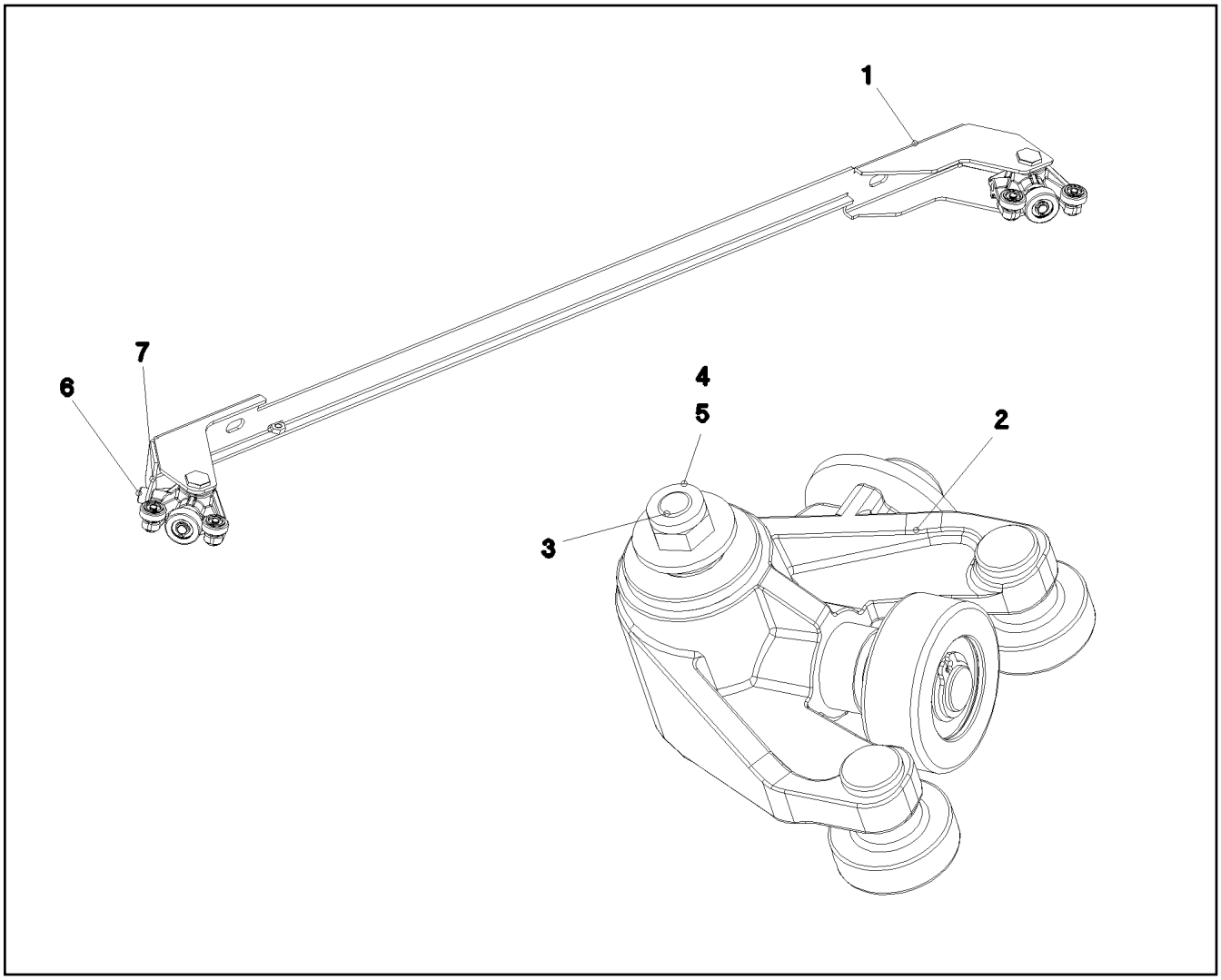

Pos.	Item	Quantity	Description	Bezeichnung
1	966253708	1	HOLDER	HALTER
2	966253908	2	WAGON ⇨ ❑ 408	WAGEN
3	97001095	2	PIN 22X57 1.4305	BOLZEN
4	421801708	2	WASHER ISO 7093-1 6 200HV-A2	SCHEIBE
5	411903008	2	HEX NUT DIN 985 M6 A2-70	SECHSKANTMUTTER
6	10875593	1	SOCKET HEAD SCREW ISO 4762 M8X10 8.8	ZYLINDERSCHRAUBE
7	421802108	1	WASHER ISO 7093-1 10 A2	SCHEIBE

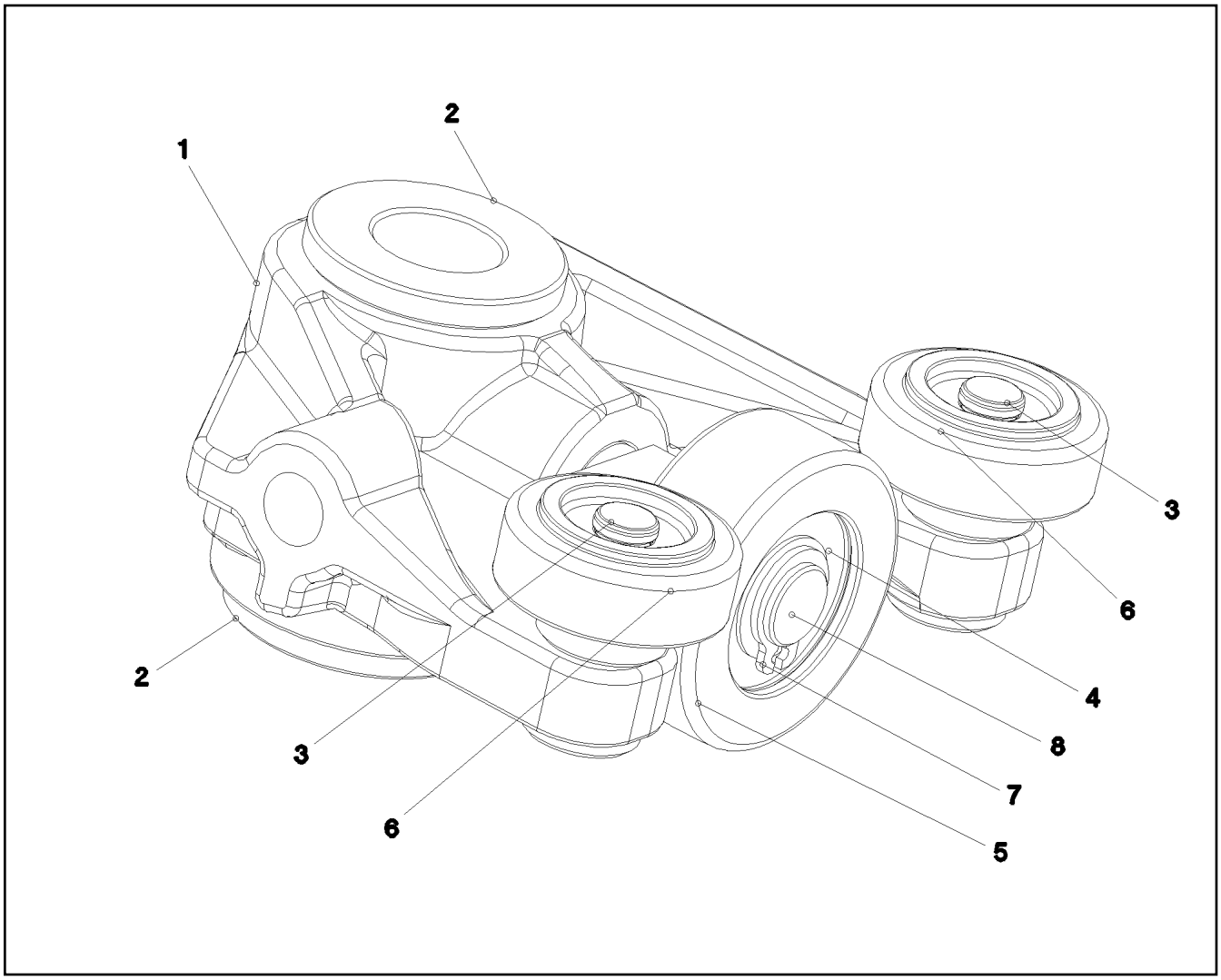

Pos.	Item	Quantity	Description	Bezeichnung
1	97001102	1	WAGON 68X64.5X33 G-ALSI7MG WA	WAGEN
2	10424489	2	FLANGE SLEEVE 18X12X12 SINT A50	BUNDLAGER
3	97001103	2	PIN 22X11 1.4301	BOLZEN
4	745129501	1	DEEP GROOVE BALL BEARING DIN 625 S6	RILLENKUGELLAGER
5	97008171	1	ROLLER 30X11 PA 12	ROLLE
6	97001109	2	ROLLER 22X13 PA 12	ROLLE
7	10450160	1	LOCKING RING DIN 471 8X0,8 EDELSTAHL	SICHERUNGSRING
8	97007043	1	PIN 39X18 1.4301	BOLZEN

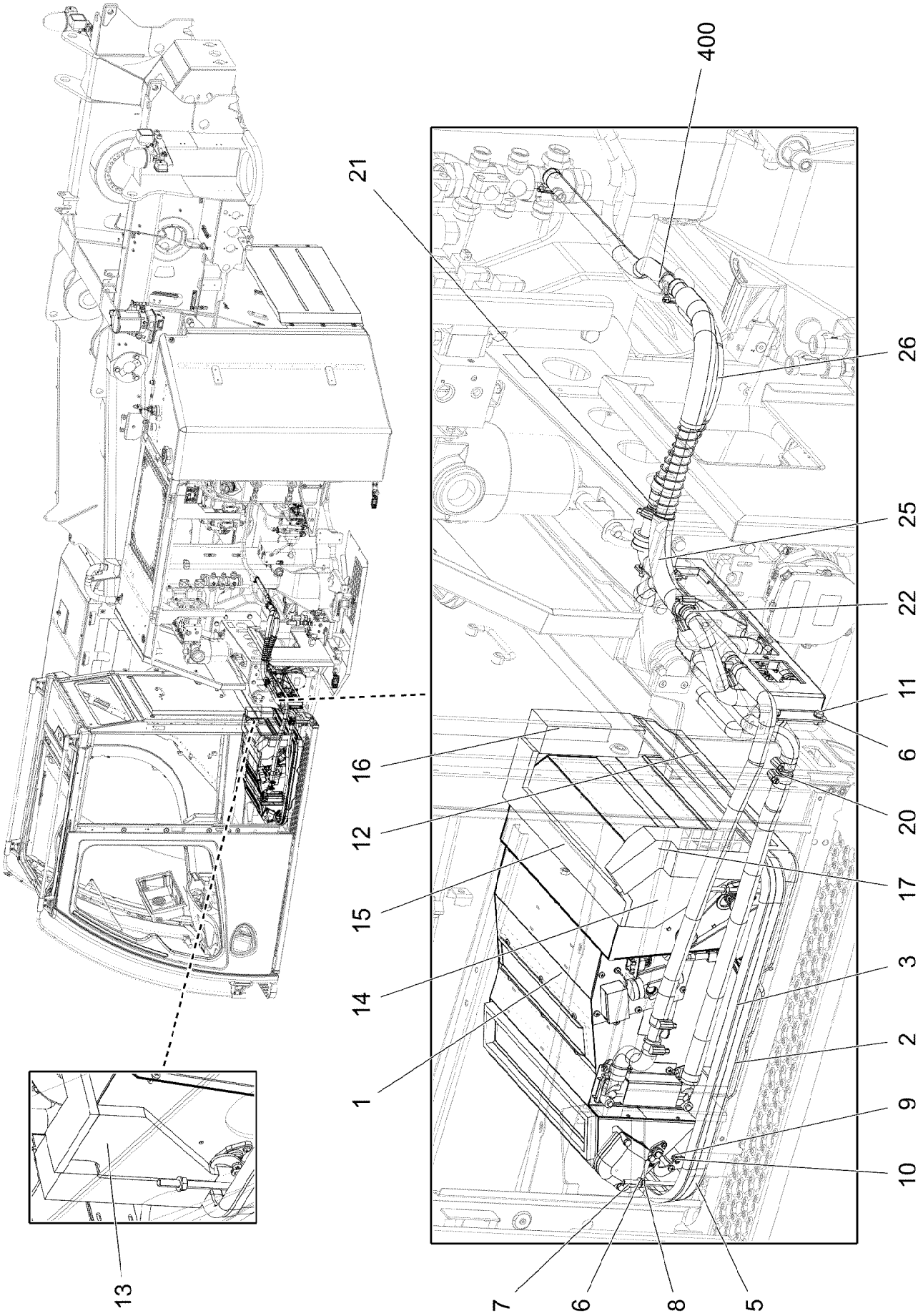
400
21
26
25
22
11
6
20
16
12
17
15
3
14
2
1
9
10
7
6
8
5
13

Pos.	Item	Quantity	Description	Bezeichnung
1	11083498	1	AIR CONDITIONING UNIT ⇨ ❑ 411	HEIZKLIMAGERAET
2	97007030	1	COVER 635X575X95 ABS	DECKEL
3	11002218	2.22	CLAMPING PROFILE 1,5-4X25X13 EPDM	KLEMMPROFIL
5	10875614	4	HEX NUT DIN 985 M8 8 480H SPF	SECHSKANTMUTTER
6	10289803	12	WASHER ISO 7089 8 300HV 480H SPF	SCHEIBE
7	10332987	4	THREADED PIN DIN 976 M8X140 4.6 A2K	GEWINDEBOLZEN
8	11693875	4	HEX NUT ISO 4032 M8 8 480H SPF	SECHSKANTMUTTER
9	511001708	2	HEX NUT ISO 4035 M5 04	SECHSKANTMUTTER
10	11690042	2	SOCKET HEAD SCREW ISO 4762 M5X12 8.8	ZYLINDERSCHRAUBE
11	11651612	4	HEX SCREW ISO 4017 M8X16 8.8 480H SPF	SECHSKANTSCHRAUBE
12	97038833	1	INSULATING MAT 40X422X93 E30F/MH/D78	DAEMMMATTE
13	97038834	1	INSULATING MAT 13X115X179 ZP30S	DAEMMMATTE
14	97038835	1	INSULATING MAT 20X115X199 ZP30S	DAEMMMATTE
15	97038836	1	INSULATING MAT 10X455X110 E30F/MH/D78	DAEMMMATTE
16	97038837	1	INSULATING MAT 50X60X182 E30F/MH/D78	DAEMMMATTE
17	97038838	1	INSULATING MAT 50X78X235 E30F/MH/D78	DAEMMMATTE
20	969085208	1	HEATING, PRE-ASSEMBLED ⇨ ❑ 413	HEIZUNG VORM.
21	11000700	2	CONNECTING PIPE 0	VERBINDUNGSROHR
22	11118077	2	HOSE CLAMP 21/16-27/12 W3	SCHLAUCHSCHELLE
25	10870633	0.75	HOSE GUARD SPIRAL DN30,5 ST VERZ	SCHLAUCHSCHUTZSPIRALE
26	10870633	0.5	HOSE GUARD SPIRAL DN30,5 ST VERZ	SCHLAUCHSCHUTZSPIRALE
400	96050638	1	HOSE LINE	SCHLAUCHLEITUNG
(2823)	96024886	1	HOSE CPL. CONTI KWS 20X750	SCHLAUCH KPL.
(2824)	96020259	1	HOSE CPL. CONTI KWS 20X1100	SCHLAUCH KPL.

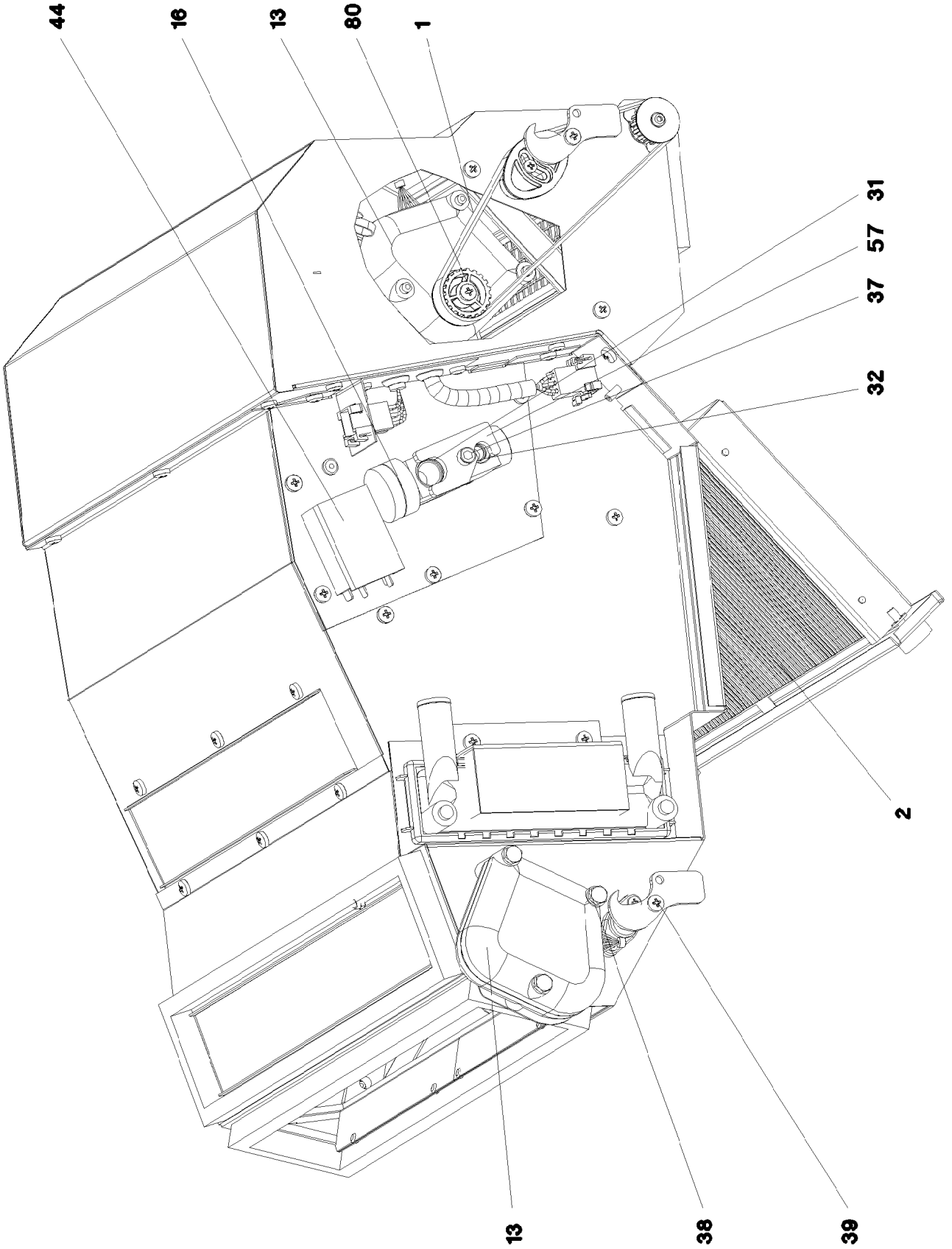
44
16
13
80
1
31
57
37
32
2
13
38
39

Pos.	Item	Quantity	Description	Bezeichnung
1	11083453	1	TOOTHED BELT	ZAHNRIEMEN
2	11083438	1	FILTER	FILTER
7	11083215	1	PLATE STAHLBLECH	BLECH
13	10287301	2	SERVOMOTOR 0,0024KW24V SPF	STELLMOTOR
14	10801858	1	HEAT EXCHANGER ALU	WAERMETAUSCHER
15	10874825	1	EVAPORATOR	VERDAMPFER
16	7622478	1	VALVE	VENTIL
31	515710608	1	O-RING ARP 568 14X1,78 NBR90	O-RING
32	510760408	1	O-RING ARP 568 10,82X1,78 NBR90	O-RING
37	12203070	2	SOCKET HEAD SCREW ISO 4762 M5X40 8.8	ZYLINDERSCHRAUBE
38	12203634	3	SOCKET HEAD SCREW ISO 4762 M6X50 8.8	ZYLINDERSCHRAUBE
39	12219804	4	PAN-HEAD SCREW ISO 7045 M4X10 4.8 480	FLACHKOPFSCHRAUBE
44	571867708	1	THERMOSTAT	THERMOSTAT
45	11083445	1	RADIAL FAN	RADIALGEBLAESE
50	261101108	0.3	SEALING TAPE	DICHTBAND
57	10009700	1	CONTROL PANEL SUPPORT	ARMATURENHALTER
80	10872521	1	GEAR WHEEL	ZAHNRAD

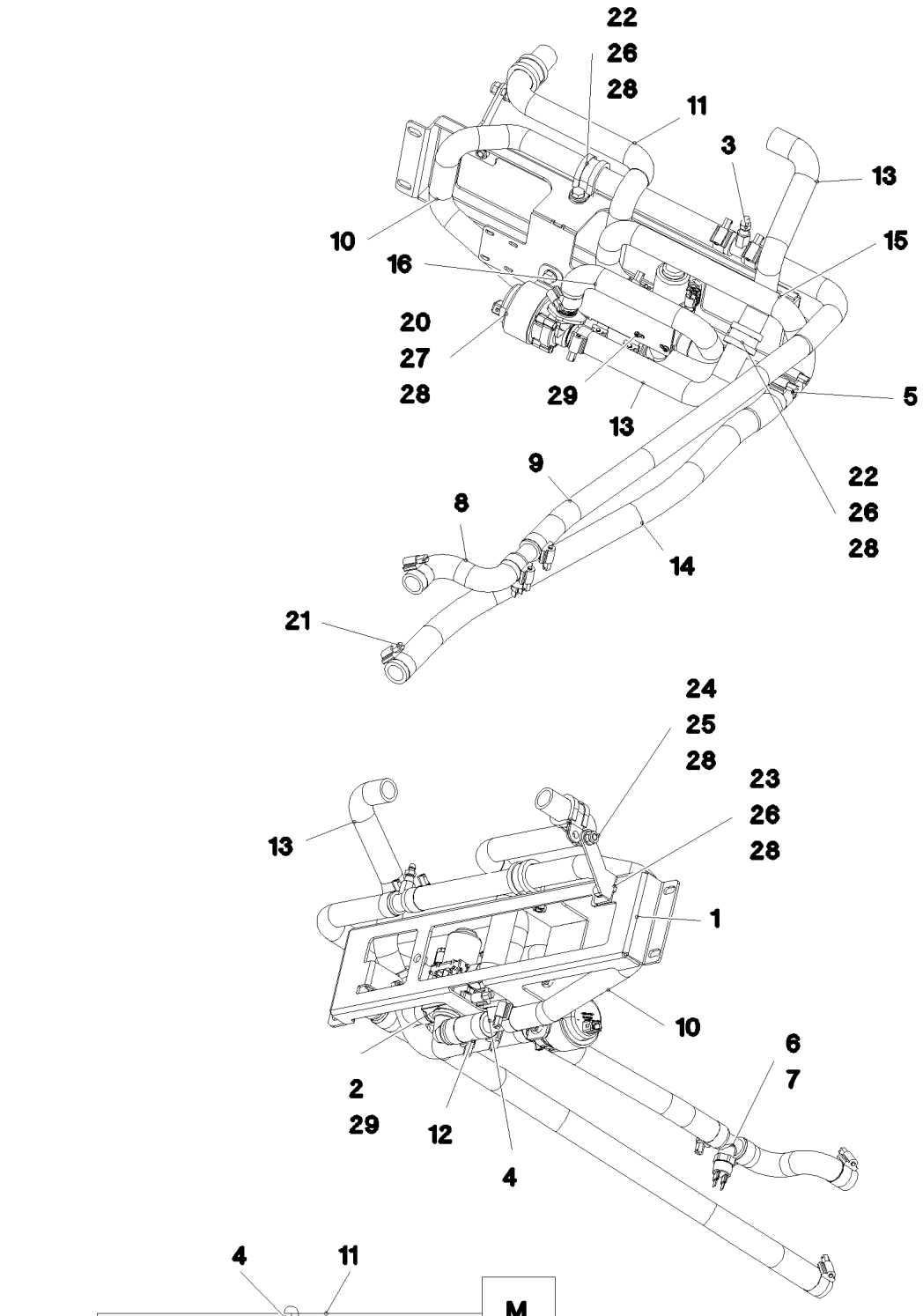
22
26
28
11
3
13
10
16
15
20
27
28
29
13
5
9
8
22
26
28
14
21
24
25
28
23
26
28
13
1
10
6
7
2
29
12
4
4
11
M
5
14
15
12
3
9
10
T
WT
6
7
8
16
13

Pos.	Item	Quantity	Description	Bezeichnung
1	969101808	1	BRACKET WELDED CONST. RAL 7016,SDGL	KONSOLE SCHWK.
2	10343003	1	SOLENOID VALVE	MAGNETVENTIL
3	11622218	1	VENTILATION VALVE	ENTLUEFTUNGSVENTIL
4	10872612	1	TEE 20X20 L=90	T-STUECK
5	11000700	1	CONNECTING PIPE 0	VERBINDUNGSROHR
6	97042155	1	PIPE SOCKET GSCK45	ROHRSTUTZEN
7	710103008	1	SEALING RING DIN 7603 A14X20X1,5 CU	DICHTRING
8	97042069	1	FORM HOSE DN20 X3.5 B SPF	FORMSCHLAUCH
9	97042071	1	FORM HOSE DN20 X3.5 B SPF	FORMSCHLAUCH
10	97046324	1	FORM HOSE DN20 X3.5 B SPF	FORMSCHLAUCH
11	97050857	1	FORM HOSE DN20 X3.5 B SPF	FORMSCHLAUCH
12	11621770	0.06	COOLING WATER HOSE DN20-CONTI-KWS	KUEHLWASSERSCHLAUCH
13	97046326	1	FORM HOSE DN20 X3.5 B SPF	FORMSCHLAUCH
14	11621770	0.7	COOLING WATER HOSE DN20-CONTI-KWS	KUEHLWASSERSCHLAUCH
15	97046327	1	FORM HOSE DN20 X3.5 B SPF	FORMSCHLAUCH
16	97046328	1	FORM HOSE DN20 X3.5 B SPF	FORMSCHLAUCH
20	11622224	1	CIRCULATING PUMP	UMWAELZPUMPE
21	11118077	16	HOSE CLAMP 21/16-27/12 W3	SCHLAUCHSCHELLE
22	11481080	3	CLAMP DIN 3016-1 28X20XD1 W5-CR	SCHELLE
23	97033348	1	PLATE 3X63X94 DC01 FE//ZNNI8//CN//T0	BLECH
24	11651767	1	HEX SCREW ISO 4017 M8X20 8.8 480H SPF	SECHSKANTSCHRAUBE
25	10875614	1	HEX NUT DIN 985 M8 8 480H SPF	SECHSKANTMUTTER
26	11651612	3	HEX SCREW ISO 4017 M8X16 8.8 480H SPF	SECHSKANTSCHRAUBE
27	11690048	2	HEX SCREW ISO 4017 M8X12 8.8 480H SPF	SECHSKANTSCHRAUBE
28	10289803	7	WASHER ISO 7089 8 300HV 480H SPF	SCHEIBE
29	10875795	4	TALLOW-DROP SCREW 4X10 10.9 P3E	LINSENKOPFSCHRAUBE

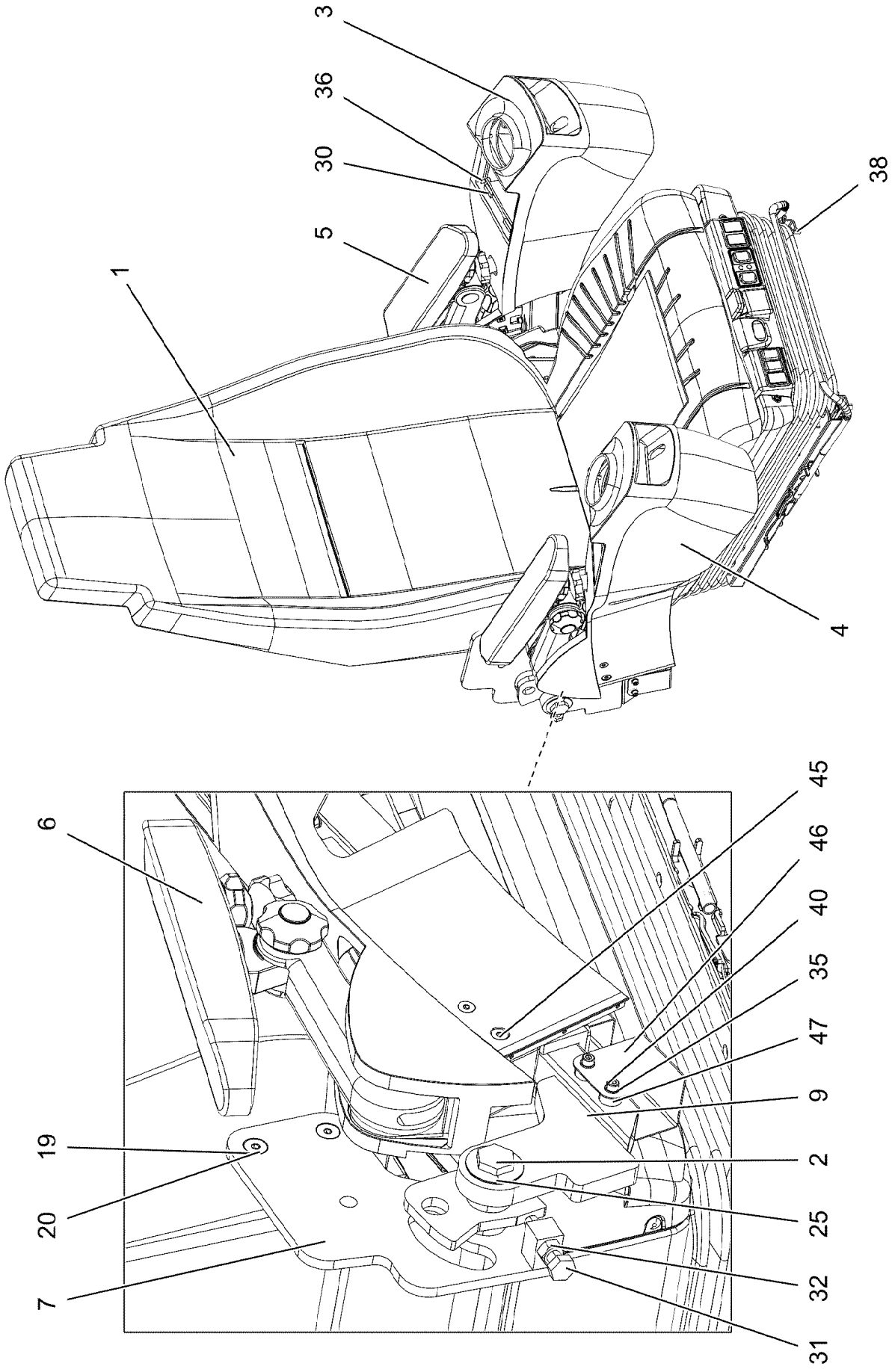
3
36
30
5
1
38
4
6
45
46
40
35
47
9
19
2
20
25
7
32
31

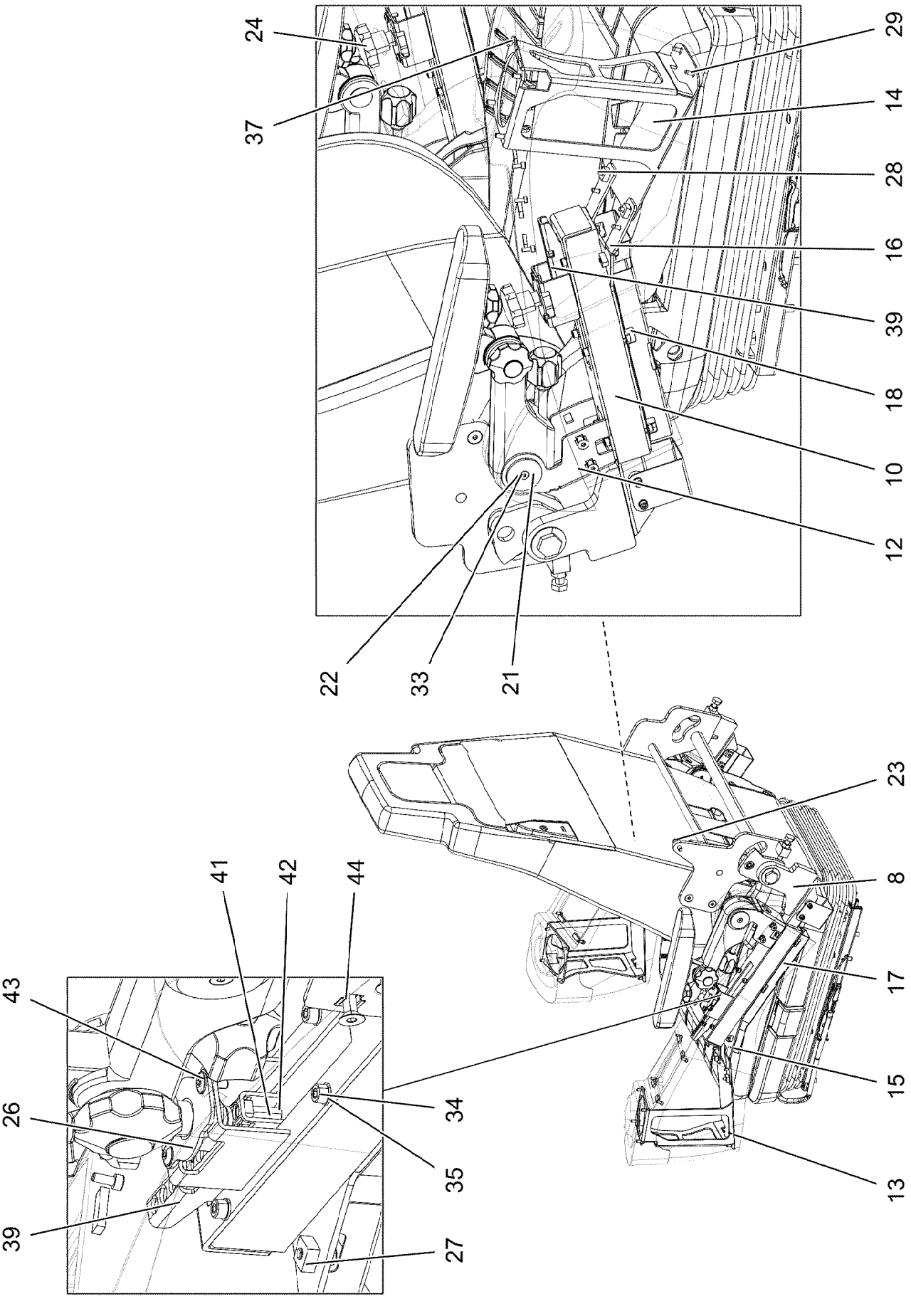
24
37
29
14
28
16
39
18
10
12
22
33
21
23
8
17
15
13
41
42
44
43
26
39
34
35
27

Pos.	Item	Quantity	Description	Bezeichnung
1	10877138	1	OPERATOR SEAT 1030/880NTS ⇨ ❑ 418	FAHRERSITZ
2	97096918	2	THREADED PIN 20X53X78 C45 FE//ZNNI8//C	GEWINDEBOLZEN
3	967588308	1	BRACKET LEFT SPF	KONSOLE LINKS
4	967588408	1	BRACKET RIGHT SPF	KONSOLE RECHTS
5	96032222	1	REWORK ARMREST LEFT ⇨ ❑ 420	NACHARBEIT ARMLEHNE LI.
6	96032223	1	REWORK ARMREST RIGHT ⇨ ❑ 422	NACHARBEIT ARMLEHNE RE.
7	96021362	1	BRACKET WELDED CONST. FE//ZNNI8//CN/	KONSOLE SCHWK.
8	96021363	1	BRACKET,LEFT WELDED FE//ZNNI8//CN//T0	KONSOLE SCHWK.LI.
9	96021365	1	BRACKET,RIGHT WELDED FE//ZNNI8//CN//T	KONSOLE SCHWK.RE.
10	977430408	2	GUIDE 306X48X37 ENAW6060-T66	FUEHRUNG
12	964843708	2	BRACKET WELDED CONST. RAL 9005 SPF	KONSOLE SCHWK.
13	964843808	1	BRACKET,LEFT WELDED RAL 9005 SPF	KONSOLE SCHWK.LI.
14	964843908	1	BRACKET,RIGHT WELDED RAL 9005 SPF	KONSOLE SCHWK.RE.
15	977444008	1	PLATE 3X366X104 DC01 RAL 9005 SPF	BLECH
16	977444108	1	PLATE 3X366X104 DC01 RAL 9005 SPF	BLECH
17	977444308	1	PLATE 1X285X126 DC01 RAL 9005 SPF	BLECH
18	977444408	1	PLATE 1X285X126 DC01 RAL 9005 SPF	BLECH
19	971805708	4	TUBE 15.0 X24 S355J2C+C FE//ZNNI8//CN//T	ROHR
20	12102051	4	THREAD FORM SCREW DIN 7500 M8X45 A2	GEWINDEFORMSCHRAUBE
21	971974108	4	PLATE 3X40X40 DC01 FE//ZNNI8//CN//T0	BLECH
22	971974208	2	PLATE 3X26X26 DC01 FE//ZNNI8//CN//T0	BLECH
23	591067008	1	GAS SPRING 19X60-550N	GASFEDER
24	10443625	2	STAR HANDLE SCREW	STERNGRIFFSCHRAUBE
25	720801908	4	DISC SPRING DIN 2093 40X20,4X1	TELLERFEDER
26	964984108	2	SHIM FE//ZNNI8//CN//T0	AUSGLEICHSBLECH
27	10455281	6	CAGE NUT M5 ST	KAEFIGMUTTER
28	10875474	6	BUTTON HEAD SCREW ISO 7380-2 M5X16 0	HALBRUNDKOPFSCHRAUBE
29	10019040	8	TALLOW-DROP SCREW K4X12 ST A3K	LINSENKOPFSCHRAUBE
30	262103108	0.064	SPONGE RUBBER 20X4 MOOSGUMMI	MOOSGUMMI
31	11642355	2	HEX SCREW ISO 4017 M10X50 8.8 FLZN SP	SECHSKANTSCHRAUBE
32	12102695	2	HEX NUT ISO 4032 M10 8 ZNNI-480H SPF	SECHSKANTMUTTER
33	408603508	4	COUNTERSUNK SCREW DIN 7991 M5,0X10,	SENKSCHRAUBE
34	11690042	24	SOCKET HEAD SCREW ISO 4762 M5X12 8.8	ZYLINDERSCHRAUBE
35	11140403	28	WASHER ISO 7089 5 200HV 480H SPF	SCHEIBE
36	11691539	8	SOCKET HEAD SCREW ISO 4762 M4X10 8.8	ZYLINDERSCHRAUBE
37	11140402	8	HEX SCREW ISO 4017 M5X12 8.8 480H SPF	SECHSKANTSCHRAUBE
38	10875559	6	SOCKET HEAD SCREW DIN 6912 M8X16 08	ZYLINDERSCHRAUBE
39	967257808	2	PLATE WELDED FE//ZNNI8//CN//T0	BLECH SCHWK.
40	12216217	4	SOCKET HEAD SCREW ISO 4762 M5X50 8.8	ZYLINDERSCHRAUBE
41	12225935	4	SOCKET HEAD SCREW ISO 4762 M6X22 10	ZYLINDERSCHRAUBE
42	10197771	4	WASHER ISO 7089 6 200HV ZNNI-480H SPF	SCHEIBE
43	11835043	2	BUTTON HEAD SCREW ISO 7380-2 M4X12 0	HALBRUNDKOPFSCHRAUBE
44	413002708	4	CAGE NUT M6	KAEFIGMUTTER
45	12100589	4	COUNTERSUNK SCREW AEHNL.ISO 10642	SENKSCHRAUBE
46	965021508	2	COVER PLATE PRE-ASS.	ABDECKBLECH VORM.
47	97002990	4	BUSHING 16X12 1.4301	BUCHSE

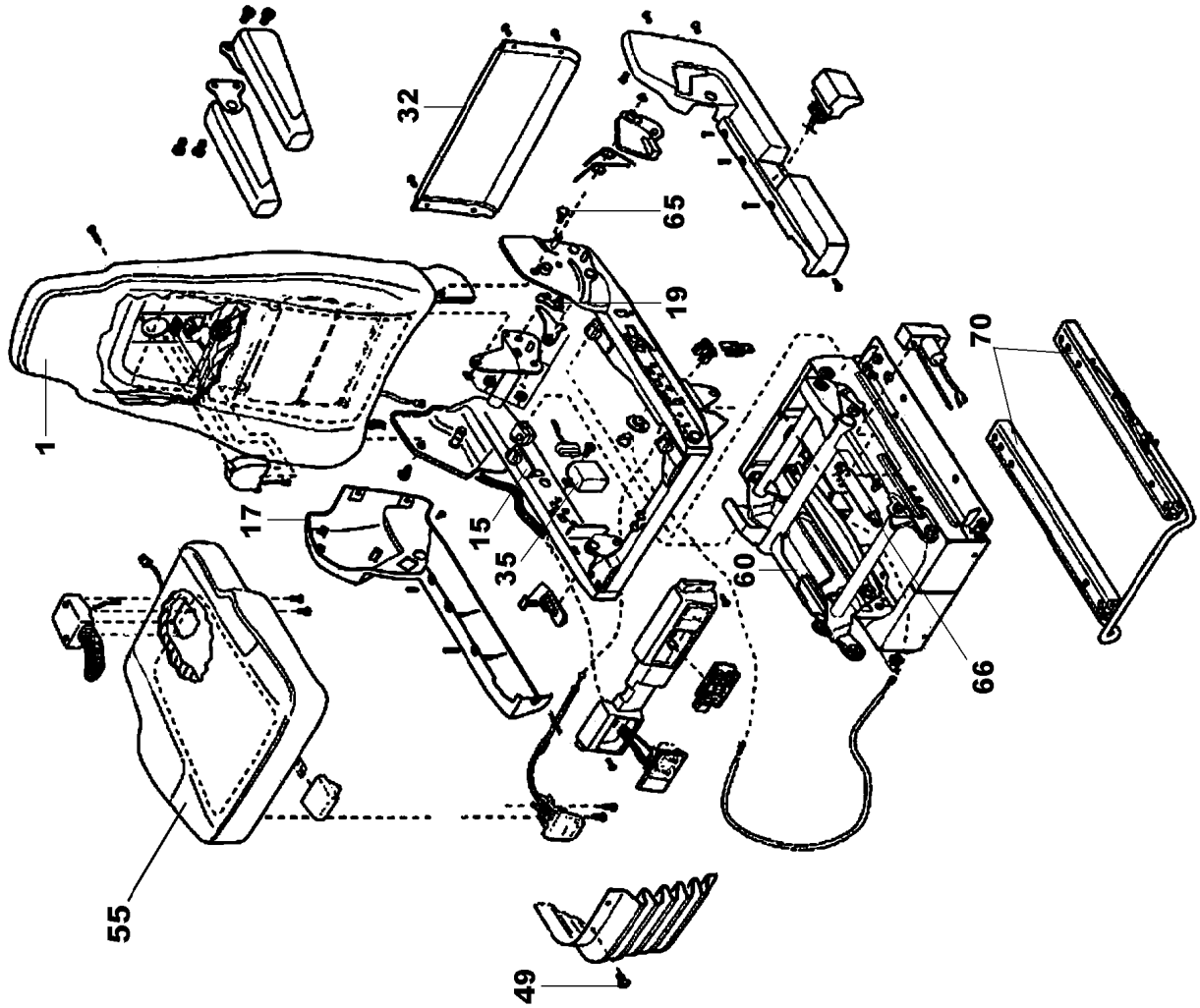
32
65
19
70
1
17
15
35
60
66
55
49

Pos.	Item	Quantity	Description	Bezeichnung
1	10663466	1	BACK PART	RUECKENTEIL
(1)	12100617	1	COVERING	BEZUG
(11)	10650386	1	FAN	LUEFTER
(13)	10650387	1	HEATING ELEMENT	HEIZELEMENT
15	10455144	1	SLIDE BLOCK CPL.	GLEITKLOTZ KPL.
17	11005170	1	COVER	ABDECKUNG
19	10492347	1	LOCKING PIECE	RASTE
24	11979975	1	SWITCH	SCHALTER
28	12102116	1	FIXED BOOM RAISING DEVICE	HOEHENVERSTELLUNG
32	11171270	1	COVER	ABDECKUNG
33	11171271	1	PUSH BUTTON	DRUCKTASTER
35	10650399	1	ELECTRONICS UNIT	ELEKTRONIKEINHEIT
49	10650403	1	MOUNTING PARTS	BEFESTIGUNGSMATERIAL
55	12100570	1	SEAT CPL.	SITZTEIL KPL.
(1)	12100619	1	COVERING	BEZUG
(2)	12103434	1	GRIP	GRIFF
(59)	12100177	1	FAN	LUEFTER
60	11171274	1	SUBSTRUCTURE	UNTERBAU
65	11171275	1	MOUNTING PARTS	BEFESTIGUNGSMATERIAL
66	10650488	1	ABSORBER	DAEMPFER
70	10650489	1	RAIL PAIR	SCHIENENPAAR
(71)	11171276	1	BRACKET	BUEGEL
85	10650490	1	AIR COMPRESSOR	LUFTPRESSER

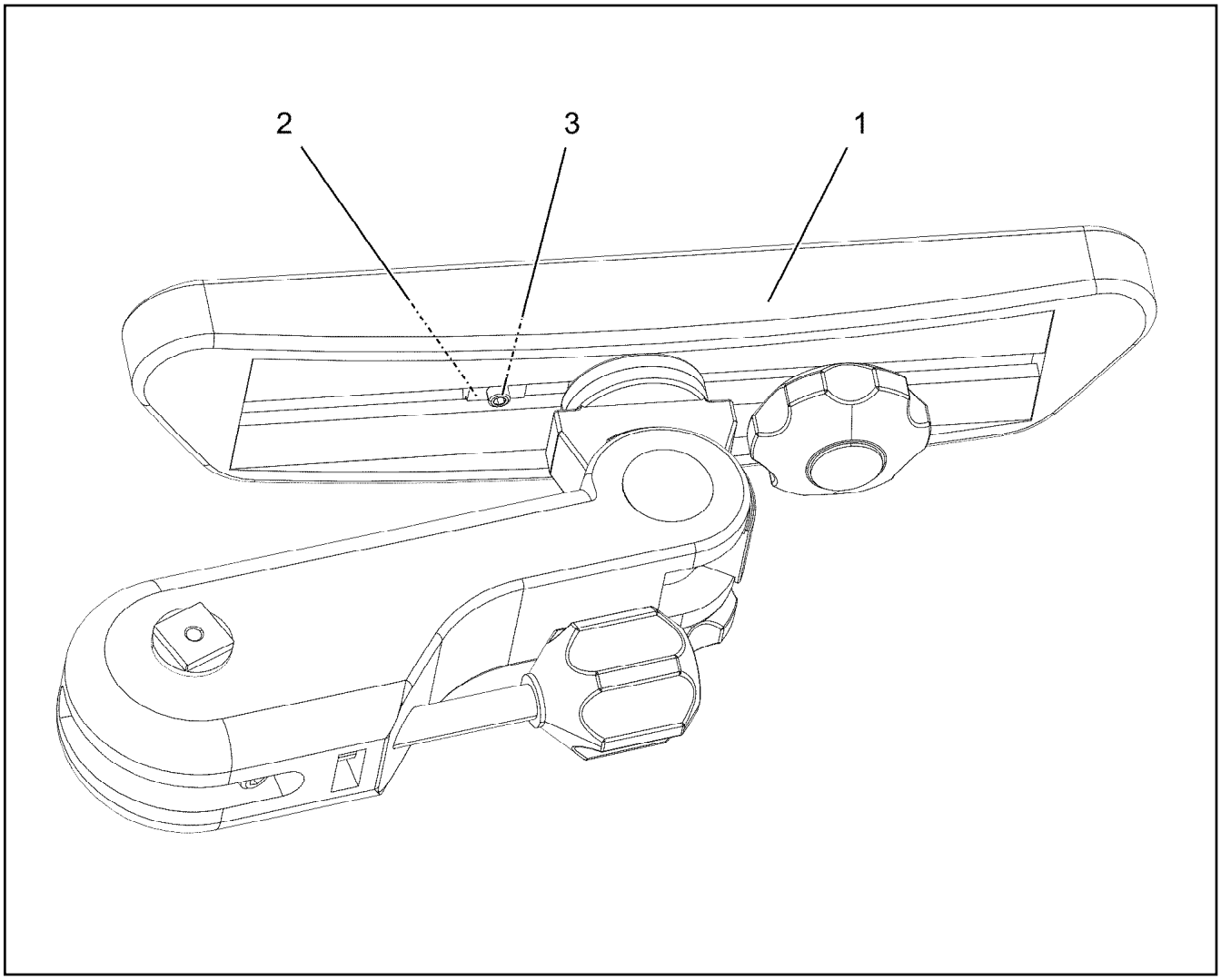

Pos.	Item	Quantity	Description	Bezeichnung
1	962282208	1	ARM REST LEFT ⇨ ❑ 421	ARMLEHNE LINKS
2	10878951	1	NUT M6X8	MUTTER
3	12100613	1	GRUB SCREW ISO 4026 M6X10 45H 480H SP	GEWINDESTIFT

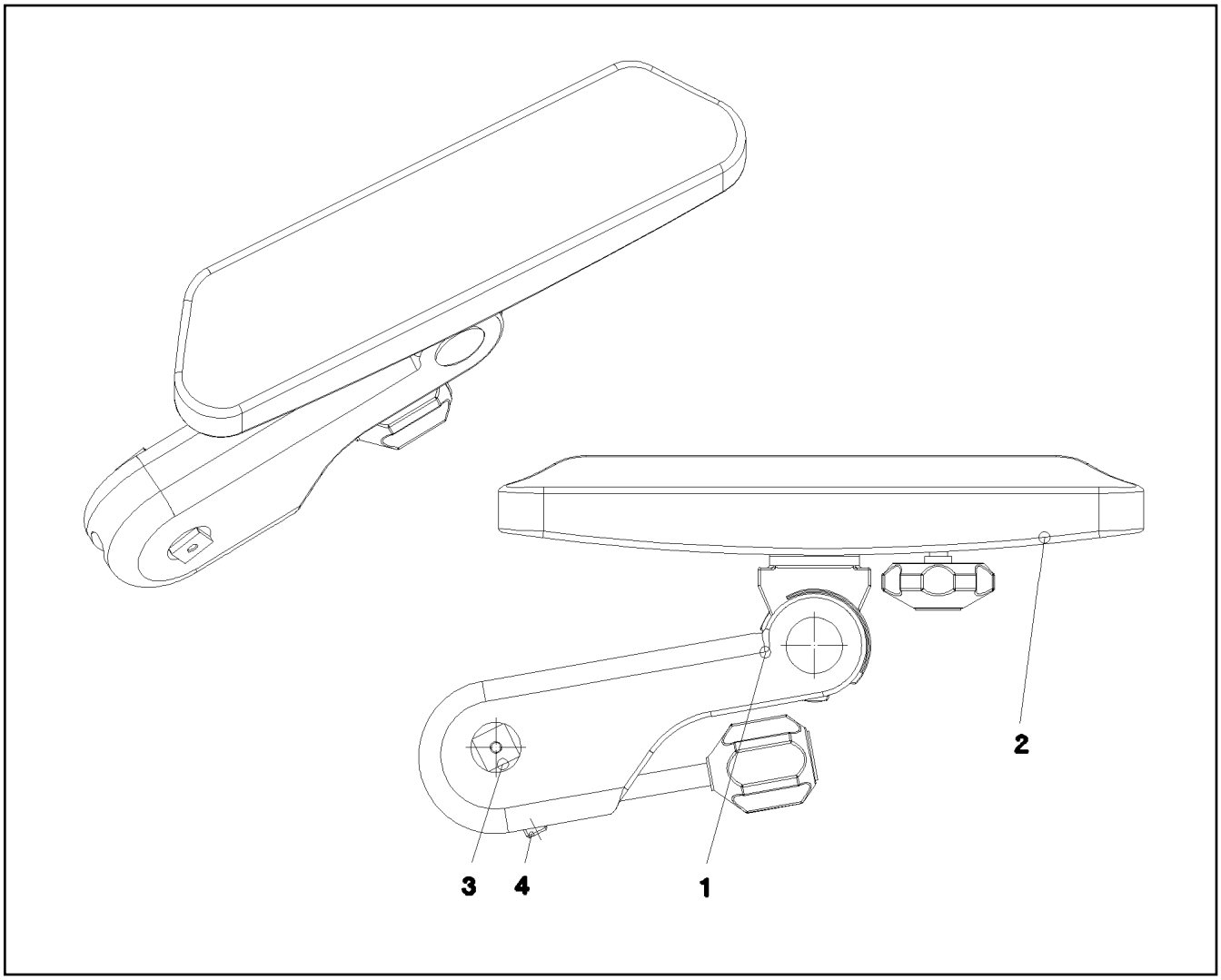

Pos.	Item	Quantity	Description	Bezeichnung
1	774119708	1	ARM REST 310ERGO	ARMLEHNE
2	971636608	1	ARM REST SUPPORT	ARMLEHNENAUFLAGE
3	971973608	1	PIN 25.0X52 S355J2G3C+C FE//ZNNI8//CN//T	BOLZEN
4	10179470	1	GRUB SCREW ISO 4026 M10X40 45H FLZN	GEWINDESTIFT

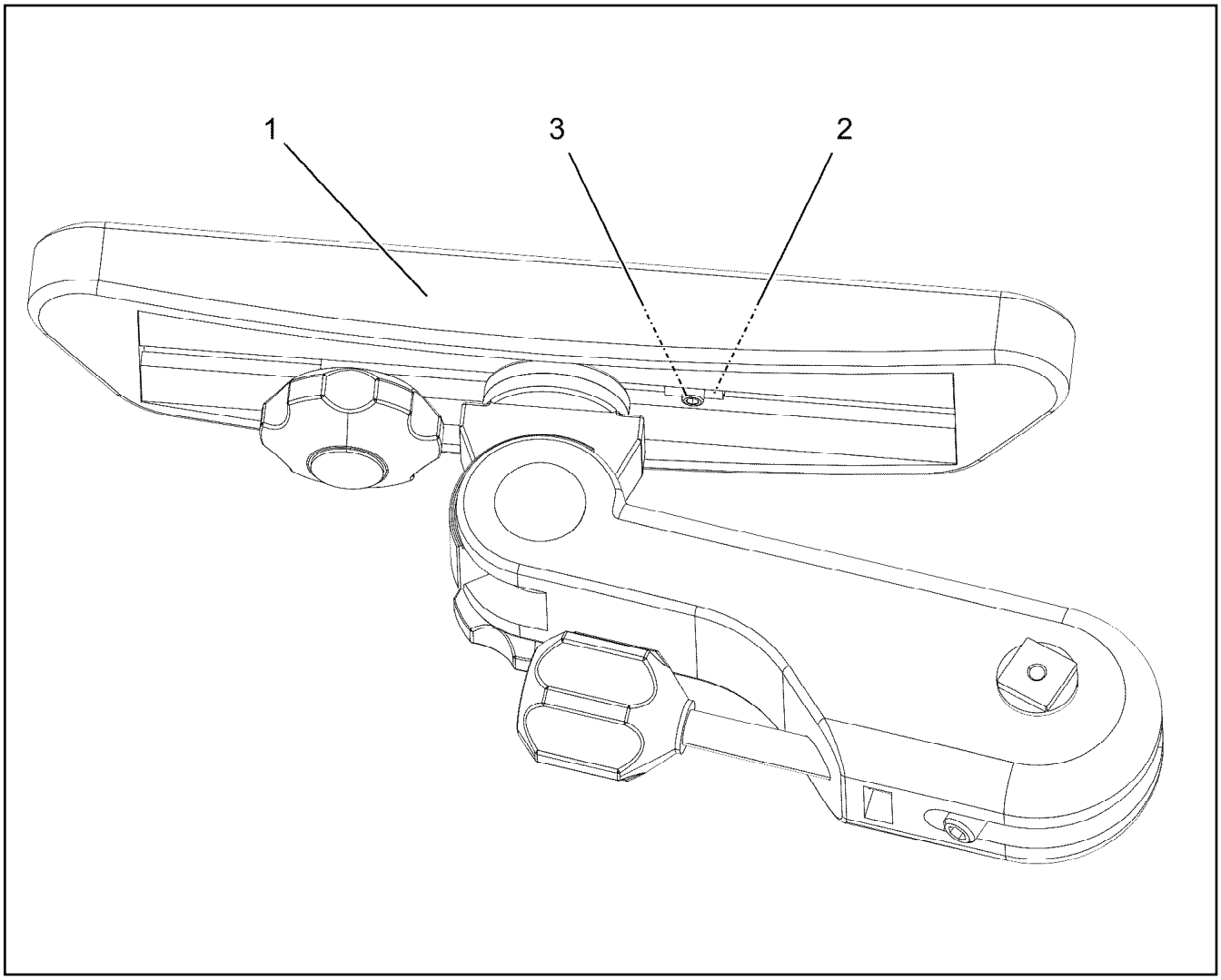

Pos.	Item	Quantity	Description	Bezeichnung
1	962282308	1	ARM REST RIGHT ⇨ ❑ 423	ARMLEHNE RECHTS
2	10878951	1	NUT M6X8	MUTTER
3	12100613	1	GRUB SCREW ISO 4026 M6X10 45H 480H SP	GEWINDESTIFT

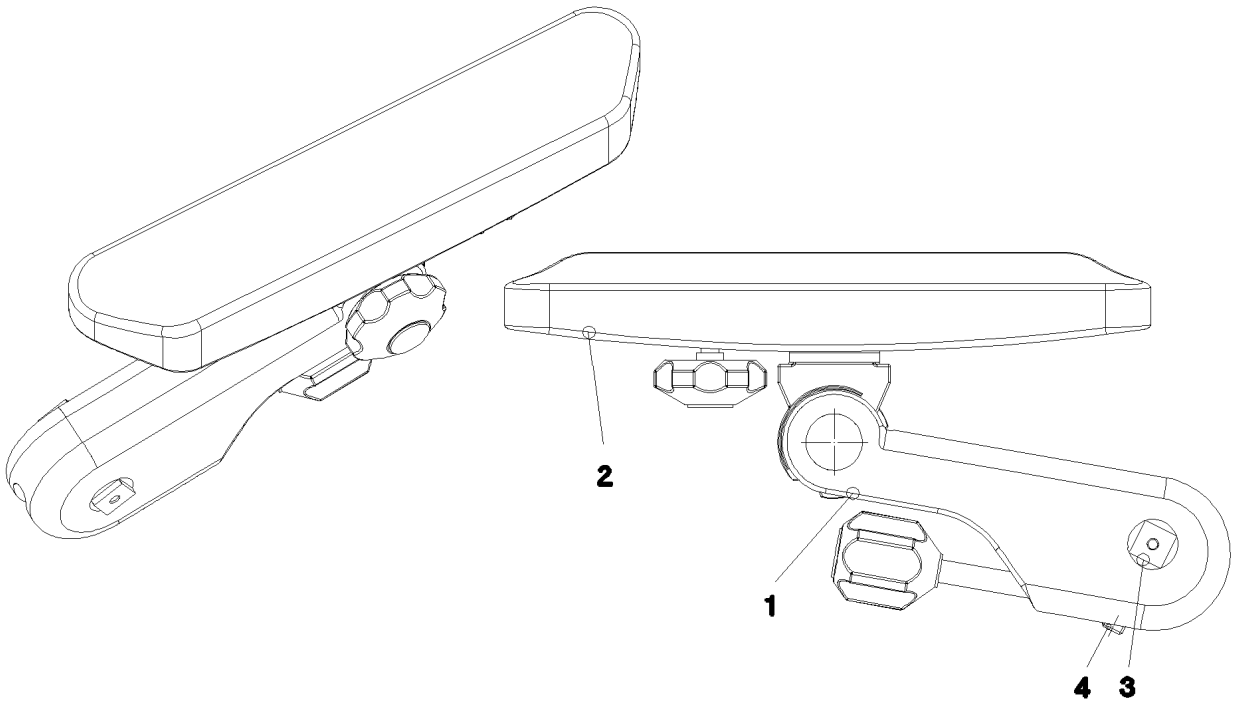

Pos.	Item	Quantity	Description	Bezeichnung
1	774119808	1	ARM REST 310ERGO	ARMLEHNE
2	971636608	1	ARM REST SUPPORT	ARMLEHNENAUFLAGE
3	971973608	1	PIN 25.0X52 S355J2G3C+C FE//ZNNI8//CN//T	BOLZEN
4	10179470	1	GRUB SCREW ISO 4026 M10X40 45H FLZN	GEWINDESTIFT

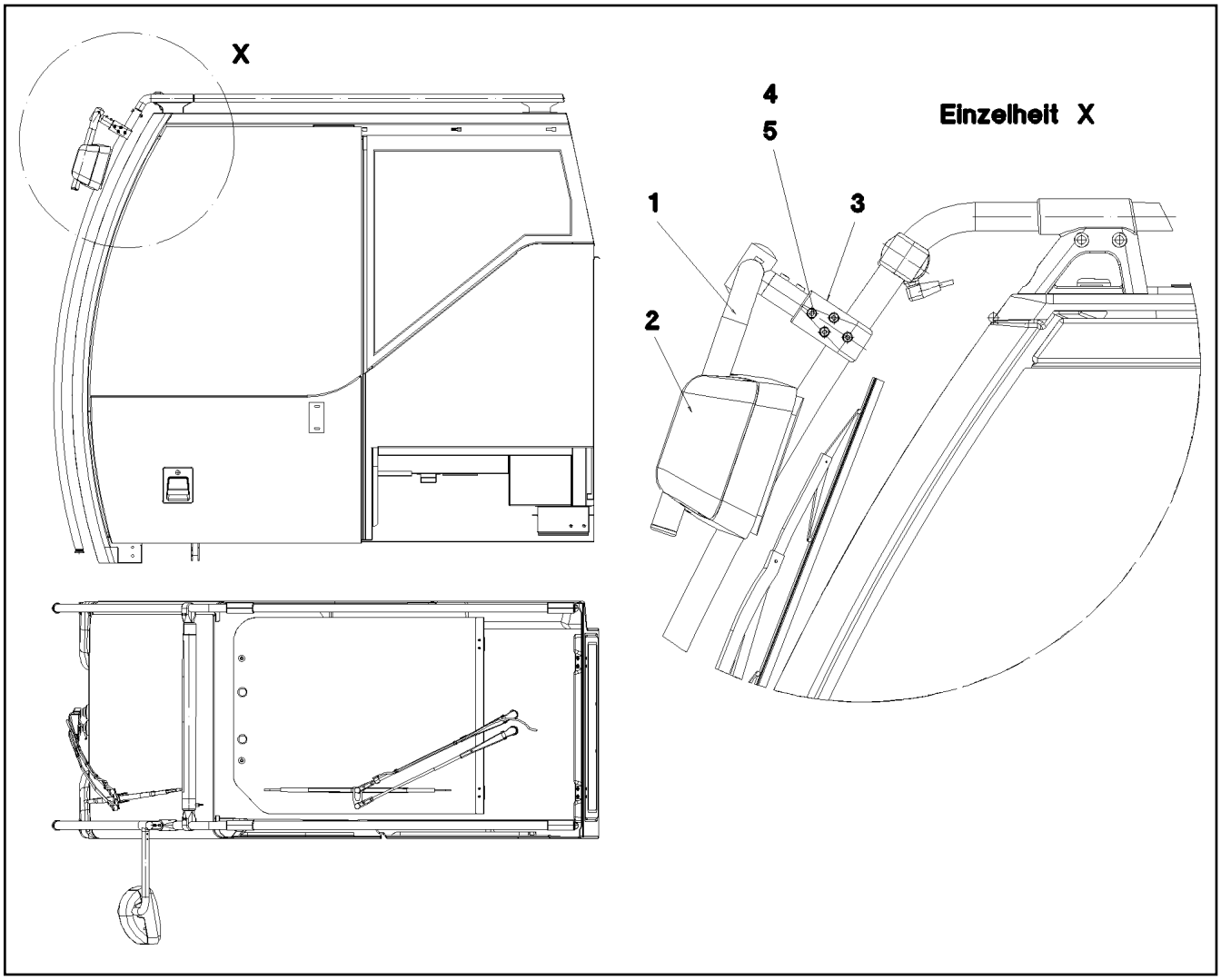

Pos.	Item	Quantity	Description	Bezeichnung
1	979320608	1	MIRROR SUPPORT 28X2 ST.37.4 KTL-BES	SPIEGELHALTER
2	591069508	1	WIDE ANGLE MIRROR 219X170	WEITWINKELSPIEGEL
(1)	10286840	1	REAR VISION MIRROR UNIT 203X154	GLASEINHEIT
(2)	10650507	1	COVER	ABDECKUNG
3	979489508	1	HOLDER 40X80X40 G-ALMG3	HALTER
4	10875601	1	SOCKET HEAD SCREW ISO 4762 M8X50 8.8	ZYLINDERSCHRAUBE
5	10875614	1	HEX NUT DIN 985 M8 8 480H SPF	SECHSKANTMUTTER

Pos.	Item	Quantity	Description	Bezeichnung
1	96036790	1	SLEWING PLATFORM PANELLING RIG ⇨ ❑ 426	DREHBUEHNENVERKLEIDUNG
2	969015908	1	SLEWING PLATFORM PANELLING LEF ⇨ ❑ 436	DREHBUEHNENVERKLEIDUNG

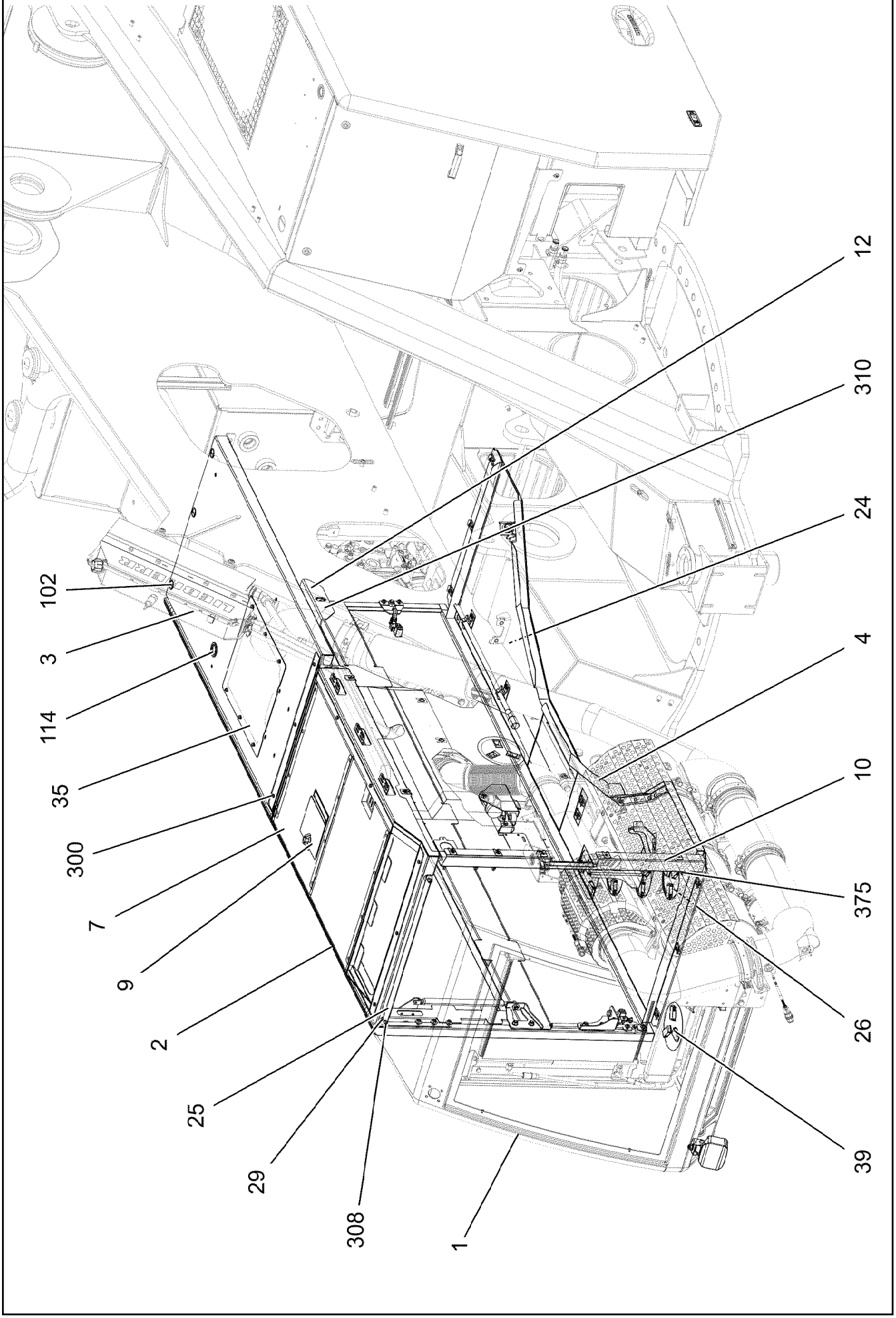
12
310
24
102
3
4
114
10
35
375
300
26
7
39
9
2
25
29
308
1

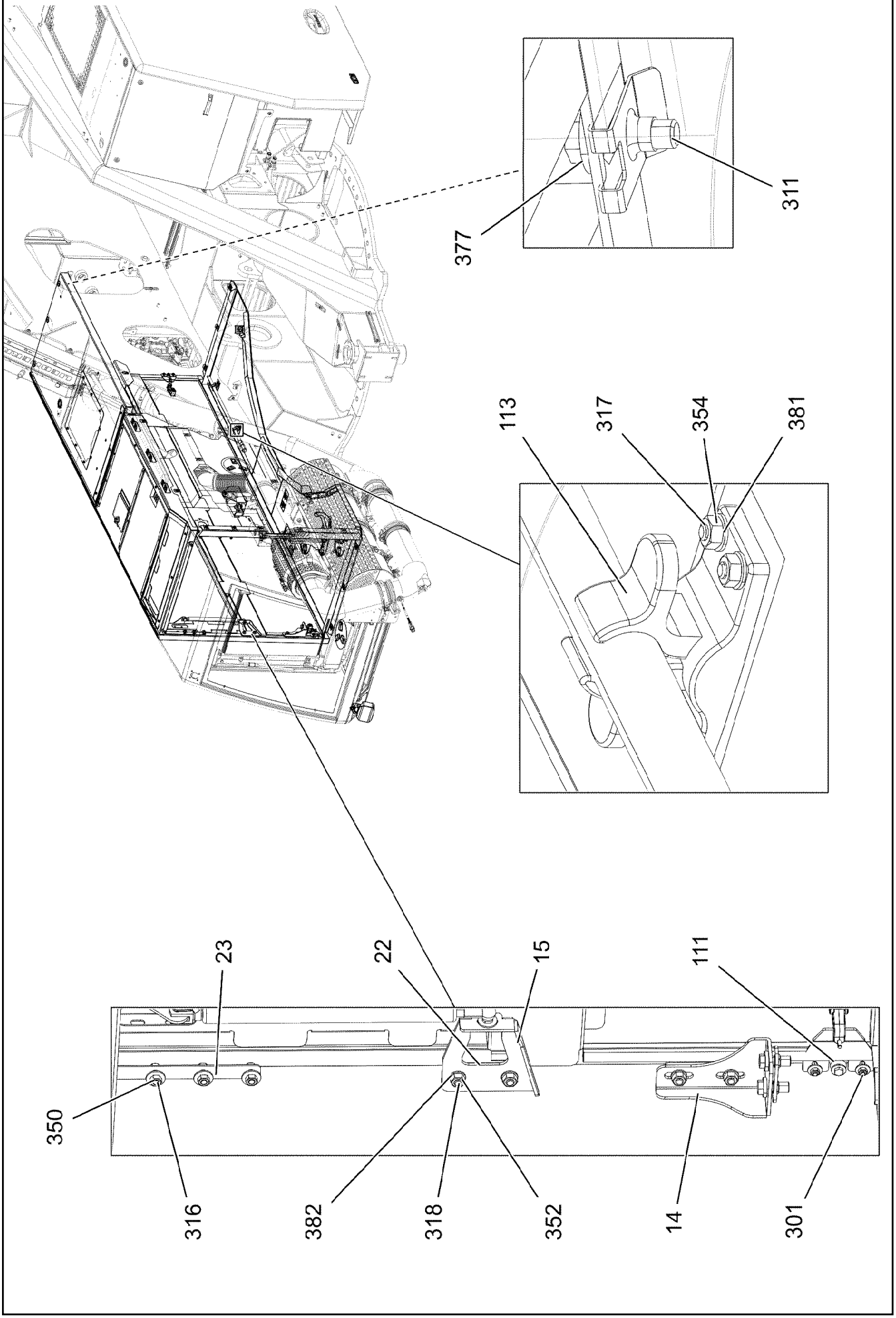
377
311
113
317
354
381
23
22
15
111
350
316
382
318
352
14
301

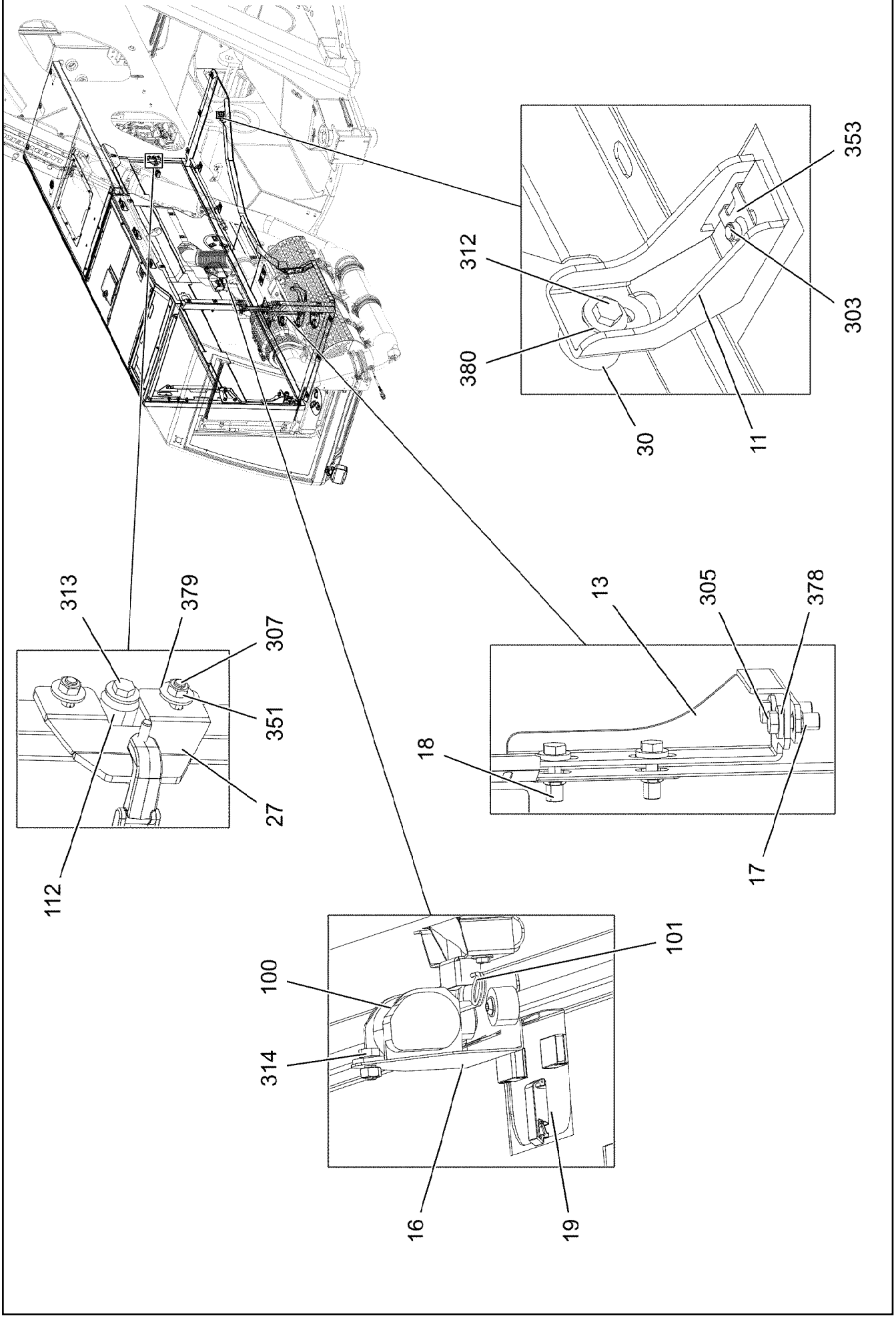

4.12.2020 004804 LIEBHERR	**etk_en_de 047580 LTR 1220** **SLEWING PLATFORM PANELLING RIG** **DREHBUEHNENVERKLEIDUNG RE.**	❑ 428 (3/5) **96036790**

Pos.	Item	Quantity	Description	Bezeichnung
1	96017704	1	RADIATOR HOOD CPL. ⇨ ❑ 431	KUEHLERHAUBE KPL.
2	968923508	1	FLAP RIGHT PRE-ASS. SPF ⇨ ❑ 432	KLAPPE VORM.RECHTS
3	968928808	1	COVER PLATE ST.CONST. SPF	DECKBLECH SCHWK.
4	968933608	1	FLOOR SHEET WELDED SPF	BODENBLECH SCHWK.
7	969002508	1	COVER WELDED SPF	DECKEL SCHWK.
9	964093408	1	COVER COMPL. ⇨ ❑ 434	DECKEL KPL.
10	97049819	1	PLATE 2X297X1030 DC01 FE//ZNNI8//CN//T0	BLECH
11	97058382	2	CONSOLE 4X163X242 S315MC FE//ZNNI8//C	KONSOLE
12	97034296	1	PLATE 4X240X188 S315MC FE//ZNNI8//CN//T	BLECH
13	97049782	1	PLATE 4X288X139 S315MC FE//ZNNI8//CN//T	BLECH
14	97049833	1	PLATE 4X134X188 S315MC FE//ZNNI8//CN//T	BLECH
15	97049834	1	PLATE 4X130X144 S315MC FE//ZNNI8//CN//T	BLECH
16	97034301	1	PLATE 2X160X196 DC01 FE//ZNNI8//CN//T0	BLECH
17	964307108	2	THREADED CARRIER FE//ZNNI8//CN//T0	GEWINDETRAEGER
18	968655508	1	THREADED CARRIER FE//ZNNI8//CN//T0	GEWINDETRAEGER
19	969493508	1	COVER COMPL.	DECKEL KPL.
(1)	97058414	1	PLATE 1X196X130 X5CRNI18-10	BLECH
(2)	10296157	3	SNAP LOCK ABS	SCHNAPPVERSCHLUSS
(3)	262103908	0.4	EDGE PROTECTION 1-2X9,5X6,5	KANTENSCHUTZ
22	979718908	2	PLATE 2X99X24 DC01 FE//ZNNI8//CN//T0	BLECH
23	979724708	1	PLATE 2X290X22 DC01 FE//ZNNI8//CN//T0	BLECH
24	968977308	1	SOUND PROOFING/SOUND INSULAT. ⇨ ❑ 435	SCHALLDAEMMUNG
25	963062208	1	THREADED CARRIER FE//ZNNI8//CN//T0	GEWINDETRAEGER
26	963544508	3	COVER COMPL.	DECKEL KPL.
(1)	974792608	1	PLATE 1X176X176 X5CRNI18-10	BLECH
(2)	10296157	3	SNAP LOCK ABS	SCHNAPPVERSCHLUSS
(3)	262103908	0.6	EDGE PROTECTION 1-2X9,5X6,5	KANTENSCHUTZ
27	954113708	2	PLATE 4X90X67 S315MC FE//ZNNI8//CN//T0	BLECH
29	975529708	2	FRICTION DISK	REIBSCHEIBE
30	978787708	5	SLEEVE 33.0X19 FE//ZNNI8//CN//T0	HUELSE
35	97049712	1	PLATE 2X431X420 ALMG3 H111 SPF	BLECH
39	963949708	1	COVER COMPL.	DECKEL KPL.
(1)	974792608	1	PLATE 1X176X176 X5CRNI18-10	BLECH
(2)	10296157	3	SNAP LOCK ABS	SCHNAPPVERSCHLUSS
100	10334488	1	TENSION FLANGE 47X2220	ZUGGURT
101	433102808	1	RETAINING SPRING 3X55 VERZ	SICHERUNGSFEDER
102	591570908	3	COVER LID POLYSTIC27-33 ABS	ABDECKKAPPE
111	726907308	1	MEGI BUFFER 20X15-M6 NR 55SHORE A	MEGIPUFFER
112	726617408	1	MEGI BUFFER	MEGIPUFFER
113	704277508	2	DOOR STOPPER	TUERFESTSTELLER
114	602717308	1	DIAPHRAGM GROMMET 35,5/47/53 TPE SC	MEMBRAN-DURCHFUEHRUNG
300	10412851	10	BUTTON HEAD SCREW AEHNL.ISO 7380-2	HALBRUNDKOPFSCHRAUBE
301	12207548	2	HEX SCREW EN 1665 M6X20 8.8 480H SPF	SECHSKANTSCHRAUBE
303	10875485	13	BUTTON HEAD SCREW AEHNL.ISO 7380-2	HALBRUNDKOPFSCHRAUBE
305	11642358	6	HEX SCREW ISO 4017 M10X30 8.8 FLZN SP	SECHSKANTSCHRAUBE
307	11840297	8	HEX SCREW EN 1665 M6X16 8.8 480H SPF	SECHSKANTSCHRAUBE
308	11690637	2	HEX SCREW EN 1665 M8X25 8.8 480H SPF	SECHSKANTSCHRAUBE
310	11651767	2	HEX SCREW ISO 4017 M8X20 8.8 480H SPF	SECHSKANTSCHRAUBE
311	10197831	7	HEX SCREW ISO 4017 M8X25 8.8 ZNNI-480	SECHSKANTSCHRAUBE
312	11651612	2	HEX SCREW ISO 4017 M8X16 8.8 480H SPF	SECHSKANTSCHRAUBE
313	11692824	2	HEX SCREW ISO 4017 M6X12 8.8 480H SPF	SECHSKANTSCHRAUBE
314	10197730	1	HEX SCREW ISO 4017 M10X20 8.8 ZNNI-480	SECHSKANTSCHRAUBE
316	11657219	4	HEX SCREW EN 1665 M8X20 8.8 480H SPF	SECHSKANTSCHRAUBE
317	11835043	8	BUTTON HEAD SCREW ISO 7380-2 M4X12 0	HALBRUNDKOPFSCHRAUBE
318	11631816	4	HEX SCREW ISO 4017 M10X25 8.8 FLZN SP	SECHSKANTSCHRAUBE
350	10197760	7	HEX NUT ISO 4032 M8 10 ZNNI-480H SPF	SECHSKANTMUTTER

Pos.	Item	Quantity	Description	Bezeichnung
351	10197764	4	HEX NUT ISO 4032 M6 10 ZNNI-480H SPF	SECHSKANTMUTTER
352	12102695	5	HEX NUT ISO 4032 M10 8 ZNNI-480H SPF	SECHSKANTMUTTER
353	12100332	22	SHEET METAL NUT M8 480H SPF	BLECHMUTTER
354	10875619	8	HEX NUT ISO 4032 M4 8 480H SPF	SECHSKANTMUTTER
375	10289803	8	WASHER ISO 7089 8 300HV 480H SPF	SCHEIBE
377	11840501	3	WASHER DIN 7349 8,4 200HV 480H SPF	SCHEIBE
378	11658580	6	WASHER DIN 7349 10,5 200HV-St FLZN SPF	SCHEIBE
379	10875648	6	WASHER ISO 7093-1 6 200HV 480H SPF	SCHEIBE
380	11140469	7	WASHER ISO 7093-1 8 200HV 480H SPF	SCHEIBE
381	10875645	8	WASHER ISO 7089 4 200HV 480H SPF	SCHEIBE
382	10289795	4	WASHER ISO 7089 10 300HV FLZN SPF	SCHEIBE

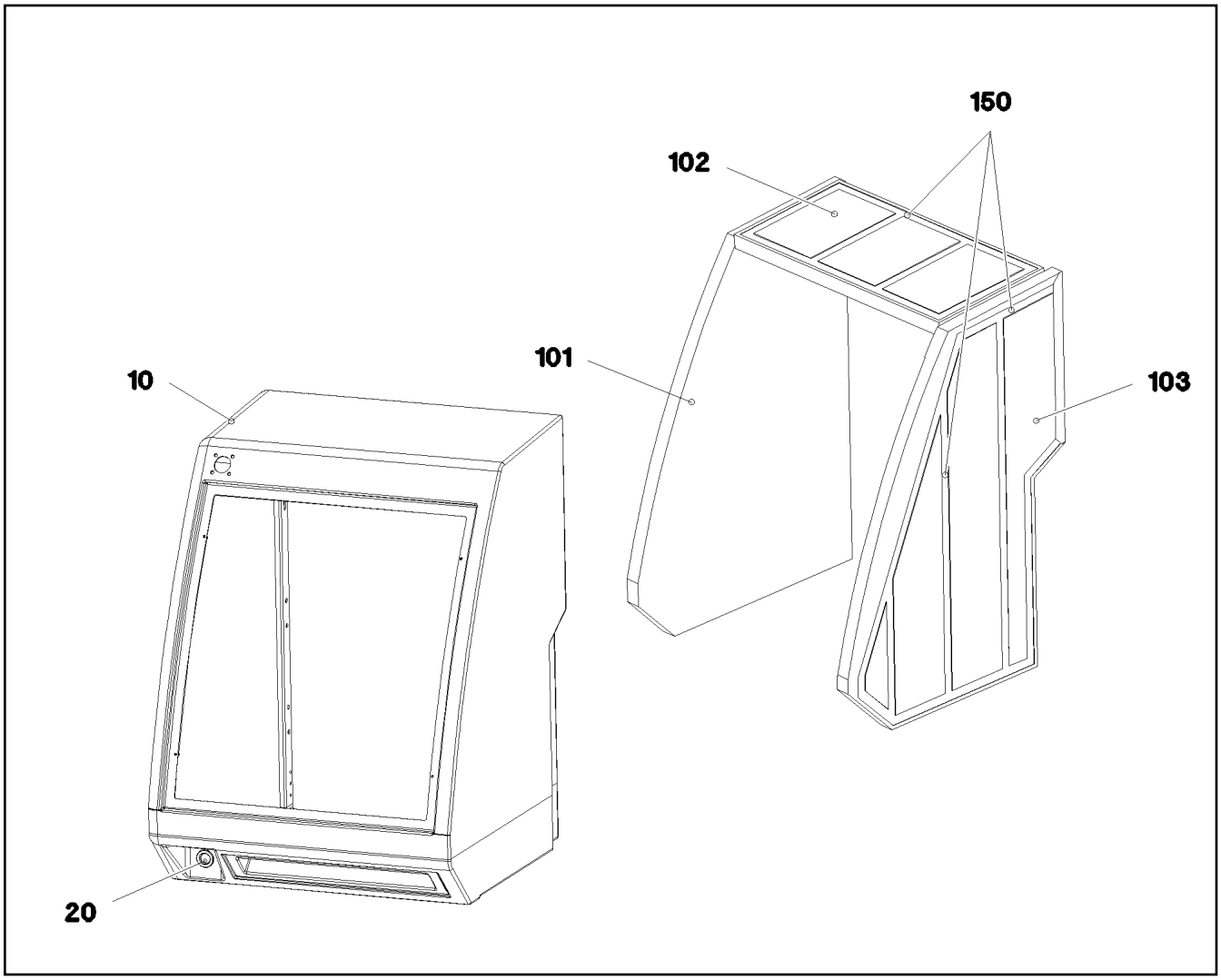

Pos.	Item	Quantity	Description	Bezeichnung
10	968100408	1	RADIATOR HOOD	KUEHLERHAUBE
20	553027808	1	DIAPHRAGM SOCKET 29/37/44	MEMBRANTUELLE
101	97034281	1	INSULATING MAT 40X1055X750 PUR-SCHAU	DAEMMMATTE
102	973767608	1	INSULATING MAT 40X740X370 PUR-SCHAU	DAEMMMATTE
103	97034282	1	INSULATING MAT 40X775X1064 PUR-SCHAU	DAEMMMATTE
150	802102008	14	ADHESIVE INSULATING STRIP 25MM PS18	PILZKOPFBAND

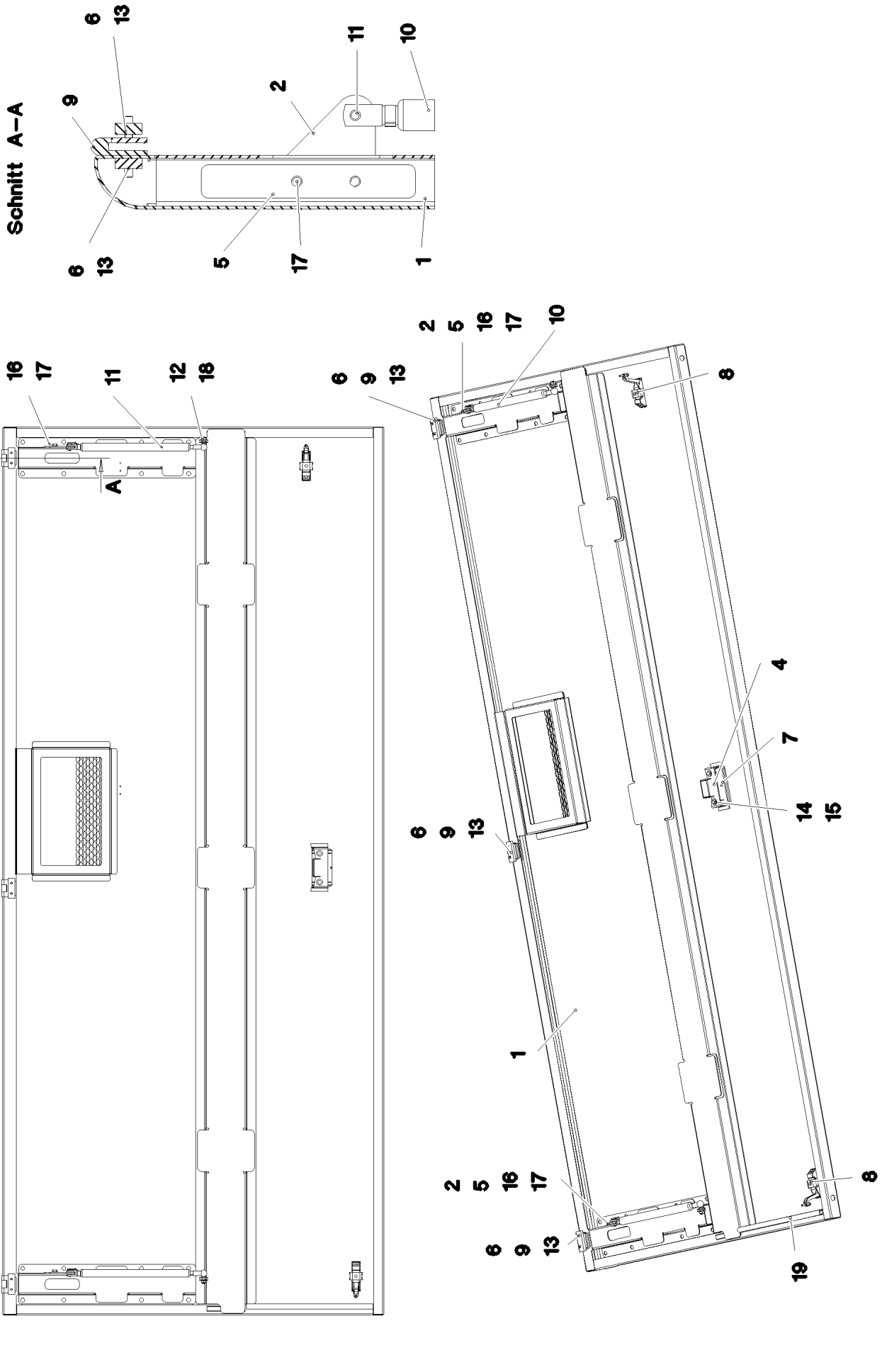

4.12.2020 083536	**etk_en_de 047580 LTR 1220**	432 (1/2)
LIEBHERR	**FLAP RIGHT PRE-ASS.** **KLAPPE VORM.RECHTS**	**968923508**

Pos.	Item	Quantity	Description	Bezeichnung
1	969007208	1	FLAP GLUED SPF	KLAPPE GEKLEBT
2	979717908	2	PLATE 4X110X77 S315MC FE//ZNNI8//CN//T	BLECH
4	974742308	1	PLATE 2X195X66 X5CRNI18-10	BLECH
5	952940908	2	PLATE 8X25X160 S355MC FE//ZNNI8//CN//T	BLECH
6	953695308	6	THREADED PLATE 8X20X60 S235JR FE//ZN	GEWINDEPLATTE
7	955500008	1	FINGER-HOLD X0 KUNSTSTOFF	GRIFFMULDE
8	11450420	2	LEVER FASTENER	HEBELVERSCHLUSS
9	704228108	3	HINGE 35X35X50/180° ST FE//ZN12//B	SCHARNIER
10	591061908	2	GAS SPRING 23X265-500N	GASFEDER
11	725111808	2	ES PIN 8X16 FE/ZN8/CN/T2	ES BOLZEN
12	11693875	2	HEX NUT ISO 4032 M8 8 480H SPF	SECHSKANTMUTTER
13	12100589	12	COUNTERSUNK SCREW AEHNL.ISO 10642	SENKSCHRAUBE
14	11692824	2	HEX SCREW ISO 4017 M6X12 8.8 480H SPF	SECHSKANTSCHRAUBE
15	10875648	2	WASHER ISO 7093-1 6 200HV 480H SPF	SCHEIBE
16	10289803	4	WASHER ISO 7089 8 300HV 480H SPF	SCHEIBE
17	11651767	4	HEX SCREW ISO 4017 M8X20 8.8 480H SPF	SECHSKANTSCHRAUBE
18	11140469	4	WASHER ISO 7093-1 8 200HV 480H SPF	SCHEIBE
19	262106508	0.37	SEALING PROFILE 1,5-3X14,6X10,7	ABDICHTPROFIL

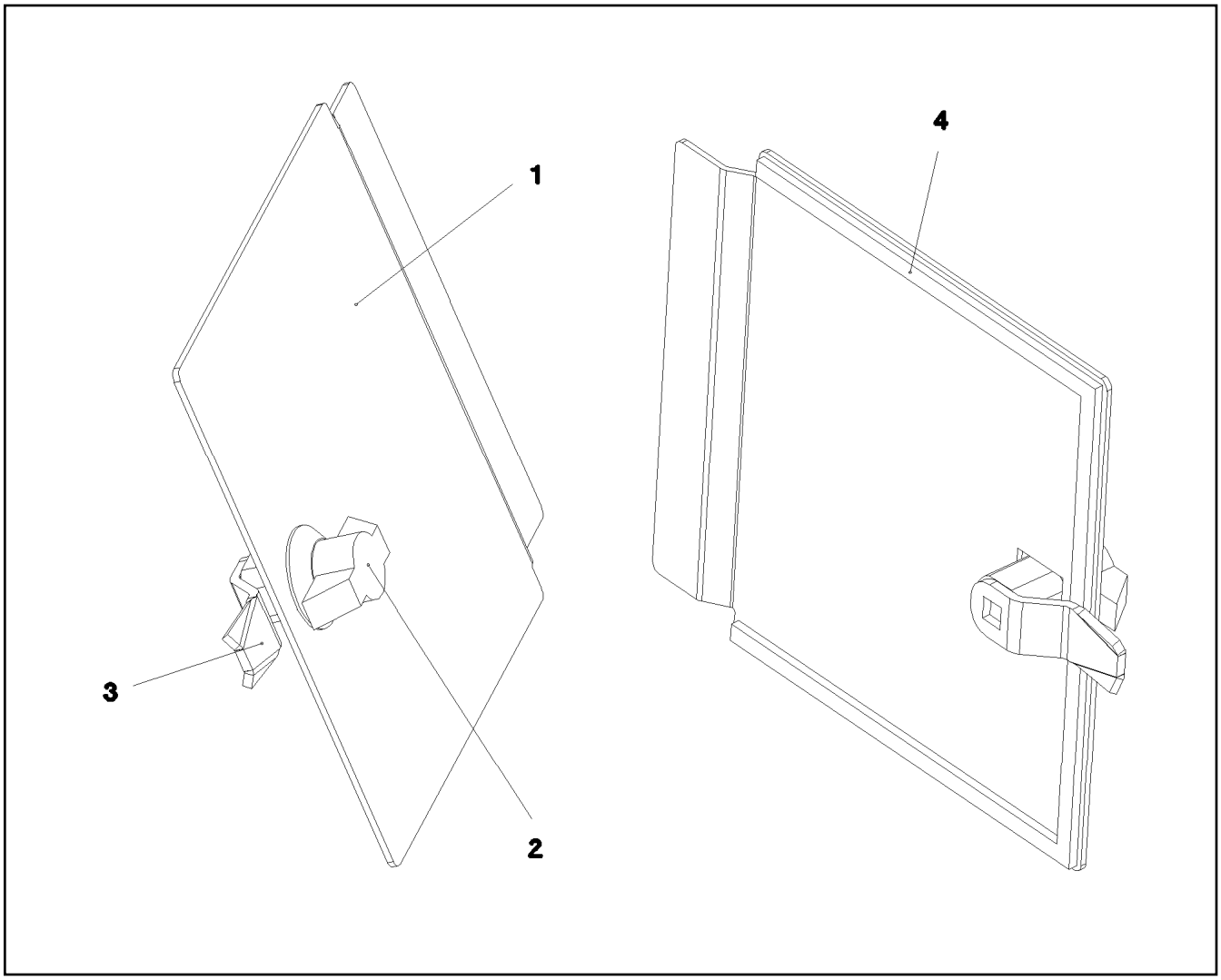

Pos.	Item	Quantity	Description	Bezeichnung
1	975842108	1	PLATE 2X180X191 ALMG3 H111 SPF	BLECH
2	704255508	1	TOGGLE GD-ZN	KNEBEL
3	704259308	1	TONGUE	ZUNGE
4	262108908	0.5	CELL RUBBER 6X3X10000 CELL.RUBBER	ZELLGUMMI

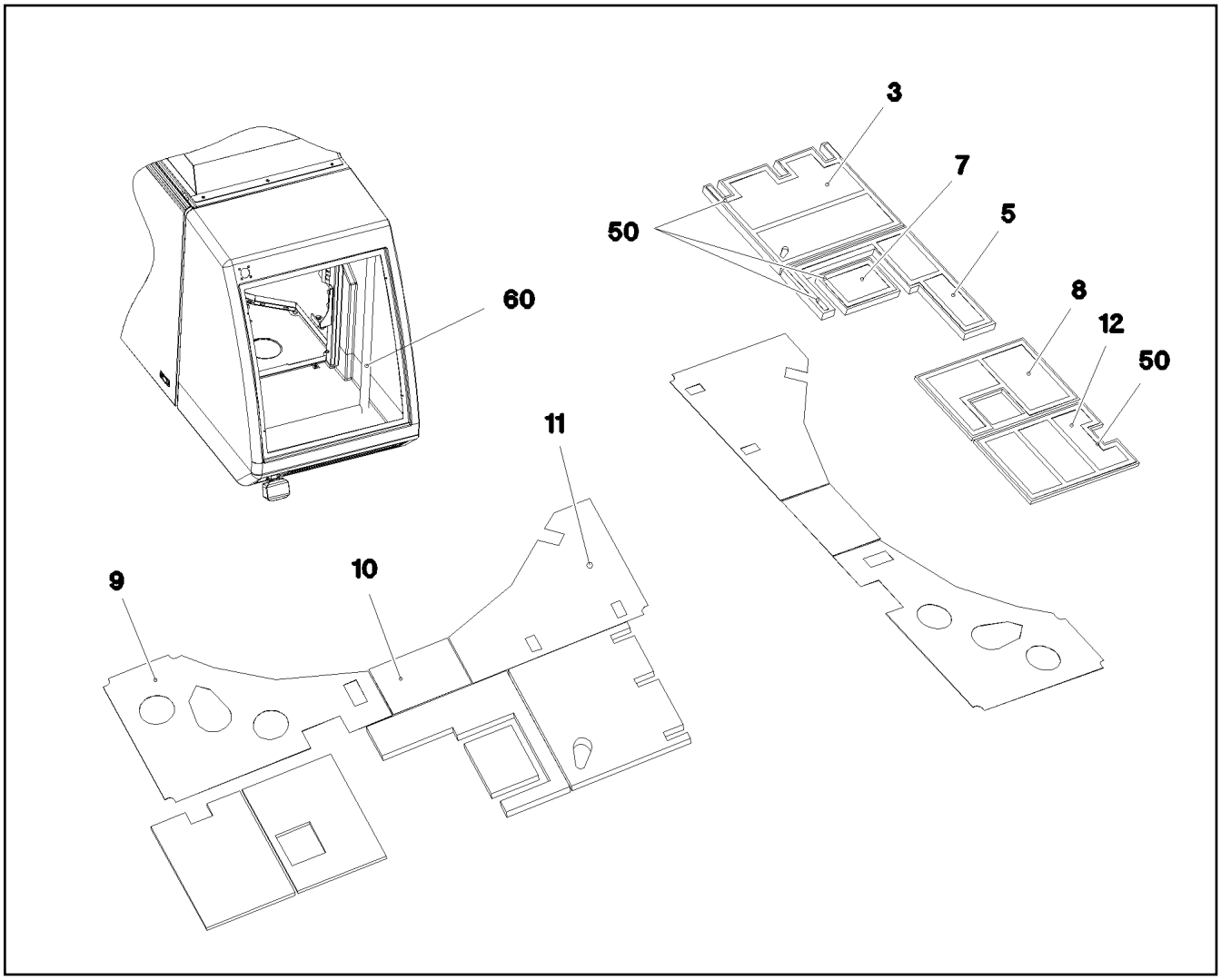

Pos.	Item	Quantity	Description	Bezeichnung
3	97034322	1	INSULATING MAT 40X720X590 PUR-SCHAU	DAEMMMATTE
5	97050669	1	INSULATING MAT 40X720X695 PUR-SCHAU	DAEMMMATTE
7	97050671	1	INSULATING MAT 40X310X235 PUR-SCHAU	DAEMMMATTE
8	97055971	1	INSULATING MAT 20X630X440 ME-SCHAUM	DAEMMMATTE
9	97051749	1	HEAVY FOIL MATTING 2X1115X765 SB-KA	SCHWERFOLIENMATTE
10	97058386	1	HEAVY FOIL MATTING 2X390X280 SB-KAUT	SCHWERFOLIENMATTE
11	97058387	1	HEAVY FOIL MATTING 2X885X700 SB-KAUT	SCHWERFOLIENMATTE
12	97050672	1	INSULATING MAT 20X630X440 ME-SCHAUM	DAEMMMATTE
50	802102008	33.22	ADHESIVE INSULATING STRIP 25MM PS18	PILZKOPFBAND
60	11006584	3.5	INSULATING HOSE ISO 3302-1 E3 DN40 10 E	ISOLIERSCHLAUCH

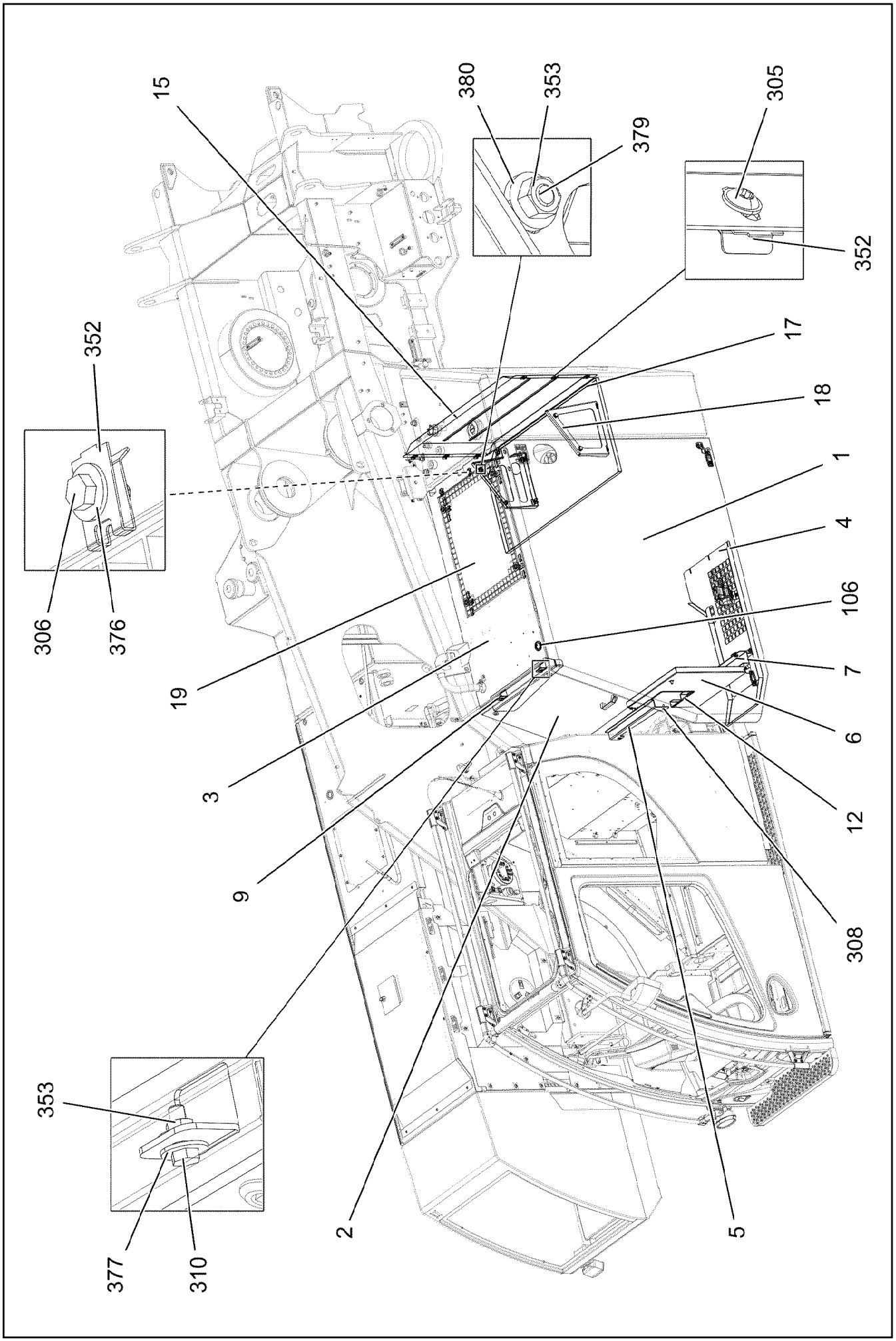

4.12.2020 083539 LIEBHERR	**etk_en_de 047580 LTR 1220** **SLEWING PLATFORM PANELLING LEF** **DREHBUEHNENVERKLEIDUNG LI.**	❑ 436 (1/4) **969015908**

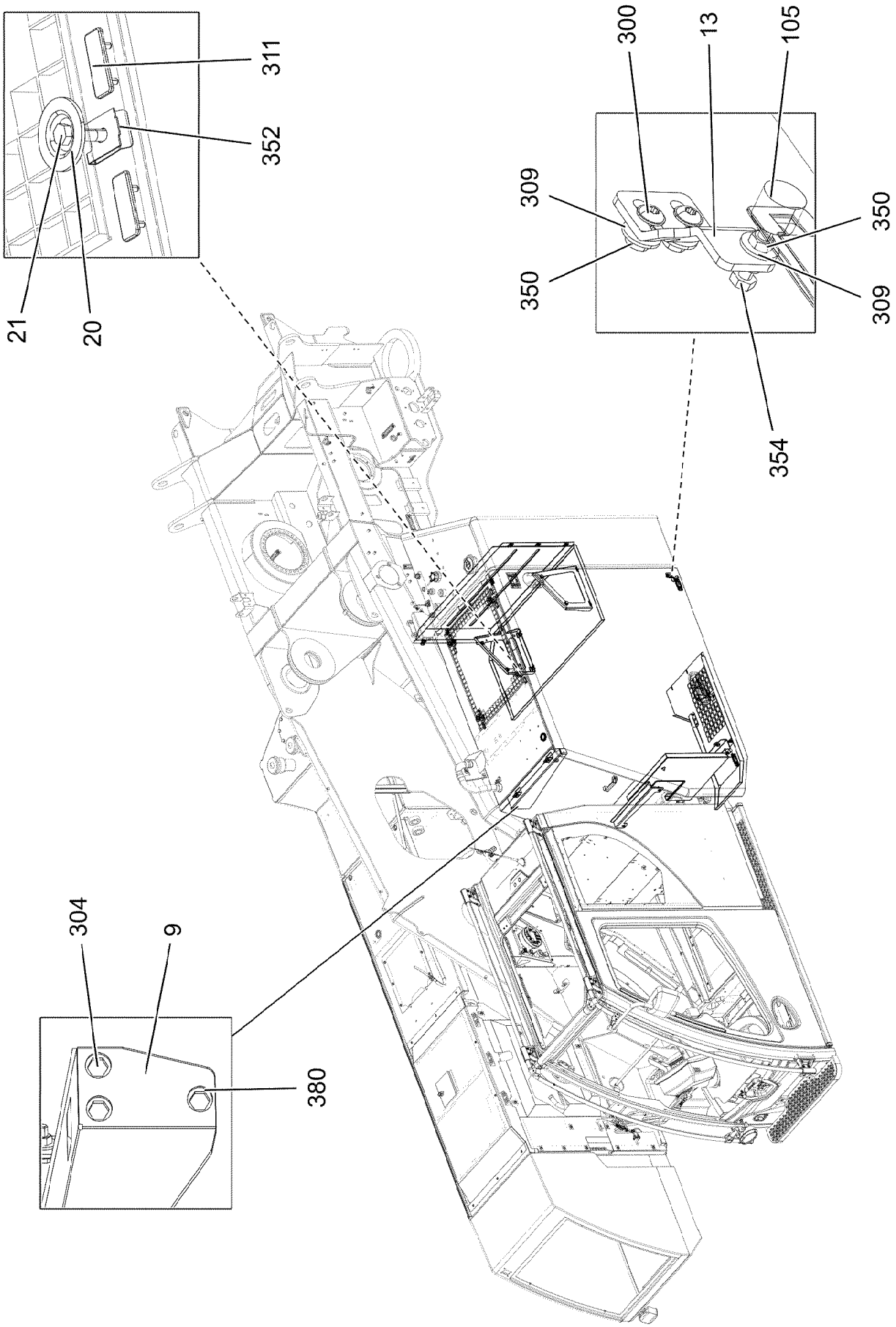
311
352
21
20
300
13
105
309
350
350
309
354
304
9
380

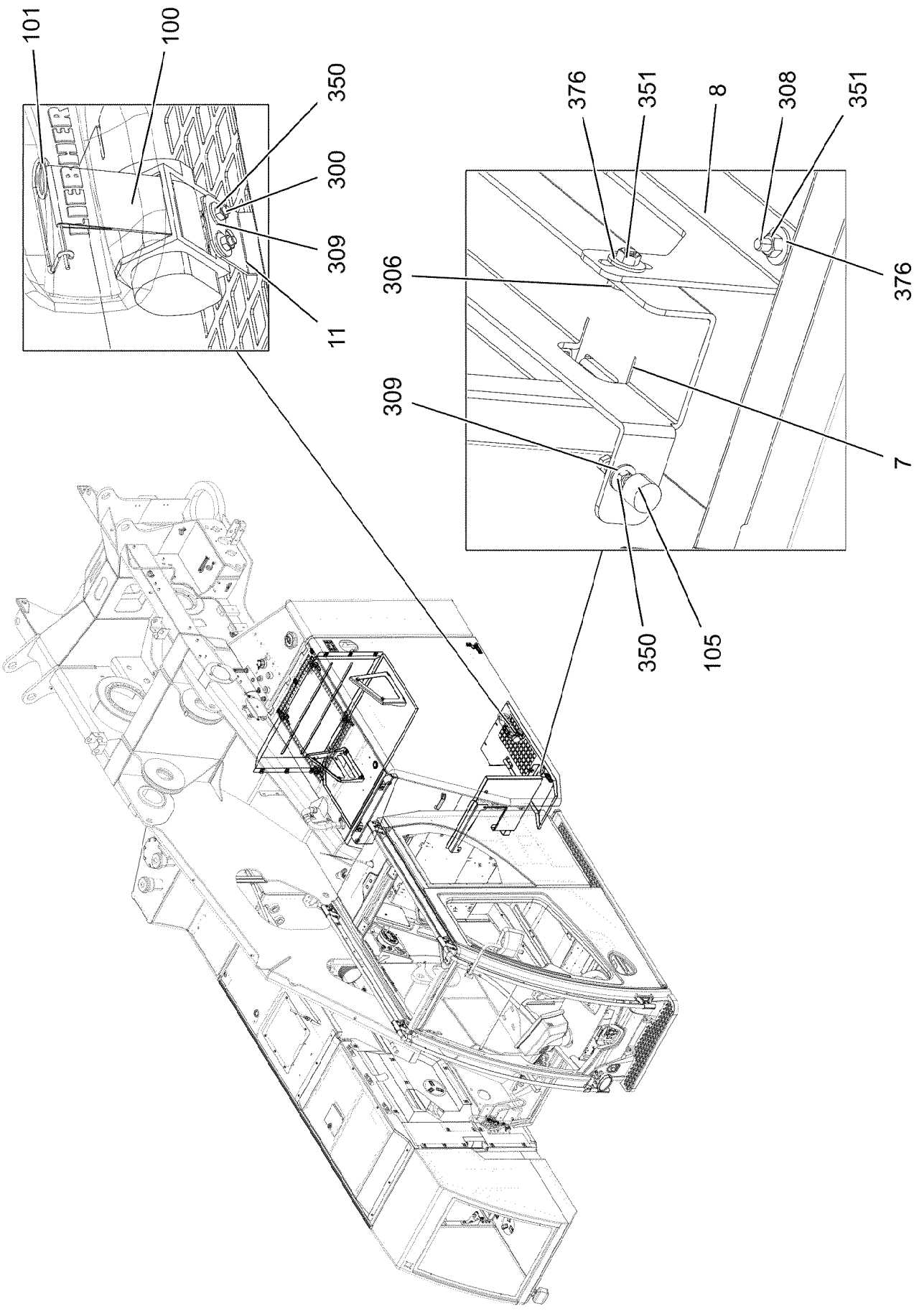
101
100
350
300
309
11
376
351
8
308
351
306
376
309
7
350
105

Pos.	Item	Quantity	Description	Bezeichnung
1	969016008	1	FLAP LEFT FRONT PRE-ASS. ⇨ ❑ 440	KLAPPE VORM.VORN LINKS
2	967982708	1	FRONT LEFT-HAND HOOD	FRONTHAUBE LI.
3	969016108	1	COVER PLATE ST.CONST.	DECKBLECH SCHWK.
4	969132208	1	FLOOR SHEET WELDED	BODENBLECH SCHWK.
5	97031538	1	DIAPHRAGM 4X480X167 S315MC FE//ZNNI8/	SCHOTTBLECH
6	97031539	1	PLATE 2X639X612 DC01	BLECH
7	97031540	1	PLATE 4X751X167 S315MC FE//ZNNI8//CN//T	BLECH
8	97031570	1	PLATE 4X260X173 S315MC FE//ZNNI8//CN//T	BLECH
9	97031571	1	PLATE 4X784X220 S315MC FE//ZNNI8//CN//T	BLECH
11	974657908	1	PLATE 2X50X115 X5CRNI18-10	BLECH
12	262103908	0.66	EDGE PROTECTION 1-2X9,5X6,5	KANTENSCHUTZ
13	97053350	1	PLATE 4X81X40 S315MC FE//ZNNI8//CN//T0	BLECH
15	97033140	1	PLATE 2X1225X659 ALMG3 H111	BLECH
17	97033142	1	PLATE 4X401X406 S315MC FE//ZNNI8//CN//T	BLECH
18	97033143	1	PLATE 4X386X404 S315MC FE//ZNNI8//CN//T	BLECH
19	97053346	1	GRIDIRON T725X564X30/3 S235JR T ZN K	GITTERROST-P
20	10100621	4	DISH MOUNTING	TELLERBEFESTIGUNG
21	11651580	4	HEX SCREW ISO 4014 M8X45 8.8 480H SPF	SECHSKANTSCHRAUBE
100	10334488	1	TENSION FLANGE 47X2220	ZUGGURT
101	433102808	1	RETAINING SPRING 3X55 VERZ	SICHERUNGSFEDER
105	726907308	2	MEGI BUFFER 20X15-M6 NR 55SHORE A	MEGIPUFFER
106	602717308	1	DIAPHRAGM GROMMET 35,5/47/53 TPE SC	MEMBRAN-DURCHFUEHRUNG
300	10412851	6	BUTTON HEAD SCREW AEHNL.ISO 7380-2	HALBRUNDKOPFSCHRAUBE
304	12222996	7	HEX SCREW ISO 4017 M10X22 8.8 FLZN SP	SECHSKANTSCHRAUBE
305	10875485	10	BUTTON HEAD SCREW AEHNL.ISO 7380-2	HALBRUNDKOPFSCHRAUBE
306	11651767	5	HEX SCREW ISO 4017 M8X20 8.8 480H SPF	SECHSKANTSCHRAUBE
308	10875486	4	BUTTON HEAD SCREW AEHNL.ISO 7380-2	HALBRUNDKOPFSCHRAUBE
309	10875648	10	WASHER ISO 7093-1 6 200HV 480H SPF	SCHEIBE
310	11642358	2	HEX SCREW ISO 4017 M10X30 8.8 FLZN SP	SECHSKANTSCHRAUBE
311	704229908	10	HOOD SUPPORT	HAUBENAUFLAGE
350	10197764	11	HEX NUT ISO 4032 M6 10 ZNNI-480H SPF	SECHSKANTMUTTER
351	10197760	4	HEX NUT ISO 4032 M8 10 ZNNI-480H SPF	SECHSKANTMUTTER
352	12100332	17	SHEET METAL NUT M8 480H SPF	BLECHMUTTER
353	12102695	6	HEX NUT ISO 4032 M10 8 ZNNI-480H SPF	SECHSKANTMUTTER
354	12216201	2	HEX SCREW ISO 4017 M6X45 8.8 480H SPF	SECHSKANTSCHRAUBE
376	11140469	11	WASHER ISO 7093-1 8 200HV 480H SPF	SCHEIBE
377	11491889	4	WASHER ISO 7093-1 10 300HV FLZN SPF	SCHEIBE
379	11631816	4	HEX SCREW ISO 4017 M10X25 8.8 FLZN SP	SECHSKANTSCHRAUBE
380	11658580	15	WASHER DIN 7349 10,5 200HV-St FLZN SPF	SCHEIBE

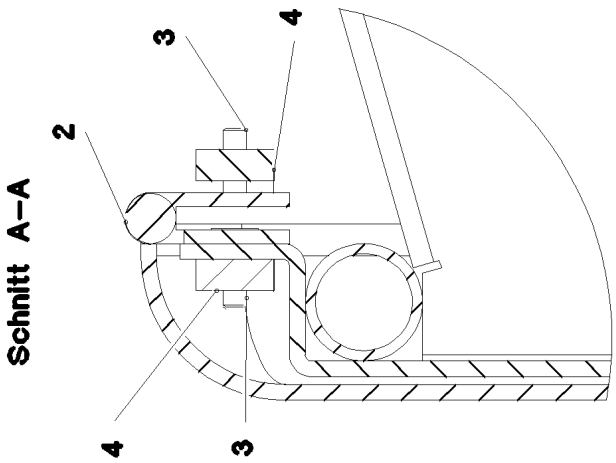

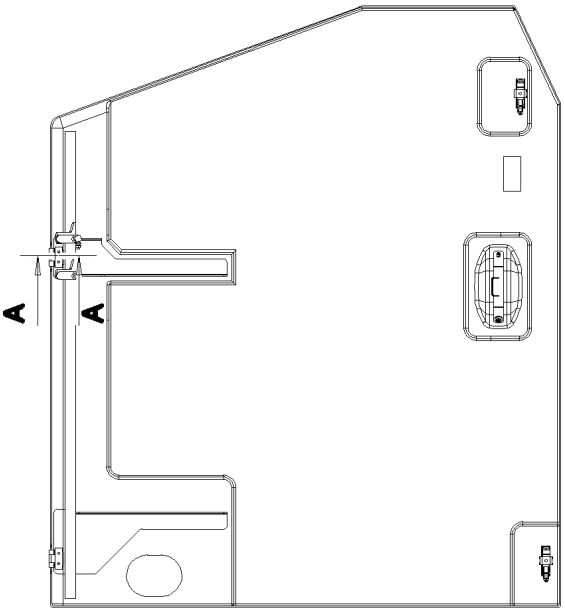

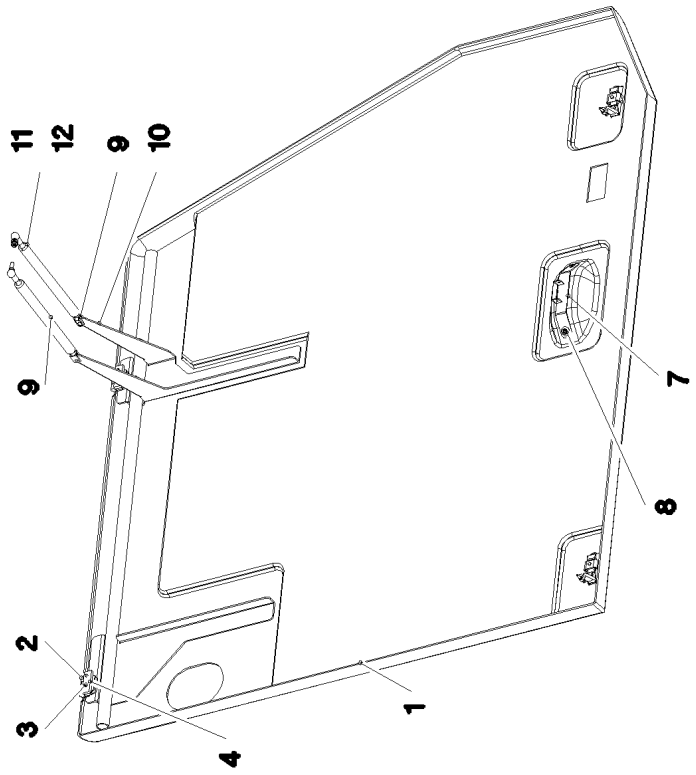

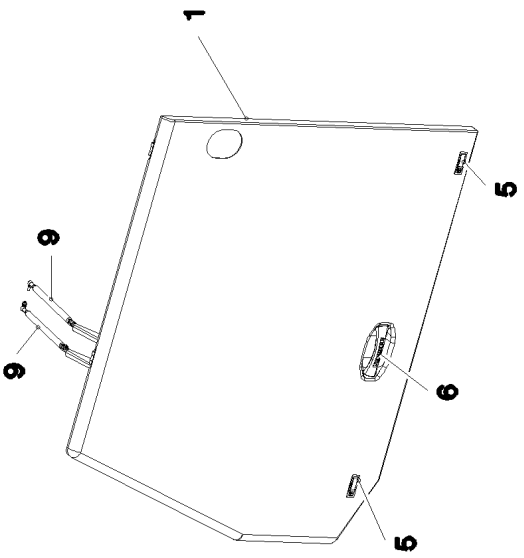

4.12.2020 083542 LIEBHERR	**etk_en_de 047580 LTR 1220** **FLAP LEFT FRONT PRE-ASS.** **KLAPPE VORM.VORN LINKS**	440 (1/2) **969016008**

Pos.	Item	Quantity	Description	Bezeichnung
1	969017908	1	FLAP COMPL.	KLAPPE KPL.
2	704228108	2	HINGE 35X35X50/180° ST FE//ZN12//B	SCHARNIER
3	12100589	8	COUNTERSUNK SCREW AEHNL.ISO 10642	SENKSCHRAUBE
4	953695308	4	THREADED PLATE 8X20X60 S235JR FE//ZN	GEWINDEPLATTE
5	11450420	2	LEVER FASTENER	HEBELVERSCHLUSS
6	12554272	1	HANDLE 212X53	HANDGRIFF
7	974656608	1	PLATE 2X236X50 X5CRNI18-10	BLECH
8	10875448	2	BUTTON HEAD SCREW ISO 7380-2 M10X25	HALBRUNDKOPFSCHRAUBE
9	591065008	2	GAS SPRING 23X265-750N	GASFEDER
10	725111808	2	ES PIN 8X16 FE/ZN8/CN/T2	ES BOLZEN
11	11693875	2	HEX NUT ISO 4032 M8 8 480H SPF	SECHSKANTMUTTER
12	10289803	4	WASHER ISO 7089 8 300HV 480H SPF	SCHEIBE

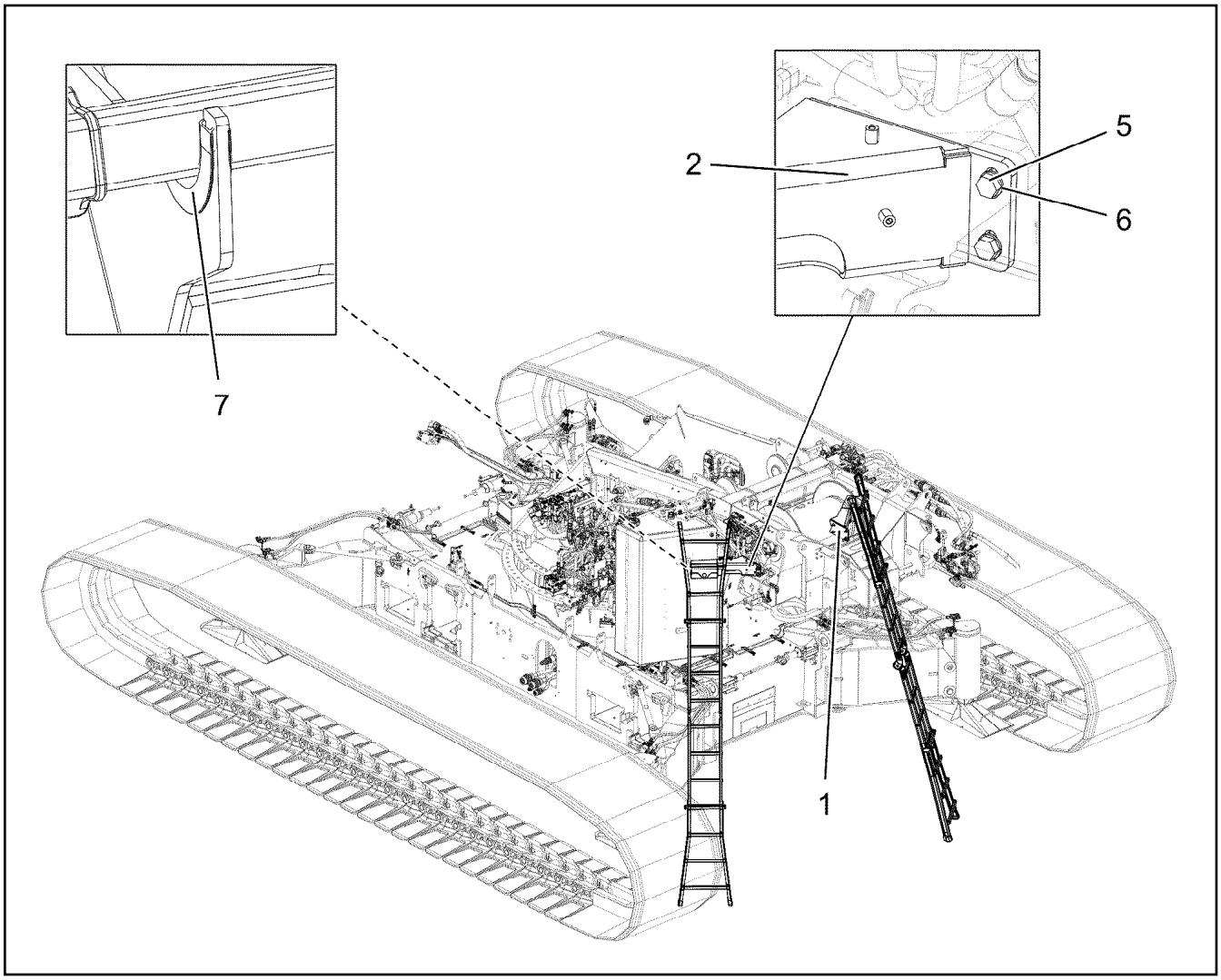

Pos.	Item	Quantity	Description	Bezeichnung
1	968072808	1	BRACKET RIGHT	KONSOLE RECHTS
2	968073008	1	BRACKET LEFT	KONSOLE LINKS
5	12214938	8	HEX SCREW ISO 4017 M16X35 8.8 FLZN SP	SECHSKANTSCHRAUBE
6	10289806	8	WASHER ISO 7089 16 300HV FLZN SPF	SCHEIBE
7	262106608	0.54	EDGE PROTECTION 4-6X15,8X11	KANTENSCHUTZ

Pos.	Item	Quantity	Description	Bezeichnung
1	97033141	1	PLATE 2X1248X623 ALMG3 H111	BLECH

Pos.	Item	Quantity	Description	Bezeichnung
5	96036954	1	CABLE LIST DRIVER'S CABIN ⇨ ❑ 445	KABELLISTE KRANFUEHRERK
6	96036957	1	ELECTRIC ADD-ON PARTS CABIN ⇨ ❑ 449	ELEKTRIK ANBAUTEILE KABINE

Pos.	Item	Quantity	Description	Bezeichnung
2	96036955	1	WIRING HARNESS W300 ⇨ ❑ 446	KABELSTRANG
3	967541908	1	WIRING HARNESS W301	KABELSTRANG
4	967542008	1	WIRING HARNESS W302	KABELSTRANG
6	10219462	2	PATCH CABLE 4X2 AWG 26/7-5M	PATCHKABEL
7	96036956	1	WIRING HARNESS W310 ⇨ ❑ 448	KABELSTRANG
10	553186908	1	CABLE HARNESS 3300MM	KABELBAUM
(1)	10492113	1	PLUG 2	STECKER
(2)	10491808	1	PLUG 12-POL	STECKER

Pos.	Item	Quantity	Description	Bezeichnung
5	680000708	1	COUPLING SOCKET 4-POL 90° SPF	KUPPLUNGSDOSE
6	680000008	1	COUPLING SOCKET 4-POLE SPF	KUPPLUNGSDOSE
7	10428545	4.375	LEAD 25 X 0,34 TPE-U	LEITUNG
9	11620017	3	LEAD 2 X 1	LEITUNG
10	10428544	4.367	LEAD 15 X 0,34 TPE-U	LEITUNG
11	10428544	4.367	LEAD 15 X 0,34 TPE-U	LEITUNG
12	10877798	1	CONNECTION CABLE 2X0,75-1,5M	ANSCHLUSSKABEL
13	11620017	0.4	LEAD 2 X 1	LEITUNG
15	11840113	4.46	BUS LINE 2 X 0,5	BUSLEITUNG
16	11840113	4.38	BUS LINE 2 X 0,5	BUSLEITUNG
17	11840113	4.38	BUS LINE 2 X 0,5	BUSLEITUNG
18	11840113	0.17	BUS LINE 2 X 0,5	BUSLEITUNG
19	10875121	1	DOUBLE SOCKET 2-POL	DOPPELSTECKDOSE
34	602217908	1	CABLE LUG DIN 46237 M6/1-2,5mm²	KABELSCHUH
72	602203408	3	RECEPTACLE 6,3X1-2,5 TIN-PLATED	STECKHUELSE
75	602203908	2	FLAT PLUG 6,3X1-2,5 SN	FLACHSTECKER
121	602300108	13	CONTACT 1-2,5MM2	KONTAKT
124	602323508	6	FLAT PLUG 2,8X0,5-1 VERZ	FLACHSTECKER
125	602300308	110	CONTACT 0,5-1MM2	KONTAKT
134	602303308	2	RECEPTACLE FOR TABS 6,3X0,5-1,5	FLACHSTECKHUELSE
143	602208408	2	RECEPTACLE 9,5X1-2,5 CUSN4	STECKHUELSE
202	11082602	7.44	INSULATING HOSE DN6X0,5 PUR SPF	ISOLIERSCHLAUCH
203	11082603	2.2	INSULATING HOSE DN8X0,65 PUR SPF	ISOLIERSCHLAUCH
204	11082604	4.43	INSULATING HOSE DN10X0,65 PUR SPF	ISOLIERSCHLAUCH
205	11082605	1.63	INSULATING HOSE DN12X0,65 PUR SPF	ISOLIERSCHLAUCH
224	11124207	0.83	CABLE CONDUIT DN20X0,6 PUR SPF	KABELSCHLAUCH
225	11124208	0.33	CABLE CONDUIT DN25X0,6 PUR SPF	KABELSCHLAUCH
227	11124210	2.26	CABLE CONDUIT DN35X0,6 PUR SPF	KABELSCHLAUCH
261	603200308	1	CABLE TIE 3,6X140-SCHWARZ PA66	KABELBINDER
298	10441166	0.1	HEATSHRINK SLEEVING 11,6/2,5X2,29 POLY	SCHRUMPFSCHLAUCH
305	10870540	319.78	ELECTR.CABLE 1,0	KFZ-LEITUNG
309	10870542	30.5	ELECTR.CABLE 2,5	KFZ-LEITUNG
344	10870538	18.2	ELECTR.CABLE 0,5	KFZ-LEITUNG
345	10870539	8.16	ELECTR.CABLE 0,75	KFZ-LEITUNG
500	923512208	53	CABLE MARKER	KABELMARKER
501	602300208	9	PLUG SHELL 18-POL	STECKERGEHAEUSE
502	10024744	2	FEMALE PLUG 15-POLE	BUCHSENSTECKER
503	10355182	4	PLUG SHELL D-SUB METALL	STECKERGEHAEUSE
504	602322708	1	FEMALE PLUG 25-POLE	BUCHSENSTECKER
505	10355170	2	PLUG SHELL D-SUB METALL	STECKERGEHAEUSE
506	602325508	3	HOUSING 6-POL	GEHAEUSE
507	602331308	4	HOUSING 4-POL	GEHAEUSE
508	602209708	4	ATTACHABLE SLEEVE HOUSING 2-POL	STECKHUELSENGEHAEUSE
509	10342517	2	PLUG SHELL 2 13A TH.PLAST SW	STECKERGEHAEUSE
510	10342519	2	CONTACT LOCK DT V-KEIL	KONTAKTVERRIEGELUNG
511	602336008	4	PLUG SHELL 14-POL	STECKERGEHAEUSE
512	10424622	2	BUSHING HOUSING 2-POL 5A	BUCHSENGEHAEUSE
513	10875280	1	BUSHING HOUSING 8-POL 5A	BUCHSENGEHAEUSE
514	602300508	1	HOUSING 8-POL	GEHAEUSE
515	602335908	4	PLUG SHELL 4-POL	STECKERGEHAEUSE
516	602300608	1	HOUSING 8-POL	GEHAEUSE
517	5603876	1	LINE CONNECTOR	LEITUNGSVERBINDER
518	602225508	1	MASTER PLUG 4-POL	ZENTRALSTECKER
519	602225608	1	MASTER PLUG 6-POL	ZENTRALSTECKER
520	10301148	1	PLUG 9-POL PVC	STECKER
521	602319808	1	ATTACHABLE SLEEVE HOUSING VALEO	STECKHUELSENGEHAEUSE
522	11822050	1	PLUG SHELL	STECKERGEHAEUSE
523	602305908	1	FLAT PLUG HOUSING FASTIN-FASTON	FLACHSTECKERGEHAEUSE
524	6001790	1	SOCKET HOUSING 2-POL	STECKDOSENGEHAEUSE
525	10342518	1	SOCKET 2 13A	STECKDOSE

Pos.	Item	Quantity	Description	Bezeichnung
526	7368241	1	CONTACT LOCK 2-POL	KONTAKTVERRIEGELUNG
527	11008024	4	COVER MOLERIT T59	ABDECKUNG
528	617000608	1	FERRITE KLAPPBAR	FERRIT
529	10874331	1	PROTECTING CAP JPT	SCHUTZKAPPE
615	602322808	55	CRIMPING CONTACT 0,2-0,56MM2 SPF	CRIMPKONTAKT
669	10100062	2	CONNECTOR PIN 0,75-2,0MM2 Cu Ni	STECKERSTIFT
670	10100063	4	PLUG BUSHING 0,75-2,0MM2 Cu	STECKERBUCHSE
689	10335819	4	PIN CONTACT 0,2-0,5MM2	STIFTKONTAKT
690	10335820	52	SLEEVE CONTACT 0,2-0,5MM2	BUCHSENKONTAKT
700	10424623	4	SLEEVE CONTACT 0,5-0,75MM2	BUCHSENKONTAKT
708	10473048	2	CABLE SLEEVE 2,4-3,0/2,4/0,6 SILIKON	KABELTUELLE
715	10300944	2	PIN CONTACT 0,5-1MM2MM2 Cu	STIFTKONTAKT
758	11080881	18	RECEPTACLE 6,3X0,5-1,0 VERZINNT	STECKHUELSE
761	7624353	2	PLUG BUSHING 0,5-1,0MM2	STECKERBUCHSE
802	602330808	2	SINGLE STRAND SEALING 1,2-2,1MM BLAU	EINZELADERABDICHTUNG
823	7368253	5	STOPPER PLUG DEUTSCH GROESSE	BLINDSTOPFEN
828	10424625	4	SINGLE STRAND SEALING 1,4-2,1MM VMQ	EINZELADERABDICHTUNG
995	965617208	6	SHIELDING TIED BACK	ABSCHIRMUNG ZURUECKGEB
996	965622108	8	LETTERING WIRE	BESCHRIFTUNG ADER
998	965622208	1	LETTERING WIRING HARNESS	BESCHRIFTUNG KABELBAUM
2238	10875281	6	SLEEVE CONTACT 0,5MM2	BUCHSENKONTAKT
2258	10877343	25	SLEEVE CONTACT 0,5-1MM2	BUCHSENKONTAKT
2259	10877344	5	CONTACT 1,0-2,5MM2	KONTAKT
2998	96014807	2	MACHINING CAN- STUETZP	BEARBEITUNG

Pos.	Item	Quantity	Description	Bezeichnung
5	680000008	1	COUPLING SOCKET 4-POLE SPF	KUPPLUNGSDOSE
6	680000308	1	COUPLING SOCKET 4-POLE 90° SPF	KUPPLUNGSDOSE
7	680000008	1	COUPLING SOCKET 4-POLE SPF	KUPPLUNGSDOSE
9	12100217	3	DATA LINE 2 X 1 FEP SPF	DATENLEITUNG
10	12100217	3	DATA LINE 2 X 1 FEP SPF	DATENLEITUNG
62	602320508	13	RECEPTACLE FOR TABS 0,5-1,5MM2	FLACHSTECKHUELSE
67	602203108	2	RECEPTACLE 2,8X0,3-1,5 VERZ	STECKHUELSE
72	602203408	4	RECEPTACLE 6,3X1-2,5 TIN-PLATED	STECKHUELSE
121	602300108	27	CONTACT 1-2,5MM2	KONTAKT
125	602300308	118	CONTACT 0,5-1MM2	KONTAKT
134	602303308	2	RECEPTACLE FOR TABS 6,3X0,5-1,5	FLACHSTECKHUELSE
140	602207608	1	RECEPTACLE 6,3X0,5-1,5 VERZ	STECKHUELSE
202	11082602	5.94	INSULATING HOSE DN6X0,5 PUR SPF	ISOLIERSCHLAUCH
203	11082603	2.77	INSULATING HOSE DN8X0,65 PUR SPF	ISOLIERSCHLAUCH
204	11082604	0.73	INSULATING HOSE DN10X0,65 PUR SPF	ISOLIERSCHLAUCH
224	11124207	0.53	CABLE CONDUIT DN20X0,6 PUR SPF	KABELSCHLAUCH
225	11124208	0.43	CABLE CONDUIT DN25X0,6 PUR SPF	KABELSCHLAUCH
227	11124210	0.88	CABLE CONDUIT DN35X0,6 PUR SPF	KABELSCHLAUCH
261	603200308	20	CABLE TIE 3,6X140-SCHWARZ PA66	KABELBINDER
305	10870540	160.31	ELECTR.CABLE 1,0	KFZ-LEITUNG
309	10870542	18.45	ELECTR.CABLE 2,5	KFZ-LEITUNG
345	10870539	7.7	ELECTR.CABLE 0,75	KFZ-LEITUNG
500	923512208	29	CABLE MARKER	KABELMARKER
501	602300208	6	PLUG SHELL 18-POL	STECKERGEHAEUSE
502	10099864	3	HOUSING 18-POL	GEHAEUSE
503	602338208	3	SECURING PIN FOR JPT PLUG	SICHERUNGSSTIFT
504	11118242	1	BUSHING HOUSING 1-POL	BUCHSENGEHAEUSE
505	602331308	2	HOUSING 4-POL	GEHAEUSE
506	602209708	2	ATTACHABLE SLEEVE HOUSING 2-POL	STECKHUELSENGEHAEUSE
507	5603876	1	LINE CONNECTOR	LEITUNGSVERBINDER
508	602337008	3	CONNECTOR PLUG A AX	ANSCHLUSSSTECKER
509	602331808	2	PLUG SHELL 2-POLE 9,5A	STECKERGEHAEUSE
510	602325508	1	HOUSING 6-POL	GEHAEUSE
511	602335908	1	PLUG SHELL 4-POL	STECKERGEHAEUSE
512	617000608	1	FERRITE KLAPPBAR	FERRIT
611	602332108	4	SLEEVE CONTACT 0,3-0,89MM2	BUCHSENKONTAKT
689	10335819	4	PIN CONTACT 0,2-0,5MM2	STIFTKONTAKT
690	10335820	6	SLEEVE CONTACT 0,2-0,5MM2	BUCHSENKONTAKT
703	602225914	2	RECEPTACLE 4,8X1,5	STECKHUELSE
708	10473048	1	CABLE SLEEVE 2,4-3,0/2,4/0,6 SILIKON	KABELTUELLE
758	11080881	4	RECEPTACLE 6,3X0,5-1,0 VERZINNT	STECKHUELSE
996	965622108	8	LETTERING WIRE	BESCHRIFTUNG ADER
998	965622208	1	LETTERING WIRING HARNESS	BESCHRIFTUNG KABELBAUM

Pos.	Item	Quantity	Description	Bezeichnung
1	96030724	1	INSTRUMENT CLUSTER ELECTRICS LSB-BK ⇨ ❑ 451	ELEKTRIK ARMATURENKONSOL
2	96022872	1	CONTROL PANEL ROOF ⇨ ❑ 453	ARMATURENBRETT DACH
3	963792208	2	KEYBOARD UNIT LSB-TE PROG.	TASTATUREINHEIT
4	10343693	2	MASTER SWITCH LSB-AMS SPF ⇨ ❑ 454	MEISTERSCHALTER
5	10340105	1	WARNING LIGHT 14W 13-36V SPF ⇨ ❑ 455	WARNLEUCHTE
6	10877828	1	WORK LIGHT 20W 12-24V ALUMINIUM	ARBEITSSCHEINWERFER
7	10424276	1	TEMPERATURE SENSOR -30°C BIS +130°C	TEMPERATURFUEHLER
8	10342854	2	INTERNAL LIGHT 6W 24V WEISS SPF	INNENLEUCHTE
9	10449516	3	PRECISION RESISTOR -40/+125°C SPF	MESSWIDERSTAND
10	10489011	2	LOUDSPEAKER 2,77V 86DBA	LAUTSPRECHER
11	12102817	1	ANTENNA AKTIV	ANTENNE
12	606020708	1	DOOR CONTACT SWITCH	TUERKONTAKTSCHALTER
13	978172508	1	SEAL 90X97X5 POLYALEFIN	DICHTUNG
16	976167908	1	PLATE 1.5X90X96 DC01 RAL 9005,M,GT SPF	BLECH
17	965417108	1	PLATE WELDED RAL 9005,M,GT SPF	BLECH SCHWK.
18	10875474	18	BUTTON HEAD SCREW ISO 7380-2 M5X16 0	HALBRUNDKOPFSCHRAUBE
19	96033140	1	LICCON CONSOLE LSB-BSE LCD5C-A PROG	LICCON MONITOR LSB-BSE
(80)	10886525	1	LICCON CONSOLE LCD5C-A LSB-BSE	LICCON MONITOR LCD5C-A
(980)	10288121	1	NAME PLATE 70X40 POLYESTER SPF	BEZEICHNUNGSSCHILD
20	10875482	8	BUTTON HEAD SCREW ISO 7380-2 M3X10 0	HALBRUNDKOPFSCHRAUBE
21	10875483	8	BUTTON HEAD SCREW ISO 7380-2 M5X10 0	HALBRUNDKOPFSCHRAUBE
22	10875468	7	BUTTON HEAD SCREW AEHNL.ISO 7380-2	HALBRUNDKOPFSCHRAUBE
23	10197730	1	HEX SCREW ISO 4017 M10X20 8.8 ZNNI-480	SECHSKANTSCHRAUBE
24	10011658	1	WASHER A 10X20X2 200HV-St MAN183-B1	SCHEIBE
25	10875633	1	HEX NUT ISO 8675 M12X1,0 04 480H SPF	SECHSKANTMUTTER
26	10876399	4	HEX NUT DIN 985 M3 8 480H SPF	SECHSKANTMUTTER
30	11140403	8	WASHER ISO 7089 5 200HV 480H SPF	SCHEIBE
31	10874785	1	KEYBOARD UNIT SPF	TASTATUREINHEIT
32	10875017	4	BUTTON HEAD SCREW ISO 7380-1 M4X10 0	HALBRUNDKOPFSCHRAUBE
33	11822051	1	BLANK COVER	BLINDABDECKUNG
34	10876030	1	PILOT LAMP 24V	MELDELEUCHTE
35	963398008	1	PREMOUNT.AXIAL FLOW FAN UPPER ⇨ ❑ 456	AXIALLUEFTER VORM.OBEN
36	966980708	2	SCREENING	ABSCHIRMUNG
(1)	97013718	1	PLATE 1.5X110X178 DC01 FE//ZNNI8//CN//T	BLECH
(2)	10875645	4	WASHER ISO 7089 4 200HV 480H SPF	SCHEIBE
(3)	11690047	2	HEX SCREW ISO 4017 M4X10 8.8 480H SPF	SECHSKANTSCHRAUBE
37	10424210	2	CLAMP EMVFSK 1 FEDERSTAHL	KLAMMER
38	602042808	2	CLAMP EMVSK 12	KLAMMER
39	11656991	6	HEX SCREW EN 1665 M8X12 8.8 480H SPF	SECHSKANTSCHRAUBE
40	11140469	6	WASHER ISO 7093-1 8 200HV 480H SPF	SCHEIBE
41	408401901	4	PAN-HEAD SCREW ISO 7045 M4X40 4.8 A2	FLACHKOPFSCHRAUBE
42	10875645	4	WASHER ISO 7089 4 200HV 480H SPF	SCHEIBE
43	425220708	4	SERRATED LOCK WASHER DIN 6798 J 4.3	FAECHERSCHEIBE
46	502923708	2	COMPRESSION RING	DRUCKRING
47	726411508	2	O-RING 14X2 NBR70	O-RING
48	10428532	2	CABLE GLAND M16X1,5X4-11 MS VERNICK	KABELVERSCHRAUBUNG
50	10335557	1	IGNITION STARTER SWITCH 3S SPF	ZUENDSTARTSCHALTER
51	591570908	1	COVER LID POLYSTIC27-33 ABS	ABDECKKAPPE
52	966979108	1	SOCKET ETHERNET ⇨ ❑ 457	STECKDOSE
53	97022452	1	PLATE 2.5X71X196 DC01 RAL 9005,M,GT SP	BLECH
54	10297310	2	FOOT ROCKER SPF	FUSSWIPPE
55	10343484	2	PEDAL TRANSDUCER 20° SPF	PEDALGEBER
56	96023875	1	FOOT SWITCH CPL.	FUSSTASTER KPL.
(10)	96023876	1	WIRING HARNESS W346	KABELSTRANG

Pos.	Item	Quantity	Description	Bezeichnung
57	11060128	2	TRANSPONDER SPF	TRANSPONDER
58	10354584	1	INDUCTIVE SENSOR BERUEHRUNGSLOS	INDUKTIVSENSOR
59	11114971	1	ANTENNA CABLE 1-4,850M	ANTENNENKABEL
60	10876819	1	ANTENNA CABLE 1,27-2M SEIDENMATT	ANTENNENKABEL
61	10331026	1	COVER	DECKEL
62	11080088	1	THERMAL SWITCH BERUEHRUNGSLOS	THERMOSCHALTER
63	591063508	1	WASHER	SCHEIBE
64	710207408	1	WASHER 20,2X25X3XA GUMMI	SCHEIBE
65	530609208	1	WASHER DIN 433 19 140HV A3C	SCHEIBE
66	97051324	1	ADAPTOR 19.0X17 S235JRC+C FE//ZNNI8//C	ADAPTER
67	602424008	2	CABLE GLAND M12X1,5X2-8 MS	KABELVERSCHRAUBUNG
69	10870472	1	ORIFICE	BLENDE

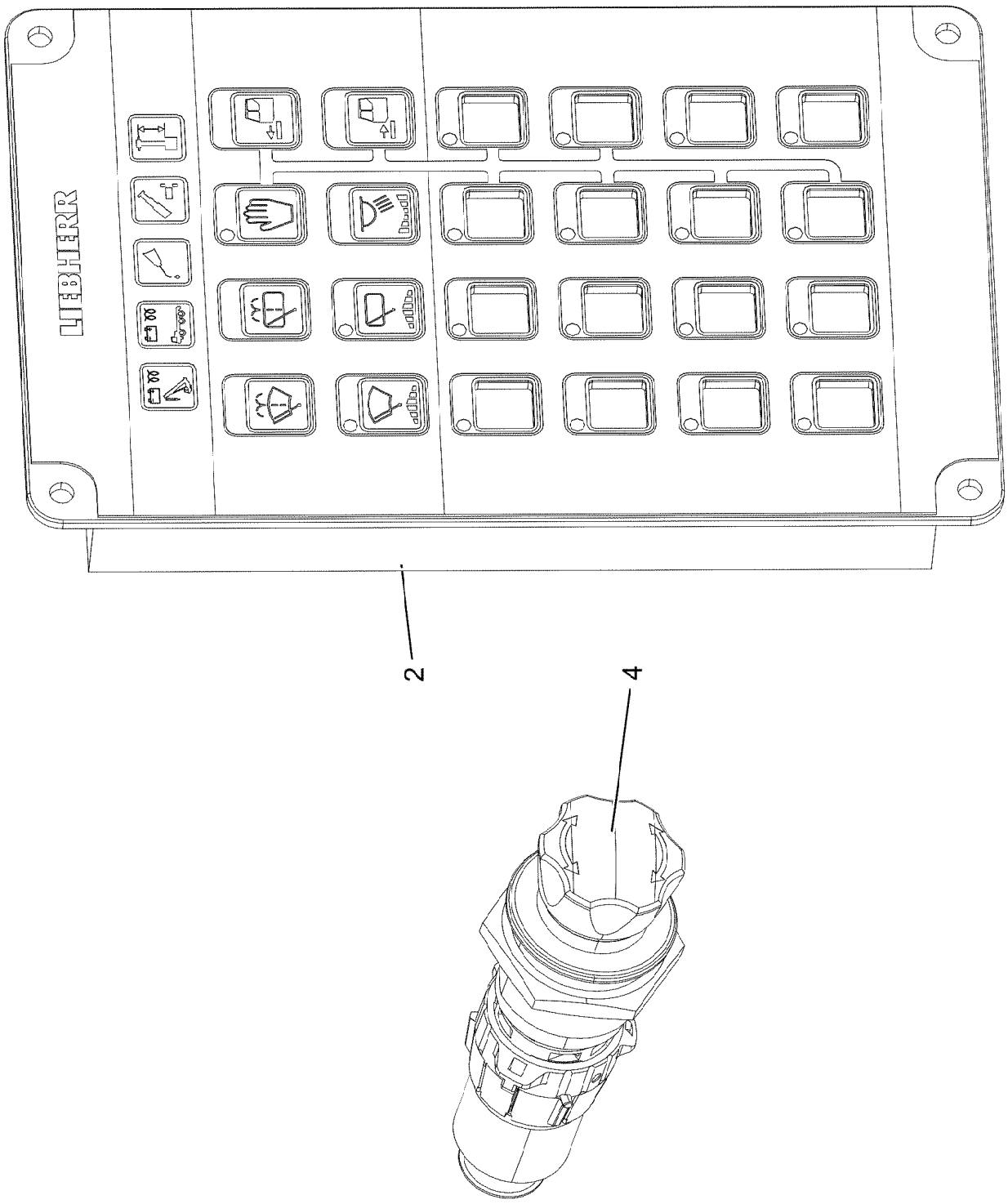
LIEBHERR
2
4

Pos.	Item	Quantity	Description	Bezeichnung
2	10816196	1	KEYBOARD UNIT SPF	TASTATUREINHEIT
4	967260908	1	EMERGENCY CUT-OFF CRANE DRIVER	NOTAUS KRANFUEHRERKABIN
(2)	606144108	1	EMERGENCY STOP BUTTON	NOT-AUS TASTE
(3)	11100197	1	TOUCH CONTACT TRANSMITTER 1OE+1S	TASTKONTAKTGEBER

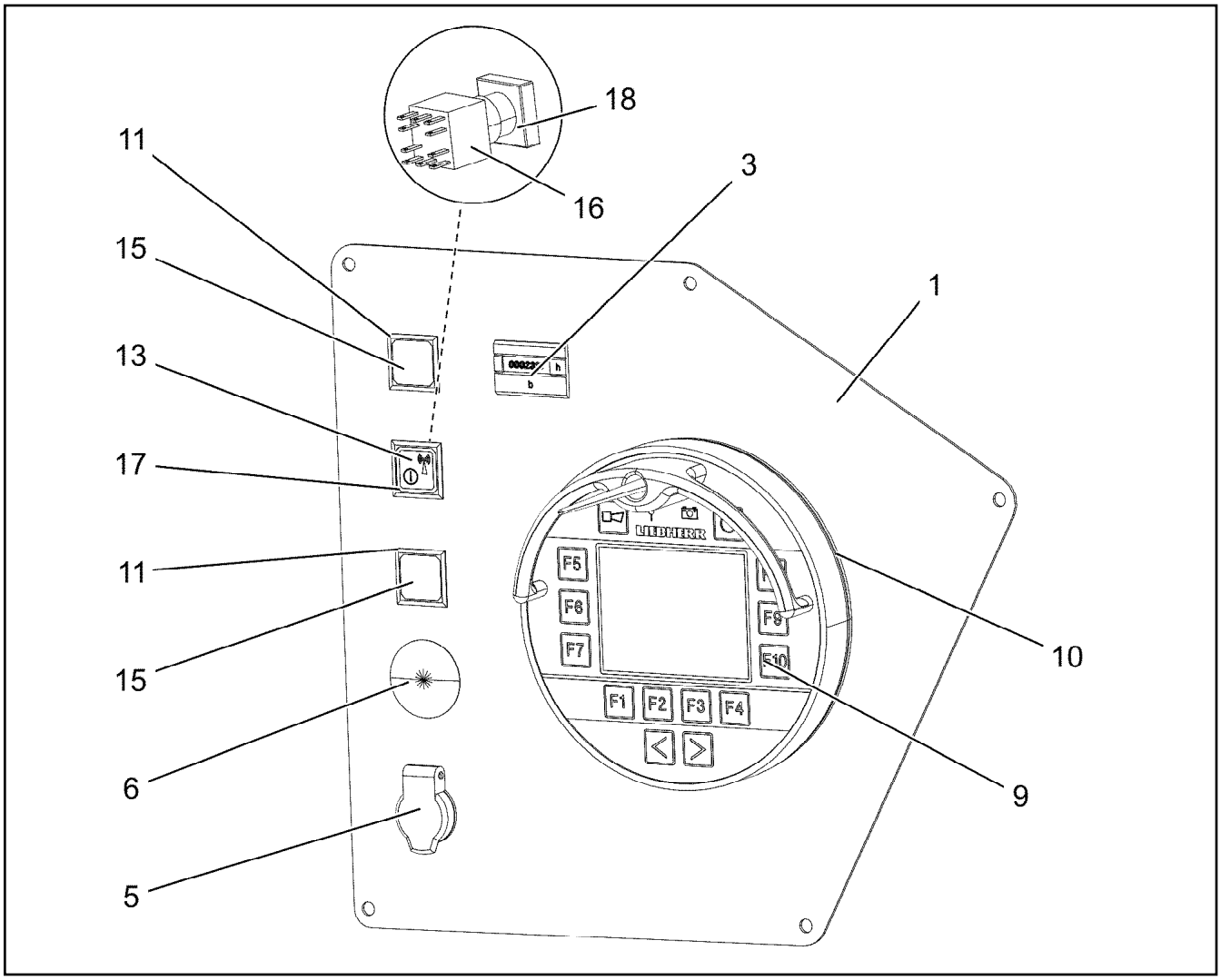

Pos.	Item	Quantity	Description	Bezeichnung
1	96022873	1	PLATE WELDED RAL 9005,M,GT SPF	BLECH SCHWK.
3	691798508	1	OPERATING HOURS COUNTER STUNDEN	BETRIEBSSTUNDENZAEHLER
5	605203908	1	BUILT-IN SOCKET 2-POL	EINBAUSTECKDOSE
6	591570908	1	COVER LID POLYSTIC27-33 ABS	ABDECKKAPPE
9	96033227	1	BTT PROGRAMMED BTTC	BTT PROGRAMMIERT
(1)	11160970	1	REMOTE CONTROL TRANSMITTER SPF	FERNSTEUERSENDER
(2)	10288121	1	NAME PLATE 70X40 POLYESTER SPF	BEZEICHNUNGSSCHILD
(3)	11007853	1	LABELS 10X90 POLYESTER	ETIKETTEN
10	10412777	1	CHARGING UNIT BTT SPF	LADEEINHEIT
11	606143508	2	INDICATOR LAMP	LEUCHTMELDER
13	607008708	1	LIGHT BULB 1,2W 30V	GLUEHLAMPE
15	606144008	2	KEYPAD BUTTON	TASTE
16	606143208	1	TOUCH CONTACT TRANSMITTER 1OE+1S	TASTKONTAKTGEBER
17	606144408	1	PUSH-BUTTON CAP FLACH KLAR	TASTERKAPPE
18	606143008	1	PUSH BUTTON	DRUCKTASTE

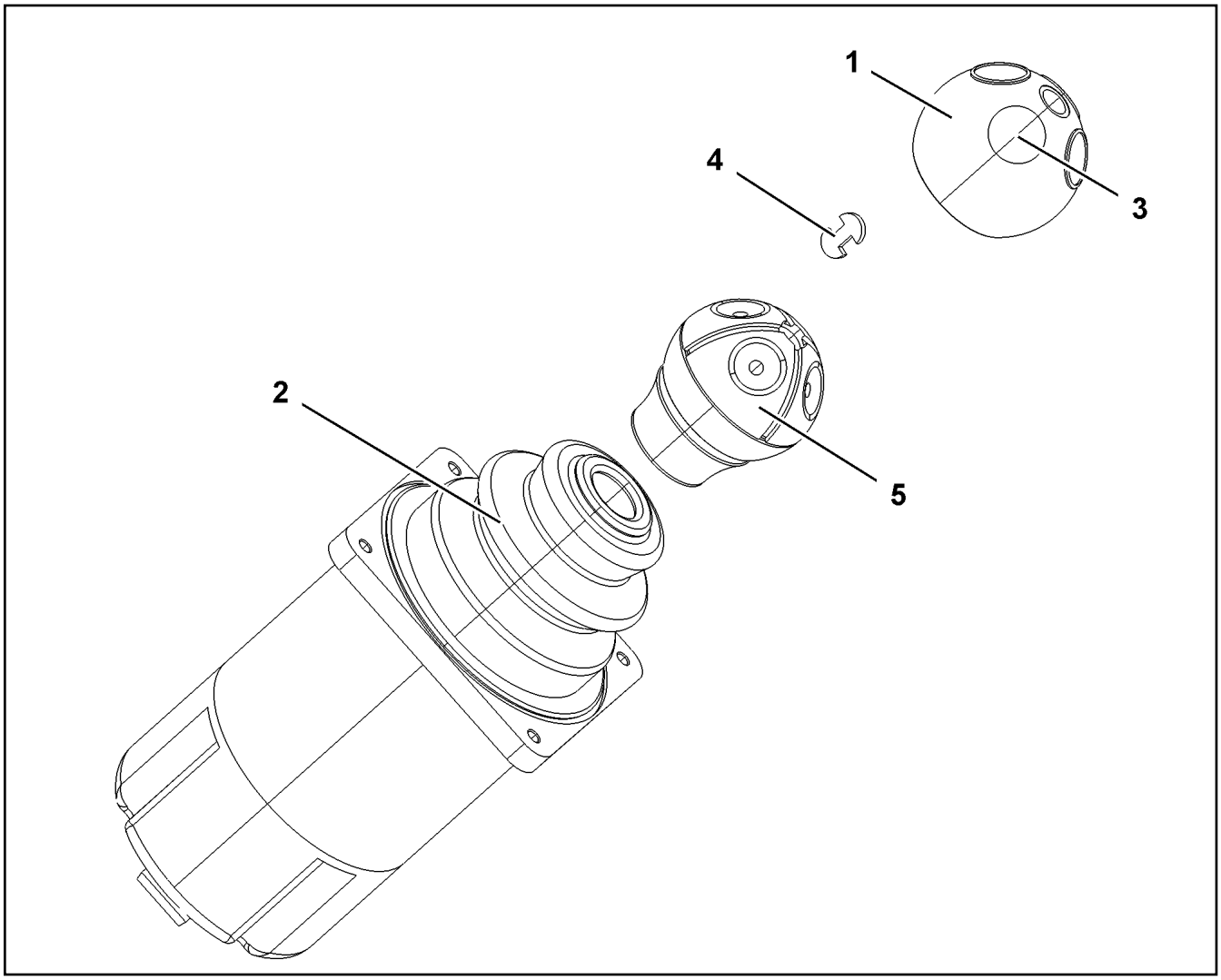

Pos.	Item	Quantity	Description	Bezeichnung
1	571824708	1	HANDLE CAP	GRIFFKAPPE
2	571912308	1	RUBBER BELLOWS	FALTENBALG
3	10335596	4	MICRO SWITCH	MIKROSCHALTER
4	10678848	2	CIRCLIP FUER GRIFFKAPPE	SICHERUNGSCLIP
5	10873517	1	SPARE PARTS SET GRIFF	ERSATZTEILSATZ

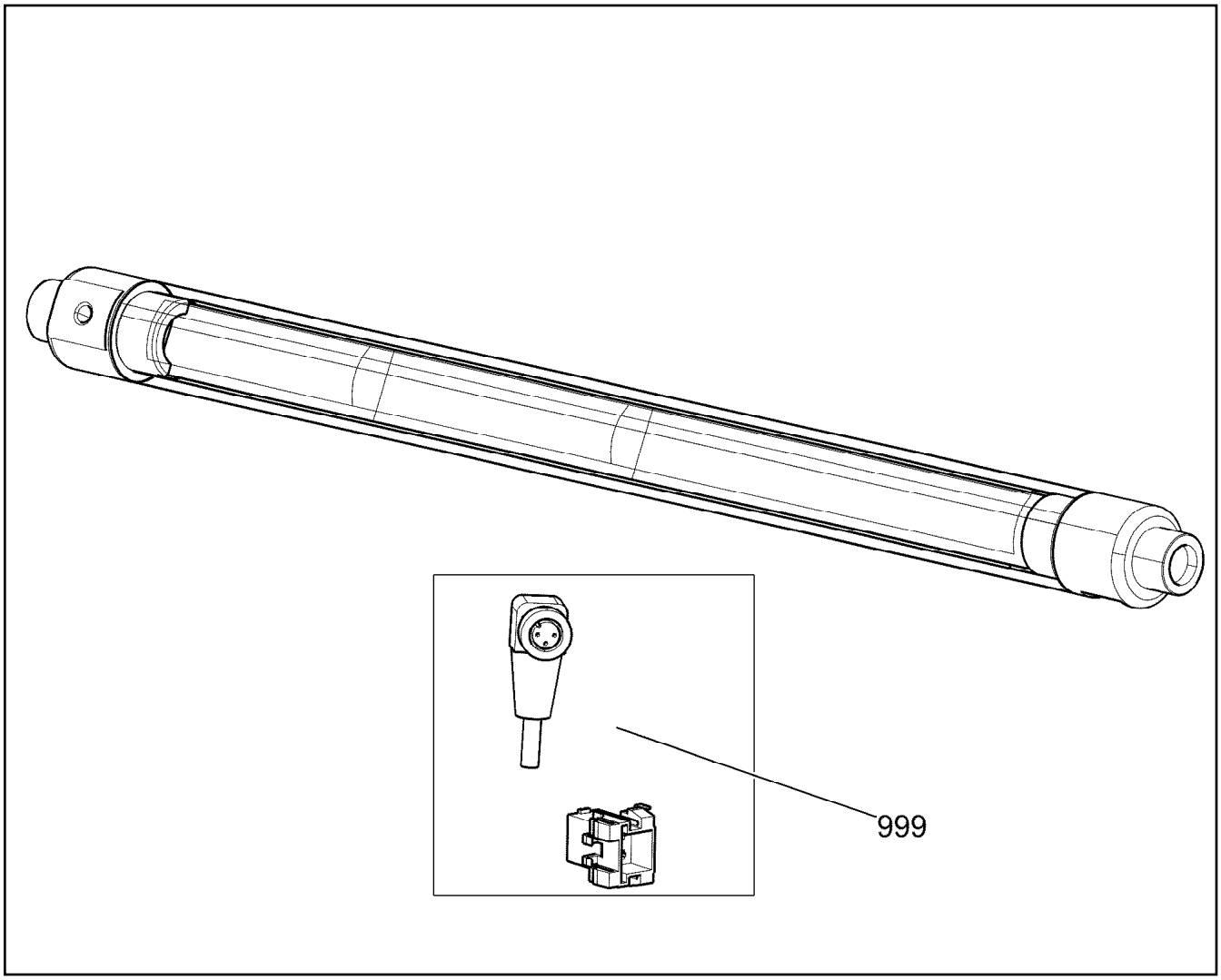

Pos.	Item	Quantity	Description	Bezeichnung
999	967363808	1	REP.KIT CENTRY WIRING	RS KABELSATZ

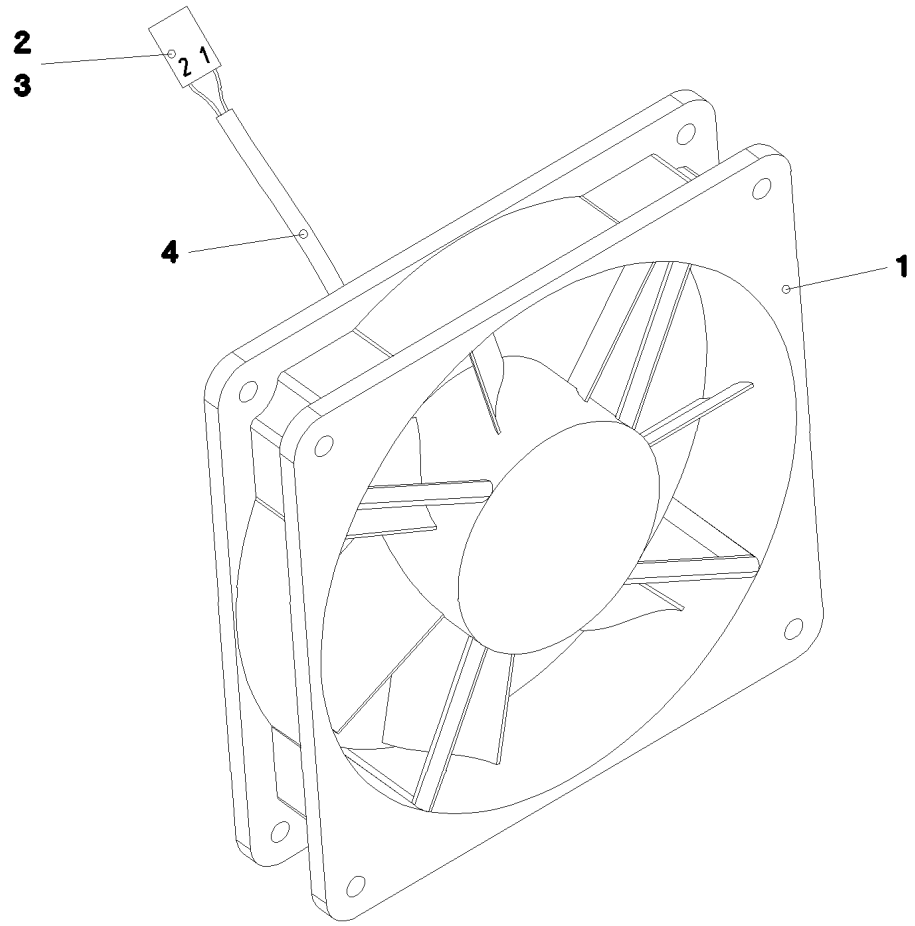

Pos.	Item	Quantity	Description	Bezeichnung
1	10222682	1	AXIAL FAN 24V	AXIALLUEFTER
2	602304808	2	FLAT PLUG	FLACHSTECKER
3	602305908	1	FLAT PLUG HOUSING FASTIN-FASTON	FLACHSTECKERGEHAEUSE
4	11082601	0.28	INSULATING HOSE DN4X0,5 PUR SPF	ISOLIERSCHLAUCH

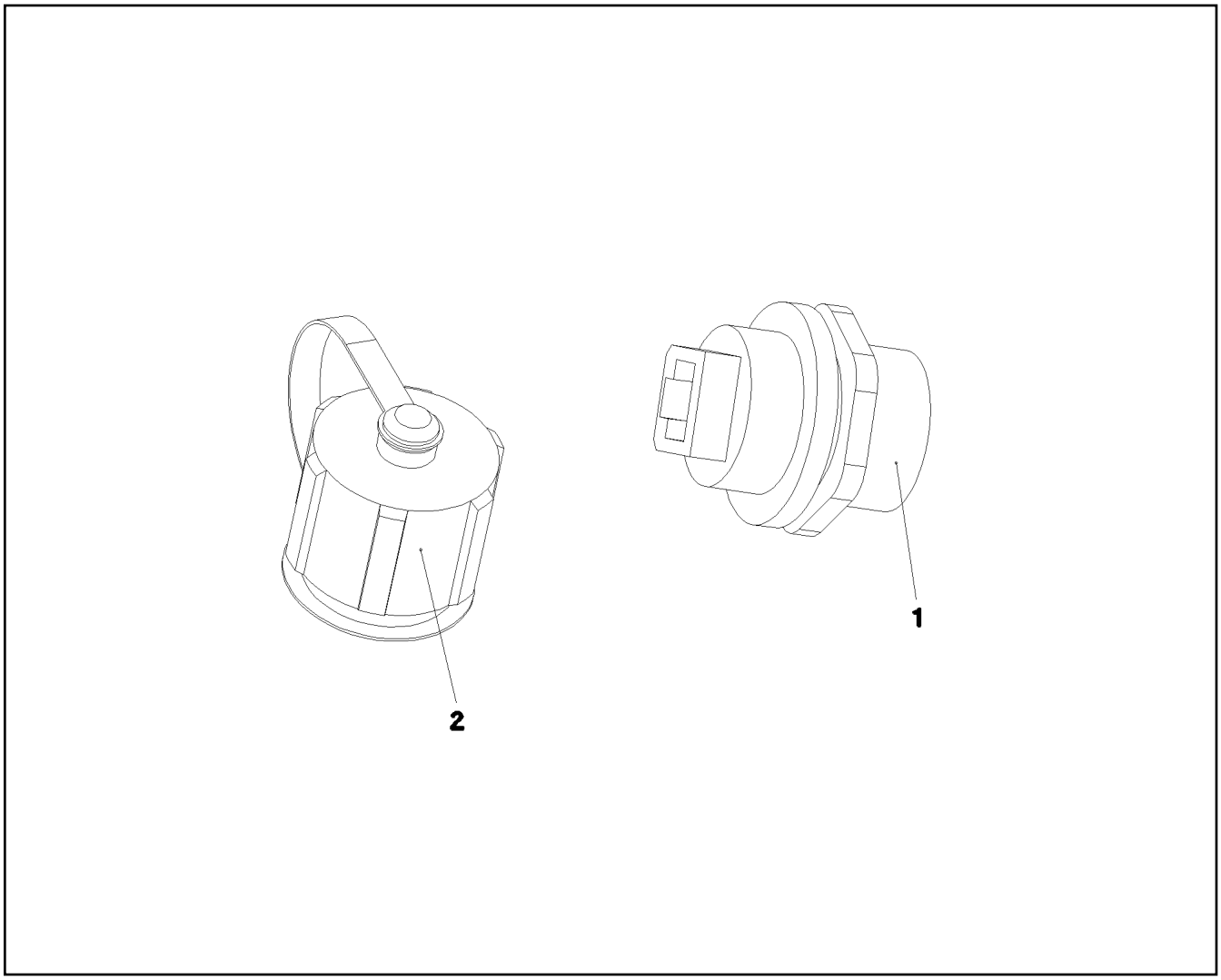

Pos.	Item	Quantity	Description	Bezeichnung
1	11008529	1	SOCKET 8-POL	STECKDOSE
2	11008530	1	PROTECTING CAP NETZW. RJ45/USB	SCHUTZKAPPE

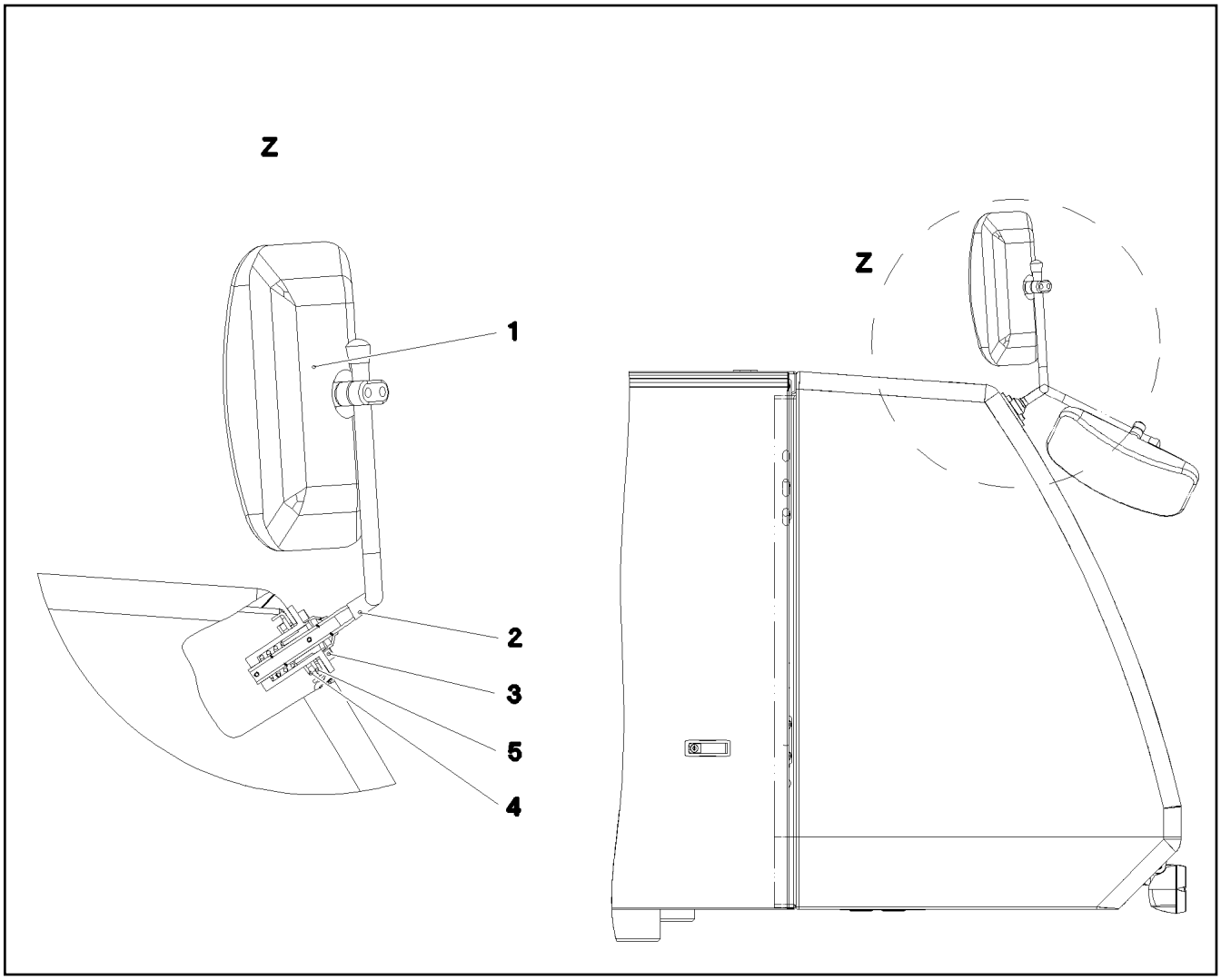

Pos.	Item	Quantity	Description	Bezeichnung
1	591070908	1	WIDE ANGLE MIRROR 316X178	WEITWINKELSPIEGEL
(1)	10675116	1	PLATE GLAS 315X178	SPIEGELGLAS
2	966707708	1	MIRROR RETAINER PRE-ASS. ⇨ ❑ 459	SPIEGELHALTER VORM.
3	10875599	4	SOCKET HEAD SCREW ISO 4762 M8X25 8.8	ZYLINDERSCHRAUBE
4	10875614	4	HEX NUT DIN 985 M8 8 480H SPF	SECHSKANTMUTTER
5	11840501	4	WASHER DIN 7349 8,4 200HV 480H SPF	SCHEIBE

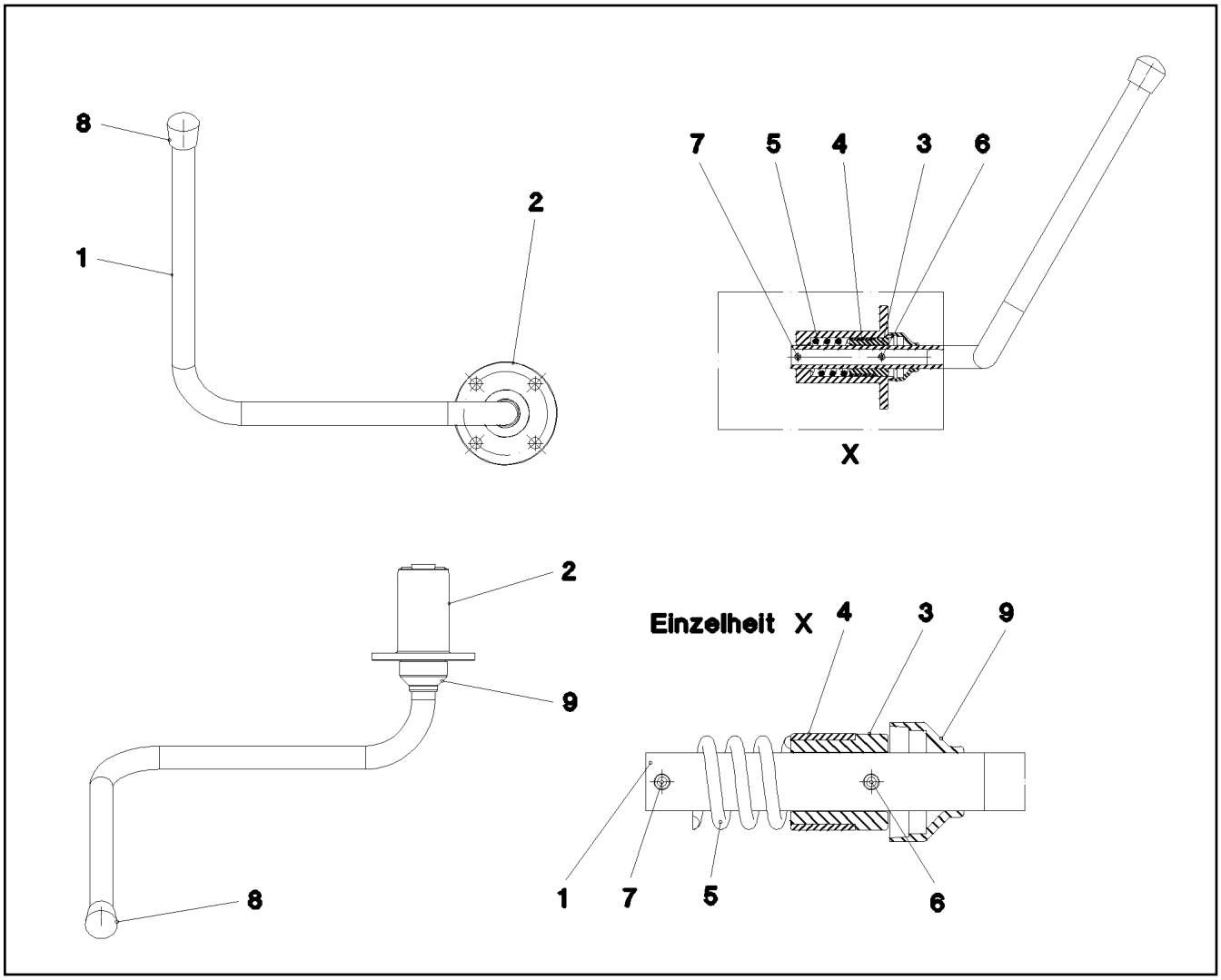

Pos.	Item	Quantity	Description	Bezeichnung
1	97008549	1	TUBE 18.0X622 X5CRNI18-10	ROHR
2	97008548	1	GUIDE 80.0X76 35NICRMOV125 SPF	FUEHRUNG
3	973998708	1	BUSHING 35.0X30 42CRMO4+QT SPF	BUCHSE
4	10215893	1	FRICTION BEARING 30X20 KUNSTSTOFF W	GLEITLAGER
5	11003426	1	PRESSURE SPRING 4X25X41 EN 10270-3	DRUCKFEDER
6	12100669	1	DOWEL PIN ISO 8752 5X28 480H SPF	SPANNSTIFT
7	12102738	1	DOWEL PIN ISO 8752 5X36 A2	SPANNSTIFT
8	591064408	1	CAP	KAPPE
9	10215892	1	COVER LID 36X22 PVC-SW	ABDECKKAPPE

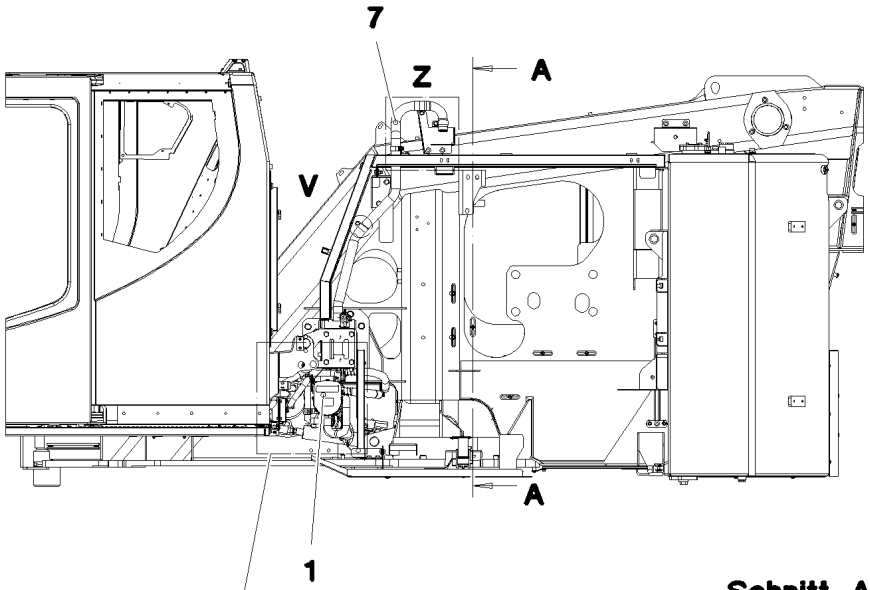

Einzelheit Z

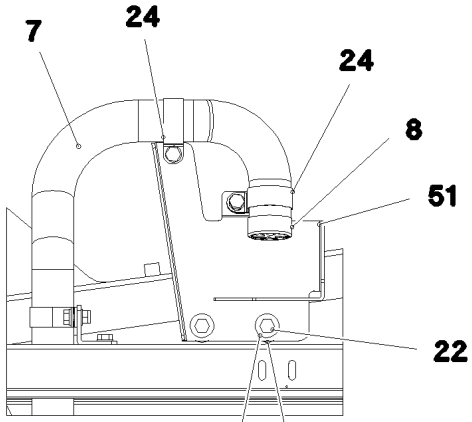

Einzelheit V

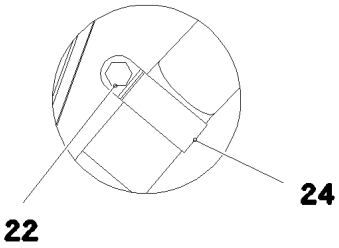

Einzelheit X

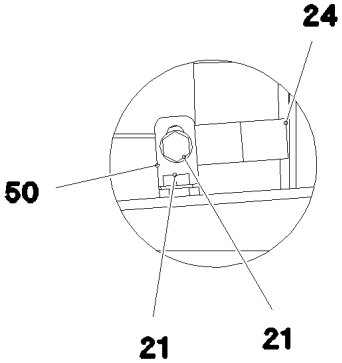

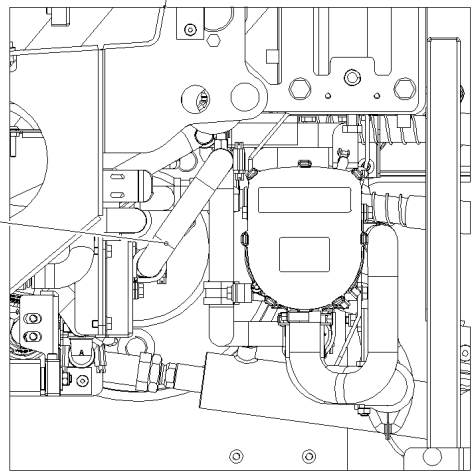

Schnitt A–A

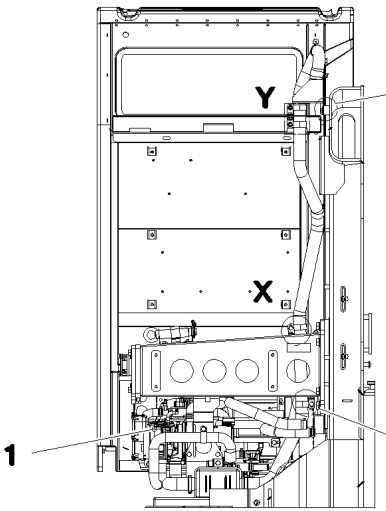

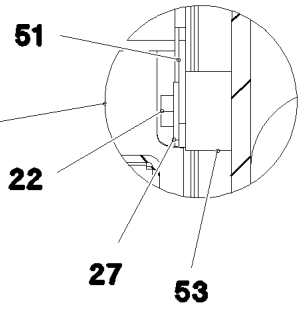

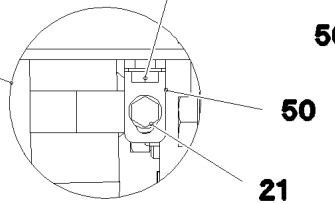

Einzelheit Y

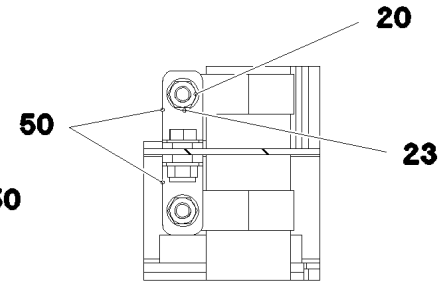

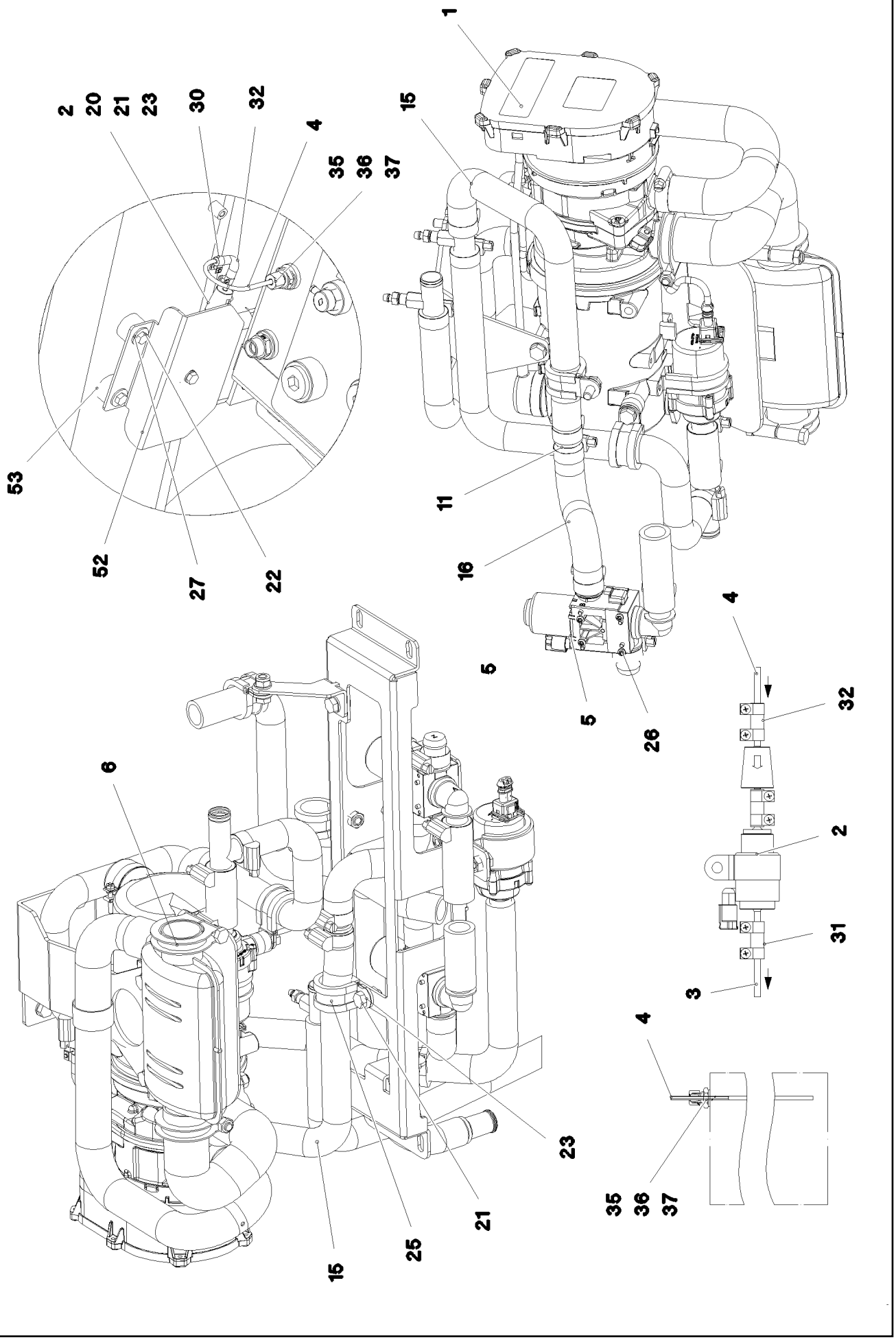
1
2
20
21
23
30
32
4
35
36
37
15
53
52
27
22
11
16
5
5
26
4
32
2
31
3
6
23
21
25
15
4
35
36
37

Pos.	Item	Quantity	Description	Bezeichnung
1	96020359	1	ADDNL.HEATING, PRE-ASSEMBLED ⇨ ❑ 463	ZUSATZHEIZUNG VORM.
2	11110051	1	DOSING PUMP DP42 ⇨ ❑ 467	DOSIERPUMPE
3	11626108	5	FUEL PIPING 5X1 PA12 ETFP	BRENNSTOFFLEITUNG
4	11626108	1.65	FUEL PIPING 5X1 PA12 ETFP	BRENNSTOFFLEITUNG
5	10343003	1	SOLENOID VALVE	MAGNETVENTIL
6	553054208	1	TERMINAL CLIP 40,5/39-42	KLEMMSCHELLE
7	553054108	1.995	EXHAUST PIPE 38/FLEXIBEL	ABGASROHR
8	553174108	1	END CAP 42,3	ENDKAPPE
11	11000700	1	CONNECTING PIPE 0	VERBINDUNGSROHR
14	11621770	0.1	COOLING WATER HOSE DN20-CONTI-KWS	KUEHLWASSERSCHLAUCH
15	97050852	1	FORM HOSE DN20 X3.5 B SPF	FORMSCHLAUCH
16	97042069	1	FORM HOSE DN20 X3.5 B SPF	FORMSCHLAUCH
19	11118077	6	HOSE CLAMP 21/16-27/12 W3	SCHLAUCHSCHELLE
20	10875614	8	HEX NUT DIN 985 M8 8 480H SPF	SECHSKANTMUTTER
21	11651767	13	HEX SCREW ISO 4017 M8X20 8.8 480H SPF	SECHSKANTSCHRAUBE
22	11651612	5	HEX SCREW ISO 4017 M8X16 8.8 480H SPF	SECHSKANTSCHRAUBE
23	10289803	21	WASHER ISO 7089 8 300HV 480H SPF	SCHEIBE
24	774221708	7	PIPE CLAMP 43/20	ROHRSCHELLE
25	11481080	1	CLAMP DIN 3016-1 28X20XD1 W5-CR	SCHELLE
26	10875795	4	TALLOW-DROP SCREW 4X10 10.9 P3E	LINSENKOPFSCHRAUBE
27	11140469	4	WASHER ISO 7093-1 8 200HV 480H SPF	SCHEIBE
30	553102308	5	HOSE CLAMP 10/9,5-10,5/9	SCHLAUCHSCHELLE
31	553191108	0.06	FUEL HOSE DN4,5-NBR NBR/CR RAL 8022	KRAFTSTOFFSCHLAUCH
32	10815777	1	FUEL HOSE DN4,5	KRAFTSTOFFSCHLAUCH
35	288182508	1	CLAMPING RING RD10X12 PA6G	KLEMMRING
36	471039308	1	FITTING GE 8L M18X1,5 CR6-FREI	VERSCHRAUBUNG
37	477401408	1	BOX NUT AL8 CR6-FREI	UEBERWURFMUTTER
50	97033103	4	PLATE 4X73X20 S315MC FE//ZNNI8//CN//T0	BLECH
51	97033925	1	PLATE 3X283X263 DC01 FE//ZNNI8//CN//T0	BLECH
52	97034243	1	PLATE 3X195X183 DC01 FE//ZNNI8//CN//T0	BLECH
53	978787708	4	SLEEVE 33.0X19 FE//ZNNI8//CN//T0	HUELSE

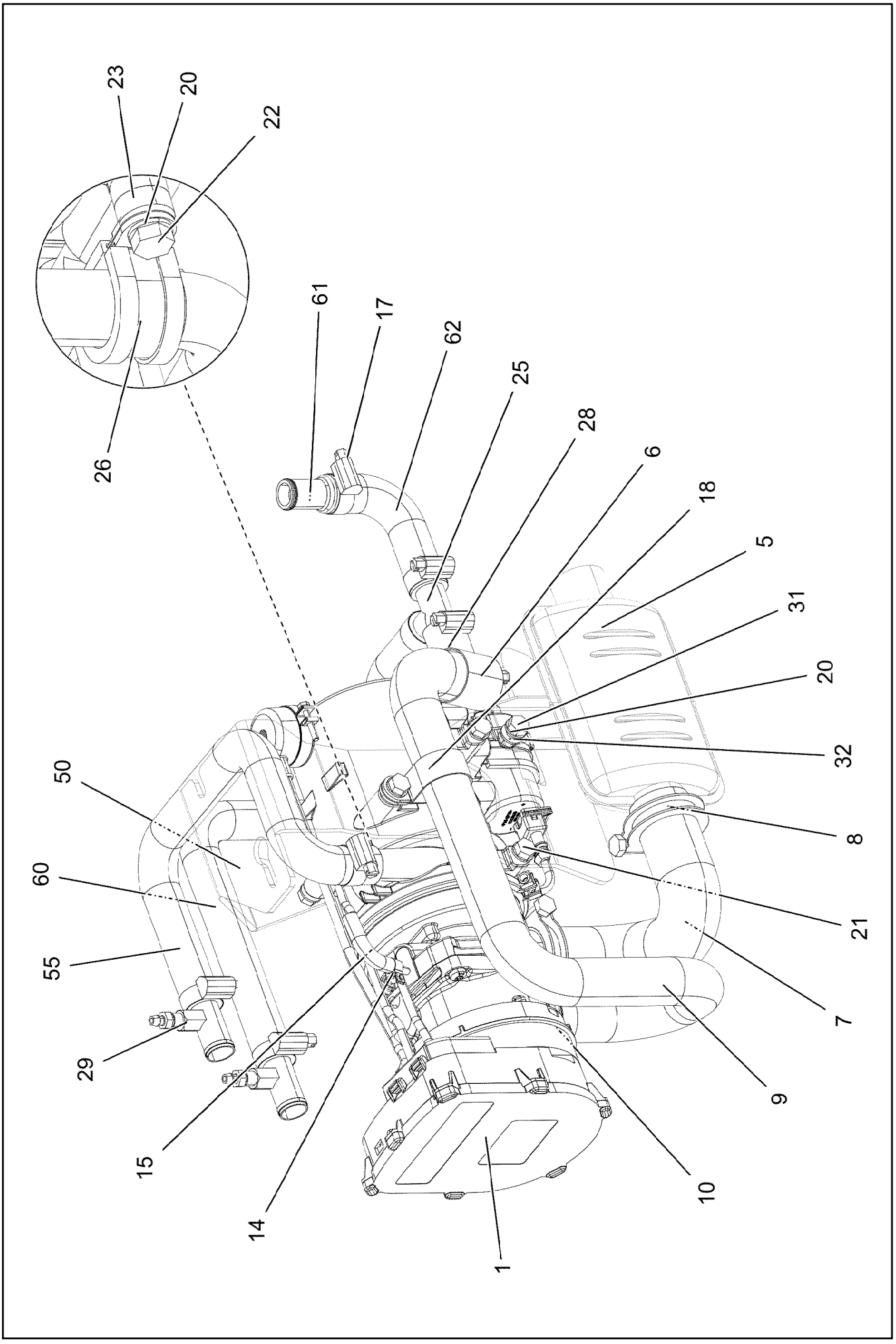
23
20
22
26
61
17
62
25
28
6
18
5
31
20
32
8
21
7
9
10
1
14
15
29
55
60
50

Pos.	Item	Quantity	Description	Bezeichnung
1	10876576	1	WATER HEATING SYSTEM 24V ⇨ ❑ 465	WASSERHEIZGERAET
5	553187208	1	EXHAUST MUFFLER 116/55X150	ABGASSCHALLDAEMPFER
6	553181108	1	END CAP 34	ENDKAPPE
7	553054108	0.25	EXHAUST PIPE 38/FLEXIBEL	ABGASROHR
8	553054208	2	TERMINAL CLIP 40,5/39-42	KLEMMSCHELLE
9	553159408	0.62	TUBE 30/FLEXIBEL PAK	ROHR
10	774208508	1	HOSE CLAMP 32/25-40/12 W3	SCHLAUCHSCHELLE
14	553102308	1	HOSE CLAMP 10/9,5-10,5/9	SCHLAUCHSCHELLE
15	10815777	1	FUEL HOSE DN4,5	KRAFTSTOFFSCHLAUCH
17	11118077	8	HOSE CLAMP 21/16-27/12 W3	SCHLAUCHSCHELLE
18	774225008	1	PIPE CLAMP 33/20	ROHRSCHELLE
20	10289803	7	WASHER ISO 7089 8 300HV 480H SPF	SCHEIBE
21	11651612	4	HEX SCREW ISO 4017 M8X16 8.8 480H SPF	SECHSKANTSCHRAUBE
22	11692827	1	HEX SCREW ISO 4017 M8X35 8.8 480H SPF	SECHSKANTSCHRAUBE
23	12214460	2	WASHER DIN 7989-2 A 10 100HV FLZN SPF	SCHEIBE
25	10872612	1	TEE 20X20 L=90	T-STUECK
26	11481080	1	CLAMP DIN 3016-1 28X20XD1 W5-CR	SCHELLE
28	11621770	0.07	COOLING WATER HOSE DN20-CONTI-KWS	KUEHLWASSERSCHLAUCH
29	11622218	2	VENTILATION VALVE	ENTLUEFTUNGSVENTIL
31	11651767	1	HEX SCREW ISO 4017 M8X20 8.8 480H SPF	SECHSKANTSCHRAUBE
32	10875614	1	HEX NUT DIN 985 M8 8 480H SPF	SECHSKANTMUTTER
50	97029040	1	PLATE 4X519X204 S315MC FE//ZNNI8//CN//T	BLECH
55	97060786	1	FORM HOSE DN20 X3.5 B SPF	FORMSCHLAUCH
60	97060781	1	FORM HOSE DN20 X3.5 B SPF	FORMSCHLAUCH
61	11000700	1	CONNECTING PIPE 0	VERBINDUNGSROHR
62	97042067	1	FORM HOSE DN20 X3.5 B SPF	FORMSCHLAUCH

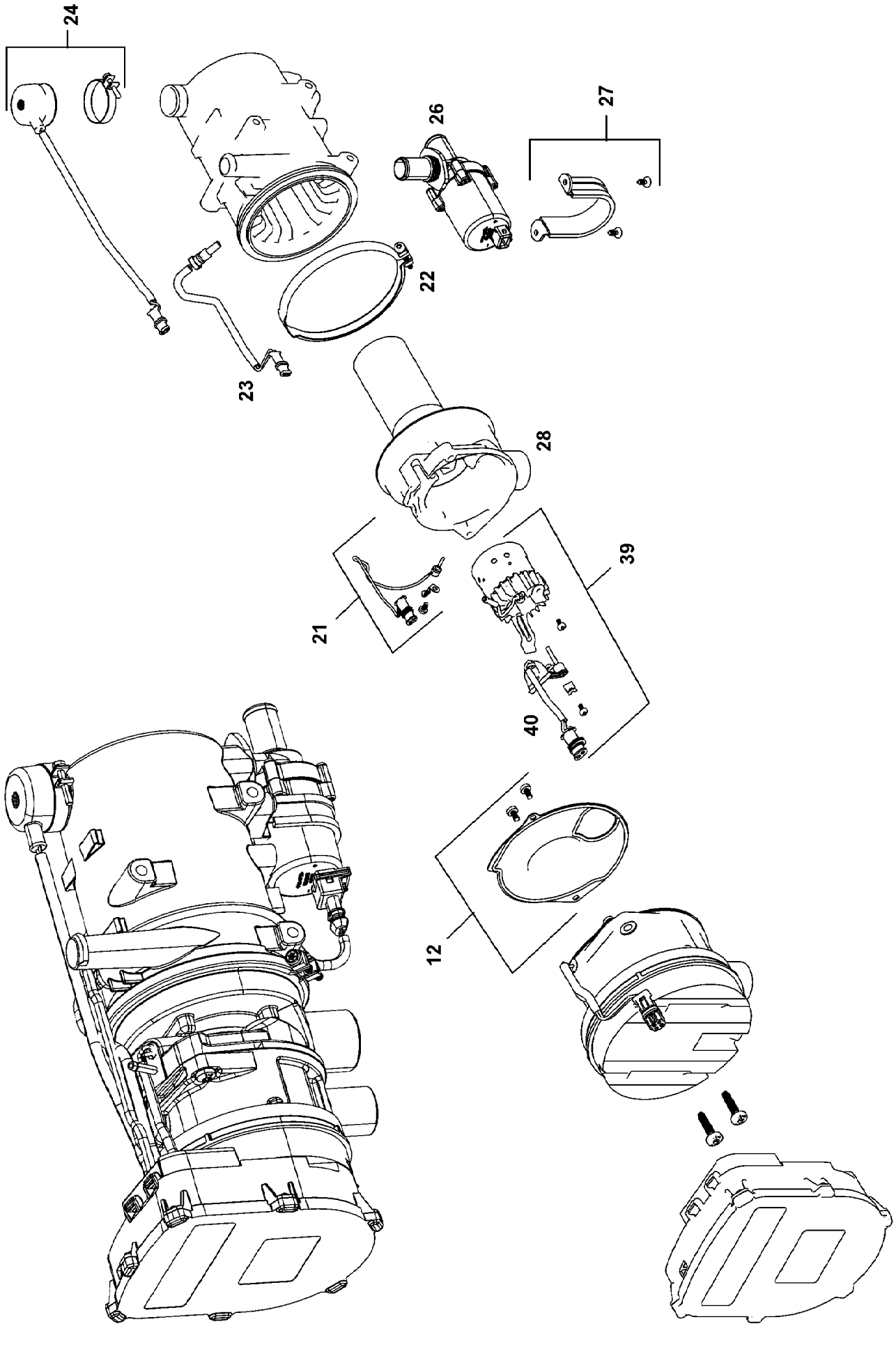
24
26
27
22
23
28
39
21
40
12

Pos.	Item	Quantity	Description	Bezeichnung
12	11826653	1	SEAL	DICHTUNG
21	11826650	1	TEMPERATURE SENSOR	TEMPERATURSENSOR
22	12222896	1	RETAINER CLIP 129	SPANNSCHELLE
23	10290126	1	TEMPERATURE SENSOR	TEMPERATURFUEHLER
24	10290127	1	OVERHEAT PROTECTION	UEBERHITZUNGSSCHUTZ
26	11622224	1	CIRCULATING PUMP	UMWAELZPUMPE
27	11826654	1	MOUNTING PARTS	MONTAGETEILE
28	11826647	1	TORCH TIP	BRENNERKOPF
39	11826648	1	BURNER 24V	BRENNER
40	11826649	1	PENCIL-TYPE GLOW PLUG	GLUEHSTIFT
999	96004475	1	REPAIR KIT WATER HEATING DEV	RS WASSERHEIZGERAET
(3)	11826653	1	SEAL	DICHTUNG
(4)	11826650	1	TEMPERATURE SENSOR	TEMPERATURSENSOR
(5)	10290126	1	TEMPERATURE SENSOR	TEMPERATURFUEHLER
(6)	10290127	1	OVERHEAT PROTECTION	UEBERHITZUNGSSCHUTZ
(7)	11622224	1	CIRCULATING PUMP	UMWAELZPUMPE
(8)	11826647	1	TORCH TIP	BRENNERKOPF
(9)	11826648	1	BURNER 24V	BRENNER
(10)	11826649	1	PENCIL-TYPE GLOW PLUG	GLUEHSTIFT

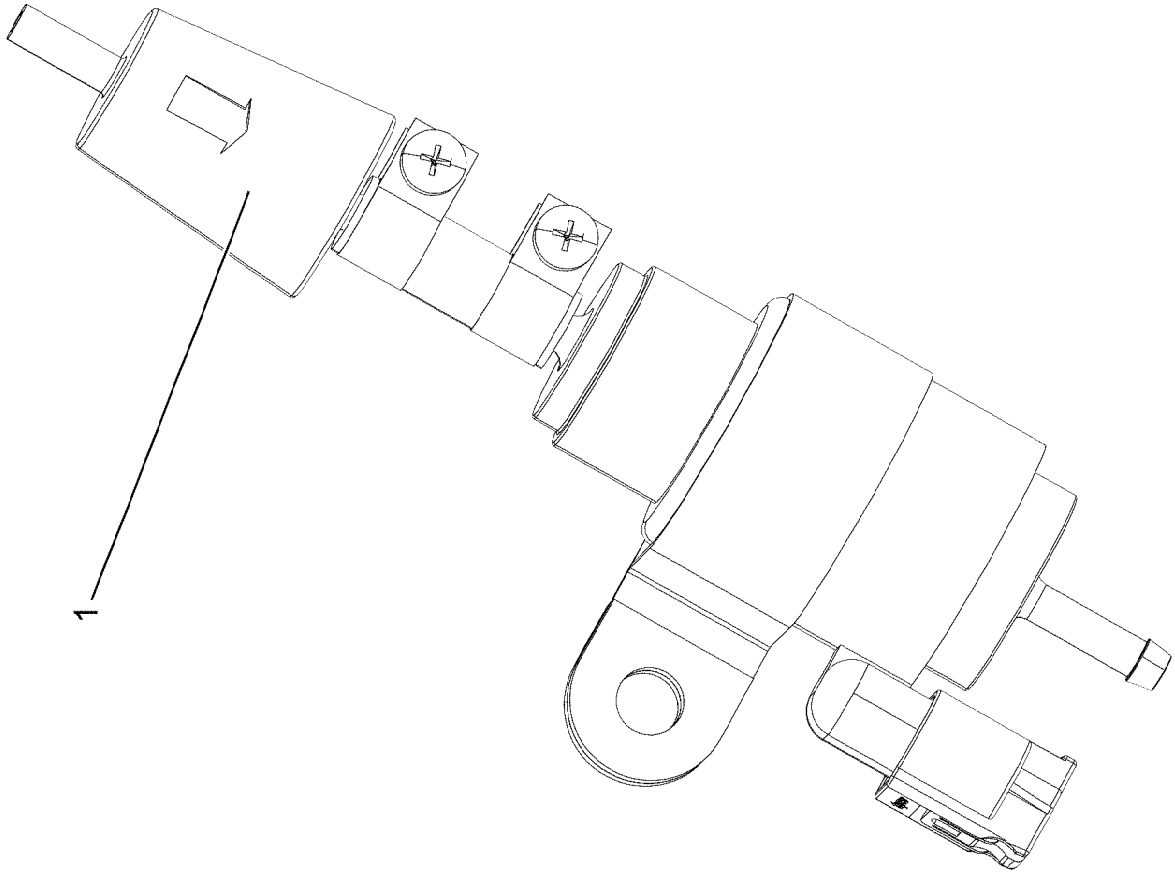
1

Pos.	Item	Quantity	Description	Bezeichnung
1	553174008	1	FUEL FILTER	KRAFTSTOFFFILTER

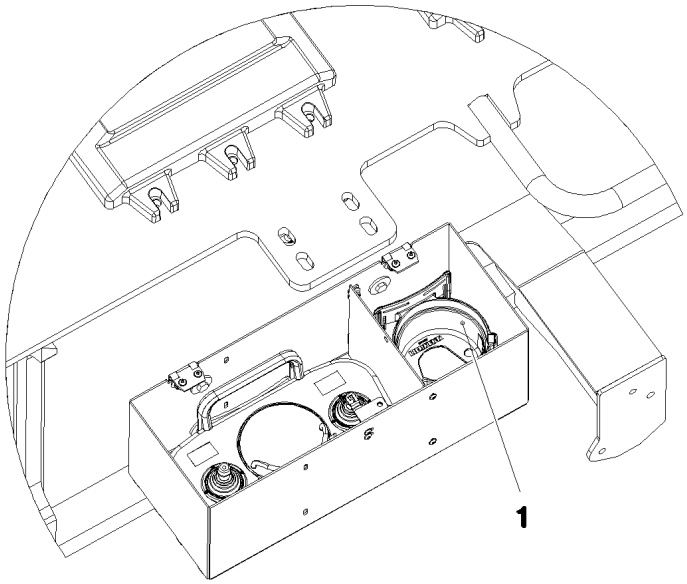

Pos.	Item	Quantity	Description	Bezeichnung
1	11212257	1	BELT CARRIER SYSTEM LSB-BTT ⇨ ❑ 470	GURTTRAGESYSTEM

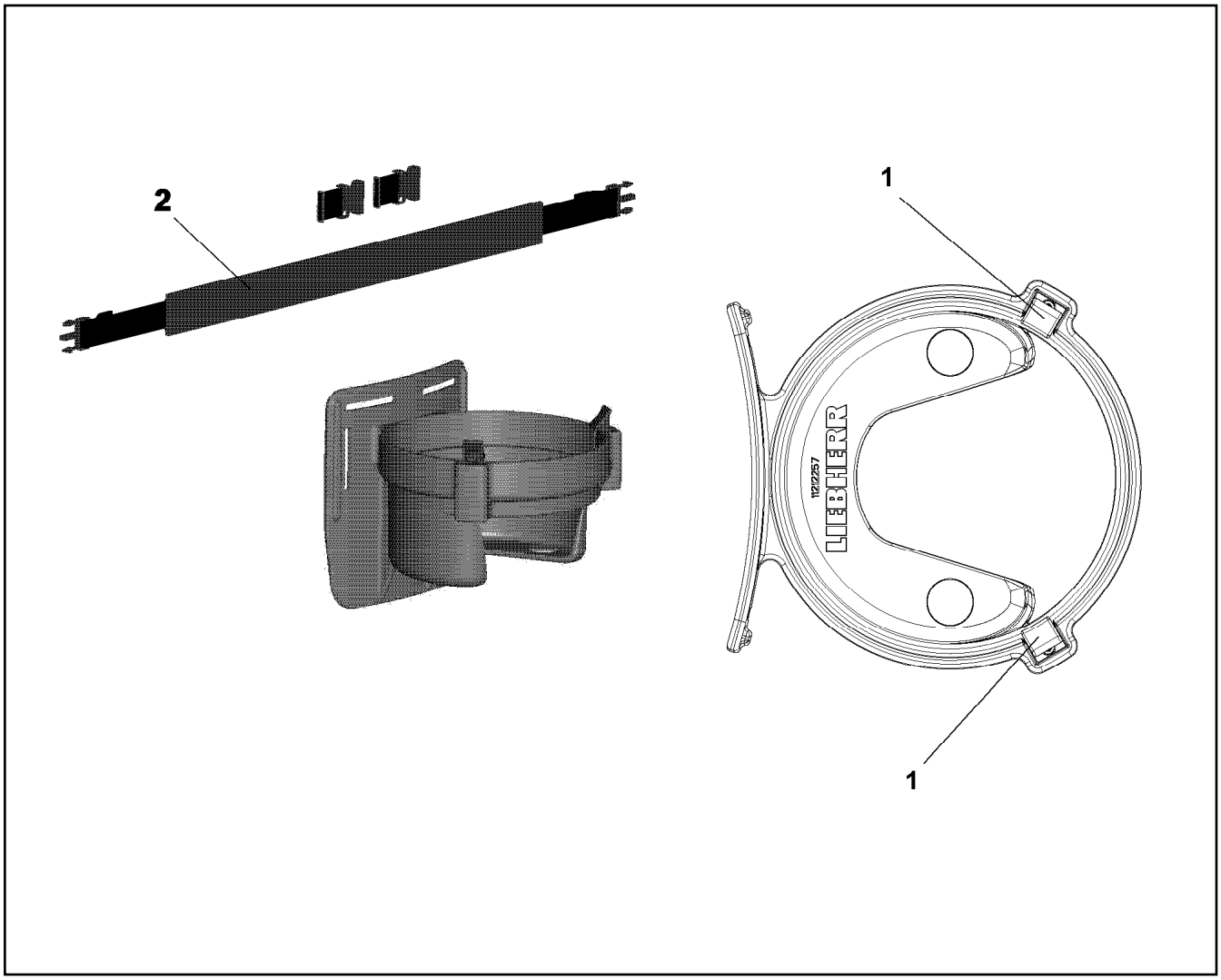

Pos.	Item	Quantity	Description	Bezeichnung
1	11002524	2	CIRCLIP	SICHERUNGSCLIP
2	12100293	1	FLANGE STRAP	GURT

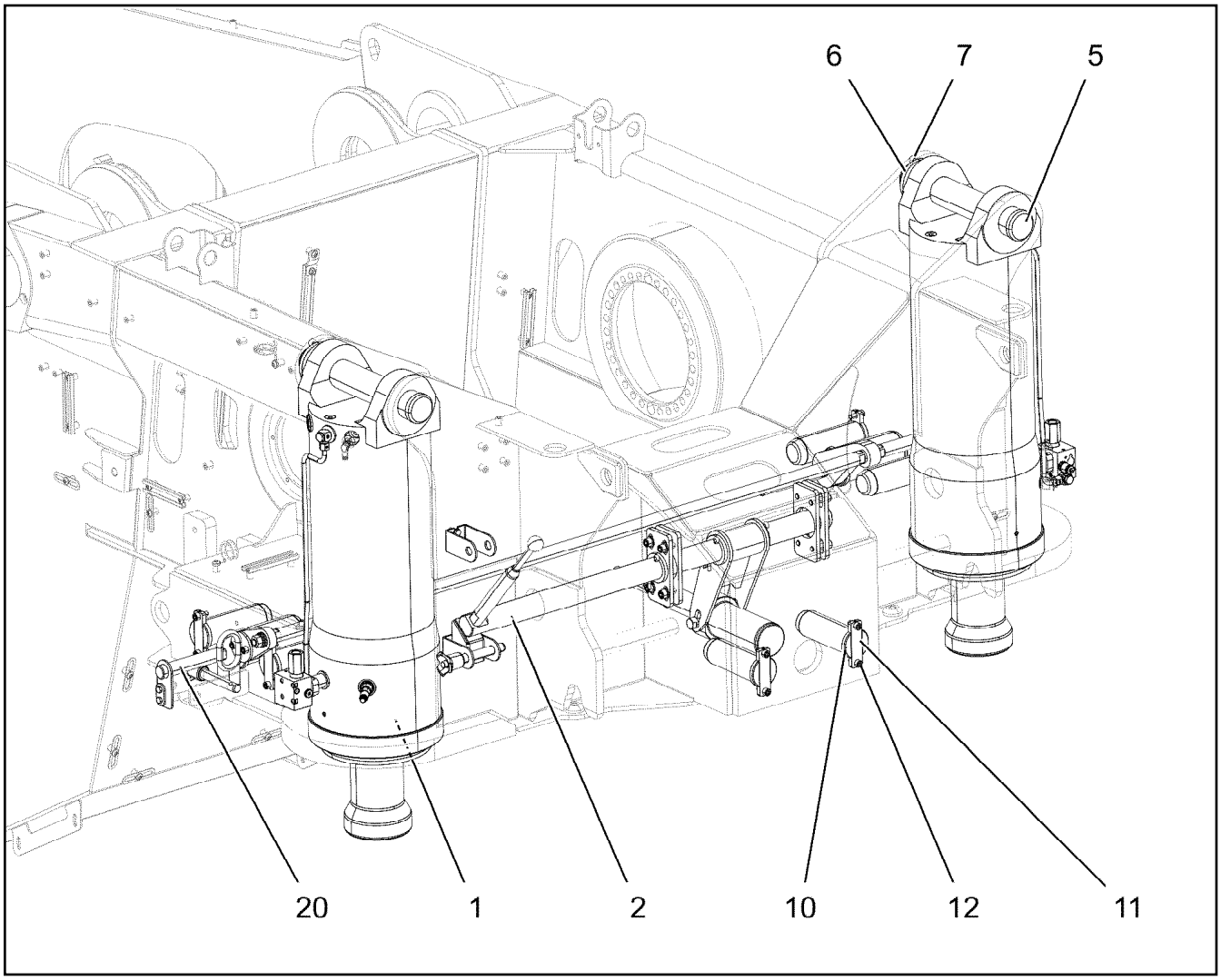

Pos.	Item	Quantity	Description	Bezeichnung
1	10877810	2	BALLAST EXTENSION RAM 240/150-440 SP ⇨ ❑ 472	BALLASTIERZYLINDER
2	967928508	1	LOCKING ⇨ ❑ 473	VERRIEGELUNG
5	97030038	2	PIN 70.0X405 35NICRMOV125 GASN. SPF	BOLZEN
6	97042598	2	WASHER 10X100X100 S355MC FE//ZNNI8//C	SCHEIBE
7	10180377	2	SPLIT PIN ISO 1234 10X100 St 480H SPF	SPLINT
10	97030039	6	PIN 70.0X190 35NICRMOV125 GASN. SPF	BOLZEN
11	973178808	6	AXLE HOLDER 10X109X30 S355MC FE//ZNNI	ACHSHALTER
12	10415162	12	SOCKET HEAD SCREW ISO 4762 M10X25 8	ZYLINDERSCHRAUBE
20	967978908	1	INTERLOCKING ⇨ ❑ 475	VERRIEGELUNG VORM.

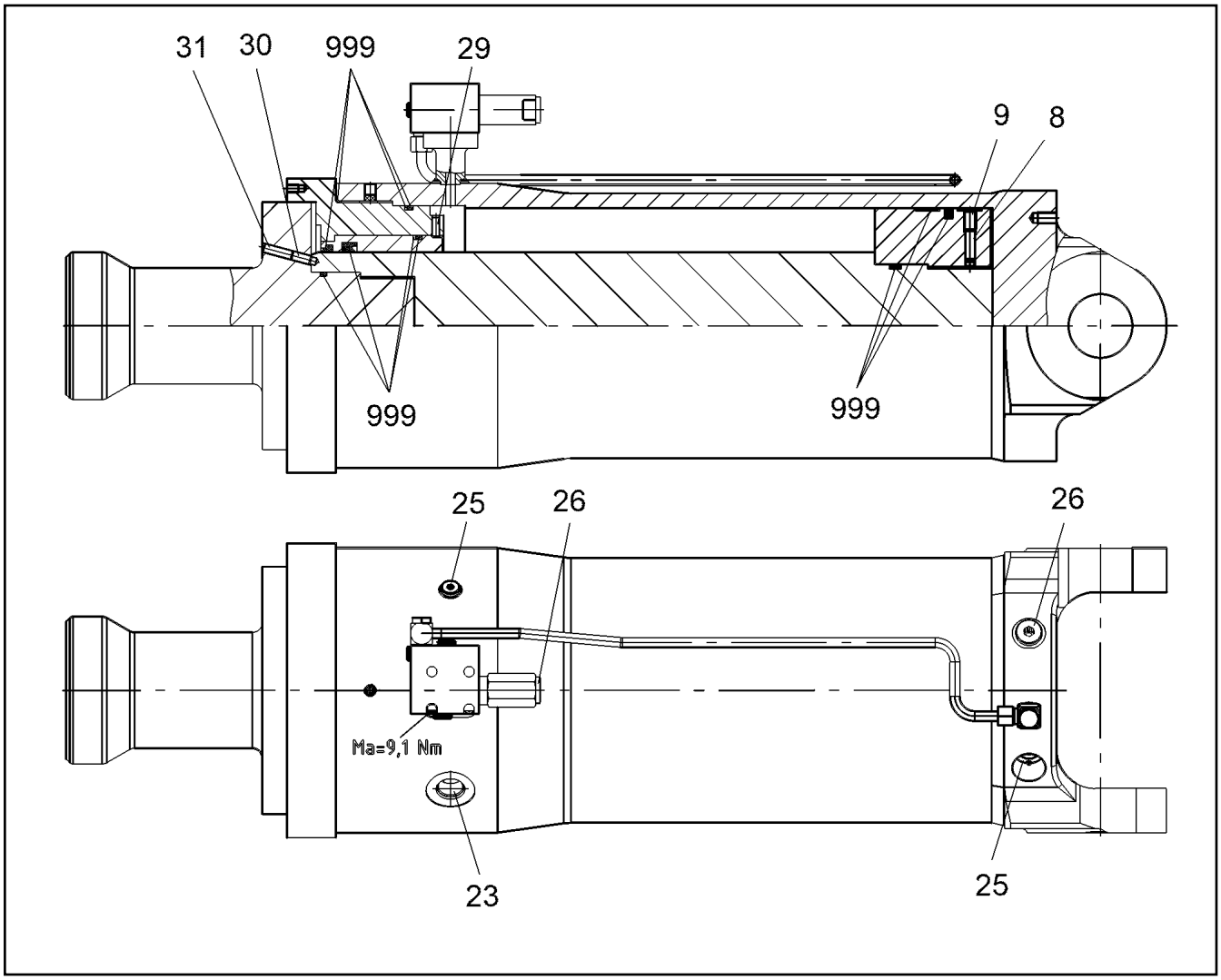

Pos.	Item	Quantity	Description	Bezeichnung
8	430707208	2	PARALLEL PIN DIN 6325 10M6X32	ZYLINDERSTIFT
9	404403608	2	GRUB SCREW DIN 913 M12X20 45H A3C	GEWINDESTIFT
23	570579808	1	SCREW PLUG	VERSCHLUSSSCHRAUBE
25	477704077	2	STOP PLUG VSTI1/4"ED A3P	STOPFEN
26	477704208	2	STOP PLUG VSTI1/2"ED A3P	STOPFEN
29	4901247	1	GRUB SCREW ISO 4028 M8X20 45H	GEWINDESTIFT
30	404402708	1	GRUB SCREW DIN 913 M10X25 45H VERZ	GEWINDESTIFT
31	404402908	1	GRUB SCREW DIN 913 M10X30 45H VERZ	GEWINDESTIFT
999	12104276	1	SEAL KIT BALLASTING CYLINDER	DS BALLASTIERZYLINDER

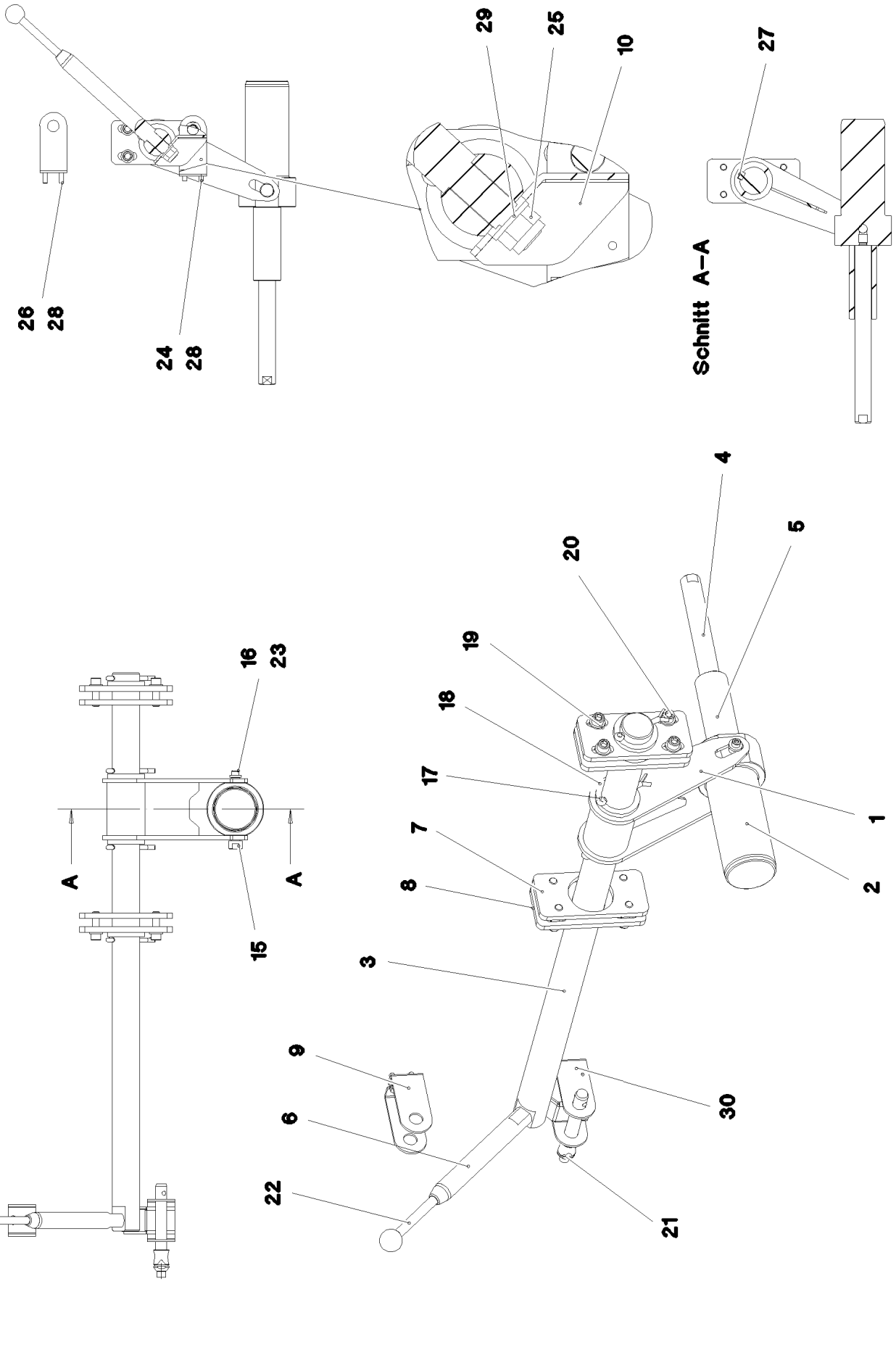

4.12.2020 077876 LIEBHERR	**etk_en_de 047580 LTR 1220** **LOCKING** **VERRIEGELUNG**	❑ 473 (1/2) **967928508**

Pos.	Item	Quantity	Description	Bezeichnung
1	967978808	1	OPERATION	BETAETIGUNG
2	97030027	1	PIN 105.0X230 35NICRMOV125 GASN. SPF	BOLZEN
3	97030028	1	SHAFT 50.0X1020 S355J2C+C FE//ZNNI8//C	WELLE
4	97030029	1	GUIDE 30.0X345 S355J2C+C FE//ZNNI8//CN/	FUEHRUNG
5	97030030	1	SLEEVE PA6G	HUELSE
6	97030031	1	LEVER 30.0X285 S355J2C+C FE//ZNNI8//CN/	HEBEL
7	97030032	2	THREADED PLATE 10X80X170 S355MC FE//	GEWINDEPLATTE
8	97030033	2	PLATE 10X170X80 S355MC FE//ZNNI8//CN//T	BLECH
9	97030037	1	PLATE 4X263X50 S315MC FE//ZNNI8//CN//T	BLECH
10	97031342	1	PLATE 4X116X148 S315MC FE//ZNNI8//CN//T	BLECH
15	978844908	1	PIN 25.0X131 35NICRMOV125 GASN. SPF	BOLZEN
16	10875597	1	SOCKET HEAD SCREW ISO 4762 M8X16 8.8	ZYLINDERSCHRAUBE
17	10180371	4	SPLIT PIN ISO 1234 8X80 St 480H SPF	SPLINT
18	10179408	4	WASHER ISO 8738 50 160HV-St FLZN SPF	SCHEIBE
19	10289804	8	WASHER ISO 7089 12 300HV FLZN SPF	SCHEIBE
20	10875565	8	SOCKET HEAD SCREW ISO 4762 M12X40 8	ZYLINDERSCHRAUBE
21	11320194	1	QUICK RELEASE PIN 20X171,2X100 NIROST	KUGELSPERRBOLZEN
22	10297396	1	HAND RAIL NIROSTA	GRIFFSTANGE
23	11840501	1	WASHER DIN 7349 8,4 200HV 480H SPF	SCHEIBE
24	10299649	2	HEX SCREW ISO 4017 M8X16 10.9 480H SP	SECHSKANTSCHRAUBE
25	10875609	1	HEX NUT DIN 985 M16 8 FLZN SPF	SECHSKANTMUTTER
26	10197831	2	HEX SCREW ISO 4017 M8X25 8.8 ZNNI-480	SECHSKANTSCHRAUBE
27	434018708	1	FITTING KEY DIN 6885 A 14X9X50	PASSFEDER
28	10289803	4	WASHER ISO 7089 8 300HV 480H SPF	SCHEIBE
29	10289806	2	WASHER ISO 7089 16 300HV FLZN SPF	SCHEIBE
30	97042636	1	PLATE 4X283X50 S315MC FE//ZNNI8//CN//T	BLECH

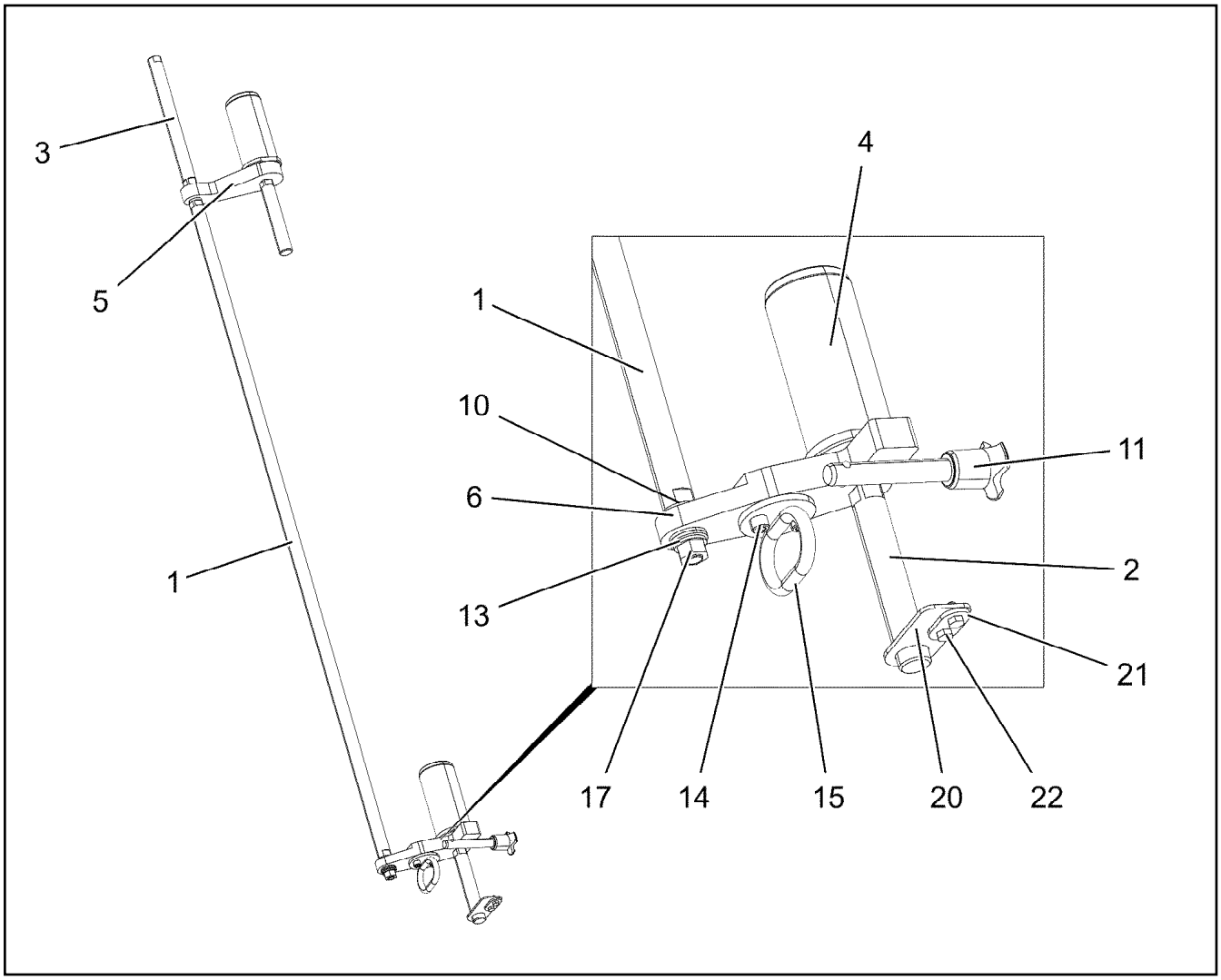

Pos.	Item	Quantity	Description	Bezeichnung
1	97033302	1	ROD 30.0X1724 S355J2C+C FE//ZNNI8//CN//T	STANGE
2	97033304	2	GUIDE 30.0X235 S355J2C+C FE//ZNNI8//CN/	FUEHRUNG
3	97033305	1	GUIDE 30.0X388 S355J2C+C FE//ZNNI8//CN/	FUEHRUNG
4	97033306	2	PIN 100.0X178 35NICRMOV125 SPF	BOLZEN
5	97033307	1	PLATE 30X210X140 S355J2+N FE//ZNNI8//C	BLECH
6	97033309	1	PLATE 30X246X99 S355J2+N FE//ZNNI8//CN/	BLECH
10	11691327	4	WASHER ISO 7092 20 300HV FLZN SPF	SCHEIBE
11	11320194	1	QUICK RELEASE PIN 20X171,2X100 NIROST	KUGELSPERRBOLZEN
13	10289806	1	WASHER ISO 7089 16 300HV FLZN SPF	SCHEIBE
14	10875571	2	SOCKET HEAD SCREW ISO 4762 M10X30 8	ZYLINDERSCHRAUBE
15	962963808	1	HANDLE WELD.CONST. FE//ZNNI8//CN//T0	GRIFF SCHWK.
17	10875617	1	HEX NUT ISO 4032 M16 8 FLZN SPF	SECHSKANTMUTTER
20	97048340	1	PLATE 4X110X50 S315MC FE//ZNNI8//CN//T	BLECH
21	97048341	1	BASE 4X53X28 S315MC FE//ZNNI8//CN//T0	UNTERLAGE
22	11651612	2	HEX SCREW ISO 4017 M8X16 8.8 480H SPF	SECHSKANTSCHRAUBE

Pos.	Item	Quantity	Description	Bezeichnung
4	969763408	1	PIPEWORK AIR INSTALLATION ⇨ ❑ 477	VERROHRUNG DRUCKLUFTANL

LIEBHERR

etk_en_de 047580 LTR 1220

PIPEWORK AIR INSTALLATION
VERROHRUNG DRUCKLUFTANLAGE

969763408

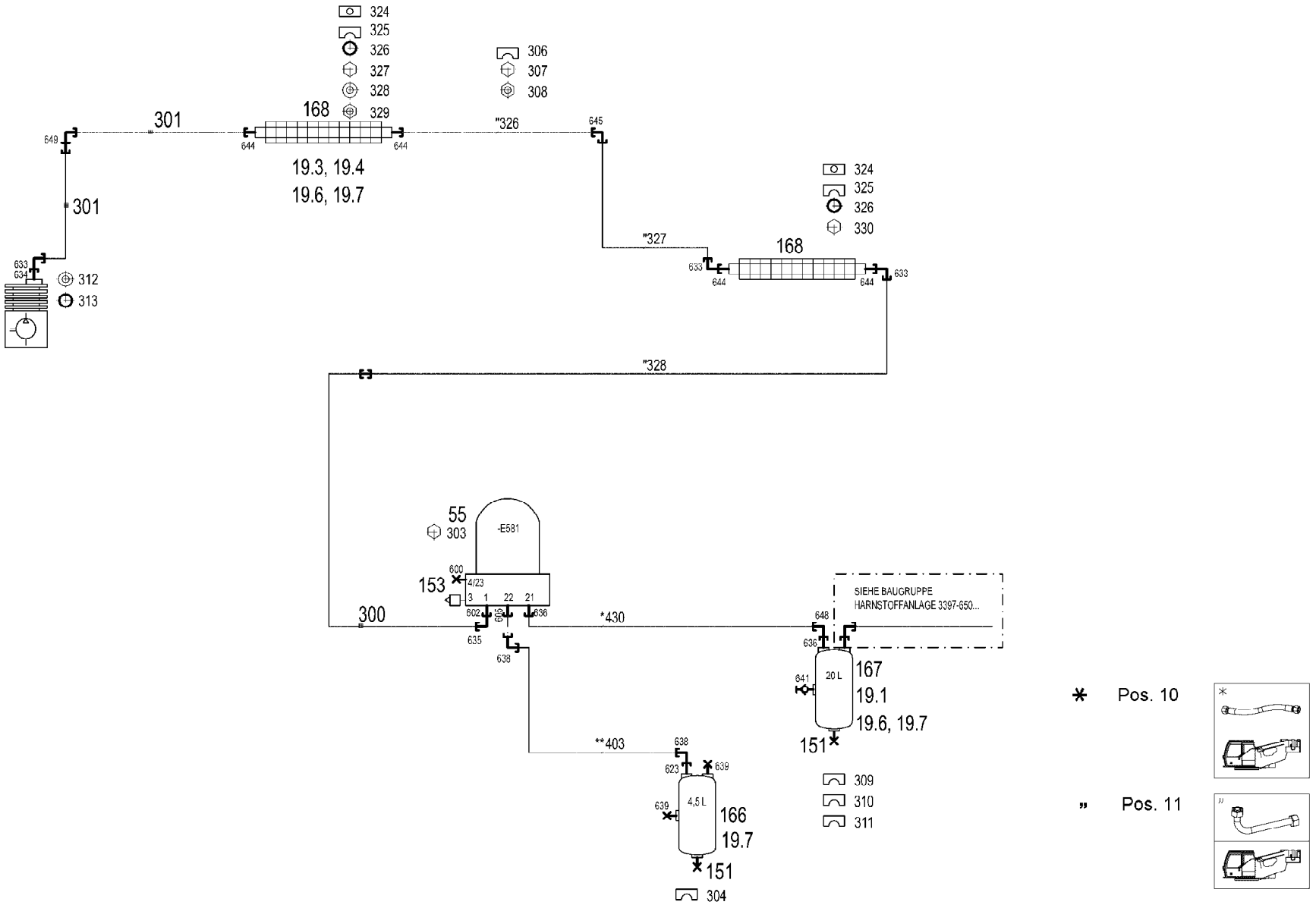

Pos.	Item	Quantity	Description	Bezeichnung
10	969842608	1	HOSE LINES DRUCKLUFT OW	SCHLAUCHLEITUNGEN
(430)	928456608	1	HOSE CPL. 2TE 12X4100	SCHLAUCH KPL.
11	969842808	1	PIPELINES DRUCKLUFT OW	ROHRLEITUNGEN
(326)	969979608	1	PIPE COMPL. 18X1.5	ROHR KPL.
(327)	968544708	1	PIPE COMPL. 18X1.5	ROHR KPL.
(328)	969978408	1	PIPE COMPL. 18X1.5	ROHR KPL.
12	969763608	1	PNEUMATIC LINES UPPER CARRIAGE STUF	PNEUMATIKLEITUNGEN OW
19	969763908	1	MECHANICAL AUXILIARIES	MECH.BEFESTIGUNGSTEILE
(1)	97038364	1	PLATE 3X349X278 DC01 FE//ZNNI8//CN//T0	BLECH
(3)	975427508	1	PLATE 4X115X122 S315MC FE//ZNNI8//CN//T	BLECH
(4)	97077348	1	PLATE 4X110X180 S315MC FE//ZNNI8//CN//T	BLECH
(6)	978787708	6	SLEEVE 33.0X19 FE//ZNNI8//CN//T0	HUELSE
(7)	10875485	6	BUTTON HEAD SCREW AEHNL.ISO 7380-2	HALBRUNDKOPFSCHRAUBE
55	502657308	1	AIR DRYER ⇨ ❑ 479	LUFTTROCKNER
151	502921908	2	WATER DRAIN VALVE 22BAR M22X1,5	ENTWAESSERUNGSVENTIL
153	502661608	1	SILENCER	GERAEUSCHDAEMPFER
166	502987108	1	AIR TANK DIN 74281 4,5L 15,5BAR ST RAL 9	LUFTBEHAELTER
167	502657708	1	AIR TANK EN 286-2 20L 15.5BAR ALMG2.7 R	LUFTBEHAELTER
168	10493045	2	RIBBED TUBE ALU	RIPPENROHR
300	510500508	1	TEFLON HOSE DN16 750 CR6-FREI	TEFLONSCHLAUCH
301	510501008	2	HOSE DN16 500	SCHLAUCH
303	12216237	3	HEX SCREW ISO 8676 M12X1,5X25 8.8 FLZ	SECHSKANTSCHRAUBE
304	774211308	1	TIGHTENING STRAP 206/206/30 ST	SPANNBAND
306	602002208	6	CLAMP-HALF DIN 3015-1 L 2 R 18 AL	KLEMMHAELFTE
307	11820284	6	SOCKET HEAD SCREW ISO 4762 M6X30 8.8	ZYLINDERSCHRAUBE
308	602018008	6	CARRIER RAIL NUT DIN 3015-1 L TM M6 W1	TRAGSCHIENENMUTTER
309	774210508	1	TIGHTENING STRAP 240-280/260/30 ST	SPANNBAND
310	774227708	1	TIGHTENING STRAP 260X735X30XSP/GT ED	SPANNBAND
311	774215508	1	PIPE SUPPORT	ROHRUNTERLAGE
312	502932808	1	COMPRESSION RING DR/R26X31	DRUCKRING
313	726422308	1	O-RING DIN 3770 25X2,5 FPM70	O-RING
324	5005525	4	LID PLATE DIN 3015-2 S-DP-A 4 W1-ZN P2E	DECKPLATTE
325	10492888	8	CLAMP-HALF S 4 E 64 PP	KLEMMHAELFTE
326	7363897	4	ELASTOMER INSERT DIN 3015 51X64X45XS	ELASTOMEREINSATZ
327	11656183	4	HEX SCREW ISO 4014 M12X120 8.8 FLZN SP	SECHSKANTSCHRAUBE
328	10289804	4	WASHER ISO 7089 12 300HV FLZN SPF	SCHEIBE
329	10875607	4	HEX NUT DIN 985 M12 8 FLZN SPF	SECHSKANTMUTTER
330	10875504	4	HEX SCREW ISO 4014 M12X100 8.8 FLZN SP	SECHSKANTSCHRAUBE
600	477704308	1	STOP PLUG VSTI M12X1,5 A3P	STOPFEN
602	471031108	1	FITTING GE 18L M22X1,5 CR6-FREI	VERSCHRAUBUNG
605	471039708	1	FITTING ISO 8434-1 GE 10L M12X1,5 CR6-F	VERSCHRAUBUNG
623	471039808	1	FITTING GE 10L M22X1,5 CR6-FREI	VERSCHRAUBUNG
633	10815664	3	FITTING EW 18L ST CR6-FREI	VERSCHRAUBUNG
634	476607608	1	FITTING XGE18-LM M26X1,5 A3P	VERSCHRAUBUNG
635	247108302	1	FITTING EW 18L M26X1,5 CR6-FREI	VERSCHRAUBUNG
636	471035508	2	FITTING XGE15-LM-ED M22X1,5 A3P	VERSCHRAUBUNG
638	7403569	2	FITTING EW 10L M16X1,5 CR6-FREI	VERSCHRAUBUNG
639	477704508	2	STOP PLUG VSTIM22X1,5ED A3P	STOPFEN
641	502921408	1	TEST CONNECTION M22X1,5 A3P	PRUEFANSCHLUSS
644	10815662	4	FITTING GE 18L M22X1,5 ST CR6-FREI	VERSCHRAUBUNG
645	470230608	1	FITTING XW18-L A3P	VERSCHRAUBUNG
648	7615379	1	FITTING EW 15L CR6-FREE	VERSCHRAUBUNG
649	474231508	1	FITTING XWSV18-L A3P	VERSCHRAUBUNG

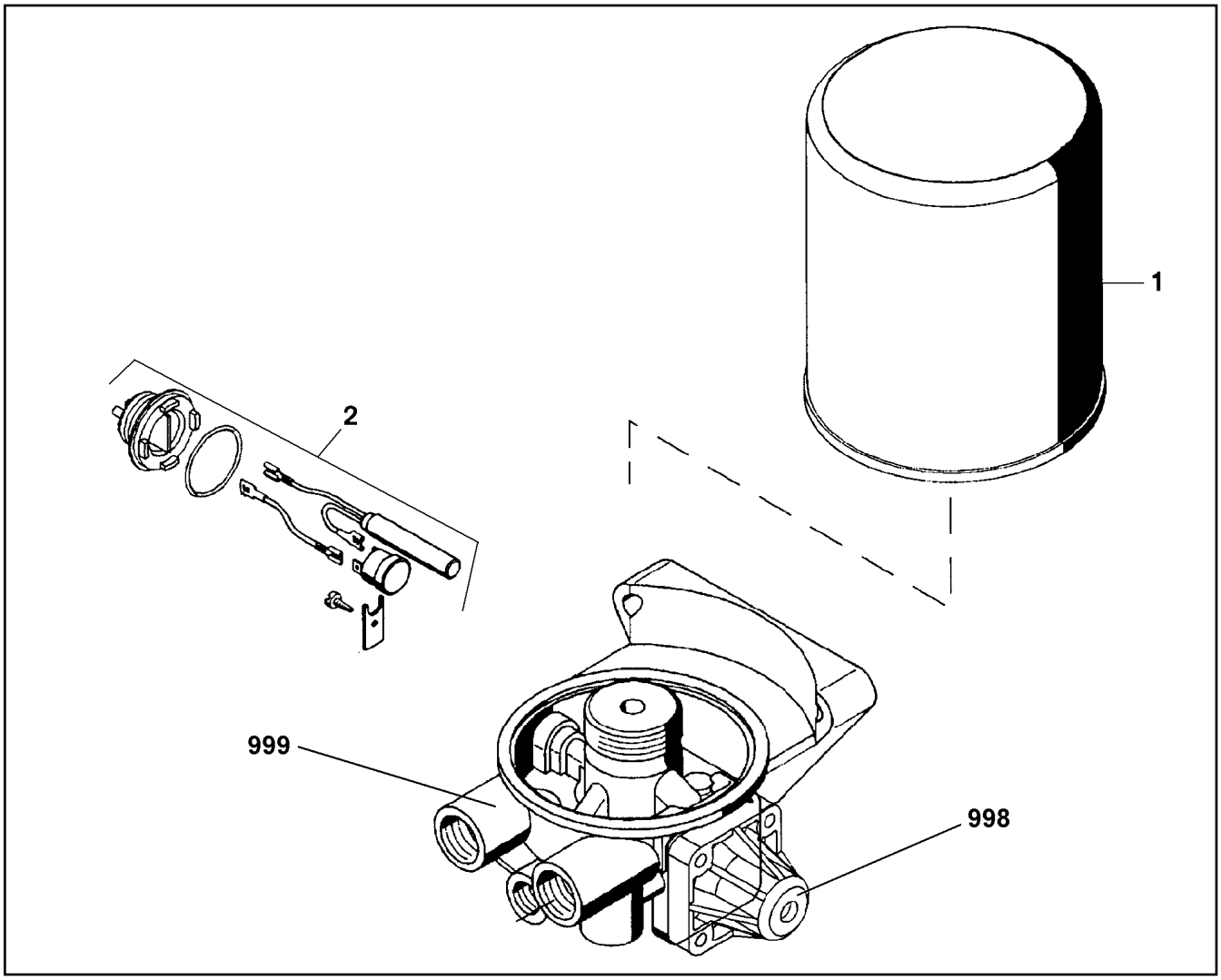

Pos.	Item	Quantity	Description	Bezeichnung
1	571352308	1	CARTRIDGE	KARTUSCHE
2	502651408	1	HEATING	HEIZUNG
998	11003089	1	REPAIR SET PRESSURE GOVERNOR	RS DRUCKREGLER
999	11003094	1	REPAIR KIT	REPARATURSATZ

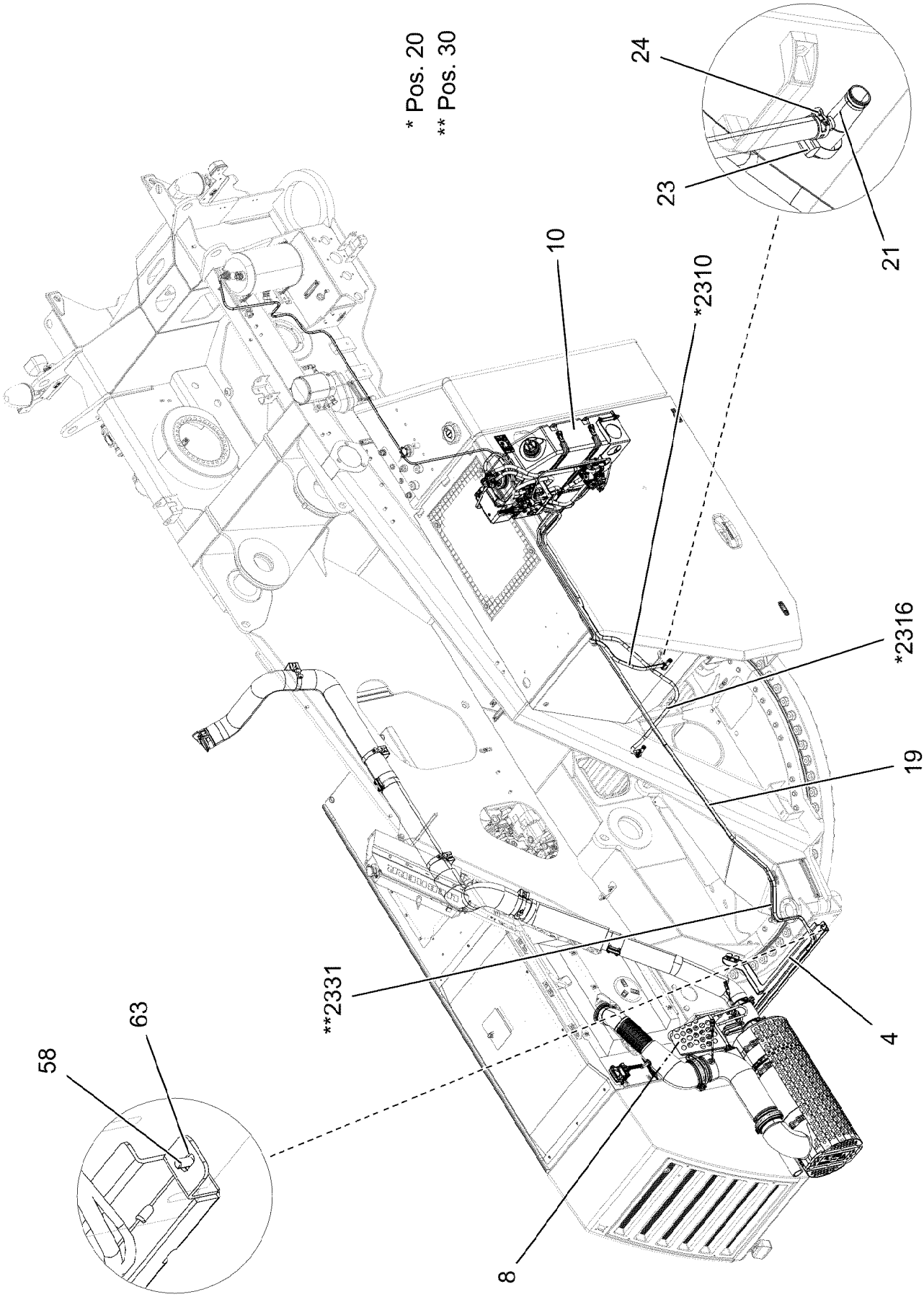
* Pos. 20
** Pos. 30
24
23
21
10
*2310
*2316
19
**2331
4
63
58
8

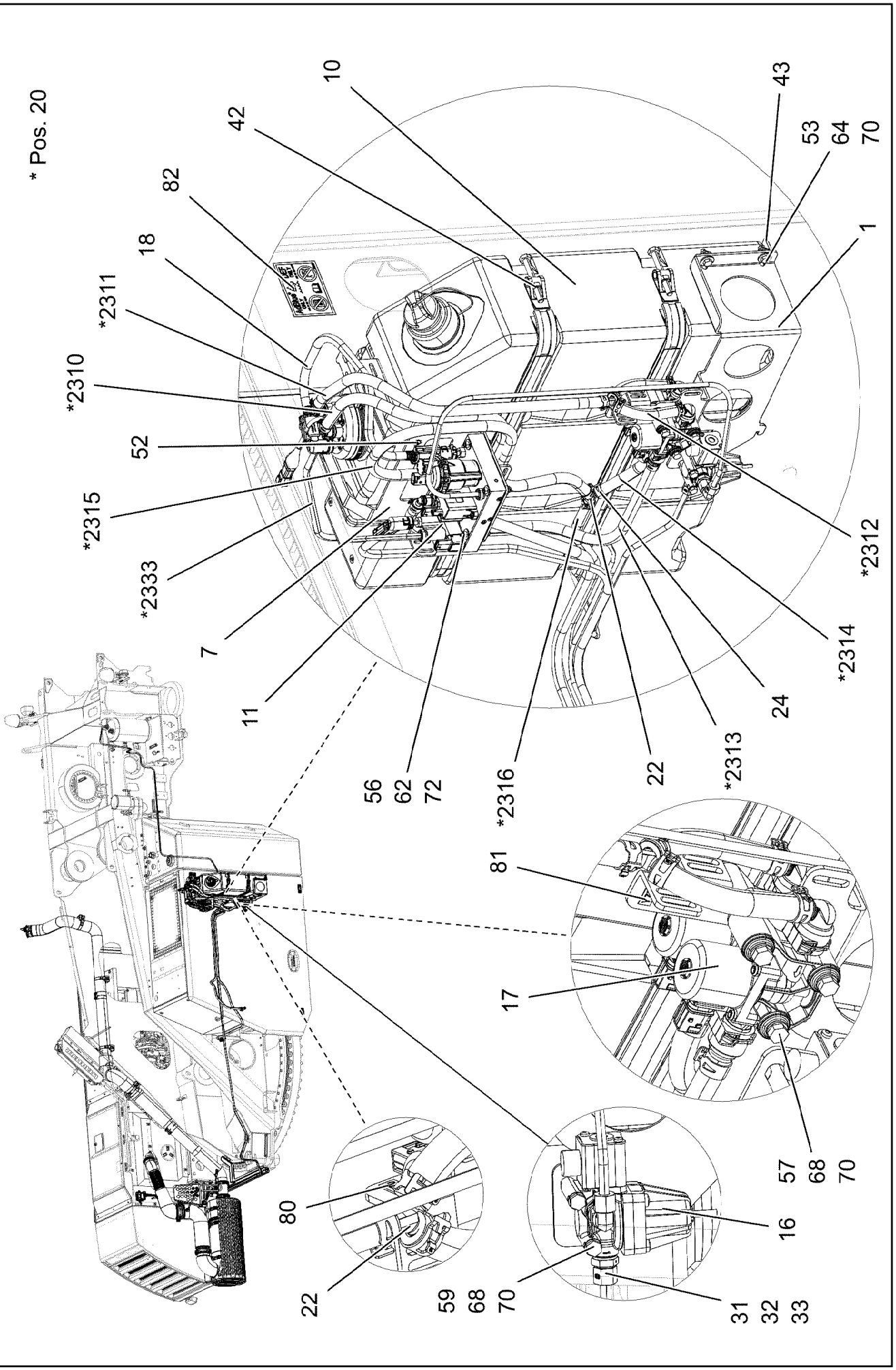
* Pos. 20
10
42
43
53
64
70
82
18
*2311
*2310
52
*2315
*2333
7
11
1
*2312
*2314
24
*2313
22
*2316
56
62
72
81
17
57
68
70
80
22
59
68
70
16
31
32
33

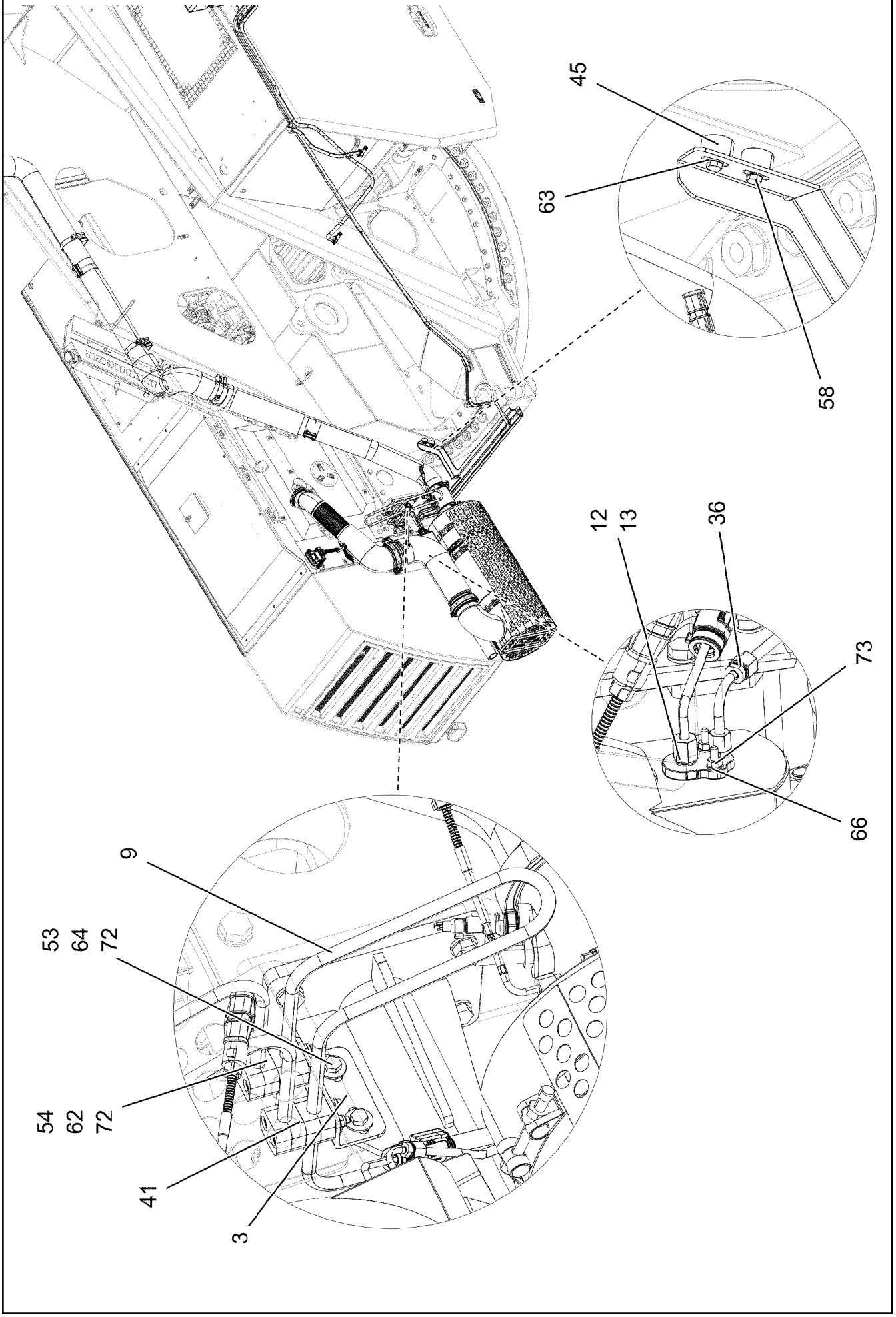
45
63
58
12
13
36
73
66
9
53
64
72
54
62
72
41
3

Pos.	Item	Quantity	Description	Bezeichnung
1	97084641	1	PLATE 4X518X425 S315MC RAL 9005,HGL,G	BLECH
3	97047603	1	PLATE 4X100X83 X5CRNI18-10	BLECH
4	97060662	1	CONSOLE 4X1167X434 S315MC FE//ZNNI8/	KONSOLE
7	97084642	1	PLATE 4X461X547 S315MC RAL 9005,HGL,G	BLECH
8	96032850	1	PROTECTION WELDED STRUCTURE	SCHUTZ SCHWK.
9	97047607	1	TUBE 12.0X1204 X5CRNI18-10	ROHR
10	968570808	1	UREA TANK 73L/65L SPF ⇨ ❑ 484	HARNSTOFFTANK
11	11373478	1	REDUCTION AGENT PUMP ADBLUE STUFE ⇨ ❑ 485	REDUKTIONSMITTELPUMPE
12	10144093	1	REDUCTION AGENT INJECTOR ⇨ ❑ 486	REDUKTIONSMITTELINJEKTOR
13	10144861	1	SEAL	DICHTUNG
16	969904608	1	PRESSURE RELIEF VALVE PRE-ASS. ⇨ ❑ 487	DRUCKBEGRENZUNGSVENTIL
17	11082158	2	WATER VALVE NW12X2,5 NICHT LACKIERE	WASSERVENTIL
18	10144270	1	HOSE LINE 4X600 EPDM	SCHLAUCHLEITUNG
19	12418622	1	REDUCTION AGENT PRESSURE LINE 2X60	REDUKTIONSMITTEL-DRUCKLE
20	96011801	1	HOSE LINES OW STUFE 4 ⇨ ❑ 488	SCHLAUCHLEITUNGEN HARNST
21	11626529	2	TEE REDUCER 20X10 L=80	T-REDUZIERSTUECK
22	10801609	2	HOSE CONNECTION SOCKET YS PA66-GF3	SCHLAUCHVERBINDUNGSSTUT
23	11118077	2	HOSE CLAMP 21/16-27/12 W3	SCHLAUCHSCHELLE
24	11162002	8	HOSE CLAMP 19/17,8-20,2/12 51CrV4 CR6-F	SCHLAUCHSCHELLE
30	96011802	1	UREA SYSTEM AIR LINE STUFE 4 OW	LUFTLEITUNGEN HARNSTOFFA
(2331)	96023299	1	PLASTIC PIPE COMPLETE	KUNSTSTOFFROHR KPL.
31	772002708	1	PLUG-IN SLEEVE E10-7	EINSTECKHUELSE
32	477100308	1	PROFILE RING PR10-S/L A3P	PROFILRING
33	477401508	1	BOX NUT DIN 3870 AL10 A3P	UEBERWURFMUTTER
35	247021802	1	FITTING EW 8L CR6-FREI	VERSCHRAUBUNG
36	10871759	2	PLUG-IN SLEEVE E8-6 EDELSTAHL	EINSTECKHUELSE
37	477401408	1	BOX NUT AL8 CR6-FREI	UEBERWURFMUTTER
38	477100208	1	PROFILE RING P-R8-L/S A2GS	PROFILRING
41	602007408	8	CLAMP-HALF DIN 3015-1 L 1 R 12 PP SW	KLEMMHAELFTE
42	11600236	2	SWIVEL BOLT CLAMPING BAND 346X877X2	GELENKBOLZENSPANNBAND
43	11114455	4	SEALING STRIP 40X4 NBR/SBR 65	DICHTSTREIFEN
45	978787708	2	SLEEVE 33.0X19 FE//ZNNI8//CN//T0	HUELSE
52	10813359	1	BUTTON HEAD SCREW AEHNL.ISO 7380-2	HALBRUNDKOPFSCHRAUBE
53	10197831	4	HEX SCREW ISO 4017 M8X25 8.8 ZNNI-480	SECHSKANTSCHRAUBE
54	12202784	4	SOCKET HEAD SCREW ISO 4762 M6X60 8.8	ZYLINDERSCHRAUBE
56	10875592	4	SOCKET HEAD SCREW ISO 4762 M6X45 8.8	ZYLINDERSCHRAUBE
57	12217239	3	HEX SCREW ISO 4014 M8X110 8.8 480H SP	SECHSKANTSCHRAUBE
58	11651612	3	HEX SCREW ISO 4017 M8X16 8.8 480H SPF	SECHSKANTSCHRAUBE
59	12216193	2	HEX SCREW ISO 4014 M8X75 8.8 480H SPF	SECHSKANTSCHRAUBE
62	10875648	12	WASHER ISO 7093-1 6 200HV 480H SPF	SCHEIBE
63	10289803	3	WASHER ISO 7089 8 300HV 480H SPF	SCHEIBE
64	11140469	8	WASHER ISO 7093-1 8 200HV 480H SPF	SCHEIBE
66	10410193	2	WASHER ISO 7089 5 -A2	SCHEIBE
68	420001014	8	WASHER ISO 7089 8 200HV-A4	SCHEIBE
70	11693875	9	HEX NUT ISO 4032 M8 8 480H SPF	SECHSKANTMUTTER
72	12102692	8	HEX NUT DIN 985 M6 8 ZNNI-480H SPF	SECHSKANTMUTTER
73	10878117	2	HEX NUT ISO 4032 M5 TI2-WS8	SECHSKANTMUTTER
80	97064219	1	SIGN 20X10 KLEBEFOLIE SPF	SCHILD
81	97064220	1	SIGN 20X10 KLEBEFOLIE SPF	SCHILD
82	97037383	1	SIGN 120X80 KLEBEFOLIE SPF	SCHILD

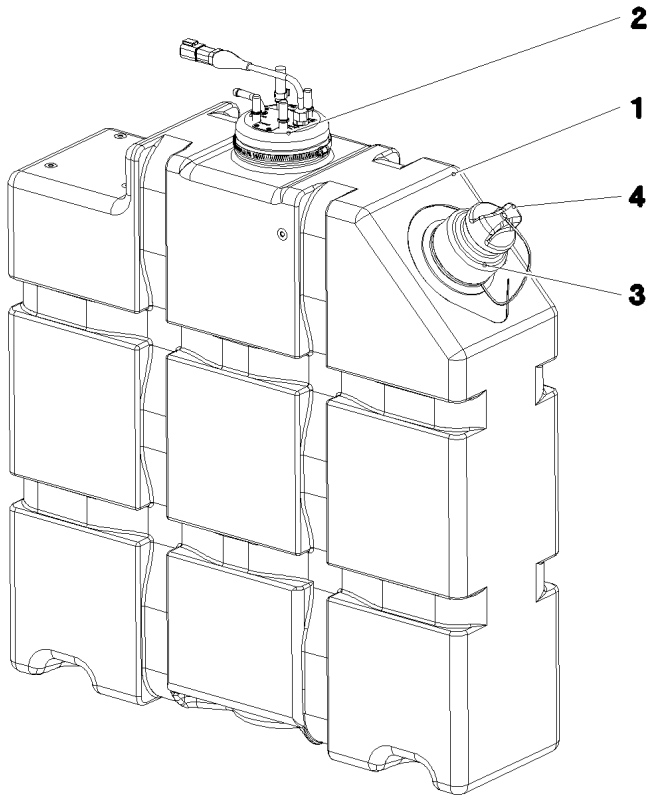

Pos.	Item	Quantity	Description	Bezeichnung
1	11481413	1	UREA CONTAINER 65L PE SPF	HARNSTOFFBEHAELTER
2	12503120	1	SUCTION MODUL L=682,5 24V NICHT LACK	ENTNAHMEMODUL
3	12211232	1	SCREW SOCKET	SCHRAUBSTUTZEN
(1)	12211223	1	FILTER	FILTER
4	10870226	1	LOCKABLE TANK CAP 40	TANKVERSCHLUSS

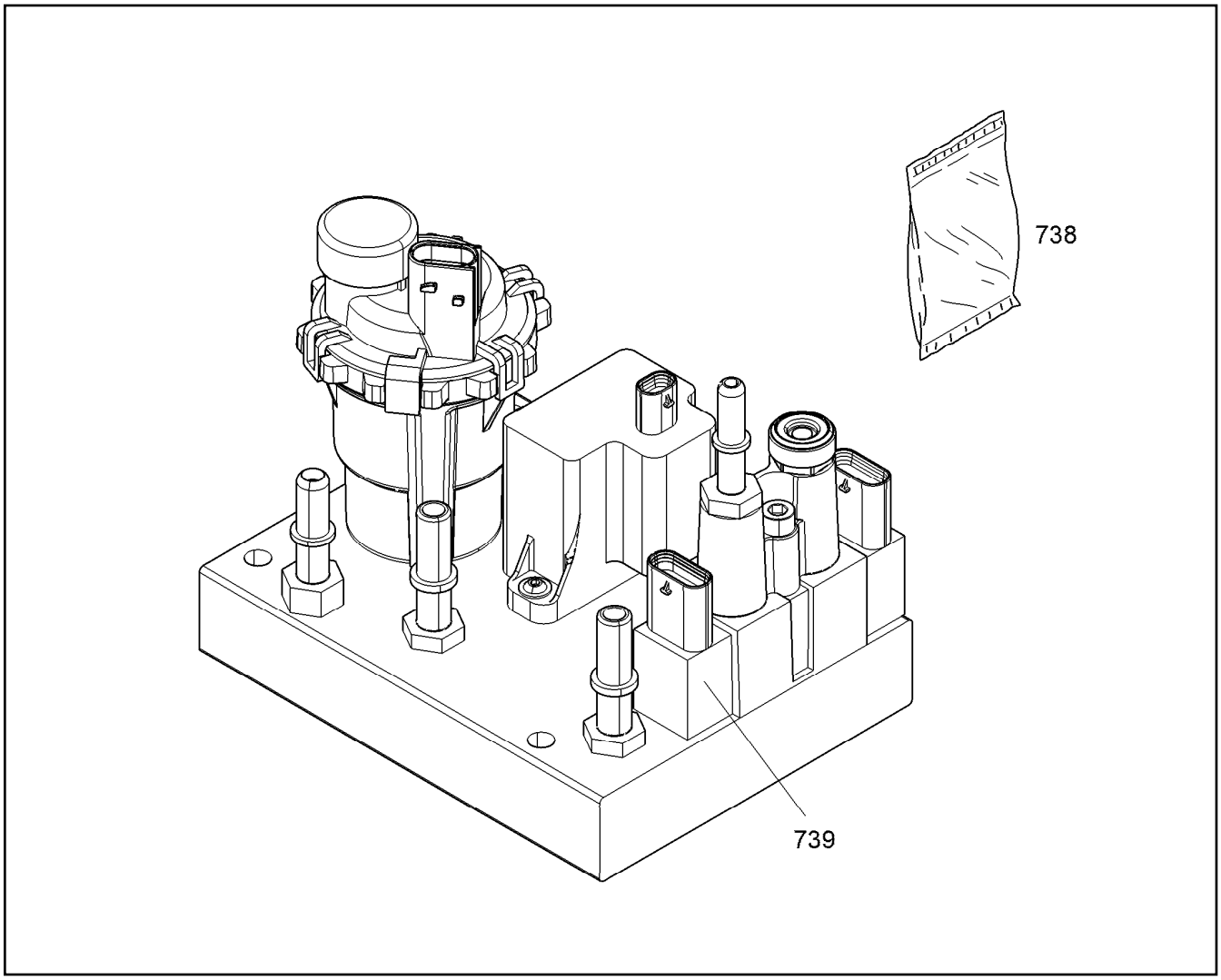

Pos.	Item	Quantity	Description	Bezeichnung
738	12466377	1	PROTECTIVE COVER NICHT LACKIEREN	SCHUTZDECKEL
739	12414685	1	PRESSURE/TEMPERATURE SENSOR NICH	DRUCK-/TEMPERATUR SENSO

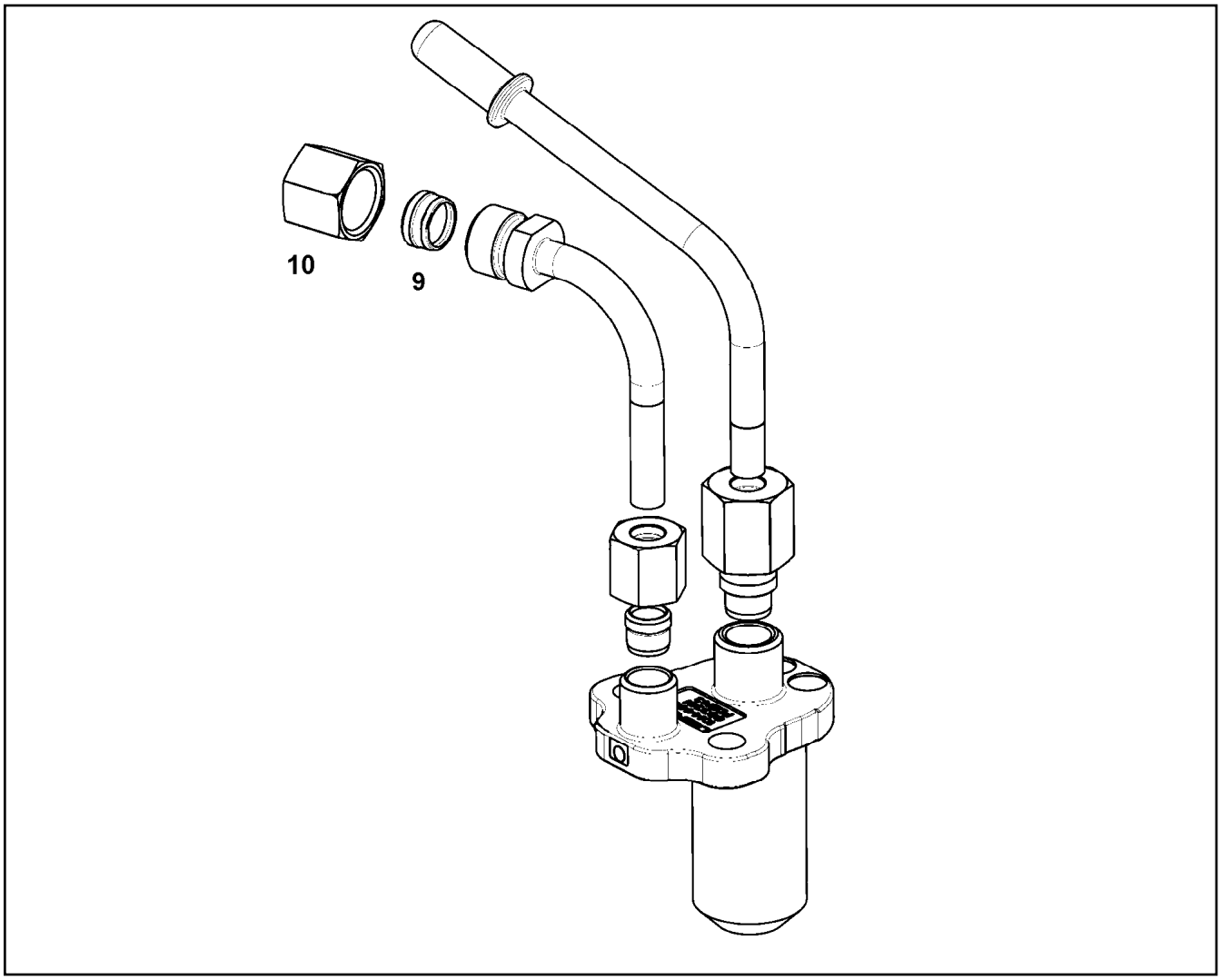

Pos.	Item	Quantity	Description	Bezeichnung
9	11355067	1	CLAMPING RING	KLEMMRING
10	11355720	1	BOX NUT UEMLL08 Inox	UEBERWURFMUTTER

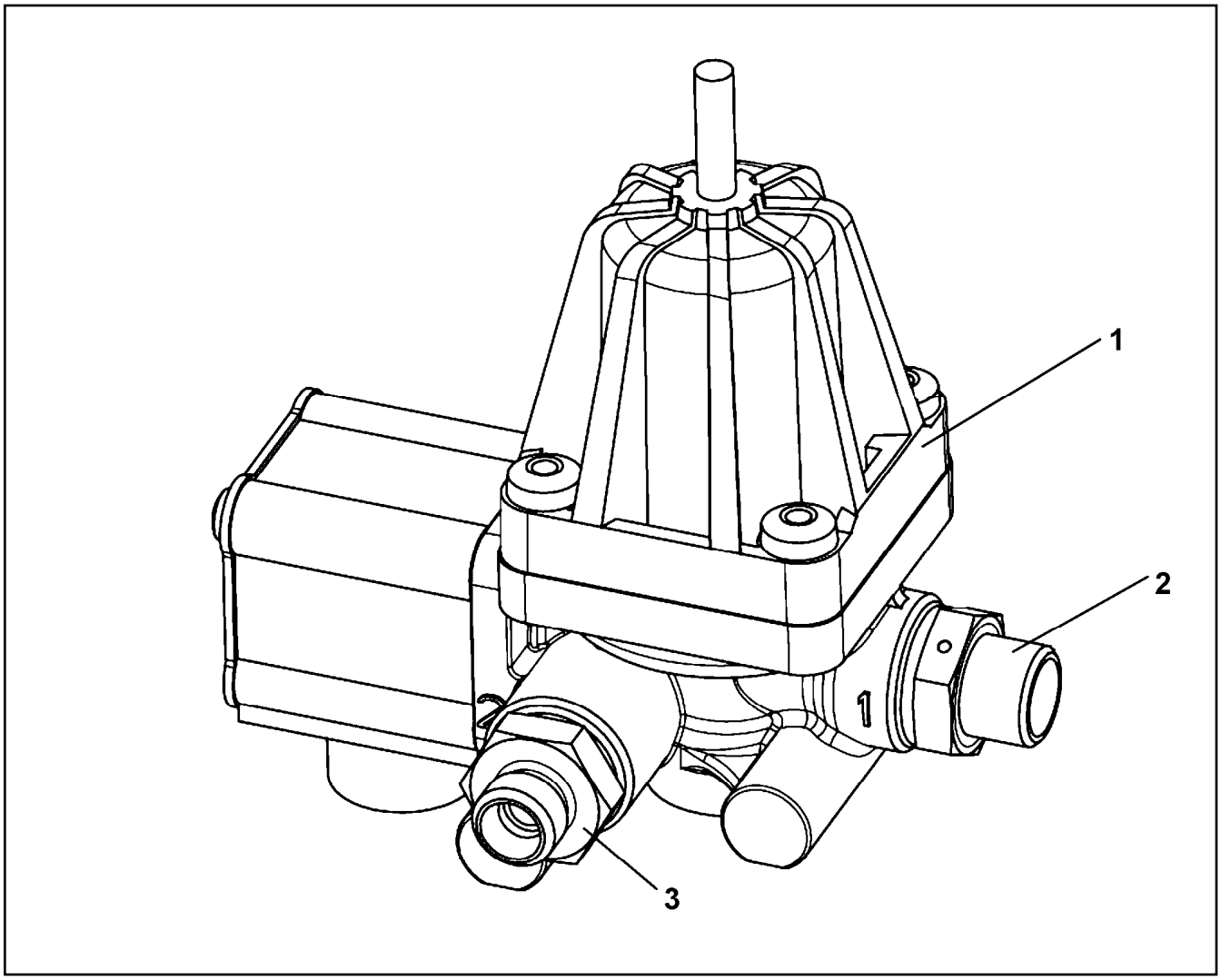

Pos.	Item	Quantity	Description	Bezeichnung
1	10872307	1	PRESSURE LIMITING VALVE 13BAR M16X1,	DRUCKBEGRENZUNGSVENTIL
2	7021521	1	FITTING GE 10L M16X1,5 CR6-FREI	VERSCHRAUBUNG
3	10872598	1	FITTING GEO 8L M16X1,5 CR6-FREI	VERSCHRAUBUNG

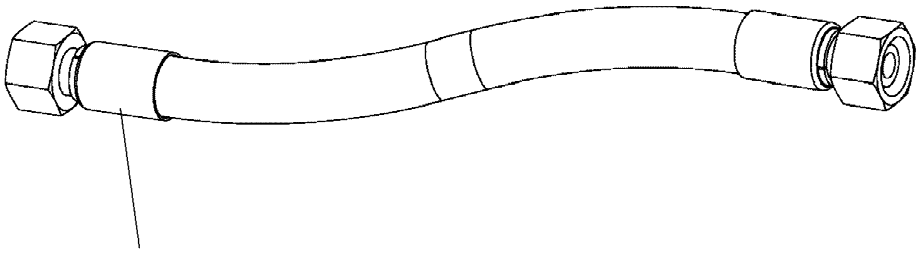

Schlauchnummer
Hose number
Numéro de flexible
Número de flexible
Номера шланга

Die Schlauchnummern auf den Schläuchen entsprechen den Positionen in der Schlauchliste.

The hose numbers from the hoses are in accordance with the items in the hose list.

Les numéros indiqués sur les flexibles correspondent aux repères de la nomenclature des flexibles.

Los números indicados en los flexibles corresponden a las posiciones de la lista de flexibles.

Нанесенные на шлангах номера соответствуют позициям в перечне.

Pos.	Item	Quantity	Description	Bezeichnung
2310	969574508	1	HOSE CPL. CONTI KWS 10X2600	SCHLAUCH KPL.
2311	96014733	1	HOSE CPL. CONTI KWS 10X620	SCHLAUCH KPL.
2312	969452108	2	HOSE CPL. CONTI KWS 10X130	SCHLAUCH KPL.
2313	96014732	1	HOSE CPL. CONTI KWS 10X700	SCHLAUCH KPL.
2314	969384408	1	HOSE CPL. CONTI KWS 10X240	SCHLAUCH KPL.
2315	96014734	1	HOSE CPL. CONTI KWS 10X880	SCHLAUCH KPL.
2316	96024954	1	HOSE CPL. CONTI KWS 10X2400	SCHLAUCH KPL.
2333	96013988	1	HOSE CPL. KUNSTSTOFF 8X600	SCHLAUCH KPL.

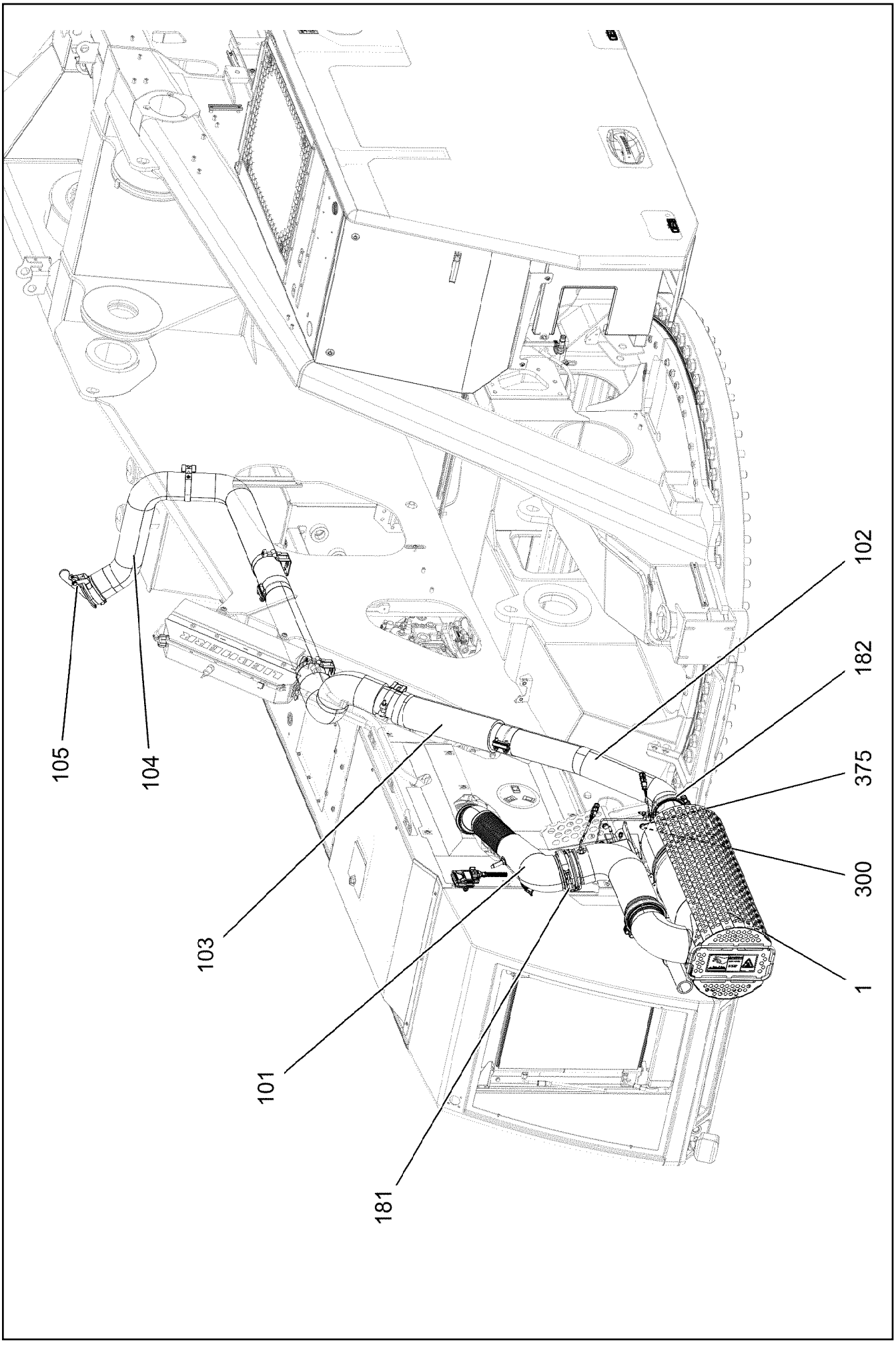
105
104
103
101
181
102
182
375
300
1

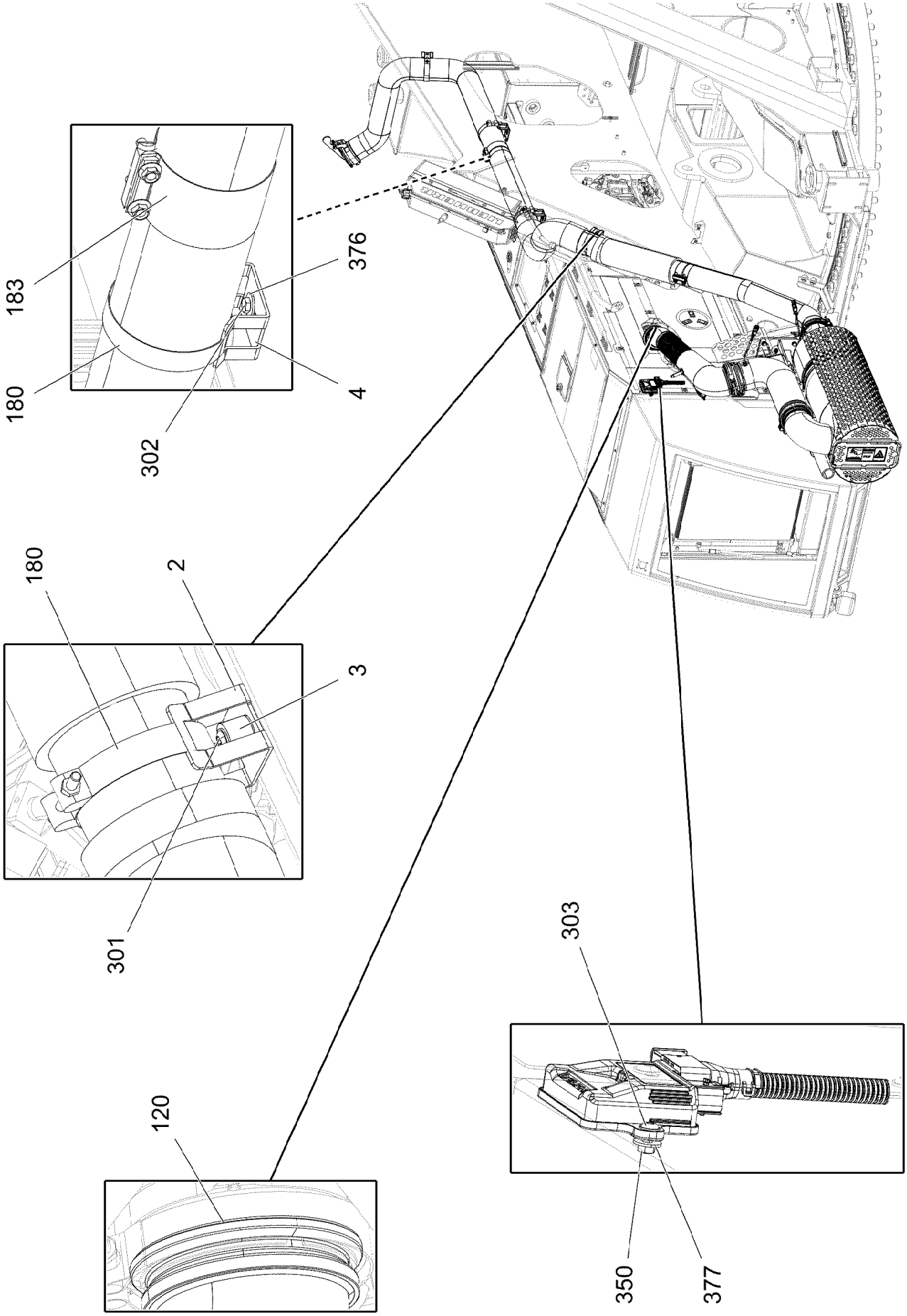

4.12.2020 026562 LIEBHERR	**etk_en_de 047580 LTR 1220** **EXHAUST SYSTEM** **ABGASANLAGE**	❑ 490 (2/3) **919372008**

Pos.	Item	Quantity	Description	Bezeichnung
1	96048826	1	EXHAUST SYSTEM PRE-ASSEMBLED ⇨ ❑ 492	ABGASANLAGE VORM.
2	97031901	1	PLATE 3X191X55 X5CRNI18-10	BLECH
3	953873408	1	SLEEVE 25X20 11SMN37 FE//ZNNI8//CN//T0	HUELSE
4	97059489	3	PLATE 3X191X55 X5CRNI18-10	BLECH
101	97124963	1	FLEXIBLE WASHER X5CRNI18-10 SPF	FLEXROHR
102	97049719	1	EXHAUST PIPE 1.4301	ABGASROHR
103	97049723	1	EXHAUST PIPE 1.4301	ABGASROHR
104	969759208	1	END PIPE X5CRNI18-10	ENDROHR
105	12100105	1	WHEATHER CAP 114,3 EDELSTAHL	WETTERKAPPE
120	10125148	1	SEAL XTREME PLUS	DICHTUNG
180	12102528	4	HOSE CLAMP 115/113-121/25 A2	SCHLAUCHSCHELLE
181	10494116	1	PROFIL CLAMP 163,0/K1	PROFILSCHELLE
182	10494115	1	PROFIL CLAMP 137,6/K1	PROFILSCHELLE
183	10296644	2	FLAT CLIP 114,3 EDELSTAHL	FLACHSCHELLE
300	11631742	4	HEX SCREW ISO 4017 M12X30 8.8 FLZN SP	SECHSKANTSCHRAUBE
301	10875485	1	BUTTON HEAD SCREW AEHNL.ISO 7380-2	HALBRUNDKOPFSCHRAUBE
302	406527808	3	HEX SCREW ISO 4017 M8X16 A2-70	SECHSKANTSCHRAUBE
303	10412851	6	BUTTON HEAD SCREW AEHNL.ISO 7380-2	HALBRUNDKOPFSCHRAUBE
350	411517114	6	HEX NUT ISO 4032 M6 A4-70	SECHSKANTMUTTER
375	10289804	4	WASHER ISO 7089 12 300HV FLZN SPF	SCHEIBE
376	421861405	3	WASHER ISO 7093-1 8 200HV-A2	SCHEIBE
377	421801708	6	WASHER ISO 7093-1 6 200HV-A2	SCHEIBE

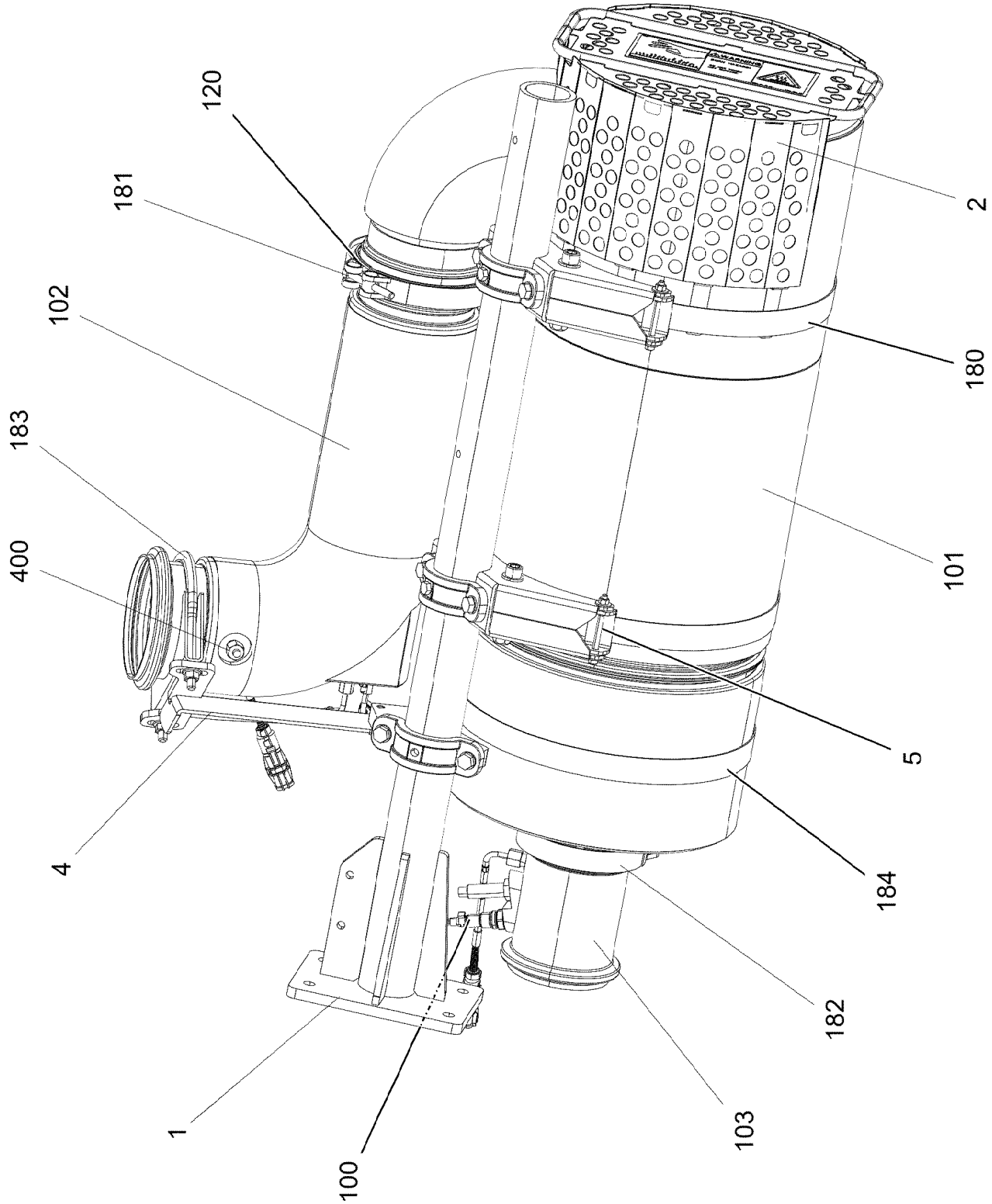
120
181
102
183
400
4
1
100
103
182
184
5
101
180
2

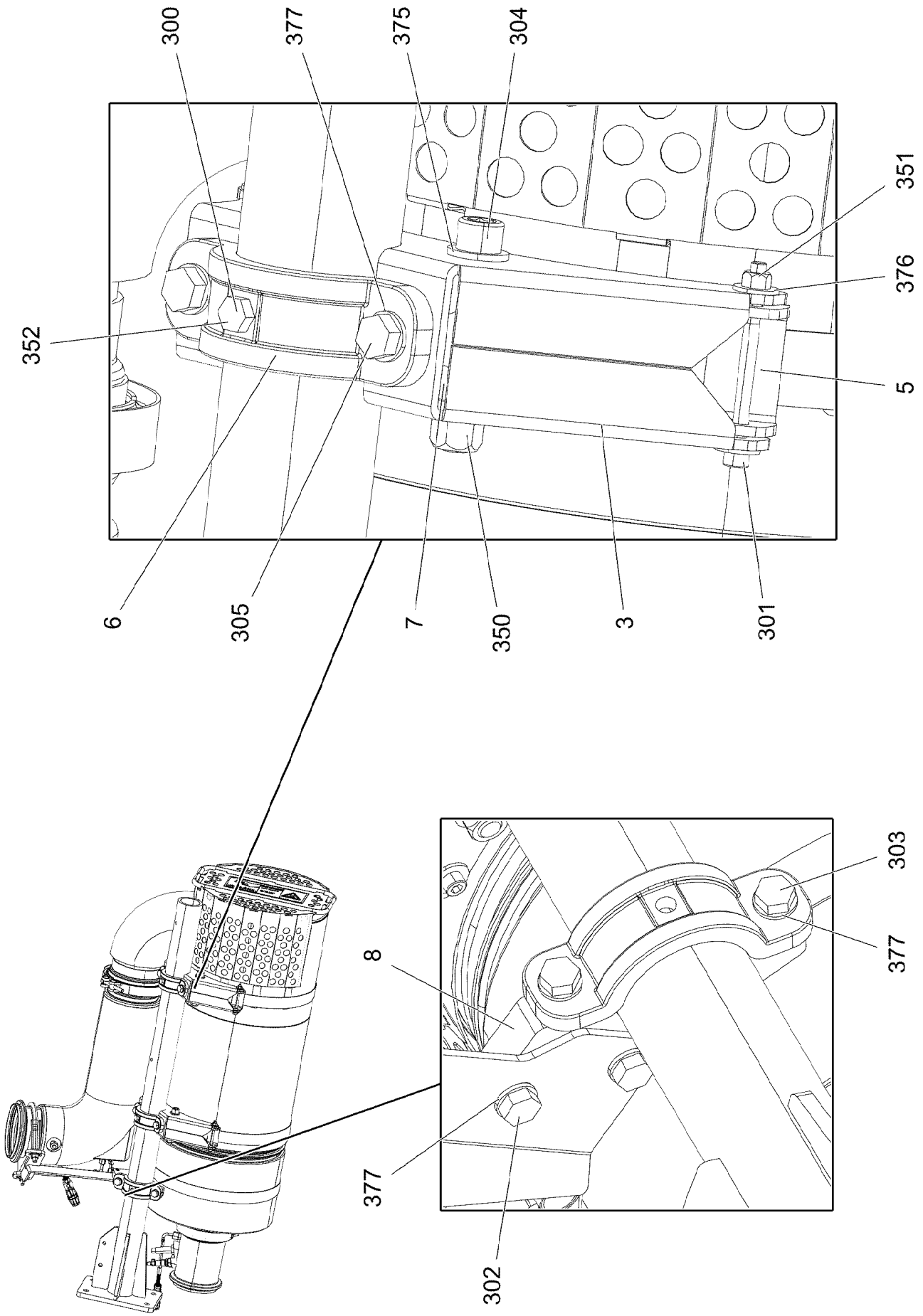
300
377
375
304
351
376
352
5
6
305
7
350
3
301
303
377
8
377
302

Pos.	Item	Quantity	Description	Bezeichnung
1	968798308	1	SUPPORTING ARM T ZN O	TRAGARM SCHWK.
2	968798408	1	CONTACT GUARD	BERUEHRUNGSSCHUTZ
3	97047477	2	PLATE 4X255X278 X5CRNI18-10	BLECH
4	969302208	1	PLATE WELDED FE//ZNNI8//CN//T0	BLECH SCHWK.
5	97093827	4	PLATE 4X30X82 X5CRNI18-10	BLECH
6	97039859	3	CLAMP G-ST-52 FE//ZN20//C	SCHELLE
7	979620608	4	TRAVERSE 20X61X37 S355J2+N FE//ZNNI8/	TRAVERSE
8	97055361	1	CLAMPING PIECE 20X157X69 S355J2+N FE//	KLEMMSTUECK
100	968929208	1	ELECTRIC ADD-ON PARTS	ELEKTRIK ANBAUTEILE
(151)	11349182	2	TEMPERATURE SENSOR -40°C BIS+800°C	TEMPERATURSENSOR
(152)	12412141	2	GAS SENSOR 0X51-0X52 NICHT LACKIERE	GASSENSOR
(153)	10144038	1	GAS SENSOR NICHT LACKIEREN	GASSENSOR
(154)	10144039	1	SENSOR CONTROL DEVICE NICHT LACKIE	SENSORSTEUERGERAET
101	11403708	1	SCR-ASSEMBLY SCRONLY ⇨ ❑ 495	SCR-BAUGRUPPE
102	10148666	1	EXHAUST MIXING PIPE SCRONLY SPF	ABGASMISCHROHR
103	12898856	1	SENSOR PIPE	SENSORROHR
120	10802682	1	SEALING RING 140X155X13	DICHTRING
180	12102925	2	HINGE PIN CLAMP 332X1022X30/A2 EDELS	GELENKBOLZENSCHELLE
181	10494116	1	PROFIL CLAMP 163,0/K1	PROFILSCHELLE
182	10494115	1	PROFIL CLAMP 137,6/K1	PROFILSCHELLE
183	11963742	1	BOW-TYPE CLAMP 132 X5CRNI18-10	BUEGELSCHELLE
184	12102925	1	HINGE PIN CLAMP 332X1022X30/A2 EDELS	GELENKBOLZENSCHELLE
300	10021245	2	HEX SCREW ISO 4014 M8X80 10.9 FLZN SP	SECHSKANTSCHRAUBE
301	10539468	4	SOCKET HEAD SCREW ISO 4762 M6X75 A4	ZYLINDERSCHRAUBE
302	11631816	2	HEX SCREW ISO 4017 M10X25 8.8 FLZN SP	SECHSKANTSCHRAUBE
303	11642358	2	HEX SCREW ISO 4017 M10X30 8.8 FLZN SP	SECHSKANTSCHRAUBE
304	10353713	4	SOCKET HEAD SCREW ISO 4762 M12X80 A2	ZYLINDERSCHRAUBE
305	11626706	4	HEX SCREW ISO 4017 M10X40 8.8 FLZN SP	SECHSKANTSCHRAUBE
350	11626393	4	HEX NUT AEHNL.ISO 7042 M12 A4	SECHSKANTMUTTER
351	11113917	4	HEX NUT AEHNL.ISO 7042 M6 A4 VERZINNT	SECHSKANTMUTTER
352	10814800	2	HEX NUT ISO 7042 M8 10 480H SPF	SECHSKANTMUTTER
375	10410178	8	WASHER ISO 7089 12 200HV-A2	SCHEIBE
376	421801708	8	WASHER ISO 7093-1 6 200HV-A2	SCHEIBE
377	10289795	8	WASHER ISO 7089 10 300HV FLZN SPF	SCHEIBE
400	10816958	1	FITTING BUZ 8 M14X1,5 INOX	VERSCHRAUBUNG

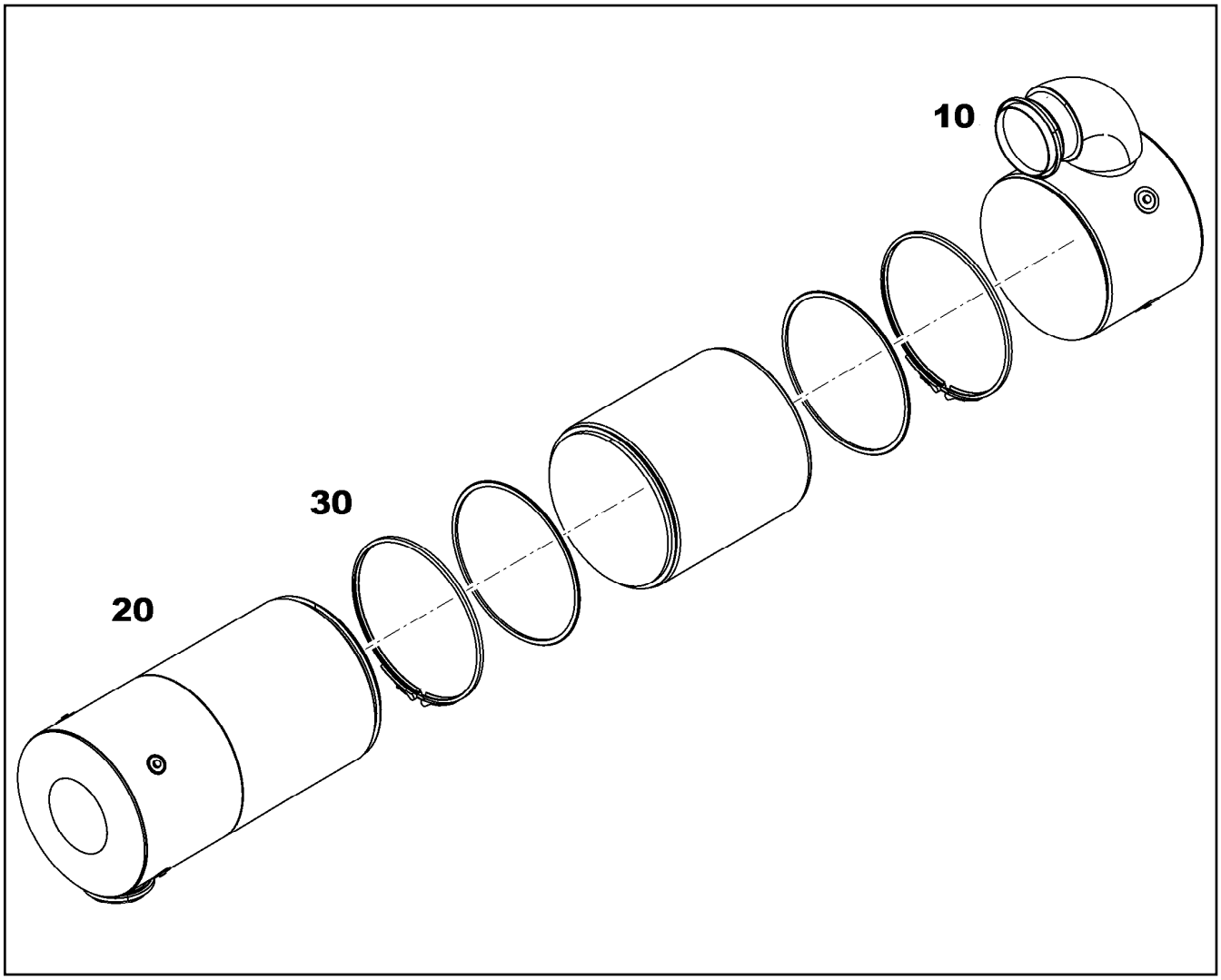

Pos.	Item	Quantity	Description	Bezeichnung
10	10144031	1	INLET MODULE SCRONLY SPF	EINLASSMODUL
20	11403694	1	OUTLET MODULE SCRONLY	AUSLASSMODUL
30	10141051	1	PROFIL CLAMP 328/K1 X5CrNi18-10	PROFILSCHELLE

Pos.	Item	Quantity	Description	Bezeichnung
1	96039740	1	ADDITIONAL PARTS CLADDING ⇨ ❑ 497	ZUSATZTEILE VERKLEIDUNG

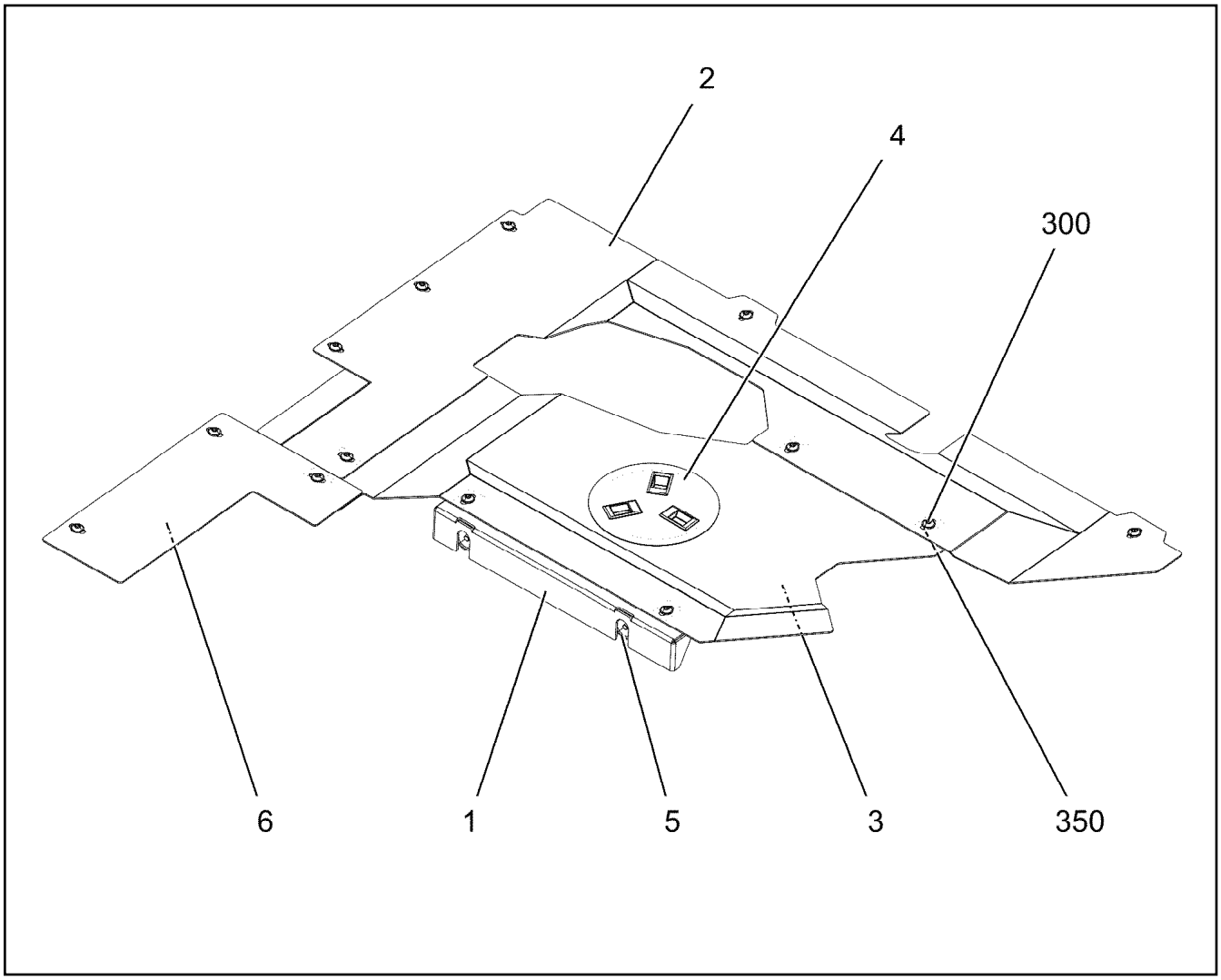

Pos.	Item	Quantity	Description	Bezeichnung
1	97121228	1	PLATE 3X487X107 ALMG3 H111 SPF	BLECH
2	97050648	1	PLATE 2X680X1160 ALMG3 H111 SPF	BLECH
3	97133336	1	PLATE 2X808X498 ALMG3 H111 SPF	BLECH
4	963544508	1	COVER COMPL.	DECKEL KPL.
5	978787708	2	SLEEVE 33.0X19 FE//ZNNI8//CN//T0	HUELSE
6	97050650	1	PLATE 2X373X250 ALMG3 H111 SPF	BLECH
300	10875485	15	BUTTON HEAD SCREW AEHNL.ISO 7380-2	HALBRUNDKOPFSCHRAUBE
350	12100332	6	SHEET METAL NUT M8 480H SPF	BLECHMUTTER

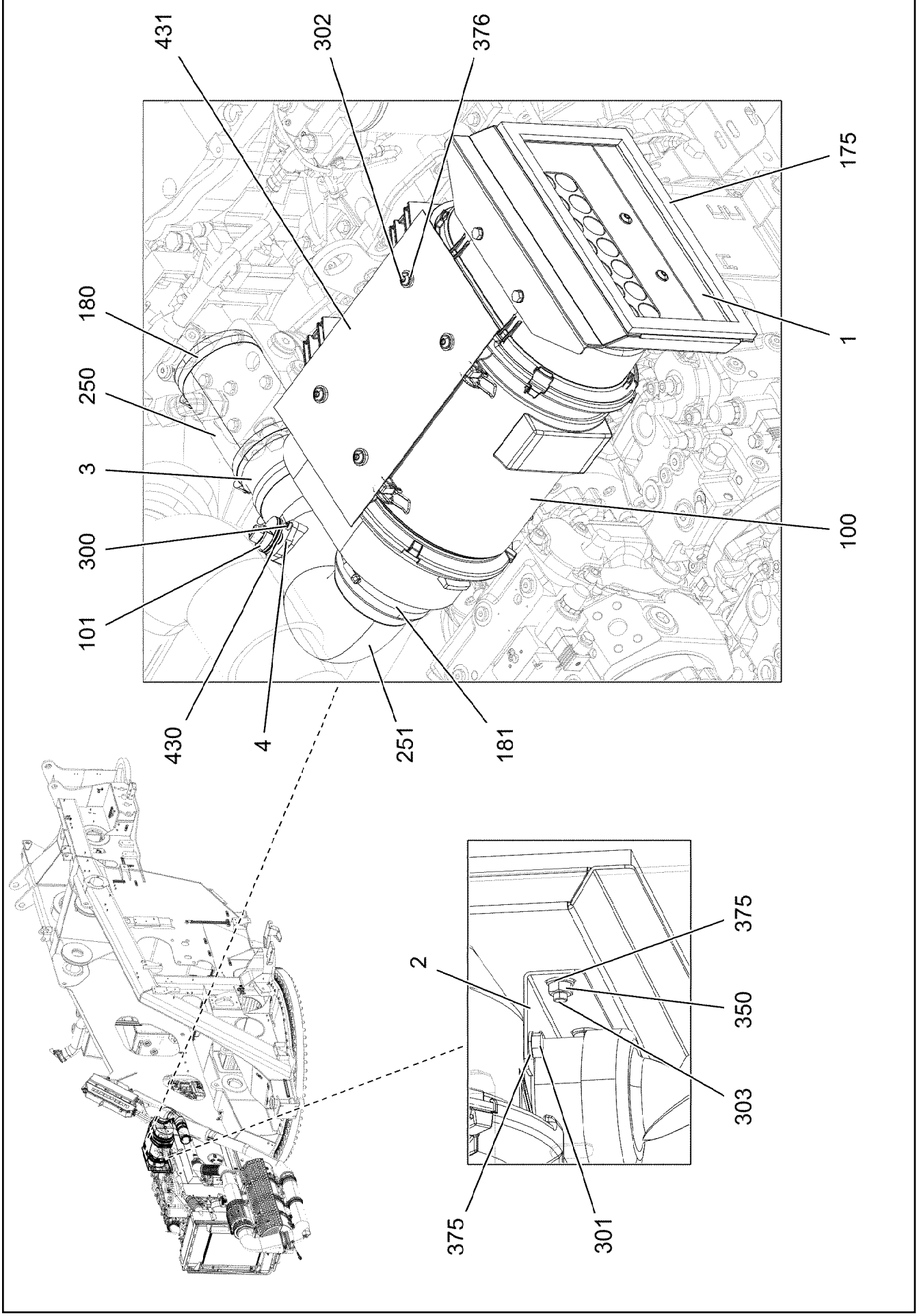
431
302
376
175
180
1
250
3
100
300
101
430
4
251
181
2
375
350
303
375
301

Pos.	Item	Quantity	Description	Bezeichnung
1	969089708	1	SCOOP WELDED	LUFTHUTZE SCHWK.
2	97052638	1	PLATE 2X130X89 ALMG3 H111	BLECH
3	97087964	1	TUBE ST12 SPF	ROHR
4	97057024	1	FLANGE 10X65X37 ALMG3 H111	FLANSCH
100	10871700	1	AIR FILTER 18M³/MIN PP ⇨ ❑ 500	LUFTFILTER
101	11101017	1	MAINTENANCE SWITCH 0,05 BAR	WARTUNGSSCHALTER
175	10425409	1	INSULATING MATERIAL 20X20X2000 PUR	DAEMMSTOFF
180	774217608	3	HOSE CLAMP 120/110-130/12 W3	SCHLAUCHSCHELLE
181	774209908	1	HOSE CLAMP 140/130-150/12 W3	SCHLAUCHSCHELLE
250	10872213	1	HOSE 100X180 EPDM	SCHLAUCH
251	97050548	1	AIR GUIDING HOSE 100/130 X 298 ELASTO	LUFTFUEHRUNGSSCHLAUCH
300	11690044	2	SOCKET HEAD SCREW ISO 4762 M6X12 8.8	ZYLINDERSCHRAUBE
301	11651767	4	HEX SCREW ISO 4017 M8X20 8.8 480H SPF	SECHSKANTSCHRAUBE
302	10875471	4	BUTTON HEAD SCREW AEHNL.ISO 7380-2	HALBRUNDKOPFSCHRAUBE
303	10875485	2	BUTTON HEAD SCREW AEHNL.ISO 7380-2	HALBRUNDKOPFSCHRAUBE
350	11693875	2	HEX NUT ISO 4032 M8 8 480H SPF	SECHSKANTMUTTER
375	10289803	6	WASHER ISO 7089 8 300HV 480H SPF	SCHEIBE
376	429900608	4	SHEET GASKET 8X22X4 -A2	DICHTSCHEIBE
430	502933208	1	O-RING 10X2,2 NBR70	O-RING
431	97083604	1	SEAL 1.5X210X360 GUMMI	DICHTUNG

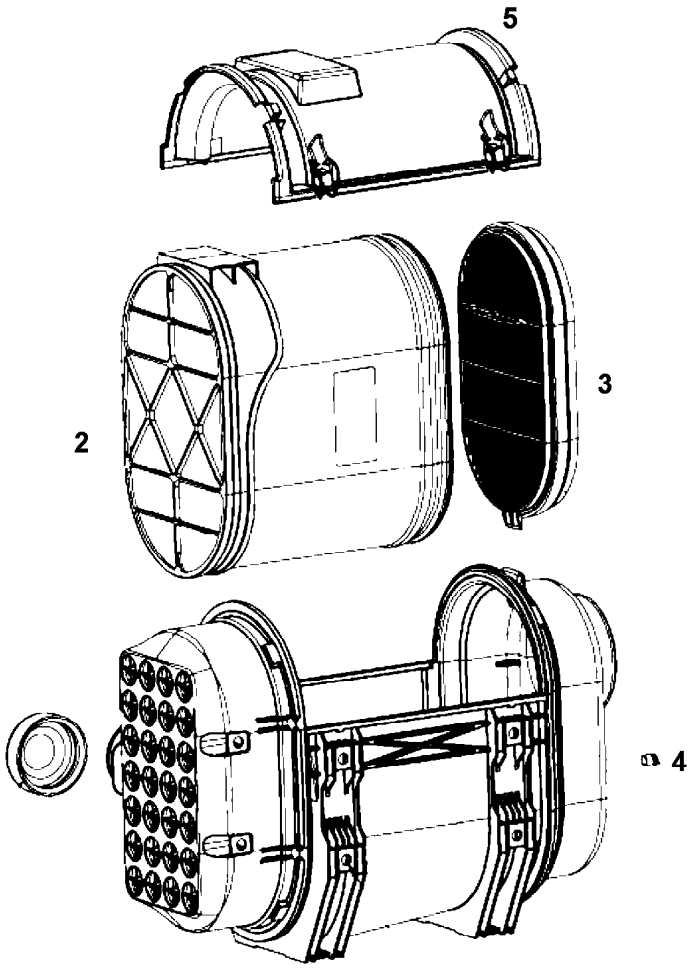

Pos.	Item	Quantity	Description	Bezeichnung
2	10294938	1	MAIN FILTER ELEMENT	HAUPTFILTERELEMENT
3	10294939	1	SAFETY ELEMENT	SICHERHEITSELEMENT
4	7619068	1	SEALING PLUG	VERSCHLUSSKAPPE
5	10297241	1	COVER	DECKEL

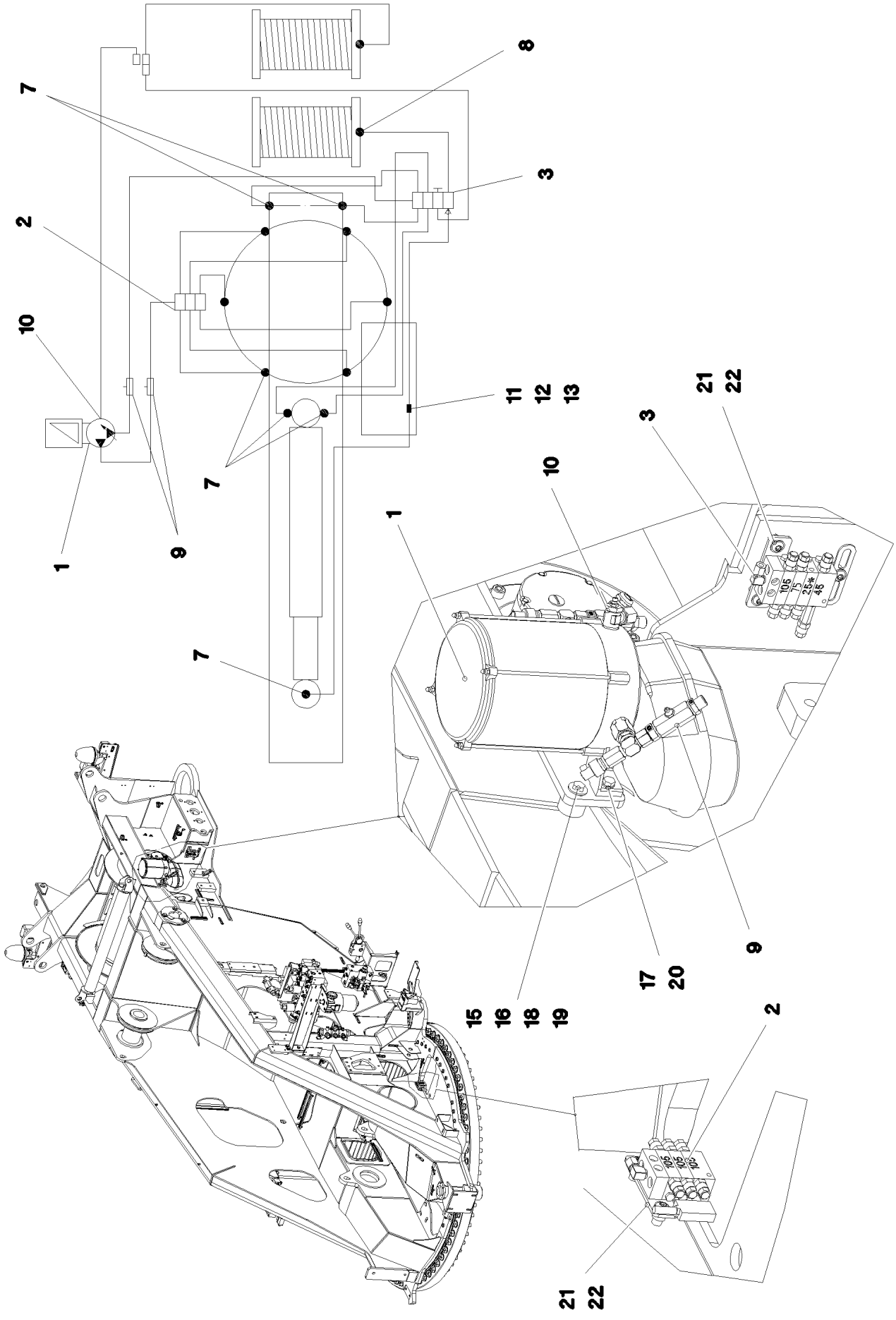

4.12.2020 077863 LIEBHERR	**etk_en_de 047580 LTR 1220** **CENT. LUBRIC. SYSTEM SUPERST.** **ZENTRALSCHMIERANLAGE OW**	❑ 501 (1/2) **917261208**

Pos.	Item	Quantity	Description	Bezeichnung
1	10327065	1	ELECTRIC PUMP ⇨ ❑ 503	ELEKTROPUMPE
2	11002916	1	DISTRIBUTION BLOCK 3/6 ⇨ ❑ 505	VERTEILERKOMBINATION
3	774387208	1	DISTRIBUTION BLOCK 4/7	VERTEILERKOMBINATION
(1)	774378108	1	NON-RETURN VALVE	RUECKSCHLAGVENTIL
4	12204614	4	SOCKET HEAD SCREW ISO 4762 M5X35 8.8	ZYLINDERSCHRAUBE
5	10875620	4	HEX NUT ISO 4032 M5 8 480H SPF	SECHSKANTMUTTER
6	11140403	4	WASHER ISO 7089 5 200HV 480H SPF	SCHEIBE
7	12101832	11	MALE CONNECTOR WSV 6 M10X1K MS	STECKANSCHLUSS
8	12101847	1	PLUG-IN CONNECTOR GE M8X1K MESSING	STECKVERBINDER
9	774375108	2	PASSAGE NIPPLE BLOCK ⇨ ❑ 131	DURCHGANGSNIPPELBLOCK
10	774372808	1	PUMP RETURN FLOW	PUMPENRUECKLAUF
11	774372608	1	COUPLING SLEEVE	KUPPLUNGSMUFFE
12	774372708	1	COUPLING PLUG	KUPPLUNGSSTECKER
13	471030008	2	FITTING XGE6-LR-ED A3P	VERSCHRAUBUNG
14	10873149	50	POLYAMID PIPE DIN 73378 6X1,5 PA 12-HL	POLYAMIDROHR
17	10289803	2	WASHER ISO 7089 8 300HV 480H SPF	SCHEIBE
20	10197831	2	HEX SCREW ISO 4017 M8X25 8.8 ZNNI-480	SECHSKANTSCHRAUBE
21	12102696	4	BUTTON HEAD SCREW ISO7380-2 M8X10 0	HALBRUNDKOPFSCHRAUBE
22	953696908	2	PLATE S315MC FE//ZNNI8//CN//T0	BLECH

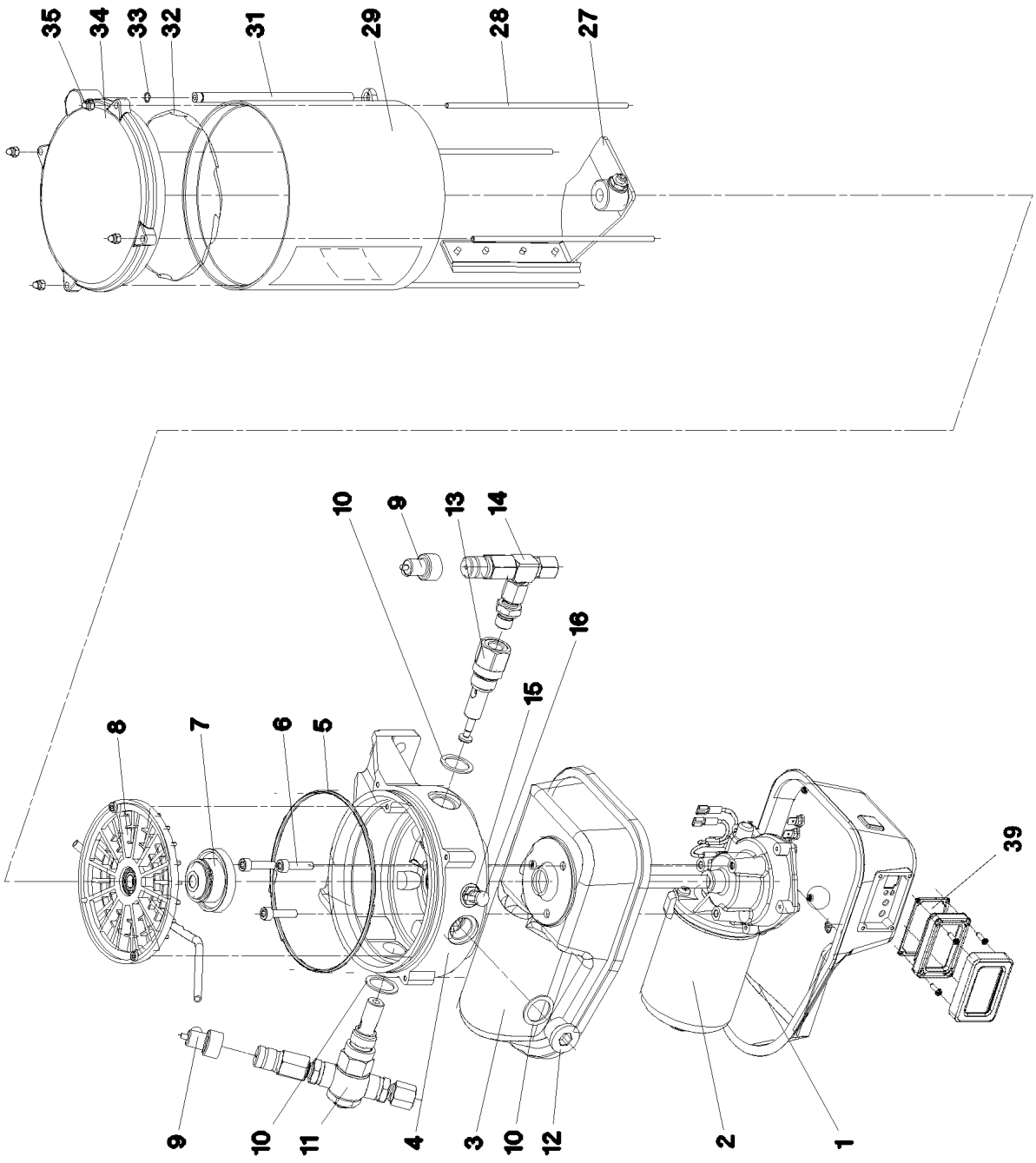
35
34
33
32
31
29
28
27
10
9
13
14
16
15
8
7
6
5
39
9
10
11
4
3
10
12
2
1

Pos.	Item	Quantity	Description	Bezeichnung
1	10493920	1	MOTOR HOUSING	MOTORGEHAEUSE
2	10355140	1	TRANSMISSION MOTOR 24V	GLEICHSTROMGETRIEBEMOTO
3	10014692	1	MOTOR HOUSING	MOTORGEHAEUSE
4	10014693	1	PUMP HOUSING	PUMPENGEHAEUSE
5	570163708	1	O-RING 140X3 NBR70	O-RING
6	10875588	3	SOCKET HEAD SCREW ISO 4762 M6X25 8.8	ZYLINDERSCHRAUBE
7	10014729	1	DRIVER	MITNEHMER
8	10014730	1	INTERMEDIATE RING	ZWISCHENRING
9	10429952	1	FAULT INDICATOR	STOERANZEIGE
10	10014697	3	SEALING RING 27X20X1,5 CU	DICHTRING
11	774387508	1	PUMP ELEMENT	PUMPENELEMENT
12	12218194	1	SCREW PLUG DIN 908 M20X1,5 St FLZN SP	VERSCHLUSSSCHRAUBE
13	10216340	1	PUMP ELEMENT	PUMPENELEMENT
14	571328408	1	PRESSURE RELIEF VALVE	UEBERDRUCKVENTIL
15	11080392	1	HYDRAULIC-TYPE LUBRICAT.NIPPLE	KEGELSCHMIERNIPPEL
16	10014701	1	GREASE NIPPLE CAP	SCHMIERNIPPELKAPPE
25	4002886	4	CAP NUT DIN 986 M4 A2-70	HUTMUTTER
27	10014712	1	AGITATOR PADDLE	RUEHRFLUEGEL
28	10099209	4	PULL ROD	ZUGSTANGE
29	10038271	1	CONTAINER 2,5 KG	BEHAELTER
30	967421808	1	STICKER BEHAELTER 2,5KG	AUFKLEBER
32	10099208	1	O-RING 133,07X1,78 NBR 70	O-RING
33	570690608	1	O-RING 6X1 NBR90	O-RING
34	12102477	1	COVER	BEHAELTERDECKEL
39	11110060	1	WINDOW	SICHTFENSTER
99	10447539	1	SEALING COMPOUND	DICHTUNGSMASSE

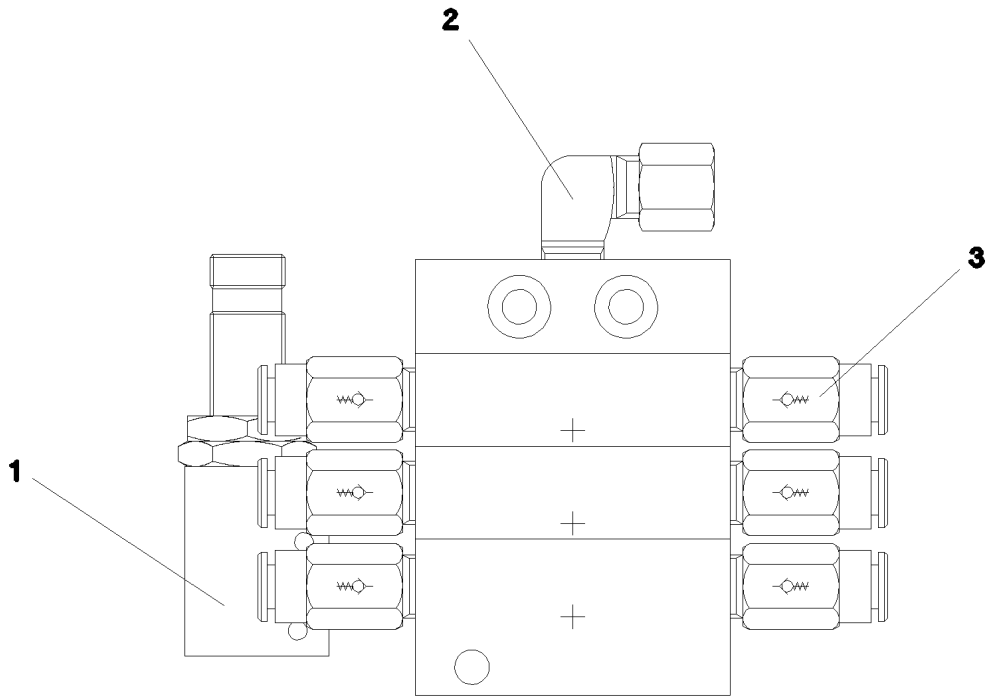

Pos.	Item	Quantity	Description	Bezeichnung
1	10097613	1	PROXIMITY SWITCH BERUEHRUNGSLOS	NAEHERUNGSSCHALTER
2	774373808	1	FITTING WE 6LL M10x1	VERSCHRAUBUNG
3	11007219	6	NON-RETURN VALVE	RUECKSCHLAGVENTIL

Pos.	Item	Quantity	Description	Bezeichnung
8	966181208	1	TEMPERATURE SENSOR	TEMPERATURFUEHLER
(150)	10800266	1	TEMPERATURE SENSOR -50/+125°C SPF	TEMPERATURFUEHLER
10	965281408	1	LIMIT SWITCH ADD-ON AUSLEGER-STEIL ⇨ ❑ 507	ENDSCHALTER ANBAU
11	968128908	1	EL.ADD-ON SET-LIMIT SWITCHES + ⇨ ❑ 508	EL.GEBER U.ENDSCHALTER
12	96045384	1	CABLE LIST SLEWING PLATFORM ⇨ ❑ 509	KABELLISTE DREHBUEHNE
21	607226808	2	SLIP-ON TUBE	AUFSTECKROHR
30	968693208	1	MOUNTING MATERIAL	MONTAGEMATERIAL
(10)	10874588	50	CABLE TIE 4,8X292-SCHWARZ PA66 SPF	KABELBINDER
(20)	10874587	50	CABLE TIE 7,6X368-SCHWARZ PA66 SPF	KABELBINDER
(30)	10870333	100	CABLE TIE 7,6X380-SCHWARZ PA66HIRHS	KABELBINDER
(40)	11691035	10	CABLE TIE 4,6X200-SCHWARZ PA66HS SPF	KABELBINDER
32	614003108	1	HORN 24V	HORN
33	10123878	2	RUBBER RING X22	GUMMIRING

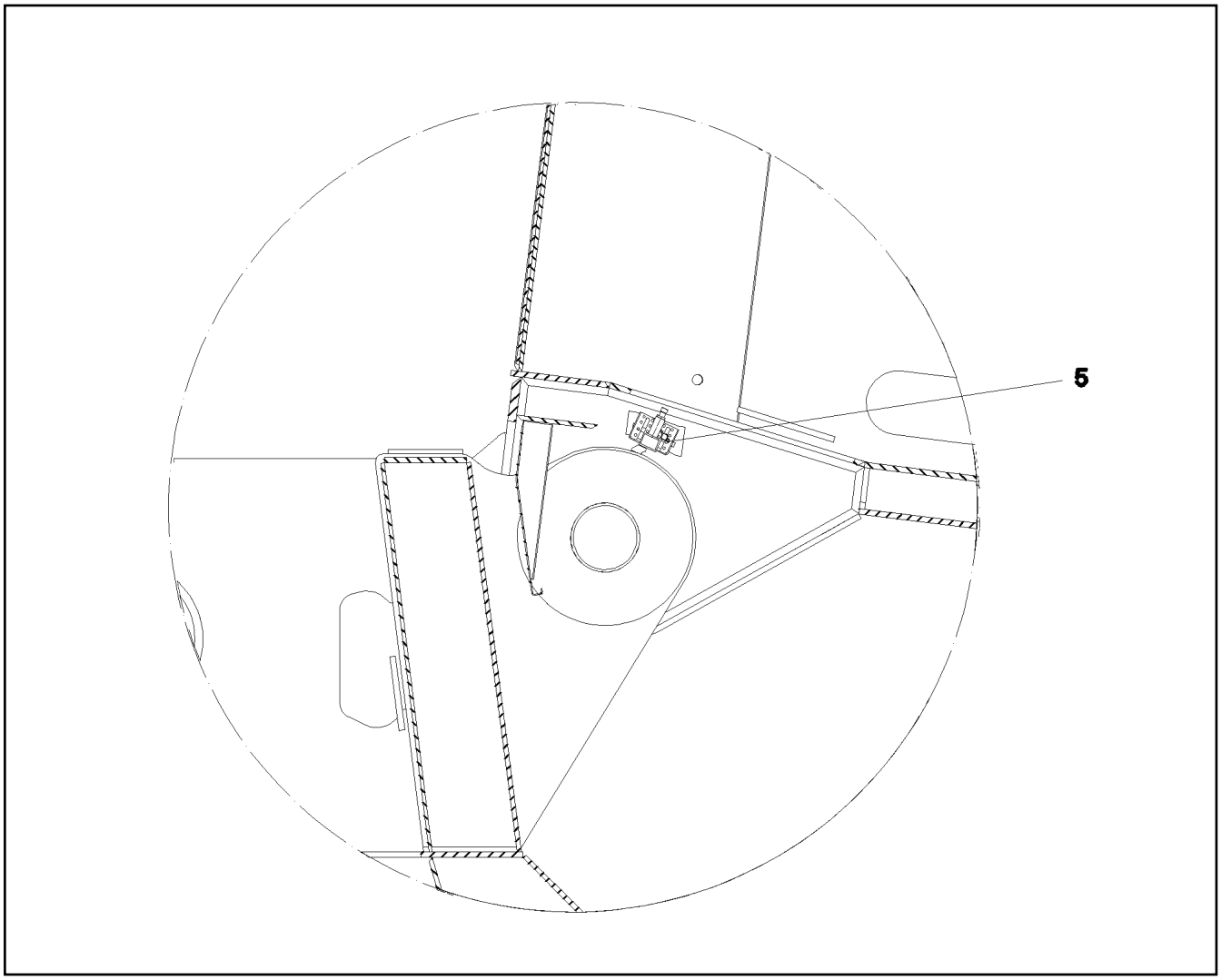

Pos.	Item	Quantity	Description	Bezeichnung
5	12100674	2	DOWEL PIN ISO 8752 6X40 480H SPF	SPANNSTIFT

Pos.	Item	Quantity	Description	Bezeichnung
17	966633408	1	ELECTRIC BALLASTING ENDSCHALTER	ELEKTRIK BALLASTIERUNG
(11)	606053108	2	LIMIT SWITCH TASTEND SPF	ENDSCHALTER
18	966633508	1	EL.SUPERSTRUCTURE INTERLOCK ENDS	EL.DREHBUEHNENARRETIERUN
(11)	606053108	2	LIMIT SWITCH TASTEND SPF	ENDSCHALTER
30	966633308	1	ELECTRIC SLEWING SENSOR BUSGEBER-3	ELEKTRIK DREHWERTGEBER
(11)	10802060	1	ROTARY ENCODER 360° LSB PL:E SPF	DREHGEBER
50	966720708	1	ELECTR.FOR SLEWING GEAR	ELEKTRIK DREHWERK
(10)	11003193	2	PROXIMITY SWITCH BERUEHRUNGSLOS 12	NAEHERUNGSSCHALTER

Pos.	Item	Quantity	Description	Bezeichnung
50	96045385	1	WIRING HARNESS W500 ⇨ ❑ 510	KABELSTRANG
51	96037136	1	WIRING HARNESS W501 ⇨ ❑ 512	KABELSTRANG
52	96037137	1	WIRING HARNESS W555 ⇨ ❑ 514	KABELSTRANG
57	968401508	1	LEAD W571	LEITUNG
58	96006879	1	LEAD W510	LEITUNG
62	96037138	1	LEAD W587	LEITUNG
63	96022970	1	LEAD W588	LEITUNG
68	10025227	1	CABLE 2X0,25-7M	KABEL
69	10870643	1	CABLE 2X0,14+2X0,22-9M	KABEL
70	96037133	1	LEAD W562 ⇨ ❑ 516	LEITUNG
71	10870635	1.5	PROTECTIVE HOSE DN20 NORMAL PP	SCHUTZSCHLAUCH

Pos.	Item	Quantity	Description	Bezeichnung
5	600460808	6.6	CONTROL LEAD 12 X 0,75 SPF	STEUERLEITUNG
7	680001408	1	COUPLING SOCKET 4-POL SPF	KUPPLUNGSDOSE
8	680001408	1	COUPLING SOCKET 4-POL SPF	KUPPLUNGSDOSE
9	680001408	1	COUPLING SOCKET 4-POL SPF	KUPPLUNGSDOSE
10	10678494	1	COUPLING SOCKET 4-POL SPF	KUPPLUNGSDOSE
11	680000808	1	COUPLING SOCKET 4-POLE 90° SPF	KUPPLUNGSDOSE
12	680001708	1	COUPLING SOCKET 4-POL GERADE PVC SP	KUPPLUNGSDOSE
13	10678491	1	COUPLING SOCKET 4-POL SPF	KUPPLUNGSDOSE
14	680001408	1	COUPLING SOCKET 4-POL SPF	KUPPLUNGSDOSE
15	680001408	1	COUPLING SOCKET 4-POL SPF	KUPPLUNGSDOSE
16	680001408	1	COUPLING SOCKET 4-POL SPF	KUPPLUNGSDOSE
18	11341599	5.83	LEAD 2 X 1,5	LEITUNG
19	10877801	1	CONNECTION CABLE 2X0,75-10M	ANSCHLUSSKABEL
85	602307908	10	WIRED END FERRULE DIN 46228-1 A0,75X5	ADERENDHUELSE
86	602307708	74	WIRED END FERRULE DIN 46228-1 A1X5 V	ADERENDHUELSE
95	6202444	1	PIN CONTACT 0,75-1,5MM2	STIFTKONTAKT
96	6202434	2	SLEEVE CONTACT 0,75-1,5MM2	BUCHSENKONTAKT
114	602307808	4	WIRED END FERRULE DIN 46228-1 A0,5X5 E	ADERENDHUELSE
121	602300108	13	CONTACT 1-2,5MM2	KONTAKT
125	602300308	96	CONTACT 0,5-1MM2	KONTAKT
134	602303308	6	RECEPTACLE FOR TABS 6,3X0,5-1,5	FLACHSTECKHUELSE
202	11082602	24.41	INSULATING HOSE DN6X0,5 PUR SPF	ISOLIERSCHLAUCH
203	11082603	2.14	INSULATING HOSE DN8X0,65 PUR SPF	ISOLIERSCHLAUCH
205	11082605	0.86	INSULATING HOSE DN12X0,65 PUR SPF	ISOLIERSCHLAUCH
223	11124205	8.35	CABLE CONDUIT DN16X0,6 PUR SPF	KABELSCHLAUCH
224	11124207	0.93	CABLE CONDUIT DN20X0,6 PUR SPF	KABELSCHLAUCH
225	11124208	2.91	CABLE CONDUIT DN25X0,6 PUR SPF	KABELSCHLAUCH
226	11124209	0.93	CABLE CONDUIT DN30X0,6 PUR SPF	KABELSCHLAUCH
227	11124210	2.86	CABLE CONDUIT DN35X0,6 PUR SPF	KABELSCHLAUCH
229	11124212	1.2	CABLE CONDUIT DN50X0,6 PUR SPF	KABELSCHLAUCH
305	10870540	395.03	ELECTR.CABLE 1,0	KFZ-LEITUNG
345	10870539	11.4	ELECTR.CABLE 0,75	KFZ-LEITUNG
371	10877800	1	CONNECTION CABLE 2X0,75-5M	ANSCHLUSSKABEL
372	10877801	1	CONNECTION CABLE 2X0,75-10M	ANSCHLUSSKABEL
375	10871126	1	COUPLING SOCKET 4-POL SPF	KUPPLUNGSDOSE
376	10871127	1	COUPLING SOCKET 4-POL SPF	KUPPLUNGSDOSE
377	10871126	1	COUPLING SOCKET 4-POL SPF	KUPPLUNGSDOSE
378	10871127	1	COUPLING SOCKET 4-POL SPF	KUPPLUNGSDOSE
500	923512208	76	CABLE MARKER	KABELMARKER
501	602300208	10	PLUG SHELL 18-POL	STECKERGEHAEUSE
502	605007908	34	APPLIANCE SOCKET 3-POL	GERAETESTECKDOSE
503	605006608	3	DEVICE PLUG DIN 43650 4-POLE	GERAETESTECKER
504	602325508	1	HOUSING 6-POL	GEHAEUSE
505	692406308	1	PLUG DIN 72585 4-POL POLYBUTOLEN SPF	STECKER
506	605251608	1	PLUG SOCKET BODY 4-POLE AL	STECKDOSENKOERPER
507	692406708	1	PLUG DIN 72585 7-POL POLYBUTOLEN SPF	STECKER
508	927996308	1	PLUG	STECKER
509	10424622	1	BUSHING HOUSING 2-POL 5A	BUCHSENGEHAEUSE
510	604526508	1	BUSHING SUPPORT 6-POL 16A	BUCHSENTRAEGER
511	10324830	1	CABLE PLUG 4-POL 90°	KABELSTECKER
512	692406008	2	TERMINAL HOUSING DIN 72585 APD POLY	ENDGEHAEUSE
513	11494567	3	DUST CAP	STAUBKAPPE
514	605212808	1	MOULDING 317-1397-000 SUR	FORMTEIL
515	605215508	1	CLAMP SURE-SEAL	KLAMMER
516	604508708	1	CABLE SLEEVE 6-8	KABELTUELLE
517	604512108	1	SEALING PLUG M1-D	VERSCHLUSSKAPPE
518	604505508	1	CABLE SOCKET M11-Z	KABELDOSE
636	604518808	2	SLEEVE CONTACT 1,5MM2	BUCHSENKONTAKT
643	602339408	3	SLEEVE CONTACT DIN 72585 0,5-1MM2 SP	BUCHSENKONTAKT
647	602339508	4	SLEEVE CONTACT DIN 72585 0,5-1,5MM2	BUCHSENKONTAKT

Pos.	Item	Quantity	Description	Bezeichnung
690	10335820	29	SLEEVE CONTACT 0,2-0,5MM2	BUCHSENKONTAKT
700	10424623	2	SLEEVE CONTACT 0,5-0,75MM2	BUCHSENKONTAKT
811	692404908	1	STOPPER PLUG	BLINDSTOPFEN
812	604518908	5	STOPPER PLUG BAUREIHE_M1	BLINDSTOPFEN
813	605619708	37	SINGLE STRAND SEALING 2	EINZELADERABDICHTUNG
816	605619808	3	SINGLE STRAND SEALING DIN 72585 15BL	EINZELADERABDICHTUNG
817	692405808	1	STOPPER PLUG DIN 72585 4 SPF	BLINDSTOPFEN
821	605619908	4	SINGLE STRAND SEALING DIN 72585 10YE	EINZELADERABDICHTUNG
822	692405708	3	STOPPER PLUG DIN 72585 7 SPF	BLINDSTOPFEN
828	10424625	2	SINGLE STRAND SEALING 1,4-2,1MM VMQ	EINZELADERABDICHTUNG
995	965617208	2	SHIELDING TIED BACK	ABSCHIRMUNG ZURUECKGEB
996	965622108	62	LETTERING WIRE	BESCHRIFTUNG ADER
998	965622208	1	LETTERING WIRING HARNESS	BESCHRIFTUNG KABELBAUM
2267	6001703	6	DOUBLE SPRING CONTACT 0,5-1,0MM2	DOPPELFEDERKONTAKT

Pos.	Item	Quantity	Description	Bezeichnung
5	10678491	1	COUPLING SOCKET 4-POL SPF	KUPPLUNGSDOSE
6	10678491	1	COUPLING SOCKET 4-POL SPF	KUPPLUNGSDOSE
7	10678491	1	COUPLING SOCKET 4-POL SPF	KUPPLUNGSDOSE
8	10678491	1	COUPLING SOCKET 4-POL SPF	KUPPLUNGSDOSE
9	10678491	1	COUPLING SOCKET 4-POL SPF	KUPPLUNGSDOSE
10	12100215	4.32	DATA LINE 3 X 1 FEP SPF	DATENLEITUNG
12	12100215	6.27	DATA LINE 3 X 1 FEP SPF	DATENLEITUNG
13	12100215	6.27	DATA LINE 3 X 1 FEP SPF	DATENLEITUNG
14	12100215	6.27	DATA LINE 3 X 1 FEP SPF	DATENLEITUNG
15	12100217	6.27	DATA LINE 2 X 1 FEP SPF	DATENLEITUNG
16	12100217	7.72	DATA LINE 2 X 1 FEP SPF	DATENLEITUNG
17	12100217	4.27	DATA LINE 2 X 1 FEP SPF	DATENLEITUNG
18	12100217	2.02	DATA LINE 2 X 1 FEP SPF	DATENLEITUNG
19	12100217	1.3	DATA LINE 2 X 1 FEP SPF	DATENLEITUNG
49	602217008	1	CABLE LUG M6/16MM²	KABELSCHUH
50	602217308	1	CABLE LUG DIN 46234 M12/16mm²	KABELSCHUH
55	602311508	1	CABLE LUG DIN 46234 M6/10mm²	KABELSCHUH
57	602311408	2	CABLE LUG DIN 46234 M8/16mm² TIN-PLATE	KABELSCHUH
58	602205708	4	CABLE LUG DIN 46234 M6/16mm²	KABELSCHUH
75	602203908	3	FLAT PLUG 6,3X1-2,5 SN	FLACHSTECKER
86	602307708	26	WIRED END FERRULE DIN 46228-1 A1X5 V	ADERENDHUELSE
95	6202444	3	PIN CONTACT 0,75-1,5MM2	STIFTKONTAKT
96	6202434	2	SLEEVE CONTACT 0,75-1,5MM2	BUCHSENKONTAKT
98	10872032	8	CABLE SLEEVE 12,0-3,0/12/1,4	KABELTUELLE
106	602301708	1	CABLE LUG DIN 46234 M8/16-25MM² VERZI	KABELSCHUH
111	602205808	1	CABLE LUG M6/16,8-26,7MM²	KABELSCHUH
121	602300108	21	CONTACT 1-2,5MM2	KONTAKT
125	602300308	92	CONTACT 0,5-1MM2	KONTAKT
202	11082602	14.02	INSULATING HOSE DN6X0,5 PUR SPF	ISOLIERSCHLAUCH
203	11082603	9.43	INSULATING HOSE DN8X0,65 PUR SPF	ISOLIERSCHLAUCH
204	11082604	7.12	INSULATING HOSE DN10X0,65 PUR SPF	ISOLIERSCHLAUCH
205	11082605	1.33	INSULATING HOSE DN12X0,65 PUR SPF	ISOLIERSCHLAUCH
206	11082606	1.18	INSULATING HOSE DN14X0,65 PUR SPF	ISOLIERSCHLAUCH
208	11082608	0.28	INSULATING HOSE DN18X0,85 PUR SPF	ISOLIERSCHLAUCH
223	11124205	3.89	CABLE CONDUIT DN16X0,6 PUR SPF	KABELSCHLAUCH
225	11124208	1.46	CABLE CONDUIT DN25X0,6 PUR SPF	KABELSCHLAUCH
226	11124209	2.91	CABLE CONDUIT DN30X0,6 PUR SPF	KABELSCHLAUCH
228	11124211	1.23	CABLE CONDUIT DN40X0,6 PUR SPF	KABELSCHLAUCH
229	11124212	3.71	CABLE CONDUIT DN50X0,6 PUR SPF	KABELSCHLAUCH
261	603200308	8	CABLE TIE 3,6X140-SCHWARZ PA66	KABELBINDER
305	10870540	427.54	ELECTR.CABLE 1,0	KFZ-LEITUNG
307	10870541	37.14	ELECTR.CABLE 1,5	KFZ-LEITUNG
309	10870542	23.3	ELECTR.CABLE 2,5	KFZ-LEITUNG
322	600430108	5.1	ELECTR.CABLE DIN 72551 10	KFZ-LEITUNG
326	600431008	5.1	ELECTR.CABLE DIN 72551 16	KFZ-LEITUNG
328	600431208	8.85	ELECTR.CABLE 16	KFZ-LEITUNG
330	600431408	7.55	ELECTR.CABLE DIN 72551 25	KFZ-LEITUNG
371	12100214	6.27	DATA LINE 2 X 2,5 FEP SPF	DATENLEITUNG
372	12100214	6.27	DATA LINE 2 X 2,5 FEP SPF	DATENLEITUNG
373	12100214	6.27	DATA LINE 2 X 2,5 FEP SPF	DATENLEITUNG
374	11840113	6.27	BUS LINE 2 X 0,5	BUSLEITUNG
375	11840113	6.27	BUS LINE 2 X 0,5	BUSLEITUNG
376	11840113	6.27	BUS LINE 2 X 0,5	BUSLEITUNG
377	600345208	6.27	BUS LINE 4 X 1 SPF	BUSLEITUNG
378	12100216	6.27	DATA LINE 2 X 1,5 FEP SPF	DATENLEITUNG
379	12100217	6.27	DATA LINE 2 X 1 FEP SPF	DATENLEITUNG
380	12100217	6.27	DATA LINE 2 X 1 FEP SPF	DATENLEITUNG
381	12100217	6.27	DATA LINE 2 X 1 FEP SPF	DATENLEITUNG
383	12100217	6.27	DATA LINE 2 X 1 FEP SPF	DATENLEITUNG
384	12100215	6.27	DATA LINE 3 X 1 FEP SPF	DATENLEITUNG

Pos.	Item	Quantity	Description	Bezeichnung
386	12100215	6.27	DATA LINE 3 X 1 FEP SPF	DATENLEITUNG
388	10877801	1	CONNECTION CABLE 2X0,75-10M	ANSCHLUSSKABEL
389	10877801	1	CONNECTION CABLE 2X0,75-10M	ANSCHLUSSKABEL
500	923512208	58	CABLE MARKER	KABELMARKER
501	602300208	11	PLUG SHELL 18-POL	STECKERGEHAEUSE
502	605007908	13	APPLIANCE SOCKET 3-POL	GERAETESTECKDOSE
503	10678453	1	PLUG SHELL 62-POL PBT-GF20 GRA	STECKERGEHAEUSE
504	10678458	2	PROTECTING CAP MCP BUCHSENGEHAE	SCHUTZKAPPE
505	6001790	4	SOCKET HOUSING 2-POL	STECKDOSENGEHAEUSE
506	10099861	1	HOUSING 12-POL	GEHAEUSE
507	10099866	1	CONTACT RETAINING PIN JPT 12 POL	KONTAKTSICHERUNGSSTIFT
508	602209708	1	ATTACHABLE SLEEVE HOUSING 2-POL	STECKHUELSENGEHAEUSE
509	10342517	3	PLUG SHELL 2 13A TH.PLAST SW	STECKERGEHAEUSE
510	605613908	1	PLUG BODY 4-POL	STECKERKOERPER
511	602208908	1	FLAT PLUG HOUSING FASTIN-FASTON	FLACHSTECKERGEHAEUSE
512	10412433	1	PLUG SHELL 12-POL 13A TH.PLAST SW	STECKERGEHAEUSE
513	10216772	1	CONTACT LOCK DT 12 POLIG TH.PLAST G	KONTAKTVERRIEGELUNG
514	10678452	1	PLUG SHELL 62-POL PBT-GF20 SCH	STECKERGEHAEUSE
515	962196208	1	CONNECTOR FOR FUEL HEATING	STECKER FUER DIESELHEIZUN
516	602208608	1	ATTACHABLE SLEEVE HOUSING FASTIN-F	STECKHUELSENGEHAEUSE
517	927996308	1	PLUG	STECKER
518	10342518	3	SOCKET 2 13A	STECKDOSE
519	605212708	1	PLUG SOCKET BODY 3-POL	STECKDOSENKOERPER
520	6004195	2	PLUG SHELL 2-POL	STECKERGEHAEUSE
521	10874331	4	PROTECTING CAP JPT	SCHUTZKAPPE
522	11647373	2	PROTECTING CAP JPT 2 POL	SCHUTZKAPPE
523	605212808	2	MOULDING 317-1397-000 SUR	FORMTEIL
524	605215508	2	CLAMP SURE-SEAL	KLAMMER
525	610701108	1	PROTECTING CAP	SCHUTZKAPPE
526	10342519	3	CONTACT LOCK DT V-KEIL	KONTAKTVERRIEGELUNG
527	7368241	2	CONTACT LOCK 2-POL	KONTAKTVERRIEGELUNG
528	10041876	2	HOLDER DT/DTM	HALTER
529	10353004	1	DUMMY PLUG DT 2 POLIG PA GRAU	BLINDSTECKER
530	10429638	1	PLUG SHELL 2-POL 13A TH.PLAST SW	STECKERGEHAEUSE
531	11494567	1	DUST CAP	STAUBKAPPE
617	602329108	8	CONTACT 0,5-1MM2	KONTAKT
669	10100062	4	CONNECTOR PIN 0,75-2,0MM2 Cu Ni	STECKERSTIFT
670	10100063	11	PLUG BUSHING 0,75-2,0MM2 Cu	STECKERBUCHSE
671	10097470	2	FLAT PLUG 0,5-1,0MM2 CuSn4	FLACHSTECKER
690	10335820	20	SLEEVE CONTACT 0,2-0,5MM2	BUCHSENKONTAKT
709	10872033	2	CABLE SLEEVE 16,0-4,0/16/1,78	KABELTUELLE
724	10493493	6	SLEEVE CONTACT 1,0-2,5MM2 CuNiSi	BUCHSENKONTAKT
726	10493495	65	SLEEVE CONTACT 0,5-1,0MM2 CuNiSi	BUCHSENKONTAKT
727	10493496	4	SLEEVE CONTACT 1,0-1,5MM2 CuNiSi	BUCHSENKONTAKT
753	10800631	4	SLEEVE CONTACT 0,5-1,0MM2 CuNiSi	BUCHSENKONTAKT
758	11080881	4	RECEPTACLE 6,3X0,5-1,0 VERZINNT	STECKHUELSE
766	602305605	1	CABLE LUG AEHNL.DIN 46237 6,5/6-10MM² V	KABELSCHUH
801	602330508	6	SINGLE STRAND SEALING 2,2-3,0MM	EINZELADERABDICHTUNG
802	602330808	14	SINGLE STRAND SEALING 1,2-2,1MM BLAU	EINZELADERABDICHTUNG
806	602331108	43	STOPPER PLUG 3,6MM SILIKON WEIS	BLINDSTOPFEN
807	602329208	4	STOPPER PLUG AMP JPT-SERIE NA	BLINDSTOPFEN
811	692404908	2	STOPPER PLUG	BLINDSTOPFEN
813	605619708	13	SINGLE STRAND SEALING 2	EINZELADERABDICHTUNG
823	7368253	3	STOPPER PLUG DEUTSCH GROESSE	BLINDSTOPFEN
830	10014387	69	SINGEL SEAL 1,0-1,5MM2	EINZELDICHTUNG
842	10800046	6	STOPPER PLUG DEUTSCH-STECKER	BLINDSTOPFEN
996	965622108	124	LETTERING WIRE	BESCHRIFTUNG ADER
998	965622208	1	LETTERING WIRING HARNESS	BESCHRIFTUNG KABELBAUM

Pos.	Item	Quantity	Description	Bezeichnung
5	11840113	5.68	BUS LINE 2 X 0,5	BUSLEITUNG
6	11840113	0.17	BUS LINE 2 X 0,5	BUSLEITUNG
7	11840113	8.81	BUS LINE 2 X 0,5	BUSLEITUNG
8	11840113	0.17	BUS LINE 2 X 0,5	BUSLEITUNG
9	11840113	3.16	BUS LINE 2 X 0,5	BUSLEITUNG
10	11840113	0.17	BUS LINE 2 X 0,5	BUSLEITUNG
11	11840113	3.16	BUS LINE 2 X 0,5	BUSLEITUNG
12	11840113	0.17	BUS LINE 2 X 0,5	BUSLEITUNG
13	11840113	8.06	BUS LINE 2 X 0,5	BUSLEITUNG
14	11840113	0.17	BUS LINE 2 X 0,5	BUSLEITUNG
15	11840113	0.18	BUS LINE 2 X 0,5	BUSLEITUNG
16	12100216	4.8	DATA LINE 2 X 1,5 FEP SPF	DATENLEITUNG
17	12100217	4.8	DATA LINE 2 X 1 FEP SPF	DATENLEITUNG
18	12100215	4.8	DATA LINE 3 X 1 FEP SPF	DATENLEITUNG
19	12100217	4.7	DATA LINE 2 X 1 FEP SPF	DATENLEITUNG
121	602300108	9	CONTACT 1-2,5MM2	KONTAKT
125	602300308	27	CONTACT 0,5-1MM2	KONTAKT
202	11082602	8.82	INSULATING HOSE DN6X0,5 PUR SPF	ISOLIERSCHLAUCH
203	11082603	5.23	INSULATING HOSE DN8X0,65 PUR SPF	ISOLIERSCHLAUCH
205	11082605	5.21	INSULATING HOSE DN12X0,65 PUR SPF	ISOLIERSCHLAUCH
211	11118396	3.8	PROTECTIVE HOSE 30MM AL-PET FOLIE	SCHUTZSCHLAUCH
225	11124208	2.53	CABLE CONDUIT DN25X0,6 PUR SPF	KABELSCHLAUCH
226	11124209	4.53	CABLE CONDUIT DN30X0,6 PUR SPF	KABELSCHLAUCH
261	603200308	1	CABLE TIE 3,6X140-SCHWARZ PA66	KABELBINDER
284	11005151	5.59	INSULATING HOSE DN12X0,8 GLASSEIDE SI	ISOLIERSCHLAUCH
298	10441166	0.5	HEATSHRINK SLEEVING 11,6/2,5X2,29 POLY	SCHRUMPFSCHLAUCH
305	10870540	82.2	ELECTR.CABLE 1,0	KFZ-LEITUNG
345	10870539	34.5	ELECTR.CABLE 0,75	KFZ-LEITUNG
371	12100217	4.7	DATA LINE 2 X 1 FEP SPF	DATENLEITUNG
372	12100217	6.4	DATA LINE 2 X 1 FEP SPF	DATENLEITUNG
373	12100217	6.4	DATA LINE 2 X 1 FEP SPF	DATENLEITUNG
374	12100217	6.4	DATA LINE 2 X 1 FEP SPF	DATENLEITUNG
375	12100215	6.6	DATA LINE 3 X 1 FEP SPF	DATENLEITUNG
500	923512208	21	CABLE MARKER	KABELMARKER
501	602300208	2	PLUG SHELL 18-POL	STECKERGEHAEUSE
502	10342517	2	PLUG SHELL 2 13A TH.PLAST SW	STECKERGEHAEUSE
503	6003248	1	PLUG 4-POL 13A	STECKER
504	7368246	1	CONTACT LOCK DT-STECKDOSE 4-P	KONTAKTVERRIEGELUNG
505	10874178	1	PLUG CONTACT CPL. 4 POL PA66	STECKER KPL.
506	11060619	2	BUSHING HOUSING 2-POL 20A	BUCHSENGEHAEUSE
507	10813633	2	PLUG SHELL MCON MCP1,2 PA 66, GF30	STECKERGEHAEUSE
508	692406308	1	PLUG DIN 72585 4-POL POLYBUTOLEN SPF	STECKER
509	11341840	1	BUSHING HOUSING 4-POL PBT SCHWARZ	BUCHSENGEHAEUSE
510	11342208	1	BUSHING HOUSING 2-POL BL	BUCHSENGEHAEUSE
511	11342255	1	PLUG 2-POL SW	STECKER
512	10342518	3	SOCKET 2 13A	STECKDOSE
513	11342257	1	PLUG 4-POL SW	STECKER
514	11342259	1	PLUG 4-POL VIOLETT	STECKER
515	11000394	1	PLUG SHELL HP PBT-GF15	STECKERGEHAEUSE
516	6003168	1	PLUG 3-POL	STECKER
517	692406008	1	TERMINAL HOUSING DIN 72585 APD POLY	ENDGEHAEUSE
518	10342519	2	CONTACT LOCK DT V-KEIL	KONTAKTVERRIEGELUNG
519	11060618	3	PROTECTING CAP 180°	SCHUTZKAPPE
520	6205239	1	SOCKET 3-POL	STECKDOSE
521	6205242	1	CONTACT LOCK DT-STECKER 3-POL	KONTAKTVERRIEGELUNG
522	11491349	1	PROTECTING CAP 180°	SCHUTZKAPPE
523	7368241	2	CONTACT LOCK 2-POL	KONTAKTVERRIEGELUNG
524	12693951	1	CONTACT LOCK 2-POL	KONTAKTVERRIEGELUNG
643	602339408	2	SLEEVE CONTACT DIN 72585 0,5-1MM2 SP	BUCHSENKONTAKT
670	10100063	6	PLUG BUSHING 0,75-2,0MM2 Cu	STECKERBUCHSE

Pos.	Item	Quantity	Description	Bezeichnung
717	10300946	4	SLEEVE CONTACT 0,50-1MM2MM2 Cu	BUCHSENKONTAKT
726	10493495	4	SLEEVE CONTACT 0,5-1,0MM2 CuNiSi	BUCHSENKONTAKT
727	10493496	2	SLEEVE CONTACT 1,0-1,5MM2 CuNiSi	BUCHSENKONTAKT
740	7369458	6	PIN CONTACT 0,5-1,0MM2 CU	STIFTKONTAKT
754	10813644	9	SLEEVE CONTACT 0,5-0,75MM2 CuNiSi	BUCHSENKONTAKT
788	11342253	9	SLEEVE CONTACT 0,75-1,0MM2 SILBER	BUCHSENKONTAKT
789	11622989	4	SLEEVE CONTACT 0,5-1,0MM2 CuNiSi	BUCHSENKONTAKT
802	602330808	4	SINGLE STRAND SEALING 1,2-2,1MM BLAU	EINZELADERABDICHTUNG
804	602331508	9	SINGLE STRAND SEALING	EINZELADERABDICHTUNG
816	605619808	2	SINGLE STRAND SEALING DIN 72585 15BL	EINZELADERABDICHTUNG
817	692405808	2	STOPPER PLUG DIN 72585 4 SPF	BLINDSTOPFEN
823	7368253	1	STOPPER PLUG DEUTSCH GROESSE	BLINDSTOPFEN
828	10424625	9	SINGLE STRAND SEALING 1,4-2,1MM VMQ	EINZELADERABDICHTUNG
830	10014387	6	SINGEL SEAL 1,0-1,5MM2	EINZELDICHTUNG
836	10813642	1	STOPPER PLUG MCON 1,23,55MM VMQ 60	BLINDSTOPFEN
844	10870403	1	STOPPER PLUG 3,9-4,1MM SILIKON-KAUT	BLINDSTOPFEN
996	965622108	52	LETTERING WIRE	BESCHRIFTUNG ADER
998	965622208	1	LETTERING WIRING HARNESS	BESCHRIFTUNG KABELBAUM
2253	11000401	3	PLUG BUSHING 0,75-1,0MM2 CuNuSi	STECKERBUCHSE
2998	96014807	10	MACHINING CAN- STUETZP	BEARBEITUNG

Pos.	Item	Quantity	Description	Bezeichnung
5	11620017	9.93	LEAD 2 X 1	LEITUNG
6	10877798	1	CONNECTION CABLE 2X0,75-1,5M	ANSCHLUSSKABEL
125	602300308	2	CONTACT 0,5-1MM2	KONTAKT
500	923512208	4	CABLE MARKER	KABELMARKER
501	602331308	1	HOUSING 4-POL	GEHAEUSE
502	604526508	1	BUSHING SUPPORT 6-POL 16A	BUCHSENTRAEGER
503	604526608	1	PIN CARRIER 6-POL 16A	STIFTTRAEGER
504	602704808	2	CABLE SLEEVE 4-6	KABELTUELLE
505	604512108	1	SEALING PLUG M1-D	VERSCHLUSSKAPPE
506	604505508	1	CABLE SOCKET M11-Z	KABELDOSE
507	604508508	1	SEALING PLUG M 1-K	VERSCHLUSSKAPPE
508	604508608	1	PLUG 6-POL	STECKER
628	604519208	2	PIN CONTACT 0,75-1MM2	STIFTKONTAKT
629	604519308	2	SLEEVE CONTACT 0,75-1,0MM2	BUCHSENKONTAKT
812	604518908	10	STOPPER PLUG BAUREIHE_M1	BLINDSTOPFEN
998	965622208	3	LETTERING WIRING HARNESS	BESCHRIFTUNG KABELBAUM

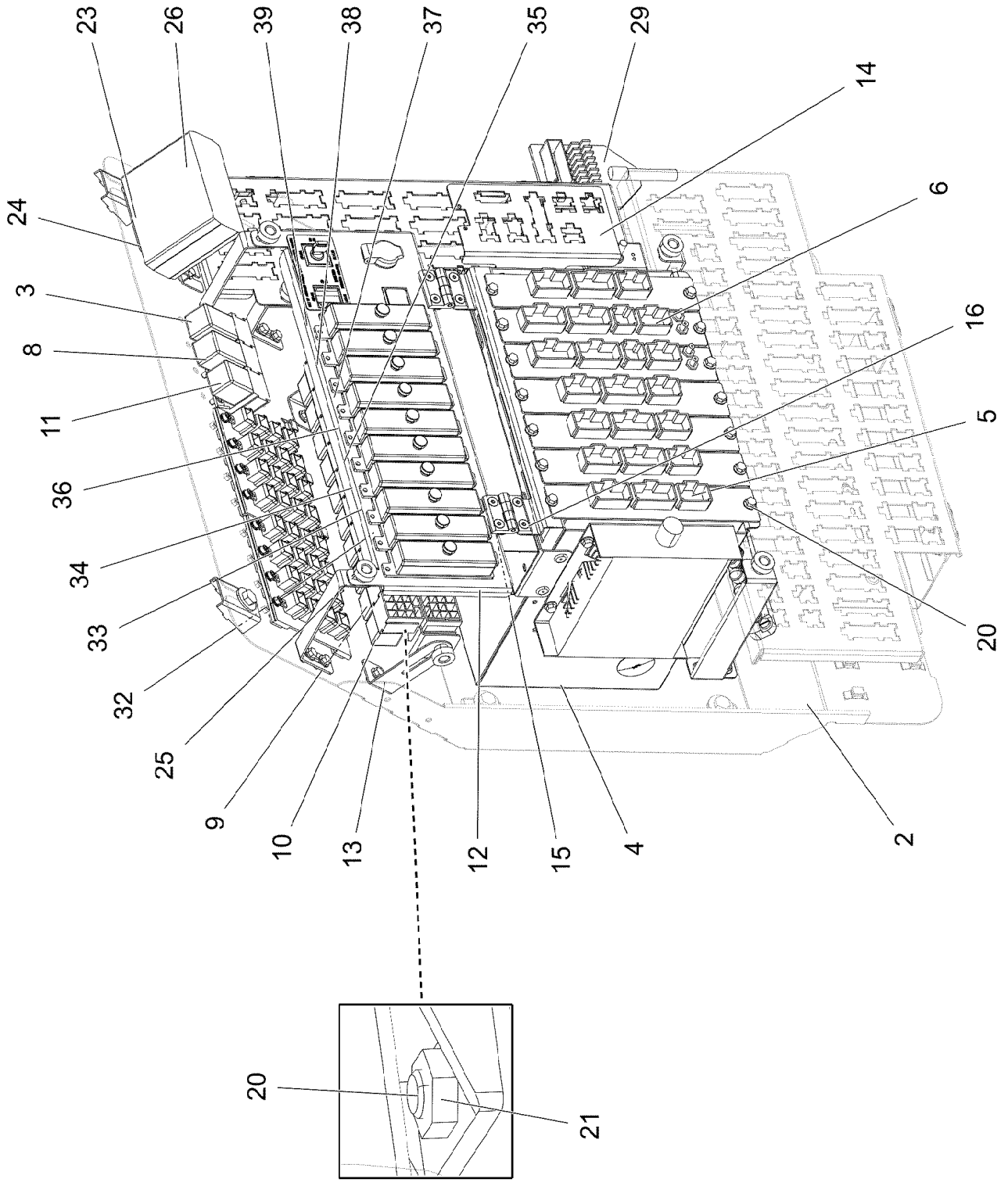
Pos. 30
23
26
39
38
37
35
29
14
24
6
3
16
8
5
11
36
34
20
33
32
25
9
10
13
12
15
4
2
20
21

Pos.	Item	Quantity	Description	Bezeichnung
2	96045386	1	BASE ASSEMBLY CPL. ⇨ ❑ 519	GRUNDAUFBAU KPL.
3	10877999	1	TIME RELAY 60S 24V	ZEITRELAIS
4	968063108	1	PRE-ASSEMBLY MOUNTING UNIT ⇨ ❑ 526	MONTAGEEINHEIT VORM.
5	968253608	5	UNIVERSAL INPUT-OUTPUT MODULE LSB- ⇨ ❑ 527	UNIVERSAL EIN-AUSGANGSMO
6	968252908	2	BTB PROGRAMMED ⇨ ❑ 39	BTB PROGRAMMIERT
8	10876716	1	TIME RELAY 10 H 24V	ZEITRELAIS
9	630121508	19	CENTER-ZERO RELAY 24V 10A SPF	WECHSLERRELAIS
10	630105408	1	RELAY 24V/1W 26X26X24MM SPF	RELAIS
11	10440553	1	DIODE SUBASSEMBLY PBTP-GF20 SPF	DIODENBAUSTEIN
12	969061708	1	CARRIER PLATE, PRE-ASSEMBLED ⇨ ❑ 529	TRAEGERBLECH SICHERUNG
13	97017074	1	PLATE 1.5X399X35 DC01 FE//ZNNI8//CN//T0	BLECH
14	97024733	1	PLATE 1.5X156X117 DC01 FE//ZNNI8//CN//T	BLECH
15	704258208	2	HINGE 20X20X40/180° GD-ZN SW GEPULV	SCHARNIER
16	10875550	8	COUNTERSUNK SCREW DIN 7991 M5X12 8	SENKSCHRAUBE
20	10875503	28	HEX SCREW EN 1665 M5X10 10.9 480H SPF	SECHSKANTSCHRAUBE
21	511001708	5	HEX NUT ISO 4035 M5 04	SECHSKANTMUTTER
23	408311208	4	PAN-HEAD SCREW ISO 7045 M2,5X12 4.8 A2	FLACHKOPFSCHRAUBE
24	425100408	4	TOOTH LOCK WASHER DIN 6797 A 2,7	ZAHNSCHEIBE
25	10449664	8	KNURLED SCREW M5X10 PA6	RAENDELSCHRAUBE
26	10873838	1	GSM MODULE MC-MRH	GSM-MODUL
29	660024508	1	ADAPTOR 18-POL SPF	ADAPTER
30	10472995	1	CONNECTING LINE 7X0,25-10,068M PUR	VERBINDUNGSLEITUNG
32	604007708	8	FLAT FUSE LINK 3A	FLACHSICHERUNGSEINSATZ
33	604006908	8	FLAT FUSE LINK 5A 32	FLACHSICHERUNGSEINSATZ
34	604007008	12	FLAT FUSE LINK 7,5A	FLACHSICHERUNGSEINSATZ
35	604007108	12	FLAT FUSE LINK 10A 32	FLACHSICHERUNGSEINSATZ
36	604007208	10	FLAT FUSE LINK 15A	FLACHSICHERUNGSEINSATZ
37	604007308	7	FLAT FUSE LINK 20A	FLACHSICHERUNGSEINSATZ
38	604007608	1	FLAT FUSE LINK 25A	FLACHSICHERUNGSEINSATZ
39	602735508	47	INSERTION BRIDGE	EINLEGEBRUECKE

Pos.	Item	Quantity	Description	Bezeichnung
1	96045387	1	CABLES, BASIC CONSTRUCTION CPL S400 ⇨ ❑ 520	DRAEHTE GRUNDAUFBAU KPL.
2	969256608	1	BASE ASSEMBLY ⇨ ❑ 521	GRUNDAUFBAU

Pos.	Item	Quantity	Description	Bezeichnung
2	96045388	1	BASIC WIRING CONST.PRE-ASSEMB. S400	DRAEHTE GRUNDAUFBAU VO
228	11124211	1.32	CABLE CONDUIT DN40X0,6 PUR SPF	KABELSCHLAUCH
229	11124212	0.65	CABLE CONDUIT DN50X0,6 PUR SPF	KABELSCHLAUCH
261	603200308	30	CABLE TIE 3,6X140-SCHWARZ PA66	KABELBINDER
268	603202208	30	CABLE TIE 2,5X98-SCHWARZ PA66	KABELBINDER
269	603200408	30	CABLE TIE 3,6X200-SCHWARZ PA66	KABELBINDER
501	602209708	5	ATTACHABLE SLEEVE HOUSING 2-POL	STECKHUELSENGEHAEUSE
502	602761608	2	TERMINAL MARKER 0,2-2,5MM²	MESSERTRENNKLEMME
503	602305908	1	FLAT PLUG HOUSING FASTIN-FASTON	FLACHSTECKERGEHAEUSE
504	602331308	32	HOUSING 4-POL	GEHAEUSE
505	602323308	53	FLAT PLUG HOUSING 18-POL	FLACHSTECKERGEHAEUSE
506	602336008	6	PLUG SHELL 14-POL	STECKERGEHAEUSE
507	602301408	2	HOUSING 8-POL	GEHAEUSE
508	10046999	10	PLUG 8-POL	STECKER
509	602338608	1	FEMALE PLUG 9-POLE	BUCHSENSTECKER
510	10099863	7	HOUSING 15-POLE	GEHAEUSE
511	10099867	7	CONTACT RETAINING PIN JPT 15 POLE	KONTAKTSICHERUNGSSTIFT
512	630122908	23	PLUG BASE 9-POLE	RELAISSTECKSOCKEL
513	10047001	10	PLUG 8-POL	STECKER
514	602337608	1	RETAINER HOUSING 4-POL 19A	AUFNAHMEGEHAEUSE
515	10047000	10	PLUG 8-POL	STECKER
516	602335908	4	PLUG SHELL 4-POL	STECKERGEHAEUSE
517	5603876	1	LINE CONNECTOR	LEITUNGSVERBINDER
518	602337008	1	CONNECTOR PLUG A AX	ANSCHLUSSSTECKER
519	10099864	5	HOUSING 18-POL	GEHAEUSE
520	602338208	5	SECURING PIN FOR JPT PLUG	SICHERUNGSSTIFT
521	10099856	9	HOUSING 21-POLE	GEHAEUSE
522	10099868	9	CONTACT RETAINING PIN JPT 21 POL	KONTAKTSICHERUNGSSTIFT
523	602300208	1	PLUG SHELL 18-POL	STECKERGEHAEUSE
524	602325608	2	FLAT PLUG HOUSING JPT	FLACHSTECKERGEHAEUSE
525	11067932	14	FLAT PLUG HOUSING 18-POL	FLACHSTECKERGEHAEUSE
526	602325508	2	HOUSING 6-POL	GEHAEUSE
527	10099860	2	HOUSING 9-POL	GEHAEUSE
528	10045101	2	CONTACT RETAINING PIN 9POL GELB	KONTAKTSICHERUNGSSTIFT
529	636107901	1	TERMINAL/CLAMP	KLEMME

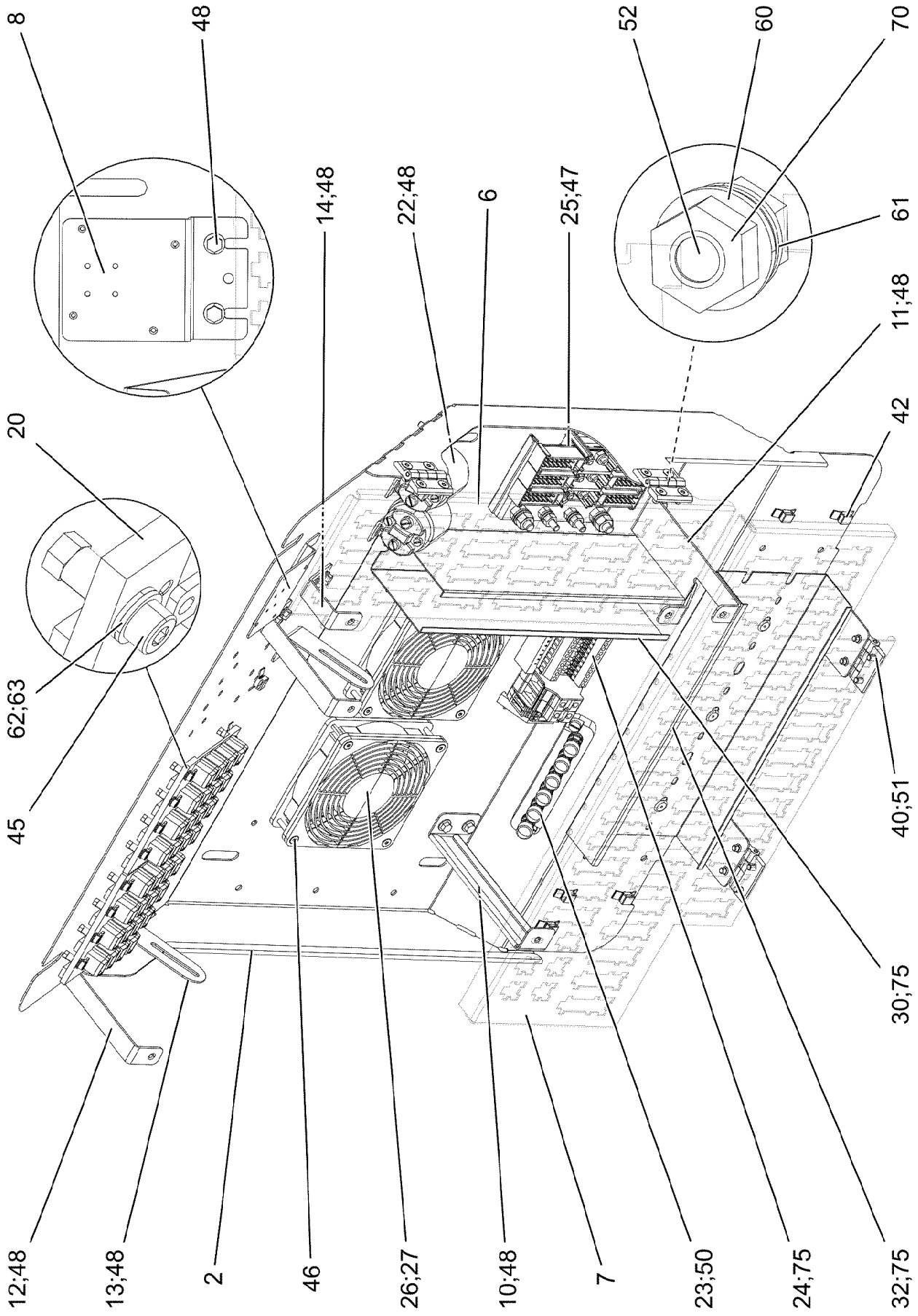

4.12.2020 095994 LIEBHERR	**etk_en_de 047580 LTR 1220** **BASE ASSEMBLY** **GRUNDAUFBAU**	❑ 521 (1/2) **969256608**

Pos.	Item	Quantity	Description	Bezeichnung
2	965461108	1	ASSEMBLY PLATE PRE-ASS.	MONTAGEBLECH VORM.
(1)	978610208	1	MOUNTING PLATE 1.5X753X899 DC01	MONTAGEBLECH
(3)	413006208	16	BLIND RIVET NUT M4 K=1,0-3,0	BLINDNIETMUTTER
6	97010811	1	PLUG PLATE 1.5X449X175 DC01	STECKERBLECH
7	97010812	1	PLUG PLATE 1.5X594X283 DC01	STECKERBLECH
8	97025882	1	PLATE 1.5X114X70 DC01 FE//ZNNI8//CN//T0	BLECH
10	978608608	1	HOLDER 1.5X198X59 DC01 FE//ZNNI8//CN//T	HALTER
11	97010814	1	RETAINER PLATE 2X192X41 DC01 FE//ZNNI	HALTERBLECH
12	979294808	2	PLATE 2X190X18 DC01 FE//ZNNI8//CN//T0	BLECH
13	972940008	2	PLATE 1.5X112X30 DC01 FE//ZNNI8//CN//T0	BLECH
14	97010815	1	RETAINER PLATE 2X121X18 DC01	HALTERBLECH
20	10027448	2	CURRENT SOURCE LSB SPF	STROMQUELLE
22	11160723	2	PERFORMANCE RELAY 75A	LEISTUNGSRELAIS
23	922648308	1	TERMINAL BOARD PRE-ASS. ⇨ ❑ 523	KLEMMBRETT VORM.
24	967589508	1	TERMINAL STRIP ⇨ ❑ 524	KLEMMENLEISTE
25	926891108	1	GROUND RAIL ⇨ ❑ 525	VERTEILER MASSE
26	963398008	2	PREMOUNT.AXIAL FLOW FAN UPPER ⇨ ❑ 456	AXIALLUEFTER VORM.OBEN
27	10222686	2	GUARD PA	SCHUTZGITTER
30	638109101	0.28	WIRING DUCT 80X40/2000 HARD-PVC	VERDRAHTUNGSKANAL
32	601407008	0.29	CABLE CHANNEL 40X120/2000	KABELKANAL
40	704258208	4	HINGE 20X20X40/180° GD-ZN SW GEPULV	SCHARNIER
42	11492315	11	CABLE CLIP HOLDER 8,1X-SCHWARZ PA66	KABELBINDERHALTER
45	10876395	16	SOCKET HEAD SCREW ISO 4762 M4X12 8.8	ZYLINDERSCHRAUBE
46	10876388	8	COUNTERSUNK SCREW DIN 7991 M4X35 8	SENKSCHRAUBE
47	10875564	2	SOCKET HEAD SCREW ISO 1207 M4X10 4.8	ZYLINDERSCHRAUBE
48	10875503	18	HEX SCREW EN 1665 M5X10 10.9 480H SPF	SECHSKANTSCHRAUBE
50	10876384	2	PAN-HEAD SCREW ISO 7045 M5X16 4.8 480	FLACHKOPFSCHRAUBE
51	10875550	16	COUNTERSUNK SCREW DIN 7991 M5X12 8	SENKSCHRAUBE
52	11651767	1	HEX SCREW ISO 4017 M8X20 8.8 480H SPF	SECHSKANTSCHRAUBE
60	425221108	1	SERRATED LOCK WASHER DIN 6798 J 8.4	FAECHERSCHEIBE
61	10289803	2	WASHER ISO 7089 8 300HV 480H SPF	SCHEIBE
62	10875645	16	WASHER ISO 7089 4 200HV 480H SPF	SCHEIBE
63	425220708	16	SERRATED LOCK WASHER DIN 6798 J 4.3	FAECHERSCHEIBE
70	11693875	2	HEX NUT ISO 4032 M8 8 480H SPF	SECHSKANTMUTTER
75	704232308	12	BLIND RIVET 4,0X10,5	BLINDNIET

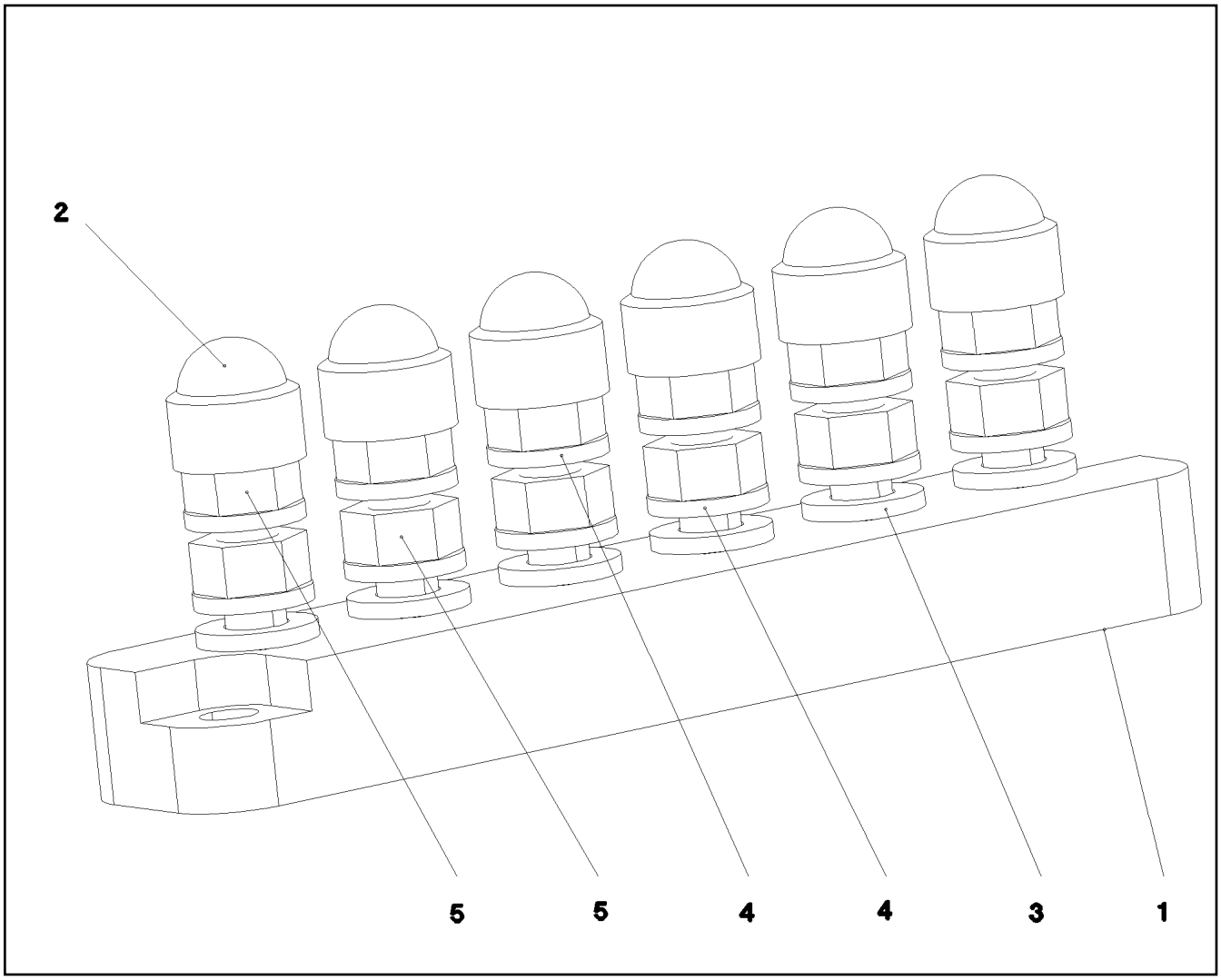

Pos.	Item	Quantity	Description	Bezeichnung
1	604412408	1	CLAMPING BOARD 6XM6	KLEMMBRETT
2	779020108	6	PROTECTING CAP SW10	SCHUTZKAPPE
3	10197771	6	WASHER ISO 7089 6 200HV ZNNI-480H SPF	SCHEIBE
4	12102694	12	SERRATED LOCK WASHER DIN 6798 A 6.4	FAECHERSCHEIBE
5	10197764	12	HEX NUT ISO 4032 M6 10 ZNNI-480H SPF	SECHSKANTMUTTER

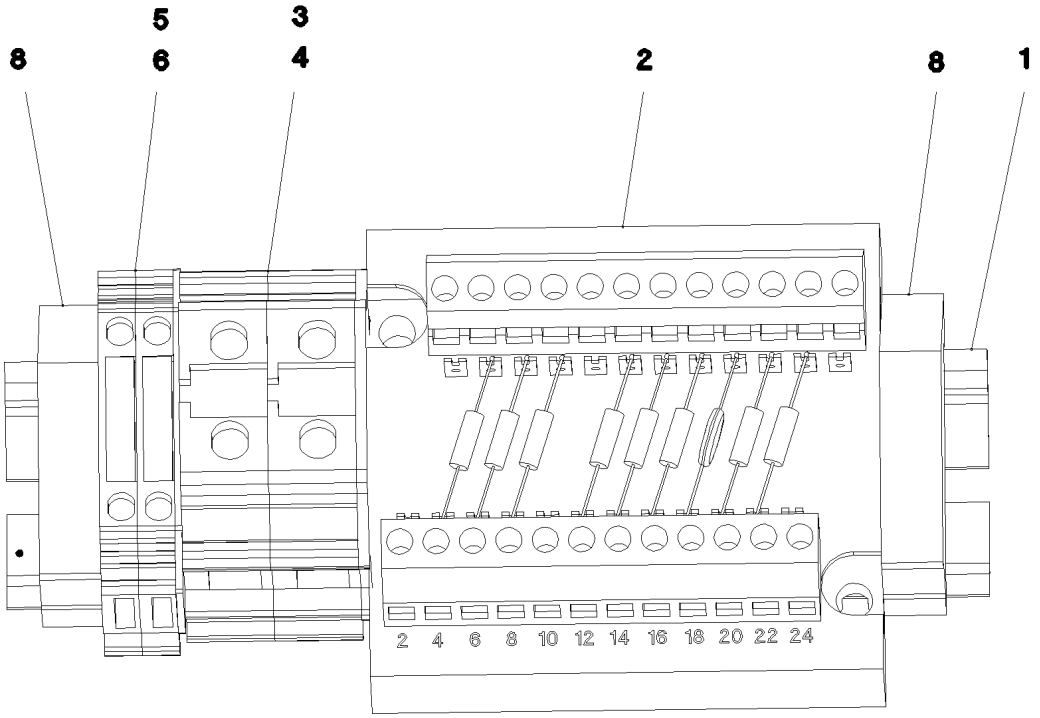

Pos.	Item	Quantity	Description	Bezeichnung
1	602106708	0.135	TOP HAT RAIL 35X27X7,3X1	HUTSCHIENE
2	965547208	1	INSERTION MODULE 12POLIG	BESTUECKUNGSMODUL
3	636107901	2	TERMINAL/CLAMP	KLEMME
4	636109301	1	COVER	DECKEL
5	602761608	2	TERMINAL MARKER 0,2-2,5MM²	MESSERTRENNKLEMME
6	602761708	1	COVER	DECKEL
7	602762908	1	IDENTIFICATION STRIPS	BEZEICHNUNGSSTREIFEN
8	602794608	2	END ANGLE	ENDWINKEL

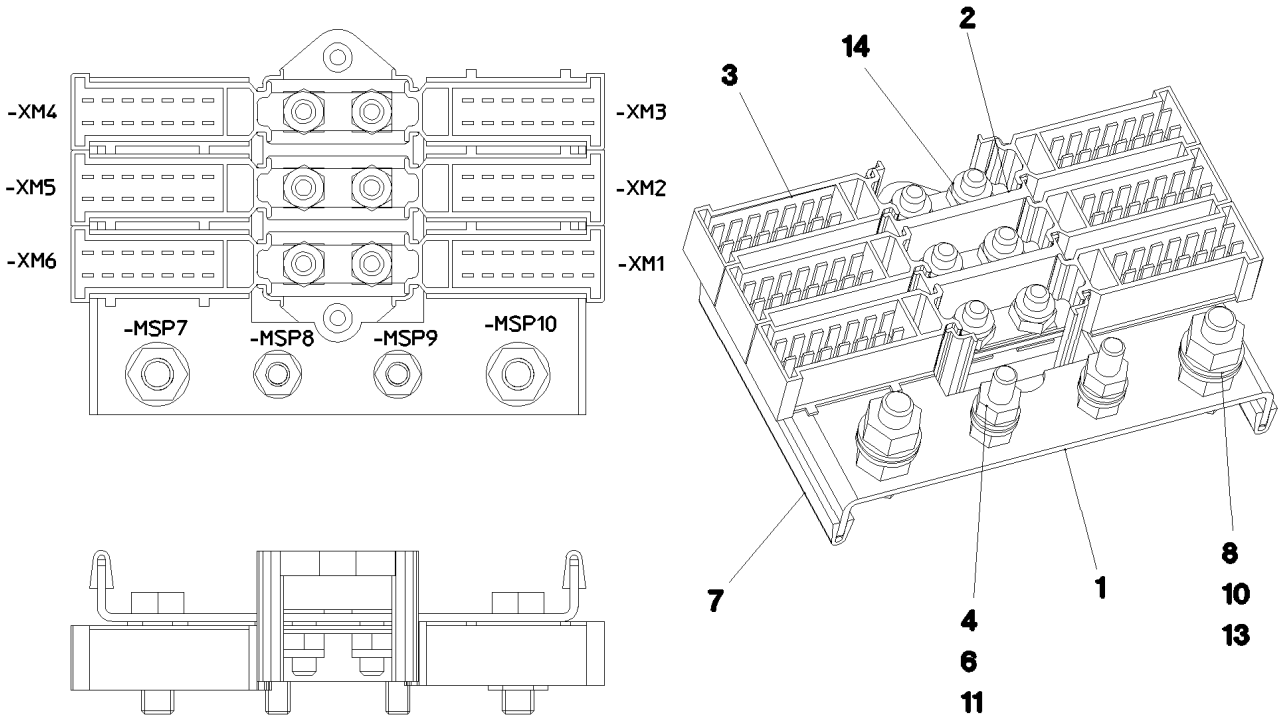

Pos. 12

Pos.	Item	Quantity	Description	Bezeichnung
1	97083880	1	PLATE 2X143X88 DC01 FE//ZNNI8//CN//T0	BLECH
2	602336408	1	CABLE CONNECTOR	KABELVERBINDER
3	602336508	6	PLUG SHELL 14-POL	STECKERGEHAEUSE
4	10197771	4	WASHER ISO 7089 6 200HV ZNNI-480H SPF	SCHEIBE
6	10197764	4	HEX NUT ISO 4032 M6 10 ZNNI-480H SPF	SECHSKANTMUTTER
7	262103908	0.16	EDGE PROTECTION 1-2X9,5X6,5	KANTENSCHUTZ
8	10197831	2	HEX SCREW ISO 4017 M8X25 8.8 ZNNI-480	SECHSKANTSCHRAUBE
10	10197760	4	HEX NUT ISO 4032 M8 10 ZNNI-480H SPF	SECHSKANTMUTTER
11	10197836	2	HEX SCREW ISO 4017 M6X25 8.8 ZNNI-480	SECHSKANTSCHRAUBE
12	602761408	10	NAME PLATE 20X8	BEZEICHNUNGSSCHILD
13	10289803	4	WASHER ISO 7089 8 300HV 480H SPF	SCHEIBE
14	12102692	6	HEX NUT DIN 985 M6 8 ZNNI-480H SPF	SECHSKANTMUTTER

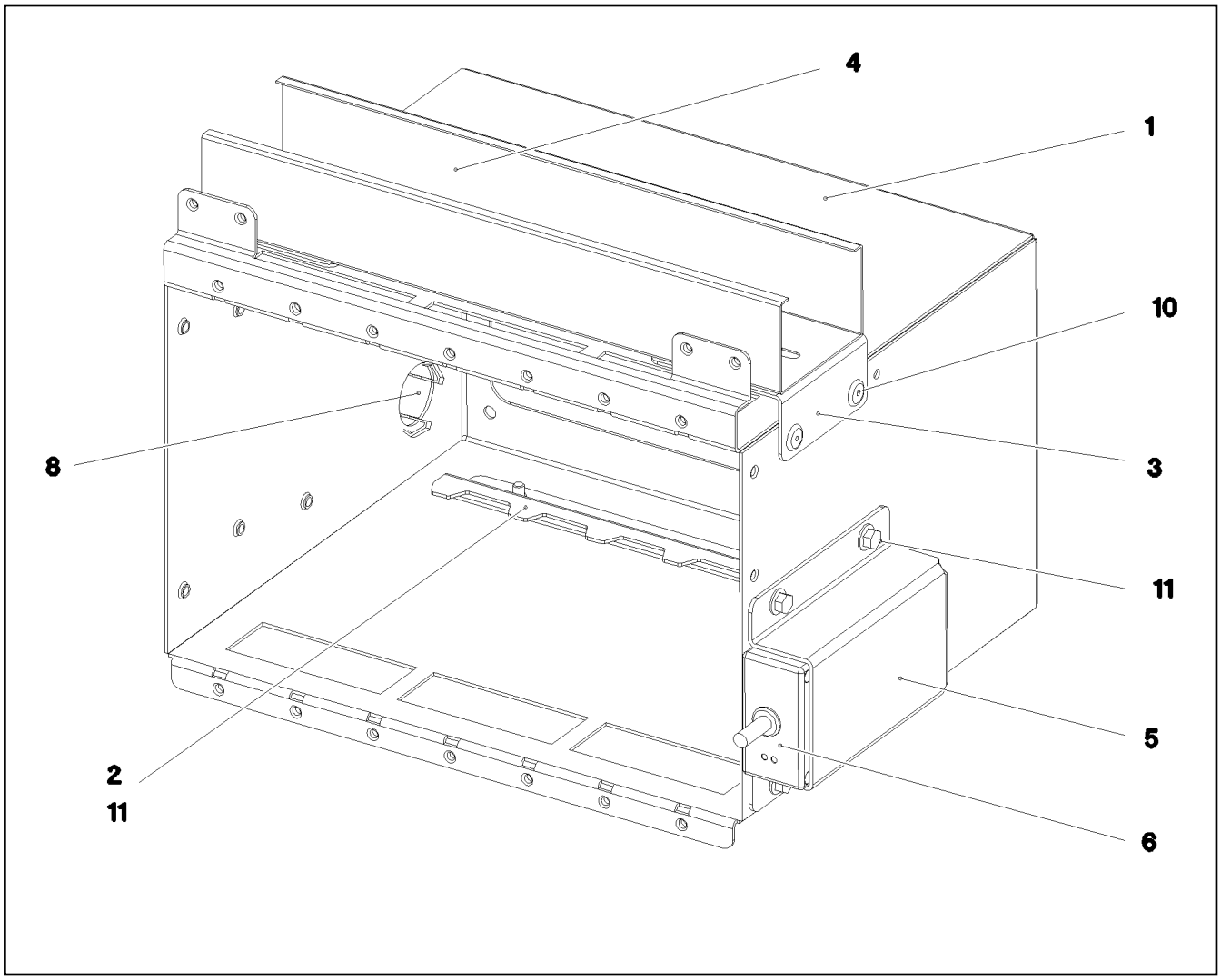

Pos.	Item	Quantity	Description	Bezeichnung
1	978606708	1	PLATE 1.5X779X733 DC01 FE//ZNNI8//CN//T	BLECH
2	979294908	1	PLATE 1.5X256X53 DC01 FE//ZNNI8//CN//T0	BLECH
3	978842708	2	PLATE 1.5X70X100 DC01 FE//ZNNI8//CN//T0	BLECH
4	601406408	0.3	CABLE CHANNEL 40X60/2000	KABELKANAL
5	976536208	1	PLATE 2X162X142 ALMG3 H111	BLECH
6	10340438	1	DATALOGGER LDL2 DIGITAL SPF	DATENLOGGER
8	591570908	1	COVER LID POLYSTIC27-33 ABS	ABDECKKAPPE
10	704232308	6	BLIND RIVET 4,0X10,5	BLINDNIET
11	10875503	6	HEX SCREW EN 1665 M5X10 10.9 480H SPF	SECHSKANTSCHRAUBE

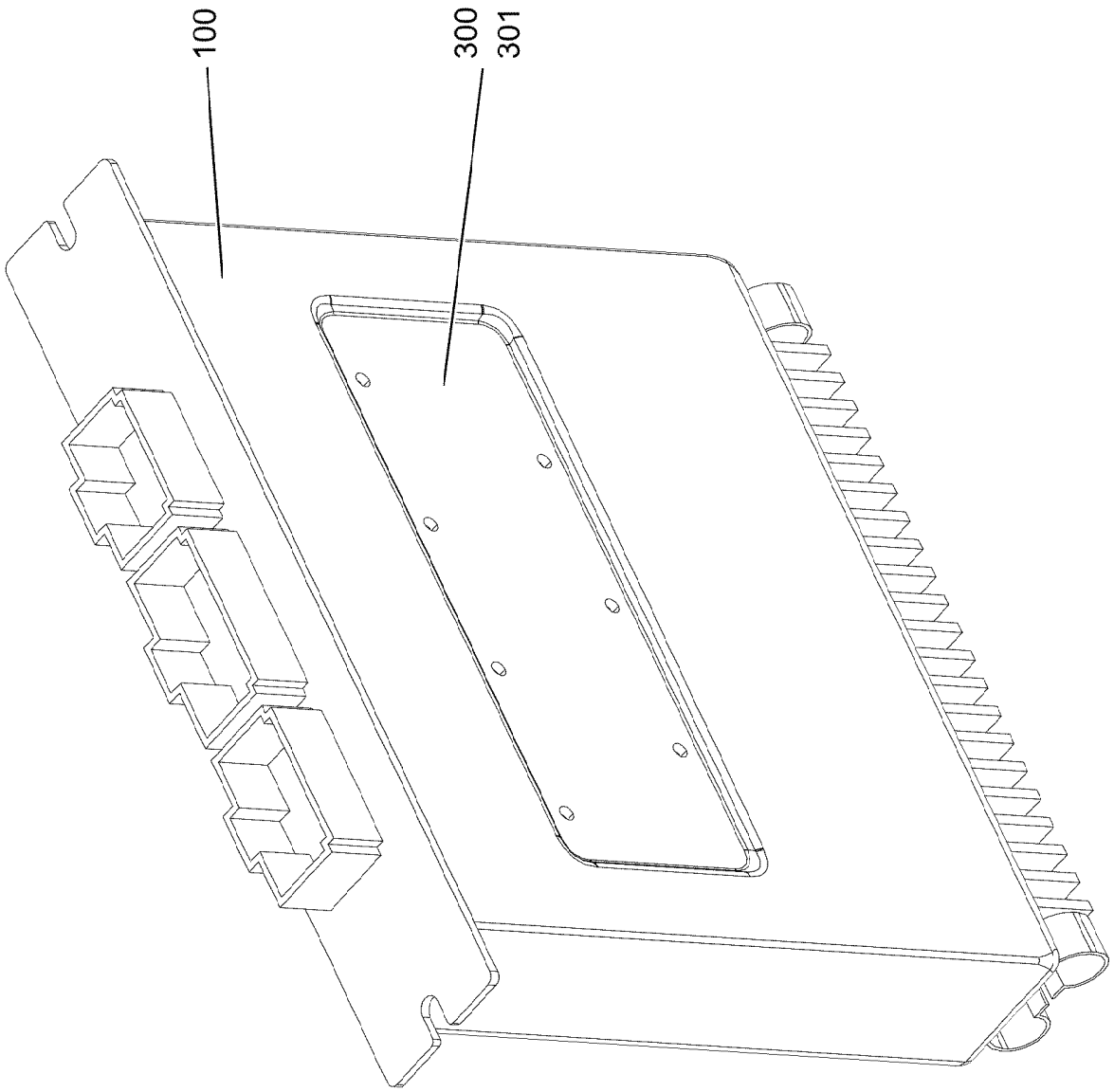
100
300
301

Pos.	Item	Quantity	Description	Bezeichnung
100	11213706	1	INPUT/OUTPUT MODULE LSB-UEA-A SPF	EIN-/AUSGANGSMODUL
300	10288121	1	NAME PLATE 70X40 POLYESTER SPF	BEZEICHNUNGSSCHILD
301	11007853	1	LABELS 10X90 POLYESTER	ETIKETTEN

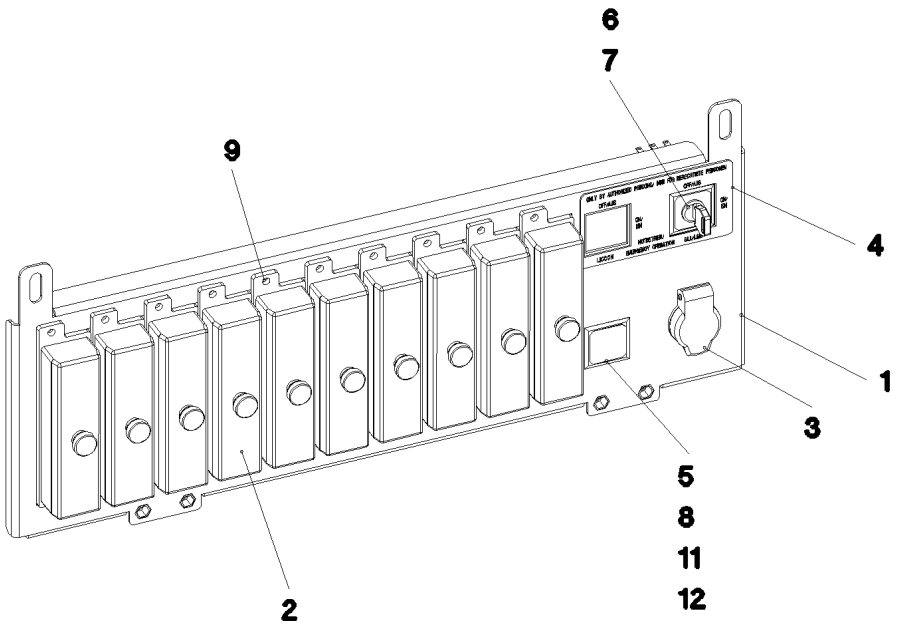

Pos.	Item	Quantity	Description	Bezeichnung
1	965807808	1	CARRIER PLATE, PRE-ASSEMBLED	TRAEGERBLECH VORM.
(1)	979295008	1	TEARDROP PLATE 1.5X442X181 DC01 FE//	TRAEGERBLECH
(2)	10042592	4	BLIND RIVET NUT M5 K=1,0-3,5 ST A2C	BLINDNIETMUTTER
2	604501608	10	FUSE BOX SMALL 6-POL, LEER	SICHERUNGSDOSE
3	605203908	1	BUILT-IN SOCKET 2-POL	EINBAUSTECKDOSE
4	976540908	1	SIGN	SCHILD
5	606143408	1	TOUCH CONTACT TRANSMITTER 1OE+1S	TASTKONTAKTGEBER
6	606144608	1	TOUCH CONTACT TRANSMITTER 2OE+2S	TASTKONTAKTGEBER
7	606144908	1	TURNLOCK ACTUATOR 1W	DREHSCHLOSSBETAETIGER
(1)	10873434	1	KEY	SCHLUESSEL
8	606143008	1	PUSH BUTTON	DRUCKTASTE
9	704207608	20	MANDRIL RIVET 4X10,3	DORNNIET
11	606145108	1	PUSH-BUTTON CAP FLACH GRUEN	TASTERKAPPE
12	602042208	1	RETAINING NUT M16X1	BEFESTIGUNGSMUTTER

Pos.	Item	Quantity	Description	Bezeichnung
4	96045351	1	HYDRAULICS UPPER CARRIAGE ⇨ ❑ 531	HYDRAULIK OBERWAGEN
10	969347008	1	HOSE LINES ADDITIONAL PARTS DREH- B ⇨ ❑ 563	SCHLAUCHLEITUNGEN ZUSATZ

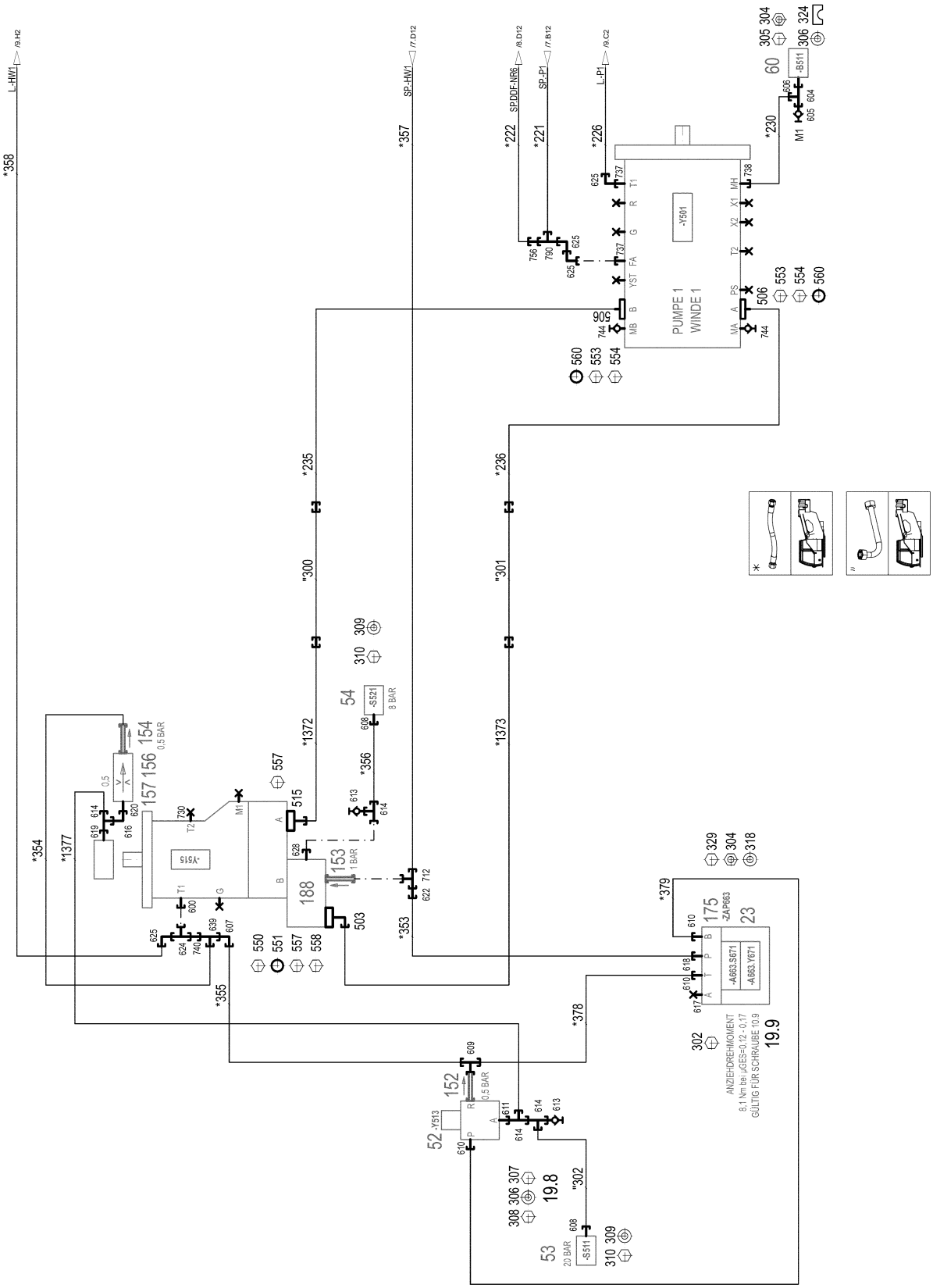

4.12.2020 077254	**etk_en_de 047580 LTR 1220**	531 (1/13)
LIEBHERR	**HYDRAULICS UPPER CARRIAGE** **HYDRAULIK OBERWAGEN**	**96045351**

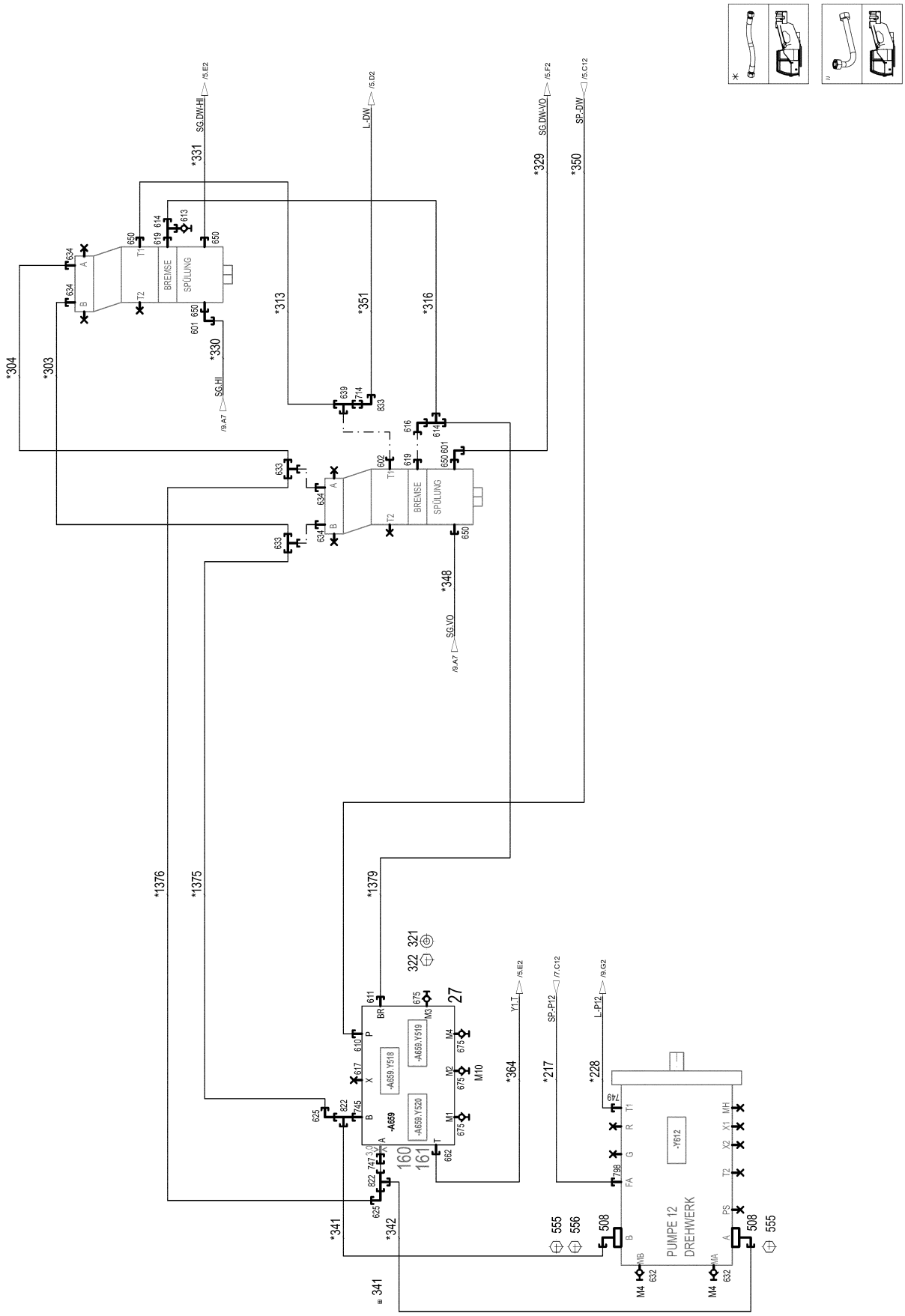
SG.DW-HI
L-DW
SG.DW-VO
SP-DW
SG.HI
SG.VO
BREMSE
SPÜLUNG
-A659.Y518
-A659.Y519
-A659.Y520
-A659
-Y612
PUMPE 12
DREHWERK
SP-P12
L-P12
Y1.T

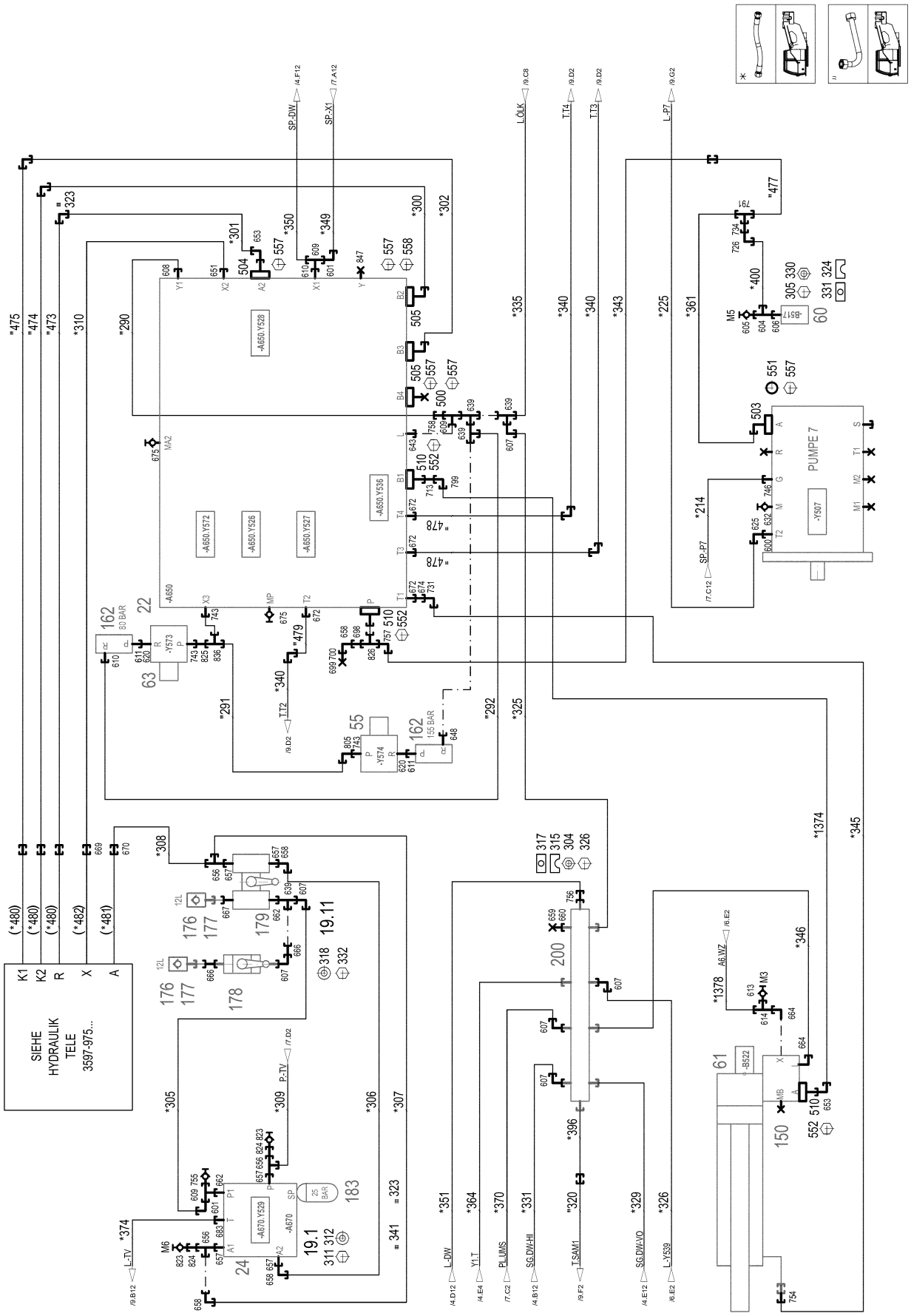

4.12.2020 077408	**etk_en_de 047580 LTR 1220**	533 (3/13)
LIEBHERR	**HYDRAULICS UPPER CARRIAGE** **HYDRAULIK OBERWAGEN**	**96045351**

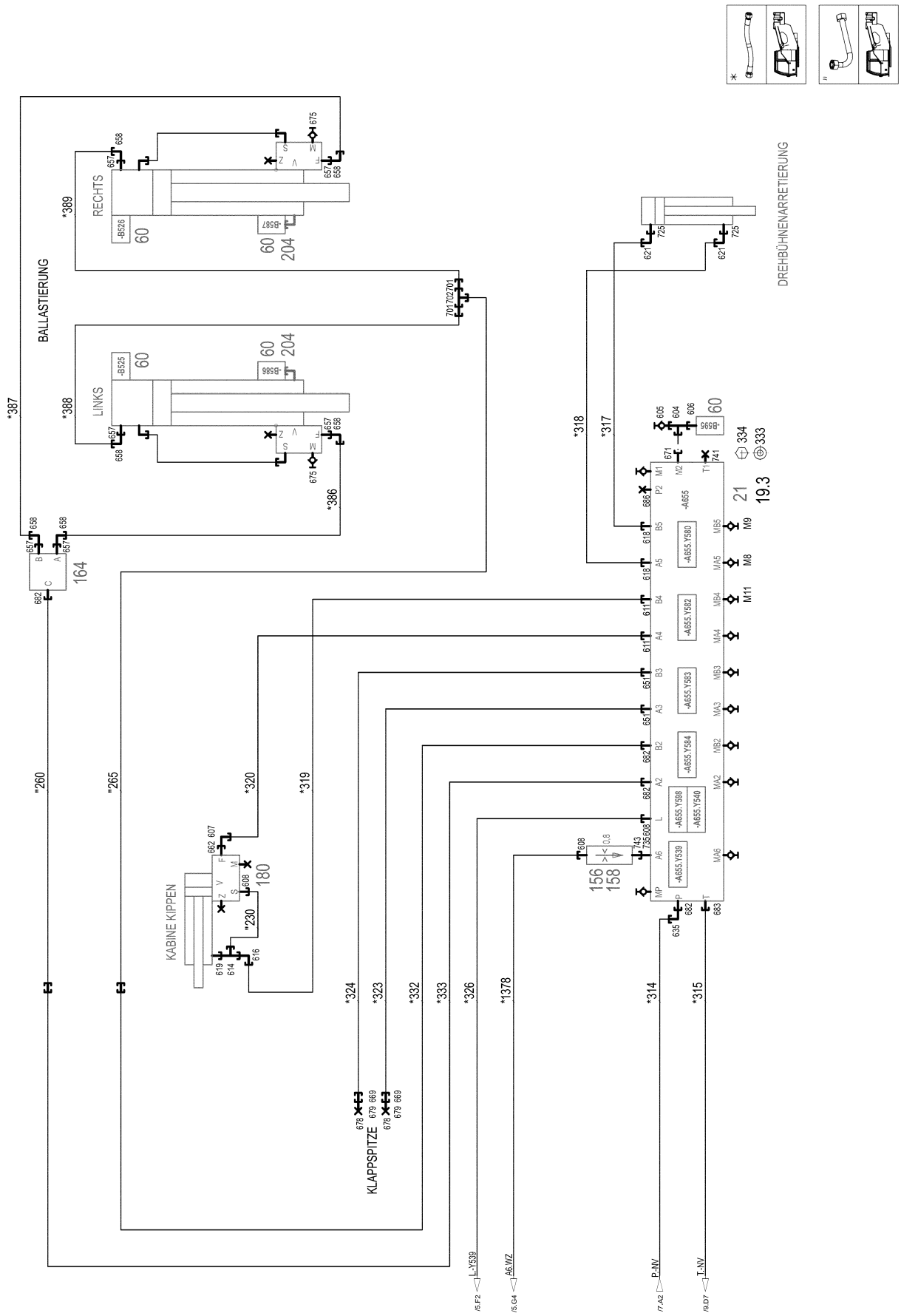
BALLASTIERUNG
RECHTS
LINKS
KABINE KIPPEN
KLAPPSPITZE
DREHBÜHNENARRETIERUNG
-A655.Y580
-A655.Y582
-A655.Y583
-A655.Y584
-A655.Y598
-A655.Y540
-A655.Y539
L-Y539
A6.WZ
P-NV
T-NV

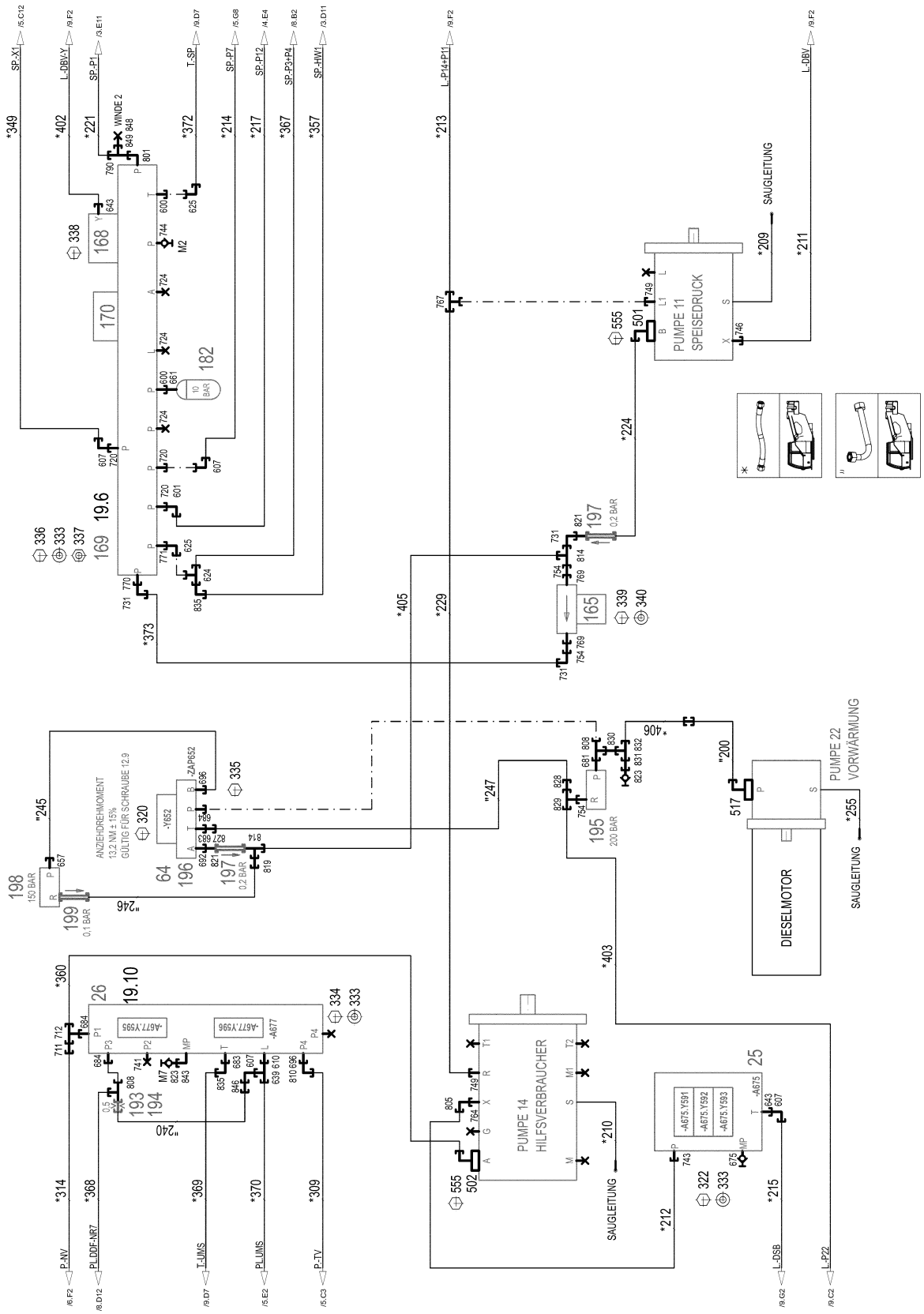

4.12.2020 077410	**etk_en_de 047580 LTR 1220**	535 (5/13)
LIEBHERR	**HYDRAULICS UPPER CARRIAGE** **HYDRAULIK OBERWAGEN**	**96045351**

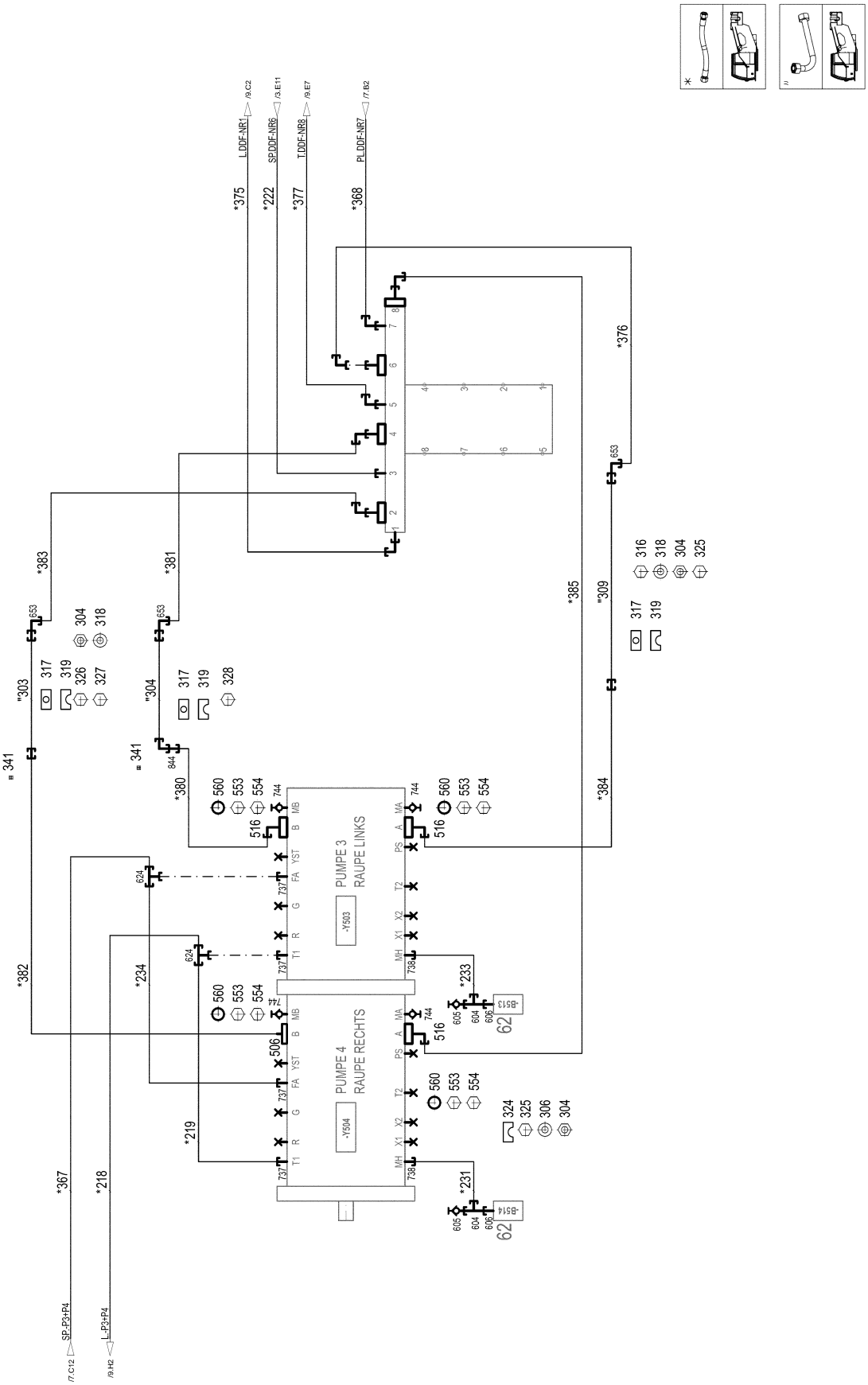

4.12.2020 077411	**etk_en_de 047580 LTR 1220**	536 (6/13)
LIEBHERR	**HYDRAULICS UPPER CARRIAGE** **HYDRAULIK OBERWAGEN**	**96045351**

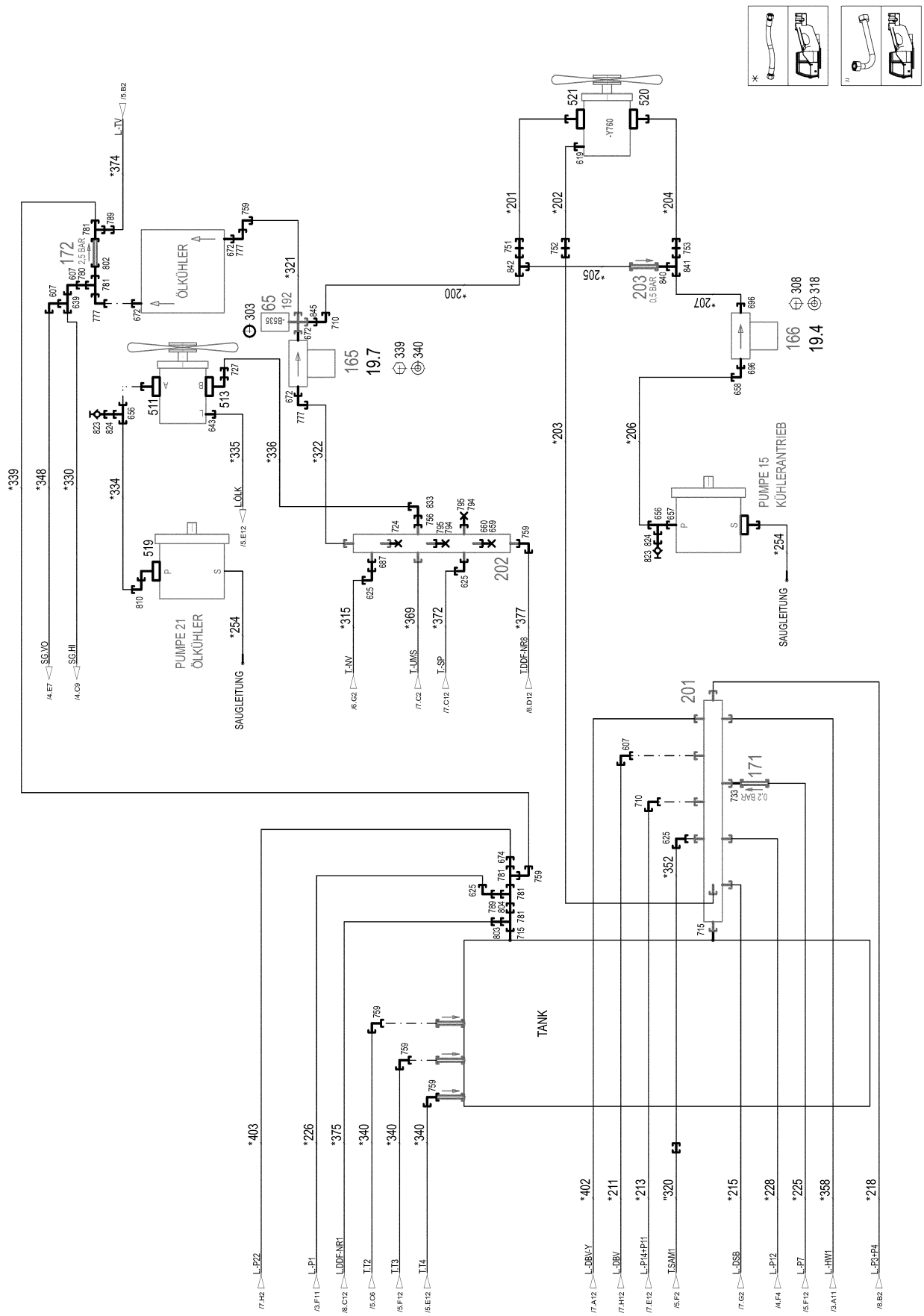

4.12.2020 077412	**etk_en_de 047580 LTR 1220**	537 (7/13)
LIEBHERR	**HYDRAULICS UPPER CARRIAGE** **HYDRAULIK OBERWAGEN**	**96045351**

Pos.	Item	Quantity	Description	Bezeichnung
19	96035117	1	MECHANICAL AUXILIARIES ⇨ ❑ 544	MECH.BEFESTIGUNGSTEILE
21	11211756	1	CONTROL BLOCK 320BAR SPF ⇨ ❑ 546	STEUERBLOCK
22	10413106	1	CONTROL BLOCK 365BAR SPF ⇨ ❑ 549	STEUERBLOCK
23	10652724	1	DIRECTIONAL CONTROL VALVE 4/2 NG6-3	WEGEVENTIL
(1)	10564740	1	MAGNET COIL	MAGNETSPULE
(2)	7027459	1	NUT	MUTTER
(999)	571840008	1	SEAL KIT	DICHTSATZ
24	10332882	1	CONTROL BLOCK 330BAR SPF ⇨ ❑ 552	STEUERBLOCK
25	10877433	1	VALVE BLOCK 420BAR ZNNI SPF	VENTILBLOCK
(4)	12104171	3	MAGNET COIL	MAGNETSPULE
26	12100860	1	CONTROL BLOCK 315BAR SPF	STEUERBLOCK
27	11341035	1	CONTROL BLOCK 380BAR SPF ⇨ ❑ 554	STEUERBLOCK
52	511444408	1	DIRECTIONAL CONTROL VALVE 3/2 350BA ⇨ ❑ 62	WEGEVENTIL
53	10289536	1	PRESSURE SWITCH 0-20/300BAR SPF	DRUCKSCHALTER
54	10220933	1	PRESSURE SWITCH 0-8/300 BAR SPF	DRUCKSCHALTER
55	511464108	1	DIRECTIONAL CONTROL VALVE 2/2 350BA	WEGEVENTIL
(1)	570633808	1	MAGNET 24V	MAGNET
60	10813738	7	PRESSURE SENSOR 0-400/400 BAR LSB PL:	DRUCKAUFNEHMER
61	10816185	1	PRESSURE SENSOR 0-400/400 BAR LSB PL:	DRUCKAUFNEHMER
62	10813739	2	PRESSURE SENSOR 0-750/750 BAR LSB PL:	DRUCKAUFNEHMER
63	511320108	1	DIRECTIONAL CONTROL VALVE 2/2 350BA	WEGEVENTIL
(1)	570633808	1	MAGNET 24V	MAGNET
(999)	10802253	1	SEAL KIT DIRECTIONAL VALVE	DS WEGEVENTIL
64	10449853	1	DIRECTIONAL CONTROL VALVE 3/2 NG10-3 ⇨ ❑ 557	WEGEVENTIL
65	691183108	1	TEMPERATURE SENSOR -30/+130°C SPF	TEMPERATURGEBER
150	10038474	1	LOWERING BRAKE VALVE SPF	SENKBREMSVENTIL
(1)	10346599	1	STRAINER FILTER	SIEBFILTER
(2)	511040408	3	STOP PLUG	STOPFEN
(999)	10816799	1	DS LOWERING BRAKE VALVE	DS SENKBREMSVENTIL
152	511460608	1	NON-RETURN VALVE 400BAR CR6-FREI	RUECKSCHLAGVENTIL
153	510408708	1	NON-RETURN VALVE 420BAR CR6-FREI	RUECKSCHLAGVENTIL
154	511311808	1	NON-RETURN VALVE 400BAR CR6-FREI	RUECKSCHLAGVENTIL
156	510671108	2	FILTER CARTRIDGE 0,005m³/min 25µm	FILTERPATRONE
157	511062708	1	NOZZLE 0,5 M5X9 MS	DUESE
158	510754008	1	NOZZLE 0,8 M5X9	DUESE
160	971581108	1	FITTING	VERSCHRAUBUNG
161	511059408	1	NOZZLE 3,0 M10X10 MS	DUESE
162	511433908	2	PRESSURE LIMITING VALVE pmax=700BAR ⇨ ❑ 558	DRUCKBEGRENZUNGSVENTIL
164	511485408	1	FLOW DIVIDER VALVE 120L/MIN	STROMTEILVENTIL
165	510671508	2	PRESSURE FILTER	DRUCKFILTER
(1)	10037623	1	FILTER INSERT OEL 10µm	FILTEREINSATZ
(3)	10101384	1	RS PRESSURE FILTER DF...330FG 1.0	RS DRUCKFILTER
(4)	571356108	1	CLOGGING INDICATOR	VERSCHMUTZUNGSANZEIGE
166	510674508	1	LINE FILTER	LEITUNGSFILTER
(1)	10037616	1	FILTER INSERT OEL 10µm	FILTEREINSATZ
(2)	10035534	1	REPAIR KIT -E DF/LF	REPARATURSATZ
168	11161570	1	PRESSURE LIMITING VALVE pmax=350BAR	DRUCKBEGRENZUNGSVENTIL
(999)	10684170	1	SEAL KIT GRUNDBLOCK	DICHTSATZ
169	511055908	1	CONNECTION BLOCK	ANSCHLUSSBLOCK
170	511497514	1	BLANKING PLATE	BLINDPLATTE
171	511316708	1	NON-RETURN VALVE 250BAR CR6-FREI	RUECKSCHLAGVENTIL
172	511435108	1	NON-RETURN VALVE 250BAR CR6-FREI	RUECKSCHLAGVENTIL

Pos.	Item	Quantity	Description	Bezeichnung
175	510629508	1	CONNECTING PLATE	ANSCHLUSSPLATTE
176	511505808	2	COUPLING SLEEVE B2 12-L	KUPPLUNGSMUFFE
(1)	571082508	1	SHEET GASKET 7,6X15,8X1 VITON	DICHTSCHEIBE
(2)	571082608	1	O-RING 17X2 FPM70	O-RING
(3)	571082708	1	O-RING 22X1,5 FPM70	O-RING
(4)	571082808	1	SUPPORTING RING 17,5X20,9X1 PTFE	STUETZRING
177	10466914	2	HEX CAP NUT RD32X3 SPF	VERSCHLUSSMUTTER
178	510697608	1	BALL VALVE BKH12-L-10 A3C ⇨ ❑ 559	KUGELHAHN
179	510697708	1	BALL VALVE COMBINATION DN13 STAHL	KUGELHAHNKOMBINATION
(10)	10112569	1	GRIP ZN-DRUCKGUSS	GRIFF
180	10218310	1	LOAD HOLDING VALVE 400BAR SPF ⇨ ❑ 560	LASTHALTEVENTIL
182	510642508	1	DIAPHRAGM ACCUMULATOR 2L 10BAR	MEMBRANSPEICHER
(998)	10650501	1	REPAIR KIT	REPARATURSATZ
183	510644608	1	DIAPHRAGM ACCUMULATOR 0,7L 25BAR	MEMBRANSPEICHER
(1)	7371651	1	SEALING RING DIN 3869 21X18,5 NBR	DICHTRING
(998)	10650501	1	REPAIR KIT	REPARATURSATZ
188	511057608	1	CONNECTION FLANGE	ANSCHLUSSFLANSCH
192	472332008	1	FITTING EL 42L A3P SPF	VERSCHRAUBUNG
193	511044108	1	NOZZLE 0,5 M5X5	DUESE
194	971774408	1	UNION PIECE RETOUCH	VERSCHRAUBUNG NACHARBEI
195	511456808	1	PRESSURE LIMITING VALVE pmax=400BAR	DRUCKBEGRENZUNGSVENTIL
196	511058308	1	CONNECTING PLATE DP1-10/32-2	ANSCHLUSSPLATTE
197	511476908	2	NON-RETURN VALVE 250BAR CR6-FREI	RUECKSCHLAGVENTIL
198	511419608	1	PRESSURE LIMITING VALVE pmax=700BAR ⇨ ❑ 561	DRUCKBEGRENZUNGSVENTIL
199	511431514	1	NON-RETURN VALVE 400BAR CR6-FREI	RUECKSCHLAGVENTIL
200	10871151	1	COLLECTING PIPE 22L/10 A3CR6F+V SPF	SAMMELROHR
201	10871595	1	COLLECTING PIPE 42L/11 SPF	SAMMELROHR
202	10412850	1	COLLECTING PIPE 42L/10 A3CR6FREI SPF	SAMMELROHR
203	510413508	1	NON-RETURN VALVE 400BAR CR6-FREI	RUECKSCHLAGVENTIL
204	12433377	2	THREADED ELBOW JOINT	WINKELVERSCHRAUBUNG
302	10181382	4	SOCKET HEAD SCREW ISO 4762 M5X50 10	ZYLINDERSCHRAUBE
303	570116908	1	USIT RING U 14X19,5X1,5	USIT-RING
304	12102692	14	HEX NUT DIN 985 M6 8 ZNNI-480H SPF	SECHSKANTMUTTER
305	12203634	4	SOCKET HEAD SCREW ISO 4762 M6X50 8.8	ZYLINDERSCHRAUBE
306	10875648	6	WASHER ISO 7093-1 6 200HV 480H SPF	SCHEIBE
307	12102696	2	BUTTON HEAD SCREW ISO7380-2 M8X10 0	HALBRUNDKOPFSCHRAUBE
308	11692824	6	HEX SCREW ISO 4017 M6X12 8.8 480H SPF	SECHSKANTSCHRAUBE
309	10875643	4	WASHER ISO 7093-1 5 200HV 480H SPF	SCHEIBE
310	11140402	4	HEX SCREW ISO 4017 M5X12 8.8 480H SPF	SECHSKANTSCHRAUBE
311	10197730	4	HEX SCREW ISO 4017 M10X20 8.8 ZNNI-480	SECHSKANTSCHRAUBE
312	11491889	4	WASHER ISO 7093-1 10 300HV FLZN SPF	SCHEIBE
315	602009108	4	CLAMP-HALF DIN 3015-1 L 5 R 35 PP SW	KLEMMHAELFTE
316	12224196	2	SOCKET HEAD SCREW ISO 4762 M6X160 8	ZYLINDERSCHRAUBE
317	5005219	7	LID PLATE DIN 3015-1 L-DP 5 W1-ZN	DECKPLATTE
318	10197771	14	WASHER ISO 7089 6 200HV ZNNI-480H SPF	SCHEIBE
319	602009208	14	CLAMP-HALF DIN 3015-1 L 5 R 38 PP SW	KLEMMHAELFTE
320	10876394	4	SOCKET HEAD SCREW DIN 912 M6X40 12.9	ZYLINDERSCHRAUBE
321	11140469	4	WASHER ISO 7093-1 8 200HV 480H SPF	SCHEIBE
322	11651612	6	HEX SCREW ISO 4017 M8X16 8.8 480H SPF	SECHSKANTSCHRAUBE
323	973731008	2	RUBBER PLATE SBR M.GEWEBE	GUMMIPLATTE
324	602008908	8	CLAMP-HALF DIN 3015-1 L 4 R 30 PP SW	KLEMMHAELFTE
325	10539471	4	SOCKET HEAD SCREW ISO 4762 M6X90 A4	ZYLINDERSCHRAUBE
326	12215338	6	SOCKET HEAD SCREW ISO 4762 M6X75 8.8	ZYLINDERSCHRAUBE
327	10876361	2	SOCKET HEAD SCREW ISO 4762 M6X70 8.8	ZYLINDERSCHRAUBE
328	12202784	2	SOCKET HEAD SCREW ISO 4762 M6X60 8.8	ZYLINDERSCHRAUBE
329	10875588	2	SOCKET HEAD SCREW ISO 4762 M6X25 8.8	ZYLINDERSCHRAUBE
330	602018008	2	CARRIER RAIL NUT DIN 3015-1 L TM M6 W1	TRAGSCHIENENMUTTER

Pos.	Item	Quantity	Description	Bezeichnung
331	7008583	1	LID PLATE DIN 3015-1 L-DP 4 W1-ZN	DECKPLATTE
332	11140465	4	SOCKET HEAD SCREW ISO 4762 M6X20 8.8	ZYLINDERSCHRAUBE
333	421100608	14	WASHER DIN 1440 8 ST VERZ	SCHEIBE
334	11651767	10	HEX SCREW ISO 4017 M8X20 8.8 480H SPF	SECHSKANTSCHRAUBE
335	11657000	2	SOCKET HEAD SCREW ISO 4762 M10X45 8	ZYLINDERSCHRAUBE
336	12203167	2	SOCKET HEAD SCREW ISO 4762 M8X80 8.8	ZYLINDERSCHRAUBE
337	11693875	2	HEX NUT ISO 4032 M8 8 480H SPF	SECHSKANTMUTTER
338	404312108	4	SOCKET HEAD SCREW ISO 4762 M12X45 10	ZYLINDERSCHRAUBE
339	11651006	8	HEX SCREW ISO 4017 M12X20 8.8 FLZN SP	SECHSKANTSCHRAUBE
340	10289804	8	WASHER ISO 7089 12 300HV FLZN SPF	SCHEIBE
341	97056998	5	HOSE	SCHLAUCH GESCHLITZT
500	511510008	1	SAE SEALING FLANGE SAE 1 1/4-CODE 6 C	SAE-VERSCHLUSSFLANSCH
501	474907608	1	SAE FLANGE CONNECTION WFS 28L 1	SAE-FLANSCHVERBINDUNG
(1)	510587008	1	O-RING ARP 568 32,92X3,53 NBR90	O-RING
502	474907508	1	SAE FLANGE CONNECTION WFS63/25-S C	SAE-FLANSCHVERBINDUNG
503	474906608	2	SAE FLANGE CONNECTION WFS65/30-S C	SAE-FLANSCHVERBINDUNG
504	510702408	1	SAE FLANGE CONNECTION GFS65/38-PS	SAE-FLANSCHVERBINDUNG
(1)	510586708	1	O-RING ARP 568 37,69X3,53 NBR90	O-RING
505	474906708	2	SAE FLANGE CONNECTION WFS 38S 1 1/4	SAE-FLANSCHVERBINDUNG
506	510586908	6	FLANGE HALF SAE 1 6000 PSI CR6-FREI	FLANSCHHAELFTE
508	474908108	2	SAE FLANGE CONNECTION WFS 20S 3/4	SAE-FLANSCHVERBINDUNG
(1)	511035108	1	O-RING ARP 568 25X3,53 NBR70	O-RING
510	511517808	3	FLANGE STUB PIPE AFG 38S G1 1/4 CR6-F	FLANSCHSTUTZEN
511	10030904	1	FLANGE FITTING BFG 16S CR6-FREI	FLANSCHVERSCHRAUBUNG
513	510037408	1	FLANGE FITTING CR6-FREI	FLANSCHVERSCHRAUBUNG
(1)	570322408	1	O-RING ARP 568 23,47x2,62 NBR70	O-RING
515	474901708	1	SAE FLANGE CONNECTION GFS 30S 1 1/4 C	SAE-FLANSCHVERBINDUNG
516	474906908	3	SAE FLANGE CONNECTION WFS64/30-S C	SAE-FLANSCHVERBINDUNG
(1)	510587008	1	O-RING ARP 568 32,92X3,53 NBR90	O-RING
517	474909008	1	SAE FLANGE CONNECTION WFG 25S 10X3	SAE-FLANSCHVERBINDUNG
519	510133208	1	FLANGE FITTING CR6-FREI	FLANSCHVERSCHRAUBUNG
(1)	726406908	1	O-RING 18X2,5 NBR70	O-RING
520	511518808	1	FLANGE FITTING	FLANSCHVERSCHRAUBUNG
521	510146208	1	SUCTION FLANGE	SAUGFLANSCH
550	10878785	4	HEX SCREW ISO 4014 M14X90 8.8 FLZN SP	SECHSKANTSCHRAUBE
551	510586708	2	O-RING ARP 568 37,69X3,53 NBR90	O-RING
552	10876373	12	SOCKET HEAD SCREW ISO 4762 M14X45 8	ZYLINDERSCHRAUBE
553	10875565	12	SOCKET HEAD SCREW ISO 4762 M12X40 8	ZYLINDERSCHRAUBE
554	11645384	12	HEX SCREW ISO 4017 M12X40 8.8 FLZN SP	SECHSKANTSCHRAUBE
555	10875571	14	SOCKET HEAD SCREW ISO 4762 M10X30 8	ZYLINDERSCHRAUBE
556	11642358	2	HEX SCREW ISO 4017 M10X30 8.8 FLZN SP	SECHSKANTSCHRAUBE
557	10878821	25	SOCKET HEAD SCREW ISO 4762 M14X50 8	ZYLINDERSCHRAUBE
558	12213406	3	HEX SCREW ISO 4017 M14X50 8.8 FLZN SP	SECHSKANTSCHRAUBE
560	510587008	6	O-RING ARP 568 32,92X3,53 NBR90	O-RING
600	471031308	4	FITTING XGE22-LM-ED M26X1,5 A3P	VERSCHRAUBUNG
601	10410305	5	FITTING EV 12L M18X1,5 CR6-FREI	VERSCHRAUBUNG
602	471902208	1	FITTING EGESD12-LM-WD A3P	VERSCHRAUBUNG
604	472331208	5	FITTING EL 6S CR6-FREI	VERSCHRAUBUNG
605	475601508	5	TEST POINT FITTING BMA3 6S	MESSANSCHLUSS
606	470700208	5	FITTING XGAI6-SR A3P	VERSCHRAUBUNG
607	247117702	15	FITTING EW 12L M18X1,5 CR6-FREI	VERSCHRAUBUNG
608	7362091	6	FITTING ISO 8434-1 GE 10L G1/4A CR6-FREI	VERSCHRAUBUNG
609	247105602	4	FITTING ET 12L M18X1,5 CR6-FREI	VERSCHRAUBUNG
610	471030808	7	FITTING XGE12-LR-ED A3P	VERSCHRAUBUNG
611	471039608	6	FITTING XGE10-LR-ED3/8" A3P	VERSCHRAUBUNG
613	510629008	4	TEST POINT FITTING VKA3 10LM16X1,5 CR6	MESSANSCHLUSS
614	472330208	8	FITTING EL 10L CR6-FREI	VERSCHRAUBUNG
616	7403569	3	FITTING EW 10L M16X1,5 CR6-FREI	VERSCHRAUBUNG
617	477704108	2	STOP PLUG VSTI3/8"ED A3P	STOPFEN
618	471032708	3	FITTING GE 12S G3/8A CR6-FREI	VERSCHRAUBUNG

Pos.	Item	Quantity	Description	Bezeichnung
619	471039708	5	FITTING ISO 8434-1 GE 10L M12X1,5 CR6-F	VERSCHRAUBUNG
620	471901108	3	FITTING EGESD10-LR-WD A3P	VERSCHRAUBUNG
621	7617354	2	FITTING EW 12S CR6-FREI	VERSCHRAUBUNG
622	475433608	1	FITTING REDSDN25/12-S A3P	VERSCHRAUBUNG
624	482430614	4	FITTING ISO 8434 ET 22L CR6-FREI	VERSCHRAUBUNG
625	472530608	13	FITTING EWSD22-L A3P	VERSCHRAUBUNG
628	471030508	1	FITTING GE 10L M14X1,5 A3P	VERSCHRAUBUNG
632	475603208	3	TEST POINT FITTING EMA3 M12X1,5 CR6-F	MESSANSCHLUSS
633	482431614	2	FITTING ISO 8434 ET 20S CR6-FREI	VERSCHRAUBUNG
634	471033308	4	FITTING XGE20-SM-ED A3P	VERSCHRAUBUNG
635	7407108	1	FITTING EW 20S M30X2 CR6-FREI	VERSCHRAUBUNG
639	247128602	8	FITTING EL 12L M18X1,5 CR6-FREI	VERSCHRAUBUNG
643	471035308	4	FITTING XGE12-LR-ED1/4" A3P	VERSCHRAUBUNG
648	471901208	1	FITTING EGESD12-LR-WD A3P	VERSCHRAUBUNG
650	471030708	5	FITTING ISO 8434-1 GE 12L M16X1,5 CR6-F ⇨ ❑ 562	VERSCHRAUBUNG
651	471032808	3	FITTING ISO 8434-1 GE 10S G3/8A CR6-FRE	VERSCHRAUBUNG
653	472531808	5	FITTING EWSD38-S A3P	VERSCHRAUBUNG
656	7407098	5	FITTING EL 16S CR6-FREI	VERSCHRAUBUNG
657	471033208	13	FITTING XGE16-SR-ED A3P	VERSCHRAUBUNG
658	7617460	11	FITTING EW 16S CR6-FREI	VERSCHRAUBUNG
659	477700508	2	BLANKING PLUG ISO 8434-1 PL 12L/S CR6-F	VERSCHLUSSSTOPFEN
660	477401608	2	BOX NUT DIN 3870 AL12 A3C	UEBERWURFMUTTER
661	471901408	1	FITTING EGE 22L G3/4 CR6-FREI	VERSCHRAUBUNG
662	471034808	4	FITTING GE 12L G1/2 ZNNI	VERSCHRAUBUNG
664	473230508	2	FITTING RSWS10-LR-WD A3P	VERSCHRAUBUNG
666	470011308	2	FITTING SNV12-L A3P	VERSCHRAUBUNG
667	471903808	1	FITTING EGE 12L G1/2 A3P	VERSCHRAUBUNG
669	470032408	3	FITTING XG10-S A3P	VERSCHRAUBUNG
670	470032708	1	FITTING XG16-S A3P	VERSCHRAUBUNG
671	471900308	1	FITTING EGESD6-SR-WD A3P	VERSCHRAUBUNG
672	471034708	8	FITTING GE 42L G1 1/2 CR6-FREI	VERSCHRAUBUNG
674	475431308	2	FITTING RED 42/28L CR6-FREI	VERSCHRAUBUNG
675	475602608	9	TEST POINT FITTING EMA3 G1/4 CR6-FREI	MESSANSCHLUSS
678	477700408	2	BLANKING PLUG ISO 8434-1 PL 10L/S CR6-F	VERSCHLUSSSTOPFEN
679	477400308	2	BOX NUT DIN 3870 AS10 A3P	UEBERWURFMUTTER
681	471900808	1	FITTING EGESD25-SR-WD CFX	VERSCHRAUBUNG
682	471033408	4	FITTING XGE20-SR-ED A3P	VERSCHRAUBUNG
683	471031408	4	FITTING XGE22-LR-ED A3P	VERSCHRAUBUNG
684	7018842	3	SCREW-ON CONNECTION ISO 8434 GE 25S	EINSCHRAUBSTUTZEN
686	477704208	1	STOP PLUG VSTI1/2"ED A3P	STOPFEN
687	475430508	1	FITTING REDSD28/22-L A3P	VERSCHRAUBUNG
692	7410441	1	FITTING GE 28L G3/4A CR6-FREI	VERSCHRAUBUNG
696	471033108	4	FITTING XGE16-SR-ED3/4" A3P	VERSCHRAUBUNG
698	475434208	1	FITTING REDSD38/16-S A3P	VERSCHRAUBUNG
699	477701108	1	FITTING BUZ 16S CR6-FREI	VERSCHRAUBUNG
700	477400608	1	BOX NUT DIN 3870 AS16 A3P	UEBERWURFMUTTER
701	475432108	2	FITTING REDSDN20/16-S A3P	VERSCHRAUBUNG
702	470432608	1	FITTING XT20-S A3P	VERSCHRAUBUNG
710	247108302	2	FITTING EW 18L M26X1,5 CR6-FREI	VERSCHRAUBUNG
711	475432308	1	FITTING REDSDN25/20-S A3P	VERSCHRAUBUNG
712	7367774	2	FITTING ET 25S CR6-FREI	VERSCHRAUBUNG
713	470010708	1	FITTING SNV38-S A3P	VERSCHRAUBUNG
714	475031708	1	FITTING XGR15/12-L A3P	VERSCHRAUBUNG
715	471903608	2	FITTING EGE 42L G1 1/2 A3P	VERSCHRAUBUNG
720	471039908	3	FITTING GE 12L M22X1,5 CR6-FREI	VERSCHRAUBUNG
724	477704908	4	STOP PLUG VSTIM14X1,5ED A3P	STOPFEN
725	471032908	2	FITTING GE 12S M18X1,5 CR6-FREI	VERSCHRAUBUNG
726	472531508	1	FITTING EW 6S M14X1,5 CR6-FREI	VERSCHRAUBUNG
727	475435608	1	FITTING RED 18/15L CR6-FREI SPF	VERSCHRAUBUNG

Pos.	Item	Quantity	Description	Bezeichnung
730	477705208	1	STOP PLUG VSTIM33X2ED A3P	STOPFEN
731	7617494	4	FITTING EW 28L CR6-FREI	VERSCHRAUBUNG
733	470010908	1	FITTING SNV22-L CFX	VERSCHRAUBUNG
734	475408108	1	FITTING REDSD38/6-S A3P	VERSCHRAUBUNG
735	471900408	1	FITTING EGE 10S G3/8 A3C	VERSCHRAUBUNG
737	10295188	6	FITTINGS ISO 8434-1 GE 22L M33X2 CR6-F	STUTZEN
738	471032208	3	FITTING XGE8-SM-ED CFX	VERSCHRAUBUNG
740	475436108	1	FITTING REDSD22/12-L A3P	VERSCHRAUBUNG
741	477704708	2	STOP PLUG VSTI3/4"ED A3P	STOPFEN
743	471004514	5	FITTING ISO 8434 GE 10S G1/4 CR6-FREI	VERSCHRAUBUNG
744	7406865	7	SCREW COUPLING EMA3 M14X1,5 CR6-FRE	SCHRAUBKUPPLUNG
745	7410451	1	FITTING GE 20S G1/2A CR6-FREI	VERSCHRAUBUNG
746	7405399	2	FITTING GE 12L M14X1,5 CR6-FREI	VERSCHRAUBUNG
747	475004108	1	FITTING GR 20/12S CR6-FREI	VERSCHRAUBUNG
749	471031108	3	FITTING GE 18L M22X1,5 CR6-FREI	VERSCHRAUBUNG
751	474030708	1	FITTING SV 18L CR6-FREI	VERSCHRAUBUNG
752	474030308	1	FITTING XSV10-L A3P	VERSCHRAUBUNG
753	474030508	1	FITTING XSV15-L A3P	VERSCHRAUBUNG
754	471031608	4	FITTING GE 28L G1 A3P	VERSCHRAUBUNG
755	7409918	1	GAUGE CONNECTION NW 12	MESSSTUTZEN
756	475435508	3	FITTING REDSD22/15-L A3P	VERSCHRAUBUNG
757	10467292	1	FITTING EV38S M52X2 A3C	VERSCHRAUBUNG
758	475431408	1	FITTING REDSD12/10-L A3P	VERSCHRAUBUNG
759	10651363	6	FITTING EV 42L M52X2 ZN-NI CR6F	VERSCHRAUBUNG
764	471008214	1	FITTING ISO 8434 GE 10S M14X1,5 CR6-FRE	VERSCHRAUBUNG
767	247108402	1	FITTING ET 18L CR6-FREI	VERSCHRAUBUNG
769	475502408	2	ADAPTOR RI11/2-EDX1 A3P	ADAPTER
770	7403925	1	FITTING GE 28L M26X1,5 CR6-FREI	VERSCHRAUBUNG
771	10036896	1	FITTING GE 22L M22X1,5 A3P	VERSCHRAUBUNG
777	482530814	3	FITTING ISO 8434 EW 42L CR6-FREI	VERSCHRAUBUNG
780	475407208	1	FITTING REDSDN42/12-L A3P	VERSCHRAUBUNG
781	7367986	5	FITTING EL 42L CR6-FREI	VERSCHRAUBUNG
789	475431608	2	FITTING RED 42/22L A3C	VERSCHRAUBUNG
790	247138602	2	FITTING EL 22L CR6-FREI	VERSCHRAUBUNG
791	470433008	1	FITTING XT38-S A3P	VERSCHRAUBUNG
794	477700808	2	STOPPER BUZ 28L A3C	BUTZEN
795	477401708	2	BOX NUT DIN 3870 AL28 A3P	UEBERWURFMUTTER
798	471039408	1	FITTING XGE12-LM-ED M18X1,5 A3P	VERSCHRAUBUNG
(1)	501243708	1	O-RING ARP 568 10,52X1,83 NBR90	O-RING
799	470233408	1	FITTING XW38-S A3P	VERSCHRAUBUNG
801	473331308	1	FITTING RSWS22-LM-WD A3P	VERSCHRAUBUNG
802	470011408	1	FITTING SNV42-L A3P	VERSCHRAUBUNG
803	475436708	1	FITTING RED 42/35L A3C	VERSCHRAUBUNG
804	470030908	1	FITTING XG42-L A3P	VERSCHRAUBUNG
805	7617268	2	FITTING EW 10S CR6-FREI	VERSCHRAUBUNG
808	7407118	2	FITTING EL 25S CR6-FREI	VERSCHRAUBUNG
810	10410770	2	FITTING EV16S M24X1,5 A3C	VERSCHRAUBUNG
814	7407120	2	FITTING EL 28L CR6-FREI	VERSCHRAUBUNG
819	475430908	1	FITTING REDSD28/18-L A3P	VERSCHRAUBUNG
821	470010608	2	FITTING SNV28-L A3P	VERSCHRAUBUNG
822	7407107	2	FITTING EL 20S CR6-FREI	VERSCHRAUBUNG
823	5607617	6	GAUGE CONNECTION DKO 10S M18X1,5 C	MESSSTUTZEN
824	475433508	4	FITTING REDSD16/10-S A3P	VERSCHRAUBUNG
825	470010208	1	FITTING SNV10-S A3P	VERSCHRAUBUNG
826	482431814	1	FITTING ISO 8434 ET 38S CR6-FREI	VERSCHRAUBUNG
827	475430808	1	FITTING REDSD22/10-L A3P	VERSCHRAUBUNG
828	475435408	1	FITTING REDSDN28/10-L A3P	VERSCHRAUBUNG
829	7407122	1	FITTING ET 28L M36X2 CR6-FREI	VERSCHRAUBUNG
830	470011008	1	FITTING SNV25-S CFX	VERSCHRAUBUNG
831	475432208	1	FITTING RED 25/10S A3P	VERSCHRAUBUNG

Pos.	Item	Quantity	Description	Bezeichnung
832	470432708	1	FITTING XT25-S A3P	VERSCHRAUBUNG
833	7615379	2	FITTING EW 15L CR6-FREE	VERSCHRAUBUNG
835	10410771	2	FITTING EV 22L M30X2 CR6-FREI	VERSCHRAUBUNG
836	482431314	1	FITTING ISO 8434 ET 10S CR6-FREI	VERSCHRAUBUNG
840	470011208	1	FITTING GZ 15L A3P	VERSCHRAUBUNG
841	472300414	1	FITTING EL 15L CR6-FREI	VERSCHRAUBUNG
842	247128502	1	FITTING EL 18L CR6-FREI	VERSCHRAUBUNG
843	473231008	1	FITTING RSWS10-SR-WD A3P	VERSCHRAUBUNG
844	475435308	1	FITTING REDSDN38/30-S CFX	VERSCHRAUBUNG
845	475431708	1	FITTING RED 42/18L CR6-FREI	VERSCHRAUBUNG
846	475430208	1	FITTING REDSDN12/6-L A3P	VERSCHRAUBUNG
847	477704008	1	STOPPER PLUG VSTI1/4"ED A3P	BLINDSTOPFEN
848	477700208	1	FITTING BUZ 22L CR6-FREI	VERSCHRAUBUNG
849	477402608	1	BOX NUT DIN 3870 AL22 A3P	UEBERWURFMUTTER

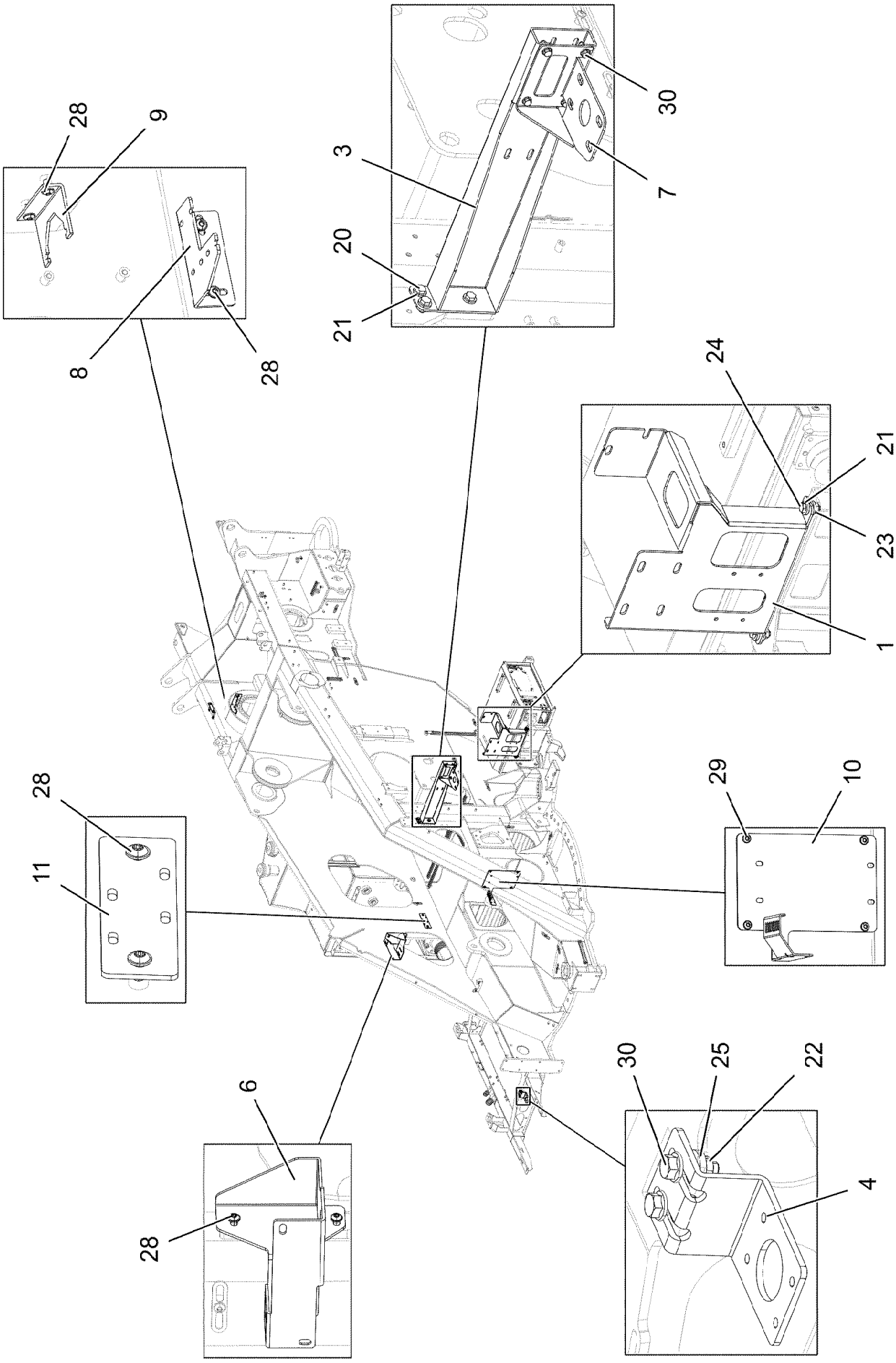
28
9
8
28
3
30
7
20
21
24
21
23
1
28
11
29
10
6
28
30
25
22
4

Pos.	Item	Quantity	Description	Bezeichnung
1	97124562	1	PLATE 4X429X566 S315MC	BLECH
3	969431008	1	CONSOLE PRE-ASS.	KONSOLE VORM.
4	97045111	1	PLATE 4X60X163 S315MC FE//ZNNI8//CN//T	BLECH
6	97056389	1	CONSOLE 4X470X340 S315MC FE//ZNNI8//C	KONSOLE
7	97056391	1	CONSOLE 4X257X253 S315MC FE//ZNNI8//C	KONSOLE
8	975418208	1	PLATE 4X140X178 S315MC FE//ZNNI8//CN//T	BLECH
9	970762808	1	PLATE S315MC FE//ZNNI8//CN//T0	BLECH
10	97119732	1	PLATE 3X325X398 S355MC FE//ZNNI8//CN//T	BLECH
11	954313608	1	PLATE 4X55X180 S315MC FE//ZNNI8//CN//T	BLECH
20	12222996	3	HEX SCREW ISO 4017 M10X22 8.8 FLZN SP	SECHSKANTSCHRAUBE
21	11658580	3	WASHER DIN 7349 10,5 200HV-St FLZN SPF	SCHEIBE
22	11693875	2	HEX NUT ISO 4032 M8 8 480H SPF	SECHSKANTMUTTER
23	12102695	2	HEX NUT ISO 4032 M10 8 ZNNI-480H SPF	SECHSKANTMUTTER
24	4635031	2	HEX SCREW ISO 4017 M10X28 8.8 FLZN	SECHSKANTSCHRAUBE
25	11840501	2	WASHER DIN 7349 8,4 200HV 480H SPF	SCHEIBE
28	10875485	7	BUTTON HEAD SCREW AEHNL.ISO 7380-2	HALBRUNDKOPFSCHRAUBE
29	12102696	4	BUTTON HEAD SCREW ISO7380-2 M8X10 0	HALBRUNDKOPFSCHRAUBE
30	11690637	4	HEX SCREW EN 1665 M8X25 8.8 480H SPF	SECHSKANTSCHRAUBE

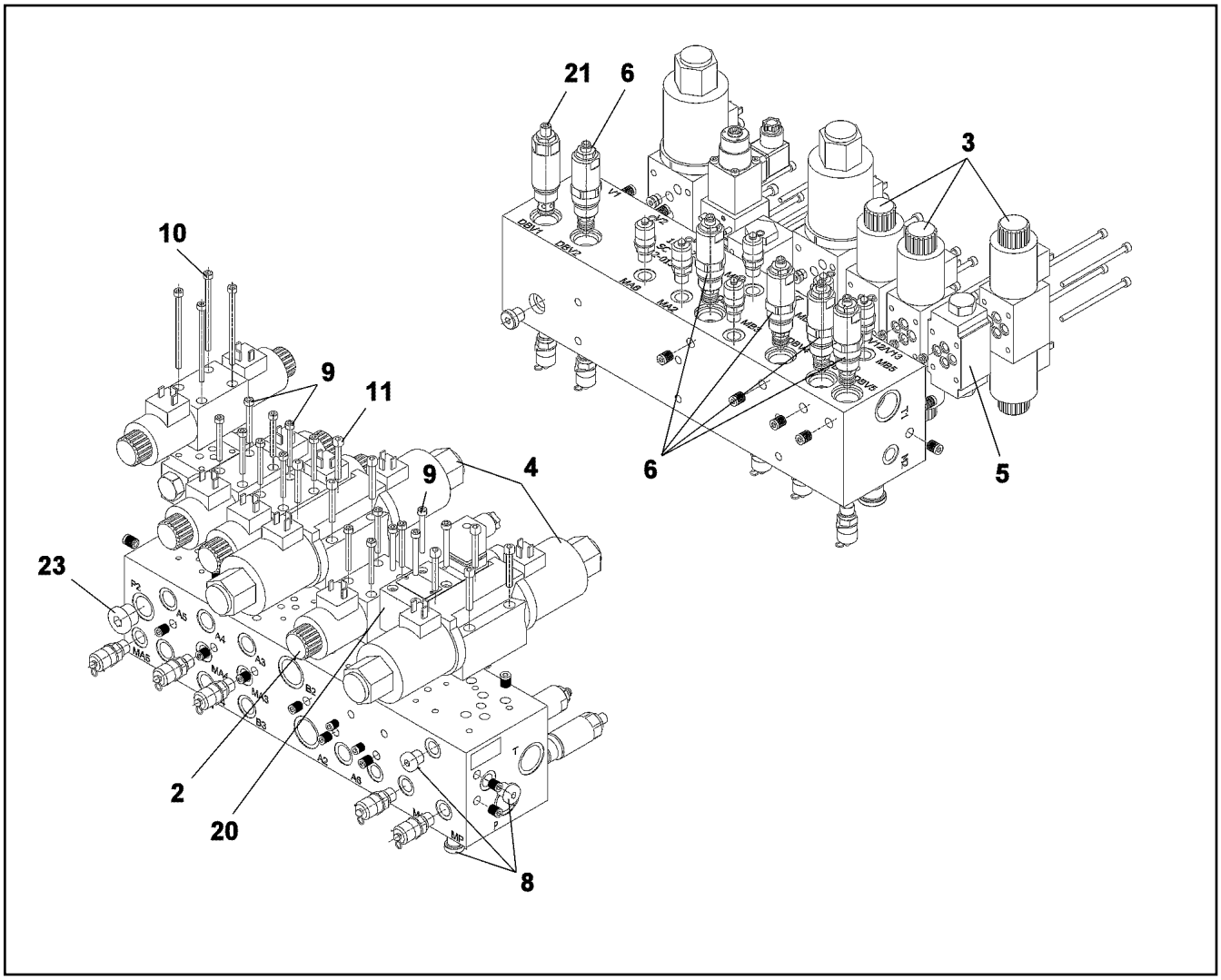

Pos.	Item	Quantity	Description	Bezeichnung
2	11482347	1	DIRECTIONAL SOLENOID ⇨ ❑ 547	WEGEMAGNETVENTIL
3	10875074	3	DIRECTIONAL CONTROL VALVE 4/3	WEGEVENTIL
4	10874849	2	DIRECTIONAL CONTROL VALVE 4/3	WEGEVENTIL
(1)	10423992	2	RETAINING NUT	BEFESTIGUNGSMUTTER
(3)	510787908	4	O-RING 30X2 NBR70	O-RING
(999)	10423993	1	SEAL KIT	DICHTSATZ
5	10875075	1	NON-RETURN VALVE	RUECKSCHLAGVENTIL
6	10875076	1	PRESSURE VALVE	DRUCKVENTIL
8	7361553	3	SCREW PLUG VSTI G1/4 CR6-FREI	VERSCHLUSSSCHRAUBE
9	404361208	16	SOCKET HEAD SCREW ISO 4762 M5X45 12.	ZYLINDERSCHRAUBE
10	404364108	4	SOCKET HEAD SCREW ISO 4762 M5X85 12.	ZYLINDERSCHRAUBE
11	10876394	8	SOCKET HEAD SCREW DIN 912 M6X40 12.9	ZYLINDERSCHRAUBE
20	10342823	1	PRESSURE CONTROL VALVE SPF ⇨ ❑ 548	DRUCKREGELVENTIL
21	10875077	1	PRESSURE VALVE	DRUCKVENTIL
23	10335593	1	SCREW PLUG VSTI R1/2	VERSCHLUSSSCHRAUBE

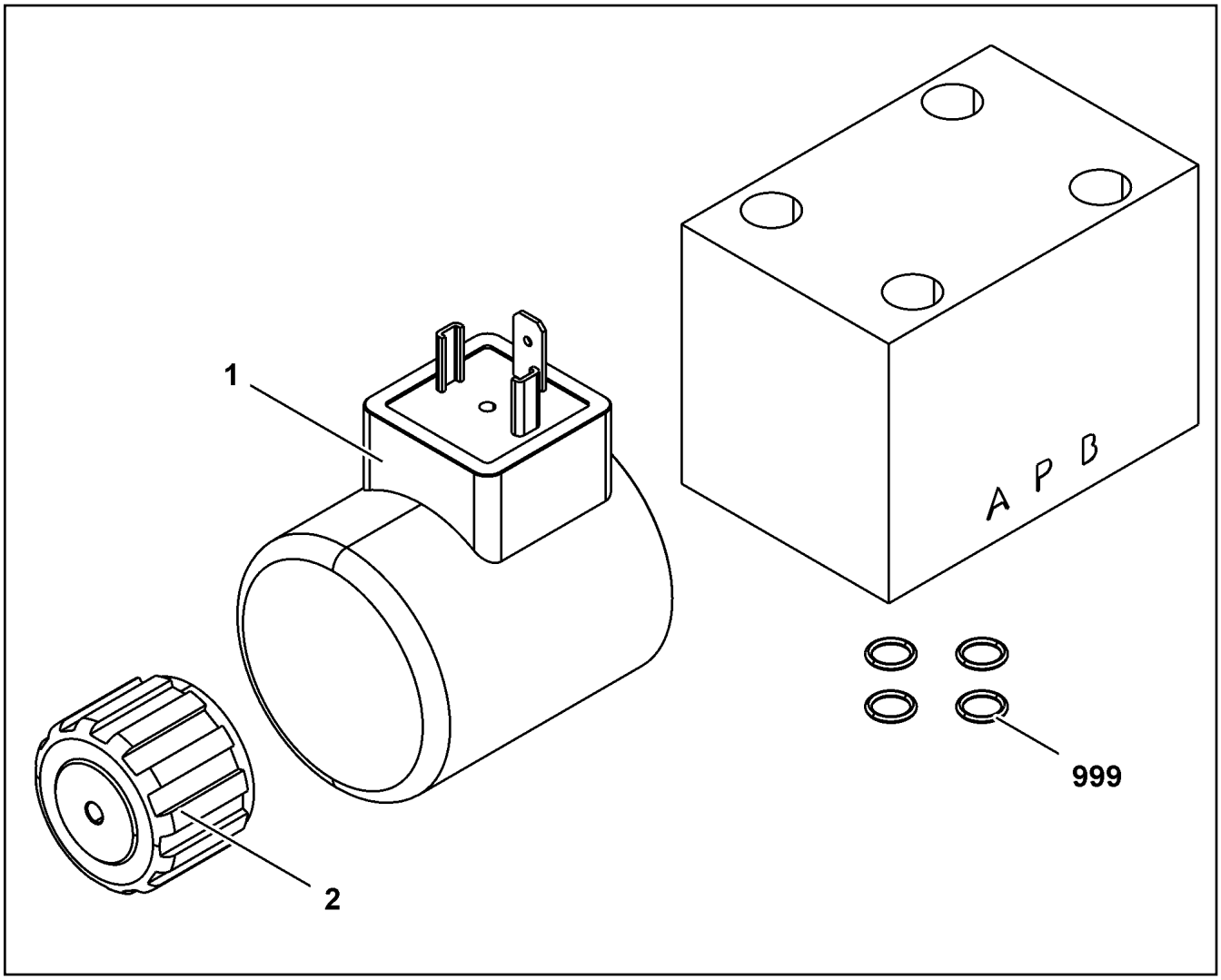

Pos.	Item	Quantity	Description	Bezeichnung
1	10874134	1	MAGNET COIL 24V	MAGNETSPULE
2	11342417	1	NUT	RAENDELMUTTER
999	10285695	1	SEAL KIT	DICHTSATZ

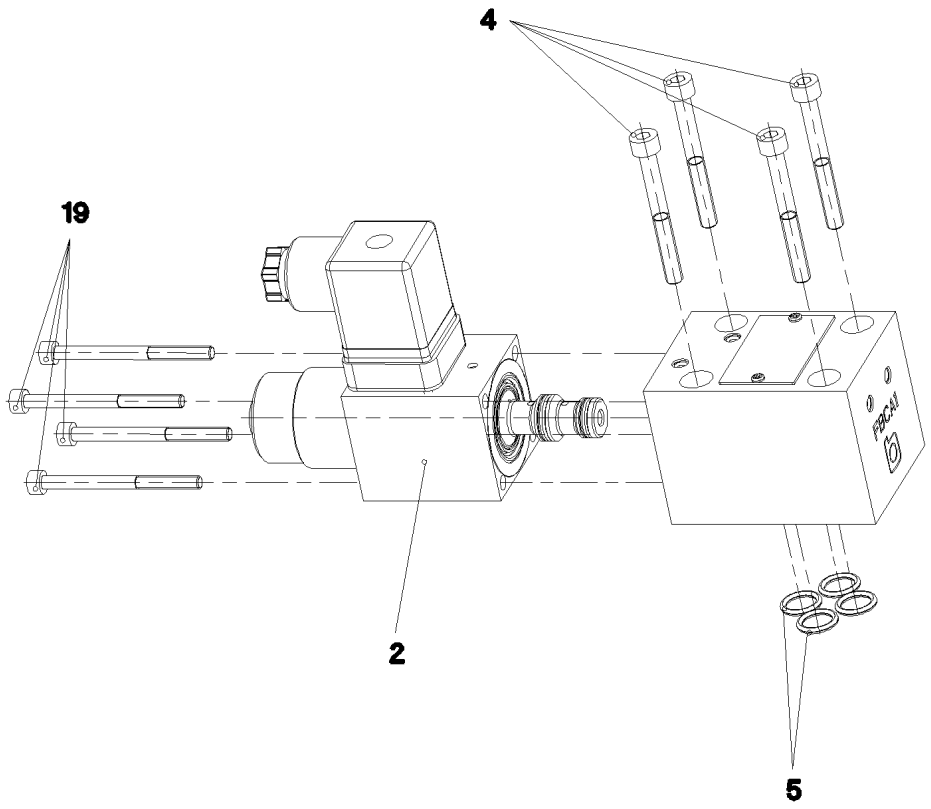

Pos.	Item	Quantity	Description	Bezeichnung
2	10650092	1	MAGNET 24V	MAGNET
4	404361208	4	SOCKET HEAD SCREW ISO 4762 M5X45 12.	ZYLINDERSCHRAUBE
5	7380574	4	O-RING ISO 3601-1 9,25X1,78 FKM 90 A,GN	O-RING
19	4901531	4	SOCKET HEAD SCREW ISO 4762 M4X50 8.8	ZYLINDERSCHRAUBE

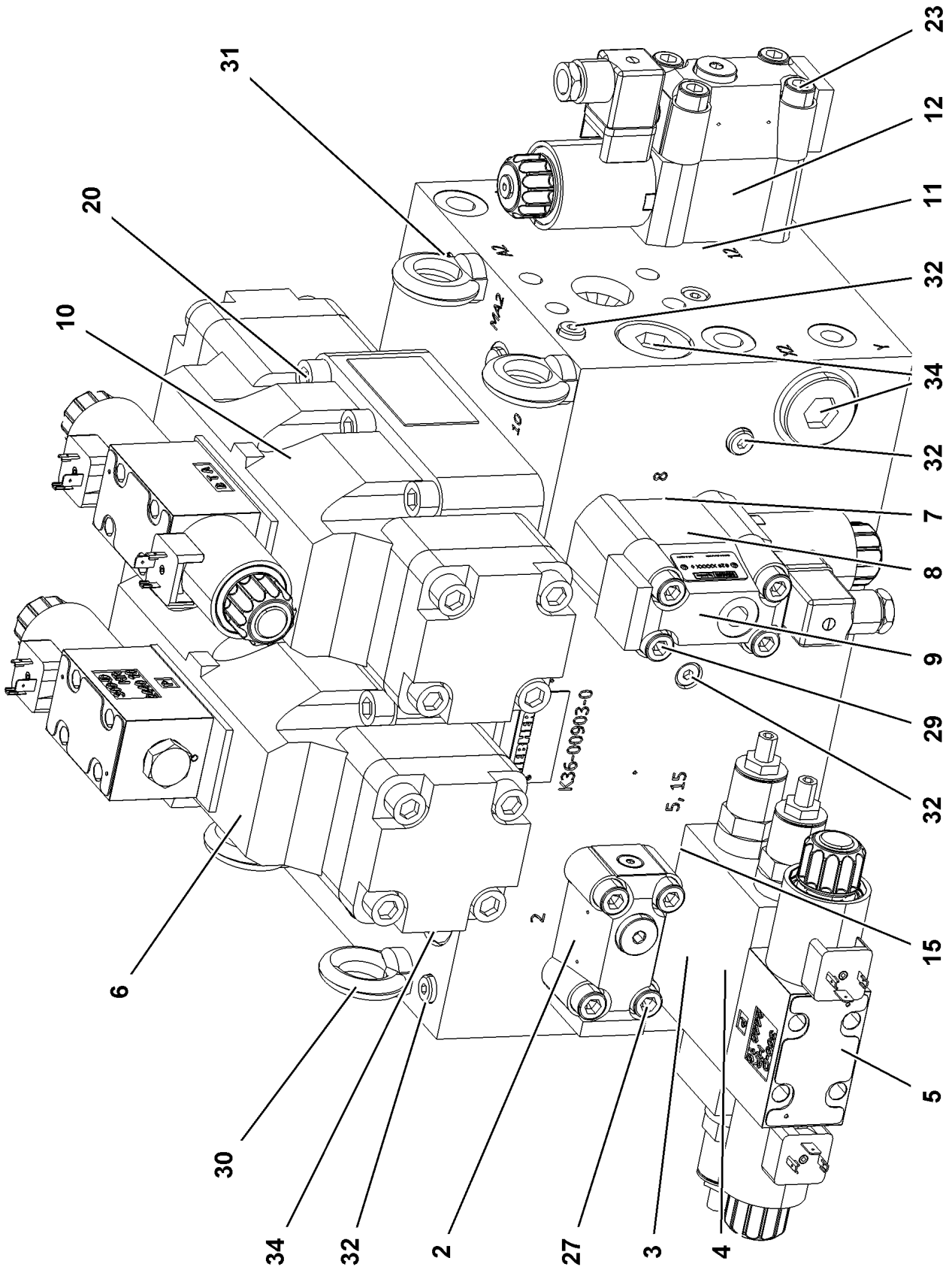

4.12.2020 059958	**etk_en_de 047580 LTR 1220**	❑ 549 (1/2)
LIEBHERR	**CONTROL BLOCK** **STEUERBLOCK**	**10413106**

Pos.	Item	Quantity	Description	Bezeichnung
2	571415208	1	BUILT-IN VALVE	EINBAUVENTIL
3	571414608	1	INTERMED.PLATE VALVE	ZWISCHENPLATTENVENTIL
(1)	510738608	4	O-RING ARP 568 9,25X1,78 NBR90	O-RING
4	571562408	1	INTERMED.PLATE VALVE	ZWISCHENPLATTENVENTIL
(1)	510738608	4	O-RING ARP 568 9,25X1,78 NBR90	O-RING
5	10801532	1	DIRECTIONAL CONTROL VALVE	WEGEVENTIL
(1)	10291306	1	MAGNET 28V	MAGNET
(18)	12103903	2	NUT	RAENDELMUTTER
(999)	10663097	1	SEALING SET VALVE	DS VENTIL
6	10801533	1	DIRECTIONAL CONTROL VALVE	WEGEVENTIL
(1)	10872796	1	DIRECTIONAL CONTROL VALVE	WEGEVENTIL
(999)	11004122	1	SEAL KIT	DICHTSATZ
7	10801534	1	BUILT-IN VALVE	EINBAUVENTIL
8	571415008	2	DIRECTIONAL CONTROL VALVE ⇨ ❑ 551	WEGEVENTIL
9	10801549	1	DIRECTIONAL CONTROL VALVE	WEGEVENTIL
10	10801551	1	DIRECTIONAL CONTROL VALVE	WEGEVENTIL
(1)	10874213	1	DIRECTIONAL CONTROL VALVE	WEGEVENTIL
(999)	10663092	1	SEALING SET VALVE	DS VENTIL
11	571415208	1	BUILT-IN VALVE	EINBAUVENTIL
12	11004126	1	DIRECTIONAL CONTROL VALVE	WEGEVENTIL
(1)	10291306	1	MAGNET 28V	MAGNET
15	4980712	1	SCREW PLUG DIN 906 M6X1 St PHR	VERSCHLUSSSCHRAUBE
20	12100905	12	SOCKET HEAD SCREW ISO 4762 M12X75 1	ZYLINDERSCHRAUBE
23	240186402	4	SOCKET HEAD SCREW ISO 4762 M10X90 1	ZYLINDERSCHRAUBE
27	404360408	4	SOCKET HEAD SCREW DIN 912 M10X45 12.	ZYLINDERSCHRAUBE
29	240186402	4	SOCKET HEAD SCREW ISO 4762 M10X90 1	ZYLINDERSCHRAUBE
30	402600208	4	RING BOLT DIN 580 M10X17 C15E A2K	RINGSCHRAUBE
31	477705408	1	STOP PLUG VSTI11/4"ED A3P	STOPFEN
32	510741508	1	STOP PLUG VSTI1/8"ED ST A3C	STOPFEN
34	477704608	1	STOP PLUG VSTI1"ED A3P	STOPFEN

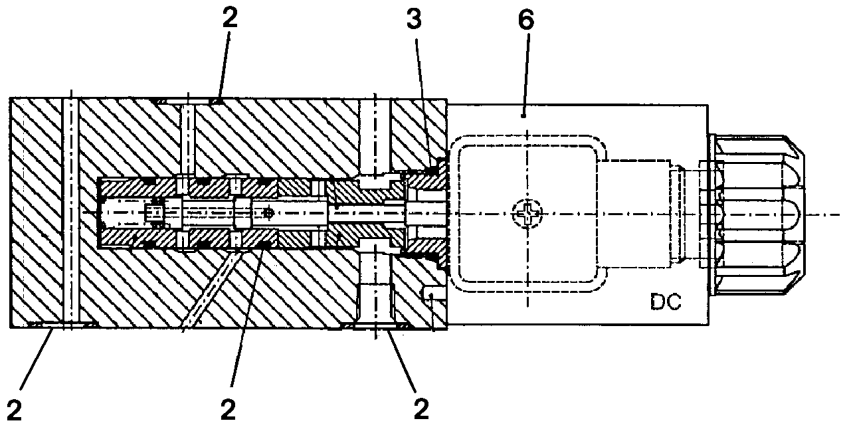

Pos.	Item	Quantity	Description	Bezeichnung
2	510760408	6	O-RING ARP 568 10,82X1,78 NBR90	O-RING
3	571141177	1	O-RING 15,4X2,1 NBR90	O-RING
6	10291306	1	MAGNET 28V	MAGNET

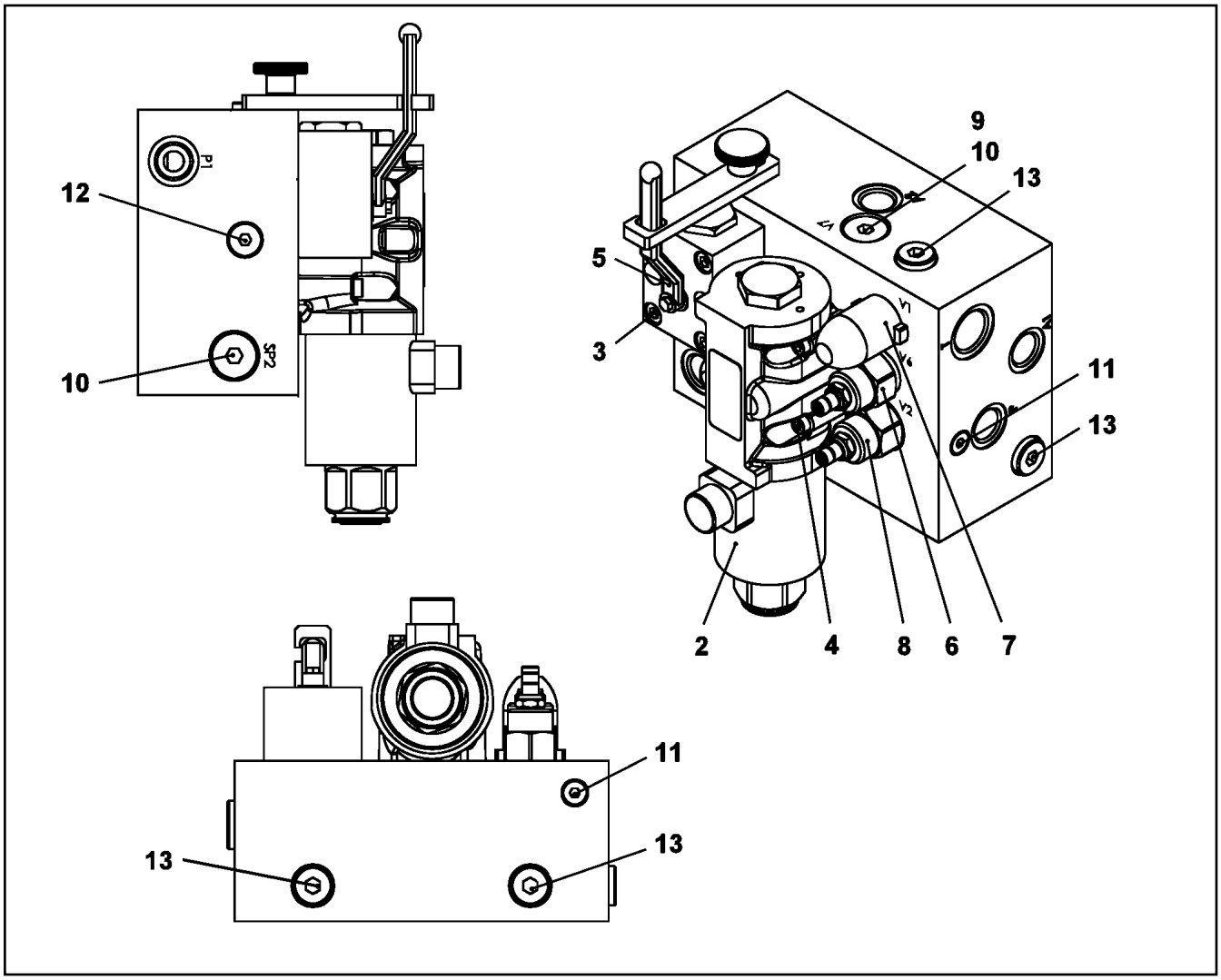

Pos.	Item	Quantity	Description	Bezeichnung
2	571737808	1	DIRECTIONAL CONTROL VALVE 4/2 NG10-3 ⇨ ❑ 553	WEGEVENTIL
3	12206699	4	SOCKET HEAD SCREW ISO 4762 M8X45 8.8	ZYLINDERSCHRAUBE
4	10875591	4	SOCKET HEAD SCREW ISO 4762 M6X40 8.8	ZYLINDERSCHRAUBE
5	571723608	1	BALL VALVE BKHU DN 10	KUGELHAHN
(1)	10337381	2	O-RING 10,00X2,5 NBR90	O-RING
6	571723708	1	PRESSURE LIMITING VALVE	DRUCKBEGRENZUNGSVENTIL
(999)	10470385	1	SEAL KIT LIMIT VALVE	DS DRUCKBEGRENZUNGSVEN
7	570427408	1	PRESSURE LIMITING VALVE	DRUCKBEGRENZUNGSVENTIL
(999)	511043308	1	SEAL KIT	DICHTSATZ
8	571723808	1	PRESSURE LIMITING VALVE	DRUCKBEGRENZUNGSVENTIL
(999)	571187408	1	SEAL KIT VITON	DICHTSATZ
9	10430042	1	NON-RETURN VALVE	RUECKSCHLAGVENTIL
10	477704208	2	STOP PLUG VSTI1/2"ED A3P	STOPFEN
11	510741508	2	STOP PLUG VSTI1/8"ED ST A3C	STOPFEN
12	477704008	1	STOPPER PLUG VSTI1/4"ED A3P	BLINDSTOPFEN
13	477704108	4	STOP PLUG VSTI3/8"ED A3P	STOPFEN

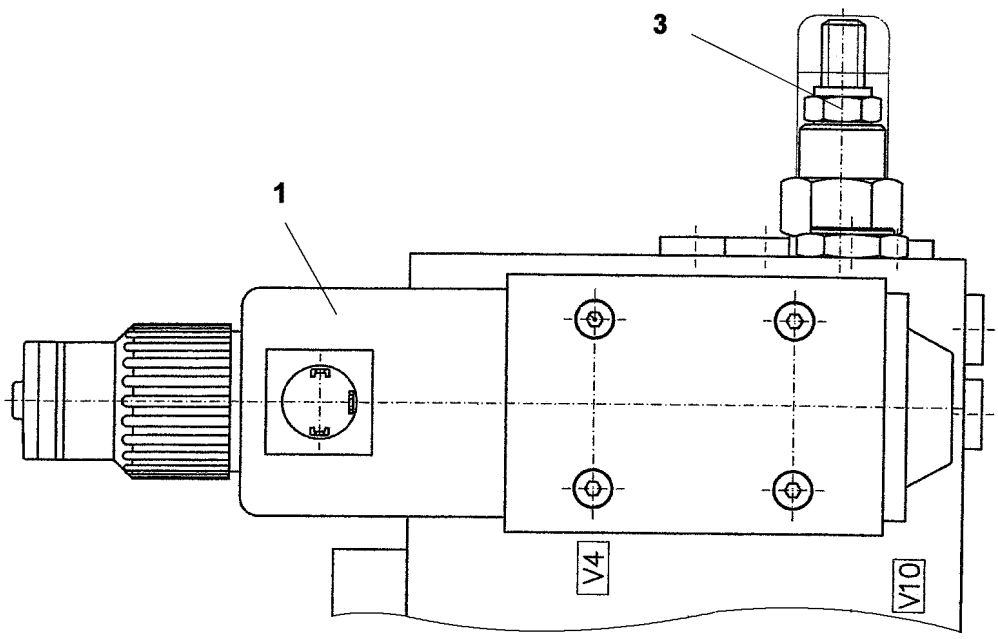

Pos. 999

Pos.	Item	Quantity	Description	Bezeichnung
1	12102117	1	MAGNET COIL 27V	MAGNETSPULE
999	11006275	1	SEAL KIT DIRECTIONAL VALVE	DS WEGEVENTIL

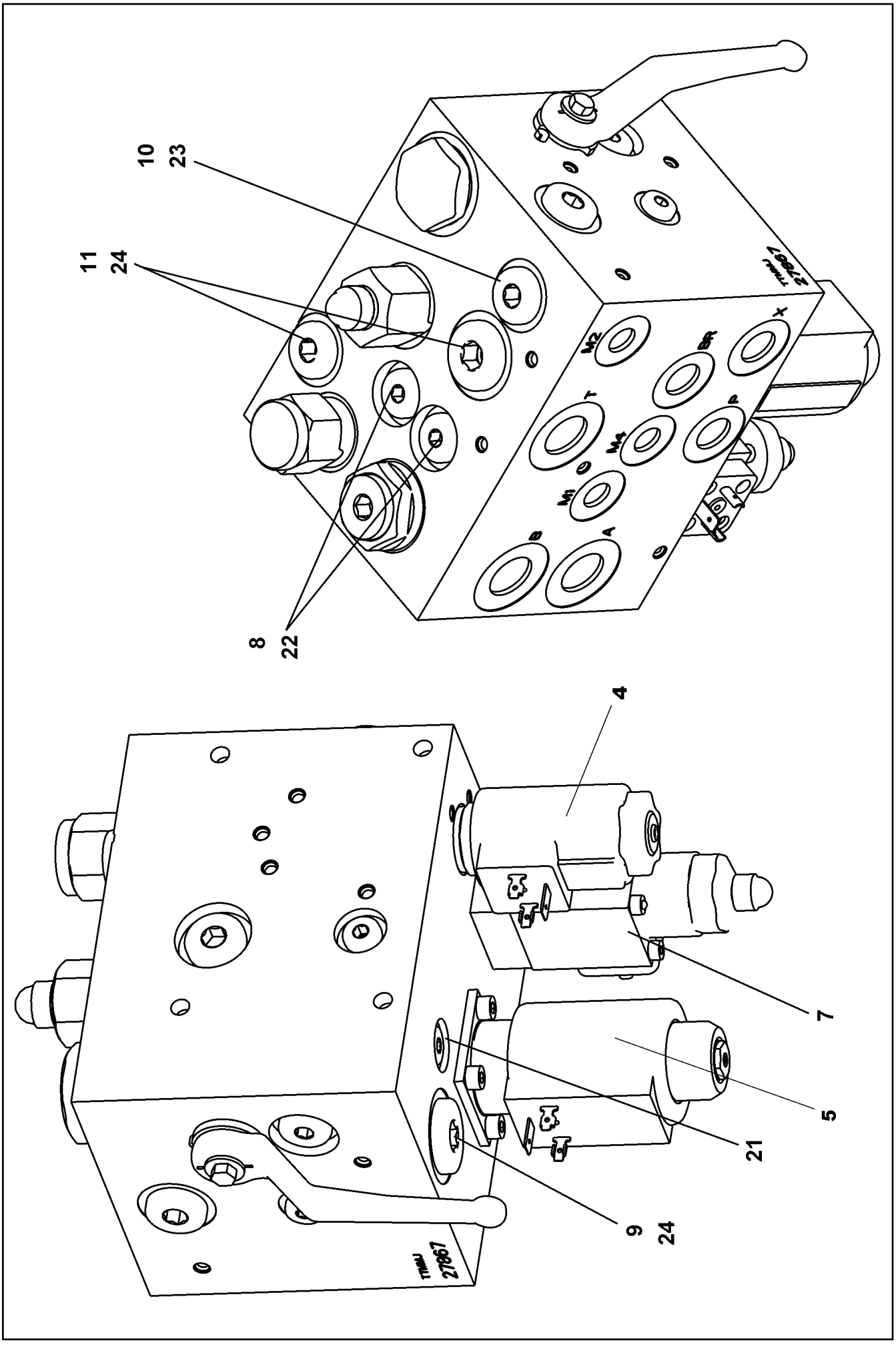

4.12.2020 009157	**etk_en_de 047580 LTR 1220**	554 (1/2)
LIEBHERR	**CONTROL BLOCK** **STEUERBLOCK**	**11341035**

Pos.	Item	Quantity	Description	Bezeichnung
4	10876704	1	SOLENOID VALVE	MAGNETVENTIL
5	10876705	1	SOLENOID VALVE	MAGNETVENTIL
7	10489734	1	PRESSURE LIMITING VALVE ⇨ ❑ 556	DRUCKBEGRENZUNGSVENTIL
8	571529508	2	SHUTTLE VALVE 350BAR	WECHSELVENTIL
9	571535008	1	SHUTTLE VALVE	WECHSELVENTIL
10	570818008	1	NON-RETURN VALVE	RUECKSCHLAGVENTIL
11	570531308	1	NON-RETURN VALVE	RUECKSCHLAGVENTIL
21	510741508	5	STOP PLUG VSTI1/8"ED ST A3C	STOPFEN
22	477704008	4	STOPPER PLUG VSTI1/4"ED A3P	BLINDSTOPFEN
23	477704108	4	STOP PLUG VSTI3/8"ED A3P	STOPFEN
24	477704208	2	STOP PLUG VSTI1/2"ED A3P	STOPFEN

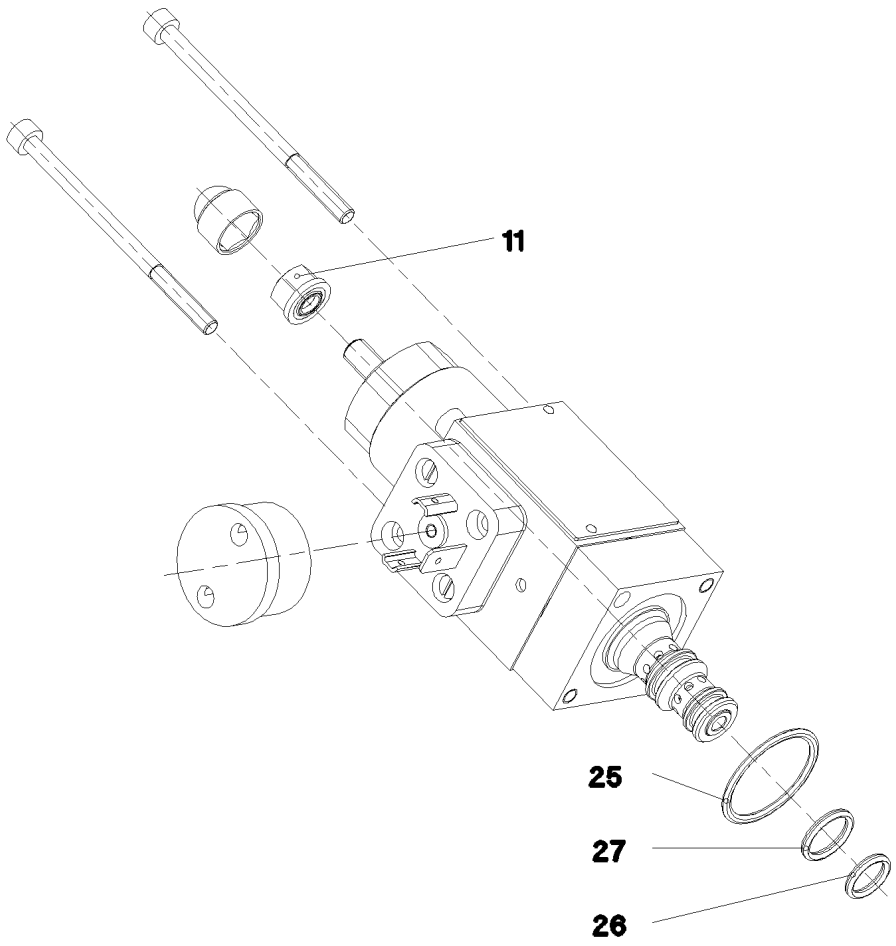

Pos.	Item	Quantity	Description	Bezeichnung
11	510753408	1	SEALING NUT M6	DICHTMUTTER
25	570652308	1	O-RING ARP 568 23,52X1,78 N903890SHOR	O-RING
26	510719008	1	O-RING ARP 568 9,25X1,78 NBR75	O-RING
27	510718108	1	O-RING ARP 568 10,82X1,78 NBR75	O-RING

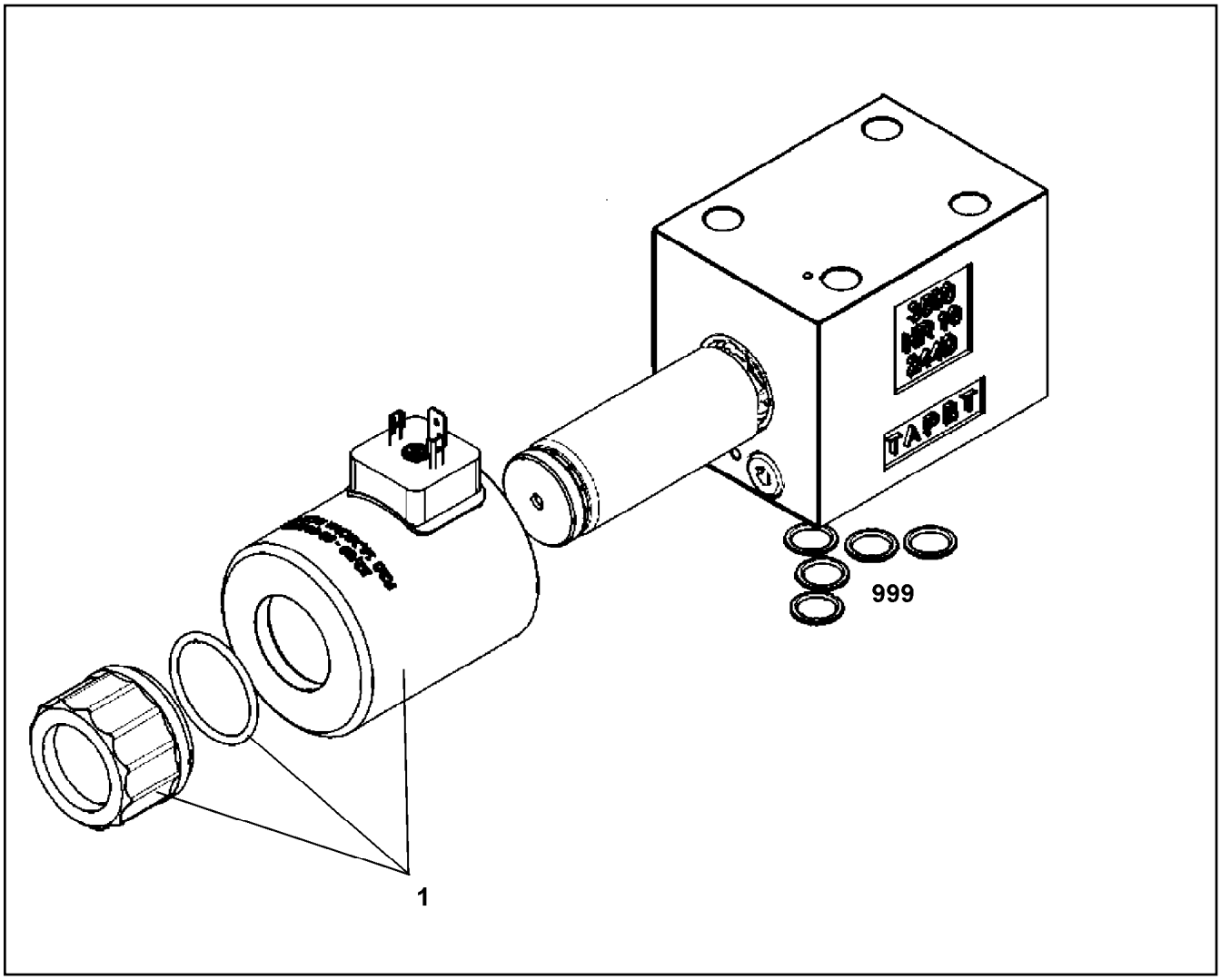

Pos.	Item	Quantity	Description	Bezeichnung
1	11005244	1	MAGNET COIL	MAGNETSPULE
999	10491129	1	SEAL KIT CONTROL BLOCK	DS STEUERBLOCK

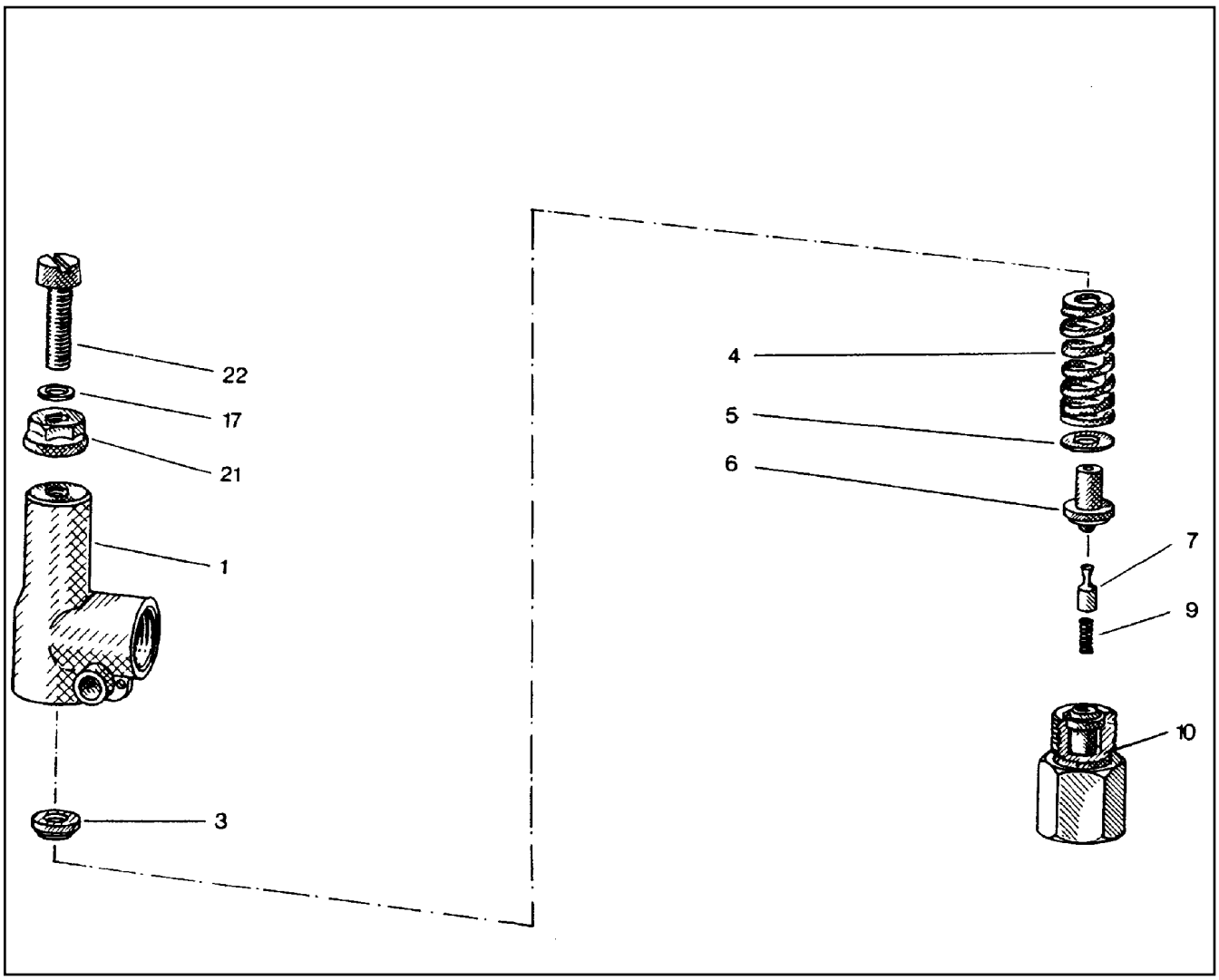

Pos.	Item	Quantity	Description	Bezeichnung
1	570063108	1	HOUSING	GEHAEUSE
3	510797008	1	SPRING SUPPORT	FEDERTELLER
4	511015108	1	PRESSURE SPRING	DRUCKFEDER
5	510797208	1	WASHER	SCHEIBE
6	510797308	1	SPRING-LOADED PIN	FEDERBOLZEN
7	510797408	1	DAMPING PISTON	DAEMPFUNGSKOLBEN
9	510797508	1	PRESSURE SPRING	DRUCKFEDER
10	570063208	1	VALVE SEAT	VENTILSITZ
17	511015508	2	SHIM	AUSGLEICHSCHEIBE
21	510741708	1	SEALING NUT M8	DICHTMUTTER
22	510797708	1	SOCKET HEAD SCREW DIN 84 M8X35 5.8	ZYLINDERSCHRAUBE

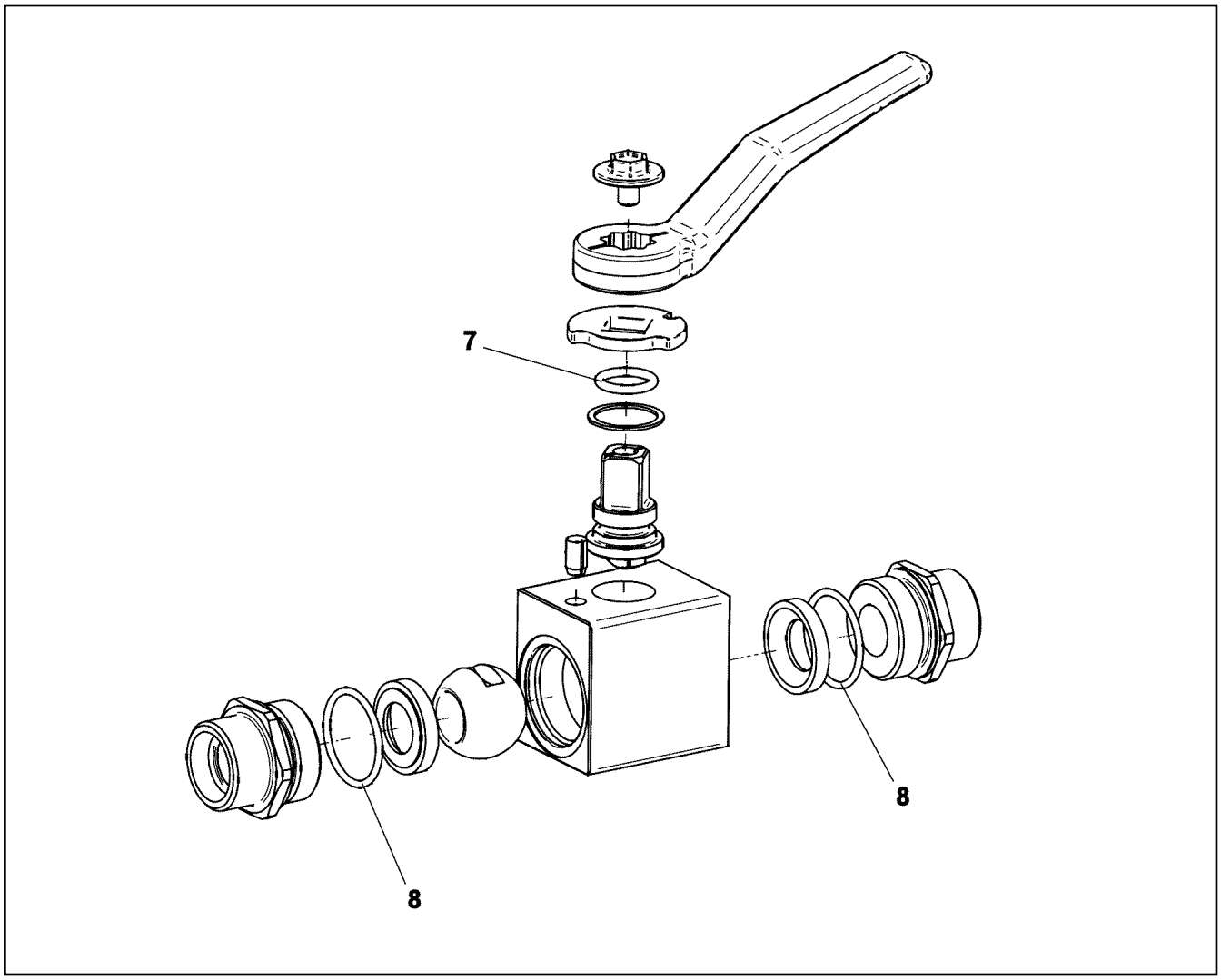

Pos.	Item	Quantity	Description	Bezeichnung
7	10337381	1	O-RING 10,00X2,5 NBR90	O-RING
8	510792708	2	O-RING 20X2 NBR90	O-RING

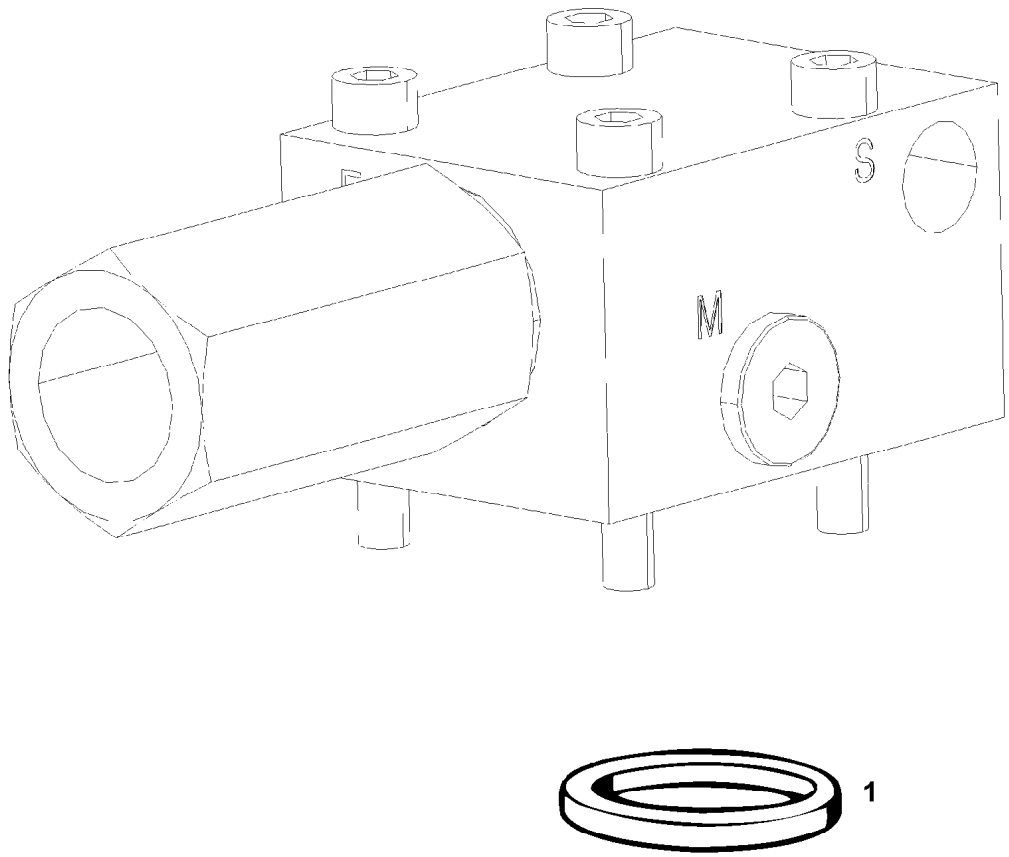

Pos.	Item	Quantity	Description	Bezeichnung
1	510746108	1	O-RING ARP 568 12,37X2,62 NBR90	O-RING

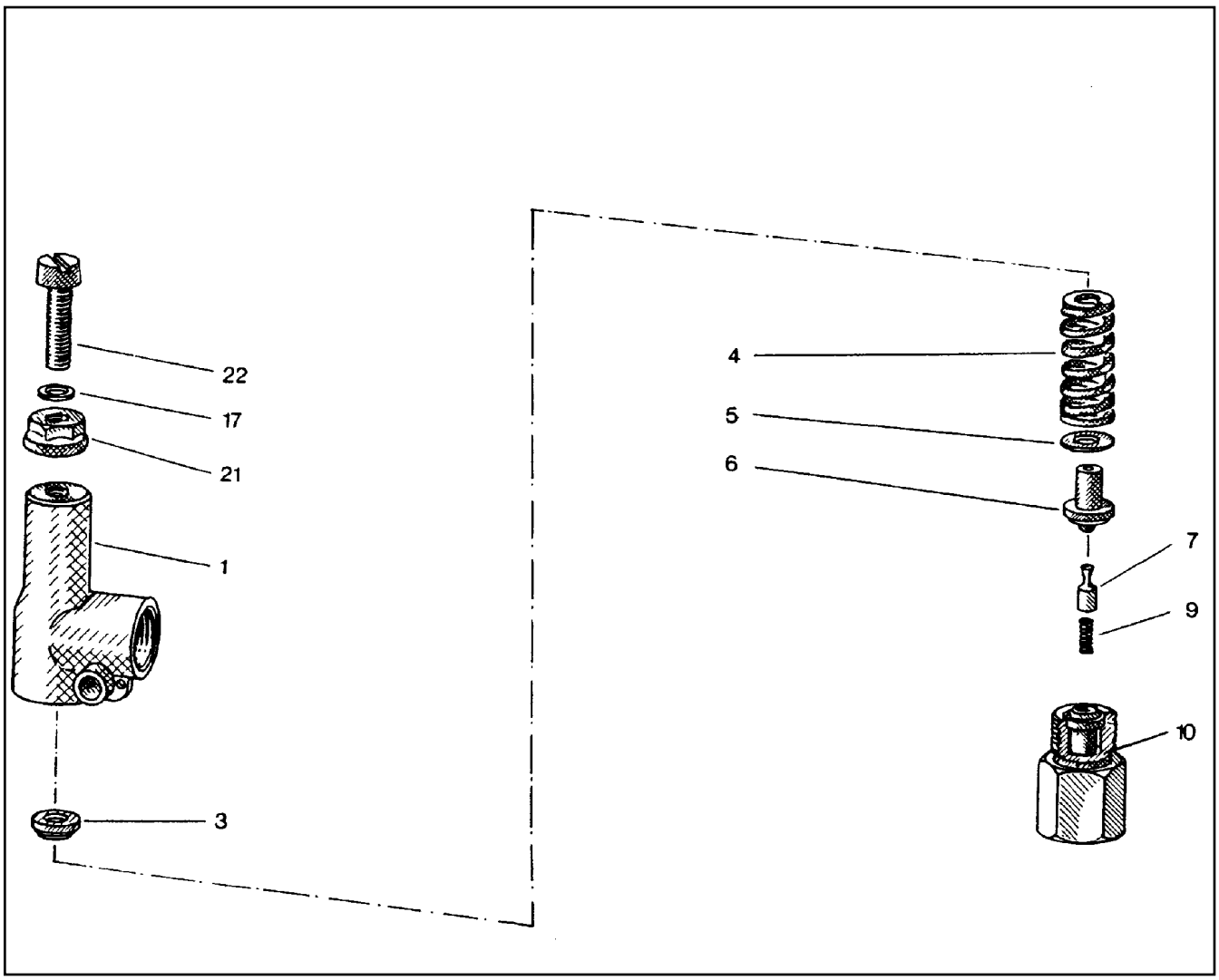

Pos.	Item	Quantity	Description	Bezeichnung
1	511015208	1	HOUSING	GEHAEUSE
3	510782508	1	SPRING SUPPORT	FEDERTELLER
4	511015308	1	PRESSURE SPRING	DRUCKFEDER
5	510782708	1	WASHER	SCHEIBE
6	510782808	1	SPRING-LOADED PIN	FEDERBOLZEN
7	510782908	1	DAMPING PISTON	DAEMPFUNGSKOLBEN
9	510783008	1	PRESSURE SPRING	DRUCKFEDER
10	511015408	1	VALVE SEAT	VENTILSITZ
17	511015508	1	SHIM	AUSGLEICHSCHEIBE
21	510741708	1	SEALING NUT M8	DICHTMUTTER
22	510797708	1	SOCKET HEAD SCREW DIN 84 M8X35 5.8	ZYLINDERSCHRAUBE

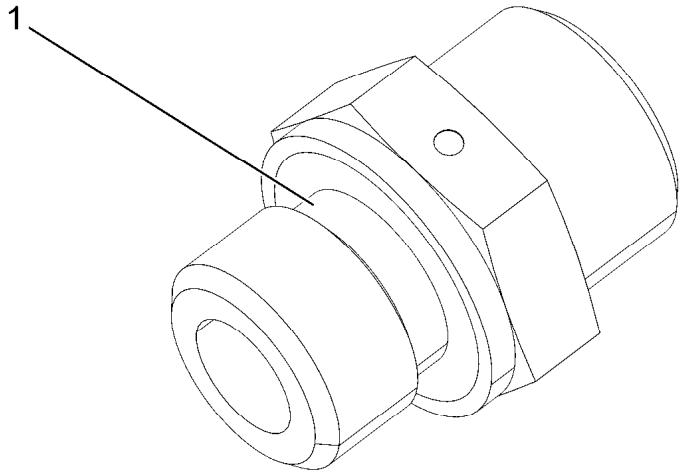

Pos.	Item	Quantity	Description	Bezeichnung
1	501243708	1	O-RING ARP 568 10,52X1,83 NBR90	O-RING

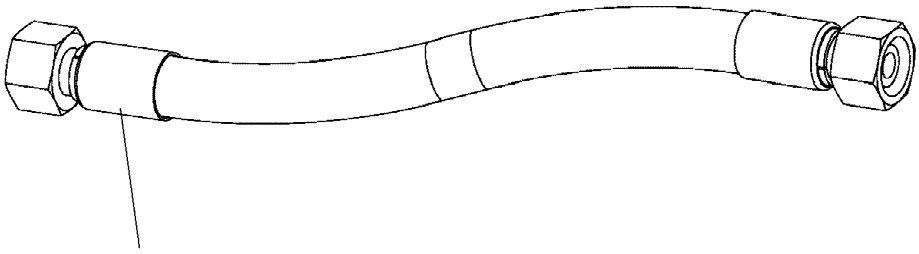

Schlauchnummer
Hose number
Numéro de flexible
Número de flexible
Номера шланга

Die Schlauchnummern auf den Schläuchen entsprechen den Positionen in der Schlauchliste.

The hose numbers from the hoses are in accordance with the items in the hose list.

Les numéros indiqués sur les flexibles correspondent aux repères de la nomenclature des flexibles.

Los números indicados en los flexibles corresponden a las posiciones de la lista de flexibles.

Нанесенные на шлангах номера соответствуют позициям в перечне.

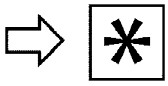

Pos.	Item	Quantity	Description	Bezeichnung
1372	963337608	1	HOSE CPL. GH506-16 25X720	SCHLAUCH KPL.
1373	963171408	1	HOSE CPL. GH506-16 25X800	SCHLAUCH KPL.
1374	968349808	1	HOSE CPL. 4ST+ 31X3600	SCHLAUCH KPL.
1375	969633008	1	HOSE CPL. GH425-10 16X450	SCHLAUCH KPL.
1376	925686208	1	HOSE CPL. GH425-10 16X470	SCHLAUCH KPL.
1377	926098108	1	HOSE CPL. 1SC 8X500	SCHLAUCH KPL.
1378	927232508	1	HOSE CPL. 1SC 8X3700	SCHLAUCH KPL.
1379	929312908	1	HOSE CPL. 2SN 8X660	SCHLAUCH KPL.

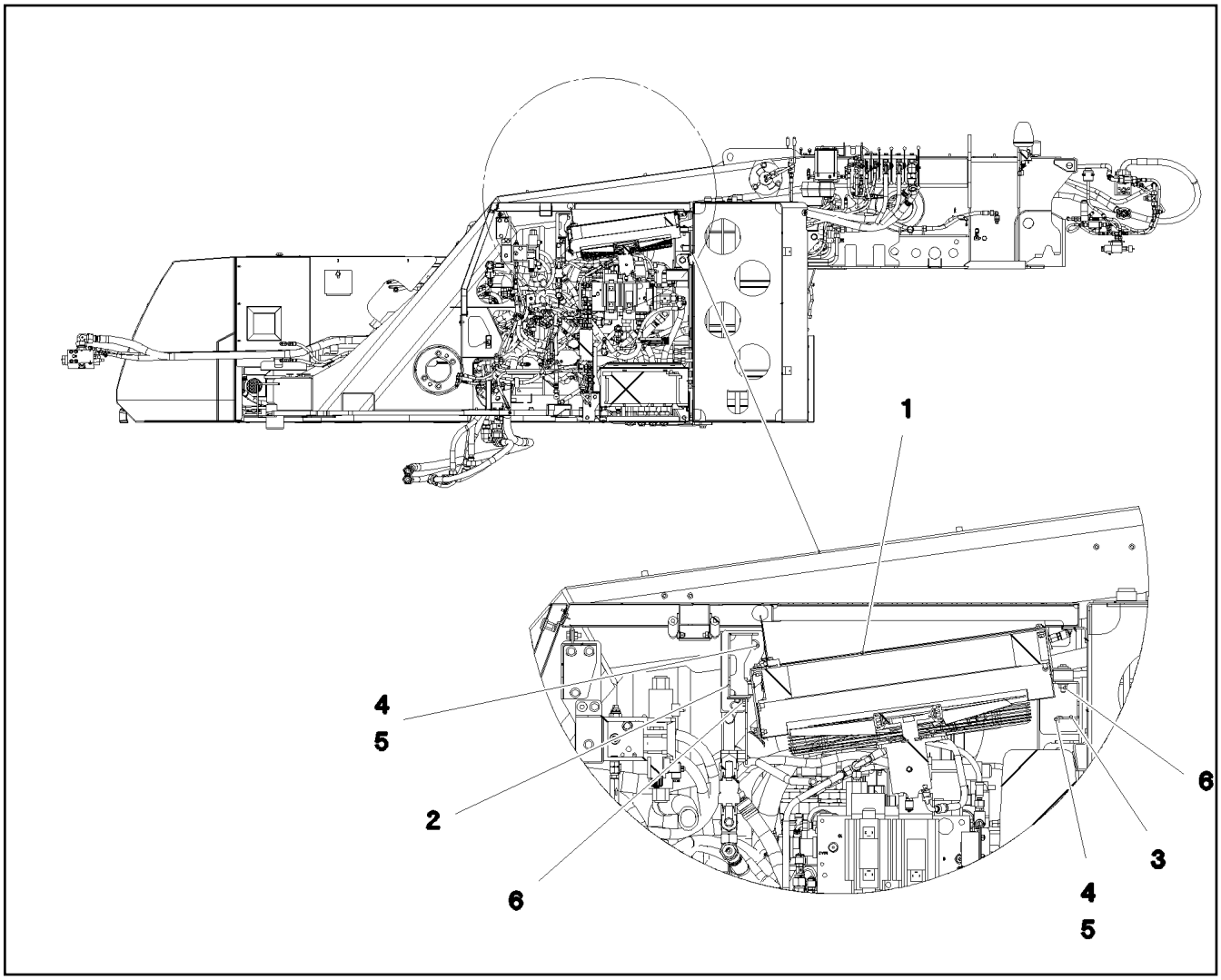

Pos.	Item	Quantity	Description	Bezeichnung
1	967980508	1	OIL COOLER, PRE-ASSEMBLED ⇨ ❑ 565	OELKUEHLER VORM.
2	967977708	1	HOLDER LEFT	HALTER LINKS
3	969185608	1	HOLDER RIGHT	HALTER RECHTS
4	11658580	6	WASHER DIN 7349 10,5 200HV-St FLZN SPF	SCHEIBE
5	11642358	6	HEX SCREW ISO 4017 M10X30 8.8 FLZN SP	SECHSKANTSCHRAUBE
6	12102695	7	HEX NUT ISO 4032 M10 8 ZNNI-480H SPF	SECHSKANTMUTTER

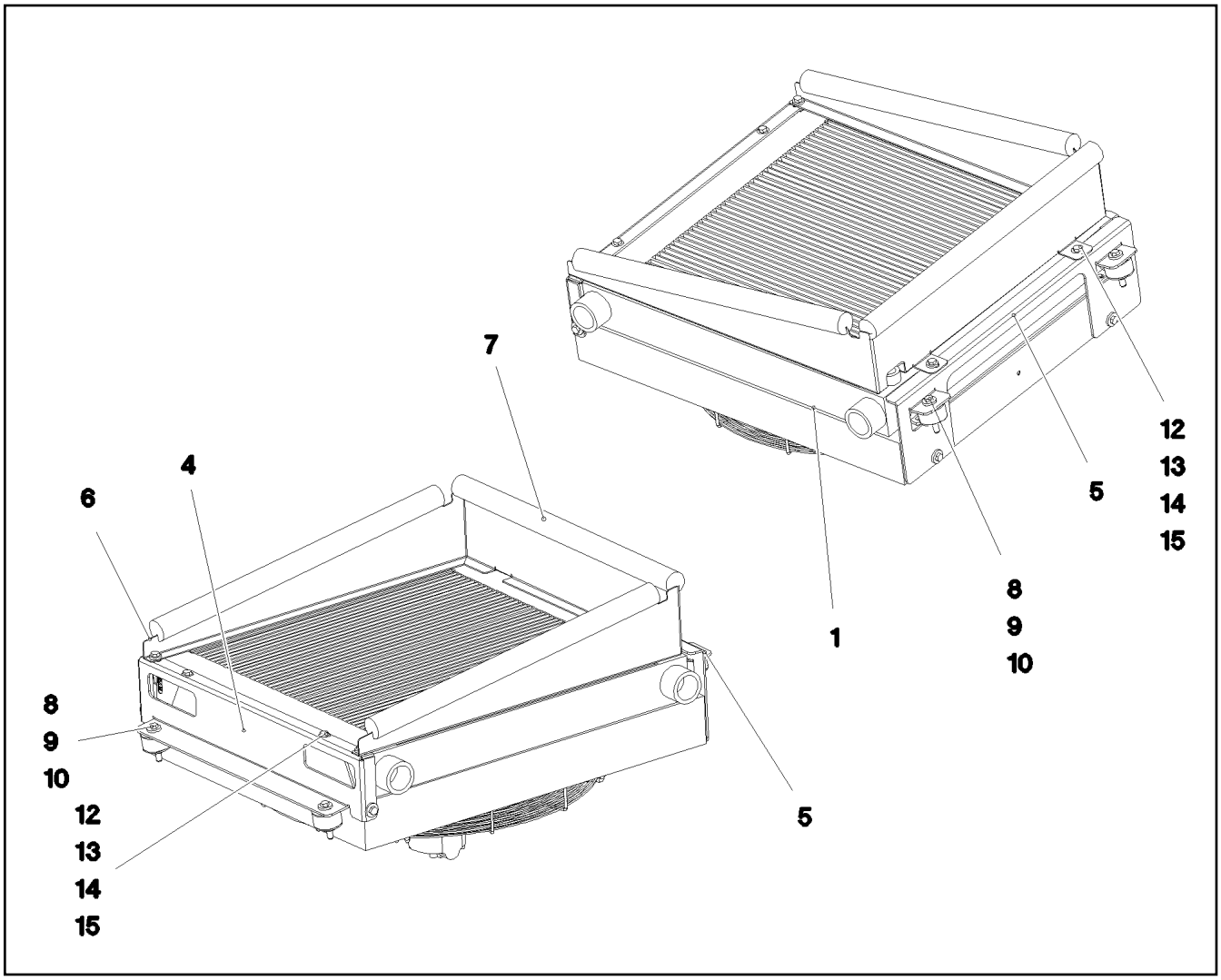

Pos.	Item	Quantity	Description	Bezeichnung
1	11622561	1	OIL AIR COOLER SPF ⇨ ❑ 566	OEL-LUFTKUEHLER
4	97031351	1	PLATE 4X701X174 S315MC FE//ZNNI8//CN//T	BLECH
5	97031349	1	PLATE 4X644X199 S315MC FE//ZNNI8//CN//T	BLECH
6	97031350	1	PLATE 2X2038X172 DC01 FE//ZNNI8//CN//T0	BLECH
7	7014524	3	CLAMPING PROFILE 40X1M PUR-HAUT	KLEMMPROFIL
8	726905008	4	CIRCULAR BEARING C50X30XM10	RUNDLAGER
9	12216205	4	HEX SCREW ISO 4017 M8X18 8.8 480H SPF	SECHSKANTSCHRAUBE
10	11658580	12	WASHER DIN 7349 10,5 200HV-St FLZN SPF	SCHEIBE
12	10289803	4	WASHER ISO 7089 8 300HV 480H SPF	SCHEIBE
13	10197760	6	HEX NUT ISO 4032 M8 10 ZNNI-480H SPF	SECHSKANTMUTTER
14	11840501	8	WASHER DIN 7349 8,4 200HV 480H SPF	SCHEIBE
15	10197831	10	HEX SCREW ISO 4017 M8X25 8.8 ZNNI-480	SECHSKANTSCHRAUBE

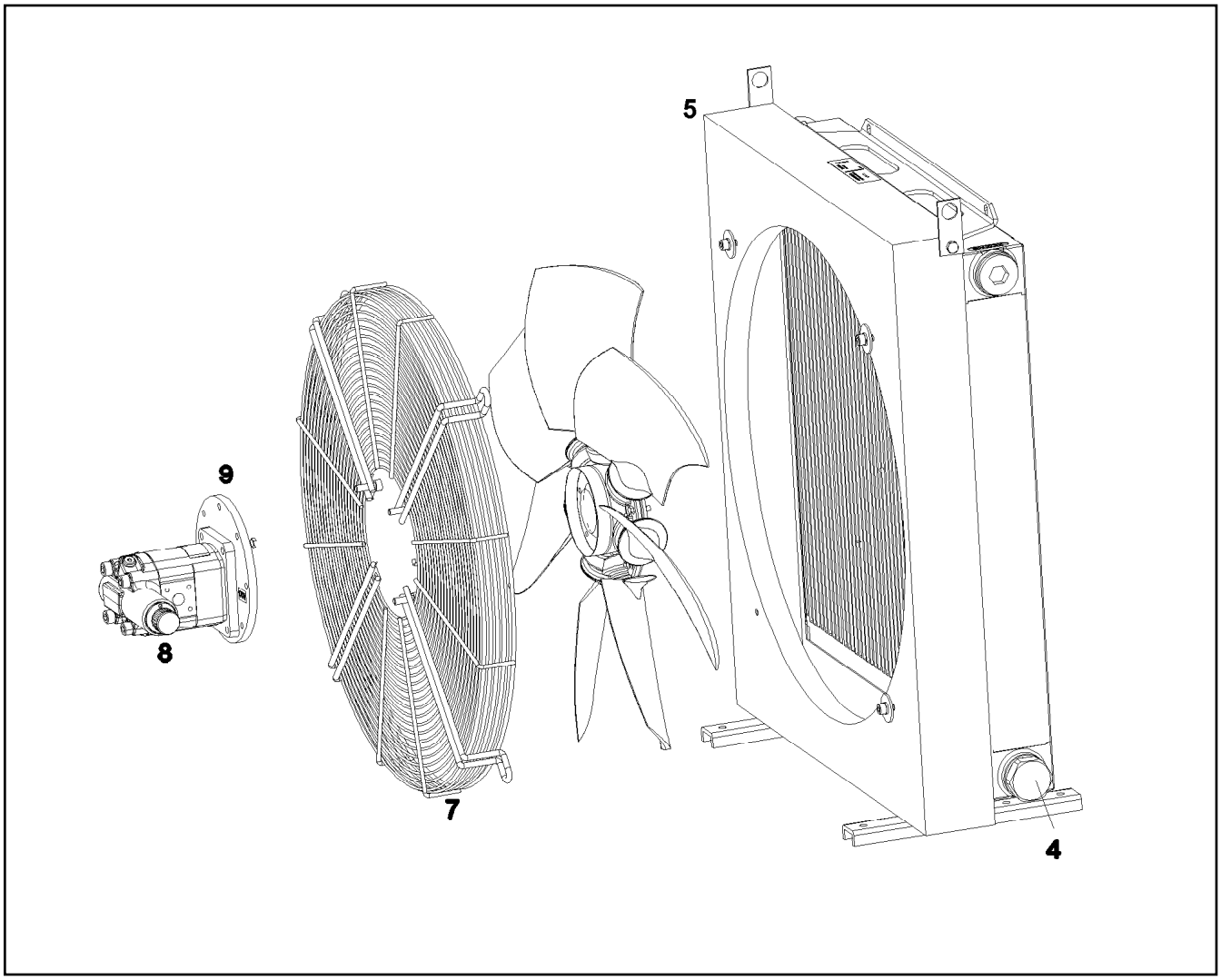

Pos.	Item	Quantity	Description	Bezeichnung
4	11490271	1	THERMO-VALVE pv=2BAR	THERMOVENTIL
5	10875930	1	FRAME RAL 9005 MATT	RAHMEN
7	10872389	1	GUARD	SCHUTZGITTER
8	10872388	1	HYDRO MOTOR ⇨ ❑ 567	HYDROMOTOR
9	10874902	1	MOTOR SEAT	MOTORAUFNAHME
10	10874640	1	FAN BLADE	LUEFTERFLUEGEL

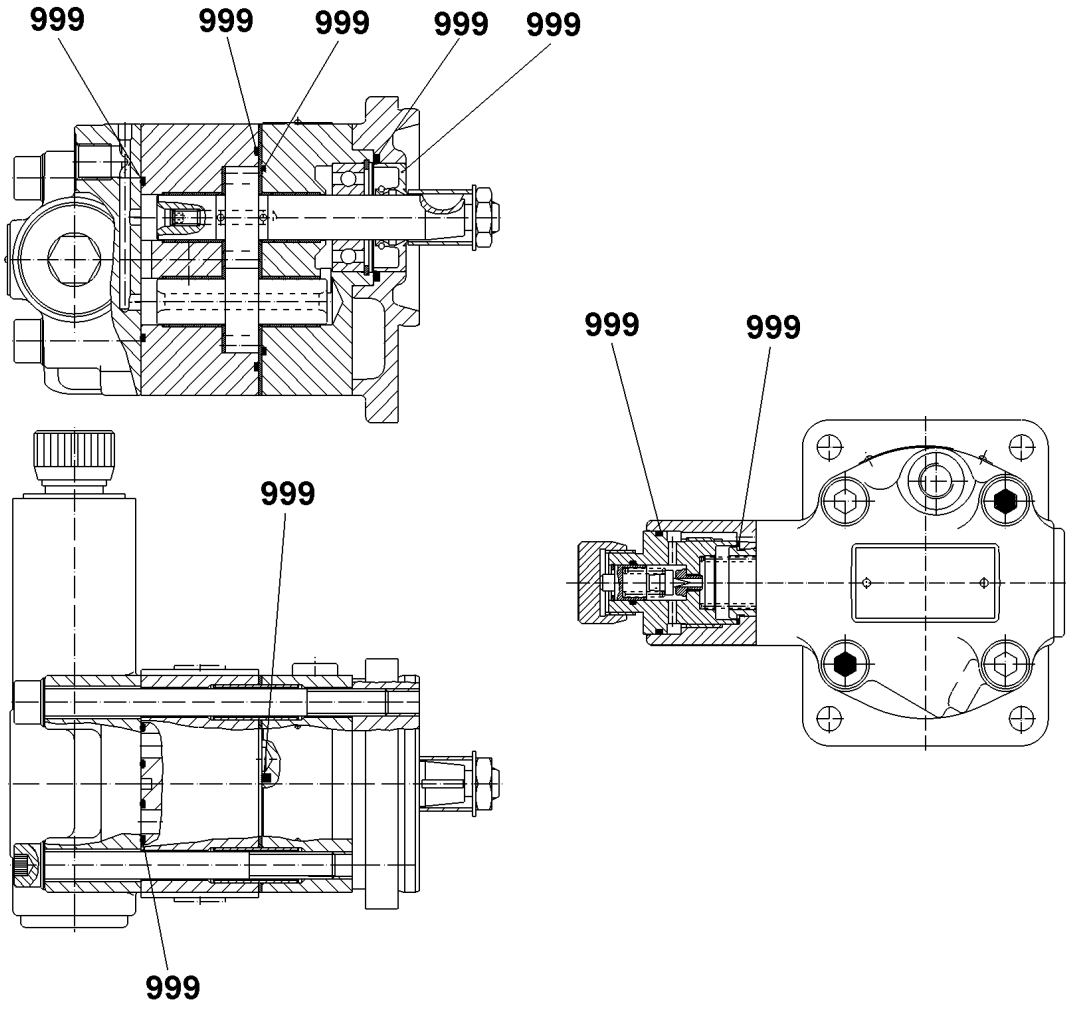

Pos.	Item	Quantity	Description	Bezeichnung
999	10872714	1	SEAL KIT F. OIL MOTOR	DS HYDROMOTOR

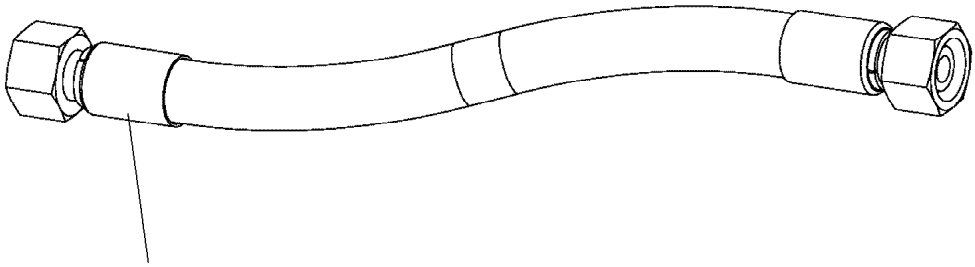

Schlauchnummer
Hose number
Numéro de flexible
Número de flexible
Номера шланга

Die Schlauchnummern auf den Schläuchen entsprechen den Positionen in der Schlauchliste.

The hose numbers from the hoses are in accordance with the items in the hose list.

Les numéros indiqués sur les flexibles correspondent aux repères de la nomenclature des flexibles.

Los números indicados en los flexibles corresponden a las posiciones de la lista de flexibles.

Нанесенные на шлангах номера соответствуют позициям в перечне.

Pos.	Item	Quantity	Description	Bezeichnung
200	962440508	1	HOSE CPL. 2SN 16X4600	SCHLAUCH KPL.
201	96034411	1	HOSE CPL. 2SN 16X420	SCHLAUCH KPL.
202	926130108	1	HOSE CPL. 1SC 8X360	SCHLAUCH KPL.
203	96035632	1	HOSE CPL. 1SC 8X3600	SCHLAUCH KPL.
204	96035633	1	HOSE CPL. 2SN 12X420	SCHLAUCH KPL.
205	96035634	1	HOSE CPL. 2TE 16X180	SCHLAUCH KPL.
206	927613508	1	HOSE CPL. 2SN 12X1300	SCHLAUCH KPL.
207	96035635	1	HOSE CPL. 2SN 12X370	SCHLAUCH KPL.
209	96040433	1	HOSE CPL. 304 60X140	SCHLAUCH KPL.
210	96040435	1	HOSE CPL. 75X150	SCHLAUCH KPL.
211	928024908	1	HOSE CPL. 2TE 10X660	SCHLAUCH KPL.
212	969633808	1	HOSE CPL. 2SN 8X2550	SCHLAUCH KPL.
213	968350608	1	HOSE CPL. 2TE 16X760	SCHLAUCH KPL.
214	926606608	1	HOSE CPL. 2TE 10X800	SCHLAUCH KPL.
215	967355108	1	HOSE CPL. 2TE 10X2150	SCHLAUCH KPL.
217	964273708	1	HOSE CPL. 2TE 10X740	SCHLAUCH KPL.
218	927295708	1	HOSE CPL. 2TE 20X440	SCHLAUCH KPL.
219	968150708	1	HOSE CPL. 2TE 20X200	SCHLAUCH KPL.
221	969634108	1	HOSE CPL. 2SN 20X280	SCHLAUCH KPL.
222	926561708	1	HOSE CPL.	SCHLAUCH KPL.
224	927032108	1	HOSE CPL. 1SN 25X640	SCHLAUCH KPL.
225	968537008	1	HOSE CPL. 2TE 20X1100	SCHLAUCH KPL.
226	968350708	1	HOSE CPL. 2TE 20X760	SCHLAUCH KPL.
228	926041308	1	HOSE CPL. 2TE 16X1200	SCHLAUCH KPL.
229	969633908	1	HOSE CPL. 2SN 16X250	SCHLAUCH KPL.
230	969634308	1	HOSE CPL.	SCHLAUCH KPL.
231	968350908	1	HOSE CPL. 2SN 6X500	SCHLAUCH KPL.
233	968351008	1	HOSE CPL.	SCHLAUCH KPL.
234	968150708	1	HOSE CPL. 2TE 20X200	SCHLAUCH KPL.
235	969634008	1	HOSE CPL. GH506-16 25X1550	SCHLAUCH KPL.
236	965155808	1	HOSE CPL. GH506-16 25X1400	SCHLAUCH KPL.
254	96040432	2	HOSE CPL.	SCHLAUCH KPL.
255	96040434	1	HOSE CPL. CARBURITE10 50X390	SCHLAUCH KPL.
300	967623008	1	HOSE CPL. 4ST+ 31X880	SCHLAUCH KPL.
301	968151108	1	HOSE CPL. 4ST+ 31X940	SCHLAUCH KPL.
302	968151208	1	HOSE CPL. 4ST+ 31X260	SCHLAUCH KPL.
303	924741208	1	HOSE CPL. GH425-10 16X480	SCHLAUCH KPL.
304	924741208	1	HOSE CPL. GH425-10 16X480	SCHLAUCH KPL.
305	968151308	1	HOSE CPL. 2SN 10X1900	SCHLAUCH KPL.
306	966142408	1	HOSE CPL. GH425-8 12X1800	SCHLAUCH KPL.
307	966350208	1	HOSE CPL. GH425-8 12X2400	SCHLAUCH KPL.
308	963170408	1	HOSE CPL. GH425-8 12X1140	SCHLAUCH KPL.
309	923343608	1	HOSE CPL. GH425-8 12X1600	SCHLAUCH KPL.
310	968151408	1	HOSE CPL. 2SN 6X880	SCHLAUCH KPL.
313	928046908	1	HOSE CPL. 2TE 10X360	SCHLAUCH KPL.
314	923853008	1	HOSE CPL. GH425-10 16X1400	SCHLAUCH KPL.
315	969386508	1	HOSE CPL.	SCHLAUCH KPL.
316	928005808	1	HOSE CPL. 2SN 8X600	SCHLAUCH KPL.
317	928762308	1	HOSE CPL. 2SN 10X3000	SCHLAUCH KPL.
318	929391108	1	HOSE CPL. 2SN 10X2900	SCHLAUCH KPL.
319	968599208	1	HOSE CPL. 2SN 8X1180	SCHLAUCH KPL.
320	968351208	1	HOSE CPL. 2SN 8X1140	SCHLAUCH KPL.
321	968151808	1	HOSE CPL. GH663 38X700	SCHLAUCH KPL.
322	968151908	1	HOSE CPL. GH663 38X820	SCHLAUCH KPL.
323	968152008	1	HOSE CPL. 2SN 8X2350	SCHLAUCH KPL.
324	968152008	1	HOSE CPL. 2SN 8X2350	SCHLAUCH KPL.
325	926362908	1	HOSE CPL. 2TE 10X1950	SCHLAUCH KPL.
326	969452208	1	HOSE CPL. 1SC 8X1400	SCHLAUCH KPL.
329	969634408	1	HOSE CPL. 1SC 8X340	SCHLAUCH KPL.
330	926028808	1	HOSE CPL. 2TE 10X2150	SCHLAUCH KPL.

Pos.	Item	Quantity	Description	Bezeichnung
331	966861108	1	HOSE CPL. 1SC 8X720	SCHLAUCH KPL.
332	924134808	1	HOSE CPL.	SCHLAUCH KPL.
333	923342808	1	HOSE CPL. GH425-10 16X1700	SCHLAUCH KPL.
334	963457808	1	HOSE CPL. 2SN 12X3700	SCHLAUCH KPL.
335	926610108	1	HOSE CPL. 2TE 10X520	SCHLAUCH KPL.
336	965159708	1	HOSE CPL. 2TE 12X820	SCHLAUCH KPL.
339	966051108	1	HOSE CPL. GH663 38X2000	SCHLAUCH KPL.
340	965861108	3	HOSE CPL. GH663 38X1300	SCHLAUCH KPL.
341	969935008	1	HOSE CPL. GH425-10 16X2000	SCHLAUCH KPL.
342	921990108	1	HOSE CPL. GH425-10 16X2000	SCHLAUCH KPL.
343	968351408	1	HOSE CPL. 4ST+ 31X630	SCHLAUCH KPL.
345	968351508	1	HOSE CPL. 1SN 25X3900	SCHLAUCH KPL.
346	962956708	1	HOSE CPL. 1SC 8X4100	SCHLAUCH KPL.
348	968139808	1	HOSE CPL. 2TE 10X1900	SCHLAUCH KPL.
349	923016308	1	HOSE CPL. 2TE 10X2800	SCHLAUCH KPL.
350	926711908	1	HOSE CPL. 2TE 10X1200	SCHLAUCH KPL.
351	926289108	1	HOSE CPL. 2TE 12X1000	SCHLAUCH KPL.
352	965434608	1	HOSE CPL. 2TE 20X800	SCHLAUCH KPL.
353	965945408	1	HOSE CPL. 2TE 10X490	SCHLAUCH KPL.
354	965198708	1	HOSE CPL. 1SC 8X330	SCHLAUCH KPL.
355	968152508	1	HOSE CPL. 2TE 10X190	SCHLAUCH KPL.
356	928006008	1	HOSE CPL.	SCHLAUCH KPL.
357	968007308	1	HOSE CPL. 2TE 20X3100	SCHLAUCH KPL.
358	928876208	1	HOSE CPL. 2TE 20X3600	SCHLAUCH KPL.
360	925352308	1	HOSE CPL. GH425-12 19X680	SCHLAUCH KPL.
361	969572608	1	HOSE CPL. 4ST+ 31X920	SCHLAUCH KPL.
364	928022908	1	HOSE CPL. 2TE 10X1220	SCHLAUCH KPL.
367	966860408	1	HOSE CPL. 2TE 20X960	SCHLAUCH KPL.
368	922068108	1	HOSE CPL. GH425-12 19X700	SCHLAUCH KPL.
369	928042908	1	HOSE CPL. 2TE 20X1000	SCHLAUCH KPL.
370	96040431	1	HOSE CPL. 2TE 10X1240	SCHLAUCH KPL.
372	926757108	1	HOSE CPL. 2TE 20X2500	SCHLAUCH KPL.
373	967219908	1	HOSE CPL. 1SN 25X1240	SCHLAUCH KPL.
374	929631408	1	HOSE CPL. 2TE 20X800	SCHLAUCH KPL.
375	969634508	1	HOSE CPL. 1SN 32X2200	SCHLAUCH KPL.
376	96040847	1	HOSE CPL. GH506-16 25X1200	SCHLAUCH KPL.
377	968352108	1	HOSE CPL. GH663 38X3000	SCHLAUCH KPL.
378	962641808	1	HOSE CPL. 2TE 10X260	SCHLAUCH KPL.
379	927294708	1	HOSE CPL. 2TE 10X220	SCHLAUCH KPL.
380	969634608	1	HOSE CPL. GH506-16 25X1020	SCHLAUCH KPL.
381	968351808	1	HOSE CPL. GH506-16 25X1400	SCHLAUCH KPL.
382	969634708	1	HOSE CPL. GH506-16 25X600	SCHLAUCH KPL.
383	963926708	1	HOSE CPL. GH506-16 25X1300	SCHLAUCH KPL.
384	968352008	1	HOSE CPL. GH506-16 25X940	SCHLAUCH KPL.
385	967618508	1	HOSE CPL. GH506-16 25X1750	SCHLAUCH KPL.
386	962255708	1	HOSE CPL. 2SN 12X1700	SCHLAUCH KPL.
387	962255708	1	HOSE CPL. 2SN 12X1700	SCHLAUCH KPL.
388	962969208	1	HOSE CPL. 2SN 12X2150	SCHLAUCH KPL.
389	962969208	1	HOSE CPL. 2SN 12X2150	SCHLAUCH KPL.
396	969386708	1	HOSE CPL.	SCHLAUCH KPL.
400	966184308	1	HOSE CPL. 2SN 6X220	SCHLAUCH KPL.
402	926990808	1	HOSE CPL. 2TE 10X580	SCHLAUCH KPL.
403	969634908	1	HOSE CPL. 1SN 25X960	SCHLAUCH KPL.
405	928720408	1	HOSE CPL.	SCHLAUCH KPL.
406	928037208	1	HOSE CPL. 2SN 20X480	SCHLAUCH KPL.
410	922628908	1	HOSE CPL. HPC 4X3800	SCHLAUCH KPL.
411	963560708	1	HOSE CPL. HPC 4X1000	SCHLAUCH KPL.

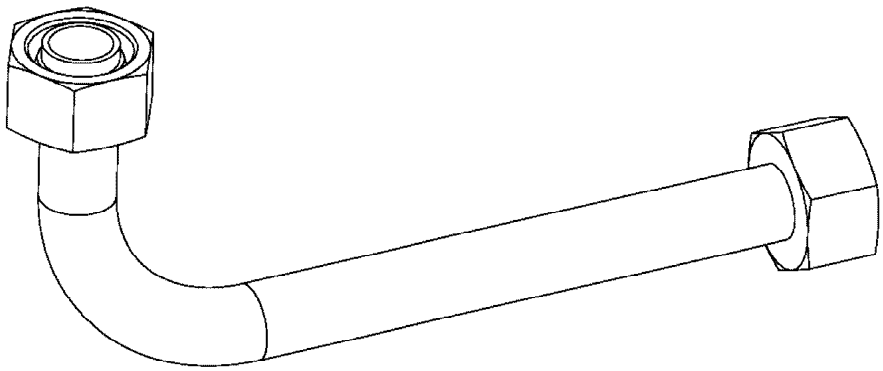

Die Positionsnummern der Rohre auf den Bildtafeln entsprechen den Positionen in der Rohrliste.

The pipe numbers from the illustrations are in accordance with the items in the pipe list.

Les numéros des tuyaux sur les illustrations correspondent aux repères de la nomenclature des tuyaux.

Los números de tubos en las ilustraciones corresponden a las posiciones de la lista de tubos.

Номера позиций труб на изображениях соответствуют позициям в перечне труб.

Pos.	Item	Quantity	Description	Bezeichnung
200	969344508	1	PIPE COMPL. 25X3	ROHR KPL.
230	969438308	1	PIPE COMPL. 10X1.5	ROHR KPL.
240	96035646	1	PIPE COMPL. 6X1	ROHR KPL.
245	969324808	1	PIPE COMPL. 16X2	ROHR KPL.
246	969324908	1	PIPE COMPL. 18X1.5	ROHR KPL.
247	969325008	1	PIPE COMPL. 10X1.5	ROHR KPL.
260	968158208	1	PIPE COMPL. 20X2.5	ROHR KPL.
265	968158508	1	PIPE COMPL. 20X2.5	ROHR KPL.
290	969325108	1	PIPE COMPL. 10X1.5	ROHR KPL.
291	969325208	1	PIPE COMPL. 10X1.5	ROHR KPL.
292	969325308	1	PIPE COMPL. 12X1.5	ROHR KPL.
300	968154808	1	PIPE COMPL. 38X5	ROHR KPL.
301	968154908	1	PIPE COMPL. 38X5	ROHR KPL.
302	968155008	1	PIPE COMPL. 10X1.5	ROHR KPL.
303	968155108	1	PIPE COMPL. 38X5	ROHR KPL.
304	96035929	1	PIPE COMPL. 38X5	ROHR KPL.
309	969438208	1	PIPE COMPL. 38X5	ROHR KPL.
320	968156108	1	PIPE COMPL. 22X2.5	ROHR KPL.
473	968158908	1	PIPE COMPL. 38X5	ROHR KPL.
474	968159008	1	PIPE COMPL. 38X5	ROHR KPL.
475	968159108	1	PIPE COMPL. 38X5	ROHR KPL.
477	968159308	1	PIPE COMPL. 38X5	ROHR KPL.
478	968159408	2	PIPE COMPL. 42X3	ROHR KPL.
479	968159508	1	PIPE COMPL. 42X3	ROHR KPL.

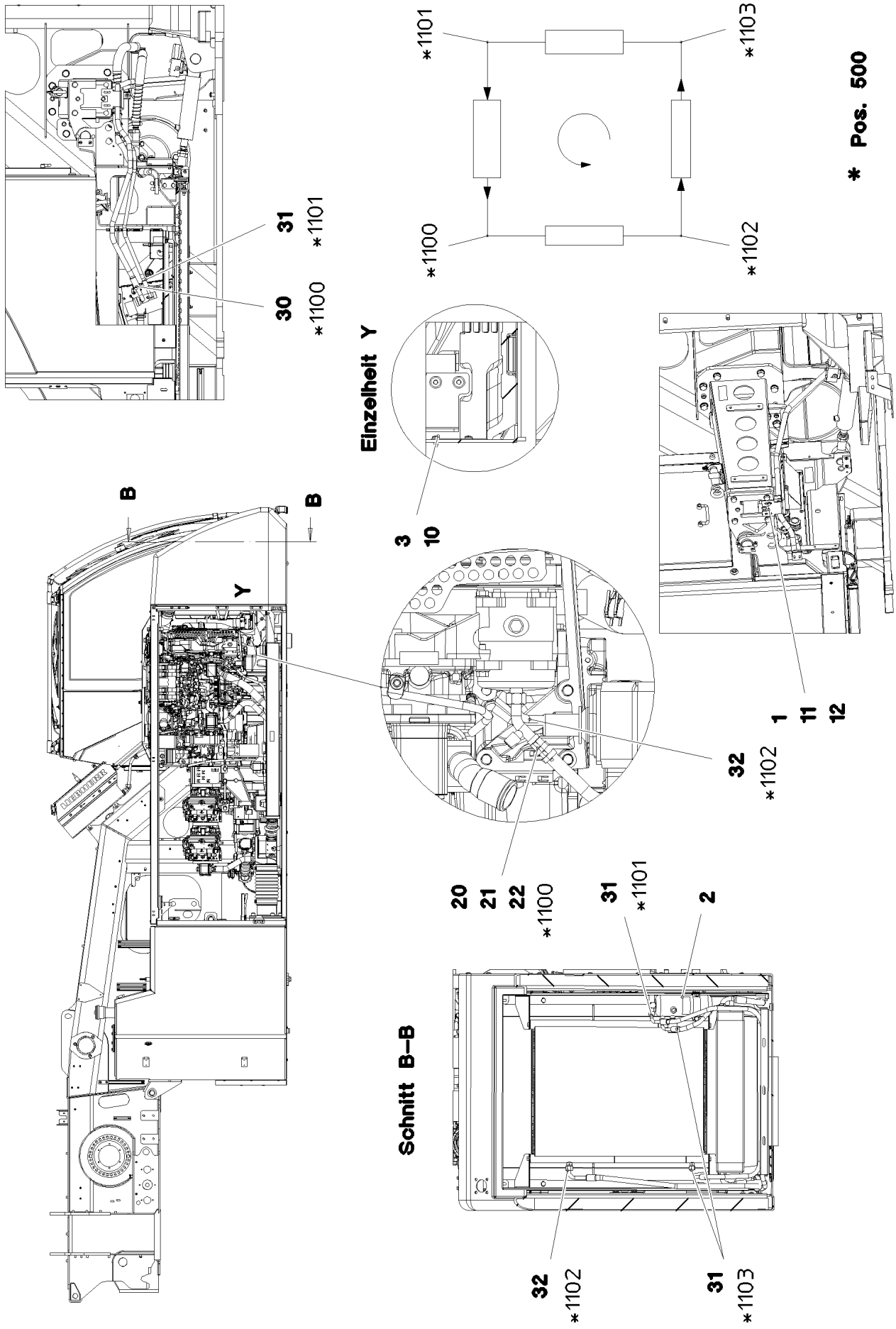
* Pos. 500
*1101
*1103
*1100
*1102
31
*1101
30
*1100
Einzelheit Y
3
10
B
B
Y
32
*1102
1
11
12
20
21
22
*1100
31
*1101
2
Schnitt B–B
32
*1102
31
*1103

Pos.	Item	Quantity	Description	Bezeichnung
1	97044721	1	PLATE 4X95X262 S315MC FE//ZNNI8//CN//T	BLECH
2	553031008	1	SIGN	SCHILD
3	976955508	1	SIGN 75X45 ALUMINIUM	SCHILD
10	10875793	2	SHEET-METAL SCREW ISO 7049 ST4,2X9,5	BLECHSCHRAUBE
11	11657360	2	HEX SCREW ISO 4017 M6X16 8.8 480H SPF	SECHSKANTSCHRAUBE
12	10197771	2	WASHER ISO 7089 6 200HV ZNNI-480H SPF	SCHEIBE
20	97057512	1	NIPPLE GA10-45°H32	NIPPEL
21	10216529	1	BRACKET 10 ST	BUEGEL
22	10216534	2	CLIP 23 ST	CLIP
30	7411823	1	O-RING NEOPRENE (W)	O-RING
31	10216678	4	O-RING 7,6X1,78 NEOPREN	O-RING
32	5610999	2	O-RING 10,8X1, 78 NEOPREN	O-RING
100	7020440	1.6	REFRIGERANT 12KG FLASCHE R134A	KAELTEMITTEL
101	11211803	0.18	COLD MACHINE OIL WAECO PAG 46 0,25L D	KAELTEMASCHINENOEL
500	96018575	1	HOSE LINES AIR CONDITIONING	SCHLAUCHLEITUNGEN KLIMA O
(1100)	964476008	1	HOSE CPL. GH001 13X5200	SCHLAUCH KPL.
(1101)	969452608	1	HOSE CPL. GH001 8X6700	SCHLAUCH KPL.
(1102)	969041408	1	HOSE CPL. GH001 10X1800	SCHLAUCH KPL.
(1103)	969637808	1	HOSE CPL. GH001 8X1160	SCHLAUCH KPL.

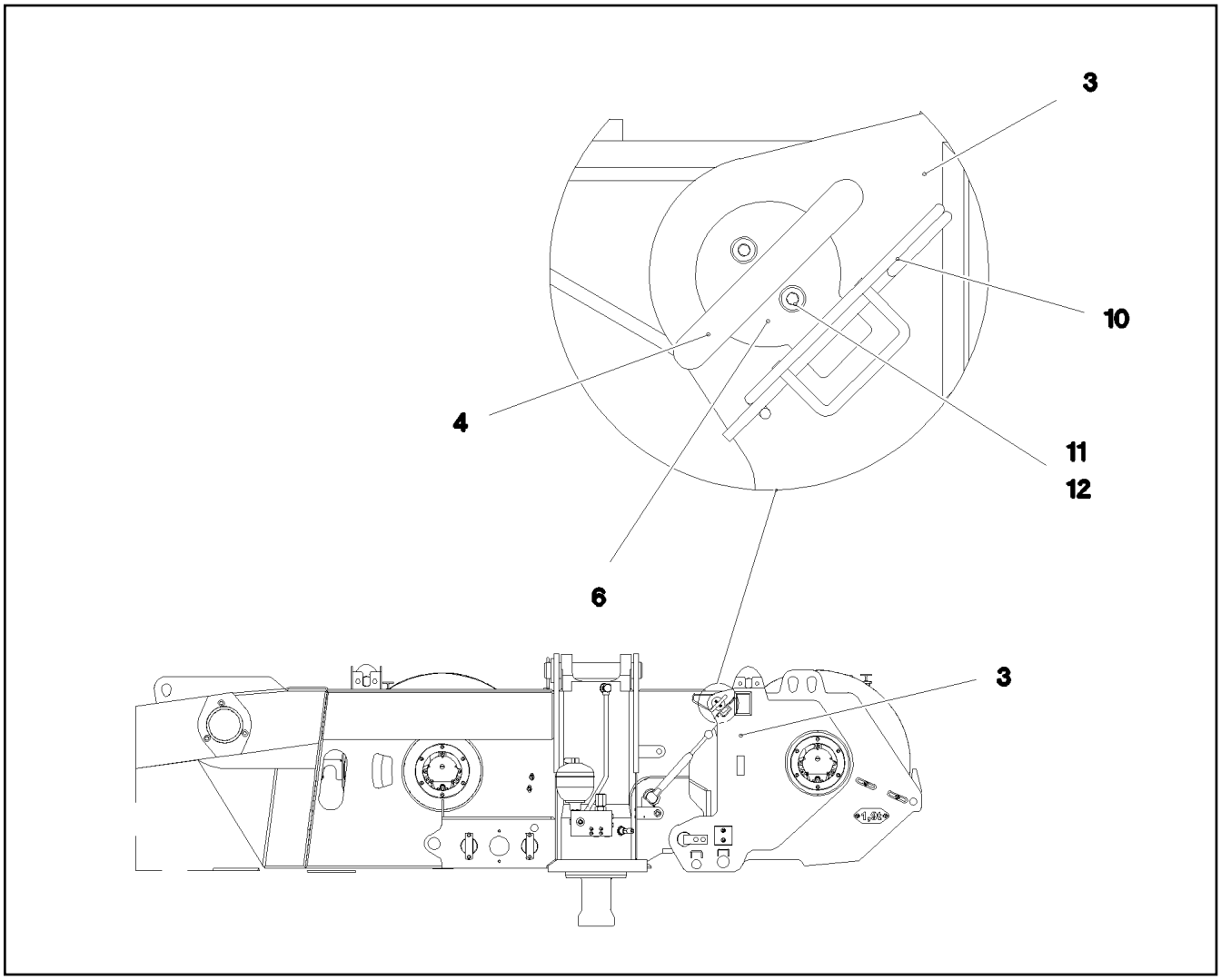

Pos.	Item	Quantity	Description	Bezeichnung
3	967969608	1	AUXILIARY HOISTING GEAR 2 PR.A ⇨ ❑ 576	HILFSHUBWERK WINDE 2 VORM
4	967969708	2	HANDLE WELD.CONST. FE//ZNNI8//CN//T0	GRIFF SCHWK.
6	97031197	2	PIN 45.0X100 35NICRMOV125 SPF	BOLZEN
10	433101208	2	RETAINING SPRING 4X68 ISO 2081 FE/ZN8/	SICHERUNGSFEDER
11	11140403	4	WASHER ISO 7089 5 200HV 480H SPF	SCHEIBE
12	11690042	4	SOCKET HEAD SCREW ISO 4762 M5X12 8.8	ZYLINDERSCHRAUBE

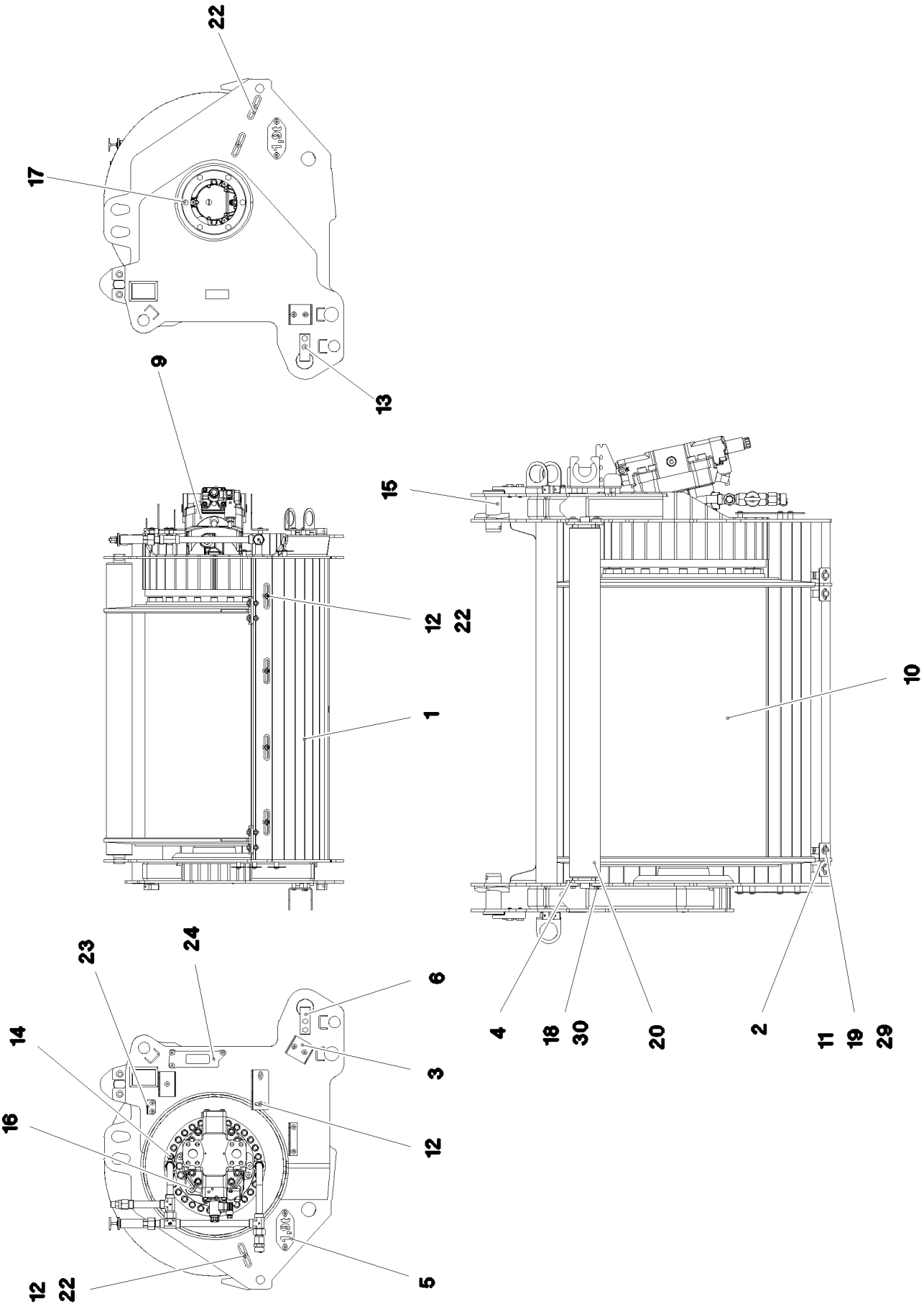

4.12.2020 077872 LIEBHERR	**etk_en_de 047580 LTR 1220** **AUXILIARY HOISTING GEAR 2 PR.A** **HILFSHUBWERK WINDE 2 VORM.**	576 (1/2) **967969608**

Pos.	Item	Quantity	Description	Bezeichnung
1	967969908	1	AUXILIARY HOISTING GEAR 2 WD	HILFSHUBWERK WINDE 2 SCH
2	967970008	2	PLATE	SICHELBLECH SCHWK.
3	97031203	2	PLATE 3X70X222 DC01 FE//ZNNI8//CN//T0	BLECH
4	956474508	2	PLATE 8X84X108 S355MC FE//ZNNI8//CN//T	BLECH
5	97031205	2	PLATE 2X145X62 DC01 FE//ZNNI8//CN//T0	BLECH
6	97031206	2	PLATE 35X96X20 S690QL	BLECH
9	11211058	1	VARIABLE DISPLACEMENT MOTOR A6VM 1 ⇨ ❑ 578	VERSTELLMOTOR
10	90028852	1	COMPACT ROPE WINCH KSW 400/1786 ⇨ ❑ 579	KOMPAKTSEILWINDE
11	10876076	4	HEX NUT DIN 985 M8 10 480H SPF	SECHSKANTMUTTER
12	12102696	25	BUTTON HEAD SCREW ISO7380-2 M8X10 0	HALBRUNDKOPFSCHRAUBE
13	11642358	4	HEX SCREW ISO 4017 M10X30 8.8 FLZN SP	SECHSKANTSCHRAUBE
14	404317008	28	SOCKET HEAD SCREW ISO 4762 M16X45 10	ZYLINDERSCHRAUBE
15	453040908	2	PIN ISO 2341 B45X110X98 35NICRMOV125	BOLZEN
16	10875803	4	HEX SCREW ISO 4017 M16X45 8.8 FLZN SP	SECHSKANTSCHRAUBE
17	406601008	6	HEX SCREW ISO 4017 M10X35 10.9 FLZN SP	SECHSKANTSCHRAUBE
18	10197730	4	HEX SCREW ISO 4017 M10X20 8.8 ZNNI-480	SECHSKANTSCHRAUBE
19	11692827	4	HEX SCREW ISO 4017 M8X35 8.8 480H SPF	SECHSKANTSCHRAUBE
20	749014908	1	CARRYING ROLLER 90/7/40X1015 GASN. SP	TRAGROLLE
22	953650008	7	CABLE CLAMP DC01 FE//ZNNI8//CN//T0	KABELHALTER
23	953756608	1	PLATE 3X50X65 DC01 FE//ZNNI8//CN//T0	BLECH
24	955668108	1	PLATE 196X63 S315MC FE//ZNNI8//CN//T0	BLECH
29	11840501	12	WASHER DIN 7349 8,4 200HV 480H SPF	SCHEIBE
30	11491889	4	WASHER ISO 7093-1 10 300HV FLZN SPF	SCHEIBE
100	966298308	1	ELECTRIC FOR WINCH 2	ELEKTRIK WINDE 2
(5)	10802061	1	WINCH REVOLUTION TRANSDUCER 655360 ⇨ ❑ 363	WINDENDREHGEBER
(6)	606012608	1	DRIVE FLANGE EDELSTAHL	ANTRIEBSFLANSCH
(8)	966298408	1	WIRING HARNESS W522	KABELSTRANG
(9)	955668108	1	PLATE 196X63 S315MC FE//ZNNI8//CN//T0	BLECH
(10)	11657360	3	HEX SCREW ISO 4017 M6X16 8.8 480H SPF	SECHSKANTSCHRAUBE
(12)	424000508	3	WASHER SPRING DIN 127 A 6 FST A2C	FEDERRING
(15)	720014408	1	CABLE CLAMP	KABELHALTER
200	921444108	1	CENTRAL LUBRICATING SYSTEM ⇨ ❑ 586	ZENTRALSCHMIERANLAGE

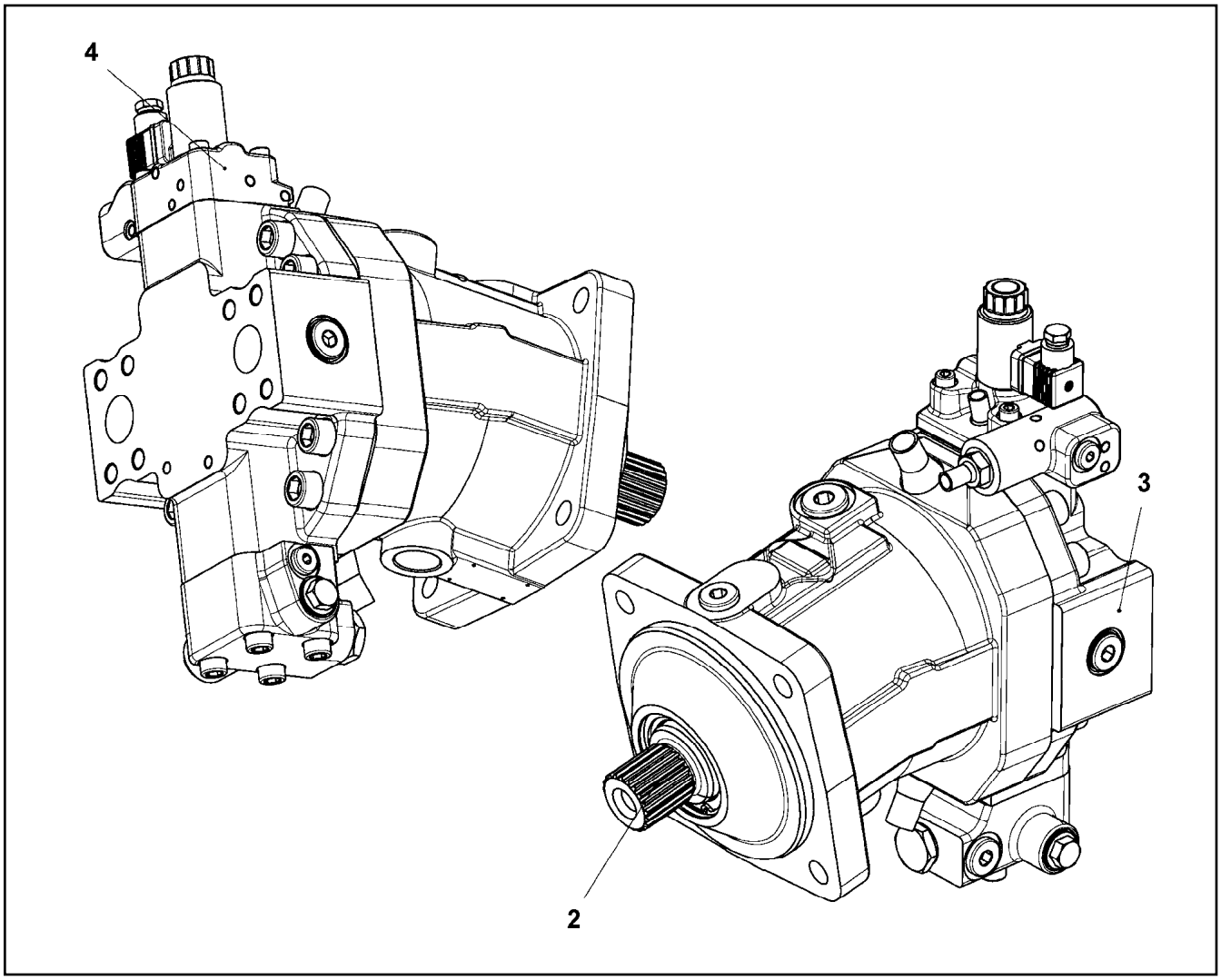

Pos.	Item	Quantity	Description	Bezeichnung
2	11643393	1	DRIVING GEAR	TRIEBWERK
3	11643394	1	CLOSING PLATE	ABSCHLUSSPLATTE
4	11161917	1	CONTROL ELEMENT	STEUERTEIL

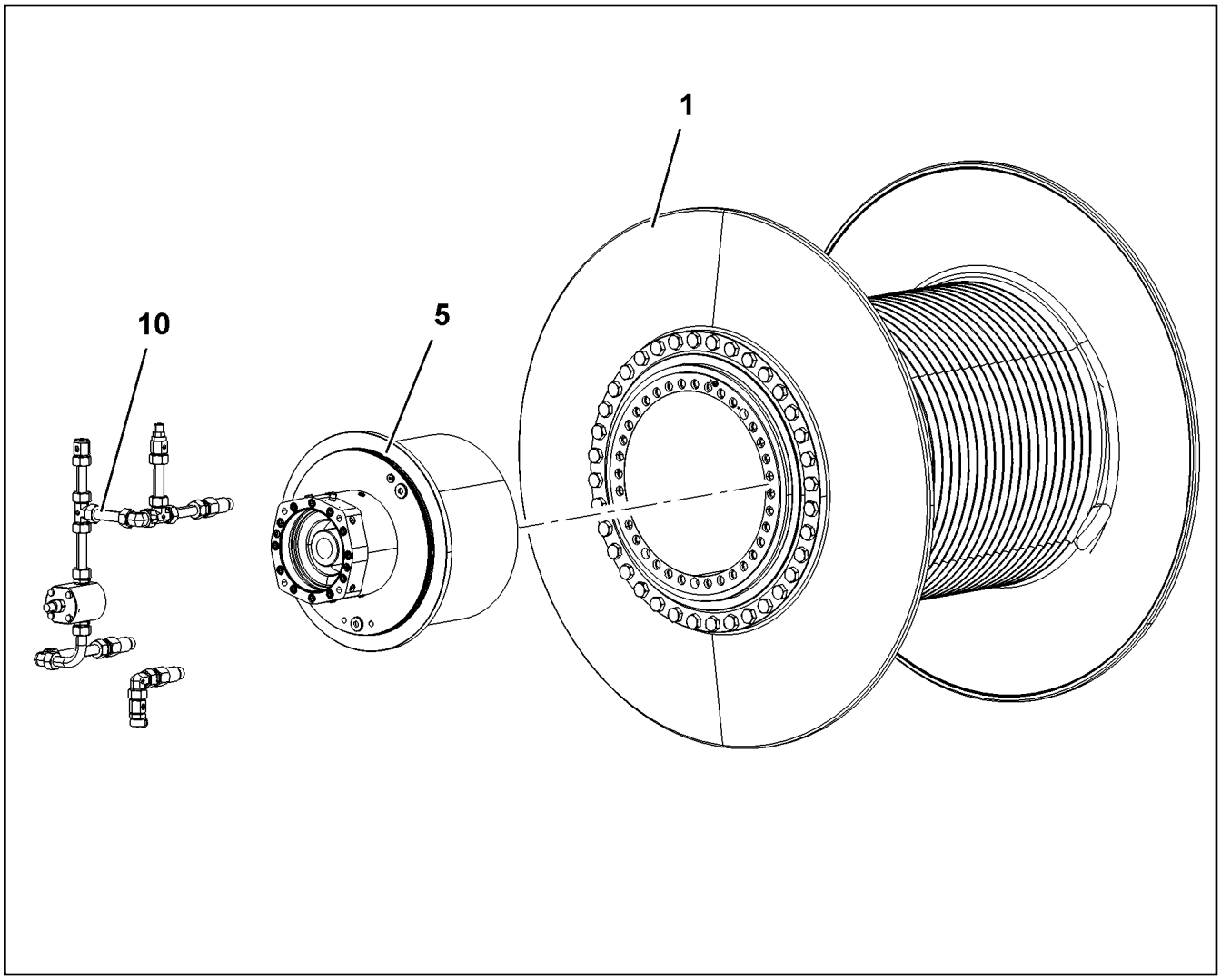

Pos.	Item	Quantity	Description	Bezeichnung
1	939294001	1	ROPE DRUM ⇨ ❑ 580	SEILTROMMEL
5	939294201	1	PLANETARY GEARBOX 3-STUFIG ⇨ ❑ 582	PLANETENGETRIEBE
10	90200103	1	OIL-GAUGING INSTRUMENT ⇨ ❑ 584	OELMESSEINRICHTUNG

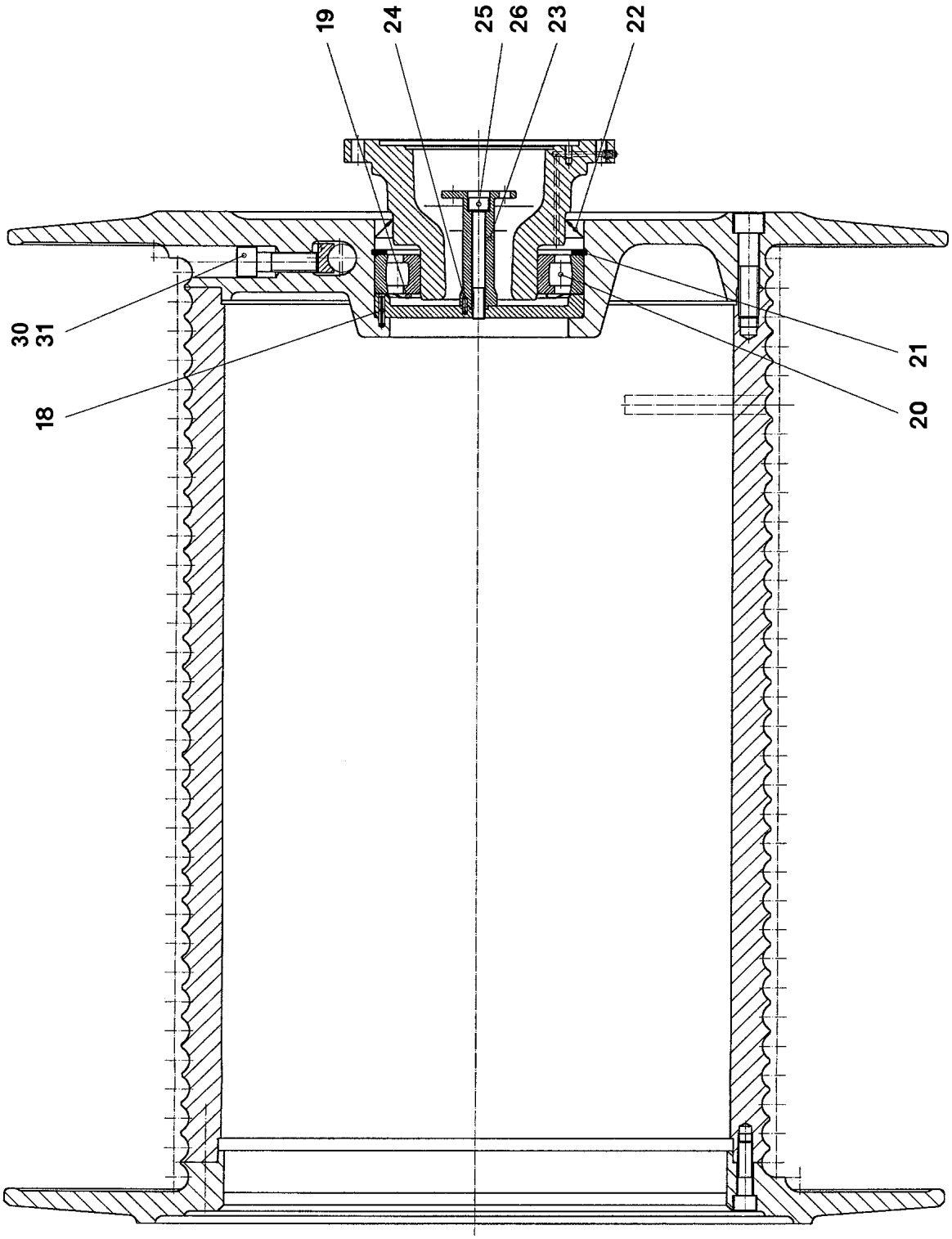
19
24
25
26
23
22
30
31
18
21
20

Pos.	Item	Quantity	Description	Bezeichnung
18	431204301	1	CORE PIN DIN 1473 5X24	KERBSTIFT
19	747272501	1	BEARING COVER RING 6219 JV	LAGERABDECKRING
20	540509008	1	SWIVEL-JOINT ROLLER BEARING DIN 635 2	TONNENLAGER
21	428105908	1	LOCKING RING DIN 472 170X4	SICHERUNGSRING
22	710032508	1	ROTARY SHAFT LIP SEAL DIN 3760 A 140X1	RADIALWELLENDICHTRING
23	927504701	1	FLANGE	FLANSCH
24	431100201	1	CORE PIN DIN 1472 4X12	KERBSTIFT
25	12223034	1	SOCKET HEAD SCREW ISO 4762 M10X90 8	ZYLINDERSCHRAUBE
26	423901508	1	LOCK WASHER VS 10	SICHERUNGSSCHEIBE
30	927606901	1	CLAMPING PIECE 24	KLEMMSTUECK
31	10001077	4	SOCKET HEAD SCREW ISO 4762 M16X50 10	ZYLINDERSCHRAUBE

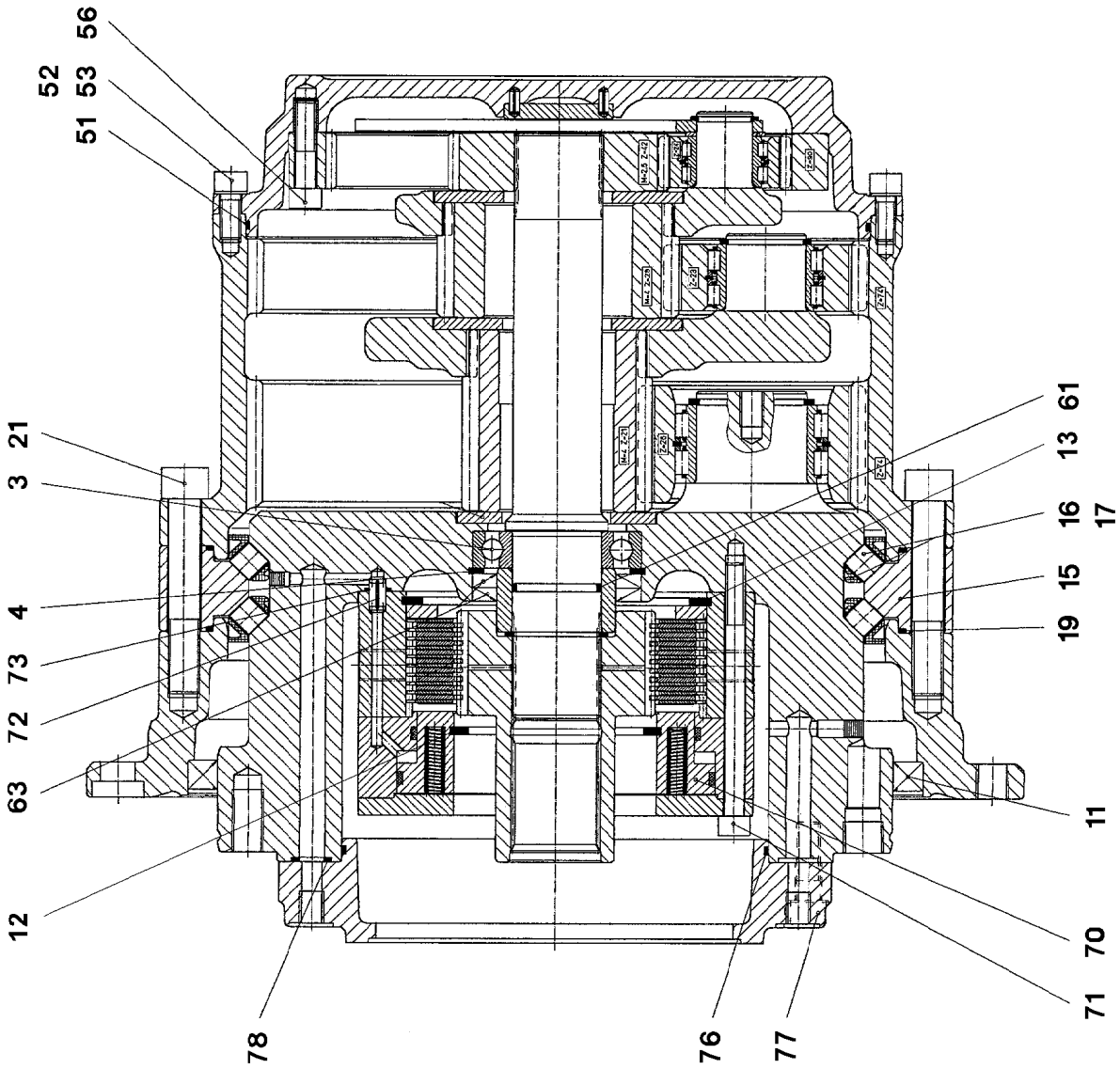
56
52
53
51
21
3
4
73
72
63
12
61
13
16
17
15
19
11
70
71
78
76
77

Pos.	Item	Quantity	Description	Bezeichnung
3	745159301	1	DEEP GROOVE BALL BEARING DIN 625 62	RILLENKUGELLAGER
4	428102708	1	LOCKING RING DIN 472 85X3	SICHERUNGSRING
11	710054601	1	ROTARY SHAFT LIP SEAL DIN 3760 AS 340X	RADIALWELLENDICHTRING
12	4281019	1	LOCKING RING DIN 472 102X4 ZNPH R	SICHERUNGSRING
13	4281048	1	LOCKING RING DIN 472 155X4 ZNPH R	SICHERUNGSRING
15	927745301	1	BEARING RING	LAGERRING
16	927514301	38	ROLLER CAGE	ROLLENKAEFIG
17	747006101	114	CYL.ROLLER 14X14	ZYLINDERROLLE
19	726429901	2	O-RING 330X3 NBR 70	O-RING
21	404318008	24	SOCKET HEAD SCREW ISO 4762 M16X100	ZYLINDERSCHRAUBE
51	530032508	1	O-RING 300X3 NBR70	O-RING
52	10415162	12	SOCKET HEAD SCREW ISO 4762 M10X25 8	ZYLINDERSCHRAUBE
53	423901508	12	LOCK WASHER VS 10	SICHERUNGSSCHEIBE
56	11657000	12	SOCKET HEAD SCREW ISO 4762 M10X45 8	ZYLINDERSCHRAUBE
61	726421108	1	O-RING 38X3 NBR90	O-RING
63	710062601	2	ROTARY SHAFT LIP SEAL BAB 60X85X7 N	RADIALWELLENDICHTRING
70	502037201	1	SPRING LOADED MULTI-DISC BRAKE	FEDERDRUCKLAMELLENBREMS
71	11320344	12	SOCKET HEAD SCREW ISO 4762 M10X130	ZYLINDERSCHRAUBE
72	432007908	1	DOWEL PIN ISO 8752 A 8X16	SPANNSTIFT
73	502652908	1	O-RING 8X2 NBR70	O-RING
76	761021703	1	O-RING 195X3 NBR 70	O-RING
77	10875565	8	SOCKET HEAD SCREW ISO 4762 M12X40 8	ZYLINDERSCHRAUBE
78	726405608	6	O-RING 14X3 NBR70	O-RING

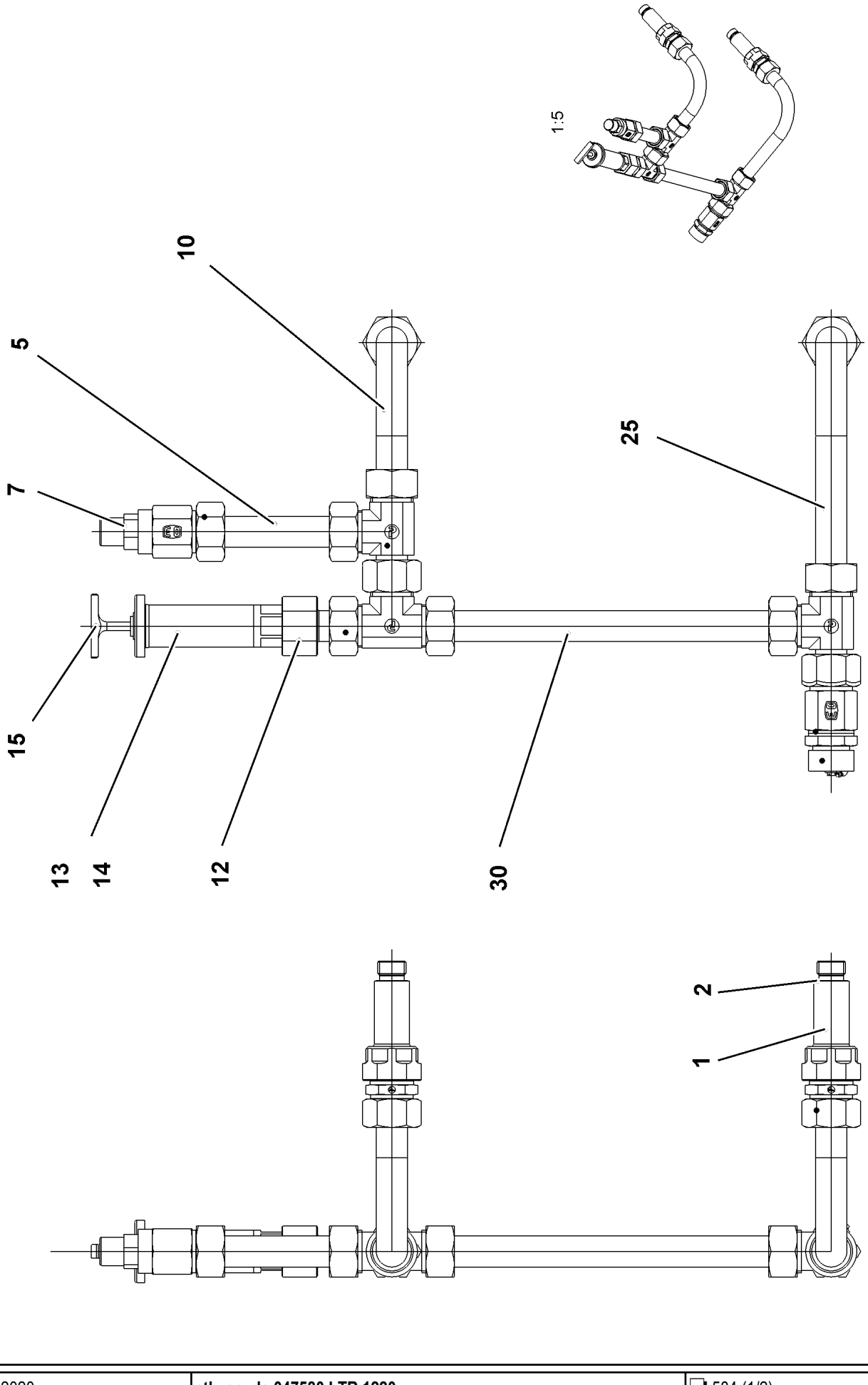
1:5
10
5
7
25
15
13
14
12
30
2
1

Pos.	Item	Quantity	Description	Bezeichnung
1	939599301	2	THREADED CONNECTION PIECE	GEWINDEANSCHLUSSSTUTZE
2	761022903	2	SEALING RING DIN 3869 20X17,8 NBR	DICHTRING
5	10190120	1	TUBE EN 10305-4 22X1,5X107 E235+N FE/ZN	ROHR
7	721108801	1	VENTILATION UNIT ST VERZ	BE- UND ENTLUEFTUNGSFILTE
10	968021308	1	PIPE COMPL. 22X2.5X229	ROHR KPL.
12	927586201	1	CONNECTION STUB 11SMnPb30+C	ANSCHLUSSSTUTZEN
13	927501901	1	VENTILATION CONNECTING PIECE	ENTLUEFTUNGSSTUTZEN
14	761022503	1	SEALING RING 19,6X24,3X1,5	DICHTRING
15	927610201	1	OIL DIPSTICK 1 1/8"	OELMESSSTAB
25	968021408	1	PIPE COMPL. 22X2,5X245	ROHR KPL.
30	979323301	1	TUBE LN 80 401 22X1.5X255 E235+N	ROHR

Pos.	Item	Quantity	Description	Bezeichnung
1	774372608	1	COUPLING SLEEVE	KUPPLUNGSMUFFE
2	774372708	2	COUPLING PLUG	KUPPLUNGSSTECKER
3	471032108	3	FITTING GE 6S G1/4 CR6-FREI	VERSCHRAUBUNG
4	12101847	1	PLUG-IN CONNECTOR GE M8X1K MESSING	STECKVERBINDER
5	10873149	5	POLYAMID PIPE DIN 73378 6X1,5 PA 12-HL	POLYAMIDROHR

Pos.	Item	Quantity	Description	Bezeichnung
4	967784808	1	HYDR.AUXILIARY HOISTING ⇨ ❑ 588	HYDRAULIK HILFSHUBWERK

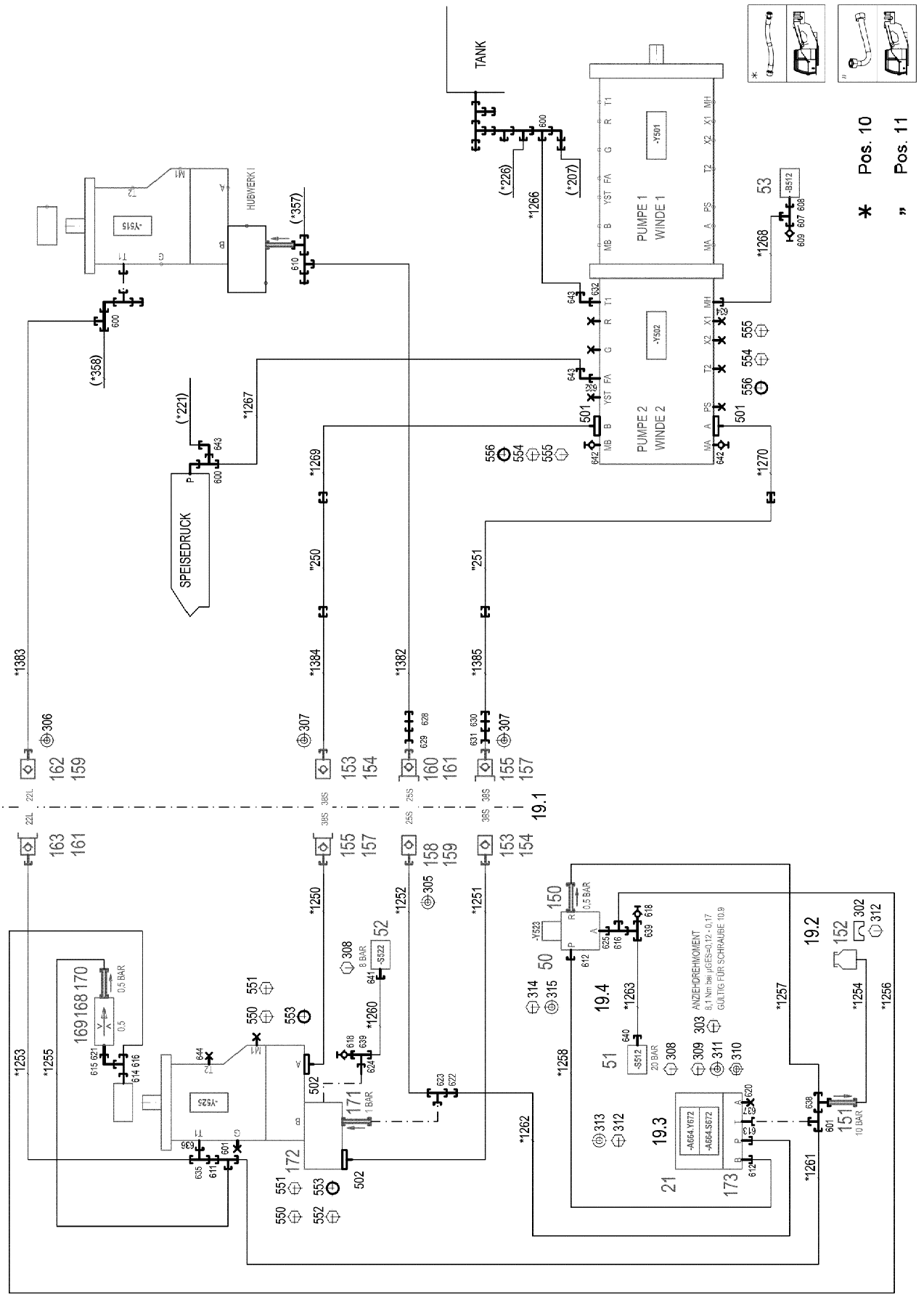
TANK
SPEISEDRUCK
HUBWERK I
PUMPE 1
WINDE 1
PUMPE 2
WINDE 2
-Y501
-Y502
-Y515
-Y525
-Y523
-S512
-S522
-A664.Y672
-A664.S672
-B512
0,5 BAR
8 BAR
1 BAR
20 BAR
10 BAR
ANZIEHDREHMOMENT
8,1 Nm bei µGES=0,12 - 0,17
GÜLTIG FÜR SCHRAUBE 10.9
* Pos. 10
" Pos. 11

Pos.	Item	Quantity	Description	Bezeichnung
10	968083708	1	HOSE LINES HOISTING GEAR ⇨ ❑ 591	SCHLAUCHLEITUNGEN HUBW
11	968083808	1	PIPE LINES WINCH 2	ROHRLEITUNGEN WINDE 2
(250)	968162308	1	PIPE COMPL. 38X5	ROHR KPL.
(251)	968162408	1	PIPE COMPL. 38X5	ROHR KPL.
18	968315808	1	ELECTRIC FOR WINCH 2	ELEKTRIK VORBEREITUNG WI
(1)	968314308	1	LEAD W512	LEITUNG
19	968083608	1	MECHANICAL AUXILIARIES	MECH.BEFESTIGUNGSTEILE
(1)	97035511	1	DIAPHRAGM 4X553X352 S315MC	SCHOTTBLECH
(2)	97037694	1	PLATE 192X126 DC01 FE//ZNNI8//CN//T0	BLECH
(3)	970762808	1	PLATE S315MC FE//ZNNI8//CN//T0	BLECH
(4)	975418208	1	PLATE 4X140X178 S315MC FE//ZNNI8//CN//T	BLECH
21	10652724	1	DIRECTIONAL CONTROL VALVE 4/2 NG6-3	WEGEVENTIL
50	511444408	1	DIRECTIONAL CONTROL VALVE 3/2 350BA ⇨ ❑ 62	WEGEVENTIL
51	10289536	1	PRESSURE SWITCH 0-20/300BAR SPF	DRUCKSCHALTER
52	10220933	1	PRESSURE SWITCH 0-8/300 BAR SPF	DRUCKSCHALTER
53	10813738	1	PRESSURE SENSOR 0-400/400 BAR LSB PL:	DRUCKAUFNEHMER
150	511460608	1	NON-RETURN VALVE 400BAR CR6-FREI	RUECKSCHLAGVENTIL
151	511481508	1	NON-RETURN VALVE 250BAR CR6-FREI SP	RUECKSCHLAGVENTIL
152	96028331	1	EXPANSION TANK CPL.	AUSGLEICHSBEHAELTER KPL.
(1)	502807308	1	EQUALIZING RESERVOIR 0,2L POLYETHY	AUSGLEICHSBEHAELTER
(2)	10878281	1	CONTAINER SCREW JOINT	BEHAELTERVERSCHRAUBUNG
153	511512208	2	COUPLING SLEEVE B8 38-S	KUPPLUNGSMUFFE
154	10466917	2	HEX CAP NUT RD79X4 SPF	VERSCHLUSSMUTTER
155	511512308	2	COUPLING PLUG B8 38-S	KUPPLUNGSSTECKER
157	10466913	2	SCREW PLUG RD79X4 SPF	VERSCHLUSSSCHRAUBE
158	510599608	1	COUPLING SLEEVE B6 25-S	KUPPLUNGSMUFFE
(2)	571076908	1	O-RING 32X3 FPM70	O-RING
(3)	571077008	1	SUPPORTING RING 32X37,2X1 PTFE	STUETZRING
(4)	571077108	1	O-RING 40X3 FPM70	O-RING
(5)	571077208	1	NUT M54 CR6-FREI	MUTTER
159	10466916	2	HEX CAP NUT RD54X4 SPF	VERSCHLUSSMUTTER
160	510599708	1	COUPLING PLUG B6 25-S	KUPPLUNGSSTECKER
161	10466912	2	SCREW PLUG RD54X4 SPF	VERSCHLUSSSCHRAUBE
162	511508208	1	COUPLING SLEEVE B6 22-L	KUPPLUNGSMUFFE
163	511508108	1	COUPLING PLUG B6 22-L	KUPPLUNGSSTECKER
168	510671108	1	FILTER CARTRIDGE 0,005m³/min 25µm	FILTERPATRONE
169	511062708	1	NOZZLE 0,5 M5X9 MS	DUESE
170	511311808	1	NON-RETURN VALVE 400BAR CR6-FREI	RUECKSCHLAGVENTIL
171	510408708	1	NON-RETURN VALVE 420BAR CR6-FREI	RUECKSCHLAGVENTIL
172	511057608	1	CONNECTION FLANGE	ANSCHLUSSFLANSCH
173	510629508	1	CONNECTING PLATE	ANSCHLUSSPLATTE
302	10872024	1	HOSE CLAMP DIN 3017-1 8-16/9 W3	SCHLAUCHSCHELLE
303	10181382	4	SOCKET HEAD SCREW ISO 4762 M5X50 10	ZYLINDERSCHRAUBE
305	710107208	2	SEALING RING DIN 7603 A38X44X2 CU	DICHTRING
306	7101022	2	SEALING RING DIN 7603 A33X39X2 CU	DICHTRING
307	710107708	4	SEALING RING DIN 7603 A52X60X2,5 CU	DICHTRING
308	10028237	4	BUTTON HEAD SCREW AEHNL.ISO 7380-2	HALBRUNDKOPFSCHRAUBE
309	10875588	2	SOCKET HEAD SCREW ISO 4762 M6X25 8.8	ZYLINDERSCHRAUBE
310	10197764	2	HEX NUT ISO 4032 M6 10 ZNNI-480H SPF	SECHSKANTMUTTER
311	10197771	2	WASHER ISO 7089 6 200HV ZNNI-480H SPF	SCHEIBE
312	10875485	5	BUTTON HEAD SCREW AEHNL.ISO 7380-2	HALBRUNDKOPFSCHRAUBE
313	953873408	4	SLEEVE 25X20 11SMN37 FE//ZNNI8//CN//T0	HUELSE
314	11692824	2	HEX SCREW ISO 4017 M6X12 8.8 480H SPF	SECHSKANTSCHRAUBE
315	10875648	2	WASHER ISO 7093-1 6 200HV 480H SPF	SCHEIBE
501	510586908	4	FLANGE HALF SAE 1 6000 PSI CR6-FREI	FLANSCHHAELFTE
502	510586608	4	FLANGE HALF CR6-FREI	FLANSCHHAELFTE
550	10876373	4	SOCKET HEAD SCREW ISO 4762 M14X45 8	ZYLINDERSCHRAUBE
551	10878799	4	HEX SCREW ISO 4017 M14X45 8.8 FLZN SP	SECHSKANTSCHRAUBE

Pos.	Item	Quantity	Description	Bezeichnung
552	10878785	4	HEX SCREW ISO 4014 M14X90 8.8 FLZN SP	SECHSKANTSCHRAUBE
553	510586708	3	O-RING ARP 568 37,69X3,53 NBR90	O-RING
554	11645384	4	HEX SCREW ISO 4017 M12X40 8.8 FLZN SP	SECHSKANTSCHRAUBE
555	10875565	4	SOCKET HEAD SCREW ISO 4762 M12X40 8	ZYLINDERSCHRAUBE
556	510587008	2	O-RING ARP 568 32,92X3,53 NBR90	O-RING
600	247138602	3	FITTING EL 22L CR6-FREI	VERSCHRAUBUNG
601	247128602	2	FITTING EL 12L M18X1,5 CR6-FREI	VERSCHRAUBUNG
607	472331208	1	FITTING EL 6S CR6-FREI	VERSCHRAUBUNG
608	470700208	1	FITTING XGAI6-SR A3P	VERSCHRAUBUNG
609	475601508	1	TEST POINT FITTING BMA3 6S	MESSANSCHLUSS
610	7407118	1	FITTING EL 25S CR6-FREI	VERSCHRAUBUNG
611	475436108	1	FITTING REDSD22/12-L A3P	VERSCHRAUBUNG
612	471030808	2	FITTING XGE12-LR-ED A3P	VERSCHRAUBUNG
613	471032708	1	FITTING GE 12S G3/8A CR6-FREI	VERSCHRAUBUNG
614	471039708	1	FITTING ISO 8434-1 GE 10L M12X1,5 CR6-F	VERSCHRAUBUNG
615	7403569	1	FITTING EW 10L M16X1,5 CR6-FREI	VERSCHRAUBUNG
616	472330208	2	FITTING EL 10L CR6-FREI	VERSCHRAUBUNG
618	510629008	2	TEST POINT FITTING VKA3 10LM16X1,5 CR6	MESSANSCHLUSS
620	477704108	1	STOP PLUG VSTI3/8"ED A3P	STOPFEN
621	471901108	1	FITTING EGESD10-LR-WD A3P	VERSCHRAUBUNG
622	475433608	1	FITTING REDSDN25/12-S A3P	VERSCHRAUBUNG
623	7367774	1	FITTING ET 25S CR6-FREI	VERSCHRAUBUNG
624	471030508	1	FITTING GE 10L M14X1,5 A3P	VERSCHRAUBUNG
625	471039608	1	FITTING XGE10-LR-ED3/8" A3P	VERSCHRAUBUNG
628	474032808	1	FITTING SV 25S A3C	VERSCHRAUBUNG
629	470011008	1	FITTING SNV25-S CFX	VERSCHRAUBUNG
630	474033008	1	FITTING XSV38-S A3P	VERSCHRAUBUNG
631	470010708	1	FITTING SNV38-S A3P	VERSCHRAUBUNG
632	10295188	2	FITTINGS ISO 8434-1 GE 22L M33X2 CR6-F	STUTZEN
634	471032208	1	FITTING XGE8-SM-ED CFX	VERSCHRAUBUNG
635	482430614	1	FITTING ISO 8434 ET 22L CR6-FREI	VERSCHRAUBUNG
636	471031308	1	FITTING XGE22-LM-ED M26X1,5 A3P	VERSCHRAUBUNG
637	471901208	1	FITTING EGESD12-LR-WD A3P	VERSCHRAUBUNG
638	247105602	1	FITTING ET 12L M18X1,5 CR6-FREI	VERSCHRAUBUNG
639	482430314	2	FITTING ISO 8434 ET 10L M16X1,5 CR6-FRE	VERSCHRAUBUNG
640	471032108	1	FITTING GE 6S G1/4 CR6-FREI	VERSCHRAUBUNG
641	7362091	1	FITTING ISO 8434-1 GE 10L G1/4A CR6-FREI	VERSCHRAUBUNG
642	7406865	2	SCREW COUPLING EMA3 M14X1,5 CR6-FRE	SCHRAUBKUPPLUNG
643	472530608	3	FITTING EWSD22-L A3P	VERSCHRAUBUNG
644	477705208	1	STOP PLUG VSTIM33X2ED A3P	STOPFEN

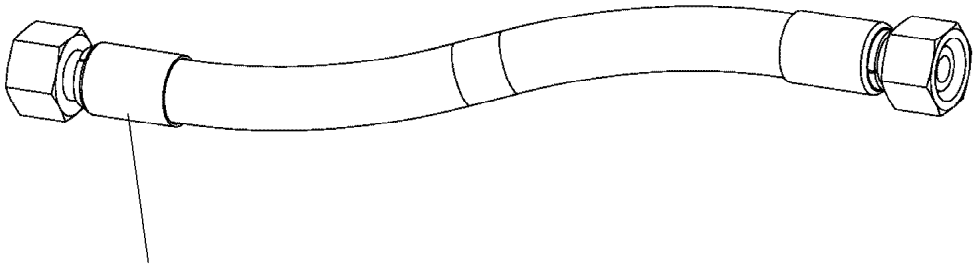

Schlauchnummer
Hose number
Numéro de flexible
Número de flexible
Номера шланга

Die Schlauchnummern auf den Schläuchen entsprechen den Positionen in der Schlauchliste.

The hose numbers from the hoses are in accordance with the items in the hose list.

Les numéros indiqués sur les flexibles correspondent aux repères de la nomenclature des flexibles.

Los números indicados en los flexibles corresponden a las posiciones de la lista de flexibles.

Нанесенные на шлангах номера соответствуют позициям в перечне.

Pos.	Item	Quantity	Description	Bezeichnung
1250	968149608	1	HOSE CPL. GH506-16 25X960	SCHLAUCH KPL.
1251	968349908	1	HOSE CPL. GH506-16 25X1620	SCHLAUCH KPL.
1252	968350008	1	HOSE CPL. 2TE 20X1020	SCHLAUCH KPL.
1253	966860008	1	HOSE CPL. 2TE 20X1460	SCHLAUCH KPL.
1254	923016208	1	HOSE CPL. 2TE 10X400	SCHLAUCH KPL.
1255	927637908	1	HOSE CPL. 1SC 8X300	SCHLAUCH KPL.
1256	926379108	1	HOSE CPL. 1SC 8X960	SCHLAUCH KPL.
1257	928046908	1	HOSE CPL. 2TE 10X360	SCHLAUCH KPL.
1258	963703908	1	HOSE CPL. 2TE 10X260	SCHLAUCH KPL.
1260	968141708	1	HOSE CPL. 2SN 6X780	SCHLAUCH KPL.
1261	920896108	1	HOSE CPL. 2TE 10X380	SCHLAUCH KPL.
1262	928025108	1	HOSE CPL. 2TE 10X700	SCHLAUCH KPL.
1263	963562308	1	HOSE CPL. 2SN 6X250	SCHLAUCH KPL.
1266	927295708	1	HOSE CPL. 2TE 20X440	SCHLAUCH KPL.
1267	967354708	1	HOSE CPL. 2TE 20X540	SCHLAUCH KPL.
1268	968149808	1	HOSE CPL. 2SN 6X500	SCHLAUCH KPL.
1269	968149908	1	HOSE CPL. GH506-16 25X1100	SCHLAUCH KPL.
1270	966145808	1	HOSE CPL. GH506-16 25X1060	SCHLAUCH KPL.
1382	968350108	1	HOSE CPL. 2TE 20X680	SCHLAUCH KPL.
1383	929742608	1	HOSE CPL. 2TE 20X420	SCHLAUCH KPL.
1384	968150008	1	HOSE CPL. GH506-16 25X1080	SCHLAUCH KPL.
1385	968150108	1	HOSE CPL. GH506-16 25X1020	SCHLAUCH KPL.

Pos.	Item	Quantity	Description	Bezeichnung
4	969426308	1	AUX. HYDR. FOLDING JIB SP ⇨ ❑ 594	ZUSATZHYDRAULIK KLAPPSPI

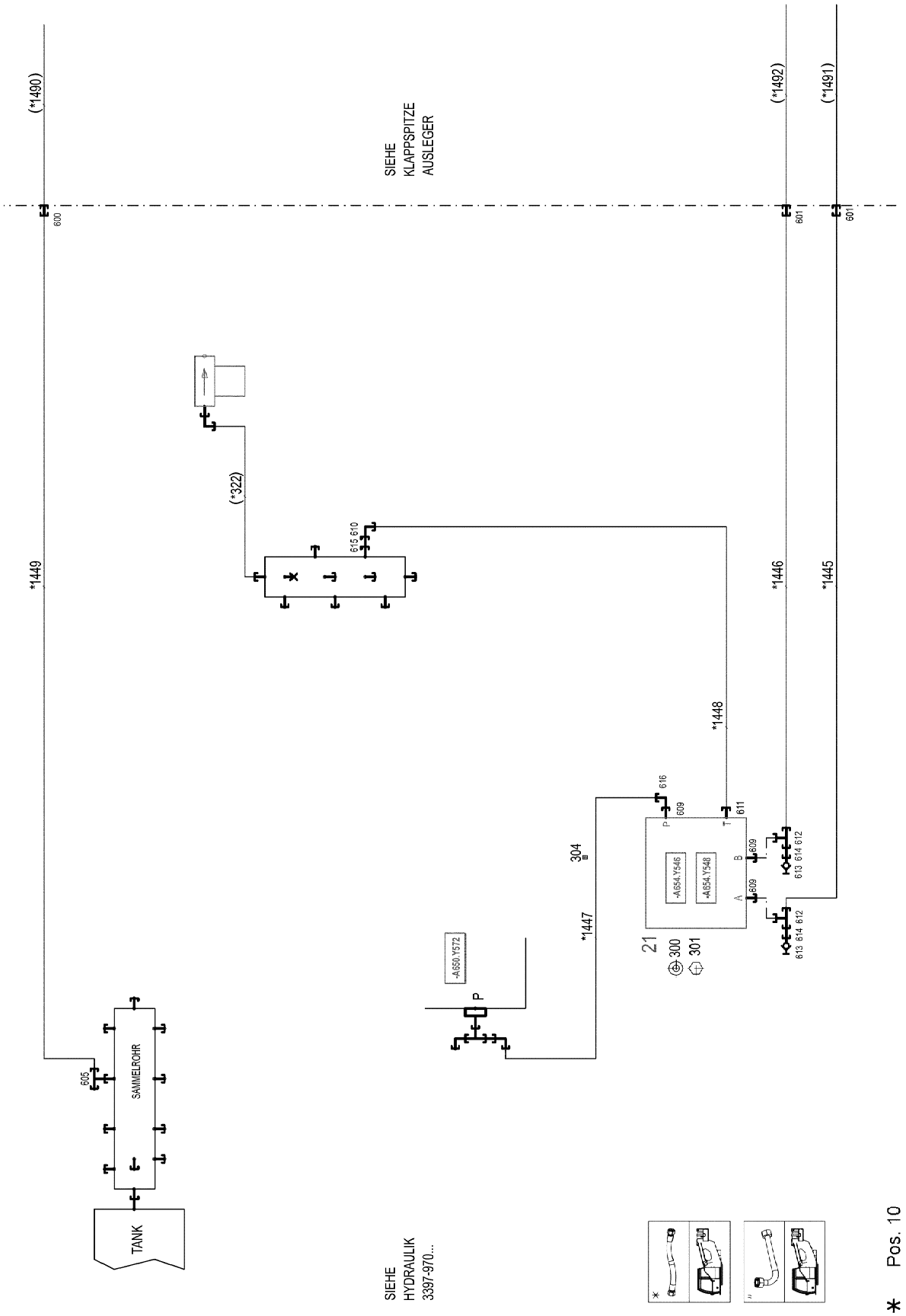
(*1490)
(*1492)
(*1491)
SIEHE
KLAPPSPITZE
AUSLEGER
600
601
601
(*322)
615 610
*1449
*1446
*1445
*1448
304
*1447
616
609
611
P
T
B
A
609
609
-A654.Y546
-A654.Y548
613 614 612
613 614 612
21
300
301
-A650.Y572
P
605
SAMMELROHR
TANK
SIEHE
HYDRAULIK
3397-970...
* Pos. 10

Pos.	Item	Quantity	Description	Bezeichnung
10	969426408	1	HOSE LINES FOLDING JIB WIPPBAR STUFE	SCHLAUCHLEITUNGEN KLAPPS
(1445)	924567508	1	HOSE CPL. GH425-8 12X2050	SCHLAUCH KPL.
(1446)	923087208	1	HOSE CPL. GH425-8 12X2100	SCHLAUCH KPL.
(1447)	923343408	1	HOSE CPL. GH425-8 12X1650	SCHLAUCH KPL.
(1448)	968148708	1	HOSE CPL. 2TE 16X600	SCHLAUCH KPL.
(1449)	968148808	1	HOSE CPL. 1SC 8X1360	SCHLAUCH KPL.
21	10038509	1	CONTROL BLOCK SPF ⇨ ❑ 596	STEUERBLOCK
300	11840501	2	WASHER DIN 7349 8,4 200HV 480H SPF	SCHEIBE
301	11651767	2	HEX SCREW ISO 4017 M8X20 8.8 480H SPF	SECHSKANTSCHRAUBE
304	97056998	1	HOSE	SCHLAUCH GESCHLITZT
600	470030408	1	FITTING XG12-L A3P	VERSCHRAUBUNG
601	470032708	2	FITTING XG16-S A3P	VERSCHRAUBUNG
605	247105602	1	FITTING ET 12L M18X1,5 CR6-FREI	VERSCHRAUBUNG
609	471033208	3	FITTING XGE16-SR-ED A3P	VERSCHRAUBUNG
610	247108302	1	FITTING EW 18L M26X1,5 CR6-FREI	VERSCHRAUBUNG
611	471031208	1	FITTING XGE18-LR-ED A3P	VERSCHRAUBUNG
612	482431514	2	FITTING ISO 8434 ET 16S CR6-FREI	VERSCHRAUBUNG
613	5607617	2	GAUGE CONNECTION DKO 10S M18X1,5 C	MESSSTUTZEN
614	475433508	2	FITTING REDSD16/10-S A3P	VERSCHRAUBUNG
615	475430908	1	FITTING REDSD28/18-L A3P	VERSCHRAUBUNG
616	10410770	1	FITTING EV16S M24X1,5 A3C	VERSCHRAUBUNG

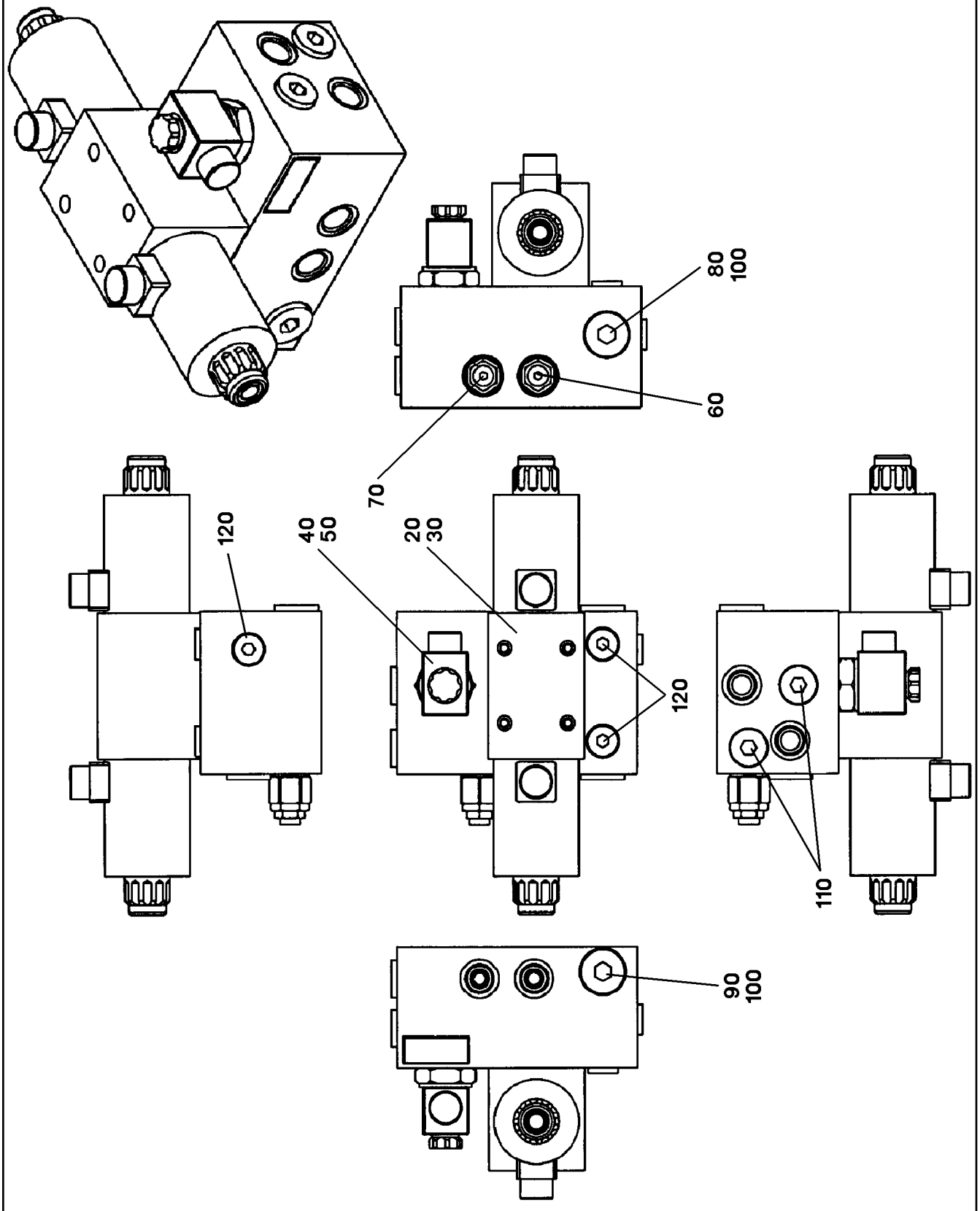
80
100
60
70
120
40
50
20
30
120
110
90
100

Pos.	Item	Quantity	Description	Bezeichnung
20	10280210	1	DIRECTIONAL CONTROL VALVE	WEGEVENTIL
30	12223035	4	SOCKET HEAD SCREW ISO 4762 M6X40 10	ZYLINDERSCHRAUBE
40	10280211	1	DIRECTIONAL SEAT VALVE 2/2	WEGESITZVENTIL
(999)	10871959	1	SEAL KIT DIRECTIONAL VALVE	DS WEGEVENTIL
50	10280212	1	MAGNET	MAGNET
60	10280213	1	PRESSURE LIMITING VALVE	DRUCKBEGRENZUNGSVENTIL
(999)	10872098	1	SEAL KIT LIMIT VALVE	DS DRUCKBEGRENZUNGSVEN
70	10280214	1	PRESSURE LIMITING VALVE	DRUCKBEGRENZUNGSVENTIL
(999)	10872098	1	SEAL KIT LIMIT VALVE	DS DRUCKBEGRENZUNGSVEN
80	10280215	1	NON-RETURN VALVE	RUECKSCHLAGVENTIL
90	10280216	1	NON-RETURN VALVE	RUECKSCHLAGVENTIL
100	477704708	2	STOP PLUG VSTI3/4"ED A3P	STOPFEN
110	477704208	2	STOP PLUG VSTI1/2"ED A3P	STOPFEN
120	477704108	3	STOP PLUG VSTI3/8"ED A3P	STOPFEN

Pos.	Item	Quantity	Description	Bezeichnung
1	605215708	1	SOCKET COMBINATION 3-POL	STECKDOSENKOMBINATION
4	10875582	4	SOCKET HEAD SCREW ISO 4762 M5X18 8.8	ZYLINDERSCHRAUBE
5	10875503	1	HEX SCREW EN 1665 M5X10 10.9 480H SPF	SECHSKANTSCHRAUBE
7	605012708	1	COUPLING SOCKET 3-POL GERADE	KUPPLUNGSDOSE
8	602422108	1	CABLE GLAND PG16/9	KABELVERSCHRAUBUNG
9	602419608	1	COUNTER NUT PG16 KUNSTSTOFF	GEGENMUTTER
11	602441701	2	CABLE GLAND M16X1,5X4,5-10 POLYAMID	KABELVERSCHRAUBUNG
12	10044648	2	REDUCER M25X1,5 M16X1,5 POLYAMID	REDUZIERUNG
13	10042696	2	COUNTER NUT M25X1,5 POLYAMIDE	GEGENMUTTER
15	965751108	1	LEAD W693	LEITUNG

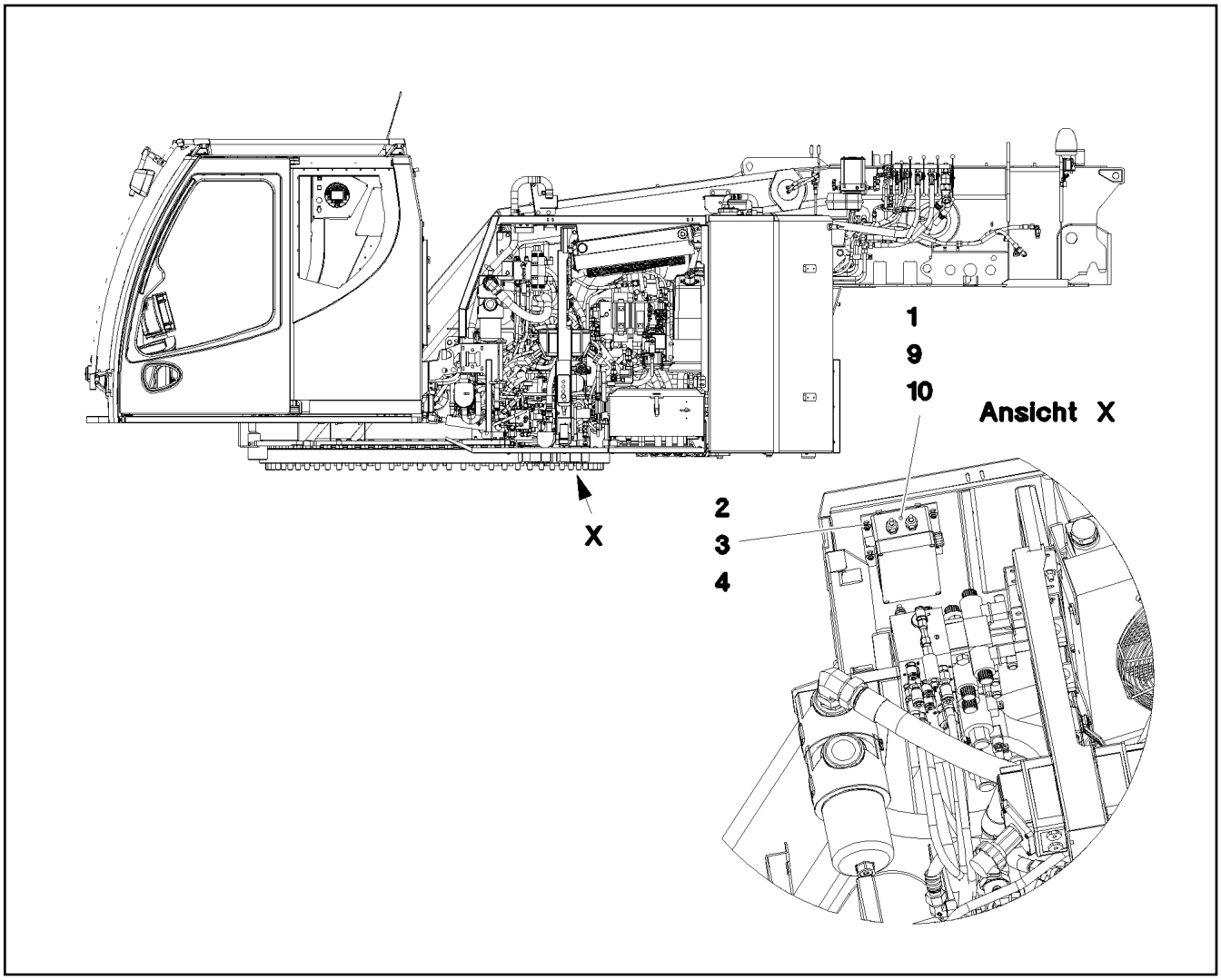

Pos.	Item	Quantity	Description	Bezeichnung
1	613301908	1	CHARGER 110V 24V8A SPF	LADEGERAET
(1)	10299987	1	TEMPERATURE SENSOR	TEMPERATURFUEHLER
2	10412851	4	BUTTON HEAD SCREW AEHNL.ISO 7380-2	HALBRUNDKOPFSCHRAUBE
3	421801708	4	WASHER ISO 7093-1 6 200HV-A2	SCHEIBE
4	411903008	4	HEX NUT DIN 985 M6 A2-70	SECHSKANTMUTTER
9	968648408	1	LEAD W621	LEITUNG
10	968648508	1	LEAD W620	LEITUNG

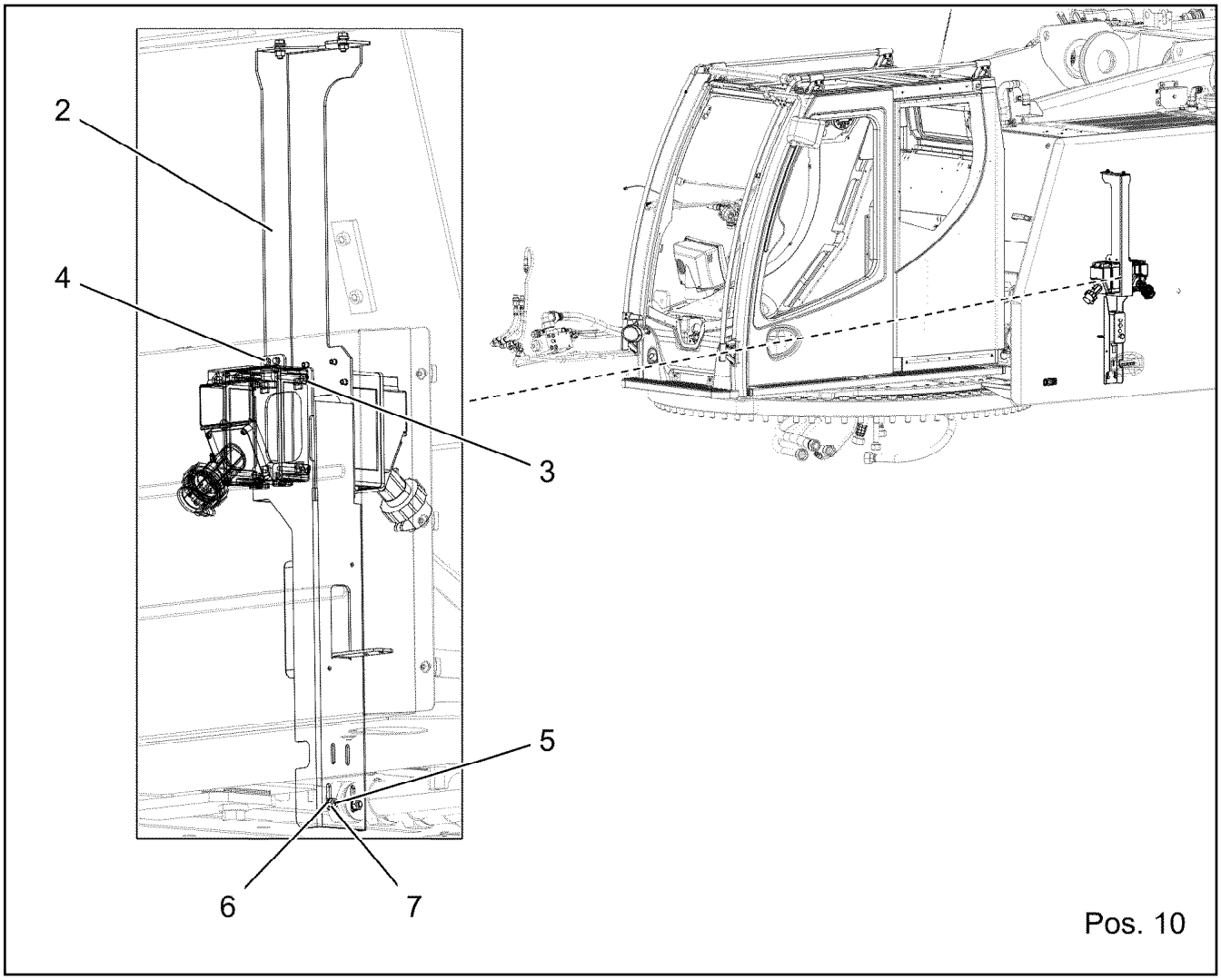

Pos.	Item	Quantity	Description	Bezeichnung
2	968646408	1	CONSOLE PRE-ASS.	KONSOLE VORM.
3	10875582	4	SOCKET HEAD SCREW ISO 4762 M5X18 8.8	ZYLINDERSCHRAUBE
4	10875582	2	SOCKET HEAD SCREW ISO 4762 M5X18 8.8	ZYLINDERSCHRAUBE
5	11657219	4	HEX SCREW EN 1665 M8X20 8.8 480H SPF	SECHSKANTSCHRAUBE
6	10289803	4	WASHER ISO 7089 8 300HV 480H SPF	SCHEIBE
7	11693875	4	HEX NUT ISO 4032 M8 8 480H SPF	SECHSKANTMUTTER
10	965991908	1	LEAD W694	LEITUNG

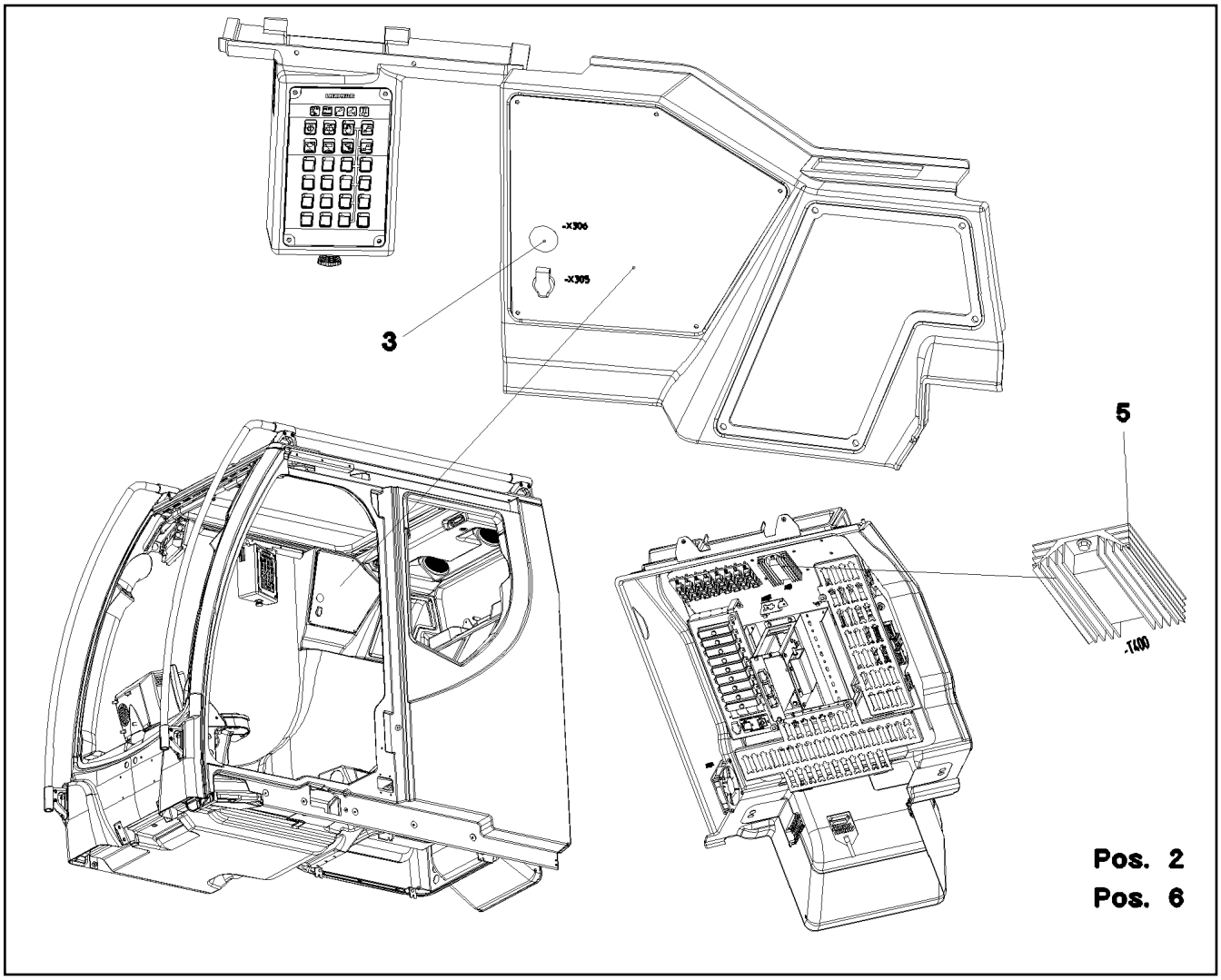

Pos.	Item	Quantity	Description	Bezeichnung
3	10429057	1	SOCKET	STECKDOSE
5	614020508	1	VOLTAGE REGULATOR 24V 12V 320W 24A	SPANNUNGSREGLER
6	10875503	4	HEX SCREW EN 1665 M5X10 10.9 480H SPF	SECHSKANTSCHRAUBE

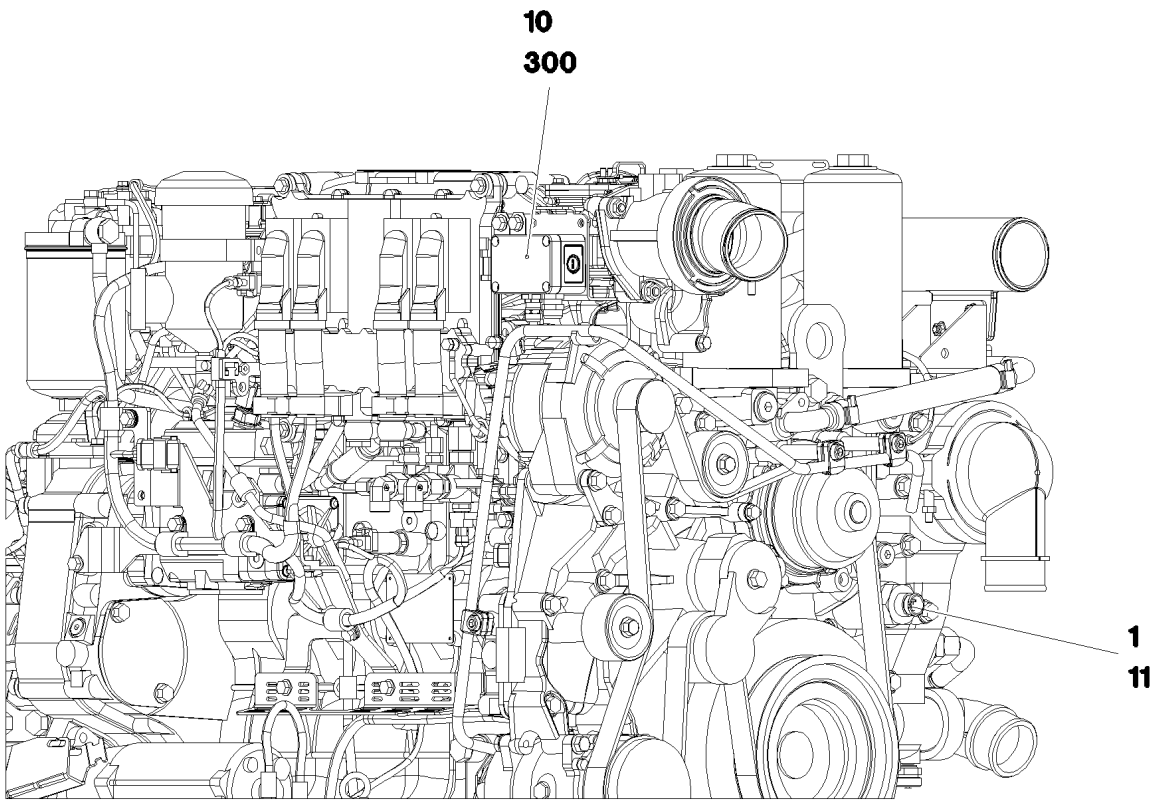

Pos.	Item	Quantity	Description	Bezeichnung
1	10025057	1	IMMERSION HEATER 120V 1KW	TAUCHHEIZER
10	917368108	1	EL.COOLANT PREHEAT ⇨ ❑ 603	EL.KUEHLWASSERVORWAERM
11	603012608	1.5	INSULATING HOSE DN14X0,8 -60°C+250°C	ISOLIERSCHLAUCH
300	10875564	4	SOCKET HEAD SCREW ISO 1207 M4X10 4.8	ZYLINDERSCHRAUBE

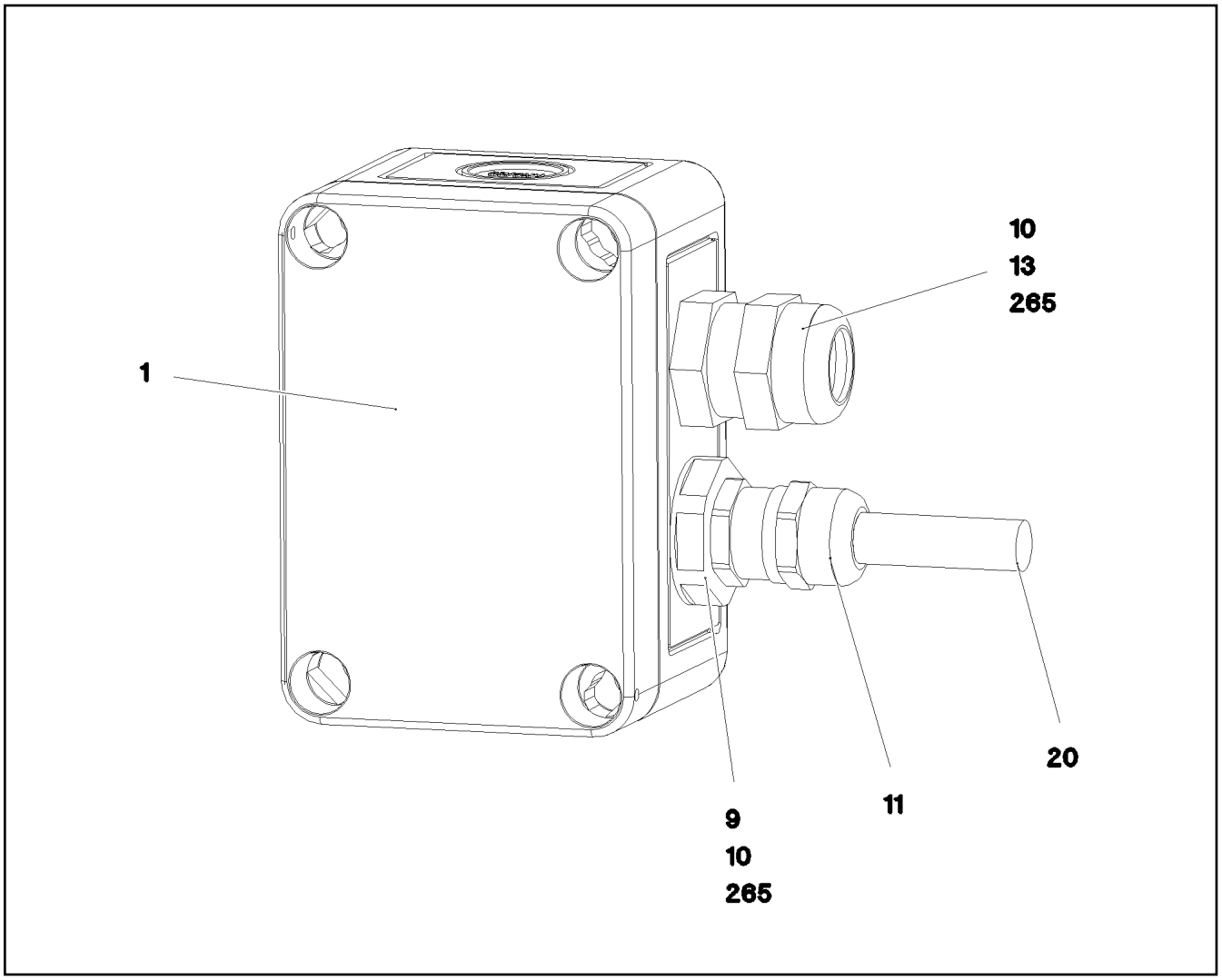

Pos.	Item	Quantity	Description	Bezeichnung
1	11114556	1	DISTRIBUTION BOX 65X94X57 POLYCARBO	VERTEILERKASTEN
9	10475314	1	REDUCER M20X1,5-M16X1,5 POLYAMID	REDUZIERUNG
10	10036629	2	COUNTER NUT M20x1,5 PA6	GEGENMUTTER
11	602441701	1	CABLE GLAND M16X1,5X4,5-10 POLYAMID	KABELVERSCHRAUBUNG
13	10216578	1	CABLE GLAND M20X1,5/13X3X12 PA6	KABELVERSCHRAUBUNG
20	967921908	1	LEAD W682	LEITUNG

Pos.	Item	Quantity	Description	Bezeichnung
10	96037229	1	ADD-ON PARTS WORK FLOODLIGHT ⇨ ❑ 605	ANBAUTEILE ARBEITSSCHEIN
20	96028878	4	ELECTR. FOR WORK AREA LIGHT	ELEKTRIK ARBEITSSCHEINWER
(10)	10877828	1	WORK LIGHT 20W 12-24V ALUMINIUM	ARBEITSSCHEINWERFER

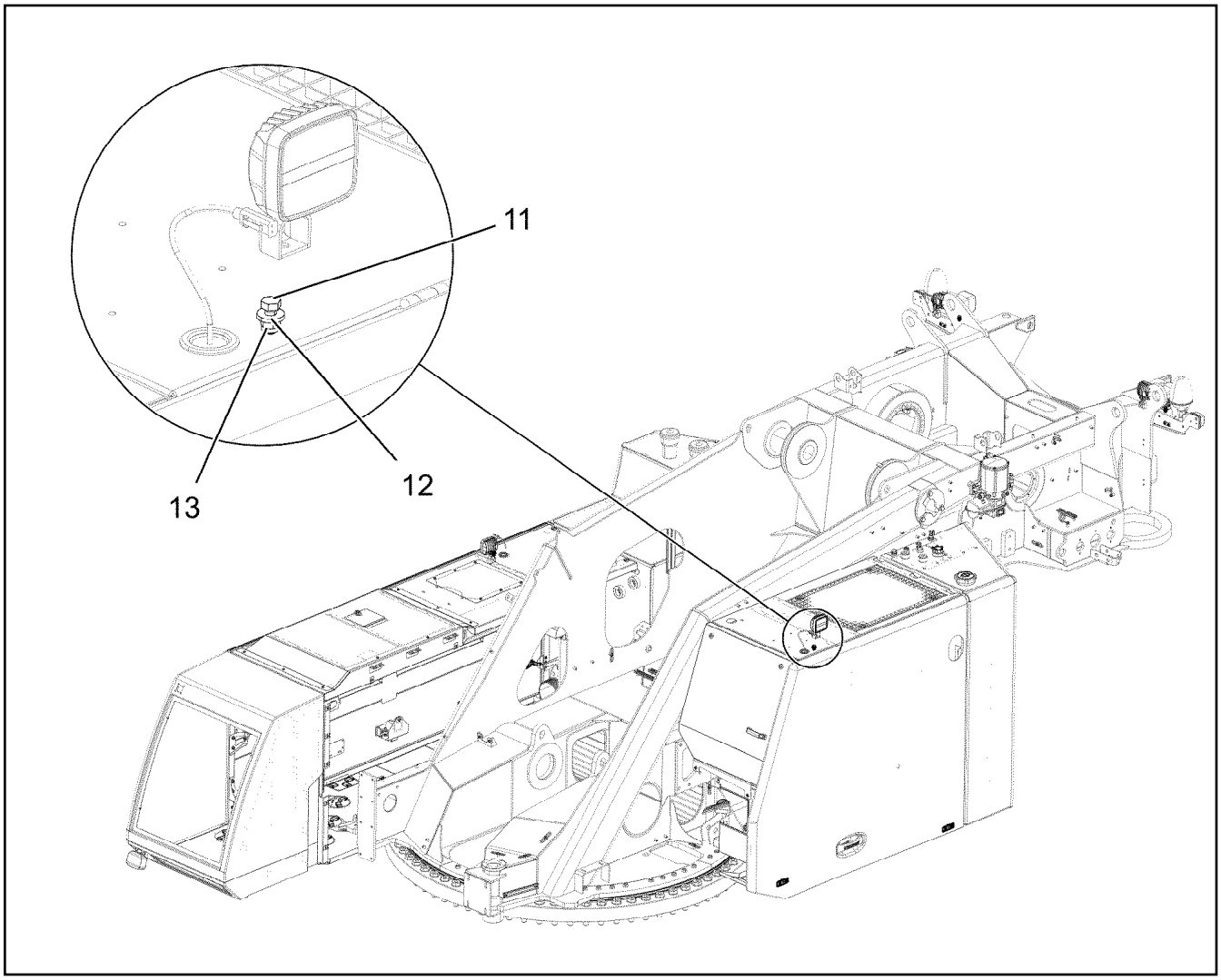

Pos.	Item	Quantity	Description	Bezeichnung
11	11631816	4	HEX SCREW ISO 4017 M10X25 8.8 FLZN SP	SECHSKANTSCHRAUBE
12	11658580	4	WASHER DIN 7349 10,5 200HV-St FLZN SPF	SCHEIBE
13	10875629	4	HEX NUT ISO 7040 M10 8 FLZN SPF	SECHSKANTMUTTER

Pos.	Item	Quantity	Description	Bezeichnung
1	968210808	1	ADD-ON PARTS CAMERA DB-HECK ⇨ ❑ 607	ANBAUTEILE KAMERA
2	968267108	1	ADD-ON PARTS CAMERA DB-WINDEIU.II ⇨ ❑ 611	ANBAUTEILE KAMERA
3	96045237	1	EQUIPMENT CAMERA CAB ⇨ ❑ 614	AUSRUESTUNG KAMERA KABIN
4	96037130	1	EQUIPMENT CAMERA SLEW COLUMN ⇨ ❑ 616	AUSRUESTUNG KAMERA DRE
5	96037131	1	EQUIPMENT CAMERA WINCHES ⇨ ❑ 618	AUSRUESTUNG KAMERA WIN

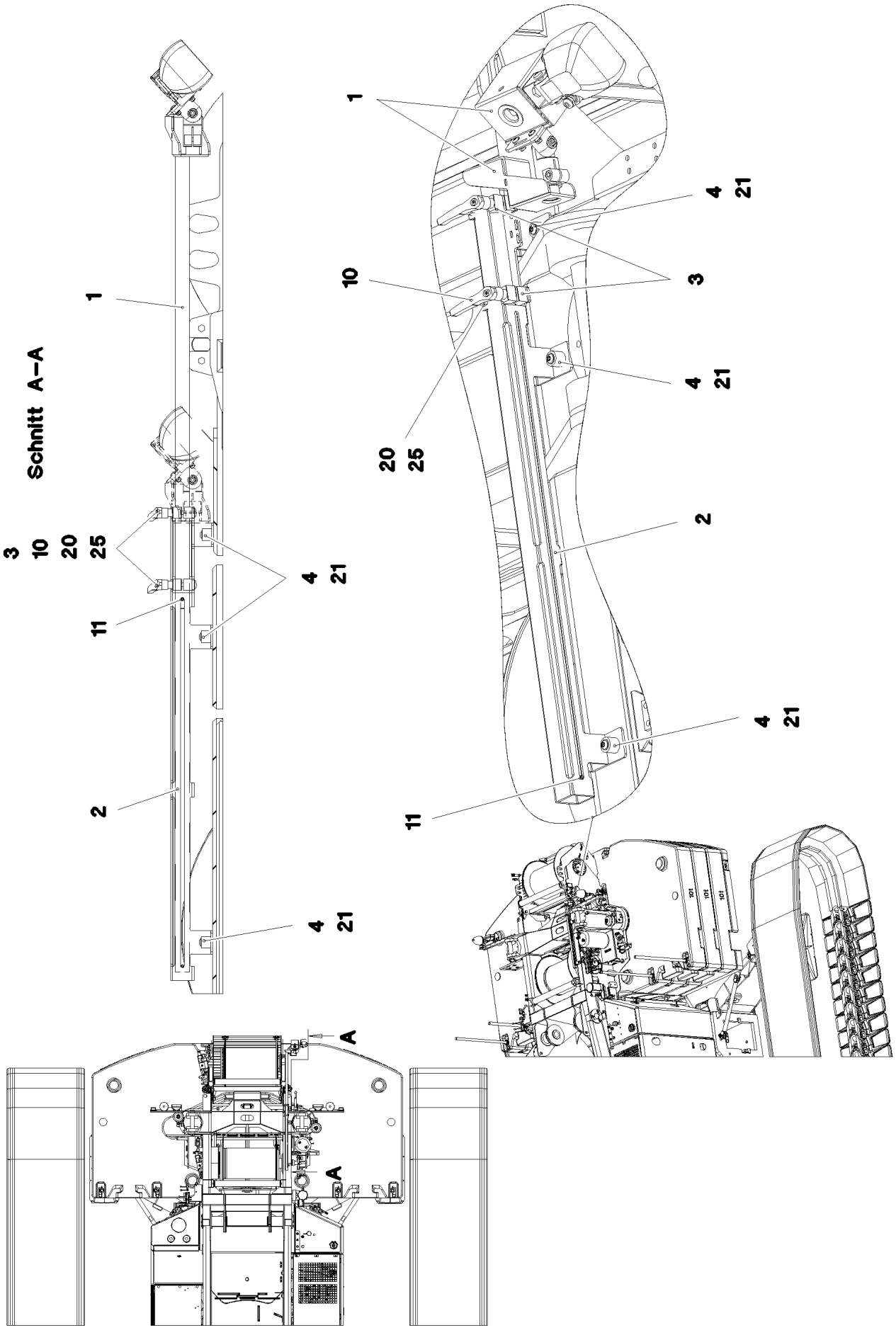
Schnitt A–A
1
2
3
10
20
25
4
21
11
A
A

Pos.	Item	Quantity	Description	Bezeichnung
1	968994408	1	CAMERA HOLDER, PREMOUNTING ⇨ ❑ 609	KAMERAHALTER VORM.
2	978787708	3	SLEEVE 33.0X19 FE//ZNNI8//CN//T0	HUELSE
3	10875485	3	BUTTON HEAD SCREW AEHNL.ISO 7380-2	HALBRUNDKOPFSCHRAUBE

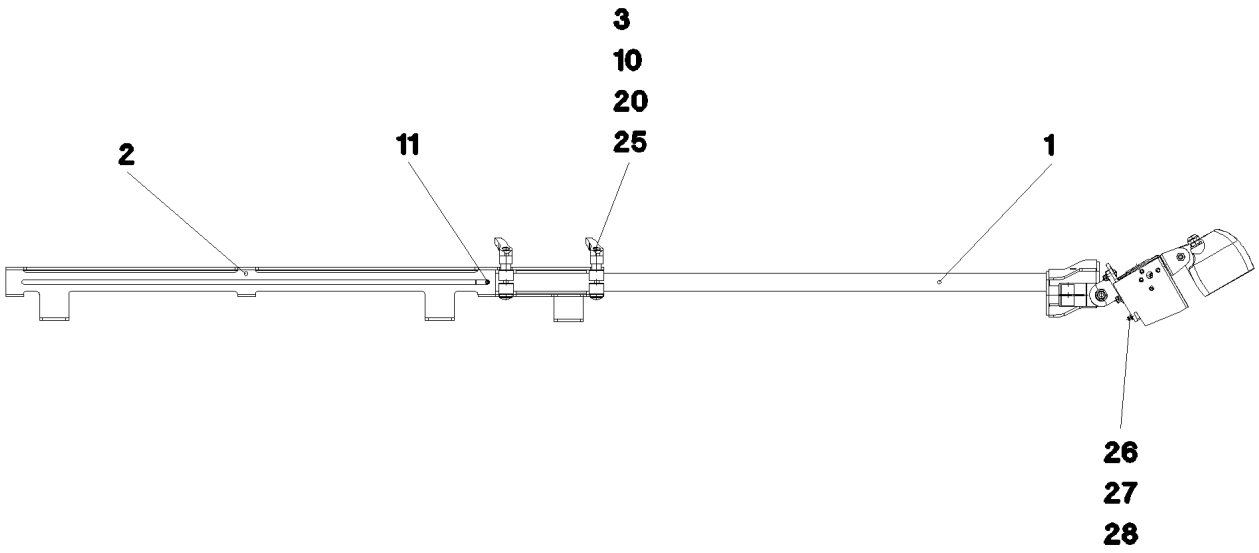

Pos.	Item	Quantity	Description	Bezeichnung
1	968290608	1	STAND ⇨ ❑ 610	STATIV
2	968290908	1	CLAMP	STATIVFUSS SCHWK.
3	976873708	2	CLAMPING PIECE PA6G+OEL	KLEMMSTUECK
10	11642508	2	CLAMPING LEVER M8 X10CRNIS189	KLEMMHEBEL
11	432006708	1	DOWEL PIN ISO 8752 6X50 A2	SPANNSTIFT
20	10181375	4	CUP HEAD SQUARE NECK BOLT DIN 603 M8	FLACHRUNDSCHRAUBE
25	10875614	2	HEX NUT DIN 985 M8 8 480H SPF	SECHSKANTMUTTER
26	10412852	2	BUTTON HEAD SCREW AEHNL.ISO 7380-2	HALBRUNDKOPFSCHRAUBE
27	411903008	2	HEX NUT DIN 985 M6 A2-70	SECHSKANTMUTTER
28	10197771	2	WASHER ISO 7089 6 200HV ZNNI-480H SPF	SCHEIBE

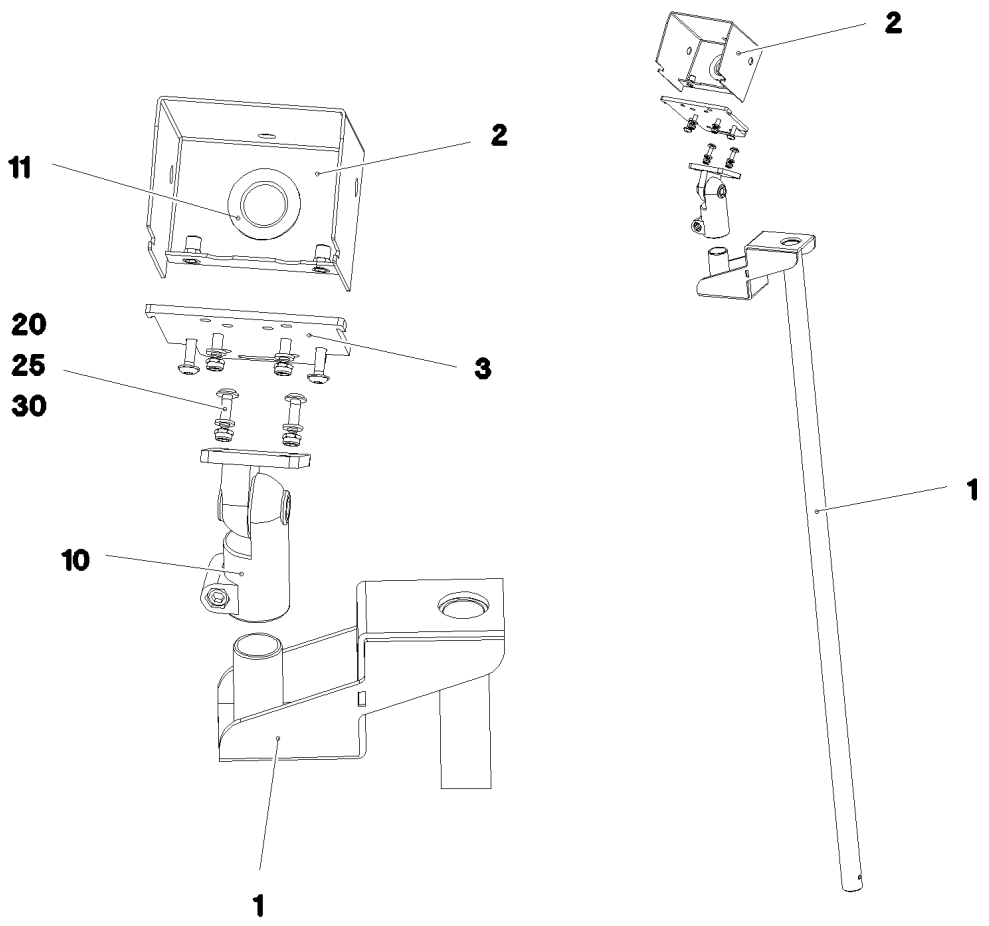

Pos.	Item	Quantity	Description	Bezeichnung
1	968290708	1	CLAMP	STATIV SCHWK.
2	97008317	1	PLATE 2X291X200 X5CRNI18-10	BLECH
3	97008318	1	PLATE 5X110X122 X5CRNI18-10	BLECH
10	11002980	1	JOINER AL	VERBINDER
11	262103908	0.2	EDGE PROTECTION 1-2X9,5X6,5	KANTENSCHUTZ
20	10412852	6	BUTTON HEAD SCREW AEHNL.ISO 7380-2	HALBRUNDKOPFSCHRAUBE
25	411903008	4	HEX NUT DIN 985 M6 A2-70	SECHSKANTMUTTER
30	10197771	4	WASHER ISO 7089 6 200HV ZNNI-480H SPF	SCHEIBE

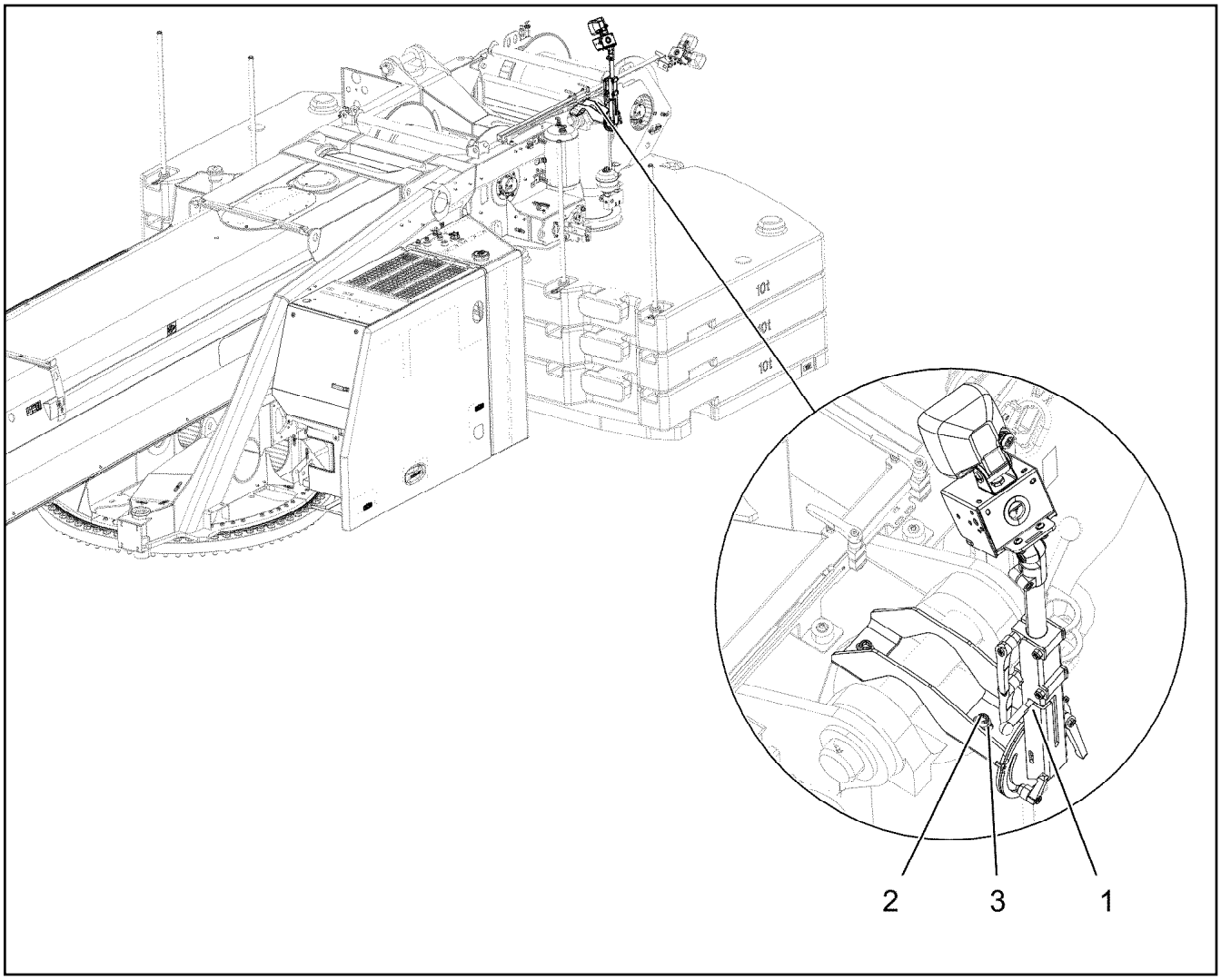

Pos.	Item	Quantity	Description	Bezeichnung
1	968993508	1	CAMERA HOLDER, PREMOUNTING ⇨ ❑ 612	KAMERAHALTER VORM.
2	12223057	2	SOCKET HEAD SCREW ISO 4762 M12X25 8	ZYLINDERSCHRAUBE
3	10289804	2	WASHER ISO 7089 12 300HV FLZN SPF	SCHEIBE

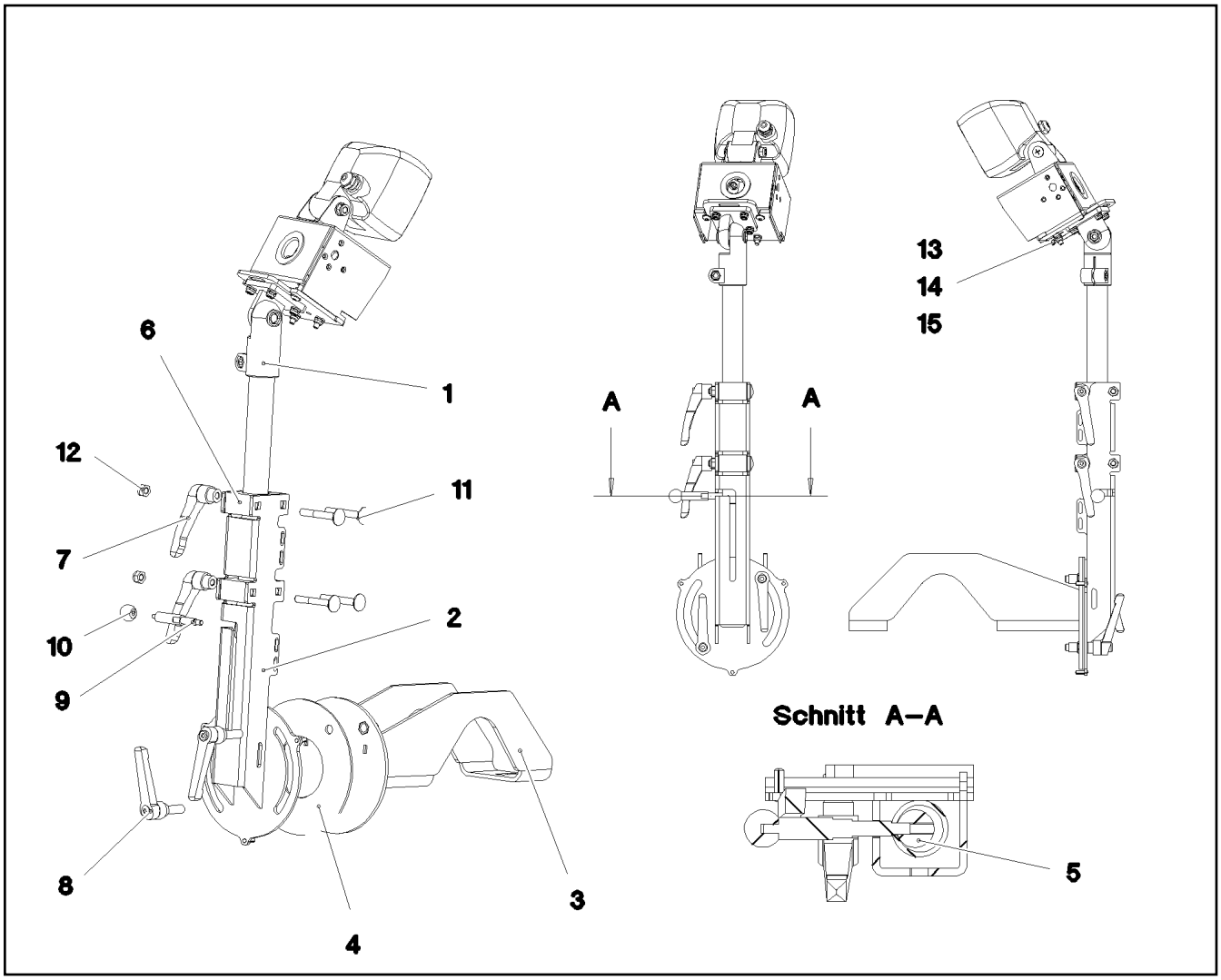

Pos.	Item	Quantity	Description	Bezeichnung
1	968267208	1	STAND ⇨ ❑ 613	STATIV
2	968267308	1	CLAMP	STATIV SCHWK.
3	968267408	1	CLAMP	STATIVFUSS SCHWK.
4	97037959	1	DISTANCE WASHER RD.164X3 PA6G	DISTANZSCHEIBE
5	97037948	1	THREADED ELEMENT EDELSTAHL	GEWINDETEIL
6	976873708	2	CLAMPING PIECE PA6G+OEL	KLEMMSTUECK
7	11642508	2	CLAMPING LEVER M8 X10CRNIS189	KLEMMHEBEL
8	11320604	2	CLAMPING LEVER M10X32 EDELSTAHL	KLEMMHEBEL
9	97038268	1	THREADED ROD 5X0X0 X5CRNI18-10	GEWINDESTANGE
10	704006308	1	SPHERICAL KNOB DIN 319 C20XM5 FS	KUGELKNOPF
11	10181375	4	CUP HEAD SQUARE NECK BOLT DIN 603 M8	FLACHRUNDSCHRAUBE
12	10875614	2	HEX NUT DIN 985 M8 8 480H SPF	SECHSKANTMUTTER
13	10412852	2	BUTTON HEAD SCREW AEHNL.ISO 7380-2	HALBRUNDKOPFSCHRAUBE
14	411903008	2	HEX NUT DIN 985 M6 A2-70	SECHSKANTMUTTER
15	10197771	2	WASHER ISO 7089 6 200HV ZNNI-480H SPF	SCHEIBE

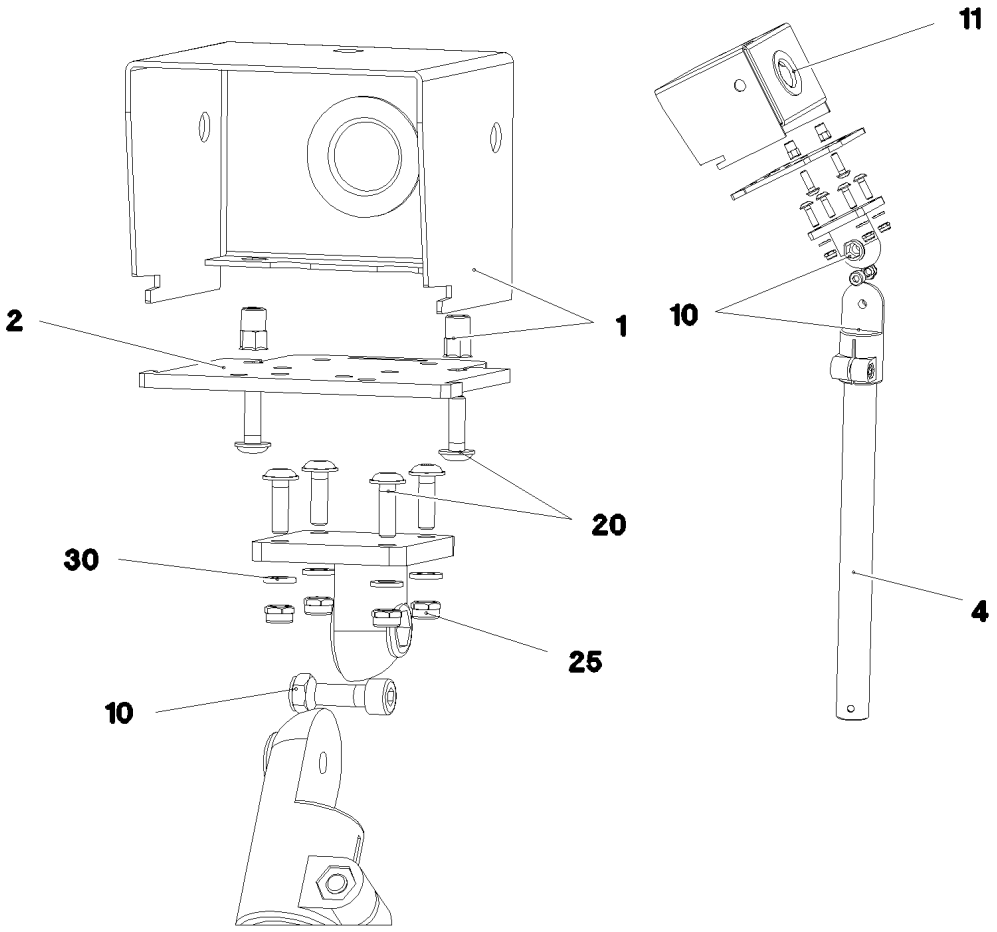

Pos.	Item	Quantity	Description	Bezeichnung
1	97008317	1	PLATE 2X291X200 X5CRNI18-10	BLECH
2	97008318	1	PLATE 5X110X122 X5CRNI18-10	BLECH
4	97037947	1	TUBE 3X0X0 X5CRNI18-10	ROHR
10	11002980	1	JOINER AL	VERBINDER
11	262103908	0.2	EDGE PROTECTION 1-2X9,5X6,5	KANTENSCHUTZ
20	10412852	6	BUTTON HEAD SCREW AEHNL.ISO 7380-2	HALBRUNDKOPFSCHRAUBE
25	411903008	4	HEX NUT DIN 985 M6 A2-70	SECHSKANTMUTTER
30	10197771	4	WASHER ISO 7089 6 200HV ZNNI-480H SPF	SCHEIBE

Pos.	Item	Quantity	Description	Bezeichnung
5	96043733	1	WIRING HARNESS W321 ⇨ ❑ 615	KABELSTRANG
10	10876638	1	MONITOR TFT 7 800X480	MONITOR
15	10097087	2	CABLE	KABEL
20	10874763	1	HOLDER MONITOR	HALTER MONITOR
21	10875640	1	WASHER DIN 440 6,6 -ST 480H SPF	SCHEIBE
22	10415159	1	HEX NUT ISO 7040 M6 10 480H SPF	SECHSKANTMUTTER
24	97025080	1	PLATE 2X231X192 DC01 RAL 9005,M,GT SP	BLECH
25	10875474	4	BUTTON HEAD SCREW ISO 7380-2 M5X16 0	HALBRUNDKOPFSCHRAUBE

Pos.	Item	Quantity	Description	Bezeichnung
125	602300308	6	CONTACT 0,5-1MM2	KONTAKT
202	11082602	2.1	INSULATING HOSE DN6X0,5 PUR SPF	ISOLIERSCHLAUCH
305	10870540	6.6	ELECTR.CABLE 1,0	KFZ-LEITUNG
500	923512208	2	CABLE MARKER	KABELMARKER
501	602331308	1	HOUSING 4-POL	GEHAEUSE
502	602301408	1	HOUSING 8-POL	GEHAEUSE
998	965622208	2	LETTERING WIRING HARNESS	BESCHRIFTUNG KABELBAUM

Pos.	Item	Quantity	Description	Bezeichnung
10	10097079	1	CAMERA SPF	KAMERA
12	10097085	1	CABLE 2X0,34+1X0,14-4M	KABEL
13	10870635	1.7	PROTECTIVE HOSE DN20 NORMAL PP	SCHUTZSCHLAUCH
17	10179393	1	SOCKET HEAD SCREW DIN 7984 M10X25 08	ZYLINDERSCHRAUBE
18	10289795	1	WASHER ISO 7089 10 300HV FLZN SPF	SCHEIBE
19	10197769	1	HEX NUT DIN 985 M10 8 ZNNI-480H SPF	SECHSKANTMUTTER
20	10877828	1	WORK LIGHT 20W 12-24V ALUMINIUM	ARBEITSSCHEINWERFER
23	96037132	1	LEAD W563	LEITUNG
			⇨ ❑ 617	

Pos.	Item	Quantity	Description	Bezeichnung
5	11620017	4.06	LEAD 2 X 1	LEITUNG
6	10877798	1	CONNECTION CABLE 2X0,75-1,5M	ANSCHLUSSKABEL
500	923512208	4	CABLE MARKER	KABELMARKER
501	604526608	2	PIN CARRIER 6-POL 16A	STIFTTRAEGER
502	604526508	1	BUSHING SUPPORT 6-POL 16A	BUCHSENTRAEGER
503	604508508	2	SEALING PLUG M 1-K	VERSCHLUSSKAPPE
504	604512108	1	SEALING PLUG M1-D	VERSCHLUSSKAPPE
505	602704808	3	CABLE SLEEVE 4-6	KABELTUELLE
506	604508608	2	PLUG 6-POL	STECKER
507	604505508	1	CABLE SOCKET M11-Z	KABELDOSE
628	604519208	4	PIN CONTACT 0,75-1MM2	STIFTKONTAKT
629	604519308	2	SLEEVE CONTACT 0,75-1,0MM2	BUCHSENKONTAKT
812	604518908	15	STOPPER PLUG BAUREIHE_M1	BLINDSTOPFEN
998	965622208	3	LETTERING WIRING HARNESS	BESCHRIFTUNG KABELBAUM

Pos.	Item	Quantity	Description	Bezeichnung
10	10024012	1	CAMERA MC3100B-2 SPF	KAMERA
13	10870635	1.5	PROTECTIVE HOSE DN20 NORMAL PP	SCHUTZSCHLAUCH
17	10179393	1	SOCKET HEAD SCREW DIN 7984 M10X25 08	ZYLINDERSCHRAUBE
18	10289795	1	WASHER ISO 7089 10 300HV FLZN SPF	SCHEIBE
19	10197769	1	HEX NUT DIN 985 M10 8 ZNNI-480H SPF	SECHSKANTMUTTER
20	10877828	1	WORK LIGHT 20W 12-24V ALUMINIUM	ARBEITSSCHEINWERFER

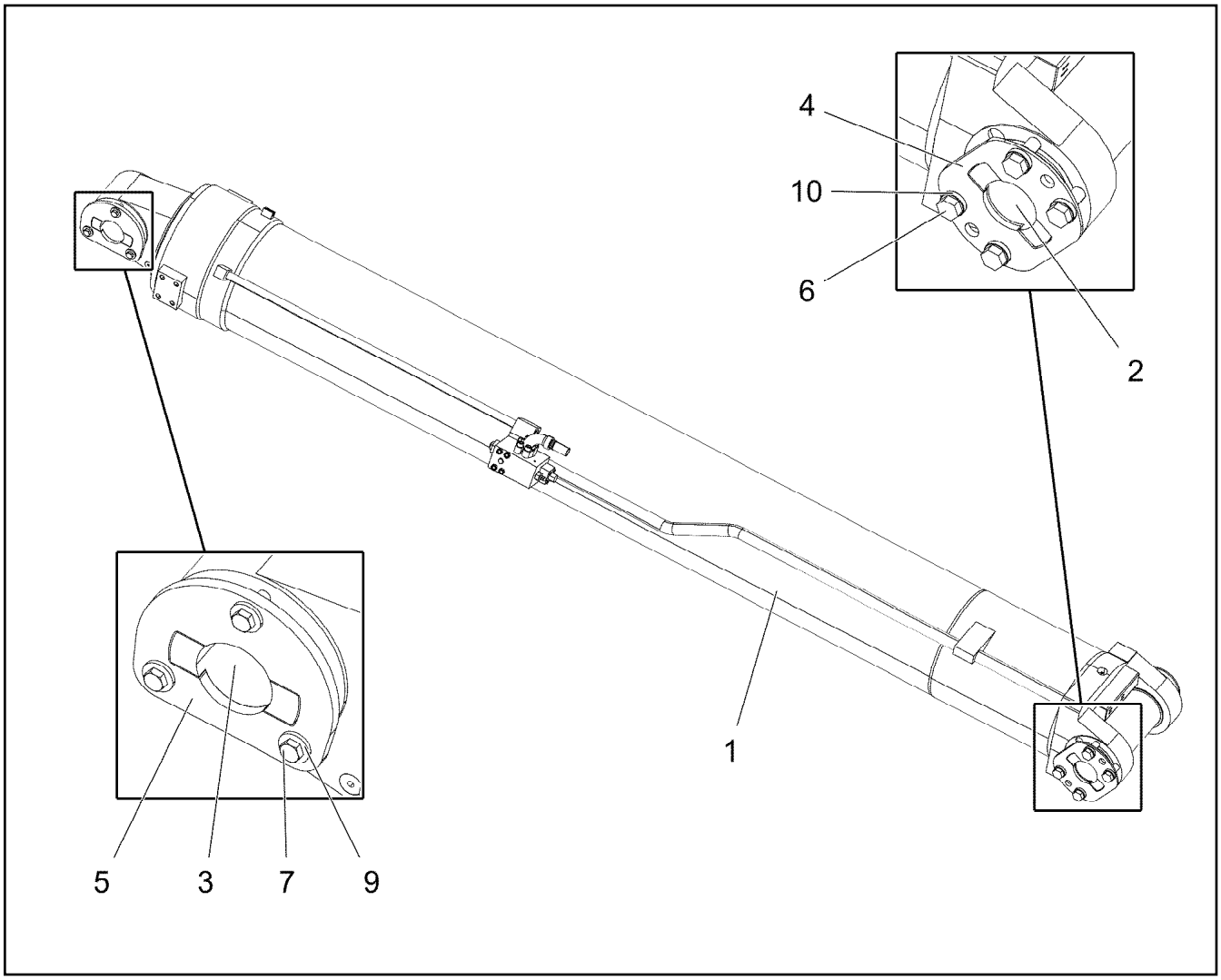

Pos.	Item	Quantity	Description	Bezeichnung
1	12102921	1	LUFFING CYLINDER 400/370-3305 SPF	WIPPZYLINDER
2	97032978	1	PIN 170.0X555 35NICRMOV125 SPF	BOLZEN
3	97032979	1	PIN 170.0X255 35NICRMOV125 SPF	BOLZEN
4	974925508	1	AXLE HOLDER 12X270X220 S960QL	ACHSHALTER
5	970598608	1	AXLE HOLDER 15X260X217 S960QL	ACHSHALTER
6	406605808	4	HEX SCREW ISO 4017 M24X60 10.9 FLZN SP	SECHSKANTSCHRAUBE
7	406603108	3	HEX SCREW ISO 4017 M16X45 10.9 FLZN SP	SECHSKANTSCHRAUBE
9	972203808	3	BUSHING 45.0X30 35NICRMOV125 GASN.	BUCHSE
10	974925608	4	BUSHING 45.0X25 35NICRMOV125 SPF	BUCHSE

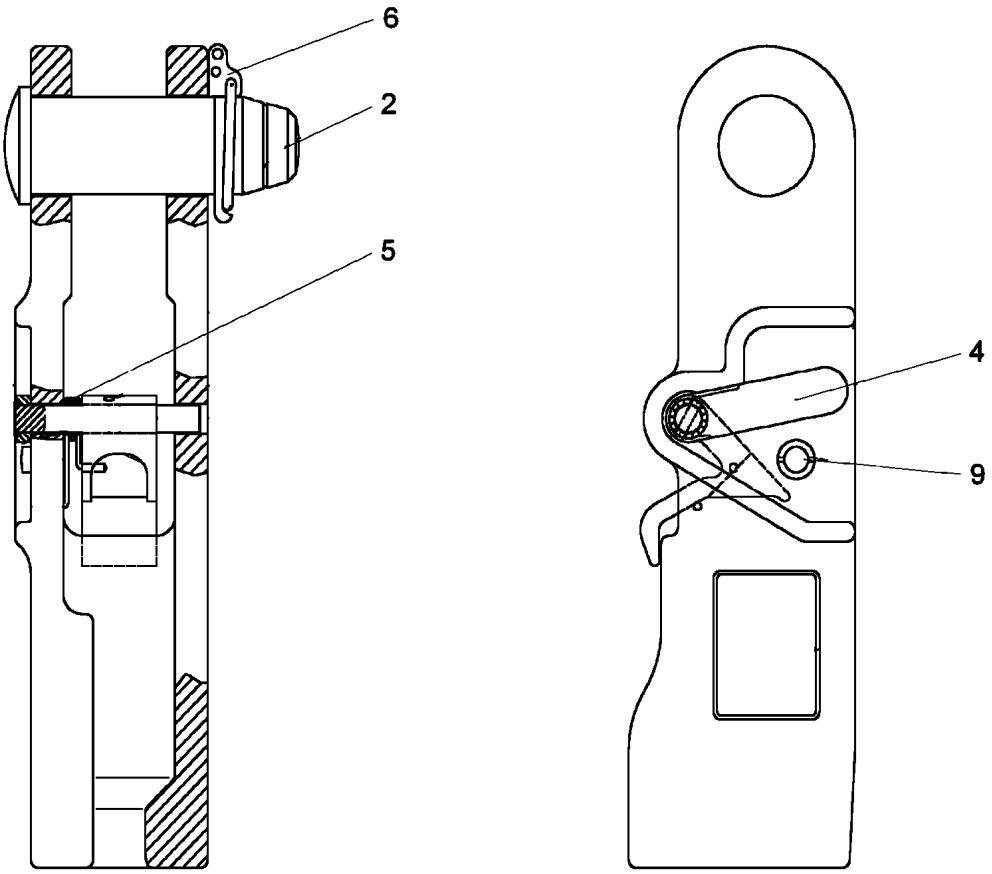

Pos.	Item	Quantity	Description	Bezeichnung
2	571430208	1	COLLER BOLT	BUNDBOLZEN
4	571430708	1	LEVER	HEBEL
5	571430508	1	LEG SPRING	SCHENKELFEDER
6	571817208	1	SAFETY PLUG W HINGE-LID	SICHERHEITSKLAPPSTECKER
9	10470667	1	SAFETY BUTTON	SICHERUNGSKNOPF
10	12102104	1	BLOCKING BAR 23-26	BLOCKIERBUEGEL

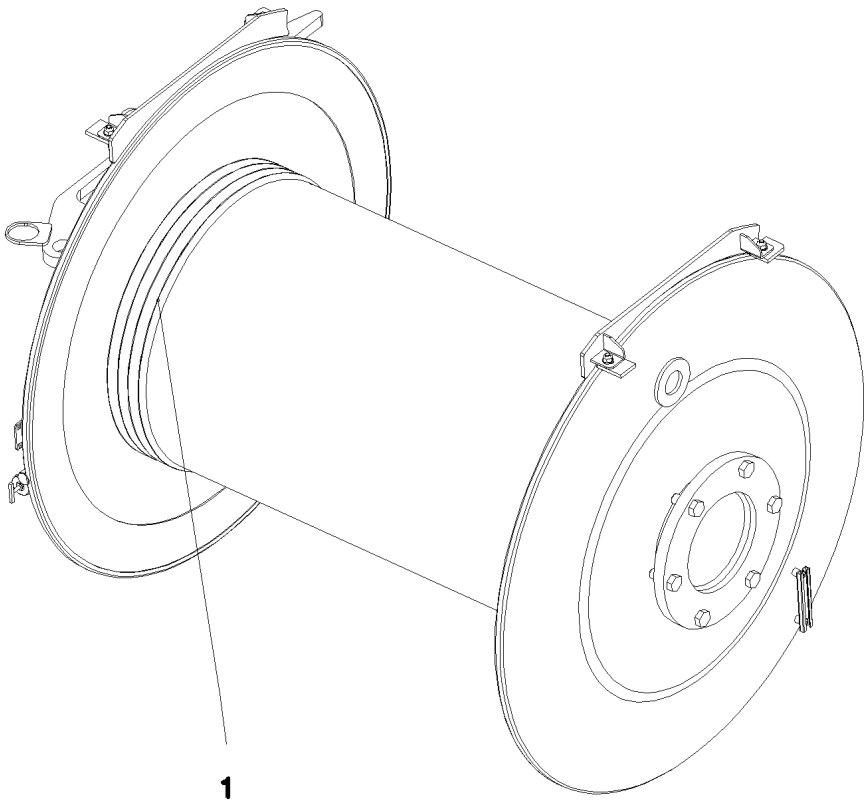

Pos.	Item	Quantity	Description	Bezeichnung
1	10115128	1	HOIST ROPE 23X350M -40°C SPF	HUBSEIL

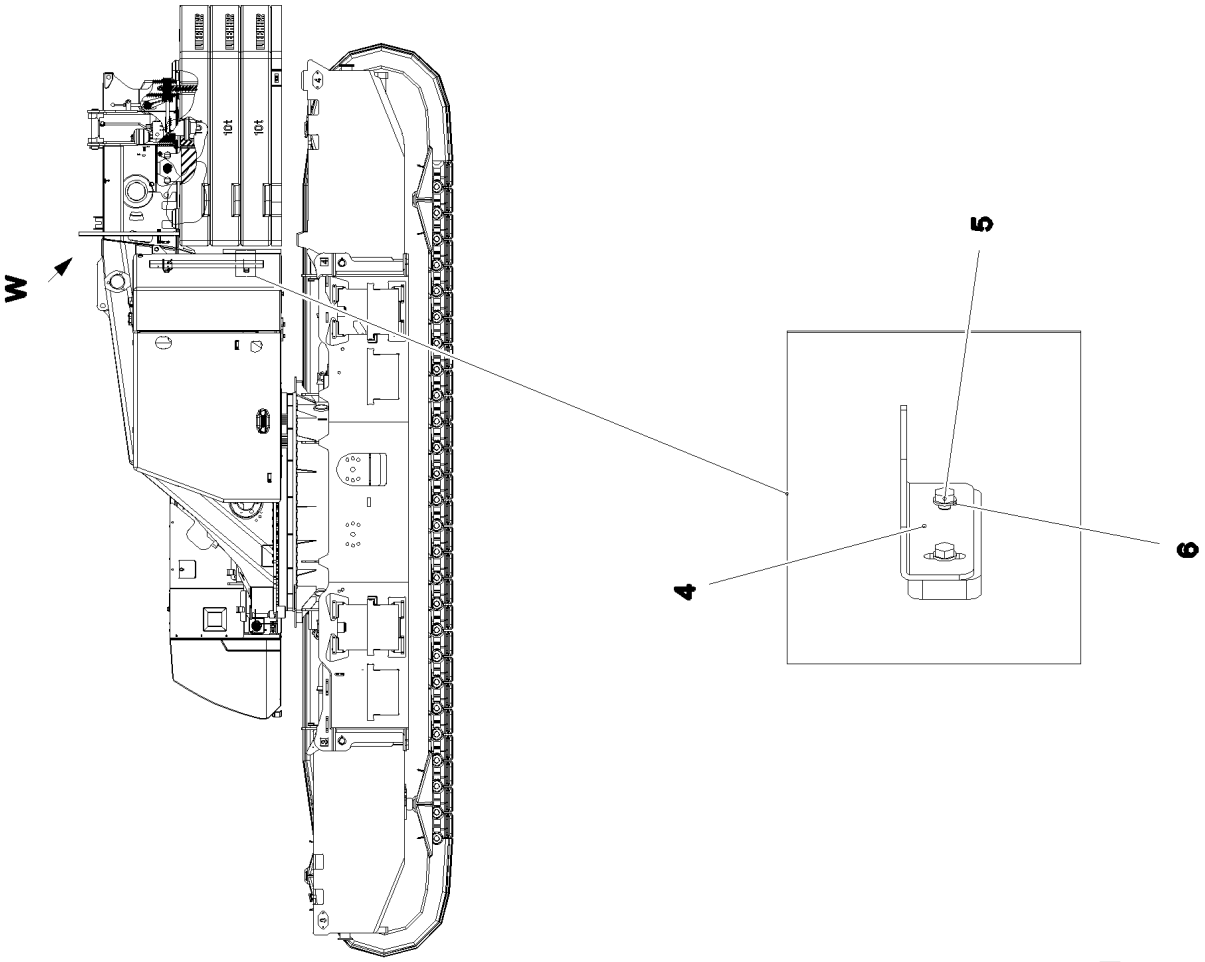

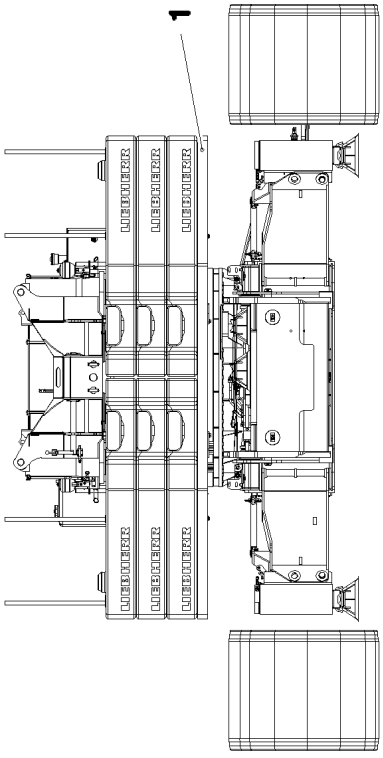

Ansicht W

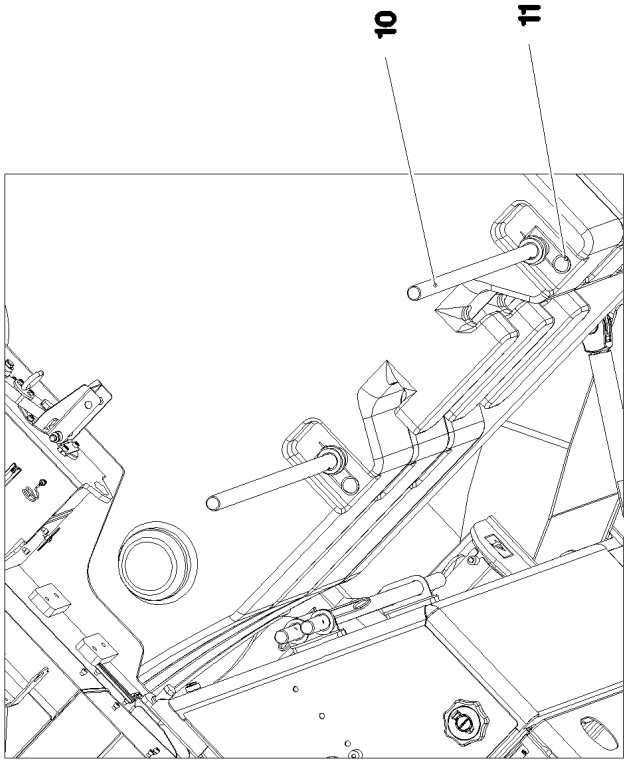

Pos.	Item	Quantity	Description	Bezeichnung
1	967936908	1	COUNTERWEIGHT CPL. ⇨ ❑ 624	GEGENGEWICHT KPL.
4	97031752	4	ANGLE 4X150X118 S315MC FE//ZNNI8//CN//T	WINKEL
5	11690048	8	HEX SCREW ISO 4017 M8X12 8.8 480H SPF	SECHSKANTSCHRAUBE
6	420060705	8	WASHER ISO 7089 8 200HV-A2	SCHEIBE
10	96004280	4	POST	PFOSTEN
11	433100908	4	RETAINING SPRING 4,5X98 ISO 2081 FE/ZN	SICHERUNGSFEDER
15	968992508	1	SIGNAGE COUNTERWEIGHT	BESCHILDERUNG GEGENGEWI
(1)	97051193	1	SIGN 100X80 KLEBEFOLIE SPF	SCHILD
(2)	97020380	3	SIGN 158X68 KLEBEFOLIE SPF	SCHILD
(3)	978674808	2	SIGN 168X62 KLEBEFOLIE SPF	SCHILD

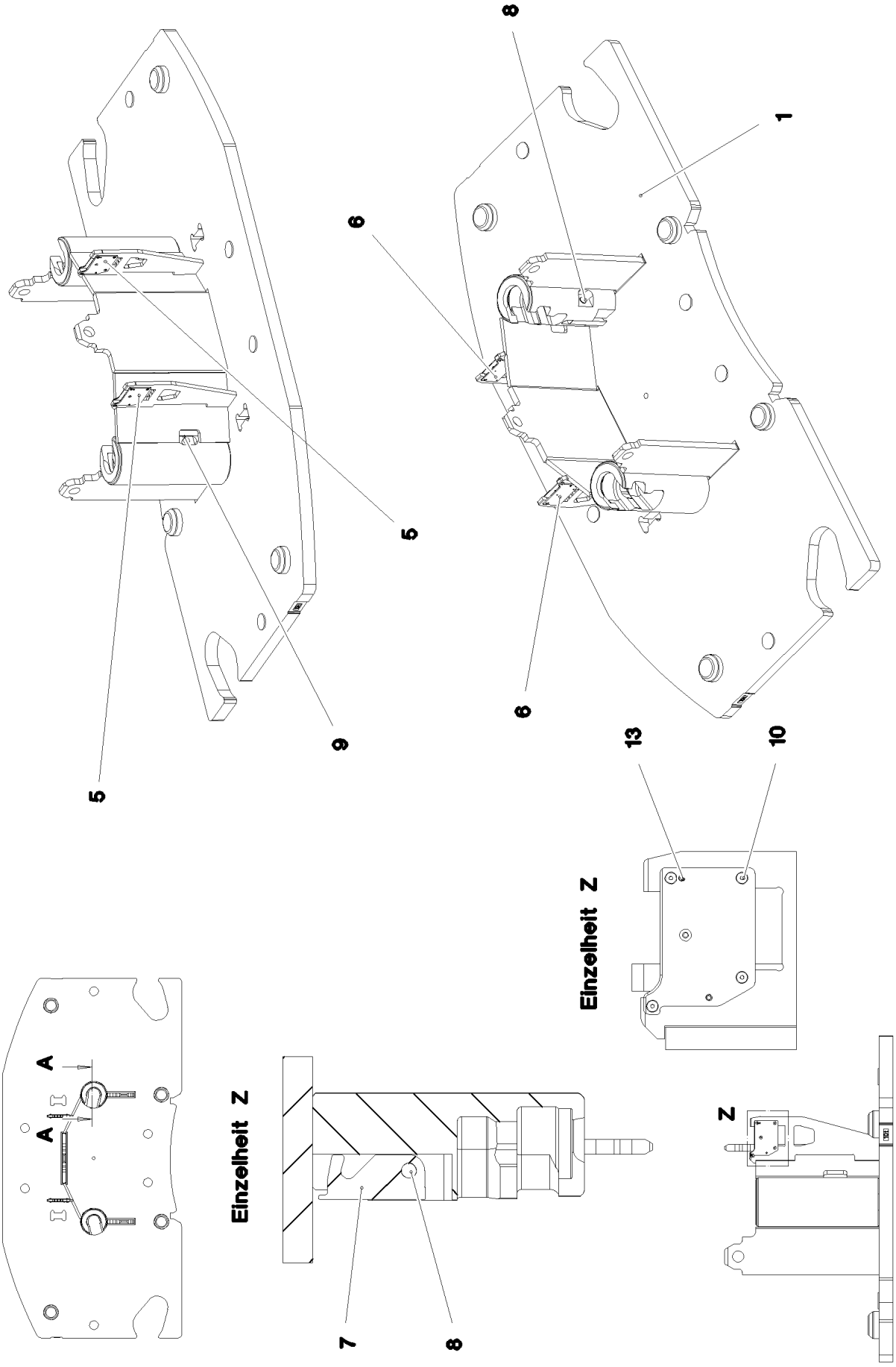

4.12.2020 077603 LIEBHERR	**etk_en_de 047580 LTR 1220** **COUNTERWEIGHT CPL.** **GEGENGEWICHT KPL.**	624 (1/2) **967936908**

Pos.	Item	Quantity	Description	Bezeichnung
1	967937508	1	COUNTERWEIGHT WELDED SPF	GEGENGEWICHT SCHWK.
5	97030303	2	PLATE 8X270X205 S700MC	BLECH
6	97030304	2	PLATE 8X270X205 S700MC	BLECH
7	97030305	2	HOOK 50X358X150 S960QL+Z25	HAKEN
8	971252308	2	PIN 55.0X280 35NICRMOV125 GASN. SPF	BOLZEN
9	10180371	2	SPLIT PIN ISO 1234 8X80 St 480H SPF	SPLINT
10	12100586	8	COUNTERSUNK SCREW ISO 10642 M10X50	SENKSCHRAUBE
13	432011808	4	DOWEL PIN ISO 8752 12X50	SPANNSTIFT

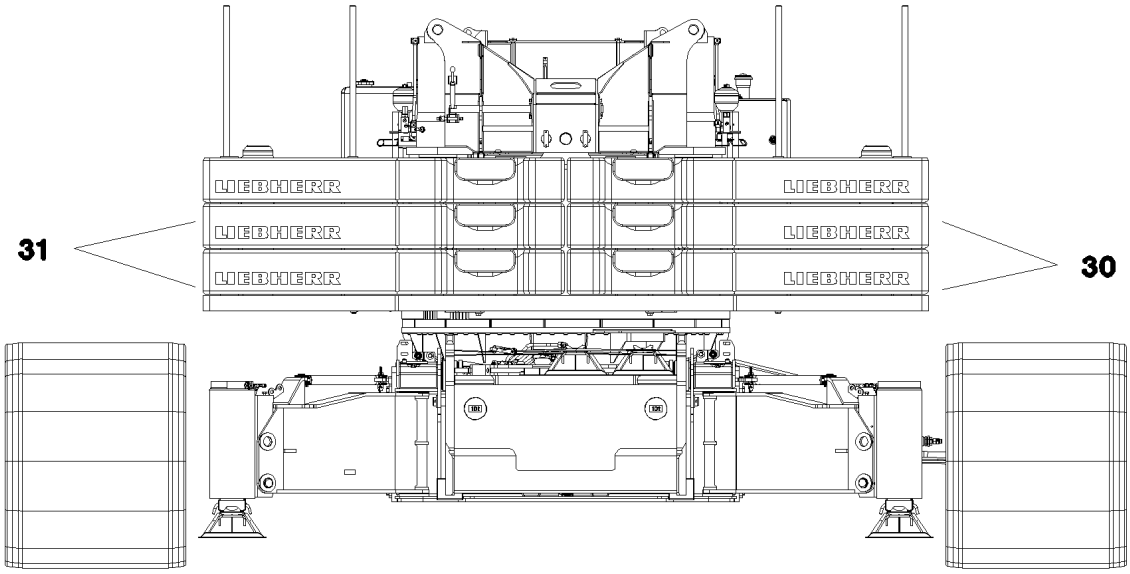

Pos.	Item	Quantity	Description	Bezeichnung
30	967916808	2	COUNTERWEIGHT CPL. 2400X 2400X375 SP	GEGENGEWICHT KPL.
31	967916508	2	COUNTERWEIGHT CPL. 2400X 2400X375 SP	GEGENGEWICHT KPL.

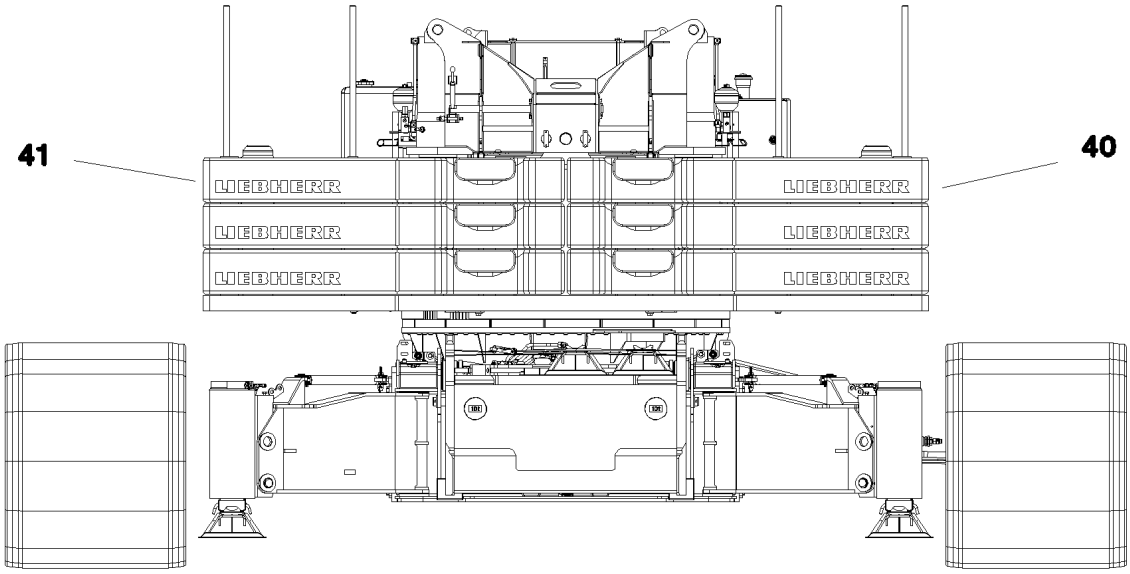

Pos.	Item	Quantity	Description	Bezeichnung
40	967916808	1	COUNTERWEIGHT CPL. 2400X 2400X375 SP	GEGENGEWICHT KPL.
41	967916508	1	COUNTERWEIGHT CPL. 2400X 2400X375 SP	GEGENGEWICHT KPL.

Pos.	Item	Quantity	Description	Bezeichnung
1	968068308	1	ASSEMBLY DEVICE LMZ-23T SPF ⇨ ❑ 629	MONTAGEVORRICHTUNG
2	96007145	1	COOLER GRILL 820X730X80 ABS	KUEHLERGRILL
3	12100291	4	COUNTERSUNK SCREW ISO 7047 M6X30 4	SENKSCHRAUBE
5	12101239	1	WEDGE SOCKET 23-25 GR.26/26 -40°C FE	KEILENDKLEMME
6	773913308	1	ROPE CLAMP DIN 1142 22 VERZ	SEILKLEMME
9	925141508	1	HOSE GUIDE PRE-ASS. ⇨ ❑ 630	SCHLAUCHFUEHRUNG VORM.
10	925185208	1	HOSE CPL.	SCHLAUCH KPL.
11	925185308	1	HOSE CPL.	SCHLAUCH KPL.
12	000608250	5	GRUB SCREW ISO 4026 M12X100 45H	GEWINDESTIFT
14	773445108	3	ROPE SLING DIN EN 13414-3 12T-8M VERZ	ANSCHLAGSEIL
15	779016608	8	BLANKING PLUG PE-LD	VERSCHLUSSSTOPFEN
20	96024265	1	ELECTR. FOR WORK AREA LIGHT LED	ELEKTRIK ARBEITSSCHEINWER
(4)	10877828	1	WORK LIGHT 20W 12-24V ALUMINIUM	ARBEITSSCHEINWERFER
(6)	10197730	1	HEX SCREW ISO 4017 M10X20 8.8 ZNNI-480	SECHSKANTSCHRAUBE
(9)	10197769	1	HEX NUT DIN 985 M10 8 ZNNI-480H SPF	SECHSKANTMUTTER
(10)	10289795	2	WASHER ISO 7089 10 300HV FLZN SPF	SCHEIBE

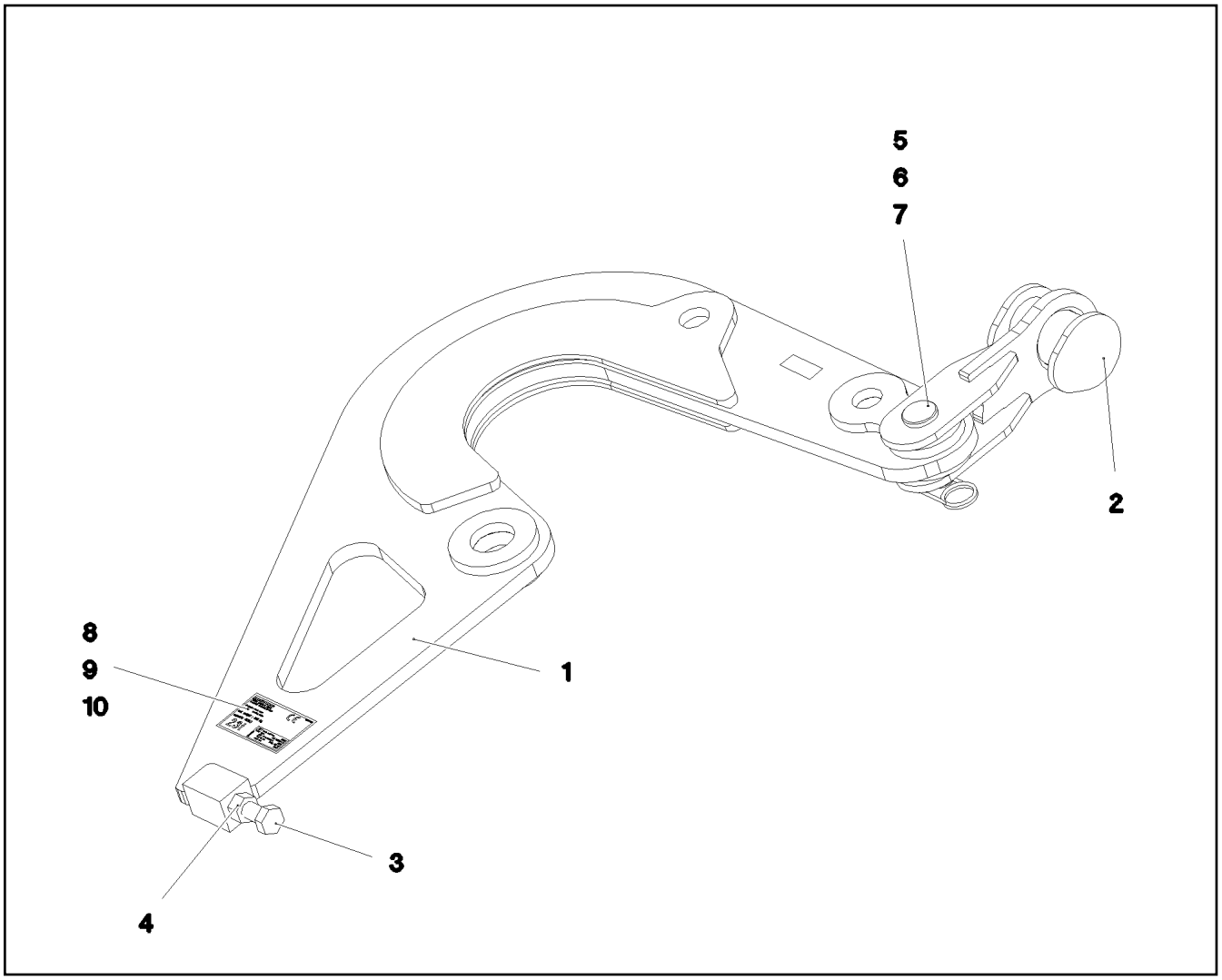

Pos.	Item	Quantity	Description	Bezeichnung
1	968010508	1	ASSEMBLY DEVICE SCHWK.	MONTAGEVORRICHTUNG
2	968498108	1	CROSS STRAP	KREUZLASCHE
3	406607008	1	HEX SCREW ISO 4017 M30X130 10.9 FLZN	SECHSKANTSCHRAUBE
4	10425689	1	HEX NUT ISO 4032 M30 10 FLZN SPF	SECHSKANTMUTTER
5	10179409	1	WASHER ISO 8738 55 160HV-St FLZN SPF	SCHEIBE
6	433105008	1	RETAINING SPRING DIN 2194 6 A3C	SICHERUNGSFEDER
7	97042167	1	PIN 65.0X155 35NICRMOV125 SPF	BOLZEN
8	97067627	2	SIGN 168X88 KLEBEFOLIE SPF	SCHILD
9	97067623	2	SIGN PROJEKT TYP KLEBEFOLIE SPF	SCHILD
10	973567608	2	PLATE IDENTIFICATION NUMBER IDENT-N	SCHILD IDENTNR.

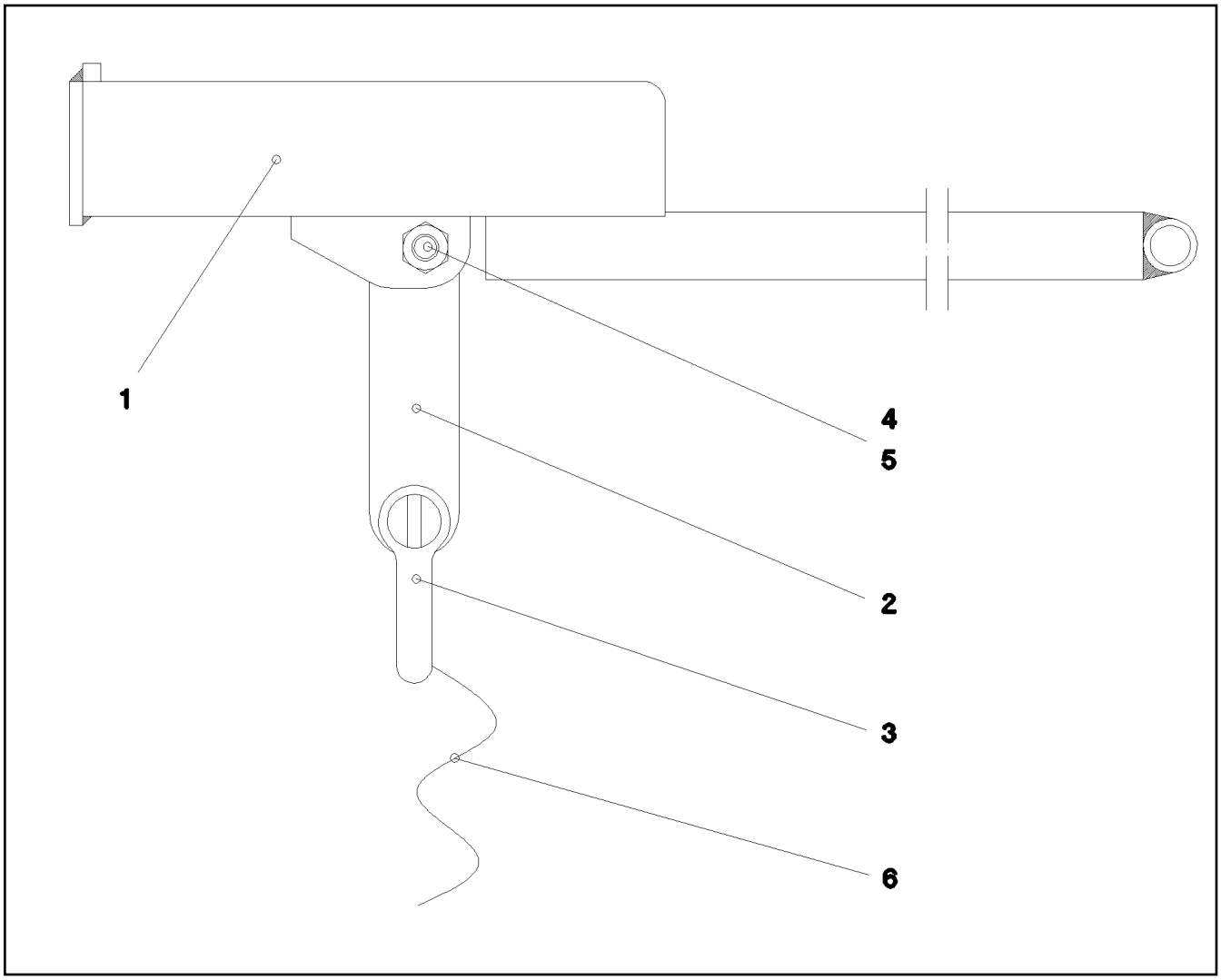

Pos.	Item	Quantity	Description	Bezeichnung
1	925143708	1	HOSE GUIDE WELDED FE//ZNNI8//CN//T0	SCHLAUCHFUEHRUNG SCHWK.
3	773933508	1	SHACKLE DIN 82101 0,25T NG0,25 ST VERZ	SCHAEKEL
4	10875586	1	SOCKET HEAD SCREW ISO 4762 M6X16 8.8	ZYLINDERSCHRAUBE
5	12102692	1	HEX NUT DIN 985 M6 8 ZNNI-480H SPF	SECHSKANTMUTTER
6	773404508	1.6	ROPE 6 0,59KN PERLON	SEIL

Pos.	Item	Quantity	Description	Bezeichnung
10	10876368	1	SENSOR SPF	GEBER

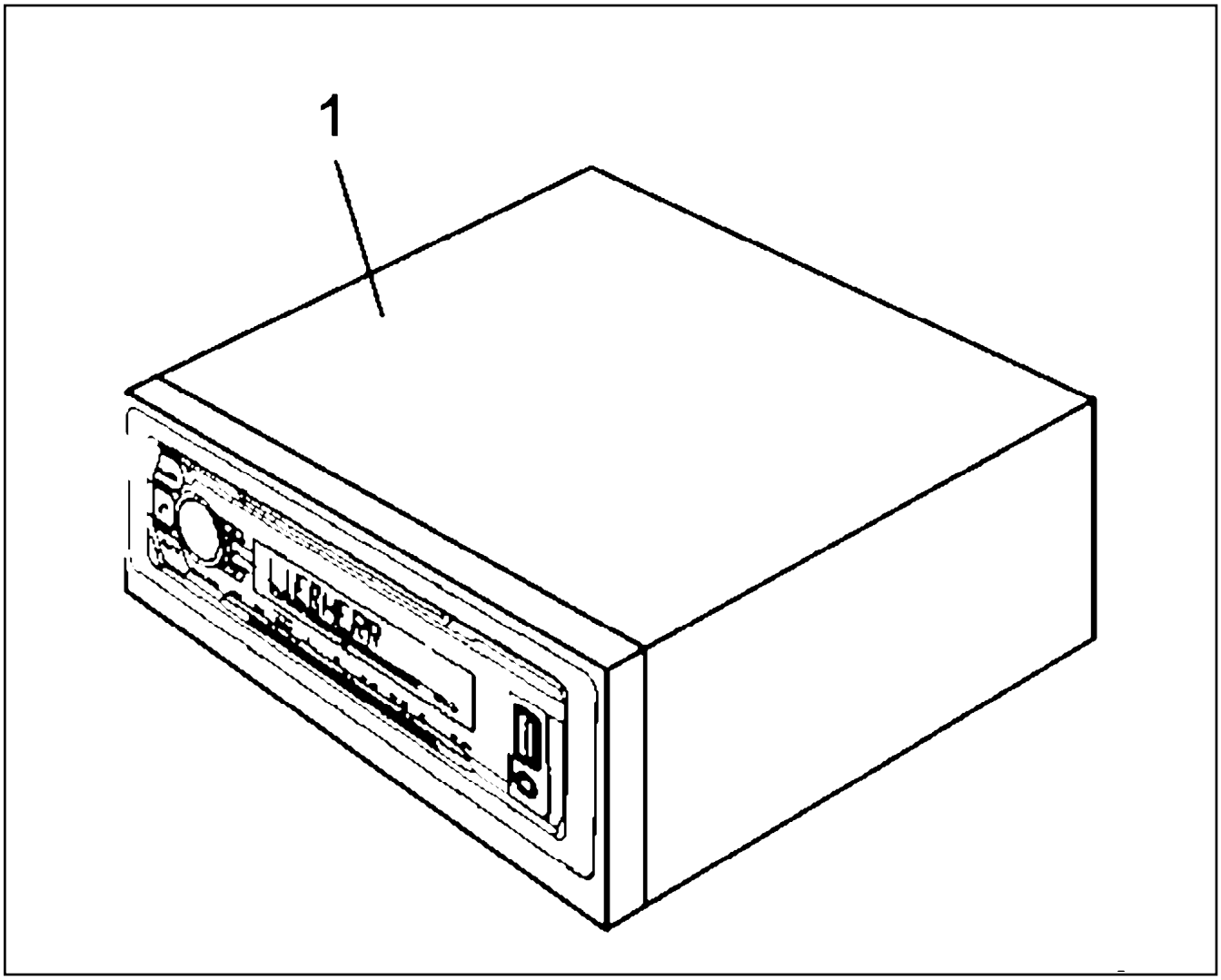

Pos.	Item	Quantity	Description	Bezeichnung
1	12257818	1	CAR RADIO ⇨ ❑ 633	AUTORADIO

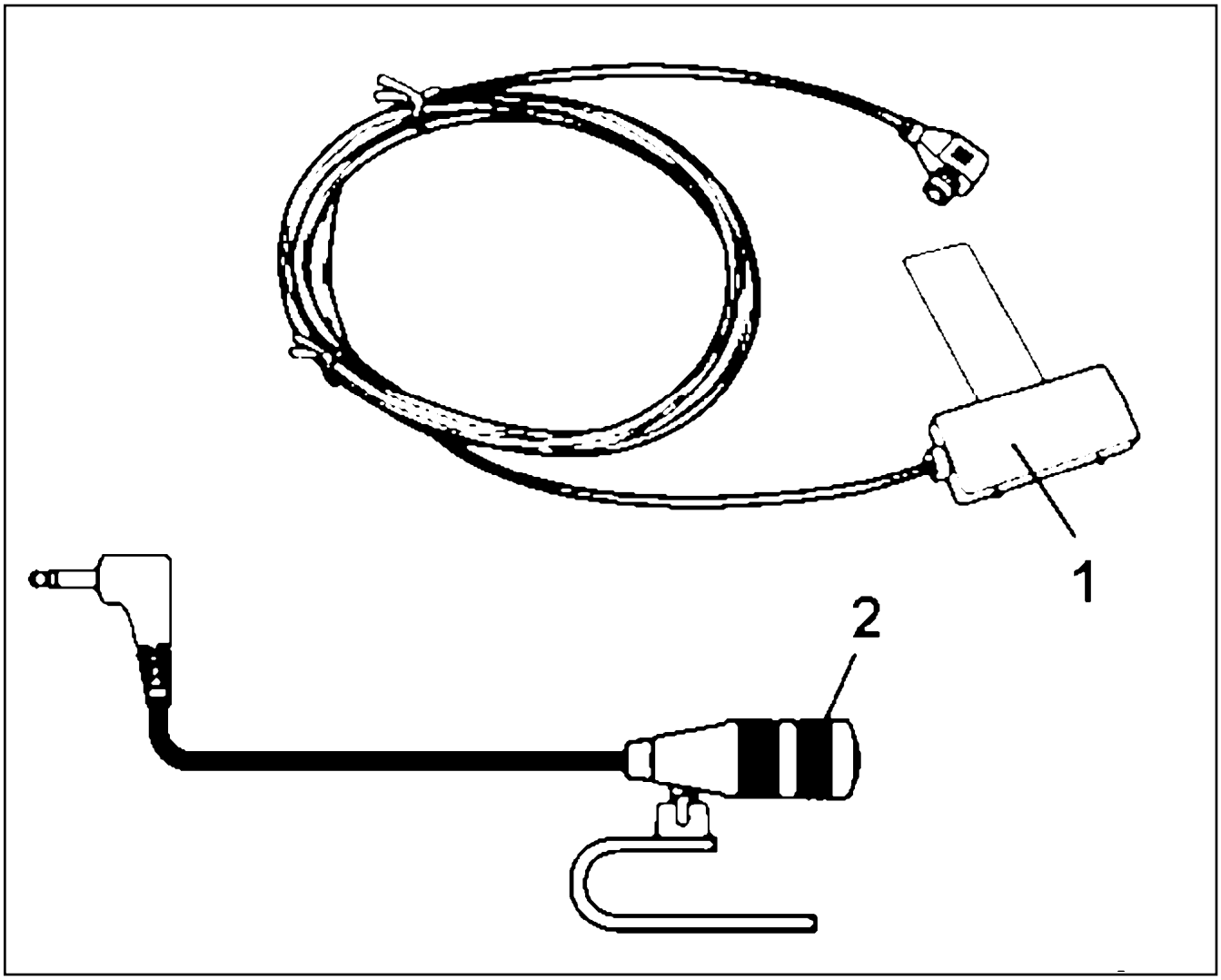

Pos.	Item	Quantity	Description	Bezeichnung
1	10878172	1	ANTENNA	ANTENNE
2	11826513	1	MICROPHONE	MIKROPHON

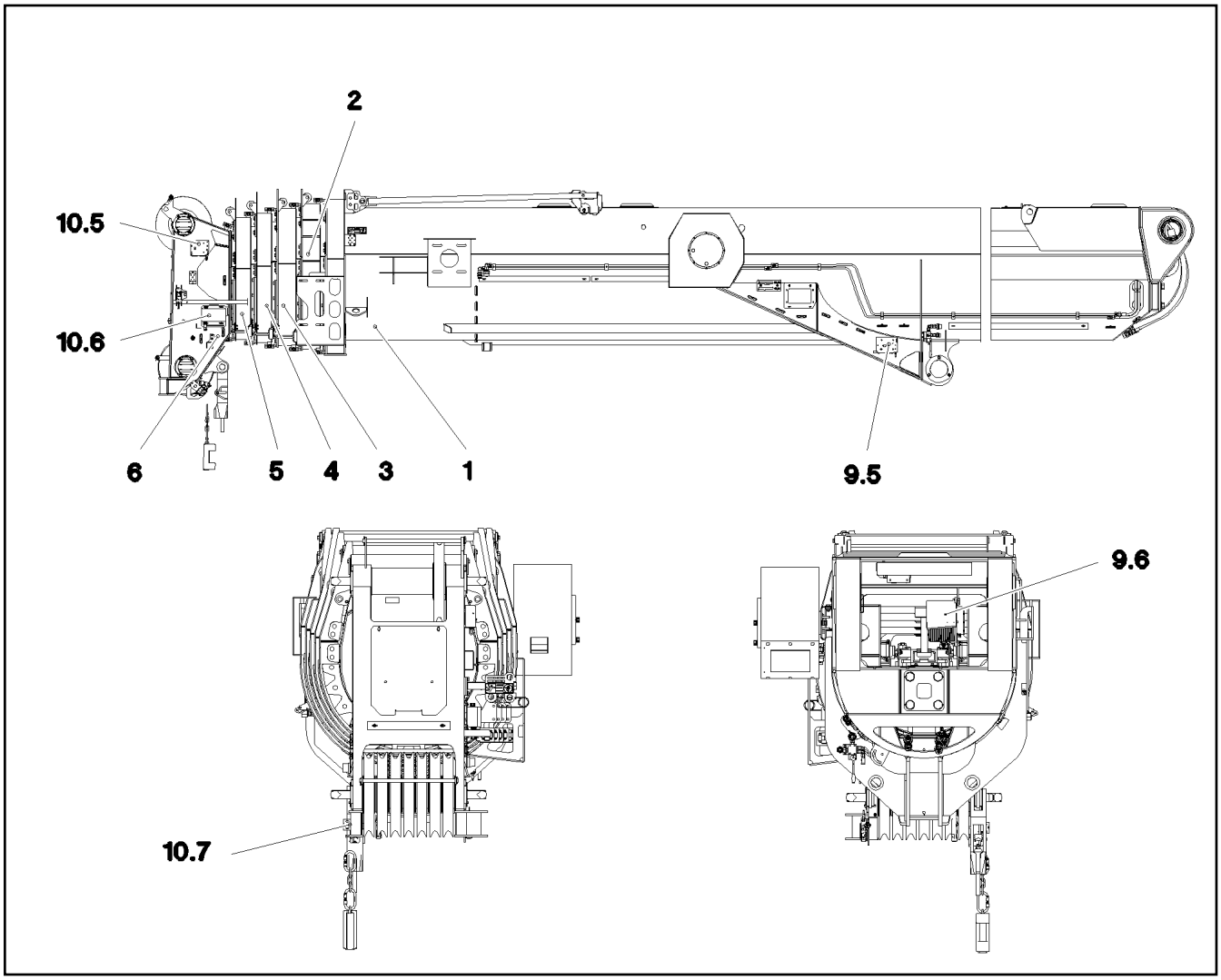

Pos.	Item	Quantity	Description	Bezeichnung
1	917291908	1	PIVOT SECTION, PRE-ASSEMBLED ⇨ ❑ 635	ANLENKSTUECK VORM.
2	917292008	1	TELESCOPIC SECTION 1 PRE-ASSEM ⇨ ❑ 641	TELESKOP 1 VORM.
3	917292108	1	TELESCOPIC SECT.2 PRE-ASSEMBL ⇨ ❑ 646	TELESKOP 2 VORM.
4	917292208	1	TELESCOPIC SECT.3 PRE-ASSEMB ⇨ ❑ 650	TELESKOP 3 VORM.
5	917292308	1	TELESCOPIC SECT.IV PRE-ASSEMBL ⇨ ❑ 654	TELESKOP 4 VORM.
6	917292408	1	TELESCOPIC SECT.5 PRE-ASSEMBLE ⇨ ❑ 658	TELESKOP 5 VORM.
7	918807308	1	MECHANICAL EXTENSION SYSTEM ⇨ ❑ 666	AUSSCHUBMECHANIK
9	966473108	1	ENCODER BASE SECTION ⇨ ❑ 673	GEBER ANLENKSTUECK
10	966200208	1	ENCODER HEAD PIECE ⇨ ❑ 676	GEBER KOPFSTUECK

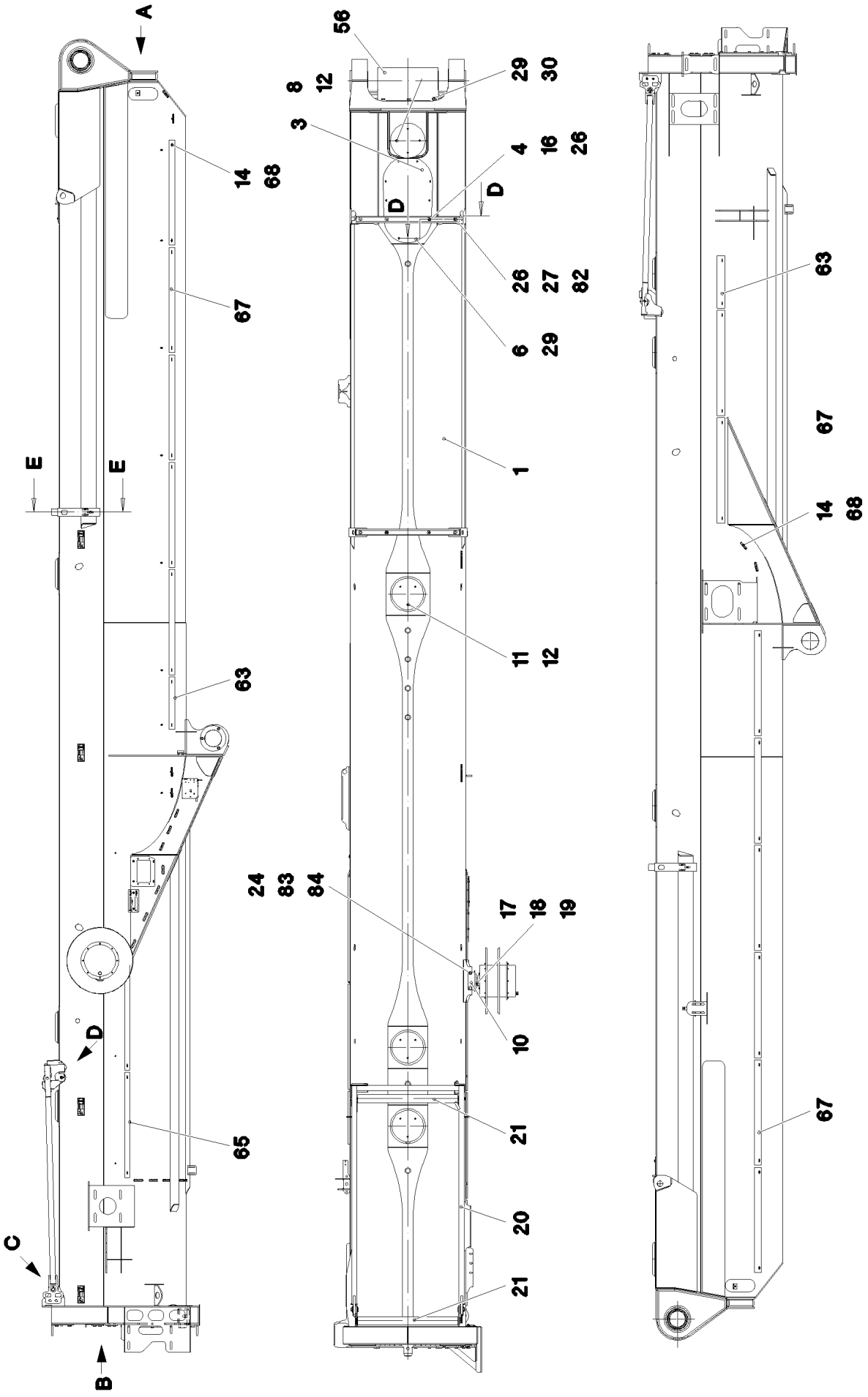

4.12.2020 077507	**etk_en_de 047580 LTR 1220**	635 (1/6)
LIEBHERR	**PIVOT SECTION, PRE-ASSEMBLED** **ANLENKSTUECK VORM.**	**917291908**

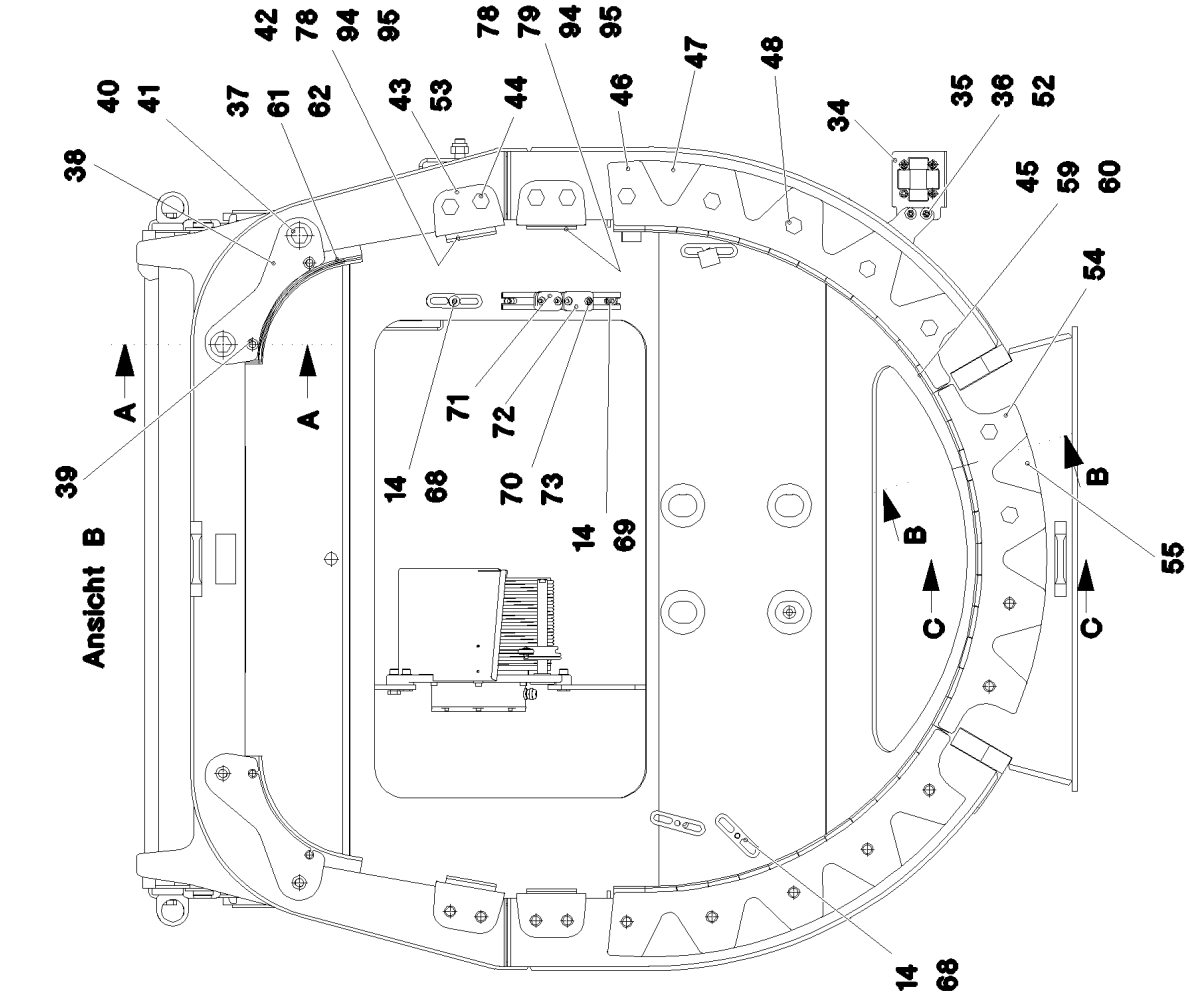

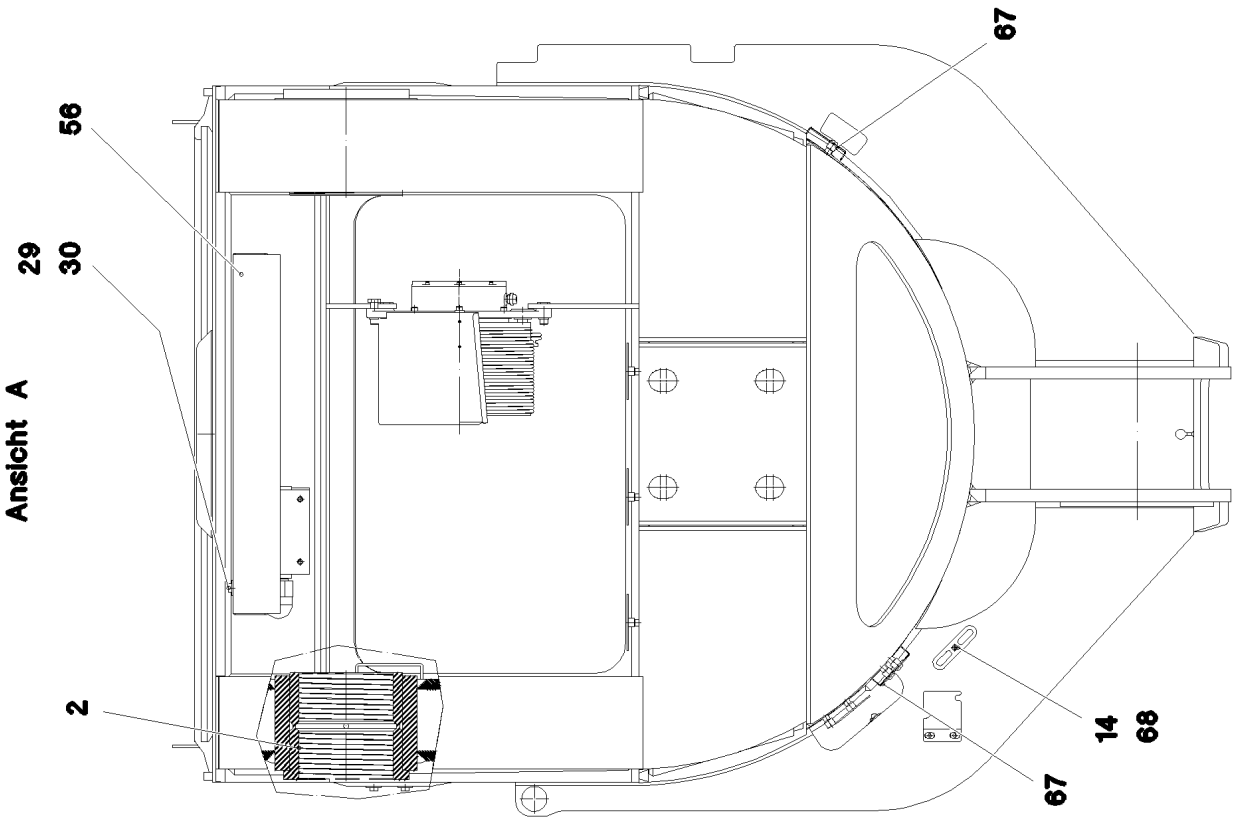

4.12.2020 077508 LIEBHERR	**etk_en_de 047580 LTR 1220** **PIVOT SECTION, PRE-ASSEMBLED** **ANLENKSTUECK VORM.**	❑ 636 (2/6) **917291908**

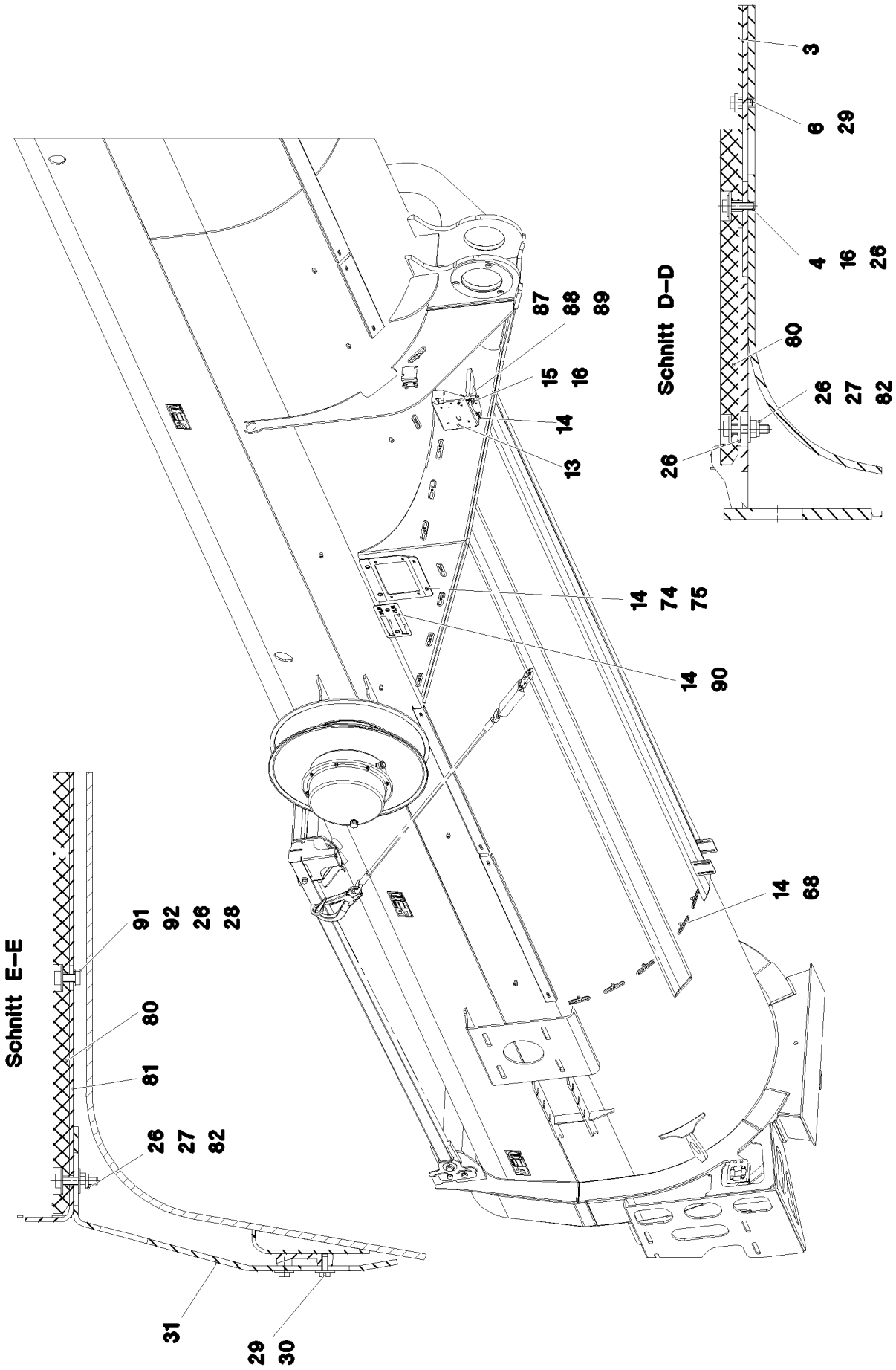
Schnitt D–D
3
6
29
4
16
26
80
26
27
82
26
87
88
89
15
16
14
13
14
74
75
14
90
14
68
Schnitt E–E
91
92
26
28
80
81
26
27
82
31
29
30

LIEBHERR

4.12.2020
077510

etk_en_de 047580 LTR 1220

PIVOT SECTION, PRE-ASSEMBLED
ANLENKSTUECK VORM.

638 (4/6)

917291908

Schnitt C–C

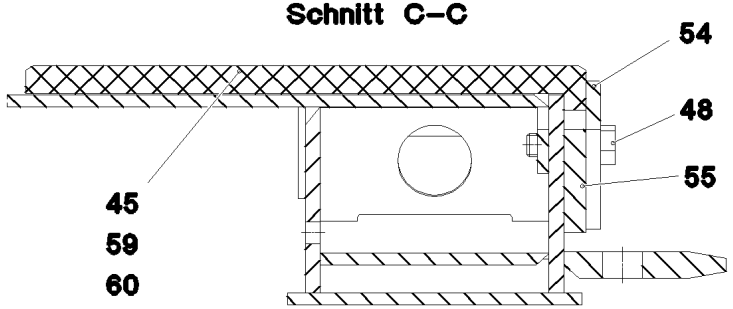

Schnitt A–A

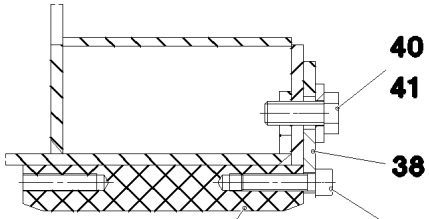

Ansicht C

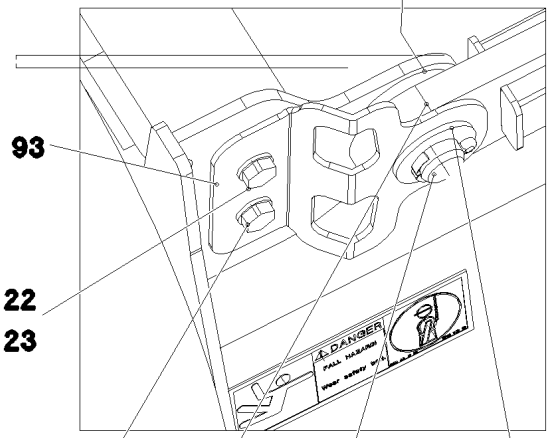

Ansicht D

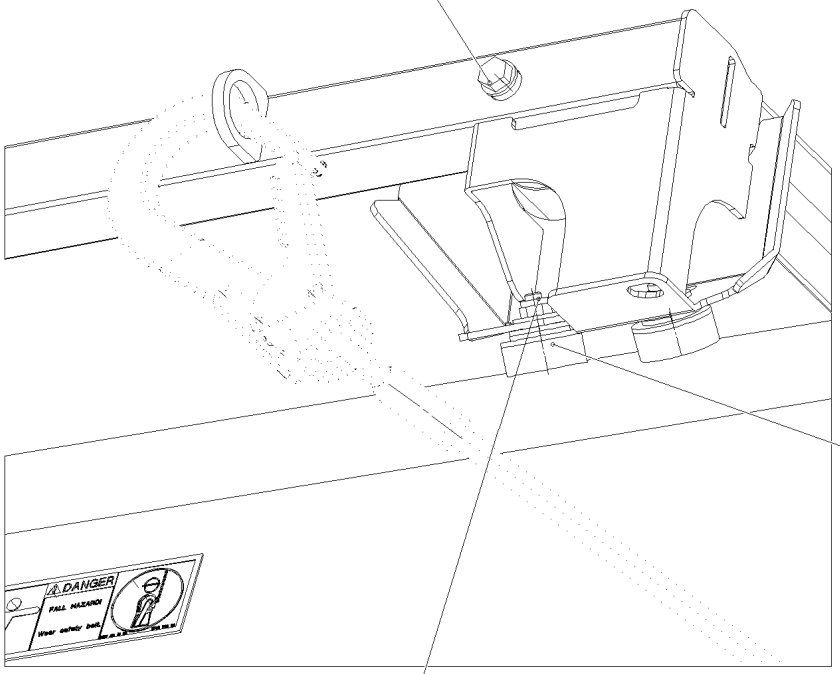

Schnitt B–B

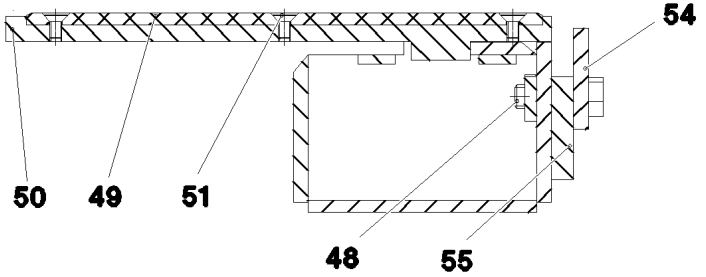

Pos.	Item	Quantity	Description	Bezeichnung
1	917292608	1	PIVOT PIECE ST. CONST. SPF	ANLENKSTUECK SCHWK.
2	973357208	2	BEARING BUSH RD200X170 GZ-CUZN25AL5	LAGERBUCHSE
3	96029256	1	COVER WELDED	DECKEL SCHWK.
4	11826527	2	HEX SCREW ISO 4017 M8X30 8.8 480H SPF	SECHSKANTSCHRAUBE
6	11840501	8	WASHER DIN 7349 8,4 200HV 480H SPF	SCHEIBE
8	972144708	1	COVER RD330X27 PA6G	DECKEL
10	972133308	1	PLATE 200X309 S355MC	BLECH
11	973077908	3	COVER 25X300X300 PA6G	DECKEL
12	12208098	13	SOCKET HEAD SCREW ISO 4762 M8X30 8.8	ZYLINDERSCHRAUBE
13	97009056	1	PLATE 2X303X252 DC01 FE//ZNNI8//CN//T0	BLECH
14	12102696	73	BUTTON HEAD SCREW ISO7380-2 M8X10 0	HALBRUNDKOPFSCHRAUBE
15	10197831	2	HEX SCREW ISO 4017 M8X25 8.8 ZNNI-480	SECHSKANTSCHRAUBE
16	10289803	2	WASHER ISO 7089 8 300HV 480H SPF	SCHEIBE
17	10875519	4	HEX SCREW ISO 4017 M16X40 8.8 FLZN SP	SECHSKANTSCHRAUBE
18	10875609	4	HEX NUT DIN 985 M16 8 FLZN SPF	SECHSKANTMUTTER
19	4000809	8	WASHER ISO 7093-1 16 300HV FLZN	SCHEIBE
20	962771108	1	HOIST ROPE GUIDE WELDED	HUBSEILFUEHRUNG SCHWK.
21	749010208	2	CARRYING ROLLER 80/5/20X950 GALV.VER	TRAGROLLE
22	10289804	16	WASHER ISO 7089 12 300HV FLZN SPF	SCHEIBE
23	11631742	4	HEX SCREW ISO 4017 M12X30 8.8 FLZN SP	SECHSKANTSCHRAUBE
24	11182717	8	WASHER ISO 7093-1 12 300HV FLZN SPF	SCHEIBE
25	726613008	4	MEGI BUFFER	MEGIPUFFER
26	11491889	16	WASHER ISO 7093-1 10 300HV FLZN SPF	SCHEIBE
27	10197769	8	HEX NUT DIN 985 M10 8 ZNNI-480H SPF	SECHSKANTMUTTER
28	12102695	2	HEX NUT ISO 4032 M10 8 ZNNI-480H SPF	SECHSKANTMUTTER
29	11651767	17	HEX SCREW ISO 4017 M8X20 8.8 480H SPF	SECHSKANTSCHRAUBE
30	11140469	8	WASHER ISO 7093-1 8 200HV 480H SPF	SCHEIBE
31	973336908	2	PLATE 6X519X80 S355MC	BLECH
32	451430708	2	PIN DIN 1436 30X60X52 ST.50 VERZ	BOLZEN
33	10180363	2	SPLIT PIN ISO 1234 6,3X40 St 480H SPF	SPLINT
34	973774708	1	ROLLER ORIFICE FE//ZNNI8//CN//T0	ROLLENMUNDSTUECK
35	10197836	2	HEX SCREW ISO 4017 M6X25 8.8 ZNNI-480	SECHSKANTSCHRAUBE
36	11656734	2	HEX NUT ISO 7040 M6 8 480H SPF	SECHSKANTMUTTER
37	971063208	2	SLIDE PLATE 190X186X187 PA6G+OEL SPF	GLEITPLATTE
38	970422908	2	PLATE 8X88X270 S960QL FE/FLZN10/NC	BLECH
39	11840140	4	SOCKET HEAD SCREW ISO 4762 M12X50 8	ZYLINDERSCHRAUBE
40	12100310	4	HEX SCREW ISO 4017 M16X40 8.8 FLZN SP	SECHSKANTSCHRAUBE
41	4600021	8	WASHER DIN 7349 17 200HV FLZN SPF	SCHEIBE
42	972898808	2	SLIDE PLATE 20X90X358 SPF	GLEITPLATTE
43	971071608	4	PLATE 4X491X110 S315MC FE//ZNNI8//CN//T	BLECH
44	12100309	8	HEX SCREW ISO 4017 M16X30 8.8 FLZN SP	SECHSKANTSCHRAUBE
45	972898208	33	SLIDE PLATE 30X50X380 PA6G+OEL SPF	GLEITPLATTE
46	973357708	2	PLATE 10X542X412 S960QL	BLECH
47	973357808	2	DISTANCE PLATE 15X141X621 PA6G	DISTANZPLATTE
48	12100283	14	HEX SCREW ISO 4017 M16X50 8.8 FLZN SP	SECHSKANTSCHRAUBE
49	972898608	2	SLIDE PLATE 8X50X350 PA6G+OEL SPF	GLEITPLATTE
50	972898708	2	PLATE 30X370X50 S960QL FE//FLZN10//NC	BLECH
51	10875552	6	COUNTERSUNK SCREW DIN 7991 M8X16 8	SENKSCHRAUBE
52	10875648	2	WASHER ISO 7093-1 6 200HV 480H SPF	SCHEIBE
53	971753708	4	PLATE 8X110X70 S960QL FE/FLZN10/NC	BLECH
54	973357908	1	PLATE 10X504X361 S960QL	BLECH
55	973358008	1	DISTANCE PLATE 15X113X492 PA6G	DISTANZPLATTE
56	970509808	1	PLATE 2X704X353 DC01	BLECH
57	10875508	2	HEX SCREW ISO 4014 M12X80 8.8 FLZN SP	SECHSKANTSCHRAUBE
58	288154508	2	BUSHING RD50,25X20 PA6G	BUCHSE
63	956572408	2	U-PROFILE 1X500X98 DC01 FE//ZNNI8//CN/	U-PROFIL
65	953714108	2	U-PROFILE 1X1000X74 DC01 FE//ZNNI8//CN/	U-PROFIL
67	955927208	13	U-PROFILE 1X1000X98 DC01 FE//ZNNI8//CN/	U-PROFIL
68	953650008	28	CABLE CLAMP DC01 FE//ZNNI8//CN//T0	KABELHALTER
69	954128608	1	MOUNTING RAIL X0	TRAGSCHIENE

Pos.	Item	Quantity	Description	Bezeichnung
70	602018008	4	CARRIER RAIL NUT DIN 3015-1 L TM M6 W1	TRAGSCHIENENMUTTER
71	7362946	4	CLAMP-HALF DIN 3015-1 L 2 R 16 PP SW	KLEMMHAELFTE
72	7005052	4	CLAMP-HALF DIN 3015-1 L 3 R 25 PP SW	KLEMMHAELFTE
73	11820284	4	SOCKET HEAD SCREW ISO 4762 M6X30 8.8	ZYLINDERSCHRAUBE
74	953717608	1	PLATE 4X290X230 S315MC FE//ZNNI8//CN//T	BLECH
75	10875857	4	CAGE NUT M6 NIROSTA	KAEFIGMUTTER
76	12226080	2	WASHER DIN 7349 31 FLZN SPF	SCHEIBE
77	10289811	2	WASHER ISO 7089 30 300HV FLZN SPF	SCHEIBE
79	971995508	2	SLIDE PLATE 15X90X358 SPF	GLEITPLATTE
80	973351308	2	SLIDE PLATE 20X60X980 PA6G	GLEITPLATTE
81	975302308	1	PLATE 5X1098X60 S355MC	BLECH
82	11691682	4	HEX SCREW ISO 4017 M10X45 8.8 FLZN SP	SECHSKANTSCHRAUBE
83	11642349	4	HEX SCREW ISO 4017 M12X35 8.8 FLZN SP	SECHSKANTSCHRAUBE
84	10875607	6	HEX NUT DIN 985 M12 8 FLZN SPF	SECHSKANTMUTTER
87	10875642	1	WASHER ISO 7093-1 4 200HV 480H SPF	SCHEIBE
88	10875611	1	HEX NUT DIN 985 M4 8 480H SPF	SECHSKANTMUTTER
89	11691539	1	SOCKET HEAD SCREW ISO 4762 M4X10 8.8	ZYLINDERSCHRAUBE
90	974276208	1	PLATE 2X220X100 DC01 FE//ZNNI8//CN//T0	BLECH
91	11631816	2	HEX SCREW ISO 4017 M10X25 8.8 FLZN SP	SECHSKANTSCHRAUBE
92	500917508	2	WASHER ISO 7089 10 200HV-A2	SCHEIBE
93	974272808	2	PLATE 4X190X188 S315MC FE//ZNNI8//CN//T	BLECH

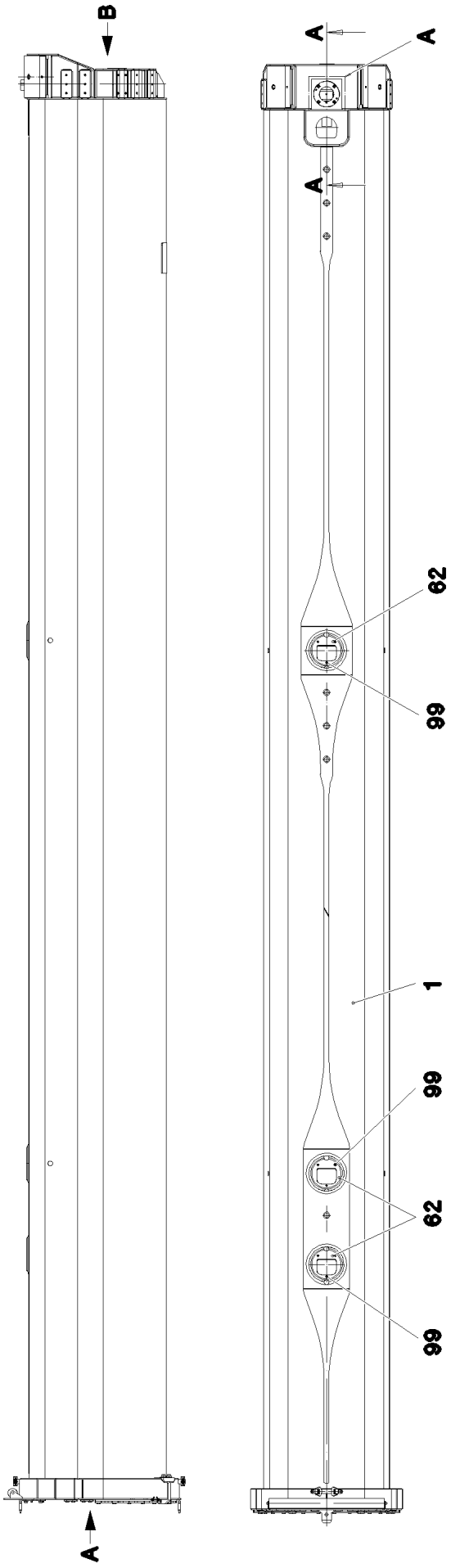
B
A
A
A
62
99
1
99
62
99
A

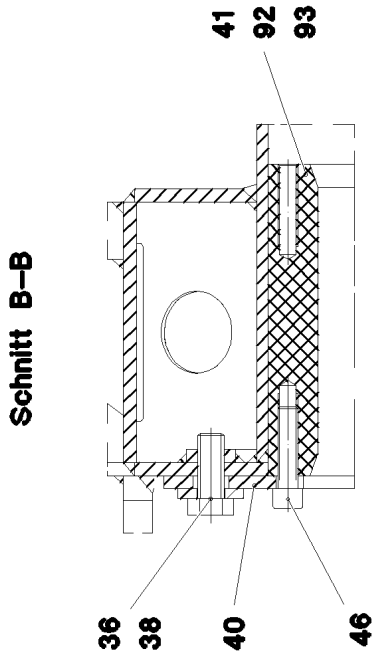
Schnitt B–B
41
92
93
36
38
40
46

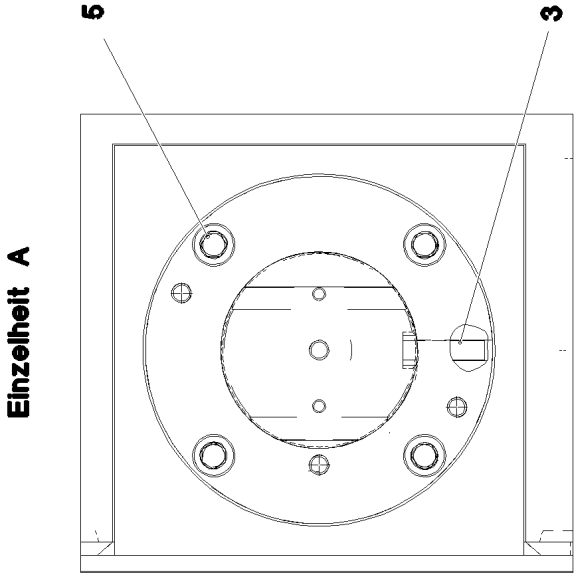
Einzelheit A
5
3

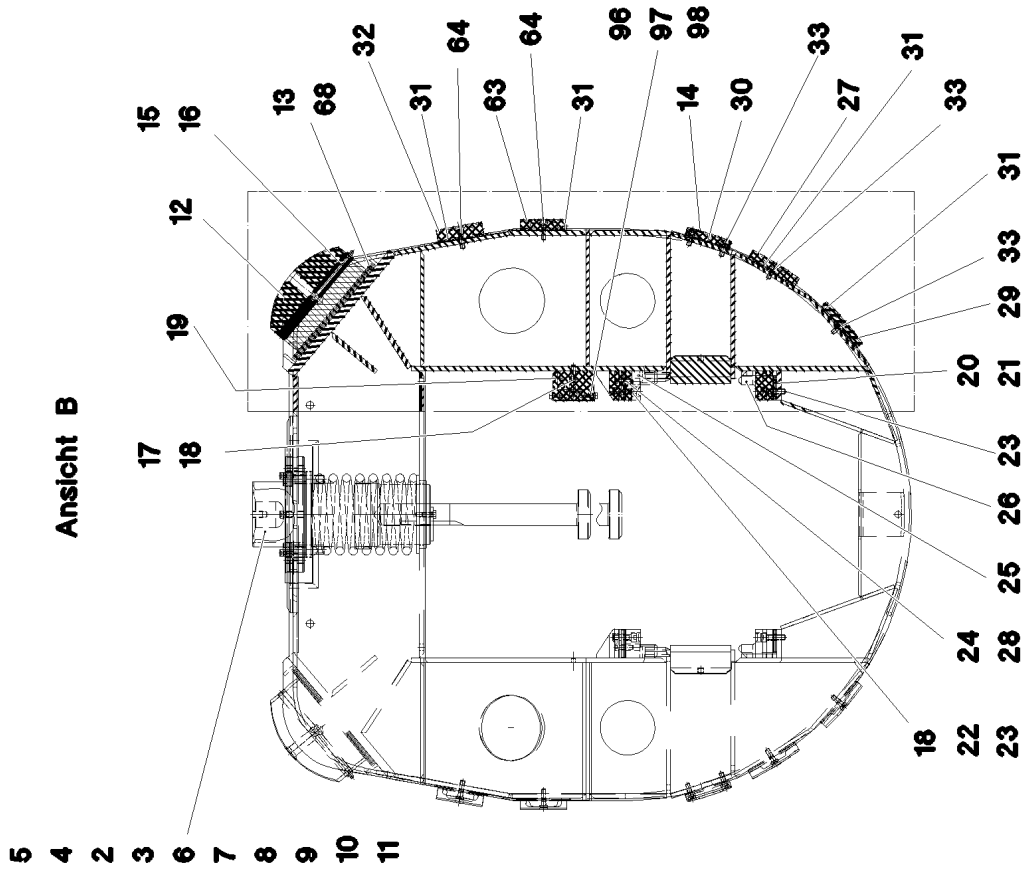
Ansicht B
5 4 2 3 6 7 8 9 10 11
17 18
19
12
15 16
13 68
32
31
64
63
64
31
96 97 98
14
30
33
27
31
33
31
33 29
20 21
23
26
25
24 28
18 22 23

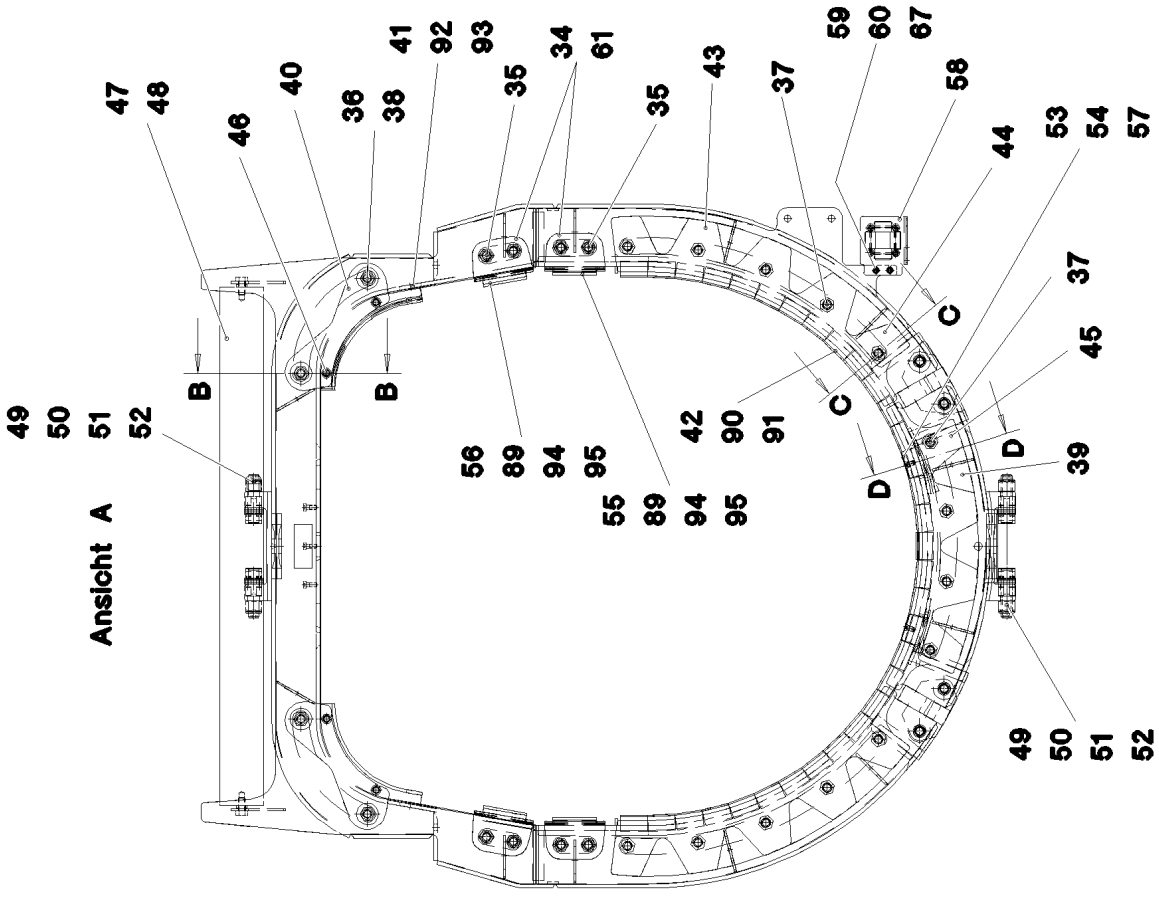
Ansicht A
49 50 51 52
47 48
46
40
36 38
41 92 93
35
34 61
35
43
37
59 60 67
58
53 54 57
44
37
45
39
B B
C C
D D
42 90 91
56 89 94 95
55 89 94 95
49 50 51 52

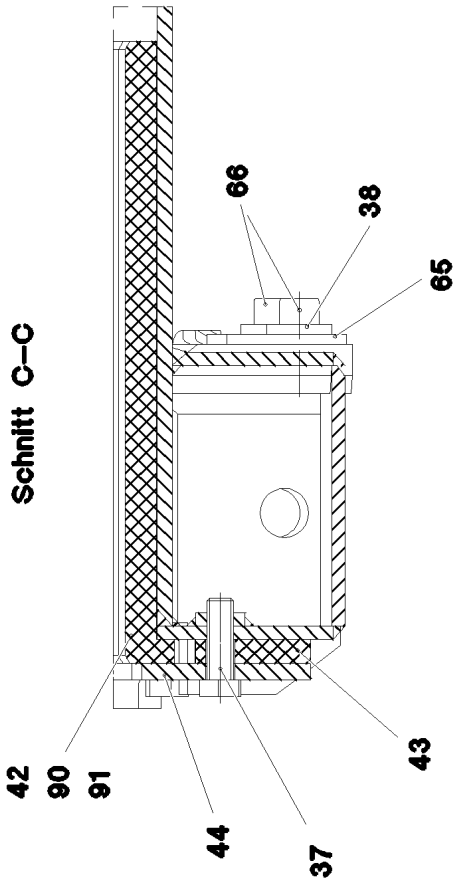
Schnitt C–C
66
38
65
42
90
91
44
37
43

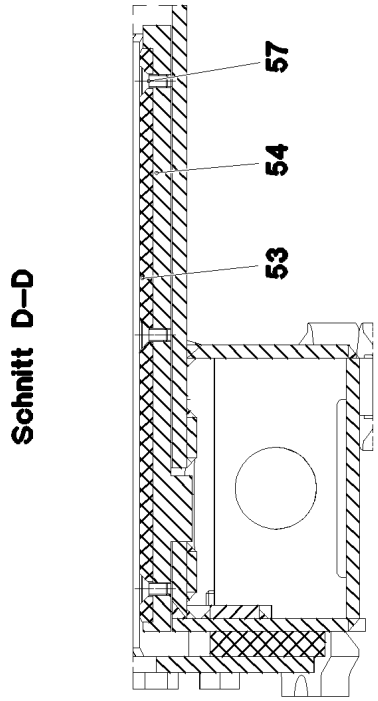
Schnitt D–D
57
54
53

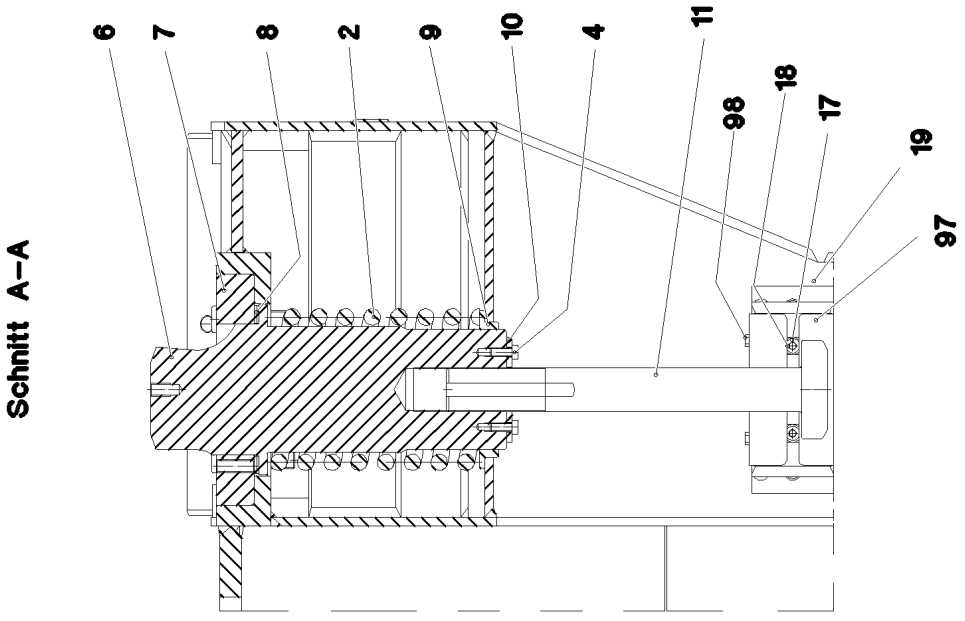
Schnitt A–A
6
7
8
2
9
10
4
11
98
18
17
19
97

Pos.	Item	Quantity	Description	Bezeichnung
1	917292708	1	TELESCOPIC SECTION 1 WELD.CONS RAL	TELESKOP 1 SCHWK.
2	720014908	1	PRESSURE SPRING 15X133X223 SPF	DRUCKFEDER
3	430611008	1	PARALLEL PIN ISO 2338 12H11X50 30CRNI	ZYLINDERSTIFT
4	11651767	2	HEX SCREW ISO 4017 M8X20 8.8 480H SPF	SECHSKANTSCHRAUBE
5	10001074	4	SOCKET HEAD SCREW ISO 4762 M16X60 10	ZYLINDERSCHRAUBE
6	97027202	1	PIN 160.0X326 35NICRMOV125 SPF	BOLZEN
7	972908008	1	WASHER 40X222X222 S960QL+Z25	SCHEIBE
8	971060108	3	WASHER 2X154X154 DC01 FE//ZNNI8//CN//T	SCHEIBE
9	970535808	1	BUSHING 20x150x150 S960QL	BUCHSE
10	954706408	1	PLATE 5X62X96 S960QL	BLECH
11	970545508	1	SCREW 90x349 35NICRMOV125	SCHRAUBE
12	970545608	2	BEARING PLATE 100X195X350 PA6G+OEL	LAGERPLATTE
13	970545708	10	PLATE 2x350x225 DC01+ZE	BLECH
14	972908108	2	SLIDER 15X85X231 PA6G+OEL SPF	GLEITSTUECK
15	970536608	2	BUSHING 16X195	BUCHSE
16	7743242	2	HYDRAULIC-TYPE LUBRICAT.NIPPLE DIN 71	KEGELSCHMIERNIPPEL
17	10289803	2	WASHER ISO 7089 8 300HV 480H SPF	SCHEIBE
18	10875599	6	SOCKET HEAD SCREW ISO 4762 M8X25 8.8	ZYLINDERSCHRAUBE
19	97001821	1	SPACER PIECE 190X75X34 PA6G+OEL SPF	DISTANZSTUECK
20	973246808	4	PLATE 3X234X43 DC01 FE//ZNNI8//CN//T0	BLECH
21	973246908	4	PLATE 1X234X43 DC01 FE//ZNNI8//CN//T0	BLECH
22	10875629	4	HEX NUT ISO 7040 M10 8 FLZN SPF	SECHSKANTMUTTER
23	10875572	8	SOCKET HEAD SCREW ISO 4762 M10X35 8	ZYLINDERSCHRAUBE
24	957025308	4	PLATE 1X86X53 DC01 FE//ZNNI8//CN//T0	BLECH
25	970537008	2	SLIDER 53X87X234 PA6G+OEL	GLEITSTUECK
26	970537108	2	SLIDER 234X53X62 PA6G+OEL SPF	GLEITSTUECK
27	970537708	2	SLIDER 18X100X231 PA6G+OEL SPF	GLEITSTUECK
28	957025408	4	PLATE 3X86X53 DC01 FE//ZNNI8//CN//T0	BLECH
29	970537508	2	SLIDER 14X100X233 PA6G+OEL SPF	GLEITSTUECK
30	972908208	2	PLATE 2X210X85 DC01 FE//ZNNI8//CN//T0	BLECH
31	970537808	12	PLATE 2X100X210 DC01 FE//ZNNI8//CN//T0	BLECH
32	972908308	2	SLIDER 23X85X231 PA6G+OEL SPF	GLEITSTUECK
33	10875561	20	SOCKET HEAD SCREW DIN 6912 M8X25 08	ZYLINDERSCHRAUBE
34	971753708	4	PLATE 8X110X70 S960QL FE/FLZN10/NC	BLECH
35	12100309	8	HEX SCREW ISO 4017 M16X30 8.8 FLZN SP	SECHSKANTSCHRAUBE
36	12100310	4	HEX SCREW ISO 4017 M16X40 8.8 FLZN SP	SECHSKANTSCHRAUBE
37	12100283	14	HEX SCREW ISO 4017 M16X50 8.8 FLZN SP	SECHSKANTSCHRAUBE
38	4600021	8	WASHER DIN 7349 17 200HV FLZN SPF	SCHEIBE
39	972898108	1	DISTANCE PLATE 15X110X465 PA6G	DISTANZPLATTE
40	970422908	2	PLATE 8X88X270 S960QL FE/FLZN10/NC	BLECH
41	971063208	2	SLIDE PLATE 190X186X187 PA6G+OEL SPF	GLEITPLATTE
42	972898208	31	SLIDE PLATE 30X50X380 PA6G+OEL SPF	GLEITPLATTE
43	972898308	2	DISTANCE PLATE 15X138X592 PA6G	DISTANZPLATTE
44	972898408	2	PLATE 10X615X181 S960QL FLZN	BLECH
45	972898508	1	PLATE 10X526X167 S960QL	BLECH
46	11840140	4	SOCKET HEAD SCREW ISO 4762 M12X50 8	ZYLINDERSCHRAUBE
47	749010208	1	CARRYING ROLLER 80/5/20X950 GALV.VER	TRAGROLLE
48	11658892	2	HEX SCREW ISO 4017 M12X25 8.8 FLZN SP	SECHSKANTSCHRAUBE
49	972426708	4	GUIDE ISO 8062-3DCTG6 30X50X78 G18NI	EINWEISER
50	10875481	4	GRUB SCREW ISO 4026 M20X90 8.8 FLZN	GEWINDESTIFT
51	10875630	4	HEX NUT ISO 7040 M20 10 FE//ZnNi8//Cn//T0	SECHSKANTMUTTER
52	11691327	16	WASHER ISO 7092 20 300HV FLZN SPF	SCHEIBE
53	972898608	2	SLIDE PLATE 8X50X350 PA6G+OEL SPF	GLEITPLATTE
54	972898708	2	PLATE 30X370X50 S960QL FE//FLZN10//NC	BLECH
55	971995508	2	SLIDE PLATE 15X90X358 SPF	GLEITPLATTE
56	972898808	2	SLIDE PLATE 20X90X358 SPF	GLEITPLATTE
57	10875552	6	COUNTERSUNK SCREW DIN 7991 M8X16 8	SENKSCHRAUBE
58	973774708	1	ROLLER ORIFICE FE//ZNNI8//CN//T0	ROLLENMUNDSTUECK
59	10197836	2	HEX SCREW ISO 4017 M6X25 8.8 ZNNI-480	SECHSKANTSCHRAUBE
60	11656734	2	HEX NUT ISO 7040 M6 8 480H SPF	SECHSKANTMUTTER

Pos.	Item	Quantity	Description	Bezeichnung
61	971071608	4	PLATE 4X491X110 S315MC FE//ZNNI8//CN//T	BLECH
62	97027203	3	COVER 289X289X12 PA6G	DECKEL
63	972908408	2	SLIDER 19X85X231 PA6G+OEL SPF	GLEITSTUECK
64	12216056	12	SOCKET HEAD SCREW DIN 7984 M8X30 08	ZYLINDERSCHRAUBE
65	973154008	2	PLATE 6X125X73 S960QL	BLECH
66	4042302	4	SOCKET HEAD SCREW ISO 4762 M16X40 8	ZYLINDERSCHRAUBE
67	10197771	2	WASHER ISO 7089 6 200HV ZNNI-480H SPF	SCHEIBE
96	972392108	1	SWITCH PANEL 21X75X160 PA6G	SCHALTLEISTE
97	972373808	2	SWITCH PLATE 2X139X46 DC01 FE//ZNNI8/	SCHALTBLECH
98	11642497	4	HEX SCREW ISO 4017 M6X10 8.8 480H SPF	SECHSKANTSCHRAUBE
99	12216054	9	SOCKET HEAD SCREW DIN 7984 M8X20 08	ZYLINDERSCHRAUBE

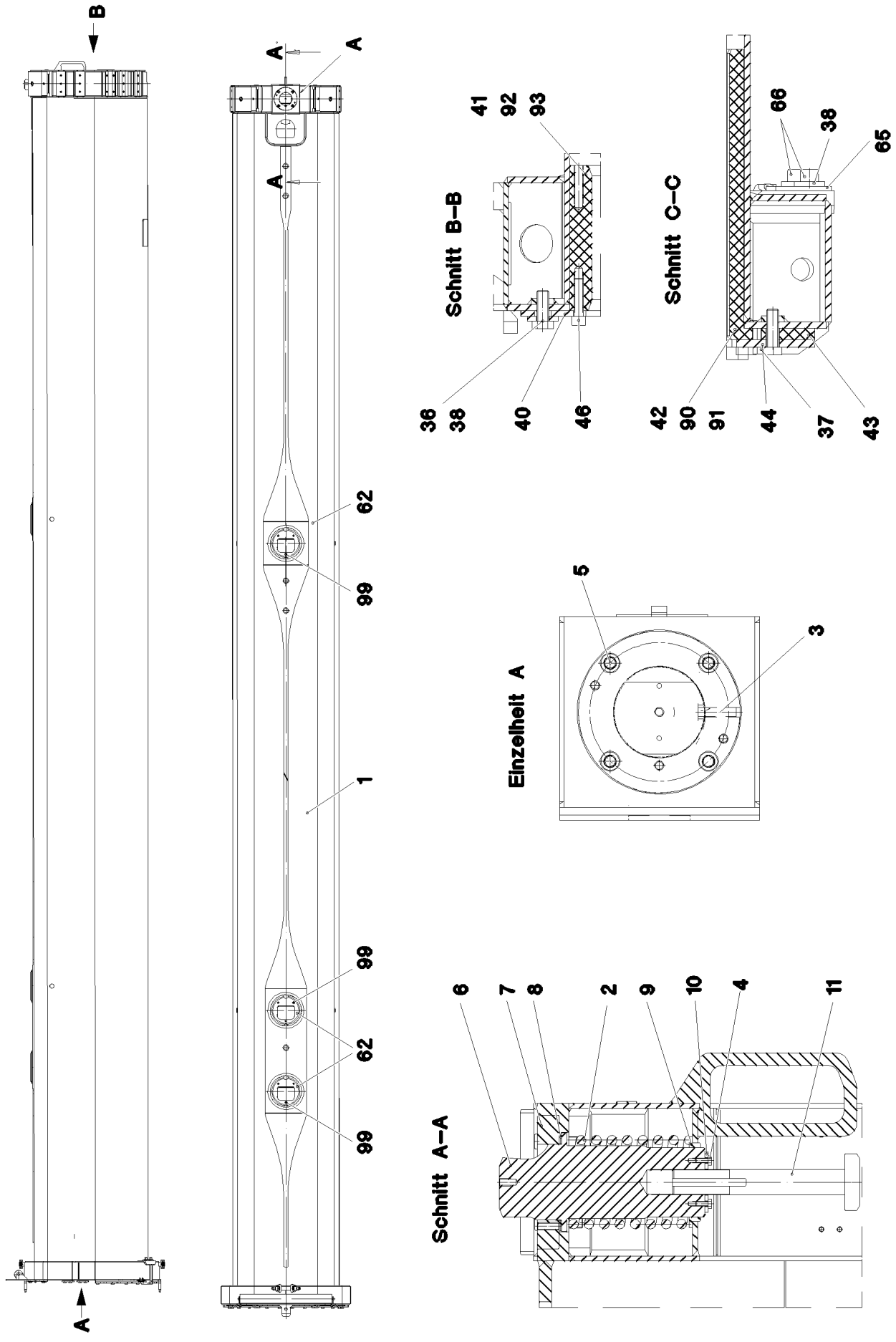

4.12.2020 077514	**etk_en_de 047580 LTR 1220**	646 (1/4)
LIEBHERR	**TELESCOPIC SECT.2 PRE-ASSEMBL** **TELESKOP 2 VORM.**	**917292108**

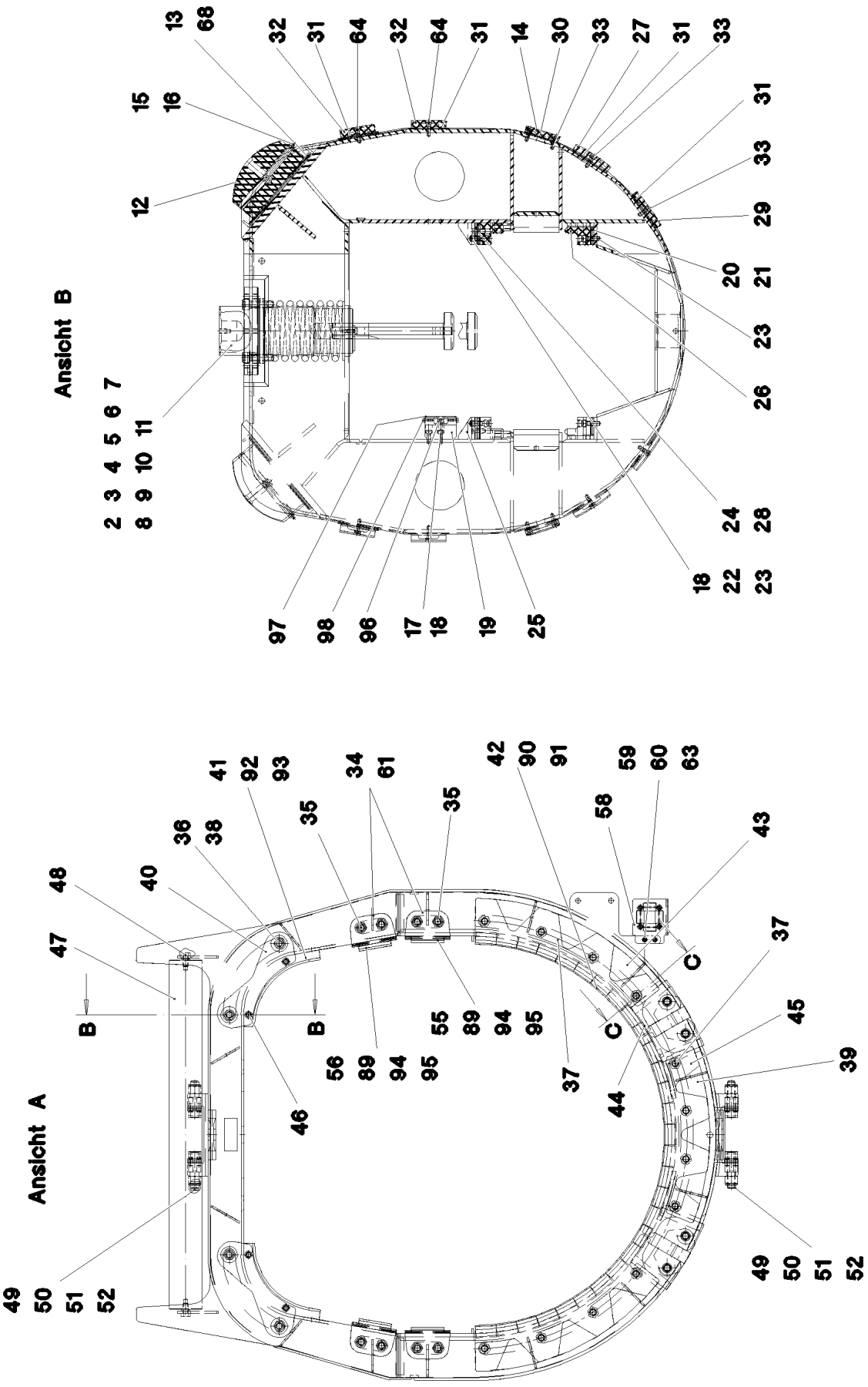
Ansicht B
Ansicht A
B
C

Pos.	Item	Quantity	Description	Bezeichnung
1	917292808	1	TELESCOPIC SECT.2 WELD.CONSTR RAL 7	TELESKOP 2 SCHWK.
2	720014908	1	PRESSURE SPRING 15X133X223 SPF	DRUCKFEDER
3	430611008	1	PARALLEL PIN ISO 2338 12H11X50 30CRNI	ZYLINDERSTIFT
4	11651767	2	HEX SCREW ISO 4017 M8X20 8.8 480H SPF	SECHSKANTSCHRAUBE
5	10001074	4	SOCKET HEAD SCREW ISO 4762 M16X60 10	ZYLINDERSCHRAUBE
6	97027202	1	PIN 160.0X326 35NICRMOV125 SPF	BOLZEN
7	972908008	1	WASHER 40X222X222 S960QL+Z25	SCHEIBE
8	971060108	2	WASHER 2X154X154 DC01 FE//ZNNI8//CN//T	SCHEIBE
9	970535808	1	BUSHING 20x150x150 S960QL	BUCHSE
10	954706408	1	PLATE 5X62X96 S960QL	BLECH
11	970574508	1	SCREW 90x297 35NICRMOV125	SCHRAUBE
12	970536108	2	BEARING PLATE 100X195X230 PA6G+OEL	LAGERPLATTE
13	970536208	10	PLATE 2x230x225 DC01+ZE	BLECH
14	972908108	2	SLIDER 15X85X231 PA6G+OEL SPF	GLEITSTUECK
15	970536608	2	BUSHING 16X195	BUCHSE
16	7743242	2	HYDRAULIC-TYPE LUBRICAT.NIPPLE DIN 71	KEGELSCHMIERNIPPEL
17	10289803	2	WASHER ISO 7089 8 300HV 480H SPF	SCHEIBE
18	10875599	8	SOCKET HEAD SCREW ISO 4762 M8X25 8.8	ZYLINDERSCHRAUBE
19	97001821	1	SPACER PIECE 190X75X34 PA6G+OEL SPF	DISTANZSTUECK
20	973246808	4	PLATE 3X234X43 DC01 FE//ZNNI8//CN//T0	BLECH
21	973246908	4	PLATE 1X234X43 DC01 FE//ZNNI8//CN//T0	BLECH
22	10875629	4	HEX NUT ISO 7040 M10 8 FLZN SPF	SECHSKANTMUTTER
23	10875572	8	SOCKET HEAD SCREW ISO 4762 M10X35 8	ZYLINDERSCHRAUBE
24	957025308	4	PLATE 1X86X53 DC01 FE//ZNNI8//CN//T0	BLECH
25	970537008	2	SLIDER 53X87X234 PA6G+OEL	GLEITSTUECK
26	970537108	2	SLIDER 234X53X62 PA6G+OEL SPF	GLEITSTUECK
27	970537708	2	SLIDER 18X100X231 PA6G+OEL SPF	GLEITSTUECK
28	957025408	4	PLATE 3X86X53 DC01 FE//ZNNI8//CN//T0	BLECH
29	970537508	2	SLIDER 14X100X233 PA6G+OEL SPF	GLEITSTUECK
30	972908208	4	PLATE 2X210X85 DC01 FE//ZNNI8//CN//T0	BLECH
31	970537808	18	PLATE 2X100X210 DC01 FE//ZNNI8//CN//T0	BLECH
32	972908408	4	SLIDER 19X85X231 PA6G+OEL SPF	GLEITSTUECK
33	10875561	20	SOCKET HEAD SCREW DIN 6912 M8X25 08	ZYLINDERSCHRAUBE
34	971753708	4	PLATE 8X110X70 S960QL FE/FLZN10/NC	BLECH
35	12100309	8	HEX SCREW ISO 4017 M16X30 8.8 FLZN SP	SECHSKANTSCHRAUBE
36	12100310	4	HEX SCREW ISO 4017 M16X40 8.8 FLZN SP	SECHSKANTSCHRAUBE
37	12100283	12	HEX SCREW ISO 4017 M16X50 8.8 FLZN SP	SECHSKANTSCHRAUBE
38	4600021	8	WASHER DIN 7349 17 200HV FLZN SPF	SCHEIBE
39	973245708	1	DISTANCE PLATE 15X105X429 PA6G	DISTANZPLATTE
40	970422908	2	PLATE 8X88X270 S960QL FE/FLZN10/NC	BLECH
41	971063208	2	SLIDE PLATE 190X186X187 PA6G+OEL SPF	GLEITPLATTE
42	972898208	29	SLIDE PLATE 30X50X380 PA6G+OEL SPF	GLEITPLATTE
43	973245808	2	DISTANCE PLATE 15X119X497 PA6G	DISTANZPLATTE
44	973245908	2	PLATE 10X527X161 S960QL FLZN	BLECH
45	973246008	1	PLATE 10X498X162 S960QL	BLECH
46	11840140	4	SOCKET HEAD SCREW ISO 4762 M12X50 8	ZYLINDERSCHRAUBE
47	749009408	1	CARRYING ROLLER 80/5/20X850 GALV.VER	TRAGROLLE
48	11658892	2	HEX SCREW ISO 4017 M12X25 8.8 FLZN SP	SECHSKANTSCHRAUBE
49	972426708	4	GUIDE ISO 8062-3DCTG6 30X50X78 G18NI	EINWEISER
50	10875481	4	GRUB SCREW ISO 4026 M20X90 8.8 FLZN	GEWINDESTIFT
51	10875630	4	HEX NUT ISO 7040 M20 10 FE//ZnNi8//Cn//T0	SECHSKANTMUTTER
52	11691327	16	WASHER ISO 7092 20 300HV FLZN SPF	SCHEIBE
55	971995508	2	SLIDE PLATE 15X90X358 SPF	GLEITPLATTE
56	972898808	2	SLIDE PLATE 20X90X358 SPF	GLEITPLATTE
58	973774708	1	ROLLER ORIFICE FE//ZNNI8//CN//T0	ROLLENMUNDSTUECK
59	10197836	2	HEX SCREW ISO 4017 M6X25 8.8 ZNNI-480	SECHSKANTSCHRAUBE
60	11656734	2	HEX NUT ISO 7040 M6 8 480H SPF	SECHSKANTMUTTER
61	971071608	4	PLATE 4X491X110 S315MC FE//ZNNI8//CN//T	BLECH
62	97027203	3	COVER 289X289X12 PA6G	DECKEL
63	10197771	2	WASHER ISO 7089 6 200HV ZNNI-480H SPF	SCHEIBE

Pos.	Item	Quantity	Description	Bezeichnung
64	12216056	12	SOCKET HEAD SCREW DIN 7984 M8X30 08	ZYLINDERSCHRAUBE
65	973154008	2	PLATE 6X125X73 S960QL	BLECH
66	4042302	4	SOCKET HEAD SCREW ISO 4762 M16X40 8	ZYLINDERSCHRAUBE
96	972392108	1	SWITCH PANEL 21X75X160 PA6G	SCHALTLEISTE
97	972373808	2	SWITCH PLATE 2X139X46 DC01 FE//ZNNI8/	SCHALTBLECH
98	11642497	4	HEX SCREW ISO 4017 M6X10 8.8 480H SPF	SECHSKANTSCHRAUBE
99	12216054	9	SOCKET HEAD SCREW DIN 7984 M8X20 08	ZYLINDERSCHRAUBE

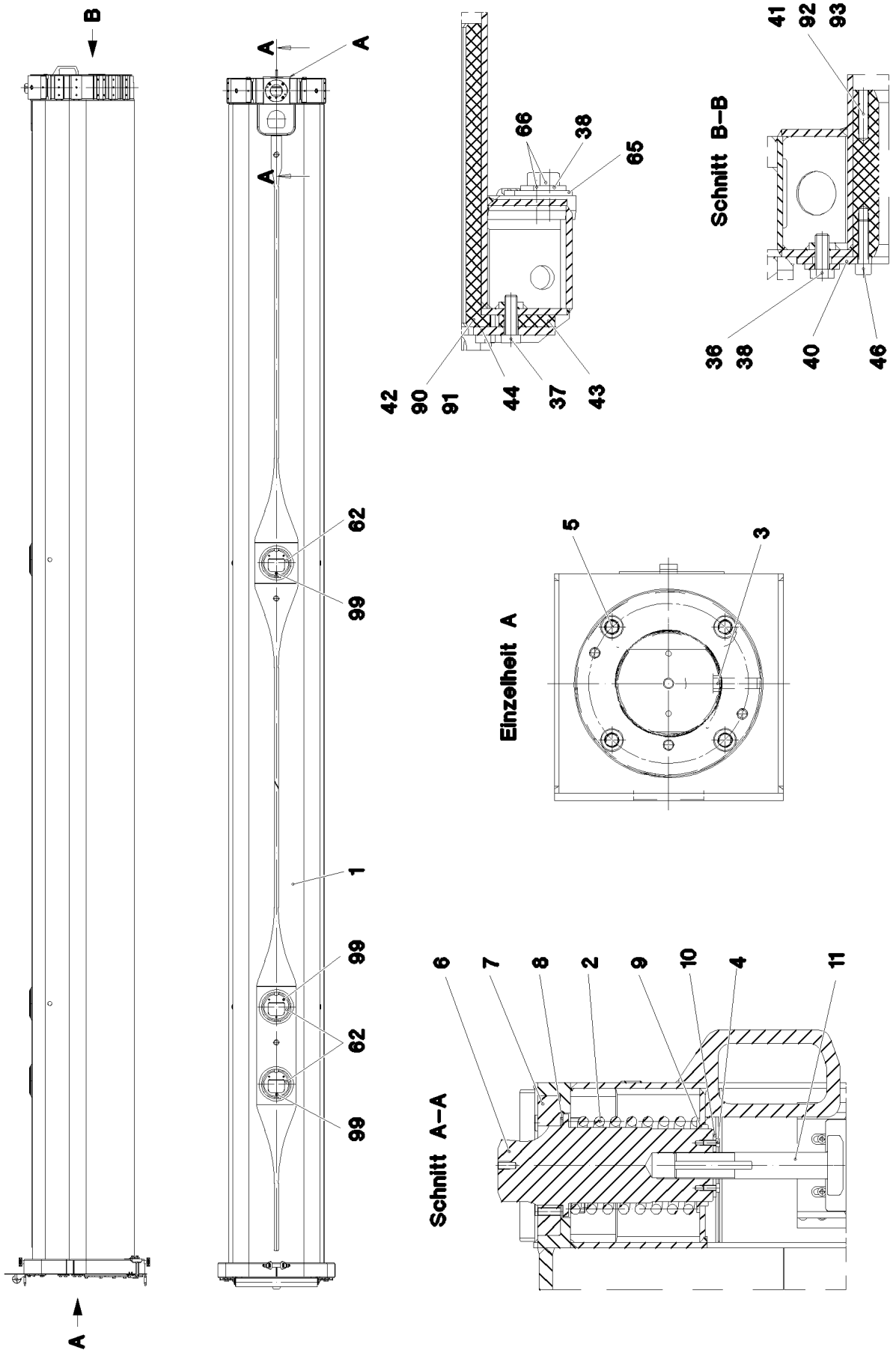

4.12.2020 077516 LIEBHERR	**etk_en_de 047580 LTR 1220** **TELESCOPIC SECT.3 PRE-ASSEMB** **TELESKOP 3 VORM.**	❑ 650 (1/4) **917292208**

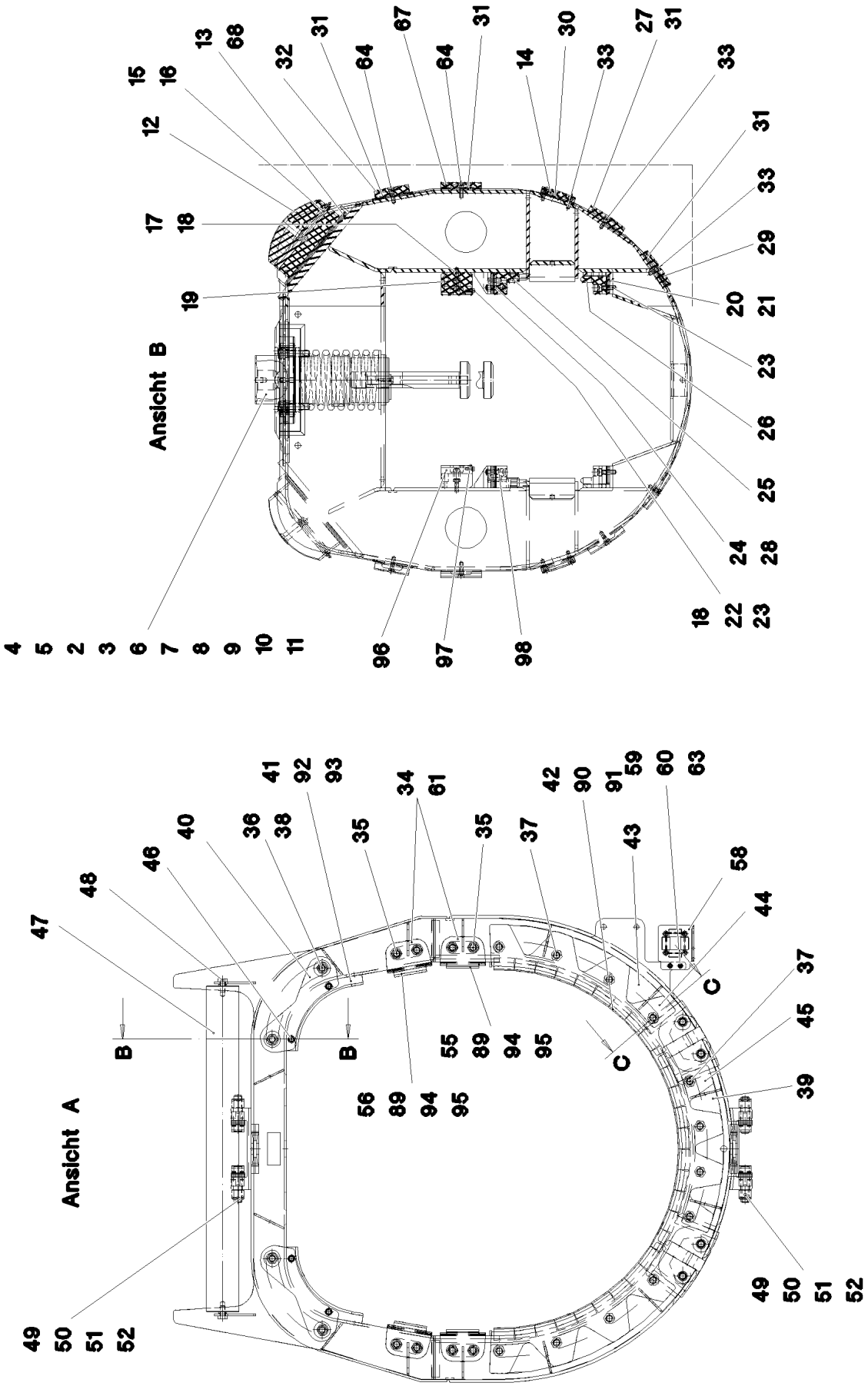
Ansicht B
Ansicht A
B
B
C
C

Pos.	Item	Quantity	Description	Bezeichnung
1	917292908	1	TELESCOPIC SECT.3 WELD.CONST RAL 701	TELESKOP 3 SCHWK.
2	720014908	1	PRESSURE SPRING 15X133X223 SPF	DRUCKFEDER
3	430611008	1	PARALLEL PIN ISO 2338 12H11X50 30CRNI	ZYLINDERSTIFT
4	11651767	2	HEX SCREW ISO 4017 M8X20 8.8 480H SPF	SECHSKANTSCHRAUBE
5	10001074	4	SOCKET HEAD SCREW ISO 4762 M16X60 10	ZYLINDERSCHRAUBE
6	97027202	1	PIN 160.0X326 35NICRMOV125 SPF	BOLZEN
7	972908008	1	WASHER 40X222X222 S960QL+Z25	SCHEIBE
8	971060108	3	WASHER 2X154X154 DC01 FE//ZNNI8//CN//T	SCHEIBE
9	970535808	1	BUSHING 20x150x150 S960QL	BUCHSE
10	954706408	1	PLATE 5X62X96 S960QL	BLECH
11	973253908	1	MUSHROOM-SHAPED DRAWING BOLT 90.	ZIEHPILZ
12	970536108	2	BEARING PLATE 100X195X230 PA6G+OEL	LAGERPLATTE
13	970536208	10	PLATE 2x230x225 DC01+ZE	BLECH
14	972908108	2	SLIDER 15X85X231 PA6G+OEL SPF	GLEITSTUECK
15	970536608	2	BUSHING 16X195	BUCHSE
16	7743242	2	HYDRAULIC-TYPE LUBRICAT.NIPPLE DIN 71	KEGELSCHMIERNIPPEL
17	10289803	4	WASHER ISO 7089 8 300HV 480H SPF	SCHEIBE
18	10875599	10	SOCKET HEAD SCREW ISO 4762 M8X25 8.8	ZYLINDERSCHRAUBE
19	97001821	2	SPACER PIECE 190X75X34 PA6G+OEL SPF	DISTANZSTUECK
20	973246808	4	PLATE 3X234X43 DC01 FE//ZNNI8//CN//T0	BLECH
21	973246908	4	PLATE 1X234X43 DC01 FE//ZNNI8//CN//T0	BLECH
22	10875629	4	HEX NUT ISO 7040 M10 8 FLZN SPF	SECHSKANTMUTTER
23	10875572	8	SOCKET HEAD SCREW ISO 4762 M10X35 8	ZYLINDERSCHRAUBE
24	957025308	4	PLATE 1X86X53 DC01 FE//ZNNI8//CN//T0	BLECH
25	970537008	2	SLIDER 53X87X234 PA6G+OEL	GLEITSTUECK
26	970537108	2	SLIDER 234X53X62 PA6G+OEL SPF	GLEITSTUECK
27	970537708	2	SLIDER 18X100X231 PA6G+OEL SPF	GLEITSTUECK
28	957025408	4	PLATE 3X86X53 DC01 FE//ZNNI8//CN//T0	BLECH
29	970537508	2	SLIDER 14X100X233 PA6G+OEL SPF	GLEITSTUECK
30	972908208	4	PLATE 2X210X85 DC01 FE//ZNNI8//CN//T0	BLECH
31	970537808	14	PLATE 2X100X210 DC01 FE//ZNNI8//CN//T0	BLECH
32	972908408	2	SLIDER 19X85X231 PA6G+OEL SPF	GLEITSTUECK
33	10875561	20	SOCKET HEAD SCREW DIN 6912 M8X25 08	ZYLINDERSCHRAUBE
34	971753708	4	PLATE 8X110X70 S960QL FE/FLZN10/NC	BLECH
35	12100309	8	HEX SCREW ISO 4017 M16X30 8.8 FLZN SP	SECHSKANTSCHRAUBE
36	12100310	4	HEX SCREW ISO 4017 M16X40 8.8 FLZN SP	SECHSKANTSCHRAUBE
37	12100283	12	HEX SCREW ISO 4017 M16X50 8.8 FLZN SP	SECHSKANTSCHRAUBE
38	4600021	8	WASHER DIN 7349 17 200HV FLZN SPF	SCHEIBE
39	973057708	1	DISTANCE PLATE 15X103X408 PA6G	DISTANZPLATTE
40	970422908	2	PLATE 8X88X270 S960QL FE/FLZN10/NC	BLECH
41	971063208	2	SLIDE PLATE 190X186X187 PA6G+OEL SPF	GLEITPLATTE
42	972898208	28	SLIDE PLATE 30X50X380 PA6G+OEL SPF	GLEITPLATTE
43	973253208	2	DISTANCE PLATE 15X121X498 PA6G	DISTANZPLATTE
44	973253308	2	PLATE 10X523X163 S960QL FLZN	BLECH
45	973253408	1	PLATE 10X470X158 S960QL	BLECH
46	11840140	4	SOCKET HEAD SCREW ISO 4762 M12X50 8	ZYLINDERSCHRAUBE
47	749010808	1	CARRYING ROLLER 80/5/20X795 GALV.VER	TRAGROLLE
48	11658892	2	HEX SCREW ISO 4017 M12X25 8.8 FLZN SP	SECHSKANTSCHRAUBE
49	972426708	4	GUIDE ISO 8062-3DCTG6 30X50X78 G18NI	EINWEISER
50	10875481	4	GRUB SCREW ISO 4026 M20X90 8.8 FLZN	GEWINDESTIFT
51	10875630	4	HEX NUT ISO 7040 M20 10 FE//ZnNi8//Cn//T0	SECHSKANTMUTTER
52	11691327	16	WASHER ISO 7092 20 300HV FLZN SPF	SCHEIBE
55	971995508	2	SLIDE PLATE 15X90X358 SPF	GLEITPLATTE
56	972898808	2	SLIDE PLATE 20X90X358 SPF	GLEITPLATTE
58	973774708	1	ROLLER ORIFICE FE//ZNNI8//CN//T0	ROLLENMUNDSTUECK
59	10197836	2	HEX SCREW ISO 4017 M6X25 8.8 ZNNI-480	SECHSKANTSCHRAUBE
60	11656734	2	HEX NUT ISO 7040 M6 8 480H SPF	SECHSKANTMUTTER
61	971071608	4	PLATE 4X491X110 S315MC FE//ZNNI8//CN//T	BLECH
62	97027203	3	COVER 289X289X12 PA6G	DECKEL
63	10197771	2	WASHER ISO 7089 6 200HV ZNNI-480H SPF	SCHEIBE

Pos.	Item	Quantity	Description	Bezeichnung
64	12216056	12	SOCKET HEAD SCREW DIN 7984 M8X30 08	ZYLINDERSCHRAUBE
65	973154008	2	PLATE 6X125X73 S960QL	BLECH
66	4042302	4	SOCKET HEAD SCREW ISO 4762 M16X40 8	ZYLINDERSCHRAUBE
67	973254708	2	SLIDER 15X100X231 PA6G+OEL SPF	GLEITSTUECK
96	972373708	2	SWITCH PANEL 21X75X160 PA6G	SCHALTLEISTE
97	972373808	2	SWITCH PLATE 2X139X46 DC01 FE//ZNNI8/	SCHALTBLECH
98	11642497	4	HEX SCREW ISO 4017 M6X10 8.8 480H SPF	SECHSKANTSCHRAUBE
99	12216054	9	SOCKET HEAD SCREW DIN 7984 M8X20 08	ZYLINDERSCHRAUBE

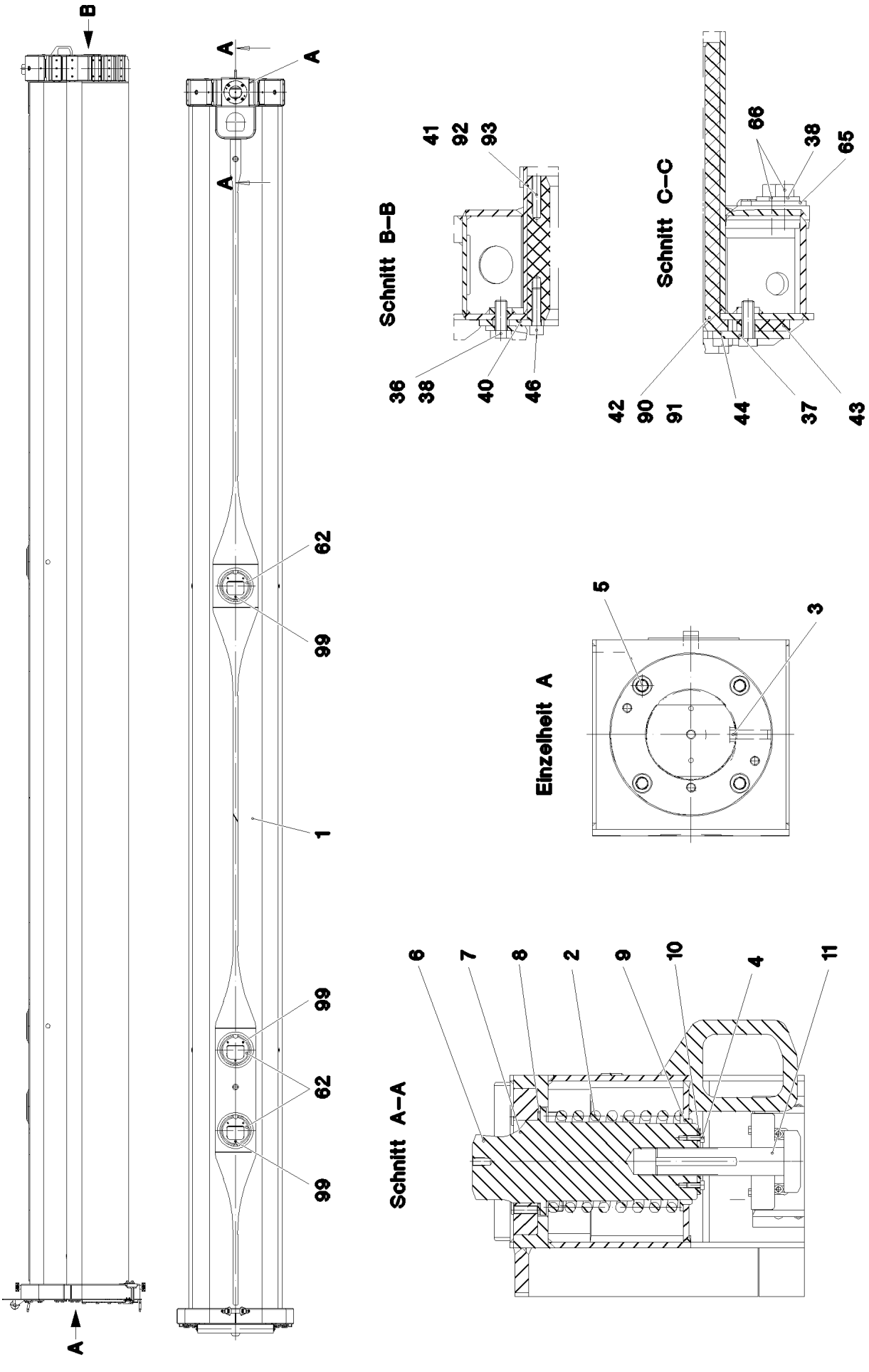

4.12.2020 077518 LIEBHERR	**etk_en_de 047580 LTR 1220** **TELESCOPIC SECT.IV PRE-ASSEMBL** **TELESKOP 4 VORM.**	654 (1/4) **917292308**

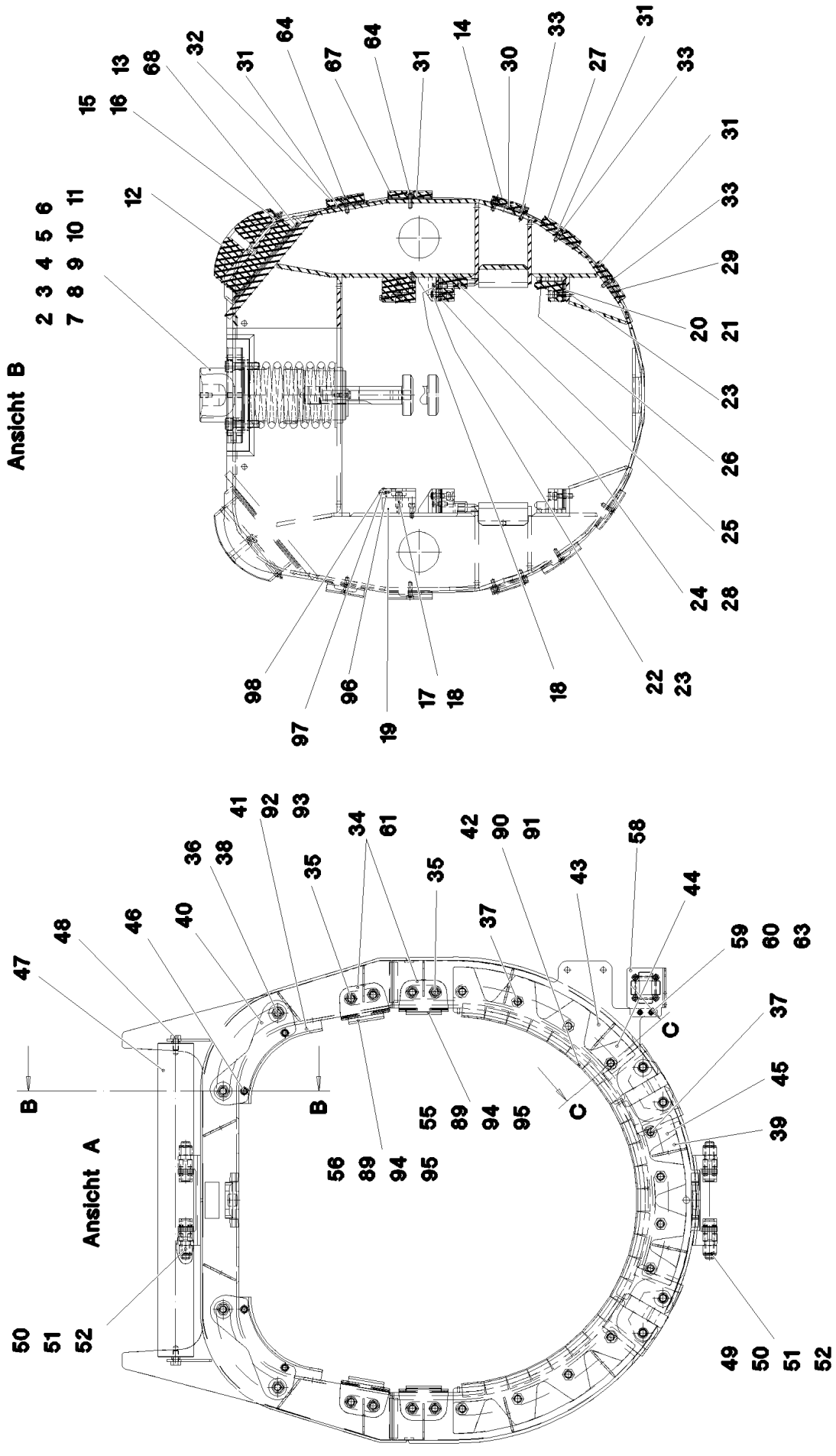
Ansicht B
Ansicht A
B
B
C
C

Pos.	Item	Quantity	Description	Bezeichnung
1	917293008	1	TELESCOPIC SECT.4 WELD.CONSTR RAL 7	TELESKOP 4 SCHWK.
2	720014908	1	PRESSURE SPRING 15X133X223 SPF	DRUCKFEDER
3	430611008	1	PARALLEL PIN ISO 2338 12H11X50 30CRNI	ZYLINDERSTIFT
4	11651767	2	HEX SCREW ISO 4017 M8X20 8.8 480H SPF	SECHSKANTSCHRAUBE
5	10001074	4	SOCKET HEAD SCREW ISO 4762 M16X60 10	ZYLINDERSCHRAUBE
6	97027202	1	PIN 160.0X326 35NICRMOV125 SPF	BOLZEN
7	972908008	1	WASHER 40X222X222 S960QL+Z25	SCHEIBE
8	971060108	3	WASHER 2X154X154 DC01 FE//ZNNI8//CN//T	SCHEIBE
9	970535808	1	BUSHING 20x150x150 S960QL	BUCHSE
10	954706408	1	PLATE 5X62X96 S960QL	BLECH
11	973259708	1	MUSHROOM-SHAPED DRAWING BOLT 90.	ZIEHPILZ
12	970536108	2	BEARING PLATE 100X195X230 PA6G+OEL	LAGERPLATTE
13	970536208	10	PLATE 2x230x225 DC01+ZE	BLECH
14	972908108	2	SLIDER 15X85X231 PA6G+OEL SPF	GLEITSTUECK
15	970536608	2	BUSHING 16X195	BUCHSE
16	7743242	2	HYDRAULIC-TYPE LUBRICAT.NIPPLE DIN 71	KEGELSCHMIERNIPPEL
17	10289803	4	WASHER ISO 7089 8 300HV 480H SPF	SCHEIBE
18	10875599	10	SOCKET HEAD SCREW ISO 4762 M8X25 8.8	ZYLINDERSCHRAUBE
19	97001821	2	SPACER PIECE 190X75X34 PA6G+OEL SPF	DISTANZSTUECK
20	973246808	4	PLATE 3X234X43 DC01 FE//ZNNI8//CN//T0	BLECH
21	973246908	4	PLATE 1X234X43 DC01 FE//ZNNI8//CN//T0	BLECH
22	10875629	4	HEX NUT ISO 7040 M10 8 FLZN SPF	SECHSKANTMUTTER
23	10875572	8	SOCKET HEAD SCREW ISO 4762 M10X35 8	ZYLINDERSCHRAUBE
24	957025308	4	PLATE 1X86X53 DC01 FE//ZNNI8//CN//T0	BLECH
25	970537008	2	SLIDER 53X87X234 PA6G+OEL	GLEITSTUECK
26	970537108	2	SLIDER 234X53X62 PA6G+OEL SPF	GLEITSTUECK
27	970537708	2	SLIDER 18X100X231 PA6G+OEL SPF	GLEITSTUECK
28	957025408	4	PLATE 3X86X53 DC01 FE//ZNNI8//CN//T0	BLECH
29	970537508	2	SLIDER 14X100X233 PA6G+OEL SPF	GLEITSTUECK
30	972908208	4	PLATE 2X210X85 DC01 FE//ZNNI8//CN//T0	BLECH
31	970537808	14	PLATE 2X100X210 DC01 FE//ZNNI8//CN//T0	BLECH
32	972908408	2	SLIDER 19X85X231 PA6G+OEL SPF	GLEITSTUECK
33	10875561	20	SOCKET HEAD SCREW DIN 6912 M8X25 08	ZYLINDERSCHRAUBE
34	971753708	4	PLATE 8X110X70 S960QL FE/FLZN10/NC	BLECH
35	12100309	8	HEX SCREW ISO 4017 M16X30 8.8 FLZN SP	SECHSKANTSCHRAUBE
36	12100310	4	HEX SCREW ISO 4017 M16X40 8.8 FLZN SP	SECHSKANTSCHRAUBE
37	12100283	12	HEX SCREW ISO 4017 M16X50 8.8 FLZN SP	SECHSKANTSCHRAUBE
38	4600021	8	WASHER DIN 7349 17 200HV FLZN SPF	SCHEIBE
39	973258608	1	DISTANCE PLATE 15X100X379 PA6G	DISTANZPLATTE
40	970422908	2	PLATE 8X88X270 S960QL FE/FLZN10/NC	BLECH
41	971063208	2	SLIDE PLATE 190X186X187 PA6G+OEL SPF	GLEITPLATTE
42	972898208	25	SLIDE PLATE 30X50X380 PA6G+OEL SPF	GLEITPLATTE
43	973258708	2	DISTANCE PLATE 15X113X449 PA6G	DISTANZPLATTE
44	973258808	2	PLATE 10X477X155 S960QL	BLECH
45	973258908	1	PLATE 10X443X155 S960QL	BLECH
46	11840140	4	SOCKET HEAD SCREW ISO 4762 M12X50 8	ZYLINDERSCHRAUBE
47	749011408	1	CARRYING ROLLER 80/5/20X700 GALV.VER	TRAGROLLE
48	11658892	2	HEX SCREW ISO 4017 M12X25 8.8 FLZN SP	SECHSKANTSCHRAUBE
49	972426708	4	GUIDE ISO 8062-3DCTG6 30X50X78 G18NI	EINWEISER
50	10875481	4	GRUB SCREW ISO 4026 M20X90 8.8 FLZN	GEWINDESTIFT
51	10875630	4	HEX NUT ISO 7040 M20 10 FE//ZnNi8//Cn//T0	SECHSKANTMUTTER
52	11691327	16	WASHER ISO 7092 20 300HV FLZN SPF	SCHEIBE
55	971995508	2	SLIDE PLATE 15X90X358 SPF	GLEITPLATTE
56	972898808	2	SLIDE PLATE 20X90X358 SPF	GLEITPLATTE
58	973774708	1	ROLLER ORIFICE FE//ZNNI8//CN//T0	ROLLENMUNDSTUECK
59	10197836	2	HEX SCREW ISO 4017 M6X25 8.8 ZNNI-480	SECHSKANTSCHRAUBE
60	11656734	2	HEX NUT ISO 7040 M6 8 480H SPF	SECHSKANTMUTTER
61	971071608	4	PLATE 4X491X110 S315MC FE//ZNNI8//CN//T	BLECH
62	97027203	3	COVER 289X289X12 PA6G	DECKEL
63	10197771	2	WASHER ISO 7089 6 200HV ZNNI-480H SPF	SCHEIBE

Pos.	Item	Quantity	Description	Bezeichnung
64	12216056	12	SOCKET HEAD SCREW DIN 7984 M8X30 08	ZYLINDERSCHRAUBE
65	973154008	2	PLATE 6X125X73 S960QL	BLECH
66	4042302	4	SOCKET HEAD SCREW ISO 4762 M16X40 8	ZYLINDERSCHRAUBE
67	973254708	2	SLIDER 15X100X231 PA6G+OEL SPF	GLEITSTUECK
96	972373708	2	SWITCH PANEL 21X75X160 PA6G	SCHALTLEISTE
97	972373808	2	SWITCH PLATE 2X139X46 DC01 FE//ZNNI8/	SCHALTBLECH
98	11642497	4	HEX SCREW ISO 4017 M6X10 8.8 480H SPF	SECHSKANTSCHRAUBE
99	12216054	9	SOCKET HEAD SCREW DIN 7984 M8X20 08	ZYLINDERSCHRAUBE

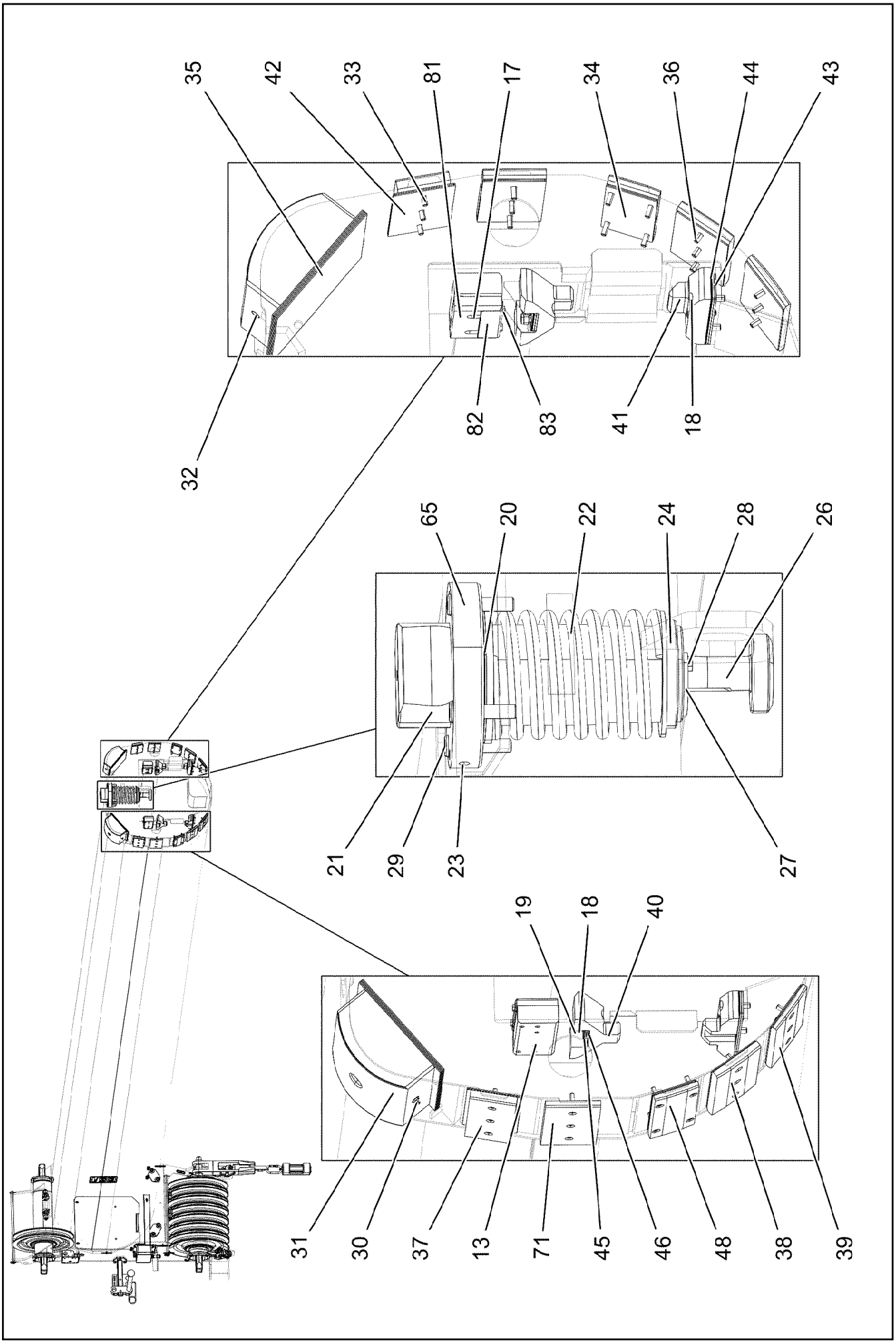

4.12.2020 077520	**etk_en_de 047580 LTR 1220**	658 (1/5)
LIEBHERR	**TELESCOPIC SECT.5 PRE-ASSEMBLE** **TELESKOP 5 VORM.**	**917292408**

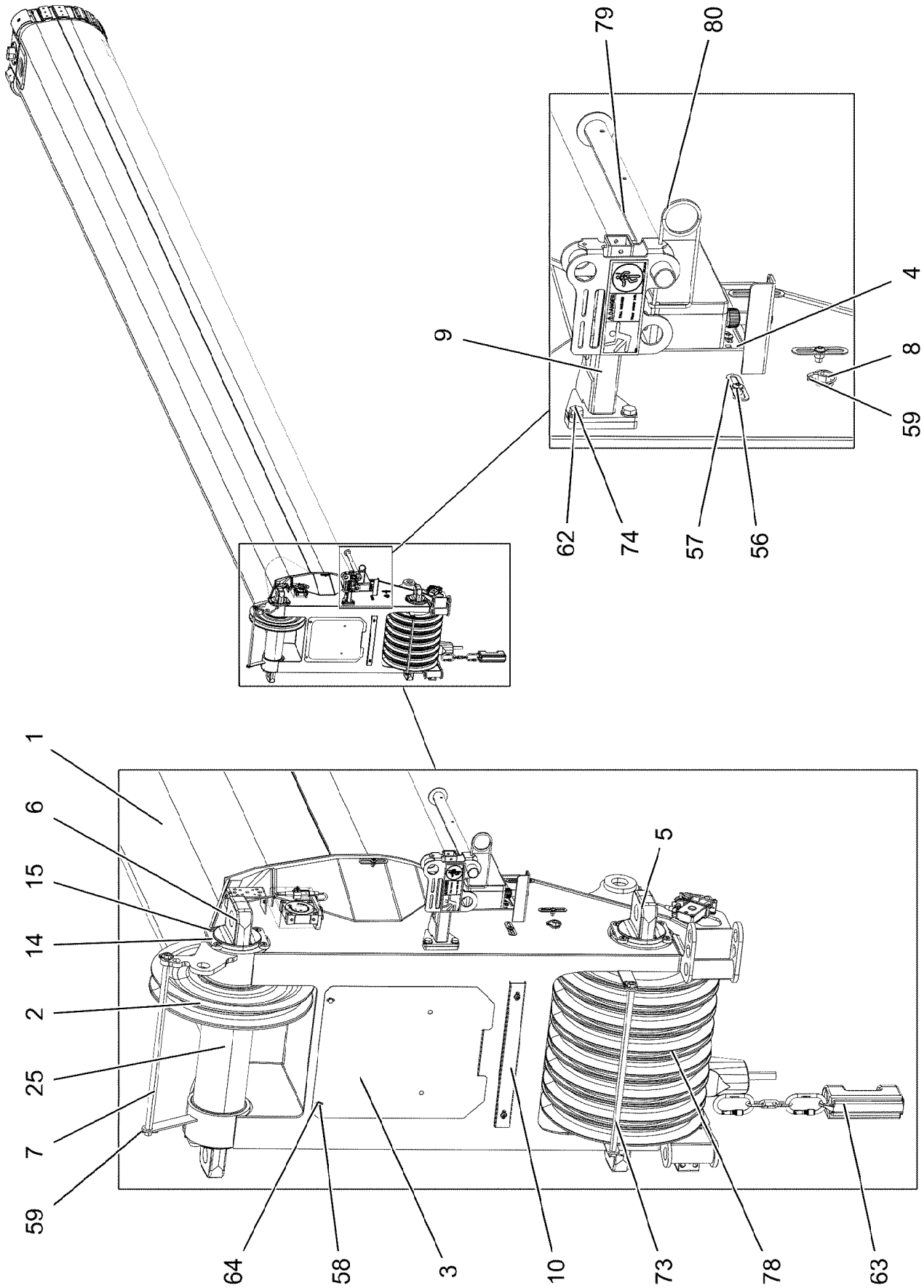

4.12.2020 077521 LIEBHERR	**etk_en_de 047580 LTR 1220** **TELESCOPIC SECT.5 PRE-ASSEMBLE** **TELESKOP 5 VORM.**	659 (2/5) **917292408**

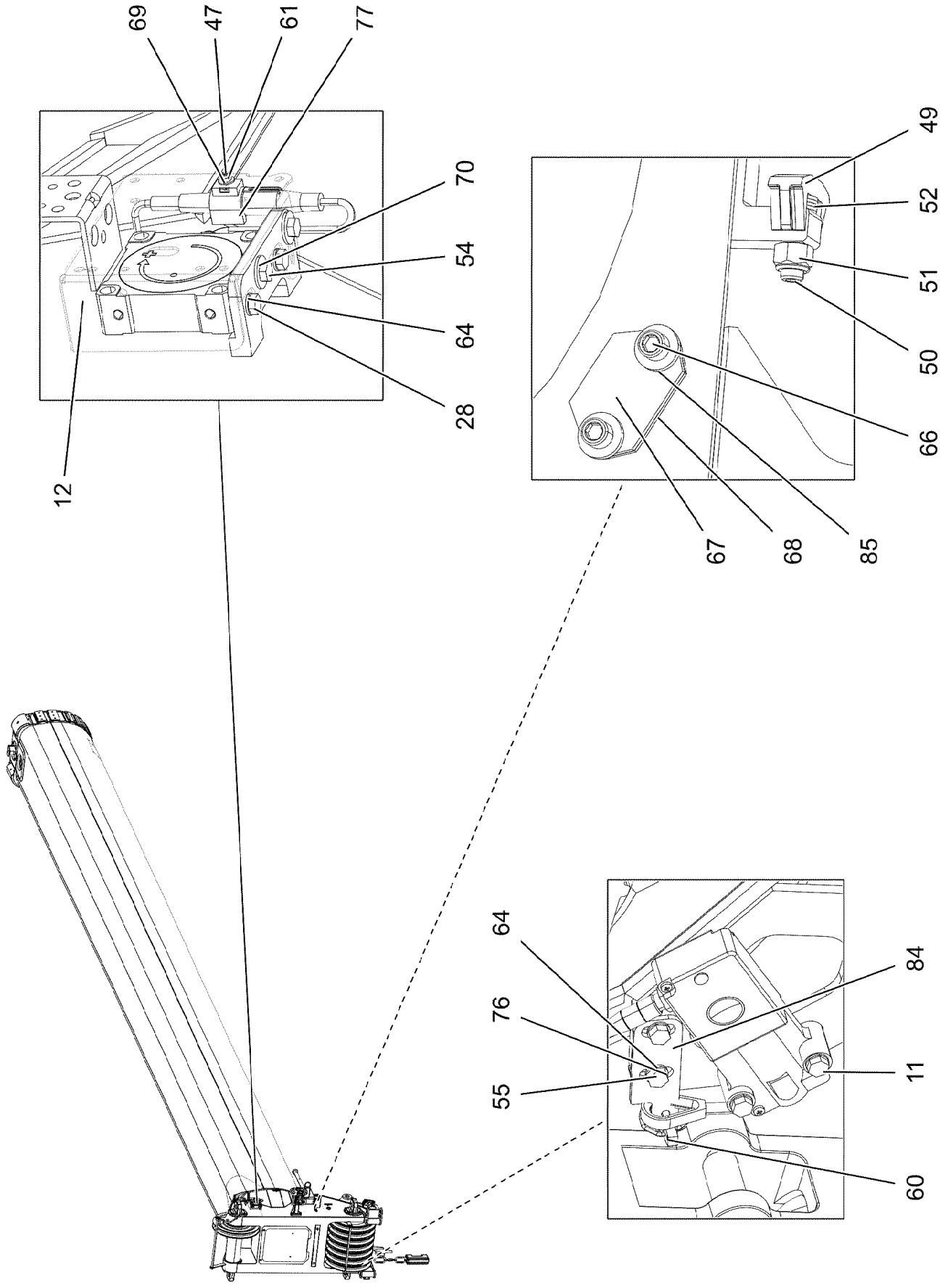

4.12.2020 077522 LIEBHERR	**etk_en_de 047580 LTR 1220** **TELESCOPIC SECT.5 PRE-ASSEMBLE** **TELESKOP 5 VORM.**	660 (3/5) **917292408**

Pos.	Item	Quantity	Description	Bezeichnung
1	917293108	1	TELESCOPIC SECT.5 WELD.CONSTR. RAL 7	TELESKOP 5 SCHWK.
2	921456108	1	ROPE PULLEY CPL. SPF ⇨ ❑ 663	SEILROLLE KPL.
3	97029382	1	PLATE 1.5X456X541 DC01	BLECH
4	953749408	1	PLATE 4X250X190 S315MC FE//ZNNI8//CN//T	BLECH
5	923661808	1	AXLE WELDED	ACHSE SCHWK.
6	923672408	1	AXLE WELDED	ACHSE SCHWK.
7	953536608	1	TUBE 21,3X4X624 S355J2H FE//ZNNI8//CN//T	ROHR
8	953536708	1	TUBE 21,3X4X700 S355J2H FE//ZNNI8//CN//T	ROHR
9	963556008	1	MOUNTING WELDED T ZN O	HALTERUNG SCHWK.
10	953713908	1	U-PROFILE 1X500X74 DC01 FE//ZNNI8//CN/	U-PROFIL
11	11690046	2	HEX SCREW ISO 4017 M8X45 8.8 480H SPF	SECHSKANTSCHRAUBE
12	97028172	1	PLATE 278X250 DC01 FE//ZNNI8//CN//T0	BLECH
13	97001821	2	SPACER PIECE 190X75X34 PA6G+OEL SPF	DISTANZSTUECK
14	97028296	8	PIN HOLDER 10X131X38 S960QL SPF	BOLZENHALTER
15	10877246	16	COUNTERSUNK SCREW DIN 7991 M10,0X25	SENKSCHRAUBE
17	10875599	8	SOCKET HEAD SCREW ISO 4762 M8X25 8.8	ZYLINDERSCHRAUBE
18	10875572	8	SOCKET HEAD SCREW ISO 4762 M10X35 8	ZYLINDERSCHRAUBE
19	10875629	4	HEX NUT ISO 7040 M10 8 FLZN SPF	SECHSKANTMUTTER
20	971060108	3	WASHER 2X154X154 DC01 FE//ZNNI8//CN//T	SCHEIBE
21	97027202	1	PIN 160.0X326 35NICRMOV125 SPF	BOLZEN
22	720014908	1	PRESSURE SPRING 15X133X223 SPF	DRUCKFEDER
23	430611008	1	PARALLEL PIN ISO 2338 12H11X50 30CRNI	ZYLINDERSTIFT
24	970535808	1	BUSHING 20x150x150 S960QL	BUCHSE
25	955581808	1	DISTANCE TUBE RD159X4,5X369 S355J2H	DISTANZROHR
26	973292708	1	MUSHROOM-SHAPED DRAWING BOLT 90.	ZIEHPILZ
27	954706408	1	PLATE 5X62X96 S960QL	BLECH
28	11651767	4	HEX SCREW ISO 4017 M8X20 8.8 480H SPF	SECHSKANTSCHRAUBE
29	10001074	4	SOCKET HEAD SCREW ISO 4762 M16X60 10	ZYLINDERSCHRAUBE
30	7743242	2	HYDRAULIC-TYPE LUBRICAT.NIPPLE DIN 71	KEGELSCHMIERNIPPEL
31	970536108	2	BEARING PLATE 100X195X230 PA6G+OEL	LAGERPLATTE
32	970536608	2	BUSHING 16X195	BUCHSE
33	12216056	20	SOCKET HEAD SCREW DIN 7984 M8X30 08	ZYLINDERSCHRAUBE
34	972908208	4	PLATE 2X210X85 DC01 FE//ZNNI8//CN//T0	BLECH
35	970536208	10	PLATE 2x230x225 DC01+ZE	BLECH
36	10875561	12	SOCKET HEAD SCREW DIN 6912 M8X25 08	ZYLINDERSCHRAUBE
37	972908408	2	SLIDER 19X85X231 PA6G+OEL SPF	GLEITSTUECK
38	970537708	2	SLIDER 18X100X231 PA6G+OEL SPF	GLEITSTUECK
39	970537508	2	SLIDER 14X100X233 PA6G+OEL SPF	GLEITSTUECK
40	970537008	2	SLIDER 53X87X234 PA6G+OEL	GLEITSTUECK
41	970537108	2	SLIDER 234X53X62 PA6G+OEL SPF	GLEITSTUECK
42	970537808	12	PLATE 2X100X210 DC01 FE//ZNNI8//CN//T0	BLECH
43	973246808	4	PLATE 3X234X43 DC01 FE//ZNNI8//CN//T0	BLECH
44	973246908	4	PLATE 1X234X43 DC01 FE//ZNNI8//CN//T0	BLECH
45	957025408	4	PLATE 3X86X53 DC01 FE//ZNNI8//CN//T0	BLECH
46	957025308	4	PLATE 1X86X53 DC01 FE//ZNNI8//CN//T0	BLECH
47	10875564	1	SOCKET HEAD SCREW ISO 1207 M4X10 4.8	ZYLINDERSCHRAUBE
48	972908108	2	SLIDER 15X85X231 PA6G+OEL SPF	GLEITSTUECK
49	972426708	4	GUIDE ISO 8062-3DCTG6 30X50X78 G18NI	EINWEISER
50	10875481	4	GRUB SCREW ISO 4026 M20X90 8.8 FLZN	GEWINDESTIFT
51	10875630	4	HEX NUT ISO 7040 M20 10 FE//ZnNi8//Cn//T0	SECHSKANTMUTTER
52	11691327	16	WASHER ISO 7092 20 300HV FLZN SPF	SCHEIBE
54	11690048	2	HEX SCREW ISO 4017 M8X12 8.8 480H SPF	SECHSKANTSCHRAUBE
55	11693875	2	HEX NUT ISO 4032 M8 8 480H SPF	SECHSKANTMUTTER
56	12102696	17	BUTTON HEAD SCREW ISO7380-2 M8X10 0	HALBRUNDKOPFSCHRAUBE
57	953650008	12	CABLE CLAMP DC01 FE//ZNNI8//CN//T0	KABELHALTER
58	11651612	2	HEX SCREW ISO 4017 M8X16 8.8 480H SPF	SECHSKANTSCHRAUBE
59	10180354	3	SPLIT PIN ISO 1234 4X40 St 480H SPF	SPLINT
60	10875869	4	SAFETY PLUG W HINGE-LID 5X29X4,7X25 4	SICHERHEITSKLAPPSTECKER
61	10875611	1	HEX NUT DIN 985 M4 8 480H SPF	SECHSKANTMUTTER

Pos.	Item	Quantity	Description	Bezeichnung
62	10289804	3	WASHER ISO 7089 12 300HV FLZN SPF	SCHEIBE
63	96013575	1	HOIST LIM.SWITCH PLUMMET CPL ⇨ ❑ 664	HUBENDSCHALTER GEWICHT K
64	10289803	10	WASHER ISO 7089 8 300HV 480H SPF	SCHEIBE
65	972908008	1	WASHER 40X222X222 S960QL+Z25	SCHEIBE
66	4042302	4	SOCKET HEAD SCREW ISO 4762 M16X40 8	ZYLINDERSCHRAUBE
67	973154008	2	PLATE 6X125X73 S960QL	BLECH
68	973153908	2	PLATE 5X125X73 S960QL	BLECH
69	10875642	1	WASHER ISO 7093-1 4 200HV 480H SPF	SCHEIBE
70	11140469	2	WASHER ISO 7093-1 8 200HV 480H SPF	SCHEIBE
71	973254708	2	SLIDER 15X100X231 PA6G+OEL SPF	GLEITSTUECK
73	973740408	1	TUBE 21.3X596 S355J2H FE//ZNNI8//CN//T0	ROHR
74	11651006	3	HEX SCREW ISO 4017 M12X20 8.8 FLZN SP	SECHSKANTSCHRAUBE
76	10197831	2	HEX SCREW ISO 4017 M8X25 8.8 ZNNI-480	SECHSKANTSCHRAUBE
77	605215508	1	CLAMP SURE-SEAL	KLAMMER
78	967771908	7	ROPE PULLEY CPL. ⇨ ❑ 665	SEILROLLE KPL.
79	963498508	1	PIPE WELDED	ROHR SCHWK.
80	433102508	1	RETAINING SPRING 5X122 ISO 2081 FE/ZN8/	SICHERUNGSFEDER
81	972373708	2	SWITCH PANEL 21X75X160 PA6G	SCHALTLEISTE
82	972373808	2	SWITCH PLATE 2X139X46 DC01 FE//ZNNI8/	SCHALTBLECH
83	11642497	4	HEX SCREW ISO 4017 M6X10 8.8 480H SPF	SECHSKANTSCHRAUBE
84	979132008	1	PLATE 110X34 S315MC FE//ZNNI8//CN//T0	BLECH
85	4600021	4	WASHER DIN 7349 17 200HV FLZN SPF	SCHEIBE

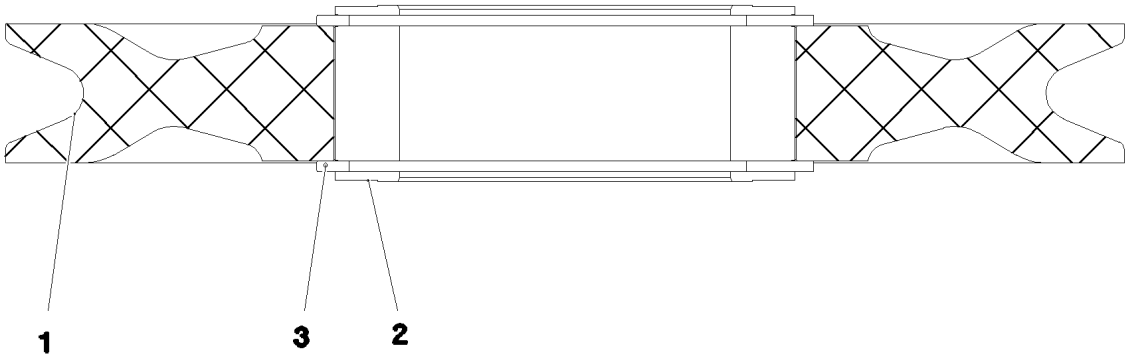

Pos.	Item	Quantity	Description	Bezeichnung
1	288195608	1	ROPE PULLEY RD508X63 PA6G SPF	SEILROLLE
2	746506608	1	ROLLER BEARING 150X210X80	WAELZLAGER
3	10872700	2	LOCKING RING DIN 471 210X5	SICHERUNGSRING

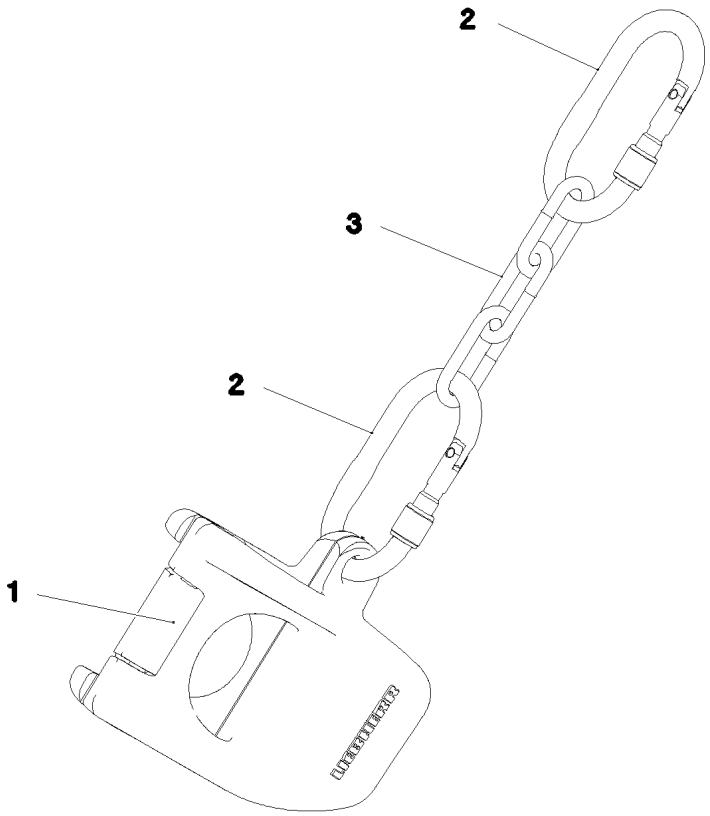

Pos.	Item	Quantity	Description	Bezeichnung
1	10873379	1	WEIGHT EN-GJS400-18 FE//ZN20//B	HUBENDSCHALTERGEWICHT
2	10877382	2	SCREW CARABINER OVAL M.PRAEGUNG S	SCHRAUBKARABINER
3	10663970	2	CHAIN DIN 763 7X49 0.3t ST35 VERZ	KETTE

Schnitt A–A

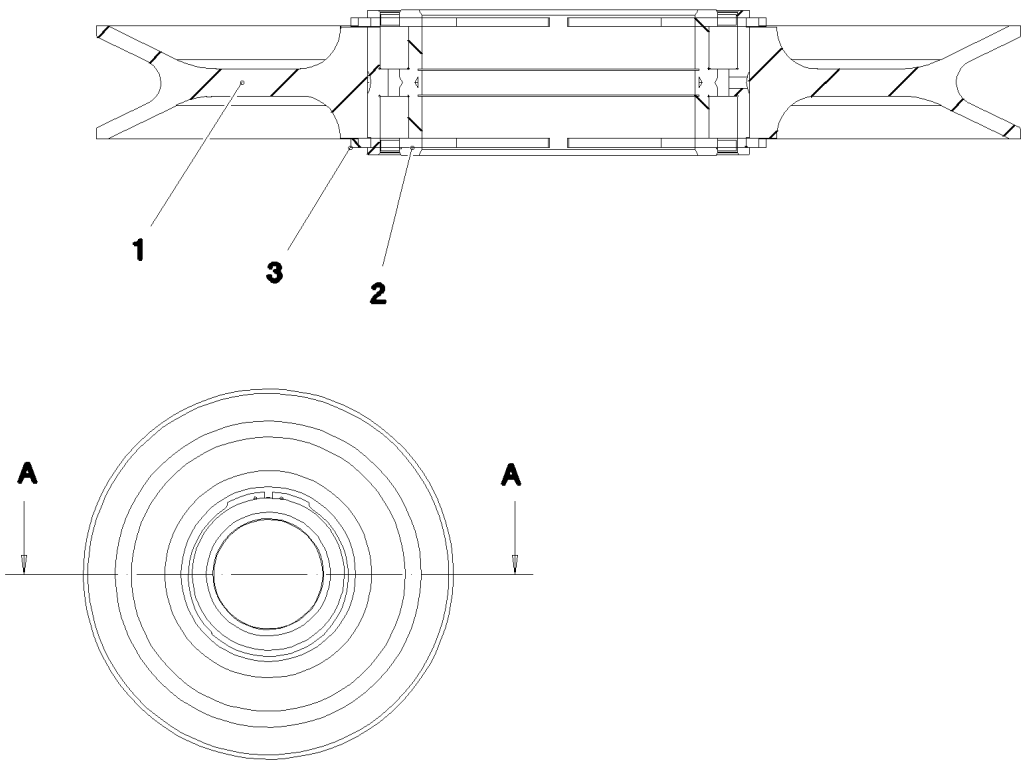

Pos.	Item	Quantity	Description	Bezeichnung
1	97027358	1	ROPE PULLEY 437X12.5 S355J2+N	SEILROLLE
2	746506608	1	ROLLER BEARING 150X210X80	WAELZLAGER
3	428009008	2	LOCKING RING DIN 471 210X5	SICHERUNGSRING

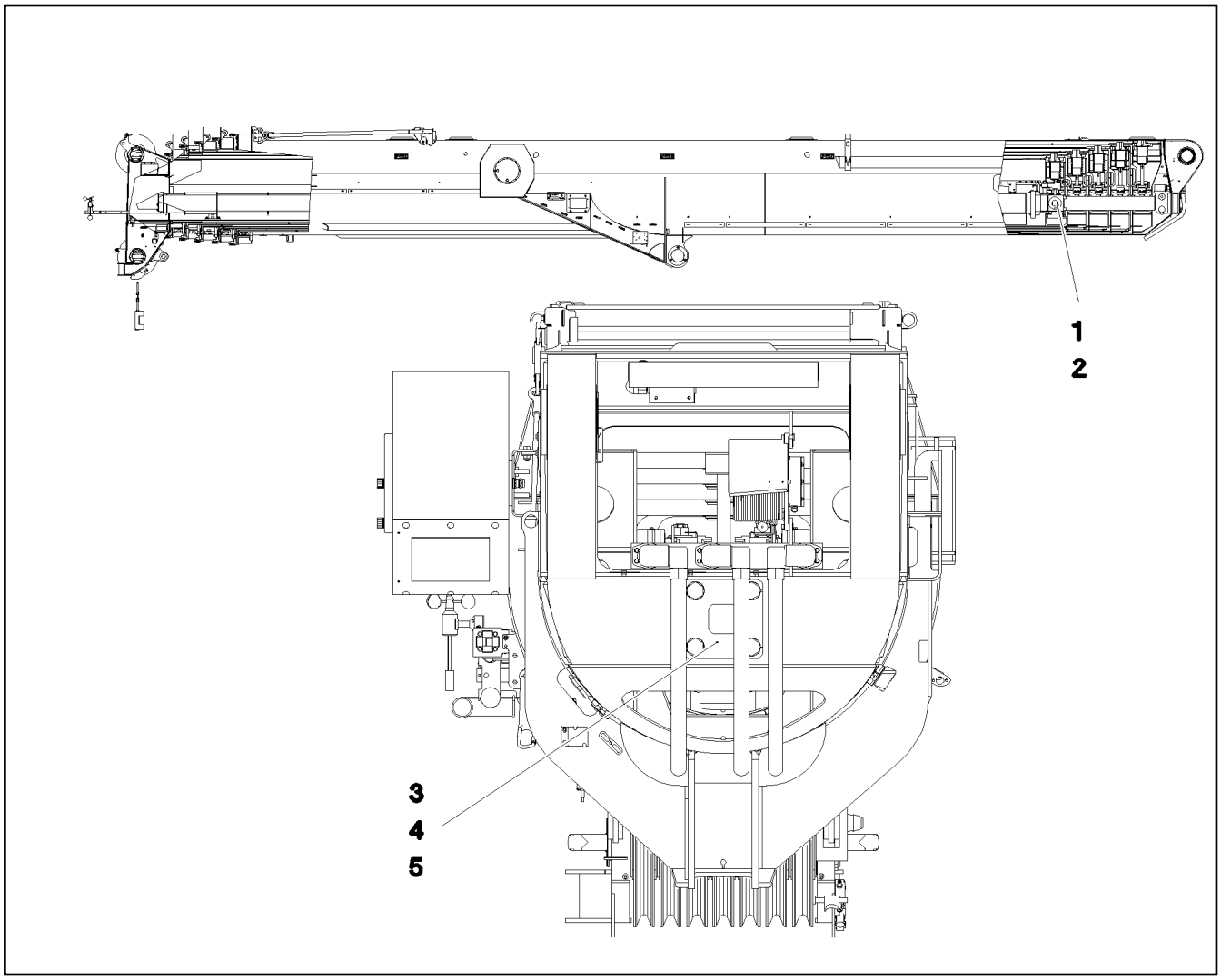

Pos.	Item	Quantity	Description	Bezeichnung
1	10876933	1	TELESCOPIC CYLINDER 225/175-10655 SPF ⇨ ❑ 667	TELESKOPIERZYLINDER
2	966134608	1	ADD-ON PARTS CYLINDER ⇨ ❑ 671	ANBAUTEILE ZYLINDER
3	970491108	1	PLATE 8x240x240 S960QL	BLECH
4	4900000	4	WASHER EN 14399-6 30 300-370HV-ST FLZ	SCHEIBE
5	406216008	4	HEX SCREW ISO 4014 M30X150 10.9 FLZN	SECHSKANTSCHRAUBE

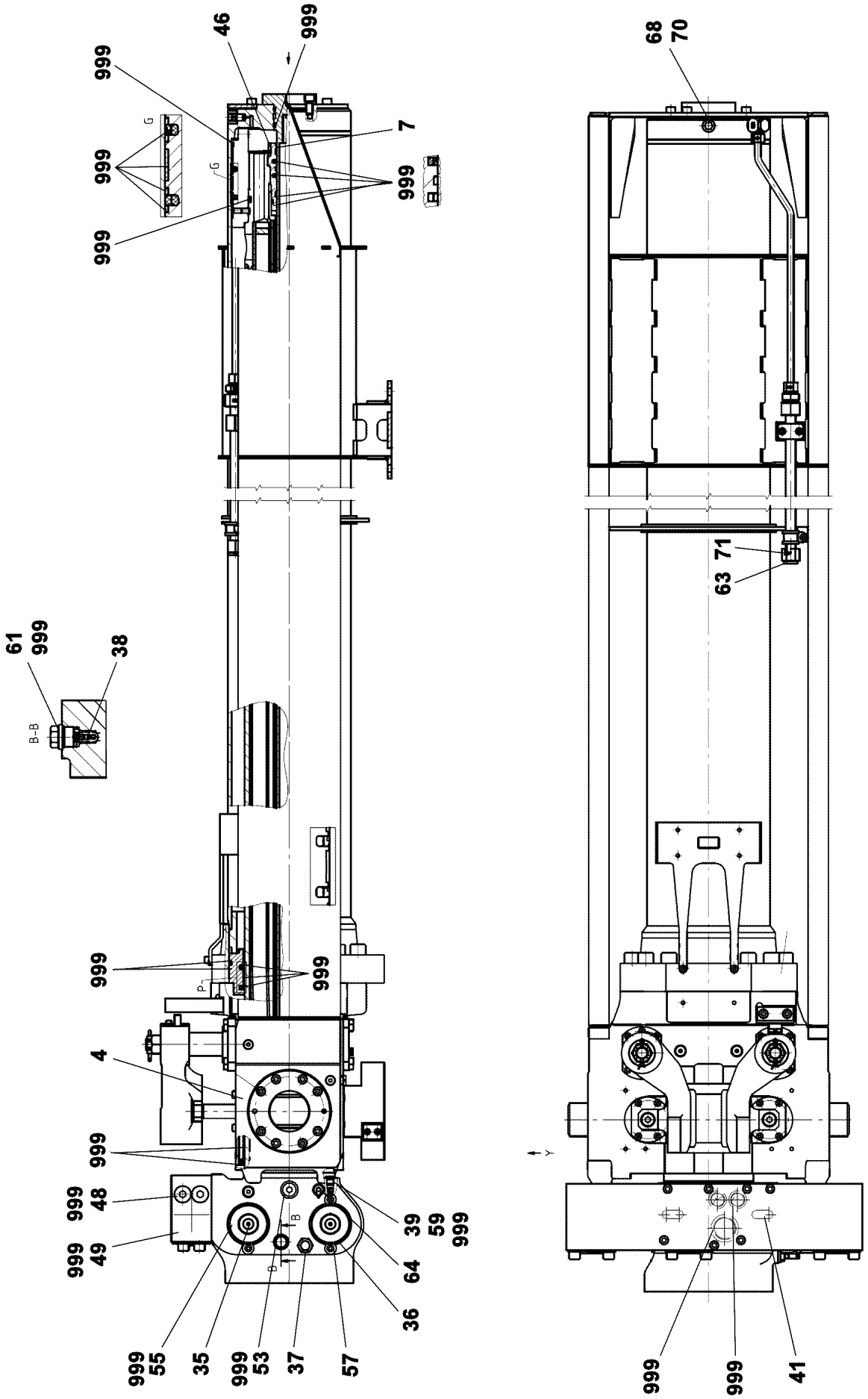

4.12.2020 001061	**etk_en_de 047580 LTR 1220**	667 (1/2)
LIEBHERR	**TELESCOPIC CYLINDER** **TELESKOPIERZYLINDER**	**10876933**

Pos.	Item	Quantity	Description	Bezeichnung
4	571928508	1	CYLINDER HEAD CPL. ⇨ ❑ 669	ZYLINDERKOPF KPL.
7	10470371	1	GUIDE BUSHING 50,1X85X132	FUEHRUNGSBUCHSE
35	10326277	1	LOWERING BRAKE VALVE	SENKBREMSVENTIL
(999)	11170384	1	SEAL KIT	DICHTSATZ
36	571413308	1	LOWERING BRAKE VALVE	SENKBREMSVENTIL
(1)	571614608	1	SEAL KIT	DICHTSATZ
37	571910208	1	PRESSURE LIMITING VALVE	DRUCKBEGRENZUNGSVENTIL
38	10326278	1	THERMO SAFETY VALVE 255BAR	THERMOUEBERDRUCKVENTIL
39	570435308	1	GRUB SCREW	GEWINDESTIFT
41	434022601	2	FITTING KEY DIN 6885 A16X10X40	PASSFEDER
46	518565008	1	PLATE	BLECH
48	570579808	2	SCREW PLUG	VERSCHLUSSSCHRAUBE
49	10650014	1	SCREW PLUG	VERSCHLUSSSCHRAUBE
53	11182678	1	SCREW PLUG	VERSCHLUSSSCHRAUBE
55	518645408	1	SCREW PLUG DIN 908 G1/4X19X12MM ST	VERSCHLUSSSCHRAUBE
57	518614708	2	WASHER	SCHEIBE
59	10470377	1	SCREW PLUG G1/4X19	VERSCHLUSSSCHRAUBE
61	10493479	1	FITTING GEF.A M24X1,5	VERSCHRAUBUNG
63	477704208	1	STOP PLUG VSTI1/2"ED A3P	STOPFEN
64	10430230	1	TEST POINT FITTING G1/4"	MESSANSCHLUSS
68	10493944	1	VENTILATION VALVE	ENTLUEFTUNGSVENTIL
70	518620608	1	DUST CAP	STAUBKAPPE
71	10877167	1	OIL FILTER INSERT OEL	OELFILTEREINSATZ
999	10878189	1	DS TELESCOPIC CYLINDER	DS TELESKOPZYLINDER

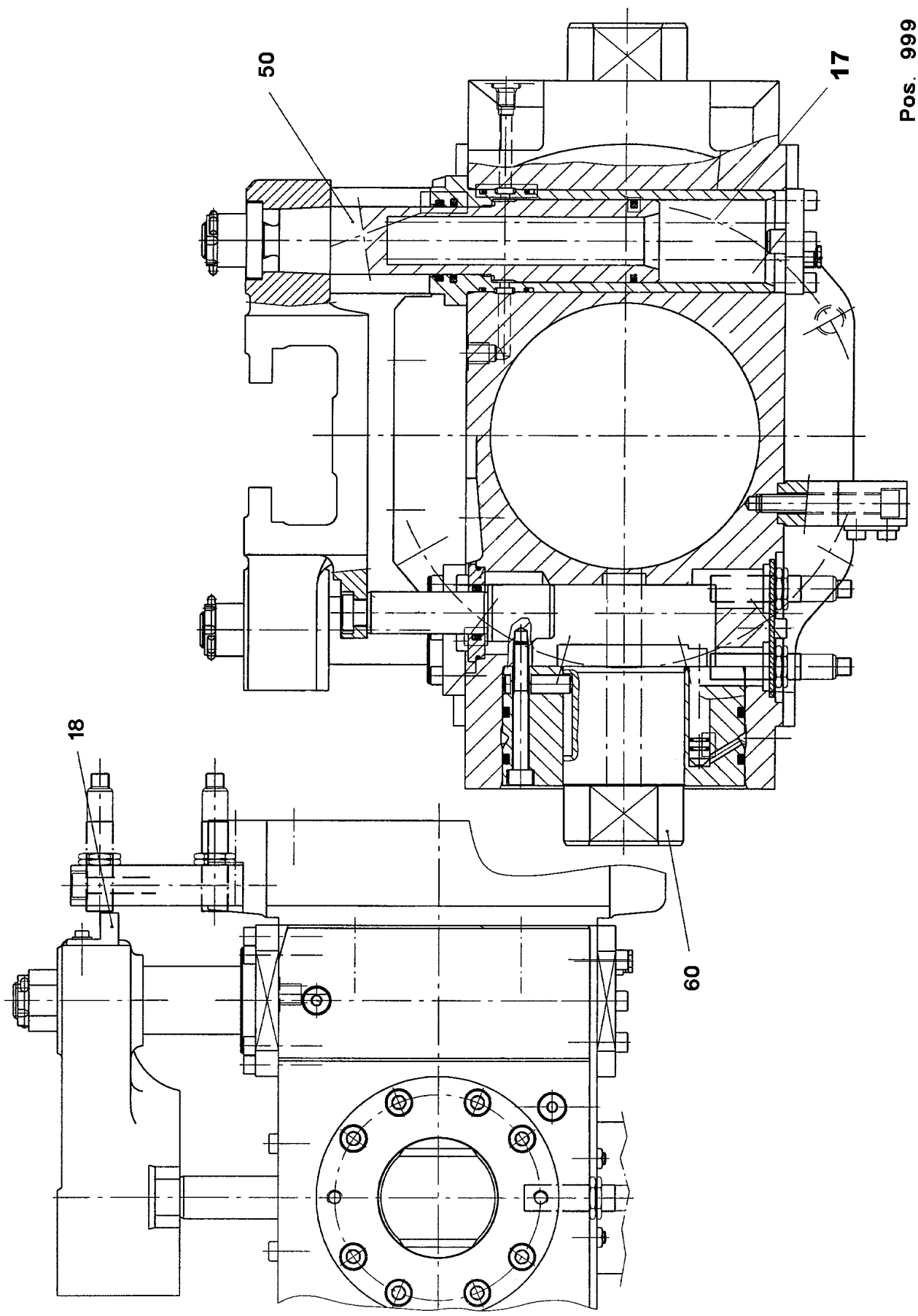
Pos. 999
50
17
18
60

Pos.	Item	Quantity	Description	Bezeichnung
17	11102038	1	PRESSURE SPRING	DRUCKFEDER
18	571687808	1	ANGLE	WINKEL
50	571934508	1	RS TELESCOPIC LOCK	RS TELESKOPVERRIEGELUNG
60	571934608	1	RS CYLINDER LOCK	RS ZYLINDERVERRIEGELUNG
999	571934708	1	SEAL KIT CYLINDER HEAD	DS ZYLINDERKOPF

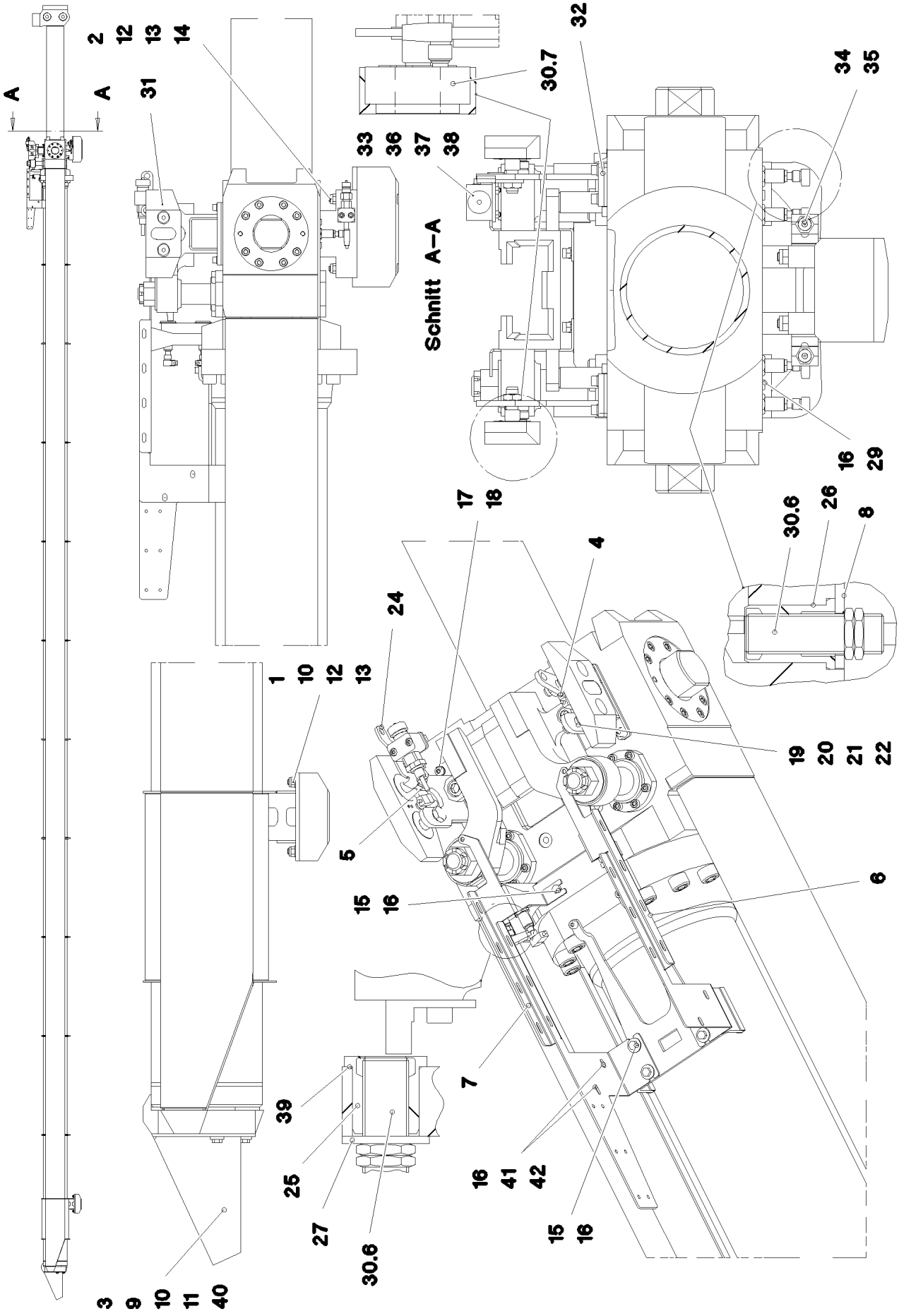

4.12.2020 073664	**etk_en_de 047580 LTR 1220**	❑ 671 (1/2)
LIEBHERR	**ADD-ON PARTS CYLINDER** **ANBAUTEILE ZYLINDER**	**966134608**

Pos.	Item	Quantity	Description	Bezeichnung
1	972997008	1	SLIDER 65X120X190 PA6G+OEL SPF	GLEITSTUECK
2	970456308	1	SLIDER 100x140x260 PA6G+OEL SPF	GLEITSTUECK
3	973763408	1	SLIDER 84X261X468 PA6G+OEL SPF	GLEITSTUECK
4	962947308	1	BRACKET WELDED CONST. FE//ZNNI8//CN/	KONSOLE SCHWK.
5	962947408	1	BRACKET WELDED CONST. FE//ZNNI8//CN/	KONSOLE SCHWK.
6	970456508	1	CABLE CLAMP 3x486x370 DC01 FE//ZNNI8/	KABELHALTER
7	970456608	1	CABLE CLAMP 3x697x370 DC01 FE//ZNNI8/	KABELHALTER
8	970477608	2	COVER 4x83x84 S315MC FE//ZNNI8//CN//T0	DECKEL
9	962625708	1	GUIDE	FUEHRUNG
10	11840140	7	SOCKET HEAD SCREW ISO 4762 M12X50 8	ZYLINDERSCHRAUBE
11	11840139	3	HEX SCREW ISO 4014 M12X90 8.8 FLZN SP	SECHSKANTSCHRAUBE
12	12218127	8	HEX NUT DIN 985 M12 10 FLZN SPF	SECHSKANTMUTTER
13	10289804	8	WASHER ISO 7089 12 300HV FLZN SPF	SCHEIBE
14	10875574	4	SOCKET HEAD SCREW ISO 4762 M12X100 8	ZYLINDERSCHRAUBE
15	11651612	6	HEX SCREW ISO 4017 M8X16 8.8 480H SPF	SECHSKANTSCHRAUBE
16	11140469	12	WASHER ISO 7093-1 8 200HV 480H SPF	SCHEIBE
17	10875598	6	SOCKET HEAD SCREW ISO 4762 M8X20 8.8	ZYLINDERSCHRAUBE
18	10299679	6	WASHER ISO 7092 8 200HV 480H SPF	SCHEIBE
19	10875617	4	HEX NUT ISO 4032 M16 8 FLZN SPF	SECHSKANTMUTTER
20	956414308	4	WASHER DC01+ZE	SCHEIBE
21	956414208	4	SCREW 25X25X65 8.8 FE//ZNNI8//CN//T0	SCHRAUBE
22	720009408	4	PRESSURE SPRING 1,6X18,2X44	DRUCKFEDER
24	773933508	1	SHACKLE DIN 82101 0,25T NG0,25 ST VERZ	SCHAEKEL
25	955918008	2	SLEEVE 32X30	HUELSE
26	955917908	4	SLEEVE RD.32X41 X12CRNIS188	HUELSE
27	10289807	2	WASHER ISO 7089 18 300HV FLZN SPF	SCHEIBE
29	10875597	4	SOCKET HEAD SCREW ISO 4762 M8X16 8.8	ZYLINDERSCHRAUBE
30	966290708	1	SENSOR INSTALL.TELESCOP.MECHAN	GEBERANBAU AUSSCHUBMEC
(6)	10354584	6	INDUCTIVE SENSOR BERUEHRUNGSLOS	INDUKTIVSENSOR
(7)	692312708	2	INDUCTIVE SENSOR BERUEHRUNGSLOS	INDUKTIVSENSOR
31	972261508	2	SENSOR HOLDER 30X75X190 PA6G+OEL	SENSORHALTER
32	970837708	2	PLATE 4x134x58 S315MC FE//ZNNI8//CN//T0	BLECH
33	971634008	1	HOLDER 4X120X75 S315MC FE//ZNNI8//CN/	HALTER
34	11820284	4	SOCKET HEAD SCREW ISO 4762 M6X30 8.8	ZYLINDERSCHRAUBE
35	602007108	12	CLAMP-HALF DIN 3015-1 L 1 R 10 PP SW	KLEMMHAELFTE
36	7005052	2	CLAMP-HALF DIN 3015-1 L 3 R 25 PP SW	KLEMMHAELFTE
37	10875591	2	SOCKET HEAD SCREW ISO 4762 M6X40 8.8	ZYLINDERSCHRAUBE
38	10299668	2	HEX NUT ISO 4032 M6 10 480H SPF	SECHSKANTMUTTER
40	10006370	3	WASHER DIN 7349 13 200HV FLZN SPF	SCHEIBE
41	12203451	2	SOCKET HEAD SCREW ISO 4762 M8X65 8.8	ZYLINDERSCHRAUBE
42	11693875	2	HEX NUT ISO 4032 M8 8 480H SPF	SECHSKANTMUTTER

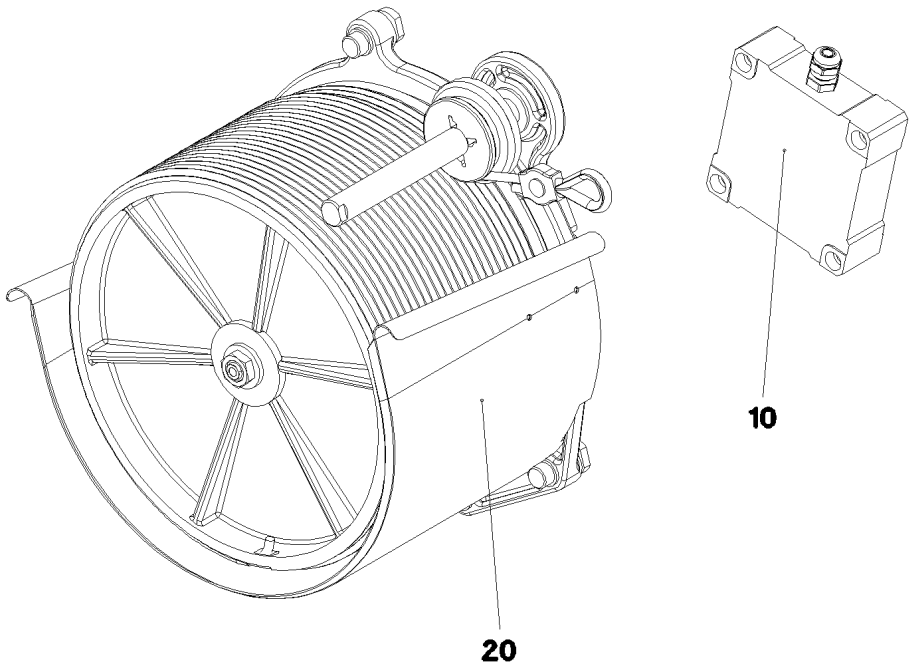

Pos.	Item	Quantity	Description	Bezeichnung
10	10802057	1	ANGLE TRANSMITTER 360° LSB PL:D SPF	WINKELGEBER
20	10802064	1	ROPE LENGTH INDICATOR 15M LSB PL:E ⇨ ❑ 674	SEILLAENGENGEBER

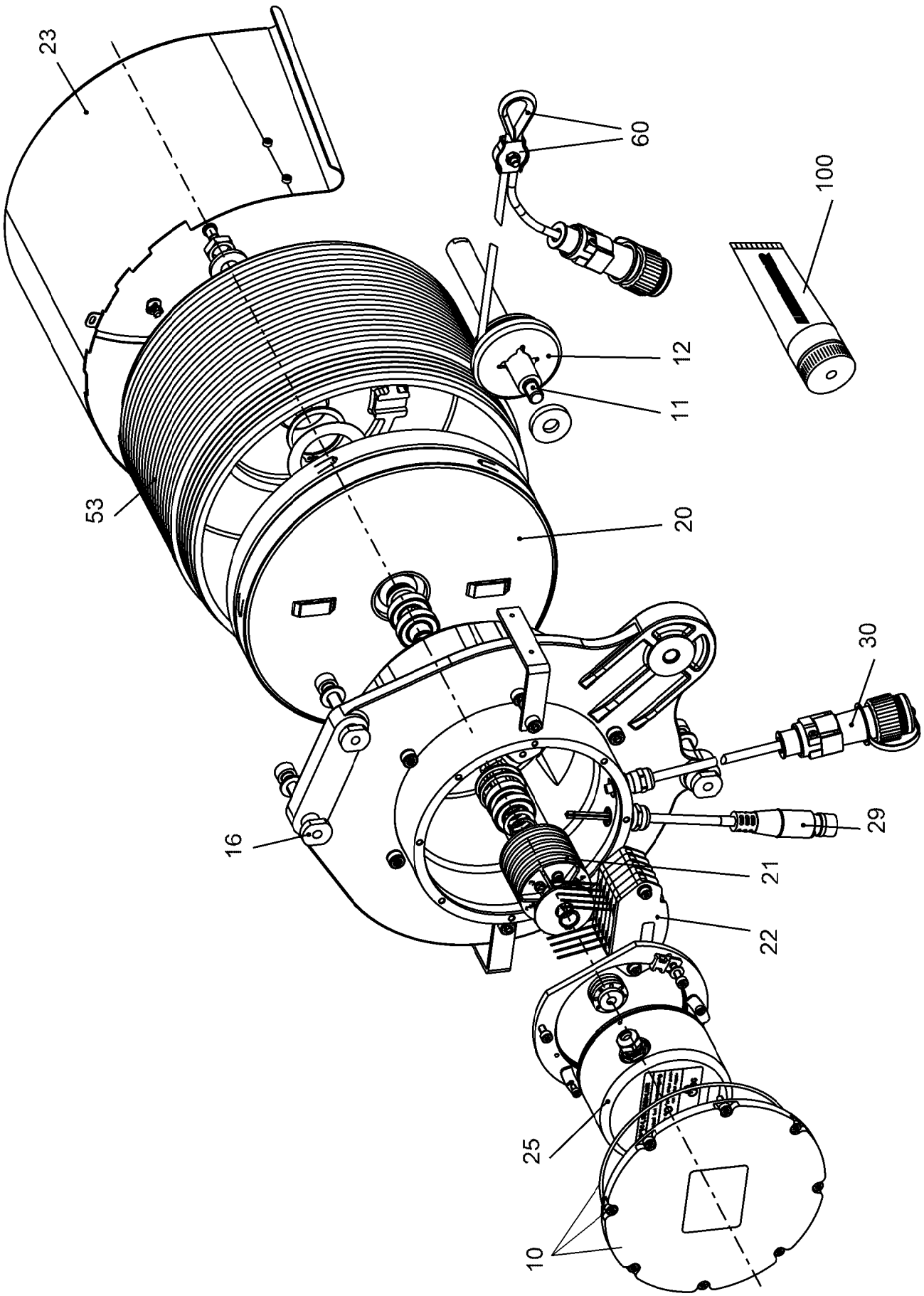

4.12.2020 001745	**etk_en_de 047580 LTR 1220**	❑ 674 (1/2)
LIEBHERR	**ROPE LENGTH INDICATOR** **SEILLAENGENGEBER**	**10802064**

Pos.	Item	Quantity	Description	Bezeichnung
10	12103044	1	COVERING	ABDECKUNG KPL.
11	11006491	1	SHAFT	WELLE
12	571851208	1	DEFLECTION PULLEY	UMLENKROLLE
16	10675205	1	MOUNTING BOLT	MONTAGEBOLZEN
20	10490072	1	SPRING SET	FEDERSATZ
21	571851008	1	SLIP RING SET	SCHLEIFRINGSATZ
(1)	11068607	10	SOLDERING LUGS	LOETOESE
22	11659642	1	CONTACT SET	KONTAKTSATZ
23	692600708	1	COVERING SL 015	ABDECKUNG KPL.
25	11170185	1	LENGTH INDICATOR	LAENGENGEBER
29	12102265	1	CONNECTION CABLE	ANSCHLUSSKABEL
53	571841008	1	LENGTH MEASURING CABLE 5 X 0,382	LAENGENMESSKABEL
60	571851308	1	THIMBLE AND CLAMP	KAUSCHE UND KLEMME
100	10045118	1	SPRAY BOTTLE	SPRITZE

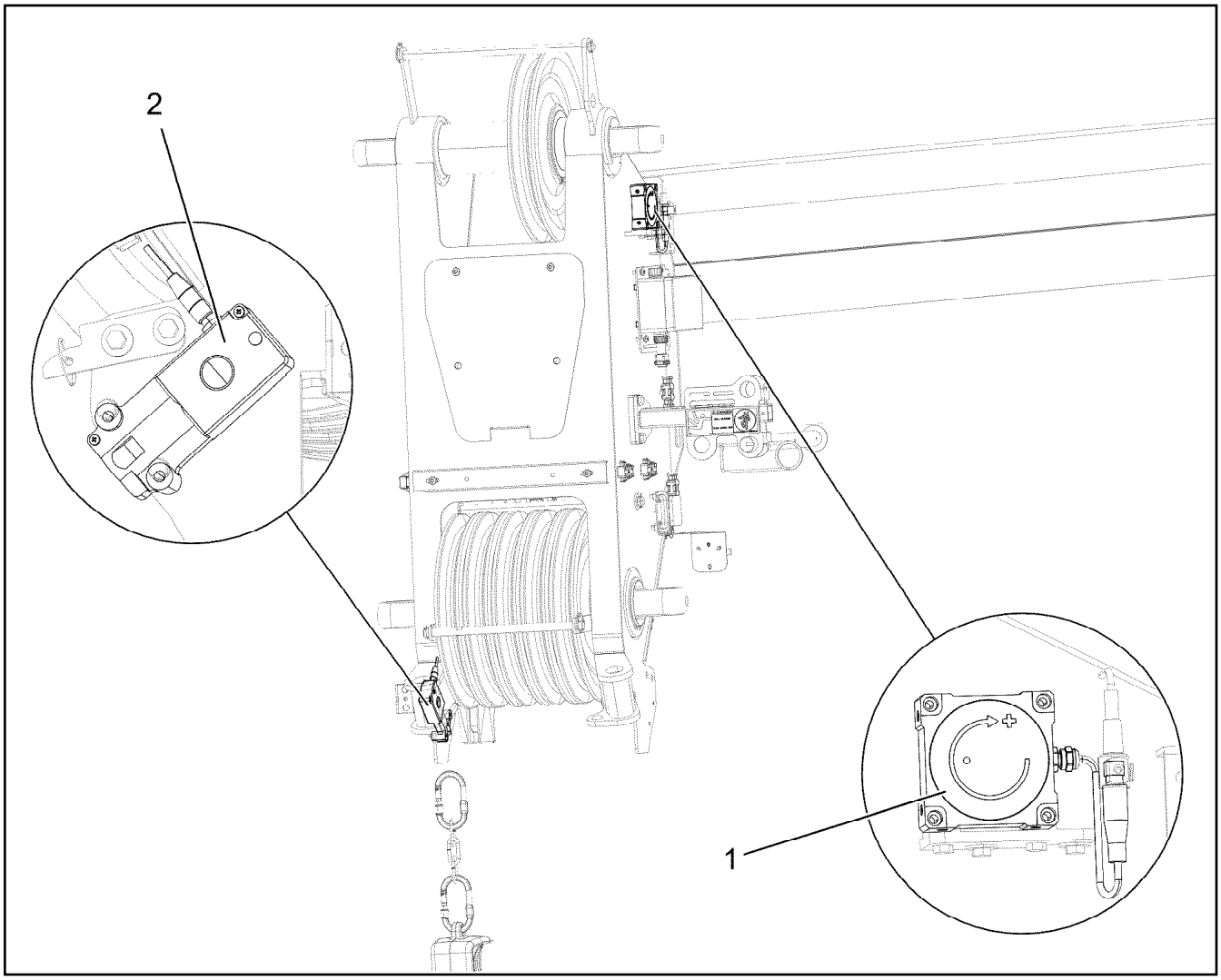

Pos.	Item	Quantity	Description	Bezeichnung
1	10802057	1	ANGLE TRANSMITTER 360° LSB PL:D SPF	WINKELGEBER
2	10678395	1	LIMIT SWITCH TQ200-RFID SPF	ENDSCHALTER

Pos.	Item	Quantity	Description	Bezeichnung
3	966290908	1	ELECTRIC F.BASE SECTION ⇨ ❑ 678	ELEKTRIK ANLENKSTUECK
4	968708608	1	ELECTR. FOR HEAD SECTION ⇨ ❑ 684	ELEKTRIK KOPFSTUECK
6	966361408	1	ELECTR. F.EXTENDING MECHANISM	ELEKTRIK AUSSCHUBMECHANI
(1)	966361508	1	LEAD W916	LEITUNG

Pos.	Item	Quantity	Description	Bezeichnung
4	966354008	1	CABLE DRUM COMPL. ⇨ ❑ 679	LEITUNGSTROMMEL KPL.
5	966291008	1	TERMINAL BOX S900 ⇨ ❑ 682	KLEMMKASTEN
10	966591508	1	LIMIT SWITCH ADD-ON AUSLEGERSTEIL ⇨ ❑ 683	ENDSCHALTER ANBAU

Pos.	Item	Quantity	Description	Bezeichnung
4	966354408	1	LEAD W912	LEITUNG
5	10354493	1	CABLE REEL 50M 14-POL+PE SPF ⇨ ❑ 680	LEITUNGSTROMMEL
6	966354508	1	LEAD W912A	LEITUNG

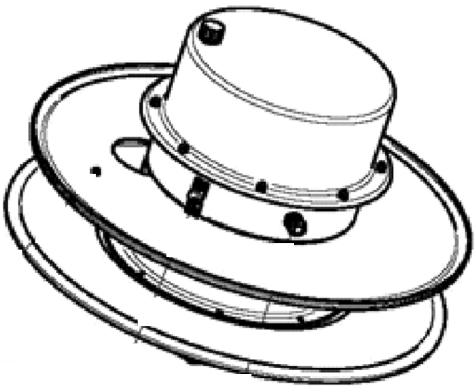

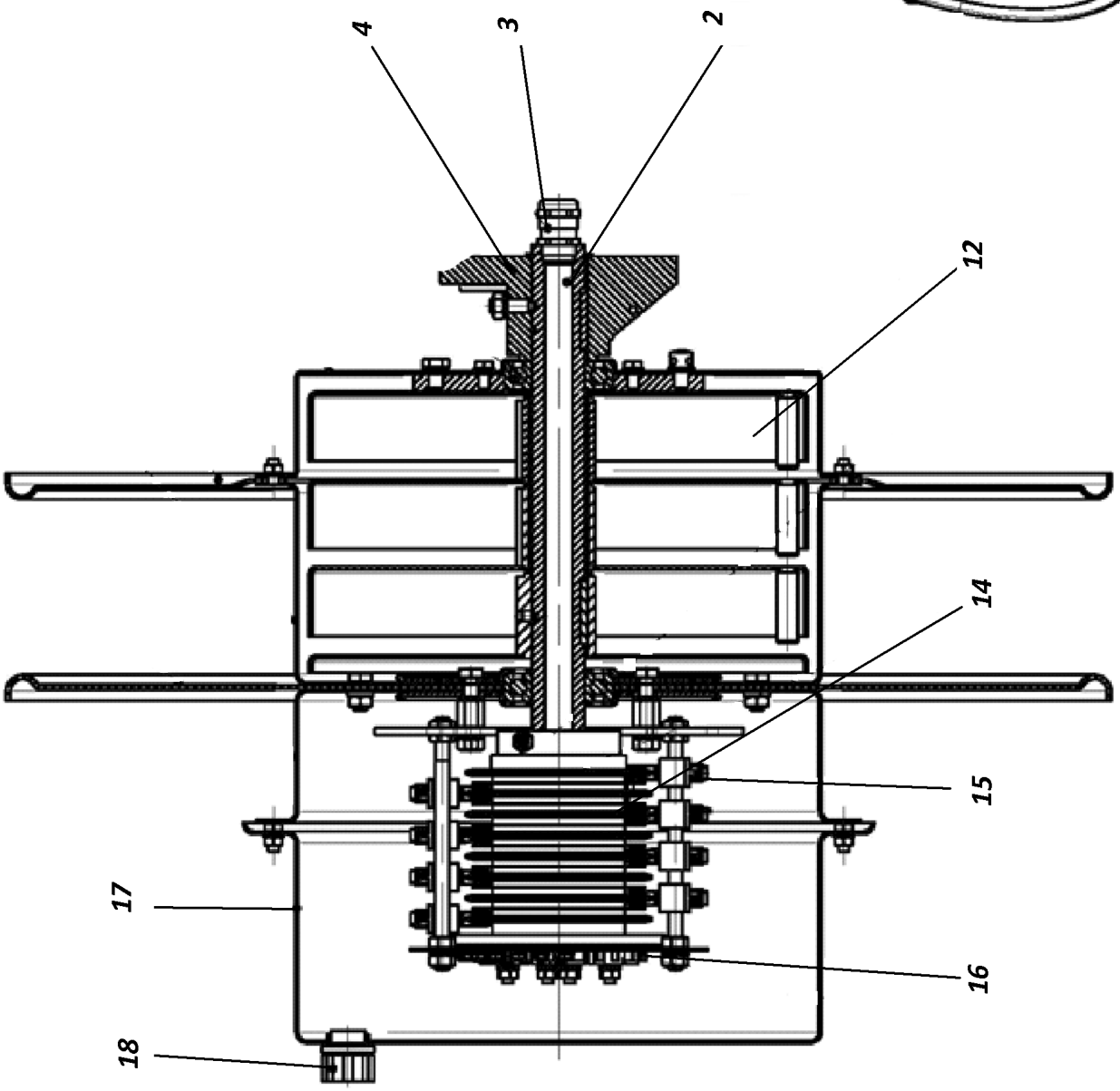
4
3
2
12
14
15
17
16
18

Pos.	Item	Quantity	Description	Bezeichnung
1	12100075	1	FLANGE	FLANSCH
2	12100076	1	DRUM AXLE	TROMMELACHSE
3	602425808	1	CABLE GLAND M25X1,5X12-15 MS	KABELVERSCHRAUBUNG
12	10428198	3	FLAT SPIRAL SPRING	SPIRALBLATTFEDER
14	11060087	8	SLIP RING 16A	SCHLEIFRING
15	10491892	8	CURRENT COLLECTOR	STROMABNEHMER
16	11003841	1	CONNECTING PLATE	ANSCHLUSSPLATTE
17	10451017	1	COVER HOOD	ABDECKHAUBE
18	602501308	1	VENTILATION SCREW G1/2"X30 POLYAMID	ENTLUEFTUNGSSCHRAUBE
140	11060088	8	SLIP RING 16A	SCHLEIFRING

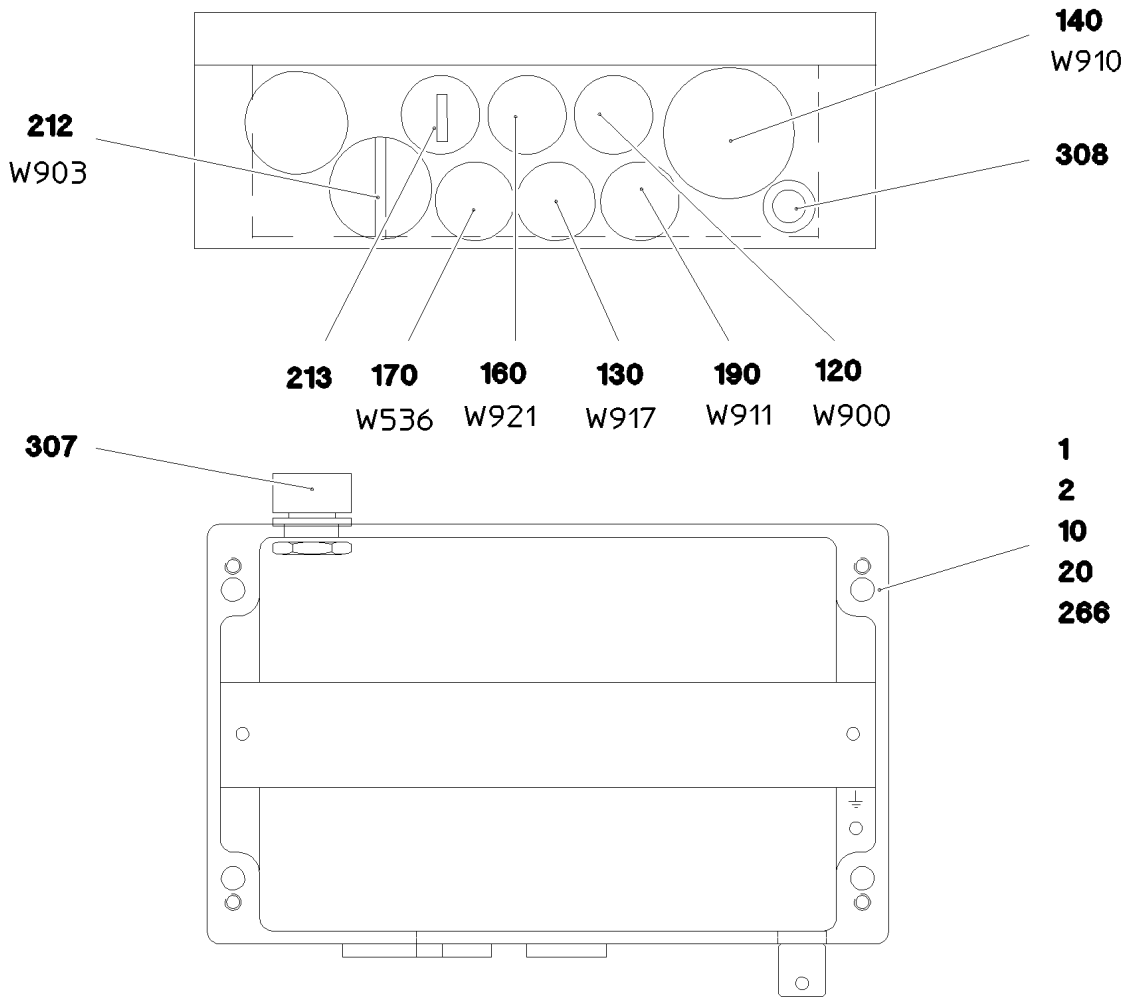

Pos.	Item	Quantity	Description	Bezeichnung
1	975113508	1	EMPTY CASING 160X260X90X0 AL	LEERGEHAEUSE
2	976917008	1	SIGN 80-38X0 LEXAN	SCHILD
10	602106708	0.245	TOP HAT RAIL 35X27X7,3X1	HUTSCHIENE
20	10874588	4	CABLE TIE 4,8X292-SCHWARZ PA66 SPF	KABELBINDER
120	966377308	1	LEAD W900	LEITUNG
130	966394008	1	LEAD W917	LEITUNG
140	966393608	1	LEAD W910	LEITUNG
160	966394208	1	LEAD W921	LEITUNG
170	966394808	1	LEAD W536	LEITUNG
190	966395208	1	LEAD W911	LEITUNG
212	602425208	1	SCREW PLUG M32X1,5 MS	VERSCHLUSSSCHRAUBE
213	602425108	1	SCREW PLUG M25X1,5 MS	VERSCHLUSSSCHRAUBE
265	870002808	0.1	SEALANT A80MR HYLOMAR	DICHTMITTEL
266	603202208	5	CABLE TIE 2,5X98-SCHWARZ PA66	KABELBINDER
307	10488662	1	VENTILATION SCREW M20X1,5 POLYAMID	ENTLUEFTUNGSSCHRAUBE
308	602501208	1	WATER DRAIN PLUG M12 PA6G SPF	ENTWAESSERUNGSSTOPFEN

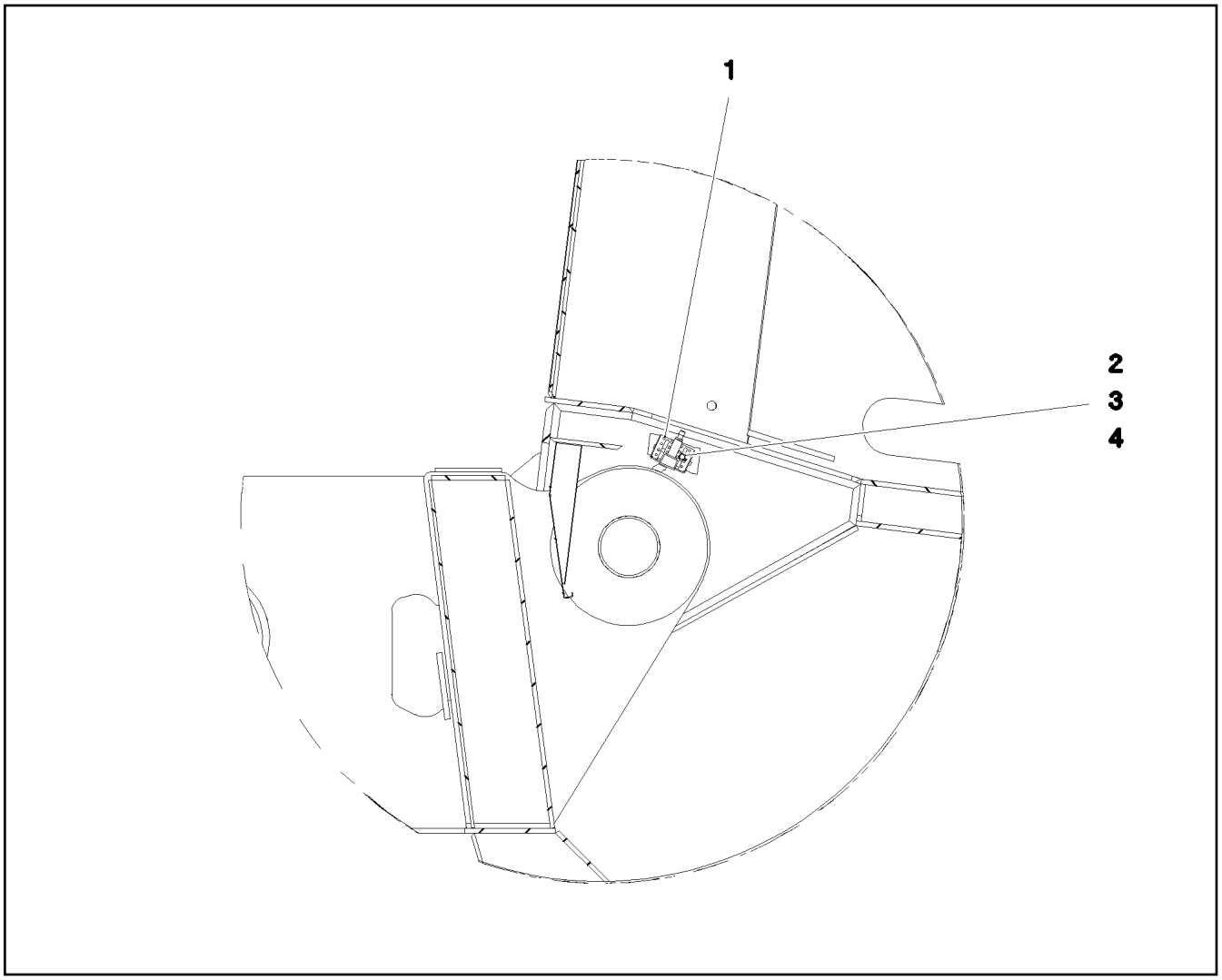

Pos.	Item	Quantity	Description	Bezeichnung
1	965371708	1	HOLDER X12CRNIS188	HALTER
2	10875857	2	CAGE NUT M6 NIROSTA	KAEFIGMUTTER
3	10197771	2	WASHER ISO 7089 6 200HV ZNNI-480H SPF	SCHEIBE
4	10001739	2	HEX SCREW ISO 4017 M6X16 A2-70	SECHSKANTSCHRAUBE
8	966563508	1	LIMIT SWITCH AUSLEGERSTEIL	ENDSCHALTER AUSLEGER STEI
(5)	10354584	1	INDUCTIVE SENSOR BERUEHRUNGSLOS	INDUKTIVSENSOR

Pos.	Item	Quantity	Description	Bezeichnung
1	968708708	1	TERMINAL BOX CPL. S930 ⇨ ❑ 685	KLEMMKASTEN KPL.

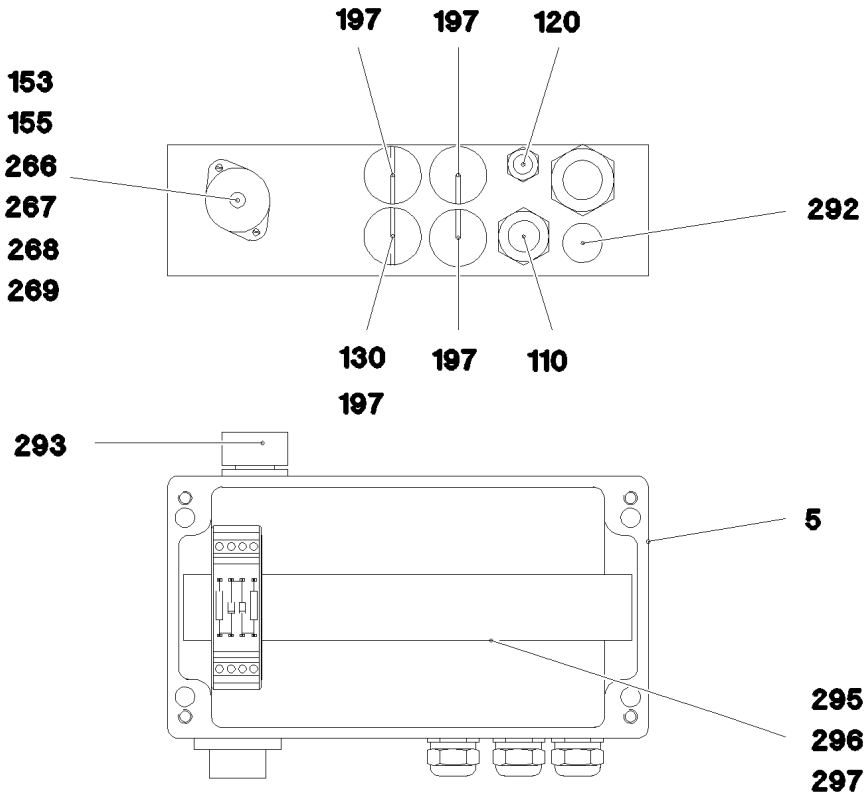

Pos.	Item	Quantity	Description	Bezeichnung
4	977667008	1	SIGN	SCHILD
5	973188508	1	EMPTY CASING 120X220X80X0 AL	LEERGEHAEUSE
18	966354908	1	WIRES TERMINAL BOX CPL. S930	DRAEHTE KLEMMKASTEN KPL.
110	966355308	1	LEAD W932	LEITUNG
120	966357008	1	LEAD W930	LEITUNG
153	604512108	1	SEALING PLUG M1-D	VERSCHLUSSKAPPE
155	604508108	1	TIN M1	DOSE
197	602425008	4	SCREW PLUG 15 M20X 1,5 MS	VERSCHLUSSSCHRAUBE
266	408400701	2	PAN-HEAD SCREW ISO 7045 M3X16 4.8 A2	FLACHKOPFSCHRAUBE
267	12226068	2	HEX NUT ISO 4032 M3 10 480H SPF	SECHSKANTMUTTER
268	420050108	2	WASHER ISO 7089 3 MS	SCHEIBE
269	425100508	2	TOOTH LOCK WASHER DIN 6797 A 3,2	ZAHNSCHEIBE
292	602501208	1	WATER DRAIN PLUG M12 PA6G SPF	ENTWAESSERUNGSSTOPFEN
293	10488662	1	VENTILATION SCREW M20X1,5 POLYAMID	ENTLUEFTUNGSSCHRAUBE
295	602106708	0.205	TOP HAT RAIL 35X27X7,3X1	HUTSCHIENE
296	10286353	1	COVER	DECKEL
297	602794608	2	END ANGLE	ENDWINKEL

Pos.	Item	Quantity	Description	Bezeichnung
4	967784508	1	HYDR.F.TELESCOPIC BOOM ⇨ ❑ 687	HYDRAULIK TELE

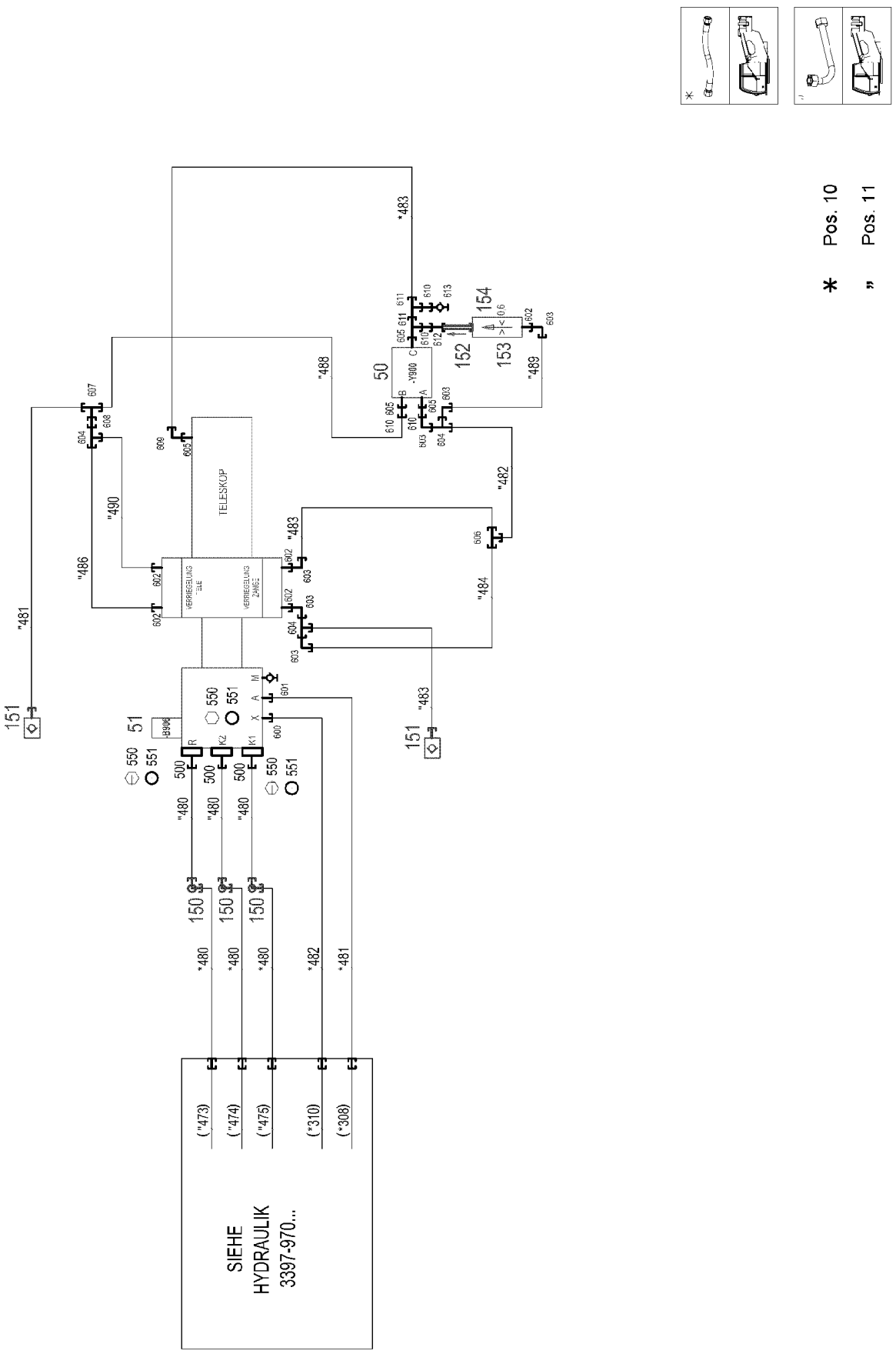

SIEHE
HYDRAULIK
3397-970...
TELESKOP
VERRIEGELUNG TELE
VERRIEGELUNG ZANGE
Y900
B906
* Pos. 10
" Pos. 11

Pos.	Item	Quantity	Description	Bezeichnung
10	968187108	1	HOSE LINES TELESCOPIC ⇨ ❑ 689	SCHLAUCHLEITUNGEN TELE
11	968187308	1	PIPELINES TELESCOPIC ⇨ ❑ 690	ROHRLEITUNGEN TELE
50	511493608	1	DIRECTIONAL CONTROL VALVE 3/2 320BA	WEGEVENTIL
(21)	571135508	1	MAGNET 24V	MAGNET
51	10813738	1	PRESSURE SENSOR 0-400/400 BAR LSB PL:	DRUCKAUFNEHMER
150	474234008	3	SWIVEL SCREW JOINT DG105 38S CF	DREHVERSCHRAUBUNG
151	511515008	2	COUPLING PLUG B2 10-L	KUPPLUNGSSTECKER
152	511493708	1	NON-RETURN VALVE 400BAR CR6-FREI	RUECKSCHLAGVENTIL
153	510746008	1	NOZZLE 0,6 M5X9 CUZN39PB3	DUESE
154	510671108	1	FILTER CARTRIDGE 0,005m³/min 25µm	FILTERPATRONE
500	511517808	3	FLANGE STUB PIPE AFG 38S G1 1/4 CR6-F	FLANSCHSTUTZEN
550	10876373	12	SOCKET HEAD SCREW ISO 4762 M14X45 8	ZYLINDERSCHRAUBE
551	510586708	3	O-RING ARP 568 37,69X3,53 NBR90	O-RING
600	471032108	1	FITTING GE 6S G1/4 CR6-FREI	VERSCHRAUBUNG
601	471033208	1	FITTING XGE16-SR-ED A3P	VERSCHRAUBUNG
602	7362091	5	FITTING ISO 8434-1 GE 10L G1/4A CR6-FREI	VERSCHRAUBUNG
603	7403569	6	FITTING EW 10L M16X1,5 CR6-FREI	VERSCHRAUBUNG
604	472330208	3	FITTING EL 10L CR6-FREI	VERSCHRAUBUNG
605	471034808	4	FITTING GE 12L G1/2 ZNNI	VERSCHRAUBUNG
606	470430308	1	FITTING XT10-L A3P	VERSCHRAUBUNG
607	482430314	1	FITTING ISO 8434 ET 10L M16X1,5 CR6-FRE	VERSCHRAUBUNG
608	470030308	1	FITTING XG10-L A3P	VERSCHRAUBUNG
609	247117702	1	FITTING EW 12L M18X1,5 CR6-FREI	VERSCHRAUBUNG
610	475431408	4	FITTING REDSD12/10-L A3P	VERSCHRAUBUNG
611	247128602	2	FITTING EL 12L M18X1,5 CR6-FREI	VERSCHRAUBUNG
612	470010108	1	FITTING SNV10-L CFX	VERSCHRAUBUNG
613	510629008	1	TEST POINT FITTING VKA3 10LM16X1,5 CR6	MESSANSCHLUSS

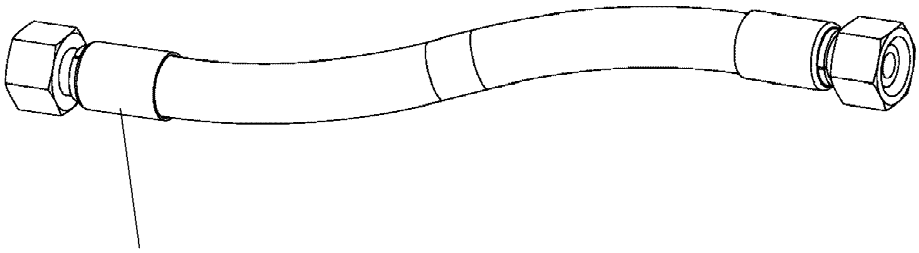

Schlauchnummer
Hose number
Numéro de flexible
Número de flexible
Номера шланга

Die Schlauchnummern auf den Schläuchen entsprechen den Positionen in der Schlauchliste.

The hose numbers from the hoses are in accordance with the items in the hose list.

Les numéros indiqués sur les flexibles correspondent aux repères de la nomenclature des flexibles.

Los números indicados en los flexibles corresponden a las posiciones de la lista de flexibles.

Нанесенные на шлангах номера соответствуют позициям в перечне.

Pos.	Item	Quantity	Description	Bezeichnung
480	962913408	3	HOSE CPL. GH506 31X1620	SCHLAUCH KPL.
481	929331808	1	HOSE CPL. 2SN 12X3400	SCHLAUCH KPL.
482	962968608	1	HOSE CPL. 2SN 6X3500	SCHLAUCH KPL.
483	921255408	1	HOSE CPL. 2SN 10X400	SCHLAUCH KPL.

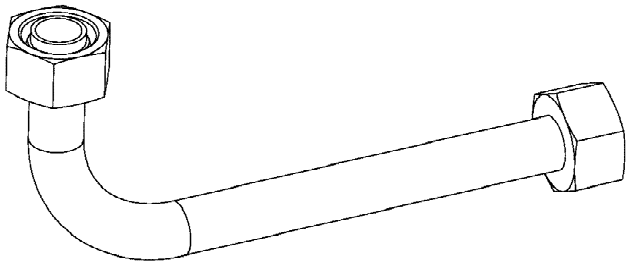

Die Positionsnummern der Rohre auf den Bildtafeln entsprechen den Positionen in der Rohrliste.

The pipe numbers from the illustrations are in accordance with the items in the pipe list.

Les numéros des tuyaux sur les illustrations correspondent aux repères de la nomenclature des tuyaux.

Los números de tubos en las ilustraciones corresponden a las posiciones de la lista de tubos.

Номера позиций труб на изображениях соответствуют позициям в перечне труб.

Pos.	Item	Quantity	Description	Bezeichnung
480	966546008	3	PIPE COMPL. 38X5X619	ROHR KPL.
481	929802108	1	PIPE COMPL. 10X1,5X853	ROHR KPL.
482	929802208	1	PIPE COMPL. 10X1,5X671	ROHR KPL.
483	929802308	2	PIPE COMPL. 10X1,5X239	ROHR KPL.
484	929802808	1	PIPE COMPL. 10X1,5X120	ROHR KPL.
486	929803008	1	PIPE COMPL. 10X1,5X407	ROHR KPL.
488	929803108	1	PIPE COMPL. 10X1,5X137	ROHR KPL.
489	929804608	1	PIPE COMPL. 10X1,5X278	ROHR KPL.
490	929806008	1	PIPE COMPL. 10X1,5X282	ROHR KPL.

Pos.	Item	Quantity	Description	Bezeichnung
4	967785408	1	ADDNL.HYDR. FOLDING JIB ⇨ ❑ 692	ZUSATZHYDRAULIK KLAPPSPI

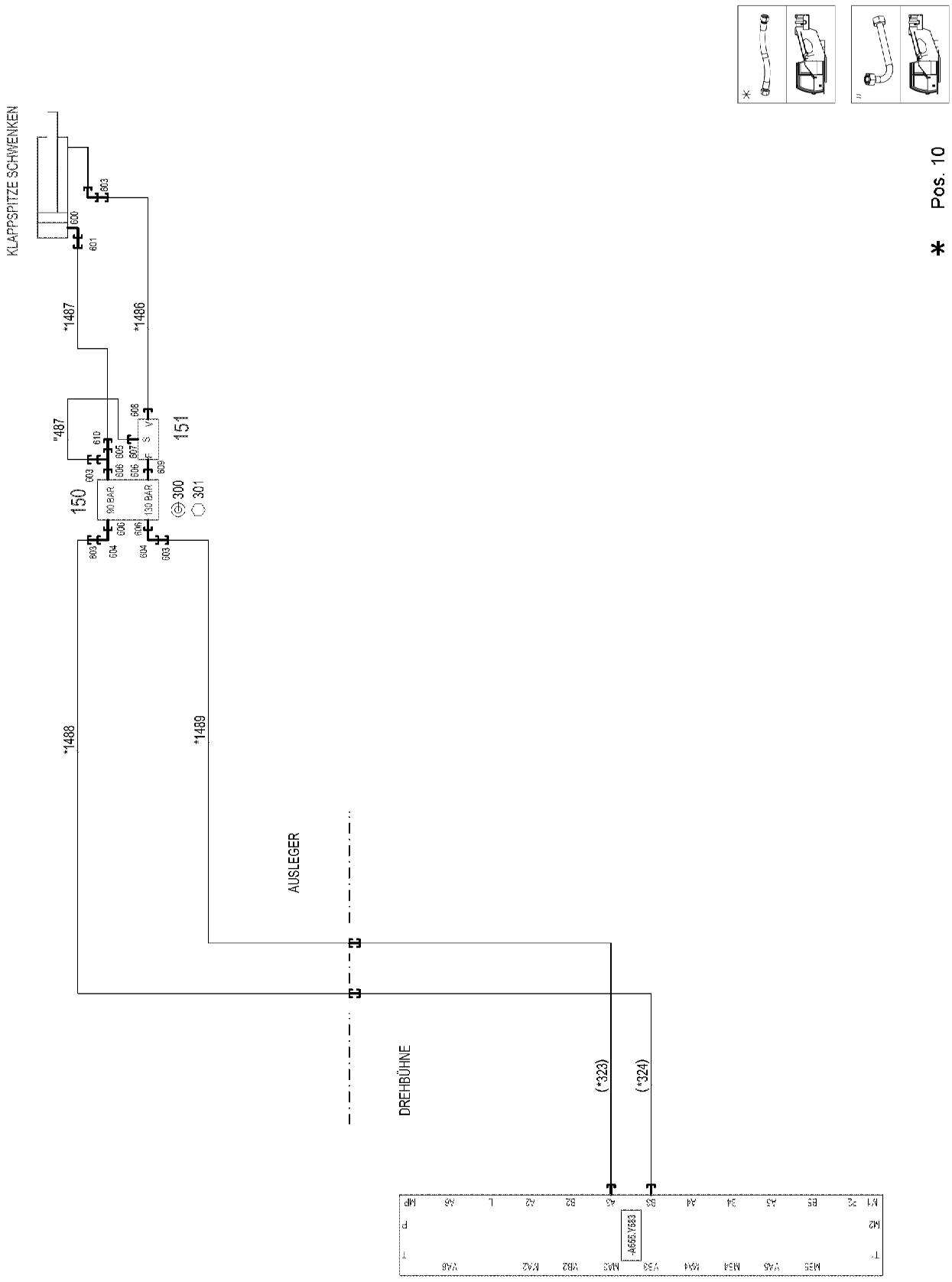

Pos. 10

*

4.12.2020 078289 LIEBHERR	**etk_en_de 047580 LTR 1220** **ADDNL.HYDR. FOLDING JIB** **ZUSATZHYDRAULIK KLAPPSPITZE**	692 (1/2) **967785408**

Pos.	Item	Quantity	Description	Bezeichnung
10	968222808	1	HOSE LINES FOLDING JIB ⇨ ❑ 694	SCHLAUCHLEITUNGEN KLAPPS
11	927163908	1	PIPE COND. FOLDING SEAT	ROHRLEITUNGEN KLAPPSPITZ
(487)	922676808	1	PIPE COMPL. 6X1X239	ROHR KPL.
150	511450208	1	PRESSURE LIMITING VALVE pmax=350BAR	DRUCKBEGRENZUNGSVENTIL
(23)	710104008	2	SEALING RING DIN 7603 A18X22X1,5 CU	DICHTRING
151	511479408	1	LOAD HOLDING VALVE ⇨ ❑ 695	LASTHALTEVENTIL
300	11140469	2	WASHER ISO 7093-1 8 200HV 480H SPF	SCHEIBE
301	11690048	2	HEX SCREW ISO 4017 M8X12 8.8 480H SPF	SECHSKANTSCHRAUBE
600	473210508	1	FITTING RSWS10-SM-WD A3P	VERSCHRAUBUNG
601	475432008	1	FITTING REDSDN10/6-S A3P	VERSCHRAUBUNG
603	475432908	4	FITTING REDSD12/6-S CFX	VERSCHRAUBUNG
604	7617354	2	FITTING EW 12S CR6-FREI	VERSCHRAUBUNG
605	7617461	1	FITTING EL 12S CR6-FREI	VERSCHRAUBUNG
606	471032608	4	FITTING GE 12S G1/2A CR6-FREI	VERSCHRAUBUNG
607	471030008	1	FITTING XGE6-LR-ED A3P	VERSCHRAUBUNG
608	471032808	1	FITTING ISO 8434-1 GE 10S G3/8A CR6-FRE	VERSCHRAUBUNG
609	471900508	1	FITTING EGESD12-SR-WD A3P	VERSCHRAUBUNG
610	475433408	1	FITTING REDSD12/10-S A3P	VERSCHRAUBUNG

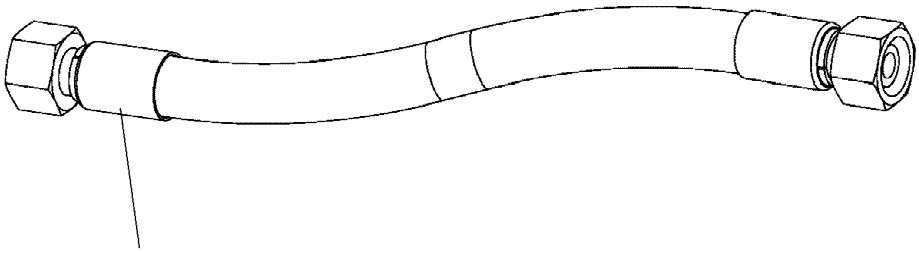

Schlauchnummer
Hose number
Numéro de flexible
Número de flexible
Номера шланга

Die Schlauchnummern auf den Schläuchen entsprechen den Positionen in der Schlauchliste.

The hose numbers from the hoses are in accordance with the items in the hose list.

Les numéros indiqués sur les flexibles correspondent aux repères de la nomenclature des flexibles.

Los números indicados en los flexibles corresponden a las posiciones de la lista de flexibles.

Нанесенные на шлангах номера соответствуют позициям в перечне.

Pos.	Item	Quantity	Description	Bezeichnung
1486	923015608	1	HOSE CPL. 2SN 6X540	SCHLAUCH KPL.
1487	923015608	1	HOSE CPL. 2SN 6X540	SCHLAUCH KPL.
1488	962968508	1	HOSE CPL. 2SN 6X13600	SCHLAUCH KPL.
1489	962968508	1	HOSE CPL. 2SN 6X13600	SCHLAUCH KPL.

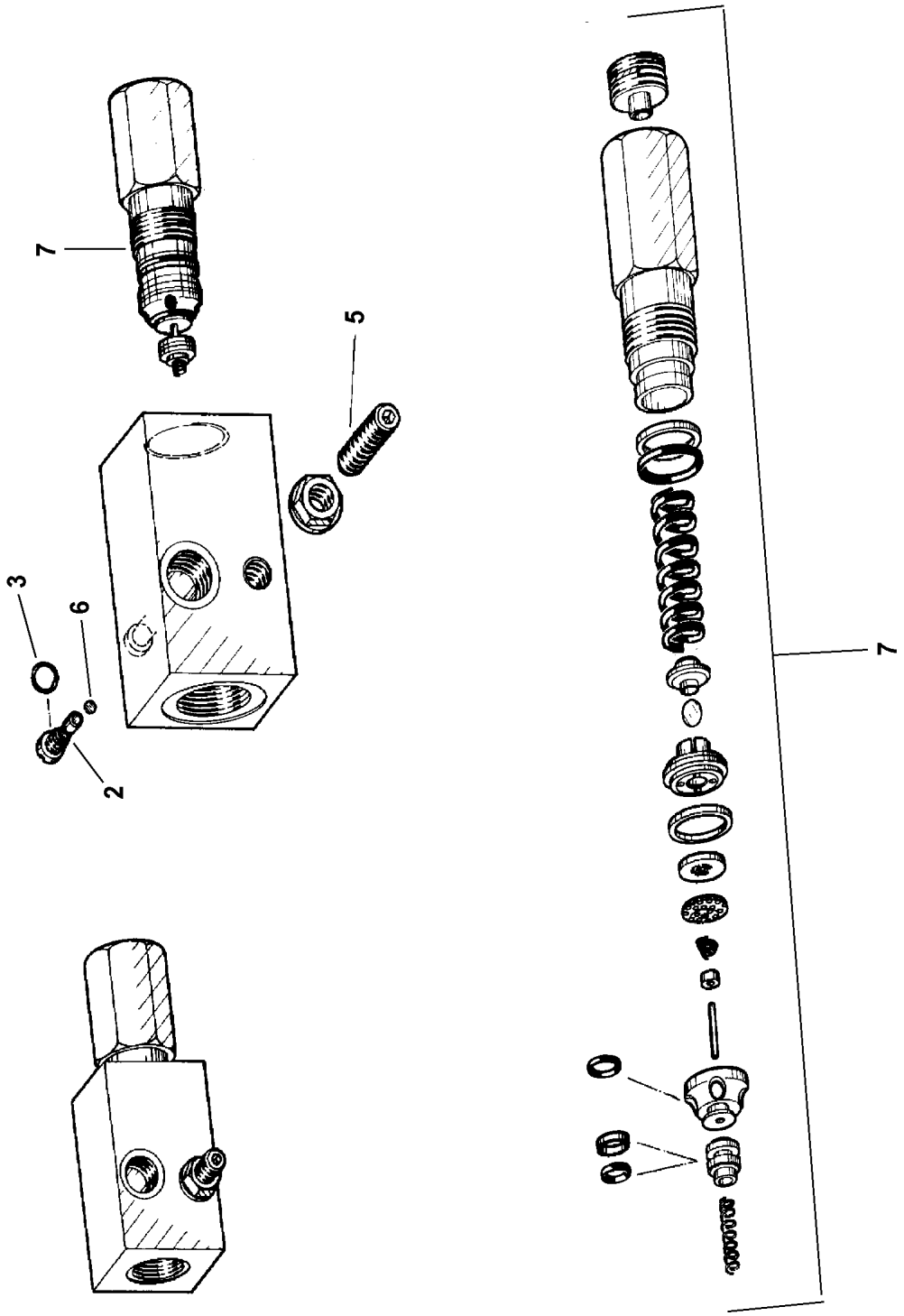
7
5
3
6
2
7

Pos.	Item	Quantity	Description	Bezeichnung
2	570941408	1	SCREW	SCHRAUBE
3	510712308	1	O-RING 4X1 NBR90	O-RING
5	404400508	1	GRUB SCREW DIN 913 M6X25 45H VERZ	GEWINDESTIFT
6	610706308	1	BALL DIN 5401 3	KUGEL
7	11002678	1	LOAD RETAINING VLV ELEMENT,CPL	LASTHALTEVENTILEINSATZ

Pos.	Item	Quantity	Description	Bezeichnung
4	967785008	1	ADDNL.HYDR. FOLDING JIB ⇨ ❑ 698	ZUSATZHYDRAULIK KLAPPSPI

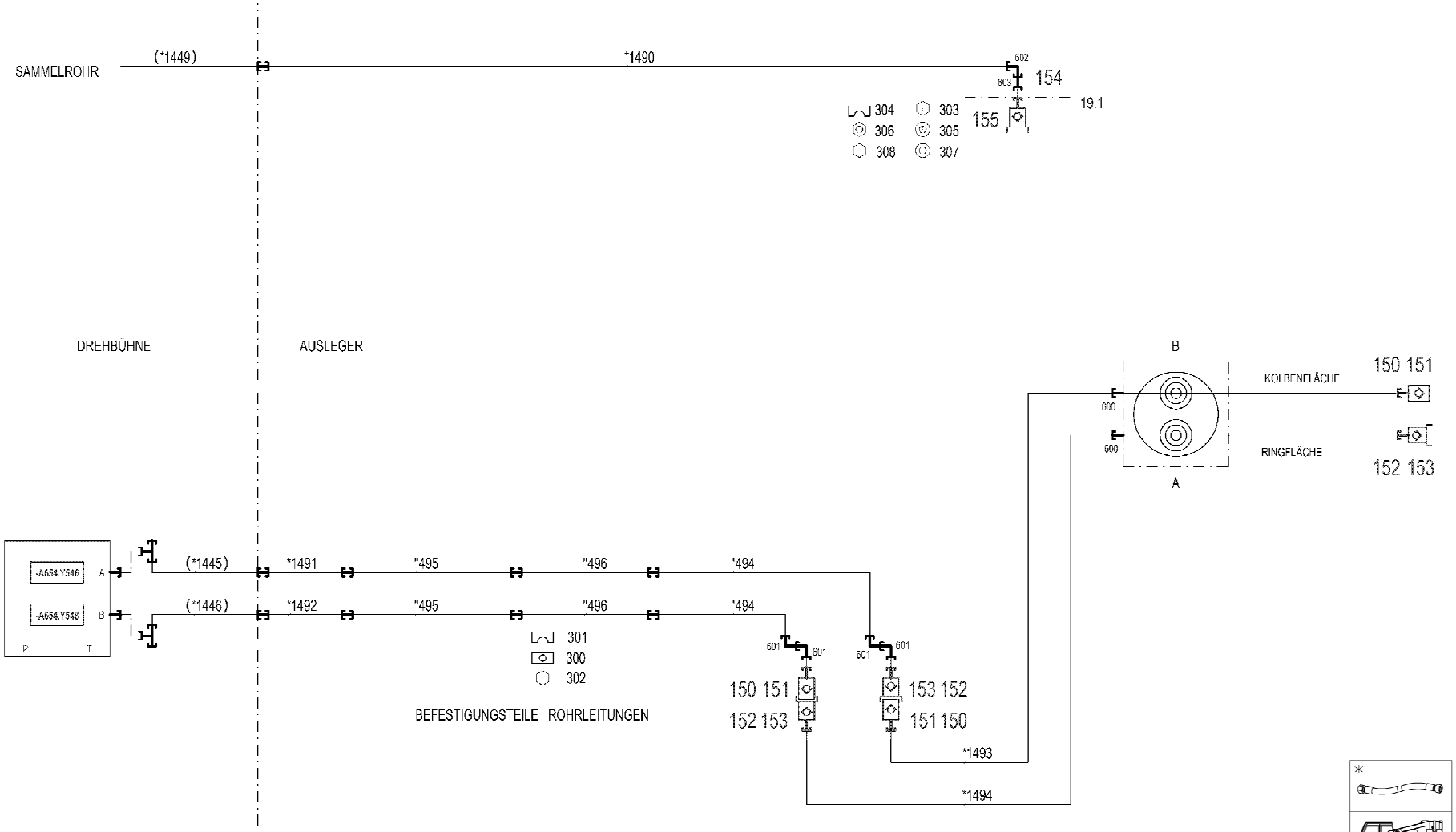
SAMMELROHR
(*1449)
*1490
602
603
154
19.1
155
304
303
306
305
308
307
DREHBÜHNE
AUSLEGER
B
KOLBENFLÄCHE
150 151
600
600
RINGFLÄCHE
152 153
A
-A654.Y546
-A654.Y548
A
B
P
T
(*1445)
*1491
"495
"496
"494
(*1446)
*1492
"495
"496
"494
301
300
302
BEFESTIGUNGSTEILE ROHRLEITUNGEN
601
601
601
601
150 151
152 153
153 152
151 150
*1493
*1494
* Pos. 10
" Pos. 11

Pos.	Item	Quantity	Description	Bezeichnung
10	968223308	1	HOSE LINES FOLDING JIB WIPPBAR ⇨ ❑ 700	SCHLAUCHLEITUNGEN KLAPPS
11	968223408	1	PIPE COND. FOLDING SEAT WIPPBAR ⇨ ❑ 701	ROHRLEITUNGEN KLAPPSPITZ
19	962602108	1	MECHANICAL AUXILIARIES	MECH.BEFESTIGUNGSTEILE
(1)	972934408	1	PLATE 4X128X75 S315MC FE//ZNNI8//CN//T	BLECH
150	10466915	3	HEX CAP NUT RD36X3 SPF	VERSCHLUSSMUTTER
151	511505908	3	COUPLING SLEEVE B3 16-S	KUPPLUNGSMUFFE
(1)	571081908	1	SHEET GASKET VITON	DICHTSCHEIBE
(2)	571082008	1	O-RING 20X2 FPM70	O-RING
(3)	571082108	1	O-RING 26X1,5 FPM70	O-RING
(4)	571082208	1	SUPPORTING RING 20X23,5X1 PTFE	STUETZRING
(5)	571082308	1	NUT CR6-FREI	MUTTER
152	10466911	3	SCREW PLUG RD36X3 SPF	VERSCHLUSSSCHRAUBE
153	511508608	3	COUPLING PLUG B3 16-S	KUPPLUNGSSTECKER
(1)	571082408	1	SHEET GASKET VITON	DICHTSCHEIBE
(2)	571082008	1	O-RING 20X2 FPM70	O-RING
(3)	571082208	1	SUPPORTING RING 20X23,5X1 PTFE	STUETZRING
154	10031987	1	DUST PLUG 3/8" SPF	STAUBSTECKER
155	10031989	1	COUPLING SLEEVE 3/8"-10L SPF	KUPPLUNGSMUFFE
300	7362606	13	LID PLATE DIN 3015-3 Z-DP 2 W1-ZN	DECKPLATTE
301	602000708	26	CLAMP-HALF 216-16 PP	KLEMMHAELFTE
302	11692827	13	HEX SCREW ISO 4017 M8X35 8.8 480H SPF	SECHSKANTSCHRAUBE
303	12202784	2	SOCKET HEAD SCREW ISO 4762 M6X60 8.8	ZYLINDERSCHRAUBE
304	602009008	2	CLAMP-HALF DIN 3015-1 L 5 R 32 PP SW	KLEMMHAELFTE
305	10875648	2	WASHER ISO 7093-1 6 200HV 480H SPF	SCHEIBE
306	12102692	2	HEX NUT DIN 985 M6 8 ZNNI-480H SPF	SECHSKANTMUTTER
307	11140469	2	WASHER ISO 7093-1 8 200HV 480H SPF	SCHEIBE
308	10197831	2	HEX SCREW ISO 4017 M8X25 8.8 ZNNI-480	SECHSKANTSCHRAUBE
600	471033208	2	FITTING XGE16-SR-ED A3P	VERSCHRAUBUNG
601	7617460	4	FITTING EW 16S CR6-FREI	VERSCHRAUBUNG
602	470230308	1	FITTING XW10-L A3P	VERSCHRAUBUNG
603	470010108	1	FITTING SNV10-L CFX	VERSCHRAUBUNG

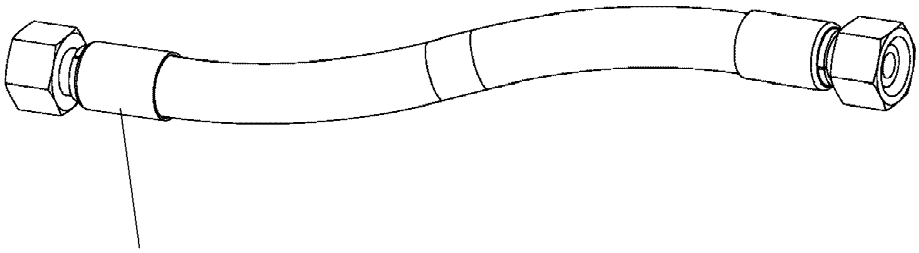

Schlauchnummer
Hose number
Numéro de flexible
Número de flexible
Номера шланга

Die Schlauchnummern auf den Schläuchen entsprechen den Positionen in der Schlauchliste.

The hose numbers from the hoses are in accordance with the items in the hose list.

Les numéros indiqués sur les flexibles correspondent aux repères de la nomenclature des flexibles.

Los números indicados en los flexibles corresponden a las posiciones de la lista de flexibles.

Нанесенные на шлангах номера соответствуют позициям в перечне.

Pos.	Item	Quantity	Description	Bezeichnung
1490	962968908	1	HOSE CPL. 1SC 8X14100	SCHLAUCH KPL.
1491	929753308	1	HOSE CPL. 2SN 12X3600	SCHLAUCH KPL.
1492	961861508	1	HOSE CPL. 2SN 12X3800	SCHLAUCH KPL.
1493	928765908	1	HOSE CPL. 2SN 12X860	SCHLAUCH KPL.
1494	964958008	1	HOSE CPL. 2SN 12X760	SCHLAUCH KPL.

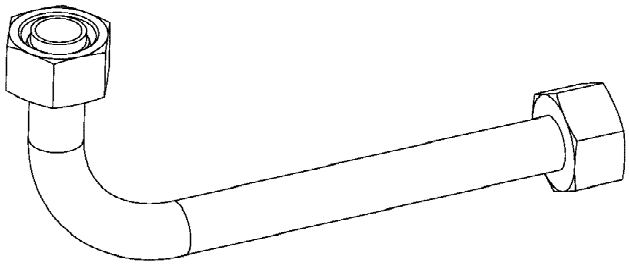

Die Positionsnummern der Rohre auf den Bildtafeln entsprechen den Positionen in der Rohrliste.

The pipe numbers from the illustrations are in accordance with the items in the pipe list.

Les numéros des tuyaux sur les illustrations correspondent aux repères de la nomenclature des tuyaux.

Los números de tubos en las ilustraciones corresponden a las posiciones de la lista de tubos.

Номера позиций труб на изображениях соответствуют позициям в перечне труб.

Pos.	Item	Quantity	Description	Bezeichnung
494	968201408	2	PIPE COMPL. 16X2X2550	ROHR KPL.
495	962977608	2	PIPE COMPL. 16X2X5360	ROHR KPL.
496	962977708	2	PIPE COMPL. 16X2X2361	ROHR KPL.

Pos.	Item	Quantity	Description	Bezeichnung
1	967970408	1	MECH.AUXILIARIES FOR LIGHTING	MECH.ANBAUTEILE SCHEINW
5	10872003	2	WORK LIGHT 50W 12-24V ALU ALU ⇨ ❑ 703	ARBEITSSCHEINWERFER
11	969723508	1	LEAD W903	LEITUNG
12	965760208	1	LEAD W901	LEITUNG
13	965760308	1	LEAD W902	LEITUNG

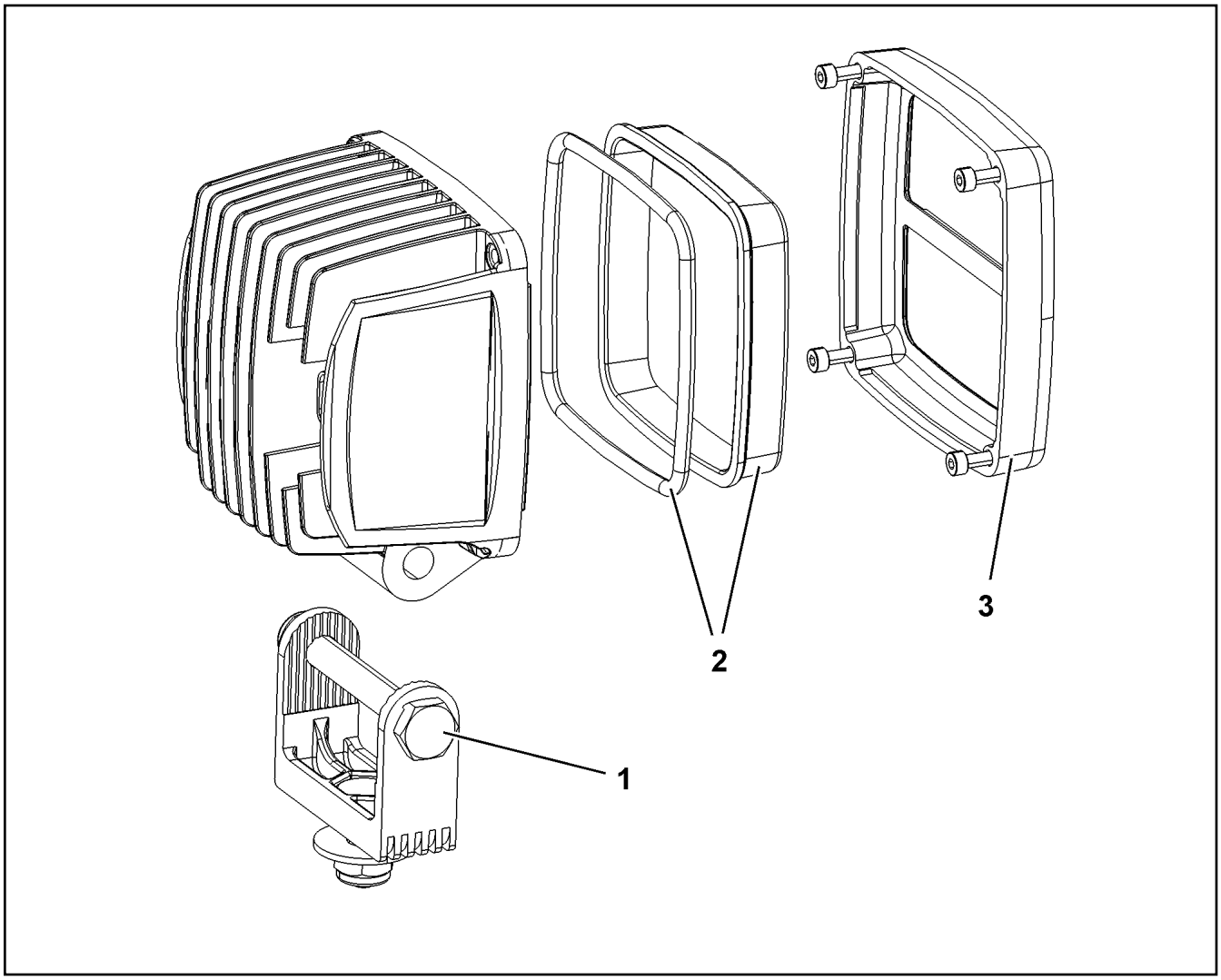

Pos.	Item	Quantity	Description	Bezeichnung
1	10875952	1	CLAMP	KLAMMER
2	10875969	1	LENS	LICHTSCHEIBE
3	10875953	1	ORIFICE	BLENDE

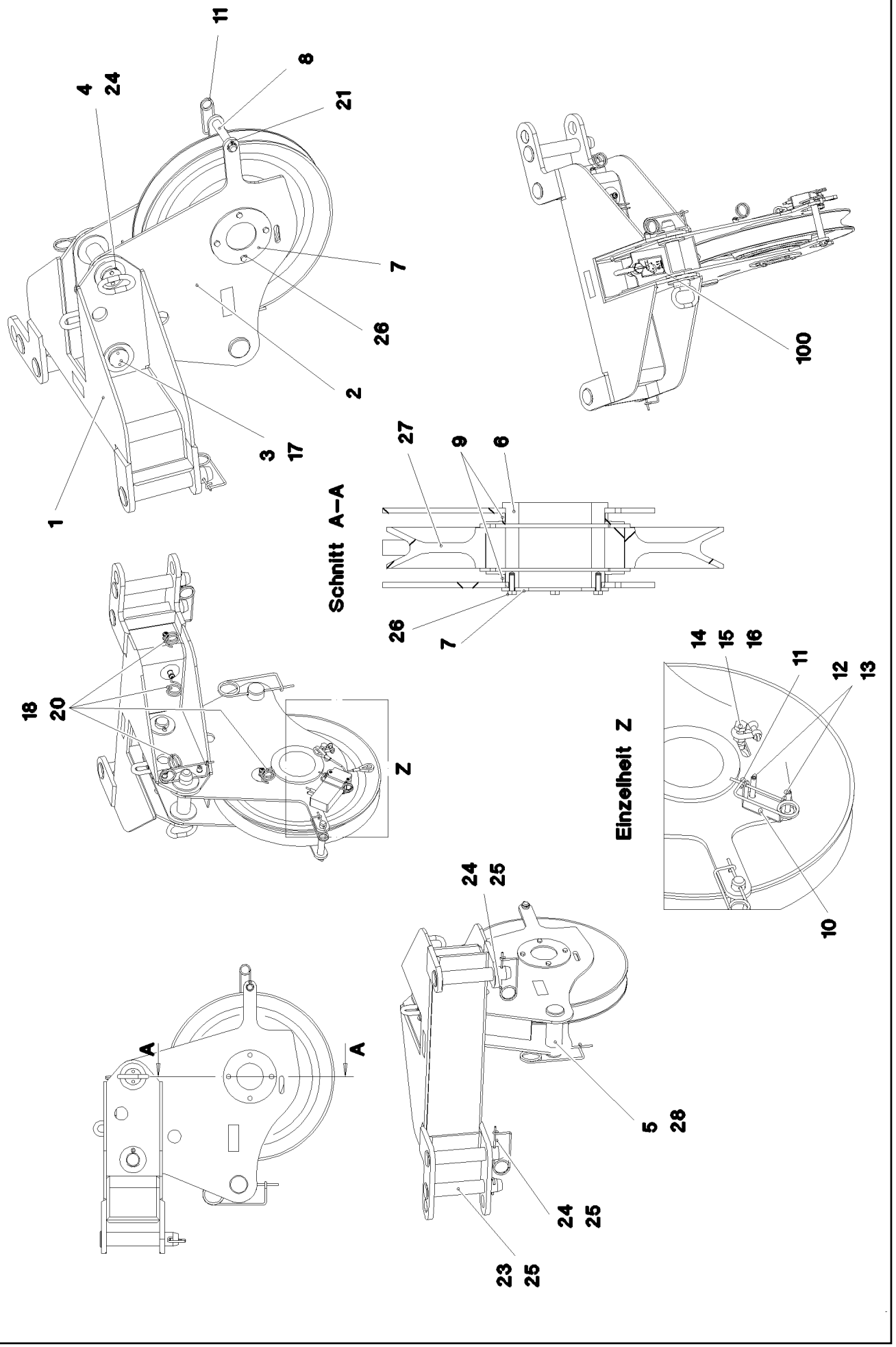

4.12.2020 078819 LIEBHERR	**etk_en_de 047580 LTR 1220** **BOOM NOSE** **MASTNASE**	❑ 704 (1/2) **917268408**

Pos.	Item	Quantity	Description	Bezeichnung
1	961940008	1	BOOM NOSE WELDED CONSTRUCTION	MASTNASE SCHWK.
2	967771808	1	ROLLER CARRIER WELDED	ROLLENTRAEGER SCHWK.
3	97070277	1	PIN 50.0X200 35NICRMOV125 SPF	BOLZEN
4	96002833	1	SOCKET PIN	STECKBOLZEN
(1)	97070277	1	PIN 50.0X200 35NICRMOV125 SPF	BOLZEN
(2)	963557408	1	HANDLE WELD.CONST. FE//ZNNI8//CN//T0	GRIFF SCHWK.
(3)	12211444	2	HEX SCREW ISO 4017 M5X10 8.8 480H SPF	SECHSKANTSCHRAUBE
5	939249808	1	PIN 55.0X158 35NICRMOV125 GASN. SPF	BOLZEN
6	946509308	1	AXLE RD150X120 S355J2H FE//ZNNI8//CN//T	ACHSE
7	971050008	1	PLATE 5X160X160 S700MC	BLECH
8	452551408	1	PIN ISO 2340 B20X150X134 S355J2+AR FE//	BOLZEN
9	971095808	2	DISTANCE TUBE 159.0X12 S355J2H FE//ZN	DISTANZROHR
10	971067708	1	PLATE 2X155X38 DC01 FE//ZNNI8//CN//T0	BLECH
11	433101208	2	RETAINING SPRING 4X68 ISO 2081 FE/ZN8/	SICHERUNGSFEDER
12	12100292	2	GRUB SCREW ISO 4026 M8X50 8.8 480H SP	GEWINDESTIFT
13	410120308	2	HEX NUT ISO 4035 M8 04 A2C	SECHSKANTMUTTER
14	773933508	1	SHACKLE DIN 82101 0,25T NG0,25 ST VERZ	SCHAEKEL
15	11626706	1	HEX SCREW ISO 4017 M10X40 8.8 FLZN SP	SECHSKANTSCHRAUBE
16	12102695	2	HEX NUT ISO 4032 M10 8 ZNNI-480H SPF	SECHSKANTMUTTER
17	10180371	1	SPLIT PIN ISO 1234 8X80 St 480H SPF	SPLINT
18	720014408	4	CABLE CLAMP	KABELHALTER
20	12102696	4	BUTTON HEAD SCREW ISO7380-2 M8X10 0	HALBRUNDKOPFSCHRAUBE
21	10180359	1	SPLIT PIN ISO 1234 5X40 St 480H SPF	SPLINT
23	10180365	1	SPLIT PIN ISO 1234 6,3X63 St 480H SPF	SPLINT
24	433100908	3	RETAINING SPRING 4,5X98 ISO 2081 FE/ZN	SICHERUNGSFEDER
25	973626408	3	PIN 50.0X235 35NICRMOV125 GASN. SPF	BOLZEN
26	10197831	4	HEX SCREW ISO 4017 M8X25 8.8 ZNNI-480	SECHSKANTSCHRAUBE
27	967771908	1	ROPE PULLEY CPL. ⇨ ❑ 665	SEILROLLE KPL.
28	433105008	1	RETAINING SPRING DIN 2194 6 A3C	SICHERUNGSFEDER
100	967774608	1	SIGNS MASTNASE	BESCHILDERUNG
(1)	97025520	1	SIGN 85X55 SPF	SCHILD

Pos.	Item	Quantity	Description	Bezeichnung
1	966479308	1	SENSOR LIFT TOP LIMIT SWITCH MIT M12 ⇨ ❑ 707	GEBER HUB OBEN ENDSCHAL
10	967321308	1	FIXING DEVICE 2.LIFT TOP ⇨ ❑ 708	HALTERUNG 2.HUB OBEN
13	966356908	1	LEAD W931	LEITUNG

OHNE BILD

WITHOUT ILLUSTRATION

SANS ILLUSTRATION

SIN ILUSTRACION

БЕЗ ИЭОБРАЖЕНИЯ

Pos.	Item	Quantity	Description	Bezeichnung
7	10678395	1	LIMIT SWITCH TQ200-RFID SPF	ENDSCHALTER

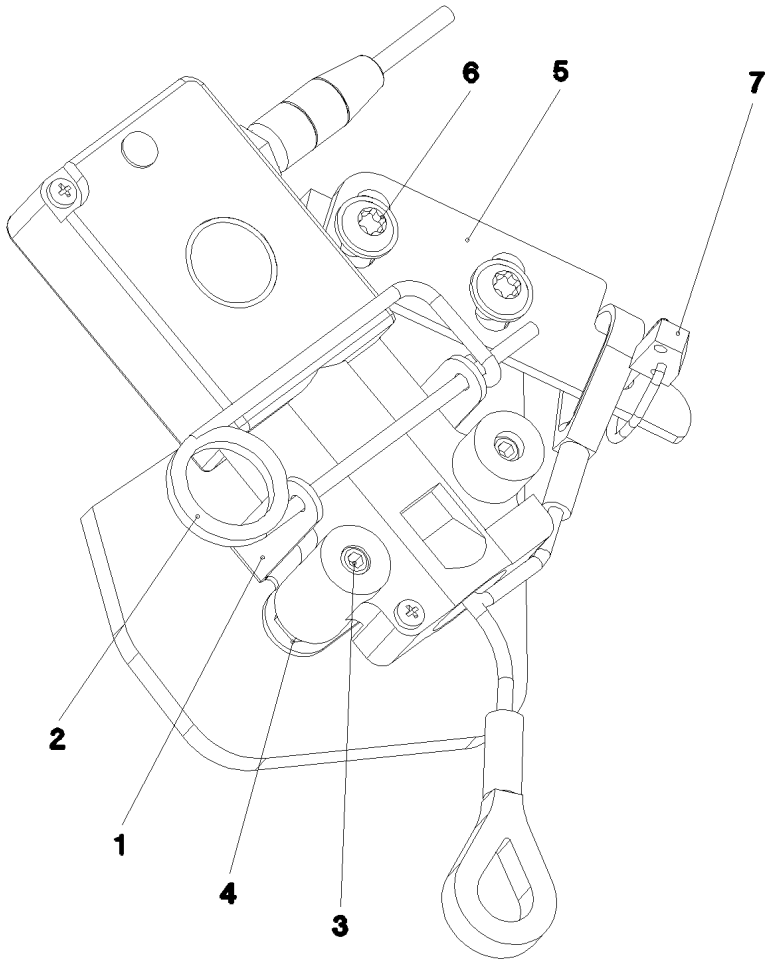

Pos.	Item	Quantity	Description	Bezeichnung
1	971067708	1	PLATE 2X155X38 DC01 FE//ZNNI8//CN//T0	BLECH
2	433101208	1	RETAINING SPRING 4X68 ISO 2081 FE/ZN8/	SICHERUNGSFEDER
3	12100292	2	GRUB SCREW ISO 4026 M8X50 8.8 480H SP	GEWINDESTIFT
4	11693875	2	HEX NUT ISO 4032 M8 8 480H SPF	SECHSKANTMUTTER
5	979132008	1	PLATE 110X34 S315MC FE//ZNNI8//CN//T0	BLECH
6	12102696	2	BUTTON HEAD SCREW ISO7380-2 M8X10 0	HALBRUNDKOPFSCHRAUBE
7	10875869	1	SAFETY PLUG W HINGE-LID 5X29X4,7X25 4	SICHERHEITSKLAPPSTECKER

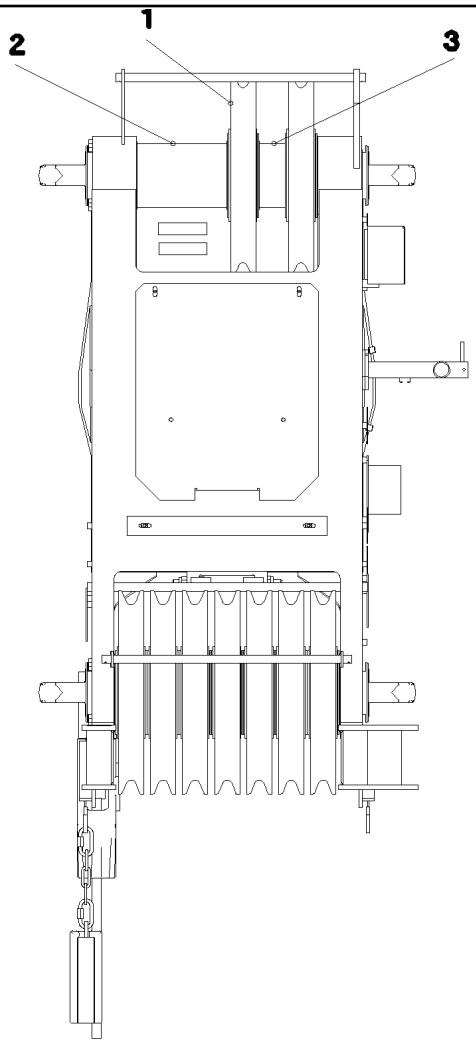

Pos.	Item	Quantity	Description	Bezeichnung
1	921456108	1	ROPE PULLEY CPL. SPF ⇨ ❑ 663	SEILROLLE KPL.
2	953536408	1	DISTANCE TUBE RD159X4,5X224 S355J2H	DISTANZROHR
3	953536508	1	DISTANCE TUBE RD159X4,5X65 S355J2H FE	DISTANZROHR

Pos.	Item	Quantity	Description	Bezeichnung
1	917598408	1	ELECTRIC MEASURING & WARN DEV WW + ⇨ ❑ 711	ELEKTRIK MESS-U.WARNEINRIC
2	968412508	1	MECH MEAS AND WARNING DEVICE WW+H ⇨ ❑ 713	MECHANIK MESS-U.WARNEINR

Pos.	Item	Quantity	Description	Bezeichnung
1	969047708	1	LEAD W933Y	LEITUNG
(5)	600462908	1.46	CONTROL LEAD 5 X 0,5 SPF	STEUERLEITUNG
(6)	680001408	1	COUPLING SOCKET 4-POL SPF	KUPPLUNGSDOSE
(7)	680000008	1	COUPLING SOCKET 4-POLE SPF	KUPPLUNGSDOSE
(500)	923512208	4	CABLE MARKER	KABELMARKER
(501)	604526608	1	PIN CARRIER 6-POL 16A	STIFTTRAEGER
(502)	604526508	1	BUSHING SUPPORT 6-POL 16A	BUCHSENTRAEGER
(503)	604508508	1	SEALING PLUG M 1-K	VERSCHLUSSKAPPE
(504)	10476383	1	PLUG M1	STECKER
(505)	602441001	1	CABLE GLAND M20X1,5X5-10 MS	KABELVERSCHRAUBUNG
(506)	10333297	1	INSERT SKINTOP 3X5,3MM	MEHRFACHDICHTEINSATZ
(507)	10871063	1	PROTECTIVE HOSE DN16XNORMAL PP	SCHUTZSCHLAUCH
(508)	602704808	1	CABLE SLEEVE 4-6	KABELTUELLE
(509)	604505508	1	CABLE SOCKET M11-Z	KABELDOSE
(510)	604512108	1	SEALING PLUG M1-D	VERSCHLUSSKAPPE
(511)	11491897	1	SCREW PLUG M12 PA	VERSCHLUSSSCHRAUBE
(628)	604519208	2	PIN CONTACT 0,75-1MM2	STIFTKONTAKT
(637)	604519108	1	PIN CONTACT 1,5MM2	STIFTKONTAKT
(719)	10493972	2	PIN CONTACT 0,5MM2 SILBER	STIFTKONTAKT
(721)	10493970	4	SLEEVE CONTACT 0,5MM2 SILBER	BUCHSENKONTAKT
(812)	604518908	5	STOPPER PLUG BAUREIHE_M1	BLINDSTOPFEN
(998)	965622208	2	LETTERING WIRING HARNESS	BESCHRIFTUNG KABELBAUM
2	11482252	1	WIND VELOCITY TRANSMITTER 0-50M/S SP ⇨ ❑ 712	WINDGESCHWINDIGKEITSGEBE
3	11482305	1	OBSTRUCTION LIGHT 7,2W 19,2-28,8V PBT	HINDERNISFEUER
5	7621780	1	LASHING STRAP 0,35MX18MM	ZURRGURT

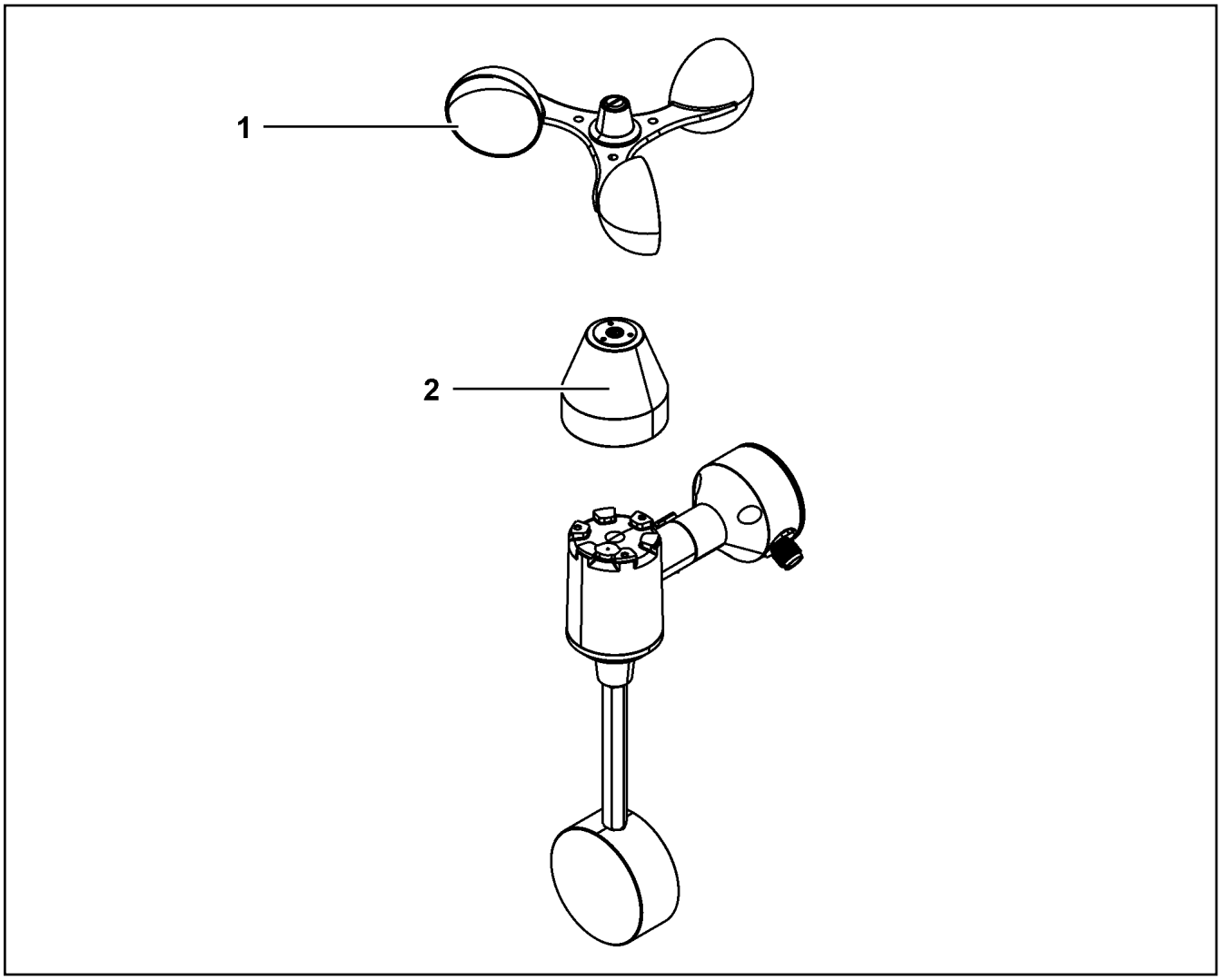

Pos.	Item	Quantity	Description	Bezeichnung
1	11171311	1	ROTOR	ROTOR
2	11171306	1	COVER LID	ABDECKKAPPE

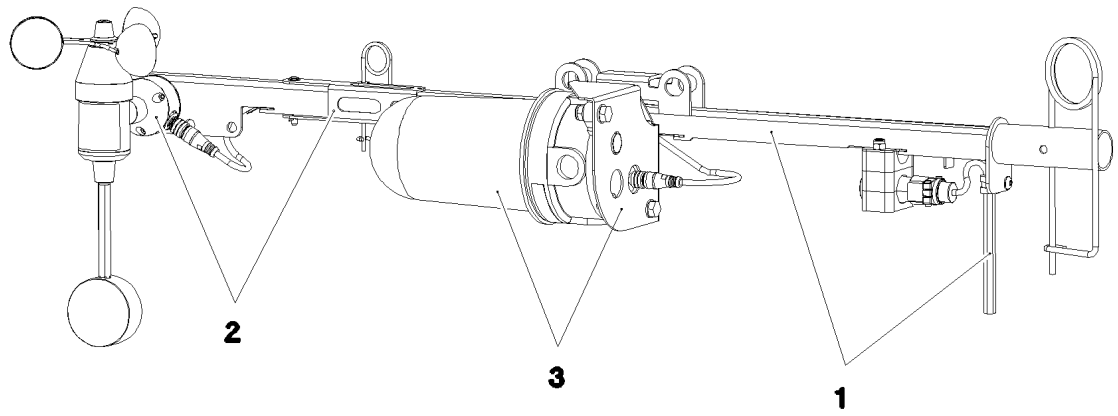

Pos.	Item	Quantity	Description	Bezeichnung
1	967933408	1	LOCATION FIXTURE PRE-ASS. ⇨ ❑ 714	GRUNDHALTER VORM.
2	967936408	1	WIND WARNING PREASSEMBLED ⇨ ❑ 715	WINDWARNUNG VORM.
3	967937608	1	OBSTRUCTION LIGHTS PREASS ⇨ ❑ 716	HINDERNISFEUER VORM.

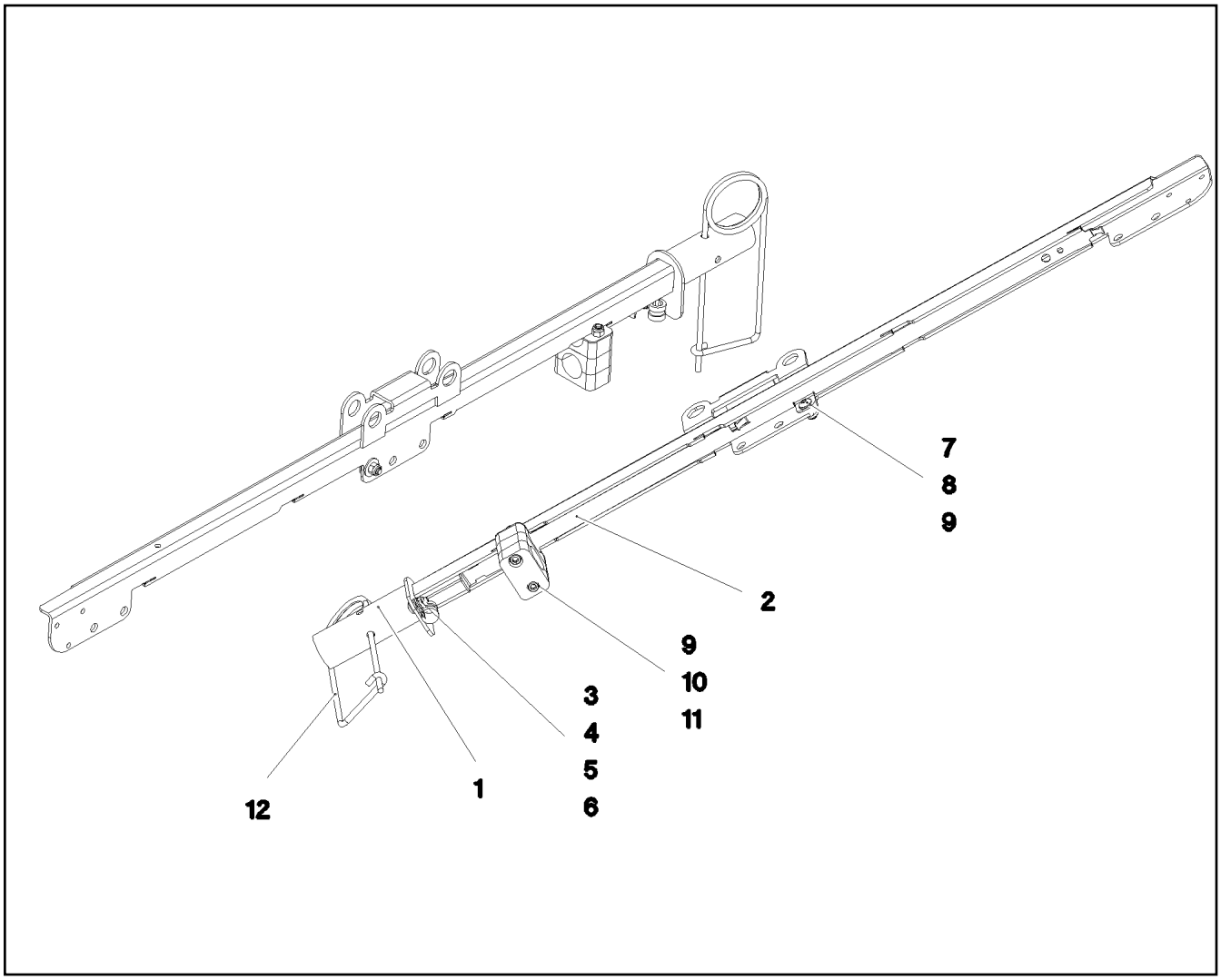

Pos.	Item	Quantity	Description	Bezeichnung
1	968266508	1	LOCATION FIXTURE WELDED	GRUNDHALTER SCHWK.
2	97030182	1	PLATE 1.5X691X50 X5CRNI18-10	BLECH
3	7381679	1	CLAMP DIN 3016-1 10X12XD1 W1-2-CR	SCHELLE
4	10028237	1	BUTTON HEAD SCREW AEHNL.ISO 7380-2	HALBRUNDKOPFSCHRAUBE
5	10301317	1	HEX NUT DIN 985 M5 A2-70	SECHSKANTMUTTER
6	11140403	1	WASHER ISO 7089 5 200HV 480H SPF	SCHEIBE
7	10412851	1	BUTTON HEAD SCREW AEHNL.ISO 7380-2	HALBRUNDKOPFSCHRAUBE
8	10540500	1	WASHER ISO 7093-1 6 200HV-A4	SCHEIBE
9	11004444	3	HEX NUT AEHNL.ISO 7040 M6 A2-70	SECHSKANTMUTTER
10	7005052	3	CLAMP-HALF DIN 3015-1 L 3 R 25 PP SW	KLEMMHAELFTE
11	11088382	2	SOCKET HEAD SCREW ISO 4762 M6X55 A2	ZYLINDERSCHRAUBE
12	433102508	1	RETAINING SPRING 5X122 ISO 2081 FE/ZN8/	SICHERUNGSFEDER

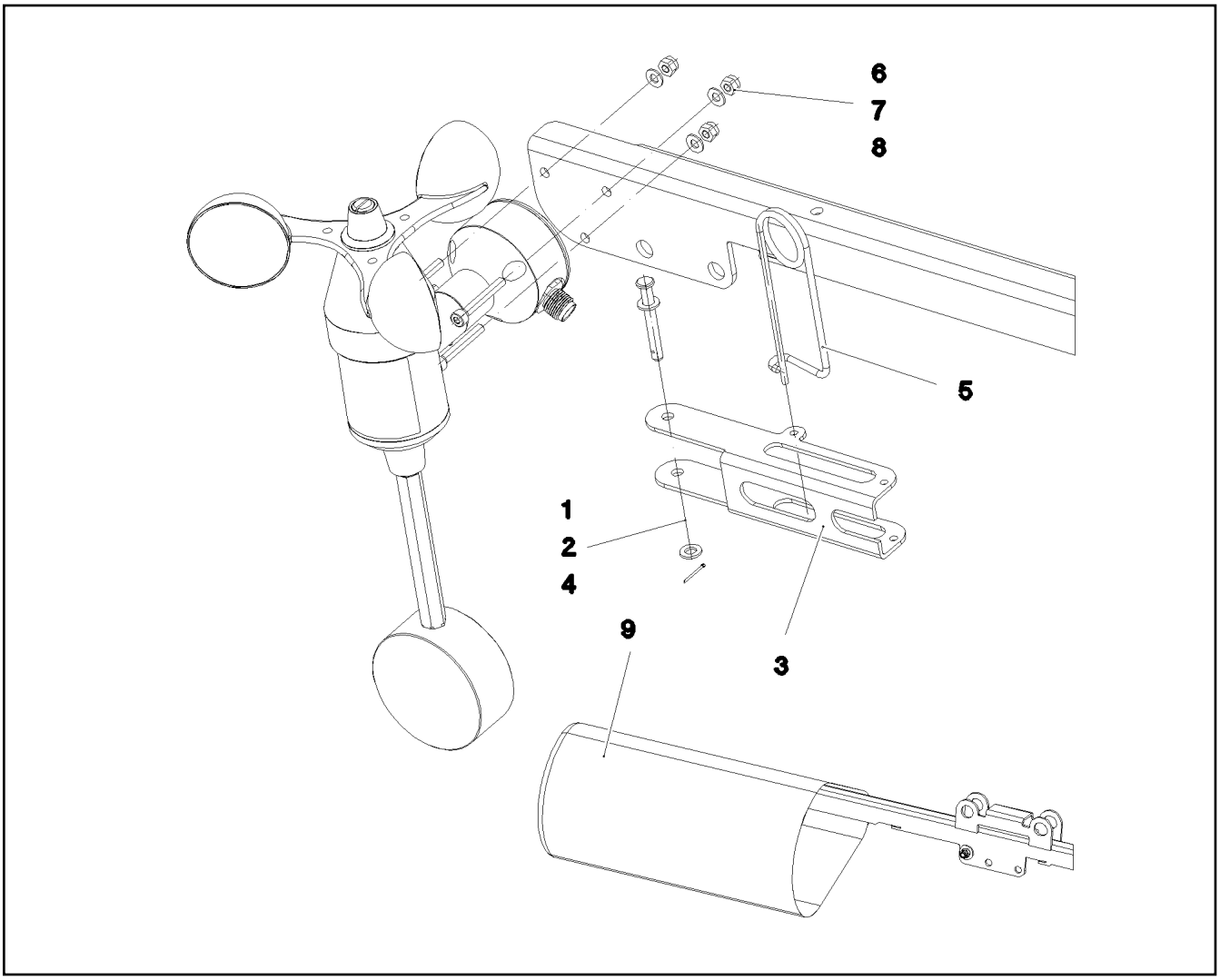

Pos.	Item	Quantity	Description	Bezeichnung
1	451000208	1	PIN DIN 1434 5X40X35 X5CRNI1810	BOLZEN
2	10410193	2	WASHER ISO 7089 5 -A2	SCHEIBE
3	97030562	1	PLATE 2X143X92 X5CRNI18-10	BLECH
4	10180340	1	SPLIT PIN ISO 1234 1,6X14 A2	SPLINT
5	433102808	1	RETAINING SPRING 3X55 VERZ	SICHERUNGSFEDER
6	10875815	3	SOCKET HEAD SCREW ISO 4762 M4X30 8.8	ZYLINDERSCHRAUBE
7	10875611	3	HEX NUT DIN 985 M4 8 480H SPF	SECHSKANTMUTTER
8	10875645	3	WASHER ISO 7089 4 200HV 480H SPF	SCHEIBE
9	97042475	1	HOOD 180X350 GEWEBE ROT	HAUBE

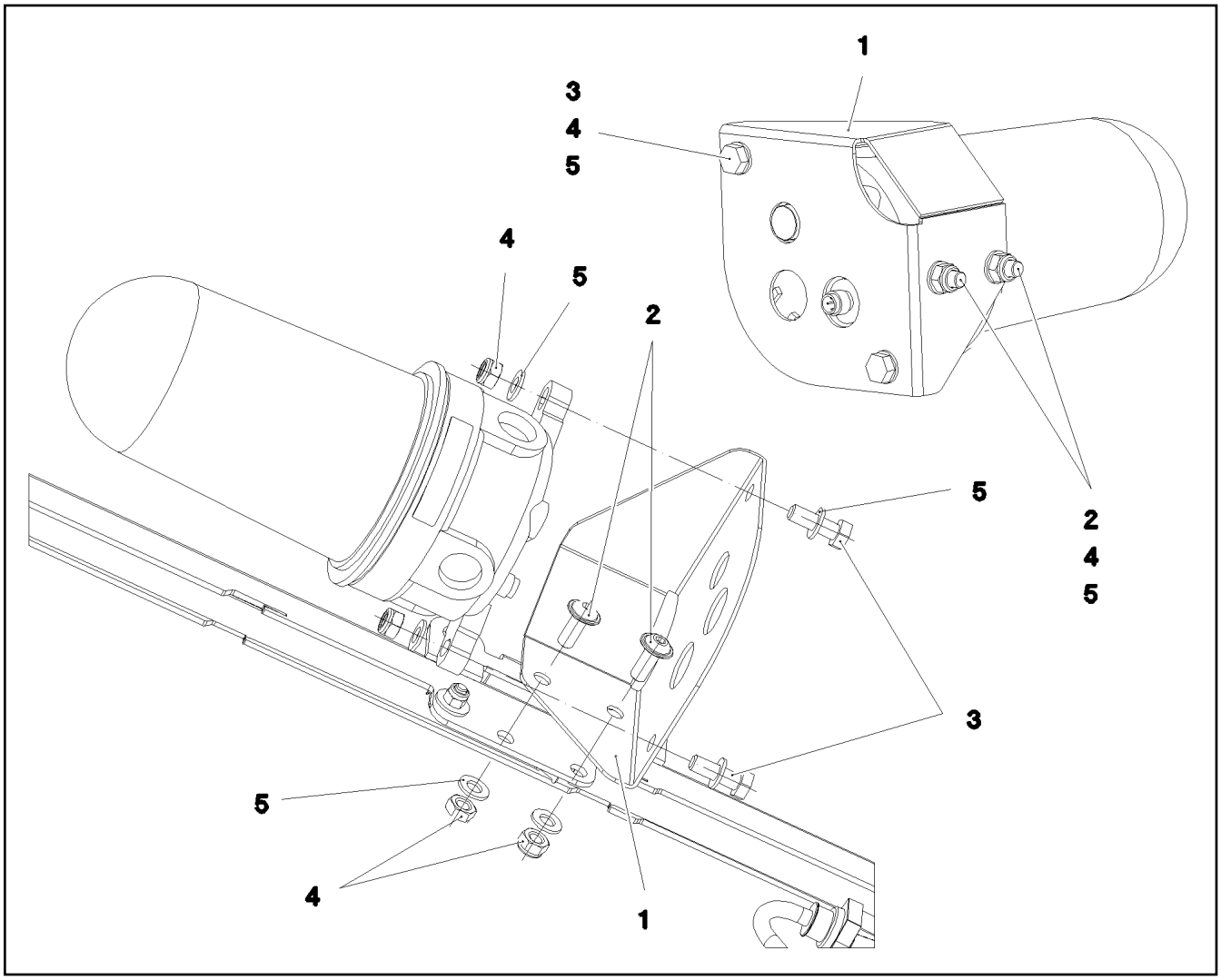

Pos.	Item	Quantity	Description	Bezeichnung
1	97030307	1	PLATE 2X191X185 X5CRNI18-10	BLECH
2	408650608	2	BUTTON HEAD SCREW ISO 7380-2 M8X20 A	HALBRUNDKOPFSCHRAUBE
3	406590105	2	HEX SCREW ISO 4017 M8X25 A2-70	SECHSKANTSCHRAUBE
4	411903108	4	HEX NUT DIN 985 M8 A2-70	SECHSKANTMUTTER
5	420060705	6	WASHER ISO 7089 8 200HV-A2	SCHEIBE

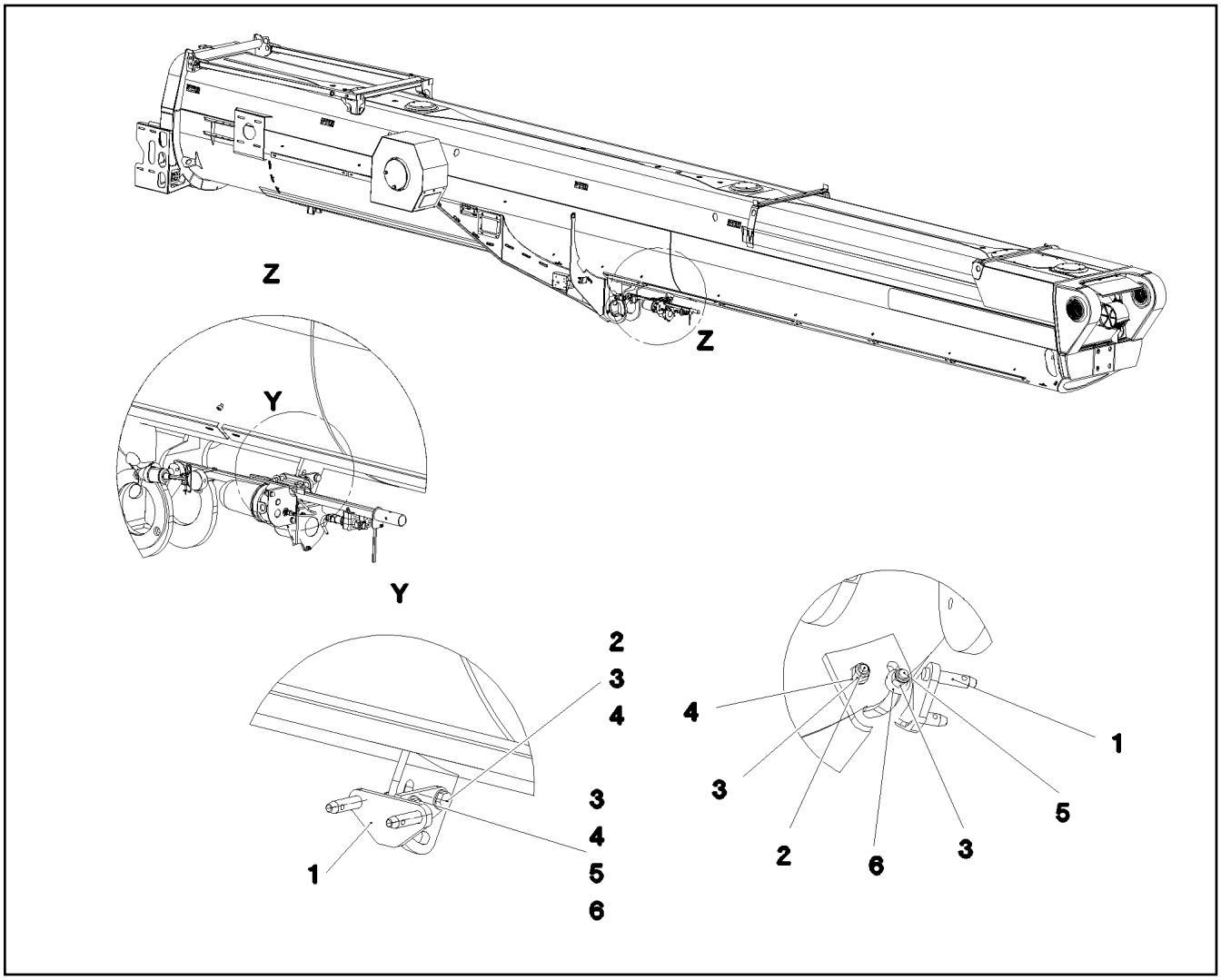

Pos.	Item	Quantity	Description	Bezeichnung
1	968410408	1	MOUNTING WELDED WARNEINRICHTUNG	AUFNAHME SCHWK.
2	11645386	1	HEX SCREW ISO 4017 M12X45 8.8 FLZN SP	SECHSKANTSCHRAUBE
3	11840127	2	HEX NUT ISO 7040 M12 8 FLZN SPF	SECHSKANTMUTTER
4	10289804	3	WASHER ISO 7089 12 300HV FLZN SPF	SCHEIBE
5	11651578	1	HEX SCREW ISO 4014 M12X50 8.8 FLZN SP	SECHSKANTSCHRAUBE
6	10006370	1	WASHER DIN 7349 13 200HV FLZN SPF	SCHEIBE

Pos.	Item	Quantity	Description	Bezeichnung
1	968811608	1	CROSS BEAM DEMONTAGE ⇨ ❑ 719	QUERTRAEGER

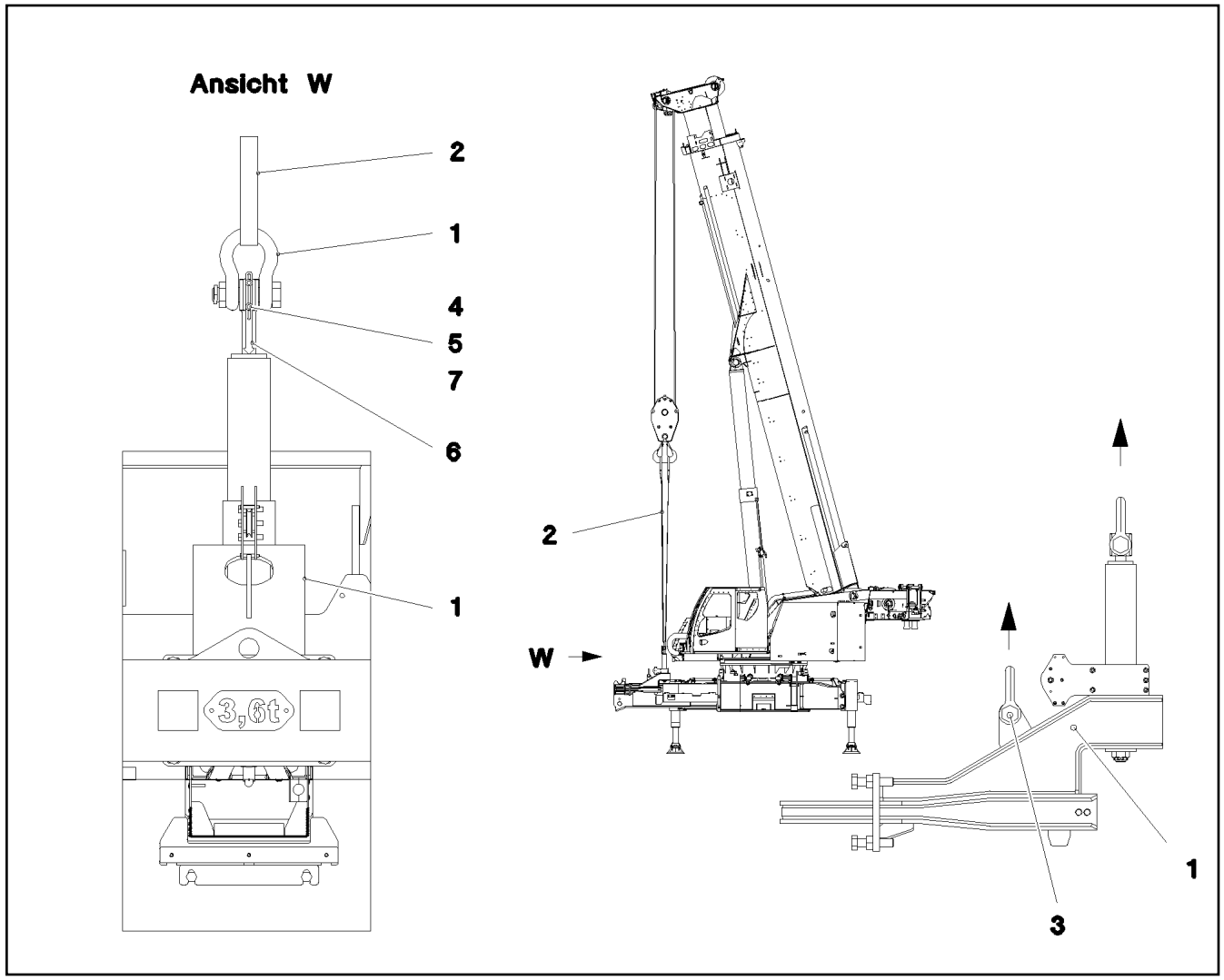

Pos.	Item	Quantity	Description	Bezeichnung
1	968728808	1	CONSOLE PRE-ASS. ⇨ ❑ 720	KONSOLE VORM.
2	10280715	1	ROUND SLING DIN EN 1492-2 2T-4M POLY	RUNDSCHLINGE
4	10441664	2	DISTANCE SLEEVE 15X6,3X25 PA66	DISTANZHUELSE
5	12216183	2	HEX SCREW ISO 4014 M6X40 8.8 480H SPF	SECHSKANTSCHRAUBE
6	97053174	1	PLATE 3X27X206 X5CRNI18-10	BLECH
7	10353667	2	WASHER DIN 7349 6 200HV-A2	SCHEIBE

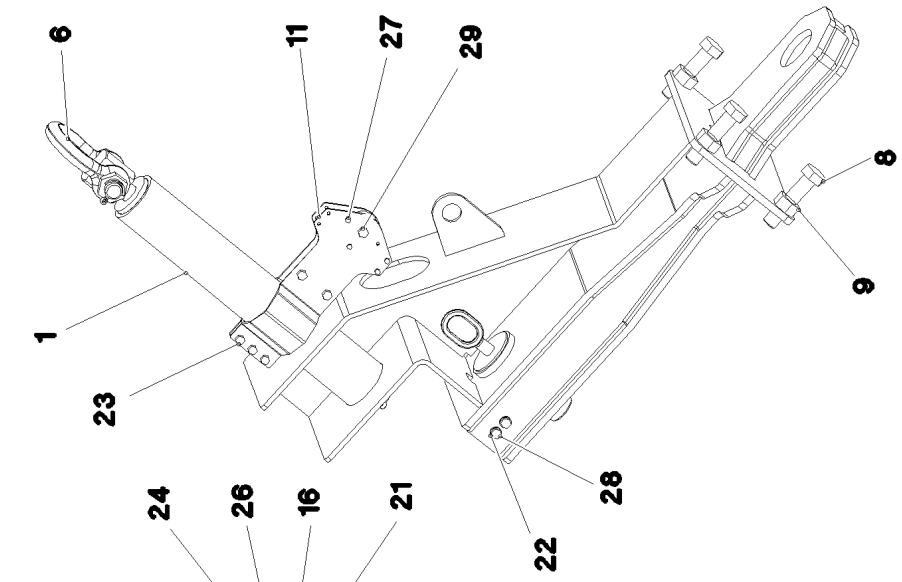

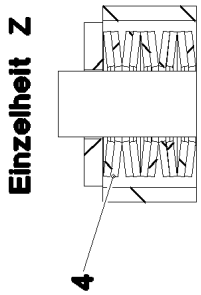

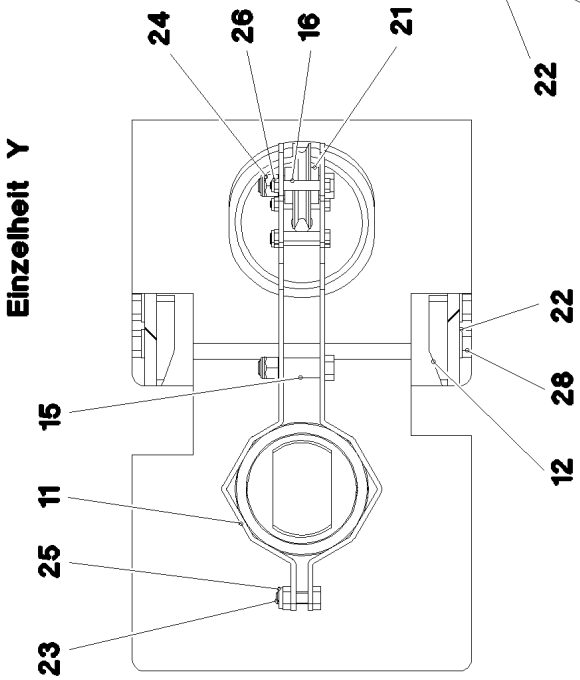

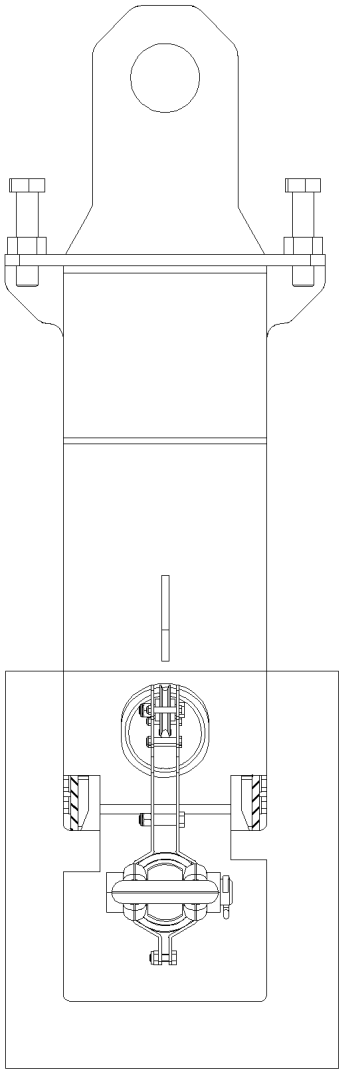

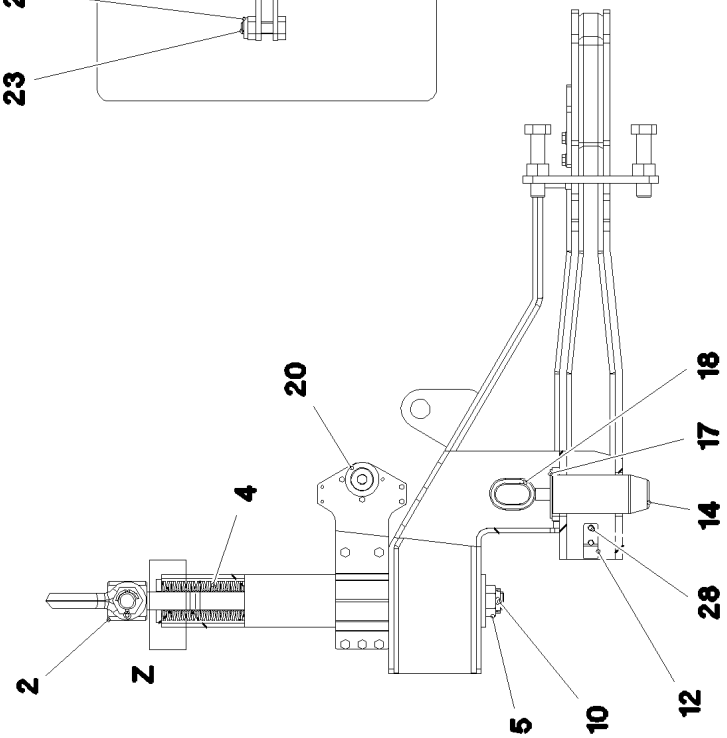

4.12.2020 078146 LIEBHERR	**etk_en_de 047580 LTR 1220** **CONSOLE PRE-ASS.** **KONSOLE VORM.**	❑ 720 (1/2) **968728808**

Pos.	Item	Quantity	Description	Bezeichnung
1	968729008	1	BRACKET WELDED CONST. RAL 9005	KONSOLE SCHWK.
2	97046349	1	THREADED PIN 80.0X816 35NICRMOV125	GEWINDEBOLZEN
4	272012502	130	DISC SPRING 80X41X4	TELLERFEDER
5	10179495	1	CROWN NUT DIN 935 M36 10 FLZN	KRONENMUTTER
6	10283201	1	SHACKLE 12T SPF	SCHAEKEL
8	406607008	4	HEX SCREW ISO 4017 M30X130 10.9 FLZN	SECHSKANTSCHRAUBE
9	10425689	4	HEX NUT ISO 4032 M30 10 FLZN SPF	SECHSKANTMUTTER
10	10180373	1	SPLIT PIN ISO 1234 8X100 St 480H SPF	SPLINT
11	97051275	2	PLATE 4X425X184 S315MC FE//ZNNI8//CN//T	BLECH
12	97051276	2	PLATE 15X30X75 S355MC	BLECH
14	97051278	1	PIN 85.0X200 35NICRMOV125 SPF	BOLZEN
15	97031233	3	SLEEVE 20.0X30 S355J2C+C FE//ZNNI8//CN/	HUELSE
16	97051280	4	DISTANCE TUBE 8.0X30 E235+N	DISTANZROHR
17	97008156	1	WASHER 4X100X100 S315MC FE//ZNNI8//C	SCHEIBE
18	925642908	1	HANDLE GRIP WELDED FE//ZNNI8//CN//T0	GEWINDEGRIFF SCHWK.
19	773404508	2.5	ROPE 6 0,59KN PERLON	SEIL
20	939279608	1	ROLLER RD70X15 PA6G	ROLLE
21	12100254	2	WASHER DIN 7989-2 20 ST FLZN SPF	SCHEIBE
22	10289804	4	WASHER ISO 7089 12 300HV FLZN SPF	SCHEIBE
23	11642358	3	HEX SCREW ISO 4017 M10X30 8.8 FLZN SP	SECHSKANTSCHRAUBE
24	11840127	3	HEX NUT ISO 7040 M12 8 FLZN SPF	SECHSKANTMUTTER
25	10197769	3	HEX NUT DIN 985 M10 8 ZNNI-480H SPF	SECHSKANTMUTTER
26	12102692	4	HEX NUT DIN 985 M6 8 ZNNI-480H SPF	SECHSKANTMUTTER
27	12216201	4	HEX SCREW ISO 4017 M6X45 8.8 480H SPF	SECHSKANTSCHRAUBE
28	11658892	4	HEX SCREW ISO 4017 M12X25 8.8 FLZN SP	SECHSKANTSCHRAUBE
29	11658891	3	HEX SCREW ISO 4014 M12X55 8.8 FLZN SP	SECHSKANTSCHRAUBE

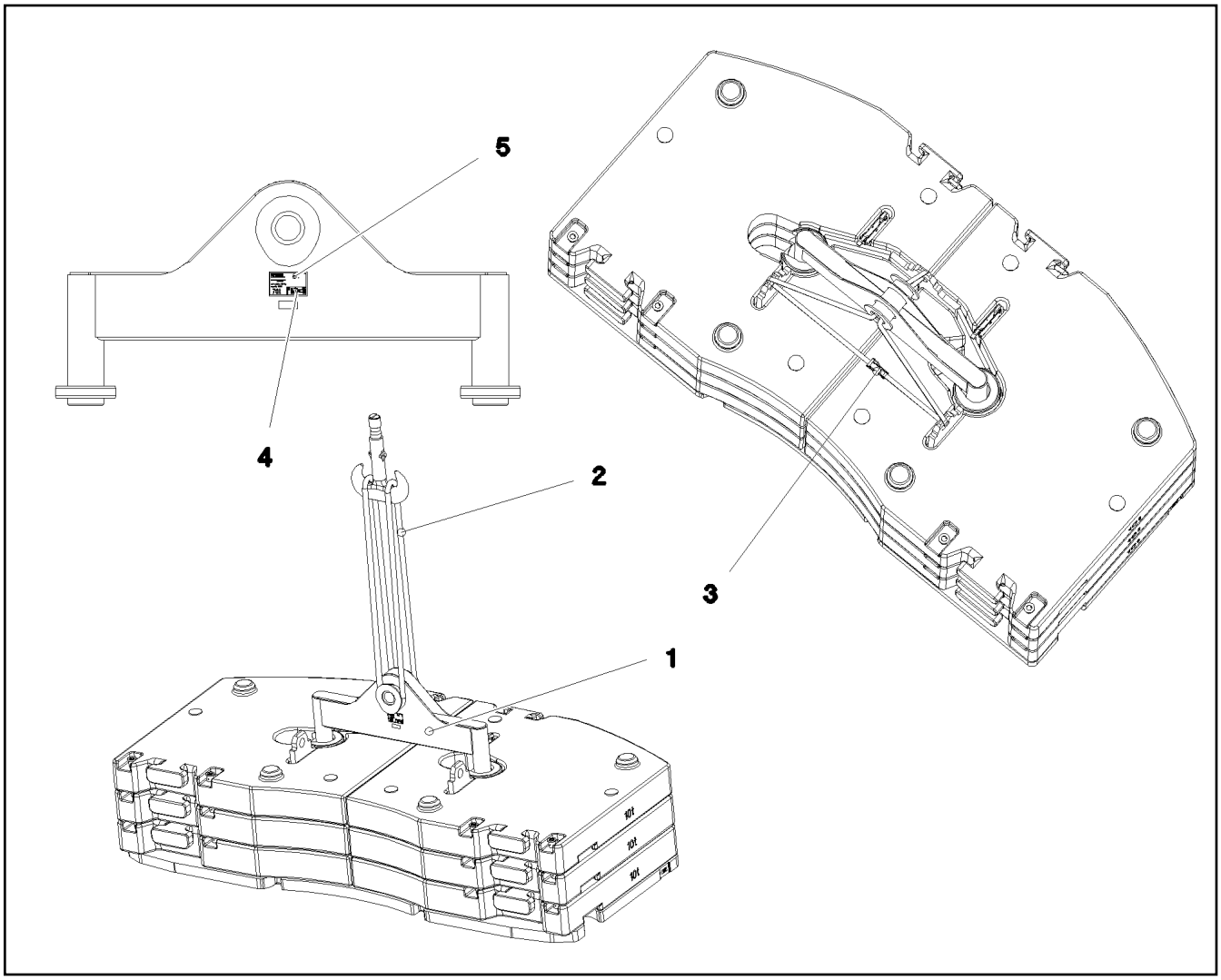

Pos.	Item	Quantity	Description	Bezeichnung
1	968497408	1	CROSS-MEMBER LMZ-70T SPF	TRAVERSE SCHWK.
2	10331368	1	ROPE SLING EN 13414-3 35.5T-8.4M ST VER	ANSCHLAGSEIL
3	779034708	1	LASHING STRAP EN 12195-2 6MX35MM SPF	ZURRGURT
4	97067623	2	SIGN PROJEKT TYP KLEBEFOLIE SPF	SCHILD
5	97067626	2	SIGN 160X100 KLEBEFOLIE SPF	SCHILD

Pos.	Item	Quantity	Description	Bezeichnung
5	12103676	1	THRUST BEARING	AXIALLAGER

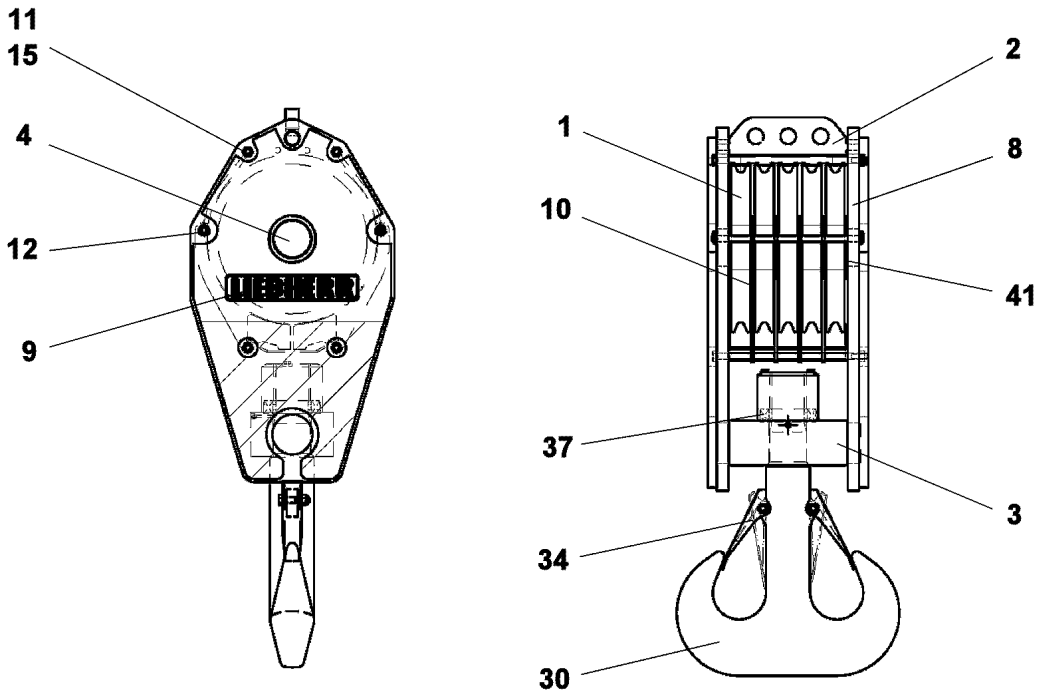

Pos.	Item	Quantity	Description	Bezeichnung
1	925203408	5	ROPE PULLEY CPL. SPF ⇨ ❑ 725	SEILROLLE KPL.
2	11347027	1	ROPE FIXING POINT	SEILFESTPUNKT
3	11347024	1	ROTATABLE BEAM	SCHWENKTRAVERSE
4	11658587	1	DISK PIN	SCHEIBENBOLZEN
8	11658586	2	SIDE PLATE	SEITENBLECH
9	10663718	2	SIGN 88X450X0,1 FOLIE	SCHILD
10	571716008	1	ROPE GUARD CPL	SEILSCHUTZ KPL.
11	11321016	4	SPACER BOLT	DISTANZBOLZEN
12	571716108	2	ROPE GUARD CPL	SEILSCHUTZ KPL.
(1)	10875869	2	SAFETY PLUG W HINGE-LID 5X29X4,7X25 4	SICHERHEITSKLAPPSTECKER
15	10875618	8	HEX NUT ISO 4032 M20 8 FLZN SPF	SECHSKANTMUTTER
30	11347028	1	TWIN HOOK	DOPPELHAKEN
34	571716208	2	SAFETY TRAP	SICHERUNGSFALLE
37	746607401	1	CYLINDER ROLLER THRUST BEARING DIN	AX.ZYL.ROLLENLAGER
41	11494286	2	COVER PLATE	ABDECKBLECH

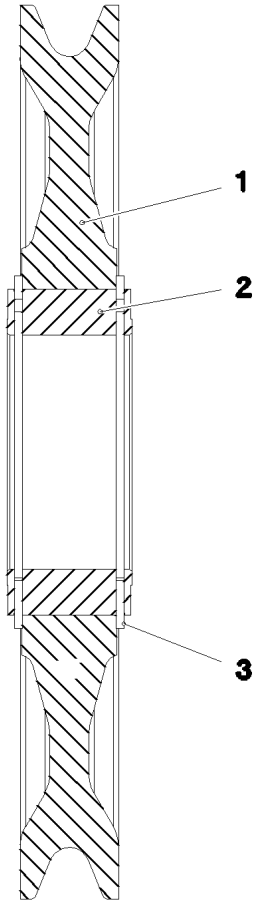

Pos.	Item	Quantity	Description	Bezeichnung
1	773953608	1	ROPE PULLEY D=572/506/210X63 PA6G SP	SEILROLLE
2	746506608	1	ROLLER BEARING 150X210X80	WAELZLAGER
3	10872700	2	LOCKING RING DIN 471 210X5	SICHERUNGSRING

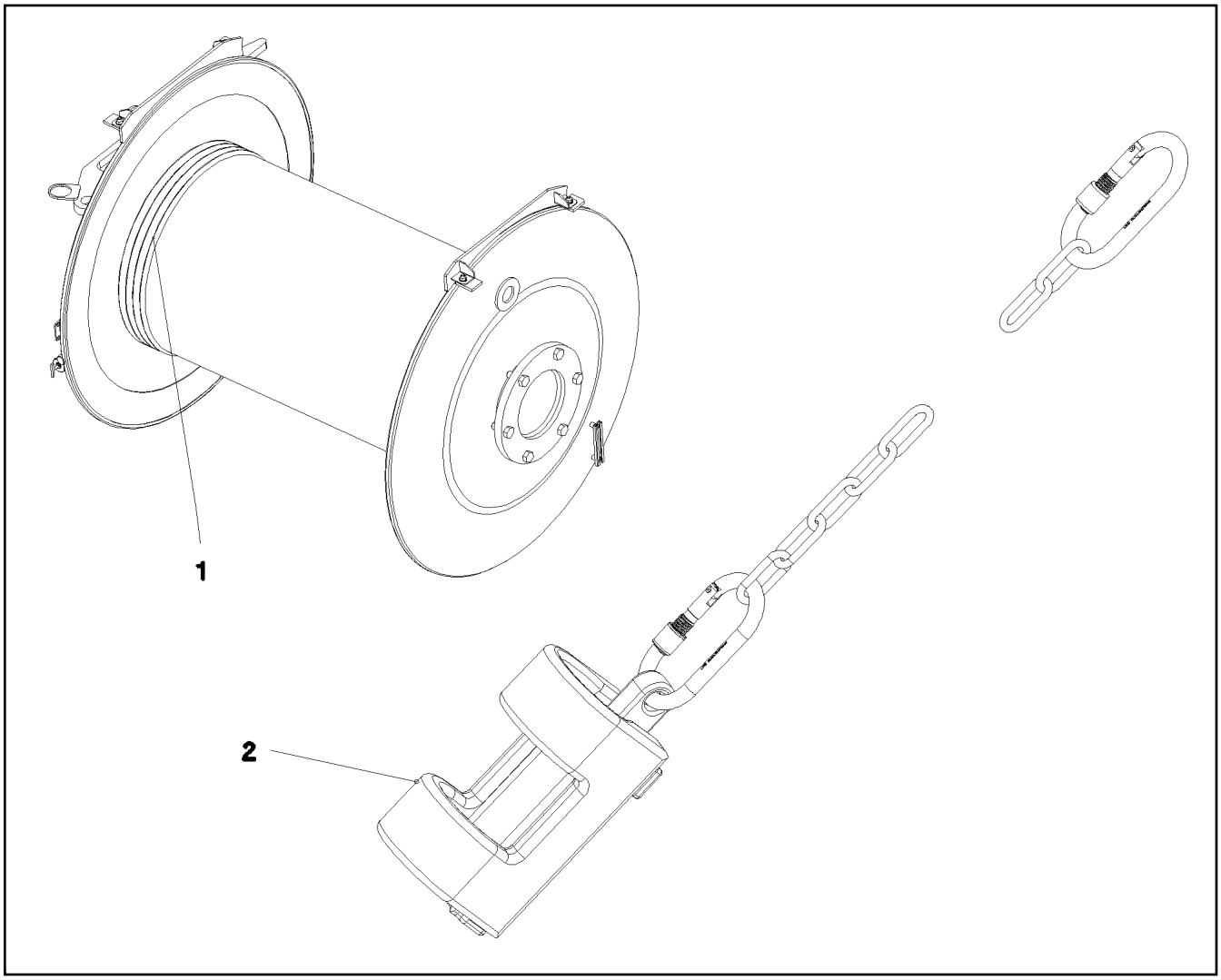

Pos.	Item	Quantity	Description	Bezeichnung
1	773444090	1	HOIST ROPE 23X280M -40°C SPF	HUBSEIL
2	96013575	1	HOIST LIM.SWITCH PLUMMET CPL ⇨ ❑ 664	HUBENDSCHALTER GEWICHT K

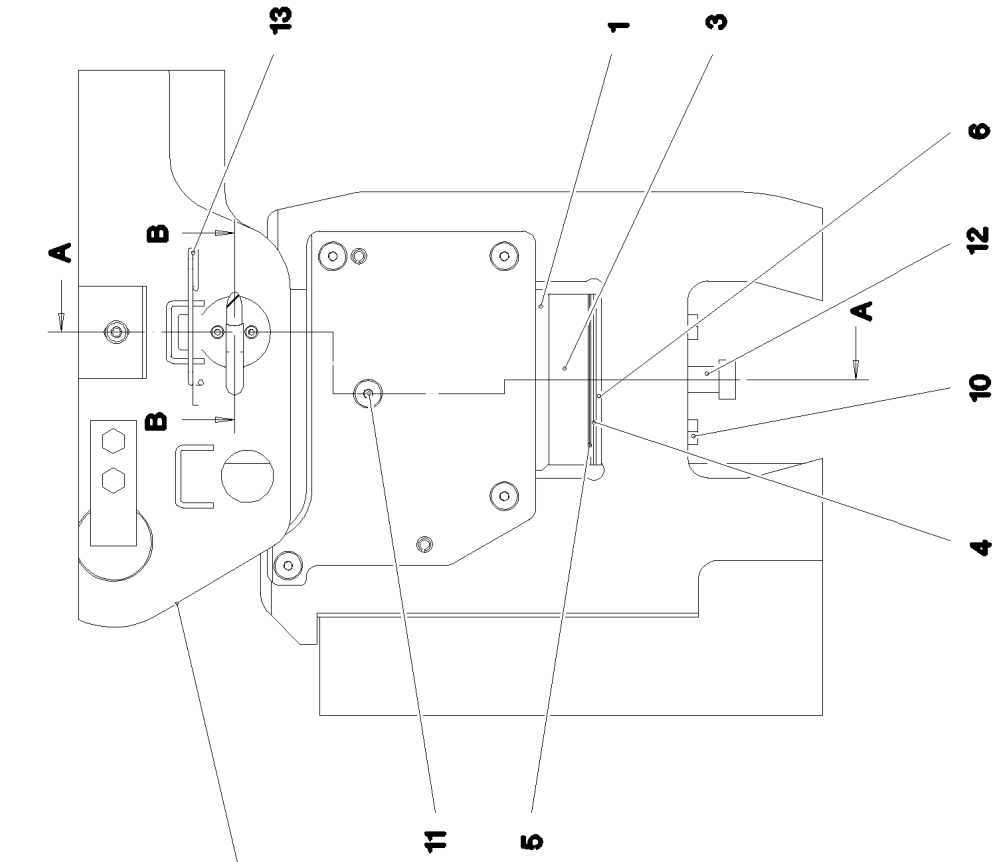
13
1
3
6
12
A
B
B
A
10
4
11
5

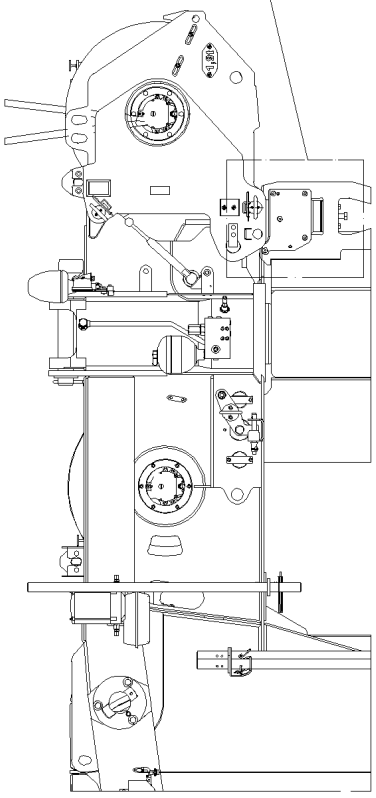

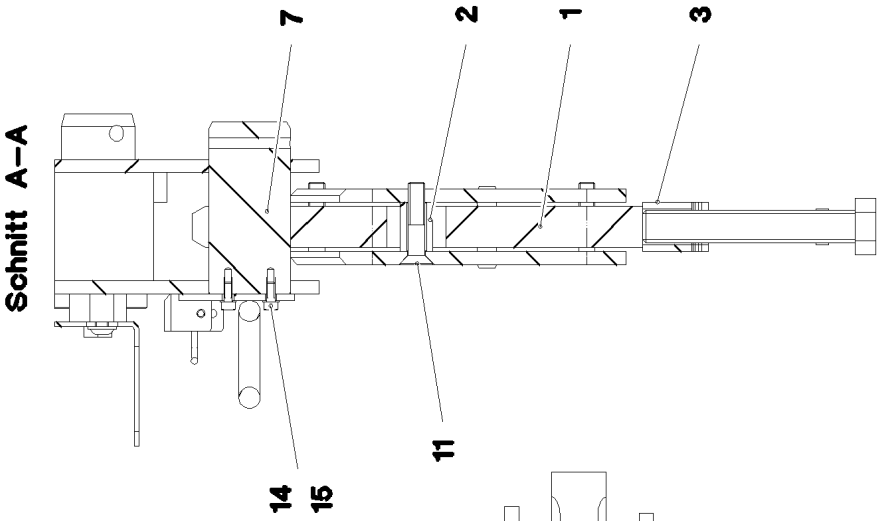
Schnitt A–A
7
2
1
3
14
15
11

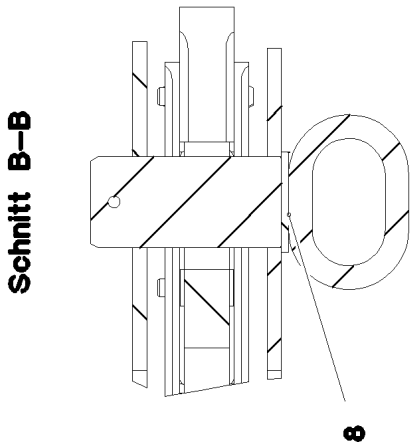
Schnitt B–B
8

Pos.	Item	Quantity	Description	Bezeichnung
1	97030323	2	PLATE 25X202X279 S690QL SPF	BLECH
2	97031233	2	SLEEVE 20.0X30 S355J2C+C FE//ZNNI8//CN/	HUELSE
3	97031659	2	PLATE 30X130X30 S355J2+N FE//ZNNI8//CN/	BLECH
4	97031660	8	PLATE 2X130X30 DC01 FE//ZNNI8//CN//T0	BLECH
5	97031661	8	PLATE 1X130X30 DC01 FE//ZNNI8//CN//T0	BLECH
6	97031684	8	PLATE 4X130X30 S315MC FE//ZNNI8//CN//T	BLECH
7	97031196	2	PIN 55.0X105 35NICRMOV125 SPF	BOLZEN
8	967969708	2	HANDLE WELD.CONST. FE//ZNNI8//CN//T0	GRIFF SCHWK.
10	10875517	4	HEX SCREW ISO 4017 M12X95 8.8 FLZN SP	SECHSKANTSCHRAUBE
11	12100586	2	COUNTERSUNK SCREW ISO 10642 M10X50	SENKSCHRAUBE
12	12225211	2	HEX SCREW ISO 4017 M20X130 8.8 FLZN SP	SECHSKANTSCHRAUBE
13	433101208	2	RETAINING SPRING 4X68 ISO 2081 FE/ZN8/	SICHERUNGSFEDER
14	11140403	4	WASHER ISO 7089 5 200HV 480H SPF	SCHEIBE
15	11690042	4	SOCKET HEAD SCREW ISO 4762 M5X12 8.8	ZYLINDERSCHRAUBE

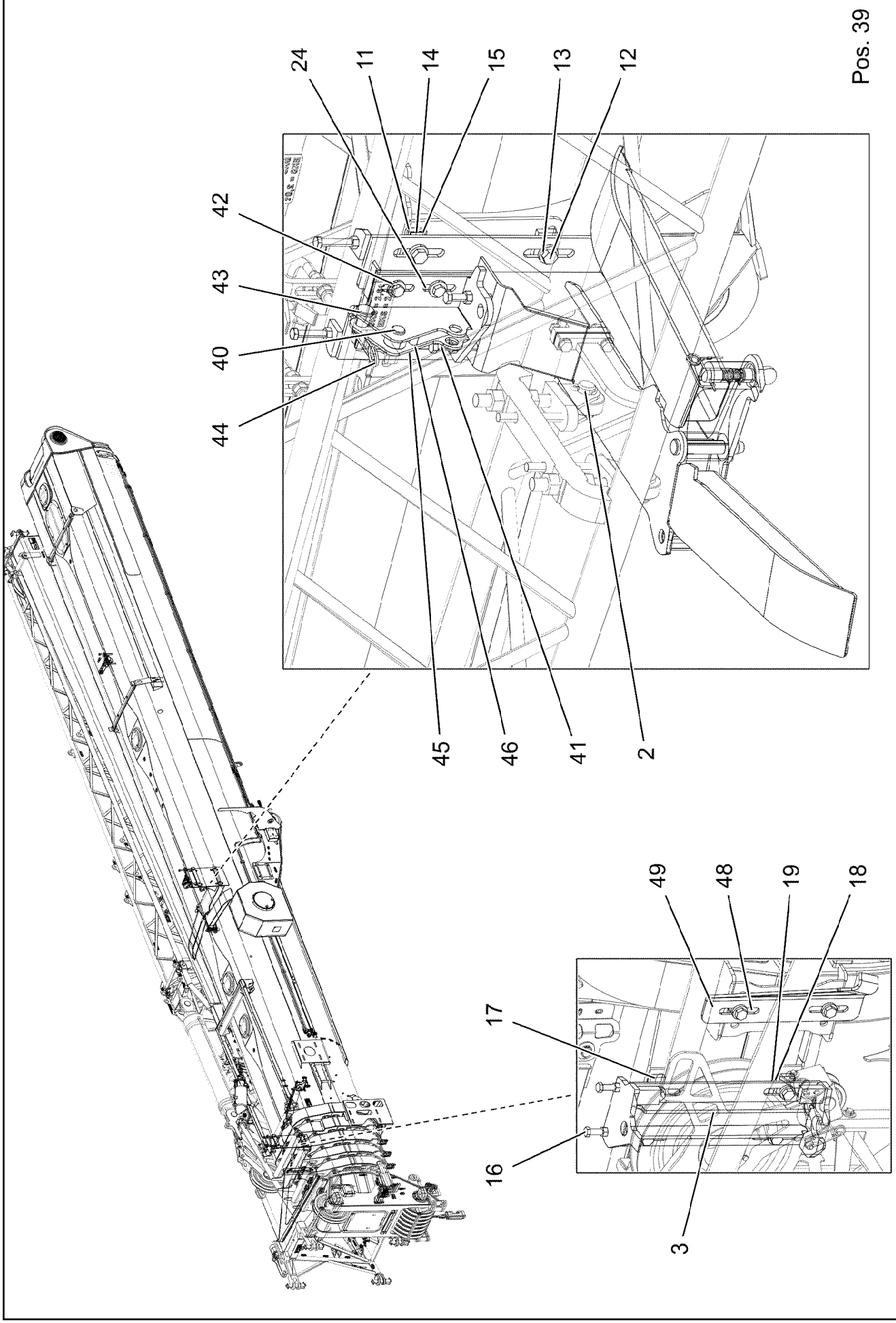
Pos. 39
24
11
14
15
13
12
42
43
40
44
45
46
41
2
49
48
19
18
17
16
3

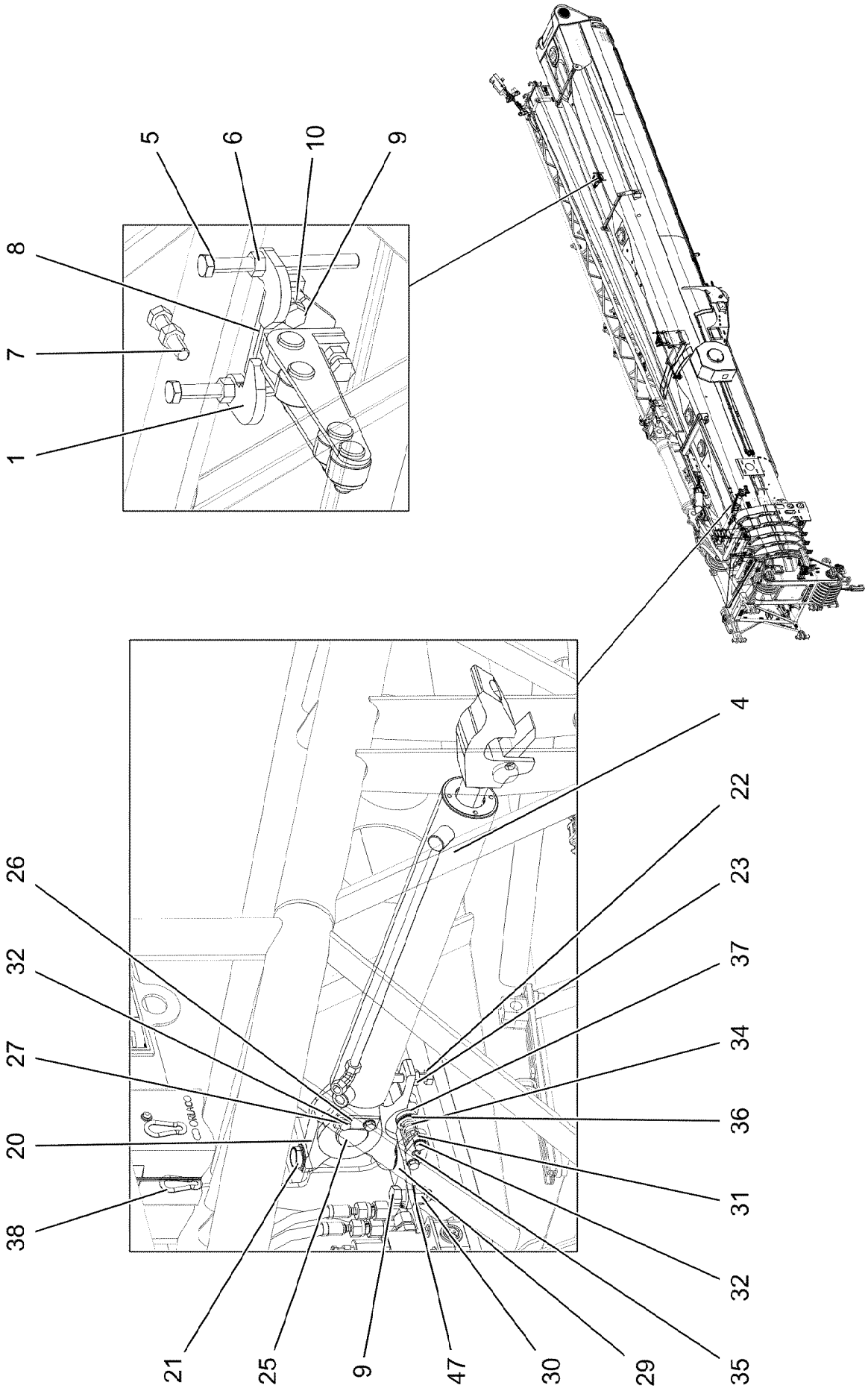
5
6
10
9
8
7
1
4
22
23
37
34
36
31
32
35
29
30
47
9
25
21
26
32
27
20
38

Pos.	Item	Quantity	Description	Bezeichnung
1	929582108	1	MOUNTING PRE-ASS. ⇨ ❑ 732	HALTERUNG VORM.
2	923285508	1	FOLDING BRACKET PRE-ASS. ⇨ ❑ 733	KLAPPKONSOLE VORM.
3	925042108	1	BRACKET WELDED CONST.	KONSOLE SCHWK.
4	512363708	1	HYDRO CYLINDER 65/36-480 SPF ⇨ ❑ 734	HYDROZYLINDER
5	10179032	4	HEX SCREW ISO 4017 M16X180 8.8 FLZN SP	SECHSKANTSCHRAUBE
6	10875617	9	HEX NUT ISO 4032 M16 8 FLZN SPF	SECHSKANTMUTTER
7	12223051	1	HEX SCREW ISO 4017 M16X70 8.8 FLZN SP	SECHSKANTSCHRAUBE
8	953147708	1	THREADED PLATE 15X40X130 S690QL	GEWINDEPLATTE
9	10875803	8	HEX SCREW ISO 4017 M16X45 8.8 FLZN SP	SECHSKANTSCHRAUBE
10	10875866	2	WASHER DIN 7989-2 16 -ST FLZN SPF	SCHEIBE
11	956347808	2	PLATE 15X45X320 S690QL	BLECH
12	10875805	10	HEX SCREW ISO 4017 M20X50 8.8 FLZN SP	SECHSKANTSCHRAUBE
13	4600604	10	WASHER DIN 7349 21 100HV FLZN SPF	SCHEIBE
14	956348808	1	PLATE 1x320x35 DC01+ZE	BLECH
15	956348908	1	PLATE 2x320x35 DC01+ZE	BLECH
16	12225311	2	HEX SCREW ISO 4017 M16X120 10.9 FLZN	SECHSKANTSCHRAUBE
17	953608508	2	PLATE 20X45X230 S690QL	BLECH
18	949361408	1	BASE 1X200X70 DC01 FE//ZNNI8//CN//T0	UNTERLAGE
19	949362208	1	BASE 2X200X70 DC01 FE//ZNNI8//CN//T0	UNTERLAGE
20	955552508	1	TRAVERSE 30X161X190 S690QL	TRAVERSE
21	708011608	2	DU BUSHING	DU-BUCHSE
22	11840136	2	HEX SCREW ISO 4017 M12X50 8.8 FLZN	SECHSKANTSCHRAUBE
23	10875616	2	HEX NUT ISO 4032 M12 8 FLZN SPF	SECHSKANTMUTTER
24	956348108	2	PLATE 15X40X140 S690QL	BLECH
25	944029908	1	PIN RD35X71 35NICRMOV125 GASN. SPF	BOLZEN
26	997040101	1	AXLE HOLDER LN 4/1 S235JR+AR ZNNI	ACHSHALTER
27	11651612	2	HEX SCREW ISO 4017 M8X16 8.8 480H SPF	SECHSKANTSCHRAUBE
28	10289803	4	WASHER ISO 7089 8 300HV 480H SPF	SCHEIBE
29	955552608	1	PLATE 8X70X182 S960QL	BLECH
30	10875859	2	HEX NUT ISO 7040 M16 8 FLZN SPF	SECHSKANTMUTTER
31	955974308	1	PLATE 8X30X58 S355MC FE//ZNNI8//CN//T0	BLECH
32	11651767	2	HEX SCREW ISO 4017 M8X20 8.8 480H SPF	SECHSKANTSCHRAUBE
34	720012608	1	PRESSURE SPRING EN10270-3	DRUCKFEDER
35	10875876	1	DOWEL PIN ISO 8752 12X85 480H SPF	SPANNSTIFT
36	10875863	1	SPHERICAL WASHER DIN 6319 17 480H SP	KUGELSCHEIBE
37	10875862	1	TAPERED SOCKET DIN 6319 19 480H SPF	KEGELPFANNE
38	744010208	2	SNAP HOOK DIN 5299 C 60X6-120KG ST V	KARABINERHAKEN
39	740001808	0.3	KNOTTED-LINK CHAIN DIN 5686 2,5 GALV.V	KNOTENKETTE
40	923879808	1	CONSOLE PRE-ASS. ⇨ ❑ 735	KONSOLE VORM.
41	10875518	2	HEX SCREW ISO 4017 M16X100 8.8 FLZN SP	SECHSKANTSCHRAUBE
42	4600021	4	WASHER DIN 7349 17 200HV FLZN SPF	SCHEIBE
43	451426608	1	PIN DIN 1436 25X55X45 42CRMO4 GASN. SP	BOLZEN
44	433100908	1	RETAINING SPRING 4,5X98 ISO 2081 FE/ZN	SICHERUNGSFEDER
45	956348608	1	PLATE 1X40X140 DC01+ZE	BLECH
46	956348708	1	PLATE 2X40X140 DC01+ZE	BLECH
47	10289806	2	WASHER ISO 7089 16 300HV FLZN SPF	SCHEIBE
48	974911108	1	THREADED PLATE 20X40X315 S690QL	GEWINDEPLATTE
49	975221808	1	PLATE 8X1054X560 S700MC	BLECH

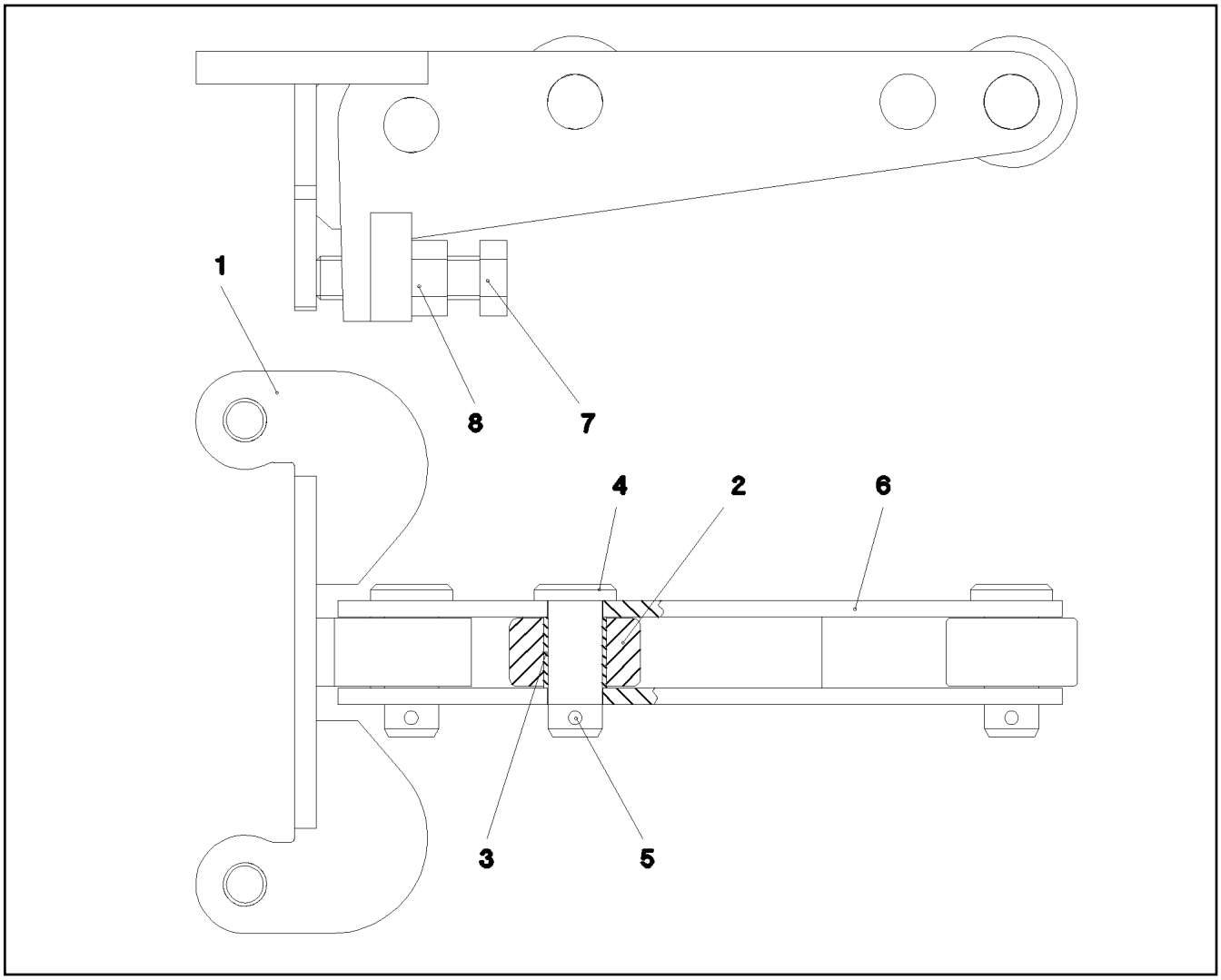

Pos.	Item	Quantity	Description	Bezeichnung
1	929582208	1	MOUNTING WELDED	HALTERUNG SCHWK.
2	947868208	2	ROLLER 50.0X25 S355J2G3 FE//ZNNI8//CN//T	ROLLE
3	708010008	2	DU BUSHING	DU-BUCHSE
4	10875669	3	PIN DIN 1435 20X50X43 42CRMO4 GASN. SP	BOLZEN
5	10180359	3	SPLIT PIN ISO 1234 5X40 St 480H SPF	SPLINT
6	929591608	1	ROLLER CARRIER WELDED	ROLLENTRAEGER SCHWK.
7	406603408	1	HEX SCREW ISO 4017 M16X60 10.9 FLZN SP	SECHSKANTSCHRAUBE
8	411514608	1	HEX NUT ISO 4032 M16 8 BLANK	SECHSKANTMUTTER

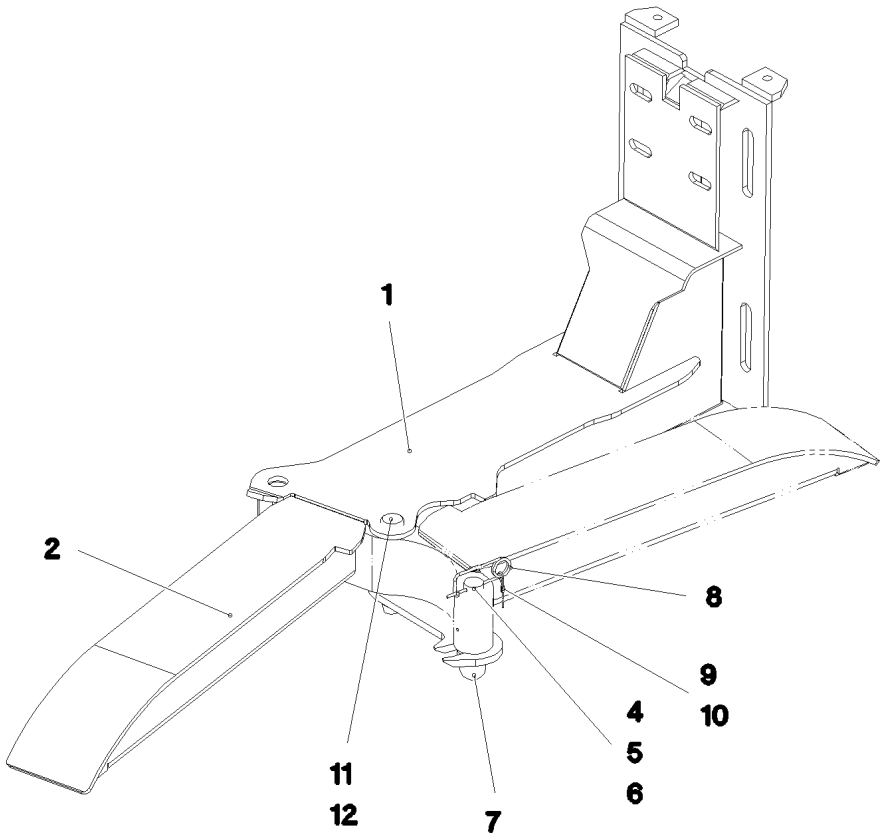

Pos.	Item	Quantity	Description	Bezeichnung
1	922849008	1	FOLDING BRACKET ST.CONST. SPF	KLAPPKONSOLE SCHWK.
2	96020727	1	FOLDING PART WELDED SPF	KLAPPTEIL SCHWK.
4	956349008	1	PIN RD30X107 42CRMO4+QT	BOLZEN
5	956349108	1	PIN RD49.5X58 42CRMO4+QT	BOLZEN
6	720008508	1	PRESSURE SPRING DIN 2098 2X16X68 X1	DRUCKFEDER
7	704004208	1	SPHERICAL KNOB DIN 319 C40XM10 FS	KUGELKNOPF
8	433101208	1	RETAINING SPRING 4X68 ISO 2081 FE/ZN8/	SICHERUNGSFEDER
9	11160431	0.3	ROPE 2 2,3KN EDELSTAHL	SEIL
10	11170565	2	FERRULE 2 CU	PRESSKLEMME
11	938865908	1	PIN 35.0X165 35NICRMOV125 SPF	BOLZEN
12	10180364	1	SPLIT PIN ISO 1234 6,3X50 St 480H SPF	SPLINT

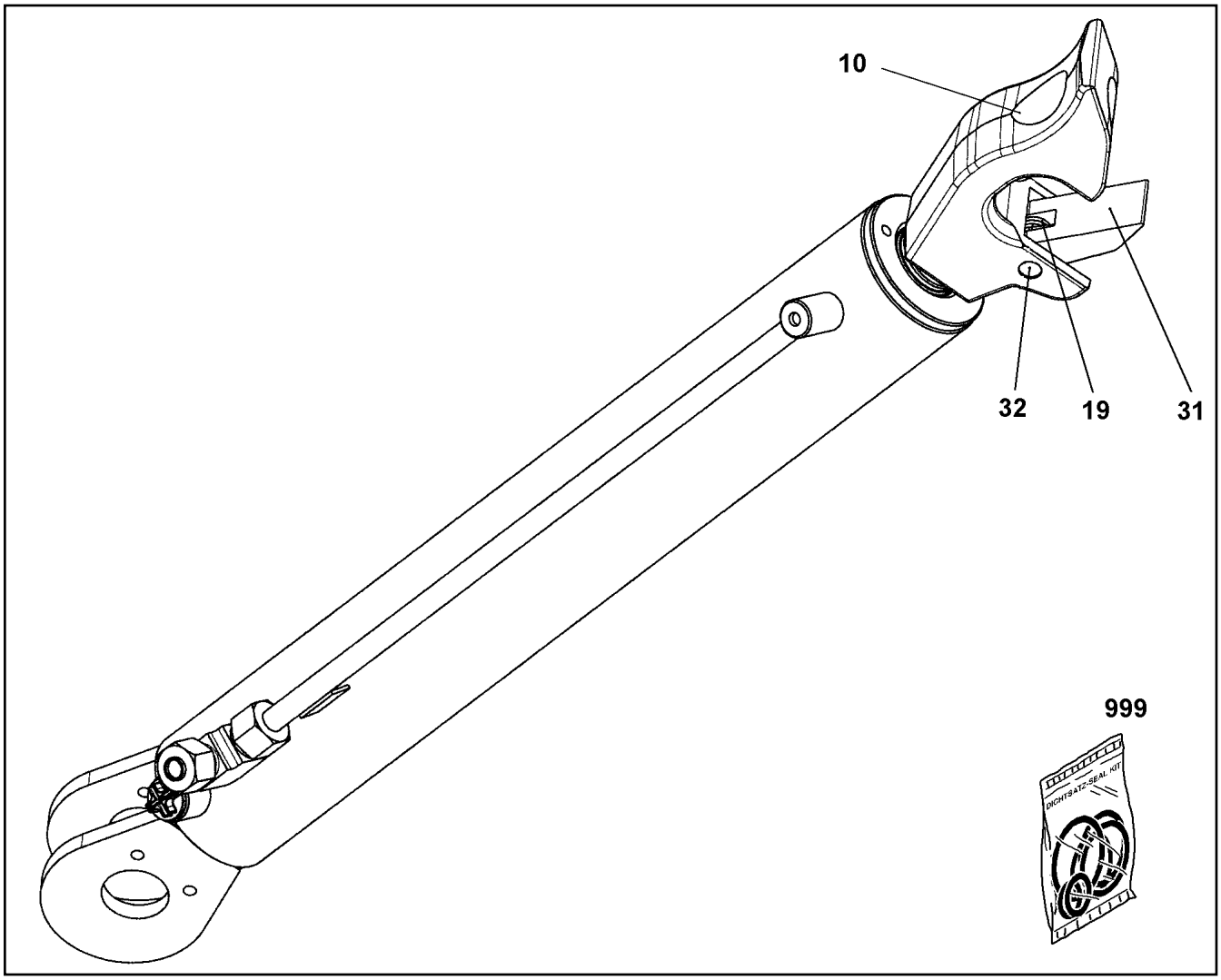

Pos.	Item	Quantity	Description	Bezeichnung
10	11004031	1	CLAW	KLAUE
19	571741908	1	LEG SPRING 2,5X13,5	SCHENKELFEDER
31	11490010	1	LATCH	KLINKE
32	430709608	1	PARALLEL PIN DIN 6325 12M6X50	ZYLINDERSTIFT
999	571496708	1	SEAL KIT	DICHTSATZ

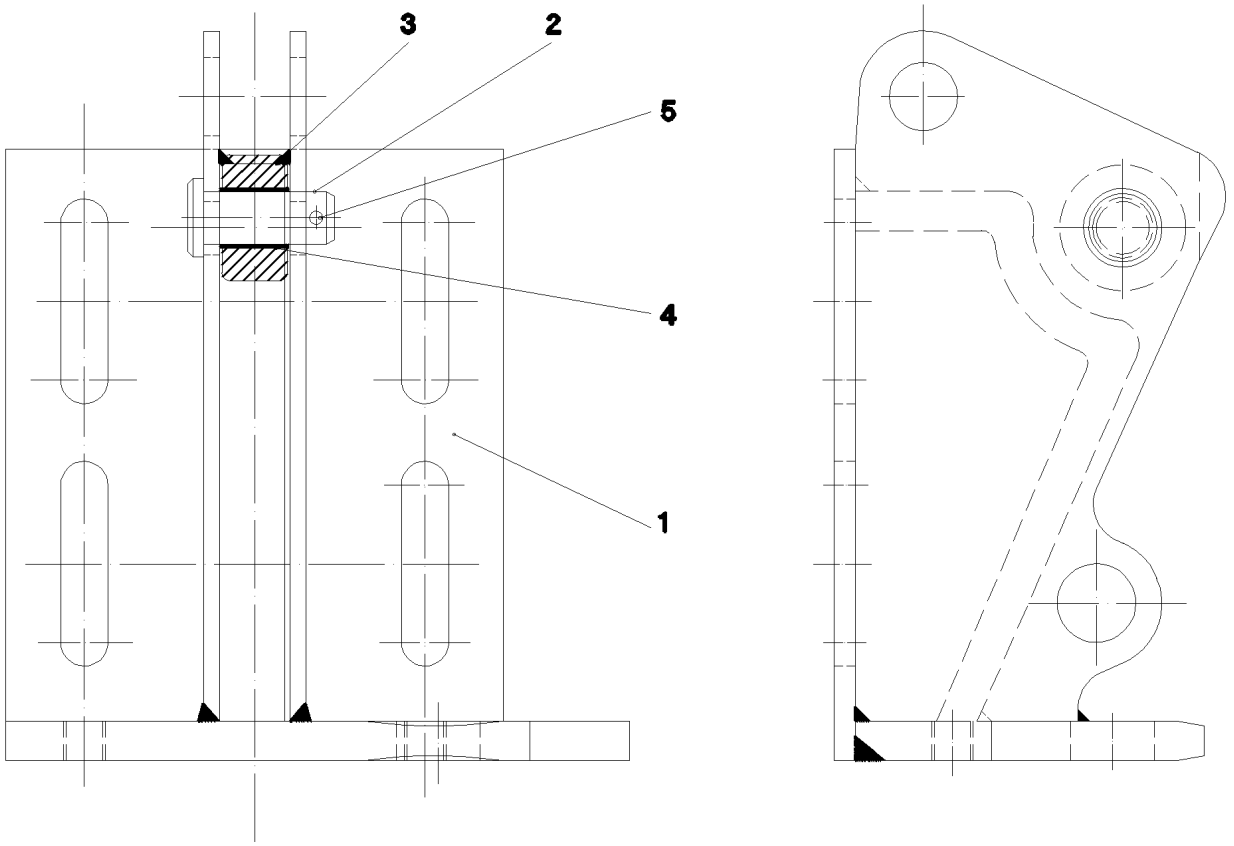

Pos.	Item	Quantity	Description	Bezeichnung
1	923982608	1	BRACKET WELDED CONST.	KONSOLE SCHWK.
2	10875669	1	PIN DIN 1435 20X50X43 42CRMO4 GASN. SP	BOLZEN
3	947868208	1	ROLLER 50.0X25 S355J2G3 FE//ZNNI8//CN//T	ROLLE
4	708010008	1	DU BUSHING	DU-BUCHSE
5	10180359	1	SPLIT PIN ISO 1234 5X40 St 480H SPF	SPLINT

Pos.	Item	Quantity	Description	Bezeichnung
1	917268208	1	LADDER ATTACHMENT ⇨ ❑ 737	LEITER ANBAU
2	968090008	1	MOUNTING HOOK ROD ⇨ ❑ 738	HAKENSTANGE ANBAU
3	773326508	1	ROPE SLING -5M PP SPF	ANSCHLAGSEIL

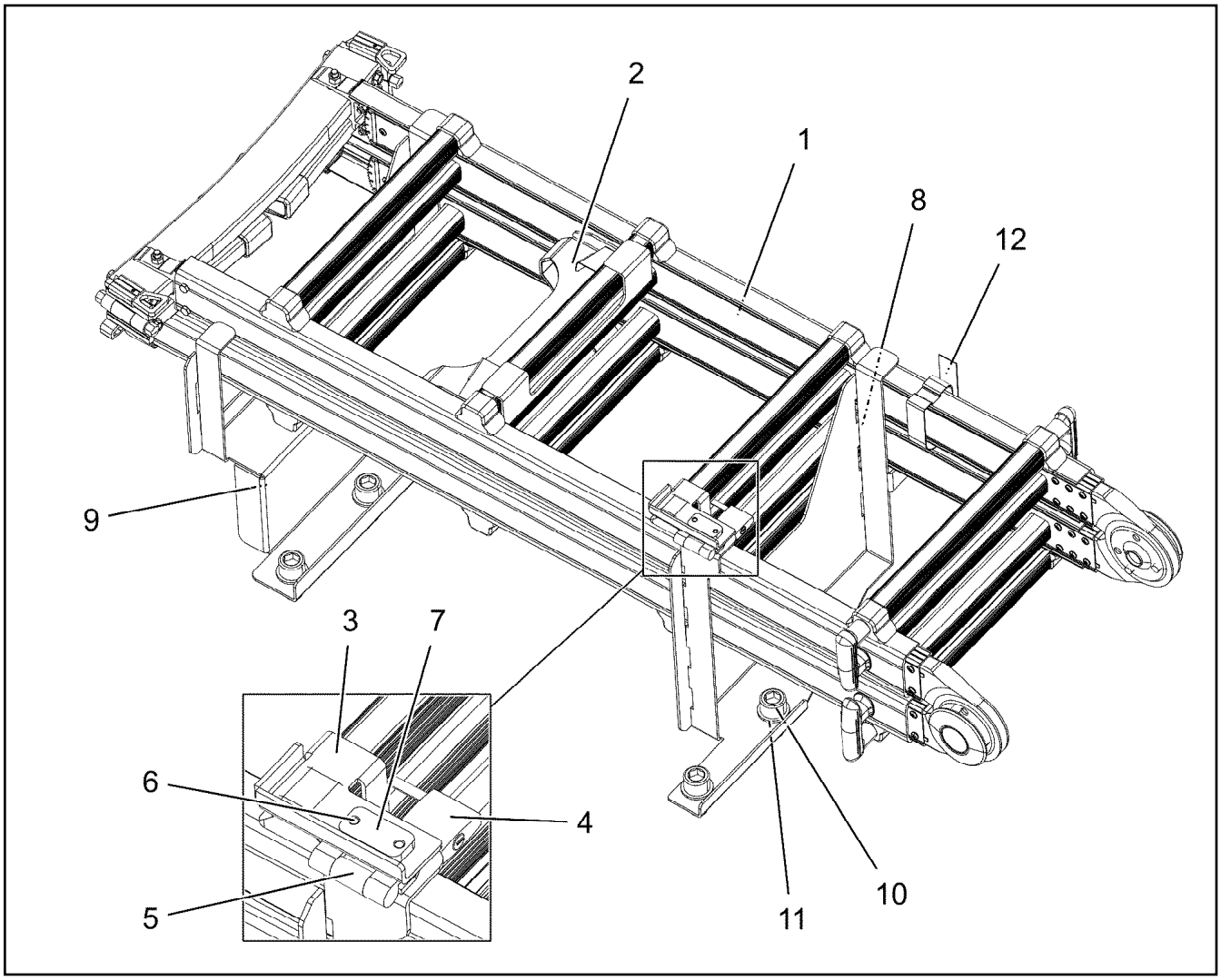

Pos.	Item	Quantity	Description	Bezeichnung
1	10877074	1	MULTI-PURPOSE LADDER 4X4-890X1,25M A	MEHRZWECKLEITER
2	10326792	1	LADDER BRACKET	LEITERHALTERUNG
3	97006497	1	PLATE 3X75X145 DC01 FE//ZNNI8//CN//T0	BLECH
4	885252008	1	PADLOCK	VORHAENGESCHLOSS
5	704228108	1	HINGE 35X35X50/180° ST FE//ZN12//B	SCHARNIER
6	10875809	4	COUNTERSUNK SCREW DIN 7991 M6X12 8	SENKSCHRAUBE
7	97053770	2	THREADED PLATE 6X20X40 S355MC FE//ZN	GEWINDEPLATTE
8	97034193	1	PLATE 3X1039X407 DC01 FE//ZNNI8//CN//T0	BLECH
9	97034194	1	PLATE 3X514X788 DC01 FE//ZNNI8//CN//T0	BLECH
10	12692008	4	SOCKET HEAD SCREW ISO 4762 M20X40 8	ZYLINDERSCHRAUBE
11	10289808	4	WASHER ISO 7089 20 300HV FLZN SPF	SCHEIBE
12	11492423	1	LASHING STRAP 1,25MX25MM POLYTEX SP	ZURRGURT

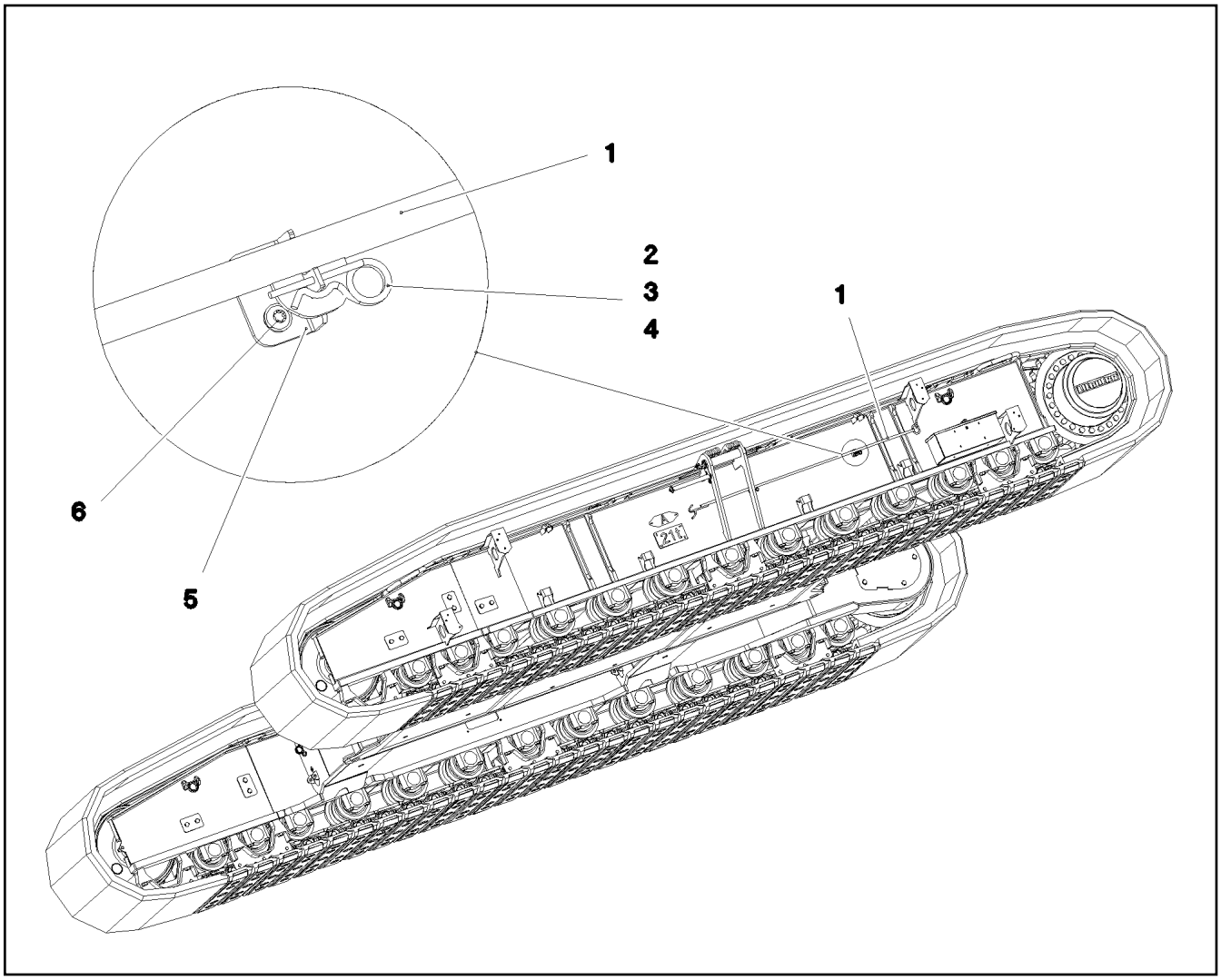

Pos.	Item	Quantity	Description	Bezeichnung
1	929529908	1	HOOK ROD FE//ZNNI8//CN//T0	HAKENSTANGE
2	433206208	2	SPRING PLUG 4,5X4X78 A2K	FEDERSTECKER
3	11160431	0.4	ROPE 2 2,3KN EDELSTAHL	SEIL
4	11170565	4	FERRULE 2 CU	PRESSKLEMME
5	953756708	2	PLATE 3X70X75 DC01 RAL 3000,SDGL,GT	BLECH
6	10875486	4	BUTTON HEAD SCREW AEHNL.ISO 7380-2	HALBRUNDKOPFSCHRAUBE

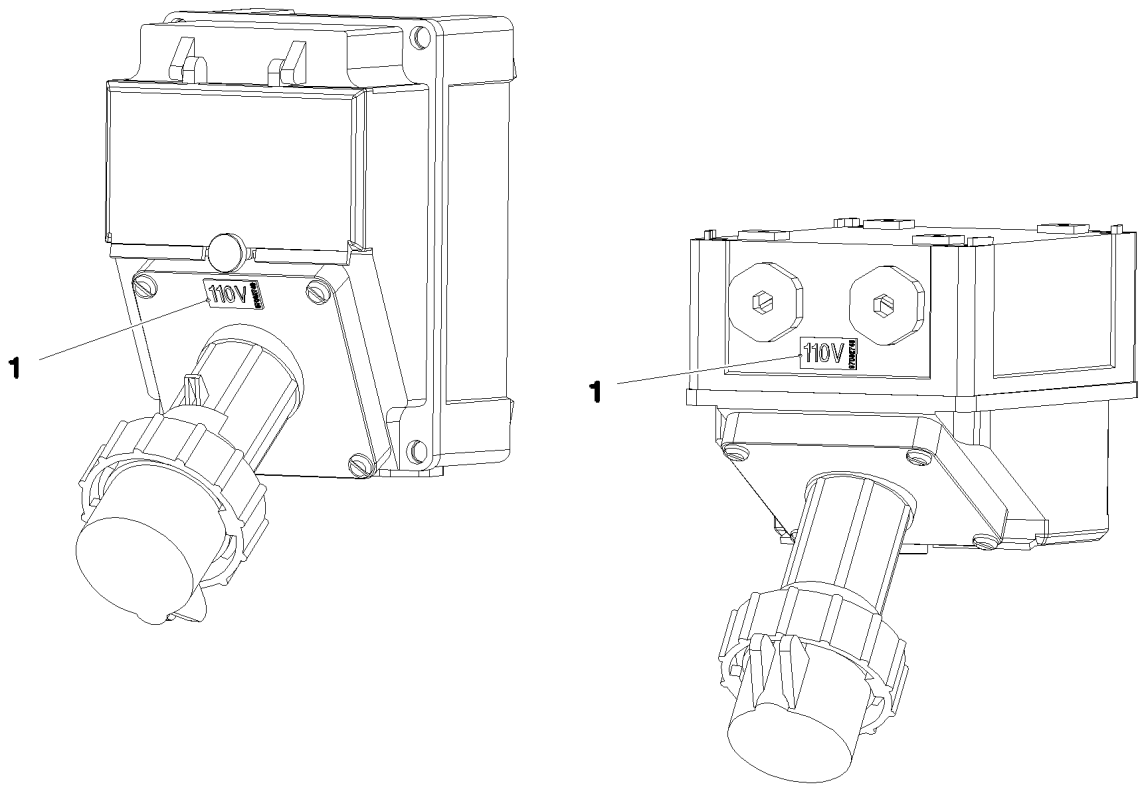

Pos.	Item	Quantity	Description	Bezeichnung
1	97082749	1	INFORMATION SIGN 23X12 KLEBEFOLIE SP	HINWEISSCHILD

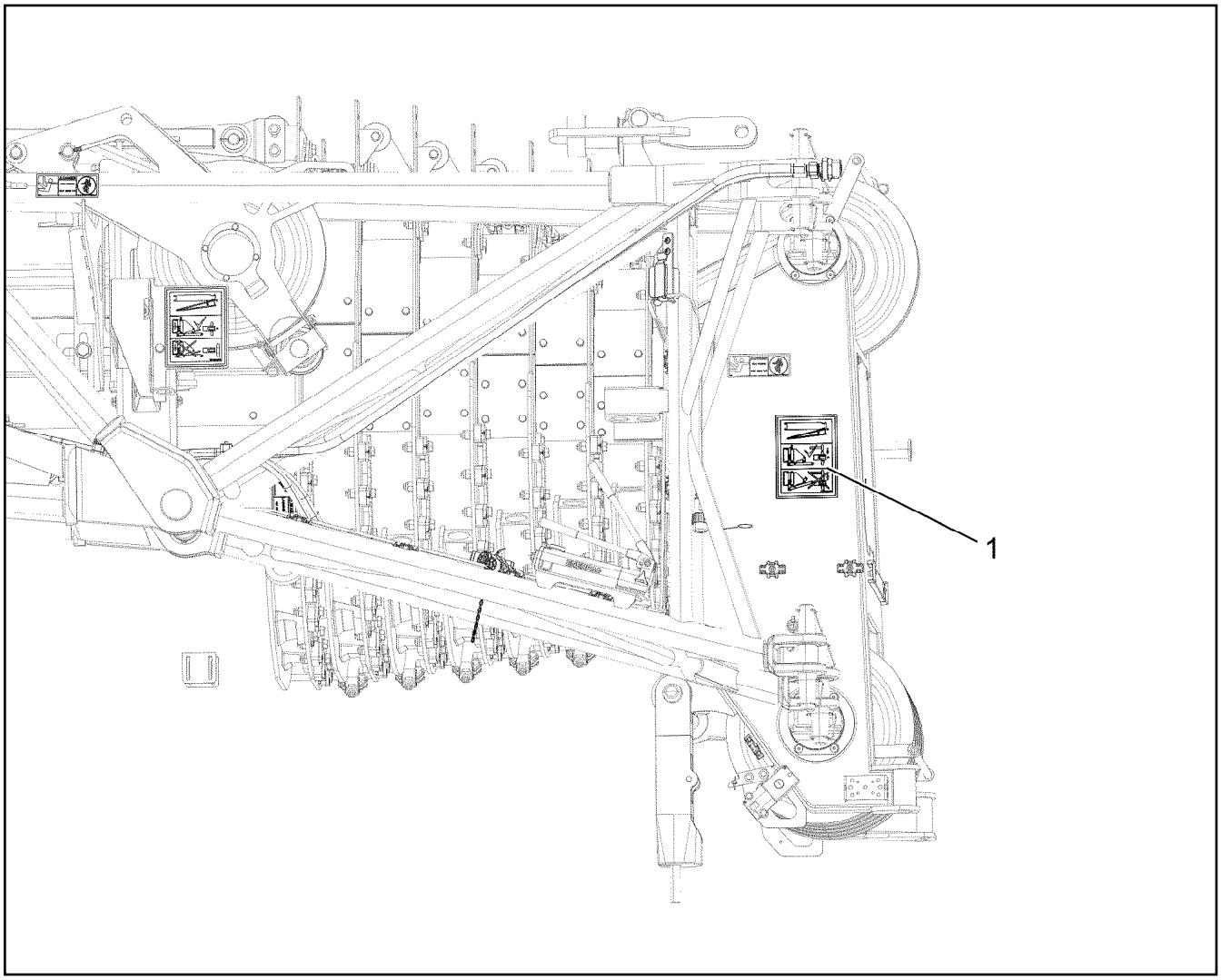

Pos.	Item	Quantity	Description	Bezeichnung
1	971539808	1	SIGN 225X165 KLEBEFOLIE SPF	SCHILD

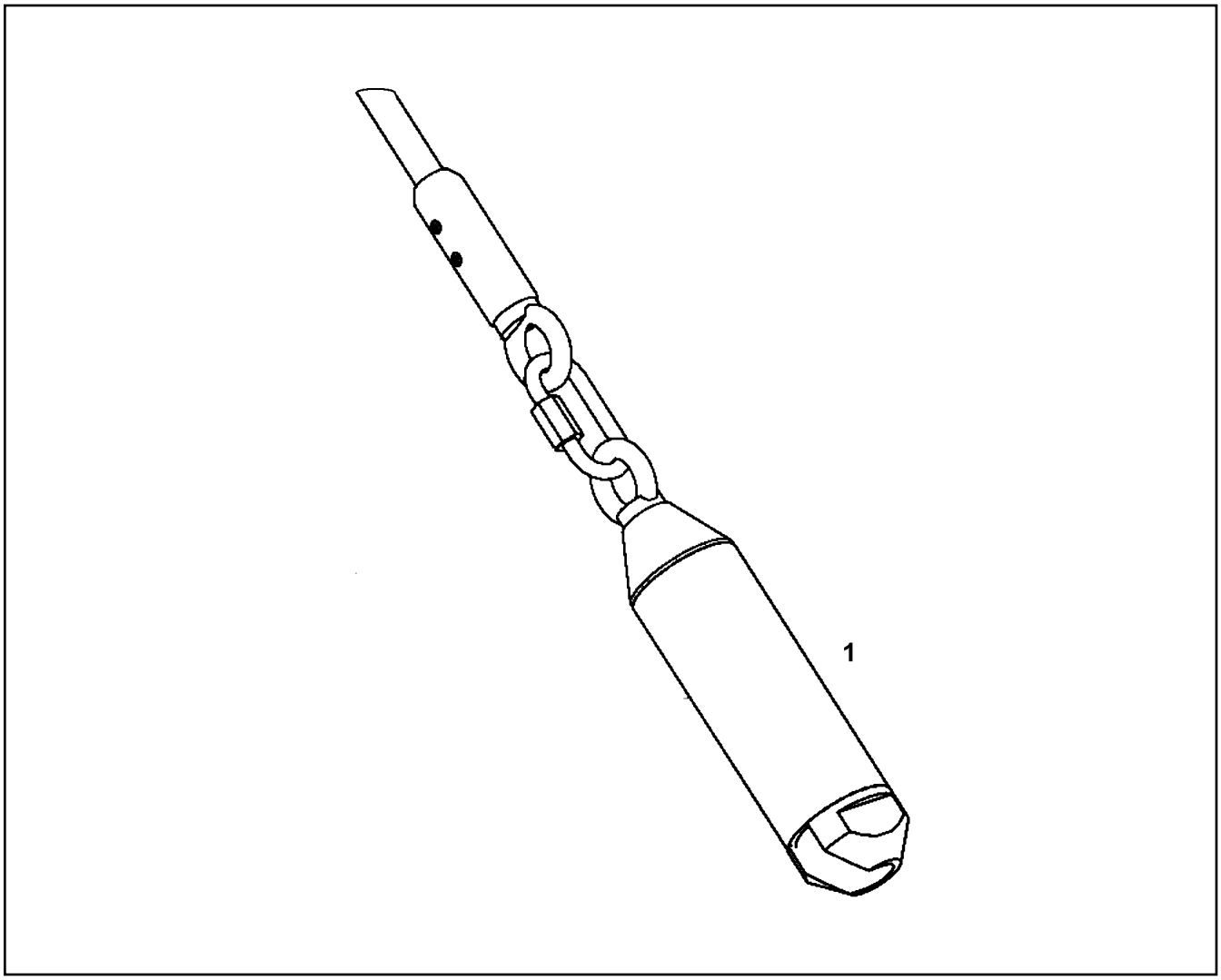

Pos.	Item	Quantity	Description	Bezeichnung
1	11493793	1	SLEEVE	HUELSE

Item	Page	Assembly	Pos.	Quantity	Item	Page	Assembly	Pos.	Quantity
000608250	628	919028808	12	5	10011869	261	10144036	12	1
10000515	294	11210795	20	1	10011869	265	10148366	6525	1
10000794	301	10472208	5	1	10011870	218	10145173	5	2
10000796	301	10472208	1	1	10011870	238	10140729	27	1
10001074	644	917292008	5	4	10011870	264	10148366	222	1
10001074	648	917292108	5	4	10011871	215	10143342	22	2
10001074	652	917292208	5	4	10012225	194	11448005	5	2
10001074	656	917292308	5	4	10012557	194	11448005	3	2
10001074	661	917292408	29	4	10014387	513	96037136	830	69
10001077	581	939294001	31	4	10014387	515	96037137	830	6
10001080	357	939292201	21	24	10014692	128	11347526	3	1
10001107	302	10871043	16	1	10014692	504	10327065	3	1
10001111	302	10871043	21	1	10014693	128	11347526	4	1
10001467	121	919644008	31	4	10014693	504	10327065	4	1
10001739	405	917304708	46	1	10014697	128	11347526	9	3
10001739	683	966591508	4	2	10014697	504	10327065	10	3
10002167	232	10148215	4	2	10014698	131	774375108	1	1
10002310	223	10127566	3	1	10014701	504	10327065	16	1
10002552	238	10140729	132	1	10014712	504	10327065	27	1
10003366	221	9078314	3	1	10014729	128	11347526	7	1
10004261	170	10147687	9	1	10014729	504	10327065	7	1
10004261	199	10129475	4	1	10014730	128	11347526	8	1
10004331	191	10149579	8	8	10014730	504	10327065	8	1
10005713	203	10148432	2	1	10016907	252	10144227	5	4
10006370	87	96034962	25	4	10019040	417	918810308	29	8
10006370	104	96034980	25	4	10020520	276	919007708	120	4
10006370	672	966134608	40	3	10021245	494	96048826	300	2
10006370	717	917551608	6	1	10021410	208	12489819	3	2
10007205	377	916162808	5	12	10021571	43	96045227	507	1
10007677	377	916162808	4	12	10023751	321	96023914	(20)	1
10008308	295	11210798	2	1	10024012	618	96037131	10	1
10009007	214	10143341	14	2	10024744	446	96036955	502	2
10009007	231	10142733	2	5	10025057	602	918377508	1	1
10009007	252	10144227	3	4	10025227	509	96045384	68	1
10009700	412	11083498	57	1	10027134	121	919644008	16	4
10010025	112	968038208	3	1	10027448	522	969256608	20	2
10010025	113	968038308	3	1	10028237	589	967784808	308	4
10011658	449	96036957	24	1	10028237	714	967933408	4	1
10011832	170	10147687	13	1	10030440	85	968420608	15	1
10011832	201	9078233	1	1	10030440	405	917304708	9	1
10011864	164	12856862	(5)	2	10030519	238	10140729	14	2
10011864	215	10143342	5	15	10030837	167	11389608	14	14
10011864	229	10145278	8	2	10030904	540	96045351	511	1
10011864	261	10144036	8	2	10031987	699	967785008	154	1
10011864	265	10148366	6524	1	10031989	699	967785008	155	1
10011864	265	10148366	6541	2	10032297	144	928569808	68	1
10011865	215	10143342	7	2	10035534	538	96045351	(2)	1
10011865	261	10144036	14	2	10035694	378	968514508	10	2
10011865	265	10148366	6526	1	10035694	393	966497908	36	8
10011866	215	10143342	11	3	10036325	194	11448005	8	1
10011866	233	10148216	2	7	10036629	603	917368108	10	2
10011866	235	10142744	6	1	10036896	542	96045351	771	1
10011866	265	10148366	3811	7	10037616	538	96045351	(1)	1
10011866	265	10148366	3872	1	10037623	538	96045351	(1)	1
10011867	214	10143341	9	2	10038271	128	11347526	26	1
10011867	229	10145278	4	8	10038271	504	10327065	29	1
10011868	181	10130406	2	1	10038474	538	96045351	150	1
10011868	214	10143341	15	10	10038509	595	969426308	21	1
10011868	264	10148366	221	1	10040024	10		122	2
10011869	224	9080294	3	2	10040984	258	12583633	(2)	1

Item	Page	Assembly	Pos.	Quantity	Item	Page	Assembly	Pos.	Quantity
10041876	513	96037136	528	2	10114843	47	11346779	7	21
10041903	170	10147687	10	5	10114850	47	11346779	8	15
10042592	529	969061708	(2)	4	10115128	621	917259808	1	1
10042593	380	917304508	11	19	10115155	47	11346779	18	4
10042593	405	917304708	35	13	10115539	164	12856862	450	1
10042696	598	918462708	13	2	10115664	164	12856862	452	1
10043002	144	928569808	41	1	10115829	165	12856862	520	1
10043136	170	10147687	16	1	10115832	177	10155227	7	1
10043136	195	11358102	6	1	10116110	165	12856862	521	1
10044648	598	918462708	12	2	10116255	222	10299988	1	1
10044661	327	96034868	101	1	10116274	252	10144227	4	8
10044762	145	928620108	1	1	10116310	238	10140729	24	1
10045101	43	96045227	509	1	10116939	184	9076457	1	1
10045101	520	96045387	528	2	10117094	248	10116110	10	1
10045118	675	10802064	100	1	10117226	276	919007708	117	4
10046999	520	96045387	508	10	10117709	199	10129475	2	1
10047000	520	96045387	515	10	10118148	247	10115829	1	1
10047001	520	96045387	513	10	10118526	187	10141974	8	1
10097079	616	96037130	10	1	10118556	217	10147365	2	4
10097085	616	96037130	12	1	10118556	264	10148366	2201	4
10097087	614	96045237	15	2	10118695	220	10149677	9	3
10097470	513	96037136	671	2	10118910	251	9077238	4	10
10097613	505	11002916	1	1	10118912	187	10141974	10	6
10097910	325	968999708	10	1	10119695	193	10148438	2	2
10099208	128	11347526	28	1	10119927	185	10116939	3	2
10099208	504	10327065	32	1	10119928	185	10116939	4	2
10099209	128	11347526	25	4	10119971	182	10139112	4	1
10099209	504	10327065	28	4	10120186	161	12856862	90	1
10099856	43	96045227	501	2	10120334	191	10149579	5	4
10099856	520	96045387	521	9	10120639	238	10140729	6	3
10099860	43	96045227	508	1	10121335	186	10153583	2	1
10099860	520	96045387	527	2	10121666	179	10121667	1	1
10099861	43	96045227	510	1	10121667	175	10132560	4	1
10099861	513	96037136	506	1	10121667	267	10141167	1	1
10099863	43	96045227	512	1	10121952	186	10153583	1	1
10099863	520	96045387	510	7	10122319	263	9078301	1	1
10099864	448	96036956	502	3	10122841	234	10142742	2	1
10099864	520	96045387	519	5	10123304	253	10144098	1	1
10099866	43	96045227	511	1	10123876	255	10151328	103	1
10099866	513	96037136	507	1	10123878	506	919410708	33	2
10099867	43	96045227	513	1	10124116	244	10115664	1	1
10099867	520	96045387	511	7	10124798	220	10149677	5	2
10099868	43	96045227	502	2	10125148	491	919372008	120	1
10099868	520	96045387	522	9	10125439	189	10149580	3	6
10100062	447	96036955	669	2	10125687	165	12856862	650	1
10100062	513	96037136	669	4	10125688	260	10125687	1	1
10100063	447	96036955	670	4	10125702	237	10144756	3	2
10100063	513	96037136	670	11	10125739	238	10140729	7	1
10100063	514	96037137	670	6	10125742	197	10138230	1	1
10100429	294	11210795	21	2	10126119	164	12856862	(16)	1
10100621	439	969015908	20	4	10126317	182	10139112	5	1
10100781	258	12583633	(1)	1	10126317	264	10148366	(2)	1
10101384	538	96045351	(3)	1	10126417	173	10126713	4	1
10112569	539	96045351	(10)	1	10126713	160	12856862	16	1
10113731	202	10152592	3	1	10126738	170	10147687	2	1
10113975	258	12583633	(2)	1	10127566	163	12856862	330	1
10114441	58	11643183	8	1	10127689	252	10144227	2	1
10114441	61	11643184	8	1	10127967	250	10127979	1	1
10114838	47	11346779	10	1	10127979	165	12856862	526	1
10114839	47	11346779	4	1	10127984	219	10147364	2	1

Item	Page	Assembly	Pos.	Quantity	Item	Page	Assembly	Pos.	Quantity
10128228	164	12856862	(7)	3	10140757	238	10140729	3	1
10128439	165	12856862	524	1	10140969	235	10142744	5	1
10128440	249	10128439	1	1	10141051	495	11403708	30	1
10128516	175	10132560	2	1	10141111	253	10144098	2	1
10128516	267	10141167	2	1	10141140	210	10153151	200	1
10128671	264	10148366	1801	2	10141157	264	10148366	120	1
10128680	192	10149578	7	2	10141165	264	10148366	160	1
10129392	207	10149198	28	2	10141167	264	10148366	200	1
10129392	208	12489819	2	2	10141169	264	10148366	250	1
10129394	208	12489819	7	1	10141178	264	10148366	520	1
10129474	199	10129475	1	1	10141181	264	10148366	800	4
10129475	161	12856862	130	1	10141182	264	10148366	1300	1
10129501	202	10152592	4	1	10141214	264	10148366	1710	1
10129904	220	10149677	4	1	10141215	209	10152867	210	1
10130104	214	10143341	6	1	10141216	210	10153151	(12)	1
10130406	160	12856862	22	1	10141216	210	10153151	210	1
10130757	264	10148366	1911	4	10141217	264	10148366	2120	1
10130816	168	10154379	5	10	10141549	219	10147364	1	1
10131177	183	10147438	1	1	10141790	162	12856862	217	1
10132170	215	10143342	3	1	10141846	215	10143342	8	1
10132180	215	10143342	19	1	10141974	160	12856862	53	1
10132560	160	12856862	20	1	10142170	187	10141974	2	1
10132935	215	10143342	16	1	10142606	239	10142863	1	1
10133607	215	10143342	13	1	10142668	235	10142744	1	1
10133667	189	10149580	2	1	10142670	239	10142863	2	1
10133692	197	10138230	4	1	10142671	234	10142742	1	1
10133693	197	10138230	6	2	10142733	163	12856862	370	1
10133837	175	10132560	1	1	10142742	163	12856862	382	1
10133928	212	10146791	1	1	10142744	163	12856862	387	1
10133991	255	10151328	102	1	10142747	165	12856862	630	1
10134348	170	10147687	3	2	10142749	160	12856862	15	4
10134348	247	10115829	3	2	10142763	235	10142744	2	1
10134698	195	11358102	3	1	10142863	164	12856862	440	1
10134750	195	11358102	1	2	10142864	165	12856862	481	1
10134753	216	10143825	3	1	10142942	161	12856862	150	1
10135434	210	10153151	220	1	10143240	214	10143341	7	1
10135885	236	10140087	3	4	10143251	215	10143342	1	1
10135885	265	10148366	4101	1	10143341	162	12856862	212	1
10136751	191	10149579	4	2	10143342	162	12856862	214	1
10136798	173	10126713	1	1	10143454	252	10144227	1	1
10136799	174	10136798	1	1	10143542	214	10143341	4	1
10137602	197	10138230	(2)	1	10143543	214	10143341	3	1
10137721	247	10115829	5	1	10143612	220	10149677	1	1
10137918	171	10138450	2	1	10143614	220	10149677	2	1
10138230	161	12856862	100	1	10143707	254	10151328	10	1
10138447	197	10138230	3	1	10143825	162	12856862	215	1
10138450	160	12856862	14	1	10143826	216	10143825	1	1
10138656	236	10140087	4	14	10143827	216	10143825	2	3
10138657	236	10140087	7	14	10144031	495	11403708	10	1
10138820	232	10148215	3	1	10144036	165	12856862	652	1
10139064	192	10149578	4	4	10144038	494	96048826	(153)	1
10139111	182	10139112	1	1	10144039	494	96048826	(154)	1
10139112	160	12856862	25	1	10144093	483	918484108	12	1
10139578	196	10120186	6	2	10144098	252	10144227	6	2
10139626	238	10140729	1	1	10144227	165	12856862	571	1
10139764	196	10120186	4	1	10144270	483	918484108	18	1
10139765	196	10120186	5	1	10144311	187	10141974	11	1
10140087	163	12856862	410	1	10144556	191	10149579	2	2
10140729	163	12856862	430	1	10144755	237	10144756	1	1
10140732	218	10145173	9	1	10144756	163	12856862	415	1

Item	Page	Assembly	Pos.	Quantity	Item	Page	Assembly	Pos.	Quantity
10144861	483	918484108	13	1	10152036	258	12583633	2	1
10145049	197	10138230	(1)	1	10152168	192	10149578	2	1
10145100	161	12856862	(2)	1	10152441	196	10120186	1	2
10145101	161	12856862	(3)	1	10152592	200	10129474	12	1
10145173	162	12856862	221	1	10152593	202	10152592	1	1
10145175	228	10145176	1	1	10152594	202	10152592	2	1
10145176	163	12856862	333	1	10152787	206	10146658	210	1
10145177	229	10145278	1	1	10152832	197	10138230	8	1
10145178	229	10145278	2	1	10152832	197	10138230	8	1
10145185	207	10149198	29	1	10152867	162	12856862	190	4
10145278	163	12856862	334	1	10152874	209	10152867	200	1
10145371	257	10143707	2	1	10152974	186	10153583	3	1
10145373	164	12856862	(15)	1	10153151	162	12856862	191	4
10145524	236	10140087	1	1	10153374	230	12418347	4	1
10145589	261	10144036	11	1	10153536	198	9079870	1	2
10145815	197	10138230	8	1	10153538	198	9079870	2	2
10145815	197	10138230	8	1	10153583	160	12856862	52	1
10145838	261	10144036	9	1	10153973	169	10154458	1	1
10145862	192	10149578	1	1	10153987	254	10151328	1	1
10146185	187	10141974	1	1	10154379	167	11389608	1	1
10146367	161	12856862	70	4	10154458	167	11389608	80	4
10146658	205	10150741	1	1	10154459	169	10154458	2	1
10146722	200	10129474	1	1	10154798	232	10148215	2	1
10146789	212	10146791	2	1	10155227	176	10133837	1	1
10146791	162	12856862	201	1	10166157	357	939292201	73	1
10147364	162	12856862	224	1	10166990	87	96034962	17	6
10147365	162	12856862	220	1	10166990	104	96034980	17	6
10147438	160	12856862	50	1	10167462	340	90008901	64	2
10147680	209	10152867	1	1	10169236	285	97029921	350	1
10147687	160	12856862	12	1	10171579	305	10871282	29	2
10148036	230	12418347	2	1	10171579	340	90008901	92	1
10148215	163	12856862	380	1	10171585	73	90028956	52	1
10148216	163	12856862	381	1	10171626	340	90008901	67	1
10148366	166	12856862	939	1	10171628	47	11346779	14	1
10148432	161	12856862	140	1	10171631	357	939292201	4	1
10148438	161	12856862	81	4	10172636	70	919254308	47	4
10148666	494	96048826	102	1	10172636	100	919254408	47	4
10149191	164	12856862	(1)	1	10175221	343	90025781	5	8
10149198	206	10146658	220	1	10175222	343	90025781	6	7
10149360	230	12418347	3	2	10176328	340	90008901	80	1
10149578	191	10149579	1	1	10176329	345	90025782	7	10
10149579	189	10149580	1	1	10176330	345	90025782	8	10
10149580	161	12856862	80	4	10178883	70	919254308	36	8
10149655	171	10138450	1	1	10178883	100	919254408	36	8
10149677	162	12856862	230	1	10178901	17	919617108	21	32
10149679	220	10149677	3	1	10179032	731	917267508	5	4
10149739	192	10149578	6	2	10179115	405	917304708	53	1
10149977	330	10878502	1	1	10179265	219	10147364	4	3
10150144	211	10135434	1	1	10179265	240	10115539	4	3
10150252	256	10151329	10	1	10179340	30	917511508	42	8
10150386	231	10142733	1	1	10179376	280	96034631	375	1
10150741	162	12856862	171	1	10179392	17	919617108	18	4
10150838	256	10151329	13	1	10179393	616	96037130	17	1
10150934	160	12856862	21	1	10179393	618	96037131	17	1
10150935	180	10150934	1	1	10179408	474	967928508	18	4
10151164	256	10151329	1	1	10179409	629	968068308	5	1
10151328	165	12856862	580	1	10179447	116	968046208	40	36
10151329	254	10151328	2	1	10179459	240	10115539	3	3
10151390	254	10151328	8	1	10179463	332	917825508	3	2
10151634	172	10142749	1	1	10179470	421	962282208	4	1

Item	Page	Assembly	Pos.	Quantity
10179470	423	962282308	4	1
10179495	721	968728808	5	1
10179932	121	919644008	18	8
10179932	335	969050308	10	1
10179943	283	968026308	355	1
10179985	51	96035801	305	8
10180175	277	919007708	332	8
10180180	280	96034631	379	1
10180180	365	917259908	10	9
10180340	372	916177508	13	1
10180340	715	967936408	4	1
10180354	71	919254308	110	2
10180354	101	919254408	111	2
10180354	661	917292408	59	3
10180359	705	917268408	21	1
10180359	732	929582108	5	3
10180359	735	923879808	5	1
10180363	639	917291908	33	2
10180364	733	923285508	12	1
10180365	705	917268408	23	1
10180371	474	967928508	17	4
10180371	625	967936908	9	2
10180371	705	917268408	17	1
10180373	721	968728808	10	1
10180375	30	917511508	47	8
10180377	471	918956108	7	2
10180381	17	919617108	30	2
10181340	47	11346779	39	4
10181375	280	96034631	300	2
10181375	609	968994408	20	4
10181375	612	968993508	11	4
10181382	539	96045351	302	4
10181382	589	967784808	303	4
10182032	283	968026308	310	2
10190120	585	90200103	5	1
10197730	71	919254308	66	4
10197730	101	919254408	66	4
10197730	111	917691008	18	8
10197730	276	919007708	313	12
10197730	369	967986308	4	16
10197730	429	96036790	314	1
10197730	449	96036957	23	1
10197730	539	96045351	311	4
10197730	577	967969608	18	4
10197730	628	919028808	(6)	1
10197760	429	96036790	350	7
10197760	439	969015908	351	4
10197760	525	926891108	10	4
10197760	565	967980508	13	6
10197764	37	966167808	13	2
10197764	38	968054008	16	2
10197764	47	11346779	48	12
10197764	134	919087608	23	2
10197764	277	919007708	350	6
10197764	280	96034631	353	4
10197764	320	96023117	27	4
10197764	383	917305408	51	2
10197764	430	96036790	351	4
10197764	439	969015908	350	11
10197764	523	922648308	5	12
10197764	525	926891108	6	4
10197764	589	967784808	310	2
10197769	71	919254308	108	10
10197769	101	919254408	109	10
10197769	399	916163008	12	1
10197769	616	96037130	19	1
10197769	618	96037131	19	1
10197769	628	919028808	(9)	1
10197769	639	917291908	27	8
10197769	721	968728808	25	3
10197771	21	96034894	10	12
10197771	24	96034977	10	12
10197771	37	966167808	14	2
10197771	38	968054008	17	2
10197771	51	96035801	312	45
10197771	134	919087608	33	2
10197771	277	919007708	384	2
10197771	280	96034631	376	8
10197771	320	96023117	26	4
10197771	365	917259908	42	2
10197771	383	917305408	50	3
10197771	396	916168308	18	4
10197771	417	918810308	42	4
10197771	523	922648308	3	6
10197771	525	926891108	4	4
10197771	539	96045351	318	14
10197771	574	918628408	12	2
10197771	589	967784808	311	2
10197771	609	968994408	28	2
10197771	610	968290608	30	4
10197771	612	968993508	15	2
10197771	613	968267208	30	4
10197771	645	917292008	67	2
10197771	648	917292108	63	2
10197771	652	917292208	63	2
10197771	656	917292308	63	2
10197771	683	966591508	3	2
10197831	127	917257108	7	2
10197831	134	919087608	36	4
10197831	276	919007708	311	2
10197831	429	96036790	311	7
10197831	474	967928508	26	2
10197831	483	918484108	53	4
10197831	502	917261208	20	2
10197831	525	926891108	8	2
10197831	565	967980508	15	10
10197831	639	917291908	15	2
10197831	662	917292408	76	2
10197831	699	967785008	308	2
10197831	705	917268408	26	4
10197836	525	926891108	11	2
10197836	639	917291908	35	2
10197836	644	917292008	59	2
10197836	648	917292108	59	2
10197836	652	917292208	59	2
10197836	656	917292308	59	2
10215892	459	966707708	9	1
10215893	459	966707708	4	1
10216340	504	10327065	13	1
10216529	574	918628408	21	1

Item	Page	Assembly	Pos.	Quantity
10216534	574	918628408	22	2
10216578	603	917368108	13	1
10216678	574	918628408	31	4
10216772	513	96037136	513	1
10217777	249	10128439	2	1
10217777	265	10148366	5241	1
10218310	539	96045351	180	1
10218370	241	10219978	2	1
10218370	243	11386644	2	1
10219361	394	965784408	12	4
10219462	445	96036954	6	2
10219618	282	10492431	1	1
10219619	282	10492431	2	1
10219620	282	10492431	999	1
10219978	240	10115539	1	1
10220419	294	11210795	23	3
10220933	538	96045351	54	1
10220933	589	967784808	52	1
10222682	456	963398008	1	1
10222686	522	969256608	27	2
10224095	64	917436708	(3)	72
10280210	597	10038509	20	1
10280211	597	10038509	40	1
10280212	597	10038509	50	1
10280213	597	10038509	60	1
10280214	597	10038509	70	1
10280215	597	10038509	80	1
10280216	597	10038509	90	1
10280715	719	968811608	2	1
10282622	179	10121667	100	1
10282622	197	10138230	100	1
10282622	244	10115664	100	1
10282774	169	10154458	4	2
10282774	264	10148366	401	8
10283201	721	968728808	6	1
10285016	112	968038208	4	2
10285016	113	968038308	4	2
10285016	283	968026308	360	2
10285695	547	11482347	999	1
10285701	368	919010208	17	1
10285708	169	10154458	100	1
10285708	170	10147687	100	1
10285708	196	10120186	100	1
10285708	203	10148432	100	1
10285708	218	10145173	100	1
10285708	220	10149677	100	1
10285708	223	10127566	100	1
10285708	231	10142733	100	1
10285708	232	10148215	100	1
10285708	234	10142742	100	1
10285708	247	10115829	100	1
10285708	250	10127979	100	1
10285708	258	12583633	(100)	1
10285708	258	12583633	(100)	1
10285708	260	10125687	(100)	1
10285708	262	9077386	100	1
10285724	204	10142942	3	1
10286353	685	968708708	296	1
10286840	424	916049908	(1)	1
10287301	412	11083498	13	2
10287382	276	919007708	115	2
10288121	40	968252908	300	1
10288121	449	96036957	(980)	1
10288121	453	96022872	(2)	1
10288121	528	968253608	300	1
10289536	538	96045351	53	1
10289536	589	967784808	51	1
10289795	17	919617108	33	12
10289795	25	968019508	31	4
10289795	30	917511508	40	6
10289795	71	919254308	107	20
10289795	101	919254408	108	20
10289795	269	918731408	375	2
10289795	277	919007708	379	28
10289795	280	96034631	378	2
10289795	335	969050308	16	8
10289795	350	917259608	7	6
10289795	430	96036790	382	4
10289795	494	96048826	377	8
10289795	616	96037130	18	1
10289795	618	96037131	18	1
10289795	628	919028808	(10)	2
10289803	21	96034894	11	4
10289803	24	96034977	11	4
10289803	51	96035801	308	24
10289803	85	968420608	17	1
10289803	87	96034962	8	7
10289803	104	96034980	8	7
10289803	112	968038208	9	2
10289803	113	968038308	9	2
10289803	127	917257108	8	2
10289803	134	919087608	37	4
10289803	277	919007708	377	44
10289803	280	96034631	377	28
10289803	283	968026308	375	6
10289803	326	919231108	375	6
10289803	327	96034868	375	3
10289803	368	919010208	9	1
10289803	372	916177508	28	4
10289803	373	96025887	12	3
10289803	384	917305408	64	4
10289803	399	916163008	13	4
10289803	410	917676208	6	12
10289803	414	969085208	28	7
10289803	430	96036790	375	8
10289803	433	968923508	16	4
10289803	441	969016008	12	4
10289803	462	918759808	23	21
10289803	464	96020359	20	7
10289803	474	967928508	28	4
10289803	483	918484108	63	3
10289803	499	918731908	375	6
10289803	502	917261208	17	2
10289803	522	969256608	61	2
10289803	525	926891108	13	4
10289803	565	967980508	12	4
10289803	600	917269408	6	4
10289803	639	917291908	16	2
10289803	644	917292008	17	2
10289803	648	917292108	17	2

Item	Page	Assembly	Pos.	Quantity	Item	Page	Assembly	Pos.	Quantity
10289803	652	917292208	17	4	10292724	128	11347526	29	1
10289803	656	917292308	17	4	10292801	305	10871282	3	1
10289803	662	917292408	64	10	10292815	310	10292801	5	1
10289803	731	917267508	28	4	10293537	70	919254308	23	1
10289804	17	919617108	19	4	10293537	100	919254408	23	1
10289804	247	10115829	8	17	10293775	347	570109008	10	1
10289804	277	919007708	381	5	10294494	372	916177508	3	4
10289804	338	919369308	7	4	10294684	85	968420608	4	2
10289804	365	917259908	13	4	10294938	500	10871700	2	1
10289804	474	967928508	19	8	10294939	500	10871700	3	1
10289804	478	969763408	328	4	10295188	314	96034515	403	1
10289804	491	919372008	375	4	10295188	542	96045351	737	6
10289804	540	96045351	340	8	10295188	590	967784808	632	2
10289804	611	968267108	3	2	10296157	429	96036790	(2)	3
10289804	639	917291908	22	16	10296157	429	96036790	(2)	3
10289804	662	917292408	62	3	10296157	429	96036790	(2)	3
10289804	672	966134608	13	8	10296644	491	919372008	183	2
10289804	717	917551608	4	3	10297241	500	10871700	5	1
10289804	721	968728808	22	4	10297295	204	10142942	1	2
10289806	17	919617108	57	32	10297310	449	96036957	54	2
10289806	71	919254308	85	16	10297396	474	967928508	22	1
10289806	101	919254408	85	16	10297691	370	96015921	5	1
10289806	269	918731408	377	4	10297876	303	11692439	2	1
10289806	277	919007708	382	18	10299564	239	10142863	3	2
10289806	442	917260108	6	8	10299564	245	9079823	2	4
10289806	474	967928508	29	2	10299565	239	10142863	4	1
10289806	475	967978908	13	1	10299585	170	10147687	6	1
10289806	731	917267508	47	2	10299589	170	10147687	5	9
10289807	70	919254308	46	4	10299604	199	10129475	3	14
10289807	100	919254408	46	4	10299649	474	967928508	24	2
10289807	672	966134608	27	2	10299668	672	966134608	38	2
10289808	71	919254308	109	2	10299679	30	917511508	41	64
10289808	101	919254408	110	2	10299679	672	966134608	18	6
10289808	134	919087608	29	12	10299987	599	917269308	(1)	1
10289808	737	917268208	11	4	10299988	221	9078314	1	1
10289810	70	919254308	28	4	10300552	393	966497908	31	2
10289810	100	919254408	28	4	10300600	405	917304708	11	4.2
10289810	280	96034631	380	1	10300944	447	96036955	715	2
10289811	640	917291908	77	2	10300946	515	96037137	717	4
10289931	294	11210795	39	1	10301148	446	96036955	520	1
10290070	325	968999708	2	1	10301317	34	96045225	17	4
10290126	466	10876576	23	1	10301317	714	967933408	5	1
10290126	466	10876576	(5)	1	10301319	370	96015921	11	5
10290127	466	10876576	24	1	10301409	383	917305408	30	2
10290127	466	10876576	(6)	1	10303270	297	10008308	17	3
10291306	550	10413106	(1)	1	10303270	309	571907208	17	3
10291306	550	10413106	(1)	1	10324830	510	96045385	511	1
10291306	551	571415008	6	1	10324900	303	11692439	4	1
10291989	369	967986308	2	4	10325001	200	10129474	3	1
10291997	383	917305408	33	1	10326277	668	10876933	35	1
10291999	370	96015921	8	1	10326278	668	10876933	38	1
10292000	383	917305408	35	2	10326792	737	917268208	2	1
10292008	372	916177508	4	1	10326925	294	11210795	2	1
10292013	383	917305408	28	8	10327065	502	917261208	1	1
10292014	399	916163008	3	1	10331026	450	96036957	61	1
10292015	393	966497908	22	1	10331368	722	917531708	2	1
10292016	399	916163008	5	1	10331946	282	10492431	998	1
10292017	393	966497908	23	1	10331947	281	10429930	800	1
10292018	399	916163008	7	1	10332882	538	96045351	24	1
10292021	399	916163008	2	2	10332987	410	917676208	7	4

Item	Page	Assembly	Pos.	Quantity	Item	Page	Assembly	Pos.	Quantity
10333297	711	917598408	(506)	1	10359128	47	11346779	21	2
10334488	429	96036790	100	1	10359142	285	97029921	450	1
10334488	439	969015908	100	1	10410178	112	968038208	6	4
10335557	449	96036957	50	1	10410178	113	968038308	6	4
10335593	546	11211756	23	1	10410178	116	968046208	52	8
10335596	454	10343693	3	4	10410178	121	919644008	65	12
10335819	447	96036955	689	4	10410178	494	96048826	375	8
10335819	448	96036956	689	4	10410193	483	918484108	66	2
10335820	44	96045228	690	14	10410193	715	967936408	2	2
10335820	447	96036955	690	52	10410198	375	916170808	13	2
10335820	448	96036956	690	6	10410305	540	96045351	601	5
10335820	511	96045385	690	29	10410651	294	11210795	31	1
10335820	513	96037136	690	20	10410651	305	10871282	28	2
10335855	281	10429930	3	1	10410770	542	96045351	810	2
10335960	314	96034515	450	1	10410770	595	969426308	616	1
10337381	552	10332882	(1)	2	10410771	314	96034515	404	1
10337381	559	510697608	7	1	10410771	543	96045351	835	2
10340105	449	96036957	5	1	10411092	241	10219978	4	1
10340438	526	968063108	6	1	10411092	243	11386644	4	1
10342478	305	10871282	12	1	10411093	241	10219978	6	2
10342479	305	10871282	26	1	10411093	243	11386644	6	2
10342480	305	10871282	999	1	10411094	241	10219978	3	1
10342517	446	96036955	509	2	10411094	243	11386644	3	1
10342517	513	96037136	509	3	10411095	241	10219978	5	2
10342517	514	96037137	502	2	10411095	243	11386644	5	2
10342518	446	96036955	525	1	10412105	320	96023117	23	4
10342518	513	96037136	518	3	10412433	513	96037136	512	1
10342518	514	96037137	512	3	10412777	453	96022872	10	1
10342519	446	96036955	510	2	10412850	539	96045351	202	1
10342519	513	96037136	526	3	10412851	21	96034894	17	4
10342519	514	96037137	518	2	10412851	24	96034977	17	4
10342770	192	10149578	3	1	10412851	375	916170808	10	6
10342823	546	11211756	20	1	10412851	378	968514508	8	1
10342854	449	96036957	8	2	10412851	405	917304708	12	4
10343003	414	969085208	2	1	10412851	429	96036790	300	10
10343003	462	918759808	5	1	10412851	439	969015908	300	6
10343484	449	96036957	55	2	10412851	491	919372008	303	6
10343693	449	96036957	4	2	10412851	599	917269308	2	4
10346599	538	96045351	(1)	1	10412851	714	967933408	7	1
10353004	513	96037136	529	1	10412852	30	917511508	30	8
10353667	719	968811608	7	2	10412852	85	968420608	5	14
10353689	335	969050308	17	4	10412852	393	966497908	15	6
10353713	494	96048826	304	4	10412852	609	968994408	26	2
10353737	320	96023117	21	4	10412852	610	968290608	20	6
10354375	383	917305408	56	1	10412852	612	968993508	13	2
10354493	679	966354008	5	1	10412852	613	968267208	20	6
10354584	26	968036408	10	1	10412853	372	916177508	6	8
10354584	450	96036957	58	1	10412853	405	917304708	41	1
10354584	672	966134608	(6)	6	10413106	538	96045351	22	1
10354584	683	966591508	(5)	1	10415159	614	96045237	22	1
10354595	175	10132560	100	1	10415162	25	968019508	21	4
10354595	267	10141167	10	1	10415162	276	919007708	315	1
10354670	383	917305408	25	2	10415162	357	939292201	52	12
10354922	25	968019508	11	6	10415162	471	918956108	12	12
10355140	128	11347526	2	1	10415162	583	939294201	52	12
10355140	504	10327065	2	1	10423992	546	11211756	(1)	2
10355170	446	96036955	505	2	10423993	546	11211756	(999)	1
10355182	446	96036955	503	4	10424210	449	96036957	37	2
10356273	307	10872488	37	1	10424276	449	96036957	7	1
10359124	47	11346779	20	2	10424489	408	966253908	2	2

Item	Page	Assembly	Pos.	Quantity
10424622	446	96036955	512	2
10424622	510	96045385	509	1
10424623	447	96036955	700	4
10424623	511	96045385	700	2
10424625	447	96036955	828	4
10424625	511	96045385	828	2
10424625	515	96037137	828	9
10424726	296	10663105	999	1
10425409	499	918731908	175	1
10425689	629	968068308	4	1
10425689	721	968728808	9	4
10428198	681	10354493	12	3
10428532	449	96036957	48	2
10428544	446	96036955	10	4.367
10428544	446	96036955	11	4.367
10428545	446	96036955	7	4.375
10429057	601	915432508	3	1
10429635	368	919010208	7	1
10429638	513	96037136	530	1
10429930	280	96034631	102	1
10429952	128	11347526	33	2
10429952	504	10327065	9	1
10430042	552	10332882	9	1
10430230	668	10876933	64	1
10440553	518	919503008	11	1
10440976	298	10472196	999	1
10441166	446	96036955	298	0.1
10441166	514	96037137	298	0.5
10441664	383	917305408	55	1
10441664	719	968811608	4	2
10443309	384	917305408	59	1
10443625	417	918810308	24	2
10443748	350	917259608	1	1
10447539	504	10327065	99	1
10449516	449	96036957	9	3
10449664	518	919503008	25	8
10449843	124	968077208	300	5.2
10449853	538	96045351	64	1
10450160	408	966253908	7	1
10450273	41	966204108	4	1
10450694	393	966497908	25	1
10450694	405	917304708	22	1
10451017	681	10354493	17	1
10455144	419	10877138	15	1
10455281	417	918810308	27	6
10465711	170	10147687	15	2
10466911	699	967785008	152	3
10466912	589	967784808	161	2
10466913	589	967784808	157	2
10466914	539	96045351	177	2
10466915	699	967785008	150	3
10466916	589	967784808	159	2
10466917	589	967784808	154	2
10467292	52	96035801	650	1
10467292	90	96035796	617	1
10467292	107	96035792	617	1
10467292	542	96045351	757	1
10468820	352	917259708	19	6
10470032	146	915731908	1	1
10470371	668	10876933	7	1
10470377	668	10876933	59	1
10470385	552	10332882	(999)	1
10470667	620	10040024	9	1
10471363	144	928569808	40	1
10471384	294	11210795	5	1
10471437	287	11690588	2	2
10471437	290	11182664	(5)	2
10471437	290	11182664	(5)	2
10471437	294	11210795	(2)	2
10471439	294	11210795	(98)	1
10472196	295	11210798	3	1
10472202	298	10472196	3	1
10472208	295	11210798	4	1
10472219	297	10008308	999	1
10472890	405	917304708	8	1
10472995	518	919503008	30	1
10473048	447	96036955	708	2
10473048	448	96036956	708	1
10475198	305	10871282	11	4
10475314	603	917368108	9	1
10475426	41	966204108	160	3.4
10475893	405	917304708	14	10
10476211	390	916162508	6	2
10476382	140	96045205	503	1
10476383	44	96045228	524	2
10476383	711	917598408	(504)	1
10476913	52	96035801	654	1
10488662	682	966291008	307	1
10488662	685	968708708	293	1
10488696	294	11210795	98	1
10489011	449	96036957	10	2
10489734	555	11341035	7	1
10490072	675	10802064	20	1
10490116	116	968046208	32	2
10490901	350	917259608	(999)	1
10491129	557	10449853	999	1
10491593	137	919499408	79	2
10491695	366	11214363	999	1
10491808	445	96036954	(2)	1
10491892	681	10354493	15	8
10492113	445	96036954	(1)	1
10492347	419	10877138	19	1
10492431	281	10429930	11	1
10492710	291	11210201	999	1
10492710	312	10870964	999	1
10492888	478	969763408	325	8
10493045	478	969763408	168	2
10493479	668	10876933	61	1
10493493	513	96037136	724	6
10493495	513	96037136	726	65
10493495	515	96037137	726	4
10493496	513	96037136	727	4
10493496	515	96037137	727	2
10493625	258	12583633	(1)	1
10493920	504	10327065	1	1
10493944	668	10876933	68	1
10493970	45	96045228	721	16
10493970	711	917598408	(721)	4
10493972	44	96045228	719	16
10493972	140	96045205	719	6

Item	Page	Assembly	Pos.	Quantity	Item	Page	Assembly	Pos.	Quantity
10493972	711	917598408	(719)	2	10678395	707	966479308	7	1
10494115	491	919372008	182	1	10678452	513	96037136	514	1
10494115	494	96048826	182	1	10678453	513	96037136	503	1
10494116	491	919372008	181	1	10678458	513	96037136	504	2
10494116	494	96048826	181	1	10678491	44	96045228	6	1
10539468	494	96048826	301	4	10678491	510	96045385	13	1
10539471	539	96045351	325	4	10678491	512	96037136	5	1
10540500	47	11346779	35	2	10678491	512	96037136	6	1
10540500	116	968046208	34	4	10678491	512	96037136	7	1
10540500	405	917304708	40	4	10678491	512	96037136	8	1
10540500	714	967933408	8	1	10678491	512	96037136	9	1
10540510	405	917304708	21	4	10678494	510	96045385	10	1
10551191	21	96034894	41	1	10678848	454	10343693	4	2
10551191	24	96034977	41	1	10684170	538	96045351	(999)	1
10562617	276	919007708	317	2	10800046	513	96037136	842	6
10564740	538	96045351	(1)	1	10800266	506	919410708	(150)	1
10650014	668	10876933	49	1	10800631	513	96037136	753	4
10650092	548	10342823	2	1	10800916	383	917305408	49	4
10650295	378	968514508	4	4	10801532	550	10413106	5	1
10650386	419	10877138	(11)	1	10801533	550	10413106	6	1
10650387	419	10877138	(13)	1	10801534	550	10413106	7	1
10650399	419	10877138	35	1	10801549	550	10413106	9	1
10650403	419	10877138	49	1	10801551	550	10413106	10	1
10650488	419	10877138	66	1	10801609	483	918484108	22	2
10650489	419	10877138	70	1	10801858	412	11083498	14	1
10650490	419	10877138	85	1	10802057	673	966473108	10	1
10650501	539	96045351	(998)	1	10802057	676	966200208	1	1
10650501	539	96045351	(998)	1	10802060	508	968128908	(11)	1
10650507	424	916049908	(2)	1	10802061	362	966631008	5	1
10650720	260	10125687	2	2	10802061	577	967969608	(5)	1
10651363	542	96045351	759	6	10802064	673	966473108	20	1
10652206	390	916162508	8	2	10802205	21	96034894	33	1
10652724	538	96045351	23	1	10802205	24	96034977	33	1
10652724	589	967784808	21	1	10802205	51	96035801	322	2
10652772	144	928569808	14	1	10802253	538	96045351	(999)	1
10663059	305	10871282	7	1	10802682	494	96048826	120	1
10663065	310	10292801	999	1	10802870	124	968077208	(99)	1
10663092	550	10413106	(999)	1	10803065	346	510229408	14	1
10663097	550	10413106	(999)	1	10813359	137	919499408	83	8
10663105	295	11210798	1	1	10813359	275	919007708	(300)	2
10663107	295	11210798	98	1	10813359	405	917304708	43	7
10663120	296	10663105	14	1	10813359	483	918484108	52	1
10663388	338	919369308	4	48	10813633	514	96037137	507	2
10663466	419	10877138	1	1	10813642	515	96037137	836	1
10663567	117	968331708	3	1	10813644	515	96037137	754	9
10663718	724	910836808	9	2	10813738	538	96045351	60	7
10663825	287	11690588	(1)	1	10813738	589	967784808	53	1
10663825	310	10292801	1	1	10813738	688	967784508	51	1
10663825	311	10292815	(1)	2	10813739	538	96045351	62	2
10663909	128	11347526	(1)	1	10813933	215	10143342	9	1
10663970	664	96013575	3	2	10813935	215	10143342	10	2
10664141	128	11347526	24	1	10813942	214	10143341	8	1
10664204	321	96023914	5	2	10814800	494	96048826	352	2
10675116	458	917260408	(1)	1	10815004	42	10450273	1	1
10675205	675	10802064	16	1	10815005	42	10450273	2	1
10675728	128	11347526	1	1	10815006	42	10450273	3	1
10678375	377	916162808	7	2	10815283	390	916162508	14	1
10678375	383	917305408	47	1	10815368	280	96034631	104	1
10678377	377	916162808	8	2	10815416	399	916163008	19	1
10678395	676	966200208	2	1	10815496	399	916163008	16	1

Item	Page	Assembly	Pos.	Quantity	Item	Page	Assembly	Pos.	Quantity
10815662	478	969763408	644	4	10871595	539	96045351	201	1
10815664	478	969763408	633	3	10871700	499	918731908	100	1
10815777	462	918759808	32	1	10871713	294	11210795	1	1
10815777	464	96020359	15	1	10871726	74	11182596	5	1
10815830	44	96045228	11	4.96	10871759	483	918484108	36	2
10815830	44	96045228	12	4.96	10871959	597	10038509	(999)	1
10815830	44	96045228	13	4.16	10872003	702	918124908	5	2
10815830	44	96045228	14	4.16	10872024	90	96035796	307	1
10816185	538	96045351	61	1	10872024	107	96035792	307	1
10816196	452	96030724	2	1	10872024	589	967784808	302	1
10816799	538	96045351	(999)	1	10872032	512	96037136	98	8
10816943	181	10130406	1	1	10872033	513	96037136	709	2
10816958	494	96048826	400	1	10872098	597	10038509	(999)	1
10870204	30	917511508	44	4	10872098	597	10038509	(999)	1
10870226	484	968570808	4	1	10872213	499	918731908	250	1
10870333	506	919410708	(30)	100	10872307	487	969904608	1	1
10870376	378	968514508	3	2	10872388	566	11622561	8	1
10870403	515	96037137	844	1	10872389	566	11622561	7	1
10870472	450	96036957	69	1	10872487	309	571907208	999	1
10870538	446	96036955	344	18.2	10872488	305	10871282	1	1
10870539	446	96036955	345	8.16	10872521	412	11083498	80	1
10870539	448	96036956	345	7.7	10872598	487	969904608	3	1
10870539	510	96045385	345	11.4	10872612	414	969085208	4	1
10870539	514	96037137	345	34.5	10872612	464	96020359	25	1
10870540	43	96045227	305	25.99	10872672	387	11002447	998	1
10870540	44	96045228	305	36.53	10872700	663	921456108	3	2
10870540	446	96036955	305	319.78	10872700	725	925203408	3	2
10870540	448	96036956	305	160.31	10872714	567	10872388	999	1
10870540	510	96045385	305	395.03	10872796	550	10413106	(1)	1
10870540	512	96037136	305	427.54	10873149	127	917257108	27	50
10870540	514	96037137	305	82.2	10873149	502	917261208	14	50
10870540	615	96043733	305	6.6	10873149	586	921444108	5	5
10870541	512	96037136	307	37.14	10873379	664	96013575	1	1
10870542	446	96036955	309	30.5	10873383	140	96045205	6	1
10870542	448	96036956	309	18.45	10873434	529	969061708	(1)	1
10870542	512	96037136	309	23.3	10873517	454	10343693	5	1
10870633	410	917676208	25	0.75	10873566	134	919087608	(23)	2
10870633	410	917676208	26	0.5	10873570	294	11210795	3	1
10870635	509	96045384	71	1.5	10873571	294	11210795	4	1
10870635	616	96037130	13	1.7	10873838	518	919503008	26	1
10870635	618	96037131	13	1.5	10874134	547	11482347	1	1
10870643	509	96045384	69	1	10874178	514	96037137	505	1
10870964	276	919007708	109	1	10874213	550	10413106	(1)	1
10870965	276	919007708	110	1	10874331	447	96036955	529	1
10870968	399	916163008	8	1	10874331	513	96037136	521	4
10871016	276	919007708	206	1	10874587	506	919410708	(20)	50
10871017	275	919007708	104	1	10874588	254	10151328	99	3
10871043	292	10871047	3	1	10874588	256	10151329	100	8
10871047	276	919007708	107	1	10874588	506	919410708	(10)	50
10871063	711	917598408	(507)	1	10874588	682	966291008	20	4
10871126	140	96045205	5	1	10874640	566	11622561	10	1
10871126	510	96045385	375	1	10874763	614	96045237	20	1
10871126	510	96045385	377	1	10874785	449	96036957	31	1
10871127	510	96045385	376	1	10874825	412	11083498	15	1
10871127	510	96045385	378	1	10874849	546	11211756	4	2
10871151	539	96045351	200	1	10874884	318	918955408	9	3
10871177	393	966497908	12	4	10874884	383	917305408	39	13
10871177	394	965784408	9	2	10874902	566	11622561	9	1
10871282	276	919007708	108	1	10875017	449	96036957	32	4
10871285	44	96045228	18	1.8	10875074	546	11211756	3	3

Item	Page	Assembly	Pos.	Quantity	Item	Page	Assembly	Pos.	Quantity
10875075	546	11211756	5	1	10875486	87	96034962	18	3
10875076	546	11211756	6	1	10875486	104	96034980	18	3
10875077	546	11211756	21	1	10875486	352	917259708	10	12
10875121	446	96036955	19	1	10875486	372	916177508	(6)	11
10875280	446	96036955	513	1	10875486	439	969015908	308	4
10875281	447	96036955	2238	6	10875486	738	968090008	6	4
10875422	323	917626608	5	1	10875488	276	919007708	300	3
10875422	332	917825508	9	1	10875488	283	968026308	300	6
10875447	383	917305408	58	2	10875488	375	916170808	17	3
10875448	269	918731408	300	2	10875488	393	966497908	33	4
10875448	373	96025887	7	3	10875503	38	968054008	10	6
10875448	441	969016008	8	2	10875503	518	919503008	20	28
10875468	134	919087608	13	8	10875503	522	969256608	48	18
10875468	314	96034515	302	1	10875503	526	968063108	11	6
10875468	320	96023117	11	12	10875503	598	918462708	5	1
10875468	373	96025887	10	3	10875503	601	915432508	6	4
10875468	380	917304508	14	12	10875504	478	969763408	330	4
10875468	383	917305408	40	73	10875507	158	918731108	8	4
10875468	399	916163008	23	6	10875508	639	917291908	57	2
10875468	405	917304708	19	5	10875509	70	919254308	43	1
10875468	449	96036957	22	7	10875509	100	919254408	43	1
10875469	383	917305408	41	10	10875517	728	917413208	10	4
10875469	405	917304708	36	7	10875518	731	917267508	41	2
10875470	383	917305408	42	2	10875519	18	919617108	66	4
10875471	142	96045206	10	4	10875519	70	919254308	17	22
10875471	394	965784408	13	2	10875519	100	919254408	17	22
10875471	499	918731908	302	4	10875519	639	917291908	17	4
10875474	383	917305408	38	16	10875520	70	919254308	25	24
10875474	396	916168308	15	5	10875520	100	919254408	25	24
10875474	417	918810308	28	6	10875521	269	918731408	304	1
10875474	449	96036957	18	18	10875538	383	917305408	44	2
10875474	614	96045237	25	4	10875547	276	919007708	116	2
10875475	373	96025887	9	2	10875549	396	916168308	20	2
10875481	644	917292008	50	4	10875550	518	919503008	16	8
10875481	648	917292108	50	4	10875550	522	969256608	51	16
10875481	652	917292208	50	4	10875551	365	917259908	16	6
10875481	656	917292308	50	4	10875551	390	916162508	12	8
10875481	661	917292408	50	4	10875551	393	966497908	13	8
10875482	449	96036957	20	8	10875551	405	917304708	18	4
10875483	320	96023117	17	6	10875552	121	919644008	17	16
10875483	396	916168308	16	14	10875552	639	917291908	51	6
10875483	399	916163008	26	2	10875552	644	917292008	57	6
10875483	449	96036957	21	8	10875553	18	919617108	64	4
10875485	21	96034894	20	3	10875553	47	11346779	3	3
10875485	24	96034977	20	3	10875559	137	919499408	86	4
10875485	34	96045225	15	4	10875559	417	918810308	38	6
10875485	121	919644008	14	16	10875561	644	917292008	33	20
10875485	127	917257108	23	3	10875561	648	917292108	33	20
10875485	158	918731108	28	4	10875561	652	917292208	33	20
10875485	276	919007708	305	6	10875561	656	917292308	33	20
10875485	380	917304508	15	6	10875561	661	917292408	36	12
10875485	429	96036790	303	13	10875564	522	969256608	47	2
10875485	439	969015908	305	10	10875564	602	918377508	300	4
10875485	478	969763408	(7)	6	10875564	661	917292408	47	1
10875485	491	919372008	301	1	10875565	73	90028956	92	8
10875485	497	96039740	300	15	10875565	357	939292201	77	8
10875485	499	918731908	303	2	10875565	474	967928508	20	8
10875485	545	96035117	28	7	10875565	540	96045351	553	12
10875485	589	967784808	312	5	10875565	583	939294201	77	8
10875485	608	968210808	3	3	10875565	590	967784808	555	4

Item	Page	Assembly	Pos.	Quantity	Item	Page	Assembly	Pos.	Quantity
10875570	384	917305408	61	2	10875599	661	917292408	17	8
10875571	71	919254308	58	2	10875601	346	510229408	10	4
10875571	101	919254408	58	2	10875601	424	916049908	4	1
10875571	350	917259608	6	6	10875607	478	969763408	329	4
10875571	352	917259708	18	4	10875607	640	917291908	84	6
10875571	475	967978908	14	2	10875609	30	917511508	14	8
10875571	540	96045351	555	14	10875609	369	967986308	5	4
10875572	338	919369308	5	8	10875609	474	967928508	25	1
10875572	644	917292008	23	8	10875609	639	917291908	18	4
10875572	648	917292108	23	8	10875610	323	917626608	7	1
10875572	652	917292208	23	8	10875610	332	917825508	6	1
10875572	656	917292308	23	8	10875611	640	917291908	88	1
10875572	661	917292408	18	8	10875611	661	917292408	61	1
10875574	672	966134608	14	4	10875611	715	967936408	7	3
10875578	73	90028956	76	8	10875614	87	96034962	9	7
10875578	137	919499408	64	12	10875614	104	96034980	9	7
10875582	384	917305408	62	2	10875614	283	968026308	350	3
10875582	598	918462708	4	4	10875614	372	916177508	(7)	11
10875582	600	917269408	3	4	10875614	383	917305408	46	1
10875582	600	917269408	4	2	10875614	410	917676208	5	4
10875583	296	10663105	47	4	10875614	414	969085208	25	1
10875583	372	916177508	20	11	10875614	424	916049908	5	1
10875584	34	96045225	18	4	10875614	458	917260408	4	4
10875584	384	917305408	63	1	10875614	462	918759808	20	8
10875586	30	917511508	12	8	10875614	464	96020359	32	1
10875586	58	11643183	13	4	10875614	609	968994408	25	2
10875586	61	11643184	13	4	10875614	612	968993508	12	2
10875586	250	10127979	3	1	10875616	17	919617108	22	32
10875586	258	12583633	(2)	1	10875616	26	968036408	30	2
10875586	258	12583633	(3)	1	10875616	70	919254308	35	3
10875586	394	965784408	14	2	10875616	100	919254408	35	3
10875586	630	925141508	4	1	10875616	134	919087608	34	1
10875588	51	96035801	310	27	10875616	731	917267508	23	2
10875588	128	11347526	6	3	10875617	17	919617108	47	4
10875588	307	10872488	47	4	10875617	30	917511508	43	4
10875588	368	919010208	(1)	2	10875617	121	919644008	32	4
10875588	504	10327065	6	3	10875617	475	967978908	17	1
10875588	539	96045351	329	2	10875617	672	966134608	19	4
10875588	589	967784808	309	2	10875617	731	917267508	6	9
10875590	320	96023117	31	4	10875618	17	919617108	48	4
10875590	375	916170808	9	2	10875618	71	919254308	64	1
10875591	51	96035801	316	20	10875618	101	919254408	64	1
10875591	276	919007708	302	4	10875618	724	910836808	15	8
10875591	552	10332882	4	4	10875619	390	916162508	10	2
10875591	672	966134608	37	2	10875619	430	96036790	354	8
10875592	483	918484108	56	4	10875620	127	917257108	4	4
10875593	407	966230508	6	1	10875620	320	96023117	18	6
10875597	474	967928508	16	1	10875620	502	917261208	5	4
10875597	672	966134608	29	4	10875629	605	96037229	13	4
10875598	346	510229408	7	2	10875629	644	917292008	22	4
10875598	372	916177508	22	5	10875629	648	917292108	22	4
10875598	672	966134608	17	6	10875629	652	917292208	22	4
10875599	30	917511508	33	32	10875629	656	917292308	22	4
10875599	276	919007708	308	4	10875629	661	917292408	19	4
10875599	340	90008901	26	8	10875630	644	917292008	51	4
10875599	458	917260408	3	4	10875630	648	917292108	51	4
10875599	644	917292008	18	6	10875630	652	917292208	51	4
10875599	648	917292108	18	8	10875630	656	917292308	51	4
10875599	652	917292208	18	10	10875630	661	917292408	51	4
10875599	656	917292308	18	10	10875633	449	96036957	25	1

Item	Page	Assembly	Pos.	Quantity	Item	Page	Assembly	Pos.	Quantity
10875637	51	96035801	306	4	10875876	731	917267508	35	1
10875639	87	96034962	24	2	10875879	357	939292201	59	2
10875639	104	96034980	24	2	10875881	390	916162508	25	2
10875640	614	96045237	21	1	10875905	369	967986308	3	4
10875642	640	917291908	87	1	10875930	566	11622561	5	1
10875642	662	917292408	69	1	10875952	703	10872003	1	1
10875643	539	96045351	309	4	10875953	703	10872003	3	1
10875645	390	916162508	9	2	10875969	703	10872003	2	1
10875645	430	96036790	381	8	10876030	449	96036957	34	1
10875645	449	96036957	(2)	4	10876056	405	917304708	55	3.4
10875645	449	96036957	42	4	10876067	276	919007708	303	2
10875645	522	969256608	62	16	10876069	332	917825508	2	2
10875645	715	967936408	8	3	10876074	276	919007708	320	2
10875648	277	919007708	376	5	10876076	577	967969608	11	4
10875648	365	917259908	34	6	10876082	71	919254308	201	2
10875648	394	965784408	11	4	10876082	101	919254408	201	2
10875648	430	96036790	379	6	10876082	142	96045206	11	4
10875648	433	968923508	15	2	10876084	393	966497908	34	14
10875648	439	969015908	309	10	10876162	283	968026308	150	2
10875648	483	918484108	62	12	10876162	365	917259908	43	2
10875648	539	96045351	306	6	10876353	90	96035796	626	1
10875648	589	967784808	315	2	10876353	107	96035792	626	1
10875648	639	917291908	52	2	10876361	539	96045351	327	2
10875648	699	967785008	305	2	10876368	631	918802108	10	1
10875659	307	10872488	36	1	10876373	51	96035801	552	32
10875669	732	929582108	4	3	10876373	90	96035796	551	8
10875669	735	923879808	2	1	10876373	107	96035792	551	8
10875678	372	916177508	10	1	10876373	540	96045351	552	12
10875793	574	918628408	10	2	10876373	589	967784808	550	4
10875795	414	969085208	29	4	10876373	688	967784508	550	12
10875795	462	918759808	26	4	10876374	17	919617108	31	48
10875796	276	919007708	318	2	10876382	383	917305408	43	16
10875797	369	967986308	7	4	10876384	522	969256608	50	2
10875803	134	919087608	26	6	10876385	195	11358102	7	20
10875803	577	967969608	16	4	10876387	36	96045226	12	6
10875803	731	917267508	9	8	10876388	522	969256608	46	8
10875804	269	918731408	303	1	10876394	539	96045351	320	4
10875805	277	919007708	345	4	10876394	546	11211756	11	8
10875805	731	917267508	12	10	10876395	58	11643183	7	4
10875809	390	916162508	11	4	10876395	58	11643183	15	4
10875809	737	917268208	6	4	10876395	61	11643184	15	4
10875815	715	967936408	6	3	10876395	522	969256608	45	16
10875857	640	917291908	75	4	10876399	449	96036957	26	4
10875857	683	966591508	2	2	10876421	365	917259908	11	6
10875859	111	917691008	14	24	10876576	464	96020359	1	1
10875859	116	968046208	22	40	10876620	51	96035801	307	12
10875859	731	917267508	30	2	10876638	614	96045237	10	1
10875862	731	917267508	37	1	10876704	555	11341035	4	1
10875863	731	917267508	36	1	10876705	555	11341035	5	1
10875866	731	917267508	10	2	10876716	518	919503008	8	1
10875868	117	968331708	4	1	10876819	450	96036957	60	1
10875869	121	919644008	34	4	10876933	666	918807308	1	1
10875869	661	917292408	60	4	10877074	737	917268208	1	1
10875869	708	967321308	7	1	10877138	417	918810308	1	1
10875869	724	910836808	(1)	2	10877167	668	10876933	71	1
10875870	17	919617108	51	4	10877246	661	917292408	15	16
10875870	365	917259908	35	1	10877342	70	919254308	8	2
10875872	372	916177508	12	1	10877342	100	919254408	8	2
10875873	121	919644008	30	4	10877343	447	96036955	2258	25
10875873	134	919087608	24	2	10877344	447	96036955	2259	5

Item	Page	Assembly	Pos.	Quantity	Item	Page	Assembly	Pos.	Quantity
10877382	664	96013575	2	2	11000903	396	916168308	13	6
10877433	538	96045351	25	1	11001115	393	966497908	16	1
10877437	145	928620108	8	1	11001194	34	96045225	10	1
10877685	76	11320954	3	1	11001770	128	11347526	39	2
10877686	76	11320954	2	1	11001935	283	968026308	110	1
10877798	446	96036955	12	1	11001955	383	917305408	57	3
10877798	516	96037133	6	1	11002218	410	917676208	3	2.22
10877798	617	96037132	6	1	11002446	383	917305408	27	1
10877800	510	96045385	371	1	11002447	383	917305408	26	1
10877801	510	96045385	19	1	11002524	470	11212257	1	2
10877801	510	96045385	372	1	11002678	696	511479408	7	1
10877801	513	96037136	388	1	11002727	365	917259908	12	5
10877801	513	96037136	389	1	11002743	261	10144036	4	4
10877810	471	918956108	1	2	11002916	502	917261208	2	1
10877828	449	96036957	6	1	11002980	610	968290608	10	1
10877828	604	918989008	(10)	1	11002980	613	968267208	10	1
10877828	616	96037130	20	1	11002988	214	10143341	5	1
10877828	618	96037131	20	1	11002995	214	10143341	2	1
10877828	628	919028808	(4)	1	11003089	479	502657308	998	1
10877999	518	919503008	3	1	11003094	479	502657308	999	1
10878064	17	919617108	16	56	11003121	286	11182708	4	1
10878117	483	918484108	73	2	11003193	508	968128908	(10)	2
10878142	321	96023914	(21)	1	11003426	459	966707708	5	1
10878143	321	96023914	(22)	1	11003837	390	916162508	17	2
10878172	633	12257818	1	1	11003841	681	10354493	16	1
10878189	668	10876933	999	1	11004031	734	512363708	10	1
10878281	93	96028333	2	1	11004117	393	966497908	28	2
10878281	589	967784808	(2)	1	11004122	550	10413106	(999)	1
10878366	121	919644008	(999)	1	11004126	550	10413106	12	1
10878394	327	96034868	400	1	11004444	21	96034894	32	2
10878445	399	916163008	20	2	11004444	24	96034977	32	2
10878502	327	96034868	100	1	11004444	85	968420608	6	14
10878578	226	5700161	27	1	11004444	714	967933408	9	3
10878580	17	919617108	34	14	11005151	514	96037137	284	5.59
10878582	17	919617108	45	3	11005170	419	10877138	17	1
10878582	30	917511508	35	4	11005244	557	10449853	1	1
10878680	321	96023914	(10)	1	11005281	164	12856862	(8)	7
10878687	116	968046208	20	32	11005983	406	966230408	3	1
10878688	111	917691008	13	24	11005984	406	966230408	2	1
10878785	540	96045351	550	4	11005985	406	966230408	1	1
10878785	590	967784808	552	4	11005987	406	966230408	4	1
10878799	589	967784808	551	4	11006275	553	571737808	999	1
10878821	540	96045351	557	25	11006491	675	10802064	11	1
10878829	335	969050308	13	4	11006584	280	96034631	122	4
10878922	320	96023117	16	4	11006584	435	968977308	60	3.5
10878951	420	96032222	2	1	11007009	405	917304708	7	1
10878951	422	96032223	2	1	11007219	505	11002916	3	6
10886525	449	96036957	(80)	1	11007300	47	11346779	2	1
11000394	514	96037137	515	1	11007305	153	916959808	1	1
11000401	515	96037137	2253	3	11007309	153	916959808	2	1
11000593	164	12856862	(10)	2	11007589	372	916177508	5	1
11000700	269	918731408	101	2	11007853	40	968252908	301	1
11000700	410	917676208	21	2	11007853	453	96022872	(3)	1
11000700	414	969085208	5	1	11007853	528	968253608	301	1
11000700	462	918759808	11	1	11008020	90	96035796	310	2
11000700	464	96020359	61	1	11008020	107	96035792	310	2
11000710	399	916163008	17	1.3	11008024	447	96036955	527	4
11000710	399	916163008	18	2.8	11008055	218	10145173	2	1
11000901	396	916168308	11	2.15	11008529	457	966979108	1	1
11000902	396	916168308	14	2	11008530	457	966979108	2	1

Item	Page	Assembly	Pos.	Quantity	Item	Page	Assembly	Pos.	Quantity
11060087	681	10354493	14	8	11110060	504	10327065	39	1
11060088	681	10354493	140	8	11113906	116	968046208	33	4
11060128	450	96036957	57	2	11113917	494	96048826	351	4
11060618	514	96037137	519	3	11114455	483	918484108	43	4
11060619	514	96037137	506	2	11114556	603	917368108	1	1
11066168	203	10148432	4	1	11114971	450	96036957	59	1
11066818	74	11182596	2	1	11118077	410	917676208	22	2
11066829	74	11182596	3	1	11118077	414	969085208	21	16
11067611	152	917258108	2	0.239	11118077	462	918759808	19	6
11067611	152	917258108	3	0.689	11118077	464	96020359	17	8
11067611	152	917258108	4	0.081	11118077	483	918484108	23	2
11067612	152	917258108	1	0.54	11118160	171	10138450	6	1
11067867	405	917304708	38	1	11118242	448	96036956	504	1
11067932	520	96045387	525	14	11118396	514	96037137	211	3.8
11068607	675	10802064	(1)	10	11124205	510	96045385	223	8.35
11080088	450	96036957	62	1	11124205	512	96037136	223	3.89
11080392	504	10327065	15	1	11124207	446	96036955	224	0.83
11080881	43	96045227	758	5	11124207	448	96036956	224	0.53
11080881	447	96036955	758	18	11124207	510	96045385	224	0.93
11080881	448	96036956	758	4	11124208	446	96036955	225	0.33
11080881	513	96037136	758	4	11124208	448	96036956	225	0.43
11081053	131	774375108	3	1	11124208	510	96045385	225	2.91
11082158	483	918484108	17	2	11124208	512	96037136	225	1.46
11082601	456	963398008	4	0.28	11124208	514	96037137	225	2.53
11082602	44	96045228	202	2.31	11124209	44	96045228	226	0.35
11082602	394	965784408	15	0.04	11124209	510	96045385	226	0.93
11082602	446	96036955	202	7.44	11124209	512	96037136	226	2.91
11082602	448	96036956	202	5.94	11124209	514	96037137	226	4.53
11082602	510	96045385	202	24.41	11124210	446	96036955	227	2.26
11082602	512	96037136	202	14.02	11124210	448	96036956	227	0.88
11082602	514	96037137	202	8.82	11124210	510	96045385	227	2.86
11082602	615	96043733	202	2.1	11124211	512	96037136	228	1.23
11082603	44	96045228	203	2.41	11124211	520	96045387	228	1.32
11082603	446	96036955	203	2.2	11124212	510	96045385	229	1.2
11082603	448	96036956	203	2.77	11124212	512	96037136	229	3.71
11082603	510	96045385	203	2.14	11124212	520	96045387	229	0.65
11082603	512	96037136	203	9.43	11140402	417	918810308	37	8
11082603	514	96037137	203	5.23	11140402	539	96045351	310	4
11082604	44	96045228	204	4.29	11140403	90	96035796	314	2
11082604	446	96036955	204	4.43	11140403	107	96035792	314	2
11082604	448	96036956	204	0.73	11140403	127	917257108	5	4
11082604	512	96037136	204	7.12	11140403	320	96023117	20	6
11082605	446	96036955	205	1.63	11140403	325	968999708	4	5
11082605	510	96045385	205	0.86	11140403	417	918810308	35	28
11082605	512	96037136	205	1.33	11140403	449	96036957	30	8
11082605	514	96037137	205	5.21	11140403	502	917261208	6	4
11082606	512	96037136	206	1.18	11140403	575	917267108	11	4
11082608	512	96037136	208	0.28	11140403	714	967933408	6	1
11082609	44	96045228	209	1.23	11140403	728	917413208	14	4
11083215	412	11083498	7	1	11140465	540	96045351	332	4
11083438	412	11083498	2	1	11140469	25	968019508	30	4
11083445	412	11083498	45	1	11140469	127	917257108	24	3
11083453	412	11083498	1	1	11140469	158	918731108	21	2
11083498	410	917676208	1	1	11140469	269	918731408	378	2
11088382	714	967933408	11	2	11140469	352	917259708	16	4
11100197	452	96030724	(3)	1	11140469	365	917259908	29	2
11100949	47	11346779	13	1	11140469	372	916177508	(5)	4
11101017	499	918731908	101	1	11140469	390	916162508	22	2
11102038	670	571928508	17	1	11140469	430	96036790	380	7
11110051	462	918759808	2	1	11140469	433	968923508	18	4

Item	Page	Assembly	Pos.	Quantity	Item	Page	Assembly	Pos.	Quantity
11140469	439	969015908	376	11	11211756	538	96045351	21	1
11140469	449	96036957	40	6	11211803	574	918628408	101	0.18
11140469	462	918759808	27	4	11212256	40	968252908	100	1
11140469	483	918484108	64	8	11212257	469	917618608	1	1
11140469	539	96045351	321	4	11212467	335	969050308	2	1
11140469	639	917291908	30	8	11213246	111	917691008	4	2
11140469	662	917292408	70	2	11213247	111	917691008	5	2
11140469	672	966134608	16	12	11213706	528	968253608	100	1
11140469	693	967785408	300	2	11214049	51	96035801	156	4
11140469	699	967785008	307	2	11214357	121	919644008	(1)	1
11160431	121	919644008	35	2	11214363	365	917259908	2	1
11160431	733	923285508	9	0.3	11220418	58	11643183	5	1
11160431	738	968090008	3	0.4	11220418	61	11643184	5	1
11160586	121	919644008	22	4	11320194	30	917511508	46	4
11160668	276	919007708	190	4	11320194	474	967928508	21	1
11160723	522	969256608	22	2	11320194	475	967978908	11	1
11160744	314	96034515	301	2	11320344	357	939292201	71	12
11160744	405	917304708	13	3	11320344	583	939294201	71	12
11160970	453	96022872	(1)	1	11320604	612	968993508	8	2
11161570	538	96045351	168	1	11320720	153	916959808	(1)	1
11161571	21	96034894	34	4	11320954	70	919254308	5	1
11161571	24	96034977	34	4	11320954	100	919254408	5	1
11161917	74	11182596	4	1	11320962	70	919254308	6	13
11161917	360	11182597	4	1	11320962	100	919254408	6	13
11161917	578	11211058	4	1	11321016	724	910836808	11	4
11161919	74	11182596	(27)	1	11321126	288	11631893	11	8
11162002	483	918484108	24	8	11321144	247	10115829	7	15
11170185	675	10802064	25	1	11340583	302	10871043	2	1
11170384	668	10876933	(999)	1	11341035	538	96045351	27	1
11170565	121	919644008	36	8	11341599	510	96045385	18	5.83
11170565	733	923285508	10	2	11341840	514	96037137	509	1
11170565	738	968090008	4	4	11342133	70	919254308	19	24
11171270	419	10877138	32	1	11342133	100	919254408	19	24
11171271	419	10877138	33	1	11342208	514	96037137	510	1
11171274	419	10877138	60	1	11342253	515	96037137	788	9
11171275	419	10877138	65	1	11342255	514	96037137	511	1
11171276	419	10877138	(71)	1	11342257	514	96037137	513	1
11171306	712	11482252	2	1	11342259	514	96037137	514	1
11171311	712	11482252	1	1	11342417	547	11482347	2	1
11181884	47	11346779	5	1	11346547	111	917691008	1	4
11181885	47	11346779	9	1	11346548	111	917691008	2	2
11181886	47	11346779	12	1	11346549	111	917691008	3	2
11181887	47	11346779	34	1	11346616	146	915731908	(1)	1
11182242	384	917305408	66	1	11346779	34	96045225	5	1
11182596	70	919254308	3	1	11347024	724	910836808	3	1
11182596	100	919254408	3	1	11347027	724	910836808	2	1
11182597	352	917259708	2	1	11347028	724	910836808	30	1
11182664	275	919007708	105	1	11347500	127	917257108	2	2
11182678	668	10876933	53	1	11347526	127	917257108	1	1
11182708	275	919007708	103	1	11348072	161	12856862	60	4
11182717	639	917291908	24	8	11348100	197	10138230	6	2
11182736	134	919087608	1	1	11348648	197	10138230	8	1
11182950	121	919644008	1	4	11349182	494	96048826	(151)	2
11183029	130	11347500	2	12	11351303	188	10146367	3	1
11210201	275	919007708	106	1	11351313	265	10148366	4300	1
11210793	290	11182664	1	1	11351425	265	10148366	2300	1
11210794	290	11182664	2	1	11351426	265	10148366	4320	1
11210795	292	10871047	1	1	11351427	265	10148366	4360	1
11210798	292	10871047	2	1	11351428	265	10148366	5200	1
11211058	577	967969608	9	1	11351429	265	10148366	2210	1

Item	Page	Assembly	Pos.	Quantity	Item	Page	Assembly	Pos.	Quantity
11351430	265	10148366	2240	1	11493963	124	968077208	(15)	1
11351432	265	10148366	3820	1	11494286	724	910836808	41	2
11351500	264	10148366	2140	1	11494337	294	11210795	(98)	1
11351503	265	10148366	3800	1	11494341	313	10870965	999	1
11351510	264	10148366	1400	1	11494432	128	11347526	(2)	1
11355067	486	10144093	9	1	11494567	510	96045385	513	3
11355720	486	10144093	10	1	11494567	513	96037136	531	1
11357514	191	10149579	8	8	11494581	128	11347526	(3)	1
11358102	161	12856862	82	1	11494585	294	11210795	(98)	1
11359503	170	10147687	1	1	11600236	483	918484108	42	2
11368890	330	10878502	9	1	11600280	286	11182708	(999)	1
11370365	330	10878502	3	1	11600879	211	10135434	3	1
11373478	483	918484108	11	1	11600960	197	10138230	(4)	6
11382888	220	10149677	10	1	11620017	44	96045228	15	2.63
11386644	240	10115539	1	1	11620017	446	96036955	9	3
11389287	216	10143825	3	1	11620017	446	96036955	13	0.4
11389287	264	10148366	2151	1	11620017	516	96037133	5	9.93
11389608	160	12856862	10	1	11620017	617	96037132	5	4.06
11403694	495	11403708	20	1	11621770	414	969085208	12	0.06
11403708	494	96048826	101	1	11621770	414	969085208	14	0.7
11403994	209	10152867	2	1	11621770	462	918759808	14	0.1
11407917	162	12856862	180	1	11621770	464	96020359	28	0.07
11415774	217	10147365	1	1	11621953	31	10870204	999	1
11420632	164	12856862	(3)	1	11622218	414	969085208	3	1
11420633	164	12856862	436	1	11622218	464	96020359	29	2
11443132	214	10143341	17	2	11622224	414	969085208	20	1
11444999	218	10145173	1	1	11622224	466	10876576	26	1
11448000	194	11448005	2	2	11622224	466	10876576	(7)	1
11448002	194	11448005	1	1	11622278	209	10152867	4	1
11448005	193	10148438	1	1	11622278	210	10153151	(2)	1
11450029	287	11690588	4	1	11622278	211	10135434	2	1
11450030	287	11690588	3	1	11622561	565	967980508	1	1
11450030	311	10292815	19	1	11622989	515	96037137	789	4
11450420	433	968923508	8	2	11626068	230	12418347	5	6
11450420	441	969016008	5	2	11626108	462	918759808	3	5
11481080	414	969085208	22	3	11626108	462	918759808	4	1.65
11481080	462	918759808	25	1	11626246	309	571907208	19	2
11481080	464	96020359	26	1	11626393	494	96048826	350	4
11481413	484	968570808	1	1	11626529	483	918484108	21	2
11481963	137	919499408	78	1	11626706	134	919087608	21	4
11482252	711	917598408	2	1	11626706	269	918731408	301	2
11482305	711	917598408	3	1	11626706	276	919007708	316	24
11482347	546	11211756	2	1	11626706	494	96048826	305	4
11482426	230	12418347	1	1	11626706	705	917268408	15	1
11485426	302	10871043	3	1	11631742	276	919007708	327	4
11490010	734	512363708	31	1	11631742	491	919372008	300	4
11490271	566	11622561	4	1	11631742	639	917291908	23	4
11491125	277	919007708	412	1	11631816	17	919617108	32	8
11491349	514	96037137	522	1	11631816	263	9078301	5	3
11491889	352	917259708	21	4	11631816	318	918955408	2	6
11491889	439	969015908	377	4	11631816	335	969050308	15	8
11491889	539	96045351	312	4	11631816	429	96036790	318	4
11491889	577	967969608	30	4	11631816	439	969015908	379	4
11491889	639	917291908	26	16	11631816	494	96048826	302	2
11491897	711	917598408	(511)	1	11631816	605	96037229	11	4
11492315	522	969256608	42	11	11631816	640	917291908	91	2
11492423	737	917268208	12	1	11631860	276	919007708	314	2
11493793	741	915037208	1	1	11631893	286	11182708	6	1
11493868	70	919254308	37	1	11631893	289	10871017	6	1
11493868	100	919254408	37	1	11631940	261	10144036	7	2

Item	Page	Assembly	Pos.	Quantity	Item	Page	Assembly	Pos.	Quantity
11642349	276	919007708	328	4	11651612	410	917676208	11	4
11642349	640	917291908	83	4	11651612	414	969085208	26	3
11642355	417	918810308	31	2	11651612	429	96036790	312	2
11642358	429	96036790	305	6	11651612	462	918759808	22	5
11642358	439	969015908	310	2	11651612	464	96020359	21	4
11642358	494	96048826	303	2	11651612	475	967978908	22	2
11642358	540	96045351	556	2	11651612	483	918484108	58	3
11642358	564	917261808	5	6	11651612	539	96045351	322	6
11642358	577	967969608	13	4	11651612	661	917292408	58	2
11642358	721	968728808	23	3	11651612	672	966134608	15	6
11642377	277	919007708	340	8	11651612	731	917267508	27	2
11642497	275	919007708	(302)	1	11651767	276	919007708	307	19
11642497	365	917259908	41	2	11651767	280	96034631	303	4
11642497	383	917305408	54	1	11651767	326	919231108	300	3
11642497	645	917292008	98	4	11651767	373	96025887	13	3
11642497	649	917292108	98	4	11651767	399	916163008	15	4
11642497	653	917292208	98	4	11651767	414	969085208	24	1
11642497	657	917292308	98	4	11651767	429	96036790	310	2
11642497	662	917292408	83	4	11651767	433	968923508	17	4
11642508	609	968994408	10	2	11651767	439	969015908	306	5
11642508	612	968993508	7	2	11651767	462	918759808	21	13
11643183	51	96035801	21	1	11651767	464	96020359	31	1
11643184	51	96035801	22	1	11651767	499	918731908	301	4
11643393	360	11182597	2	1	11651767	522	969256608	52	1
11643393	578	11211058	2	1	11651767	540	96045351	334	10
11643394	360	11182597	3	1	11651767	595	969426308	301	2
11643394	578	11211058	3	1	11651767	639	917291908	29	17
11643397	360	11182597	(999)	1	11651767	644	917292008	4	2
11643655	301	10472208	10	1	11651767	648	917292108	4	2
11643686	223	10127566	2	3	11651767	652	917292208	4	2
11644899	38	968054008	15	1	11651767	656	917292308	4	2
11645138	203	10148432	3	2	11651767	661	917292408	28	4
11645384	276	919007708	331	2	11651767	731	917267508	32	2
11645384	540	96045351	554	12	11652470	30	917511508	31	6
11645384	590	967784808	554	4	11656153	182	10139112	3	2
11645386	134	919087608	35	1	11656153	254	10151328	68	3
11645386	717	917551608	2	1	11656153	256	10151329	58	2
11647373	513	96037136	522	2	11656155	244	10115664	3	3
11647548	90	96035796	313	2	11656155	254	10151328	69	1
11647548	107	96035792	313	2	11656158	212	10146791	4	2
11651006	540	96045351	339	8	11656158	217	10147365	3	4
11651006	662	917292408	74	3	11656158	230	12418347	7	2
11651578	717	917551608	5	1	11656160	230	12418347	6	1
11651580	283	968026308	306	1	11656183	478	969763408	327	4
11651580	439	969015908	21	4	11656452	177	10155227	9	1
11651612	21	96034894	12	4	11656731	71	919254308	105	8
11651612	24	96034977	12	4	11656731	101	919254408	106	8
11651612	25	968019508	20	4	11656731	280	96034631	352	6
11651612	51	96035801	303	8	11656734	116	968046208	35	4
11651612	87	96034962	5	4	11656734	639	917291908	36	2
11651612	104	96034980	5	4	11656734	644	917292008	60	2
11651612	111	917691008	21	16	11656734	648	917292108	60	2
11651612	121	919644008	26	8	11656734	652	917292208	60	2
11651612	137	919499408	68	16	11656734	656	917292308	60	2
11651612	158	918731108	16	8	11656991	449	96036957	39	6
11651612	269	918731408	306	2	11656992	164	12856862	(11)	2
11651612	280	96034631	304	18	11656992	164	12856862	(14)	1
11651612	352	917259708	15	4	11656992	215	10143342	15	1
11651612	372	916177508	30	2	11656992	248	10116110	11	4
11651612	390	916162508	21	2	11656992	254	10151328	60	2

Item	Page	Assembly	Pos.	Quantity	Item	Page	Assembly	Pos.	Quantity
11656992	257	10143707	3	3	11690056	363	10802061	4	1
11656999	73	90028956	68	12	11690057	363	10802061	3	1
11657000	357	939292201	56	12	11690584	286	11182708	1	1
11657000	540	96045351	335	2	11690584	289	10871017	1	1
11657000	583	939294201	56	12	11690585	286	11182708	2	1
11657219	214	10143341	12	1	11690585	289	10871017	2	1
11657219	218	10145173	14	1	11690587	289	10871017	4	1
11657219	249	10128439	3	1	11690588	286	11182708	5	1
11657219	254	10151328	61	14	11690588	289	10871017	5	1
11657219	256	10151329	51	2	11690589	286	11182708	98	1
11657219	257	10143707	4	1	11690589	289	10871017	98	1
11657219	429	96036790	316	4	11690637	429	96036790	308	2
11657219	600	917269408	5	4	11690637	545	96035117	30	4
11657360	280	96034631	302	4	11691013	254	10151328	97	2
11657360	574	918628408	11	2	11691035	506	919410708	(40)	10
11657360	577	967969608	(10)	3	11691104	305	10871282	40	1
11658059	370	96015921	9	4	11691327	475	967978908	10	4
11658580	116	968046208	31	12	11691327	644	917292008	52	16
11658580	256	10151329	77	1	11691327	648	917292108	52	16
11658580	318	918955408	3	6	11691327	652	917292208	52	16
11658580	430	96036790	378	6	11691327	656	917292308	52	16
11658580	439	969015908	380	15	11691327	661	917292408	52	16
11658580	545	96035117	21	3	11691328	71	919254308	106	10
11658580	564	917261808	4	6	11691328	101	919254408	107	10
11658580	565	967980508	10	12	11691375	366	11214363	1	1
11658580	605	96037229	12	4	11691377	366	11214363	2	1
11658586	724	910836808	8	2	11691424	207	10149198	26	2
11658587	724	910836808	4	1	11691424	340	90008901	74	8
11658660	220	10149677	8	2	11691539	368	919010208	15	4
11658888	64	917436708	(997)	1	11691539	417	918810308	36	8
11658890	227	9072906	4	1	11691539	640	917291908	89	1
11658891	721	968728808	29	3	11691682	640	917291908	82	4
11658892	17	919617108	20	4	11691686	200	10129474	5	4
11658892	87	96034962	26	3	11691686	212	10146791	5	1
11658892	104	96034980	26	3	11691956	58	11643183	3	1
11658892	276	919007708	325	3	11691956	61	11643184	3	1
11658892	644	917292008	48	2	11692299	42	10450273	4	1
11658892	648	917292108	48	2	11692439	302	10871043	50	1
11658892	652	917292208	48	2	11692824	21	96034894	9	12
11658892	656	917292308	48	2	11692824	24	96034977	9	12
11658892	721	968728808	28	4	11692824	51	96035801	318	2
11659642	675	10802064	22	1	11692824	396	916168308	17	4
11659651	124	968077208	(14)	1	11692824	429	96036790	313	2
11659846	207	10149198	27	1	11692824	433	968923508	14	2
11690042	410	917676208	10	2	11692824	539	96045351	308	6
11690042	417	918810308	34	24	11692824	589	967784808	314	2
11690042	575	917267108	12	4	11692827	112	968038208	7	1
11690042	728	917413208	15	4	11692827	113	968038308	7	1
11690044	362	966631008	10	3	11692827	365	917259908	28	2
11690044	365	917259908	33	6	11692827	464	96020359	22	1
11690044	499	918731908	300	2	11692827	577	967969608	19	4
11690046	661	917292408	11	2	11692827	699	967785008	302	13
11690047	449	96036957	(3)	2	11693875	112	968038208	8	2
11690048	85	968420608	16	1	11693875	113	968038308	8	2
11690048	368	919010208	8	1	11693875	127	917257108	9	2
11690048	372	916177508	14	2	11693875	277	919007708	351	17
11690048	414	969085208	27	2	11693875	280	96034631	354	2
11690048	623	917260608	5	8	11693875	326	919231108	350	3
11690048	661	917292408	54	2	11693875	365	917259908	25	2
11690048	693	967785408	301	2	11693875	399	916163008	27	2

Item	Page	Assembly	Pos.	Quantity
11693875	410	917676208	8	4
11693875	433	968923508	12	2
11693875	441	969016008	11	2
11693875	483	918484108	70	9
11693875	499	918731908	350	2
11693875	522	969256608	70	2
11693875	540	96045351	337	2
11693875	545	96035117	22	2
11693875	600	917269408	7	4
11693875	661	917292408	55	2
11693875	672	966134608	42	2
11693875	708	967321308	4	2
11693878	51	96035801	319	2
11695999	64	917436708	1	1
11697855	370	96015921	12	4
11697855	390	916162508	27	7
11698481	208	12489819	5	1
11820284	372	916177508	23	2
11820284	375	916170808	11	4
11820284	478	969763408	307	6
11820284	640	917291908	73	4
11820284	672	966134608	34	4
11820285	220	10149677	11	2
11820285	254	10151328	78	1
11822050	446	96036955	522	1
11822051	449	96036957	33	1
11826513	633	12257818	2	1
11826527	276	919007708	309	4
11826527	280	96034631	305	4
11826527	283	968026308	305	2
11826527	365	917259908	24	2
11826527	383	917305408	45	1
11826527	639	917291908	4	2
11826563	173	10126713	2	2
11826563	212	10146791	6	4
11826563	218	10145173	12	1
11826563	254	10151328	63	1
11826563	256	10151329	53	2
11826647	466	10876576	28	1
11826647	466	10876576	(8)	1
11826648	466	10876576	39	1
11826648	466	10876576	(9)	1
11826649	466	10876576	40	1
11826649	466	10876576	(10)	1
11826650	466	10876576	21	1
11826650	466	10876576	(4)	1
11826653	466	10876576	12	1
11826653	466	10876576	(3)	1
11826654	466	10876576	27	1
11835043	417	918810308	43	2
11835043	429	96036790	317	8
11835061	208	12489819	6	2
11839607	269	918731408	100	1
11840113	43	96045227	7	0.3
11840113	43	96045227	8	0.4
11840113	43	96045227	9	0.45
11840113	44	96045228	7	1.63
11840113	44	96045228	8	4.66
11840113	446	96036955	15	4.46
11840113	446	96036955	16	4.38
11840113	446	96036955	17	4.38
11840113	446	96036955	18	0.17
11840113	512	96037136	374	6.27
11840113	512	96037136	375	6.27
11840113	512	96037136	376	6.27
11840113	514	96037137	5	5.68
11840113	514	96037137	6	0.17
11840113	514	96037137	7	8.81
11840113	514	96037137	8	0.17
11840113	514	96037137	9	3.16
11840113	514	96037137	10	0.17
11840113	514	96037137	11	3.16
11840113	514	96037137	12	0.17
11840113	514	96037137	13	8.06
11840113	514	96037137	14	0.17
11840113	514	96037137	15	0.18
11840127	87	96034962	31	1
11840127	104	96034980	31	1
11840127	112	968038208	5	4
11840127	113	968038308	5	4
11840127	116	968046208	51	8
11840127	121	919644008	66	12
11840127	717	917551608	3	2
11840127	721	968728808	24	3
11840136	87	96034962	27	1
11840136	104	96034980	27	1
11840136	276	919007708	329	1
11840136	731	917267508	22	2
11840139	276	919007708	330	4
11840139	672	966134608	11	3
11840140	116	968046208	50	8
11840140	121	919644008	33	14
11840140	639	917291908	39	4
11840140	644	917292008	46	4
11840140	648	917292108	46	4
11840140	652	917292208	46	4
11840140	656	917292308	46	4
11840140	672	966134608	10	7
11840297	34	96045225	11	3
11840297	164	12856862	(13)	7
11840297	195	11358102	8	4
11840297	215	10143342	21	1
11840297	254	10151328	54	7
11840297	276	919007708	304	2
11840297	396	916168308	19	2
11840297	399	916163008	24	4
11840297	429	96036790	307	8
11840501	51	96035801	304	20
11840501	430	96036790	377	3
11840501	458	917260408	5	4
11840501	474	967928508	23	1
11840501	545	96035117	25	2
11840501	565	967980508	14	8
11840501	577	967969608	29	12
11840501	595	969426308	300	2
11840501	639	917291908	6	8
11952500	155	919553608	1	2
11963742	494	96048826	183	1
11979975	419	10877138	24	1
12100075	681	10354493	1	1

Item	Page	Assembly	Pos.	Quantity	Item	Page	Assembly	Pos.	Quantity
12100076	681	10354493	2	1	12100310	648	917292108	36	4
12100096	276	919007708	326	8	12100310	652	917292208	36	4
12100105	491	919372008	105	1	12100310	656	917292308	36	4
12100177	419	10877138	(59)	1	12100332	318	918955408	8	4
12100214	512	96037136	371	6.27	12100332	430	96036790	353	22
12100214	512	96037136	372	6.27	12100332	439	969015908	352	17
12100214	512	96037136	373	6.27	12100332	497	96039740	350	6
12100215	512	96037136	10	4.32	12100338	372	916177508	21	4
12100215	512	96037136	12	6.27	12100570	419	10877138	55	1
12100215	512	96037136	13	6.27	12100586	625	967936908	10	8
12100215	512	96037136	14	6.27	12100586	728	917413208	11	2
12100215	512	96037136	384	6.27	12100589	417	918810308	45	4
12100215	513	96037136	386	6.27	12100589	433	968923508	13	12
12100215	514	96037137	18	4.8	12100589	441	969016008	3	8
12100215	514	96037137	375	6.6	12100613	420	96032222	3	1
12100216	512	96037136	378	6.27	12100613	422	96032223	3	1
12100216	514	96037137	16	4.8	12100617	419	10877138	(1)	1
12100217	43	96045227	5	0.4	12100619	419	10877138	(1)	1
12100217	43	96045227	6	0.4	12100622	387	11002447	1	1
12100217	448	96036956	9	3	12100657	296	10663105	37	1
12100217	448	96036956	10	3	12100669	459	966707708	6	1
12100217	512	96037136	15	6.27	12100674	507	965281408	5	2
12100217	512	96037136	16	7.72	12100860	538	96045351	26	1
12100217	512	96037136	17	4.27	12100905	550	10413106	20	12
12100217	512	96037136	18	2.02	12101064	314	96034515	6	1
12100217	512	96037136	19	1.3	12101064	315	96034522	3	1
12100217	512	96037136	379	6.27	12101159	145	928620108	4	1
12100217	512	96037136	380	6.27	12101183	21	96034894	40	1
12100217	512	96037136	381	6.27	12101183	24	96034977	40	1
12100217	512	96037136	383	6.27	12101239	628	919028808	5	1
12100217	514	96037137	17	4.8	12101506	26	968036408	25	2
12100217	514	96037137	19	4.7	12101576	87	96034962	40	1
12100217	514	96037137	371	4.7	12101576	104	96034980	40	1
12100217	514	96037137	372	6.4	12101832	502	917261208	7	11
12100217	514	96037137	373	6.4	12101847	502	917261208	8	1
12100217	514	96037137	374	6.4	12101847	586	921444108	4	1
12100221	36	96045226	26	1	12101886	330	10878502	999	1
12100254	721	968728808	21	2	12101888	330	10878502	2	1
12100256	90	96035796	311	2	12102051	417	918810308	20	4
12100256	107	96035792	311	2	12102104	620	10040024	10	1
12100265	380	917304508	13	1	12102116	419	10877138	28	1
12100279	394	965784408	10	4	12102117	553	571737808	1	1
12100283	639	917291908	48	14	12102265	675	10802064	29	1
12100283	644	917292008	37	14	12102278	76	11320954	(999)	1
12100283	648	917292108	37	12	12102477	128	11347526	40	1
12100283	652	917292208	37	12	12102477	504	10327065	34	1
12100283	656	917292308	37	12	12102524	58	11643183	20	2
12100289	328	96034872	20	3	12102528	491	919372008	180	4
12100289	380	917304508	12	9	12102692	483	918484108	72	8
12100291	628	919028808	3	4	12102692	525	926891108	14	6
12100292	705	917268408	12	2	12102692	539	96045351	304	14
12100292	708	967321308	3	2	12102692	630	925141508	5	1
12100293	470	11212257	2	1	12102692	699	967785008	306	2
12100309	639	917291908	44	8	12102692	721	968728808	26	4
12100309	644	917292008	35	8	12102694	38	968054008	18	1
12100309	648	917292108	35	8	12102694	378	968514508	12	1
12100309	652	917292208	35	8	12102694	523	922648308	4	12
12100309	656	917292308	35	8	12102695	417	918810308	32	2
12100310	639	917291908	40	4	12102695	430	96036790	352	5
12100310	644	917292008	36	4	12102695	439	969015908	353	6

Item	Page	Assembly	Pos.	Quantity	Item	Page	Assembly	Pos.	Quantity
12102695	545	96035117	23	2	12204614	325	968999708	3	5
12102695	564	917261808	6	7	12204614	502	917261208	4	4
12102695	639	917291908	28	2	12206699	298	10472196	50	5
12102695	705	917268408	16	2	12206699	310	10292801	50	5
12102696	17	919617108	27	24	12206699	552	10332882	3	4
12102696	34	96045225	19	4	12207546	164	12856862	(12)	2
12102696	63	918925508	32	2	12207546	254	10151328	52	1
12102696	70	919254308	39	4	12207546	256	10151329	42	1
12102696	100	919254408	39	4	12207548	221	9078314	2	4
12102696	127	917257108	21	8	12207548	429	96036790	301	2
12102696	137	919499408	80	8	12207559	239	10142863	5	1
12102696	158	918731108	11	6	12207562	170	10147687	4	8
12102696	350	917259608	10	2	12207570	246	10142864	2	2
12102696	373	96025887	8	10	12207587	218	10145173	3	1
12102696	502	917261208	21	4	12208088	217	10147365	4	4
12102696	539	96045351	307	2	12208098	639	917291908	12	13
12102696	545	96035117	29	4	12208101	276	919007708	319	2
12102696	577	967969608	12	25	12209429	87	96034962	28	1
12102696	639	917291908	14	73	12209429	104	96034980	28	1
12102696	661	917292408	56	17	12209779	167	11389608	2	4
12102696	705	917268408	20	4	12209781	192	10149578	10	3
12102696	708	967321308	6	2	12209783	167	11389608	3	7
12102738	459	966707708	7	1	12210010	164	12856862	(6)	1
12102817	449	96036957	11	1	12210010	215	10143342	6	6
12102869	153	916959808	3	1	12210010	229	10145278	7	1
12102921	619	919617008	1	1	12210010	261	10144036	10	1
12102925	494	96048826	180	2	12210013	215	10143342	17	1
12102925	494	96048826	184	1	12210024	215	10143342	2	1
12102931	17	919617108	1	2	12210024	261	10144036	13	1
12102954	90	96035796	308	2	12210025	229	10145278	3	4
12102954	107	96035792	308	2	12210029	215	10143342	12	1
12103044	675	10802064	10	1	12210035	219	10147364	3	3
12103320	71	919254308	(1)	1	12210037	253	10144098	3	1
12103321	71	919254308	(2)	1	12210040	186	10153583	4	3
12103434	419	10877138	(2)	1	12210060	175	10132560	3	28
12103676	723	919007108	5	1	12211223	484	968570808	(1)	1
12103903	550	10413106	(18)	2	12211232	484	968570808	3	1
12103956	26	968036408	20	2	12211444	705	917268408	(3)	2
12104171	538	96045351	(4)	3	12213406	540	96045351	558	3
12104246	47	11346779	50	1	12213825	340	90008901	86	10
12104276	472	10877810	999	1	12214460	277	919007708	380	14
12201166	87	96034962	7	4	12214460	464	96020359	23	2
12201166	104	96034980	7	4	12214938	71	919254308	84	16
12202784	21	96034894	31	2	12214938	101	919254408	84	16
12202784	24	96034977	31	2	12214938	269	918731408	302	2
12202784	483	918484108	54	4	12214938	442	917260108	5	8
12202784	539	96045351	328	2	12215338	539	96045351	326	6
12202784	699	967785008	303	2	12215999	235	10142744	3	1
12202976	30	917511508	34	32	12216054	71	919254308	104	4
12202976	51	96035801	324	24	12216054	101	919254408	105	4
12203070	412	11083498	37	2	12216054	645	917292008	99	9
12203167	540	96045351	336	2	12216054	649	917292108	99	9
12203451	355	932916901	22	1	12216054	653	917292208	99	9
12203451	672	966134608	41	2	12216054	657	917292308	99	9
12203634	51	96035801	311	22	12216056	645	917292008	64	12
12203634	412	11083498	38	3	12216056	649	917292108	64	12
12203634	539	96045351	305	4	12216056	653	917292208	64	12
12203635	90	96035796	312	2	12216056	657	917292308	64	12
12203635	107	96035792	312	2	12216056	661	917292408	33	20
12204614	127	917257108	3	4	12216183	719	968811608	5	2

Item	Page	Assembly	Pos.	Quantity	Item	Page	Assembly	Pos.	Quantity
12216193	483	918484108	59	2	12455699	213	10133928	1	1
12216195	327	96034868	300	3	12466377	485	11373478	738	1
12216201	439	969015908	354	2	12475399	238	10140729	4	1
12216201	721	968728808	27	4	12476138	188	10146367	4	1
12216202	134	919087608	20	2	12478647	188	10146367	5	1
12216205	565	967980508	9	4	12489819	206	10146658	240	1
12216217	417	918810308	40	4	12490199	206	10146658	230	1
12216233	335	969050308	12	12	12503120	484	968570808	2	1
12216237	478	969763408	303	3	12511916	214	10143341	1	1
12217239	483	918484108	57	3	12512627	164	12856862	432	1
12218127	672	966134608	12	8	12544505	258	12583633	20	2
12218194	128	11347526	10	1	12549825	193	10148438	1	1
12218194	504	10327065	12	1	12554272	441	969016008	6	1
12219296	30	917511508	32	8	12565355	195	11358102	4	4
12219309	323	917626608	2	2	12583633	165	12856862	581	1
12219491	209	10152867	3	1	12691559	305	10871282	(3)	4
12219804	412	11083498	39	4	12691987	335	969050308	14	4
12220085	332	917825508	4	2	12692008	737	917268208	10	4
12222407	121	919644008	20	16	12692012	17	919617108	15	32
12222407	276	919007708	312	2	12693951	514	96037137	524	1
12222407	280	96034631	301	2	12694669	186	10153583	160	1
12222896	466	10876576	22	1	12809567	251	9077238	1	1
12222989	352	917259708	12	4	12820742	213	10133928	2	1
12222996	439	969015908	304	7	12835708	170	10147687	1	1
12222996	545	96035117	20	3	12843150	209	10152867	5	1
12223034	581	939294001	25	1	12847441	238	10140729	2	1
12223035	597	10038509	30	4	12856862	159	919371808	1	1
12223051	731	917267508	7	1	12861845	207	10149198	25	1
12223057	338	919369308	6	4	12863021	231	10142733	1	1
12223057	611	968267108	2	2	12869773	165	12856862	570	1
12223058	269	918731408	305	2	12873083	207	10149198	1	1
12224014	277	919007708	337	3	12874086	195	11358102	2	1
12224014	352	917259708	17	4	12898856	494	96048826	103	1
12224034	116	968046208	21	8	12907001	258	12583633	(1)	1
12224035	73	90028956	87	2	12907020	258	12583633	(1)	1
12224045	17	919617108	46	1	12977971	258	12583633	(1)	1
12224196	539	96045351	316	2	12978423	257	10143707	1	1
12225211	728	917413208	12	2	13187353	155	919553608	2	1
12225311	731	917267508	16	2	13410342	258	12583633	1	2
12225935	417	918810308	41	4	240049702	196	10120186	7	5
12226068	685	968708708	267	2	240122602	197	10138230	9	3
12226080	17	919617108	53	2	240122602	197	10138230	9	3
12226080	640	917291908	76	2	240186402	550	10413106	23	4
12226910	276	919007708	301	5	240186402	550	10413106	29	4
12227697	320	96023117	19	6	240191502	283	968026308	100	1
12228747	17	919617108	23	4	241047802	370	96015921	7	1
12229337	373	96025887	11	14	243034002	196	10120186	10	2
12257818	632	916166208	1	1	247021702	52	96035801	626	2
12400857	196	10120186	3	1	247021702	127	917257108	18	2
12408221	196	10120186	2	1	247021802	483	918484108	35	1
12412141	494	96048826	(152)	2	247105602	52	96035801	620	1
12414685	485	11373478	739	1	247105602	90	96035796	621	1
12418347	163	12856862	340	1	247105602	107	96035792	621	1
12418622	483	918484108	19	1	247105602	540	96045351	609	4
12424993	206	10146658	211	1	247105602	590	967784808	638	1
12428325	220	10149677	10	1	247105602	595	969426308	605	1
12429351	164	12856862	(2)	1	247108302	52	96035801	644	2
12429430	164	12856862	(4)	1	247108302	327	96034868	401	2
12433377	539	96045351	204	2	247108302	478	969763408	635	1
12438990	203	10148432	1	1	247108302	541	96045351	710	2

Item	Page	Assembly	Pos.	Quantity	Item	Page	Assembly	Pos.	Quantity
247108302	595	969426308	610	1	4042302	653	917292208	66	4
247108402	542	96045351	767	1	4042302	657	917292308	66	4
247117702	51	96035801	616	1	4042302	662	917292408	66	4
247117702	90	96035796	612	2	404230208	372	916177508	8	2
247117702	107	96035792	612	2	404230308	405	917304708	45	1
247117702	540	96045351	607	15	404250914	405	917304708	51	1
247117702	688	967784508	609	1	404291213	58	11643183	14	4
247126202	228	10145176	2	1	404291213	61	11643184	14	4
247128502	543	96045351	842	1	404293213	368	919010208	11	1
247128602	51	96035801	614	1	404294613	372	916177508	17	4
247128602	90	96035796	609	1	4043006	193	10148438	5	2
247128602	107	96035792	609	1	404309408	73	90028956	62	24
247128602	541	96045351	639	8	404312108	540	96045351	338	4
247128602	590	967784808	601	2	404317008	352	917259708	11	28
247128602	688	967784508	611	2	404317008	577	967969608	14	28
247138602	542	96045351	790	2	404318008	583	939294201	21	24
247138602	590	967784808	600	3	404319708	305	10871282	25	4
261101108	412	11083498	50	0.3	404320908	73	90028956	11	12
262101308	384	917305408	68	0.04	404360408	550	10413106	27	4
262103108	417	918810308	30	0.064	404361208	546	11211756	9	16
262103908	280	96034631	123	0.5	404361208	548	10342823	4	4
262103908	320	96023117	8	1.6	404364108	546	11211756	10	4
262103908	429	96036790	(3)	0.4	404400508	405	917304708	16	1
262103908	429	96036790	(3)	0.6	404400508	696	511479408	5	1
262103908	439	969015908	12	0.66	404402708	472	10877810	30	1
262103908	525	926891108	7	0.16	404402908	472	10877810	31	1
262103908	610	968290608	11	0.2	404403608	472	10877810	9	2
262103908	613	968267208	11	0.2	406209008	70	919254308	20	24
262104308	37	966167808	5	1.08	406209008	100	919254408	20	24
262105508	70	919254308	40	0.56	4062145	70	919254308	18	68
262105508	100	919254408	40	0.56	4062145	100	919254408	18	68
262106508	433	968923508	19	0.37	406216008	666	918807308	5	4
262106608	442	917260108	7	0.54	4065240	277	919007708	335	2
262108908	434	964093408	4	0.5	406527808	405	917304708	24	4
262181001	337	90025640	315	6.29	406527808	491	919372008	302	3
262181001	337	90025640	316	6.24	4065281	134	919087608	32	12
262183501	337	90025640	314	6.26	406590105	716	967937608	3	2
272012502	721	968728808	4	130	406601008	577	967969608	17	6
288154508	639	917291908	58	2	406603108	158	918731108	3	6
288176208	134	919087608	22	1	406603108	365	917259908	9	9
288182508	462	918759808	35	1	406603108	619	919617008	7	3
288195608	663	921456108	1	1	406603408	732	929582108	7	1
308115114	70	919254308	7	4	406604208	70	919254308	27	2
308115114	100	919254408	7	4	406604208	100	919254408	27	2
380057108	276	919007708	205	6	406605808	619	919617008	6	4
4000521	354	90208882	6	24	406607008	629	968068308	3	1
4000809	369	967986308	6	4	406607008	721	968728808	8	4
4000809	639	917291908	19	8	406608908	277	919007708	338	6
400093303	357	939292201	8	5	408311208	518	919503008	23	4
4001622	205	10150741	2	4	408400701	685	968708708	266	2
400208003	359	90017588	33	3	408401901	449	96036957	41	4
4002698	58	11643183	12	4	408603508	417	918810308	33	4
4002698	61	11643184	12	4	408650608	318	918955408	11	4
4002860	47	11346779	32	4	408650608	716	967937608	2	2
4002886	128	11347526	32	4	409710601	73	90028956	67	4
4002886	504	10327065	25	4	410120308	705	917268408	13	2
402600208	550	10413106	30	4	411514608	732	929582108	8	1
404230108	116	968046208	30	12	411514877	47	11346779	49	7
4042302	645	917292008	66	4	411517114	491	919372008	350	6
4042302	649	917292108	66	4	411703308	366	11214363	3	1

Item	Page	Assembly	Pos.	Quantity	Item	Page	Assembly	Pos.	Quantity
411903008	30	917511508	49	8	428009008	665	967771908	3	2
411903008	378	968514508	11	1	428011301	194	11448005	7	2
411903008	405	917304708	23	4	428100708	281	10429930	5	1
411903008	407	966230508	5	2	4281019	583	939294201	12	1
411903008	599	917269308	4	4	428102508	347	570109008	12	1
411903008	609	968994408	27	2	428102708	583	939294201	4	1
411903008	610	968290608	25	4	4281048	583	939294201	13	1
411903008	612	968993508	14	2	428105908	355	932916901	18	1
411903008	613	968267208	25	4	428105908	581	939294001	21	1
411903108	372	916177508	9	6	429606201	357	939292201	62	1
411903108	377	916162808	6	12	429612001	73	90028956	57	1
411903108	716	967937608	4	4	429900308	85	968420608	7	12
413002708	417	918810308	44	4	429900608	499	918731908	376	4
413002808	383	917305408	53	1	430608708	71	919254308	86	8
413006208	368	919010208	13	4	430608708	101	919254408	86	8
413006208	522	969256608	(3)	16	430611008	644	917292008	3	1
420000414	85	968420608	8	2	430611008	648	917292108	3	1
420001014	483	918484108	68	8	430611008	652	917292208	3	1
420001114	277	919007708	378	4	430611008	656	917292308	3	1
420001114	368	919010208	12	1	430611008	661	917292408	23	1
420002101	73	90028956	88	2	430704808	297	10008308	13	2
420010405	30	917511508	48	16	430706808	309	571907208	13	2
420050108	685	968708708	268	2	430707208	472	10877810	8	2
420060201	405	917304708	39	2	430709608	734	512363708	32	1
420060705	17	919617108	58	6	431100201	355	932916901	21	1
420060705	623	917260608	6	8	431100201	581	939294001	24	1
420060705	716	967937608	5	6	431200501	340	90008901	91	3
421000408	347	570109008	17	2	431204301	581	939294001	18	1
421000508	347	570109008	18	1	432006708	609	968994408	11	1
421100608	540	96045351	333	14	432007908	583	939294201	72	1
421104208	17	919617108	29	2	432008001	357	939292201	72	1
421300208	134	919087608	14	8	432011808	625	967936908	13	4
421500201	121	919644008	27	8	432310501	196	10120186	10	2
421801708	393	966497908	14	2	433100908	71	919254308	62	1
421801708	407	966230508	4	2	433100908	101	919254408	62	1
421801708	491	919372008	377	6	433100908	121	919644008	37	4
421801708	494	96048826	376	8	433100908	134	919087608	25	1
421801708	599	917269308	3	4	433100908	623	917260608	11	4
421802108	399	916163008	14	1	433100908	705	917268408	24	3
421802108	407	966230508	7	1	433100908	731	917267508	44	1
421861405	372	916177508	29	4	433101208	70	919254308	49	1
421861405	491	919372008	376	3	433101208	100	919254408	49	1
422001001	357	939292201	47	3	433101208	575	917267108	10	2
4229913	357	939292201	53	12	433101208	705	917268408	11	2
423901508	581	939294001	26	1	433101208	708	967321308	2	1
423901508	583	939294201	53	12	433101208	728	917413208	13	2
423910801	340	90008901	27	8	433101208	733	923285508	8	1
423910801	340	90008901	75	8	433102508	662	917292408	80	1
423911201	73	90028956	93	8	433102508	714	967933408	12	1
423912001	73	90028956	69	12	433102808	429	96036790	101	1
424000508	577	967969608	(12)	3	433102808	439	969015908	101	1
424100708	346	510229408	8	6	433102808	715	967936408	5	1
425050608	47	11346779	47	11	433105008	629	968068308	6	1
425050908	263	9078301	7	3	433105008	705	917268408	28	1
425100408	518	919503008	24	4	433206208	738	968090008	2	2
425100508	685	968708708	269	2	433206408	365	917259908	23	1
425220708	449	96036957	43	4	434018708	474	967928508	27	1
425220708	522	969256608	63	16	434022601	668	10876933	41	2
425221108	522	969256608	60	1	451000208	715	967936408	1	1
428002908	296	10663105	36	1	451210308	372	916177508	11	1

Item	Page	Assembly	Pos.	Quantity	Item	Page	Assembly	Pos.	Quantity
451237208	134	919087608	10	2	470030308	688	967784508	608	1
451237508	134	919087608	11	1	470030408	595	969426308	600	1
451426608	731	917267508	43	1	470030908	542	96045351	804	1
451430708	639	917291908	32	2	470032408	541	96045351	669	3
452551408	705	917268408	8	1	470032708	541	96045351	670	1
453032708	365	917259908	14	1	470032708	595	969426308	601	2
453040908	577	967969608	15	2	470033108	90	96035796	627	1
4600021	70	919254308	24	24	470033108	107	96035792	627	1
4600021	100	919254408	24	24	470200108	127	917257108	17	14
4600021	111	917691008	15	48	470230308	699	967785008	602	1
4600021	116	968046208	23	80	470230608	478	969763408	645	1
4600021	639	917291908	41	8	470233408	542	96045351	799	1
4600021	644	917292008	38	8	470400708	361	90200104	8	1
4600021	648	917292108	38	8	470402208	52	96035801	657	4
4600021	652	917292208	38	8	470430308	688	967784508	606	1
4600021	656	917292308	38	8	470432608	541	96045351	702	1
4600021	662	917292408	85	4	470432708	543	96045351	832	1
4600021	731	917267508	42	4	470433008	542	96045351	791	1
4600199	134	919087608	27	3	470700208	540	96045351	606	5
4600222	70	919254308	26	2	470700208	590	967784808	608	1
4600222	100	919254408	26	2	471001308	361	90200104	3	2
4600222	277	919007708	383	4	471004514	542	96045351	743	5
4600232	226	5700161	29	3	471008214	542	96045351	764	1
4600328	17	919617108	49	4	471030008	502	917261208	13	2
4600328	71	919254308	63	1	471030008	693	967785408	607	1
4600328	101	919254408	63	1	471030108	127	917257108	16	8
4600328	323	917626608	6	1	471030508	541	96045351	628	1
4600328	332	917825508	8	1	471030508	590	967784808	624	1
4600335	73	90028956	84	12	471030708	541	96045351	650	5
4600604	134	919087608	30	3	471030808	51	96035801	617	1
4600604	323	917626608	4	3	471030808	540	96045351	610	7
4600604	332	917825508	7	1	471030808	590	967784808	612	2
4600604	731	917267508	13	10	471031008	52	96035801	651	1
4600612	71	919254308	202	2	471031108	478	969763408	602	1
4600612	101	919254408	202	2	471031108	542	96045351	749	3
4600871	38	968054008	11	4	471031208	595	969426308	611	1
4601105	182	10139112	6	1	471031308	540	96045351	600	4
4601105	264	10148366	(3)	4	471031308	590	967784808	636	1
4601290	70	919254308	32	2	471031408	541	96045351	683	4
4601290	100	919254408	32	2	471031608	542	96045351	754	4
463000003	340	90008901	41	3	471032108	586	921444108	3	3
463000103	340	90008901	21	5	471032108	590	967784808	640	1
463000103	357	939292201	43	3	471032108	688	967784508	600	1
4635031	545	96035117	24	2	471032208	542	96045351	738	3
4635422	17	919617108	24	4	471032208	590	967784808	634	1
470010108	688	967784508	612	1	471032608	51	96035801	608	3
470010108	699	967785008	603	1	471032608	90	96035796	622	1
470010208	542	96045351	825	1	471032608	107	96035792	622	1
470010608	542	96045351	821	2	471032608	693	967785408	606	4
470010708	541	96045351	713	1	471032708	51	96035801	618	10
470010708	590	967784808	631	1	471032708	540	96045351	618	3
470010908	542	96045351	733	1	471032708	590	967784808	613	1
470011008	542	96045351	830	1	471032808	52	96035801	655	8
470011008	590	967784808	629	1	471032808	541	96045351	651	3
470011208	543	96045351	840	1	471032808	693	967785408	608	1
470011308	90	96035796	611	1	471032908	124	968077208	601	12
470011308	107	96035792	611	1	471032908	541	96045351	725	2
470011308	541	96045351	666	2	471033108	541	96045351	696	4
470011408	542	96045351	802	1	471033208	541	96045351	657	13
470030108	127	917257108	15	10	471033208	595	969426308	609	3

Item	Page	Assembly	Pos.	Quantity	Item	Page	Assembly	Pos.	Quantity
471033208	688	967784508	601	1	472530608	590	967784808	643	3
471033208	699	967785008	600	2	472531508	127	917257108	11	2
471033308	541	96045351	634	4	472531508	541	96045351	726	1
471033408	51	96035801	607	28	472531808	51	96035801	605	6
471033408	541	96045351	682	4	472531808	90	96035796	602	2
471033608	51	96035801	603	2	472531808	107	96035792	602	2
471034308	277	919007708	425	2	472531808	541	96045351	653	5
471034408	51	96035801	606	9	473210508	693	967785408	600	1
471034508	51	96035801	602	3	473230508	541	96045351	664	2
471034508	90	96035796	624	1	473230608	52	96035801	645	2
471034508	107	96035792	624	1	473231008	52	96035801	658	4
471034708	51	96035801	610	1	473231008	543	96045351	843	1
471034708	541	96045351	672	8	473331308	542	96045351	801	1
471034808	541	96045351	662	4	474000408	52	96035801	621	1
471034808	688	967784508	605	4	474001008	51	96035801	600	3
471035308	90	96035796	616	2	474030308	542	96045351	752	1
471035308	107	96035792	616	2	474030508	542	96045351	753	1
471035308	541	96045351	643	4	474030708	542	96045351	751	1
471035508	325	968999708	11	2	474032408	51	96035801	601	10
471035508	478	969763408	636	2	474032708	52	96035801	624	8
471037508	327	96034868	402	3	474032808	52	96035801	636	1
471039308	462	918759808	36	1	474032808	590	967784808	628	1
471039408	542	96045351	798	1	474033008	590	967784808	630	1
471039608	540	96045351	611	6	474200408	90	96035796	601	1
471039608	590	967784808	625	1	474200408	107	96035792	601	1
471039708	478	969763408	605	1	474231508	478	969763408	649	1
471039708	541	96045351	619	5	474232808	52	96035801	623	4
471039708	590	967784808	614	1	474234008	688	967784508	150	3
471039808	478	969763408	623	1	474901708	540	96045351	515	1
471039908	541	96045351	720	3	474906608	540	96045351	503	2
471900108	52	96035801	627	2	474906708	540	96045351	505	2
471900308	541	96045351	671	1	474906908	540	96045351	516	3
471900408	542	96045351	735	1	474907508	540	96045351	502	1
471900508	693	967785408	609	1	474907608	540	96045351	501	1
471900608	52	96035801	637	6	474908108	540	96045351	508	2
471900808	541	96045351	681	1	474909008	540	96045351	517	1
471901108	541	96045351	620	3	475004108	542	96045351	747	1
471901108	590	967784808	621	1	475030108	52	96035801	625	2
471901208	541	96045351	648	1	475030708	52	96035801	643	2
471901208	590	967784808	637	1	475031208	90	96035796	607	1
471901308	52	96035801	646	2	475031208	107	96035792	607	1
471901408	541	96045351	661	1	475031708	541	96045351	714	1
471902208	540	96045351	602	1	475033608	52	96035801	639	6
471902408	90	96035796	605	1	475407208	51	96035801	613	1
471902408	107	96035792	605	1	475407208	542	96045351	780	1
471903608	541	96045351	715	2	475408108	542	96045351	734	1
471903808	541	96045351	667	1	475430208	543	96045351	846	1
471903908	90	96035796	603	1	475430408	52	96035801	632	3
471903908	107	96035792	603	1	475430508	52	96035801	647	2
472004008	361	90200104	4	2	475430508	541	96045351	687	1
472300414	543	96045351	841	1	475430808	542	96045351	827	1
472330208	90	96035796	604	2	475430908	542	96045351	819	1
472330208	107	96035792	604	2	475430908	595	969426308	615	1
472330208	540	96045351	614	8	475431308	51	96035801	609	2
472330208	590	967784808	616	2	475431308	541	96045351	674	2
472330208	688	967784508	604	3	475431408	90	96035796	620	1
472331208	540	96045351	604	5	475431408	107	96035792	620	1
472331208	590	967784808	607	1	475431408	542	96045351	758	1
472332008	539	96045351	192	1	475431408	688	967784508	610	4
472530608	541	96045351	625	13	475431608	542	96045351	789	2

Item	Page	Assembly	Pos.	Quantity	Item	Page	Assembly	Pos.	Quantity
475431708	543	96045351	845	1	477704077	472	10877810	25	2
475432008	693	967785408	601	1	477704108	540	96045351	617	2
475432108	541	96045351	701	2	477704108	552	10332882	13	4
475432208	542	96045351	831	1	477704108	555	11341035	23	4
475432308	52	96035801	634	2	477704108	590	967784808	620	1
475432308	541	96045351	711	1	477704108	597	10038509	120	3
475432908	693	967785408	603	4	477704208	325	968999708	12	1
475433108	52	96035801	661	2	477704208	472	10877810	26	2
475433408	693	967785408	610	1	477704208	541	96045351	686	1
475433508	542	96045351	824	4	477704208	552	10332882	10	2
475433508	595	969426308	614	2	477704208	555	11341035	24	2
475433608	541	96045351	622	1	477704208	597	10038509	110	2
475433608	590	967784808	622	1	477704208	668	10876933	63	1
475434208	541	96045351	698	1	477704308	297	10008308	19	2
475435308	543	96045351	844	1	477704308	478	969763408	600	1
475435408	542	96045351	828	1	477704408	124	968077208	603	4
475435508	542	96045351	756	3	477704408	314	96034515	402	2
475435608	541	96045351	727	1	477704408	315	96034522	401	1
475436108	90	96035796	610	1	477704508	478	969763408	639	2
475436108	107	96035792	610	1	477704608	325	968999708	13	2
475436108	542	96045351	740	1	477704608	550	10413106	34	1
475436108	590	967784808	611	1	477704708	542	96045351	741	2
475436708	542	96045351	803	1	477704708	597	10038509	100	2
475501108	52	96035801	662	2	477704808	276	919007708	151	1
475501108	90	96035796	623	1	477704908	541	96045351	724	4
475501108	107	96035792	623	1	477705108	325	968999708	6	1
475502408	542	96045351	769	2	477705208	542	96045351	730	1
475601508	52	96035801	642	4	477705208	590	967784808	644	1
475601508	540	96045351	605	5	477705408	550	10413106	31	1
475601508	590	967784808	609	1	477705808	90	96035796	619	1
475602608	541	96045351	675	9	477705808	107	96035792	619	1
475603208	541	96045351	632	3	477705808	335	969050308	11	1
476607608	478	969763408	634	1	477705808	361	90200104	28	1
477100208	316	96039022	3	1	4789210	215	10143342	23	1
477100208	483	918484108	38	1	482430314	590	967784808	639	2
477100308	483	918484108	32	1	482430314	688	967784508	607	1
477101408	127	917257108	13	22	482430614	90	96035796	606	1
477102808	314	96034515	(2)	1	482430614	107	96035792	606	1
4772028	177	10155227	12	2	482430614	541	96045351	624	4
477400308	541	96045351	679	2	482430614	590	967784808	635	1
477400608	541	96045351	700	1	482431114	51	96035801	611	1
477401308	127	917257108	14	22	482431314	543	96045351	836	1
477401408	316	96039022	4	1	482431414	52	96035801	648	1
477401408	462	918759808	37	1	482431514	52	96035801	660	2
477401408	483	918484108	37	1	482431514	595	969426308	612	2
477401508	483	918484108	33	1	482431614	541	96045351	633	2
477401608	541	96045351	660	2	482431814	542	96045351	826	1
477401708	542	96045351	795	2	482530814	51	96035801	615	2
477402608	314	96034515	(3)	1	482530814	542	96045351	777	3
477402608	543	96045351	849	1	485501414	64	917436708	(2)	288
477510501	357	939292201	82	3	4900000	666	918807308	4	4
477511401	357	939292201	86	2	4901159	303	11692439	3	4
477700208	543	96045351	848	1	4901247	472	10877810	29	1
477700408	541	96045351	678	2	4901531	61	11643184	7	3
477700508	541	96045351	659	2	4901531	548	10342823	19	4
477700808	542	96045351	794	2	4901595	70	919254308	21	4
477701108	541	96045351	699	1	4901595	100	919254408	21	4
477704008	543	96045351	847	1	4902172	111	917691008	19	8
477704008	552	10332882	12	1	4902244	73	90028956	66	24
477704008	555	11341035	22	4	4980000	196	10120186	9	1

Item	Page	Assembly	Pos.	Quantity	Item	Page	Assembly	Pos.	Quantity
4980000	197	10138230	(5)	1	510586608	589	967784808	502	4
4980012	247	10115829	6	2	510586708	51	96035801	551	8
4980257	197	10138230	12	12	510586708	90	96035796	550	2
4980359	200	10129474	4	2	510586708	107	96035792	550	2
4980376	183	10147438	5	1	510586708	540	96045351	(1)	1
4980482	188	10146367	7	2	510586708	540	96045351	551	2
4980712	550	10413106	15	1	510586708	590	967784808	553	3
4980736	197	10138230	5	1	510586708	688	967784508	551	3
4980927	197	10138230	9	3	510586908	540	96045351	506	6
4980927	197	10138230	9	3	510586908	589	967784808	501	4
4981029	182	10139112	6	4	510587008	540	96045351	(1)	1
4981172	238	10140729	5	3	510587008	540	96045351	(1)	1
4981226	214	10143341	16	3	510587008	540	96045351	560	6
4981233	229	10145278	6	1	510587008	590	967784808	556	2
4981235	180	10150934	3	1	510587908	277	919007708	(1)	1
4981235	238	10140729	19	2	510598408	277	919007708	432	6
500411708	17	919617108	56	6	510599608	589	967784808	158	1
5004624	177	10155227	6	1	510599708	589	967784808	160	1
5004929	220	10149677	6	2	510629008	90	96035796	618	1
5005219	539	96045351	317	7	510629008	107	96035792	618	1
5005525	478	969763408	324	4	510629008	540	96045351	613	4
500917508	640	917291908	92	2	510629008	590	967784808	618	2
500926208	285	97029921	430	2	510629008	688	967784508	613	1
501201708	277	919007708	440	1	510629508	539	96045351	175	1
501243708	542	96045351	(1)	1	510629508	589	967784808	173	1
501243708	562	471030708	1	1	510642508	539	96045351	182	1
502037001	73	90028956	80	1	510644608	539	96045351	183	1
502037201	357	939292201	70	1	510667308	335	969050308	6	2
502037201	583	939294201	70	1	510671108	90	96035796	158	1
502319101	357	939292201	51	1	510671108	107	96035792	158	1
502618908	158	918731108	20	2	510671108	538	96045351	156	2
502624508	128	11347526	41	1	510671108	589	967784808	168	1
502651408	479	502657308	2	1	510671108	688	967784508	154	1
502652908	583	939294201	73	1	510671508	538	96045351	165	2
502657308	478	969763408	55	1	510671808	335	969050308	(1)	1
502657708	478	969763408	167	1	510674508	538	96045351	166	1
502661608	478	969763408	153	1	510676908	90	96035796	50	1
502806508	93	96028333	1	1	510676908	107	96035792	50	1
502807308	589	967784808	(1)	1	510697608	539	96045351	178	1
502807501	357	939292201	(1)	1	510697708	539	96045351	179	1
502921408	478	969763408	641	1	510702408	540	96045351	504	1
502921908	478	969763408	151	2	510712308	696	511479408	3	1
502923708	449	96036957	46	2	510718108	556	10489734	27	1
502932508	325	968999708	9	1	510719008	556	10489734	26	1
502932808	478	969763408	312	1	510737408	372	916177508	7	2
502932908	325	968999708	8	1	510738308	299	571900808	12	1
502933208	499	918731908	430	1	510738308	300	10472202	12	1
502933508	277	919007708	449	1	510738608	550	10413106	(1)	4
502940108	325	968999708	7	1	510738608	550	10413106	(1)	4
502987108	478	969763408	166	1	510741508	550	10413106	32	1
510037408	540	96045351	513	1	510741508	552	10332882	11	2
510133208	540	96045351	519	1	510741508	555	11341035	21	5
510146208	280	96034631	400	1	510741708	558	511433908	21	1
510146208	540	96045351	521	1	510741708	561	511419608	21	1
510229408	338	919369308	2	2	510746008	688	967784508	153	1
510408708	538	96045351	153	1	510746108	560	10218310	1	1
510408708	589	967784808	171	1	510753308	372	916177508	27	2
510413508	539	96045351	203	1	510753408	556	10489734	11	1
510500508	478	969763408	300	1	510754008	538	96045351	158	1
510501008	478	969763408	301	2	510760408	412	11083498	32	1

Item	Page	Assembly	Pos.	Quantity	Item	Page	Assembly	Pos.	Quantity
510760408	551	571415008	2	6	511460608	589	967784808	150	1
510762108	275	919007708	(301)	3	511464108	538	96045351	55	1
510776608	311	10292815	14	1	511476908	539	96045351	197	2
510782508	561	511419608	3	1	511479408	693	967785408	151	1
510782708	561	511419608	5	1	511481508	90	96035796	160	1
510782808	561	511419608	6	1	511481508	107	96035792	160	1
510782908	561	511419608	7	1	511481508	589	967784808	151	1
510783008	561	511419608	9	1	511485408	538	96045351	164	1
510787908	546	11211756	(3)	4	511493608	688	967784508	50	1
510792708	559	510697608	8	2	511493708	688	967784508	152	1
510797008	558	511433908	3	1	511497514	538	96045351	170	1
510797208	558	511433908	5	1	511502608	277	919007708	430	2
510797308	558	511433908	6	1	511505808	539	96045351	176	2
510797408	558	511433908	7	1	511505908	699	967785008	151	3
510797508	558	511433908	9	1	511508108	589	967784808	163	1
510797708	558	511433908	22	1	511508208	589	967784808	162	1
510797708	561	511419608	22	1	511508608	699	967785008	153	3
511001708	410	917676208	9	2	511510008	540	96045351	500	1
511001708	518	919503008	21	5	511512208	589	967784808	153	2
511015108	558	511433908	4	1	511512308	589	967784808	155	2
511015208	561	511419608	1	1	511515008	688	967784508	151	2
511015308	561	511419608	4	1	511517808	51	96035801	500	8
511015408	561	511419608	10	1	511517808	90	96035796	500	2
511015508	558	511433908	17	2	511517808	107	96035792	500	2
511015508	561	511419608	17	1	511517808	540	96045351	510	3
511025408	58	11643183	11	2	511517808	688	967784508	500	3
511025408	61	11643184	11	2	511518808	540	96045351	520	1
511025508	58	11643183	10	2	512363708	731	917267508	4	1
511025508	61	11643184	10	2	514507808	297	10008308	16	1
511035108	540	96045351	(1)	1	514525208	347	570109008	20	7
511036508	58	11643183	1	1	514530408	347	570109008	15	1
511036508	61	11643184	1	1	514539308	297	10008308	12	1
511040408	538	96045351	(2)	3	514584908	294	11210795	26	1
511043308	552	10332882	(999)	1	514588908	297	10008308	14	1
511044108	539	96045351	193	1	514589108	300	10472202	13	1
511055908	538	96045351	169	1	514611808	58	11643183	4	1
511057608	539	96045351	188	1	514611808	61	11643184	4	1
511057608	589	967784808	172	1	514613208	307	10872488	39	1
511058308	539	96045351	196	1	515710608	412	11083498	31	1
511059408	538	96045351	161	1	518512408	58	11643183	9	2
511062708	90	96035796	159	1	518512408	61	11643184	9	2
511062708	107	96035792	159	1	518565008	668	10876933	46	1
511062708	538	96045351	157	1	518578108	277	919007708	448	1
511062708	589	967784808	169	1	518614708	668	10876933	57	2
511311808	538	96045351	154	1	518620608	668	10876933	70	1
511311808	589	967784808	170	1	518623608	296	10663105	39	1
511316708	538	96045351	171	1	518629608	383	917305408	31	2
511320108	538	96045351	63	1	518645408	668	10876933	55	1
511322808	124	968077208	152	4	518648508	346	510229408	6	1
511419608	539	96045351	198	1	520190408	144	928569808	67	1
511431514	539	96045351	199	1	520303308	226	5700161	10	1
511433908	538	96045351	162	2	520402808	143	919328608	3	1
511435108	538	96045351	172	1	530032508	583	939294201	51	1
511444408	51	96035801	50	1	530609208	450	96036957	65	1
511444408	538	96045351	52	1	540509008	355	932916901	17	1
511444408	589	967784808	50	1	540509008	581	939294001	20	1
511450208	693	967785408	150	1	540511908	277	919007708	336	3
511456808	539	96045351	195	1	550628308	280	96034631	103	1
511457808	335	969050308	9	3	550639508	280	96034631	101	1
511460608	538	96045351	152	1	550640608	158	918731108	5	4

Item	Page	Assembly	Pos.	Quantity	Item	Page	Assembly	Pos.	Quantity
550838008	158	918731108	17	2	570116908	314	96034515	405	1
550838008	276	919007708	185	4	570116908	539	96045351	303	1
551710608	276	919007708	252	1	570163708	504	10327065	5	1
553027808	375	916170808	4	7	570322408	280	96034631	(1)	1
553027808	431	96017704	20	1	570322408	540	96045351	(1)	1
553031008	574	918628408	2	1	570340077	378	968514508	5	4
553054108	462	918759808	7	1.995	570427408	552	10332882	7	1
553054108	464	96020359	7	0.25	570435308	668	10876933	39	1
553054208	462	918759808	6	1	570435508	281	10429930	18	1
553054208	464	96020359	8	2	570531308	555	11341035	11	1
553102308	462	918759808	30	5	570579808	472	10877810	23	1
553102308	464	96020359	14	1	570579808	668	10876933	48	2
553136608	58	11643183	2	2	570613877	226	5700161	9	4
553136608	61	11643184	2	2	570633808	538	96045351	(1)	1
553159408	464	96020359	9	0.62	570633808	538	96045351	(1)	1
553174008	468	11110051	1	1	570652308	556	10489734	25	1
553174108	462	918759808	8	1	570690608	504	10327065	33	1
553181108	464	96020359	6	1	570818008	555	11341035	10	1
553181208	396	916168308	12	0.25	570824177	47	11346779	30	2
553186908	445	96036954	10	1	570827808	62	511444408	1	1
553187208	464	96020359	5	1	570862108	58	11643183	6	1
553191108	462	918759808	31	0.06	570862108	61	11643184	6	1
553193208	383	917305408	29	6	570941408	696	511479408	2	1
560208508	305	10871282	27	2	570951508	302	10871043	15	1
5603876	446	96036955	517	1	570979708	226	5700161	7	1
5603876	448	96036956	507	1	571058608	311	10292815	13	1
5603876	520	96045387	517	1	571076908	589	967784808	(2)	1
5607617	542	96045351	823	6	571077008	589	967784808	(3)	1
5607617	595	969426308	613	2	571077108	589	967784808	(4)	1
5610999	574	918628408	32	2	571077208	589	967784808	(5)	1
5700161	224	9080294	1	1	571081908	699	967785008	(1)	1
570033608	307	10872488	11	1	571082008	699	967785008	(2)	1
570054708	309	571907208	16	1	571082008	699	967785008	(2)	1
570063108	558	511433908	1	1	571082108	699	967785008	(3)	1
570063208	558	511433908	10	1	571082208	699	967785008	(4)	1
570065908	94	502806508	1	1	571082208	699	967785008	(3)	1
570066008	94	502806508	2	1	571082308	699	967785008	(5)	1
570066108	94	502806508	3	1	571082408	699	967785008	(1)	1
570066208	94	502806508	4	1	571082508	539	96045351	(1)	1
570066308	94	502806508	5	1	571082608	539	96045351	(2)	1
570066408	94	502806508	7	1	571082708	539	96045351	(3)	1
570109008	346	510229408	1	1	571082808	539	96045351	(4)	1
570109108	346	510229408	3	1	571135508	688	967784508	(21)	1
570109208	346	510229408	4	1	571141177	551	571415008	3	1
570109308	346	510229408	5	1	571187408	552	10332882	(999)	1
570109408	346	510229408	11	2	571233308	305	10871282	(5)	1
570109508	347	570109008	1	1	571307708	288	11631893	10	1
570109608	347	570109008	2	1	571310608	71	919254308	113	4
570109708	347	570109008	3	1	571310608	101	919254408	114	4
570109808	347	570109008	4	1	571328408	128	11347526	12	2
570109908	347	570109008	5	1	571328408	504	10327065	14	1
570110008	347	570109008	7	1	571352308	479	502657308	1	1
570110108	347	570109008	9	1	571356108	538	96045351	(4)	1
570110308	348	570109508	1	1	571413308	668	10876933	36	1
570110408	348	570109508	2	1	571414608	550	10413106	3	1
570110508	348	570109508	3	1	571415008	550	10413106	8	2
570110608	348	570109508	4	7	571415208	550	10413106	2	1
570110708	348	570109508	5	14	571415208	550	10413106	11	1
570110808	348	570109508	6	1	571430208	620	10040024	2	1
570110908	348	570109508	7	4	571430508	620	10040024	5	1

Item	Page	Assembly	Pos.	Quantity	Item	Page	Assembly	Pos.	Quantity
571430708	620	10040024	4	1	591063508	450	96036957	63	1
571477908	307	10872488	31	1	591063808	393	966497908	30	1
571486808	47	11346779	29	1	591064408	459	966707708	8	1
571489008	280	96034631	105	1	591065008	441	969016008	9	2
571489108	280	96034631	106	1	591066808	393	966497908	10	2
571496708	734	512363708	999	1	591066808	394	965784408	5	1
571529508	555	11341035	8	2	591067008	417	918810308	23	1
571535008	555	11341035	9	1	591069508	424	916049908	2	1
571562408	550	10413106	4	1	591070408	158	918731108	29	2
571578608	131	774375108	2	1	591070908	458	917260408	1	1
571582108	226	5700161	1	1	591080608	399	916163008	28	0.25
571582208	226	5700161	2	1	591570908	429	96036790	102	3
571582308	226	5700161	4	1	591570908	449	96036957	51	1
571582408	226	5700161	6	1	591570908	453	96022872	6	1
571582508	226	5700161	11	1	591570908	526	968063108	8	1
571582608	226	5700161	13	1	6001703	511	96045385	2267	6
571582708	226	5700161	15	1	6001790	446	96036955	524	1
571582808	226	5700161	30	1	6001790	513	96037136	505	4
571614608	668	10876933	(1)	1	6003168	514	96037137	516	1
571687808	670	571928508	18	1	6003248	514	96037137	503	1
571716008	724	910836808	10	1	600345208	512	96037136	377	6.27
571716108	724	910836808	12	2	6004195	513	96037136	520	2
571716208	724	910836808	34	2	600430108	512	96037136	322	5.1
571723608	552	10332882	5	1	600431008	512	96037136	326	5.1
571723708	552	10332882	6	1	600431208	512	96037136	328	8.85
571723808	552	10332882	8	1	600431408	512	96037136	330	7.55
571737808	552	10332882	2	1	600460808	510	96045385	5	6.6
571741908	734	512363708	19	1	600462908	711	917598408	(5)	1.46
571817208	620	10040024	6	1	600463908	44	96045228	9	3.13
571819108	285	97029921	110	2	600463908	44	96045228	10	2.63
571819708	285	97029921	190	1	600463908	44	96045228	16	6.06
571819808	285	97029921	360	2	600463908	44	96045228	17	6.06
571824708	454	10343693	1	1	601406408	526	968063108	4	0.3
571840008	538	96045351	(999)	1	601407008	522	969256608	32	0.29
571841008	675	10802064	53	1	602000708	699	967785008	301	26
571851008	675	10802064	21	1	602002208	478	969763408	306	6
571851208	675	10802064	12	1	602007108	672	966134608	35	12
571851308	675	10802064	60	1	602007408	483	918484108	41	8
571867708	412	11083498	44	1	602007808	51	96035801	326	64
571898008	277	919007708	443	1	602008308	320	96023117	29	2
571899308	294	11210795	(31)	1	602008408	51	96035801	315	14
571899408	294	11210795	(1)	1	602008408	320	96023117	30	2
571899508	294	11210795	(3)	1	602008508	51	96035801	317	6
571900808	298	10472196	2	1	602008808	21	96034894	35	2
571900808	310	10292801	2	1	602008808	24	96034977	35	2
571907208	305	10871282	2	1	602008808	51	96035801	321	4
571907508	307	10872488	14	1	602008908	539	96045351	324	8
571907608	307	10872488	38	1	602009008	699	967785008	304	2
571910208	668	10876933	37	1	602009108	539	96045351	315	4
571911708	311	10292815	20	1	602009208	539	96045351	319	14
571912308	454	10343693	2	1	602010108	90	96035796	309	6
571928508	668	10876933	4	1	602010108	107	96035792	309	6
571934508	670	571928508	50	1	602015408	21	96034894	36	2
571934608	670	571928508	60	1	602015408	24	96034977	36	2
571934708	670	571928508	999	1	602015408	51	96035801	323	4
591051008	399	916163008	22	2	602018008	51	96035801	313	61
591055408	400	966408908	2	2	602018008	320	96023117	28	4
591055508	400	966408908	3	2	602018008	478	969763408	308	6
591055608	399	916163008	10	2	602018008	539	96045351	330	2
591061908	433	968923508	10	2	602018008	640	917291908	70	4

Item	Page	Assembly	Pos.	Quantity	Item	Page	Assembly	Pos.	Quantity
602042208	529	969061708	12	1	602301708	512	96037136	106	1
602042808	449	96036957	38	2	602303308	44	96045228	134	2
602106708	524	967589508	1	0.135	602303308	446	96036955	134	2
602106708	682	966291008	10	0.245	602303308	448	96036956	134	2
602106708	685	968708708	295	0.205	602303308	510	96045385	134	6
602116008	368	919010208	14	4	602304808	456	963398008	2	2
602203108	448	96036956	67	2	602305605	513	96037136	766	1
602203408	43	96045227	72	6	602305908	43	96045227	517	1
602203408	446	96036955	72	3	602305908	446	96036955	523	1
602203408	448	96036956	72	4	602305908	456	963398008	3	1
602203908	43	96045227	75	2	602305908	520	96045387	503	1
602203908	446	96036955	75	2	602307708	44	96045228	86	2
602203908	512	96037136	75	3	602307708	510	96045385	86	74
602205708	512	96037136	58	4	602307708	512	96037136	86	26
602205808	512	96037136	111	1	602307808	44	96045228	114	8
602207608	448	96036956	140	1	602307808	510	96045385	114	4
602208408	446	96036955	143	2	602307908	510	96045385	85	10
602208608	513	96037136	516	1	602311408	512	96037136	57	2
602208908	513	96037136	511	1	602311508	512	96037136	55	1
602209708	43	96045227	516	1	602319808	446	96036955	521	1
602209708	446	96036955	508	4	602320508	448	96036956	62	13
602209708	448	96036956	506	2	602322708	446	96036955	504	1
602209708	513	96037136	508	1	602322808	447	96036955	615	55
602209708	520	96045387	501	5	602323208	43	96045227	120	21
602213308	43	96045227	39	1	602323308	43	96045227	503	3
602217008	512	96037136	49	1	602323308	520	96045387	505	53
602217308	512	96037136	50	1	602323508	43	96045227	124	34
602217908	43	96045227	34	5	602323508	446	96036955	124	6
602217908	446	96036955	34	1	602325508	446	96036955	506	3
602225508	446	96036955	518	1	602325508	448	96036956	510	1
602225608	446	96036955	519	1	602325508	510	96045385	504	1
602225914	448	96036956	703	2	602325508	520	96045387	526	2
602300108	43	96045227	121	14	602325608	520	96045387	524	2
602300108	44	96045228	121	1	602329108	44	96045228	617	12
602300108	446	96036955	121	13	602329108	513	96037136	617	8
602300108	448	96036956	121	27	602329208	513	96037136	807	4
602300108	510	96045385	121	13	602330508	513	96037136	801	6
602300108	512	96037136	121	21	602330808	45	96045228	802	12
602300108	514	96037137	121	9	602330808	447	96036955	802	2
602300208	44	96045228	504	2	602330808	513	96037136	802	14
602300208	446	96036955	501	9	602330808	515	96037137	802	4
602300208	448	96036956	501	6	602331108	513	96037136	806	43
602300208	510	96045385	501	10	602331308	446	96036955	507	4
602300208	513	96037136	501	11	602331308	448	96036956	505	2
602300208	514	96037137	501	2	602331308	516	96037133	501	1
602300208	520	96045387	523	1	602331308	520	96045387	504	32
602300308	43	96045227	125	35	602331308	615	96043733	501	1
602300308	44	96045228	125	19	602331508	515	96037137	804	9
602300308	446	96036955	125	110	602331808	448	96036956	509	2
602300308	448	96036956	125	118	602332108	448	96036956	611	4
602300308	510	96045385	125	96	602335908	43	96045227	514	1
602300308	512	96037136	125	92	602335908	446	96036955	515	4
602300308	514	96037137	125	27	602335908	448	96036956	511	1
602300308	516	96037133	125	2	602335908	520	96045387	516	4
602300308	615	96043733	125	6	602336008	446	96036955	511	4
602300508	446	96036955	514	1	602336008	520	96045387	506	6
602300608	446	96036955	516	1	602336408	525	926891108	2	1
602301408	44	96045228	501	1	602336508	525	926891108	3	6
602301408	520	96045387	507	2	602337008	448	96036956	508	3
602301408	615	96043733	502	1	602337008	520	96045387	518	1

Item	Page	Assembly	Pos.	Quantity	Item	Page	Assembly	Pos.	Quantity
602337608	520	96045387	514	1	603200308	512	96037136	261	8
602338208	448	96036956	503	3	603200308	514	96037137	261	1
602338208	520	96045387	520	5	603200308	520	96045387	261	30
602338608	520	96045387	509	1	603200408	520	96045387	269	30
602339108	43	96045227	642	4	603202208	520	96045387	268	30
602339308	44	96045228	507	3	603202208	682	966291008	266	5
602339408	510	96045385	643	3	604006908	43	96045227	515	1
602339408	514	96037137	643	2	604006908	518	919503008	33	8
602339508	510	96045385	647	4	604007008	43	96045227	505	1
602339608	44	96045228	516	3	604007008	518	919503008	34	12
602419608	598	918462708	9	1	604007108	518	919503008	35	12
602421908	44	96045228	525	2	604007208	518	919503008	36	10
602421908	140	96045205	504	1	604007308	518	919503008	37	7
602422108	598	918462708	8	1	604007608	518	919503008	38	1
602424008	450	96036957	67	2	604007708	518	919503008	32	8
602424108	36	96045226	14	2	604412408	523	922648308	1	1
602424108	41	966204108	153	1	604501608	529	969061708	2	10
602424108	44	96045228	527	4	604501708	43	96045227	504	2
602424908	368	919010208	16	2	604505508	44	96045228	522	4
602424908	380	917304508	17	1	604505508	510	96045385	518	1
602425008	36	96045226	17	1	604505508	516	96037133	506	1
602425008	685	968708708	197	4	604505508	617	96037132	507	1
602425108	682	966291008	213	1	604505508	711	917598408	(509)	1
602425208	682	966291008	212	1	604508108	685	968708708	155	1
602425808	681	10354493	3	1	604508508	44	96045228	515	5
602440708	44	96045228	513	1	604508508	516	96037133	507	1
602441001	44	96045228	526	2	604508508	617	96037132	503	2
602441001	140	96045205	505	1	604508508	711	917598408	(503)	1
602441001	711	917598408	(505)	1	604508608	44	96045228	514	3
602441701	598	918462708	11	2	604508608	516	96037133	508	1
602441701	603	917368108	11	1	604508608	617	96037132	506	2
602501208	36	96045226	10	2	604508708	510	96045385	516	1
602501208	682	966291008	308	1	604509408	44	96045228	511	1
602501208	685	968708708	292	1	604512108	44	96045228	523	4
602501308	37	966167808	11	1	604512108	140	96045205	502	1
602501308	681	10354493	18	1	604512108	510	96045385	517	1
602504108	36	96045226	15	2	604512108	516	96037133	505	1
602504208	36	96045226	18	1	604512108	617	96037132	504	1
602504508	44	96045228	512	1	604512108	685	968708708	153	1
602600808	375	916170808	12	2	604512108	711	917598408	(510)	1
602701308	375	916170808	1	1	604518808	510	96045385	636	2
602704808	44	96045228	520	6	604518908	45	96045228	812	25
602704808	516	96037133	504	2	604518908	140	96045205	812	1
602704808	617	96037132	505	3	604518908	511	96045385	812	5
602704808	711	917598408	(508)	1	604518908	516	96037133	812	10
602717308	280	96034631	124	1	604518908	617	96037132	812	15
602717308	429	96036790	114	1	604518908	711	917598408	(812)	5
602717308	439	969015908	106	1	604519108	711	917598408	(637)	1
602735508	518	919503008	39	47	604519208	516	96037133	628	2
602761408	525	926891108	12	10	604519208	617	96037132	628	4
602761608	520	96045387	502	2	604519208	711	917598408	(628)	2
602761608	524	967589508	5	2	604519308	44	96045228	629	6
602761708	524	967589508	6	1	604519308	516	96037133	629	2
602762908	524	967589508	7	1	604519308	617	96037132	629	2
602794608	524	967589508	8	2	604526508	44	96045228	506	5
602794608	685	968708708	297	2	604526508	510	96045385	510	1
603012608	602	918377508	11	1.5	604526508	516	96037133	502	1
603200308	44	96045228	261	2	604526508	617	96037132	502	1
603200308	446	96036955	261	1	604526508	711	917598408	(502)	1
603200308	448	96036956	261	20	604526608	44	96045228	509	4

Item	Page	Assembly	Pos.	Quantity	Item	Page	Assembly	Pos.	Quantity
604526608	140	96045205	501	1	614003108	506	919410708	32	1
604526608	516	96037133	503	1	614009908	36	96045226	11	1
604526608	617	96037132	501	2	614020508	601	915432508	5	1
604526608	711	917598408	(501)	1	617000608	447	96036955	528	1
605006608	44	96045228	510	2	617000608	448	96036956	512	1
605006608	510	96045385	503	3	6202434	44	96045228	96	4
605007908	44	96045228	505	3	6202434	510	96045385	96	2
605007908	510	96045385	502	34	6202434	512	96037136	96	2
605007908	513	96037136	502	13	6202444	44	96045228	95	3
605012408	44	96045228	517	1	6202444	510	96045385	95	1
605012708	598	918462708	7	1	6202444	512	96037136	95	3
605203908	453	96022872	5	1	6202909	314	96034515	100	1
605203908	529	969061708	3	1	6205239	514	96037137	520	1
605212708	44	96045228	508	1	6205242	514	96037137	521	1
605212708	513	96037136	519	1	630105408	518	919503008	10	1
605212808	44	96045228	519	3	630121508	38	968054008	6	2
605212808	510	96045385	514	1	630121508	518	919503008	9	19
605212808	513	96037136	523	2	630122908	43	96045227	506	2
605215508	44	96045228	518	2	630122908	520	96045387	512	23
605215508	510	96045385	515	1	636107901	520	96045387	529	1
605215508	513	96037136	524	2	636107901	524	967589508	3	2
605215508	662	917292408	77	1	636109301	524	967589508	4	1
605215708	598	918462708	1	1	638109101	522	969256608	30	0.28
605251608	44	96045228	502	1	660024508	518	919503008	29	1
605251608	510	96045385	506	1	680000008	446	96036955	6	1
605613908	513	96037136	510	1	680000008	448	96036956	5	1
605619708	45	96045228	813	1	680000008	448	96036956	7	1
605619708	511	96045385	813	37	680000008	711	917598408	(7)	1
605619708	513	96037136	813	13	680000308	448	96036956	6	1
605619808	511	96045385	816	3	680000708	446	96036955	5	1
605619808	515	96037137	816	2	680000808	510	96045385	11	1
605619908	511	96045385	821	4	680001408	44	96045228	5	1
606012608	362	966631008	6	1	680001408	510	96045385	7	1
606012608	577	967969608	(6)	1	680001408	510	96045385	8	1
606020708	449	96036957	12	1	680001408	510	96045385	9	1
606053108	508	968128908	(11)	2	680001408	510	96045385	14	1
606053108	508	968128908	(11)	2	680001408	510	96045385	15	1
606143008	453	96022872	18	1	680001408	510	96045385	16	1
606143008	529	969061708	8	1	680001408	711	917598408	(6)	1
606143208	453	96022872	16	1	680001708	510	96045385	12	1
606143408	529	969061708	5	1	6905877	256	10151329	(1)	1
606143508	453	96022872	11	2	691035008	47	11346779	36	2
606144008	453	96022872	15	2	691041608	47	11346779	19	21
606144108	452	96030724	(2)	1	691041708	47	11346779	6	37
606144408	453	96022872	17	1	691043108	47	11346779	17	35
606144608	529	969061708	6	1	691183108	538	96045351	65	1
606144908	529	969061708	7	1	691798508	453	96022872	3	1
606145108	529	969061708	11	1	692312708	672	966134608	(7)	2
607008708	453	96022872	13	1	692404908	45	96045228	811	3
607011108	145	928620108	(1)	2	692404908	511	96045385	811	1
607023708	146	915731908	2	1	692404908	513	96037136	811	2
607106208	145	928620108	2	2	692405708	511	96045385	822	3
607226808	506	919410708	21	2	692405808	511	96045385	817	1
610701108	513	96037136	525	1	692405808	515	96037137	817	2
610706308	696	511479408	6	1	692406008	510	96045385	512	2
613200608	145	928620108	3	10	692406008	514	96037137	517	1
613206508	321	96023914	22	2	692406308	510	96045385	505	1
613206608	321	96023914	21	2	692406308	514	96037137	508	1
613301908	599	917269308	1	1	692406708	510	96045385	507	1
614003108	36	96045226	24	1	692600708	675	10802064	23	1

Item	Page	Assembly	Pos.	Quantity	Item	Page	Assembly	Pos.	Quantity
7002458	361	90200104	7	1	704229908	439	969015908	311	10
7003652	208	12489819	4	1	704230208	320	96023117	25	2
7005052	21	96034894	30	3	704232208	393	966497908	9	1
7005052	24	96034977	30	3	704232308	522	969256608	75	12
7005052	640	917291908	72	4	704232308	526	968063108	10	6
7005052	672	966134608	36	2	704253308	37	966167808	6	4
7005052	714	967933408	10	3	704253308	79	967972208	3	5
7005053	51	96035801	314	10	704253308	80	967972308	3	2
7005071	299	571900808	11	1	704253308	81	967972408	3	2
7005071	300	10472202	11	1	704253308	82	968270108	3	2
7008583	51	96035801	320	2	704253308	83	968274208	3	2
7008583	540	96045351	331	1	704253308	102	968055808	3	5
7009080	232	10148215	5	1	704253308	320	96023117	13	1
7011131	178	5004624	2	1	704253408	37	966167808	7	4
7011745	208	12489819	1	1	704253408	79	967972208	4	5
7012971	294	11210795	(13)	2	704253408	80	967972308	4	2
7012971	309	571907208	12	1	704253408	81	967972408	4	2
7013456	178	5004624	3	1	704253408	82	968270108	4	2
7014524	21	96034894	8	1	704253408	83	968274208	4	2
7014524	24	96034977	8	1	704253408	102	968055808	4	5
7014524	565	967980508	7	3	704253408	320	96023117	14	1
7014529	294	11210795	47	1	704253708	79	967972208	5	5
7015814	405	917304708	50	2	704253708	82	968270108	5	2
7016016	231	10142733	(1)	1	704253708	83	968274208	5	2
7016016	231	10142733	(7)	1	704253708	102	968055808	5	5
7016016	231	10142733	7	1	704254008	85	968420608	9	1
7018842	541	96045351	684	3	704254808	37	966167808	12	4
7020440	574	918628408	100	1.6	704254808	79	967972208	6	5
7021521	487	969904608	2	1	704254808	80	967972308	6	2
7021600	296	10663105	38	1	704254808	81	967972408	6	2
7022127	294	11210795	(11)	1	704254808	82	968270108	6	2
7022127	297	10008308	11	4	704254808	83	968274208	6	2
7022127	298	10472196	52	7	704254808	102	968055808	6	5
7022127	309	571907208	11	6	704255508	434	964093408	2	1
7022127	310	10292801	52	5	704256708	37	966167808	8	4
7022315	302	10871043	20	1	704258208	518	919503008	15	2
7022315	346	510229408	(14)	1	704258208	522	969256608	40	4
7022315	347	570109008	14	1	704259008	80	967972308	5	2
7023643	295	11210798	5	1	704259008	81	967972408	5	2
7023659	301	10472208	3	1	704259008	84	968709108	5	2
7023664	301	10472208	2	1	704259008	320	96023117	15	1
7023666	301	10472208	4	1	704259308	434	964093408	3	1
7023703	297	10008308	10	1	704259608	405	917304708	57	1
7025732	226	5700161	23	1	704262608	320	96023117	22	2
7027459	538	96045351	(2)	1	704271108	145	928620108	7	2
7027497	294	11210795	(14)	4	704274808	37	966167808	9	4
7027497	297	10008308	20	2	704274808	79	967972208	7	5
7027497	298	10472196	53	1	704274808	80	967972308	7	2
7027497	309	571907208	20	2	704274808	81	967972408	7	2
704004208	733	923285508	7	1	704274808	82	968270108	7	2
704004608	283	968026308	120	1	704274808	83	968274208	7	2
704006308	612	968993508	10	1	704274808	102	968055808	7	5
704008508	25	968019508	10	2	704274808	335	969050308	(8)	2
704207608	529	969061708	9	20	704274908	37	966167808	10	4
704207708	150	917862808	200	4	704277508	429	96036790	113	2
704228108	137	919499408	84	2	704278708	84	968709108	4	2
704228108	320	96023117	12	2	704278708	85	968420608	10	1
704228108	433	968923508	9	3	708010008	732	929582108	3	2
704228108	441	969016008	2	2	708010008	735	923879808	4	1
704228108	737	917268208	5	1	708011608	731	917267508	21	2

Item	Page	Assembly	Pos.	Quantity	Item	Page	Assembly	Pos.	Quantity
710032508	355	932916901	19	1	726426008	277	919007708	447	3
710032508	581	939294001	22	1	726429008	285	97029921	482	1
710035001	285	97029921	440	1	726429901	357	939292201	19	2
710054601	357	939292201	11	1	726429901	583	939294201	19	2
710054601	583	939294201	11	1	726433408	30	917511508	50	4
710059301	340	90008901	11	1	726440001	340	90008901	73	1
710062601	357	939292201	63	2	726452801	128	11347526	5	1
710062601	583	939294201	63	2	726453601	340	90008901	24	1
710100408	378	968514508	9	1	726453601	357	939292201	79	1
710100708	377	916162808	9	8	726455301	357	939292201	61	1
710101408	378	968514508	7	4	726458401	357	939292201	13	1
7101022	589	967784808	306	2	726613008	639	917291908	25	4
710102508	177	10155227	11	1	726617408	393	966497908	24	1
7101030	358	939292201	87	1	726617408	429	96036790	112	1
710103008	414	969085208	7	1	726905008	280	96034631	120	2
710103708	315	96034522	402	1	726905008	565	967980508	8	4
710104008	693	967785408	(23)	2	726907308	429	96036790	111	1
710105908	361	90200104	29	1	726907308	439	969015908	105	2
710106508	171	10138450	3	1	7361205	380	917304508	10	10
710106508	177	10155227	5	3	7361205	405	917304708	42	2
710106508	264	10148366	141	1	7361553	546	11211756	8	3
710107208	589	967784808	305	2	7361600	311	10292815	18	1
710107708	589	967784808	307	4	7361602	305	10871282	22	2
710121114	76	11320954	6	2	7362091	90	96035796	600	1
710207408	450	96036957	64	1	7362091	107	96035792	600	1
710908701	357	939292201	12	1	7362091	540	96045351	608	6
720008508	733	923285508	6	1	7362091	590	967784808	641	1
720009408	672	966134608	22	4	7362091	688	967784508	602	5
720011408	350	917259608	4	1	7362515	228	10145176	3	1
720012608	731	917267508	34	1	7362606	699	967785008	300	13
720014408	577	967969608	(15)	1	7362946	640	917291908	71	4
720014408	705	917268408	18	4	7363178	357	939292201	81	1
720014908	644	917292008	2	1	7363897	478	969763408	326	4
720014908	648	917292108	2	1	7365090	21	96034894	37	4
720014908	652	917292208	2	1	7365090	24	96034977	37	4
720014908	656	917292308	2	1	7365090	51	96035801	309	62
720014908	661	917292408	22	1	7367374	296	10663105	31	1
720801908	417	918810308	25	4	7367564	78	10877686	6	2
721108801	585	90200103	7	1	7367565	78	10877686	5	1
721114701	357	939292201	83	1	7367566	78	10877686	3	1
725111808	433	968923508	11	2	7367567	78	10877686	4	1
725111808	441	969016008	10	2	7367774	52	96035801	635	1
726204008	335	969050308	5	1	7367774	541	96045351	712	2
726403401	357	939292201	78	6	7367774	590	967784808	623	1
726405608	377	916162808	10	12	7367986	51	96035801	612	1
726405608	583	939294201	78	6	7367986	542	96045351	781	5
726405908	277	919007708	442	1	7368241	447	96036955	526	1
726406908	540	96045351	(1)	1	7368241	513	96037136	527	2
726407908	314	96034515	401	2	7368241	514	96037137	523	2
726407908	327	96034868	(1)	1	7368246	514	96037137	504	1
726407908	335	969050308	(9)	2	7368253	447	96036955	823	5
726411508	449	96036957	47	2	7368253	513	96037136	823	3
726412308	277	919007708	450	2	7368253	515	96037137	823	1
7264141	285	97029921	470	1	7369458	515	96037137	740	6
726414901	340	90008901	69	1	7369933	307	10872488	20	1
726417708	285	97029921	485	1	7371651	539	96045351	(1)	1
726421108	583	939294201	61	1	7372624	294	11210795	(35)	1
726421501	285	97029921	480	3	7372626	294	11210795	32	1
726421608	277	919007708	445	3	7372626	305	10871282	24	4
726422308	478	969763408	313	1	7373052	305	10871282	(5)	1

Item	Page	Assembly	Pos.	Quantity	Item	Page	Assembly	Pos.	Quantity
737350503	73	90028956	(5)	8	7382085	214	10143341	13	1
737350603	73	90028956	(4)	9	7382086	256	10151329	39	1
7380083	234	10142742	3	1	7382088	215	10143342	14	1
7380177	167	11389608	10	3	7382090	254	10151328	37	4
7380177	248	10116110	14	1	7382092	182	10139112	2	2
7380401	262	9077386	5	1	7382092	254	10151328	47	4
7380401	265	10148366	6522	1	7382158	265	10148366	6542	2
738048003	357	939292201	2	1	7382202	259	10142747	1	1
7380520	262	9077386	4	1	7382203	213	10133928	3	1
7380520	265	10148366	6521	1	7382203	261	10144036	15	2
7380566	167	11389608	6	3	7382204	200	10129474	11	1
7380566	212	10146791	7	1	740001808	731	917267508	39	0.3
7380566	218	10145173	4	1	740300008	383	917305408	22	1
7380566	238	10140729	20	1	7403569	478	969763408	638	2
7380574	548	10342823	5	4	7403569	540	96045351	616	3
7380605	219	10147364	5	1	7403569	590	967784808	615	1
7380605	277	919007708	452	1	7403569	688	967784508	603	6
7380653	170	10147687	8	2	7403925	542	96045351	770	1
7380653	247	10115829	9	1	7405399	542	96045351	746	2
7380657	266	10148366	6561	1	7406865	542	96045351	744	7
7380935	222	10299988	2	1	7406865	590	967784808	642	2
7380960	239	10142863	6	1	7407098	541	96045351	656	5
7380970	220	10149677	7	1	7407107	542	96045351	822	2
7380970	277	919007708	451	1	7407108	52	96035801	640	2
7381103	250	10127979	2	1	7407108	541	96045351	635	1
7381103	258	12583633	(2)	1	7407118	542	96045351	808	2
7381103	265	10148366	5261	1	7407118	590	967784808	610	1
7381225	170	10147687	14	1	7407119	51	96035801	604	2
738122523	201	9078233	2	1	7407120	542	96045351	814	2
7381286	218	10145173	11	1	7407122	52	96035801	633	1
7381292	164	12856862	(9)	6	7407122	542	96045351	829	1
7381292	215	10143342	20	1	7409918	542	96045351	755	1
7381361	260	10125687	(4)	2	7409922	52	96035801	649	1
7381361	265	10148366	6501	2	7410441	541	96045351	692	1
7381361	277	919007708	446	1	7410451	542	96045351	745	1
7381363	224	9080294	4	2	7410455	52	96035801	663	4
7381457	167	11389608	7	2	7410455	90	96035796	625	1
7381457	238	10140729	21	1	7410455	107	96035792	625	1
7381526	235	10142744	4	1	7411823	574	918628408	30	1
7381526	265	10148366	3871	1	744010208	731	917267508	38	2
7381566	179	10121667	2	2	745129501	408	966253908	4	1
7381628	254	10151328	38	2	745129508	285	97029921	390	2
7381629	254	10151328	39	5	745139101	340	90008901	66	1
7381630	218	10145173	13	1	745145308	285	97029921	410	4
7381630	254	10151328	42	3	745159301	357	939292201	3	1
7381638	220	10149677	12	1	745159301	583	939294201	3	1
7381638	229	10145278	9	2	745165608	285	97029921	370	1
7381638	247	10115829	10	2	746221908	347	570109008	11	1
7381638	263	9078301	8	1	746506608	663	921456108	2	1
7381679	714	967933408	3	1	746506608	665	967771908	2	1
7381685	196	10120186	8	1	746506608	725	925203408	2	1
7381685	197	10138230	14	1	746607401	724	910836808	37	1
7381685	264	10148366	901	1	747004501	73	90028956	3	78
7381685	264	10148366	1001	1	747006101	357	939292201	17	114
7381770	254	10151328	32	6	747006101	583	939294201	17	114
7381771	254	10151328	31	1	747258401	340	90008901	4	1
7381779	170	10147687	7	2	747272501	355	932916901	16	1
7381995	244	10115664	4	1	747272501	581	939294001	19	1
7381995	265	10148366	4521	1	747404001	340	90008901	71	1
7382059	203	10148432	5	1	749009408	648	917292108	47	1

Item	Page	Assembly	Pos.	Quantity	Item	Page	Assembly	Pos.	Quantity
749010208	639	917291908	21	2	774211308	478	969763408	304	1
749010208	644	917292008	47	1	774214308	276	919007708	183	4
749010808	652	917292208	47	1	774215008	173	10126713	3	4
749011408	656	917292308	47	1	774215008	218	10145173	8	4
749014908	352	917259708	3	1	774215008	238	10140729	25	2
749014908	577	967969608	20	1	774215508	478	969763408	311	1
749056414	70	919254308	4	1	774217608	499	918731908	180	3
749056414	100	919254408	4	1	774218808	276	919007708	184	6
761021703	357	939292201	76	1	774221708	462	918759808	24	7
761021703	583	939294201	76	1	774225008	464	96020359	18	1
761022503	341	927554301	6	1	774227108	269	918731408	180	2
761022503	361	90200104	14	1	774227708	478	969763408	310	1
761022503	585	90200103	14	1	774227908	276	919007708	180	1
761022903	361	90200104	2	2	774301101	354	90208882	18	1
761022903	585	90200103	2	2	774301808	121	919644008	21	8
761035303	73	90028956	59	2	774320108	335	969050308	7	1
761081903	73	90028956	8	1	7743242	644	917292008	16	2
761081903	357	939292201	9	3	7743242	648	917292108	16	2
7615379	277	919007708	424	2	7743242	652	917292208	16	2
7615379	478	969763408	648	1	7743242	656	917292308	16	2
7615379	543	96045351	833	2	7743242	661	917292408	30	2
7617268	52	96035801	659	2	774351714	76	11320954	7	1
7617268	542	96045351	805	2	774372608	502	917261208	11	1
7617354	52	96035801	638	4	774372608	586	921444108	1	1
7617354	541	96045351	621	2	774372708	502	917261208	12	1
7617354	693	967785408	604	2	774372708	586	921444108	2	2
7617460	52	96035801	641	2	774372808	502	917261208	10	1
7617460	541	96045351	658	11	774373808	130	11347500	1	1
7617460	699	967785008	601	4	774373808	505	11002916	2	1
7617461	51	96035801	619	1	774374508	121	919644008	38	8
7617461	124	968077208	602	4	774374808	127	917257108	19	16
7617461	693	967785408	605	1	774375108	127	917257108	6	2
7617494	542	96045351	731	4	774375108	502	917261208	9	2
7618383	316	96039022	2	1	774378108	502	917261208	(1)	1
7619068	500	10871700	4	1	774383508	127	917257108	26	10
7621780	711	917598408	5	1	774387208	502	917261208	3	1
7622478	412	11083498	16	1	774387508	504	10327065	11	1
7623427	305	10871282	20	2	779010901	357	939292201	80	1
7624238	307	10872488	17	4	779012201	357	939292201	84	1
7624353	447	96036955	761	2	779016201	340	90008901	88	1
772002708	483	918484108	31	1	779016608	628	919028808	15	8
772624608	147	916283508	1	1	779020108	523	922648308	2	6
773326508	736	917268108	3	1	779034708	722	917531708	3	1
773404508	630	925141508	6	1.6	779040801	380	917304508	18	2
773404508	721	968728808	19	2.5	789000308	145	928620108	5	1
773444090	726	917267208	1	1	789000701	354	90208882	34	1
773445108	628	919028808	14	3	789011908	276	919007708	150	2
773913308	628	919028808	6	1	789011908	335	969050308	8	1
773933508	630	925141508	3	1	790001708	144	928569808	10	1
773933508	672	966134608	24	1	790002208	144	928569808	12	1
773933508	705	917268408	14	1	790002408	144	928569808	13	1
773953608	725	925203408	1	1	790002508	144	928569808	16	1
774119708	421	962282208	1	1	790002608	144	928569808	17	1
774119808	423	962282308	1	1	790002808	144	928569808	18	1
774206408	276	919007708	186	2	790002908	144	928569808	19	1
774208008	276	919007708	181	4	790003308	144	928569808	11	1
774208508	464	96020359	10	1	790003608	144	928569808	15	1
774209708	280	96034631	180	1	790003908	144	928569808	20	1
774209908	499	918731908	181	1	790004608	144	928569808	22	1
774210508	478	969763408	309	1	790020008	144	928569808	31	1

Item	Page	Assembly	Pos.	Quantity	Item	Page	Assembly	Pos.	Quantity
790020108	144	928569808	32	1	90025782	340	90008901	970	1
790021008	144	928569808	33	1	90028852	577	967969608	10	1
790021208	144	928569808	34	1	90028956	70	919254308	2	1
790021308	144	928569808	35	1	90028956	100	919254408	2	1
790021608	144	928569808	30	1	90200103	579	90028852	10	1
790026208	144	928569808	63	1	90200104	352	917259708	6	1
790026308	144	928569808	64	1	90208882	352	917259708	1	1
790026408	144	928569808	65	1	90208884	354	90208882	50	1
790028508	144	928569808	66	1	9072834	183	10147438	3	1
790030008	144	928569808	60	1	9072904	227	9072906	1	1
790031108	144	928569808	61	1	9072906	163	12856862	331	1
790031508	144	928569808	62	1	9072907	227	9072906	2	1
790032008	144	928569808	50	1	9072908	227	9072906	3	1
790032308	144	928569808	51	1	9073343	224	9080294	2	1
790032508	144	928569808	52	1	9073699	161	12856862	(3)	1
790033208	144	928569808	53	1	9073734	185	10116939	1	5
790042008	144	928569808	70	1	9074480	191	10149579	7	4
790042214	143	919328608	7	1	9074481	191	10149579	9	4
790042708	143	919328608	9	1	9074798	189	10149580	4	2
790042908	144	928569808	71	1	9075606	185	10116939	2	5
790042914	143	919328608	8	1	9075607	161	12856862	(2)	1
790045408	144	928569808	1	1	9076457	160	12856862	51	1
790065608	143	919328608	4	1	9076531	258	12583633	10	2
790202814	64	917436708	(1)	288	9076550	258	12583633	11	1
790533908	143	919328608	5	2	9076588	254	10151328	90	1
8008673	143	919328608	10	1	9076638	238	10140729	17	4
802102008	431	96017704	150	14	9077238	165	12856862	530	1
802102008	435	968977308	50	33.22	9077327	262	9077386	1	1
811201314	262	9077386	108	1	9077384	262	9077386	2	1
811203108	390	916162508	16	1	9077386	261	10144036	1	1
811203108	405	917304708	49	1	9077612	262	9077386	3	1
811203308	390	916162508	15	1	9078233	200	10129474	6	1
811203308	405	917304708	48	1	9078301	166	12856862	654	1
811205108	405	917304708	47	1	9078314	162	12856862	260	1
811205708	196	10120186	105	1	9078522	194	11448005	6	2
811205708	230	12418347	105	1	9078849	245	9079823	1	1
811205708	245	9079823	109	1	9078935	215	10143342	4	1
811205708	252	10144227	109	1	9079078	192	10149578	9	1
811205708	261	10144036	105	1	9079130	212	10146791	3	1
811208001	177	10155227	102	1	9079130	264	10148366	2011	1
861303501	354	90208882	38	0.1	9079131	198	9079870	3	2
8627609	177	10155227	112	1	9079532	180	10150934	2	1
8655016	204	10142942	105	1	9079603	182	10139112	7	1
8655023	192	10149578	104	1	9079603	264	10148366	(4)	1
8655032	167	11389608	104	1	9079823	164	12856862	480	1
870002808	682	966291008	265	0.1	9079870	161	12856862	110	4
870004108	390	916162508	23	1	9080294	223	10127566	1	1
872101908	145	928620108	6	1	9080310	229	10145278	5	1
885132208	144	928569808	21	1	9080377	177	10155227	8	1
885166108	144	928569808	29	1	9080466	233	10148216	3	3
885251508	85	968420608	11	1	9080660	177	10155227	10	1
885251508	144	928569808	2	1	9080911	221	9078314	4	1
885252008	737	917268208	4	1	910040808	11		363	1
885602114	143	919328608	6	1	910836808	11		316	1
890020214	143	919328608	11	1	9132281	168	10154379	11	2
90008901	338	919369308	1	2	9132577	254	10151328	93	1
90010683	340	90008901	10	1	9140351	218	10145173	6	2
90017588	358	939292201	700	1	9140351	238	10140729	26	1
90025640	336	917259408	1	1	9144757	195	11358102	5	1
90025781	340	90008901	960	1	9144762	195	11358102	(3)	1

Item	Page	Assembly	Pos.	Quantity	Item	Page	Assembly	Pos.	Quantity
915037208	12		440	1	917430308	121	919644008	100	1
915432508	12		391	1	917436708	9		8	2
915731908	9		39	2	917511508	27	919499308	1	1
916049908	10		138	1	917511608	30	917511508	1	1
916162508	380	917304508	2	1	917531708	11		304	1
916162808	368	919010208	19	1	917551608	11		286	1
916163008	380	917304508	5	1	917598408	710	917379608	1	1
916165808	401	917304608	1	1	917610208	10		141	1
916166208	11		199	1	917611508	11		299	1
916168308	380	917304508	3	1	917618608	10		150	1
916170808	368	919010208	5	1	917626608	9		108	1
916177508	368	919010208	3	1	917676208	10		134	1
916283508	9		40	1	917676308	10		155	1
916959808	9		46	1	917691008	9		13	1
917257108	9		20	1	9177636	168	10154379	6	10
917258108	9		44	1	9177776	218	10145173	10	1
917259408	9		117	1	9177776	237	10144756	2	2
917259608	9		121	1	9177948	263	9078301	2	1
917259708	10		125	1	917825508	9		110	1
917259808	10		127	1	9178294	260	10125687	(6)	1
917259908	10		129	1	917862808	9		42	1
917260108	10		140	1	917966708	11		364	1
917260408	10		144	1	918124908	11		321	1
917260608	10		146	1	918197708	11		362	1
917261208	10		169	1	918377508	12		401	1
917261808	11		187	1	918462408	12		417	1
917262208	11		203	1	918462708	12		381	1
917262408	11		217	1	918484108	10		162	1
917262508	11		229	1	918628408	11		301	1
917265308	11		302	1	918731108	9		103	1
917267108	11		330	1	918731408	9		105	1
917267208	11		332	1	918731508	10		139	1
917267308	11		333	1	918731608	10		143	1
917267508	11		350	1	918731908	10		165	1
917268108	11		352	1	918732808	11		185	1
917268208	736	917268108	1	1	918739608	11		191	1
917268408	11		356	1	918759808	10		145	1
917269308	12		383	1	918802108	11		195	2
917269408	12		389	1	918804808	11		201	1
917291908	634	918804808	1	1	918807308	634	918804808	7	1
917292008	634	918804808	2	1	918810308	10		135	1
917292108	634	918804808	3	1	918925508	9		6	2
917292208	634	918804808	4	1	918955408	9		107	1
917292308	634	918804808	5	1	918956108	10		153	1
917292408	634	918804808	6	1	918956208	11		193	1
917292608	639	917291908	1	1	918989008	12		438	1
917292708	644	917292008	1	1	918992008	12		491	1
917292808	648	917292108	1	1	919007108	11		310	1
917292908	652	917292208	1	1	919007708	269	918731408	1	1
917293008	656	917292308	1	1	919010208	10		130	1
917293108	661	917292408	1	1	919028808	10		175	1
917304508	10		131	1	919087608	9		30	1
917304608	10		132	1	919127808	12		421	1
917304708	10		133	1	919231108	9		109	1
917305408	380	917304508	1	1	919254108	9		10	1
917368108	602	918377508	10	1	919254208	9		11	1
917379608	11		285	1	919254308	65	919254108	1	1
917404008	10		148	1	919254408	95	919254208	1	1
917404508	10		147	1	919296408	95	919254208	4	1
917413208	11		334	1	919296508	65	919254108	4	1

Item	Page	Assembly	Pos.	Quantity	Item	Page	Assembly	Pos.	Quantity
919296608	27	919499308	3	1	924496108	53	96035802	813	2
919328608	9		24	1	924567508	595	969426308	(1445)	1
919369308	9		119	1	924741208	569	918739608	303	1
919371808	9		104	1	924741208	569	918739608	304	1
919371908	10		164	1	925042108	731	917267508	3	1
919372008	10		163	1	925141508	628	919028808	9	1
919410708	10		179	1	925143708	630	925141508	1	1
919499308	9		4	1	925185208	628	919028808	10	1
919499408	9		22	1	925185308	628	919028808	11	1
919499508	9		23	1	925203408	724	910836808	1	5
919503008	11		181	1	925352308	570	918739608	360	1
919510708	27	919499308	2	1	925642908	121	919644008	28	4
919553608	9		78	1	925642908	721	968728808	18	1
919617008	9		111	1	925686208	563	969347008	1376	1
919617108	9		2	1	926028808	569	918739608	330	1
919644008	9		14	1	926041308	569	918739608	228	1
920381108	44	96045228	503	1	926041708	53	96035802	812	1
920715608	53	96035802	800	12	926098108	563	969347008	1377	1
920715608	53	96035802	814	4	926120008	91	96035799	834	1
920896108	592	968083708	1261	1	926120008	108	96035798	834	1
920978208	326	919231108	(2390)	1	926130108	569	918739608	202	1
920983508	53	96035802	891	1	926289108	570	918739608	351	1
921255408	689	968187108	483	1	926315908	53	96035802	815	2
921444108	577	967969608	200	1	926362908	569	918739608	325	1
921456108	661	917292408	2	1	926379108	592	968083708	1256	1
921456108	709	910040808	1	1	926465408	53	96035802	808	1
921990108	570	918739608	342	1	926555408	124	968077208	(881)	4
922068108	570	918739608	368	1	926561708	569	918739608	222	1
922628908	570	918739608	410	1	926606608	569	918739608	214	1
922648308	522	969256608	23	1	926610108	570	918739608	335	1
922676808	693	967785408	(487)	1	926711908	570	918739608	350	1
922849008	733	923285508	1	1	926757108	570	918739608	372	1
923015608	694	968222808	1486	1	9268131	238	10140729	18	1
923015608	694	968222808	1487	1	926891108	522	969256608	25	1
923016208	592	968083708	1254	1	926976308	91	96035799	835	1
923016308	570	918739608	349	1	926976308	108	96035798	835	1
923087208	595	969426308	(1446)	1	926990808	570	918739608	402	1
923285508	731	917267508	2	1	927032108	569	918739608	224	1
923342808	570	918739608	333	1	9271340	173	10126713	5	1
923343408	595	969426308	(1447)	1	927163908	693	967785408	11	1
923343608	569	918739608	309	1	927232508	563	969347008	1378	1
923512208	43	96045227	500	18	927294708	570	918739608	379	1
923512208	44	96045228	500	26	927295708	569	918739608	218	1
923512208	140	96045205	500	3	927295708	592	968083708	1266	1
923512208	446	96036955	500	53	9273161	218	10145173	7	2
923512208	448	96036956	500	29	9273271	204	10142942	2	2
923512208	510	96045385	500	76	9273690	261	10144036	6	1
923512208	513	96037136	500	58	9273691	261	10144036	5	1
923512208	514	96037137	500	21	9273691	265	10148366	6523	1
923512208	516	96037133	500	4	9273691	266	10148366	6543	1
923512208	615	96043733	500	2	9274859	168	10154379	10	5
923512208	617	96037132	500	4	927501901	341	927554301	2	1
923512208	711	917598408	(500)	4	927501901	361	90200104	13	1
923661808	661	917292408	5	1	927501901	585	90200103	13	1
923672408	661	917292408	6	1	927504701	581	939294001	23	1
923702508	53	96035802	803	1	927514301	357	939292201	16	38
923853008	569	918739608	314	1	927514301	583	939294201	16	38
923879808	731	917267508	40	1	9275178	254	10151328	91	1
923982608	735	923879808	1	1	927530201	340	90008901	13	1
924134808	570	918739608	332	1	927530301	340	90008901	14	1

Item	Page	Assembly	Pos.	Quantity	Item	Page	Assembly	Pos.	Quantity
927530801	340	90008901	40	3	929312908	563	969347008	1379	1
927531901	340	90008901	16	1	929331808	689	968187108	481	1
927554301	340	90008901	77	1	929391108	569	918739608	318	1
927554401	341	927554301	1	1	929529908	738	968090008	1	1
9275826	248	10116110	16	1	929582108	731	917267508	1	1
927586201	361	90200104	12	2	929582208	732	929582108	1	1
927586201	585	90200103	12	1	929591608	732	929582108	6	1
927601301	357	939292201	6	1	929631408	570	918739608	374	1
927601401	357	939292201	7	5	929742608	592	968083708	1383	1
927601901	357	939292201	25	1	929752308	53	96035802	809	1
927602001	359	90017588	30	1	929753308	700	968223308	1491	1
927602101	359	90017588	32	3	929802108	690	968187308	481	1
927602301	357	939292201	46	1	929802208	690	968187308	482	1
927602501	357	939292201	60	1	929802308	690	968187308	483	2
927602601	357	939292201	65	1	929802808	690	968187308	484	1
927602801	357	939292201	41	1	929803008	690	968187308	486	1
927602801	359	90017588	31	1	929803108	690	968187308	488	1
927602901	357	939292201	35	1	929804608	690	968187308	489	1
927606901	581	939294001	30	1	929806008	690	968187308	490	1
927608501	357	939292201	40	1	931185608	365	917259908	15	3
927608601	357	939292201	42	3	931549101	355	932916901	20	1
927608801	357	939292201	45	1	931807501	340	90008901	5	1
927610201	361	90200104	15	1	932916901	354	90208882	1	1
927610201	585	90200103	15	1	935508808	17	919617108	52	8
927613508	569	918739608	206	1	938865908	733	923285508	11	1
927637908	592	968083708	1255	1	938996401	340	90008901	85	1
927716701	340	90008901	70	1	938996501	340	90008901	90	1
927742801	357	939292201	58	1	939249808	705	917268408	5	1
927745001	357	939292201	1	1	939250301	340	90008901	15	1
927745101	357	939292201	5	1	939251101	340	90008901	20	5
927745301	357	939292201	15	1	939251401	340	90008901	30	1
927745301	583	939294201	15	1	939251501	340	90008901	35	1
927745401	357	939292201	20	1	939251601	340	90008901	45	1
927745901	357	939292201	50	1	939251701	340	90008901	60	1
927746101	357	939292201	55	1	939251801	340	90008901	65	1
927746301	357	939292201	75	1	939257301	340	90008901	50	1
927996308	510	96045385	508	1	939279608	721	968728808	20	1
927996308	513	96037136	517	1	939292201	354	90208882	5	1
928005808	569	918739608	316	1	939292301	357	939292201	10	1
928006008	570	918739608	356	1	939294001	579	90028852	1	1
928022908	570	918739608	364	1	939294201	579	90028852	5	1
928023108	91	96035799	836	1	939589501	357	939292201	(997)	1
928023108	108	96035798	836	1	939589601	357	939292201	(998)	1
928024908	569	918739608	211	1	939589701	357	939292201	(999)	1
928025108	592	968083708	1262	1	939599301	361	90200104	1	2
928033508	53	96035802	806	2	939599301	585	90200103	1	2
928037208	570	918739608	406	1	939637901	355	932916901	15	1
928042908	570	918739608	369	1	940116008	71	919254308	67	4
928046908	569	918739608	313	1	940116008	101	919254408	67	4
928046908	592	968083708	1257	1	9412158	150	917862808	35	1
928456608	478	969763408	(430)	1	941530008	134	919087608	15	4
928569808	143	919328608	1	1	942164608	17	919617108	8	2
928620108	143	919328608	2	1	944029908	731	917267508	25	1
928720408	570	918739608	405	1	944134103	340	90008901	36	1
928762308	569	918739608	317	1	944303303	73	90028956	56	1
928765908	700	968223308	1493	1	946104608	275	919007708	34	2
928865508	53	96035802	810	2	946509308	705	917268408	6	1
928874708	53	96035802	801	4	947868208	732	929582108	2	2
928876208	570	918739608	358	1	947868208	735	923879808	3	1
929310208	124	968077208	(880)	4	948717708	121	919644008	19	4

Item	Page	Assembly	Pos.	Quantity	Item	Page	Assembly	Pos.	Quantity
949361408	731	917267508	18	1	955918008	672	966134608	25	2
949362208	731	917267508	19	1	955927208	639	917291908	67	13
951111408	17	919617108	28	2	955974308	731	917267508	31	1
952177008	269	918731408	20	2	956078908	70	919254308	22	1
952177008	275	919007708	31	5	956078908	100	919254408	22	1
952940908	433	968923508	5	2	956078908	332	917825508	5	2
953147708	731	917267508	8	1	956347808	731	917267508	11	2
953504308	158	918731108	4	6	956348108	731	917267508	24	2
953515408	323	917626608	8	3	956348608	731	917267508	45	1
953515508	323	917626608	9	1	956348708	731	917267508	46	1
953515508	332	917825508	10	8	956348808	731	917267508	14	1
953536408	709	910040808	2	1	956348908	731	917267508	15	1
953536508	709	910040808	3	1	956349008	733	923285508	4	1
953536608	661	917292408	7	1	956349108	733	923285508	5	1
953536708	661	917292408	8	1	956414208	672	966134608	21	4
953608508	134	919087608	9	2	956414308	672	966134608	20	4
953608508	731	917267508	17	2	956474508	352	917259708	23	2
953650008	577	967969608	22	7	956474508	577	967969608	4	2
953650008	639	917291908	68	28	956572408	639	917291908	63	2
953650008	661	917292408	57	12	957025308	644	917292008	24	4
953661008	277	919007708	400	1	957025308	648	917292108	24	4
953695308	21	96034894	18	2	957025308	652	917292208	24	4
953695308	24	96034977	18	2	957025308	656	917292308	24	4
953695308	320	96023117	9	4	957025308	661	917292408	46	4
953695308	405	917304708	6	2	957025408	644	917292008	28	4
953695308	433	968923508	6	6	957025408	648	917292108	28	4
953695308	441	969016008	4	4	957025408	652	917292208	28	4
953696908	502	917261208	22	2	957025408	656	917292308	28	4
953713908	661	917292408	10	1	957025408	661	917292408	45	4
953714108	639	917291908	65	2	96000309	71	919254308	80	1
953717608	640	917291908	74	1	96000309	101	919254408	80	1
953749408	661	917292408	4	1	96000310	71	919254308	81	1
953756608	577	967969608	23	1	96000310	101	919254408	81	1
953756708	738	968090008	5	2	96000311	71	919254308	82	1
953873408	36	96045226	25	1	96000311	101	919254408	82	1
953873408	111	917691008	20	16	96000312	71	919254308	83	1
953873408	121	919644008	25	8	96000312	101	919254408	83	1
953873408	137	919499408	85	4	96002833	705	917268408	4	1
953873408	142	96045206	12	4	96004280	623	917260608	10	4
953873408	269	918731408	21	2	96004318	275	919007708	30	1
953873408	275	919007708	14	6	96004475	466	10876576	999	1
953873408	352	917259708	22	4	96006879	509	96045384	58	1
953873408	491	919372008	3	1	96007145	628	919028808	2	1
953873408	589	967784808	313	4	96011801	483	918484108	20	1
954113708	429	96036790	27	2	96011802	483	918484108	30	1
954117308	320	96023117	24	1	96013575	662	917292408	63	1
954128608	639	917291908	69	1	96013575	726	917267208	2	1
954313608	545	96035117	11	1	96013988	488	96011801	2333	1
954706408	644	917292008	10	1	96014023	317	96034533	2456	1
954706408	648	917292108	10	1	96014060	317	96034533	2463	1
954706408	652	917292208	10	1	96014317	91	96035799	844	1
954706408	656	917292308	10	1	96014317	108	96035798	829	1
954706408	661	917292408	27	1	96014732	488	96011801	2313	1
955500008	433	968923508	7	1	96014733	488	96011801	2311	1
955552508	731	917267508	20	1	96014734	488	96011801	2315	1
955552608	731	917267508	29	1	96014807	447	96036955	2998	2
955581808	661	917292408	25	1	96014807	515	96037137	2998	10
955668108	577	967969608	24	1	96015921	368	919010208	2	1
955668108	577	967969608	(9)	1	96015926	370	96015921	1	1
955917908	672	966134608	26	4	96017704	429	96036790	1	1

Item	Page	Assembly	Pos.	Quantity	Item	Page	Assembly	Pos.	Quantity
96018230	70	919254308	1	1	96034980	101	919254408	200	1
96018575	574	918628408	500	1	96035117	538	96045351	19	1
96019396	100	919254408	1	1	96035326	314	96034515	1	1
96020259	410	917676208	(2824)	1	96035597	314	96034515	3	2
96020359	462	918759808	1	1	96035632	569	918739608	203	1
96020727	733	923285508	2	1	96035633	569	918739608	204	1
96021362	417	918810308	7	1	96035634	569	918739608	205	1
96021363	417	918810308	8	1	96035635	569	918739608	207	1
96021365	417	918810308	9	1	96035646	572	918956208	240	1
96022872	449	96036957	2	1	96035739	315	96034522	1	1
96022873	453	96022872	1	1	96035792	105	919296408	4	1
96022970	509	96045384	63	1	96035796	88	919296508	4	1
96023028	320	96023117	3	1	96035798	107	96035792	10	1
96023109	63	918925508	1	1	96035799	90	96035796	10	1
96023117	318	918955408	1	1	96035801	48	919296608	4	1
96023299	483	918484108	(2331)	1	96035802	51	96035801	10	1
96023301	317	96034533	2466	1	96035803	51	96035801	11	1
96023875	449	96036957	56	1	96035865	53	96035802	816	4
96023876	449	96036957	(10)	1	96035888	91	96035799	840	1
96023914	318	918955408	100	1	96035889	91	96035799	841	1
96023930	321	96023914	10	1	96035890	108	96035798	830	1
96023931	321	96023914	11	1	96035891	108	96035798	831	1
96023932	321	96023914	14	1	96035892	108	96035798	832	1
96023960	321	96023914	19	1	96035893	108	96035798	833	1
96023967	317	96034533	2455	1	96035894	91	96035799	843	1
96024265	628	919028808	20	1	96035905	55	96035803	706	1
96024886	410	917676208	(2823)	1	96035906	55	96035803	707	1
96024954	488	96011801	2316	1	96035907	55	96035803	708	1
96025887	368	919010208	4	1	96035909	55	96035803	709	1
96028313	320	96023117	2	1	96035910	55	96035803	726	1
96028331	589	967784808	152	1	96035911	55	96035803	727	1
96028333	90	96035796	161	1	96035912	55	96035803	728	1
96028333	107	96035792	161	1	96035913	55	96035803	729	1
96028878	604	918989008	20	4	96035929	572	918956208	304	1
96029256	639	917291908	3	1	96036790	425	918731508	1	1
96030724	449	96036957	1	1	96036907	134	919087608	12	1
96031888	317	96034533	2450	1	96036954	444	918731608	5	1
96032222	417	918810308	5	1	96036955	445	96036954	2	1
96032223	417	918810308	6	1	96036956	445	96036954	7	1
96032358	317	96034533	2457	1	96036957	444	918731608	6	1
96032850	483	918484108	8	1	96036998	318	918955408	4	1
96033140	449	96036957	19	1	96037000	318	918955408	5	1
96033227	453	96022872	9	1	96037130	606	918992008	4	1
96033235	326	919231108	(2395)	1	96037131	606	918992008	5	1
96034411	569	918739608	201	1	96037132	616	96037130	23	1
96034456	275	919007708	50	1	96037133	509	96045384	70	1
96034457	275	919007708	(1612)	1	96037136	509	96045384	51	1
96034515	269	918731408	2	1	96037137	509	96045384	52	1
96034522	269	918731408	3	1	96037138	509	96045384	62	1
96034533	269	918731408	290	1	96037229	604	918989008	10	1
96034535	317	96034533	2451	1	96039022	315	96034522	2	1
96034540	317	96034533	2453	1	96039740	496	919371908	1	1
96034631	275	919007708	2	1	96040431	570	918739608	370	1
96034858	326	919231108	(2391)	1	96040432	569	918739608	254	2
96034868	326	919231108	1	1	96040433	569	918739608	209	1
96034872	327	96034868	1	1	96040434	569	918739608	255	1
96034873	326	919231108	2	1	96040435	569	918739608	210	1
96034894	17	919617108	2	1	96040847	570	918739608	376	1
96034962	71	919254308	200	1	96043733	614	96045237	5	1
96034977	17	919617108	10	1	96045204	138	919499508	10	1

Item	Page	Assembly	Pos.	Quantity	Item	Page	Assembly	Pos.	Quantity
96045205	139	96045204	30	1	963544508	497	96039740	4	1
96045206	138	919499508	30	1	963556008	661	917292408	9	1
96045225	32	919510708	1	1	963557408	705	917268408	(2)	1
96045226	34	96045225	2	1	963560708	570	918739608	411	1
96045227	36	96045226	21	1	963562308	592	968083708	1263	1
96045228	36	96045226	23	1	963703908	592	968083708	1258	1
96045237	606	918992008	3	1	963792208	449	96036957	3	2
96045351	530	918732808	4	1	963926708	570	918739608	383	1
96045384	506	919410708	12	1	963949708	429	96036790	39	1
96045385	509	96045384	50	1	964093408	429	96036790	9	1
96045386	518	919503008	2	1	964273708	569	918739608	217	1
96045387	519	96045386	1	1	964307108	429	96036790	17	2
96045388	520	96045387	2	1	964476008	574	918628408	(1100)	1
96045601	137	919499408	50	1	964581908	121	919644008	5	4
96045603	137	919499408	51	1	964813808	275	919007708	15	1
96045838	275	919007708	(1)	1	964843708	417	918810308	12	2
96045839	275	919007708	(2)	1	964843808	417	918810308	13	1
96048826	491	919372008	1	1	964843908	417	918810308	14	1
96049688	121	919644008	2	2	964958008	700	968223308	1494	1
96049689	121	919644008	3	2	964984108	417	918810308	26	2
96050169	71	919254308	300	1	965021508	417	918810308	46	2
96050638	410	917676208	400	1	965155808	569	918739608	236	1
961727008	134	919087608	5	1	965159708	570	918739608	336	1
961861508	700	968223308	1492	1	965198708	570	918739608	354	1
961940008	705	917268408	1	1	965255408	365	917259908	26	1
962196208	513	96037136	515	1	965281408	506	919410708	10	1
962255708	570	918739608	386	1	965356108	321	96023914	30	1
962255708	570	918739608	387	1	965371708	683	966591508	1	1
962282208	420	96032222	1	1	965417108	449	96036957	17	1
962282308	422	96032223	1	1	965426208	283	968026308	1	1
962440508	569	918739608	200	1	965426308	283	968026308	2	1
962602108	699	967785008	19	1	965434608	570	918739608	352	1
962625708	672	966134608	9	1	965461108	522	969256608	2	1
962641808	570	918739608	378	1	965547208	524	967589508	2	1
962771108	639	917291908	20	1	965617208	447	96036955	995	6
962913408	689	968187108	480	3	965617208	511	96045385	995	2
962947308	672	966134608	4	1	965622108	43	96045227	996	20
962947408	672	966134608	5	1	965622108	45	96045228	996	20
962956708	570	918739608	346	1	965622108	447	96036955	996	8
962963808	70	919254308	56	1	965622108	448	96036956	996	8
962963808	100	919254408	56	1	965622108	511	96045385	996	62
962963808	475	967978908	15	1	965622108	513	96037136	996	124
962968508	694	968222808	1488	1	965622108	515	96037137	996	52
962968508	694	968222808	1489	1	965622208	43	96045227	998	1
962968608	689	968187108	482	1	965622208	45	96045228	998	1
962968908	700	968223308	1490	1	965622208	140	96045205	998	3
962969208	570	918739608	388	1	965622208	447	96036955	998	1
962969208	570	918739608	389	1	965622208	448	96036956	998	1
962977608	701	968223408	495	2	965622208	511	96045385	998	1
962977708	701	968223408	496	2	965622208	513	96037136	998	1
963062208	429	96036790	25	1	965622208	515	96037137	998	1
963170408	569	918739608	308	1	965622208	516	96037133	998	3
963171408	563	969347008	1373	1	965622208	615	96043733	998	2
963257908	370	96015921	2	1	965622208	617	96037132	998	3
963337608	563	969347008	1372	1	965622208	711	917598408	(998)	2
963398008	449	96036957	35	1	965751108	598	918462708	15	1
963398008	522	969256608	26	2	965760208	702	918124908	12	1
963457808	570	918739608	334	1	965760308	702	918124908	13	1
963498508	662	917292408	79	1	965763608	383	917305408	9	1
963544508	429	96036790	26	3	965784408	390	916162508	4	1

Item	Page	Assembly	Pos.	Quantity	Item	Page	Assembly	Pos.	Quantity
965807808	529	969061708	1	1	966620008	383	917305408	13	1
965861108	570	918739608	340	3	966621108	383	917305408	12	1
965921308	17	919617108	43	4	966629308	373	96025887	1	1
965945408	570	918739608	353	1	966631008	352	917259708	100	1
965946108	326	919231108	(2394)	1	966633308	508	968128908	30	1
965991908	600	917269408	10	1	966633408	508	968128908	17	1
966051108	570	918739608	339	1	966633508	508	968128908	18	1
966134608	666	918807308	2	1	966662508	368	919010208	6	1
966142408	569	918739608	306	1	966707708	458	917260408	2	1
966145808	592	968083708	1270	1	966720708	508	968128908	50	1
966167808	36	96045226	2	1	966796408	143	919328608	100	1
966181208	506	919410708	8	1	966825408	405	917304708	10	1
966184308	570	918739608	400	1	966860008	592	968083708	1253	1
966189708	37	966167808	1	1	966860408	570	918739608	367	1
966200208	634	918804808	10	1	966861108	570	918739608	331	1
966204108	36	96045226	4	2	966979108	449	96036957	52	1
966230408	405	917304708	25	1	966980708	449	96036957	36	2
966230508	405	917304708	27	1	967219908	570	918739608	373	1
966230608	405	917304708	28	1	967257808	417	918810308	39	2
966230708	405	917304708	29	1	967260908	452	96030724	4	1
966230808	405	917304708	30	1	967307008	372	916177508	26	1
966241008	375	916170808	14	1	967321308	706	918197708	10	1
966253708	407	966230508	1	1	967354708	592	968083708	1267	1
966253908	407	966230508	2	2	967355108	569	918739608	215	1
966269808	372	916177508	2	1	967363808	455	10340105	999	1
966270208	372	916177508	(1)	1	967421808	128	11347526	27	1
966270808	372	916177508	1	1	967421808	504	10327065	30	1
966282308	383	917305408	1	1	967541908	445	96036954	3	1
966282408	383	917305408	2	1	967542008	445	96036954	4	1
966290708	672	966134608	30	1	967588308	417	918810308	3	1
966290908	677	917262208	3	1	967588408	417	918810308	4	1
966291008	678	966290908	5	1	967589508	522	969256608	24	1
966298308	577	967969608	100	1	967618508	570	918739608	385	1
966298408	577	967969608	(8)	1	967623008	569	918739608	300	1
966350208	569	918739608	307	1	967709108	44	96045228	521	1
966354008	678	966290908	4	1	967771808	705	917268408	2	1
966354408	679	966354008	4	1	967771908	662	917292408	78	7
966354508	679	966354008	6	1	967771908	705	917268408	27	1
966354908	685	968708708	18	1	967774608	705	917268408	100	1
966355308	685	968708708	110	1	967775308	383	917305408	34	1
966356908	706	918197708	13	1	967784508	686	917262408	4	1
966357008	685	968708708	120	1	967784808	587	917267308	4	1
966361408	677	917262208	6	1	967785008	697	917265308	4	1
966361508	677	917262208	(1)	1	967785408	691	917262508	4	1
966363808	405	917304708	37	1	967850808	365	917259908	3	1
966377308	682	966291008	120	1	967916508	626	917404508	31	2
966393608	682	966291008	140	1	967916508	627	917404008	41	1
966394008	682	966291008	130	1	967916808	626	917404508	30	2
966394208	682	966291008	160	1	967916808	627	917404008	40	1
966394808	682	966291008	170	1	967921908	603	917368108	20	1
966395208	682	966291008	190	1	967928508	471	918956108	2	1
966408908	399	916163008	1	1	967933408	713	968412508	1	1
966473108	634	918804808	9	1	967936408	713	968412508	2	1
966479308	706	918197708	1	1	967936908	623	917260608	1	1
966497808	393	966497908	2	1	967937508	625	967936908	1	1
966497908	390	916162508	1	1	967937608	713	968412508	3	1
966513708	393	966497908	17	1	967969608	575	917267108	3	1
966546008	690	968187308	480	3	967969708	575	917267108	4	2
966563508	683	966591508	8	1	967969708	728	917413208	8	2
966591508	678	966290908	10	1	967969908	577	967969608	1	1

Item	Page	Assembly	Pos.	Quantity	Item	Page	Assembly	Pos.	Quantity
967970008	577	967969608	2	2	968143708	108	96035798	837	1
967970408	702	918124908	1	1	968144208	53	96035802	805	1
967972208	70	919254308	9	1	968144308	53	96035802	807	1
967972308	70	919254308	10	1	968144408	53	96035802	811	1
967972308	100	919254408	10	1	968144708	53	96035802	804	1
967972408	70	919254308	11	4	968148408	91	96035799	842	1
967972408	100	919254408	11	4	968148708	595	969426308	(1448)	1
967977708	564	917261808	2	1	968148808	595	969426308	(1449)	1
967978808	474	967928508	1	1	968149608	592	968083708	1250	1
967978908	471	918956108	20	1	968149808	592	968083708	1268	1
967980508	564	917261808	1	1	968149908	592	968083708	1269	1
967982708	439	969015908	2	1	968150008	592	968083708	1384	1
967985808	365	917259908	1	1	968150108	592	968083708	1385	1
967986308	368	919010208	1	1	968150708	569	918739608	219	1
967986408	369	967986308	1	1	968150708	569	918739608	234	1
967996008	17	919617108	9	2	968151108	569	918739608	301	1
967996108	134	919087608	3	1	968151208	569	918739608	302	1
967996608	121	919644008	4	4	968151308	569	918739608	305	1
968007308	570	918739608	357	1	968151408	569	918739608	310	1
968010508	629	968068308	1	1	968151808	569	918739608	321	1
968011508	134	919087608	4	1	968151908	569	918739608	322	1
968011608	134	919087608	6	1	968152008	569	918739608	323	1
968014808	121	919644008	13	4	968152008	569	918739608	324	1
968014908	121	919644008	6	4	968152508	570	918739608	355	1
968019508	17	919617108	50	1	968154808	572	918956208	300	1
968021308	585	90200103	10	1	968154908	572	918956208	301	1
968021408	585	90200103	25	1	968155008	572	918956208	302	1
968021508	361	90200104	10	1	968155108	572	918956208	303	1
968021608	361	90200104	25	1	968156108	572	918956208	320	1
968025208	275	919007708	3	1	968158208	572	918956208	260	1
968025308	275	919007708	4	1	968158508	572	918956208	265	1
968026308	275	919007708	7	1	968158908	572	918956208	473	1
968036408	25	968019508	1	2	968159008	572	918956208	474	1
968036508	26	968036408	1	1	968159108	572	918956208	475	1
968038208	111	917691008	10	6	968159308	572	918956208	477	1
968038308	111	917691008	11	6	968159408	572	918956208	478	2
968046208	111	917691008	50	2	968159508	572	918956208	479	1
968049608	36	96045226	1	1	968162308	589	967784808	(250)	1
968050708	116	968046208	1	2	968162408	589	967784808	(251)	1
968052308	116	968046208	4	4	968166708	55	96035803	700	1
968054008	36	96045226	3	1	968166808	55	96035803	701	1
968054808	352	917259708	5	2	968166908	55	96035803	702	1
968055808	100	919254408	9	1	968167008	55	96035803	703	1
968063108	518	919503008	4	1	968167108	55	96035803	704	1
968068308	628	919028808	1	1	968167808	55	96035803	712	1
968072808	442	917260108	1	1	968167908	55	96035803	713	1
968073008	442	917260108	2	1	968168008	55	96035803	714	1
968075708	378	968514508	1	1	968168108	55	96035803	715	1
968077208	122	917430308	4	1	968168208	55	96035803	716	2
968077308	124	968077208	10	1	968168308	55	96035803	717	2
968078808	124	968077208	11	1	968168408	55	96035803	718	2
968083608	589	967784808	19	1	968168508	55	96035803	719	2
968083708	589	967784808	10	1	968168608	55	96035803	720	2
968083808	589	967784808	11	1	968168708	55	96035803	721	2
968090008	736	917268108	2	1	968168808	124	968077208	(760)	4
968100408	431	96017704	10	1	968170308	70	919254308	12	3
968128908	506	919410708	11	1	968170308	100	919254408	12	3
968139808	570	918739608	348	1	968170708	70	919254308	14	1
968141708	592	968083708	1260	1	968170708	100	919254408	14	1
968143708	91	96035799	837	1	968187108	688	967784508	10	1

Item	Page	Assembly	Pos.	Quantity	Item	Page	Assembly	Pos.	Quantity
968187308	688	967784508	11	1	968655508	429	96036790	18	1
968201408	701	968223408	494	2	968661408	277	919007708	404	2
968205108	55	96035803	770	4	968693208	506	919410708	30	1
968205208	55	96035803	771	4	968708608	677	917262208	4	1
968210808	606	918992008	1	1	968708708	684	968708608	1	1
968222808	693	967785408	10	1	968709108	70	919254308	34	1
968223308	699	967785008	10	1	968709108	100	919254408	34	1
968223408	699	967785008	11	1	968710308	116	968046208	2	2
968252908	38	968054008	5	1	968728808	719	968811608	1	1
968252908	518	919503008	6	2	968729008	721	968728808	1	1
968253608	518	919503008	5	5	968765608	30	917511508	25	4
968266508	714	967933408	1	1	968798308	494	96048826	1	1
968267108	606	918992008	2	1	968798408	494	96048826	2	1
968267208	612	968993508	1	1	968811608	718	917611508	1	1
968267308	612	968993508	2	1	968841908	53	96035802	890	1
968267408	612	968993508	3	1	968918808	275	919007708	1	1
968270108	70	919254308	29	1	968923508	429	96036790	2	1
968270108	100	919254408	29	1	968928808	429	96036790	3	1
968274208	70	919254308	33	1	968929208	494	96048826	100	1
968274208	100	919254408	33	1	968933608	429	96036790	4	1
968290608	609	968994408	1	1	968977308	429	96036790	24	1
968290708	610	968290608	1	1	968981408	280	96034631	1	1
968290908	609	968994408	2	1	968981508	280	96034631	2	1
968314308	589	967784808	(1)	1	968986008	275	919007708	8	1
968315808	589	967784808	18	1	968992508	623	917260608	15	1
968331708	116	968046208	9	6	968993508	611	968267108	1	1
968349808	563	969347008	1374	1	968994408	608	968210808	1	1
968349908	592	968083708	1251	1	968999708	323	917626608	1	1
968350008	592	968083708	1252	1	969002508	429	96036790	7	1
968350108	592	968083708	1382	1	969007208	433	968923508	1	1
968350608	569	918739608	213	1	969015908	425	918731508	2	1
968350708	569	918739608	226	1	969016008	439	969015908	1	1
968350908	569	918739608	231	1	969016108	439	969015908	3	1
968351008	569	918739608	233	1	969017908	441	969016008	1	1
968351208	569	918739608	320	1	969034108	326	919231108	(2393)	1
968351408	570	918739608	343	1	969041408	574	918628408	(1102)	1
968351508	570	918739608	345	1	969047708	711	917598408	1	1
968351808	570	918739608	381	1	969050308	332	917825508	1	1
968352008	570	918739608	384	1	969050408	335	969050308	1	1
968352108	570	918739608	377	1	969061708	518	919503008	12	1
968401508	509	96045384	57	1	969072608	325	968999708	1	1
968410408	717	917551608	1	1	969085208	410	917676208	20	1
968412508	710	917379608	2	1	969089708	499	918731908	1	1
968420608	71	919254308	65	1	969101808	414	969085208	1	1
968420608	101	919254408	65	1	969132208	439	969015908	4	1
968497408	722	917531708	1	1	969165508	55	96035803	710	1
968498108	629	968068308	2	1	969165608	55	96035803	711	1
968514508	368	919010208	20	1	969168408	121	919644008	11	8
968537008	569	918739608	225	1	969185608	564	917261808	3	1
968544708	478	969763408	(327)	1	969256608	519	96045386	2	1
968570808	483	918484108	10	1	969302208	494	96048826	4	1
968585908	53	96035802	802	4	969324808	572	918956208	245	1
968593808	55	96035803	722	2	969324908	572	918956208	246	1
968593908	55	96035803	723	2	969325008	572	918956208	247	1
968594008	55	96035803	724	2	969325108	572	918956208	290	1
968594108	55	96035803	725	2	969325208	572	918956208	291	1
968599208	569	918739608	319	1	969325308	572	918956208	292	1
968646408	600	917269408	2	1	969344508	572	918956208	200	1
968648408	599	917269308	9	1	969347008	530	918732808	10	1
968648508	599	917269308	10	1	969384408	488	96011801	2314	1

Item	Page	Assembly	Pos.	Quantity	Item	Page	Assembly	Pos.	Quantity
969386508	569	918739608	315	1	97001014	386	966282408	1	1
969386708	570	918739608	396	1	97001015	383	917305408	3	1
969426308	593	917966708	4	1	97001048	383	917305408	6	1
969426408	595	969426308	10	1	97001095	407	966230508	3	2
969431008	545	96035117	3	1	97001102	408	966253908	1	1
969438208	572	918956208	309	1	97001103	408	966253908	3	2
969438308	572	918956208	230	1	97001109	408	966253908	6	2
969444008	158	918731108	19	1	97001248	396	916168308	6	1
969452108	488	96011801	2312	2	97001249	396	916168308	7	1
969452208	569	918739608	326	1	97001250	396	916168308	8	2
969452608	574	918628408	(1101)	1	97001317	372	916177508	25	1
969493508	429	96036790	19	1	97001318	372	916177508	(2)	1
969572608	570	918739608	361	1	97001404	383	917305408	5	1
969574508	488	96011801	2310	1	97001553	383	917305408	17	1
969633008	563	969347008	1375	1	97001589	383	917305408	4	1
969633808	569	918739608	212	1	97001699	385	966282308	2	1
969633908	569	918739608	229	1	97001700	386	966282408	2	1
969634008	569	918739608	235	1	97001711	405	917304708	33	1
969634108	569	918739608	221	1	97001760	405	917304708	34	1
969634308	569	918739608	230	1	97001821	644	917292008	19	1
969634408	569	918739608	329	1	97001821	648	917292108	19	1
969634508	570	918739608	375	1	97001821	652	917292208	19	2
969634608	570	918739608	380	1	97001821	656	917292308	19	2
969634708	570	918739608	382	1	97001821	661	917292408	13	2
969634908	570	918739608	403	1	97002207	383	917305408	18	1
969637808	574	918628408	(1103)	1	97002209	383	917305408	19	1
969723508	702	918124908	11	1	97002609	383	917305408	23	1
969759208	491	919372008	104	1	97002645	375	916170808	3	1
969763408	476	917676308	4	1	97002990	405	917304708	15	1
969763608	478	969763408	12	1	97002990	417	918810308	47	4
969763908	478	969763408	19	1	97003164	400	966408908	1	1
969842608	478	969763408	10	1	97003298	383	917305408	24	1
969842808	478	969763408	11	1	97003558	393	966497908	1	1
969904608	483	918484108	16	1	97003560	390	916162508	2	1
969935008	570	918739608	341	1	97003561	390	916162508	3	1
969939408	314	96034515	4	1	97003805	370	96015921	10	1
969978408	478	969763408	(328)	1	97004696	385	966282308	3	1
969979608	478	969763408	(326)	1	97005040	396	916168308	9	1
969997708	73	90028956	(999)	1	97005042	396	916168308	10	2
97000274	405	917304708	2	1	97005143	385	966282308	4	1
97000275	405	917304708	3	1	97005144	386	966282408	3	1
97000276	405	917304708	4	1	97005272	393	966497908	3	1
97000277	405	917304708	5	1	97005273	393	966497908	4	1
97000279	390	916162508	5	1	97005289	393	966497908	5	1
970003708	280	96034631	9	1	97005290	393	966497908	6	1
97000389	399	916163008	6	1	97005291	393	966497908	7	1
97000436	396	916168308	1	1	97005309	393	966497908	11	9
97000437	396	916168308	2	1	97006055	393	966497908	18	1
97000438	396	916168308	3	1	97006057	393	966497908	19	1
97000440	396	916168308	4	1	97006461	399	916163008	9	1
97000442	396	916168308	5	1	97006497	737	917268208	3	1
97000466	383	917305408	10	1	97006624	399	916163008	4	1
97000467	383	917305408	11	1	97006863	383	917305408	16	1
97000469	383	917305408	15	1	97006874	383	917305408	32	6
97000470	383	917305408	14	1	97006875	383	917305408	36	1
97000492	405	917304708	26	1	97006876	383	917305408	37	1
97000516	405	917304708	31	1	97007030	410	917676208	2	1
97000517	405	917304708	32	1	97007043	408	966253908	8	1
97000735	375	916170808	2	1	97007597	384	917305408	60	4
97001013	385	966282308	1	1	97007649	378	968514508	2	1

Item	Page	Assembly	Pos.	Quantity	Item	Page	Assembly	Pos.	Quantity
97008063	365	917259908	18	1	97028159	383	917305408	48	4
97008156	721	968728808	17	1	97028172	661	917292408	12	1
97008171	408	966253908	5	1	97028296	661	917292408	14	8
97008317	610	968290608	2	1	97028395	365	917259908	7	2
97008317	613	968267208	1	1	97028396	365	917259908	8	1
97008318	610	968290608	3	1	97029040	464	96020359	50	1
97008318	613	968267208	2	1	97029382	661	917292408	3	1
97008548	459	966707708	2	1	97029921	275	919007708	100	1
97008549	459	966707708	1	1	97030027	474	967928508	2	1
97008572	390	916162508	13	1	97030028	474	967928508	3	1
97009056	639	917291908	13	1	97030029	474	967928508	4	1
97009160	380	917304508	7	2	97030030	474	967928508	5	1
97009799	150	917862808	101	1	97030031	474	967928508	6	1
97010811	522	969256608	6	1	97030032	474	967928508	7	2
97010812	522	969256608	7	1	97030033	474	967928508	8	2
97010814	522	969256608	11	1	97030037	474	967928508	9	1
97010815	522	969256608	14	1	97030038	471	918956108	5	2
97011112	137	919499408	74	1	97030039	471	918956108	10	6
97011113	137	919499408	75	1	97030182	714	967933408	2	1
97011114	137	919499408	76	1	97030303	625	967936908	5	2
97011115	137	919499408	77	1	97030304	625	967936908	6	2
97011246	368	919010208	18	1	97030305	625	967936908	7	2
97011478	17	919617108	26	2	97030307	716	967937608	1	1
97011689	150	917862808	95	1	97030323	728	917413208	1	2
97011690	150	917862808	96	1	97030562	715	967936408	3	1
97012017	393	966497908	29	2	97031196	728	917413208	7	2
97012184	405	917304708	44	1	97031197	575	917267108	6	2
97012288	375	916170808	6	1	97031203	577	967969608	3	2
97013718	449	96036957	(1)	1	97031205	577	967969608	5	2
97015127	137	919499408	55	2	97031206	577	967969608	6	2
97015722	368	919010208	10	1	97031233	721	968728808	15	3
97016304	150	917862808	49	1	97031233	728	917413208	2	2
97016392	150	917862808	72	4	97031266	79	967972208	1	1
97016752	372	916177508	31	1	97031267	79	967972208	2	1
97017074	518	919503008	13	1	97031267	102	968055808	2	1
97017499	17	919617108	36	16	97031271	80	967972308	1	1
97019129	405	917304708	52	1	97031272	80	967972308	2	1
97020380	623	917260608	(2)	3	97031272	82	968270108	2	1
97022452	449	96036957	53	1	97031273	81	967972408	1	1
97024733	518	919503008	14	1	97031274	81	967972408	2	1
97024781	390	916162508	19	1	97031342	474	967928508	10	1
97024783	390	916162508	24	1	97031349	565	967980508	5	1
97025080	614	96045237	24	1	97031350	565	967980508	6	1
97025127	393	966497908	35	3	97031351	565	967980508	4	1
97025484	280	96034631	121	4	97031434	365	917259908	30	1
97025520	705	917268408	(1)	1	97031454	365	917259908	32	1
97025690	380	917304508	8	1	97031462	365	917259908	36	2
97025882	522	969256608	8	1	97031463	365	917259908	37	1
97026779	405	917304708	54	1	97031480	70	919254308	30	2
97027202	644	917292008	6	1	97031480	100	919254408	30	2
97027202	648	917292108	6	1	97031481	70	919254308	31	2
97027202	652	917292208	6	1	97031481	100	919254408	31	2
97027202	656	917292308	6	1	97031535	365	917259908	4	1
97027202	661	917292408	21	1	97031536	365	917259908	5	1
97027203	645	917292008	62	3	97031537	365	917259908	6	1
97027203	648	917292108	62	3	97031538	439	969015908	5	1
97027203	652	917292208	62	3	97031539	439	969015908	6	1
97027203	656	917292308	62	3	97031540	439	969015908	7	1
97027358	665	967771908	1	1	97031570	439	969015908	8	1
97027494	384	917305408	65	1	97031571	439	969015908	9	1

Item	Page	Assembly	Pos.	Quantity	Item	Page	Assembly	Pos.	Quantity
97031639	17	919617108	4	8	97033038	350	917259608	9	1
97031640	17	919617108	5	16	97033100	102	968055808	1	1
97031641	17	919617108	6	32	97033103	462	918759808	50	4
97031642	17	919617108	7	32	97033140	439	969015908	15	1
97031659	728	917413208	3	2	97033141	443	917610208	1	1
97031660	728	917413208	4	8	97033142	439	969015908	17	1
97031661	728	917413208	5	8	97033143	439	969015908	18	1
97031684	728	917413208	6	8	97033190	365	917259908	40	1
97031752	623	917260608	4	4	97033250	137	919499408	56	2
97031860	30	917511508	10	1	97033251	137	919499408	57	2
97031901	491	919372008	2	1	97033301	30	917511508	22	4
97031991	17	919617108	13	40	97033302	475	967978908	1	1
97031992	17	919617108	14	16	97033304	475	967978908	2	2
97032012	17	919617108	17	2	97033305	475	967978908	3	1
97032020	134	919087608	7	1	97033306	475	967978908	4	2
97032051	350	917259608	2	1	97033307	475	967978908	5	1
97032093	121	919644008	10	4	97033309	475	967978908	6	1
97032133	30	917511508	21	4	97033348	414	969085208	23	1
97032155	121	919644008	8	8	97033383	116	968046208	24	4
97032162	365	917259908	17	1	97033390	116	968046208	25	4
97032167	121	919644008	7	4	97033487	390	916162508	7	1
97032197	121	919644008	12	4	97033889	275	919007708	21	1
97032260	283	968026308	21	1	97033897	21	96034894	16	1
97032261	335	969050308	3	1	97033897	24	96034977	16	1
97032263	276	919007708	203	1	97033902	21	96034894	19	1
97032320	121	919644008	29	4	97033902	24	96034977	19	1
97032370	70	919254308	48	1	97033925	462	918759808	51	1
97032370	100	919254408	48	1	97033935	21	96034894	15	1
97032383	70	919254308	52	1	97033935	24	96034977	15	1
97032383	100	919254408	52	1	97034096	350	917259608	3	1
97032409	70	919254308	45	2	97034193	737	917268208	8	1
97032409	100	919254408	45	2	97034194	737	917268208	9	1
97032592	276	919007708	256	1	97034243	462	918759808	52	1
97032611	25	968019508	2	4	97034262	71	919254308	61	1
97032616	25	968019508	4	6	97034262	101	919254408	61	1
97032617	25	968019508	5	8	97034281	431	96017704	101	1
97032618	26	968036408	2	1	97034282	431	96017704	103	1
97032619	25	968019508	6	2	97034296	429	96036790	12	1
97032646	112	968038208	1	2	97034301	429	96036790	16	1
97032646	113	968038308	1	2	97034322	435	968977308	3	1
97032647	112	968038208	2	2	97034837	350	917259608	8	1
97032647	113	968038308	2	2	97035163	17	919617108	37	8
97032687	338	919369308	3	2	97035164	17	919617108	38	8
97032691	111	917691008	12	72	97035511	589	967784808	(1)	1
97032692	116	968046208	10	8	97035737	70	919254308	13	6
97032692	121	919644008	63	12	97035737	100	919254408	13	6
97032692	137	919499408	63	16	97035748	70	919254308	15	1
97032836	116	968046208	5	3	97035748	100	919254408	15	1
97032837	116	968046208	6	3	97035749	70	919254308	16	1
97032838	116	968046208	7	32	97035749	100	919254408	16	1
97032839	116	968046208	8	32	970365108	269	918731408	10	2
97032840	117	968331708	2	1	97036732	150	917862808	68	1
97032978	619	919617008	2	1	97036914	17	919617108	40	4
97032979	619	919617008	3	1	97036916	17	919617108	42	4
97032982	275	919007708	18	1	97037153	51	96035801	300	6
97032989	38	968054008	1	1	97037154	51	96035801	301	6
97032990	38	968054008	2	1	97037244	71	919254308	60	1
97033009	121	919644008	23	2	97037244	101	919254408	60	1
97033010	121	919644008	24	2	97037383	483	918484108	82	1
97033021	352	917259708	4	2	97037477	384	917305408	67	2

Item	Page	Assembly	Pos.	Quantity	Item	Page	Assembly	Pos.	Quantity
97037626	34	96045225	20	2	970422908	648	917292108	40	2
97037694	589	967784808	(2)	1	970422908	652	917292208	40	2
97037936	158	918731108	13	1	970422908	656	917292308	40	2
97037945	17	919617108	25	2	97042475	715	967936408	9	1
97037947	613	968267208	4	1	97042598	471	918956108	6	2
97037948	612	968993508	5	1	97042636	474	967928508	30	1
97037952	150	917862808	18	1	97042769	30	917511508	19	16
97037959	612	968993508	4	1	97042770	30	917511508	20	16
97037975	82	968270108	1	1	97043049	30	917511508	24	4
97038088	83	968274208	1	1	97043050	30	917511508	11	4
97038089	83	968274208	2	1	97043051	30	917511508	13	8
97038268	612	968993508	9	1	97043334	150	917862808	90	4
97038364	478	969763408	(1)	1	97043335	150	917862808	91	4
97038431	275	919007708	22	4	97043336	150	917862808	92	4
97038433	380	917304508	16	1	97043682	17	919617108	60	8
97038475	275	919007708	23	2	97043683	18	919617108	61	8
97038484	134	919087608	16	2	97044048	51	96035801	157	2
97038559	17	919617108	54	2	970447008	336	917259408	2	62
97038560	17	919617108	55	2	97044721	574	918628408	1	1
97038833	410	917676208	12	1	97045050	275	919007708	16	1
97038834	410	917676208	13	1	97045111	275	919007708	35	1
97038835	410	917676208	14	1	97045111	545	96035117	4	1
97038836	410	917676208	15	1	97045292	385	966282308	5	1
97038837	410	917676208	16	1	97045387	352	917259708	26	6
97038838	410	917676208	17	1	97045388	352	917259708	27	2
97039156	111	917691008	16	2	970456308	672	966134608	2	1
97039157	111	917691008	17	2	970456508	672	966134608	6	1
97039386	55	96035803	772	4	970456608	672	966134608	7	1
97039387	55	96035803	773	4	97045974	84	968709108	1	1
97039388	55	96035803	774	4	97045975	84	968709108	2	1
97039389	55	96035803	775	4	97046043	390	916162508	18	1
97039420	117	968331708	1	1	97046324	414	969085208	10	1
97039576	116	968046208	11	2	97046326	414	969085208	13	1
97039611	30	917511508	16	8	97046327	414	969085208	15	1
97039612	30	917511508	17	8	97046328	414	969085208	16	1
97039613	30	917511508	18	16	97046349	721	968728808	2	1
97039694	158	918731108	12	1	97046465	121	919644008	40	4
97039859	494	96048826	6	3	97047272	352	917259708	25	2
97039932	30	917511508	15	4	97047274	352	917259708	28	2
97039936	275	919007708	24	2	97047477	494	96048826	3	2
97039973	18	919617108	62	2	97047603	483	918484108	3	1
97039974	18	919617108	63	4	97047607	483	918484108	9	1
97040155	70	919254308	44	16	97047676	127	917257108	50	1
97040155	100	919254408	44	16	970477608	672	966134608	8	2
97040355	365	917259908	21	8	97047984	275	919007708	13	1
97040356	365	917259908	39	6	97048340	475	967978908	20	1
97040643	85	968420608	1	1	97048341	475	967978908	21	1
97040644	85	968420608	2	1	97049098	17	919617108	59	8
97040645	85	968420608	3	1	970491108	666	918807308	3	1
97041747	275	919007708	26	1	97049712	429	96036790	35	1
97041755	85	968420608	14	1	97049719	491	919372008	102	1
97042011	127	917257108	22	4	97049723	491	919372008	103	1
97042067	464	96020359	62	1	97049782	429	96036790	13	1
97042069	414	969085208	8	1	97049819	429	96036790	10	1
97042069	462	918759808	16	1	97049833	429	96036790	14	1
97042071	414	969085208	9	1	97049834	429	96036790	15	1
97042155	414	969085208	6	1	97050548	499	918731908	251	1
97042167	629	968068308	7	1	97050648	497	96039740	2	1
970422908	639	917291908	38	2	97050650	497	96039740	6	1
970422908	644	917292008	40	2	97050669	435	968977308	5	1

Item	Page	Assembly	Pos.	Quantity	Item	Page	Assembly	Pos.	Quantity
97050671	435	968977308	7	1	970537108	652	917292208	26	2
97050672	435	968977308	12	1	970537108	656	917292308	26	2
97050762	280	96034631	5	1	970537108	661	917292408	41	2
97050763	280	96034631	6	1	970537508	644	917292008	29	2
97050764	280	96034631	7	1	970537508	648	917292108	29	2
97050776	18	919617108	65	2	970537508	652	917292208	29	2
97050852	462	918759808	15	1	970537508	656	917292308	29	2
97050857	414	969085208	11	1	970537508	661	917292408	39	2
97050878	276	919007708	201	1	97053770	737	917268208	7	2
97050879	275	919007708	12	1	970537708	644	917292008	27	2
97050880	275	919007708	17	2	970537708	648	917292108	27	2
97050881	275	919007708	10	1	970537708	652	917292208	27	2
97050893	276	919007708	250	1	970537708	656	917292308	27	2
97050894	276	919007708	251	1	970537708	661	917292408	38	2
97050960	280	96034631	10	1	970537808	644	917292008	31	12
970509808	639	917291908	56	1	970537808	648	917292108	31	18
97051193	623	917260608	(1)	1	970537808	652	917292208	31	14
97051275	721	968728808	11	2	970537808	656	917292308	31	14
97051276	721	968728808	12	2	970537808	661	917292408	42	12
97051278	721	968728808	14	1	97053934	277	919007708	402	2
97051280	721	968728808	16	4	970545508	644	917292008	11	1
97051324	450	96036957	66	1	970545608	644	917292008	12	2
97051749	435	968977308	9	1	970545708	644	917292008	13	10
97051989	365	917259908	38	1	97055159	276	919007708	200	1
97052119	393	966497908	8	1	97055361	494	96048826	8	1
97052637	121	919644008	9	4	97055971	435	968977308	8	1
97052638	499	918731908	2	1	97056389	545	96035117	6	1
97053069	158	918731108	22	1	97056391	545	96035117	7	1
97053103	275	919007708	40	1	97056998	540	96045351	341	5
97053104	275	919007708	41	1	97056998	595	969426308	304	1
97053174	719	968811608	6	1	97057024	499	918731908	4	1
97053346	439	969015908	19	1	970574508	648	917292108	11	1
97053350	439	969015908	13	1	97057512	574	918628408	20	1
970535808	644	917292008	9	1	97058382	429	96036790	11	2
970535808	648	917292108	9	1	97058386	435	968977308	10	1
970535808	652	917292208	9	1	97058387	435	968977308	11	1
970535808	656	917292308	9	1	97058414	429	96036790	(1)	1
970535808	661	917292408	24	1	970591108	158	918731108	2	2
970536108	648	917292108	12	2	97059337	275	919007708	19	1
970536108	652	917292208	12	2	97059376	280	96034631	3	1
970536108	656	917292308	12	2	97059489	491	919372008	4	3
970536108	661	917292408	31	2	970598608	619	919617008	5	1
97053616	276	919007708	202	1	97060662	483	918484108	4	1
970536208	648	917292108	13	10	97060689	150	917862808	100	1
970536208	652	917292208	13	10	97060781	464	96020359	60	1
970536208	656	917292308	13	10	97060786	464	96020359	55	1
970536208	661	917292408	35	10	97061080	275	919007708	36	1
97053626	30	917511508	23	4	970611208	336	917259408	3	72
970536608	644	917292008	15	2	97061150	275	919007708	5	1
970536608	648	917292108	15	2	97061151	275	919007708	6	1
970536608	652	917292208	15	2	97061320	275	919007708	9	1
970536608	656	917292308	15	2	97061385	17	919617108	39	4
970536608	661	917292408	32	2	97061426	17	919617108	41	4
970537008	644	917292008	25	2	97064219	483	918484108	80	1
970537008	648	917292108	25	2	97064220	483	918484108	81	1
970537008	652	917292208	25	2	97064857	314	96034515	(1)	1
970537008	656	917292308	25	2	97065229	275	919007708	42	1
970537008	661	917292408	40	2	97065544	276	919007708	207	1
970537108	644	917292008	26	2	970658608	269	918731408	250	1
970537108	648	917292108	26	2	97066482	71	919254308	87	1

Item	Page	Assembly	Pos.	Quantity	Item	Page	Assembly	Pos.	Quantity
97066483	101	919254408	87	1	97100242	70	919254308	41	1
97066819	275	919007708	101	1	97100242	100	919254408	41	1
97067623	629	968068308	9	2	97100243	70	919254308	42	1
97067623	722	917531708	4	2	97100243	100	919254408	42	1
97067626	722	917531708	5	2	97100419	17	919617108	3	2
97067627	629	968068308	8	2	97100598	320	96023117	1	1
970689108	158	918731108	6	8	97100731	320	96023117	4	1
970689208	158	918731108	7	4	97101894	275	919007708	11	1
97070277	705	917268408	3	1	97103093	21	96034894	2	1
97070277	705	917268408	(1)	1	97103093	24	96034977	2	1
97070985	71	919254308	102	4	97103682	71	919254308	100	2
97070985	101	919254408	103	4	97103682	101	919254408	100	2
97071962	375	916170808	15	1	97103683	71	919254308	101	2
97071963	375	916170808	16	1	97103683	101	919254408	101	2
97072035	390	916162508	26	4	97104844	71	919254308	111	1
97072923	275	919007708	(1)	1	97104844	101	919254408	112	1
97072959	275	919007708	32	1	97104898	71	919254308	112	12
97073453	71	919254308	103	2	97104898	101	919254408	113	12
97073453	101	919254408	104	2	971050008	705	917268408	7	1
970762808	545	96035117	9	1	97105652	373	96025887	3	1
970762808	589	967784808	(3)	1	971060108	644	917292008	8	3
97077297	275	919007708	33	1	971060108	648	917292108	8	2
97077309	275	919007708	(2)	3	971060108	652	917292208	8	3
97077348	478	969763408	(4)	1	971060108	656	917292308	8	3
970780908	323	917626608	3	2	971060108	661	917292408	20	3
97081505	369	967986308	8	2	971063208	639	917291908	37	2
97081862	373	96025887	6	2	971063208	644	917292008	41	2
970821508	158	918731108	9	4	971063208	648	917292108	41	2
97082749	739	918462408	1	1	971063208	652	917292208	41	2
97083604	499	918731908	431	1	971063208	656	917292308	41	2
970837708	672	966134608	32	2	971067708	705	917268408	10	1
97083880	525	926891108	1	1	971067708	708	967321308	1	1
97084641	483	918484108	1	1	971071608	639	917291908	43	4
97084642	483	918484108	7	1	971071608	645	917292008	61	4
97087964	499	918731908	3	1	971071608	648	917292108	61	4
97088496	405	917304708	56	1	971071608	652	917292208	61	4
97089358	373	96025887	4	1	971071608	656	917292308	61	4
970904808	134	919087608	8	8	971095808	705	917268408	9	2
97091350	314	96034515	8	1	97114100	338	919369308	9	48
97092913	71	919254308	92	1	97116895	338	919369308	8	6
97093425	87	96034962	16	1	97118133	280	96034631	100	1
97093426	87	96034962	15	1	97118534	328	96034872	10	1
97093426	104	96034980	15	1	97118611	24	96034977	3	1
97093427	87	96034962	1	1	97118618	87	96034962	30	1
97093427	104	96034980	1	1	97118618	104	96034980	30	1
97093428	87	96034962	4	1	97118621	104	96034980	16	1
97093428	104	96034980	4	1	97119732	545	96035117	10	1
97093429	21	96034894	3	1	97121228	497	96039740	1	1
97093430	21	96034894	1	1	97124033	316	96039022	1	1
97093430	24	96034977	1	1	97124562	545	96035117	1	1
97093433	87	96034962	6	1	97124963	491	919372008	101	1
97093433	104	96034980	6	1	971252308	625	967936908	8	2
97093827	494	96048826	5	4	97126204	158	918731108	23	1
97094056	101	919254408	92	1	97126205	158	918731108	24	1
97094637	393	966497908	20	10	97126865	143	919328608	21	1
97094940	150	917862808	107	1	97127026	318	918955408	10	1
97096918	417	918810308	2	2	97131530	150	917862808	110	1
97097713	87	96034962	2	1	97132168	137	919499408	81	2
97097713	104	96034980	2	1	97132169	137	919499408	82	2
97098446	142	96045206	1	2	97132207	142	96045206	2	2

Item	Page	Assembly	Pos.	Quantity	Item	Page	Assembly	Pos.	Quantity
97133336	497	96039740	3	1	972898208	652	917292208	42	28
97133544	87	96034962	3	2	972898208	656	917292308	42	25
97133544	104	96034980	3	2	972898308	644	917292008	43	2
97133617	24	96034977	50	1	972898408	644	917292008	44	2
97133618	21	96034894	50	1	972898508	644	917292008	45	1
97135430	150	917862808	17	1	972898608	639	917291908	49	2
97135431	150	917862808	19	1	972898608	644	917292008	53	2
97138958	383	917305408	21	1	972898708	639	917291908	50	2
971539808	740	919127808	1	1	972898708	644	917292008	54	2
971565208	380	917304508	9	1	972898808	639	917291908	42	2
971581108	538	96045351	160	1	972898808	644	917292008	56	2
971634008	672	966134608	33	1	972898808	648	917292108	56	2
971636608	421	962282208	2	1	972898808	652	917292208	56	2
971636608	423	962282308	2	1	972898808	656	917292308	56	2
971693508	150	917862808	76	1	972908008	644	917292008	7	1
971749908	150	917862808	2	2	972908008	648	917292108	7	1
971753708	639	917291908	53	4	972908008	652	917292208	7	1
971753708	644	917292008	34	4	972908008	656	917292308	7	1
971753708	648	917292108	34	4	972908008	662	917292408	65	1
971753708	652	917292208	34	4	972908108	644	917292008	14	2
971753708	656	917292308	34	4	972908108	648	917292108	14	2
971774408	539	96045351	194	1	972908108	652	917292208	14	2
971805708	417	918810308	19	4	972908108	656	917292308	14	2
971973608	421	962282208	3	1	972908108	661	917292408	48	2
971973608	423	962282308	3	1	972908208	644	917292008	30	2
971974108	417	918810308	21	4	972908208	648	917292108	30	4
971974208	417	918810308	22	2	972908208	652	917292208	30	4
971995508	640	917291908	79	2	972908208	656	917292308	30	4
971995508	644	917292008	55	2	972908208	661	917292408	34	4
971995508	648	917292108	55	2	972908308	644	917292008	32	2
971995508	652	917292208	55	2	972908408	645	917292008	63	2
971995508	656	917292308	55	2	972908408	648	917292108	32	4
972133308	639	917291908	10	1	972908408	652	917292208	32	2
972140108	350	917259608	5	1	972908408	656	917292308	32	2
972144708	639	917291908	8	1	972908408	661	917292408	37	2
972203808	619	919617008	9	3	972934408	699	967785008	(1)	1
972261508	672	966134608	31	2	972940008	522	969256608	13	2
972272908	335	969050308	4	1	972997008	672	966134608	1	1
972353808	280	96034631	4	2	973057708	652	917292208	39	1
972357608	352	917259708	24	2	973077908	639	917291908	11	3
972373708	653	917292208	96	2	973153908	662	917292408	68	2
972373708	657	917292308	96	2	973154008	645	917292008	65	2
972373708	662	917292408	81	2	973154008	649	917292108	65	2
972373808	645	917292008	97	2	973154008	653	917292208	65	2
972373808	649	917292108	97	2	973154008	657	917292308	65	2
972373808	653	917292208	97	2	973154008	662	917292408	67	2
972373808	657	917292308	97	2	973178808	471	918956108	11	6
972373808	662	917292408	82	2	973188508	685	968708708	5	1
972392108	645	917292008	96	1	973245708	648	917292108	39	1
972392108	649	917292108	96	1	973245808	648	917292108	43	2
972426708	644	917292008	49	4	973245908	648	917292108	44	2
972426708	648	917292108	49	4	973246008	648	917292108	45	1
972426708	652	917292208	49	4	973246808	644	917292008	20	4
972426708	656	917292308	49	4	973246808	648	917292108	20	4
972426708	661	917292408	49	4	973246808	652	917292208	20	4
972698608	275	919007708	29	4	973246808	656	917292308	20	4
972898108	644	917292008	39	1	973246808	661	917292408	43	4
972898208	639	917291908	45	33	973246908	644	917292008	21	4
972898208	644	917292008	42	31	973246908	648	917292108	21	4
972898208	648	917292108	42	29	973246908	652	917292208	21	4

Item	Page	Assembly	Pos.	Quantity	Item	Page	Assembly	Pos.	Quantity
973246908	656	917292308	21	4	975218608	377	916162808	2	6
973246908	661	917292408	44	4	975221808	731	917267508	49	1
973253208	652	917292208	43	2	975231708	63	918925508	6	1
973253308	652	917292208	44	2	975302308	640	917291908	81	1
973253408	652	917292208	45	1	975384508	377	916162808	3	6
973253908	652	917292208	11	1	975418208	545	96035117	8	1
973254708	653	917292208	67	2	975418208	589	967784808	(4)	1
973254708	657	917292308	67	2	975427508	478	969763408	(3)	1
973254708	662	917292408	71	2	975529708	429	96036790	29	2
973258608	656	917292308	39	1	975614108	275	919007708	20	1
973258708	656	917292308	43	2	975683808	372	916177508	(4)	1
973258808	656	917292308	44	2	975685808	372	916177508	(3)	1
973258908	656	917292308	45	1	975842108	434	964093408	1	1
973259708	656	917292308	11	1	975850708	383	917305408	7	1
973292708	661	917292408	26	1	976094108	375	916170808	5	1
973336908	639	917291908	31	2	976094308	375	916170808	7	1
973351308	640	917291908	80	2	976167908	449	96036957	16	1
973357208	639	917291908	2	2	976193208	375	916170808	8	1
973357708	639	917291908	46	2	976388708	276	919007708	204	1
973357808	639	917291908	47	2	976490008	277	919007708	401	1
973357908	639	917291908	54	1	976536208	526	968063108	5	1
973358008	639	917291908	55	1	976540908	529	969061708	4	1
973411808	158	918731108	1	2	976673908	365	917259908	27	4
973485408	17	919617108	44	4	976873708	609	968994408	3	2
973519308	276	919007708	253	1	976873708	612	968993508	6	2
973567608	629	968068308	10	2	976917008	682	966291008	2	1
973618208	280	96034631	8	2	976955508	574	918628408	3	1
973626408	705	917268408	25	3	977430408	417	918810308	10	2
973717208	275	919007708	27	1	977444008	417	918810308	15	1
973717308	275	919007708	25	1	977444108	417	918810308	16	1
973731008	539	96045351	323	2	977444308	417	918810308	17	1
973740408	662	917292408	73	1	977444408	417	918810308	18	1
973763408	672	966134608	3	1	977667008	685	968708708	4	1
973767608	431	96017704	102	1	978172508	449	96036957	13	1
973774708	639	917291908	34	1	978361008	283	968026308	24	1
973774708	644	917292008	58	1	978361308	283	968026308	23	1
973774708	648	917292108	58	1	978361608	283	968026308	30	1
973774708	652	917292208	58	1	978554708	283	968026308	22	1
973774708	656	917292308	58	1	978606708	526	968063108	1	1
973998708	459	966707708	3	1	978608608	522	969256608	10	1
974150408	150	917862808	84	2	978610208	522	969256608	(1)	1
974150508	150	917862808	85	2	978673908	150	917862808	11	2
974150608	150	917862808	86	2	978674008	150	917862808	12	8
974150708	150	917862808	87	2	978674108	150	917862808	14	15
974272808	640	917291908	93	2	978674308	150	917862808	28	2
974276208	640	917291908	90	1	978674408	150	917862808	29	5
974656608	441	969016008	7	1	978674508	150	917862808	31	1
974657908	439	969015908	11	1	978674608	150	917862808	32	1
974680008	373	96025887	2	2	978674808	150	917862808	63	12
974742308	433	968923508	4	1	978674808	623	917260608	(3)	2
974792608	429	96036790	(1)	1	978674908	150	917862808	64	1
974792608	429	96036790	(1)	1	978675008	150	917862808	66	8
974911108	731	917267508	48	1	978787708	34	96045225	16	4
974922808	372	916177508	15	4	978787708	70	919254308	38	6
974925508	619	919617008	4	1	978787708	100	919254408	38	6
974925608	619	919617008	10	4	978787708	127	917257108	25	3
975040308	370	96015921	4	1	978787708	137	919499408	69	12
975113508	682	966291008	1	1	978787708	158	918731108	15	12
975208408	370	96015921	6	1	978787708	429	96036790	30	5
975218508	377	916162808	1	2	978787708	462	918759808	53	4

Item	Page	Assembly	Pos.	Quantity	Item	Page	Assembly	Pos.	Quantity
978787708	478	969763408	(6)	6					
978787708	483	918484108	45	2					
978787708	497	96039740	5	2					
978787708	608	968210808	2	3					
978842708	526	968063108	3	2					
978844908	474	967928508	15	1					
978867108	150	917862808	33	2					
979022508	394	965784408	6	1					
979022608	394	965784408	7	2					
979132008	662	917292408	84	1					
979132008	708	967321308	5	1					
979142208	394	965784408	8	4					
979204408	41	966204108	5	1					
979206708	383	917305408	8	1					
979206908	383	917305408	20	1					
979207008	370	96015921	3	1					
979240608	394	965784408	1	1					
979243408	394	965784408	2	1					
979243508	394	965784408	3	1					
979243608	394	965784408	4	2					
979294808	522	969256608	12	2					
979294908	526	968063108	2	1					
979295008	529	969061708	(1)	1					
979320608	424	916049908	1	1					
979323301	585	90200103	30	1					
979374708	277	919007708	403	1					
979383308	150	917862808	62	1					
979443608	30	917511508	45	4					
979489508	424	916049908	3	1					
979620608	494	96048826	7	4					
979672708	158	918731108	18	1					
979717908	433	968923508	2	2					
979718908	429	96036790	22	2					
979724708	429	96036790	23	1					
979896308	37	966167808	2	1					
9885529	260	10125687	(5)	1					
9885529	265	10148366	6502	1					
9886591	200	10129474	8	1					
9886756	200	10129474	9	1					
9888259	168	10154379	12	6					
9888448	262	9077386	(2)	2					
9889290	227	9072906	(2)	2					
997040101	731	917267508	26	1					

Description	Item	Pos.	Quantity	Page	Assembly	Description
12-SIDED SCREW M10X25 X5N	12475399	4	1	238	10140729	EXHAUST TC MOUNTING
2nd NECK PULLEY INSTALLAT	910040808	363	1	11		LIEBHERR LTR 1220
A COLUMN CLADDING LEFT 1	97002207	18	1	383	917305408	INTERNAL PANELLING INSTA
A COLUMN CLADDING RIGHT 1	97002209	19	1	383	917305408	INTERNAL PANELLING INSTA
A-HEADL.SEARCHLIGHT PIVO	918124908	321	1	11		LIEBHERR LTR 1220
A-HEADLIGHT SLEWING PLA	918989008	438	1	12		LIEBHERR LTR 1220
ABSORBER	10650488	66	1	419	10877138	OPERATOR SEAT
ACCESSORIES	928620108	2	1	143	919328608	TOOLS AND ACCESSORIES
ACCESSORIES AIR COMPRES	10145278	334	1	163	12856862	DIESEL ENGINE
ACTIVATOR 1000ML	870004108	23	1	390	916162508	WINDOW ASSEMBLY
ACTIVATOR 250ML DOSE	10815283	14	1	390	916162508	WINDOW ASSEMBLY
ACTUATION SPIKE GD-ZN SW	704253408	7	4	37	966167808	COVER COMPL.
ACTUATION SPIKE GD-ZN SW	704253408	4	5	79	967972208	COVER PRE-ASSY.
ACTUATION SPIKE GD-ZN SW	704253408	4	2	80	967972308	COVER PRE-ASSY.
ACTUATION SPIKE GD-ZN SW	704253408	4	2	81	967972408	COVER PRE-ASSY.
ACTUATION SPIKE GD-ZN SW	704253408	4	2	82	968270108	COVER PRE-ASSY.
ACTUATION SPIKE GD-ZN SW	704253408	4	2	83	968274208	COVER PRE-ASSY.
ACTUATION SPIKE GD-ZN SW	704253408	4	5	102	968055808	COVER PRE-ASSY.
ACTUATION SPIKE GD-ZN SW	704253408	14	1	320	96023117	BATTERY BOX, PRE-ASSEMB
ACTUATOR WELDED	967996108	3	1	134	919087608	ROTARY FEED THROUGH
ADAPTER RING	11007300	2	1	47	11346779	SLIP RING TRANSMITTER
ADAPTOR 18-POL SPF	660024508	29	1	518	919503008	SWITCHBOX MOUNTING PART
ADAPTOR 19.0X17 S235JRC+C	97051324	66	1	450	96036957	ELECTRIC ADD-ON PARTS CA
ADAPTOR 32X185X45 PAGF30	979243408	2	1	394	965784408	ROOF WINDOW PRE-ASS.
ADAPTOR M16-M10 ST.60-2K	972698608	29	4	275	919007708	DRIVE ASSEMBLY, PRE-ASSE
ADAPTOR RI11/2-EDX1 A3P	475502408	769	2	542	96045351	HYDRAULICS UPPER CARRI
ADAPTOR RI11/4-EDX1/2 A3P	475501108	662	2	52	96035801	HYDRAULIC EQUIPM.CENTER
ADAPTOR RI11/4-EDX1/2 A3P	475501108	623	1	90	96035796	HYDR.TRAVEL DRIVE
ADAPTOR RI11/4-EDX1/2 A3P	475501108	623	1	107	96035792	HYDR.TRAVEL DRIVE
ADD HEATING SUPERSTRUCT	918759808	145	1	10		LIEBHERR LTR 1220
ADD-ON PARTS BTT	917618608	150	1	10		LIEBHERR LTR 1220
ADD-ON PARTS CAMERA DB-H	968210808	1	1	606	918992008	CAMERA MONITOR OW
ADD-ON PARTS CAMERA DB	968267108	2	1	606	918992008	CAMERA MONITOR OW
ADD-ON PARTS CYLINDER	966134608	2	1	666	918807308	MECHANICAL EXTENSION SYS
ADD-ON PARTS RAUPENTRAE	968046208	50	2	111	917691008	FALL PROTECTION
ADD-ON PARTS TELE	917551608	286	1	11		LIEBHERR LTR 1220
ADD-ON PARTS WORK FLOOD	96037229	10	1	604	918989008	A-HEADLIGHT SLEWING PLA
ADDITIONAL BALLAST	917404008	148	1	10		LIEBHERR LTR 1220
ADDITIONAL KIT	965356108	30	1	321	96023914	ELECTRIC FOR BATTERY BOX
ADDITIONAL PART LEVEL IV	919371908	164	1	10		LIEBHERR LTR 1220
ADDITIONAL PARTS CLADDIN	96039740	1	1	496	919371908	ADDITIONAL PART LEVEL IV
ADDITIONAL PARTS DREHBU	917610208	141	1	10		LIEBHERR LTR 1220
ADDITIONAL SIGNAGE CALIF	919553608	78	1	9		LIEBHERR LTR 1220
ADDNL.HEATING, PRE-ASSE	96020359	1	1	462	918759808	ADD HEATING SUPERSTRUCT
ADDNL.HYDR. FOLDING JIB	917262508	229	1	11		LIEBHERR LTR 1220
ADDNL.HYDR. FOLDING JIB	917265308	302	1	11		LIEBHERR LTR 1220
ADDNL.HYDR. FOLDING JIB	967785008	4	1	697	917265308	ADDNL.HYDR. FOLDING JIB
ADDNL.HYDR. FOLDING JIB	967785408	4	1	691	917262508	ADDNL.HYDR. FOLDING JIB
ADDNL.HYDR. FOLDING JIB D	917966708	364	1	11		LIEBHERR LTR 1220
ADHESIVE 600ML FC-BEUTEL	811203308	15	1	390	916162508	WINDOW ASSEMBLY
ADHESIVE 600ML FC-BEUTEL	811203308	48	1	405	917304708	SLIDING DOOR INSTALLATION
ADHESIVE CLEANER 250ML	811205108	47	1	405	917304708	SLIDING DOOR INSTALLATION
ADHESIVE FOIL OUTSIDE HA	97088496	56	1	405	917304708	SLIDING DOOR INSTALLATION
ADHESIVE INSULATING STRIP	802102008	150	14	431	96017704	RADIATOR HOOD CPL.
ADHESIVE INSULATING STRIP	802102008	50	33.22	435	968977308	SOUND PROOFING/SOUND I
ADJUSTING DISK 8X74X74 S35	97028396	8	1	365	917259908	CRANE DRIVER CAB ADDITIO
ADJUSTING SCREW M10X1	10012225	5	2	194	11448005	ROCKER ARM BRACKET PRE
ADJUSTMENT	10326925	2	1	294	11210795	VARIABLE PUMP
ADJUSTMENT	10472208	4	1	295	11210798	VARIABLE PUMP
ADJUSTMENT	11690585	2	1	286	11182708	VARIABLE PUMP

Description	Item	Pos.	Quantity	Page	Assembly	Description
ADJUSTMENT	11690585	2	1	289	10871017	VARIABLE PUMP
AERATION FILTER	510667308	6	2	335	969050308	OIL TANK PRE-ASS.
AGGREGATE SUPPORT PRE-A	12835708	1	1	170	10147687	POWER UNIT SUPPORT ATT
AGITATOR PADDLE	10014712	27	1	504	10327065	ELECTRIC PUMP
AGITATOR PADDLE	10664141	24	1	128	11347526	ELECTRIC PUMP
AIR COMPRESSOR	10650490	85	1	419	10877138	OPERATOR SEAT
AIR COMPRESSOR 293CM3	5700161	1	1	224	9080294	AIR COMPRESSOR PRE-ASSY
AIR COMPRESSOR PRE-ASSY.	9080294	1	1	223	10127566	INSTALLATION BRAKE COMPR
AIR COND. COMPRESSOR A	12418347	340	1	163	12856862	DIESEL ENGINE
AIR COND. UNIT SUPERSTRU	918628408	301	1	11		LIEBHERR LTR 1220
AIR CONDITIONING COMPRES	10148036	2	1	230	12418347	AIR COND. COMPRESSOR A
AIR CONDITIONING UNIT	11083498	1	1	410	917676208	HEATING CRANE DRIVER'S CA
AIR DRYER	502657308	55	1	478	969763408	PIPEWORK AIR INSTALLATIO
AIR DUCT	916168308	3	1	380	917304508	CRANE OPERATOR CABIN P
AIR DUCT 128X523X170 PP SP	97000437	2	1	396	916168308	AIR DUCT
AIR DUCT 152X627X339 PP SP	97000438	3	1	396	916168308	AIR DUCT
AIR DUCT 81X233X419 PP SPF	97000436	1	1	396	916168308	AIR DUCT
AIR FILTER 18M³/MIN PP	10871700	100	1	499	918731908	AIR FILTER UNIT
AIR FILTER UNIT	918731908	165	1	10		LIEBHERR LTR 1220
AIR GUIDE CHANNEL 39X75X	97004696	3	1	385	966282308	PANELLING,LEFT
AIR GUIDE L 107X394X947 PP	97000440	4	1	396	916168308	AIR DUCT
AIR GUIDE L 113X705X1091 AB	97001699	2	1	385	966282308	PANELLING,LEFT
AIR GUIDE L 144X143X275 PV	97001248	6	1	396	916168308	AIR DUCT
AIR GUIDE R 100X714X953 AB	97001700	2	1	386	966282408	PANELLING
AIR GUIDE R 109X391X941 PP	97000442	5	1	396	916168308	AIR DUCT
AIR GUIDE R 143X150X273 PV	97001249	7	1	396	916168308	AIR DUCT
AIR GUIDING HOSE 100/130 X	97050548	251	1	499	918731908	AIR FILTER UNIT
AIR INTAKE ASSEMBLY R-MOT	10147364	224	1	162	12856862	DIESEL ENGINE
AIR INTAKE PIPE ASS. R-MOT	10147365	220	1	162	12856862	DIESEL ENGINE
AIR SUCTION PIPE R-MOTOR	11415774	1	1	217	10147365	AIR INTAKE PIPE ASS.
AIR TANK DIN 74281 4,5L 15,5	502987108	166	1	478	969763408	PIPEWORK AIR INSTALLATIO
AIR TANK EN 286-2 20L 15.5B	502657708	167	1	478	969763408	PIPEWORK AIR INSTALLATIO
ALLEN KEY GR.3	885166108	29	1	144	928569808	MAIN TOOLS
ANGLE	571687808	18	1	670	571928508	CYLINDER HEAD CPL.
ANGLE 4X150X118 S315MC FE	97031752	4	4	623	917260608	COUNTERWEIGHT WITH CLAM
ANGLE FE//ZNNI8//CN//T0	968036508	1	1	26	968036408	LIMIT SWITCH, PRE-ASSEMB
ANGLE SCREW DRIVER TX 40	10043002	41	1	144	928569808	MAIN TOOLS
ANGLE SCREW DRIVER TX30	10471363	40	1	144	928569808	MAIN TOOLS
ANGLE TRANSMITTER 360° L	10802057	10	1	673	966473108	ENCODER BASE SECTION
ANGLE TRANSMITTER 360° L	10802057	1	1	676	966200208	ENCODER HEAD PIECE
ANTENNA	10450273	4	1	41	966204108	ANTENNA CPL.
ANTENNA	10878172	1	1	633	12257818	CAR RADIO
ANTENNA AKTIV	12102817	11	1	449	96036957	ELECTRIC ADD-ON PARTS CA
ANTENNA CABLE 1,27-2M SEI	10876819	60	1	450	96036957	ELECTRIC ADD-ON PARTS CA
ANTENNA CABLE 1-4,850M	11114971	59	1	450	96036957	ELECTRIC ADD-ON PARTS CA
ANTENNA CPL.	966204108	4	2	36	96045226	SWITCH BOX COMPL.
ANTENNA ROD	10815004	1	1	42	10450273	ANTENNA
ANTI-SLIP SURFACE 1.6X25X	97037477	67	2	384	917305408	INTERNAL PANELLING INSTA
APPLIANCE SOCKET 3-POL	605007908	505	3	44	96045228	WIRING HARNESS
APPLIANCE SOCKET 3-POL	605007908	502	34	510	96045385	WIRING HARNESS
APPLIANCE SOCKET 3-POL	605007908	502	13	513	96037136	WIRING HARNESS
ARM REST 310ERGO	774119708	1	1	421	962282208	ARM REST LEFT
ARM REST 310ERGO	774119808	1	1	423	962282308	ARM REST RIGHT
ARM REST LEFT	962282208	1	1	420	96032222	REWORK ARMREST LEFT
ARM REST RIGHT	962282308	1	1	422	96032223	REWORK ARMREST RIGHT
ARM REST SUPPORT	971636608	2	1	421	962282208	ARM REST LEFT
ARM REST SUPPORT	971636608	2	1	423	962282308	ARM REST RIGHT
ARM WELDED RAL 7016 LACKI	967985808	1	1	365	917259908	CRANE DRIVER CAB ADDITIO
ASH TRAY KUNSTSTOFF	10291997	33	1	383	917305408	INTERNAL PANELLING INSTA
ASSEMBLY DEVICE LMZ-23T	968068308	1	1	628	919028808	DISPATCH ASSY.MECH.PART

Description	Item	Pos.	Quantity	Page	Assembly	Description
ASSEMBLY DEVICE SCHWK.	968010508	1	1	629	968068308	ASSEMBLY DEVICE
ASSEMBLY GEL 1KG DOSE	12694669	160	1	186	10153583	CRANKSHAFT SEALING
ASSEMBLY PARTS F.SLEWIN	918731108	103	1	9		LIEBHERR LTR 1220
ASSEMBLY PLATE PRE-ASS.	965461108	2	1	522	969256608	BASE ASSEMBLY
ASSEMBLY TOOL BOX	790045408	1	1	144	928569808	MAIN TOOLS
ASSORTMENT BOX FLACHSI	10877437	8	1	145	928620108	ACCESSORIES
ATTACHABLE SLEEVE HOUSIN	604501708	504	2	43	96045227	WIRING HARNESS
ATTACHABLE SLEEVE HOUSIN	602209708	516	1	43	96045227	WIRING HARNESS
ATTACHABLE SLEEVE HOUSIN	602209708	508	4	446	96036955	WIRING HARNESS
ATTACHABLE SLEEVE HOUSIN	602209708	506	2	448	96036956	WIRING HARNESS
ATTACHABLE SLEEVE HOUSIN	602209708	508	1	513	96037136	WIRING HARNESS
ATTACHABLE SLEEVE HOUSIN	602209708	501	5	520	96045387	CABLES, BASIC CONSTRUCTI
ATTACHABLE SLEEVE HOUSIN	602208608	516	1	513	96037136	WIRING HARNESS
ATTACHABLE SLEEVE HOUSIN	602319808	521	1	446	96036955	WIRING HARNESS
AUX. HYDR. FOLDING JIB SP	969426308	4	1	593	917966708	ADDNL.HYDR. FOLDING JIB
AUXILIARY DRIVE PRE-ASS.	10125688	1	1	260	10125687	POWER TAKE-OFF ADD-ON
AUXILIARY DRIVE PRE-ASS.	9077386	1	1	261	10144036	POWER TAKE-OFF ADD-ON
AUXILIARY HOIST.ROPE W.AC	917267208	332	1	11		LIEBHERR LTR 1220
AUXILIARY HOISTING GEAR 2	917267108	330	1	11		LIEBHERR LTR 1220
AUXILIARY HOISTING GEAR 2	967969608	3	1	575	917267108	AUXILIARY HOISTING GEAR 2
AUXILIARY HOISTING GEAR 2	967969908	1	1	577	967969608	AUXILIARY HOISTING GEAR 2
AUXILIARY REEVING CABLE, C	915037208	440	1	12		LIEBHERR LTR 1220
AXIAL FAN 24V	10222682	1	1	456	963398008	PREMOUNT.AXIAL FLOW FAN
AXLE 30.0X95 S355J2C+C FE//	97011246	18	1	368	919010208	CRANE OPERATOR CABIN P
AXLE HOLDER 10X109X30 S35	973178808	11	6	471	918956108	HYDRAULIC BALLASTING
AXLE HOLDER 10X140X40 S35	942164608	8	2	17	919617108	CRAWLER TRACK TRAVEL G
AXLE HOLDER 12X222X222 S	970591108	2	2	158	918731108	ASSEMBLY PARTS F.SLEWING
AXLE HOLDER 12X270X220 S	974925508	4	1	619	919617008	LUFFING RAM W. PIVOT
AXLE HOLDER 15X260X217 S	970598608	5	1	619	919617008	LUFFING RAM W. PIVOT
AXLE HOLDER 8X30X60 S235J	931185608	15	3	365	917259908	CRANE DRIVER CAB ADDITIO
AXLE HOLDER LN 4/1 S235JR+	997040101	26	1	731	917267508	TRANSPORT MOUNTING
AXLE RD150X120 S355J2H FE//	946509308	6	1	705	917268408	BOOM NOSE
AXLE WELDED	923661808	5	1	661	917292408	TELESCOPIC SECT.5 PRE-AS
AXLE WELDED	923672408	6	1	661	917292408	TELESCOPIC SECT.5 PRE-AS
BACK PART	10663466	1	1	419	10877138	OPERATOR SEAT
BAG	11320720	(1)	1	153	916959808	PERSONAL PROTECTION EQ
BALANCER ASSEMBLY	10120186	90	1	161	12856862	DIESEL ENGINE
BALANCER SHAFT PRE-ASS.	10152441	1	2	196	10120186	BALANCER ASSEMBLY
BALL DIN 5401 3	610706308	6	1	696	511479408	LOAD HOLDING VALVE
BALL DIN 5401 3,5	511036508	1	1	58	11643183	CONTROL BLOCK
BALL DIN 5401 3,5	511036508	1	1	61	11643184	CONTROL BLOCK
BALL DIN 5401 7	570862108	6	1	58	11643183	CONTROL BLOCK
BALL DIN 5401 7	570862108	6	1	61	11643184	CONTROL BLOCK
BALL DIN 5401 7,5	518512408	9	2	58	11643183	CONTROL BLOCK
BALL DIN 5401 7,5	518512408	9	2	61	11643184	CONTROL BLOCK
BALL ELEMENT PA6G SPF	975040308	4	1	370	96015921	OPERATING ELEMENT INSTAL
BALL VALVE BKH12-L-10 A3C	510697608	178	1	539	96045351	HYDRAULICS UPPER CARRI
BALL VALVE BKHU DN 10	571723608	5	1	552	10332882	CONTROL BLOCK
BALL VALVE COMBINATION D	510697708	179	1	539	96045351	HYDRAULICS UPPER CARRI
BALL VALVE DN20-G 3/4	10044661	101	1	327	96034868	PREMOUNTED FUEL FILTER
BALLAST DREHBUEHNE 4X10	917404508	147	1	10		LIEBHERR LTR 1220
BALLAST EXTENSION RAM 24	10877810	1	2	471	918956108	HYDRAULIC BALLASTING
BALLAST MONITORING	919499508	23	1	9		LIEBHERR LTR 1220
BALLAST MONITORING ENCO	918802108	195	2	11		LIEBHERR LTR 1220
BALLAST TRAVERSE 70T	917531708	304	1	11		LIEBHERR LTR 1220
BASE 1X200X70 DC01 FE//ZNNI	949361408	18	1	731	917267508	TRANSPORT MOUNTING
BASE 2X200X70 DC01 FE//ZNNI	949362208	19	1	731	917267508	TRANSPORT MOUNTING
BASE 4X53X28 S315MC FE//ZN	97048341	21	1	475	967978908	INTERLOCKING
BASE ASSEMBLY	969256608	2	1	519	96045386	BASE ASSEMBLY CPL.
BASE ASSEMBLY CPL.	96045386	2	1	518	919503008	SWITCHBOX MOUNTING PART

Description	Item	Pos.	Quantity	Page	Assembly	Description
BASIC WIRING CONST.PRE-A	96045388	2	1	520	96045387	CABLES, BASIC CONSTRUCTI
BATTERY 1.5V 16.5AH	613200608	3	10	145	928620108	ACCESSORIES
BATTERY 12V 180AH	10664204	5	2	321	96023914	ELECTRIC FOR BATTERY BOX
BATTERY BOX CPL.	918955408	107	1	9		LIEBHERR LTR 1220
BATTERY BOX ST.CONST. SP	96023028	3	1	320	96023117	BATTERY BOX, PRE-ASSEMB
BATTERY BOX, PRE-ASSEMB	96023117	1	1	318	918955408	BATTERY BOX CPL.
BATTERY MAIN SWITCH	96023960	19	1	321	96023914	ELECTRIC FOR BATTERY BOX
BATTERY TERMINAL CLAMP 1	613206608	21	2	321	96023914	ELECTRIC FOR BATTERY BOX
BATTERY TERMINAL CLAMP 1	613206508	22	2	321	96023914	ELECTRIC FOR BATTERY BOX
BEARING 12X17X4,6	12209429	28	1	87	96034962	GUIDE LEFT
BEARING 12X17X4,6	12209429	28	1	104	96034980	GUIDE RIGHT
BEARING 6X129X209 S355MC	97032646	1	2	112	968038208	BEARING AHEAD LEFT SIDE
BEARING 6X129X209 S355MC	97032646	1	2	113	968038308	BEARING AHEAD RIGHT SIDE
BEARING AHEAD LEFT SIDE	968038208	10	6	111	917691008	FALL PROTECTION
BEARING AHEAD RIGHT SIDE	968038308	11	6	111	917691008	FALL PROTECTION
BEARING BLOCK 40x115x42	970365108	10	2	269	918731408	DRIVE ASSEMBLY CPL.
BEARING BUSH 60X65X28 GLY	9888259	12	6	168	10154379	CRANKCASE PRE-ASSY.
BEARING BUSH RD200X170 G	973357208	2	2	639	917291908	PIVOT SECTION, PRE-ASSEMB
BEARING COVER 31CrMoV9	9072908	3	1	227	9072906	INTERMEDIATE GEAR CPL.
BEARING COVER RING 33117	747258401	4	1	340	90008901	SLEWING GEAR DRIVE
BEARING COVER RING 6219 J	747272501	16	1	355	932916901	ROPE DRUM
BEARING COVER RING 6219 J	747272501	19	1	581	939294001	ROPE DRUM
BEARING FLANGE	11631893	6	1	286	11182708	VARIABLE PUMP
BEARING FLANGE	11631893	6	1	289	10871017	VARIABLE PUMP
BEARING FLANGE EN-GJS-40	939637901	15	1	355	932916901	ROPE DRUM
BEARING HOUSING, PRE-AS	9077384	2	1	262	9077386	AUXILIARY DRIVE PRE-ASS.
BEARING INSTALLATION	967986308	1	1	368	919010208	CRANE OPERATOR CABIN P
BEARING MOUNT	11100949	13	1	47	11346779	SLIP RING TRANSMITTER
BEARING PLATE 100X195X230	970536108	12	2	648	917292108	TELESCOPIC SECT.2 PRE-AS
BEARING PLATE 100X195X230	970536108	12	2	652	917292208	TELESCOPIC SECT.3 PRE-ASS
BEARING PLATE 100X195X230	970536108	12	2	656	917292308	TELESCOPIC SECT.IV PRE-A
BEARING PLATE 100X195X230	970536108	31	2	661	917292408	TELESCOPIC SECT.5 PRE-AS
BEARING PLATE 100X195X350	970545608	12	2	644	917292008	TELESCOPIC SECTION 1 PRE
BEARING RING	570109708	3	1	347	570109008	DRIVING GEAR
BEARING RING	927745301	15	1	357	939292201	PLANETARY GEARBOX
BEARING RING	927745301	15	1	583	939294201	PLANETARY GEARBOX
BEARING STUB SHAFT	11181885	9	1	47	11346779	SLIP RING TRANSMITTER
BEARING WELDED	968052308	4	4	116	968046208	ADD-ON PARTS
BEARING WIPERS UNIT 50X1	97052119	8	1	393	966497908	FRONT WINDOW CPL.
BELT CARRIER SYSTEM LSB-	11212257	1	1	469	917618608	ADD-ON PARTS
BELT PULLEY 31.5X8PKX215	10146185	1	1	187	10141974	CRANKSHAFT ADD-ON PARTS
BLANK COVER	11822051	33	1	449	96036957	ELECTRIC ADD-ON PARTS CA
BLANKING PLATE	511497514	170	1	538	96045351	HYDRAULICS UPPER CARRI
BLANKING PLUG	779012201	84	1	357	939292201	PLANETARY GEARBOX
BLANKING PLUG GPN 300 LD	779016201	88	1	340	90008901	SLEWING GEAR DRIVE
BLANKING PLUG GPN 360 PE-	11698481	5	1	208	12489819	COVERING CAPS - KIT
BLANKING PLUG GPN 360 PE-	11835061	6	2	208	12489819	COVERING CAPS - KIT
BLANKING PLUG ISO 8434-1 PL	477700408	678	2	541	96045351	HYDRAULICS UPPER CARRI
BLANKING PLUG ISO 8434-1 PL	477700508	659	2	541	96045351	HYDRAULICS UPPER CARRI
BLANKING PLUG PE-LD	7361205	10	10	380	917304508	CRANE OPERATOR CABIN P
BLANKING PLUG PE-LD	7361205	42	2	405	917304708	SLIDING DOOR INSTALLATION
BLANKING PLUG PE-LD	779016608	15	8	628	919028808	DISPATCH ASSY.MECH.PART
BLIND	11002446	27	1	383	917305408	INTERNAL PANELLING INSTA
BLIND	11002447	26	1	383	917305408	INTERNAL PANELLING INSTA
BLIND RIVET 4,0X10,5	704232308	75	12	522	969256608	BASE ASSEMBLY
BLIND RIVET 4,0X10,5	704232308	10	6	526	968063108	PRE-ASSEMBLY MOUNTING U
BLIND RIVET NUT M10 K=1,5-5	12100265	13	1	380	917304508	CRANE OPERATOR CABIN P
BLIND RIVET NUT M4 K=1,0-3,	413006208	13	4	368	919010208	CRANE OPERATOR CABIN P
BLIND RIVET NUT M4 K=1,0-3,	413006208	(3)	16	522	969256608	BASE ASSEMBLY
BLIND RIVET NUT M5 K=1,0-3,5	10042592	(2)	4	529	969061708	CARRIER PLATE, PRE-ASSE

Description	Item	Pos.	Quantity	Page	Assembly	Description
BLIND RIVET NUT M6 K=1,5-3,	10042593	11	19	380	917304508	CRANE OPERATOR CABIN P
BLIND RIVET NUT M6 K=1,5-3,	10042593	35	13	405	917304708	SLIDING DOOR INSTALLATION
BLIND RIVET NUT M8 K=1,8-5 4	12100289	20	3	328	96034872	RETAINER CPL.
BLIND RIVET NUT M8 K=1,8-5 4	12100289	12	9	380	917304508	CRANE OPERATOR CABIN P
BLOCKING BAR 23-26	12102104	10	1	620	10040024	POUCH SOCKET
BLUB HOLDER LEFT 4X163X3	97126204	23	1	158	918731108	ASSEMBLY PARTS F.SLEWING
BOOM NOSE	917268408	356	1	11		LIEBHERR LTR 1220
BOOM NOSE WELDED CONST	961940008	1	1	705	917268408	BOOM NOSE
BOW-TYPE CLAMP 132 X5CRNI	11963742	183	1	494	96048826	EXHAUST SYSTEM PRE-ASSE
BOX NUT AL6 A3P	477401308	14	22	127	917257108	CENTRALIZED LUBRICATION
BOX NUT AL8 CR6-FREI	477401408	4	1	316	96039022	CONNECTION PIECE
BOX NUT AL8 CR6-FREI	477401408	37	1	462	918759808	ADD HEATING SUPERSTRUCT
BOX NUT AL8 CR6-FREI	477401408	37	1	483	918484108	UREA PLANT
BOX NUT DIN 3870 AL10 A3P	477401508	33	1	483	918484108	UREA PLANT
BOX NUT DIN 3870 AL12 A3C	477401608	660	2	541	96045351	HYDRAULICS UPPER CARRI
BOX NUT DIN 3870 AL22 A3P	477402608	(3)	1	314	96034515	EXPANSION TANK PRE-ASS.
BOX NUT DIN 3870 AL22 A3P	477402608	849	1	543	96045351	HYDRAULICS UPPER CARRI
BOX NUT DIN 3870 AL28 A3P	477401708	795	2	542	96045351	HYDRAULICS UPPER CARRI
BOX NUT DIN 3870 AS10 A3P	477400308	679	2	541	96045351	HYDRAULICS UPPER CARRI
BOX NUT DIN 3870 AS16 A3P	477400608	700	1	541	96045351	HYDRAULICS UPPER CARRI
BOX NUT UEMLL08 Inox	11355720	10	1	486	10144093	REDUCTION AGENT INJECTO
BRACKET	11171276	(71)	1	419	10877138	OPERATOR SEAT
BRACKET 10 ST	10216529	21	1	574	918628408	AIR COND. UNIT SUPERSTRU
BRACKET LEFT	968073008	2	1	442	917260108	FALL PROTECTION
BRACKET LEFT SPF	967588308	3	1	417	918810308	CONTROL STAND
BRACKET RIGHT	968072808	1	1	442	917260108	FALL PROTECTION
BRACKET RIGHT FE//ZNNI8//C	96036998	4	1	318	918955408	BATTERY BOX CPL.
BRACKET RIGHT SPF	967588408	4	1	417	918810308	CONTROL STAND
BRACKET WELDED CONST.	923982608	1	1	735	923879808	CONSOLE PRE-ASS.
BRACKET WELDED CONST.	925042108	3	1	731	917267508	TRANSPORT MOUNTING
BRACKET WELDED CONST.	96000309	80	1	71	919254308	CRAWLER SUPPORT PREASS
BRACKET WELDED CONST.	96000309	80	1	101	919254408	CRAWLER SUPPORT PREASS
BRACKET WELDED CONST.	96000310	81	1	71	919254308	CRAWLER SUPPORT PREASS
BRACKET WELDED CONST.	96000310	81	1	101	919254408	CRAWLER SUPPORT PREASS
BRACKET WELDED CONST.	96000311	82	1	71	919254308	CRAWLER SUPPORT PREASS
BRACKET WELDED CONST.	96000311	82	1	101	919254408	CRAWLER SUPPORT PREASS
BRACKET WELDED CONST.	96000312	83	1	71	919254308	CRAWLER SUPPORT PREASS
BRACKET WELDED CONST.	96000312	83	1	101	919254408	CRAWLER SUPPORT PREASS
BRACKET WELDED CONST.	96036907	12	1	134	919087608	ROTARY FEED THROUGH
BRACKET WELDED CONST.	96049688	2	2	121	919644008	HYDRAULIC SUPPORT
BRACKET WELDED CONST.	96049689	3	2	121	919644008	HYDRAULIC SUPPORT
BRACKET WELDED CONST.	967996008	9	2	17	919617108	CRAWLER TRACK TRAVEL G
BRACKET WELDED CONST.	968011508	4	1	134	919087608	ROTARY FEED THROUGH
BRACKET WELDED CONST. FE	96021362	7	1	417	918810308	CONTROL STAND
BRACKET WELDED CONST. FE	962947308	4	1	672	966134608	ADD-ON PARTS CYLINDER
BRACKET WELDED CONST. FE	962947408	5	1	672	966134608	ADD-ON PARTS CYLINDER
BRACKET WELDED CONST. FE	968014908	6	4	121	919644008	HYDRAULIC SUPPORT
BRACKET WELDED CONST. FE	969168408	11	8	121	919644008	HYDRAULIC SUPPORT
BRACKET WELDED CONST. R	969101808	1	1	414	969085208	HEATING, PRE-ASSEMBLED
BRACKET WELDED CONST. R	968729008	1	1	721	968728808	CONSOLE PRE-ASS.
BRACKET WELDED CONST. R	964843708	12	2	417	918810308	CONTROL STAND
BRACKET,LEFT WELDED FE//	96021363	8	1	417	918810308	CONTROL STAND
BRACKET,LEFT WELDED FE//	96037000	5	1	318	918955408	BATTERY BOX CPL.
BRACKET,LEFT WELDED RAL	964843808	13	1	417	918810308	CONTROL STAND
BRACKET,RIGHT WELDED FE//	96021365	9	1	417	918810308	CONTROL STAND
BRACKET,RIGHT WELDED RAL	964843908	14	1	417	918810308	CONTROL STAND
BRAKE ACTUATING UNIT	502807501	(1)	1	357	939292201	PLANETARY GEARBOX
BRAKE MULTI-DISC SET	90025781	960	1	340	90008901	SLEWING GEAR DRIVE
BRAKE MULTI-DISC SET	939589501	(997)	1	357	939292201	PLANETARY GEARBOX
BRAKE PACKING SET	939589601	(998)	1	357	939292201	PLANETARY GEARBOX

Description	Item	Pos.	Quantity	Page	Assembly	Description
BRAKE SPRING SET	90025782	970	1	340	90008901	SLEWING GEAR DRIVE
BRAKE SPRING SET	939589701	(999)	1	357	939292201	PLANETARY GEARBOX
BTB PROGRAMMED	968252908	5	1	38	968054008	MOUNTING PLATE PRE-ASS.
BTB PROGRAMMED	968252908	6	2	518	919503008	SWITCHBOX MOUNTING PART
BTT PROGRAMMED BTTC	96033227	9	1	453	96022872	CONTROL PANEL ROOF
BUFFER 30X20 GUMMI 50SH	97025484	121	4	280	96034631	RADIATOR, PRE-ASSEMBLED
BUILT-IN SOCKET 2-POL	605203908	5	1	453	96022872	CONTROL PANEL ROOF
BUILT-IN SOCKET 2-POL	605203908	3	1	529	969061708	CARRIER PLATE, PRE-ASSE
BUILT-IN VALVE	10801534	7	1	550	10413106	CONTROL BLOCK
BUILT-IN VALVE	571415208	2	1	550	10413106	CONTROL BLOCK
BUILT-IN VALVE	571415208	11	1	550	10413106	CONTROL BLOCK
BURNER 24V	11826648	39	1	466	10876576	WATER HEATING SYSTEM
BURNER 24V	11826648	(9)	1	466	10876576	WATER HEATING SYSTEM
BUS LINE 2 X 0,5	11840113	7	0.3	43	96045227	WIRING HARNESS
BUS LINE 2 X 0,5	11840113	8	0.4	43	96045227	WIRING HARNESS
BUS LINE 2 X 0,5	11840113	9	0.45	43	96045227	WIRING HARNESS
BUS LINE 2 X 0,5	11840113	7	1.63	44	96045228	WIRING HARNESS
BUS LINE 2 X 0,5	11840113	8	4.66	44	96045228	WIRING HARNESS
BUS LINE 2 X 0,5	11840113	15	4.46	446	96036955	WIRING HARNESS
BUS LINE 2 X 0,5	11840113	16	4.38	446	96036955	WIRING HARNESS
BUS LINE 2 X 0,5	11840113	17	4.38	446	96036955	WIRING HARNESS
BUS LINE 2 X 0,5	11840113	18	0.17	446	96036955	WIRING HARNESS
BUS LINE 2 X 0,5	11840113	374	6.27	512	96037136	WIRING HARNESS
BUS LINE 2 X 0,5	11840113	375	6.27	512	96037136	WIRING HARNESS
BUS LINE 2 X 0,5	11840113	376	6.27	512	96037136	WIRING HARNESS
BUS LINE 2 X 0,5	11840113	5	5.68	514	96037137	WIRING HARNESS
BUS LINE 2 X 0,5	11840113	6	0.17	514	96037137	WIRING HARNESS
BUS LINE 2 X 0,5	11840113	7	8.81	514	96037137	WIRING HARNESS
BUS LINE 2 X 0,5	11840113	8	0.17	514	96037137	WIRING HARNESS
BUS LINE 2 X 0,5	11840113	9	3.16	514	96037137	WIRING HARNESS
BUS LINE 2 X 0,5	11840113	10	0.17	514	96037137	WIRING HARNESS
BUS LINE 2 X 0,5	11840113	11	3.16	514	96037137	WIRING HARNESS
BUS LINE 2 X 0,5	11840113	12	0.17	514	96037137	WIRING HARNESS
BUS LINE 2 X 0,5	11840113	13	8.06	514	96037137	WIRING HARNESS
BUS LINE 2 X 0,5	11840113	14	0.17	514	96037137	WIRING HARNESS
BUS LINE 2 X 0,5	11840113	15	0.18	514	96037137	WIRING HARNESS
BUS LINE 4 X 1 SPF	600345208	377	6.27	512	96037136	WIRING HARNESS
BUSHING	10000794	5	1	301	10472208	ADJUSTMENT
BUSHING	571582208	2	1	226	5700161	AIR COMPRESSOR
BUSHING 14X14X5 PA6 SCHW	97094637	20	10	393	966497908	FRONT WINDOW CPL.
BUSHING 16X12 1.4301	97002990	15	1	405	917304708	SLIDING DOOR INSTALLATION
BUSHING 16X12 1.4301	97002990	47	4	417	918810308	CONTROL STAND
BUSHING 16X195	970536608	15	2	644	917292008	TELESCOPIC SECTION 1 PRE
BUSHING 16X195	970536608	15	2	648	917292108	TELESCOPIC SECT.2 PRE-AS
BUSHING 16X195	970536608	15	2	652	917292208	TELESCOPIC SECT.3 PRE-ASS
BUSHING 16X195	970536608	15	2	656	917292308	TELESCOPIC SECT.IV PRE-A
BUSHING 16X195	970536608	32	2	661	917292408	TELESCOPIC SECT.5 PRE-AS
BUSHING 20x150x150 S960QL	970535808	9	1	644	917292008	TELESCOPIC SECTION 1 PRE
BUSHING 20x150x150 S960QL	970535808	9	1	648	917292108	TELESCOPIC SECT.2 PRE-AS
BUSHING 20x150x150 S960QL	970535808	9	1	652	917292208	TELESCOPIC SECT.3 PRE-ASS
BUSHING 20x150x150 S960QL	970535808	9	1	656	917292308	TELESCOPIC SECT.IV PRE-A
BUSHING 20x150x150 S960QL	970535808	24	1	661	917292408	TELESCOPIC SECT.5 PRE-AS
BUSHING 35.0X30 42CRMO4+Q	973998708	3	1	459	966707708	MIRROR RETAINER PRE-ASS.
BUSHING 45.0X25 35NICRMOV	974925608	10	4	619	919617008	LUFFING RAM W. PIVOT
BUSHING 45.0X30 35NICRMOV	972203808	9	3	619	919617008	LUFFING RAM W. PIVOT
BUSHING 45.0X32 35NICRMOV	97032692	10	8	116	968046208	ADD-ON PARTS
BUSHING 45.0X32 35NICRMOV	97032692	63	12	121	919644008	HYDRAULIC SUPPORT
BUSHING 45.0X32 35NICRMOV	97032692	63	16	137	919499408	CENTRAL BALLAST
BUSHING 60.3X24 S355J2H FE	970689108	6	8	158	918731108	ASSEMBLY PARTS F.SLEWING
BUSHING HOUSING 1-POL	11118242	504	1	448	96036956	WIRING HARNESS

Description	Item	Pos.	Quantity	Page	Assembly	Description
BUSHING HOUSING 2-POL 20	11060619	506	2	514	96037137	WIRING HARNESS
BUSHING HOUSING 2-POL 5A	10424622	512	2	446	96036955	WIRING HARNESS
BUSHING HOUSING 2-POL 5A	10424622	509	1	510	96045385	WIRING HARNESS
BUSHING HOUSING 2-POL BL	11342208	510	1	514	96037137	WIRING HARNESS
BUSHING HOUSING 4-POL PB	11341840	509	1	514	96037137	WIRING HARNESS
BUSHING HOUSING 8-POL 5A	10875280	513	1	446	96036955	WIRING HARNESS
BUSHING RD20X7.5 X5CRNI18	97072035	26	4	390	916162508	WINDOW ASSEMBLY
BUSHING RD40X27 35NICRM	953504308	4	6	158	918731108	ASSEMBLY PARTS F.SLEWING
BUSHING RD50,25X20 PA6G	288154508	58	2	639	917291908	PIVOT SECTION, PRE-ASSEMB
BUSHING SUPPORT 6-POL 16	604526508	506	5	44	96045228	WIRING HARNESS
BUSHING SUPPORT 6-POL 16	604526508	510	1	510	96045385	WIRING HARNESS
BUSHING SUPPORT 6-POL 16	604526508	502	1	516	96037133	LEAD
BUSHING SUPPORT 6-POL 16	604526508	502	1	617	96037132	LEAD
BUSHING SUPPORT 6-POL 16	604526508	(502)	1	711	917598408	ELECTRIC MEASURING & WAR
BUTT STRAP 4X40X20 S315M	978361008	24	1	283	968026308	CLUTCH ACTUATOR
BUTT STRAP 4X95X52 S315M	978554708	22	1	283	968026308	CLUTCH ACTUATOR
BUTTON HEAD SCREW AEHNL	10875475	9	2	373	96025887	PEDAL CANTILEVER INSTALL
BUTTON HEAD SCREW AEHN	11160744	301	2	314	96034515	EXPANSION TANK PRE-ASS.
BUTTON HEAD SCREW AEHN	11160744	13	3	405	917304708	SLIDING DOOR INSTALLATION
BUTTON HEAD SCREW AEHN	10028237	308	4	589	967784808	HYDR.AUXILIARY HOISTING
BUTTON HEAD SCREW AEHN	10028237	4	1	714	967933408	LOCATION FIXTURE PRE-ASS.
BUTTON HEAD SCREW AEHN	10813359	83	8	137	919499408	CENTRAL BALLAST
BUTTON HEAD SCREW AEHN	10813359	(300)	2	275	919007708	DRIVE ASSEMBLY, PRE-ASSE
BUTTON HEAD SCREW AEHN	10813359	43	7	405	917304708	SLIDING DOOR INSTALLATION
BUTTON HEAD SCREW AEHN	10813359	52	1	483	918484108	UREA PLANT
BUTTON HEAD SCREW AEHN	10475893	14	10	405	917304708	SLIDING DOOR INSTALLATION
BUTTON HEAD SCREW AEHN	10875468	13	8	134	919087608	ROTARY FEED THROUGH
BUTTON HEAD SCREW AEHN	10875468	302	1	314	96034515	EXPANSION TANK PRE-ASS.
BUTTON HEAD SCREW AEHN	10875468	11	12	320	96023117	BATTERY BOX, PRE-ASSEMB
BUTTON HEAD SCREW AEHN	10875468	10	3	373	96025887	PEDAL CANTILEVER INSTALL
BUTTON HEAD SCREW AEHN	10875468	14	12	380	917304508	CRANE OPERATOR CABIN P
BUTTON HEAD SCREW AEHN	10875468	40	73	383	917305408	INTERNAL PANELLING INSTA
BUTTON HEAD SCREW AEHN	10875468	23	6	399	916163008	WIPERS INSTALLATION
BUTTON HEAD SCREW AEHN	10875468	19	5	405	917304708	SLIDING DOOR INSTALLATION
BUTTON HEAD SCREW AEHN	10875468	22	7	449	96036957	ELECTRIC ADD-ON PARTS CA
BUTTON HEAD SCREW AEHN	10412851	17	4	21	96034894	PROTECTION PLATE CPL.
BUTTON HEAD SCREW AEHN	10412851	17	4	24	96034977	PROTECTION PLATE
BUTTON HEAD SCREW AEHN	10412851	10	6	375	916170808	CABLE INLET
BUTTON HEAD SCREW AEHN	10412851	8	1	378	968514508	INSTALLATION SWITCH CAB. C
BUTTON HEAD SCREW AEHN	10412851	12	4	405	917304708	SLIDING DOOR INSTALLATION
BUTTON HEAD SCREW AEHN	10412851	300	10	429	96036790	SLEWING PLATFORM PANELLI
BUTTON HEAD SCREW AEHN	10412851	300	6	439	969015908	SLEWING PLATFORM PANELLI
BUTTON HEAD SCREW AEHN	10412851	303	6	491	919372008	EXHAUST SYSTEM
BUTTON HEAD SCREW AEHN	10412851	2	4	599	917269308	CHARGER
BUTTON HEAD SCREW AEHN	10412851	7	1	714	967933408	LOCATION FIXTURE PRE-ASS.
BUTTON HEAD SCREW AEHN	10412852	30	8	30	917511508	CRAWLER CENTRE PART PRE
BUTTON HEAD SCREW AEHN	10412852	5	14	85	968420608	STORAGE BOX
BUTTON HEAD SCREW AEHN	10412852	15	6	393	966497908	FRONT WINDOW CPL.
BUTTON HEAD SCREW AEHN	10412852	26	2	609	968994408	CAMERA HOLDER, PREMOU
BUTTON HEAD SCREW AEHN	10412852	20	6	610	968290608	STAND
BUTTON HEAD SCREW AEHN	10412852	13	2	612	968993508	CAMERA HOLDER, PREMOU
BUTTON HEAD SCREW AEHN	10412852	20	6	613	968267208	STAND
BUTTON HEAD SCREW AEHN	10412853	6	8	372	916177508	STEP CPL.
BUTTON HEAD SCREW AEHN	10412853	41	1	405	917304708	SLIDING DOOR INSTALLATION
BUTTON HEAD SCREW AEHN	11161571	34	4	21	96034894	PROTECTION PLATE CPL.
BUTTON HEAD SCREW AEHN	11161571	34	4	24	96034977	PROTECTION PLATE
BUTTON HEAD SCREW AEHNL	10876082	201	2	71	919254308	CRAWLER SUPPORT PREASS
BUTTON HEAD SCREW AEHNL	10876082	201	2	101	919254408	CRAWLER SUPPORT PREASS
BUTTON HEAD SCREW AEHNL	10876082	11	4	142	96045206	MECHANICAL AUXILIARIES
BUTTON HEAD SCREW AEHN	10875485	20	3	21	96034894	PROTECTION PLATE CPL.

Description	Item	Pos.	Quantity	Page	Assembly	Description
BUTTON HEAD SCREW AEHN	10875485	20	3	24	96034977	PROTECTION PLATE
BUTTON HEAD SCREW AEHN	10875485	15	4	34	96045225	ELECTR.FOR CENTER SECTIO
BUTTON HEAD SCREW AEHN	10875485	14	16	121	919644008	HYDRAULIC SUPPORT
BUTTON HEAD SCREW AEHN	10875485	23	3	127	917257108	CENTRALIZED LUBRICATION
BUTTON HEAD SCREW AEHN	10875485	28	4	158	918731108	ASSEMBLY PARTS F.SLEWING
BUTTON HEAD SCREW AEHN	10875485	305	6	276	919007708	DRIVE ASSEMBLY, PRE-ASSE
BUTTON HEAD SCREW AEHN	10875485	15	6	380	917304508	CRANE OPERATOR CABIN P
BUTTON HEAD SCREW AEHN	10875485	303	13	429	96036790	SLEWING PLATFORM PANELLI
BUTTON HEAD SCREW AEHN	10875485	305	10	439	969015908	SLEWING PLATFORM PANELLI
BUTTON HEAD SCREW AEHN	10875485	(7)	6	478	969763408	PIPEWORK AIR INSTALLATIO
BUTTON HEAD SCREW AEHN	10875485	301	1	491	919372008	EXHAUST SYSTEM
BUTTON HEAD SCREW AEHN	10875485	300	15	497	96039740	ADDITIONAL PARTS CLADDIN
BUTTON HEAD SCREW AEHN	10875485	303	2	499	918731908	AIR FILTER UNIT
BUTTON HEAD SCREW AEHN	10875485	28	7	545	96035117	MECHANICAL AUXILIARIES
BUTTON HEAD SCREW AEHN	10875485	312	5	589	967784808	HYDR.AUXILIARY HOISTING
BUTTON HEAD SCREW AEHN	10875485	3	3	608	968210808	ADD-ON PARTS CAMERA
BUTTON HEAD SCREW AEHN	10875471	10	4	142	96045206	MECHANICAL AUXILIARIES
BUTTON HEAD SCREW AEHN	10875471	13	2	394	965784408	ROOF WINDOW PRE-ASS.
BUTTON HEAD SCREW AEHN	10875471	302	4	499	918731908	AIR FILTER UNIT
BUTTON HEAD SCREW AEHN	10876067	303	2	276	919007708	DRIVE ASSEMBLY, PRE-ASSE
BUTTON HEAD SCREW AEHN	10875486	18	3	87	96034962	GUIDE LEFT
BUTTON HEAD SCREW AEHN	10875486	18	3	104	96034980	GUIDE RIGHT
BUTTON HEAD SCREW AEHN	10875486	10	12	352	917259708	MAIN HOIST GEAR
BUTTON HEAD SCREW AEHN	10875486	(6)	11	372	916177508	STEP CPL.
BUTTON HEAD SCREW AEHN	10875486	308	4	439	969015908	SLEWING PLATFORM PANELLI
BUTTON HEAD SCREW AEHN	10875486	6	4	738	968090008	MOUNTING HOOK ROD
BUTTON HEAD SCREW ISO 73	10875017	32	4	449	96036957	ELECTRIC ADD-ON PARTS CA
BUTTON HEAD SCREW ISO 7	10875448	300	2	269	918731408	DRIVE ASSEMBLY CPL.
BUTTON HEAD SCREW ISO 7	10875448	7	3	373	96025887	PEDAL CANTILEVER INSTALL
BUTTON HEAD SCREW ISO 7	10875448	8	2	441	969016008	FLAP LEFT FRONT PRE-ASS.
BUTTON HEAD SCREW ISO 73	10875482	20	8	449	96036957	ELECTRIC ADD-ON PARTS CA
BUTTON HEAD SCREW ISO 73	11835043	43	2	417	918810308	CONTROL STAND
BUTTON HEAD SCREW ISO 73	11835043	317	8	429	96036790	SLEWING PLATFORM PANELLI
BUTTON HEAD SCREW ISO 73	10875483	17	6	320	96023117	BATTERY BOX, PRE-ASSEMB
BUTTON HEAD SCREW ISO 73	10875483	16	14	396	916168308	AIR DUCT
BUTTON HEAD SCREW ISO 73	10875483	26	2	399	916163008	WIPERS INSTALLATION
BUTTON HEAD SCREW ISO 73	10875483	21	8	449	96036957	ELECTRIC ADD-ON PARTS CA
BUTTON HEAD SCREW ISO 7	12229337	11	14	373	96025887	PEDAL CANTILEVER INSTALL
BUTTON HEAD SCREW ISO 73	10875474	38	16	383	917305408	INTERNAL PANELLING INSTA
BUTTON HEAD SCREW ISO 73	10875474	15	5	396	916168308	AIR DUCT
BUTTON HEAD SCREW ISO 73	10875474	28	6	417	918810308	CONTROL STAND
BUTTON HEAD SCREW ISO 73	10875474	18	18	449	96036957	ELECTRIC ADD-ON PARTS CA
BUTTON HEAD SCREW ISO 73	10875474	25	4	614	96045237	EQUIPMENT CAMERA CAB
BUTTON HEAD SCREW ISO 7	11697855	12	4	370	96015921	OPERATING ELEMENT INSTAL
BUTTON HEAD SCREW ISO 7	11697855	27	7	390	916162508	WINDOW ASSEMBLY
BUTTON HEAD SCREW ISO 73	10875488	300	3	276	919007708	DRIVE ASSEMBLY, PRE-ASSE
BUTTON HEAD SCREW ISO 73	10875488	300	6	283	968026308	CLUTCH ACTUATOR
BUTTON HEAD SCREW ISO 73	10875488	17	3	375	916170808	CABLE INLET
BUTTON HEAD SCREW ISO 73	10875488	33	4	393	966497908	FRONT WINDOW CPL.
BUTTON HEAD SCREW ISO 73	10874884	9	3	318	918955408	BATTERY BOX CPL.
BUTTON HEAD SCREW ISO 73	10874884	39	13	383	917305408	INTERNAL PANELLING INSTA
BUTTON HEAD SCREW ISO 73	10875469	41	10	383	917305408	INTERNAL PANELLING INSTA
BUTTON HEAD SCREW ISO 73	10875469	36	7	405	917304708	SLIDING DOOR INSTALLATION
BUTTON HEAD SCREW ISO 73	10410198	13	2	375	916170808	CABLE INLET
BUTTON HEAD SCREW ISO 73	10875470	42	2	383	917305408	INTERNAL PANELLING INSTA
BUTTON HEAD SCREW ISO 73	10353737	21	4	320	96023117	BATTERY BOX, PRE-ASSEMB
BUTTON HEAD SCREW ISO 7	10429635	7	1	368	919010208	CRANE OPERATOR CABIN P
BUTTON HEAD SCREW ISO 73	408650608	11	4	318	918955408	BATTERY BOX CPL.
BUTTON HEAD SCREW ISO 73	408650608	2	2	716	967937608	OBSTRUCTION LIGHTS PREAS
BUTTON HEAD SCREW ISO 73	10301319	11	5	370	96015921	OPERATING ELEMENT INSTAL

Description	Item	Pos.	Quantity	Page	Assembly	Description
BUTTON HEAD SCREW ISO 73	10182032	310	2	283	968026308	CLUTCH ACTUATOR
BUTTON HEAD SCREW ISO 7	12100221	26	1	36	96045226	SWITCH BOX COMPL.
BUTTON HEAD SCREW ISO73	12102696	27	24	17	919617108	CRAWLER TRACK TRAVEL G
BUTTON HEAD SCREW ISO73	12102696	19	4	34	96045225	ELECTR.FOR CENTER SECTIO
BUTTON HEAD SCREW ISO73	12102696	32	2	63	918925508	CROSS BEAM CPL.
BUTTON HEAD SCREW ISO73	12102696	39	4	70	919254308	CRAWLER SUPPORT PREASS
BUTTON HEAD SCREW ISO73	12102696	39	4	100	919254408	CRAWLER SUPPORT PREASS
BUTTON HEAD SCREW ISO73	12102696	21	8	127	917257108	CENTRALIZED LUBRICATION
BUTTON HEAD SCREW ISO73	12102696	80	8	137	919499408	CENTRAL BALLAST
BUTTON HEAD SCREW ISO73	12102696	11	6	158	918731108	ASSEMBLY PARTS F.SLEWING
BUTTON HEAD SCREW ISO73	12102696	10	2	350	917259608	ROTATING PLATFORM LOCK
BUTTON HEAD SCREW ISO73	12102696	8	10	373	96025887	PEDAL CANTILEVER INSTALL
BUTTON HEAD SCREW ISO73	12102696	21	4	502	917261208	CENT. LUBRIC. SYSTEM SUP
BUTTON HEAD SCREW ISO73	12102696	307	2	539	96045351	HYDRAULICS UPPER CARRI
BUTTON HEAD SCREW ISO73	12102696	29	4	545	96035117	MECHANICAL AUXILIARIES
BUTTON HEAD SCREW ISO73	12102696	12	25	577	967969608	AUXILIARY HOISTING GEAR 2
BUTTON HEAD SCREW ISO73	12102696	14	73	639	917291908	PIVOT SECTION, PRE-ASSEMB
BUTTON HEAD SCREW ISO73	12102696	56	17	661	917292408	TELESCOPIC SECT.5 PRE-AS
BUTTON HEAD SCREW ISO73	12102696	20	4	705	917268408	BOOM NOSE
BUTTON HEAD SCREW ISO73	12102696	6	2	708	967321308	FIXING DEVICE 2.LIFT TOP
CABLE	10097087	15	2	614	96045237	EQUIPMENT CAMERA CAB
CABLE 2X0,14+2X0,22-9M	10870643	69	1	509	96045384	CABLE LIST SLEWING PLATF
CABLE 2X0,25-7M	10025227	68	1	509	96045384	CABLE LIST SLEWING PLATF
CABLE 2X0,34+1X0,14-4M	10097085	12	1	616	96037130	EQUIPMENT CAMERA SLEW C
CABLE CHANNEL 40X120/2000	601407008	32	0.29	522	969256608	BASE ASSEMBLY
CABLE CHANNEL 40X60/2000	601406408	4	0.3	526	968063108	PRE-ASSEMBLY MOUNTING U
CABLE CLAMP	720014408	(15)	1	577	967969608	AUXILIARY HOISTING GEAR 2
CABLE CLAMP	720014408	18	4	705	917268408	BOOM NOSE
CABLE CLAMP 3x486x370 DC0	970456508	6	1	672	966134608	ADD-ON PARTS CYLINDER
CABLE CLAMP 3x697x370 DC0	970456608	7	1	672	966134608	ADD-ON PARTS CYLINDER
CABLE CLAMP DC01 FE//ZNNI	953650008	22	7	577	967969608	AUXILIARY HOISTING GEAR 2
CABLE CLAMP DC01 FE//ZNNI	953650008	68	28	639	917291908	PIVOT SECTION, PRE-ASSEMB
CABLE CLAMP DC01 FE//ZNNI	953650008	57	12	661	917292408	TELESCOPIC SECT.5 PRE-AS
CABLE CLIP HOLDER 8,1X-S	11492315	42	11	522	969256608	BASE ASSEMBLY
CABLE CONDUIT DN16X0,6 PU	11124205	223	8.35	510	96045385	WIRING HARNESS
CABLE CONDUIT DN16X0,6 PU	11124205	223	3.89	512	96037136	WIRING HARNESS
CABLE CONDUIT DN20X0,6 PU	11124207	224	0.83	446	96036955	WIRING HARNESS
CABLE CONDUIT DN20X0,6 PU	11124207	224	0.53	448	96036956	WIRING HARNESS
CABLE CONDUIT DN20X0,6 PU	11124207	224	0.93	510	96045385	WIRING HARNESS
CABLE CONDUIT DN25X0,6 PU	11124208	225	0.33	446	96036955	WIRING HARNESS
CABLE CONDUIT DN25X0,6 PU	11124208	225	0.43	448	96036956	WIRING HARNESS
CABLE CONDUIT DN25X0,6 PU	11124208	225	2.91	510	96045385	WIRING HARNESS
CABLE CONDUIT DN25X0,6 PU	11124208	225	1.46	512	96037136	WIRING HARNESS
CABLE CONDUIT DN25X0,6 PU	11124208	225	2.53	514	96037137	WIRING HARNESS
CABLE CONDUIT DN30X0,6 PU	11124209	226	0.35	44	96045228	WIRING HARNESS
CABLE CONDUIT DN30X0,6 PU	11124209	226	0.93	510	96045385	WIRING HARNESS
CABLE CONDUIT DN30X0,6 PU	11124209	226	2.91	512	96037136	WIRING HARNESS
CABLE CONDUIT DN30X0,6 PU	11124209	226	4.53	514	96037137	WIRING HARNESS
CABLE CONDUIT DN35X0,6 PU	11124210	227	2.26	446	96036955	WIRING HARNESS
CABLE CONDUIT DN35X0,6 PU	11124210	227	0.88	448	96036956	WIRING HARNESS
CABLE CONDUIT DN35X0,6 PU	11124210	227	2.86	510	96045385	WIRING HARNESS
CABLE CONDUIT DN40X0,6 PU	11124211	228	1.23	512	96037136	WIRING HARNESS
CABLE CONDUIT DN40X0,6 PU	11124211	228	1.32	520	96045387	CABLES, BASIC CONSTRUCTI
CABLE CONDUIT DN50X0,6 PU	11124212	229	1.2	510	96045385	WIRING HARNESS
CABLE CONDUIT DN50X0,6 PU	11124212	229	3.71	512	96037136	WIRING HARNESS
CABLE CONDUIT DN50X0,6 PU	11124212	229	0.65	520	96045387	CABLES, BASIC CONSTRUCTI
CABLE CONNECTOR	602336408	2	1	525	926891108	GROUND RAIL
CABLE COUPLING BOX 12/21/	602600808	12	2	375	916170808	CABLE INLET
CABLE DRUM COMPL.	966354008	4	1	678	966290908	ELECTRIC F.BASE SECTION
CABLE GLAND M12X1,5X2-8 M	602424008	67	2	450	96036957	ELECTRIC ADD-ON PARTS CA

Description	Item	Pos.	Quantity	Page	Assembly	Description
CABLE GLAND M16X1,5X4,5-10	602441701	11	2	598	918462708	EXTERNAL FEED
CABLE GLAND M16X1,5X4,5-10	602441701	11	1	603	917368108	EL.COOLANT PREHEAT
CABLE GLAND M16X1,5X4-11	602424108	14	2	36	96045226	SWITCH BOX COMPL.
CABLE GLAND M16X1,5X4-11	602424108	153	1	41	966204108	ANTENNA CPL.
CABLE GLAND M16X1,5X4-11	602424108	527	4	44	96045228	WIRING HARNESS
CABLE GLAND M16X1,5X4-11	10428532	48	2	449	96036957	ELECTRIC ADD-ON PARTS CA
CABLE GLAND M20X1,5/13X3	10216578	13	1	603	917368108	EL.COOLANT PREHEAT
CABLE GLAND M20X1,5X5-10	602441001	526	2	44	96045228	WIRING HARNESS
CABLE GLAND M20X1,5X5-10	602441001	505	1	140	96045205	WIRING HARNESS
CABLE GLAND M20X1,5X5-10	602441001	(505)	1	711	917598408	ELECTRIC MEASURING & WAR
CABLE GLAND M25X1,5X12-15	602425808	3	1	681	10354493	CABLE REEL
CABLE GLAND PG16/9	602422108	8	1	598	918462708	EXTERNAL FEED
CABLE HARNESS 3300MM	553186908	10	1	445	96036954	CABLE LIST DRIVER'S CABIN
CABLE HARNESS MOUNTING	10151328	580	1	165	12856862	DIESEL ENGINE
CABLE HARNESS W700	10153987	1	1	254	10151328	CABLE HARNESS MOUNTING
CABLE INLET	916170808	5	1	368	919010208	CRANE OPERATOR CABIN P
CABLE LIST	96045204	10	1	138	919499508	BALLAST MONITORING
CABLE LIST DRIVER'S CABIN	96036954	5	1	444	918731608	EL.INSTRUMENTS F.CRANE D
CABLE LIST SLEWING PLATF	96045384	12	1	506	919410708	ELECTR. SYSTEM F.SLEWING
CABLE LOOM WL705	10151164	1	1	256	10151329	WIRING HARNESS ASSEMBLY
CABLE LUG AEHNL.DIN 46237	602305605	766	1	513	96037136	WIRING HARNESS
CABLE LUG DIN 46234 M12/16	602217308	50	1	512	96037136	WIRING HARNESS
CABLE LUG DIN 46234 M6/10	602311508	55	1	512	96037136	WIRING HARNESS
CABLE LUG DIN 46234 M6/16	602205708	58	4	512	96037136	WIRING HARNESS
CABLE LUG DIN 46234 M8/16-2	602301708	106	1	512	96037136	WIRING HARNESS
CABLE LUG DIN 46234 M8/16m	602311408	57	2	512	96037136	WIRING HARNESS
CABLE LUG DIN 46237 6/6mm²	602213308	39	1	43	96045227	WIRING HARNESS
CABLE LUG DIN 46237 M6/1-2,5	602217908	34	5	43	96045227	WIRING HARNESS
CABLE LUG DIN 46237 M6/1-2,5	602217908	34	1	446	96036955	WIRING HARNESS
CABLE LUG M6/16,8-26,7MM²	602205808	111	1	512	96037136	WIRING HARNESS
CABLE LUG M6/16MM²	602217008	49	1	512	96037136	WIRING HARNESS
CABLE MARKER	923512208	500	18	43	96045227	WIRING HARNESS
CABLE MARKER	923512208	500	26	44	96045228	WIRING HARNESS
CABLE MARKER	923512208	500	3	140	96045205	WIRING HARNESS
CABLE MARKER	923512208	500	53	446	96036955	WIRING HARNESS
CABLE MARKER	923512208	500	29	448	96036956	WIRING HARNESS
CABLE MARKER	923512208	500	76	510	96045385	WIRING HARNESS
CABLE MARKER	923512208	500	58	513	96037136	WIRING HARNESS
CABLE MARKER	923512208	500	21	514	96037137	WIRING HARNESS
CABLE MARKER	923512208	500	4	516	96037133	LEAD
CABLE MARKER	923512208	500	2	615	96043733	WIRING HARNESS
CABLE MARKER	923512208	500	4	617	96037132	LEAD
CABLE MARKER	923512208	(500)	4	711	917598408	ELECTRIC MEASURING & WAR
CABLE PLUG 4-POL 90°	10324830	511	1	510	96045385	WIRING HARNESS
CABLE REEL 50M 14-POL+PE	10354493	5	1	679	966354008	CABLE DRUM COMPL.
CABLE SLEEVE 12,0-3,0/12/1,4	10872032	98	8	512	96037136	WIRING HARNESS
CABLE SLEEVE 16,0-4,0/16/1,7	10872033	709	2	513	96037136	WIRING HARNESS
CABLE SLEEVE 2,4-3,0/2,4/0,6	10473048	708	2	447	96036955	WIRING HARNESS
CABLE SLEEVE 2,4-3,0/2,4/0,6	10473048	708	1	448	96036956	WIRING HARNESS
CABLE SLEEVE 4-6	602704808	520	6	44	96045228	WIRING HARNESS
CABLE SLEEVE 4-6	602704808	504	2	516	96037133	LEAD
CABLE SLEEVE 4-6	602704808	505	3	617	96037132	LEAD
CABLE SLEEVE 4-6	602704808	(508)	1	711	917598408	ELECTRIC MEASURING & WAR
CABLE SLEEVE 6-8	604508708	516	1	510	96045385	WIRING HARNESS
CABLE SLEEVE 8-10	604509408	511	1	44	96045228	WIRING HARNESS
CABLE SOCKET M1	10476382	503	1	140	96045205	WIRING HARNESS
CABLE SOCKET M11-Z	604505508	522	4	44	96045228	WIRING HARNESS
CABLE SOCKET M11-Z	604505508	518	1	510	96045385	WIRING HARNESS
CABLE SOCKET M11-Z	604505508	506	1	516	96037133	LEAD
CABLE SOCKET M11-Z	604505508	507	1	617	96037132	LEAD

Description	Item	Pos.	Quantity	Page	Assembly	Description
CABLE SOCKET M11-Z	604505508	(509)	1	711	917598408	ELECTRIC MEASURING & WAR
CABLE TIE 2,5X98-SCHWARZ P	603202208	268	30	520	96045387	CABLES, BASIC CONSTRUCTI
CABLE TIE 2,5X98-SCHWARZ P	603202208	266	5	682	966291008	TERMINAL BOX
CABLE TIE 3,6X140-SCHWARZ	603200308	261	2	44	96045228	WIRING HARNESS
CABLE TIE 3,6X140-SCHWARZ	603200308	261	1	446	96036955	WIRING HARNESS
CABLE TIE 3,6X140-SCHWARZ	603200308	261	20	448	96036956	WIRING HARNESS
CABLE TIE 3,6X140-SCHWARZ	603200308	261	8	512	96037136	WIRING HARNESS
CABLE TIE 3,6X140-SCHWARZ	603200308	261	1	514	96037137	WIRING HARNESS
CABLE TIE 3,6X140-SCHWARZ	603200308	261	30	520	96045387	CABLES, BASIC CONSTRUCTI
CABLE TIE 3,6X200-SCHWARZ	603200408	269	30	520	96045387	CABLES, BASIC CONSTRUCTI
CABLE TIE 4,6X200-SCHWARZ	11691035	(40)	10	506	919410708	ELECTR. SYSTEM F.SLEWING
CABLE TIE 4,6X200-SW/GR P	11691013	97	2	254	10151328	CABLE HARNESS MOUNTING
CABLE TIE 4,8X292-SCHWARZ	10874588	99	3	254	10151328	CABLE HARNESS MOUNTING
CABLE TIE 4,8X292-SCHWARZ	10874588	100	8	256	10151329	WIRING HARNESS ASSEMBLY
CABLE TIE 4,8X292-SCHWARZ	10874588	(10)	50	506	919410708	ELECTR. SYSTEM F.SLEWING
CABLE TIE 4,8X292-SCHWARZ	10874588	20	4	682	966291008	TERMINAL BOX
CABLE TIE 7,6X368-SCHWARZ	10874587	(20)	50	506	919410708	ELECTR. SYSTEM F.SLEWING
CABLE TIE 7,6X380-SCHWARZ	10870333	(30)	100	506	919410708	ELECTR. SYSTEM F.SLEWING
CABLES, BASIC CONSTRUCTI	96045387	1	1	519	96045386	BASE ASSEMBLY CPL.
CAGE NUT M5 ST	10455281	27	6	417	918810308	CONTROL STAND
CAGE NUT M6	413002708	44	4	417	918810308	CONTROL STAND
CAGE NUT M6	413002808	53	1	383	917305408	INTERNAL PANELLING INSTA
CAGE NUT M6 NIROSTA	10875857	75	4	640	917291908	PIVOT SECTION, PRE-ASSEMB
CAGE NUT M6 NIROSTA	10875857	2	2	683	966591508	LIMIT SWITCH ADD-ON
CAMERA HOLDER, PREMOU	968993508	1	1	611	968267108	ADD-ON PARTS CAMERA
CAMERA HOLDER, PREMOU	968994408	1	1	608	968210808	ADD-ON PARTS CAMERA
CAMERA MC3100B-2 SPF	10024012	10	1	618	96037131	EQUIPMENT CAMERA WINCHE
CAMERA MONITOR OW	918992008	491	1	12		LIEBHERR LTR 1220
CAMERA SPF	10097079	10	1	616	96037130	EQUIPMENT CAMERA SLEW C
CAMS SHAFT BUSHING	9132281	11	2	168	10154379	CRANKCASE PRE-ASSY.
CAMS SHAFT BUSHING	9274859	10	5	168	10154379	CRANKCASE PRE-ASSY.
CAMSHAFT CPL. R-MOTORXD	10138230	100	1	161	12856862	DIESEL ENGINE
CAMSHAFT R-MOTORXD934/	10125742	1	1	197	10138230	CAMSHAFT CPL.
CAP	571582808	30	1	226	5700161	AIR COMPRESSOR
CAP	591064408	8	1	459	966707708	MIRROR RETAINER PRE-ASS.
CAP NUT DIN 1587 M6 A2-70	10219361	12	4	394	965784408	ROOF WINDOW PRE-ASS.
CAP NUT DIN 986 M4 A2-70	4002886	32	4	128	11347526	ELECTRIC PUMP
CAP NUT DIN 986 M4 A2-70	4002886	25	4	504	10327065	ELECTRIC PUMP
CAP NUT DIN 986 M6	691035008	36	2	47	11346779	SLIP RING TRANSMITTER
CAPACITOR	10815368	104	1	280	96034631	RADIATOR, PRE-ASSEMBLED
CAR RADIO	12257818	1	1	632	916166208	CAR RADIO
CAR RADIO	916166208	199	1	11		LIEBHERR LTR 1220
CARRIER	968050708	1	2	116	968046208	ADD-ON PARTS
CARRIER PLATE, PRE-ASSE	965807808	1	1	529	969061708	CARRIER PLATE, PRE-ASSE
CARRIER PLATE, PRE-ASSE	969061708	12	1	518	919503008	SWITCHBOX MOUNTING PART
CARRIER RAIL NUT DIN 3015-	602018008	313	61	51	96035801	HYDRAULIC EQUIPM.CENTER
CARRIER RAIL NUT DIN 3015-	602018008	28	4	320	96023117	BATTERY BOX, PRE-ASSEMB
CARRIER RAIL NUT DIN 3015-	602018008	308	6	478	969763408	PIPEWORK AIR INSTALLATIO
CARRIER RAIL NUT DIN 3015-	602018008	330	2	539	96045351	HYDRAULICS UPPER CARRI
CARRIER RAIL NUT DIN 3015-	602018008	70	4	640	917291908	PIVOT SECTION, PRE-ASSEMB
CARRIER T ZN O	968710308	2	2	116	968046208	ADD-ON PARTS
CARRIER, MEAS. & WARN. D	917379608	285	1	11		LIEBHERR LTR 1220
CARRYING ROLLER 80/5/20X70	749011408	47	1	656	917292308	TELESCOPIC SECT.IV PRE-A
CARRYING ROLLER 80/5/20X79	749010808	47	1	652	917292208	TELESCOPIC SECT.3 PRE-ASS
CARRYING ROLLER 80/5/20X85	749009408	47	1	648	917292108	TELESCOPIC SECT.2 PRE-AS
CARRYING ROLLER 80/5/20X95	749010208	21	2	639	917291908	PIVOT SECTION, PRE-ASSEMB
CARRYING ROLLER 80/5/20X95	749010208	47	1	644	917292008	TELESCOPIC SECTION 1 PRE
CARRYING ROLLER 90/7/40X1	749014908	3	1	352	917259708	MAIN HOIST GEAR
CARRYING ROLLER 90/7/40X1	749014908	20	1	577	967969608	AUXILIARY HOISTING GEAR 2
CARRYING ROLLER D8KX165	10877342	8	2	70	919254308	CRAWLER SUPPORT PREASS

Description	Item	Pos.	Quantity	Page	Assembly	Description
CARRYING ROLLER D8KX165	10877342	8	2	100	919254408	CRAWLER SUPPORT PREASS
CARTRIDGE	571352308	1	1	479	502657308	AIR DRYER
CARTRIDGE FOR BRAKE VALV	11214357	(1)	1	121	919644008	HYDRAULIC SUPPORT
CAUTION DECAL ACCID.PREV	9412158	35	1	150	917862808	LABELLING GREAT BRITAIN
CELL RUBBER 20X12 CR SC	262104308	5	1.08	37	966167808	COVER COMPL.
CELL RUBBER 6X3X10000 CE	262108908	4	0.5	434	964093408	COVER COMPL.
CENT. LUBRIC. SYSTEM SUP	917261208	169	1	10		LIEBHERR LTR 1220
CENTER STUD	570110508	3	1	348	570109508	DRIVING GEAR
CENTER-ZERO RELAY 24V 10	630121508	6	2	38	968054008	MOUNTING PLATE PRE-ASS.
CENTER-ZERO RELAY 24V 10	630121508	9	19	518	919503008	SWITCHBOX MOUNTING PART
CENTERING FLANGE 42CrMo	10142170	2	1	187	10141974	CRANKSHAFT ADD-ON PARTS
CENTRAL BALLAST	919499408	22	1	9		LIEBHERR LTR 1220
CENTRAL COUNTERWEIGHT	96045601	50	1	137	919499408	CENTRAL BALLAST
CENTRAL COUNTERWEIGHT	96045603	51	1	137	919499408	CENTRAL BALLAST
CENTRAL LUBRICATING SYS	921444108	200	1	577	967969608	AUXILIARY HOISTING GEAR 2
CENTRAL SECTION CRAWLER	917511608	1	1	30	917511508	CRAWLER CENTRE PART PRE
CENTRAL SECTION CRAWLER	919499308	4	1	9		LIEBHERR LTR 1220
CENTRALIZED LUBRICATION S	917257108	20	1	9		LIEBHERR LTR 1220
CHAIN DIN 763 7X49 0.3t ST35	10663970	3	2	664	96013575	HOIST LIM.SWITCH PLUMMET
CHARGE AIR CORRUGATED H	97032592	256	1	276	919007708	DRIVE ASSEMBLY, PRE-ASSE
CHARGE AIR LINE	10143612	1	1	220	10149677	CONNECTING LINE ADD-ON
CHARGE AIR LINE	10143614	2	1	220	10149677	CONNECTING LINE ADD-ON
CHARGE AIR PIPE DN85 STAH	97050878	201	1	276	919007708	DRIVE ASSEMBLY, PRE-ASSE
CHARGE AIR PIPE G-ALST10M	97055159	200	1	276	919007708	DRIVE ASSEMBLY, PRE-ASSE
CHARGER 110V	917269308	383	1	12		LIEBHERR LTR 1220
CHARGER 110V 24V8A SPF	613301908	1	1	599	917269308	CHARGER
CHARGING UNIT BTT SPF	10412777	10	1	453	96022872	CONTROL PANEL ROOF
CIRCLIP	11002524	1	2	470	11212257	BELT CARRIER SYSTEM
CIRCLIP FUER GRIFFKAPPE	10678848	4	2	454	10343693	MASTER SWITCH
CIRCULAR BEARING C50X30X	726905008	120	2	280	96034631	RADIATOR, PRE-ASSEMBLED
CIRCULAR BEARING C50X30X	726905008	8	4	565	967980508	OIL COOLER, PRE-ASSEMBLE
CIRCULATING PUMP	11622224	20	1	414	969085208	HEATING, PRE-ASSEMBLED
CIRCULATING PUMP	11622224	26	1	466	10876576	WATER HEATING SYSTEM
CIRCULATING PUMP	11622224	(7)	1	466	10876576	WATER HEATING SYSTEM
CLADDING REAR PANEL 193X	97001404	5	1	383	917305408	INTERNAL PANELLING INSTA
CLAMP	10875952	1	1	703	10872003	WORK LIGHT
CLAMP	6202909	100	1	314	96034515	EXPANSION TANK PRE-ASS.
CLAMP	968267308	2	1	612	968993508	CAMERA HOLDER, PREMOU
CLAMP	968267408	3	1	612	968993508	CAMERA HOLDER, PREMOU
CLAMP	968290708	1	1	610	968290608	STAND
CLAMP	968290908	2	1	609	968994408	CAMERA HOLDER, PREMOU
CLAMP - ADD-ON UNIT	10143707	10	1	254	10151328	CABLE HARNESS MOUNTING
CLAMP DIN 3016-1 10X12XD1	7381679	3	1	714	967933408	LOCATION FIXTURE PRE-ASS.
CLAMP DIN 3016-1 10X15XD1	7381770	32	6	254	10151328	CABLE HARNESS MOUNTING
CLAMP DIN 3016-1 10X20XD1	7381628	38	2	254	10151328	CABLE HARNESS MOUNTING
CLAMP DIN 3016-1 10X25XD1	7382092	2	2	182	10139112	OIL LINE PRE-ASSEMBLY
CLAMP DIN 3016-1 10X25XD1	7382092	47	4	254	10151328	CABLE HARNESS MOUNTING
CLAMP DIN 3016-1 12X20XD1	7381629	39	5	254	10151328	CABLE HARNESS MOUNTING
CLAMP DIN 3016-1 16X20XD1	7382085	13	1	214	10143341	FUEL LINES
CLAMP DIN 3016-1 18X25XD1	7382086	39	1	256	10151329	WIRING HARNESS ASSEMBLY
CLAMP DIN 3016-1 22X20XA1	7381286	11	1	218	10145173	INTAKE STACK ASSEMBLY
CLAMP DIN 3016-1 22X20XD1	7381630	13	1	218	10145173	INTAKE STACK ASSEMBLY
CLAMP DIN 3016-1 22X20XD1	7381630	42	3	254	10151328	CABLE HARNESS MOUNTING
CLAMP DIN 3016-1 28X20XD1	11481080	22	3	414	969085208	HEATING, PRE-ASSEMBLED
CLAMP DIN 3016-1 28X20XD1	11481080	25	1	462	918759808	ADD HEATING SUPERSTRUCT
CLAMP DIN 3016-1 28X20XD1	11481080	26	1	464	96020359	ADDNL.HEATING, PRE-ASSE
CLAMP DIN 3016-1 6X15XD1 W	7381292	(9)	6	164	12856862	DIESEL ENGINE
CLAMP DIN 3016-1 6X15XD1 W	7381292	20	1	215	10143342	LEAK OIL RETURN LINE
CLAMP DIN 3016-1 6X20XA1 W	11000593	(10)	2	164	12856862	DIESEL ENGINE
CLAMP DIN 3016-1 6X20XD1 W	7382088	14	1	215	10143342	LEAK OIL RETURN LINE

Description	Item	Pos.	Quantity	Page	Assembly	Description
CLAMP DIN 3016-1 8X15XD1 W	7381771	31	1	254	10151328	CABLE HARNESS MOUNTING
CLAMP DIN 3016-1 8X20XD1 W	7382090	37	4	254	10151328	CABLE HARNESS MOUNTING
CLAMP DIN 3017-1 16/12-20/9	4601105	6	1	182	10139112	OIL LINE PRE-ASSEMBLY
CLAMP DIN 3017-1 16/12-20/9	4601105	(3)	4	264	10148366	SEAL KIT DIESEL ENGINE
CLAMP EMVFSK 1 FEDERST	10424210	37	2	449	96036957	ELECTRIC ADD-ON PARTS CA
CLAMP EMVSK 12	602042808	38	2	449	96036957	ELECTRIC ADD-ON PARTS CA
CLAMP FITTING 1-3X21X9,3 ZE	262101308	68	0.04	384	917305408	INTERNAL PANELLING INSTA
CLAMP G-ST-52 FE//ZN20//C	97039859	6	3	494	96048826	EXHAUST SYSTEM PRE-ASSE
CLAMP SURE-SEAL	605215508	518	2	44	96045228	WIRING HARNESS
CLAMP SURE-SEAL	605215508	515	1	510	96045385	WIRING HARNESS
CLAMP SURE-SEAL	605215508	524	2	513	96037136	WIRING HARNESS
CLAMP SURE-SEAL	605215508	77	1	662	917292408	TELESCOPIC SECT.5 PRE-AS
CLAMP WELDED CONST.	966230708	29	1	405	917304708	SLIDING DOOR INSTALLATION
CLAMP WELDED CONST.	966230808	30	1	405	917304708	SLIDING DOOR INSTALLATION
CLAMP WELDED CONST. FE//	965426208	1	1	283	968026308	CLUTCH ACTUATOR
CLAMP WELDED CONST. FE//	968765608	25	4	30	917511508	CRAWLER CENTRE PART PRE
CLAMP-HALF 216-16 PP	602000708	301	26	699	967785008	ADDNL.HYDR. FOLDING JIB
CLAMP-HALF DIN 3015-1 L 0 G	602007808	326	64	51	96035801	HYDRAULIC EQUIPM.CENTER
CLAMP-HALF DIN 3015-1 L 0 R	7365090	37	4	21	96034894	PROTECTION PLATE CPL.
CLAMP-HALF DIN 3015-1 L 0 R	7365090	37	4	24	96034977	PROTECTION PLATE
CLAMP-HALF DIN 3015-1 L 0 R	7365090	309	62	51	96035801	HYDRAULIC EQUIPM.CENTER
CLAMP-HALF DIN 3015-1 L 1 R	602007108	35	12	672	966134608	ADD-ON PARTS CYLINDER
CLAMP-HALF DIN 3015-1 L 1 R	602007408	41	8	483	918484108	UREA PLANT
CLAMP-HALF DIN 3015-1 L 2 R	7362946	71	4	640	917291908	PIVOT SECTION, PRE-ASSEMB
CLAMP-HALF DIN 3015-1 L 2 R	602002208	306	6	478	969763408	PIPEWORK AIR INSTALLATIO
CLAMP-HALF DIN 3015-1 L 2 R	602008308	29	2	320	96023117	BATTERY BOX, PRE-ASSEMB
CLAMP-HALF DIN 3015-1 L 3 G	602008408	315	14	51	96035801	HYDRAULIC EQUIPM.CENTER
CLAMP-HALF DIN 3015-1 L 3 G	602008408	30	2	320	96023117	BATTERY BOX, PRE-ASSEMB
CLAMP-HALF DIN 3015-1 L 3 R	602008508	317	6	51	96035801	HYDRAULIC EQUIPM.CENTER
CLAMP-HALF DIN 3015-1 L 3 R	7005052	30	3	21	96034894	PROTECTION PLATE CPL.
CLAMP-HALF DIN 3015-1 L 3 R	7005052	30	3	24	96034977	PROTECTION PLATE
CLAMP-HALF DIN 3015-1 L 3 R	7005052	72	4	640	917291908	PIVOT SECTION, PRE-ASSEMB
CLAMP-HALF DIN 3015-1 L 3 R	7005052	36	2	672	966134608	ADD-ON PARTS CYLINDER
CLAMP-HALF DIN 3015-1 L 3 R	7005052	10	3	714	967933408	LOCATION FIXTURE PRE-ASS.
CLAMP-HALF DIN 3015-1 L 4 R	602008808	35	2	21	96034894	PROTECTION PLATE CPL.
CLAMP-HALF DIN 3015-1 L 4 R	602008808	35	2	24	96034977	PROTECTION PLATE
CLAMP-HALF DIN 3015-1 L 4 R	602008808	321	4	51	96035801	HYDRAULIC EQUIPM.CENTER
CLAMP-HALF DIN 3015-1 L 4 R	602008908	324	8	539	96045351	HYDRAULICS UPPER CARRI
CLAMP-HALF DIN 3015-1 L 5 R	602009008	304	2	699	967785008	ADDNL.HYDR. FOLDING JIB
CLAMP-HALF DIN 3015-1 L 5 R	602009108	315	4	539	96045351	HYDRAULICS UPPER CARRI
CLAMP-HALF DIN 3015-1 L 5 R	602009208	319	14	539	96045351	HYDRAULICS UPPER CARRI
CLAMP-HALF DIN 3015-1 L 6 R	602010108	309	6	90	96035796	HYDR.TRAVEL DRIVE
CLAMP-HALF DIN 3015-1 L 6 R	602010108	309	6	107	96035792	HYDR.TRAVEL DRIVE
CLAMP-HALF L 3 R 22 AL	11160668	190	4	276	919007708	DRIVE ASSEMBLY, PRE-ASSE
CLAMP-HALF S 4 E 64 PP	10492888	325	8	478	969763408	PIPEWORK AIR INSTALLATIO
CLAMPING BOARD 6XM6	604412408	1	1	523	922648308	TERMINAL BOARD PRE-ASS.
CLAMPING LEVER M10X32 ED	11320604	8	2	612	968993508	CAMERA HOLDER, PREMOU
CLAMPING LEVER M8 X10CRN	11642508	10	2	609	968994408	CAMERA HOLDER, PREMOU
CLAMPING LEVER M8 X10CRN	11642508	7	2	612	968993508	CAMERA HOLDER, PREMOU
CLAMPING PIECE 12 G20MN5	380057108	205	6	276	919007708	DRIVE ASSEMBLY, PRE-ASSE
CLAMPING PIECE 20X157X69 S	97055361	8	1	494	96048826	EXHAUST SYSTEM PRE-ASSE
CLAMPING PIECE 24	927606901	30	1	581	939294001	ROPE DRUM
CLAMPING PIECE PA6G+OEL	976873708	3	2	609	968994408	CAMERA HOLDER, PREMOU
CLAMPING PIECE PA6G+OEL	976873708	6	2	612	968993508	CAMERA HOLDER, PREMOU
CLAMPING PROFILE 1,5-4X25X	11002218	3	2.22	410	917676208	HEATING CRANE DRIVER'S CA
CLAMPING PROFILE 25,7X21,5	10876056	55	3.4	405	917304708	SLIDING DOOR INSTALLATION
CLAMPING PROFILE 2X13,5X2	10300600	11	4.2	405	917304708	SLIDING DOOR INSTALLATION
CLAMPING PROFILE 40X1M P	7014524	8	1	21	96034894	PROTECTION PLATE CPL.
CLAMPING PROFILE 40X1M P	7014524	8	1	24	96034977	PROTECTION PLATE
CLAMPING PROFILE 40X1M P	7014524	7	3	565	967980508	OIL COOLER, PRE-ASSEMBLE

Description	Item	Pos.	Quantity	Page	Assembly	Description
CLAMPING RING	11355067	9	1	486	10144093	REDUCTION AGENT INJECTO
CLAMPING RING RD10X12 PA6	288182508	35	1	462	918759808	ADD HEATING SUPERSTRUCT
CLAW	11004031	10	1	734	512363708	HYDRO CYLINDER
CLIP 23 ST	10216534	22	2	574	918628408	AIR COND. UNIT SUPERSTRU
CLOGGING INDICATOR	571356108	(4)	1	538	96045351	HYDRAULICS UPPER CARRI
CLOSING DEVICE	966230408	25	1	405	917304708	SLIDING DOOR INSTALLATION
CLOSING PIN 1.4305	97019129	52	1	405	917304708	SLIDING DOOR INSTALLATION
CLOSING PLATE	11643394	3	1	360	11182597	VARIABLE DISPLACEMENT MO
CLOSING PLATE	11643394	3	1	578	11211058	VARIABLE DISPLACEMENT MO
CLOSING RING	10803065	14	1	346	510229408	HYDRO MOTOR
CLOSING RING	570109808	4	1	347	570109008	DRIVING GEAR
CLUTCH ACTUATOR	968026308	7	1	275	919007708	DRIVE ASSEMBLY, PRE-ASSE
CLUTCH WRENCH 90MM	966796408	100	1	143	919328608	TOOLS AND ACCESSORIES
COLD MACHINE OIL WAECO	11211803	101	0.18	574	918628408	AIR COND. UNIT SUPERSTRU
COLLAR NUT M10X1,5	7361602	22	2	305	10871282	VARIABLE PUMP
COLLECTING PIPE 22L/10 A3C	10871151	200	1	539	96045351	HYDRAULICS UPPER CARRI
COLLECTING PIPE 42L/10 A3	10412850	202	1	539	96045351	HYDRAULICS UPPER CARRI
COLLECTING PIPE 42L/11 SPF	10871595	201	1	539	96045351	HYDRAULICS UPPER CARRI
COLLER BOLT	571430208	2	1	620	10040024	POUCH SOCKET
COMBI PLIERS DIN 5244 180	790031508	62	1	144	928569808	MAIN TOOLS
COMBINATED RADIATOR	97118133	100	1	280	96034631	RADIATOR, PRE-ASSEMBLED
COMPACT ROPE WINCH KSW	90028852	10	1	577	967969608	AUXILIARY HOISTING GEAR 2
COMPACT ROPE WINCH KSW	90208882	1	1	352	917259708	MAIN HOIST GEAR
COMPRESSED-AIR SYST.SU	917676308	155	1	10		LIEBHERR LTR 1220
COMPRESSION RING	502923708	46	2	449	96036957	ELECTRIC ADD-ON PARTS CA
COMPRESSION RING DR/R22	502932508	9	1	325	968999708	FUEL TANK, PRE-ASSEMBLED
COMPRESSION RING DR/R26	502932808	312	1	478	969763408	PIPEWORK AIR INSTALLATIO
CONICAL MOUNT 70NR11	10291989	2	4	369	967986308	BEARING INSTALLATION
CONICAL PLUG	779010901	80	1	357	939292201	PLANETARY GEARBOX
CONNECTING CABLE 4M	11692299	4	1	42	10450273	ANTENNA
CONNECTING DEVICE EN 358	12102869	3	1	153	916959808	PERSONAL PROTECTION EQ
CONNECTING LINE 7X0,25-10,0	10472995	30	1	518	919503008	SWITCHBOX MOUNTING PART
CONNECTING LINE ADD-ON R-	10149677	230	1	162	12856862	DIESEL ENGINE
CONNECTING LINE R-MOTORX	10141549	1	1	219	10147364	AIR INTAKE ASSEMBLY
CONNECTING PIECE Al Rm>2	10121666	1	1	179	10121667	CONNECTING PIECE W.O-RIN
CONNECTING PIECE PRE-ASS	10141790	217	1	162	12856862	DIESEL ENGINE
CONNECTING PIECE W.O-RIN	10121667	4	1	175	10132560	OIL SUMP WITH FASTENING
CONNECTING PIECE W.O-RIN	10121667	1	1	267	10141167	SEAL KIT OIL SUMP
CONNECTING PIPE 0	11000700	101	2	269	918731408	DRIVE ASSEMBLY CPL.
CONNECTING PIPE 0	11000700	21	2	410	917676208	HEATING CRANE DRIVER'S CA
CONNECTING PIPE 0	11000700	5	1	414	969085208	HEATING, PRE-ASSEMBLED
CONNECTING PIPE 0	11000700	11	1	462	918759808	ADD HEATING SUPERSTRUCT
CONNECTING PIPE 0	11000700	61	1	464	96020359	ADDNL.HEATING, PRE-ASSE
CONNECTING PLATE	10008308	2	1	295	11210798	VARIABLE PUMP
CONNECTING PLATE	10873570	3	1	294	11210795	VARIABLE PUMP
CONNECTING PLATE	11003841	16	1	681	10354493	CABLE REEL
CONNECTING PLATE	510629508	175	1	539	96045351	HYDRAULICS UPPER CARRI
CONNECTING PLATE	510629508	173	1	589	967784808	HYDR.AUXILIARY HOISTING
CONNECTING PLATE	570109208	4	1	346	510229408	HYDRO MOTOR
CONNECTING PLATE	571907208	2	1	305	10871282	VARIABLE PUMP
CONNECTING PLATE DP1-10/3	511058308	196	1	539	96045351	HYDRAULICS UPPER CARRI
CONNECTING ROD BEARING 8	10145100	(2)	1	161	12856862	DIESEL ENGINE
CONNECTING ROD BEARING 8	10145101	(3)	1	161	12856862	DIESEL ENGINE
CONNECTING ROD BEARING	9073699	(3)	1	161	12856862	DIESEL ENGINE
CONNECTING ROD BEARING	9075607	(2)	1	161	12856862	DIESEL ENGINE
CONNECTION BLOCK	511055908	169	1	538	96045351	HYDRAULICS UPPER CARRI
CONNECTION CABLE	12102265	29	1	675	10802064	ROPE LENGTH INDICATOR
CONNECTION CABLE 2X0,75-1	10877798	12	1	446	96036955	WIRING HARNESS
CONNECTION CABLE 2X0,75-1	10877798	6	1	516	96037133	LEAD
CONNECTION CABLE 2X0,75-1	10877798	6	1	617	96037132	LEAD

Description	Item	Pos.	Quantity	Page	Assembly	Description
CONNECTION CABLE 2X0,75-	10877801	19	1	510	96045385	WIRING HARNESS
CONNECTION CABLE 2X0,75-	10877801	372	1	510	96045385	WIRING HARNESS
CONNECTION CABLE 2X0,75-	10877801	388	1	513	96037136	WIRING HARNESS
CONNECTION CABLE 2X0,75-	10877801	389	1	513	96037136	WIRING HARNESS
CONNECTION CABLE 2X0,75-5	10877800	371	1	510	96045385	WIRING HARNESS
CONNECTION CARRIER 42CrM	927745001	1	1	357	939292201	PLANETARY GEARBOX
CONNECTION FLANGE	511057608	188	1	539	96045351	HYDRAULICS UPPER CARRI
CONNECTION FLANGE	511057608	172	1	589	967784808	HYDR.AUXILIARY HOISTING
CONNECTION PIECE	96035597	3	2	314	96034515	EXPANSION TANK PRE-ASS.
CONNECTION PIECE	96039022	2	1	315	96034522	EQUALIZING RESERVOIR
CONNECTION STUB 11SMnPb3	927586201	12	2	361	90200104	OIL-GAUGING INSTRUMENT
CONNECTION STUB 11SMnPb3	927586201	12	1	585	90200103	OIL-GAUGING INSTRUMENT
CONNECTOR FOR FUEL HEAT	962196208	515	1	513	96037136	WIRING HARNESS
CONNECTOR PIN 0,75-2,0MM2	10100062	669	2	447	96036955	WIRING HARNESS
CONNECTOR PIN 0,75-2,0MM2	10100062	669	4	513	96037136	WIRING HARNESS
CONNECTOR PLUG A	12102524	20	2	58	11643183	CONTROL BLOCK
CONNECTOR PLUG A AX	602337008	508	3	448	96036956	WIRING HARNESS
CONNECTOR PLUG A AX	602337008	518	1	520	96045387	CABLES, BASIC CONSTRUCTI
CONROD	571582508	11	1	226	5700161	AIR COMPRESSOR
CONROD R-MOTORX88	11348072	60	4	161	12856862	DIESEL ENGINE
CONSOLE 4X1167X434 S315M	97060662	4	1	483	918484108	UREA PLANT
CONSOLE 4X163X242 S315MC	97058382	11	2	429	96036790	SLEWING PLATFORM PANELLI
CONSOLE 4X257X253 S315MC	97056391	7	1	545	96035117	MECHANICAL AUXILIARIES
CONSOLE 4X277X179 S315MC	97065229	42	1	275	919007708	DRIVE ASSEMBLY, PRE-ASSE
CONSOLE 4X470X340 S315MC	97056389	6	1	545	96035117	MECHANICAL AUXILIARIES
CONSOLE AUX. REPLENISHIN	917269408	389	1	12		LIEBHERR LTR 1220
CONSOLE FOR FILTER PRE-A	10133928	1	1	212	10146791	FUEL FINE-FILTER ASSEMBLY
CONSOLE PRE-ASS.	923879808	40	1	731	917267508	TRANSPORT MOUNTING
CONSOLE PRE-ASS.	968646408	2	1	600	917269408	CONSOLE AUX. REPLENISHIN
CONSOLE PRE-ASS.	968728808	1	1	719	968811608	CROSS BEAM
CONSOLE PRE-ASS.	969431008	3	1	545	96035117	MECHANICAL AUXILIARIES
CONSOLE X5CrNi18-10	10149679	3	1	220	10149677	CONNECTING LINE ADD-ON
CONTACT 0,5-1MM2	602300308	125	35	43	96045227	WIRING HARNESS
CONTACT 0,5-1MM2	602300308	125	19	44	96045228	WIRING HARNESS
CONTACT 0,5-1MM2	602300308	125	110	446	96036955	WIRING HARNESS
CONTACT 0,5-1MM2	602300308	125	118	448	96036956	WIRING HARNESS
CONTACT 0,5-1MM2	602300308	125	96	510	96045385	WIRING HARNESS
CONTACT 0,5-1MM2	602300308	125	92	512	96037136	WIRING HARNESS
CONTACT 0,5-1MM2	602300308	125	27	514	96037137	WIRING HARNESS
CONTACT 0,5-1MM2	602300308	125	2	516	96037133	LEAD
CONTACT 0,5-1MM2	602300308	125	6	615	96043733	WIRING HARNESS
CONTACT 0,5-1MM2	602329108	617	12	44	96045228	WIRING HARNESS
CONTACT 0,5-1MM2	602329108	617	8	513	96037136	WIRING HARNESS
CONTACT 1,0-2,5MM2	10877344	2259	5	447	96036955	WIRING HARNESS
CONTACT 1-2,5MM2	602300108	121	14	43	96045227	WIRING HARNESS
CONTACT 1-2,5MM2	602300108	121	1	44	96045228	WIRING HARNESS
CONTACT 1-2,5MM2	602300108	121	13	446	96036955	WIRING HARNESS
CONTACT 1-2,5MM2	602300108	121	27	448	96036956	WIRING HARNESS
CONTACT 1-2,5MM2	602300108	121	13	510	96045385	WIRING HARNESS
CONTACT 1-2,5MM2	602300108	121	21	512	96037136	WIRING HARNESS
CONTACT 1-2,5MM2	602300108	121	9	514	96037137	WIRING HARNESS
CONTACT BOW	691041608	19	21	47	11346779	SLIP RING TRANSMITTER
CONTACT BOW HOLDER	10359128	21	2	47	11346779	SLIP RING TRANSMITTER
CONTACT BOW HOLDER	691043108	17	35	47	11346779	SLIP RING TRANSMITTER
CONTACT GUARD	968798408	2	1	494	96048826	EXHAUST SYSTEM PRE-ASSE
CONTACT LOCK 2-POL	12693951	524	1	514	96037137	WIRING HARNESS
CONTACT LOCK 2-POL	7368241	526	1	447	96036955	WIRING HARNESS
CONTACT LOCK 2-POL	7368241	527	2	513	96037136	WIRING HARNESS
CONTACT LOCK 2-POL	7368241	523	2	514	96037137	WIRING HARNESS
CONTACT LOCK DT 12 POLIG	10216772	513	1	513	96037136	WIRING HARNESS

Description	Item	Pos.	Quantity	Page	Assembly	Description
CONTACT LOCK DT V-KEIL	10342519	510	2	446	96036955	WIRING HARNESS
CONTACT LOCK DT V-KEIL	10342519	526	3	513	96037136	WIRING HARNESS
CONTACT LOCK DT V-KEIL	10342519	518	2	514	96037137	WIRING HARNESS
CONTACT LOCK DT-STECKD	7368246	504	1	514	96037137	WIRING HARNESS
CONTACT LOCK DT-STECKER	6205242	521	1	514	96037137	WIRING HARNESS
CONTACT RETAINING PIN 9P	10045101	509	1	43	96045227	WIRING HARNESS
CONTACT RETAINING PIN 9P	10045101	528	2	520	96045387	CABLES, BASIC CONSTRUCTI
CONTACT RETAINING PIN JPT	10099866	511	1	43	96045227	WIRING HARNESS
CONTACT RETAINING PIN JPT	10099866	507	1	513	96037136	WIRING HARNESS
CONTACT RETAINING PIN JPT	10099867	513	1	43	96045227	WIRING HARNESS
CONTACT RETAINING PIN JPT	10099867	511	7	520	96045387	CABLES, BASIC CONSTRUCTI
CONTACT RETAINING PIN JPT	10099868	502	2	43	96045227	WIRING HARNESS
CONTACT RETAINING PIN JPT	10099868	522	9	520	96045387	CABLES, BASIC CONSTRUCTI
CONTACT SET	11659642	22	1	675	10802064	ROPE LENGTH INDICATOR
CONTAINER 2,5 KG	10038271	26	1	128	11347526	ELECTRIC PUMP
CONTAINER 2,5 KG	10038271	29	1	504	10327065	ELECTRIC PUMP
CONTAINER PLUG	570066208	4	1	94	502806508	EQUALIZING RESERVOIR
CONTAINER SCREW JOINT	10878281	2	1	93	96028333	EXPANSION TANK CPL.
CONTAINER SCREW JOINT	10878281	(2)	1	589	967784808	HYDR.AUXILIARY HOISTING
CONTROL BLOCK 315BAR SP	12100860	26	1	538	96045351	HYDRAULICS UPPER CARRI
CONTROL BLOCK 320BAR SP	11211756	21	1	538	96045351	HYDRAULICS UPPER CARRI
CONTROL BLOCK 330BAR SP	10332882	24	1	538	96045351	HYDRAULICS UPPER CARRI
CONTROL BLOCK 365BAR SP	10413106	22	1	538	96045351	HYDRAULICS UPPER CARRI
CONTROL BLOCK 380BAR SP	11341035	27	1	538	96045351	HYDRAULICS UPPER CARRI
CONTROL BLOCK 420BAR SP	11643183	21	1	51	96035801	HYDRAULIC EQUIPM.CENTER
CONTROL BLOCK 420BAR SP	11643184	22	1	51	96035801	HYDRAULIC EQUIPM.CENTER
CONTROL BLOCK SPF	10038509	21	1	595	969426308	AUX. HYDR. FOLDING JIB SP
CONTROL BOX ANNEXE	10144227	571	1	165	12856862	DIESEL ENGINE
CONTROL ELEMENT	11161917	4	1	74	11182596	VARIABLE DISPLACEMENT MO
CONTROL ELEMENT	11161917	4	1	360	11182597	VARIABLE DISPLACEMENT MO
CONTROL ELEMENT	11161917	4	1	578	11211058	VARIABLE DISPLACEMENT MO
CONTROL LEAD 12 X 0,75 SPF	600460808	5	6.6	510	96045385	WIRING HARNESS
CONTROL LEAD 4 X 0,5 SPF	600463908	9	3.13	44	96045228	WIRING HARNESS
CONTROL LEAD 4 X 0,5 SPF	600463908	10	2.63	44	96045228	WIRING HARNESS
CONTROL LEAD 4 X 0,5 SPF	600463908	16	6.06	44	96045228	WIRING HARNESS
CONTROL LEAD 4 X 0,5 SPF	600463908	17	6.06	44	96045228	WIRING HARNESS
CONTROL LEAD 5 X 0,5 SPF	600462908	(5)	1.46	711	917598408	ELECTRIC MEASURING & WAR
CONTROL PANEL ROOF	96022872	2	1	449	96036957	ELECTRIC ADD-ON PARTS CA
CONTROL PANEL SUPPORT	10009700	57	1	412	11083498	AIR CONDITIONING UNIT
CONTROL PARTS	9079870	110	4	161	12856862	DIESEL ENGINE
CONTROL STAND	918810308	135	1	10		LIEBHERR LTR 1220
CONTROL UNIT	10471384	5	1	294	11210795	VARIABLE PUMP
CONTROL UNIT	11690588	5	1	286	11182708	VARIABLE PUMP
CONTROL UNIT	11690588	5	1	289	10871017	VARIABLE PUMP
CONTROL VALVE	11692439	50	1	302	10871043	VARIABLE PUMP
COOLANT PIPE BEND ADD-ON	10142742	382	1	163	12856862	DIESEL ENGINE
COOLER GRILL 820X730X80	96007145	2	1	628	919028808	DISPATCH ASSY.MECH.PART
COOLING WATER AIR BLEED	10142744	387	1	163	12856862	DIESEL ENGINE
COOLING WATER HOSE 55/6	97050894	251	1	276	919007708	DRIVE ASSEMBLY, PRE-ASSE
COOLING WATER HOSE 55/65	97050893	250	1	276	919007708	DRIVE ASSEMBLY, PRE-ASSE
COOLING WATER HOSE DN20-	11621770	12	0.06	414	969085208	HEATING, PRE-ASSEMBLED
COOLING WATER HOSE DN20-	11621770	14	0.7	414	969085208	HEATING, PRE-ASSEMBLED
COOLING WATER HOSE DN20-	11621770	14	0.1	462	918759808	ADD HEATING SUPERSTRUCT
COOLING WATER HOSE DN20-	11621770	28	0.07	464	96020359	ADDNL.HEATING, PRE-ASSE
COOLING WATER LINE 12X1	10145177	1	1	229	10145278	ACCESSORIES AIR COMPRES
COOLING WATER LINE 12X1	10145178	2	1	229	10145278	ACCESSORIES AIR COMPRES
COOLING WATER PRE-HEATI	918377508	401	1	12		LIEBHERR LTR 1220
COPPER PASTE 850g	10002552	132	1	238	10140729	EXHAUST TC MOUNTING
CORE PIN DIN 1472 4X12	431100201	21	1	355	932916901	ROPE DRUM
CORE PIN DIN 1472 4X12	431100201	24	1	581	939294001	ROPE DRUM

Description	Item	Pos.	Quantity	Page	Assembly	Description
CORE PIN DIN 1473 5X24	431204301	18	1	581	939294001	ROPE DRUM
CORE PIN ISO 8740 3X20	431200501	91	3	340	90008901	SLEWING GEAR DRIVE
CORRUGATED PIPE DN10 PA	10475426	160	3.4	41	966204108	ANTENNA CPL.
COTTER PIN FE//ZNNI8//CN//T	968014808	13	4	121	919644008	HYDRAULIC SUPPORT
COUNTER NUT M20x1,5 PA6	10036629	10	2	603	917368108	EL.COOLANT PREHEAT
COUNTER NUT M25X1,5 POLY	10042696	13	2	598	918462708	EXTERNAL FEED
COUNTER NUT PG16 KUNST	602419608	9	1	598	918462708	EXTERNAL FEED
COUNTERSUNK SCREW AEHN	12100589	45	4	417	918810308	CONTROL STAND
COUNTERSUNK SCREW AEHN	12100589	13	12	433	968923508	FLAP RIGHT PRE-ASS.
COUNTERSUNK SCREW AEHN	12100589	3	8	441	969016008	FLAP LEFT FRONT PRE-ASS.
COUNTERSUNK SCREW DIN 7	10877246	15	16	661	917292408	TELESCOPIC SECT.5 PRE-AS
COUNTERSUNK SCREW DIN 7	10179447	40	36	116	968046208	ADD-ON PARTS
COUNTERSUNK SCREW DIN	10876388	46	8	522	969256608	BASE ASSEMBLY
COUNTERSUNK SCREW DIN 7	408603508	33	4	417	918810308	CONTROL STAND
COUNTERSUNK SCREW DIN	10875549	20	2	396	916168308	AIR DUCT
COUNTERSUNK SCREW DIN	10875550	16	8	518	919503008	SWITCHBOX MOUNTING PART
COUNTERSUNK SCREW DIN	10875550	51	16	522	969256608	BASE ASSEMBLY
COUNTERSUNK SCREW DIN	10875809	11	4	390	916162508	WINDOW ASSEMBLY
COUNTERSUNK SCREW DIN	10875809	6	4	737	917268208	LADDER ATTACHMENT
COUNTERSUNK SCREW DIN	10875551	16	6	365	917259908	CRANE DRIVER CAB ADDITIO
COUNTERSUNK SCREW DIN	10875551	12	8	390	916162508	WINDOW ASSEMBLY
COUNTERSUNK SCREW DIN	10875551	13	8	393	966497908	FRONT WINDOW CPL.
COUNTERSUNK SCREW DIN	10875551	18	4	405	917304708	SLIDING DOOR INSTALLATION
COUNTERSUNK SCREW DIN	11113906	33	4	116	968046208	ADD-ON PARTS
COUNTERSUNK SCREW DIN	10875552	17	16	121	919644008	HYDRAULIC SUPPORT
COUNTERSUNK SCREW DIN	10875552	51	6	639	917291908	PIVOT SECTION, PRE-ASSEMB
COUNTERSUNK SCREW DIN	10875552	57	6	644	917292008	TELESCOPIC SECTION 1 PRE
COUNTERSUNK SCREW DIN	10875553	64	4	18	919617108	CRAWLER TRACK TRAVEL G
COUNTERSUNK SCREW DIN	10875553	3	3	47	11346779	SLIP RING TRANSMITTER
COUNTERSUNK SCREW ISO 1	12100586	10	8	625	967936908	COUNTERWEIGHT CPL.
COUNTERSUNK SCREW ISO 1	12100586	11	2	728	917413208	SELF-ERECT. AUX. HOIST GEA
COUNTERSUNK SCREW ISO	10878064	16	56	17	919617108	CRAWLER TRACK TRAVEL G
COUNTERSUNK SCREW ISO	12100279	10	4	394	965784408	ROOF WINDOW PRE-ASS.
COUNTERSUNK SCREW ISO 1	12210040	4	3	186	10153583	CRANKSHAFT SEALING
COUNTERSUNK SCREW ISO	12216233	12	12	335	969050308	OIL TANK PRE-ASS.
COUNTERSUNK SCREW ISO	12100291	3	4	628	919028808	DISPATCH ASSY.MECH.PART
COUNTERWEIGHT CPL.	967936908	1	1	623	917260608	COUNTERWEIGHT WITH CLAM
COUNTERWEIGHT CPL. 2400X	967916508	31	2	626	917404508	BALLAST
COUNTERWEIGHT CPL. 2400X	967916508	41	1	627	917404008	ADDITIONAL BALLAST
COUNTERWEIGHT CPL. 2400X	967916808	30	2	626	917404508	BALLAST
COUNTERWEIGHT CPL. 2400X	967916808	40	1	627	917404008	ADDITIONAL BALLAST
COUNTERWEIGHT WELDED	967937508	1	1	625	967936908	COUNTERWEIGHT CPL.
COUNTERWEIGHT WITH CLAM	917260608	146	1	10		LIEBHERR LTR 1220
COUPLING	97066819	101	1	275	919007708	DRIVE ASSEMBLY, PRE-ASSE
COUPLING 16MnCrS5	12861845	25	1	207	10149198	RK PRE-FEED PUMP
COUPLING PLUG	774372708	12	1	502	917261208	CENT. LUBRIC. SYSTEM SUP
COUPLING PLUG	774372708	2	2	586	921444108	CENTRAL LUBRICATING SYS
COUPLING PLUG B2 10-L	511515008	151	2	688	967784508	HYDR.F.TELESCOPIC BOOM
COUPLING PLUG B3 16-S	511508608	153	3	699	967785008	ADDNL.HYDR. FOLDING JIB
COUPLING PLUG B6 22-L	511508108	163	1	589	967784808	HYDR.AUXILIARY HOISTING
COUPLING PLUG B6 25-S	510599708	160	1	589	967784808	HYDR.AUXILIARY HOISTING
COUPLING PLUG B8 38-S	511512308	155	2	589	967784808	HYDR.AUXILIARY HOISTING
COUPLING SLEEVE	774372608	11	1	502	917261208	CENT. LUBRIC. SYSTEM SUP
COUPLING SLEEVE	774372608	1	1	586	921444108	CENTRAL LUBRICATING SYS
COUPLING SLEEVE 3/8"-10L	10031989	155	1	699	967785008	ADDNL.HYDR. FOLDING JIB
COUPLING SLEEVE B2 12-L	511505808	176	2	539	96045351	HYDRAULICS UPPER CARRI
COUPLING SLEEVE B3 16-S	511505908	151	3	699	967785008	ADDNL.HYDR. FOLDING JIB
COUPLING SLEEVE B6 22-L	511508208	162	1	589	967784808	HYDR.AUXILIARY HOISTING
COUPLING SLEEVE B6 25-S	510599608	158	1	589	967784808	HYDR.AUXILIARY HOISTING
COUPLING SLEEVE B8 38-S	511512208	153	2	589	967784808	HYDR.AUXILIARY HOISTING

Description	Item	Pos.	Quantity	Page	Assembly	Description
COUPLING SOCKET 3-POL G	605012708	7	1	598	918462708	EXTERNAL FEED
COUPLING SOCKET 4-POL 90°	680000708	5	1	446	96036955	WIRING HARNESS
COUPLING SOCKET 4-POL G	680001708	12	1	510	96045385	WIRING HARNESS
COUPLING SOCKET 4-POL SP	10678491	6	1	44	96045228	WIRING HARNESS
COUPLING SOCKET 4-POL SP	10678491	13	1	510	96045385	WIRING HARNESS
COUPLING SOCKET 4-POL SP	10678491	5	1	512	96037136	WIRING HARNESS
COUPLING SOCKET 4-POL SP	10678491	6	1	512	96037136	WIRING HARNESS
COUPLING SOCKET 4-POL SP	10678491	7	1	512	96037136	WIRING HARNESS
COUPLING SOCKET 4-POL SP	10678491	8	1	512	96037136	WIRING HARNESS
COUPLING SOCKET 4-POL SP	10678491	9	1	512	96037136	WIRING HARNESS
COUPLING SOCKET 4-POL SP	10678494	10	1	510	96045385	WIRING HARNESS
COUPLING SOCKET 4-POL SP	10871126	5	1	140	96045205	WIRING HARNESS
COUPLING SOCKET 4-POL SP	10871126	375	1	510	96045385	WIRING HARNESS
COUPLING SOCKET 4-POL SP	10871126	377	1	510	96045385	WIRING HARNESS
COUPLING SOCKET 4-POL SP	10871127	376	1	510	96045385	WIRING HARNESS
COUPLING SOCKET 4-POL SP	10871127	378	1	510	96045385	WIRING HARNESS
COUPLING SOCKET 4-POL SP	10873383	6	1	140	96045205	WIRING HARNESS
COUPLING SOCKET 4-POL SP	680001408	5	1	44	96045228	WIRING HARNESS
COUPLING SOCKET 4-POL SP	680001408	7	1	510	96045385	WIRING HARNESS
COUPLING SOCKET 4-POL SP	680001408	8	1	510	96045385	WIRING HARNESS
COUPLING SOCKET 4-POL SP	680001408	9	1	510	96045385	WIRING HARNESS
COUPLING SOCKET 4-POL SP	680001408	14	1	510	96045385	WIRING HARNESS
COUPLING SOCKET 4-POL SP	680001408	15	1	510	96045385	WIRING HARNESS
COUPLING SOCKET 4-POL SP	680001408	16	1	510	96045385	WIRING HARNESS
COUPLING SOCKET 4-POL SP	680001408	(6)	1	711	917598408	ELECTRIC MEASURING & WAR
COUPLING SOCKET 4-POLE 90	680000308	6	1	448	96036956	WIRING HARNESS
COUPLING SOCKET 4-POLE 90	680000808	11	1	510	96045385	WIRING HARNESS
COUPLING SOCKET 4-POLE	680000008	6	1	446	96036955	WIRING HARNESS
COUPLING SOCKET 4-POLE	680000008	5	1	448	96036956	WIRING HARNESS
COUPLING SOCKET 4-POLE	680000008	7	1	448	96036956	WIRING HARNESS
COUPLING SOCKET 4-POLE	680000008	(7)	1	711	917598408	ELECTRIC MEASURING & WAR
COVER	10122319	1	1	263	9078301	LOCKING PIECES
COVER	10286353	296	1	685	968708708	TERMINAL BOX CPL.
COVER	10297241	5	1	500	10871700	AIR FILTER
COVER	10331026	61	1	450	96036957	ELECTRIC ADD-ON PARTS CA
COVER	10650507	(2)	1	424	916049908	MIRROR ATTACHM.IN CRANE
COVER	10663059	7	1	305	10871282	VARIABLE PUMP
COVER	11005170	17	1	419	10877138	OPERATOR SEAT
COVER	11171270	32	1	419	10877138	OPERATOR SEAT
COVER	11368890	9	1	330	10878502	FUEL FILTER
COVER	12102477	40	1	128	11347526	ELECTRIC PUMP
COVER	12102477	34	1	504	10327065	ELECTRIC PUMP
COVER	602761708	6	1	524	967589508	TERMINAL STRIP
COVER	636109301	4	1	524	967589508	TERMINAL STRIP
COVER	9178294	(6)	1	260	10125687	POWER TAKE-OFF ADD-ON
COVER	9273690	6	1	261	10144036	POWER TAKE-OFF ADD-ON
COVER 10X220X220 ALMG3 F2	972272908	4	1	335	969050308	OIL TANK PRE-ASS.
COVER 25X300X300 PA6G	973077908	11	3	639	917291908	PIVOT SECTION, PRE-ASSEMB
COVER 289X289X12 PA6G	97027203	62	3	645	917292008	TELESCOPIC SECTION 1 PRE
COVER 289X289X12 PA6G	97027203	62	3	648	917292108	TELESCOPIC SECT.2 PRE-AS
COVER 289X289X12 PA6G	97027203	62	3	652	917292208	TELESCOPIC SECT.3 PRE-ASS
COVER 289X289X12 PA6G	97027203	62	3	656	917292308	TELESCOPIC SECT.IV PRE-A
COVER 4X1260X860 ALMG3 H	97031860	10	1	30	917511508	CRAWLER CENTRE PART PRE
COVER 4x83x84 S315MC FE//	970477608	8	2	672	966134608	ADD-ON PARTS CYLINDER
COVER 635X575X95 ABS	97007030	2	1	410	917676208	HEATING CRANE DRIVER'S CA
COVER 8X735X83 PE SCHWAR	97008572	13	1	390	916162508	WINDOW ASSEMBLY
COVER Al Rm>200N/m	10127967	1	1	250	10127979	LOCKING PIECES
COVER COMPL.	963544508	26	3	429	96036790	SLEWING PLATFORM PANELLI
COVER COMPL.	963544508	4	1	497	96039740	ADDITIONAL PARTS CLADDIN
COVER COMPL.	963949708	39	1	429	96036790	SLEWING PLATFORM PANELLI

Description	Item	Pos.	Quantity	Page	Assembly	Description
COVER COMPL.	964093408	9	1	429	96036790	SLEWING PLATFORM PANELLI
COVER COMPL.	966167808	2	1	36	96045226	SWITCH BOX COMPL.
COVER COMPL.	969493508	19	1	429	96036790	SLEWING PLATFORM PANELLI
COVER EN AC-Al Si8	10124116	1	1	244	10115664	LOCKING PIECES
COVER GLUED	966189708	1	1	37	966167808	COVER COMPL.
COVER HOOD	10451017	17	1	681	10354493	CABLE REEL
COVER LID	11171306	2	1	712	11482252	WIND VELOCITY TRANSMITTE
COVER LID 112,7 PPA	10115832	7	1	177	10155227	OIL SUMP PRE-ASS.
COVER LID 36X22 PVC-SW	10215892	9	1	459	966707708	MIRROR RETAINER PRE-ASS.
COVER LID 700 M18X1,5 PA 6	10129392	28	2	207	10149198	RK PRE-FEED PUMP
COVER LID 700 M18X1,5 PA 6	10129392	2	2	208	12489819	COVERING CAPS - KIT
COVER LID POLYSTIC27-33 AB	591570908	102	3	429	96036790	SLEWING PLATFORM PANELLI
COVER LID POLYSTIC27-33 AB	591570908	51	1	449	96036957	ELECTRIC ADD-ON PARTS CA
COVER LID POLYSTIC27-33 AB	591570908	6	1	453	96022872	CONTROL PANEL ROOF
COVER LID POLYSTIC27-33 AB	591570908	8	1	526	968063108	PRE-ASSEMBLY MOUNTING U
COVER LID PP	10129394	7	1	208	12489819	COVERING CAPS - KIT
COVER MOLERIT T59	11008024	527	4	447	96036955	WIRING HARNESS
COVER PLATE	11494286	41	2	724	910836808	HOOK BLOCK
COVER PLATE PRE-ASS.	965021508	46	2	417	918810308	CONTROL STAND
COVER PLATE ST.CONST.	969016108	3	1	439	969015908	SLEWING PLATFORM PANELLI
COVER PLATE ST.CONST. SP	968928808	3	1	429	96036790	SLEWING PLATFORM PANELLI
COVER PRE-ASSY.	967972208	9	1	70	919254308	CRAWLER SUPPORT PREASS
COVER PRE-ASSY.	967972308	10	1	70	919254308	CRAWLER SUPPORT PREASS
COVER PRE-ASSY.	967972308	10	1	100	919254408	CRAWLER SUPPORT PREASS
COVER PRE-ASSY.	967972408	11	4	70	919254308	CRAWLER SUPPORT PREASS
COVER PRE-ASSY.	967972408	11	4	100	919254408	CRAWLER SUPPORT PREASS
COVER PRE-ASSY.	968055808	9	1	100	919254408	CRAWLER SUPPORT PREASS
COVER PRE-ASSY.	968270108	29	1	70	919254308	CRAWLER SUPPORT PREASS
COVER PRE-ASSY.	968270108	29	1	100	919254408	CRAWLER SUPPORT PREASS
COVER PRE-ASSY.	968274208	33	1	70	919254308	CRAWLER SUPPORT PREASS
COVER PRE-ASSY.	968274208	33	1	100	919254408	CRAWLER SUPPORT PREASS
COVER PRE-ASSY.	968709108	34	1	70	919254308	CRAWLER SUPPORT PREASS
COVER PRE-ASSY.	968709108	34	1	100	919254408	CRAWLER SUPPORT PREASS
COVER RD190X6 S355MC FE//	935508808	52	8	17	919617108	CRAWLER TRACK TRAVEL G
COVER RD330X27 PA6G	972144708	8	1	639	917291908	PIVOT SECTION, PRE-ASSEMB
COVER S235JR	10117094	10	1	248	10116110	LOCKING PIECES
COVER WELDED	96029256	3	1	639	917291908	PIVOT SECTION, PRE-ASSEMB
COVER WELDED RAL 7016,SD	968075708	1	1	378	968514508	INSTALLATION SWITCH CAB. C
COVER WELDED SPF	969002508	7	1	429	96036790	SLEWING PLATFORM PANELLI
COVERING	12100617	(1)	1	419	10877138	OPERATOR SEAT
COVERING	12100619	(1)	1	419	10877138	OPERATOR SEAT
COVERING	12103044	10	1	675	10802064	ROPE LENGTH INDICATOR
COVERING CAPS - KIT	12489819	240	1	206	10146658	HIGH PRESSURE PUMP
COVERING SL 015	692600708	23	1	675	10802064	ROPE LENGTH INDICATOR
CRANE DRIVER CAB ADDITIO	917259908	129	1	10		LIEBHERR LTR 1220
CRANE DRIVER CABIN, UNFIN	917304608	132	1	10		LIEBHERR LTR 1220
CRANE DRIVER'S CABIN PUR	916165808	1	1	401	917304608	CRANE DRIVER CABIN, UNFINI
CRANE OPERATOR CABIN P	917304508	131	1	10		LIEBHERR LTR 1220
CRANE OPERATOR CABIN P	919010208	130	1	10		LIEBHERR LTR 1220
CRANKCASE BREATHER	10136798	1	1	173	10126713	CRANKCASE BREATHER ASS
CRANKCASE BREATHER ASS	10126713	16	1	160	12856862	DIESEL ENGINE
CRANKCASE CPL. WITH CYLI	11389608	10	1	160	12856862	DIESEL ENGINE
CRANKCASE PRE-ASSY. R-M	10154379	1	1	167	11389608	CRANKCASE CPL. WITH CYLIN
CRANKSHAFT ADD-ON PARTS	10141974	53	1	160	12856862	DIESEL ENGINE
CRANKSHAFT R-MOTORXD934	10131177	1	1	183	10147438	CRANKSHAFT WITH GEAR
CRANKSHAFT SEALING	10153583	52	1	160	12856862	DIESEL ENGINE
CRANKSHAFT WITH GEAR R-M	10147438	50	1	160	12856862	DIESEL ENGINE
CRAWLER CARRIER RIGHT CP	919254208	11	1	9		LIEBHERR LTR 1220
CRAWLER CARRIER STEEL	96018230	1	1	70	919254308	CRAWLER SUPPORT PREASS
CRAWLER CARRIER STEEL	96019396	1	1	100	919254408	CRAWLER SUPPORT PREASS

Description	Item	Pos.	Quantity	Page	Assembly	Description
CRAWLER CENTRE PART PRE	917511508	1	1	27	919499308	CENTRAL SECTION CRAWLER
CRAWLER CHAIN CPL.	11695999	1	1	64	917436708	FLOOR SHEET COMPL.
CRAWLER SUPPORT PREASS	919254308	1	1	65	919254108	CRAWLER TRACK CARRIER LE
CRAWLER SUPPORT PREASS	919254408	1	1	95	919254208	CRAWLER CARRIER RIGHT CP
CRAWLER TRACK CARRIER L	919254108	10	1	9		LIEBHERR LTR 1220
CRAWLER TRACK TRAVEL GE	919617108	2	1	9		LIEBHERR LTR 1220
CRIMPING CONTACT 0,2-0,56	602322808	615	55	447	96036955	WIRING HARNESS
CROSS BEAM CPL.	918925508	6	2	9		LIEBHERR LTR 1220
CROSS BEAM DEMONTAGE	968811608	1	1	718	917611508	SLINGING MEAN
CROSS MEMBER STEEL CON	96023109	1	1	63	918925508	CROSS BEAM CPL.
CROSS STRAP	968498108	2	1	629	968068308	ASSEMBLY DEVICE
CROSS-MEMBER LMZ-70T SP	968497408	1	1	722	917531708	BALLAST TRAVERSE
CROWN NUT DIN 935 M36 10 F	10179495	5	1	721	968728808	CONSOLE PRE-ASS.
CUP HEAD SQUARE NECK B	10181375	300	2	280	96034631	RADIATOR, PRE-ASSEMBLED
CUP HEAD SQUARE NECK B	10181375	20	4	609	968994408	CAMERA HOLDER, PREMOU
CUP HEAD SQUARE NECK B	10181375	11	4	612	968993508	CAMERA HOLDER, PREMOU
CUP HOLDER	10291999	8	1	370	96015921	OPERATING ELEMENT INSTAL
CUP SPRING PILLAR	570033608	11	1	307	10872488	DRIVING GEAR
CURRENT COLLECTOR	10491892	15	8	681	10354493	CABLE REEL
CURRENT SOURCE LSB SPF	10027448	20	2	522	969256608	BASE ASSEMBLY
CYCLE VALVE 3.4BAR 8L/MIN 6	10149191	(1)	1	164	12856862	DIESEL ENGINE
CYCLE VALVE 3.4BAR 8L/MIN 6	11420633	436	1	164	12856862	DIESEL ENGINE
CYL.ROLLER 14X14	747006101	17	114	357	939292201	PLANETARY GEARBOX
CYL.ROLLER 14X14	747006101	17	114	583	939294201	PLANETARY GEARBOX
CYL.ROLLER DIN 5402-1 32X3	747004501	3	78	73	90028956	TRACTION DRIVE
CYLINDER	570110308	1	1	348	570109508	DRIVING GEAR
CYLINDER BUSHING E2728-M	10153973	1	1	169	10154458	CYLINDER
CYLINDER HANDLE	704004608	120	1	283	968026308	CLUTCH ACTUATOR
CYLINDER HEAD	7025732	23	1	226	5700161	AIR COMPRESSOR
CYLINDER HEAD ASSEMBLY	10149580	80	4	161	12856862	DIESEL ENGINE
CYLINDER HEAD COVER	10134698	3	1	195	11358102	CYLINDER HEAD COVER ASS
CYLINDER HEAD COVER	10134750	1	2	195	11358102	CYLINDER HEAD COVER ASS
CYLINDER HEAD COVER	12874086	2	1	195	11358102	CYLINDER HEAD COVER ASS
CYLINDER HEAD COVER ASS	11358102	82	1	161	12856862	DIESEL ENGINE
CYLINDER HEAD CPL.	571928508	4	1	668	10876933	TELESCOPIC CYLINDER
CYLINDER HEAD GASKET	10133667	2	1	189	10149580	CYLINDER HEAD ASSEMBLY
CYLINDER HEAD PRE-ASSY.	10149579	1	1	189	10149580	CYLINDER HEAD ASSEMBLY
CYLINDER HEAD R-MOTOR	10145862	1	1	192	10149578	CYLINDER HEAD
CYLINDER HEAD R-MOTOR	10149578	1	1	191	10149579	CYLINDER HEAD PRE-ASSY.
CYLINDER R-MOTORXD944/D9	10154458	80	4	167	11389608	CRANKCASE CPL. WITH CYLIN
CYLINDER ROLLER THRUST B	746607401	37	1	724	910836808	HOOK BLOCK
CYLINDRICAL ROLLER BEARIN	571899308	(31)	1	294	11210795	VARIABLE PUMP
CYLINDRICAL ROLLER BEARIN	7023703	10	1	297	10008308	CONNECTING PLATE
CYLINDRICAL ROLLER BEARIN	7367374	31	1	296	10663105	DRIVING GEAR
CYLINDRICAL ROLLER BEARI	571477908	31	1	307	10872488	DRIVING GEAR
CYLINDRICAL ROLLER BEARI	500926208	430	2	285	97029921	DISTRIBUTOR GEARBOX
DAMPING PISTON	510782908	7	1	561	511419608	PRESSURE LIMITING VALVE
DAMPING PISTON	510797408	7	1	558	511433908	PRESSURE LIMITING VALVE
DATA LINE 2 X 1 FEP SPF	12100217	5	0.4	43	96045227	WIRING HARNESS
DATA LINE 2 X 1 FEP SPF	12100217	6	0.4	43	96045227	WIRING HARNESS
DATA LINE 2 X 1 FEP SPF	12100217	9	3	448	96036956	WIRING HARNESS
DATA LINE 2 X 1 FEP SPF	12100217	10	3	448	96036956	WIRING HARNESS
DATA LINE 2 X 1 FEP SPF	12100217	15	6.27	512	96037136	WIRING HARNESS
DATA LINE 2 X 1 FEP SPF	12100217	16	7.72	512	96037136	WIRING HARNESS
DATA LINE 2 X 1 FEP SPF	12100217	17	4.27	512	96037136	WIRING HARNESS
DATA LINE 2 X 1 FEP SPF	12100217	18	2.02	512	96037136	WIRING HARNESS
DATA LINE 2 X 1 FEP SPF	12100217	19	1.3	512	96037136	WIRING HARNESS
DATA LINE 2 X 1 FEP SPF	12100217	379	6.27	512	96037136	WIRING HARNESS
DATA LINE 2 X 1 FEP SPF	12100217	380	6.27	512	96037136	WIRING HARNESS
DATA LINE 2 X 1 FEP SPF	12100217	381	6.27	512	96037136	WIRING HARNESS

Description	Item	Pos.	Quantity	Page	Assembly	Description
DATA LINE 2 X 1 FEP SPF	12100217	383	6.27	512	96037136	WIRING HARNESS
DATA LINE 2 X 1 FEP SPF	12100217	17	4.8	514	96037137	WIRING HARNESS
DATA LINE 2 X 1 FEP SPF	12100217	19	4.7	514	96037137	WIRING HARNESS
DATA LINE 2 X 1 FEP SPF	12100217	371	4.7	514	96037137	WIRING HARNESS
DATA LINE 2 X 1 FEP SPF	12100217	372	6.4	514	96037137	WIRING HARNESS
DATA LINE 2 X 1 FEP SPF	12100217	373	6.4	514	96037137	WIRING HARNESS
DATA LINE 2 X 1 FEP SPF	12100217	374	6.4	514	96037137	WIRING HARNESS
DATA LINE 2 X 1,5 FEP SPF	12100216	378	6.27	512	96037136	WIRING HARNESS
DATA LINE 2 X 1,5 FEP SPF	12100216	16	4.8	514	96037137	WIRING HARNESS
DATA LINE 2 X 2,5 FEP SPF	12100214	371	6.27	512	96037136	WIRING HARNESS
DATA LINE 2 X 2,5 FEP SPF	12100214	372	6.27	512	96037136	WIRING HARNESS
DATA LINE 2 X 2,5 FEP SPF	12100214	373	6.27	512	96037136	WIRING HARNESS
DATA LINE 3 X 1 FEP SPF	12100215	10	4.32	512	96037136	WIRING HARNESS
DATA LINE 3 X 1 FEP SPF	12100215	12	6.27	512	96037136	WIRING HARNESS
DATA LINE 3 X 1 FEP SPF	12100215	13	6.27	512	96037136	WIRING HARNESS
DATA LINE 3 X 1 FEP SPF	12100215	14	6.27	512	96037136	WIRING HARNESS
DATA LINE 3 X 1 FEP SPF	12100215	384	6.27	512	96037136	WIRING HARNESS
DATA LINE 3 X 1 FEP SPF	12100215	386	6.27	513	96037136	WIRING HARNESS
DATA LINE 3 X 1 FEP SPF	12100215	18	4.8	514	96037137	WIRING HARNESS
DATA LINE 3 X 1 FEP SPF	12100215	375	6.6	514	96037137	WIRING HARNESS
DATALOGGER LDL2 DIGITAL	10340438	6	1	526	968063108	PRE-ASSEMBLY MOUNTING U
DEEP GROOVE BALL BEARIN	10114839	4	1	47	11346779	SLIP RING TRANSMITTER
DEEP GROOVE BALL BEARIN	10114838	10	1	47	11346779	SLIP RING TRANSMITTER
DEEP GROOVE BALL BEARIN	745139101	66	1	340	90008901	SLEWING GEAR DRIVE
DEEP GROOVE BALL BEARIN	745129508	390	2	285	97029921	DISTRIBUTOR GEARBOX
DEEP GROOVE BALL BEARING	10169236	350	1	285	97029921	DISTRIBUTOR GEARBOX
DEEP GROOVE BALL BEARIN	745159301	3	1	357	939292201	PLANETARY GEARBOX
DEEP GROOVE BALL BEARIN	745159301	3	1	583	939294201	PLANETARY GEARBOX
DEEP GROOVE BALL BEARING	571819808	360	2	285	97029921	DISTRIBUTOR GEARBOX
DEEP GROOVE BALL BEARIN	745145308	410	4	285	97029921	DISTRIBUTOR GEARBOX
DEEP GROOVE BALL BEARIN	745165608	370	1	285	97029921	DISTRIBUTOR GEARBOX
DEEP GROOVE BALL BEARIN	745129501	4	1	408	966253908	WAGON
DEEP GROOVE BALL BEARIN	10294494	3	4	372	916177508	STEP CPL.
DEFLECTION PULLEY	571851208	12	1	675	10802064	ROPE LENGTH INDICATOR
DEVICE PLUG DIN 43650 4-POL	605006608	510	2	44	96045228	WIRING HARNESS
DEVICE PLUG DIN 43650 4-POL	605006608	503	3	510	96045385	WIRING HARNESS
DIAPHRAGM 4X480X167 S31	97031538	5	1	439	969015908	SLEWING PLATFORM PANELLI
DIAPHRAGM 4X553X352 S31	97035511	(1)	1	589	967784808	HYDR.AUXILIARY HOISTING
DIAPHRAGM ACCUMULATOR 0	510644608	183	1	539	96045351	HYDRAULICS UPPER CARRI
DIAPHRAGM ACCUMULATOR 2	510642508	182	1	539	96045351	HYDRAULICS UPPER CARRI
DIAPHRAGM GROMMET 35,5/	602717308	124	1	280	96034631	RADIATOR, PRE-ASSEMBLED
DIAPHRAGM GROMMET 35,5/	602717308	114	1	429	96036790	SLEWING PLATFORM PANELLI
DIAPHRAGM GROMMET 35,5/	602717308	106	1	439	969015908	SLEWING PLATFORM PANELLI
DIAPHRAGM SOCKET 29/37/44	553027808	4	7	375	916170808	CABLE INLET
DIAPHRAGM SOCKET 29/37/44	553027808	20	1	431	96017704	RADIATOR HOOD CPL.
DIE PLUG	11450029	4	1	287	11690588	CONTROL UNIT
DIE PLUG	11450030	3	1	287	11690588	CONTROL UNIT
DIE PLUG	11450030	19	1	311	10292815	REGULATOR ELEMENT
DIESEL ENGINE D944 A7-04 SP	12856862	1	1	159	919371808	DIESEL ENGINE PURCHASED
DIESEL ENGINE PURCHASED	919371808	104	1	9		LIEBHERR LTR 1220
DIODE SUBASSEMBLY PBTP-G	10440553	11	1	518	919503008	SWITCHBOX MOUNTING PART
DIRECTIONAL CONTROL VALV	10280210	20	1	597	10038509	CONTROL BLOCK
DIRECTIONAL CONTROL VALV	10801532	5	1	550	10413106	CONTROL BLOCK
DIRECTIONAL CONTROL VALV	10801533	6	1	550	10413106	CONTROL BLOCK
DIRECTIONAL CONTROL VALV	10801549	9	1	550	10413106	CONTROL BLOCK
DIRECTIONAL CONTROL VALV	10801551	10	1	550	10413106	CONTROL BLOCK
DIRECTIONAL CONTROL VALV	10872796	(1)	1	550	10413106	CONTROL BLOCK
DIRECTIONAL CONTROL VALV	10874213	(1)	1	550	10413106	CONTROL BLOCK
DIRECTIONAL CONTROL VALV	11004126	12	1	550	10413106	CONTROL BLOCK
DIRECTIONAL CONTROL VALV	571415008	8	2	550	10413106	CONTROL BLOCK

Description	Item	Pos.	Quantity	Page	Assembly	Description
DIRECTIONAL CONTROL VAL	511464108	55	1	538	96045351	HYDRAULICS UPPER CARRI
DIRECTIONAL CONTROL VAL	511320108	63	1	538	96045351	HYDRAULICS UPPER CARRI
DIRECTIONAL CONTROL VAL	511493608	50	1	688	967784508	HYDR.F.TELESCOPIC BOOM
DIRECTIONAL CONTROL VAL	511444408	50	1	51	96035801	HYDRAULIC EQUIPM.CENTER
DIRECTIONAL CONTROL VAL	511444408	52	1	538	96045351	HYDRAULICS UPPER CARRI
DIRECTIONAL CONTROL VAL	511444408	50	1	589	967784808	HYDR.AUXILIARY HOISTING
DIRECTIONAL CONTROL VALV	10449853	64	1	538	96045351	HYDRAULICS UPPER CARRI
DIRECTIONAL CONTROL VALV	571737808	2	1	552	10332882	CONTROL BLOCK
DIRECTIONAL CONTROL VAL	10652724	23	1	538	96045351	HYDRAULICS UPPER CARRI
DIRECTIONAL CONTROL VAL	10652724	21	1	589	967784808	HYDR.AUXILIARY HOISTING
DIRECTIONAL CONTROL VALV	10874849	4	2	546	11211756	CONTROL BLOCK
DIRECTIONAL CONTROL VALV	10875074	3	3	546	11211756	CONTROL BLOCK
DIRECTIONAL SEAT VALVE 2/	10280211	40	1	597	10038509	CONTROL BLOCK
DIRECTIONAL SOLENOID	11482347	2	1	546	11211756	CONTROL BLOCK
DISC SPRING	570110908	7	4	348	570109508	DRIVING GEAR
DISC SPRING 80X41X4	272012502	4	130	721	968728808	CONSOLE PRE-ASS.
DISC SPRING DIN 2093 40X20,	720801908	25	4	417	918810308	CONTROL STAND
DISH MOUNTING	10100621	20	4	439	969015908	SLEWING PLATFORM PANELLI
DISK PIN	11658587	4	1	724	910836808	HOOK BLOCK
DISPATCH ASSY.MECH.PART	919028808	175	1	10		LIEBHERR LTR 1220
DISTANCE PLATE 15X100X379	973258608	39	1	656	917292308	TELESCOPIC SECT.IV PRE-A
DISTANCE PLATE 15X103X408	973057708	39	1	652	917292208	TELESCOPIC SECT.3 PRE-ASS
DISTANCE PLATE 15X105X429	973245708	39	1	648	917292108	TELESCOPIC SECT.2 PRE-AS
DISTANCE PLATE 15X110X465	972898108	39	1	644	917292008	TELESCOPIC SECTION 1 PRE
DISTANCE PLATE 15X113X449	973258708	43	2	656	917292308	TELESCOPIC SECT.IV PRE-A
DISTANCE PLATE 15X113X492	973358008	55	1	639	917291908	PIVOT SECTION, PRE-ASSEMB
DISTANCE PLATE 15X119X497	973245808	43	2	648	917292108	TELESCOPIC SECT.2 PRE-AS
DISTANCE PLATE 15X121X498	973253208	43	2	652	917292208	TELESCOPIC SECT.3 PRE-ASS
DISTANCE PLATE 15X138X592	972898308	43	2	644	917292008	TELESCOPIC SECTION 1 PRE
DISTANCE PLATE 15X141X621	973357808	47	2	639	917291908	PIVOT SECTION, PRE-ASSEMB
DISTANCE PLATE 1X60X120 D	97033390	25	4	116	968046208	ADD-ON PARTS
DISTANCE PLATE 60X37X730 P	97031640	5	16	17	919617108	CRAWLER TRACK TRAVEL G
DISTANCE PLATE 8X60X120 S	97033383	24	4	116	968046208	ADD-ON PARTS
DISTANCE SLEEVE 10X6,2X10	10354375	56	1	383	917305408	INTERNAL PANELLING INSTA
DISTANCE SLEEVE 11X18X10	10117226	117	4	276	919007708	DRIVE ASSEMBLY, PRE-ASSE
DISTANCE SLEEVE 11X20X25	10138657	7	14	236	10140087	EXHAUST PIPE ASSEMBLY
DISTANCE SLEEVE 11X24X10	9076588	90	1	254	10151328	CABLE HARNESS MOUNTING
DISTANCE SLEEVE 15X6,3X25	10441664	55	1	383	917305408	INTERNAL PANELLING INSTA
DISTANCE SLEEVE 15X6,3X25	10441664	4	2	719	968811608	CROSS BEAM
DISTANCE SLEEVE 18.0X26 E	97047984	13	1	275	919007708	DRIVE ASSEMBLY, PRE-ASSE
DISTANCE SLEEVE 30.0 X0 4	952177008	20	2	269	918731408	DRIVE ASSEMBLY CPL.
DISTANCE SLEEVE 30.0 X0 4	952177008	31	5	275	919007708	DRIVE ASSEMBLY, PRE-ASSE
DISTANCE SLEEVE 35.0X40 3	970780908	3	2	323	917626608	FUEL TANK ADD-ON UNIT
DISTANCE SLEEVE 8,5X18X10	9132577	93	1	254	10151328	CABLE HARNESS MOUNTING
DISTANCE SLEEVE 9X15X30	12843150	5	1	209	10152867	INJECTOR WITH FASTENING
DISTANCE STUD M5X30 11SM	97028159	48	4	383	917305408	INTERNAL PANELLING INSTA
DISTANCE STUD M6X30 ST V	11001955	57	3	383	917305408	INTERNAL PANELLING INSTA
DISTANCE STUD M6X50 STA	10875447	58	2	383	917305408	INTERNAL PANELLING INSTA
DISTANCE TUBE 159.0X12 S3	971095808	9	2	705	917268408	BOOM NOSE
DISTANCE TUBE 8.0X30 E235+	97051280	16	4	721	968728808	CONSOLE PRE-ASS.
DISTANCE TUBE RD159X4,5X	953536408	2	1	709	910040808	2nd NECK PULLEY INSTALLAT
DISTANCE TUBE RD159X4,5X	955581808	25	1	661	917292408	TELESCOPIC SECT.5 PRE-AS
DISTANCE TUBE RD159X4,5X6	953536508	3	1	709	910040808	2nd NECK PULLEY INSTALLAT
DISTANCE WASHER RD.164X3	97037959	4	1	612	968993508	CAMERA HOLDER, PREMOU
DISTRIBUTION BLOCK 3/6	11002916	2	1	502	917261208	CENT. LUBRIC. SYSTEM SUP
DISTRIBUTION BLOCK 4/7	774387208	3	1	502	917261208	CENT. LUBRIC. SYSTEM SUP
DISTRIBUTION BLOCK MX-F 6	11347500	2	2	127	917257108	CENTRALIZED LUBRICATION
DISTRIBUTION BOX 65X94X57	11114556	1	1	603	917368108	EL.COOLANT PREHEAT
DISTRIBUTOR BLOCK	12511916	1	1	214	10143341	FUEL LINES
DISTRIBUTOR BLOCK G1 1/2 /8	11214049	156	4	51	96035801	HYDRAULIC EQUIPM.CENTER

Description	Item	Pos.	Quantity	Page	Assembly	Description
DISTRIBUTOR GEARBOX SPF	97029921	100	1	275	919007708	DRIVE ASSEMBLY, PRE-ASSE
DOOR CONTACT SWITCH	606020708	12	1	449	96036957	ELECTRIC ADD-ON PARTS CA
DOOR COVERING 880X390X28	97000275	3	1	405	917304708	SLIDING DOOR INSTALLATION
DOOR PANE 4X1161X 950 ES	97000274	2	1	405	917304708	SLIDING DOOR INSTALLATION
DOOR STOPPER	704277508	113	2	429	96036790	SLEWING PLATFORM PANELLI
DOSING PUMP DP42	11110051	2	1	462	918759808	ADD HEATING SUPERSTRUCT
DOUBLE BANJO BOLT 6-6-M1	12210029	12	1	215	10143342	LEAK OIL RETURN LINE
DOUBLE PLUG	7012971	(13)	2	294	11210795	VARIABLE PUMP
DOUBLE PLUG	7012971	12	1	309	571907208	CONNECTING PLATE
DOUBLE PLUG	7022127	(11)	1	294	11210795	VARIABLE PUMP
DOUBLE PLUG	7022127	11	4	297	10008308	CONNECTING PLATE
DOUBLE PLUG	7022127	52	7	298	10472196	REGULATOR
DOUBLE PLUG	7022127	11	6	309	571907208	CONNECTING PLATE
DOUBLE PLUG	7022127	52	5	310	10292801	REGULATOR
DOUBLE SOCKET 2-POL	10875121	19	1	446	96036955	WIRING HARNESS
DOUBLE SPRING CONTACT 0	6001703	2267	6	511	96045385	WIRING HARNESS
DOUBLE-ENDED STUD DIN 83	12210035	3	3	219	10147364	AIR INTAKE ASSEMBLY
DOUBLE-ENDED STUD DIN 83	10179459	3	3	240	10115539	STARTER INSTALLATION
DOUBLE-ENDED STUD DIN 93	4981172	5	3	238	10140729	EXHAUST TC MOUNTING
DOUBLE-HEADED SPANNER D	790003908	20	1	144	928569808	MAIN TOOLS
DOUBLE-HEADED SPANNER D	790003308	11	1	144	928569808	MAIN TOOLS
DOUBLE-HEADED SPANNER D	790002208	12	1	144	928569808	MAIN TOOLS
DOUBLE-HEADED SPANNER D	790002408	13	1	144	928569808	MAIN TOOLS
DOUBLE-HEADED SPANNER D	790003608	15	1	144	928569808	MAIN TOOLS
DOUBLE-HEADED SPANNER D	790002508	16	1	144	928569808	MAIN TOOLS
DOUBLE-HEADED SPANNER D	790002608	17	1	144	928569808	MAIN TOOLS
DOUBLE-HEADED SPANNER D	790002808	18	1	144	928569808	MAIN TOOLS
DOUBLE-HEADED SPANNER D	790002908	19	1	144	928569808	MAIN TOOLS
DOUBLE-HEADED SPANNER	790001708	10	1	144	928569808	MAIN TOOLS
DOUBLE-HEADED SPANNER	10652772	14	1	144	928569808	MAIN TOOLS
DOWEL PIN 3X10	10410651	31	1	294	11210795	VARIABLE PUMP
DOWEL PIN 3X10	10410651	28	2	305	10871282	VARIABLE PUMP
DOWEL PIN ISO 8752 12X50	432011808	13	4	625	967936908	COUNTERWEIGHT CPL.
DOWEL PIN ISO 8752 12X85 4	10875876	35	1	731	917267508	TRANSPORT MOUNTING
DOWEL PIN ISO 8752 18X45 4	10876421	11	6	365	917259908	CRANE DRIVER CAB ADDITIO
DOWEL PIN ISO 8752 5X12 480	10875879	59	2	357	939292201	PLANETARY GEARBOX
DOWEL PIN ISO 8752 5X28 480	12100669	6	1	459	966707708	MIRROR RETAINER PRE-ASS.
DOWEL PIN ISO 8752 5X36 A2	12102738	7	1	459	966707708	MIRROR RETAINER PRE-ASS.
DOWEL PIN ISO 8752 5X50 A2	10663567	3	1	117	968331708	FUSE HOLDER
DOWEL PIN ISO 8752 6X10 ST	10875881	25	2	390	916162508	WINDOW ASSEMBLY
DOWEL PIN ISO 8752 6X20 480	10876162	150	2	283	968026308	CLUTCH ACTUATOR
DOWEL PIN ISO 8752 6X20 480	10876162	43	2	365	917259908	CRANE DRIVER CAB ADDITIO
DOWEL PIN ISO 8752 6X30 ST	243034002	10	2	196	10120186	BALANCER ASSEMBLY
DOWEL PIN ISO 8752 6X40 480	12100674	5	2	507	965281408	LIMIT SWITCH ADD-ON
DOWEL PIN ISO 8752 6X50 A2	432006708	11	1	609	968994408	CAMERA HOLDER, PREMOU
DOWEL PIN ISO 8752 8X16 St 4	432008001	72	1	357	939292201	PLANETARY GEARBOX
DOWEL PIN ISO 8752 8X40 St	4980376	5	1	183	10147438	CRANKSHAFT WITH GEAR
DOWEL PIN ISO 8752 A 8X16	432007908	72	1	583	939294201	PLANETARY GEARBOX
DRAWBAR WELDED	961727008	5	1	134	919087608	ROTARY FEED THROUGH
DRIVE ASSEMBLY CPL.	918731408	105	1	9		LIEBHERR LTR 1220
DRIVE ASSEMBLY, PRE-ASSE	919007708	1	1	269	918731408	DRIVE ASSEMBLY CPL.
DRIVE FLANGE EDELSTAHL	606012608	6	1	362	966631008	ELECTRIC FOR WINCH 1
DRIVE FLANGE EDELSTAHL	606012608	(6)	1	577	967969608	AUXILIARY HOISTING GEAR 2
DRIVE FOR HIGH PRESSURE P	11407917	180	1	162	12856862	DIESEL ENGINE
DRIVE SHAFT	10663120	14	1	296	10663105	DRIVING GEAR
DRIVE SHAFT	570109608	2	1	347	570109008	DRIVING GEAR
DRIVE SHAFT	571907508	14	1	307	10872488	DRIVING GEAR
DRIVE SHAFT	927745101	5	1	357	939292201	PLANETARY GEARBOX
DRIVE WHEEL 12XB9SX260,35	749056414	4	1	70	919254308	CRAWLER SUPPORT PREASS
DRIVE WHEEL 12XB9SX260,35	749056414	4	1	100	919254408	CRAWLER SUPPORT PREASS

Description	Item	Pos.	Quantity	Page	Assembly	Description
DRIVER	10014729	7	1	128	11347526	ELECTRIC PUMP
DRIVER	10014729	7	1	504	10327065	ELECTRIC PUMP
DRIVER	931549101	20	1	355	932916901	ROPE DRUM
DRIVING GEAR	10663105	1	1	295	11210798	VARIABLE PUMP
DRIVING GEAR	10871713	1	1	294	11210795	VARIABLE PUMP
DRIVING GEAR	10872488	1	1	305	10871282	VARIABLE PUMP
DRIVING GEAR	11066818	2	1	74	11182596	VARIABLE DISPLACEMENT MO
DRIVING GEAR	11643393	2	1	360	11182597	VARIABLE DISPLACEMENT MO
DRIVING GEAR	11643393	2	1	578	11211058	VARIABLE DISPLACEMENT MO
DRIVING GEAR	11690584	1	1	286	11182708	VARIABLE PUMP
DRIVING GEAR	11690584	1	1	289	10871017	VARIABLE PUMP
DRIVING GEAR	570109008	1	1	346	510229408	HYDRO MOTOR
DRIVING GEAR	570109508	1	1	347	570109008	DRIVING GEAR
DRUM AXLE	12100076	2	1	681	10354493	CABLE REEL
DRYER	571489008	105	1	280	96034631	RADIATOR, PRE-ASSEMBLED
DS HYDRO CYLINDER	10490901	(999)	1	350	917259608	ROTATING PLATFORM LOCK
DS HYDRO CYLINDER	10491695	999	1	366	11214363	TILT CYLINDER
DS LOWERING BRAKE VALVE	10816799	(999)	1	538	96045351	HYDRAULICS UPPER CARRI
DS SUPPORT CYLINDER	10878366	(999)	1	121	919644008	HYDRAULIC SUPPORT
DS TELESCOPIC CYLINDER	10878189	999	1	668	10876933	TELESCOPIC CYLINDER
DSF RING 130X121,9X3,5	12478647	5	1	188	10146367	PISTON CPL.
DU BUSHING	708010008	3	2	732	929582108	MOUNTING PRE-ASS.
DU BUSHING	708010008	4	1	735	923879808	CONSOLE PRE-ASS.
DU BUSHING	708011608	21	2	731	917267508	TRANSPORT MOUNTING
DUMMY PLUG DT 2 POLIG PA	10353004	529	1	513	96037136	WIRING HARNESS
DUST CAP	11494567	513	3	510	96045385	WIRING HARNESS
DUST CAP	11494567	531	1	513	96037136	WIRING HARNESS
DUST CAP	518620608	70	1	668	10876933	TELESCOPIC CYLINDER
DUST CAP POLYETHYLEN SC	704254808	12	4	37	966167808	COVER COMPL.
DUST CAP POLYETHYLEN SC	704254808	6	5	79	967972208	COVER PRE-ASSY.
DUST CAP POLYETHYLEN SC	704254808	6	2	80	967972308	COVER PRE-ASSY.
DUST CAP POLYETHYLEN SC	704254808	6	2	81	967972408	COVER PRE-ASSY.
DUST CAP POLYETHYLEN SC	704254808	6	2	82	968270108	COVER PRE-ASSY.
DUST CAP POLYETHYLEN SC	704254808	6	2	83	968274208	COVER PRE-ASSY.
DUST CAP POLYETHYLEN SC	704254808	6	5	102	968055808	COVER PRE-ASSY.
DUST PLUG 3/8" SPF	10031987	154	1	699	967785008	ADDNL.HYDR. FOLDING JIB
EARTH CONNECTION PLATE C	9080911	4	1	221	9078314	HEATING FLANGE ADD-ON
EASY-CHANGE FILTER OEL 9µ	10297295	1	2	204	10142942	LUBE OIL FILTER ASSEMBLY
EDGE PROTECTION 1-2X9,5X6,	262103908	123	0.5	280	96034631	RADIATOR, PRE-ASSEMBLED
EDGE PROTECTION 1-2X9,5X6,	262103908	8	1.6	320	96023117	BATTERY BOX, PRE-ASSEMB
EDGE PROTECTION 1-2X9,5X6,	262103908	(3)	0.4	429	96036790	SLEWING PLATFORM PANELLI
EDGE PROTECTION 1-2X9,5X6,	262103908	(3)	0.6	429	96036790	SLEWING PLATFORM PANELLI
EDGE PROTECTION 1-2X9,5X6,	262103908	12	0.66	439	969015908	SLEWING PLATFORM PANELLI
EDGE PROTECTION 1-2X9,5X6,	262103908	7	0.16	525	926891108	GROUND RAIL
EDGE PROTECTION 1-2X9,5X6,	262103908	11	0.2	610	968290608	STAND
EDGE PROTECTION 1-2X9,5X6,	262103908	11	0.2	613	968267208	STAND
EDGE PROTECTION 4-6X15,8	262106608	7	0.54	442	917260108	FALL PROTECTION
EDGE SEALING RING	10303270	17	3	297	10008308	CONNECTING PLATE
EDGE SEALING RING	10303270	17	3	309	571907208	CONNECTING PLATE
EL.2 HOISTING LIMIT SWITCH	918197708	362	1	11		LIEBHERR LTR 1220
EL.ADD-ON SET-LIMIT SWITC	968128908	11	1	506	919410708	ELECTR. SYSTEM F.SLEWING
EL.COMP. DISPATCH ASSEM	915731908	39	2	9		LIEBHERR LTR 1220
EL.COOLANT PREHEAT	917368108	10	1	602	918377508	COOLING WATER PRE-HEATIN
EL.INSTRUMENTS F.CRANE	918731608	143	1	10		LIEBHERR LTR 1220
EL.SUPERSTRUCTURE INTERL	966633508	18	1	508	968128908	EL.ADD-ON SET-LIMIT SWITCH
ELASTOMER INSERT DIN 3015	7363897	326	4	478	969763408	PIPEWORK AIR INSTALLATIO
ELBOW	10142671	1	1	234	10142742	COOLANT PIPE BEND ADD-ON
ELECTR. F.EXTENDING MECH	966361408	6	1	677	917262208	ELECTR. SYSTEM F. BOOM
ELECTR. FOR HEAD SECTION	968708608	4	1	677	917262208	ELECTR. SYSTEM F. BOOM
ELECTR. FOR WORK AREA LI	96028878	20	4	604	918989008	A-HEADLIGHT SLEWING PLA

Description	Item	Pos.	Quantity	Page	Assembly	Description
ELECTR. FOR WORK AREA LI	96024265	20	1	628	919028808	DISPATCH ASSY.MECH.PART
ELECTR. SYSTEM F. BOOM	917262208	203	1	11		LIEBHERR LTR 1220
ELECTR. SYSTEM F.SLEWING	919410708	179	1	10		LIEBHERR LTR 1220
ELECTR.CABLE 0,5	10870538	344	18.2	446	96036955	WIRING HARNESS
ELECTR.CABLE 0,75	10870539	345	8.16	446	96036955	WIRING HARNESS
ELECTR.CABLE 0,75	10870539	345	7.7	448	96036956	WIRING HARNESS
ELECTR.CABLE 0,75	10870539	345	11.4	510	96045385	WIRING HARNESS
ELECTR.CABLE 0,75	10870539	345	34.5	514	96037137	WIRING HARNESS
ELECTR.CABLE 1,0	10870540	305	25.99	43	96045227	WIRING HARNESS
ELECTR.CABLE 1,0	10870540	305	36.53	44	96045228	WIRING HARNESS
ELECTR.CABLE 1,0	10870540	305	319.78	446	96036955	WIRING HARNESS
ELECTR.CABLE 1,0	10870540	305	160.31	448	96036956	WIRING HARNESS
ELECTR.CABLE 1,0	10870540	305	395.03	510	96045385	WIRING HARNESS
ELECTR.CABLE 1,0	10870540	305	427.54	512	96037136	WIRING HARNESS
ELECTR.CABLE 1,0	10870540	305	82.2	514	96037137	WIRING HARNESS
ELECTR.CABLE 1,0	10870540	305	6.6	615	96043733	WIRING HARNESS
ELECTR.CABLE 1,5	10870541	307	37.14	512	96037136	WIRING HARNESS
ELECTR.CABLE 16	600431208	328	8.85	512	96037136	WIRING HARNESS
ELECTR.CABLE 2,5	10870542	309	30.5	446	96036955	WIRING HARNESS
ELECTR.CABLE 2,5	10870542	309	18.45	448	96036956	WIRING HARNESS
ELECTR.CABLE 2,5	10870542	309	23.3	512	96037136	WIRING HARNESS
ELECTR.CABLE DIN 72551 10	600430108	322	5.1	512	96037136	WIRING HARNESS
ELECTR.CABLE DIN 72551 16	600431008	326	5.1	512	96037136	WIRING HARNESS
ELECTR.CABLE DIN 72551 25	600431408	330	7.55	512	96037136	WIRING HARNESS
ELECTR.FOR CENTER SECTIO	96045225	1	1	32	919510708	ELECTR.FOR CRAWLER CARR
ELECTR.FOR CRAWLER CARR	919510708	2	1	27	919499308	CENTRAL SECTION CRAWLER
ELECTR.FOR SLEWING GEAR	966720708	50	1	508	968128908	EL.ADD-ON SET-LIMIT SWITCH
ELECTRIC ADD-ON PARTS	968929208	100	1	494	96048826	EXHAUST SYSTEM PRE-ASSE
ELECTRIC ADD-ON PARTS CA	96036957	6	1	444	918731608	EL.INSTRUMENTS F.CRANE D
ELECTRIC BALLASTING ENDS	966633408	17	1	508	968128908	EL.ADD-ON SET-LIMIT SWITCH
ELECTRIC CYLINDER 24V	10292008	4	1	372	916177508	STEP CPL.
ELECTRIC F.BASE SECTION	966290908	3	1	677	917262208	ELECTR. SYSTEM F. BOOM
ELECTRIC FOR BATTERY BOX	96023914	100	1	318	918955408	BATTERY BOX CPL.
ELECTRIC FOR WINCH 1	966631008	100	1	352	917259708	MAIN HOIST GEAR
ELECTRIC FOR WINCH 2	966298308	100	1	577	967969608	AUXILIARY HOISTING GEAR 2
ELECTRIC FOR WINCH 2	968315808	18	1	589	967784808	HYDR.AUXILIARY HOISTING
ELECTRIC MEASURING & WAR	917598408	1	1	710	917379608	CARRIER, MEAS. & WARN. D
ELECTRIC PUMP	10327065	1	1	502	917261208	CENT. LUBRIC. SYSTEM SUP
ELECTRIC PUMP EP-1	11347526	1	1	127	917257108	CENTRALIZED LUBRICATION
ELECTRIC SLEWING SENSOR	966633308	30	1	508	968128908	EL.ADD-ON SET-LIMIT SWITCH
ELECTRONICS UNIT	10650399	35	1	419	10877138	OPERATOR SEAT
EMERGENCY CUT-OFF CRANE	967260908	4	1	452	96030724	INSTRUMENT CLUSTER ELEC
EMERGENCY STOP BUTTON	606144108	(2)	1	452	96030724	INSTRUMENT CLUSTER ELEC
EMPTY CASING 120X220X80X0	973188508	5	1	685	968708708	TERMINAL BOX CPL.
EMPTY CASING 160X260X90X0	975113508	1	1	682	966291008	TERMINAL BOX
EMPTY CASING 80.0X0 AL	979204408	5	1	41	966204108	ANTENNA CPL.
ENCODER BASE SECTION	966473108	9	1	634	918804808	TELESCOPIC BOOM CPL.
ENCODER HEAD PIECE	966200208	10	1	634	918804808	TELESCOPIC BOOM CPL.
END ANGLE	602794608	8	2	524	967589508	TERMINAL STRIP
END ANGLE	602794608	297	2	685	968708708	TERMINAL BOX CPL.
END CAP 34	553181108	6	1	464	96020359	ADDNL.HEATING, PRE-ASSE
END CAP 42,3	553174108	8	1	462	918759808	ADD HEATING SUPERSTRUCT
END COVER 60	9144757	5	1	195	11358102	CYLINDER HEAD COVER ASS
END COVER DIN 443 B 480H	12209779	2	4	167	11389608	CRANKCASE CPL. WITH CYLIN
END COVER DIN 443 B 480H	12209781	10	3	192	10149578	CYLINDER HEAD
END COVER DIN 443 B 480H	12209783	3	7	167	11389608	CRANKCASE CPL. WITH CYLIN
END PIPE X5CRNI18-10	969759208	104	1	491	919372008	EXHAUST SYSTEM
ENGINE BRACKET LEFT G28M	97061150	5	1	275	919007708	DRIVE ASSEMBLY, PRE-ASSE
ENGINE BRACKET RIGHT G2	97061151	6	1	275	919007708	DRIVE ASSEMBLY, PRE-ASSE
ENGINE BRACKET WELDED	968025208	3	1	275	919007708	DRIVE ASSEMBLY, PRE-ASSE

Description	Item	Pos.	Quantity	Page	Assembly	Description
ENGINE BRACKET WELDED	968025308	4	1	275	919007708	DRIVE ASSEMBLY, PRE-ASSE
ENGINE CONTROL SENSORS	12583633	581	1	165	12856862	DIESEL ENGINE
EQUALIZER PLATE	10115155	18	4	47	11346779	SLIP RING TRANSMITTER
EQUALIZER PLATE	10359124	20	2	47	11346779	SLIP RING TRANSMITTER
EQUALIZING RESERVOIR	570065908	1	1	94	502806508	EQUALIZING RESERVOIR
EQUALIZING RESERVOIR	96034522	3	1	269	918731408	DRIVE ASSEMBLY CPL.
EQUALIZING RESERVOIR 0,2L	502807308	(1)	1	589	967784808	HYDR.AUXILIARY HOISTING
EQUALIZING RESERVOIR 1L	502806508	1	1	93	96028333	EXPANSION TANK CPL.
EQUIPMENT CAMERA CAB	96045237	3	1	606	918992008	CAMERA MONITOR OW
EQUIPMENT CAMERA SLEW C	96037130	4	1	606	918992008	CAMERA MONITOR OW
EQUIPMENT CAMERA WINCHE	96037131	5	1	606	918992008	CAMERA MONITOR OW
EQUIPMENT CARRIER WELDE	968918808	1	1	275	919007708	DRIVE ASSEMBLY, PRE-ASSE
ES PIN 8X16 FE/ZN8/CN/T2	725111808	11	2	433	968923508	FLAP RIGHT PRE-ASS.
ES PIN 8X16 FE/ZN8/CN/T2	725111808	10	2	441	969016008	FLAP LEFT FRONT PRE-ASS.
EVAPORATOR	10874825	15	1	412	11083498	AIR CONDITIONING UNIT
EXHAUST MIXING PIPE SCRO	10148666	102	1	494	96048826	EXHAUST SYSTEM PRE-ASSE
EXHAUST MUFFLER 116/55X15	553187208	5	1	464	96020359	ADDNL.HEATING, PRE-ASSE
EXHAUST NOZZLE ATTACHME	12512627	432	1	164	12856862	DIESEL ENGINE
EXHAUST PIPE 1.4301	97049719	102	1	491	919372008	EXHAUST SYSTEM
EXHAUST PIPE 1.4301	97049723	103	1	491	919372008	EXHAUST SYSTEM
EXHAUST PIPE 38/FLEXIBEL	553054108	7	1.995	462	918759808	ADD HEATING SUPERSTRUCT
EXHAUST PIPE 38/FLEXIBEL	553054108	7	0.25	464	96020359	ADDNL.HEATING, PRE-ASSE
EXHAUST PIPE ASSEMBLY R	10140087	410	1	163	12856862	DIESEL ENGINE
EXHAUST PIPE R-MOTORXD93	10145524	1	1	236	10140087	EXHAUST PIPE ASSEMBLY
EXHAUST SYSTEM	919372008	163	1	10		LIEBHERR LTR 1220
EXHAUST SYSTEM PRE-ASSE	96048826	1	1	491	919372008	EXHAUST SYSTEM
EXHAUST TC MOUNTING	10140729	430	1	163	12856862	DIESEL ENGINE
EXHAUST VALVE SEAT INSE	10128680	7	2	192	10149578	CYLINDER HEAD
EXPANSION BOLT 55.0X152 3	970611208	3	72	336	917259408	ROLLER SLEWING RING
EXPANSION BOLT M30X145 10.	970447008	2	62	336	917259408	ROLLER SLEWING RING
EXPANSION TANK CPL.	96028331	152	1	589	967784808	HYDR.AUXILIARY HOISTING
EXPANSION TANK CPL.	96028333	161	1	90	96035796	HYDR.TRAVEL DRIVE
EXPANSION TANK CPL.	96028333	161	1	107	96035792	HYDR.TRAVEL DRIVE
EXPANSION TANK PRE-ASS.	96034515	2	1	269	918731408	DRIVE ASSEMBLY CPL.
EXPANSION TANK WELDED	96035739	1	1	315	96034522	EQUALIZING RESERVOIR
EXPANSION TANK WELDED AL	96035326	1	1	314	96034515	EXPANSION TANK PRE-ASS.
EXTENSION DIN 3123 200X3/4"	790026408	65	1	144	928569808	MAIN TOOLS
EXTENSION DIN 3123 400X3/4"	790026308	64	1	144	928569808	MAIN TOOLS
EXTENSION M8X1	774374508	38	8	121	919644008	HYDRAULIC SUPPORT
EXTERNAL FEED 230V-110V	918462708	381	1	12		LIEBHERR LTR 1220
FALL PROTECTION	917260108	140	1	10		LIEBHERR LTR 1220
FALL PROTECTION	917691008	13	1	9		LIEBHERR LTR 1220
FALL PROTECTION EN 360 HW	11007309	2	1	153	916959808	PERSONAL PROTECTION EQ
FALL-BACK GUARD 12-36V 82	614009908	11	1	36	96045226	SWITCH BOX COMPL.
FAN	10650386	(11)	1	419	10877138	OPERATOR SEAT
FAN	12100177	(59)	1	419	10877138	OPERATOR SEAT
FAN BLADE	10874640	10	1	566	11622561	OIL AIR COOLER
FASTENING CLAMP	570066408	7	1	94	502806508	EQUALIZING RESERVOIR
FASTENING CLAMP 34 EN AC	10123304	1	1	253	10144098	FASTENING CLAMP
FASTENING CLAMP 34X34	10144098	6	2	252	10144227	CONTROL BOX ANNEXE
FASTENING DEVICE	10153374	4	1	230	12418347	AIR COND. COMPRESSOR A
FAULT INDICATOR	10429952	33	2	128	11347526	ELECTRIC PUMP
FAULT INDICATOR	10429952	9	1	504	10327065	ELECTRIC PUMP
FEINZAHNKNARRE DIN 3120-A	12103320	(1)	1	71	919254308	CRAWLER SUPPORT PREASS
FEMALE PLUG 15-POLE	10024744	502	2	446	96036955	WIRING HARNESS
FEMALE PLUG 25-POLE	602322708	504	1	446	96036955	WIRING HARNESS
FEMALE PLUG 9-POLE	602338608	509	1	520	96045387	CABLES, BASIC CONSTRUCTI
FERRITE KLAPPBAR	617000608	528	1	447	96036955	WIRING HARNESS
FERRITE KLAPPBAR	617000608	512	1	448	96036956	WIRING HARNESS
FERRULE 2 CU	11170565	36	8	121	919644008	HYDRAULIC SUPPORT

Description	Item	Pos.	Quantity	Page	Assembly	Description
FERRULE 2 CU	11170565	10	2	733	923285508	FOLDING BRACKET PRE-ASS.
FERRULE 2 CU	11170565	4	4	738	968090008	MOUNTING HOOK ROD
FILLER CAP 42 PA	10815416	19	1	399	916163008	WIPERS INSTALLATION
FILTER	11083438	2	1	412	11083498	AIR CONDITIONING UNIT
FILTER	12211223	(1)	1	484	968570808	UREA TANK
FILTER BRACKET	12455699	1	1	213	10133928	CONSOLE FOR FILTER PRE-A
FILTER CARTRIDGE 0,005m³/m	510671108	158	1	90	96035796	HYDR.TRAVEL DRIVE
FILTER CARTRIDGE 0,005m³/m	510671108	158	1	107	96035792	HYDR.TRAVEL DRIVE
FILTER CARTRIDGE 0,005m³/m	510671108	156	2	538	96045351	HYDRAULICS UPPER CARRI
FILTER CARTRIDGE 0,005m³/m	510671108	168	1	589	967784808	HYDR.AUXILIARY HOISTING
FILTER CARTRIDGE 0,005m³/m	510671108	154	1	688	967784508	HYDR.F.TELESCOPIC BOOM
FILTER INSERT 1m³/min 10µm	510671808	(1)	1	335	969050308	OIL TANK PRE-ASS.
FILTER INSERT OEL 10µm	10037616	(1)	1	538	96045351	HYDRAULICS UPPER CARRI
FILTER INSERT OEL 10µm	10037623	(1)	1	538	96045351	HYDRAULICS UPPER CARRI
FILTER SYNFASAN	11182242	66	1	384	917305408	INTERNAL PANELLING INSTA
FINAL CONTROL VALVE pmax	10138450	14	1	160	12856862	DIESEL ENGINE
FINGER-HOLD X0 KUNSTSTOF	955500008	7	1	433	968923508	FLAP RIGHT PRE-ASS.
FIRE EXTINGUISHER DIN EN 3	12101159	4	1	145	928620108	ACCESSORIES
FIRST AID KIST DIN 13164 260	789000308	5	1	145	928620108	ACCESSORIES
FITTING	11081053	3	1	131	774375108	PASSAGE NIPPLE BLOCK
FITTING	570066008	2	1	94	502806508	EQUALIZING RESERVOIR
FITTING	790065608	4	1	143	919328608	TOOLS AND ACCESSORIES
FITTING	790533908	5	2	143	919328608	TOOLS AND ACCESSORIES
FITTING	971581108	160	1	538	96045351	HYDRAULICS UPPER CARRI
FITTING BUZ 16S CR6-FREI	477701108	699	1	541	96045351	HYDRAULICS UPPER CARRI
FITTING BUZ 22L CR6-FREI	477700208	848	1	543	96045351	HYDRAULICS UPPER CARRI
FITTING BUZ 8 M14X1,5 INOX	10816958	400	1	494	96048826	EXHAUST SYSTEM PRE-ASSE
FITTING E335	979374708	403	1	277	919007708	DRIVE ASSEMBLY, PRE-ASSE
FITTING EGE 10L M12X1,5 CR6	471903908	603	1	90	96035796	HYDR.TRAVEL DRIVE
FITTING EGE 10L M12X1,5 CR6	471903908	603	1	107	96035792	HYDR.TRAVEL DRIVE
FITTING EGE 10S G3/8 A3C	471900408	735	1	542	96045351	HYDRAULICS UPPER CARRI
FITTING EGE 12L G1/2 A3P	471903808	667	1	541	96045351	HYDRAULICS UPPER CARRI
FITTING EGE 18L G3/4 CR6-F	10878394	400	1	327	96034868	PREMOUNTED FUEL FILTER
FITTING EGE 22L G3/4 CR6-F	471901408	661	1	541	96045351	HYDRAULICS UPPER CARRI
FITTING EGE 38S G1 1/4 CR6-F	10876353	626	1	90	96035796	HYDR.TRAVEL DRIVE
FITTING EGE 38S G1 1/4 CR6-F	10876353	626	1	107	96035792	HYDR.TRAVEL DRIVE
FITTING EGE 42L G1 1/2 A3P	471903608	715	2	541	96045351	HYDRAULICS UPPER CARRI
FITTING EGESD10-LR-WD A3P	471901108	620	3	541	96045351	HYDRAULICS UPPER CARRI
FITTING EGESD10-LR-WD A3P	471901108	621	1	590	967784808	HYDR.AUXILIARY HOISTING
FITTING EGESD12-LM-WD A3P	471902208	602	1	540	96045351	HYDRAULICS UPPER CARRI
FITTING EGESD12-LR-WD A3P	471901208	648	1	541	96045351	HYDRAULICS UPPER CARRI
FITTING EGESD12-LR-WD A3P	471901208	637	1	590	967784808	HYDR.AUXILIARY HOISTING
FITTING EGESD12-SR-WD A3P	471900508	609	1	693	967785408	ADDNL.HYDR. FOLDING JIB
FITTING EGESD16-SR-WD A3P	471900608	637	6	52	96035801	HYDRAULIC EQUIPM.CENTER
FITTING EGESD18-LR-WD A3P	471901308	646	2	52	96035801	HYDRAULIC EQUIPM.CENTER
FITTING EGESD22-LM-WD A3P	471902408	605	1	90	96035796	HYDR.TRAVEL DRIVE
FITTING EGESD22-LM-WD A3P	471902408	605	1	107	96035792	HYDR.TRAVEL DRIVE
FITTING EGESD25-SR-WD CF	471900808	681	1	541	96045351	HYDRAULICS UPPER CARRI
FITTING EGESD6-LR-WD CFX	471900108	627	2	52	96035801	HYDRAULIC EQUIPM.CENTER
FITTING EGESD6-SR-WD A3P	471900308	671	1	541	96045351	HYDRAULICS UPPER CARRI
FITTING EL 10L CR6-FREI	472330208	604	2	90	96035796	HYDR.TRAVEL DRIVE
FITTING EL 10L CR6-FREI	472330208	604	2	107	96035792	HYDR.TRAVEL DRIVE
FITTING EL 10L CR6-FREI	472330208	614	8	540	96045351	HYDRAULICS UPPER CARRI
FITTING EL 10L CR6-FREI	472330208	616	2	590	967784808	HYDR.AUXILIARY HOISTING
FITTING EL 10L CR6-FREI	472330208	604	3	688	967784508	HYDR.F.TELESCOPIC BOOM
FITTING EL 12L M18X1,5 CR6-F	247128602	614	1	51	96035801	HYDRAULIC EQUIPM.CENTER
FITTING EL 12L M18X1,5 CR6-F	247128602	609	1	90	96035796	HYDR.TRAVEL DRIVE
FITTING EL 12L M18X1,5 CR6-F	247128602	609	1	107	96035792	HYDR.TRAVEL DRIVE
FITTING EL 12L M18X1,5 CR6-F	247128602	639	8	541	96045351	HYDRAULICS UPPER CARRI
FITTING EL 12L M18X1,5 CR6-F	247128602	601	2	590	967784808	HYDR.AUXILIARY HOISTING

Description	Item	Pos.	Quantity	Page	Assembly	Description
FITTING EL 12L M18X1,5 CR6-F	247128602	611	2	688	967784508	HYDR.F.TELESCOPIC BOOM
FITTING EL 12S CR6-FREI	7617461	619	1	51	96035801	HYDRAULIC EQUIPM.CENTER
FITTING EL 12S CR6-FREI	7617461	602	4	124	968077208	HYDRAULIC SUPPORT
FITTING EL 12S CR6-FREI	7617461	605	1	693	967785408	ADDNL.HYDR. FOLDING JIB
FITTING EL 15L CR6-FREI	472300414	841	1	543	96045351	HYDRAULICS UPPER CARRI
FITTING EL 16S CR6-FREI	7407098	656	5	541	96045351	HYDRAULICS UPPER CARRI
FITTING EL 18L CR6-FREI	247128502	842	1	543	96045351	HYDRAULICS UPPER CARRI
FITTING EL 20S CR6-FREI	7407107	822	2	542	96045351	HYDRAULICS UPPER CARRI
FITTING EL 22L CR6-FREI	247138602	790	2	542	96045351	HYDRAULICS UPPER CARRI
FITTING EL 22L CR6-FREI	247138602	600	3	590	967784808	HYDR.AUXILIARY HOISTING
FITTING EL 25S CR6-FREI	7407118	808	2	542	96045351	HYDRAULICS UPPER CARRI
FITTING EL 25S CR6-FREI	7407118	610	1	590	967784808	HYDR.AUXILIARY HOISTING
FITTING EL 28L CR6-FREI	7407120	814	2	542	96045351	HYDRAULICS UPPER CARRI
FITTING EL 42L A3P SPF	472332008	192	1	539	96045351	HYDRAULICS UPPER CARRI
FITTING EL 42L CR6-FREI	7367986	612	1	51	96035801	HYDRAULIC EQUIPM.CENTER
FITTING EL 42L CR6-FREI	7367986	781	5	542	96045351	HYDRAULICS UPPER CARRI
FITTING EL 6S CR6-FREI	472331208	604	5	540	96045351	HYDRAULICS UPPER CARRI
FITTING EL 6S CR6-FREI	472331208	607	1	590	967784808	HYDR.AUXILIARY HOISTING
FITTING ET 12L M18X1,5 CR6-F	247105602	620	1	52	96035801	HYDRAULIC EQUIPM.CENTER
FITTING ET 12L M18X1,5 CR6-F	247105602	621	1	90	96035796	HYDR.TRAVEL DRIVE
FITTING ET 12L M18X1,5 CR6-F	247105602	621	1	107	96035792	HYDR.TRAVEL DRIVE
FITTING ET 12L M18X1,5 CR6-F	247105602	609	4	540	96045351	HYDRAULICS UPPER CARRI
FITTING ET 12L M18X1,5 CR6-F	247105602	638	1	590	967784808	HYDR.AUXILIARY HOISTING
FITTING ET 12L M18X1,5 CR6-F	247105602	605	1	595	969426308	AUX. HYDR. FOLDING JIB SP
FITTING ET 18L CR6-FREI	247108402	767	1	542	96045351	HYDRAULICS UPPER CARRI
FITTING ET 25S CR6-FREI	7367774	635	1	52	96035801	HYDRAULIC EQUIPM.CENTER
FITTING ET 25S CR6-FREI	7367774	712	2	541	96045351	HYDRAULICS UPPER CARRI
FITTING ET 25S CR6-FREI	7367774	623	1	590	967784808	HYDR.AUXILIARY HOISTING
FITTING ET 28L M36X2 CR6-F	7407122	633	1	52	96035801	HYDRAULIC EQUIPM.CENTER
FITTING ET 28L M36X2 CR6-F	7407122	829	1	542	96045351	HYDRAULICS UPPER CARRI
FITTING EV 12L M18X1,5 CR6-F	10410305	601	5	540	96045351	HYDRAULICS UPPER CARRI
FITTING EV 22L M30X2 CR6-F	10410771	404	1	314	96034515	EXPANSION TANK PRE-ASS.
FITTING EV 22L M30X2 CR6-F	10410771	835	2	543	96045351	HYDRAULICS UPPER CARRI
FITTING EV 42L M52X2 ZN-NI C	10651363	759	6	542	96045351	HYDRAULICS UPPER CARRI
FITTING EV16S M24X1,5 A3C	10410770	810	2	542	96045351	HYDRAULICS UPPER CARRI
FITTING EV16S M24X1,5 A3C	10410770	616	1	595	969426308	AUX. HYDR. FOLDING JIB SP
FITTING EV38S M52X2 A3C	10467292	650	1	52	96035801	HYDRAULIC EQUIPM.CENTER
FITTING EV38S M52X2 A3C	10467292	617	1	90	96035796	HYDR.TRAVEL DRIVE
FITTING EV38S M52X2 A3C	10467292	617	1	107	96035792	HYDR.TRAVEL DRIVE
FITTING EV38S M52X2 A3C	10467292	757	1	542	96045351	HYDRAULICS UPPER CARRI
FITTING EVL16-SR3/4"	472004008	4	2	361	90200104	OIL-GAUGING INSTRUMENT
FITTING EW 10L M16X1,5 CR6	7403569	638	2	478	969763408	PIPEWORK AIR INSTALLATIO
FITTING EW 10L M16X1,5 CR6	7403569	616	3	540	96045351	HYDRAULICS UPPER CARRI
FITTING EW 10L M16X1,5 CR6	7403569	615	1	590	967784808	HYDR.AUXILIARY HOISTING
FITTING EW 10L M16X1,5 CR6	7403569	603	6	688	967784508	HYDR.F.TELESCOPIC BOOM
FITTING EW 10S CR6-FREI	7617268	659	2	52	96035801	HYDRAULIC EQUIPM.CENTER
FITTING EW 10S CR6-FREI	7617268	805	2	542	96045351	HYDRAULICS UPPER CARRI
FITTING EW 12L M18X1,5 CR6	247117702	616	1	51	96035801	HYDRAULIC EQUIPM.CENTER
FITTING EW 12L M18X1,5 CR6	247117702	612	2	90	96035796	HYDR.TRAVEL DRIVE
FITTING EW 12L M18X1,5 CR6	247117702	612	2	107	96035792	HYDR.TRAVEL DRIVE
FITTING EW 12L M18X1,5 CR6	247117702	607	15	540	96045351	HYDRAULICS UPPER CARRI
FITTING EW 12L M18X1,5 CR6	247117702	609	1	688	967784508	HYDR.F.TELESCOPIC BOOM
FITTING EW 12S CR6-FREI	7617354	638	4	52	96035801	HYDRAULIC EQUIPM.CENTER
FITTING EW 12S CR6-FREI	7617354	621	2	541	96045351	HYDRAULICS UPPER CARRI
FITTING EW 12S CR6-FREI	7617354	604	2	693	967785408	ADDNL.HYDR. FOLDING JIB
FITTING EW 15L CR6-FREE	7615379	424	2	277	919007708	DRIVE ASSEMBLY, PRE-ASSE
FITTING EW 15L CR6-FREE	7615379	648	1	478	969763408	PIPEWORK AIR INSTALLATIO
FITTING EW 15L CR6-FREE	7615379	833	2	543	96045351	HYDRAULICS UPPER CARRI
FITTING EW 16S CR6-FREI	7617460	641	2	52	96035801	HYDRAULIC EQUIPM.CENTER
FITTING EW 16S CR6-FREI	7617460	658	11	541	96045351	HYDRAULICS UPPER CARRI

Description	Item	Pos.	Quantity	Page	Assembly	Description
FITTING EW 16S CR6-FREI	7617460	601	4	699	967785008	ADDNL.HYDR. FOLDING JIB
FITTING EW 18L M26X1,5 CR6	247108302	644	2	52	96035801	HYDRAULIC EQUIPM.CENTER
FITTING EW 18L M26X1,5 CR6	247108302	401	2	327	96034868	PREMOUNTED FUEL FILTER
FITTING EW 18L M26X1,5 CR6	247108302	635	1	478	969763408	PIPEWORK AIR INSTALLATIO
FITTING EW 18L M26X1,5 CR6	247108302	710	2	541	96045351	HYDRAULICS UPPER CARRI
FITTING EW 18L M26X1,5 CR6	247108302	610	1	595	969426308	AUX. HYDR. FOLDING JIB SP
FITTING EW 18L ST CR6-FREI	10815664	633	3	478	969763408	PIPEWORK AIR INSTALLATIO
FITTING EW 20S M30X2 CR6-F	7407108	640	2	52	96035801	HYDRAULIC EQUIPM.CENTER
FITTING EW 20S M30X2 CR6-F	7407108	635	1	541	96045351	HYDRAULICS UPPER CARRI
FITTING EW 22L CR6-FREI	247126202	2	1	228	10145176	PIPELINE INSTALLATION
FITTING EW 25S CR6-FREI	7407119	604	2	51	96035801	HYDRAULIC EQUIPM.CENTER
FITTING EW 28L CR6-FREI	7617494	731	4	542	96045351	HYDRAULICS UPPER CARRI
FITTING EW 6L CR6-FREI	247021702	626	2	52	96035801	HYDRAULIC EQUIPM.CENTER
FITTING EW 6L CR6-FREI	247021702	18	2	127	917257108	CENTRALIZED LUBRICATION
FITTING EW 6S M14X1,5 CR6-F	472531508	11	2	127	917257108	CENTRALIZED LUBRICATION
FITTING EW 6S M14X1,5 CR6-F	472531508	726	1	541	96045351	HYDRAULICS UPPER CARRI
FITTING EW 8L CR6-FREI	247021802	35	1	483	918484108	UREA PLANT
FITTING EWSD22-L A3P	472530608	625	13	541	96045351	HYDRAULICS UPPER CARRI
FITTING EWSD22-L A3P	472530608	643	3	590	967784808	HYDR.AUXILIARY HOISTING
FITTING EWSD38-S A3P	472531808	605	6	51	96035801	HYDRAULIC EQUIPM.CENTER
FITTING EWSD38-S A3P	472531808	602	2	90	96035796	HYDR.TRAVEL DRIVE
FITTING EWSD38-S A3P	472531808	602	2	107	96035792	HYDR.TRAVEL DRIVE
FITTING EWSD38-S A3P	472531808	653	5	541	96045351	HYDRAULICS UPPER CARRI
FITTING GE 10L M14X1,5 A3P	471030508	628	1	541	96045351	HYDRAULICS UPPER CARRI
FITTING GE 10L M14X1,5 A3P	471030508	624	1	590	967784808	HYDR.AUXILIARY HOISTING
FITTING GE 10L M16X1,5 CR6	7021521	2	1	487	969904608	PRESSURE RELIEF VALVE PR
FITTING GE 10L M22X1,5 CR6	471039808	623	1	478	969763408	PIPEWORK AIR INSTALLATIO
FITTING GE 12 M14X1,5/3/ INO	11002988	5	1	214	10143341	FUEL LINES
FITTING GE 12L G1/2 ZNNI	471034808	662	4	541	96045351	HYDRAULICS UPPER CARRI
FITTING GE 12L G1/2 ZNNI	471034808	605	4	688	967784508	HYDR.F.TELESCOPIC BOOM
FITTING GE 12L M14X1,5 CR6	7405399	746	2	542	96045351	HYDRAULICS UPPER CARRI
FITTING GE 12L M22X1,5 CR6	471039908	720	3	541	96045351	HYDRAULICS UPPER CARRI
FITTING GE 12S G1/2A CR6-F	471032608	608	3	51	96035801	HYDRAULIC EQUIPM.CENTER
FITTING GE 12S G1/2A CR6-F	471032608	622	1	90	96035796	HYDR.TRAVEL DRIVE
FITTING GE 12S G1/2A CR6-F	471032608	622	1	107	96035792	HYDR.TRAVEL DRIVE
FITTING GE 12S G1/2A CR6-F	471032608	606	4	693	967785408	ADDNL.HYDR. FOLDING JIB
FITTING GE 12S G3/8A CR6-F	471032708	618	10	51	96035801	HYDRAULIC EQUIPM.CENTER
FITTING GE 12S G3/8A CR6-F	471032708	618	3	540	96045351	HYDRAULICS UPPER CARRI
FITTING GE 12S G3/8A CR6-F	471032708	613	1	590	967784808	HYDR.AUXILIARY HOISTING
FITTING GE 12S M18X1,5 CR6	471032908	601	12	124	968077208	HYDRAULIC SUPPORT
FITTING GE 12S M18X1,5 CR6	471032908	725	2	541	96045351	HYDRAULICS UPPER CARRI
FITTING GE 14,15,16 M18X CR6	10813942	8	1	214	10143341	FUEL LINES
FITTING GE 18L M22X1,5 CR6	471031108	602	1	478	969763408	PIPEWORK AIR INSTALLATIO
FITTING GE 18L M22X1,5 CR6	471031108	749	3	542	96045351	HYDRAULICS UPPER CARRI
FITTING GE 18L M22X1,5 ST C	10815662	644	4	478	969763408	PIPEWORK AIR INSTALLATIO
FITTING GE 20S G1/2A CR6-F	7410451	745	1	542	96045351	HYDRAULICS UPPER CARRI
FITTING GE 22L M22X1,5 A3P	10036896	771	1	542	96045351	HYDRAULICS UPPER CARRI
FITTING GE 22L M26X1,5	471001308	3	2	361	90200104	OIL-GAUGING INSTRUMENT
FITTING GE 28L G1 A3P	471031608	754	4	542	96045351	HYDRAULICS UPPER CARRI
FITTING GE 28L G3/4A CR6-F	7410441	692	1	541	96045351	HYDRAULICS UPPER CARRI
FITTING GE 28L M26X1,5 CR6	7403925	770	1	542	96045351	HYDRAULICS UPPER CARRI
FITTING GE 42L G1 1/2 CR6-F	471034708	610	1	51	96035801	HYDRAULIC EQUIPM.CENTER
FITTING GE 42L G1 1/2 CR6-F	471034708	672	8	541	96045351	HYDRAULICS UPPER CARRI
FITTING GE 6 M10X1,0/7/1 CR6	10813933	9	1	215	10143342	LEAK OIL RETURN LINE
FITTING GE 6S G1/4 CR6-FREI	471032108	3	3	586	921444108	CENTRAL LUBRICATING SYS
FITTING GE 6S G1/4 CR6-FREI	471032108	640	1	590	967784808	HYDR.AUXILIARY HOISTING
FITTING GE 6S G1/4 CR6-FREI	471032108	600	1	688	967784508	HYDR.F.TELESCOPIC BOOM
FITTING GE 8 M12X1,5/1/2 CR6	10813935	10	2	215	10143342	LEAK OIL RETURN LINE
FITTING GE 8L M16X1,5 CR6-F	7618383	2	1	316	96039022	CONNECTION PIECE
FITTING GE 8L M18X1,5 CR6-F	471039308	36	1	462	918759808	ADD HEATING SUPERSTRUCT

Description	Item	Pos.	Quantity	Page	Assembly	Description
FITTING GE6-LM8X1K	774374808	19	16	127	917257108	CENTRALIZED LUBRICATION
FITTING GEF.A M24X1,5	10493479	61	1	668	10876933	TELESCOPIC CYLINDER
FITTING GEO 8L M16X1,5 CR6	10872598	3	1	487	969904608	PRESSURE RELIEF VALVE PR
FITTING GR 20/12S CR6-FREI	475004108	747	1	542	96045351	HYDRAULICS UPPER CARRI
FITTING GR 20/16S A3P	475033608	639	6	52	96035801	HYDRAULIC EQUIPM.CENTER
FITTING GR 22/18L CR6-FREI	475030708	643	2	52	96035801	HYDRAULIC EQUIPM.CENTER
FITTING GZ 15L A3P	470011208	840	1	543	96045351	HYDRAULICS UPPER CARRI
FITTING ISO 8434 ET 10L M16	482430314	639	2	590	967784808	HYDR.AUXILIARY HOISTING
FITTING ISO 8434 ET 10L M16	482430314	607	1	688	967784508	HYDR.F.TELESCOPIC BOOM
FITTING ISO 8434 ET 10S CR6	482431314	836	1	543	96045351	HYDRAULICS UPPER CARRI
FITTING ISO 8434 ET 12S CR6	482431414	648	1	52	96035801	HYDRAULIC EQUIPM.CENTER
FITTING ISO 8434 ET 16S CR6	482431514	660	2	52	96035801	HYDRAULIC EQUIPM.CENTER
FITTING ISO 8434 ET 16S CR6	482431514	612	2	595	969426308	AUX. HYDR. FOLDING JIB SP
FITTING ISO 8434 ET 20S CR6	482431614	633	2	541	96045351	HYDRAULICS UPPER CARRI
FITTING ISO 8434 ET 22L CR6	482430614	606	1	90	96035796	HYDR.TRAVEL DRIVE
FITTING ISO 8434 ET 22L CR6	482430614	606	1	107	96035792	HYDR.TRAVEL DRIVE
FITTING ISO 8434 ET 22L CR6	482430614	624	4	541	96045351	HYDRAULICS UPPER CARRI
FITTING ISO 8434 ET 22L CR6	482430614	635	1	590	967784808	HYDR.AUXILIARY HOISTING
FITTING ISO 8434 ET 38S CR6	482431814	826	1	542	96045351	HYDRAULICS UPPER CARRI
FITTING ISO 8434 ET 42L CR6	482431114	611	1	51	96035801	HYDRAULIC EQUIPM.CENTER
FITTING ISO 8434 EW 42L CR6	482530814	615	2	51	96035801	HYDRAULIC EQUIPM.CENTER
FITTING ISO 8434 EW 42L CR6	482530814	777	3	542	96045351	HYDRAULICS UPPER CARRI
FITTING ISO 8434 GE 10S G1/4	471004514	743	5	542	96045351	HYDRAULICS UPPER CARRI
FITTING ISO 8434 GE 10S M14	471008214	764	1	542	96045351	HYDRAULICS UPPER CARRI
FITTING ISO 8434-1 GE 10L G1/	7362091	600	1	90	96035796	HYDR.TRAVEL DRIVE
FITTING ISO 8434-1 GE 10L G1/	7362091	600	1	107	96035792	HYDR.TRAVEL DRIVE
FITTING ISO 8434-1 GE 10L G1/	7362091	608	6	540	96045351	HYDRAULICS UPPER CARRI
FITTING ISO 8434-1 GE 10L G1/	7362091	641	1	590	967784808	HYDR.AUXILIARY HOISTING
FITTING ISO 8434-1 GE 10L G1/	7362091	602	5	688	967784508	HYDR.F.TELESCOPIC BOOM
FITTING ISO 8434-1 GE 10L M	471039708	605	1	478	969763408	PIPEWORK AIR INSTALLATIO
FITTING ISO 8434-1 GE 10L M	471039708	619	5	541	96045351	HYDRAULICS UPPER CARRI
FITTING ISO 8434-1 GE 10L M	471039708	614	1	590	967784808	HYDR.AUXILIARY HOISTING
FITTING ISO 8434-1 GE 10L M	4981235	3	1	180	10150934	OIL DIPSTICK CPL.
FITTING ISO 8434-1 GE 10L M	4981235	19	2	238	10140729	EXHAUST TC MOUNTING
FITTING ISO 8434-1 GE 10S G3/	471032808	655	8	52	96035801	HYDRAULIC EQUIPM.CENTER
FITTING ISO 8434-1 GE 10S G3/	471032808	651	3	541	96045351	HYDRAULICS UPPER CARRI
FITTING ISO 8434-1 GE 10S G3/	471032808	608	1	693	967785408	ADDNL.HYDR. FOLDING JIB
FITTING ISO 8434-1 GE 12L M	471030708	650	5	541	96045351	HYDRAULICS UPPER CARRI
FITTING ISO 8434-1 GE 22L M	7362515	3	1	228	10145176	PIPELINE INSTALLATION
FITTING ISO 8434-1 GE 6L M10	4981233	6	1	229	10145278	ACCESSORIES AIR COMPRES
FITTING KEY DIN 6885 A 14X9	434018708	27	1	474	967928508	LOCKING
FITTING KEY DIN 6885 A16X10	434022601	41	2	668	10876933	TELESCOPIC CYLINDER
FITTING RED 18/15L CR6-FREI	475435608	727	1	541	96045351	HYDRAULICS UPPER CARRI
FITTING RED 25/10S A3P	475432208	831	1	542	96045351	HYDRAULICS UPPER CARRI
FITTING RED 42/18L CR6-FREI	475431708	845	1	543	96045351	HYDRAULICS UPPER CARRI
FITTING RED 42/22L A3C	475431608	789	2	542	96045351	HYDRAULICS UPPER CARRI
FITTING RED 42/28L CR6-FREI	475431308	609	2	51	96035801	HYDRAULIC EQUIPM.CENTER
FITTING RED 42/28L CR6-FREI	475431308	674	2	541	96045351	HYDRAULICS UPPER CARRI
FITTING RED 42/35L A3C	475436708	803	1	542	96045351	HYDRAULICS UPPER CARRI
FITTING REDSD12/10-L A3P	475431408	620	1	90	96035796	HYDR.TRAVEL DRIVE
FITTING REDSD12/10-L A3P	475431408	620	1	107	96035792	HYDR.TRAVEL DRIVE
FITTING REDSD12/10-L A3P	475431408	758	1	542	96045351	HYDRAULICS UPPER CARRI
FITTING REDSD12/10-L A3P	475431408	610	4	688	967784508	HYDR.F.TELESCOPIC BOOM
FITTING REDSD12/10-S A3P	475433408	610	1	693	967785408	ADDNL.HYDR. FOLDING JIB
FITTING REDSD12/6-S CFX	475432908	603	4	693	967785408	ADDNL.HYDR. FOLDING JIB
FITTING REDSD16/10-S A3P	475433508	824	4	542	96045351	HYDRAULICS UPPER CARRI
FITTING REDSD16/10-S A3P	475433508	614	2	595	969426308	AUX. HYDR. FOLDING JIB SP
FITTING REDSD16/6-S CFX	475433108	661	2	52	96035801	HYDRAULIC EQUIPM.CENTER
FITTING REDSD22/10-L A3P	475430808	827	1	542	96045351	HYDRAULICS UPPER CARRI
FITTING REDSD22/12-L A3P	475436108	610	1	90	96035796	HYDR.TRAVEL DRIVE

Description	Item	Pos.	Quantity	Page	Assembly	Description
FITTING REDSD22/12-L A3P	475436108	610	1	107	96035792	HYDR.TRAVEL DRIVE
FITTING REDSD22/12-L A3P	475436108	740	1	542	96045351	HYDRAULICS UPPER CARRI
FITTING REDSD22/12-L A3P	475436108	611	1	590	967784808	HYDR.AUXILIARY HOISTING
FITTING REDSD22/15-L A3P	475435508	756	3	542	96045351	HYDRAULICS UPPER CARRI
FITTING REDSD28/18-L A3P	475430908	819	1	542	96045351	HYDRAULICS UPPER CARRI
FITTING REDSD28/18-L A3P	475430908	615	1	595	969426308	AUX. HYDR. FOLDING JIB SP
FITTING REDSD28/22-L A3P	475430508	647	2	52	96035801	HYDRAULIC EQUIPM.CENTER
FITTING REDSD28/22-L A3P	475430508	687	1	541	96045351	HYDRAULICS UPPER CARRI
FITTING REDSD35/28-L CFX	475430408	632	3	52	96035801	HYDRAULIC EQUIPM.CENTER
FITTING REDSD38/16-S A3P	475434208	698	1	541	96045351	HYDRAULICS UPPER CARRI
FITTING REDSD38/6-S A3P	475408108	734	1	542	96045351	HYDRAULICS UPPER CARRI
FITTING REDSDN10/6-S A3P	475432008	601	1	693	967785408	ADDNL.HYDR. FOLDING JIB
FITTING REDSDN12/6-L A3P	475430208	846	1	543	96045351	HYDRAULICS UPPER CARRI
FITTING REDSDN20/16-S A3P	475432108	701	2	541	96045351	HYDRAULICS UPPER CARRI
FITTING REDSDN25/12-S A3P	475433608	622	1	541	96045351	HYDRAULICS UPPER CARRI
FITTING REDSDN25/12-S A3P	475433608	622	1	590	967784808	HYDR.AUXILIARY HOISTING
FITTING REDSDN25/20-S A3P	475432308	634	2	52	96035801	HYDRAULIC EQUIPM.CENTER
FITTING REDSDN25/20-S A3P	475432308	711	1	541	96045351	HYDRAULICS UPPER CARRI
FITTING REDSDN28/10-L A3P	475435408	828	1	542	96045351	HYDRAULICS UPPER CARRI
FITTING REDSDN38/30-S CFX	475435308	844	1	543	96045351	HYDRAULICS UPPER CARRI
FITTING REDSDN42/12-L A3P	475407208	613	1	51	96035801	HYDRAULIC EQUIPM.CENTER
FITTING REDSDN42/12-L A3P	475407208	780	1	542	96045351	HYDRAULICS UPPER CARRI
FITTING RI M22X1,5/M16X CR6	7381363	4	2	224	9080294	AIR COMPRESSOR PRE-ASSY
FITTING RSWS10-LR-WD A3P	473230508	664	2	541	96045351	HYDRAULICS UPPER CARRI
FITTING RSWS10-SM-WD A3P	473210508	600	1	693	967785408	ADDNL.HYDR. FOLDING JIB
FITTING RSWS10-SR-WD A3P	473231008	658	4	52	96035801	HYDRAULIC EQUIPM.CENTER
FITTING RSWS10-SR-WD A3P	473231008	843	1	543	96045351	HYDRAULICS UPPER CARRI
FITTING RSWS22-LM-WD A3P	473331308	801	1	542	96045351	HYDRAULICS UPPER CARRI
FITTING RSWS6-SR-WD A3P	473230608	645	2	52	96035801	HYDRAULIC EQUIPM.CENTER
FITTING S235JR	10145589	11	1	261	10144036	POWER TAKE-OFF ADD-ON
FITTING SNV10-L CFX	470010108	612	1	688	967784508	HYDR.F.TELESCOPIC BOOM
FITTING SNV10-L CFX	470010108	603	1	699	967785008	ADDNL.HYDR. FOLDING JIB
FITTING SNV10-S A3P	470010208	825	1	542	96045351	HYDRAULICS UPPER CARRI
FITTING SNV12-L A3P	470011308	611	1	90	96035796	HYDR.TRAVEL DRIVE
FITTING SNV12-L A3P	470011308	611	1	107	96035792	HYDR.TRAVEL DRIVE
FITTING SNV12-L A3P	470011308	666	2	541	96045351	HYDRAULICS UPPER CARRI
FITTING SNV22-L CFX	470010908	733	1	542	96045351	HYDRAULICS UPPER CARRI
FITTING SNV25-S CFX	470011008	830	1	542	96045351	HYDRAULICS UPPER CARRI
FITTING SNV25-S CFX	470011008	629	1	590	967784808	HYDR.AUXILIARY HOISTING
FITTING SNV28-L A3P	470010608	821	2	542	96045351	HYDRAULICS UPPER CARRI
FITTING SNV38-S A3P	470010708	713	1	541	96045351	HYDRAULICS UPPER CARRI
FITTING SNV38-S A3P	470010708	631	1	590	967784808	HYDR.AUXILIARY HOISTING
FITTING SNV42-L A3P	470011408	802	1	542	96045351	HYDRAULICS UPPER CARRI
FITTING SV 18L CR6-FREI	474030708	751	1	542	96045351	HYDRAULICS UPPER CARRI
FITTING SV 25S A3C	474032808	636	1	52	96035801	HYDRAULIC EQUIPM.CENTER
FITTING SV 25S A3C	474032808	628	1	590	967784808	HYDR.AUXILIARY HOISTING
FITTING T 10S A3C	470402208	657	4	52	96035801	HYDRAULIC EQUIPM.CENTER
FITTING T 22L	470400708	8	1	361	90200104	OIL-GAUGING INSTRUMENT
FITTING W 6L	470200108	17	14	127	917257108	CENTRALIZED LUBRICATION
FITTING WE 6LL M10x1	774373808	1	1	130	11347500	DISTRIBUTION BLOCK
FITTING WE 6LL M10x1	774373808	2	1	505	11002916	DISTRIBUTION BLOCK
FITTING WSV 20S A3C	474232808	623	4	52	96035801	HYDRAULIC EQUIPM.CENTER
FITTING XG10-L A3P	470030308	608	1	688	967784508	HYDR.F.TELESCOPIC BOOM
FITTING XG10-S A3P	470032408	669	3	541	96045351	HYDRAULICS UPPER CARRI
FITTING XG12-L A3P	470030408	600	1	595	969426308	AUX. HYDR. FOLDING JIB SP
FITTING XG16-S A3P	470032708	670	1	541	96045351	HYDRAULICS UPPER CARRI
FITTING XG16-S A3P	470032708	601	2	595	969426308	AUX. HYDR. FOLDING JIB SP
FITTING XG38-S A3P	470033108	627	1	90	96035796	HYDR.TRAVEL DRIVE
FITTING XG38-S A3P	470033108	627	1	107	96035792	HYDR.TRAVEL DRIVE
FITTING XG42-L A3P	470030908	804	1	542	96045351	HYDRAULICS UPPER CARRI

Description	Item	Pos.	Quantity	Page	Assembly	Description
FITTING XG6-L A3P	470030108	15	10	127	917257108	CENTRALIZED LUBRICATION
FITTING XGAI6-SR A3P	470700208	606	5	540	96045351	HYDRAULICS UPPER CARRI
FITTING XGAI6-SR A3P	470700208	608	1	590	967784808	HYDR.AUXILIARY HOISTING
FITTING XGE10-LR-ED3/8" A3P	471039608	611	6	540	96045351	HYDRAULICS UPPER CARRI
FITTING XGE10-LR-ED3/8" A3P	471039608	625	1	590	967784808	HYDR.AUXILIARY HOISTING
FITTING XGE12-LM-ED M18X1,	471039408	798	1	542	96045351	HYDRAULICS UPPER CARRI
FITTING XGE12-LR-ED A3P	471030808	617	1	51	96035801	HYDRAULIC EQUIPM.CENTER
FITTING XGE12-LR-ED A3P	471030808	610	7	540	96045351	HYDRAULICS UPPER CARRI
FITTING XGE12-LR-ED A3P	471030808	612	2	590	967784808	HYDR.AUXILIARY HOISTING
FITTING XGE12-LR-ED1/4" A3P	471035308	616	2	90	96035796	HYDR.TRAVEL DRIVE
FITTING XGE12-LR-ED1/4" A3P	471035308	616	2	107	96035792	HYDR.TRAVEL DRIVE
FITTING XGE12-LR-ED1/4" A3P	471035308	643	4	541	96045351	HYDRAULICS UPPER CARRI
FITTING XGE15-LM-ED M22X1,	471035508	11	2	325	968999708	FUEL TANK, PRE-ASSEMBLED
FITTING XGE15-LM-ED M22X1,	471035508	636	2	478	969763408	PIPEWORK AIR INSTALLATIO
FITTING XGE15-LR-ED A3P	471031008	651	1	52	96035801	HYDRAULIC EQUIPM.CENTER
FITTING XGE16-SR-ED A3P	471033208	657	13	541	96045351	HYDRAULICS UPPER CARRI
FITTING XGE16-SR-ED A3P	471033208	609	3	595	969426308	AUX. HYDR. FOLDING JIB SP
FITTING XGE16-SR-ED A3P	471033208	601	1	688	967784508	HYDR.F.TELESCOPIC BOOM
FITTING XGE16-SR-ED A3P	471033208	600	2	699	967785008	ADDNL.HYDR. FOLDING JIB
FITTING XGE16-SR-ED3/4" A3	471033108	696	4	541	96045351	HYDRAULICS UPPER CARRI
FITTING XGE18-LM M26X1,5 A3	476607608	634	1	478	969763408	PIPEWORK AIR INSTALLATIO
FITTING XGE18-LR-ED A3P	471031208	611	1	595	969426308	AUX. HYDR. FOLDING JIB SP
FITTING XGE18-LR-ED3/4" A3P	471037508	402	3	327	96034868	PREMOUNTED FUEL FILTER
FITTING XGE20-SM-ED A3P	471033308	634	4	541	96045351	HYDRAULICS UPPER CARRI
FITTING XGE20-SM-ED M33X2	471034308	425	2	277	919007708	DRIVE ASSEMBLY, PRE-ASSE
FITTING XGE20-SR-ED A3P	471033408	607	28	51	96035801	HYDRAULIC EQUIPM.CENTER
FITTING XGE20-SR-ED A3P	471033408	682	4	541	96045351	HYDRAULICS UPPER CARRI
FITTING XGE22-LM-ED M26X1,	471031308	600	4	540	96045351	HYDRAULICS UPPER CARRI
FITTING XGE22-LM-ED M26X1,	471031308	636	1	590	967784808	HYDR.AUXILIARY HOISTING
FITTING XGE22-LR-ED A3P	471031408	683	4	541	96045351	HYDRAULICS UPPER CARRI
FITTING XGE25-SR-ED A3P	471033608	603	2	51	96035801	HYDRAULIC EQUIPM.CENTER
FITTING XGE35-LR-ED A3P	471034508	602	3	51	96035801	HYDRAULIC EQUIPM.CENTER
FITTING XGE35-LR-ED A3P	471034508	624	1	90	96035796	HYDR.TRAVEL DRIVE
FITTING XGE35-LR-ED A3P	471034508	624	1	107	96035792	HYDR.TRAVEL DRIVE
FITTING XGE6-LM-ED A3P	471030108	16	8	127	917257108	CENTRALIZED LUBRICATION
FITTING XGE6-LR-ED A3P	471030008	13	2	502	917261208	CENT. LUBRIC. SYSTEM SUP
FITTING XGE6-LR-ED A3P	471030008	607	1	693	967785408	ADDNL.HYDR. FOLDING JIB
FITTING XGE8-SM-ED CFX	471032208	738	3	542	96045351	HYDRAULICS UPPER CARRI
FITTING XGE8-SM-ED CFX	471032208	634	1	590	967784808	HYDR.AUXILIARY HOISTING
FITTING XGEV38-SR-WD A3P	471034408	606	9	51	96035801	HYDRAULIC EQUIPM.CENTER
FITTING XGR12/6-L A3P	475030108	625	2	52	96035801	HYDRAULIC EQUIPM.CENTER
FITTING XGR15/12-L A3P	475031708	714	1	541	96045351	HYDRAULICS UPPER CARRI
FITTING XGR35/22-L A3C	475031208	607	1	90	96035796	HYDR.TRAVEL DRIVE
FITTING XGR35/22-L A3C	475031208	607	1	107	96035792	HYDR.TRAVEL DRIVE
FITTING XSV10-L A3P	474030308	752	1	542	96045351	HYDRAULICS UPPER CARRI
FITTING XSV12-L A3P	474000408	621	1	52	96035801	HYDRAULIC EQUIPM.CENTER
FITTING XSV12-S A3P	474032408	601	10	51	96035801	HYDRAULIC EQUIPM.CENTER
FITTING XSV15-L A3P	474030508	753	1	542	96045351	HYDRAULICS UPPER CARRI
FITTING XSV20-S A3P	474032708	624	8	52	96035801	HYDRAULIC EQUIPM.CENTER
FITTING XSV28-L CFX	474001008	600	3	51	96035801	HYDRAULIC EQUIPM.CENTER
FITTING XSV38-S A3P	474033008	630	1	590	967784808	HYDR.AUXILIARY HOISTING
FITTING XT10-L A3P	470430308	606	1	688	967784508	HYDR.F.TELESCOPIC BOOM
FITTING XT20-S A3P	470432608	702	1	541	96045351	HYDRAULICS UPPER CARRI
FITTING XT25-S A3P	470432708	832	1	543	96045351	HYDRAULICS UPPER CARRI
FITTING XT38-S A3P	470433008	791	1	542	96045351	HYDRAULICS UPPER CARRI
FITTING XW10-L A3P	470230308	602	1	699	967785008	ADDNL.HYDR. FOLDING JIB
FITTING XW18-L A3P	470230608	645	1	478	969763408	PIPEWORK AIR INSTALLATIO
FITTING XW38-S A3P	470233408	799	1	542	96045351	HYDRAULICS UPPER CARRI
FITTING XWSV12-L A3P	474200408	601	1	90	96035796	HYDR.TRAVEL DRIVE
FITTING XWSV12-L A3P	474200408	601	1	107	96035792	HYDR.TRAVEL DRIVE

Description	Item	Pos.	Quantity	Page	Assembly	Description
FITTING XWSV18-L A3P	474231508	649	1	478	969763408	PIPEWORK AIR INSTALLATIO
FITTINGS	9273271	2	2	204	10142942	LUBE OIL FILTER ASSEMBLY
FITTINGS ISO 8434-1 GE 22L M	10295188	403	1	314	96034515	EXPANSION TANK PRE-ASS.
FITTINGS ISO 8434-1 GE 22L M	10295188	737	6	542	96045351	HYDRAULICS UPPER CARRI
FITTINGS ISO 8434-1 GE 22L M	10295188	632	2	590	967784808	HYDR.AUXILIARY HOISTING
FIXED BOOM RAISING DEVICE	12102116	28	1	419	10877138	OPERATOR SEAT
FIXING DEVICE 2.LIFT TOP	967321308	10	1	706	918197708	EL.2 HOISTING LIMIT SWITCH
FLANGE	12100075	1	1	681	10354493	CABLE REEL
FLANGE	12400857	3	1	196	10120186	BALANCER ASSEMBLY
FLANGE	927504701	23	1	581	939294001	ROPE DRUM
FLANGE 10X137X137 S355MC	97032260	21	1	283	968026308	CLUTCH ACTUATOR
FLANGE 10X65X37 ALMG3 H11	97057024	4	1	499	918731908	AIR FILTER UNIT
FLANGE 25.0X16 9 42CRMO4	970003708	9	1	280	96034631	RADIATOR, PRE-ASSEMBLED
FLANGE FITTING	511518808	520	1	540	96045351	HYDRAULICS UPPER CARRI
FLANGE FITTING 101.6X71 S3	97053934	402	2	277	919007708	DRIVE ASSEMBLY, PRE-ASSE
FLANGE FITTING BFG 16S CR6	10030904	511	1	540	96045351	HYDRAULICS UPPER CARRI
FLANGE FITTING CR6-FREI	510037408	513	1	540	96045351	HYDRAULICS UPPER CARRI
FLANGE FITTING CR6-FREI	510133208	519	1	540	96045351	HYDRAULICS UPPER CARRI
FLANGE FITTING FLK40-35-40	10871016	206	1	276	919007708	DRIVE ASSEMBLY, PRE-ASSE
FLANGE FITTING SFL60-50-45	11491125	412	1	277	919007708	DRIVE ASSEMBLY, PRE-ASSE
FLANGE HALF CR6-FREI	510586608	502	4	589	967784808	HYDR.AUXILIARY HOISTING
FLANGE HALF SAE 1 6000 PSI	510586908	506	6	540	96045351	HYDRAULICS UPPER CARRI
FLANGE HALF SAE 1 6000 PSI	510586908	501	4	589	967784808	HYDR.AUXILIARY HOISTING
FLANGE PRE-ASS.	10152832	8	1	197	10138230	CAMSHAFT CPL.
FLANGE PRE-ASS.	10152832	8	1	197	10138230	CAMSHAFT CPL.
FLANGE PRE-ASS.	11348648	8	1	197	10138230	CAMSHAFT CPL.
FLANGE PRE-ASS.	12408221	2	1	196	10120186	BALANCER ASSEMBLY
FLANGE SLEEVE 18X12X12 S	10424489	2	2	408	966253908	WAGON
FLANGE SLEEVE 45X50X25 G-	9888448	(2)	2	262	9077386	AUXILIARY DRIVE PRE-ASS.
FLANGE STRAP	12100293	2	1	470	11212257	BELT CARRIER SYSTEM
FLANGE STUB PIPE AFG 38S	511517808	500	8	51	96035801	HYDRAULIC EQUIPM.CENTER
FLANGE STUB PIPE AFG 38S	511517808	500	2	90	96035796	HYDR.TRAVEL DRIVE
FLANGE STUB PIPE AFG 38S	511517808	500	2	107	96035792	HYDR.TRAVEL DRIVE
FLANGE STUB PIPE AFG 38S	511517808	510	3	540	96045351	HYDRAULICS UPPER CARRI
FLANGE STUB PIPE AFG 38S	511517808	500	3	688	967784508	HYDR.F.TELESCOPIC BOOM
FLAP COMPL.	969017908	1	1	441	969016008	FLAP LEFT FRONT PRE-ASS.
FLAP GLUED SPF	969007208	1	1	433	968923508	FLAP RIGHT PRE-ASS.
FLAP LEFT FRONT PRE-ASS.	969016008	1	1	439	969015908	SLEWING PLATFORM PANELLI
FLAP RIGHT PRE-ASS. SPF	968923508	2	1	429	96036790	SLEWING PLATFORM PANELLI
FLASHING LIGHT GLASS	11346616	(1)	1	146	915731908	EL.COMP. DISPATCH ASSEM
FLAT CLIP 114,3 EDELSTAHL	10296644	183	2	491	919372008	EXHAUST SYSTEM
FLAT FUSE LINK 10A 32	604007108	35	12	518	919503008	SWITCHBOX MOUNTING PART
FLAT FUSE LINK 15A	604007208	36	10	518	919503008	SWITCHBOX MOUNTING PART
FLAT FUSE LINK 20A	604007308	37	7	518	919503008	SWITCHBOX MOUNTING PART
FLAT FUSE LINK 25A	604007608	38	1	518	919503008	SWITCHBOX MOUNTING PART
FLAT FUSE LINK 3A	604007708	32	8	518	919503008	SWITCHBOX MOUNTING PART
FLAT FUSE LINK 5A 32	604006908	515	1	43	96045227	WIRING HARNESS
FLAT FUSE LINK 5A 32	604006908	33	8	518	919503008	SWITCHBOX MOUNTING PART
FLAT FUSE LINK 7,5A	604007008	505	1	43	96045227	WIRING HARNESS
FLAT FUSE LINK 7,5A	604007008	34	12	518	919503008	SWITCHBOX MOUNTING PART
FLAT GASKET	704274908	10	4	37	966167808	COVER COMPL.
FLAT PLUG	602304808	2	2	456	963398008	PREMOUNT.AXIAL FLOW FAN
FLAT PLUG 0,5-1,0MM2 CuSn4	10097470	671	2	513	96037136	WIRING HARNESS
FLAT PLUG 1,0-2,5MM2	602323208	120	21	43	96045227	WIRING HARNESS
FLAT PLUG 2,8X0,5-1 VERZ	602323508	124	34	43	96045227	WIRING HARNESS
FLAT PLUG 2,8X0,5-1 VERZ	602323508	124	6	446	96036955	WIRING HARNESS
FLAT PLUG 6,3X1-2,5 SN	602203908	75	2	43	96045227	WIRING HARNESS
FLAT PLUG 6,3X1-2,5 SN	602203908	75	2	446	96036955	WIRING HARNESS
FLAT PLUG 6,3X1-2,5 SN	602203908	75	3	512	96037136	WIRING HARNESS
FLAT PLUG HOUSING 18-POL	11067932	525	14	520	96045387	CABLES, BASIC CONSTRUCTI

Description	Item	Pos.	Quantity	Page	Assembly	Description
FLAT PLUG HOUSING 18-POL	602323308	503	3	43	96045227	WIRING HARNESS
FLAT PLUG HOUSING 18-POL	602323308	505	53	520	96045387	CABLES, BASIC CONSTRUCTI
FLAT PLUG HOUSING FASTIN	602208908	511	1	513	96037136	WIRING HARNESS
FLAT PLUG HOUSING FASTIN	602305908	517	1	43	96045227	WIRING HARNESS
FLAT PLUG HOUSING FASTIN	602305908	523	1	446	96036955	WIRING HARNESS
FLAT PLUG HOUSING FASTIN	602305908	3	1	456	963398008	PREMOUNT.AXIAL FLOW FAN
FLAT PLUG HOUSING FASTIN	602305908	503	1	520	96045387	CABLES, BASIC CONSTRUCTI
FLAT PLUG HOUSING JPT	602325608	524	2	520	96045387	CABLES, BASIC CONSTRUCTI
FLAT SEALING RING 17,4X24X	710121114	6	2	76	11320954	GUIDE WHEEL UNIT
FLAT SPIRAL SPRING	10428198	12	3	681	10354493	CABLE REEL
FLEXIBLE WASHER X5CRNI18	97124963	101	1	491	919372008	EXHAUST SYSTEM
FLOOR MAT 227X798X849 PU	97000467	11	1	383	917305408	INTERNAL PANELLING INSTA
FLOOR MAT 61X753X552 PU-S	97000466	10	1	383	917305408	INTERNAL PANELLING INSTA
FLOOR PLATE B9HDS 983593	10224095	(3)	72	64	917436708	FLOOR SHEET COMPL.
FLOOR SHEET COMPL. 1.0M	917436708	8	2	9		LIEBHERR LTR 1220
FLOOR SHEET WELDED	969132208	4	1	439	969015908	SLEWING PLATFORM PANELLI
FLOOR SHEET WELDED SPF	968933608	4	1	429	96036790	SLEWING PLATFORM PANELLI
FLOW DIVIDER VALVE 120L/MI	511485408	164	1	538	96045351	HYDRAULICS UPPER CARRI
FLUSH-/FEED PRESSURE VA	10871726	5	1	74	11182596	VARIABLE DISPLACEMENT MO
FLYWHEEL ASSEMBLY SAE 1	9077238	530	1	165	12856862	DIESEL ENGINE
FLYWHEEL HOUSING MOUNT	10115829	520	1	165	12856862	DIESEL ENGINE
FLYWHEEL HOUSING PRE-A	10118148	1	1	247	10115829	FLYWHEEL HOUSING MOUNT
FLYWHEEL PRE-ASS. SAE 1X1	12809567	1	1	251	9077238	FLYWHEEL ASSEMBLY
FOLDING BRACKET PRE-ASS.	923285508	2	1	731	917267508	TRANSPORT MOUNTING
FOLDING BRACKET ST.CONST	922849008	1	1	733	923285508	FOLDING BRACKET PRE-ASS.
FOLDING PART WELDED SPF	96020727	2	1	733	923285508	FOLDING BRACKET PRE-ASS.
FOOT ROCKER SPF	10297310	54	2	449	96036957	ELECTRIC ADD-ON PARTS CA
FOOT SWITCH CPL.	96023875	56	1	449	96036957	ELECTRIC ADD-ON PARTS CA
FORM HOSE DN20 X3.5 B SPF	97042067	62	1	464	96020359	ADDNL.HEATING, PRE-ASSE
FORM HOSE DN20 X3.5 B SPF	97042069	8	1	414	969085208	HEATING, PRE-ASSEMBLED
FORM HOSE DN20 X3.5 B SPF	97042069	16	1	462	918759808	ADD HEATING SUPERSTRUCT
FORM HOSE DN20 X3.5 B SPF	97042071	9	1	414	969085208	HEATING, PRE-ASSEMBLED
FORM HOSE DN20 X3.5 B SPF	97046324	10	1	414	969085208	HEATING, PRE-ASSEMBLED
FORM HOSE DN20 X3.5 B SPF	97046326	13	1	414	969085208	HEATING, PRE-ASSEMBLED
FORM HOSE DN20 X3.5 B SPF	97046327	15	1	414	969085208	HEATING, PRE-ASSEMBLED
FORM HOSE DN20 X3.5 B SPF	97046328	16	1	414	969085208	HEATING, PRE-ASSEMBLED
FORM HOSE DN20 X3.5 B SPF	97050852	15	1	462	918759808	ADD HEATING SUPERSTRUCT
FORM HOSE DN20 X3.5 B SPF	97050857	11	1	414	969085208	HEATING, PRE-ASSEMBLED
FORM HOSE DN20 X3.5 B SPF	97060781	60	1	464	96020359	ADDNL.HEATING, PRE-ASSE
FORM HOSE DN20 X3.5 B SPF	97060786	55	1	464	96020359	ADDNL.HEATING, PRE-ASSE
FRAME RAL 9005 MATT	10875930	5	1	566	11622561	OIL AIR COOLER
FRICTION BEARING 30X20 K	10215893	4	1	459	966707708	MIRROR RETAINER PRE-ASS.
FRICTION DISK	975529708	29	2	429	96036790	SLEWING PLATFORM PANELLI
FRICTION PLATE 3M TYP35	97116895	8	6	338	919369308	SLEWING GEAR
FRONT LEFT-HAND HOOD	967982708	2	1	439	969015908	SLEWING PLATFORM PANELLI
FRONT PROFILE 803X122X44 1	97000516	31	1	405	917304708	SLIDING DOOR INSTALLATION
FRONT WINDOW 6X735X1506	97003558	1	1	393	966497908	FRONT WINDOW CPL.
FRONT WINDOW CPL.	966497908	1	1	390	916162508	WINDOW ASSEMBLY
FUEL FEED	919231108	109	1	9		LIEBHERR LTR 1220
FUEL FILTER	10878502	100	1	327	96034868	PREMOUNTED FUEL FILTER
FUEL FILTER	553174008	1	1	468	11110051	DOSING PUMP
FUEL FILTER ELEMENT KRAFT	10149977	1	1	330	10878502	FUEL FILTER
FUEL FINE FILTER KRAFTST	12820742	2	1	213	10133928	CONSOLE FOR FILTER PRE-A
FUEL FINE-FILTER ASSEMBLY	10146791	201	1	162	12856862	DIESEL ENGINE
FUEL HOSE DN4,5	10815777	32	1	462	918759808	ADD HEATING SUPERSTRUCT
FUEL HOSE DN4,5	10815777	15	1	464	96020359	ADDNL.HEATING, PRE-ASSE
FUEL HOSE DN4,5-NBR NBR/	553191108	31	0.06	462	918759808	ADD HEATING SUPERSTRUCT
FUEL LINE	9078935	4	1	215	10143342	LEAK OIL RETURN LINE
FUEL LINE 12X1	10143240	7	1	214	10143341	FUEL LINES
FUEL LINES	10143341	212	1	162	12856862	DIESEL ENGINE

Description	Item	Pos.	Quantity	Page	Assembly	Description
FUEL PIPING 5X1 PA12 ETFP	11626108	3	5	462	918759808	ADD HEATING SUPERSTRUCT
FUEL PIPING 5X1 PA12 ETFP	11626108	4	1.65	462	918759808	ADD HEATING SUPERSTRUCT
FUEL PUMP	12101888	2	1	330	10878502	FUEL FILTER
FUEL TANK ADD-ON UNIT	917626608	108	1	9		LIEBHERR LTR 1220
FUEL TANK WELDED CONSTR	969072608	1	1	325	968999708	FUEL TANK, PRE-ASSEMBLED
FUEL TANK, PRE-ASSEMBLED	968999708	1	1	323	917626608	FUEL TANK ADD-ON UNIT
FUSE 50A 32V SPF	10023751	(20)	1	321	96023914	ELECTRIC FOR BATTERY BOX
FUSE BOX SMALL 6-POL, LEE	604501608	2	10	529	969061708	CARRIER PLATE, PRE-ASSE
FUSE CARTRIDGE 100A DC32	10878143	(22)	1	321	96023914	ELECTRIC FOR BATTERY BOX
FUSE CARTRIDGE 80A DC32	10878142	(21)	1	321	96023914	ELECTRIC FOR BATTERY BOX
FUSE CARTRIDGE DIN 72581	6905877	(1)	1	256	10151329	WIRING HARNESS ASSEMBLY
FUSE HOLDER RAUPENTRAE	968331708	9	6	116	968046208	ADD-ON PARTS
GAS SENSOR 0X51-0X52 NICH	12412141	(152)	2	494	96048826	EXHAUST SYSTEM PRE-ASSE
GAS SENSOR NICHT LACKIE	10144038	(153)	1	494	96048826	EXHAUST SYSTEM PRE-ASSE
GAS SPRING 12X80-100N ST	10476211	6	2	390	916162508	WINDOW ASSEMBLY
GAS SPRING 19X60-550N	591067008	23	1	417	918810308	CONTROL STAND
GAS SPRING 23X251-550N ST	11003837	17	2	390	916162508	WINDOW ASSEMBLY
GAS SPRING 23X265-500N	591061908	10	2	433	968923508	FLAP RIGHT PRE-ASS.
GAS SPRING 23X265-750N	591065008	9	2	441	969016008	FLAP LEFT FRONT PRE-ASS.
GASKET KIT INT.FLANGE	10472219	999	1	297	10008308	CONNECTING PLATE
GASKET KIT INT.FLANGE	10872487	999	1	309	571907208	CONNECTING PLATE
GAUGE 1.5X130X25 X5CRNI18	97126865	21	1	143	919328608	TOOLS AND ACCESSORIES
GAUGE CONNECTION 12S M20	7409922	649	1	52	96035801	HYDRAULIC EQUIPM.CENTER
GAUGE CONNECTION DKO 1	5607617	823	6	542	96045351	HYDRAULICS UPPER CARRI
GAUGE CONNECTION DKO 1	5607617	613	2	595	969426308	AUX. HYDR. FOLDING JIB SP
GAUGE CONNECTION NW 12	7409918	755	1	542	96045351	HYDRAULICS UPPER CARRI
GEAR PUMP FP12	10870965	110	1	276	919007708	DRIVE ASSEMBLY, PRE-ASSE
GEAR PUMP WP09 SPF	10870964	109	1	276	919007708	DRIVE ASSEMBLY, PRE-ASSE
GEAR PUMP WP09 SPF	11210201	106	1	275	919007708	DRIVE ASSEMBLY, PRE-ASSE
GEAR WHEEL	10133692	4	1	197	10138230	CAMSHAFT CPL.
GEAR WHEEL	10137602	(2)	1	197	10138230	CAMSHAFT CPL.
GEAR WHEEL	10139764	4	1	196	10120186	BALANCER ASSEMBLY
GEAR WHEEL	10139765	5	1	196	10120186	BALANCER ASSEMBLY
GEAR WHEEL	10872521	80	1	412	11083498	AIR CONDITIONING UNIT
GEAR WHEEL MOTOR AZMF	10429930	102	1	280	96034631	RADIATOR, PRE-ASSEMBLED
GEAR WHEEL Z=36 M=2,5	9073343	2	1	224	9080294	AIR COMPRESSOR PRE-ASSY
GEAR WHEEL Z=50 M=2,5	9072834	3	1	183	10147438	CRANKSHAFT WITH GEAR
GEARBOX COVER	939251801	65	1	340	90008901	SLEWING GEAR DRIVE
GEARWHEEL PRE-ASS.	10138447	3	1	197	10138230	CAMSHAFT CPL.
GEARWHEEL PRE-ASS.	10145049	(1)	1	197	10138230	CAMSHAFT CPL.
GENERATOR, PRE-ASSEMBL	10142863	440	1	164	12856862	DIESEL ENGINE
GLUE 10ML FLASCHE -50/+175	8655032	104	1	167	11389608	CRANKCASE CPL. WITH CYLIN
GLUE 250ML FLASCHE -50/+1	8655023	104	1	192	10149578	CYLINDER HEAD
GREASE CTK 668190 50KG	861303501	38	0.1	354	90208882	COMPACT ROPE WINCH
GREASE NBU 30 1KG DOSE	10285708	100	1	169	10154458	CYLINDER
GREASE NBU 30 1KG DOSE	10285708	100	1	170	10147687	POWER UNIT SUPPORT ATT
GREASE NBU 30 1KG DOSE	10285708	100	1	196	10120186	BALANCER ASSEMBLY
GREASE NBU 30 1KG DOSE	10285708	100	1	203	10148432	LUBE OIL PUMP WITH FASTEN
GREASE NBU 30 1KG DOSE	10285708	100	1	218	10145173	INTAKE STACK ASSEMBLY
GREASE NBU 30 1KG DOSE	10285708	100	1	220	10149677	CONNECTING LINE ADD-ON
GREASE NBU 30 1KG DOSE	10285708	100	1	223	10127566	INSTALLATION BRAKE COMPR
GREASE NBU 30 1KG DOSE	10285708	100	1	231	10142733	WATER PUMP WITH FASTENIN
GREASE NBU 30 1KG DOSE	10285708	100	1	232	10148215	THERMOSTAT HOUSING ASS
GREASE NBU 30 1KG DOSE	10285708	100	1	234	10142742	COOLANT PIPE BEND ADD-ON
GREASE NBU 30 1KG DOSE	10285708	100	1	247	10115829	FLYWHEEL HOUSING MOUNT
GREASE NBU 30 1KG DOSE	10285708	100	1	250	10127979	LOCKING PIECES
GREASE NBU 30 1KG DOSE	10285708	(100)	1	258	12583633	ENGINE CONTROL SENSORS
GREASE NBU 30 1KG DOSE	10285708	(100)	1	258	12583633	ENGINE CONTROL SENSORS
GREASE NBU 30 1KG DOSE	10285708	(100)	1	260	10125687	POWER TAKE-OFF ADD-ON
GREASE NBU 30 1KG DOSE	10285708	100	1	262	9077386	AUXILIARY DRIVE PRE-ASS.

Description	Item	Pos.	Quantity	Page	Assembly	Description
GREASE NIPPLE CAP	10014701	16	1	504	10327065	ELECTRIC PUMP
GREASE NIPPLE DIN 71412 C	774301808	21	8	121	919644008	HYDRAULIC SUPPORT
GREASE NIPPLE M16X1.5	774351714	7	1	76	11320954	GUIDE WHEEL UNIT
GREASE STABURAGS NBU 30	10282622	100	1	179	10121667	CONNECTING PIECE W.O-RIN
GREASE STABURAGS NBU 30	10282622	100	1	197	10138230	CAMSHAFT CPL.
GREASE STABURAGS NBU 30	10282622	100	1	244	10115664	LOCKING PIECES
GRIDIRON T725X564X30/3 S2	97053346	19	1	439	969015908	SLEWING PLATFORM PANELLI
GRIP	12103434	(2)	1	419	10877138	OPERATOR SEAT
GRIP 4X110X245 S315MC	97100419	3	2	17	919617108	CRAWLER TRACK TRAVEL G
GRIP DIN 3122 A 3/4"	790026208	63	1	144	928569808	MAIN TOOLS
GRIP ZN-DRUCKGUSS	10112569	(10)	1	539	96045351	HYDRAULICS UPPER CARRI
GROMMET 10/12/17,5 PVC BK	602701308	1	1	375	916170808	CABLE INLET
GROMMET NUT M6	7361600	18	1	311	10292815	REGULATOR ELEMENT
GROUND RAIL	926891108	25	1	522	969256608	BASE ASSEMBLY
GRUB SCREW	570435308	39	1	668	10876933	TELESCOPIC CYLINDER
GRUB SCREW DIN 913 M10X25	404402708	30	1	472	10877810	BALLAST EXTENSION RAM
GRUB SCREW DIN 913 M10X30	404402908	31	1	472	10877810	BALLAST EXTENSION RAM
GRUB SCREW DIN 913 M10X6	7623427	20	2	305	10871282	VARIABLE PUMP
GRUB SCREW DIN 913 M12X2	404403608	9	2	472	10877810	BALLAST EXTENSION RAM
GRUB SCREW DIN 913 M5X6 4	510762108	(301)	3	275	919007708	DRIVE ASSEMBLY, PRE-ASSE
GRUB SCREW DIN 913 M6X25	404400508	16	1	405	917304708	SLIDING DOOR INSTALLATION
GRUB SCREW DIN 913 M6X25	404400508	5	1	696	511479408	LOAD HOLDING VALVE
GRUB SCREW ISO 4026 M10X	10179470	4	1	421	962282208	ARM REST LEFT
GRUB SCREW ISO 4026 M10X	10179470	4	1	423	962282308	ARM REST RIGHT
GRUB SCREW ISO 4026 M12X	000608250	12	5	628	919028808	DISPATCH ASSY.MECH.PART
GRUB SCREW ISO 4026 M20X	10875481	50	4	644	917292008	TELESCOPIC SECTION 1 PRE
GRUB SCREW ISO 4026 M20X	10875481	50	4	648	917292108	TELESCOPIC SECT.2 PRE-AS
GRUB SCREW ISO 4026 M20X	10875481	50	4	652	917292208	TELESCOPIC SECT.3 PRE-ASS
GRUB SCREW ISO 4026 M20X	10875481	50	4	656	917292308	TELESCOPIC SECT.IV PRE-A
GRUB SCREW ISO 4026 M20X	10875481	50	4	661	917292408	TELESCOPIC SECT.5 PRE-AS
GRUB SCREW ISO 4026 M6X10	12100613	3	1	420	96032222	REWORK ARMREST LEFT
GRUB SCREW ISO 4026 M6X10	12100613	3	1	422	96032223	REWORK ARMREST RIGHT
GRUB SCREW ISO 4026 M6X3	510753308	27	2	372	916177508	STEP CPL.
GRUB SCREW ISO 4026 M8X50	12100292	12	2	705	917268408	BOOM NOSE
GRUB SCREW ISO 4026 M8X50	12100292	3	2	708	967321308	FIXING DEVICE 2.LIFT TOP
GRUB SCREW ISO 4028 M8X2	4901247	29	1	472	10877810	BALLAST EXTENSION RAM
GRUB SCREW M6X50 A2-70	10450694	25	1	393	966497908	FRONT WINDOW CPL.
GRUB SCREW M6X50 A2-70	10450694	22	1	405	917304708	SLIDING DOOR INSTALLATION
GSM MODULE MC-MRH	10873838	26	1	518	919503008	SWITCHBOX MOUNTING PART
GUARD	10872389	7	1	566	11622561	OIL AIR COOLER
GUARD PA	10222686	27	2	522	969256608	BASE ASSEMBLY
GUARD RING	10152974	3	1	186	10153583	CRANKSHAFT SEALING
GUIDE	962625708	9	1	672	966134608	ADD-ON PARTS CYLINDER
GUIDE 180X70X 50 PA6G	97093433	6	1	87	96034962	GUIDE LEFT
GUIDE 180X70X 50 PA6G	97093433	6	1	104	96034980	GUIDE RIGHT
GUIDE 30.0X235 S355J2C+C FE	97033304	2	2	475	967978908	INTERLOCKING
GUIDE 30.0X345 S355J2C+C FE	97030029	4	1	474	967928508	LOCKING
GUIDE 30.0X388 S355J2C+C FE	97033305	3	1	475	967978908	INTERLOCKING
GUIDE 306X48X37 ENAW6060-	977430408	10	2	417	918810308	CONTROL STAND
GUIDE 80.0X76 35NICRMOV12	97008548	2	1	459	966707708	MIRROR RETAINER PRE-ASS.
GUIDE BUSHING 50,1X85X132	10470371	7	1	668	10876933	TELESCOPIC CYLINDER
GUIDE ISO 8062-3DCTG6 30X5	972426708	49	4	644	917292008	TELESCOPIC SECTION 1 PRE
GUIDE ISO 8062-3DCTG6 30X5	972426708	49	4	648	917292108	TELESCOPIC SECT.2 PRE-AS
GUIDE ISO 8062-3DCTG6 30X5	972426708	49	4	652	917292208	TELESCOPIC SECT.3 PRE-ASS
GUIDE ISO 8062-3DCTG6 30X5	972426708	49	4	656	917292308	TELESCOPIC SECT.IV PRE-A
GUIDE ISO 8062-3DCTG6 30X5	972426708	49	4	661	917292408	TELESCOPIC SECT.5 PRE-AS
GUIDE LEFT	96034962	200	1	71	919254308	CRAWLER SUPPORT PREASS
GUIDE PLATE	570110408	2	1	348	570109508	DRIVING GEAR
GUIDE PRE-ASS.	966230508	27	1	405	917304708	SLIDING DOOR INSTALLATION
GUIDE PULLEY COMPL.	10149360	3	2	230	12418347	AIR COND. COMPRESSOR A

Description	Item	Pos.	Quantity	Page	Assembly	Description
GUIDE RIGHT	96034980	200	1	101	919254408	CRAWLER SUPPORT PREASS
GUIDE WELDED GLASPERLEN	966230608	28	1	405	917304708	SLIDING DOOR INSTALLATION
GUIDE WHEEL UNIT B9HDSX	11320954	5	1	70	919254308	CRAWLER SUPPORT PREASS
GUIDE WHEEL UNIT B9HDSX	11320954	5	1	100	919254408	CRAWLER SUPPORT PREASS
GUIDING PIPE	9079532	2	1	180	10150934	OIL DIPSTICK CPL.
GUIDING RAIL 5X1380X184 S7	97032836	5	3	116	968046208	ADD-ON PARTS
GUIDING RAIL 5X1380X184 S7	97032837	6	3	116	968046208	ADD-ON PARTS
GUIDING ROD 45.0X445 35NIC	97037244	60	1	71	919254308	CRAWLER SUPPORT PREASS
GUIDING ROD 45.0X445 35NIC	97037244	60	1	101	919254408	CRAWLER SUPPORT PREASS
GUIDING ROD 45.0X455 35NIC	97036914	40	4	17	919617108	CRAWLER TRACK TRAVEL G
GUIDING TAPE 160X25	7367564	6	2	78	10877686	TENSION JACK HYDR CPL
HALF SHELL 80X25 PA6G + OE	97038484	16	2	134	919087608	ROTARY FEED THROUGH
HAND GRIP CPL. DREH KUNST	704232208	9	1	393	966497908	FRONT WINDOW CPL.
HAND HAMMER DIN 1041 800	790030008	60	1	144	928569808	MAIN TOOLS
HAND LEVER PRESS	885602114	6	1	143	919328608	TOOLS AND ACCESSORIES
HAND LEVER PRESS VERZ.	790042008	70	1	144	928569808	MAIN TOOLS
HAND RAIL NIROSTA	10297396	22	1	474	967928508	LOCKING
HANDGRIP 215X25X59,2X169	10443309	59	1	384	917305408	INTERNAL PANELLING INSTA
HANDLE	591066808	10	2	393	966497908	FRONT WINDOW CPL.
HANDLE	591066808	5	1	394	965784408	ROOF WINDOW PRE-ASS.
HANDLE 212X53	12554272	6	1	441	969016008	FLAP LEFT FRONT PRE-ASS.
HANDLE CAP	571824708	1	1	454	10343693	MASTER SWITCH
HANDLE GRIP WELDED FE//ZN	925642908	28	4	121	919644008	HYDRAULIC SUPPORT
HANDLE GRIP WELDED FE//ZN	925642908	18	1	721	968728808	CONSOLE PRE-ASS.
HANDLE WELD.CONST. FE//ZN	962963808	56	1	70	919254308	CRAWLER SUPPORT PREASS
HANDLE WELD.CONST. FE//ZN	962963808	56	1	100	919254408	CRAWLER SUPPORT PREASS
HANDLE WELD.CONST. FE//ZN	962963808	15	1	475	967978908	INTERLOCKING
HANDLE WELD.CONST. FE//ZN	963557408	(2)	1	705	917268408	BOOM NOSE
HANDLE WELD.CONST. FE//ZN	967969708	4	2	575	917267108	AUXILIARY HOISTING GEAR 2
HANDLE WELD.CONST. FE//ZN	967969708	8	2	728	917413208	SELF-ERECT. AUX. HOIST GEA
HANDLEADAPTER	11005983	3	1	406	966230408	CLOSING DEVICE
HATCHING PLAN SPF	917258108	44	1	9		LIEBHERR LTR 1220
HAZARD WARNING FLASHER 2	607106208	2	2	145	928620108	ACCESSORIES
HEAT EXCHANGER ALU	10801858	14	1	412	11083498	AIR CONDITIONING UNIT
HEAT PROTECTION SHEET	10144755	1	1	237	10144756	HEAT PROTECTION W.FASTEN
HEAT PROTECTION SHEET S	11382888	10	1	220	10149677	CONNECTING LINE ADD-ON
HEAT PROTECTION SHEET S	12428325	10	1	220	10149677	CONNECTING LINE ADD-ON
HEAT PROTECTION W.FASTEN	10144756	415	1	163	12856862	DIESEL ENGINE
HEATING	502651408	2	1	479	502657308	AIR DRYER
HEATING CRANE DRIVER'S C	917676208	134	1	10		LIEBHERR LTR 1220
HEATING ELEMENT	10650387	(13)	1	419	10877138	OPERATOR SEAT
HEATING FLANGE ADD-ON	9078314	260	1	162	12856862	DIESEL ENGINE
HEATING FLANGE PRE.ASS.	10299988	1	1	221	9078314	HEATING FLANGE ADD-ON
HEATING HOSE 70/PRIMAFLE	553181208	12	0.25	396	916168308	AIR DUCT
HEATING, PRE-ASSEMBLED	969085208	20	1	410	917676208	HEATING CRANE DRIVER'S CA
HEATSHRINK SLEEVING 11,6/2	10441166	298	0.1	446	96036955	WIRING HARNESS
HEATSHRINK SLEEVING 11,6/2	10441166	298	0.5	514	96037137	WIRING HARNESS
HEAVY FOIL MATTING 2X1115	97051749	9	1	435	968977308	SOUND PROOFING/SOUND I
HEAVY FOIL MATTING 2X390	97058386	10	1	435	968977308	SOUND PROOFING/SOUND I
HEAVY FOIL MATTING 2X885	97058387	11	1	435	968977308	SOUND PROOFING/SOUND I
HEX CAP NUT RD32X3 SPF	10466914	177	2	539	96045351	HYDRAULICS UPPER CARRI
HEX CAP NUT RD36X3 SPF	10466915	150	3	699	967785008	ADDNL.HYDR. FOLDING JIB
HEX CAP NUT RD54X4 SPF	10466916	159	2	589	967784808	HYDR.AUXILIARY HOISTING
HEX CAP NUT RD79X4 SPF	10466917	154	2	589	967784808	HYDR.AUXILIARY HOISTING
HEX NUT AEHNL.ISO 7040 M6	11004444	32	2	21	96034894	PROTECTION PLATE CPL.
HEX NUT AEHNL.ISO 7040 M6	11004444	32	2	24	96034977	PROTECTION PLATE
HEX NUT AEHNL.ISO 7040 M6	11004444	6	14	85	968420608	STORAGE BOX
HEX NUT AEHNL.ISO 7040 M6	11004444	9	3	714	967933408	LOCATION FIXTURE PRE-ASS.
HEX NUT AEHNL.ISO 7042 M12	11626393	350	4	494	96048826	EXHAUST SYSTEM PRE-ASSE
HEX NUT AEHNL.ISO 7042 M6	11113917	351	4	494	96048826	EXHAUST SYSTEM PRE-ASSE

Description	Item	Pos.	Quantity	Page	Assembly	Description
HEX NUT DIN 934 M5 8 VERZ	411514877	49	7	47	11346779	SLIP RING TRANSMITTER
HEX NUT DIN 985 M10 8 ZNNI-4	10197769	108	10	71	919254308	CRAWLER SUPPORT PREASS
HEX NUT DIN 985 M10 8 ZNNI-4	10197769	109	10	101	919254408	CRAWLER SUPPORT PREASS
HEX NUT DIN 985 M10 8 ZNNI-4	10197769	12	1	399	916163008	WIPERS INSTALLATION
HEX NUT DIN 985 M10 8 ZNNI-4	10197769	19	1	616	96037130	EQUIPMENT CAMERA SLEW C
HEX NUT DIN 985 M10 8 ZNNI-4	10197769	19	1	618	96037131	EQUIPMENT CAMERA WINCHE
HEX NUT DIN 985 M10 8 ZNNI-4	10197769	(9)	1	628	919028808	DISPATCH ASSY.MECH.PART
HEX NUT DIN 985 M10 8 ZNNI-4	10197769	27	8	639	917291908	PIVOT SECTION, PRE-ASSEMB
HEX NUT DIN 985 M10 8 ZNNI-4	10197769	25	3	721	968728808	CONSOLE PRE-ASS.
HEX NUT DIN 985 M12 10 FLZ	12218127	12	8	672	966134608	ADD-ON PARTS CYLINDER
HEX NUT DIN 985 M12 8 FLZN	10875607	329	4	478	969763408	PIPEWORK AIR INSTALLATIO
HEX NUT DIN 985 M12 8 FLZN	10875607	84	6	640	917291908	PIVOT SECTION, PRE-ASSEMB
HEX NUT DIN 985 M16 8 FLZN	10875609	14	8	30	917511508	CRAWLER CENTRE PART PRE
HEX NUT DIN 985 M16 8 FLZN	10875609	5	4	369	967986308	BEARING INSTALLATION
HEX NUT DIN 985 M16 8 FLZN	10875609	25	1	474	967928508	LOCKING
HEX NUT DIN 985 M16 8 FLZN	10875609	18	4	639	917291908	PIVOT SECTION, PRE-ASSEMB
HEX NUT DIN 985 M20 10 FLZ	10875610	7	1	323	917626608	FUEL TANK ADD-ON UNIT
HEX NUT DIN 985 M20 10 FLZ	10875610	6	1	332	917825508	OIL RESERVOIR, EXTENSION
HEX NUT DIN 985 M3 8 480H	10876399	26	4	449	96036957	ELECTRIC ADD-ON PARTS CA
HEX NUT DIN 985 M4 8 480H	10875611	88	1	640	917291908	PIVOT SECTION, PRE-ASSEMB
HEX NUT DIN 985 M4 8 480H	10875611	61	1	661	917292408	TELESCOPIC SECT.5 PRE-AS
HEX NUT DIN 985 M4 8 480H	10875611	7	3	715	967936408	WIND WARNING PREASSEMB
HEX NUT DIN 985 M5 A2-70	10301317	17	4	34	96045225	ELECTR.FOR CENTER SECTIO
HEX NUT DIN 985 M5 A2-70	10301317	5	1	714	967933408	LOCATION FIXTURE PRE-ASS.
HEX NUT DIN 985 M6 8 ZNNI-4	12102692	72	8	483	918484108	UREA PLANT
HEX NUT DIN 985 M6 8 ZNNI-4	12102692	14	6	525	926891108	GROUND RAIL
HEX NUT DIN 985 M6 8 ZNNI-4	12102692	304	14	539	96045351	HYDRAULICS UPPER CARRI
HEX NUT DIN 985 M6 8 ZNNI-4	12102692	5	1	630	925141508	HOSE GUIDE PRE-ASS.
HEX NUT DIN 985 M6 8 ZNNI-4	12102692	306	2	699	967785008	ADDNL.HYDR. FOLDING JIB
HEX NUT DIN 985 M6 8 ZNNI-4	12102692	26	4	721	968728808	CONSOLE PRE-ASS.
HEX NUT DIN 985 M6 A2-70	411903008	49	8	30	917511508	CRAWLER CENTRE PART PRE
HEX NUT DIN 985 M6 A2-70	411903008	11	1	378	968514508	INSTALLATION SWITCH CAB. C
HEX NUT DIN 985 M6 A2-70	411903008	23	4	405	917304708	SLIDING DOOR INSTALLATION
HEX NUT DIN 985 M6 A2-70	411903008	5	2	407	966230508	GUIDE PRE-ASS.
HEX NUT DIN 985 M6 A2-70	411903008	4	4	599	917269308	CHARGER
HEX NUT DIN 985 M6 A2-70	411903008	27	2	609	968994408	CAMERA HOLDER, PREMOU
HEX NUT DIN 985 M6 A2-70	411903008	25	4	610	968290608	STAND
HEX NUT DIN 985 M6 A2-70	411903008	14	2	612	968993508	CAMERA HOLDER, PREMOU
HEX NUT DIN 985 M6 A2-70	411903008	25	4	613	968267208	STAND
HEX NUT DIN 985 M8 10 480H	10876076	11	4	577	967969608	AUXILIARY HOISTING GEAR 2
HEX NUT DIN 985 M8 8 480H	10875614	9	7	87	96034962	GUIDE LEFT
HEX NUT DIN 985 M8 8 480H	10875614	9	7	104	96034980	GUIDE RIGHT
HEX NUT DIN 985 M8 8 480H	10875614	350	3	283	968026308	CLUTCH ACTUATOR
HEX NUT DIN 985 M8 8 480H	10875614	(7)	11	372	916177508	STEP CPL.
HEX NUT DIN 985 M8 8 480H	10875614	46	1	383	917305408	INTERNAL PANELLING INSTA
HEX NUT DIN 985 M8 8 480H	10875614	5	4	410	917676208	HEATING CRANE DRIVER'S CA
HEX NUT DIN 985 M8 8 480H	10875614	25	1	414	969085208	HEATING, PRE-ASSEMBLED
HEX NUT DIN 985 M8 8 480H	10875614	5	1	424	916049908	MIRROR ATTACHM.IN CRANE
HEX NUT DIN 985 M8 8 480H	10875614	4	4	458	917260408	MIRROR ATTACHM.AT SLEW.P
HEX NUT DIN 985 M8 8 480H	10875614	20	8	462	918759808	ADD HEATING SUPERSTRUCT
HEX NUT DIN 985 M8 8 480H	10875614	32	1	464	96020359	ADDNL.HEATING, PRE-ASSE
HEX NUT DIN 985 M8 8 480H	10875614	25	2	609	968994408	CAMERA HOLDER, PREMOU
HEX NUT DIN 985 M8 8 480H	10875614	12	2	612	968993508	CAMERA HOLDER, PREMOU
HEX NUT DIN 985 M8 A2-70	411903108	9	6	372	916177508	STEP CPL.
HEX NUT DIN 985 M8 A2-70	411903108	6	12	377	916162808	RELING
HEX NUT DIN 985 M8 A2-70	411903108	4	4	716	967937608	OBSTRUCTION LIGHTS PREAS
HEX NUT EN 1661 M10 8 FLZN	10179265	4	3	219	10147364	AIR INTAKE ASSEMBLY
HEX NUT EN 1661 M10 8 FLZN	10179265	4	3	240	10115539	STARTER INSTALLATION
HEX NUT EN 1661 M8 8 480H	11820285	11	2	220	10149677	CONNECTING LINE ADD-ON
HEX NUT EN 1661 M8 8 480H	11820285	78	1	254	10151328	CABLE HARNESS MOUNTING

Description	Item	Pos.	Quantity	Page	Assembly	Description
HEX NUT ISO 4032 M10 8 ZNNI	12102695	32	2	417	918810308	CONTROL STAND
HEX NUT ISO 4032 M10 8 ZNNI	12102695	352	5	430	96036790	SLEWING PLATFORM PANELLI
HEX NUT ISO 4032 M10 8 ZNNI	12102695	353	6	439	969015908	SLEWING PLATFORM PANELLI
HEX NUT ISO 4032 M10 8 ZNNI	12102695	23	2	545	96035117	MECHANICAL AUXILIARIES
HEX NUT ISO 4032 M10 8 ZNNI	12102695	6	7	564	917261808	OIL COOLER INSTALLATION
HEX NUT ISO 4032 M10 8 ZNNI	12102695	28	2	639	917291908	PIVOT SECTION, PRE-ASSEMB
HEX NUT ISO 4032 M10 8 ZNNI	12102695	16	2	705	917268408	BOOM NOSE
HEX NUT ISO 4032 M12 8 FLZ	10875616	22	32	17	919617108	CRAWLER TRACK TRAVEL G
HEX NUT ISO 4032 M12 8 FLZ	10875616	30	2	26	968036408	LIMIT SWITCH, PRE-ASSEMB
HEX NUT ISO 4032 M12 8 FLZ	10875616	35	3	70	919254308	CRAWLER SUPPORT PREASS
HEX NUT ISO 4032 M12 8 FLZ	10875616	35	3	100	919254408	CRAWLER SUPPORT PREASS
HEX NUT ISO 4032 M12 8 FLZ	10875616	34	1	134	919087608	ROTARY FEED THROUGH
HEX NUT ISO 4032 M12 8 FLZ	10875616	23	2	731	917267508	TRANSPORT MOUNTING
HEX NUT ISO 4032 M16 8 BLAN	411514608	8	1	732	929582108	MOUNTING PRE-ASS.
HEX NUT ISO 4032 M16 8 FLZ	10875617	47	4	17	919617108	CRAWLER TRACK TRAVEL G
HEX NUT ISO 4032 M16 8 FLZ	10875617	43	4	30	917511508	CRAWLER CENTRE PART PRE
HEX NUT ISO 4032 M16 8 FLZ	10875617	32	4	121	919644008	HYDRAULIC SUPPORT
HEX NUT ISO 4032 M16 8 FLZ	10875617	17	1	475	967978908	INTERLOCKING
HEX NUT ISO 4032 M16 8 FLZ	10875617	19	4	672	966134608	ADD-ON PARTS CYLINDER
HEX NUT ISO 4032 M16 8 FLZ	10875617	6	9	731	917267508	TRANSPORT MOUNTING
HEX NUT ISO 4032 M20 8 FLZ	10875618	48	4	17	919617108	CRAWLER TRACK TRAVEL G
HEX NUT ISO 4032 M20 8 FLZ	10875618	64	1	71	919254308	CRAWLER SUPPORT PREASS
HEX NUT ISO 4032 M20 8 FLZ	10875618	64	1	101	919254408	CRAWLER SUPPORT PREASS
HEX NUT ISO 4032 M20 8 FLZ	10875618	15	8	724	910836808	HOOK BLOCK
HEX NUT ISO 4032 M3 10 480H	12226068	267	2	685	968708708	TERMINAL BOX CPL.
HEX NUT ISO 4032 M30 10 FLZ	10425689	4	1	629	968068308	ASSEMBLY DEVICE
HEX NUT ISO 4032 M30 10 FLZ	10425689	9	4	721	968728808	CONSOLE PRE-ASS.
HEX NUT ISO 4032 M4 8 480H	10875619	10	2	390	916162508	WINDOW ASSEMBLY
HEX NUT ISO 4032 M4 8 480H	10875619	354	8	430	96036790	SLEWING PLATFORM PANELLI
HEX NUT ISO 4032 M5 8 480H	10875620	4	4	127	917257108	CENTRALIZED LUBRICATION
HEX NUT ISO 4032 M5 8 480H	10875620	18	6	320	96023117	BATTERY BOX, PRE-ASSEMB
HEX NUT ISO 4032 M5 8 480H	10875620	5	4	502	917261208	CENT. LUBRIC. SYSTEM SUP
HEX NUT ISO 4032 M5 TI2-WS	10878117	73	2	483	918484108	UREA PLANT
HEX NUT ISO 4032 M6 10 480H	10299668	38	2	672	966134608	ADD-ON PARTS CYLINDER
HEX NUT ISO 4032 M6 10 ZNNI	10197764	13	2	37	966167808	COVER COMPL.
HEX NUT ISO 4032 M6 10 ZNNI	10197764	16	2	38	968054008	MOUNTING PLATE PRE-ASS.
HEX NUT ISO 4032 M6 10 ZNNI	10197764	48	12	47	11346779	SLIP RING TRANSMITTER
HEX NUT ISO 4032 M6 10 ZNNI	10197764	23	2	134	919087608	ROTARY FEED THROUGH
HEX NUT ISO 4032 M6 10 ZNNI	10197764	350	6	277	919007708	DRIVE ASSEMBLY, PRE-ASSE
HEX NUT ISO 4032 M6 10 ZNNI	10197764	353	4	280	96034631	RADIATOR, PRE-ASSEMBLED
HEX NUT ISO 4032 M6 10 ZNNI	10197764	27	4	320	96023117	BATTERY BOX, PRE-ASSEMB
HEX NUT ISO 4032 M6 10 ZNNI	10197764	51	2	383	917305408	INTERNAL PANELLING INSTA
HEX NUT ISO 4032 M6 10 ZNNI	10197764	351	4	430	96036790	SLEWING PLATFORM PANELLI
HEX NUT ISO 4032 M6 10 ZNNI	10197764	350	11	439	969015908	SLEWING PLATFORM PANELLI
HEX NUT ISO 4032 M6 10 ZNNI	10197764	5	12	523	922648308	TERMINAL BOARD PRE-ASS.
HEX NUT ISO 4032 M6 10 ZNNI	10197764	6	4	525	926891108	GROUND RAIL
HEX NUT ISO 4032 M6 10 ZNNI	10197764	310	2	589	967784808	HYDR.AUXILIARY HOISTING
HEX NUT ISO 4032 M6 A4-70	411517114	350	6	491	919372008	EXHAUST SYSTEM
HEX NUT ISO 4032 M8 10 ZNNI	10197760	350	7	429	96036790	SLEWING PLATFORM PANELLI
HEX NUT ISO 4032 M8 10 ZNNI	10197760	351	4	439	969015908	SLEWING PLATFORM PANELLI
HEX NUT ISO 4032 M8 10 ZNNI	10197760	10	4	525	926891108	GROUND RAIL
HEX NUT ISO 4032 M8 10 ZNNI	10197760	13	6	565	967980508	OIL COOLER, PRE-ASSEMBLE
HEX NUT ISO 4032 M8 8 480H	11693875	8	2	112	968038208	BEARING AHEAD LEFT SIDE
HEX NUT ISO 4032 M8 8 480H	11693875	8	2	113	968038308	BEARING AHEAD RIGHT SIDE
HEX NUT ISO 4032 M8 8 480H	11693875	9	2	127	917257108	CENTRALIZED LUBRICATION
HEX NUT ISO 4032 M8 8 480H	11693875	351	17	277	919007708	DRIVE ASSEMBLY, PRE-ASSE
HEX NUT ISO 4032 M8 8 480H	11693875	354	2	280	96034631	RADIATOR, PRE-ASSEMBLED
HEX NUT ISO 4032 M8 8 480H	11693875	350	3	326	919231108	FUEL FEED
HEX NUT ISO 4032 M8 8 480H	11693875	25	2	365	917259908	CRANE DRIVER CAB ADDITIO
HEX NUT ISO 4032 M8 8 480H	11693875	27	2	399	916163008	WIPERS INSTALLATION

Description	Item	Pos.	Quantity	Page	Assembly	Description
HEX NUT ISO 4032 M8 8 480H	11693875	8	4	410	917676208	HEATING CRANE DRIVER'S CA
HEX NUT ISO 4032 M8 8 480H	11693875	12	2	433	968923508	FLAP RIGHT PRE-ASS.
HEX NUT ISO 4032 M8 8 480H	11693875	11	2	441	969016008	FLAP LEFT FRONT PRE-ASS.
HEX NUT ISO 4032 M8 8 480H	11693875	70	9	483	918484108	UREA PLANT
HEX NUT ISO 4032 M8 8 480H	11693875	350	2	499	918731908	AIR FILTER UNIT
HEX NUT ISO 4032 M8 8 480H	11693875	70	2	522	969256608	BASE ASSEMBLY
HEX NUT ISO 4032 M8 8 480H	11693875	337	2	540	96045351	HYDRAULICS UPPER CARRI
HEX NUT ISO 4032 M8 8 480H	11693875	22	2	545	96035117	MECHANICAL AUXILIARIES
HEX NUT ISO 4032 M8 8 480H	11693875	7	4	600	917269408	CONSOLE AUX. REPLENISHIN
HEX NUT ISO 4032 M8 8 480H	11693875	55	2	661	917292408	TELESCOPIC SECT.5 PRE-AS
HEX NUT ISO 4032 M8 8 480H	11693875	42	2	672	966134608	ADD-ON PARTS CYLINDER
HEX NUT ISO 4032 M8 8 480H	11693875	4	2	708	967321308	FIXING DEVICE 2.LIFT TOP
HEX NUT ISO 4032 M8 A2-70	510737408	7	2	372	916177508	STEP CPL.
HEX NUT ISO 4035 M10X1,5 04	10411095	5	2	241	10219978	STARTER
HEX NUT ISO 4035 M10X1,5 04	10411095	5	2	243	11386644	STARTER PRE-ASSY.
HEX NUT ISO 4035 M24 05 FLZ	10179943	355	1	283	968026308	CLUTCH ACTUATOR
HEX NUT ISO 4035 M30 05 FLZ	4635422	24	4	17	919617108	CRAWLER TRACK TRAVEL G
HEX NUT ISO 4035 M5 04	511001708	9	2	410	917676208	HEATING CRANE DRIVER'S CA
HEX NUT ISO 4035 M5 04	511001708	21	5	518	919503008	SWITCHBOX MOUNTING PART
HEX NUT ISO 4035 M8 04 A2C	410120308	13	2	705	917268408	BOOM NOSE
HEX NUT ISO 7040 M10 8 FLZ	10875629	13	4	605	96037229	ADD-ON PARTS WORK FLOOD
HEX NUT ISO 7040 M10 8 FLZ	10875629	22	4	644	917292008	TELESCOPIC SECTION 1 PRE
HEX NUT ISO 7040 M10 8 FLZ	10875629	22	4	648	917292108	TELESCOPIC SECT.2 PRE-AS
HEX NUT ISO 7040 M10 8 FLZ	10875629	22	4	652	917292208	TELESCOPIC SECT.3 PRE-ASS
HEX NUT ISO 7040 M10 8 FLZ	10875629	22	4	656	917292308	TELESCOPIC SECT.IV PRE-A
HEX NUT ISO 7040 M10 8 FLZ	10875629	19	4	661	917292408	TELESCOPIC SECT.5 PRE-AS
HEX NUT ISO 7040 M12 8 FLZ	11840127	31	1	87	96034962	GUIDE LEFT
HEX NUT ISO 7040 M12 8 FLZ	11840127	31	1	104	96034980	GUIDE RIGHT
HEX NUT ISO 7040 M12 8 FLZ	11840127	5	4	112	968038208	BEARING AHEAD LEFT SIDE
HEX NUT ISO 7040 M12 8 FLZ	11840127	5	4	113	968038308	BEARING AHEAD RIGHT SIDE
HEX NUT ISO 7040 M12 8 FLZ	11840127	51	8	116	968046208	ADD-ON PARTS
HEX NUT ISO 7040 M12 8 FLZ	11840127	66	12	121	919644008	HYDRAULIC SUPPORT
HEX NUT ISO 7040 M12 8 FLZ	11840127	3	2	717	917551608	ADD-ON PARTS
HEX NUT ISO 7040 M12 8 FLZ	11840127	24	3	721	968728808	CONSOLE PRE-ASS.
HEX NUT ISO 7040 M16 8 FLZ	10875859	14	24	111	917691008	FALL PROTECTION
HEX NUT ISO 7040 M16 8 FLZ	10875859	22	40	116	968046208	ADD-ON PARTS
HEX NUT ISO 7040 M16 8 FLZ	10875859	30	2	731	917267508	TRANSPORT MOUNTING
HEX NUT ISO 7040 M20 10 FE//	10875630	51	4	644	917292008	TELESCOPIC SECTION 1 PRE
HEX NUT ISO 7040 M20 10 FE//	10875630	51	4	648	917292108	TELESCOPIC SECT.2 PRE-AS
HEX NUT ISO 7040 M20 10 FE//	10875630	51	4	652	917292208	TELESCOPIC SECT.3 PRE-ASS
HEX NUT ISO 7040 M20 10 FE//	10875630	51	4	656	917292308	TELESCOPIC SECT.IV PRE-A
HEX NUT ISO 7040 M20 10 FE//	10875630	51	4	661	917292408	TELESCOPIC SECT.5 PRE-AS
HEX NUT ISO 7040 M6 10 480H	10415159	22	1	614	96045237	EQUIPMENT CAMERA CAB
HEX NUT ISO 7040 M6 8 480H	11656734	35	4	116	968046208	ADD-ON PARTS
HEX NUT ISO 7040 M6 8 480H	11656734	36	2	639	917291908	PIVOT SECTION, PRE-ASSEMB
HEX NUT ISO 7040 M6 8 480H	11656734	60	2	644	917292008	TELESCOPIC SECTION 1 PRE
HEX NUT ISO 7040 M6 8 480H	11656734	60	2	648	917292108	TELESCOPIC SECT.2 PRE-AS
HEX NUT ISO 7040 M6 8 480H	11656734	60	2	652	917292208	TELESCOPIC SECT.3 PRE-ASS
HEX NUT ISO 7040 M6 8 480H	11656734	60	2	656	917292308	TELESCOPIC SECT.IV PRE-A
HEX NUT ISO 7040 M8 8 480H	11656731	105	8	71	919254308	CRAWLER SUPPORT PREASS
HEX NUT ISO 7040 M8 8 480H	11656731	106	8	101	919254408	CRAWLER SUPPORT PREASS
HEX NUT ISO 7040 M8 8 480H	11656731	352	6	280	96034631	RADIATOR, PRE-ASSEMBLED
HEX NUT ISO 7042 M8 10 480H	10814800	352	2	494	96048826	EXHAUST SYSTEM PRE-ASSE
HEX NUT ISO 8673 M10X1 8 F	10179115	53	1	405	917304708	SLIDING DOOR INSTALLATION
HEX NUT ISO 8675 M12X1,0 04	10875633	25	1	449	96036957	ELECTRIC ADD-ON PARTS CA
HEX NUT ISO 8675 M20X1,5 A	10285016	4	2	112	968038208	BEARING AHEAD LEFT SIDE
HEX NUT ISO 8675 M20X1,5 A	10285016	4	2	113	968038308	BEARING AHEAD RIGHT SIDE
HEX NUT ISO 8675 M20X1,5 A	10285016	360	2	283	968026308	CLUTCH ACTUATOR
HEX NUT ISO 8675 M24X2 05	411703308	3	1	366	11214363	TILT CYLINDER
HEX NUT M10X1	10012557	3	2	194	11448005	ROCKER ARM BRACKET PRE

Description	Item	Pos.	Quantity	Page	Assembly	Description
HEX NUT M16X1,5 MS	602504108	15	2	36	96045226	SWITCH BOX COMPL.
HEX NUT M20X1,5 MS	602504208	18	1	36	96045226	SWITCH BOX COMPL.
HEX NUT M40X1,50 MS	602504508	512	1	44	96045228	WIRING HARNESS
HEX NUT M6 8	10411094	3	1	241	10219978	STARTER
HEX NUT M6 8	10411094	3	1	243	11386644	STARTER PRE-ASSY.
HEX SCREW DIN 6921 M8X20	10030519	14	2	238	10140729	EXHAUST TC MOUNTING
HEX SCREW DIN 6921 M8X25	10009007	14	2	214	10143341	FUEL LINES
HEX SCREW DIN 6921 M8X25	10009007	2	5	231	10142733	WATER PUMP WITH FASTENIN
HEX SCREW DIN 6921 M8X25	10009007	3	4	252	10144227	CONTROL BOX ANNEXE
HEX SCREW DIN 6921 M8X40 1	11600960	(4)	6	197	10138230	CAMSHAFT CPL.
HEX SCREW DIN 6921 M8X45	10005713	2	1	203	10148432	LUBE OIL PUMP WITH FASTEN
HEX SCREW DIN 6921 M8X45	10016907	5	4	252	10144227	CONTROL BOX ANNEXE
HEX SCREW DIN 6921 M8X80	11645138	3	2	203	10148432	LUBE OIL PUMP WITH FASTEN
HEX SCREW EN 1665 M10X12	12207562	4	8	170	10147687	POWER UNIT SUPPORT ATT
HEX SCREW EN 1665 M10X120	12207559	5	1	239	10142863	GENERATOR, PRE-ASSEMBLE
HEX SCREW EN 1665 M10X20	11656153	3	2	182	10139112	OIL LINE PRE-ASSEMBLY
HEX SCREW EN 1665 M10X20	11656153	68	3	254	10151328	CABLE HARNESS MOUNTING
HEX SCREW EN 1665 M10X20	11656153	58	2	256	10151329	WIRING HARNESS ASSEMBLY
HEX SCREW EN 1665 M10X30	10299564	3	2	239	10142863	GENERATOR, PRE-ASSEMBLE
HEX SCREW EN 1665 M10X30	10299564	2	4	245	9079823	TRANSPORT DEVICE ATTACH
HEX SCREW EN 1665 M10X30	11656155	3	3	244	10115664	LOCKING PIECES
HEX SCREW EN 1665 M10X30	11656155	69	1	254	10151328	CABLE HARNESS MOUNTING
HEX SCREW EN 1665 M10X35	11643686	2	3	223	10127566	INSTALLATION BRAKE COMPR
HEX SCREW EN 1665 M10X40	11626068	5	6	230	12418347	AIR COND. COMPRESSOR A
HEX SCREW EN 1665 M10X50	10299585	6	1	170	10147687	POWER UNIT SUPPORT ATT
HEX SCREW EN 1665 M10X60	11656158	4	2	212	10146791	FUEL FINE-FILTER ASSEMBLY
HEX SCREW EN 1665 M10X60	11656158	3	4	217	10147365	AIR INTAKE PIPE ASS.
HEX SCREW EN 1665 M10X60	11656158	7	2	230	12418347	AIR COND. COMPRESSOR A
HEX SCREW EN 1665 M10X70	10299589	5	9	170	10147687	POWER UNIT SUPPORT ATT
HEX SCREW EN 1665 M10X80	11656160	6	1	230	12418347	AIR COND. COMPRESSOR A
HEX SCREW EN 1665 M10X90	12208088	4	4	217	10147365	AIR INTAKE PIPE ASS.
HEX SCREW EN 1665 M12X30	11631940	7	2	261	10144036	POWER TAKE-OFF ADD-ON
HEX SCREW EN 1665 M12X40	10299565	4	1	239	10142863	GENERATOR, PRE-ASSEMBLE
HEX SCREW EN 1665 M12X45	11656452	9	1	177	10155227	OIL SUMP PRE-ASS.
HEX SCREW EN 1665 M16X50	12207570	2	2	246	10142864	TRANSPORT DEVICE ATTACH
HEX SCREW EN 1665 M5X10	10875503	10	6	38	968054008	MOUNTING PLATE PRE-ASS.
HEX SCREW EN 1665 M5X10	10875503	20	28	518	919503008	SWITCHBOX MOUNTING PART
HEX SCREW EN 1665 M5X10	10875503	48	18	522	969256608	BASE ASSEMBLY
HEX SCREW EN 1665 M5X10	10875503	11	6	526	968063108	PRE-ASSEMBLY MOUNTING U
HEX SCREW EN 1665 M5X10	10875503	5	1	598	918462708	EXTERNAL FEED
HEX SCREW EN 1665 M5X10	10875503	6	4	601	915432508	RADIO PREPARATION UPPER
HEX SCREW EN 1665 M5X10 8	12207546	(12)	2	164	12856862	DIESEL ENGINE
HEX SCREW EN 1665 M5X10 8	12207546	52	1	254	10151328	CABLE HARNESS MOUNTING
HEX SCREW EN 1665 M5X10 8	12207546	42	1	256	10151329	WIRING HARNESS ASSEMBLY
HEX SCREW EN 1665 M6X16 8	11840297	11	3	34	96045225	ELECTR.FOR CENTER SECTIO
HEX SCREW EN 1665 M6X16 8	11840297	(13)	7	164	12856862	DIESEL ENGINE
HEX SCREW EN 1665 M6X16 8	11840297	8	4	195	11358102	CYLINDER HEAD COVER ASS
HEX SCREW EN 1665 M6X16 8	11840297	21	1	215	10143342	LEAK OIL RETURN LINE
HEX SCREW EN 1665 M6X16 8	11840297	54	7	254	10151328	CABLE HARNESS MOUNTING
HEX SCREW EN 1665 M6X16 8	11840297	304	2	276	919007708	DRIVE ASSEMBLY, PRE-ASSE
HEX SCREW EN 1665 M6X16 8	11840297	19	2	396	916168308	AIR DUCT
HEX SCREW EN 1665 M6X16 8	11840297	24	4	399	916163008	WIPERS INSTALLATION
HEX SCREW EN 1665 M6X16 8	11840297	307	8	429	96036790	SLEWING PLATFORM PANELLI
HEX SCREW EN 1665 M6X20 8	12207548	2	4	221	9078314	HEATING FLANGE ADD-ON
HEX SCREW EN 1665 M6X20 8	12207548	301	2	429	96036790	SLEWING PLATFORM PANELLI
HEX SCREW EN 1665 M6X40 8	12207587	3	1	218	10145173	INTAKE STACK ASSEMBLY
HEX SCREW EN 1665 M8X12 8	11656991	39	6	449	96036957	ELECTRIC ADD-ON PARTS CA
HEX SCREW EN 1665 M8X16 8	11656992	(11)	2	164	12856862	DIESEL ENGINE
HEX SCREW EN 1665 M8X16 8	11656992	(14)	1	164	12856862	DIESEL ENGINE
HEX SCREW EN 1665 M8X16 8	11656992	15	1	215	10143342	LEAK OIL RETURN LINE

Description	Item	Pos.	Quantity	Page	Assembly	Description
HEX SCREW EN 1665 M8X16 8	11656992	11	4	248	10116110	LOCKING PIECES
HEX SCREW EN 1665 M8X16 8	11656992	60	2	254	10151328	CABLE HARNESS MOUNTING
HEX SCREW EN 1665 M8X16 8	11656992	3	3	257	10143707	CLAMP - ADD-ON UNIT
HEX SCREW EN 1665 M8X20 8	11657219	12	1	214	10143341	FUEL LINES
HEX SCREW EN 1665 M8X20 8	11657219	14	1	218	10145173	INTAKE STACK ASSEMBLY
HEX SCREW EN 1665 M8X20 8	11657219	3	1	249	10128439	LOCKING PIECES
HEX SCREW EN 1665 M8X20 8	11657219	61	14	254	10151328	CABLE HARNESS MOUNTING
HEX SCREW EN 1665 M8X20 8	11657219	51	2	256	10151329	WIRING HARNESS ASSEMBLY
HEX SCREW EN 1665 M8X20 8	11657219	4	1	257	10143707	CLAMP - ADD-ON UNIT
HEX SCREW EN 1665 M8X20 8	11657219	316	4	429	96036790	SLEWING PLATFORM PANELLI
HEX SCREW EN 1665 M8X20 8	11657219	5	4	600	917269408	CONSOLE AUX. REPLENISHIN
HEX SCREW EN 1665 M8X25	12215999	3	1	235	10142744	COOLING WATER AIR BLEED
HEX SCREW EN 1665 M8X25 8	11690637	308	2	429	96036790	SLEWING PLATFORM PANELLI
HEX SCREW EN 1665 M8X25 8	11690637	30	4	545	96035117	MECHANICAL AUXILIARIES
HEX SCREW EN 1665 M8X30 8	11826563	2	2	173	10126713	CRANKCASE BREATHER ASS
HEX SCREW EN 1665 M8X30 8	11826563	6	4	212	10146791	FUEL FINE-FILTER ASSEMBLY
HEX SCREW EN 1665 M8X30 8	11826563	12	1	218	10145173	INTAKE STACK ASSEMBLY
HEX SCREW EN 1665 M8X30 8	11826563	63	1	254	10151328	CABLE HARNESS MOUNTING
HEX SCREW EN 1665 M8X30 8	11826563	53	2	256	10151329	WIRING HARNESS ASSEMBLY
HEX SCREW EN 1665 M8X40	10299604	3	14	199	10129475	OIL COOLER ADD-ON
HEX SCREW EN 1665 M8X40 8	11658660	8	2	220	10149677	CONNECTING LINE ADD-ON
HEX SCREW EN 1665 M8X50 8	11691686	5	4	200	10129474	OIL COOLER, PRE-ASSEMBLE
HEX SCREW EN 1665 M8X50 8	11691686	5	1	212	10146791	FUEL FINE-FILTER ASSEMBLY
HEX SCREW EN 1665 M8X55 8	12210060	3	28	175	10132560	OIL SUMP WITH FASTENING
HEX SCREW EN 1665 M8X90 8	10876385	7	20	195	11358102	CYLINDER HEAD COVER ASS
HEX SCREW ISO 4014 M10X1	10875796	318	2	276	919007708	DRIVE ASSEMBLY, PRE-ASSE
HEX SCREW ISO 4014 M10X2	10878922	16	4	320	96023117	BATTERY BOX, PRE-ASSEMB
HEX SCREW ISO 4014 M10X50	11631860	314	2	276	919007708	DRIVE ASSEMBLY, PRE-ASSE
HEX SCREW ISO 4014 M12X1	10875504	330	4	478	969763408	PIPEWORK AIR INSTALLATIO
HEX SCREW ISO 4014 M12X1	11656183	327	4	478	969763408	PIPEWORK AIR INSTALLATIO
HEX SCREW ISO 4014 M12X1	4601290	32	2	70	919254308	CRAWLER SUPPORT PREASS
HEX SCREW ISO 4014 M12X1	4601290	32	2	100	919254408	CRAWLER SUPPORT PREASS
HEX SCREW ISO 4014 M12X50	11651578	5	1	717	917551608	ADD-ON PARTS
HEX SCREW ISO 4014 M12X55	11658891	29	3	721	968728808	CONSOLE PRE-ASS.
HEX SCREW ISO 4014 M12X65	11658890	4	1	227	9072906	INTERMEDIATE GEAR CPL.
HEX SCREW ISO 4014 M12X75	10875507	8	4	158	918731108	ASSEMBLY PARTS F.SLEWING
HEX SCREW ISO 4014 M12X80	10875508	57	2	639	917291908	PIVOT SECTION, PRE-ASSEMB
HEX SCREW ISO 4014 M12X85	10875509	43	1	70	919254308	CRAWLER SUPPORT PREASS
HEX SCREW ISO 4014 M12X85	10875509	43	1	100	919254408	CRAWLER SUPPORT PREASS
HEX SCREW ISO 4014 M12X90	11840139	330	4	276	919007708	DRIVE ASSEMBLY, PRE-ASSE
HEX SCREW ISO 4014 M12X90	11840139	11	3	672	966134608	ADD-ON PARTS CYLINDER
HEX SCREW ISO 4014 M14X90	10878785	550	4	540	96045351	HYDRAULICS UPPER CARRI
HEX SCREW ISO 4014 M14X90	10878785	552	4	590	967784808	HYDR.AUXILIARY HOISTING
HEX SCREW ISO 4014 M16X1	10875797	7	4	369	967986308	BEARING INSTALLATION
HEX SCREW ISO 4014 M16X1	12223058	305	2	269	918731408	DRIVE ASSEMBLY CPL.
HEX SCREW ISO 4014 M16X2	12224045	46	1	17	919617108	CRAWLER TRACK TRAVEL G
HEX SCREW ISO 4014 M16X3	10878582	45	3	17	919617108	CRAWLER TRACK TRAVEL G
HEX SCREW ISO 4014 M16X3	10878582	35	4	30	917511508	CRAWLER CENTRE PART PRE
HEX SCREW ISO 4014 M16X70	11642377	340	8	277	919007708	DRIVE ASSEMBLY, PRE-ASSE
HEX SCREW ISO 4014 M16X85	10878687	20	32	116	968046208	ADD-ON PARTS
HEX SCREW ISO 4014 M16X90	12224034	21	8	116	968046208	ADD-ON PARTS
HEX SCREW ISO 4014 M16X95	10878688	13	24	111	917691008	FALL PROTECTION
HEX SCREW ISO 4014 M18X70	10178883	36	8	70	919254308	CRAWLER SUPPORT PREASS
HEX SCREW ISO 4014 M18X70	10178883	36	8	100	919254408	CRAWLER SUPPORT PREASS
HEX SCREW ISO 4014 M20X75	11656999	68	12	73	90028956	TRACTION DRIVE
HEX SCREW ISO 4014 M20X90	12219309	2	2	323	917626608	FUEL TANK ADD-ON UNIT
HEX SCREW ISO 4014 M24X11	4062145	18	68	70	919254308	CRAWLER SUPPORT PREASS
HEX SCREW ISO 4014 M24X11	4062145	18	68	100	919254408	CRAWLER SUPPORT PREASS
HEX SCREW ISO 4014 M24X1	10876069	2	2	332	917825508	OIL RESERVOIR, EXTENSION
HEX SCREW ISO 4014 M30X11	11342133	19	24	70	919254308	CRAWLER SUPPORT PREASS

Description	Item	Pos.	Quantity	Page	Assembly	Description
HEX SCREW ISO 4014 M30X11	11342133	19	24	100	919254408	CRAWLER SUPPORT PREASS
HEX SCREW ISO 4014 M30X12	406209008	20	24	70	919254308	CRAWLER SUPPORT PREASS
HEX SCREW ISO 4014 M30X12	406209008	20	24	100	919254408	CRAWLER SUPPORT PREASS
HEX SCREW ISO 4014 M30X15	406216008	5	4	666	918807308	MECHANICAL EXTENSION SYS
HEX SCREW ISO 4014 M6X40 8	12216183	5	2	719	968811608	CROSS BEAM
HEX SCREW ISO 4014 M8X100	10876620	307	12	51	96035801	HYDRAULIC EQUIPM.CENTER
HEX SCREW ISO 4014 M8X110	12217239	57	3	483	918484108	UREA PLANT
HEX SCREW ISO 4014 M8X45 8	11651580	306	1	283	968026308	CLUTCH ACTUATOR
HEX SCREW ISO 4014 M8X45 8	11651580	21	4	439	969015908	SLEWING PLATFORM PANELLI
HEX SCREW ISO 4014 M8X75 8	12216193	59	2	483	918484108	UREA PLANT
HEX SCREW ISO 4014 M8X80	10021245	300	2	494	96048826	EXHAUST SYSTEM PRE-ASSE
HEX SCREW ISO 4014 M8X90 8	12216195	300	3	327	96034868	PREMOUNTED FUEL FILTER
HEX SCREW ISO 4017 M10X12	12222989	12	4	352	917259708	MAIN HOIST GEAR
HEX SCREW ISO 4017 M10X16	11652470	31	6	30	917511508	CRAWLER CENTRE PART PRE
HEX SCREW ISO 4017 M10X20	10197730	66	4	71	919254308	CRAWLER SUPPORT PREASS
HEX SCREW ISO 4017 M10X20	10197730	66	4	101	919254408	CRAWLER SUPPORT PREASS
HEX SCREW ISO 4017 M10X20	10197730	18	8	111	917691008	FALL PROTECTION
HEX SCREW ISO 4017 M10X20	10197730	313	12	276	919007708	DRIVE ASSEMBLY, PRE-ASSE
HEX SCREW ISO 4017 M10X20	10197730	4	16	369	967986308	BEARING INSTALLATION
HEX SCREW ISO 4017 M10X20	10197730	314	1	429	96036790	SLEWING PLATFORM PANELLI
HEX SCREW ISO 4017 M10X20	10197730	23	1	449	96036957	ELECTRIC ADD-ON PARTS CA
HEX SCREW ISO 4017 M10X20	10197730	311	4	539	96045351	HYDRAULICS UPPER CARRI
HEX SCREW ISO 4017 M10X20	10197730	18	4	577	967969608	AUXILIARY HOISTING GEAR 2
HEX SCREW ISO 4017 M10X20	10197730	(6)	1	628	919028808	DISPATCH ASSY.MECH.PART
HEX SCREW ISO 4017 M10X22	12222996	304	7	439	969015908	SLEWING PLATFORM PANELLI
HEX SCREW ISO 4017 M10X22	12222996	20	3	545	96035117	MECHANICAL AUXILIARIES
HEX SCREW ISO 4017 M10X25	11631816	32	8	17	919617108	CRAWLER TRACK TRAVEL G
HEX SCREW ISO 4017 M10X25	11631816	5	3	263	9078301	LOCKING PIECES
HEX SCREW ISO 4017 M10X25	11631816	2	6	318	918955408	BATTERY BOX CPL.
HEX SCREW ISO 4017 M10X25	11631816	15	8	335	969050308	OIL TANK PRE-ASS.
HEX SCREW ISO 4017 M10X25	11631816	318	4	429	96036790	SLEWING PLATFORM PANELLI
HEX SCREW ISO 4017 M10X25	11631816	379	4	439	969015908	SLEWING PLATFORM PANELLI
HEX SCREW ISO 4017 M10X25	11631816	302	2	494	96048826	EXHAUST SYSTEM PRE-ASSE
HEX SCREW ISO 4017 M10X25	11631816	11	4	605	96037229	ADD-ON PARTS WORK FLOOD
HEX SCREW ISO 4017 M10X25	11631816	91	2	640	917291908	PIVOT SECTION, PRE-ASSEMB
HEX SCREW ISO 4017 M10X28	4635031	24	2	545	96035117	MECHANICAL AUXILIARIES
HEX SCREW ISO 4017 M10X30	11642358	305	6	429	96036790	SLEWING PLATFORM PANELLI
HEX SCREW ISO 4017 M10X30	11642358	310	2	439	969015908	SLEWING PLATFORM PANELLI
HEX SCREW ISO 4017 M10X30	11642358	303	2	494	96048826	EXHAUST SYSTEM PRE-ASSE
HEX SCREW ISO 4017 M10X30	11642358	556	2	540	96045351	HYDRAULICS UPPER CARRI
HEX SCREW ISO 4017 M10X30	11642358	5	6	564	917261808	OIL COOLER INSTALLATION
HEX SCREW ISO 4017 M10X30	11642358	13	4	577	967969608	AUXILIARY HOISTING GEAR 2
HEX SCREW ISO 4017 M10X30	11642358	23	3	721	968728808	CONSOLE PRE-ASS.
HEX SCREW ISO 4017 M10X35	406601008	17	6	577	967969608	AUXILIARY HOISTING GEAR 2
HEX SCREW ISO 4017 M10X35	11691328	106	10	71	919254308	CRAWLER SUPPORT PREASS
HEX SCREW ISO 4017 M10X35	11691328	107	10	101	919254408	CRAWLER SUPPORT PREASS
HEX SCREW ISO 4017 M10X40	11626706	21	4	134	919087608	ROTARY FEED THROUGH
HEX SCREW ISO 4017 M10X40	11626706	301	2	269	918731408	DRIVE ASSEMBLY CPL.
HEX SCREW ISO 4017 M10X40	11626706	316	24	276	919007708	DRIVE ASSEMBLY, PRE-ASSE
HEX SCREW ISO 4017 M10X40	11626706	305	4	494	96048826	EXHAUST SYSTEM PRE-ASSE
HEX SCREW ISO 4017 M10X40	11626706	15	1	705	917268408	BOOM NOSE
HEX SCREW ISO 4017 M10X45	11691682	82	4	640	917291908	PIVOT SECTION, PRE-ASSEMB
HEX SCREW ISO 4017 M10X50	11642355	31	2	417	918810308	CONTROL STAND
HEX SCREW ISO 4017 M12X1	10178901	21	32	17	919617108	CRAWLER TRACK TRAVEL G
HEX SCREW ISO 4017 M12X20	11651006	339	8	540	96045351	HYDRAULICS UPPER CARRI
HEX SCREW ISO 4017 M12X20	11651006	74	3	662	917292408	TELESCOPIC SECT.5 PRE-AS
HEX SCREW ISO 4017 M12X25	11658892	20	4	17	919617108	CRAWLER TRACK TRAVEL G
HEX SCREW ISO 4017 M12X25	11658892	26	3	87	96034962	GUIDE LEFT
HEX SCREW ISO 4017 M12X25	11658892	26	3	104	96034980	GUIDE RIGHT
HEX SCREW ISO 4017 M12X25	11658892	325	3	276	919007708	DRIVE ASSEMBLY, PRE-ASSE

Description	Item	Pos.	Quantity	Page	Assembly	Description
HEX SCREW ISO 4017 M12X25	11658892	48	2	644	917292008	TELESCOPIC SECTION 1 PRE
HEX SCREW ISO 4017 M12X25	11658892	48	2	648	917292108	TELESCOPIC SECT.2 PRE-AS
HEX SCREW ISO 4017 M12X25	11658892	48	2	652	917292208	TELESCOPIC SECT.3 PRE-ASS
HEX SCREW ISO 4017 M12X25	11658892	48	2	656	917292308	TELESCOPIC SECT.IV PRE-A
HEX SCREW ISO 4017 M12X25	11658892	28	4	721	968728808	CONSOLE PRE-ASS.
HEX SCREW ISO 4017 M12X28	12100096	326	8	276	919007708	DRIVE ASSEMBLY, PRE-ASSE
HEX SCREW ISO 4017 M12X30	11631742	327	4	276	919007708	DRIVE ASSEMBLY, PRE-ASSE
HEX SCREW ISO 4017 M12X30	11631742	300	4	491	919372008	EXHAUST SYSTEM
HEX SCREW ISO 4017 M12X30	11631742	23	4	639	917291908	PIVOT SECTION, PRE-ASSEMB
HEX SCREW ISO 4017 M12X35	11642349	328	4	276	919007708	DRIVE ASSEMBLY, PRE-ASSE
HEX SCREW ISO 4017 M12X35	11642349	83	4	640	917291908	PIVOT SECTION, PRE-ASSEMB
HEX SCREW ISO 4017 M12X40	11002727	12	5	365	917259908	CRANE DRIVER CAB ADDITIO
HEX SCREW ISO 4017 M12X40	11645384	331	2	276	919007708	DRIVE ASSEMBLY, PRE-ASSE
HEX SCREW ISO 4017 M12X40	11645384	554	12	540	96045351	HYDRAULICS UPPER CARRI
HEX SCREW ISO 4017 M12X40	11645384	554	4	590	967784808	HYDR.AUXILIARY HOISTING
HEX SCREW ISO 4017 M12X45	11645386	35	1	134	919087608	ROTARY FEED THROUGH
HEX SCREW ISO 4017 M12X45	11645386	2	1	717	917551608	ADD-ON PARTS
HEX SCREW ISO 4017 M12X50	11840136	27	1	87	96034962	GUIDE LEFT
HEX SCREW ISO 4017 M12X50	11840136	27	1	104	96034980	GUIDE RIGHT
HEX SCREW ISO 4017 M12X50	11840136	329	1	276	919007708	DRIVE ASSEMBLY, PRE-ASSE
HEX SCREW ISO 4017 M12X50	11840136	22	2	731	917267508	TRANSPORT MOUNTING
HEX SCREW ISO 4017 M12X95	10875517	10	4	728	917413208	SELF-ERECT. AUX. HOIST GEA
HEX SCREW ISO 4017 M14X45	10878799	551	4	589	967784808	HYDR.AUXILIARY HOISTING
HEX SCREW ISO 4017 M14X50	12213406	558	3	540	96045351	HYDRAULICS UPPER CARRI
HEX SCREW ISO 4017 M16X1	10875518	41	2	731	917267508	TRANSPORT MOUNTING
HEX SCREW ISO 4017 M16X12	12225311	16	2	731	917267508	TRANSPORT MOUNTING
HEX SCREW ISO 4017 M16X1	10179032	5	4	731	917267508	TRANSPORT MOUNTING
HEX SCREW ISO 4017 M16X20	4065240	335	2	277	919007708	DRIVE ASSEMBLY, PRE-ASSE
HEX SCREW ISO 4017 M16X30	12100309	44	8	639	917291908	PIVOT SECTION, PRE-ASSEMB
HEX SCREW ISO 4017 M16X30	12100309	35	8	644	917292008	TELESCOPIC SECTION 1 PRE
HEX SCREW ISO 4017 M16X30	12100309	35	8	648	917292108	TELESCOPIC SECT.2 PRE-AS
HEX SCREW ISO 4017 M16X30	12100309	35	8	652	917292208	TELESCOPIC SECT.3 PRE-ASS
HEX SCREW ISO 4017 M16X30	12100309	35	8	656	917292308	TELESCOPIC SECT.IV PRE-A
HEX SCREW ISO 4017 M16X35	12214938	84	16	71	919254308	CRAWLER SUPPORT PREASS
HEX SCREW ISO 4017 M16X35	12214938	84	16	101	919254408	CRAWLER SUPPORT PREASS
HEX SCREW ISO 4017 M16X35	12214938	302	2	269	918731408	DRIVE ASSEMBLY CPL.
HEX SCREW ISO 4017 M16X35	12214938	5	8	442	917260108	FALL PROTECTION
HEX SCREW ISO 4017 M16X40	10875519	66	4	18	919617108	CRAWLER TRACK TRAVEL G
HEX SCREW ISO 4017 M16X40	10875519	17	22	70	919254308	CRAWLER SUPPORT PREASS
HEX SCREW ISO 4017 M16X40	10875519	17	22	100	919254408	CRAWLER SUPPORT PREASS
HEX SCREW ISO 4017 M16X40	10875519	17	4	639	917291908	PIVOT SECTION, PRE-ASSEMB
HEX SCREW ISO 4017 M16X40	12100310	40	4	639	917291908	PIVOT SECTION, PRE-ASSEMB
HEX SCREW ISO 4017 M16X40	12100310	36	4	644	917292008	TELESCOPIC SECTION 1 PRE
HEX SCREW ISO 4017 M16X40	12100310	36	4	648	917292108	TELESCOPIC SECT.2 PRE-AS
HEX SCREW ISO 4017 M16X40	12100310	36	4	652	917292208	TELESCOPIC SECT.3 PRE-ASS
HEX SCREW ISO 4017 M16X40	12100310	36	4	656	917292308	TELESCOPIC SECT.IV PRE-A
HEX SCREW ISO 4017 M16X45	406603108	3	6	158	918731108	ASSEMBLY PARTS F.SLEWING
HEX SCREW ISO 4017 M16X45	406603108	9	9	365	917259908	CRANE DRIVER CAB ADDITIO
HEX SCREW ISO 4017 M16X45	406603108	7	3	619	919617008	LUFFING RAM W. PIVOT
HEX SCREW ISO 4017 M16X45	10875803	26	6	134	919087608	ROTARY FEED THROUGH
HEX SCREW ISO 4017 M16X45	10875803	16	4	577	967969608	AUXILIARY HOISTING GEAR 2
HEX SCREW ISO 4017 M16X45	10875803	9	8	731	917267508	TRANSPORT MOUNTING
HEX SCREW ISO 4017 M16X50	10875520	25	24	70	919254308	CRAWLER SUPPORT PREASS
HEX SCREW ISO 4017 M16X50	10875520	25	24	100	919254408	CRAWLER SUPPORT PREASS
HEX SCREW ISO 4017 M16X50	12100283	48	14	639	917291908	PIVOT SECTION, PRE-ASSEMB
HEX SCREW ISO 4017 M16X50	12100283	37	14	644	917292008	TELESCOPIC SECTION 1 PRE
HEX SCREW ISO 4017 M16X50	12100283	37	12	648	917292108	TELESCOPIC SECT.2 PRE-AS
HEX SCREW ISO 4017 M16X50	12100283	37	12	652	917292208	TELESCOPIC SECT.3 PRE-ASS
HEX SCREW ISO 4017 M16X50	12100283	37	12	656	917292308	TELESCOPIC SECT.IV PRE-A
HEX SCREW ISO 4017 M16X55	406608908	338	6	277	919007708	DRIVE ASSEMBLY, PRE-ASSE

Description	Item	Pos.	Quantity	Page	Assembly	Description
HEX SCREW ISO 4017 M16X55	10875804	303	1	269	918731408	DRIVE ASSEMBLY CPL.
HEX SCREW ISO 4017 M16X60	406603408	7	1	732	929582108	MOUNTING PRE-ASS.
HEX SCREW ISO 4017 M16X60	10875521	304	1	269	918731408	DRIVE ASSEMBLY CPL.
HEX SCREW ISO 4017 M16X65	12226910	301	5	276	919007708	DRIVE ASSEMBLY, PRE-ASSE
HEX SCREW ISO 4017 M16X70	12223051	7	1	731	917267508	TRANSPORT MOUNTING
HEX SCREW ISO 4017 M16X80	10001467	31	4	121	919644008	HYDRAULIC SUPPORT
HEX SCREW ISO 4017 M20X1	12225211	12	2	728	917413208	SELF-ERECT. AUX. HOIST GEA
HEX SCREW ISO 4017 M20X30	12224035	87	2	73	90028956	TRACTION DRIVE
HEX SCREW ISO 4017 M20X40	4600199	27	3	134	919087608	ROTARY FEED THROUGH
HEX SCREW ISO 4017 M20X45	4065281	32	12	134	919087608	ROTARY FEED THROUGH
HEX SCREW ISO 4017 M20X50	10875805	345	4	277	919007708	DRIVE ASSEMBLY, PRE-ASSE
HEX SCREW ISO 4017 M20X50	10875805	12	10	731	917267508	TRANSPORT MOUNTING
HEX SCREW ISO 4017 M20X60	406604208	27	2	70	919254308	CRAWLER SUPPORT PREASS
HEX SCREW ISO 4017 M20X60	406604208	27	2	100	919254408	CRAWLER SUPPORT PREASS
HEX SCREW ISO 4017 M20X70	10875422	5	1	323	917626608	FUEL TANK ADD-ON UNIT
HEX SCREW ISO 4017 M20X70	10875422	9	1	332	917825508	OIL RESERVOIR, EXTENSION
HEX SCREW ISO 4017 M24X60	406605808	6	4	619	919617008	LUFFING RAM W. PIVOT
HEX SCREW ISO 4017 M24X80	4901595	21	4	70	919254308	CRAWLER SUPPORT PREASS
HEX SCREW ISO 4017 M24X80	4901595	21	4	100	919254408	CRAWLER SUPPORT PREASS
HEX SCREW ISO 4017 M30X13	406607008	3	1	629	968068308	ASSEMBLY DEVICE
HEX SCREW ISO 4017 M30X13	406607008	8	4	721	968728808	CONSOLE PRE-ASS.
HEX SCREW ISO 4017 M30X60	12228747	23	4	17	919617108	CRAWLER TRACK TRAVEL G
HEX SCREW ISO 4017 M4X10 8	11690047	(3)	2	449	96036957	ELECTRIC ADD-ON PARTS CA
HEX SCREW ISO 4017 M5X10 8	12211444	(3)	2	705	917268408	BOOM NOSE
HEX SCREW ISO 4017 M5X12 8	11140402	37	8	417	918810308	CONTROL STAND
HEX SCREW ISO 4017 M5X12 8	11140402	310	4	539	96045351	HYDRAULICS UPPER CARRI
HEX SCREW ISO 4017 M5X16 8	11647548	313	2	90	96035796	HYDR.TRAVEL DRIVE
HEX SCREW ISO 4017 M5X16 8	11647548	313	2	107	96035792	HYDR.TRAVEL DRIVE
HEX SCREW ISO 4017 M5X8 8.	4600871	11	4	38	968054008	MOUNTING PLATE PRE-ASS.
HEX SCREW ISO 4017 M6X10 8	11642497	(302)	1	275	919007708	DRIVE ASSEMBLY, PRE-ASSE
HEX SCREW ISO 4017 M6X10 8	11642497	41	2	365	917259908	CRANE DRIVER CAB ADDITIO
HEX SCREW ISO 4017 M6X10 8	11642497	54	1	383	917305408	INTERNAL PANELLING INSTA
HEX SCREW ISO 4017 M6X10 8	11642497	98	4	645	917292008	TELESCOPIC SECTION 1 PRE
HEX SCREW ISO 4017 M6X10 8	11642497	98	4	649	917292108	TELESCOPIC SECT.2 PRE-AS
HEX SCREW ISO 4017 M6X10 8	11642497	98	4	653	917292208	TELESCOPIC SECT.3 PRE-ASS
HEX SCREW ISO 4017 M6X10 8	11642497	98	4	657	917292308	TELESCOPIC SECT.IV PRE-A
HEX SCREW ISO 4017 M6X10 8	11642497	83	4	662	917292408	TELESCOPIC SECT.5 PRE-AS
HEX SCREW ISO 4017 M6X12 8	11692824	9	12	21	96034894	PROTECTION PLATE CPL.
HEX SCREW ISO 4017 M6X12 8	11692824	9	12	24	96034977	PROTECTION PLATE
HEX SCREW ISO 4017 M6X12 8	11692824	318	2	51	96035801	HYDRAULIC EQUIPM.CENTER
HEX SCREW ISO 4017 M6X12 8	11692824	17	4	396	916168308	AIR DUCT
HEX SCREW ISO 4017 M6X12 8	11692824	313	2	429	96036790	SLEWING PLATFORM PANELLI
HEX SCREW ISO 4017 M6X12 8	11692824	14	2	433	968923508	FLAP RIGHT PRE-ASS.
HEX SCREW ISO 4017 M6X12 8	11692824	308	6	539	96045351	HYDRAULICS UPPER CARRI
HEX SCREW ISO 4017 M6X12 8	11692824	314	2	589	967784808	HYDR.AUXILIARY HOISTING
HEX SCREW ISO 4017 M6X16 8	11657360	302	4	280	96034631	RADIATOR, PRE-ASSEMBLED
HEX SCREW ISO 4017 M6X16 8	11657360	11	2	574	918628408	AIR COND. UNIT SUPERSTRU
HEX SCREW ISO 4017 M6X16 8	11657360	(10)	3	577	967969608	AUXILIARY HOISTING GEAR 2
HEX SCREW ISO 4017 M6X16	10001739	46	1	405	917304708	SLIDING DOOR INSTALLATION
HEX SCREW ISO 4017 M6X16	10001739	4	2	683	966591508	LIMIT SWITCH ADD-ON
HEX SCREW ISO 4017 M6X20 8	11644899	15	1	38	968054008	MOUNTING PLATE PRE-ASS.
HEX SCREW ISO 4017 M6X20	4002860	32	4	47	11346779	SLIP RING TRANSMITTER
HEX SCREW ISO 4017 M6X25	10197836	11	2	525	926891108	GROUND RAIL
HEX SCREW ISO 4017 M6X25	10197836	35	2	639	917291908	PIVOT SECTION, PRE-ASSEMB
HEX SCREW ISO 4017 M6X25	10197836	59	2	644	917292008	TELESCOPIC SECTION 1 PRE
HEX SCREW ISO 4017 M6X25	10197836	59	2	648	917292108	TELESCOPIC SECT.2 PRE-AS
HEX SCREW ISO 4017 M6X25	10197836	59	2	652	917292208	TELESCOPIC SECT.3 PRE-ASS
HEX SCREW ISO 4017 M6X25	10197836	59	2	656	917292308	TELESCOPIC SECT.IV PRE-A
HEX SCREW ISO 4017 M6X45 8	12216201	354	2	439	969015908	SLEWING PLATFORM PANELLI
HEX SCREW ISO 4017 M6X45 8	12216201	27	4	721	968728808	CONSOLE PRE-ASS.

Description	Item	Pos.	Quantity	Page	Assembly	Description
HEX SCREW ISO 4017 M6X50 8	12216202	20	2	134	919087608	ROTARY FEED THROUGH
HEX SCREW ISO 4017 M6X60 8	10181340	39	4	47	11346779	SLIP RING TRANSMITTER
HEX SCREW ISO 4017 M6X85	11007009	7	1	405	917304708	SLIDING DOOR INSTALLATION
HEX SCREW ISO 4017 M8X12 8	11690048	16	1	85	968420608	STORAGE BOX
HEX SCREW ISO 4017 M8X12 8	11690048	8	1	368	919010208	CRANE OPERATOR CABIN P
HEX SCREW ISO 4017 M8X12 8	11690048	14	2	372	916177508	STEP CPL.
HEX SCREW ISO 4017 M8X12 8	11690048	27	2	414	969085208	HEATING, PRE-ASSEMBLED
HEX SCREW ISO 4017 M8X12 8	11690048	5	8	623	917260608	COUNTERWEIGHT WITH CLAM
HEX SCREW ISO 4017 M8X12 8	11690048	54	2	661	917292408	TELESCOPIC SECT.5 PRE-AS
HEX SCREW ISO 4017 M8X12 8	11690048	301	2	693	967785408	ADDNL.HYDR. FOLDING JIB
HEX SCREW ISO 4017 M8X16	10299649	24	2	474	967928508	LOCKING
HEX SCREW ISO 4017 M8X16 8	11651612	12	4	21	96034894	PROTECTION PLATE CPL.
HEX SCREW ISO 4017 M8X16 8	11651612	12	4	24	96034977	PROTECTION PLATE
HEX SCREW ISO 4017 M8X16 8	11651612	20	4	25	968019508	LIMIT SWITCH ADD-ON
HEX SCREW ISO 4017 M8X16 8	11651612	303	8	51	96035801	HYDRAULIC EQUIPM.CENTER
HEX SCREW ISO 4017 M8X16 8	11651612	5	4	87	96034962	GUIDE LEFT
HEX SCREW ISO 4017 M8X16 8	11651612	5	4	104	96034980	GUIDE RIGHT
HEX SCREW ISO 4017 M8X16 8	11651612	21	16	111	917691008	FALL PROTECTION
HEX SCREW ISO 4017 M8X16 8	11651612	26	8	121	919644008	HYDRAULIC SUPPORT
HEX SCREW ISO 4017 M8X16 8	11651612	68	16	137	919499408	CENTRAL BALLAST
HEX SCREW ISO 4017 M8X16 8	11651612	16	8	158	918731108	ASSEMBLY PARTS F.SLEWING
HEX SCREW ISO 4017 M8X16 8	11651612	306	2	269	918731408	DRIVE ASSEMBLY CPL.
HEX SCREW ISO 4017 M8X16 8	11651612	304	18	280	96034631	RADIATOR, PRE-ASSEMBLED
HEX SCREW ISO 4017 M8X16 8	11651612	15	4	352	917259708	MAIN HOIST GEAR
HEX SCREW ISO 4017 M8X16 8	11651612	30	2	372	916177508	STEP CPL.
HEX SCREW ISO 4017 M8X16 8	11651612	21	2	390	916162508	WINDOW ASSEMBLY
HEX SCREW ISO 4017 M8X16 8	11651612	11	4	410	917676208	HEATING CRANE DRIVER'S CA
HEX SCREW ISO 4017 M8X16 8	11651612	26	3	414	969085208	HEATING, PRE-ASSEMBLED
HEX SCREW ISO 4017 M8X16 8	11651612	312	2	429	96036790	SLEWING PLATFORM PANELLI
HEX SCREW ISO 4017 M8X16 8	11651612	22	5	462	918759808	ADD HEATING SUPERSTRUCT
HEX SCREW ISO 4017 M8X16 8	11651612	21	4	464	96020359	ADDNL.HEATING, PRE-ASSE
HEX SCREW ISO 4017 M8X16 8	11651612	22	2	475	967978908	INTERLOCKING
HEX SCREW ISO 4017 M8X16 8	11651612	58	3	483	918484108	UREA PLANT
HEX SCREW ISO 4017 M8X16 8	11651612	322	6	539	96045351	HYDRAULICS UPPER CARRI
HEX SCREW ISO 4017 M8X16 8	11651612	58	2	661	917292408	TELESCOPIC SECT.5 PRE-AS
HEX SCREW ISO 4017 M8X16 8	11651612	15	6	672	966134608	ADD-ON PARTS CYLINDER
HEX SCREW ISO 4017 M8X16 8	11651612	27	2	731	917267508	TRANSPORT MOUNTING
HEX SCREW ISO 4017 M8X16	406527808	24	4	405	917304708	SLIDING DOOR INSTALLATION
HEX SCREW ISO 4017 M8X16	406527808	302	3	491	919372008	EXHAUST SYSTEM
HEX SCREW ISO 4017 M8X18 8	12216205	9	4	565	967980508	OIL COOLER, PRE-ASSEMBLE
HEX SCREW ISO 4017 M8X20 8	11651767	307	19	276	919007708	DRIVE ASSEMBLY, PRE-ASSE
HEX SCREW ISO 4017 M8X20 8	11651767	303	4	280	96034631	RADIATOR, PRE-ASSEMBLED
HEX SCREW ISO 4017 M8X20 8	11651767	300	3	326	919231108	FUEL FEED
HEX SCREW ISO 4017 M8X20 8	11651767	13	3	373	96025887	PEDAL CANTILEVER INSTALL
HEX SCREW ISO 4017 M8X20 8	11651767	15	4	399	916163008	WIPERS INSTALLATION
HEX SCREW ISO 4017 M8X20 8	11651767	24	1	414	969085208	HEATING, PRE-ASSEMBLED
HEX SCREW ISO 4017 M8X20 8	11651767	310	2	429	96036790	SLEWING PLATFORM PANELLI
HEX SCREW ISO 4017 M8X20 8	11651767	17	4	433	968923508	FLAP RIGHT PRE-ASS.
HEX SCREW ISO 4017 M8X20 8	11651767	306	5	439	969015908	SLEWING PLATFORM PANELLI
HEX SCREW ISO 4017 M8X20 8	11651767	21	13	462	918759808	ADD HEATING SUPERSTRUCT
HEX SCREW ISO 4017 M8X20 8	11651767	31	1	464	96020359	ADDNL.HEATING, PRE-ASSE
HEX SCREW ISO 4017 M8X20 8	11651767	301	4	499	918731908	AIR FILTER UNIT
HEX SCREW ISO 4017 M8X20 8	11651767	52	1	522	969256608	BASE ASSEMBLY
HEX SCREW ISO 4017 M8X20 8	11651767	334	10	540	96045351	HYDRAULICS UPPER CARRI
HEX SCREW ISO 4017 M8X20 8	11651767	301	2	595	969426308	AUX. HYDR. FOLDING JIB SP
HEX SCREW ISO 4017 M8X20 8	11651767	29	17	639	917291908	PIVOT SECTION, PRE-ASSEMB
HEX SCREW ISO 4017 M8X20 8	11651767	4	2	644	917292008	TELESCOPIC SECTION 1 PRE
HEX SCREW ISO 4017 M8X20 8	11651767	4	2	648	917292108	TELESCOPIC SECT.2 PRE-AS
HEX SCREW ISO 4017 M8X20 8	11651767	4	2	652	917292208	TELESCOPIC SECT.3 PRE-ASS
HEX SCREW ISO 4017 M8X20 8	11651767	4	2	656	917292308	TELESCOPIC SECT.IV PRE-A

Description	Item	Pos.	Quantity	Page	Assembly	Description
HEX SCREW ISO 4017 M8X20 8	11651767	28	4	661	917292408	TELESCOPIC SECT.5 PRE-AS
HEX SCREW ISO 4017 M8X20 8	11651767	32	2	731	917267508	TRANSPORT MOUNTING
HEX SCREW ISO 4017 M8X22	502618908	20	2	158	918731108	ASSEMBLY PARTS F.SLEWING
HEX SCREW ISO 4017 M8X25	10197831	7	2	127	917257108	CENTRALIZED LUBRICATION
HEX SCREW ISO 4017 M8X25	10197831	36	4	134	919087608	ROTARY FEED THROUGH
HEX SCREW ISO 4017 M8X25	10197831	311	2	276	919007708	DRIVE ASSEMBLY, PRE-ASSE
HEX SCREW ISO 4017 M8X25	10197831	311	7	429	96036790	SLEWING PLATFORM PANELLI
HEX SCREW ISO 4017 M8X25	10197831	26	2	474	967928508	LOCKING
HEX SCREW ISO 4017 M8X25	10197831	53	4	483	918484108	UREA PLANT
HEX SCREW ISO 4017 M8X25	10197831	20	2	502	917261208	CENT. LUBRIC. SYSTEM SUP
HEX SCREW ISO 4017 M8X25	10197831	8	2	525	926891108	GROUND RAIL
HEX SCREW ISO 4017 M8X25	10197831	15	10	565	967980508	OIL COOLER, PRE-ASSEMBLE
HEX SCREW ISO 4017 M8X25	10197831	15	2	639	917291908	PIVOT SECTION, PRE-ASSEMB
HEX SCREW ISO 4017 M8X25	10197831	76	2	662	917292408	TELESCOPIC SECT.5 PRE-AS
HEX SCREW ISO 4017 M8X25	10197831	308	2	699	967785008	ADDNL.HYDR. FOLDING JIB
HEX SCREW ISO 4017 M8X25	10197831	26	4	705	917268408	BOOM NOSE
HEX SCREW ISO 4017 M8X25	406590105	3	2	716	967937608	OBSTRUCTION LIGHTS PREAS
HEX SCREW ISO 4017 M8X28	500411708	56	6	17	919617108	CRAWLER TRACK TRAVEL G
HEX SCREW ISO 4017 M8X30 8	11826527	309	4	276	919007708	DRIVE ASSEMBLY, PRE-ASSE
HEX SCREW ISO 4017 M8X30 8	11826527	305	4	280	96034631	RADIATOR, PRE-ASSEMBLED
HEX SCREW ISO 4017 M8X30 8	11826527	305	2	283	968026308	CLUTCH ACTUATOR
HEX SCREW ISO 4017 M8X30 8	11826527	24	2	365	917259908	CRANE DRIVER CAB ADDITIO
HEX SCREW ISO 4017 M8X30 8	11826527	45	1	383	917305408	INTERNAL PANELLING INSTA
HEX SCREW ISO 4017 M8X30 8	11826527	4	2	639	917291908	PIVOT SECTION, PRE-ASSEMB
HEX SCREW ISO 4017 M8X35 8	11692827	7	1	112	968038208	BEARING AHEAD LEFT SIDE
HEX SCREW ISO 4017 M8X35 8	11692827	7	1	113	968038308	BEARING AHEAD RIGHT SIDE
HEX SCREW ISO 4017 M8X35 8	11692827	28	2	365	917259908	CRANE DRIVER CAB ADDITIO
HEX SCREW ISO 4017 M8X35 8	11692827	22	1	464	96020359	ADDNL.HEATING, PRE-ASSE
HEX SCREW ISO 4017 M8X35 8	11692827	19	4	577	967969608	AUXILIARY HOISTING GEAR 2
HEX SCREW ISO 4017 M8X35 8	11692827	302	13	699	967785008	ADDNL.HYDR. FOLDING JIB
HEX SCREW ISO 4017 M8X45 8	11690046	11	2	661	917292408	TELESCOPIC SECT.5 PRE-AS
HEX SCREW ISO 4017 M8X50 8	10875538	44	2	383	917305408	INTERNAL PANELLING INSTA
HEX SCREW ISO 8676 M12X1,	12216237	303	3	478	969763408	PIPEWORK AIR INSTALLATIO
HEX SCREW M5X16 10.9 480H	10876387	12	6	36	96045226	SWITCH BOX COMPL.
HEXAGON KEY DIN 911 10 GLA	790021208	34	1	144	928569808	MAIN TOOLS
HEXAGON KEY DIN 911 12 GLA	790021308	35	1	144	928569808	MAIN TOOLS
HEXAGON KEY DIN 911 4 GLA	790021608	30	1	144	928569808	MAIN TOOLS
HEXAGON KEY DIN 911 5 GLA	790020008	31	1	144	928569808	MAIN TOOLS
HEXAGON KEY DIN 911 6 GLA	790020108	32	1	144	928569808	MAIN TOOLS
HEXAGON KEY DIN 911 GR.8 G	790021008	33	1	144	928569808	MAIN TOOLS
HEXALOBULAR HEAD SCREW	10138656	4	14	236	10140087	EXHAUST PIPE ASSEMBLY
HEXALOBULAR HEAD SCREW	10139578	6	2	196	10120186	BALANCER ASSEMBLY
HEXALOBULAR HEAD SCREW	10125439	3	6	189	10149580	CYLINDER HEAD ASSEMBLY
HEXALOBULAR HEAD SCREW	10118910	4	10	251	9077238	FLYWHEEL ASSEMBLY
HEXALOBULAR HEAD SCREW	10118912	10	6	187	10141974	CRANKSHAFT ADD-ON PARTS
HEXALOBULAR HEAD SCREW	10130816	5	10	168	10154379	CRANKCASE PRE-ASSY.
HEXALOBULAR HEAD SCREW	10118695	9	3	220	10149677	CONNECTING LINE ADD-ON
HEXALOBULAR HEAD SCREW	10125702	3	2	237	10144756	HEAT PROTECTION W.FASTEN
HIGH CURRENT DISTRIBUTOR	10878680	(10)	1	321	96023914	ELECTRIC FOR BATTERY BOX
HIGH PRESS.CONNECTOR W.	10153151	191	4	162	12856862	DIESEL ENGINE
HIGH PRESSURE PUMP R-M	10146658	1	1	205	10150741	HIGH PRESSURE PUMP W.FAS
HIGH PRESSURE PUMP W.FAS	10150741	171	1	162	12856862	DIESEL ENGINE
HINGE 20X20X40/180° GD-ZN S	704258208	15	2	518	919503008	SWITCHBOX MOUNTING PART
HINGE 20X20X40/180° GD-ZN S	704258208	40	4	522	969256608	BASE ASSEMBLY
HINGE 35X35X50/180° NIROS	10294684	4	2	85	968420608	STORAGE BOX
HINGE 35X35X50/180° ST FE//	704228108	84	2	137	919499408	CENTRAL BALLAST
HINGE 35X35X50/180° ST FE//	704228108	12	2	320	96023117	BATTERY BOX, PRE-ASSEMB
HINGE 35X35X50/180° ST FE//	704228108	9	3	433	968923508	FLAP RIGHT PRE-ASS.
HINGE 35X35X50/180° ST FE//	704228108	2	2	441	969016008	FLAP LEFT FRONT PRE-ASS.
HINGE 35X35X50/180° ST FE//	704228108	5	1	737	917268208	LADDER ATTACHMENT

Description	Item	Pos.	Quantity	Page	Assembly	Description
HINGE PIN CLAMP 332X1022X3	12102925	180	2	494	96048826	EXHAUST SYSTEM PRE-ASSE
HINGE PIN CLAMP 332X1022X3	12102925	184	1	494	96048826	EXHAUST SYSTEM PRE-ASSE
HOIST LIM.SWITCH PLUMMET	96013575	63	1	662	917292408	TELESCOPIC SECT.5 PRE-AS
HOIST LIM.SWITCH PLUMMET	96013575	2	1	726	917267208	AUXILIARY HOIST.ROPE W.A
HOIST ROPE 23X280M -40°C	773444090	1	1	726	917267208	AUXILIARY HOIST.ROPE W.A
HOIST ROPE 23X350M -40°C	10115128	1	1	621	917259808	ROPE WITH ACCESSORIES 1
HOIST ROPE GUIDE WELDED	962771108	20	1	639	917291908	PIVOT SECTION, PRE-ASSEMB
HOLDER	10145373	(15)	1	164	12856862	DIESEL ENGINE
HOLDER	10146789	2	1	212	10146791	FUEL FINE-FILTER ASSEMBLY
HOLDER	591070408	29	2	158	918731108	ASSEMBLY PARTS F.SLEWING
HOLDER	966253708	1	1	407	966230508	GUIDE PRE-ASS.
HOLDER 1.4308	975218608	2	6	377	916162808	RELING
HOLDER 1.4308	975384508	3	6	377	916162808	RELING
HOLDER 1.5X198X59 DC01 FE//	978608608	10	1	522	969256608	BASE ASSEMBLY
HOLDER 40X30X175 PA6G+OE	97033902	19	1	21	96034894	PROTECTION PLATE CPL.
HOLDER 40X30X175 PA6G+OE	97033902	19	1	24	96034977	PROTECTION PLATE
HOLDER 40X80X40 G-ALMG3	979489508	3	1	424	916049908	MIRROR ATTACHM.IN CRANE
HOLDER 44X88.5X40 G-ALSIM	97009160	7	2	380	917304508	CRANE OPERATOR CABIN P
HOLDER 4X120X75 S315MC FE	971634008	33	1	672	966134608	ADD-ON PARTS CYLINDER
HOLDER 4X173X175 X5CRNI18	97032840	2	1	117	968331708	FUSE HOLDER
HOLDER 4X337X245 S315MC	97047676	50	1	127	917257108	CENTRALIZED LUBRICATION
HOLDER DT/DTM	10041876	528	2	513	96037136	WIRING HARNESS
HOLDER GX5CRNI19-10	97077297	33	1	275	919007708	DRIVE ASSEMBLY, PRE-ASSE
HOLDER GX5CRNI19-10	97077309	(2)	3	275	919007708	DRIVE ASSEMBLY, PRE-ASSE
HOLDER LEFT	967977708	2	1	564	917261808	OIL COOLER INSTALLATION
HOLDER MONITOR	10874763	20	1	614	96045237	EQUIPMENT CAMERA CAB
HOLDER PA6MDGF30 SPF	97098446	1	2	142	96045206	MECHANICAL AUXILIARIES
HOLDER RIGHT	969185608	3	1	564	917261808	OIL COOLER INSTALLATION
HOLDER S235JR	10150252	10	1	256	10151329	WIRING HARNESS ASSEMBLY
HOLDER S235JR	10150838	13	1	256	10151329	WIRING HARNESS ASSEMBLY
HOLDER S235JR	12429351	(2)	1	164	12856862	DIESEL ENGINE
HOLDER S235JR	9275178	91	1	254	10151328	CABLE HARNESS MOUNTING
HOLDER X12CRNIS188	965371708	1	1	683	966591508	LIMIT SWITCH ADD-ON
HOLDING RING	11659651	(14)	1	124	968077208	HYDRAULIC SUPPORT
HOLLOW KEY	704271108	7	2	145	928620108	ACCESSORIES
HOLLOW SCREW 10X1X27 11S	9080466	3	3	233	10148216	PIPELINE INSTALLATION
HOLLOW SCREW 15-3-32	11443132	17	2	214	10143341	FUEL LINES
HOLLOW SCREW DIN 74305 22	502940108	7	1	325	968999708	FUEL TANK, PRE-ASSEMBLED
HOLLOW SCREW DIN 7643 10	12210013	17	1	215	10143342	LEAK OIL RETURN LINE
HOLLOW SCREW DIN 7643 12	12210025	3	4	229	10145278	ACCESSORIES AIR COMPRES
HOLLOW SCREW DIN 7643 12-	11002995	2	1	214	10143341	FUEL LINES
HOLLOW SCREW DIN 7643 15--	4981226	16	3	214	10143341	FUEL LINES
HOLLOW SCREW DIN 7643 4-3	4789210	23	1	215	10143342	LEAK OIL RETURN LINE
HOLLOW SCREW DIN 7643 6-3	12210010	(6)	1	164	12856862	DIESEL ENGINE
HOLLOW SCREW DIN 7643 6-3	12210010	6	6	215	10143342	LEAK OIL RETURN LINE
HOLLOW SCREW DIN 7643 6-3	12210010	7	1	229	10145278	ACCESSORIES AIR COMPRES
HOLLOW SCREW DIN 7643 6-3	12210010	10	1	261	10144036	POWER TAKE-OFF ADD-ON
HOLLOW SCREW DIN 7643 8-3	12210024	2	1	215	10143342	LEAK OIL RETURN LINE
HOLLOW SCREW DIN 7643 8-3	12210024	13	1	261	10144036	POWER TAKE-OFF ADD-ON
HOLLOW SCREW M18X1,5 C	11493963	(15)	1	124	968077208	HYDRAULIC SUPPORT
HOOD 180X350 GEWEBE ROT	97042475	9	1	715	967936408	WIND WARNING PREASSEMB
HOOD 5X220X434 S355MC FE//	97032619	6	2	25	968019508	LIMIT SWITCH ADD-ON
HOOD COVER	11181887	34	1	47	11346779	SLIP RING TRANSMITTER
HOOD RIGHT 4X585X711 S31	97066483	87	1	101	919254408	CRAWLER SUPPORT PREASS
HOOD SUPPORT	704229908	311	10	439	969015908	SLEWING PLATFORM PANELLI
HOOD/BONNET LEFT 4X585X7	97066482	87	1	71	919254308	CRAWLER SUPPORT PREASS
HOOK 50X358X150 S960QL+Z2	97030305	7	2	625	967936908	COUNTERWEIGHT CPL.
HOOK BLOCK 125DM SPF	910836808	316	1	11		LIEBHERR LTR 1220
HOOK ROD FE//ZNNI8//CN//T0	929529908	1	1	738	968090008	MOUNTING HOOK ROD
HORN 24V	614003108	24	1	36	96045226	SWITCH BOX COMPL.

Description	Item	Pos.	Quantity	Page	Assembly	Description
HORN 24V	614003108	32	1	506	919410708	ELECTR. SYSTEM F.SLEWING
HOSE	97056998	341	5	540	96045351	HYDRAULICS UPPER CARRI
HOSE	97056998	304	1	595	969426308	AUX. HYDR. FOLDING JIB SP
HOSE 100X180 EPDM	10872213	250	1	499	918731908	AIR FILTER UNIT
HOSE 85X200 SILIKON	551710608	252	1	276	919007708	DRIVE ASSEMBLY, PRE-ASSE
HOSE CLAMP 10/9,5-10,5/9	553102308	30	5	462	918759808	ADD HEATING SUPERSTRUCT
HOSE CLAMP 10/9,5-10,5/9	553102308	14	1	464	96020359	ADDNL.HEATING, PRE-ASSE
HOSE CLAMP 115/113-121/25 A	12102528	180	4	491	919372008	EXHAUST SYSTEM
HOSE CLAMP 120/110-130/12	774217608	180	3	499	918731908	AIR FILTER UNIT
HOSE CLAMP 140/130-150/12	774209908	181	1	499	918731908	AIR FILTER UNIT
HOSE CLAMP 169/167-175/25 S	774227108	180	2	269	918731408	DRIVE ASSEMBLY CPL.
HOSE CLAMP 19/17,8-20,2/12	11162002	24	8	483	918484108	UREA PLANT
HOSE CLAMP 21/16-27/12 W3	11118077	22	2	410	917676208	HEATING CRANE DRIVER'S CA
HOSE CLAMP 21/16-27/12 W3	11118077	21	16	414	969085208	HEATING, PRE-ASSEMBLED
HOSE CLAMP 21/16-27/12 W3	11118077	19	6	462	918759808	ADD HEATING SUPERSTRUCT
HOSE CLAMP 21/16-27/12 W3	11118077	17	8	464	96020359	ADDNL.HEATING, PRE-ASSE
HOSE CLAMP 21/16-27/12 W3	11118077	23	2	483	918484108	UREA PLANT
HOSE CLAMP 26/20-32/12 W3	774215008	3	4	173	10126713	CRANKCASE BREATHER ASS
HOSE CLAMP 26/20-32/12 W3	774215008	8	4	218	10145173	INTAKE STACK ASSEMBLY
HOSE CLAMP 26/20-32/12 W3	774215008	25	2	238	10140729	EXHAUST TC MOUNTING
HOSE CLAMP 32/25-40/12 W3	774208508	10	1	464	96020359	ADDNL.HEATING, PRE-ASSE
HOSE CLAMP 45/30-45/9 W3	10878445	20	2	399	916163008	WIPERS INSTALLATION
HOSE CLAMP 50/40-60/12 W3	550838008	17	2	158	918731108	ASSEMBLY PARTS F.SLEWING
HOSE CLAMP 50/40-60/12 W3	550838008	185	4	276	919007708	DRIVE ASSEMBLY, PRE-ASSE
HOSE CLAMP 60/50-70/12 W3	774208008	181	4	276	919007708	DRIVE ASSEMBLY, PRE-ASSE
HOSE CLAMP 70/60-80/12 W3	774214308	183	4	276	919007708	DRIVE ASSEMBLY, PRE-ASSE
HOSE CLAMP 80/70-90/12 W3	774206408	186	2	276	919007708	DRIVE ASSEMBLY, PRE-ASSE
HOSE CLAMP 86-91X25 ST	774227908	180	1	276	919007708	DRIVE ASSEMBLY, PRE-ASSE
HOSE CLAMP 90/80-100/12 W3	774218808	184	6	276	919007708	DRIVE ASSEMBLY, PRE-ASSE
HOSE CLAMP DIN 3017-1 70/60	5004929	6	2	220	10149677	CONNECTING LINE ADD-ON
HOSE CLAMP DIN 3017-1 8-16	10872024	307	1	90	96035796	HYDR.TRAVEL DRIVE
HOSE CLAMP DIN 3017-1 8-16	10872024	307	1	107	96035792	HYDR.TRAVEL DRIVE
HOSE CLAMP DIN 3017-1 8-16	10872024	302	1	589	967784808	HYDR.AUXILIARY HOISTING
HOSE CLAMP DIN 3017-2 12/1	11005281	(8)	7	164	12856862	DIESEL ENGINE
HOSE CLAMP DIN 3017-2 17/16	4981029	6	4	182	10139112	OIL LINE PRE-ASSEMBLY
HOSE CONNECTION SOCKET	10801609	22	2	483	918484108	UREA PLANT
HOSE CPL.	924134808	332	1	570	918739608	HOSE LINES SUPERSTRUCT
HOSE CPL.	925185208	10	1	628	919028808	DISPATCH ASSY.MECH.PART
HOSE CPL.	925185308	11	1	628	919028808	DISPATCH ASSY.MECH.PART
HOSE CPL.	926315908	815	2	53	96035802	HOSE LINES CENTRE SECTIO
HOSE CPL.	926561708	222	1	569	918739608	HOSE LINES SUPERSTRUCT
HOSE CPL.	928006008	356	1	570	918739608	HOSE LINES SUPERSTRUCT
HOSE CPL.	928720408	405	1	570	918739608	HOSE LINES SUPERSTRUCT
HOSE CPL.	96040432	254	2	569	918739608	HOSE LINES SUPERSTRUCT
HOSE CPL.	968144708	804	1	53	96035802	HOSE LINES CENTRE SECTIO
HOSE CPL.	968351008	233	1	569	918739608	HOSE LINES SUPERSTRUCT
HOSE CPL.	969386508	315	1	569	918739608	HOSE LINES SUPERSTRUCT
HOSE CPL.	969386708	396	1	570	918739608	HOSE LINES SUPERSTRUCT
HOSE CPL.	969634308	230	1	569	918739608	HOSE LINES SUPERSTRUCT
HOSE CPL. 1SC 8X1360	968148808	(1449)	1	595	969426308	AUX. HYDR. FOLDING JIB SP
HOSE CPL. 1SC 8X1400	969452208	326	1	569	918739608	HOSE LINES SUPERSTRUCT
HOSE CPL. 1SC 8X14100	962968908	1490	1	700	968223308	HOSE LINES FOLDING JIB
HOSE CPL. 1SC 8X300	927637908	1255	1	592	968083708	HOSE LINES HOISTING GEAR
HOSE CPL. 1SC 8X330	965198708	354	1	570	918739608	HOSE LINES SUPERSTRUCT
HOSE CPL. 1SC 8X340	969634408	329	1	569	918739608	HOSE LINES SUPERSTRUCT
HOSE CPL. 1SC 8X360	926130108	202	1	569	918739608	HOSE LINES SUPERSTRUCT
HOSE CPL. 1SC 8X3600	96035632	203	1	569	918739608	HOSE LINES SUPERSTRUCT
HOSE CPL. 1SC 8X3700	927232508	1378	1	563	969347008	HOSE LINES ADDITIONAL PA
HOSE CPL. 1SC 8X4100	962956708	346	1	570	918739608	HOSE LINES SUPERSTRUCT
HOSE CPL. 1SC 8X500	926098108	1377	1	563	969347008	HOSE LINES ADDITIONAL PA

Description	Item	Pos.	Quantity	Page	Assembly	Description
HOSE CPL. 1SC 8X720	966861108	331	1	570	918739608	HOSE LINES SUPERSTRUCT
HOSE CPL. 1SC 8X960	926379108	1256	1	592	968083708	HOSE LINES HOISTING GEAR
HOSE CPL. 1SN 25X1240	967219908	373	1	570	918739608	HOSE LINES SUPERSTRUCT
HOSE CPL. 1SN 25X1300	968144308	807	1	53	96035802	HOSE LINES CENTRE SECTIO
HOSE CPL. 1SN 25X1750	928033508	806	2	53	96035802	HOSE LINES CENTRE SECTIO
HOSE CPL. 1SN 25X1900	968144208	805	1	53	96035802	HOSE LINES CENTRE SECTIO
HOSE CPL. 1SN 25X3900	968351508	345	1	570	918739608	HOSE LINES SUPERSTRUCT
HOSE CPL. 1SN 25X640	927032108	224	1	569	918739608	HOSE LINES SUPERSTRUCT
HOSE CPL. 1SN 25X960	969634908	403	1	570	918739608	HOSE LINES SUPERSTRUCT
HOSE CPL. 1SN 32X2200	969634508	375	1	570	918739608	HOSE LINES SUPERSTRUCT
HOSE CPL. 1SN 32X3500	968148408	842	1	91	96035799	HOSE LINES CRAWLER
HOSE CPL. 1SN 32X4250	96035892	832	1	108	96035798	HOSE LINES CRAWLER
HOSE CPL. 2SN 10X1460	926555408	(881)	4	124	968077208	HYDRAULIC SUPPORT
HOSE CPL. 2SN 10X1500	929310208	(880)	4	124	968077208	HYDRAULIC SUPPORT
HOSE CPL. 2SN 10X1700	928865508	810	2	53	96035802	HOSE LINES CENTRE SECTIO
HOSE CPL. 2SN 10X1900	968151308	305	1	569	918739608	HOSE LINES SUPERSTRUCT
HOSE CPL. 2SN 10X2900	929391108	318	1	569	918739608	HOSE LINES SUPERSTRUCT
HOSE CPL. 2SN 10X3000	928762308	317	1	569	918739608	HOSE LINES SUPERSTRUCT
HOSE CPL. 2SN 10X3550	96035894	843	1	91	96035799	HOSE LINES CRAWLER
HOSE CPL. 2SN 10X400	921255408	483	1	689	968187108	HOSE LINES TELESCOPIC
HOSE CPL. 2SN 10X4050	96035893	833	1	108	96035798	HOSE LINES CRAWLER
HOSE CPL. 2SN 12X1300	927613508	206	1	569	918739608	HOSE LINES SUPERSTRUCT
HOSE CPL. 2SN 12X1700	962255708	386	1	570	918739608	HOSE LINES SUPERSTRUCT
HOSE CPL. 2SN 12X1700	962255708	387	1	570	918739608	HOSE LINES SUPERSTRUCT
HOSE CPL. 2SN 12X2150	962969208	388	1	570	918739608	HOSE LINES SUPERSTRUCT
HOSE CPL. 2SN 12X2150	962969208	389	1	570	918739608	HOSE LINES SUPERSTRUCT
HOSE CPL. 2SN 12X3400	929331808	481	1	689	968187108	HOSE LINES TELESCOPIC
HOSE CPL. 2SN 12X3600	929753308	1491	1	700	968223308	HOSE LINES FOLDING JIB
HOSE CPL. 2SN 12X370	96035635	207	1	569	918739608	HOSE LINES SUPERSTRUCT
HOSE CPL. 2SN 12X3700	963457808	334	1	570	918739608	HOSE LINES SUPERSTRUCT
HOSE CPL. 2SN 12X3800	961861508	1492	1	700	968223308	HOSE LINES FOLDING JIB
HOSE CPL. 2SN 12X420	96035633	204	1	569	918739608	HOSE LINES SUPERSTRUCT
HOSE CPL. 2SN 12X760	964958008	1494	1	700	968223308	HOSE LINES FOLDING JIB
HOSE CPL. 2SN 12X860	928765908	1493	1	700	968223308	HOSE LINES FOLDING JIB
HOSE CPL. 2SN 16X250	969633908	229	1	569	918739608	HOSE LINES SUPERSTRUCT
HOSE CPL. 2SN 16X420	96034411	201	1	569	918739608	HOSE LINES SUPERSTRUCT
HOSE CPL. 2SN 16X4600	962440508	200	1	569	918739608	HOSE LINES SUPERSTRUCT
HOSE CPL. 2SN 20X280	969634108	221	1	569	918739608	HOSE LINES SUPERSTRUCT
HOSE CPL. 2SN 20X480	928037208	406	1	570	918739608	HOSE LINES SUPERSTRUCT
HOSE CPL. 2SN 6X13600	962968508	1488	1	694	968222808	HOSE LINES FOLDING JIB
HOSE CPL. 2SN 6X13600	962968508	1489	1	694	968222808	HOSE LINES FOLDING JIB
HOSE CPL. 2SN 6X220	966184308	400	1	570	918739608	HOSE LINES SUPERSTRUCT
HOSE CPL. 2SN 6X250	963562308	1263	1	592	968083708	HOSE LINES HOISTING GEAR
HOSE CPL. 2SN 6X3500	962968608	482	1	689	968187108	HOSE LINES TELESCOPIC
HOSE CPL. 2SN 6X500	968149808	1268	1	592	968083708	HOSE LINES HOISTING GEAR
HOSE CPL. 2SN 6X500	968350908	231	1	569	918739608	HOSE LINES SUPERSTRUCT
HOSE CPL. 2SN 6X540	923015608	1486	1	694	968222808	HOSE LINES FOLDING JIB
HOSE CPL. 2SN 6X540	923015608	1487	1	694	968222808	HOSE LINES FOLDING JIB
HOSE CPL. 2SN 6X780	968141708	1260	1	592	968083708	HOSE LINES HOISTING GEAR
HOSE CPL. 2SN 6X880	968151408	310	1	569	918739608	HOSE LINES SUPERSTRUCT
HOSE CPL. 2SN 8X1140	968351208	320	1	569	918739608	HOSE LINES SUPERSTRUCT
HOSE CPL. 2SN 8X1180	968599208	319	1	569	918739608	HOSE LINES SUPERSTRUCT
HOSE CPL. 2SN 8X2350	968152008	323	1	569	918739608	HOSE LINES SUPERSTRUCT
HOSE CPL. 2SN 8X2350	968152008	324	1	569	918739608	HOSE LINES SUPERSTRUCT
HOSE CPL. 2SN 8X2550	969633808	212	1	569	918739608	HOSE LINES SUPERSTRUCT
HOSE CPL. 2SN 8X320	968585908	802	4	53	96035802	HOSE LINES CENTRE SECTIO
HOSE CPL. 2SN 8X400	928874708	801	4	53	96035802	HOSE LINES CENTRE SECTIO
HOSE CPL. 2SN 8X600	928005808	316	1	569	918739608	HOSE LINES SUPERSTRUCT
HOSE CPL. 2SN 8X660	929312908	1379	1	563	969347008	HOSE LINES ADDITIONAL PA
HOSE CPL. 2TE 10X1000	926465408	808	1	53	96035802	HOSE LINES CENTRE SECTIO

Description	Item	Pos.	Quantity	Page	Assembly	Description
HOSE CPL. 2TE 10X1060	926976308	835	1	91	96035799	HOSE LINES CRAWLER
HOSE CPL. 2TE 10X1060	926976308	835	1	108	96035798	HOSE LINES CRAWLER
HOSE CPL. 2TE 10X1200	926711908	350	1	570	918739608	HOSE LINES SUPERSTRUCT
HOSE CPL. 2TE 10X1220	928022908	364	1	570	918739608	HOSE LINES SUPERSTRUCT
HOSE CPL. 2TE 10X1240	96040431	370	1	570	918739608	HOSE LINES SUPERSTRUCT
HOSE CPL. 2TE 10X190	968152508	355	1	570	918739608	HOSE LINES SUPERSTRUCT
HOSE CPL. 2TE 10X1900	968139808	348	1	570	918739608	HOSE LINES SUPERSTRUCT
HOSE CPL. 2TE 10X1900	968144408	811	1	53	96035802	HOSE LINES CENTRE SECTIO
HOSE CPL. 2TE 10X1950	926362908	325	1	569	918739608	HOSE LINES SUPERSTRUCT
HOSE CPL. 2TE 10X2150	926028808	330	1	569	918739608	HOSE LINES SUPERSTRUCT
HOSE CPL. 2TE 10X2150	967355108	215	1	569	918739608	HOSE LINES SUPERSTRUCT
HOSE CPL. 2TE 10X220	927294708	379	1	570	918739608	HOSE LINES SUPERSTRUCT
HOSE CPL. 2TE 10X260	962641808	378	1	570	918739608	HOSE LINES SUPERSTRUCT
HOSE CPL. 2TE 10X260	963703908	1258	1	592	968083708	HOSE LINES HOISTING GEAR
HOSE CPL. 2TE 10X2800	923016308	349	1	570	918739608	HOSE LINES SUPERSTRUCT
HOSE CPL. 2TE 10X360	928046908	313	1	569	918739608	HOSE LINES SUPERSTRUCT
HOSE CPL. 2TE 10X360	928046908	1257	1	592	968083708	HOSE LINES HOISTING GEAR
HOSE CPL. 2TE 10X380	920896108	1261	1	592	968083708	HOSE LINES HOISTING GEAR
HOSE CPL. 2TE 10X400	923016208	1254	1	592	968083708	HOSE LINES HOISTING GEAR
HOSE CPL. 2TE 10X490	965945408	353	1	570	918739608	HOSE LINES SUPERSTRUCT
HOSE CPL. 2TE 10X500	926041708	812	1	53	96035802	HOSE LINES CENTRE SECTIO
HOSE CPL. 2TE 10X520	926610108	335	1	570	918739608	HOSE LINES SUPERSTRUCT
HOSE CPL. 2TE 10X580	926990808	402	1	570	918739608	HOSE LINES SUPERSTRUCT
HOSE CPL. 2TE 10X600	926120008	834	1	91	96035799	HOSE LINES CRAWLER
HOSE CPL. 2TE 10X600	926120008	834	1	108	96035798	HOSE LINES CRAWLER
HOSE CPL. 2TE 10X600	929752308	809	1	53	96035802	HOSE LINES CENTRE SECTIO
HOSE CPL. 2TE 10X660	928024908	211	1	569	918739608	HOSE LINES SUPERSTRUCT
HOSE CPL. 2TE 10X700	928025108	1262	1	592	968083708	HOSE LINES HOISTING GEAR
HOSE CPL. 2TE 10X740	964273708	217	1	569	918739608	HOSE LINES SUPERSTRUCT
HOSE CPL. 2TE 10X800	926606608	214	1	569	918739608	HOSE LINES SUPERSTRUCT
HOSE CPL. 2TE 12X1000	926289108	351	1	570	918739608	HOSE LINES SUPERSTRUCT
HOSE CPL. 2TE 12X1900	969034108	(2393)	1	326	919231108	FUEL FEED
HOSE CPL. 2TE 12X4100	928456608	(430)	1	478	969763408	PIPEWORK AIR INSTALLATIO
HOSE CPL. 2TE 12X6400	965946108	(2394)	1	326	919231108	FUEL FEED
HOSE CPL. 2TE 12X650	96033235	(2395)	1	326	919231108	FUEL FEED
HOSE CPL. 2TE 12X820	965159708	336	1	570	918739608	HOSE LINES SUPERSTRUCT
HOSE CPL. 2TE 16X1200	926041308	228	1	569	918739608	HOSE LINES SUPERSTRUCT
HOSE CPL. 2TE 16X180	96035634	205	1	569	918739608	HOSE LINES SUPERSTRUCT
HOSE CPL. 2TE 16X2800	96034858	(2391)	1	326	919231108	FUEL FEED
HOSE CPL. 2TE 16X4700	920978208	(2390)	1	326	919231108	FUEL FEED
HOSE CPL. 2TE 16X600	968148708	(1448)	1	595	969426308	AUX. HYDR. FOLDING JIB SP
HOSE CPL. 2TE 16X760	968350608	213	1	569	918739608	HOSE LINES SUPERSTRUCT
HOSE CPL. 2TE 20X1000	928042908	369	1	570	918739608	HOSE LINES SUPERSTRUCT
HOSE CPL. 2TE 20X1020	968350008	1252	1	592	968083708	HOSE LINES HOISTING GEAR
HOSE CPL. 2TE 20X1100	968537008	225	1	569	918739608	HOSE LINES SUPERSTRUCT
HOSE CPL. 2TE 20X1460	966860008	1253	1	592	968083708	HOSE LINES HOISTING GEAR
HOSE CPL. 2TE 20X200	968150708	219	1	569	918739608	HOSE LINES SUPERSTRUCT
HOSE CPL. 2TE 20X200	968150708	234	1	569	918739608	HOSE LINES SUPERSTRUCT
HOSE CPL. 2TE 20X2500	926757108	372	1	570	918739608	HOSE LINES SUPERSTRUCT
HOSE CPL. 2TE 20X3100	968007308	357	1	570	918739608	HOSE LINES SUPERSTRUCT
HOSE CPL. 2TE 20X3600	928876208	358	1	570	918739608	HOSE LINES SUPERSTRUCT
HOSE CPL. 2TE 20X420	929742608	1383	1	592	968083708	HOSE LINES HOISTING GEAR
HOSE CPL. 2TE 20X440	927295708	218	1	569	918739608	HOSE LINES SUPERSTRUCT
HOSE CPL. 2TE 20X440	927295708	1266	1	592	968083708	HOSE LINES HOISTING GEAR
HOSE CPL. 2TE 20X540	967354708	1267	1	592	968083708	HOSE LINES HOISTING GEAR
HOSE CPL. 2TE 20X680	968350108	1382	1	592	968083708	HOSE LINES HOISTING GEAR
HOSE CPL. 2TE 20X760	968350708	226	1	569	918739608	HOSE LINES SUPERSTRUCT
HOSE CPL. 2TE 20X800	929631408	374	1	570	918739608	HOSE LINES SUPERSTRUCT
HOSE CPL. 2TE 20X800	965434608	352	1	570	918739608	HOSE LINES SUPERSTRUCT
HOSE CPL. 2TE 20X960	966860408	367	1	570	918739608	HOSE LINES SUPERSTRUCT

Description	Item	Pos.	Quantity	Page	Assembly	Description
HOSE CPL. 2TE 8X460	928023108	836	1	91	96035799	HOSE LINES CRAWLER
HOSE CPL. 2TE 8X460	928023108	836	1	108	96035798	HOSE LINES CRAWLER
HOSE CPL. 2TE 8X700	968143708	837	1	91	96035799	HOSE LINES CRAWLER
HOSE CPL. 2TE 8X700	968143708	837	1	108	96035798	HOSE LINES CRAWLER
HOSE CPL. 304 60X140	96040433	209	1	569	918739608	HOSE LINES SUPERSTRUCT
HOSE CPL. 4ST+ 31X260	968151208	302	1	569	918739608	HOSE LINES SUPERSTRUCT
HOSE CPL. 4ST+ 31X3450	96035889	841	1	91	96035799	HOSE LINES CRAWLER
HOSE CPL. 4ST+ 31X3550	96035888	840	1	91	96035799	HOSE LINES CRAWLER
HOSE CPL. 4ST+ 31X3600	968349808	1374	1	563	969347008	HOSE LINES ADDITIONAL PA
HOSE CPL. 4ST+ 31X4100	96035890	830	1	108	96035798	HOSE LINES CRAWLER
HOSE CPL. 4ST+ 31X4200	96035891	831	1	108	96035798	HOSE LINES CRAWLER
HOSE CPL. 4ST+ 31X630	968351408	343	1	570	918739608	HOSE LINES SUPERSTRUCT
HOSE CPL. 4ST+ 31X880	967623008	300	1	569	918739608	HOSE LINES SUPERSTRUCT
HOSE CPL. 4ST+ 31X920	969572608	361	1	570	918739608	HOSE LINES SUPERSTRUCT
HOSE CPL. 4ST+ 31X940	968151108	301	1	569	918739608	HOSE LINES SUPERSTRUCT
HOSE CPL. 75X150	96040435	210	1	569	918739608	HOSE LINES SUPERSTRUCT
HOSE CPL. CARBURITE10 50X	96040434	255	1	569	918739608	HOSE LINES SUPERSTRUCT
HOSE CPL. CONTI KWS 10X13	969452108	2312	2	488	96011801	HOSE LINES
HOSE CPL. CONTI KWS 10X1	96014023	2456	1	317	96034533	HOSE LINES DRIVE UNIT
HOSE CPL. CONTI KWS 10X1	96023967	2455	1	317	96034533	HOSE LINES DRIVE UNIT
HOSE CPL. CONTI KWS 10X1	96032358	2457	1	317	96034533	HOSE LINES DRIVE UNIT
HOSE CPL. CONTI KWS 10X24	969384408	2314	1	488	96011801	HOSE LINES
HOSE CPL. CONTI KWS 10X2	96024954	2316	1	488	96011801	HOSE LINES
HOSE CPL. CONTI KWS 10X2	969574508	2310	1	488	96011801	HOSE LINES
HOSE CPL. CONTI KWS 10X62	96014733	2311	1	488	96011801	HOSE LINES
HOSE CPL. CONTI KWS 10X70	96014732	2313	1	488	96011801	HOSE LINES
HOSE CPL. CONTI KWS 10X88	96014734	2315	1	488	96011801	HOSE LINES
HOSE CPL. CONTI KWS 20X1	96020259	(2824)	1	410	917676208	HEATING CRANE DRIVER'S CA
HOSE CPL. CONTI KWS 20X2	96023301	2466	1	317	96034533	HOSE LINES DRIVE UNIT
HOSE CPL. CONTI KWS 20X3	96014060	2463	1	317	96034533	HOSE LINES DRIVE UNIT
HOSE CPL. CONTI KWS 20X75	96024886	(2823)	1	410	917676208	HEATING CRANE DRIVER'S CA
HOSE CPL. CONTI KWS 22X28	96034457	(1612)	1	275	919007708	DRIVE ASSEMBLY, PRE-ASSE
HOSE CPL. CONTI KWS 22X70	96034535	2451	1	317	96034533	HOSE LINES DRIVE UNIT
HOSE CPL. CONTI KWS 8X300	96031888	2450	1	317	96034533	HOSE LINES DRIVE UNIT
HOSE CPL. CONTI KWS 8X440	96034540	2453	1	317	96034533	HOSE LINES DRIVE UNIT
HOSE CPL. GH001 10X1800	969041408	(1102)	1	574	918628408	AIR COND. UNIT SUPERSTRU
HOSE CPL. GH001 13X5200	964476008	(1100)	1	574	918628408	AIR COND. UNIT SUPERSTRU
HOSE CPL. GH001 8X1160	969637808	(1103)	1	574	918628408	AIR COND. UNIT SUPERSTRU
HOSE CPL. GH001 8X6700	969452608	(1101)	1	574	918628408	AIR COND. UNIT SUPERSTRU
HOSE CPL. GH425-10 16X1160	924496108	813	2	53	96035802	HOSE LINES CENTRE SECTIO
HOSE CPL. GH425-10 16X1400	923853008	314	1	569	918739608	HOSE LINES SUPERSTRUCT
HOSE CPL. GH425-10 16X1520	96035865	816	4	53	96035802	HOSE LINES CENTRE SECTIO
HOSE CPL. GH425-10 16X1700	923342808	333	1	570	918739608	HOSE LINES SUPERSTRUCT
HOSE CPL. GH425-10 16X1750	920715608	800	12	53	96035802	HOSE LINES CENTRE SECTIO
HOSE CPL. GH425-10 16X1750	920715608	814	4	53	96035802	HOSE LINES CENTRE SECTIO
HOSE CPL. GH425-10 16X2000	921990108	342	1	570	918739608	HOSE LINES SUPERSTRUCT
HOSE CPL. GH425-10 16X2000	969935008	341	1	570	918739608	HOSE LINES SUPERSTRUCT
HOSE CPL. GH425-10 16X450	969633008	1375	1	563	969347008	HOSE LINES ADDITIONAL PA
HOSE CPL. GH425-10 16X470	925686208	1376	1	563	969347008	HOSE LINES ADDITIONAL PA
HOSE CPL. GH425-10 16X480	924741208	303	1	569	918739608	HOSE LINES SUPERSTRUCT
HOSE CPL. GH425-10 16X480	924741208	304	1	569	918739608	HOSE LINES SUPERSTRUCT
HOSE CPL. GH425-12 19X680	925352308	360	1	570	918739608	HOSE LINES SUPERSTRUCT
HOSE CPL. GH425-12 19X700	922068108	368	1	570	918739608	HOSE LINES SUPERSTRUCT
HOSE CPL. GH425-12 19X960	923702508	803	1	53	96035802	HOSE LINES CENTRE SECTIO
HOSE CPL. GH425-8 12X1140	963170408	308	1	569	918739608	HOSE LINES SUPERSTRUCT
HOSE CPL. GH425-8 12X1600	923343608	309	1	569	918739608	HOSE LINES SUPERSTRUCT
HOSE CPL. GH425-8 12X1650	923343408	(1447)	1	595	969426308	AUX. HYDR. FOLDING JIB SP
HOSE CPL. GH425-8 12X1800	966142408	306	1	569	918739608	HOSE LINES SUPERSTRUCT
HOSE CPL. GH425-8 12X2050	924567508	(1445)	1	595	969426308	AUX. HYDR. FOLDING JIB SP
HOSE CPL. GH425-8 12X2100	923087208	(1446)	1	595	969426308	AUX. HYDR. FOLDING JIB SP

Description	Item	Pos.	Quantity	Page	Assembly	Description
HOSE CPL. GH425-8 12X2400	966350208	307	1	569	918739608	HOSE LINES SUPERSTRUCT
HOSE CPL. GH506 31X1620	962913408	480	3	689	968187108	HOSE LINES TELESCOPIC
HOSE CPL. GH506-16 25X1020	968150108	1385	1	592	968083708	HOSE LINES HOISTING GEAR
HOSE CPL. GH506-16 25X1020	969634608	380	1	570	918739608	HOSE LINES SUPERSTRUCT
HOSE CPL. GH506-16 25X1060	966145808	1270	1	592	968083708	HOSE LINES HOISTING GEAR
HOSE CPL. GH506-16 25X1080	968150008	1384	1	592	968083708	HOSE LINES HOISTING GEAR
HOSE CPL. GH506-16 25X1100	968149908	1269	1	592	968083708	HOSE LINES HOISTING GEAR
HOSE CPL. GH506-16 25X1200	96040847	376	1	570	918739608	HOSE LINES SUPERSTRUCT
HOSE CPL. GH506-16 25X1300	963926708	383	1	570	918739608	HOSE LINES SUPERSTRUCT
HOSE CPL. GH506-16 25X1400	965155808	236	1	569	918739608	HOSE LINES SUPERSTRUCT
HOSE CPL. GH506-16 25X1400	968351808	381	1	570	918739608	HOSE LINES SUPERSTRUCT
HOSE CPL. GH506-16 25X1550	969634008	235	1	569	918739608	HOSE LINES SUPERSTRUCT
HOSE CPL. GH506-16 25X1620	968349908	1251	1	592	968083708	HOSE LINES HOISTING GEAR
HOSE CPL. GH506-16 25X1750	967618508	385	1	570	918739608	HOSE LINES SUPERSTRUCT
HOSE CPL. GH506-16 25X600	969634708	382	1	570	918739608	HOSE LINES SUPERSTRUCT
HOSE CPL. GH506-16 25X720	963337608	1372	1	563	969347008	HOSE LINES ADDITIONAL PA
HOSE CPL. GH506-16 25X800	963171408	1373	1	563	969347008	HOSE LINES ADDITIONAL PA
HOSE CPL. GH506-16 25X940	968352008	384	1	570	918739608	HOSE LINES SUPERSTRUCT
HOSE CPL. GH506-16 25X960	968149608	1250	1	592	968083708	HOSE LINES HOISTING GEAR
HOSE CPL. GH663 38X1300	965861108	340	3	570	918739608	HOSE LINES SUPERSTRUCT
HOSE CPL. GH663 38X2000	966051108	339	1	570	918739608	HOSE LINES SUPERSTRUCT
HOSE CPL. GH663 38X3000	968352108	377	1	570	918739608	HOSE LINES SUPERSTRUCT
HOSE CPL. GH663 38X700	968151808	321	1	569	918739608	HOSE LINES SUPERSTRUCT
HOSE CPL. GH663 38X820	968151908	322	1	569	918739608	HOSE LINES SUPERSTRUCT
HOSE CPL. HPC 4X1000	963560708	411	1	570	918739608	HOSE LINES SUPERSTRUCT
HOSE CPL. HPC 4X2850	968841908	890	1	53	96035802	HOSE LINES CENTRE SECTIO
HOSE CPL. HPC 4X3800	922628908	410	1	570	918739608	HOSE LINES SUPERSTRUCT
HOSE CPL. HPC 4X4900	920983508	891	1	53	96035802	HOSE LINES CENTRE SECTIO
HOSE CPL. KUNSTSTOFF 8X60	96013988	2333	1	488	96011801	HOSE LINES
HOSE CPL. L6254.11 42X500	96014317	844	1	91	96035799	HOSE LINES CRAWLER
HOSE CPL. L6254.11 42X500	96014317	829	1	108	96035798	HOSE LINES CRAWLER
HOSE DN16 500	510501008	301	2	478	969763408	PIPEWORK AIR INSTALLATIO
HOSE DN3,5-GU23725 GUMMI	591080608	28	0.25	399	916163008	WIPERS INSTALLATION
HOSE DN82-UNIE13 SCHWAR	11000901	11	2.15	396	916168308	AIR DUCT
HOSE GUARD DN44-65 SGX50	10449843	300	5.2	124	968077208	HYDRAULIC SUPPORT
HOSE GUARD SPIRAL DN30,5	10870633	25	0.75	410	917676208	HEATING CRANE DRIVER'S CA
HOSE GUARD SPIRAL DN30,5	10870633	26	0.5	410	917676208	HEATING CRANE DRIVER'S CA
HOSE GUIDE PRE-ASS.	925141508	9	1	628	919028808	DISPATCH ASSY.MECH.PART
HOSE GUIDE WELDED FE//ZN	925143708	1	1	630	925141508	HOSE GUIDE PRE-ASS.
HOSE LINE	96050638	400	1	410	917676208	HEATING CRANE DRIVER'S CA
HOSE LINE 4X600 EPDM	10144270	18	1	483	918484108	UREA PLANT
HOSE LINE X300	790042214	7	1	143	919328608	TOOLS AND ACCESSORIES
HOSE LINE X300	790042914	8	1	143	919328608	TOOLS AND ACCESSORIES
HOSE LINES ADDITIONAL PAR	969347008	10	1	530	918732808	HYDRAULICS
HOSE LINES AIR CONDITIONIN	96018575	500	1	574	918628408	AIR COND. UNIT SUPERSTRU
HOSE LINES CENTRE SECTIO	96035802	10	1	51	96035801	HYDRAULIC EQUIPM.CENTER
HOSE LINES CRAWLER	96035798	10	1	107	96035792	HYDR.TRAVEL DRIVE
HOSE LINES CRAWLER	96035799	10	1	90	96035796	HYDR.TRAVEL DRIVE
HOSE LINES DRIVE UNIT	96034533	290	1	269	918731408	DRIVE ASSEMBLY CPL.
HOSE LINES DRUCKLUFT OW	969842608	10	1	478	969763408	PIPEWORK AIR INSTALLATIO
HOSE LINES ENGINE PREASS	96034456	50	1	275	919007708	DRIVE ASSEMBLY, PRE-ASSE
HOSE LINES FOLDING JIB	968222808	10	1	693	967785408	ADDNL.HYDR. FOLDING JIB
HOSE LINES FOLDING JIB WI	968223308	10	1	699	967785008	ADDNL.HYDR. FOLDING JIB
HOSE LINES FOLDING JIB WI	969426408	10	1	595	969426308	AUX. HYDR. FOLDING JIB SP
HOSE LINES FUEL	96034873	2	1	326	919231108	FUEL FEED
HOSE LINES HOISTING GEAR	968083708	10	1	589	967784808	HYDR.AUXILIARY HOISTING
HOSE LINES OW STUFE 4	96011801	20	1	483	918484108	UREA PLANT
HOSE LINES SUPERSTRUCT	918739608	191	1	11		LIEBHERR LTR 1220
HOSE LINES SUPPORT SYSTE	968077308	10	1	124	968077208	HYDRAULIC SUPPORT
HOSE LINES TELESCOPIC	968187108	10	1	688	967784508	HYDR.F.TELESCOPIC BOOM

Description	Item	Pos.	Quantity	Page	Assembly	Description
HOSE NIPPLE	10142668	1	1	235	10142744	COOLING WATER AIR BLEED
HOSE NIPPLE 11SMn30+C	10140969	5	1	235	10142744	COOLING WATER AIR BLEED
HOSE NIPPLE CE-0, H54	9140351	6	2	218	10145173	INTAKE STACK ASSEMBLY
HOSE NIPPLE CE-0, H54	9140351	26	1	238	10140729	EXHAUST TC MOUNTING
HOSE PROTECTION WELDM	969444008	19	1	158	918731108	ASSEMBLY PARTS F.SLEWING
HOSE UNION JOINT 0 MS	602440708	513	1	44	96045228	WIRING HARNESS
HOUSING	511015208	1	1	561	511419608	PRESSURE LIMITING VALVE
HOUSING	570063108	1	1	558	511433908	PRESSURE LIMITING VALVE
HOUSING	570109108	3	1	346	510229408	HYDRO MOTOR
HOUSING 12-POL	10099861	510	1	43	96045227	WIRING HARNESS
HOUSING 12-POL	10099861	506	1	513	96037136	WIRING HARNESS
HOUSING 15-POLE	10099863	512	1	43	96045227	WIRING HARNESS
HOUSING 15-POLE	10099863	510	7	520	96045387	CABLES, BASIC CONSTRUCTI
HOUSING 18-POL	10099864	502	3	448	96036956	WIRING HARNESS
HOUSING 18-POL	10099864	519	5	520	96045387	CABLES, BASIC CONSTRUCTI
HOUSING 21-POLE	10099856	501	2	43	96045227	WIRING HARNESS
HOUSING 21-POLE	10099856	521	9	520	96045387	CABLES, BASIC CONSTRUCTI
HOUSING 4-POL	602331308	507	4	446	96036955	WIRING HARNESS
HOUSING 4-POL	602331308	505	2	448	96036956	WIRING HARNESS
HOUSING 4-POL	602331308	501	1	516	96037133	LEAD
HOUSING 4-POL	602331308	504	32	520	96045387	CABLES, BASIC CONSTRUCTI
HOUSING 4-POL	602331308	501	1	615	96043733	WIRING HARNESS
HOUSING 4-POL	602339308	507	3	44	96045228	WIRING HARNESS
HOUSING 6-POL	602325508	506	3	446	96036955	WIRING HARNESS
HOUSING 6-POL	602325508	510	1	448	96036956	WIRING HARNESS
HOUSING 6-POL	602325508	504	1	510	96045385	WIRING HARNESS
HOUSING 6-POL	602325508	526	2	520	96045387	CABLES, BASIC CONSTRUCTI
HOUSING 8-POL	602300508	514	1	446	96036955	WIRING HARNESS
HOUSING 8-POL	602300608	516	1	446	96036955	WIRING HARNESS
HOUSING 8-POL	602301408	501	1	44	96045228	WIRING HARNESS
HOUSING 8-POL	602301408	507	2	520	96045387	CABLES, BASIC CONSTRUCTI
HOUSING 8-POL	602301408	502	1	615	96043733	WIRING HARNESS
HOUSING 9-POL	10099860	508	1	43	96045227	WIRING HARNESS
HOUSING 9-POL	10099860	527	2	520	96045387	CABLES, BASIC CONSTRUCTI
HOUSING GD-ZN SW GEPULV	704253308	6	4	37	966167808	COVER COMPL.
HOUSING GD-ZN SW GEPULV	704253308	3	5	79	967972208	COVER PRE-ASSY.
HOUSING GD-ZN SW GEPULV	704253308	3	2	80	967972308	COVER PRE-ASSY.
HOUSING GD-ZN SW GEPULV	704253308	3	2	81	967972408	COVER PRE-ASSY.
HOUSING GD-ZN SW GEPULV	704253308	3	2	82	968270108	COVER PRE-ASSY.
HOUSING GD-ZN SW GEPULV	704253308	3	2	83	968274208	COVER PRE-ASSY.
HOUSING GD-ZN SW GEPULV	704253308	3	5	102	968055808	COVER PRE-ASSY.
HOUSING GD-ZN SW GEPULV	704253308	13	1	320	96023117	BATTERY BOX, PRE-ASSEMB
HOUSING PUR SPF	975850708	7	1	383	917305408	INTERNAL PANELLING INSTA
HYDR.AUXILIARY HOISTING	917267308	333	1	11		LIEBHERR LTR 1220
HYDR.AUXILIARY HOISTING	967784808	4	1	587	917267308	HYDR.AUXILIARY HOISTING
HYDR.F.TELESCOPIC BOOM	917262408	217	1	11		LIEBHERR LTR 1220
HYDR.F.TELESCOPIC BOOM	967784508	4	1	686	917262408	HYDR.F.TELESCOPIC BOOM
HYDR.TRAVEL DRIVE	919296408	4	1	95	919254208	CRAWLER CARRIER RIGHT CP
HYDR.TRAVEL DRIVE	919296508	4	1	65	919254108	CRAWLER TRACK CARRIER LE
HYDR.TRAVEL DRIVE	96035792	4	1	105	919296408	HYDR.TRAVEL DRIVE
HYDR.TRAVEL DRIVE	96035796	4	1	88	919296508	HYDR.TRAVEL DRIVE
HYDRAULIC BALLASTING	918956108	153	1	10		LIEBHERR LTR 1220
HYDRAULIC EQUIPM.CENTER	919296608	3	1	27	919499308	CENTRAL SECTION CRAWLER
HYDRAULIC EQUIPM.CENTER	96035801	4	1	48	919296608	HYDRAULIC EQUIPM.CENTER
HYDRAULIC SUPPORT	917430308	100	1	121	919644008	HYDRAULIC SUPPORT
HYDRAULIC SUPPORT	919644008	14	1	9		LIEBHERR LTR 1220
HYDRAULIC SUPPORT	968077208	4	1	122	917430308	HYDRAULIC SUPPORT
HYDRAULIC-TYPE LUBRICAT.N	11080392	15	1	504	10327065	ELECTRIC PUMP
HYDRAULIC-TYPE LUBRICAT.N	7743242	16	2	644	917292008	TELESCOPIC SECTION 1 PRE
HYDRAULIC-TYPE LUBRICAT.N	7743242	16	2	648	917292108	TELESCOPIC SECT.2 PRE-AS

Description	Item	Pos.	Quantity	Page	Assembly	Description
HYDRAULIC-TYPE LUBRICAT.N	7743242	16	2	652	917292208	TELESCOPIC SECT.3 PRE-ASS
HYDRAULIC-TYPE LUBRICAT.N	7743242	16	2	656	917292308	TELESCOPIC SECT.IV PRE-A
HYDRAULIC-TYPE LUBRICAT.N	7743242	30	2	661	917292408	TELESCOPIC SECT.5 PRE-AS
HYDRAULIC-TYPE LUBRICAT.N	571578608	2	1	131	774375108	PASSAGE NIPPLE BLOCK
HYDRAULIC-TYPE LUBRICAT.	774301101	18	1	354	90208882	COMPACT ROPE WINCH
HYDRAULICS	918732808	185	1	11		LIEBHERR LTR 1220
HYDRAULICS UPPER CARRI	96045351	4	1	530	918732808	HYDRAULICS
HYDRO CYLINDER 65/36-480	512363708	4	1	731	917267508	TRANSPORT MOUNTING
HYDRO CYLINDER 70/45-50 SP	10443748	1	1	350	917259608	ROTATING PLATFORM LOCK
HYDRO MOTOR	10872388	8	1	566	11622561	OIL AIR COOLER
HYDRO MOTOR A2FM 23CM³/	510229408	2	2	338	919369308	SLEWING GEAR
IDENTIFICATION STRIPS	602762908	7	1	524	967589508	TERMINAL STRIP
IGNITION STARTER SWITCH 3	10335557	50	1	449	96036957	ELECTRIC ADD-ON PARTS CA
IMMERSION HEATER 120V 1K	10025057	1	1	602	918377508	COOLING WATER PRE-HEATIN
INCLINATION SENSOR +/-25°	11001194	10	1	34	96045225	ELECTR.FOR CENTER SECTIO
INDICATOR LAMP	606143508	11	2	453	96022872	CONTROL PANEL ROOF
INDUCTIVE SENSOR BERUE	10354584	10	1	26	968036408	LIMIT SWITCH, PRE-ASSEMB
INDUCTIVE SENSOR BERUE	10354584	58	1	450	96036957	ELECTRIC ADD-ON PARTS CA
INDUCTIVE SENSOR BERUE	10354584	(6)	6	672	966134608	ADD-ON PARTS CYLINDER
INDUCTIVE SENSOR BERUE	10354584	(5)	1	683	966591508	LIMIT SWITCH ADD-ON
INDUCTIVE SENSOR BERUE	692312708	(7)	2	672	966134608	ADD-ON PARTS CYLINDER
INFORMATION SIGN 120X80 K	97094940	107	1	150	917862808	LABELLING GREAT BRITAIN
INFORMATION SIGN 208X100 K	97131530	110	1	150	917862808	LABELLING GREAT BRITAIN
INFORMATION SIGN 23X12 K	97082749	1	1	739	918462408	SIGN EXTERNAL SUPPLY
INFORMATION SIGN 60X90 K	97135430	17	1	150	917862808	LABELLING GREAT BRITAIN
INFORMATION SIGN 60X90 K	97135431	19	1	150	917862808	LABELLING GREAT BRITAIN
INFORMATION SIGN 70X50 K	97133618	50	1	21	96034894	PROTECTION PLATE CPL.
INFORMATION SIGN 70X50 K	97133617	50	1	24	96034977	PROTECTION PLATE
INJECTION LINE R-MOTORXD	10143826	1	1	216	10143825	INJECTION LINES
INJECTION LINE R-MOTORXD	10143827	2	3	216	10143825	INJECTION LINES
INJECTION LINES R-MOTORXD	10143825	215	1	162	12856862	DIESEL ENGINE
INJECTOR LI2.7-20-SF-950	10147680	1	1	209	10152867	INJECTOR WITH FASTENING
INJECTOR WITH FASTENING LI	10152867	190	4	162	12856862	DIESEL ENGINE
INLET MODULE SCRONLY SP	10144031	10	1	495	11403708	SCR-ASSEMBLY
INLET VALVE	10144556	2	2	191	10149579	CYLINDER HEAD PRE-ASSY.
INLET VALVE SEAT INSERT	10149739	6	2	192	10149578	CYLINDER HEAD
INNER RING 40X45X20	747404001	71	1	340	90008901	SLEWING GEAR DRIVE
INNER WHEEL Z=74	927745401	20	1	357	939292201	PLANETARY GEARBOX
INNER WHEEL Z=90 42CrMo4	927746101	55	1	357	939292201	PLANETARY GEARBOX
INPUT/OUTPUT MODULE LSB-	11213706	100	1	528	968253608	UNIVERSAL INPUT-OUTPUT M
INSERT M20X1,5 NBR	602421908	525	2	44	96045228	WIRING HARNESS
INSERT M20X1,5 NBR	602421908	504	1	140	96045205	WIRING HARNESS
INSERT PART 10X91X152 PA6	97032167	7	4	121	919644008	HYDRAULIC SUPPORT
INSERT SKINTOP 3X5,3MM	10333297	(506)	1	711	917598408	ELECTRIC MEASURING & WAR
INSERTION BRIDGE	602735508	39	47	518	919503008	SWITCHBOX MOUNTING PART
INSERTION MODULE 12POLIG	965547208	2	1	524	967589508	TERMINAL STRIP
INSIDE HANDLE ZUG	11005984	2	1	406	966230408	CLOSING DEVICE
INSTALLATION BRAKE COMPR	10127566	330	1	163	12856862	DIESEL ENGINE
INSTALLATION SWITCH CAB.	968514508	20	1	368	919010208	CRANE OPERATOR CABIN P
INSTRUMENT CLUSTER ELEC	96030724	1	1	449	96036957	ELECTRIC ADD-ON PARTS CA
INSULATING HOSE DN10X0,65	11082604	204	4.29	44	96045228	WIRING HARNESS
INSULATING HOSE DN10X0,65	11082604	204	4.43	446	96036955	WIRING HARNESS
INSULATING HOSE DN10X0,65	11082604	204	0.73	448	96036956	WIRING HARNESS
INSULATING HOSE DN10X0,65	11082604	204	7.12	512	96037136	WIRING HARNESS
INSULATING HOSE DN12X0,65	11082605	205	1.63	446	96036955	WIRING HARNESS
INSULATING HOSE DN12X0,65	11082605	205	0.86	510	96045385	WIRING HARNESS
INSULATING HOSE DN12X0,65	11082605	205	1.33	512	96037136	WIRING HARNESS
INSULATING HOSE DN12X0,65	11082605	205	5.21	514	96037137	WIRING HARNESS
INSULATING HOSE DN12X0,8	11005151	284	5.59	514	96037137	WIRING HARNESS
INSULATING HOSE DN14X0,65	11082606	206	1.18	512	96037136	WIRING HARNESS

Description	Item	Pos.	Quantity	Page	Assembly	Description
INSULATING HOSE DN14X0,8	603012608	11	1.5	602	918377508	COOLING WATER PRE-HEATIN
INSULATING HOSE DN18X0,85	11082608	208	0.28	512	96037136	WIRING HARNESS
INSULATING HOSE DN20X0,85	11082609	209	1.23	44	96045228	WIRING HARNESS
INSULATING HOSE DN4X0,5	11082601	4	0.28	456	963398008	PREMOUNT.AXIAL FLOW FAN
INSULATING HOSE DN6X0,5	11082602	202	2.31	44	96045228	WIRING HARNESS
INSULATING HOSE DN6X0,5	11082602	15	0.04	394	965784408	ROOF WINDOW PRE-ASS.
INSULATING HOSE DN6X0,5	11082602	202	7.44	446	96036955	WIRING HARNESS
INSULATING HOSE DN6X0,5	11082602	202	5.94	448	96036956	WIRING HARNESS
INSULATING HOSE DN6X0,5	11082602	202	24.41	510	96045385	WIRING HARNESS
INSULATING HOSE DN6X0,5	11082602	202	14.02	512	96037136	WIRING HARNESS
INSULATING HOSE DN6X0,5	11082602	202	8.82	514	96037137	WIRING HARNESS
INSULATING HOSE DN6X0,5	11082602	202	2.1	615	96043733	WIRING HARNESS
INSULATING HOSE DN8X0,65	11082603	203	2.41	44	96045228	WIRING HARNESS
INSULATING HOSE DN8X0,65	11082603	203	2.2	446	96036955	WIRING HARNESS
INSULATING HOSE DN8X0,65	11082603	203	2.77	448	96036956	WIRING HARNESS
INSULATING HOSE DN8X0,65	11082603	203	2.14	510	96045385	WIRING HARNESS
INSULATING HOSE DN8X0,65	11082603	203	9.43	512	96037136	WIRING HARNESS
INSULATING HOSE DN8X0,65	11082603	203	5.23	514	96037137	WIRING HARNESS
INSULATING HOSE ISO 3302-1	11006584	122	4	280	96034631	RADIATOR, PRE-ASSEMBLED
INSULATING HOSE ISO 3302-1	11006584	60	3.5	435	968977308	SOUND PROOFING/SOUND I
INSULATING MAT 10X455X110	97038836	15	1	410	917676208	HEATING CRANE DRIVER'S CA
INSULATING MAT 13X115X179	97038834	13	1	410	917676208	HEATING CRANE DRIVER'S CA
INSULATING MAT 20X115X199	97038835	14	1	410	917676208	HEATING CRANE DRIVER'S CA
INSULATING MAT 20X630X440	97050672	12	1	435	968977308	SOUND PROOFING/SOUND I
INSULATING MAT 20X630X440	97055971	8	1	435	968977308	SOUND PROOFING/SOUND I
INSULATING MAT 40X1055X7	97034281	101	1	431	96017704	RADIATOR HOOD CPL.
INSULATING MAT 40X310X235	97050671	7	1	435	968977308	SOUND PROOFING/SOUND I
INSULATING MAT 40X422X93 E	97038833	12	1	410	917676208	HEATING CRANE DRIVER'S CA
INSULATING MAT 40X720X590	97034322	3	1	435	968977308	SOUND PROOFING/SOUND I
INSULATING MAT 40X720X695	97050669	5	1	435	968977308	SOUND PROOFING/SOUND I
INSULATING MAT 40X740X370	973767608	102	1	431	96017704	RADIATOR HOOD CPL.
INSULATING MAT 40X775X10	97034282	103	1	431	96017704	RADIATOR HOOD CPL.
INSULATING MAT 50X60X182 E	97038837	16	1	410	917676208	HEATING CRANE DRIVER'S CA
INSULATING MAT 50X78X235 E	97038838	17	1	410	917676208	HEATING CRANE DRIVER'S CA
INSULATING MATERIAL 20X20	10425409	175	1	499	918731908	AIR FILTER UNIT
INSULATING RING	691041708	6	37	47	11346779	SLIP RING TRANSMITTER
INTAKE 50.0X78 S355J2C+C FE	953661008	400	1	277	919007708	DRIVE ASSEMBLY, PRE-ASSE
INTAKE 82.5X87 S355J2H FE//	976490008	401	1	277	919007708	DRIVE ASSEMBLY, PRE-ASSE
INTAKE STACK ASSEMBLY R	10145173	221	1	162	12856862	DIESEL ENGINE
INTAKE STACK R-MOTORXD93	11444999	1	1	218	10145173	INTAKE STACK ASSEMBLY
INTERLOCKING	967978908	20	1	471	918956108	HYDRAULIC BALLASTING
INTERMED.PLATE VALVE	571414608	3	1	550	10413106	CONTROL BLOCK
INTERMED.PLATE VALVE	571562408	4	1	550	10413106	CONTROL BLOCK
INTERMEDIATE GEAR CPL.	9072906	331	1	163	12856862	DIESEL ENGINE
INTERMEDIATE GEAR PRE-AS	9072904	1	1	227	9072906	INTERMEDIATE GEAR CPL.
INTERMEDIATE PART 11SMnP	10132935	16	1	215	10143342	LEAK OIL RETURN LINE
INTERMEDIATE RING	10014730	8	1	128	11347526	ELECTRIC PUMP
INTERMEDIATE RING	10014730	8	1	504	10327065	ELECTRIC PUMP
INTERMEDIATE WHEEL AXLE 4	9072907	2	1	227	9072906	INTERMEDIATE GEAR CPL.
INTERNAL LIGHT 6W 24V WEIS	10342854	8	2	449	96036957	ELECTRIC ADD-ON PARTS CA
INTERNAL MULTI-DISC	10175222	6	7	343	90025781	BRAKE MULTI-DISC SET
INTERNAL MULTI-DISC	737350503	(5)	8	73	90028956	TRACTION DRIVE
INTERNAL PANELLING INSTAL	917305408	1	1	380	917304508	CRANE OPERATOR CABIN P
JAW 42CrMoS4+QT	10150144	1	1	211	10135434	PRESSURE ADAPTER FASTEN
JAW 42CrMoS4+QT	11403994	2	1	209	10152867	INJECTOR WITH FASTENING
JOINER AL	11002980	10	1	610	968290608	STAND
JOINER AL	11002980	10	1	613	968267208	STAND
KBA-RING 130X121,1X3,5	11351303	3	1	188	10146367	PISTON CPL.
KEY	10873434	(1)	1	529	969061708	CARRIER PLATE, PRE-ASSE
KEYBOARD UNIT LSB-TE PR	963792208	3	2	449	96036957	ELECTRIC ADD-ON PARTS CA

Description	Item	Pos.	Quantity	Page	Assembly	Description
KEYBOARD UNIT SPF	10816196	2	1	452	96030724	INSTRUMENT CLUSTER ELEC
KEYBOARD UNIT SPF	10874785	31	1	449	96036957	ELECTRIC ADD-ON PARTS CA
KEYPAD BUTTON	606144008	15	2	453	96022872	CONTROL PANEL ROOF
KNOTTED-LINK CHAIN DIN 568	740001808	39	0.3	731	917267508	TRANSPORT MOUNTING
KNURLED BUTTON 21-M4 PA	10652206	8	2	390	916162508	WINDOW ASSEMBLY
KNURLED BUTTON PA	10800916	49	4	383	917305408	INTERNAL PANELLING INSTA
KNURLED SCREW M5X10 PA6	10449664	25	8	518	919503008	SWITCHBOX MOUNTING PART
L RING 50X2	429612001	57	1	73	90028956	TRACTION DRIVE
LABELLING GREAT BRITAIN	917862808	42	1	9		LIEBHERR LTR 1220
LABELS 10X90 POLYESTER	11007853	301	1	40	968252908	BTB PROGRAMMED
LABELS 10X90 POLYESTER	11007853	(3)	1	453	96022872	CONTROL PANEL ROOF
LABELS 10X90 POLYESTER	11007853	301	1	528	968253608	UNIVERSAL INPUT-OUTPUT M
LADDER ATTACHMENT	917268208	1	1	736	917268108	TOOLS
LADDER BRACKET	10326792	2	1	737	917268208	LADDER ATTACHMENT
LAMP SUPPORT 4X163X370 S	97126205	24	1	158	918731108	ASSEMBLY PARTS F.SLEWING
LASHING STRAP 0,35MX18MM	7621780	5	1	711	917598408	ELECTRIC MEASURING & WAR
LASHING STRAP 0,75MX18MM	10020520	120	4	276	919007708	DRIVE ASSEMBLY, PRE-ASSE
LASHING STRAP 1,25MX25MM	11492423	12	1	737	917268208	LADDER ATTACHMENT
LASHING STRAP 1MX35MM PO	11481963	78	1	137	919499408	CENTRAL BALLAST
LASHING STRAP 4MX35MM PO	10491593	79	2	137	919499408	CENTRAL BALLAST
LASHING STRAP EN 12195-2	779034708	3	1	722	917531708	BALLAST TRAVERSE
LATCH	11490010	31	1	734	512363708	HYDRO CYLINDER
LATCH CLAMP	602116008	14	4	368	919010208	CRANE OPERATOR CABIN P
LATCH GD-ZN SW GEPULVER	704278708	4	2	84	968709108	COVER PRE-ASSY.
LATCH GD-ZN SW GEPULVER	704278708	10	1	85	968420608	STORAGE BOX
LATCHING ACTUATOR 32/22-6	10870204	44	4	30	917511508	CRAWLER CENTRE PART PRE
LEAD	12104246	50	1	47	11346779	SLIP RING TRANSMITTER
LEAD 15 X 0,34 TPE-U	10428544	10	4.367	446	96036955	WIRING HARNESS
LEAD 15 X 0,34 TPE-U	10428544	11	4.367	446	96036955	WIRING HARNESS
LEAD 2 X 0,5	10815830	11	4.96	44	96045228	WIRING HARNESS
LEAD 2 X 0,5	10815830	12	4.96	44	96045228	WIRING HARNESS
LEAD 2 X 0,5	10815830	13	4.16	44	96045228	WIRING HARNESS
LEAD 2 X 0,5	10815830	14	4.16	44	96045228	WIRING HARNESS
LEAD 2 X 1	11620017	15	2.63	44	96045228	WIRING HARNESS
LEAD 2 X 1	11620017	9	3	446	96036955	WIRING HARNESS
LEAD 2 X 1	11620017	13	0.4	446	96036955	WIRING HARNESS
LEAD 2 X 1	11620017	5	9.93	516	96037133	LEAD
LEAD 2 X 1	11620017	5	4.06	617	96037132	LEAD
LEAD 2 X 1,5	11341599	18	5.83	510	96045385	WIRING HARNESS
LEAD 25 X 0,34 TPE-U	10428545	7	4.375	446	96036955	WIRING HARNESS
LEAD 7 G 1	10871285	18	1.8	44	96045228	WIRING HARNESS
LEAD W510	96006879	58	1	509	96045384	CABLE LIST SLEWING PLATF
LEAD W512	968314308	(1)	1	589	967784808	HYDR.AUXILIARY HOISTING
LEAD W536	966394808	170	1	682	966291008	TERMINAL BOX
LEAD W562	96037133	70	1	509	96045384	CABLE LIST SLEWING PLATF
LEAD W563	96037132	23	1	616	96037130	EQUIPMENT CAMERA SLEW C
LEAD W571	968401508	57	1	509	96045384	CABLE LIST SLEWING PLATF
LEAD W587	96037138	62	1	509	96045384	CABLE LIST SLEWING PLATF
LEAD W588	96022970	63	1	509	96045384	CABLE LIST SLEWING PLATF
LEAD W591	96023931	11	1	321	96023914	ELECTRIC FOR BATTERY BOX
LEAD W592	96023932	14	1	321	96023914	ELECTRIC FOR BATTERY BOX
LEAD W593	96023930	10	1	321	96023914	ELECTRIC FOR BATTERY BOX
LEAD W620	968648508	10	1	599	917269308	CHARGER
LEAD W621	968648408	9	1	599	917269308	CHARGER
LEAD W682	967921908	20	1	603	917368108	EL.COOLANT PREHEAT
LEAD W693	965751108	15	1	598	918462708	EXTERNAL FEED
LEAD W694	965991908	10	1	600	917269408	CONSOLE AUX. REPLENISHIN
LEAD W900	966377308	120	1	682	966291008	TERMINAL BOX
LEAD W901	965760208	12	1	702	918124908	A-HEADL.SEARCHLIGHT PIVO
LEAD W902	965760308	13	1	702	918124908	A-HEADL.SEARCHLIGHT PIVO

Description	Item	Pos.	Quantity	Page	Assembly	Description
LEAD W903	969723508	11	1	702	918124908	A-HEADL.SEARCHLIGHT PIVO
LEAD W910	966393608	140	1	682	966291008	TERMINAL BOX
LEAD W911	966395208	190	1	682	966291008	TERMINAL BOX
LEAD W912	966354408	4	1	679	966354008	CABLE DRUM COMPL.
LEAD W912A	966354508	6	1	679	966354008	CABLE DRUM COMPL.
LEAD W916	966361508	(1)	1	677	917262208	ELECTR. SYSTEM F. BOOM
LEAD W917	966394008	130	1	682	966291008	TERMINAL BOX
LEAD W921	966394208	160	1	682	966291008	TERMINAL BOX
LEAD W930	966357008	120	1	685	968708708	TERMINAL BOX CPL.
LEAD W931	966356908	13	1	706	918197708	EL.2 HOISTING LIMIT SWITCH
LEAD W932	966355308	110	1	685	968708708	TERMINAL BOX CPL.
LEAD W933Y	969047708	1	1	711	917598408	ELECTRIC MEASURING & WAR
LEAK OIL RETURN LINE	10143342	214	1	162	12856862	DIESEL ENGINE
LEG SPRING	571430508	5	1	620	10040024	POUCH SOCKET
LEG SPRING 2,5X13,5	571741908	19	1	734	512363708	HYDRO CYLINDER
LENGTH INDICATOR	11170185	25	1	675	10802064	ROPE LENGTH INDICATOR
LENGTH MEASURING CABLE	571841008	53	1	675	10802064	ROPE LENGTH INDICATOR
LENS	10875969	2	1	703	10872003	WORK LIGHT
LETTERING WIRE	965622108	996	20	43	96045227	WIRING HARNESS
LETTERING WIRE	965622108	996	20	45	96045228	WIRING HARNESS
LETTERING WIRE	965622108	996	8	447	96036955	WIRING HARNESS
LETTERING WIRE	965622108	996	8	448	96036956	WIRING HARNESS
LETTERING WIRE	965622108	996	62	511	96045385	WIRING HARNESS
LETTERING WIRE	965622108	996	124	513	96037136	WIRING HARNESS
LETTERING WIRE	965622108	996	52	515	96037137	WIRING HARNESS
LETTERING WIRING HARNES	965622208	998	1	43	96045227	WIRING HARNESS
LETTERING WIRING HARNES	965622208	998	1	45	96045228	WIRING HARNESS
LETTERING WIRING HARNES	965622208	998	3	140	96045205	WIRING HARNESS
LETTERING WIRING HARNES	965622208	998	1	447	96036955	WIRING HARNESS
LETTERING WIRING HARNES	965622208	998	1	448	96036956	WIRING HARNESS
LETTERING WIRING HARNES	965622208	998	1	511	96045385	WIRING HARNESS
LETTERING WIRING HARNES	965622208	998	1	513	96037136	WIRING HARNESS
LETTERING WIRING HARNES	965622208	998	1	515	96037137	WIRING HARNESS
LETTERING WIRING HARNES	965622208	998	3	516	96037133	LEAD
LETTERING WIRING HARNES	965622208	998	2	615	96043733	WIRING HARNESS
LETTERING WIRING HARNES	965622208	998	3	617	96037132	LEAD
LETTERING WIRING HARNES	965622208	(998)	2	711	917598408	ELECTRIC MEASURING & WAR
LEVEL SENSOR L=115 24V	10130406	22	1	160	12856862	DIESEL ENGINE
LEVEL SENSOR L=115 24V	10816943	1	1	181	10130406	LEVEL SENSOR
LEVER	571430708	4	1	620	10040024	POUCH SOCKET
LEVER 30.0X285 S355J2C+C	97030031	6	1	474	967928508	LOCKING
LEVER FASTENER	11450420	8	2	433	968923508	FLAP RIGHT PRE-ASS.
LEVER FASTENER	11450420	5	2	441	969016008	FLAP LEFT FRONT PRE-ASS.
LEVER PRE-ASSY.	96050169	300	1	71	919254308	CRAWLER SUPPORT PREASS
LEVER WELDED FE//ZNNI8//C	965426308	2	1	283	968026308	CLUTCH ACTUATOR
LICCON CONSOLE LCD5C-A	10886525	(80)	1	449	96036957	ELECTRIC ADD-ON PARTS CA
LICCON CONSOLE LSB-BSE	96033140	19	1	449	96036957	ELECTRIC ADD-ON PARTS CA
LID CPL	10551191	41	1	21	96034894	PROTECTION PLATE CPL.
LID CPL	10551191	41	1	24	96034977	PROTECTION PLATE
LID PLATE DIN 3015-1 L-DP 3	7005053	314	10	51	96035801	HYDRAULIC EQUIPM.CENTER
LID PLATE DIN 3015-1 L-DP 4	7008583	320	2	51	96035801	HYDRAULIC EQUIPM.CENTER
LID PLATE DIN 3015-1 L-DP 4	7008583	331	1	540	96045351	HYDRAULICS UPPER CARRI
LID PLATE DIN 3015-1 L-DP 5	5005219	317	7	539	96045351	HYDRAULICS UPPER CARRI
LID PLATE DIN 3015-1 L-DP 6	12102954	308	2	90	96035796	HYDR.TRAVEL DRIVE
LID PLATE DIN 3015-1 L-DP 6	12102954	308	2	107	96035792	HYDR.TRAVEL DRIVE
LID PLATE DIN 3015-2 S-DP-A	5005525	324	4	478	969763408	PIPEWORK AIR INSTALLATIO
LID PLATE DIN 3015-3 Z-DP 2	7362606	300	13	699	967785008	ADDNL.HYDR. FOLDING JIB
LIGHT BULB 1,2W 30V	607008708	13	1	453	96022872	CONTROL PANEL ROOF
LIGHT BULB DIN 49848 2,4W 6	607011108	(1)	2	145	928620108	ACCESSORIES
LIGHT BULB DIN 72601 70W 24	607023708	2	1	146	915731908	EL.COMP. DISPATCH ASSEM

Description	Item	Pos.	Quantity	Page	Assembly	Description
LIMIT STOP	11485426	3	1	302	10871043	VARIABLE PUMP
LIMIT STOP 90X60X10 PA6G	97070985	102	4	71	919254308	CRAWLER SUPPORT PREASS
LIMIT STOP 90X60X10 PA6G	97070985	103	4	101	919254408	CRAWLER SUPPORT PREASS
LIMIT STOP RING 16,5X75X5	10875905	3	4	369	967986308	BEARING INSTALLATION
LIMIT SWITCH ADD-ON	968019508	50	1	17	919617108	CRAWLER TRACK TRAVEL G
LIMIT SWITCH ADD-ON AUSLE	965281408	10	1	506	919410708	ELECTR. SYSTEM F.SLEWING
LIMIT SWITCH ADD-ON AUSL	966591508	10	1	678	966290908	ELECTRIC F.BASE SECTION
LIMIT SWITCH AUSLEGERSTEI	966563508	8	1	683	966591508	LIMIT SWITCH ADD-ON
LIMIT SWITCH TASTEND SPF	606053108	(11)	2	508	968128908	EL.ADD-ON SET-LIMIT SWITCH
LIMIT SWITCH TASTEND SPF	606053108	(11)	2	508	968128908	EL.ADD-ON SET-LIMIT SWITCH
LIMIT SWITCH TQ200-RFID SP	10678395	2	1	676	966200208	ENCODER HEAD PIECE
LIMIT SWITCH TQ200-RFID SP	10678395	7	1	707	966479308	SENSOR LIFT TOP LIMIT SWI
LIMIT SWITCH, PRE-ASSEMB	968036408	1	2	25	968019508	LIMIT SWITCH ADD-ON
LINE CONNECTOR	5603876	517	1	446	96036955	WIRING HARNESS
LINE CONNECTOR	5603876	507	1	448	96036956	WIRING HARNESS
LINE CONNECTOR	5603876	517	1	520	96045387	CABLES, BASIC CONSTRUCTI
LINE FILTER	510674508	166	1	538	96045351	HYDRAULICS UPPER CARRI
LINEAR SLIDEWAY SYSTEM	11007589	5	1	372	916177508	STEP CPL.
LOAD HOLDING VALVE	511479408	151	1	693	967785408	ADDNL.HYDR. FOLDING JIB
LOAD HOLDING VALVE 400BA	10218310	180	1	539	96045351	HYDRAULICS UPPER CARRI
LOAD HOOK 12.5E SPF	919007108	310	1	11		LIEBHERR LTR 1220
LOAD RETAINING VLV ELEM	11002678	7	1	696	511479408	LOAD HOLDING VALVE
LOCATION FIXTURE PRE-ASS.	967933408	1	1	713	968412508	MECH MEAS AND WARNING D
LOCATION FIXTURE WELDED	968266508	1	1	714	967933408	LOCATION FIXTURE PRE-ASS.
LOCK PIECE HAKEN	704230208	25	2	320	96023117	BATTERY BOX, PRE-ASSEMB
LOCK WASHER DIN 6799 7X0,9	12210037	3	1	253	10144098	FASTENING CLAMP
LOCK WASHER VS 10	423901508	26	1	581	939294001	ROPE DRUM
LOCK WASHER VS 10	423901508	53	12	583	939294201	PLANETARY GEARBOX
LOCK WASHER VS 10 ZN8M+P	4229913	53	12	357	939292201	PLANETARY GEARBOX
LOCK WASHER VS 12 ZN8M+P	423911201	93	8	73	90028956	TRACTION DRIVE
LOCK WASHER VS 20 ZN8M+P	423912001	69	12	73	90028956	TRACTION DRIVE
LOCK WASHER VS 8 ZN8M+P	423910801	27	8	340	90008901	SLEWING GEAR DRIVE
LOCK WASHER VS 8 ZN8M+P	423910801	75	8	340	90008901	SLEWING GEAR DRIVE
LOCK WITH FALLING LATCH LI	11005985	1	1	406	966230408	CLOSING DEVICE
LOCKABLE TANK CAP 40	10870226	4	1	484	968570808	UREA TANK
LOCKING	967928508	2	1	471	918956108	HYDRAULIC BALLASTING
LOCKING BAR WELDMENT	966825408	10	1	405	917304708	SLIDING DOOR INSTALLATION
LOCKING BOLT 30.0X200 35N	97073453	103	2	71	919254308	CRAWLER SUPPORT PREASS
LOCKING BOLT 30.0X200 35N	97073453	104	2	101	919254408	CRAWLER SUPPORT PREASS
LOCKING PIECE	10492347	19	1	419	10877138	OPERATOR SEAT
LOCKING PIECES	10115664	452	1	164	12856862	DIESEL ENGINE
LOCKING PIECES	10116110	521	1	165	12856862	DIESEL ENGINE
LOCKING PIECES	10127979	526	1	165	12856862	DIESEL ENGINE
LOCKING PIECES	10128439	524	1	165	12856862	DIESEL ENGINE
LOCKING PIECES	10142747	630	1	165	12856862	DIESEL ENGINE
LOCKING PIECES	9078301	654	1	166	12856862	DIESEL ENGINE
LOCKING PIECES Al Rm>150N/	10128440	1	1	249	10128439	LOCKING PIECES
LOCKING RING	10356273	37	1	307	10872488	DRIVING GEAR
LOCKING RING DIN 471 210X5	10872700	3	2	663	921456108	ROPE PULLEY CPL.
LOCKING RING DIN 471 210X5	10872700	3	2	725	925203408	ROPE PULLEY CPL.
LOCKING RING DIN 471 210X5	428009008	3	2	665	967771908	ROPE PULLEY CPL.
LOCKING RING DIN 471 22X1,7	463000003	41	3	340	90008901	SLEWING GEAR DRIVE
LOCKING RING DIN 471 28X2	463000103	21	5	340	90008901	SLEWING GEAR DRIVE
LOCKING RING DIN 471 28X2	463000103	43	3	357	939292201	PLANETARY GEARBOX
LOCKING RING DIN 471 34X1,5	428011301	7	2	194	11448005	ROCKER ARM BRACKET PRE
LOCKING RING DIN 471 35X1,5	428002908	36	1	296	10663105	DRIVING GEAR
LOCKING RING DIN 471 35X1,5	10171579	29	2	305	10871282	VARIABLE PUMP
LOCKING RING DIN 471 35X1,5	10171579	92	1	340	90008901	SLEWING GEAR DRIVE
LOCKING RING DIN 471 40X2,5	400208003	33	3	359	90017588	PLANETARY CARRIER
LOCKING RING DIN 471 50X2 4	10875659	36	1	307	10872488	DRIVING GEAR

Description	Item	Pos.	Quantity	Page	Assembly	Description
LOCKING RING DIN 471 50X2	10171585	52	1	73	90028956	TRACTION DRIVE
LOCKING RING DIN 471 55X3	400093303	8	5	357	939292201	PLANETARY GEARBOX
LOCKING RING DIN 471 8X0,8	10450160	7	1	408	966253908	WAGON
LOCKING RING DIN 471 9X1 4	12100338	21	4	372	916177508	STEP CPL.
LOCKING RING DIN 472 102X4	4281019	12	1	583	939294201	PLANETARY GEARBOX
LOCKING RING DIN 472 155X4	4281048	13	1	583	939294201	PLANETARY GEARBOX
LOCKING RING DIN 472 170X4	428105908	18	1	355	932916901	ROPE DRUM
LOCKING RING DIN 472 170X4	428105908	21	1	581	939294001	ROPE DRUM
LOCKING RING DIN 472 30X1,2	428100708	5	1	281	10429930	GEAR WHEEL MOTOR
LOCKING RING DIN 472 68X2,5	10171626	67	1	340	90008901	SLEWING GEAR DRIVE
LOCKING RING DIN 472 72X2,5	10171628	14	1	47	11346779	SLIP RING TRANSMITTER
LOCKING RING DIN 472 80X2,5	428102508	12	1	347	570109008	DRIVING GEAR
LOCKING RING DIN 472 85X3	428102708	4	1	583	939294201	PLANETARY GEARBOX
LOCKING RING DIN 472 85X3	10171631	4	1	357	939292201	PLANETARY GEARBOX
LOCKING RING DIN 472 90X3 4	12100657	37	1	296	10663105	DRIVING GEAR
LOCKING SCREW M10X19 10.	10153538	2	2	198	9079870	CONTROL PARTS
LOUDSPEAKER 2,77V 86DBA	10489011	10	2	449	96036957	ELECTRIC ADD-ON PARTS CA
LOWERING BRAKE VALVE	10326277	35	1	668	10876933	TELESCOPIC CYLINDER
LOWERING BRAKE VALVE	571413308	36	1	668	10876933	TELESCOPIC CYLINDER
LOWERING BRAKE VALVE SP	10038474	150	1	538	96045351	HYDRAULICS UPPER CARRI
LUBE OIL FILTER ASSEMBLY	10142942	150	1	161	12856862	DIESEL ENGINE
LUBE OIL PUMP WITH FASTE	10148432	140	1	161	12856862	DIESEL ENGINE
LUBRICATING OIL LINE 10X1	10140757	3	1	238	10140729	EXHAUST TC MOUNTING
LUBRICATING OIL LINE 6X1	9080310	5	1	229	10145278	ACCESSORIES AIR COMPRES
LUBRICATING OIL PUMP B=41.	12438990	1	1	203	10148432	LUBE OIL PUMP WITH FASTEN
LUFFING CYLINDER 400/370-3	12102921	1	1	619	919617008	LUFFING RAM W. PIVOT
LUFFING RAM W. PIVOT	919617008	111	1	9		LIEBHERR LTR 1220
LUMP HAMMER DIN 6475 3000	790031108	61	1	144	928569808	MAIN TOOLS
MACHINING CAN- STUETZP	96014807	2998	2	447	96036955	WIRING HARNESS
MACHINING CAN- STUETZP	96014807	2998	10	515	96037137	WIRING HARNESS
MAGNET	10280212	50	1	597	10038509	CONTROL BLOCK
MAGNET 24V	10650092	2	1	548	10342823	PRESSURE CONTROL VALVE
MAGNET 24V	570633808	(1)	1	538	96045351	HYDRAULICS UPPER CARRI
MAGNET 24V	570633808	(1)	1	538	96045351	HYDRAULICS UPPER CARRI
MAGNET 24V	570827808	1	1	62	511444408	DIRECTIONAL CONTROL VALV
MAGNET 24V	571135508	(21)	1	688	967784508	HYDR.F.TELESCOPIC BOOM
MAGNET 28V	10291306	(1)	1	550	10413106	CONTROL BLOCK
MAGNET 28V	10291306	(1)	1	550	10413106	CONTROL BLOCK
MAGNET 28V	10291306	6	1	551	571415008	DIRECTIONAL CONTROL VALV
MAGNET COIL	10564740	(1)	1	538	96045351	HYDRAULICS UPPER CARRI
MAGNET COIL	11005244	1	1	557	10449853	DIRECTIONAL CONTROL VALV
MAGNET COIL	12104171	(4)	3	538	96045351	HYDRAULICS UPPER CARRI
MAGNET COIL 24V	10874134	1	1	547	11482347	DIRECTIONAL SOLENOID
MAGNET COIL 27V	12102117	1	1	553	571737808	DIRECTIONAL CONTROL VALV
MAIN BEARING 104/111/32	9073734	1	5	185	10116939	RS CRANKSHAFT BEARING K
MAIN BEARING 104/111/32 MIB	9075606	2	5	185	10116939	RS CRANKSHAFT BEARING K
MAIN FILTER ELEMENT	10294938	2	1	500	10871700	AIR FILTER
MAIN HOIST GEAR	917259708	125	1	10		LIEBHERR LTR 1220
MAIN TOOLS	928569808	1	1	143	919328608	TOOLS AND ACCESSORIES
MAINTENANCE SWITCH 0,05	11101017	101	1	499	918731908	AIR FILTER UNIT
MALE CONNECTOR WSV 6 M1	12101832	7	11	502	917261208	CENT. LUBRIC. SYSTEM SUP
MANDRIL RIVET 4X10,3	704207608	9	20	529	969061708	CARRIER PLATE, PRE-ASSE
MANDRIL RIVET 4X15	704207708	200	4	150	917862808	LABELLING GREAT BRITAIN
MASTER PLUG 4-POL	602225508	518	1	446	96036955	WIRING HARNESS
MASTER PLUG 6-POL	602225608	519	1	446	96036955	WIRING HARNESS
MASTER SWITCH LSB-AMS SP	10343693	4	2	449	96036957	ELECTRIC ADD-ON PARTS CA
MECH MEAS AND WARNING D	968412508	2	1	710	917379608	CARRIER, MEAS. & WARN. D
MECH.AUXILIARIES FOR LIG	967970408	1	1	702	918124908	A-HEADL.SEARCHLIGHT PIVO
MECHANICAL AUXILIARIES	96035117	19	1	538	96045351	HYDRAULICS UPPER CARRI
MECHANICAL AUXILIARIES	96045206	30	1	138	919499508	BALLAST MONITORING

Description	Item	Pos.	Quantity	Page	Assembly	Description
MECHANICAL AUXILIARIES	962602108	19	1	699	967785008	ADDNL.HYDR. FOLDING JIB
MECHANICAL AUXILIARIES	968083608	19	1	589	967784808	HYDR.AUXILIARY HOISTING
MECHANICAL AUXILIARIES	969763908	19	1	478	969763408	PIPEWORK AIR INSTALLATIO
MECHANICAL EXTENSION SYS	918807308	7	1	634	918804808	TELESCOPIC BOOM CPL.
MEGI BUFFER	726613008	25	4	639	917291908	PIVOT SECTION, PRE-ASSEMB
MEGI BUFFER	726617408	24	1	393	966497908	FRONT WINDOW CPL.
MEGI BUFFER	726617408	112	1	429	96036790	SLEWING PLATFORM PANELLI
MEGI BUFFER 20X15-M6 NR 55	726907308	111	1	429	96036790	SLEWING PLATFORM PANELLI
MEGI BUFFER 20X15-M6 NR 55	726907308	105	2	439	969015908	SLEWING PLATFORM PANELLI
MEGI BUFFER 30X17 M8 75°SH	10030440	15	1	85	968420608	STORAGE BOX
MEGI BUFFER 30X17 M8 75°SH	10030440	9	1	405	917304708	SLIDING DOOR INSTALLATION
MICRO SWITCH	10335596	3	4	454	10343693	MASTER SWITCH
MICROPHONE	11826513	2	1	633	12257818	CAR RADIO
MIRROR ATTACHM.AT SLEW.	917260408	144	1	10		LIEBHERR LTR 1220
MIRROR ATTACHM.IN CRANE	916049908	138	1	10		LIEBHERR LTR 1220
MIRROR RETAINER PRE-ASS.	966707708	2	1	458	917260408	MIRROR ATTACHM.AT SLEW.P
MIRROR SUPPORT 28X2 ST.37	979320608	1	1	424	916049908	MIRROR ATTACHM.IN CRANE
MONITOR HOUSING GLUED	963257908	2	1	370	96015921	OPERATING ELEMENT INSTAL
MONITOR SUPPORT 162X765X	96015926	1	1	370	96015921	OPERATING ELEMENT INSTAL
MONITOR TFT 7 800X480	10876638	10	1	614	96045237	EQUIPMENT CAMERA CAB
MOTOR CONTROL DEVICE E	12869773	570	1	165	12856862	DIESEL ENGINE
MOTOR FLANGE	927746301	75	1	357	939292201	PLANETARY GEARBOX
MOTOR FLANGE EN-GJL-250	938996401	85	1	340	90008901	SLEWING GEAR DRIVE
MOTOR HOUSING	10014692	3	1	128	11347526	ELECTRIC PUMP
MOTOR HOUSING	10014692	3	1	504	10327065	ELECTRIC PUMP
MOTOR HOUSING	10493920	1	1	504	10327065	ELECTRIC PUMP
MOTOR HOUSING UNTEN	10675728	1	1	128	11347526	ELECTRIC PUMP
MOTOR SEAT	10874902	9	1	566	11622561	OIL AIR COOLER
MOULDING 317-1397-000 SUR	605212808	519	3	44	96045228	WIRING HARNESS
MOULDING 317-1397-000 SUR	605212808	514	1	510	96045385	WIRING HARNESS
MOULDING 317-1397-000 SUR	605212808	523	2	513	96037136	WIRING HARNESS
MOUNTING BOLT	10675205	16	1	675	10802064	ROPE LENGTH INDICATOR
MOUNTING HOOK ROD	968090008	2	1	736	917268108	TOOLS
MOUNTING MATERIAL	968693208	30	1	506	919410708	ELECTR. SYSTEM F.SLEWING
MOUNTING PARTS	10650403	49	1	419	10877138	OPERATOR SEAT
MOUNTING PARTS	11171275	65	1	419	10877138	OPERATOR SEAT
MOUNTING PARTS	11826654	27	1	466	10876576	WATER HEATING SYSTEM
MOUNTING PLATE 1.5X753X8	978610208	(1)	1	522	969256608	BASE ASSEMBLY
MOUNTING PLATE PRE-ASS.	968054008	3	1	36	96045226	SWITCH BOX COMPL.
MOUNTING PRE-ASS.	929582108	1	1	731	917267508	TRANSPORT MOUNTING
MOUNTING RAIL X0	954117308	24	1	320	96023117	BATTERY BOX, PRE-ASSEMB
MOUNTING RAIL X0	954128608	69	1	639	917291908	PIVOT SECTION, PRE-ASSEMB
MOUNTING SHEET	10142670	2	1	239	10142863	GENERATOR, PRE-ASSEMBLE
MOUNTING WELDED	929582208	1	1	732	929582108	MOUNTING PRE-ASS.
MOUNTING WELDED T ZN O	963556008	9	1	661	917292408	TELESCOPIC SECT.5 PRE-AS
MOUNTING WELDED WARNEI	968410408	1	1	717	917551608	ADD-ON PARTS
MULTI-DISC CARRIER 100	927602601	65	1	357	939292201	PLANETARY GEARBOX
MULTI-DISC CARRIER 51,6 42C	927716701	70	1	340	90008901	SLEWING GEAR DRIVE
MULTI-PLATE PLUG 28MM PE-	10678377	8	2	377	916162808	RELING
MULTI-PURPOSE LADDER 4X4	10877074	1	1	737	917268208	LADDER ATTACHMENT
MUSHROOM-SHAPED DRAWIN	973292708	26	1	661	917292408	TELESCOPIC SECT.5 PRE-AS
MUSHROOM-SHAPED DRAWIN	973259708	11	1	656	917292308	TELESCOPIC SECT.IV PRE-A
MUSHROOM-SHAPED DRAWIN	973253908	11	1	652	917292208	TELESCOPIC SECT.3 PRE-ASS
NAME PLATE 20X8	602761408	12	10	525	926891108	GROUND RAIL
NAME PLATE 70X40 POLYES	10288121	300	1	40	968252908	BTB PROGRAMMED
NAME PLATE 70X40 POLYES	10288121	(980)	1	449	96036957	ELECTRIC ADD-ON PARTS CA
NAME PLATE 70X40 POLYES	10288121	(2)	1	453	96022872	CONTROL PANEL ROOF
NAME PLATE 70X40 POLYES	10288121	300	1	528	968253608	UNIVERSAL INPUT-OUTPUT M
NIPPLE GA10-45°H32	97057512	20	1	574	918628408	AIR COND. UNIT SUPERSTRU
NITROGEN TENSIONER CPL	10877685	3	1	76	11320954	GUIDE WHEEL UNIT

Description	Item	Pos.	Quantity	Page	Assembly	Description
NON-RETURN VALVE	10119971	4	1	182	10139112	OIL LINE PRE-ASSEMBLY
NON-RETURN VALVE	10280215	80	1	597	10038509	CONTROL BLOCK
NON-RETURN VALVE	10280216	90	1	597	10038509	CONTROL BLOCK
NON-RETURN VALVE	10430042	9	1	552	10332882	CONTROL BLOCK
NON-RETURN VALVE	10875075	5	1	546	11211756	CONTROL BLOCK
NON-RETURN VALVE	11007219	3	6	505	11002916	DISTRIBUTION BLOCK
NON-RETURN VALVE	11066829	3	1	74	11182596	VARIABLE DISPLACEMENT MO
NON-RETURN VALVE	570531308	11	1	555	11341035	CONTROL BLOCK
NON-RETURN VALVE	570818008	10	1	555	11341035	CONTROL BLOCK
NON-RETURN VALVE	591055608	10	2	399	916163008	WIPERS INSTALLATION
NON-RETURN VALVE	774378108	(1)	1	502	917261208	CENT. LUBRIC. SYSTEM SUP
NON-RETURN VALVE 2.5BAR P	11839607	100	1	269	918731408	DRIVE ASSEMBLY CPL.
NON-RETURN VALVE 250BAR	511316708	171	1	538	96045351	HYDRAULICS UPPER CARRI
NON-RETURN VALVE 250BAR	511435108	172	1	538	96045351	HYDRAULICS UPPER CARRI
NON-RETURN VALVE 250BAR	511457808	9	3	335	969050308	OIL TANK PRE-ASS.
NON-RETURN VALVE 250BAR	511476908	197	2	539	96045351	HYDRAULICS UPPER CARRI
NON-RETURN VALVE 250BAR	511481508	160	1	90	96035796	HYDR.TRAVEL DRIVE
NON-RETURN VALVE 250BAR	511481508	160	1	107	96035792	HYDR.TRAVEL DRIVE
NON-RETURN VALVE 250BAR	511481508	151	1	589	967784808	HYDR.AUXILIARY HOISTING
NON-RETURN VALVE 400BAR	510413508	203	1	539	96045351	HYDRAULICS UPPER CARRI
NON-RETURN VALVE 400BAR	511311808	154	1	538	96045351	HYDRAULICS UPPER CARRI
NON-RETURN VALVE 400BAR	511311808	170	1	589	967784808	HYDR.AUXILIARY HOISTING
NON-RETURN VALVE 400BAR	511431514	199	1	539	96045351	HYDRAULICS UPPER CARRI
NON-RETURN VALVE 400BAR	511460608	152	1	538	96045351	HYDRAULICS UPPER CARRI
NON-RETURN VALVE 400BAR	511460608	150	1	589	967784808	HYDR.AUXILIARY HOISTING
NON-RETURN VALVE 400BAR	511493708	152	1	688	967784508	HYDR.F.TELESCOPIC BOOM
NON-RETURN VALVE 420BAR	510408708	153	1	538	96045351	HYDRAULICS UPPER CARRI
NON-RETURN VALVE 420BAR	510408708	171	1	589	967784808	HYDR.AUXILIARY HOISTING
NOZZLE 0,5 M5X5	511044108	193	1	539	96045351	HYDRAULICS UPPER CARRI
NOZZLE 0,5 M5X9 MS	511062708	159	1	90	96035796	HYDR.TRAVEL DRIVE
NOZZLE 0,5 M5X9 MS	511062708	159	1	107	96035792	HYDR.TRAVEL DRIVE
NOZZLE 0,5 M5X9 MS	511062708	157	1	538	96045351	HYDRAULICS UPPER CARRI
NOZZLE 0,5 M5X9 MS	511062708	169	1	589	967784808	HYDR.AUXILIARY HOISTING
NOZZLE 0,6 M5X9 CUZN39PB3	510746008	153	1	688	967784508	HYDR.F.TELESCOPIC BOOM
NOZZLE 0,8 M5X9	510754008	158	1	538	96045351	HYDRAULICS UPPER CARRI
NOZZLE 3,0 M10X10 MS	511059408	161	1	538	96045351	HYDRAULICS UPPER CARRI
NOZZLE SET PA	10815496	16	1	399	916163008	WIPERS INSTALLATION
NUT	10219618	1	1	282	10492431	PRESSURE LIMITING VALVE
NUT	11342417	2	1	547	11482347	DIRECTIONAL SOLENOID
NUT	12103903	(18)	2	550	10413106	CONTROL BLOCK
NUT	7027459	(2)	1	538	96045351	HYDRAULICS UPPER CARRI
NUT CR6-FREI	571082308	(5)	1	699	967785008	ADDNL.HYDR. FOLDING JIB
NUT M10X1,5 X5NiCrTi26-1	10120639	6	3	238	10140729	EXHAUST TC MOUNTING
NUT M54 CR6-FREI	571077208	(5)	1	589	967784808	HYDR.AUXILIARY HOISTING
NUT M6X8	10878951	2	1	420	96032222	REWORK ARMREST LEFT
NUT M6X8	10878951	2	1	422	96032223	REWORK ARMREST RIGHT
NUT UNF1 1/8X12 12	790202814	(1)	288	64	917436708	FLOOR SHEET COMPL.
O-RING	10001111	21	1	302	10871043	VARIABLE PUMP
O-RING 10,00X2,5 NBR90	10337381	(1)	2	552	10332882	CONTROL BLOCK
O-RING 10,00X2,5 NBR90	10337381	7	1	559	510697608	BALL VALVE
O-RING 10,8X1, 78 NEOPREN	5610999	32	2	574	918628408	AIR COND. UNIT SUPERSTRU
O-RING 100X5 FKM 70	11008055	2	1	218	10145173	INTAKE STACK ASSEMBLY
O-RING 10X2,2 NBR70	502933208	430	1	499	918731908	AIR FILTER UNIT
O-RING 125X2 VMQ 70	10002310	3	1	223	10127566	INSTALLATION BRAKE COMPR
O-RING 125X3 NBR70	726426008	447	3	277	919007708	DRIVE ASSEMBLY, PRE-ASSE
O-RING 127,76X2,62 NBR 70	11003121	4	1	286	11182708	VARIABLE PUMP
O-RING 12X2 NBR70	704274808	9	4	37	966167808	COVER COMPL.
O-RING 12X2 NBR70	704274808	7	5	79	967972208	COVER PRE-ASSY.
O-RING 12X2 NBR70	704274808	7	2	80	967972308	COVER PRE-ASSY.
O-RING 12X2 NBR70	704274808	7	2	81	967972408	COVER PRE-ASSY.

Description	Item	Pos.	Quantity	Page	Assembly	Description
O-RING 12X2 NBR70	704274808	7	2	82	968270108	COVER PRE-ASSY.
O-RING 12X2 NBR70	704274808	7	2	83	968274208	COVER PRE-ASSY.
O-RING 12X2 NBR70	704274808	7	5	102	968055808	COVER PRE-ASSY.
O-RING 12X2 NBR70	704274808	(8)	2	335	969050308	OIL TANK PRE-ASS.
O-RING 132X3 NBR 70	7264141	470	1	285	97029921	DISTRIBUTOR GEARBOX
O-RING 133,07X1,78 NBR 70	10099208	28	1	128	11347526	ELECTRIC PUMP
O-RING 133,07X1,78 NBR 70	10099208	32	1	504	10327065	ELECTRIC PUMP
O-RING 135X3 NBR 70 SPF	726452801	5	1	128	11347526	ELECTRIC PUMP
O-RING 140X3 NBR70	570163708	5	1	504	10327065	ELECTRIC PUMP
O-RING 145 75 FKM 17939	10282774	4	2	169	10154458	CYLINDER
O-RING 145 75 FKM 17939	10282774	401	8	264	10148366	SEAL KIT DIESEL ENGINE
O-RING 14X2 NBR70	726411508	47	2	449	96036957	ELECTRIC ADD-ON PARTS CA
O-RING 14X3 NBR70	726405608	10	12	377	916162808	RELING
O-RING 14X3 NBR70	726405608	78	6	583	939294201	PLANETARY GEARBOX
O-RING 15,4X2,1 NBR90	571141177	3	1	551	571415008	DIRECTIONAL CONTROL VALV
O-RING 15,50X2,00 FKM 80	10113975	(2)	1	258	12583633	ENGINE CONTROL SENSORS
O-RING 150X3 NBR70	518578108	448	1	277	919007708	DRIVE ASSEMBLY, PRE-ASSE
O-RING 15X3 NBR 70	726403401	78	6	357	939292201	PLANETARY GEARBOX
O-RING 160X3 NBR70	726204008	5	1	335	969050308	OIL TANK PRE-ASS.
O-RING 165X3 FKM 70	726440001	73	1	340	90008901	SLEWING GEAR DRIVE
O-RING 16X2 NBR70	726407908	401	2	314	96034515	EXPANSION TANK PRE-ASS.
O-RING 16X2 NBR70	726407908	(1)	1	327	96034868	PREMOUNTED FUEL FILTER
O-RING 16X2 NBR70	726407908	(9)	2	335	969050308	OIL TANK PRE-ASS.
O-RING 175X3 NBR 70	726453601	24	1	340	90008901	SLEWING GEAR DRIVE
O-RING 175X3 NBR 70	726453601	79	1	357	939292201	PLANETARY GEARBOX
O-RING 17X2 FPM70	571082608	(2)	1	539	96045351	HYDRAULICS UPPER CARRI
O-RING 18X2,5 NBR70	726406908	(1)	1	540	96045351	HYDRAULICS UPPER CARRI
O-RING 192X4 SPF	11493868	37	1	70	919254308	CRAWLER SUPPORT PREASS
O-RING 192X4 SPF	11493868	37	1	100	919254408	CRAWLER SUPPORT PREASS
O-RING 195X3 NBR 70	761021703	76	1	357	939292201	PLANETARY GEARBOX
O-RING 195X3 NBR 70	761021703	76	1	583	939294201	PLANETARY GEARBOX
O-RING 19X1,5 NBR70	502624508	41	1	128	11347526	ELECTRIC PUMP
O-RING 19X2,5 FKM80	10219619	2	1	282	10492431	PRESSURE LIMITING VALVE
O-RING 20,3X2,4 NBR70	502932908	8	1	325	968999708	FUEL TANK, PRE-ASSEMBLED
O-RING 200X3 NBR 70	726421501	480	3	285	97029921	DISTRIBUTOR GEARBOX
O-RING 209,14X3,53 NBR70	10342479	26	1	305	10871282	VARIABLE PUMP
O-RING 20X2 FPM70	571082008	(2)	1	699	967785008	ADDNL.HYDR. FOLDING JIB
O-RING 20X2 FPM70	571082008	(2)	1	699	967785008	ADDNL.HYDR. FOLDING JIB
O-RING 20X2 NBR90	510792708	8	2	559	510697608	BALL VALVE
O-RING 20X4 NBR 70	726414901	69	1	340	90008901	SLEWING GEAR DRIVE
O-RING 21,30X2,4 V70GA	7381526	4	1	235	10142744	COOLING WATER AIR BLEED
O-RING 21,30X2,4 V70GA	7381526	3871	1	265	10148366	SEAL KIT DIESEL ENGINE
O-RING 22X1,5 FPM70	571082708	(3)	1	539	96045351	HYDRAULICS UPPER CARRI
O-RING 23,52X1,78 NBR90	514611808	4	1	58	11643183	CONTROL BLOCK
O-RING 23,52X1,78 NBR90	514611808	4	1	61	11643184	CONTROL BLOCK
O-RING 230X3 NBR70	726429008	482	1	285	97029921	DISTRIBUTOR GEARBOX
O-RING 24X2,5 NBR70	502933508	449	1	277	919007708	DRIVE ASSEMBLY, PRE-ASSE
O-RING 24X3 FKM 70	10217777	2	1	249	10128439	LOCKING PIECES
O-RING 24X3 FKM 70	10217777	5241	1	265	10148366	SEAL KIT DIESEL ENGINE
O-RING 26X1,5 FPM70	571082108	(3)	1	699	967785008	ADDNL.HYDR. FOLDING JIB
O-RING 26X3 HNBR 70	10004261	9	1	170	10147687	POWER UNIT SUPPORT ATT
O-RING 26X3 HNBR 70	10004261	4	1	199	10129475	OIL COOLER ADD-ON
O-RING 280X3 NBR70	726417708	485	1	285	97029921	DISTRIBUTOR GEARBOX
O-RING 300X3 NBR 70	502319101	51	1	357	939292201	PLANETARY GEARBOX
O-RING 300X3 NBR70	530032508	51	1	583	939294201	PLANETARY GEARBOX
O-RING 300X6 EPDM 70	726458401	13	1	357	939292201	PLANETARY GEARBOX
O-RING 30X2 NBR70	510787908	(3)	4	546	11211756	CONTROL BLOCK
O-RING 32X3 FPM70	571076908	(2)	1	589	967784808	HYDR.AUXILIARY HOISTING
O-RING 330X3 NBR 70	726429901	19	2	357	939292201	PLANETARY GEARBOX
O-RING 330X3 NBR 70	726429901	19	2	583	939294201	PLANETARY GEARBOX

Description	Item	Pos.	Quantity	Page	Assembly	Description
O-RING 38X3 NBR 70	726455301	61	1	357	939292201	PLANETARY GEARBOX
O-RING 38X3 NBR90	726421108	61	1	583	939294201	PLANETARY GEARBOX
O-RING 40X3 FPM70	571077108	(4)	1	589	967784808	HYDR.AUXILIARY HOISTING
O-RING 43X2 FKM 70	11066168	4	1	203	10148432	LUBE OIL PUMP WITH FASTEN
O-RING 4X1 NBR90	510712308	3	1	696	511479408	LOAD HOLDING VALVE
O-RING 530X5 NBR 70	761035303	59	2	73	90028956	TRACTION DRIVE
O-RING 5X1 NBR70	553136608	2	2	58	11643183	CONTROL BLOCK
O-RING 5X1 NBR70	553136608	2	2	61	11643184	CONTROL BLOCK
O-RING 63,17X2,62 FKM 70 A,G	7380970	7	1	220	10149677	CONNECTING LINE ADD-ON
O-RING 63,17X2,62 FKM 70 A,G	7380970	451	1	277	919007708	DRIVE ASSEMBLY, PRE-ASSE
O-RING 65X3 NBR70	726412308	450	2	277	919007708	DRIVE ASSEMBLY, PRE-ASSE
O-RING 6X1 NBR90	570690608	33	1	504	10327065	ELECTRIC PUMP
O-RING 7,6X1,78 NEOPREN	10216678	31	4	574	918628408	AIR COND. UNIT SUPERSTRU
O-RING 85X2 HNBR 70	10218370	2	1	241	10219978	STARTER
O-RING 85X2 HNBR 70	10218370	2	1	243	11386644	STARTER PRE-ASSY.
O-RING 88X3 ACM70	570979708	7	1	226	5700161	AIR COMPRESSOR
O-RING 8X1,5 FKM 70	11659846	27	1	207	10149198	RK PRE-FEED PUMP
O-RING 8X2 NBR70	502652908	73	1	583	939294201	PLANETARY GEARBOX
O-RING 8X2 NBR90	10166157	73	1	357	939292201	PLANETARY GEARBOX
O-RING 94X3 NBR70	726433408	50	4	30	917511508	CRAWLER CENTRE PART PRE
O-RING 98,02X3,53 FKM 70 M	10128671	1801	2	264	10148366	SEAL KIT DIESEL ENGINE
O-RING AEHNL.ISO 3601-1 25	10342770	3	1	192	10149578	CYLINDER HEAD
O-RING ARP 568 10,52X1,83 NB	501243708	(1)	1	542	96045351	HYDRAULICS UPPER CARRI
O-RING ARP 568 10,52X1,83 NB	501243708	1	1	562	471030708	FITTING
O-RING ARP 568 10,82X1,78 NB	510718108	27	1	556	10489734	PRESSURE LIMITING VALVE
O-RING ARP 568 10,82X1,78 NB	510760408	32	1	412	11083498	AIR CONDITIONING UNIT
O-RING ARP 568 10,82X1,78 NB	510760408	2	6	551	571415008	DIRECTIONAL CONTROL VALV
O-RING ARP 568 107,62X2,62	571233308	(5)	1	305	10871282	VARIABLE PUMP
O-RING ARP 568 12,37X2,62 NB	510746108	1	1	560	10218310	LOAD HOLDING VALVE
O-RING ARP 568 14X1,78 NBR9	515710608	31	1	412	11083498	AIR CONDITIONING UNIT
O-RING ARP 568 18,72X2,62 NB	510738308	12	1	299	571900808	REGULATOR ELEMENT
O-RING ARP 568 18,72X2,62 NB	510738308	12	1	300	10472202	REGULATOR ELEMENT
O-RING ARP 568 202,79X3,53	571307708	10	1	288	11631893	BEARING FLANGE
O-RING ARP 568 23,47X2,62 NB	510776608	14	1	311	10292815	REGULATOR ELEMENT
O-RING ARP 568 23,47x2,62 NB	570322408	(1)	1	280	96034631	RADIATOR, PRE-ASSEMBLED
O-RING ARP 568 23,47x2,62 NB	570322408	(1)	1	540	96045351	HYDRAULICS UPPER CARRI
O-RING ARP 568 23,52X1,78 N	570652308	25	1	556	10489734	PRESSURE LIMITING VALVE
O-RING ARP 568 25,07X2,62 NB	571058608	13	1	311	10292815	REGULATOR ELEMENT
O-RING ARP 568 25X3,53 NBR7	511035108	(1)	1	540	96045351	HYDRAULICS UPPER CARRI
O-RING ARP 568 28,17X3,53 NB	501201708	440	1	277	919007708	DRIVE ASSEMBLY, PRE-ASSE
O-RING ARP 568 32,92X3,53 NB	510587008	(1)	1	540	96045351	HYDRAULICS UPPER CARRI
O-RING ARP 568 32,92X3,53 NB	510587008	(1)	1	540	96045351	HYDRAULICS UPPER CARRI
O-RING ARP 568 32,92X3,53 NB	510587008	560	6	540	96045351	HYDRAULICS UPPER CARRI
O-RING ARP 568 32,92X3,53 NB	510587008	556	2	590	967784808	HYDR.AUXILIARY HOISTING
O-RING ARP 568 37,69X3,53 NB	510586708	551	8	51	96035801	HYDRAULIC EQUIPM.CENTER
O-RING ARP 568 37,69X3,53 NB	510586708	550	2	90	96035796	HYDR.TRAVEL DRIVE
O-RING ARP 568 37,69X3,53 NB	510586708	550	2	107	96035792	HYDR.TRAVEL DRIVE
O-RING ARP 568 37,69X3,53 NB	510586708	(1)	1	540	96045351	HYDRAULICS UPPER CARRI
O-RING ARP 568 37,69X3,53 NB	510586708	551	2	540	96045351	HYDRAULICS UPPER CARRI
O-RING ARP 568 37,69X3,53 NB	510586708	553	3	590	967784808	HYDR.AUXILIARY HOISTING
O-RING ARP 568 37,69X3,53 NB	510586708	551	3	688	967784508	HYDR.F.TELESCOPIC BOOM
O-RING ARP 568 45,69X2,62 NB	514507808	16	1	297	10008308	CONNECTING PLATE
O-RING ARP 568 47,22X3,53 NB	510587908	(1)	1	277	919007708	DRIVE ASSEMBLY, PRE-ASSE
O-RING ARP 568 50,47X2,62 NB	570054708	16	1	309	571907208	CONNECTING PLATE
O-RING ARP 568 56,74X3,53 NB	726421608	445	3	277	919007708	DRIVE ASSEMBLY, PRE-ASSE
O-RING ARP 568 66,27X3,53 NB	518648508	6	1	346	510229408	HYDRO MOTOR
O-RING ARP 568 72,62X3,53 NB	518629608	31	2	383	917305408	INTERNAL PANELLING INSTA
O-RING ARP 568 75,87X2,62 NB	514530408	15	1	347	570109008	DRIVING GEAR
O-RING ARP 568 82,14X3,53 NB	518623608	39	1	296	10663105	DRIVING GEAR
O-RING ARP 568 9,19X2,62 NB	514589108	13	1	300	10472202	REGULATOR ELEMENT

Description	Item	Pos.	Quantity	Page	Assembly	Description
O-RING ARP 568 9,25X1,78 NB	510719008	26	1	556	10489734	PRESSURE LIMITING VALVE
O-RING ARP 568 9,25X1,78 NB	510738608	(1)	4	550	10413106	CONTROL BLOCK
O-RING ARP 568 9,25X1,78 NB	510738608	(1)	4	550	10413106	CONTROL BLOCK
O-RING ARP 568 98,02X3,53 NB	514613208	39	1	307	10872488	DRIVING GEAR
O-RING DIN 3770 25X2,5 FPM7	726422308	313	1	478	969763408	PIPEWORK AIR INSTALLATIO
O-RING DIN 3771 101,20X3,53	7382158	6542	2	265	10148366	SEAL KIT DIESEL ENGINE
O-RING DIN 3771 101,20X3,53	7380401	5	1	262	9077386	AUXILIARY DRIVE PRE-ASS.
O-RING DIN 3771 101,20X3,53	7380401	6522	1	265	10148366	SEAL KIT DIESEL ENGINE
O-RING DIN 3771 104,37X3,53	7380520	4	1	262	9077386	AUXILIARY DRIVE PRE-ASS.
O-RING DIN 3771 104,37X3,53	7380520	6521	1	265	10148366	SEAL KIT DIESEL ENGINE
O-RING DIN 3771 120X3 VMQ	9177948	2	1	263	9078301	LOCKING PIECES
O-RING DIN 3771 40,64X5,33 F	7381566	2	2	179	10121667	CONNECTING PIECE W.O-RIN
O-RING DIN 3771 44X3 NBR70	726405908	442	1	277	919007708	DRIVE ASSEMBLY, PRE-ASSE
O-RING DIN 3771 59,92X3,53	7381779	7	2	170	10147687	POWER UNIT SUPPORT ATT
O-RING DIN 3771 7,00X1,5 FK	7381685	8	1	196	10120186	BALANCER ASSEMBLY
O-RING DIN 3771 7,00X1,5 FK	7381685	14	1	197	10138230	CAMSHAFT CPL.
O-RING DIN 3771 7,00X1,5 FK	7381685	901	1	264	10148366	SEAL KIT DIESEL ENGINE
O-RING DIN 3771 7,00X1,5 FK	7381685	1001	1	264	10148366	SEAL KIT DIESEL ENGINE
O-RING DIN 3771 75,79X3,53 M	7009080	5	1	232	10148215	THERMOSTAT HOUSING ASS
O-RING DIN 3771 94,50X3,00 F	10116255	1	1	222	10299988	HEATING FLANGE PRE.ASS.
O-RING DIN 3771 98,02X3,53 H	7381995	4	1	244	10115664	LOCKING PIECES
O-RING DIN 3771 98,02X3,53 H	7381995	4521	1	265	10148366	SEAL KIT DIESEL ENGINE
O-RING ISO 3601-1 101,27X2,6	7380605	5	1	219	10147364	AIR INTAKE ASSEMBLY
O-RING ISO 3601-1 101,27X2,6	7380605	452	1	277	919007708	DRIVE ASSEMBLY, PRE-ASSE
O-RING ISO 3601-1 107,54X3,53	10002167	4	2	232	10148215	THERMOSTAT HOUSING ASS
O-RING ISO 3601-1 12,37X2,62	7380935	2	1	222	10299988	HEATING FLANGE PRE.ASS.
O-RING ISO 3601-1 132,94X3,53	7016016	(1)	1	231	10142733	WATER PUMP WITH FASTENIN
O-RING ISO 3601-1 132,94X3,53	7016016	(7)	1	231	10142733	WATER PUMP WITH FASTENIN
O-RING ISO 3601-1 132,94X3,53	7016016	7	1	231	10142733	WATER PUMP WITH FASTENIN
O-RING ISO 3601-1 17,17X1,78	7381103	2	1	250	10127979	LOCKING PIECES
O-RING ISO 3601-1 17,17X1,78	7381103	(2)	1	258	12583633	ENGINE CONTROL SENSORS
O-RING ISO 3601-1 17,17X1,78	7381103	5261	1	265	10148366	SEAL KIT DIESEL ENGINE
O-RING ISO 3601-1 23,47X2,62	10130757	1911	4	264	10148366	SEAL KIT DIESEL ENGINE
O-RING ISO 3601-1 34,59X2,62	7382059	5	1	203	10148432	LUBE OIL PUMP WITH FASTEN
O-RING ISO 3601-1 34,59X2,62	7380653	8	2	170	10147687	POWER UNIT SUPPORT ATT
O-RING ISO 3601-1 34,59X2,62	7380653	9	1	247	10115829	FLYWHEEL HOUSING MOUNT
O-RING ISO 3601-1 55,25X2,62	7380083	3	1	234	10142742	COOLANT PIPE BEND ADD-ON
O-RING ISO 3601-1 85,32X3,53	7381361	(4)	2	260	10125687	POWER TAKE-OFF ADD-ON
O-RING ISO 3601-1 85,32X3,53	7381361	6501	2	265	10148366	SEAL KIT DIESEL ENGINE
O-RING ISO 3601-1 85,32X3,53	7381361	446	1	277	919007708	DRIVE ASSEMBLY, PRE-ASSE
O-RING ISO 3601-1 9,25X1,78	7380574	5	4	548	10342823	PRESSURE CONTROL VALVE
O-RING ISO 3601-1 91,67X3,53	7380657	6561	1	266	10148366	SEAL KIT DIESEL ENGINE
O-RING NEOPRENE (W)	7411823	30	1	574	918628408	AIR COND. UNIT SUPERSTRU
OBSTRUCTION LIGHT 7,2W 19,	11482305	3	1	711	917598408	ELECTRIC MEASURING & WAR
OBSTRUCTION LIGHTS PREAS	967937608	3	1	713	968412508	MECH MEAS AND WARNING D
OIL AIR COOLER	550628308	103	1	280	96034631	RADIATOR, PRE-ASSEMBLED
OIL AIR COOLER SPF	11622561	1	1	565	967980508	OIL COOLER, PRE-ASSEMBLE
OIL COOLER	10325001	3	1	200	10129474	OIL COOLER, PRE-ASSEMBLE
OIL COOLER ADD-ON	10129475	130	1	161	12856862	DIESEL ENGINE
OIL COOLER HOUSING	10146722	1	1	200	10129474	OIL COOLER, PRE-ASSEMBLE
OIL COOLER INSTALLATION	917261808	187	1	11		LIEBHERR LTR 1220
OIL COOLER, PRE-ASSEMBLE	10129474	1	1	199	10129475	OIL COOLER ADD-ON
OIL COOLER, PRE-ASSEMBLE	967980508	1	1	564	917261808	OIL COOLER INSTALLATION
OIL DIPSTICK	10150935	1	1	180	10150934	OIL DIPSTICK CPL.
OIL DIPSTICK 1 1/8"	927554401	1	1	341	927554301	VENTILATION CONNECTING PI
OIL DIPSTICK 1 1/8"	927610201	15	1	361	90200104	OIL-GAUGING INSTRUMENT
OIL DIPSTICK 1 1/8"	927610201	15	1	585	90200103	OIL-GAUGING INSTRUMENT
OIL DIPSTICK CPL.	10150934	21	1	160	12856862	DIESEL ENGINE
OIL DRAIN PLUG M 30 1,5	5004624	6	1	177	10155227	OIL SUMP PRE-ASS.
OIL DRAIN PLUG M26X1,5	789011908	150	2	276	919007708	DRIVE ASSEMBLY, PRE-ASSE

Description	Item	Pos.	Quantity	Page	Assembly	Description
OIL DRAIN PLUG M26X1,5	789011908	8	1	335	969050308	OIL TANK PRE-ASS.
OIL DRAINING HOSE COMPL. 1	10032297	68	1	144	928569808	MAIN TOOLS
OIL FILTER INSERT OEL	10877167	71	1	668	10876933	TELESCOPIC CYLINDER
OIL LINE PRE-ASSEMBLY 10X	10139112	25	1	160	12856862	DIESEL ENGINE
OIL RESERVOIR, EXTENSION	917825508	110	1	9		LIEBHERR LTR 1220
OIL RETURN PIPE 10X1	10139111	1	1	182	10139112	OIL LINE PRE-ASSEMBLY
OIL RETURN PIPE 22X1,5	12847441	2	1	238	10140729	EXHAUST TC MOUNTING
OIL SIGHT GLASS G1" ALU	774320108	7	1	335	969050308	OIL TANK PRE-ASS.
OIL SUMP PRE-ASS. R-MOTO	10155227	1	1	176	10133837	OIL SUMP PRE-ASS.
OIL SUMP PRE-ASS. R-MOTOR	10133837	1	1	175	10132560	OIL SUMP WITH FASTENING
OIL SUMP WITH FASTENING R	10132560	20	1	160	12856862	DIESEL ENGINE
OIL TANK PRE-ASS.	969050308	1	1	332	917825508	OIL RESERVOIR, EXTENSION
OIL TANK ST.CONST. ALMG3	969050408	1	1	335	969050308	OIL TANK PRE-ASS.
OIL-GAUGING INSTRUMENT	90200103	10	1	579	90028852	COMPACT ROPE WINCH
OIL-GAUGING INSTRUMENT	90200104	6	1	352	917259708	MAIN HOIST GEAR
OIL-GAUGING INSTRUMENT	90208884	50	1	354	90208882	COMPACT ROPE WINCH
OPERATING ELEMENT INSTA	96015921	2	1	368	919010208	CRANE OPERATOR CABIN P
OPERATING HOURS COUNTE	691798508	3	1	453	96022872	CONTROL PANEL ROOF
OPERATION	967978808	1	1	474	967928508	LOCKING
OPERATOR SEAT 1030/880NT	10877138	1	1	417	918810308	CONTROL STAND
ORIFICE	10870472	69	1	450	96036957	ELECTRIC ADD-ON PARTS CA
ORIFICE	10875953	3	1	703	10872003	WORK LIGHT
OUTER MULTI-DISC	10175221	5	8	343	90025781	BRAKE MULTI-DISC SET
OUTER MULTI-DISC	737350603	(4)	9	73	90028956	TRACTION DRIVE
OUTLET JET D=63 ABS	10301409	30	2	383	917305408	INTERNAL PANELLING INSTA
OUTLET JET D=82 T=5 PA	553193208	29	6	383	917305408	INTERNAL PANELLING INSTA
OUTLET MODULE SCRONLY	11403694	20	1	495	11403708	SCR-ASSEMBLY
OUTLET VALVE	10136751	4	2	191	10149579	CYLINDER HEAD PRE-ASSY.
OUTPUT SHAFT 135,9 18CrNi	90010683	10	1	340	90008901	SLEWING GEAR DRIVE
OUTSIDE HANDLE ZUG	11005987	4	1	406	966230408	CLOSING DEVICE
OVAL SCREW M4X12 10.9	514525208	20	7	347	570109008	DRIVING GEAR
OVERHEAT PROTECTION	10290127	24	1	466	10876576	WATER HEATING SYSTEM
OVERHEAT PROTECTION	10290127	(6)	1	466	10876576	WATER HEATING SYSTEM
PADLOCK	885252008	4	1	737	917268208	LADDER ATTACHMENT
PADLOCK ABUS-64TI/40 TITAL	885251508	11	1	85	968420608	STORAGE BOX
PADLOCK ABUS-64TI/40 TITAL	885251508	2	1	144	928569808	MAIN TOOLS
PAN-HEAD SCREW ISO 7045	408311208	23	4	518	919503008	SWITCHBOX MOUNTING PART
PAN-HEAD SCREW ISO 7045	408400701	266	2	685	968708708	TERMINAL BOX CPL.
PAN-HEAD SCREW ISO 7045 M	12219804	39	4	412	11083498	AIR CONDITIONING UNIT
PAN-HEAD SCREW ISO 7045	408401901	41	4	449	96036957	ELECTRIC ADD-ON PARTS CA
PAN-HEAD SCREW ISO 7045 M	11658059	9	4	370	96015921	OPERATING ELEMENT INSTAL
PAN-HEAD SCREW ISO 7045 M	10876384	50	2	522	969256608	BASE ASSEMBLY
PANELLING	966282408	2	1	383	917305408	INTERNAL PANELLING INSTA
PANELLING 120X526X308 ABS	97138958	21	1	383	917305408	INTERNAL PANELLING INSTA
PANELLING 127X1598X1088 AB	97001014	1	1	386	966282408	PANELLING
PANELLING 201X846X165 ABS	97006863	16	1	383	917305408	INTERNAL PANELLING INSTA
PANELLING ABOVE RIGHT 18	97001589	4	1	383	917305408	INTERNAL PANELLING INSTA
PANELLING FORCED AERATI	979206908	20	1	383	917305408	INTERNAL PANELLING INSTA
PANELLING MONITOR HOUSIN	979207008	3	1	370	96015921	OPERATING ELEMENT INSTAL
PANELLING PEDAL 258X599X	97105652	3	1	373	96025887	PEDAL CANTILEVER INSTALL
PANELLING PEDAL 315X118X	97089358	4	1	373	96025887	PEDAL CANTILEVER INSTALL
PANELLING REST 82X599X144	97001553	17	1	383	917305408	INTERNAL PANELLING INSTA
PANELLING ROLLER BLIND 9	97001048	6	1	383	917305408	INTERNAL PANELLING INSTA
PANELLING,LEFT	966282308	1	1	383	917305408	INTERNAL PANELLING INSTA
PANELLING,LEFT 130X832X126	97001013	1	1	385	966282308	PANELLING,LEFT
PANELLING,STRUT LEFT 84X1	97001015	3	1	383	917305408	INTERNAL PANELLING INSTA
PARALLEL PIN DIN 6325 10M6	430706808	13	2	309	571907208	CONNECTING PLATE
PARALLEL PIN DIN 6325 10M6	430707208	8	2	472	10877810	BALLAST EXTENSION RAM
PARALLEL PIN DIN 6325 12M6	430709608	32	1	734	512363708	HYDRO CYLINDER
PARALLEL PIN DIN 6325 8M6X2	430704808	13	2	297	10008308	CONNECTING PLATE

Description	Item	Pos.	Quantity	Page	Assembly	Description
PARALLEL PIN ISO 2338 10M6X	430608708	86	8	71	919254308	CRAWLER SUPPORT PREASS
PARALLEL PIN ISO 2338 10M6X	430608708	86	8	101	919254408	CRAWLER SUPPORT PREASS
PARALLEL PIN ISO 2338 12H11	430611008	3	1	644	917292008	TELESCOPIC SECTION 1 PRE
PARALLEL PIN ISO 2338 12H11	430611008	3	1	648	917292108	TELESCOPIC SECT.2 PRE-AS
PARALLEL PIN ISO 2338 12H11	430611008	3	1	652	917292208	TELESCOPIC SECT.3 PRE-ASS
PARALLEL PIN ISO 2338 12H11	430611008	3	1	656	917292308	TELESCOPIC SECT.IV PRE-A
PARALLEL PIN ISO 2338 12H11	430611008	23	1	661	917292408	TELESCOPIC SECT.5 PRE-AS
PARALLEL PIN ISO 2338 4M6X	570109308	5	1	346	510229408	HYDRO MOTOR
PARALLEL PIN ISO 8734 5M6X	514588908	14	1	297	10008308	CONNECTING PLATE
PARALLEL PIN ISO 8734 6m6X	4980000	9	1	196	10120186	BALANCER ASSEMBLY
PARALLEL PIN ISO 8734 6m6X	4980000	(5)	1	197	10138230	CAMSHAFT CPL.
PARALLEL PIN ISO 8734 6m6X	4980736	5	1	197	10138230	CAMSHAFT CPL.
PASSAGE NIPPLE BLOCK	774375108	6	2	127	917257108	CENTRALIZED LUBRICATION
PASSAGE NIPPLE BLOCK	774375108	9	2	502	917261208	CENT. LUBRIC. SYSTEM SUP
PATCH CABLE 4X2 AWG 26/7-5	10219462	6	2	445	96036954	CABLE LIST DRIVER'S CABIN
PEDAL CANTILEVER INSTALL	96025887	4	1	368	919010208	CRANE OPERATOR CABIN P
PEDAL TRANSDUCER 20° SPF	10343484	55	2	449	96036957	ELECTRIC ADD-ON PARTS CA
PEDESTAL 50X1166X2200 STA	11346549	3	2	111	917691008	FALL PROTECTION
PEDESTAL 50X1350X1610 STA	11346547	1	4	111	917691008	FALL PROTECTION
PEDESTAL 50X1350X1610 T Z	11346548	2	2	111	917691008	FALL PROTECTION
PENCIL-TYPE GLOW PLUG	11826649	40	1	466	10876576	WATER HEATING SYSTEM
PENCIL-TYPE GLOW PLUG	11826649	(10)	1	466	10876576	WATER HEATING SYSTEM
PERFORATED PLATE	9080377	8	1	177	10155227	OIL SUMP PRE-ASS.
PERFORMANCE RELAY 75A	11160723	22	2	522	969256608	BASE ASSEMBLY
PERSONAL PROTECTION EQ	916959808	46	1	9		LIEBHERR LTR 1220
PILOT LAMP 24V	10876030	34	1	449	96036957	ELECTRIC ADD-ON PARTS CA
PIN 100.0X178 35NICRMOV125	97033306	4	2	475	967978908	INTERLOCKING
PIN 105.0X230 35NICRMOV125	97030027	2	1	474	967928508	LOCKING
PIN 105.0X452 35NICRMOV125	97031481	31	2	70	919254308	CRAWLER SUPPORT PREASS
PIN 105.0X452 35NICRMOV125	97031481	31	2	100	919254408	CRAWLER SUPPORT PREASS
PIN 110.0X170 35NICRMOV125	97043050	11	4	30	917511508	CRAWLER CENTRE PART PRE
PIN 110.0X245 35NICRMOV125	97039932	15	4	30	917511508	CRAWLER CENTRE PART PRE
PIN 110.0X277 35NICRMOV125	97032012	17	2	17	919617108	CRAWLER TRACK TRAVEL G
PIN 110.0X451 35NICRMOV125	97061385	39	4	17	919617108	CRAWLER TRACK TRAVEL G
PIN 160.0X326 35NICRMOV125	97027202	6	1	644	917292008	TELESCOPIC SECTION 1 PRE
PIN 160.0X326 35NICRMOV125	97027202	6	1	648	917292108	TELESCOPIC SECT.2 PRE-AS
PIN 160.0X326 35NICRMOV125	97027202	6	1	652	917292208	TELESCOPIC SECT.3 PRE-ASS
PIN 160.0X326 35NICRMOV125	97027202	6	1	656	917292308	TELESCOPIC SECT.IV PRE-A
PIN 160.0X326 35NICRMOV125	97027202	21	1	661	917292408	TELESCOPIC SECT.5 PRE-AS
PIN 160.0X394 35NICRMOV125	973411808	1	2	158	918731108	ASSEMBLY PARTS F.SLEWING
PIN 170.0X255 35NICRMOV125	97032979	3	1	619	919617008	LUFFING RAM W. PIVOT
PIN 170.0X555 35NICRMOV125	97032978	2	1	619	919617008	LUFFING RAM W. PIVOT
PIN 18.0X410 S355J2C+C FE//	97032409	45	2	70	919254308	CRAWLER SUPPORT PREASS
PIN 18.0X410 S355J2C+C FE//	97032409	45	2	100	919254408	CRAWLER SUPPORT PREASS
PIN 22X11 1.4301	97001103	3	2	408	966253908	WAGON
PIN 22X57 1.4305	97001095	3	2	407	966230508	GUIDE PRE-ASS.
PIN 25.0X100 S355J2G3C+C FE	97032647	2	2	112	968038208	BEARING AHEAD LEFT SIDE
PIN 25.0X100 S355J2G3C+C FE	97032647	2	2	113	968038308	BEARING AHEAD RIGHT SIDE
PIN 25.0X100 S355J2G3C+C FE	97039420	1	1	117	968331708	FUSE HOLDER
PIN 25.0X131 35NICRMOV125	978844908	15	1	474	967928508	LOCKING
PIN 25.0X50 42CRMO4+QT	974922808	15	4	372	916177508	STEP CPL.
PIN 25.0X52 S355J2G3C+C FE//	971973608	3	1	421	962282208	ARM REST LEFT
PIN 25.0X52 S355J2G3C+C FE//	971973608	3	1	423	962282308	ARM REST RIGHT
PIN 35.0X165 35NICRMOV125	938865908	11	1	733	923285508	FOLDING BRACKET PRE-ASS.
PIN 35.0X65 35NICRMOV125	97008063	18	1	365	917259908	CRANE DRIVER CAB ADDITIO
PIN 35.0X92 35NICRMOV125	97032162	17	1	365	917259908	CRANE DRIVER CAB ADDITIO
PIN 39X18 1.4301	97007043	8	1	408	966253908	WAGON
PIN 40X60X50 S355J2C+C FE//	451237208	10	2	134	919087608	ROTARY FEED THROUGH
PIN 45.0X100 35NICRMOV125	97031197	6	2	575	917267108	AUXILIARY HOISTING GEAR 2
PIN 45.0X105 35NICRMOV125	97032320	29	4	121	919644008	HYDRAULIC SUPPORT

Description	Item	Pos.	Quantity	Page	Assembly	Description
PIN 45.0X121 35NICRMOV125	97031434	30	1	365	917259908	CRANE DRIVER CAB ADDITIO
PIN 50.0X200 35NICRMOV125	97070277	3	1	705	917268408	BOOM NOSE
PIN 50.0X200 35NICRMOV125	97070277	(1)	1	705	917268408	BOOM NOSE
PIN 50.0X235 35NICRMOV125	973626408	25	3	705	917268408	BOOM NOSE
PIN 55.0X105 35NICRMOV125	97031196	7	2	728	917413208	SELF-ERECT. AUX. HOIST GEA
PIN 55.0X158 35NICRMOV125	939249808	5	1	705	917268408	BOOM NOSE
PIN 55.0X280 35NICRMOV125	971252308	8	2	625	967936908	COUNTERWEIGHT CPL.
PIN 65.0X155 35NICRMOV125	97042167	7	1	629	968068308	ASSEMBLY DEVICE
PIN 65.0X225 35NICRMOV125	97033301	22	4	30	917511508	CRAWLER CENTRE PART PRE
PIN 70.0X190 35NICRMOV125	97030039	10	6	471	918956108	HYDRAULIC BALLASTING
PIN 70.0X283 35NICRMOV125	97032197	12	4	121	919644008	HYDRAULIC SUPPORT
PIN 70.0X390 35NICRMOV125	97100242	41	1	70	919254308	CRAWLER SUPPORT PREASS
PIN 70.0X390 35NICRMOV125	97100242	41	1	100	919254408	CRAWLER SUPPORT PREASS
PIN 70.0X405 35NICRMOV125	97030038	5	2	471	918956108	HYDRAULIC BALLASTING
PIN 85.0X200 35NICRMOV125	97051278	14	1	721	968728808	CONSOLE PRE-ASS.
PIN 85.0X350 35NICRMOV125	97034096	3	1	350	917259608	ROTATING PLATFORM LOCK
PIN 90.0X415 35NICRMOV125	97032383	52	1	70	919254308	CRAWLER SUPPORT PREASS
PIN 90.0X415 35NICRMOV125	97032383	52	1	100	919254408	CRAWLER SUPPORT PREASS
PIN 90.0X785 35NICRMOV125	97032093	10	4	121	919644008	HYDRAULIC SUPPORT
PIN CARRIER 6-POL 16A	604526608	509	4	44	96045228	WIRING HARNESS
PIN CARRIER 6-POL 16A	604526608	501	1	140	96045205	WIRING HARNESS
PIN CARRIER 6-POL 16A	604526608	503	1	516	96037133	LEAD
PIN CARRIER 6-POL 16A	604526608	501	2	617	96037132	LEAD
PIN CARRIER 6-POL 16A	604526608	(501)	1	711	917598408	ELECTRIC MEASURING & WAR
PIN CONTACT 0,2-0,5MM2	10335819	689	4	447	96036955	WIRING HARNESS
PIN CONTACT 0,2-0,5MM2	10335819	689	4	448	96036956	WIRING HARNESS
PIN CONTACT 0,5-1,0MM2 CU	7369458	740	6	515	96037137	WIRING HARNESS
PIN CONTACT 0,5-1MM2MM2 C	10300944	715	2	447	96036955	WIRING HARNESS
PIN CONTACT 0,5MM2 SILBER	10493972	719	16	44	96045228	WIRING HARNESS
PIN CONTACT 0,5MM2 SILBER	10493972	719	6	140	96045205	WIRING HARNESS
PIN CONTACT 0,5MM2 SILBER	10493972	(719)	2	711	917598408	ELECTRIC MEASURING & WAR
PIN CONTACT 0,75-1,5MM2	6202444	95	3	44	96045228	WIRING HARNESS
PIN CONTACT 0,75-1,5MM2	6202444	95	1	510	96045385	WIRING HARNESS
PIN CONTACT 0,75-1,5MM2	6202444	95	3	512	96037136	WIRING HARNESS
PIN CONTACT 0,75-1MM2	604519208	628	2	516	96037133	LEAD
PIN CONTACT 0,75-1MM2	604519208	628	4	617	96037132	LEAD
PIN CONTACT 0,75-1MM2	604519208	(628)	2	711	917598408	ELECTRIC MEASURING & WAR
PIN CONTACT 1,5MM2	604519108	(637)	1	711	917598408	ELECTRIC MEASURING & WAR
PIN DIN 1434 5X40X35 X5CRN	451000208	1	1	715	967936408	WIND WARNING PREASSEMB
PIN DIN 1435 20X50X43 42CR	10875669	4	3	732	929582108	MOUNTING PRE-ASS.
PIN DIN 1435 20X50X43 42CR	10875669	2	1	735	923879808	CONSOLE PRE-ASS.
PIN DIN 1435 40X80X68 S355J2	451237508	11	1	134	919087608	ROTARY FEED THROUGH
PIN DIN 1435 8X50X47 ST.50	451210308	11	1	372	916177508	STEP CPL.
PIN DIN 1436 25X55X45 42CR	451426608	43	1	731	917267508	TRANSPORT MOUNTING
PIN DIN 1436 30X60X52 ST.50	451430708	32	2	639	917291908	PIVOT SECTION, PRE-ASSEMB
PIN DIN 1436 35X82X72 35NIC	10027134	16	4	121	919644008	HYDRAULIC SUPPORT
PIN EXTRACTOR T ZN O	965921308	43	4	17	919617108	CRAWLER TRACK TRAVEL G
PIN HOLDER 10X131X38 S96	97028296	14	8	661	917292408	TELESCOPIC SECT.5 PRE-AS
PIN ISO 2340 B20X150X134 S3	452551408	8	1	705	917268408	BOOM NOSE
PIN ISO 2341 B30X95X85 35NIC	453032708	14	1	365	917259908	CRANE DRIVER CAB ADDITIO
PIN ISO 2341 B45X110X98 35N	453040908	15	2	577	967969608	AUXILIARY HOISTING GEAR 2
PIN ISO 2341 B6X25X22 ST 480	10875678	10	1	372	916177508	STEP CPL.
PIN RD100X193 35NICRMOV12	951111408	28	2	17	919617108	CRAWLER TRACK TRAVEL G
PIN RD30X107 42CRMO4+QT	956349008	4	1	733	923285508	FOLDING BRACKET PRE-ASS.
PIN RD35X71 35NICRMOV125	944029908	25	1	731	917267508	TRANSPORT MOUNTING
PIN RD49.5X58 42CRMO4+QT	956349108	5	1	733	923285508	FOLDING BRACKET PRE-ASS.
PIN W. HANDLE RAL 3020,SD	967850808	3	1	365	917259908	CRANE DRIVER CAB ADDITIO
PIN WITH HEAD 45.0X167 35N	97036916	42	4	17	919617108	CRAWLER TRACK TRAVEL G
PIPE CLAMP 33/20	774225008	18	1	464	96020359	ADDNL.HEATING, PRE-ASSE
PIPE CLAMP 43/20	774221708	24	7	462	918759808	ADD HEATING SUPERSTRUCT

Description	Item	Pos.	Quantity	Page	Assembly	Description
PIPE CLAMP PART 26X50X332	97037153	300	6	51	96035801	HYDRAULIC EQUIPM.CENTER
PIPE CLAMP PART 26X50X332	97037154	301	6	51	96035801	HYDRAULIC EQUIPM.CENTER
PIPE COMPL.	968661408	404	2	277	919007708	DRIVE ASSEMBLY, PRE-ASSE
PIPE COMPL.	969939408	4	1	314	96034515	EXPANSION TANK PRE-ASS.
PIPE COMPL. 10X1,5X120	929802808	484	1	690	968187308	PIPELINES TELESCOPIC
PIPE COMPL. 10X1,5X137	929803108	488	1	690	968187308	PIPELINES TELESCOPIC
PIPE COMPL. 10X1,5X239	929802308	483	2	690	968187308	PIPELINES TELESCOPIC
PIPE COMPL. 10X1,5X278	929804608	489	1	690	968187308	PIPELINES TELESCOPIC
PIPE COMPL. 10X1,5X282	929806008	490	1	690	968187308	PIPELINES TELESCOPIC
PIPE COMPL. 10X1,5X407	929803008	486	1	690	968187308	PIPELINES TELESCOPIC
PIPE COMPL. 10X1,5X671	929802208	482	1	690	968187308	PIPELINES TELESCOPIC
PIPE COMPL. 10X1,5X853	929802108	481	1	690	968187308	PIPELINES TELESCOPIC
PIPE COMPL. 10X1.5	968155008	302	1	572	918956208	PIPELINES SUPERSTRUCTUR
PIPE COMPL. 10X1.5	968593808	722	2	55	96035803	PIPELINES CENTER PART
PIPE COMPL. 10X1.5	968593908	723	2	55	96035803	PIPELINES CENTER PART
PIPE COMPL. 10X1.5	968594008	724	2	55	96035803	PIPELINES CENTER PART
PIPE COMPL. 10X1.5	968594108	725	2	55	96035803	PIPELINES CENTER PART
PIPE COMPL. 10X1.5	969325008	247	1	572	918956208	PIPELINES SUPERSTRUCTUR
PIPE COMPL. 10X1.5	969325108	290	1	572	918956208	PIPELINES SUPERSTRUCTUR
PIPE COMPL. 10X1.5	969325208	291	1	572	918956208	PIPELINES SUPERSTRUCTUR
PIPE COMPL. 10X1.5	969438308	230	1	572	918956208	PIPELINES SUPERSTRUCTUR
PIPE COMPL. 12X1.5	96035909	709	1	55	96035803	PIPELINES CENTER PART
PIPE COMPL. 12X1.5	96035913	729	1	55	96035803	PIPELINES CENTER PART
PIPE COMPL. 12X1.5	96045839	(2)	1	275	919007708	DRIVE ASSEMBLY, PRE-ASSE
PIPE COMPL. 12X1.5	968167108	704	1	55	96035803	PIPELINES CENTER PART
PIPE COMPL. 12X1.5	968168008	714	1	55	96035803	PIPELINES CENTER PART
PIPE COMPL. 12X1.5	968168108	715	1	55	96035803	PIPELINES CENTER PART
PIPE COMPL. 12X1.5	968168208	716	2	55	96035803	PIPELINES CENTER PART
PIPE COMPL. 12X1.5	968168308	717	2	55	96035803	PIPELINES CENTER PART
PIPE COMPL. 12X1.5	968168608	720	2	55	96035803	PIPELINES CENTER PART
PIPE COMPL. 12X1.5	968168708	721	2	55	96035803	PIPELINES CENTER PART
PIPE COMPL. 12X1.5	968168808	(760)	4	124	968077208	HYDRAULIC SUPPORT
PIPE COMPL. 12X1.5	969325308	292	1	572	918956208	PIPELINES SUPERSTRUCTUR
PIPE COMPL. 16X2	969324808	245	1	572	918956208	PIPELINES SUPERSTRUCTUR
PIPE COMPL. 16X2X2361	962977708	496	2	701	968223408	PIPE COND. FOLDING SEAT
PIPE COMPL. 16X2X2550	968201408	494	2	701	968223408	PIPE COND. FOLDING SEAT
PIPE COMPL. 16X2X5360	962977608	495	2	701	968223408	PIPE COND. FOLDING SEAT
PIPE COMPL. 18X1.5	968544708	(327)	1	478	969763408	PIPEWORK AIR INSTALLATIO
PIPE COMPL. 18X1.5	969324908	246	1	572	918956208	PIPELINES SUPERSTRUCTUR
PIPE COMPL. 18X1.5	969978408	(328)	1	478	969763408	PIPEWORK AIR INSTALLATIO
PIPE COMPL. 18X1.5	969979608	(326)	1	478	969763408	PIPEWORK AIR INSTALLATIO
PIPE COMPL. 20X2.5	968158208	260	1	572	918956208	PIPELINES SUPERSTRUCTUR
PIPE COMPL. 20X2.5	968158508	265	1	572	918956208	PIPELINES SUPERSTRUCTUR
PIPE COMPL. 20X2.5	968168408	718	2	55	96035803	PIPELINES CENTER PART
PIPE COMPL. 20X2.5	968168508	719	2	55	96035803	PIPELINES CENTER PART
PIPE COMPL. 20X2.5	969165508	710	1	55	96035803	PIPELINES CENTER PART
PIPE COMPL. 20X2.5	969165608	711	1	55	96035803	PIPELINES CENTER PART
PIPE COMPL. 22X2,5X245	968021408	25	1	585	90200103	OIL-GAUGING INSTRUMENT
PIPE COMPL. 22X2,5X307	968021508	10	1	361	90200104	OIL-GAUGING INSTRUMENT
PIPE COMPL. 22X2,5X357	968021608	25	1	361	90200104	OIL-GAUGING INSTRUMENT
PIPE COMPL. 22X2.5	96045838	(1)	1	275	919007708	DRIVE ASSEMBLY, PRE-ASSE
PIPE COMPL. 22X2.5	968156108	320	1	572	918956208	PIPELINES SUPERSTRUCTUR
PIPE COMPL. 22X2.5	968167808	712	1	55	96035803	PIPELINES CENTER PART
PIPE COMPL. 22X2.5	968167908	713	1	55	96035803	PIPELINES CENTER PART
PIPE COMPL. 22X2.5X229	968021308	10	1	585	90200103	OIL-GAUGING INSTRUMENT
PIPE COMPL. 25X3	969344508	200	1	572	918956208	PIPELINES SUPERSTRUCTUR
PIPE COMPL. 28X2	96035907	708	1	55	96035803	PIPELINES CENTER PART
PIPE COMPL. 28X2	96035912	728	1	55	96035803	PIPELINES CENTER PART
PIPE COMPL. 38X5	96035905	706	1	55	96035803	PIPELINES CENTER PART
PIPE COMPL. 38X5	96035906	707	1	55	96035803	PIPELINES CENTER PART

Description	Item	Pos.	Quantity	Page	Assembly	Description
PIPE COMPL. 38X5	96035910	726	1	55	96035803	PIPELINES CENTER PART
PIPE COMPL. 38X5	96035911	727	1	55	96035803	PIPELINES CENTER PART
PIPE COMPL. 38X5	96035929	304	1	572	918956208	PIPELINES SUPERSTRUCTUR
PIPE COMPL. 38X5	968154808	300	1	572	918956208	PIPELINES SUPERSTRUCTUR
PIPE COMPL. 38X5	968154908	301	1	572	918956208	PIPELINES SUPERSTRUCTUR
PIPE COMPL. 38X5	968155108	303	1	572	918956208	PIPELINES SUPERSTRUCTUR
PIPE COMPL. 38X5	968158908	473	1	572	918956208	PIPELINES SUPERSTRUCTUR
PIPE COMPL. 38X5	968159008	474	1	572	918956208	PIPELINES SUPERSTRUCTUR
PIPE COMPL. 38X5	968159108	475	1	572	918956208	PIPELINES SUPERSTRUCTUR
PIPE COMPL. 38X5	968159308	477	1	572	918956208	PIPELINES SUPERSTRUCTUR
PIPE COMPL. 38X5	968162308	(250)	1	589	967784808	HYDR.AUXILIARY HOISTING
PIPE COMPL. 38X5	968162408	(251)	1	589	967784808	HYDR.AUXILIARY HOISTING
PIPE COMPL. 38X5	968166708	700	1	55	96035803	PIPELINES CENTER PART
PIPE COMPL. 38X5	968166808	701	1	55	96035803	PIPELINES CENTER PART
PIPE COMPL. 38X5	968166908	702	1	55	96035803	PIPELINES CENTER PART
PIPE COMPL. 38X5	968167008	703	1	55	96035803	PIPELINES CENTER PART
PIPE COMPL. 38X5	969438208	309	1	572	918956208	PIPELINES SUPERSTRUCTUR
PIPE COMPL. 38X5X619	966546008	480	3	690	968187308	PIPELINES TELESCOPIC
PIPE COMPL. 42X3	968159408	478	2	572	918956208	PIPELINES SUPERSTRUCTUR
PIPE COMPL. 42X3	968159508	479	1	572	918956208	PIPELINES SUPERSTRUCTUR
PIPE COMPL. 6X1	96035646	240	1	572	918956208	PIPELINES SUPERSTRUCTUR
PIPE COMPL. 6X1X239	922676808	(487)	1	693	967785408	ADDNL.HYDR. FOLDING JIB
PIPE COMPL. 6X1X327	968205108	770	4	55	96035803	PIPELINES CENTER PART
PIPE COMPL. 6X1X327	968205208	771	4	55	96035803	PIPELINES CENTER PART
PIPE COND. FOLDING SEAT	927163908	11	1	693	967785408	ADDNL.HYDR. FOLDING JIB
PIPE COND. FOLDING SEAT WI	968223408	11	1	699	967785008	ADDNL.HYDR. FOLDING JIB
PIPE ELBOW	570066108	3	1	94	502806508	EQUALIZING RESERVOIR
PIPE LINES WINCH 2	968083808	11	1	589	967784808	HYDR.AUXILIARY HOISTING
PIPE SOCKET GSCK45	97042155	6	1	414	969085208	HEATING, PRE-ASSEMBLED
PIPE SOCKET R1/4"	10014698	1	1	131	774375108	PASSAGE NIPPLE BLOCK
PIPE SUPPORT	774215508	311	1	478	969763408	PIPEWORK AIR INSTALLATIO
PIPE UNION GE 42L G11/4A C	10476913	654	1	52	96035801	HYDRAULIC EQUIPM.CENTER
PIPE WELDED	963498508	79	1	662	917292408	TELESCOPIC SECT.5 PRE-AS
PIPE WELDED	968011608	6	1	134	919087608	ROTARY FEED THROUGH
PIPE WELDED RAL 9005,M,GT	966621108	12	1	383	917305408	INTERNAL PANELLING INSTA
PIPE WELDED RAL 9005,M,GT,	966620008	13	1	383	917305408	INTERNAL PANELLING INSTA
PIPE WELDED SCHWARZ PUL	966513708	17	1	393	966497908	FRONT WINDOW CPL.
PIPE WELDED SCHWARZ PUL	966662508	6	1	368	919010208	CRANE OPERATOR CABIN P
PIPELINE	10143542	4	1	214	10143341	FUEL LINES
PIPELINE	10143543	3	1	214	10143341	FUEL LINES
PIPELINE 15X1,5	10130104	6	1	214	10143341	FUEL LINES
PIPELINE 22X1,5	10140732	9	1	218	10145173	INTAKE STACK ASSEMBLY
PIPELINE 22X1,5	10145175	1	1	228	10145176	PIPELINE INSTALLATION
PIPELINE 6X1	10132170	3	1	215	10143342	LEAK OIL RETURN LINE
PIPELINE 6X1	10133607	13	1	215	10143342	LEAK OIL RETURN LINE
PIPELINE 6X1	10141846	8	1	215	10143342	LEAK OIL RETURN LINE
PIPELINE 6X1	10145838	9	1	261	10144036	POWER TAKE-OFF ADD-ON
PIPELINE 6X1	11420632	(3)	1	164	12856862	DIESEL ENGINE
PIPELINE 6X1	12429430	(4)	1	164	12856862	DIESEL ENGINE
PIPELINE 8X1	10132180	19	1	215	10143342	LEAK OIL RETURN LINE
PIPELINE 8X2	10143251	1	1	215	10143342	LEAK OIL RETURN LINE
PIPELINE INSTALLATION	10145176	333	1	163	12856862	DIESEL ENGINE
PIPELINE INSTALLATION	10148216	381	1	163	12856862	DIESEL ENGINE
PIPELINE SUPPORT	968078808	11	1	124	968077208	HYDRAULIC SUPPORT
PIPELINES CENTER PART	96035803	11	1	51	96035801	HYDRAULIC EQUIPM.CENTER
PIPELINES DRIVE ASSEMBLY	968986008	8	1	275	919007708	DRIVE ASSEMBLY, PRE-ASSE
PIPELINES DRUCKLUFT OW	969842808	11	1	478	969763408	PIPEWORK AIR INSTALLATIO
PIPELINES SUPERSTRUCTUR	918956208	193	1	11		LIEBHERR LTR 1220
PIPELINES TELESCOPIC	968187308	11	1	688	967784508	HYDR.F.TELESCOPIC BOOM
PIPEWORK AIR INSTALLATIO	969763408	4	1	476	917676308	COMPRESSED-AIR SYST.SU

Description	Item	Pos.	Quantity	Page	Assembly	Description
PISTON	10152593	1	1	202	10152592	PRESSURE RELIEF VALVE
PISTON	570110608	4	7	348	570109508	DRIVING GEAR
PISTON	571582608	13	1	226	5700161	AIR COMPRESSOR
PISTON	9886591	8	1	200	10129474	OIL COOLER, PRE-ASSEMBLE
PISTON 31CrMoV9	10149655	1	1	171	10138450	FINAL CONTROL VALVE
PISTON COOLING	10142749	15	4	160	12856862	DIESEL ENGINE
PISTON COOLING PRE-ASS.	10151634	1	1	172	10142749	PISTON COOLING
PISTON CPL. R-MOTORX130	10146367	70	4	161	12856862	DIESEL ENGINE
PISTON RING MG 130X120,5X	12476138	4	1	188	10146367	PISTON CPL.
PIVOT HEAD	11691377	2	1	366	11214363	TILT CYLINDER
PIVOT PIECE ST. CONST. SPF	917292608	1	1	639	917291908	PIVOT SECTION, PRE-ASSEMB
PIVOT PIN	10475198	11	4	305	10871282	VARIABLE PUMP
PIVOT SECTION, PRE-ASSEMB	917291908	1	1	634	918804808	TELESCOPIC BOOM CPL.
PLAIN BEARING BUSHING 30	9889290	(2)	2	227	9072906	INTERMEDIATE GEAR CPL.
PLANET WHEEL	927530801	40	3	340	90008901	SLEWING GEAR DRIVE
PLANET WHEEL	927601401	7	5	357	939292201	PLANETARY GEARBOX
PLANET WHEEL	927602101	32	3	359	90017588	PLANETARY CARRIER
PLANET WHEEL	927608601	42	3	357	939292201	PLANETARY GEARBOX
PLANET WHEEL	939251101	20	5	340	90008901	SLEWING GEAR DRIVE
PLANETARY CARRIER	90017588	700	1	358	939292201	PLANETARY GEARBOX
PLANETARY CARRIER 150 42C	939251501	35	1	340	90008901	SLEWING GEAR DRIVE
PLANETARY CARRIER 150 42C	939257301	50	1	340	90008901	SLEWING GEAR DRIVE
PLANETARY CARRIER 170 42	939250301	15	1	340	90008901	SLEWING GEAR DRIVE
PLANETARY CARRIER 225 42	927608501	40	1	357	939292201	PLANETARY GEARBOX
PLANETARY CARRIER 275 42C	927602001	30	1	359	90017588	PLANETARY CARRIER
PLANETARY GEARBOX 3-STU	939292201	5	1	354	90208882	COMPACT ROPE WINCH
PLANETARY GEARBOX 3-STU	939294201	5	1	579	90028852	COMPACT ROPE WINCH
PLASTIC PIPE COMPLETE	96023299	(2331)	1	483	918484108	UREA PLANT
PLATE	10142763	2	1	235	10142744	COOLING WATER AIR BLEED
PLATE	518565008	46	1	668	10876933	TELESCOPIC CYLINDER
PLATE	927530301	14	1	340	90008901	SLEWING GEAR DRIVE
PLATE	967970008	2	2	577	967969608	AUXILIARY HOISTING GEAR 2
PLATE 1.5X107X120 DC01 RAL	97006876	37	1	383	917305408	INTERNAL PANELLING INSTA
PLATE 1.5X110X178 DC01 FE//	97013718	(1)	1	449	96036957	ELECTRIC ADD-ON PARTS CA
PLATE 1.5X112X30 DC01 FE//	972940008	13	2	522	969256608	BASE ASSEMBLY
PLATE 1.5X114X70 DC01 FE//	97025882	8	1	522	969256608	BASE ASSEMBLY
PLATE 1.5X131X117 DC01 FE//	97002645	3	1	375	916170808	CABLE INLET
PLATE 1.5X156X117 DC01 FE//	97024733	14	1	518	919503008	SWITCHBOX MOUNTING PART
PLATE 1.5X170X50 DC01 FE//	976673908	27	4	365	917259908	CRANE DRIVER CAB ADDITIO
PLATE 1.5X174X114 DC01 RAL	976094108	5	1	375	916170808	CABLE INLET
PLATE 1.5X219X129 DC01 FE//	97031454	32	1	365	917259908	CRANE DRIVER CAB ADDITIO
PLATE 1.5X256X53 DC01 FE//	979294908	2	1	526	968063108	PRE-ASSEMBLY MOUNTING U
PLATE 1.5X25X47 DC01 RAL 7	97006875	36	1	383	917305408	INTERNAL PANELLING INSTA
PLATE 1.5X290X162 DC01 FE//	97000735	2	1	375	916170808	CABLE INLET
PLATE 1.5X322X156 DC01 RAL	97033190	40	1	365	917259908	CRANE DRIVER CAB ADDITIO
PLATE 1.5X399X35 DC01 FE//	97017074	13	1	518	919503008	SWITCHBOX MOUNTING PART
PLATE 1.5X404X230 DC01 FE//	97032990	2	1	38	968054008	MOUNTING PLATE PRE-ASS.
PLATE 1.5X436X90 DC01 RAL 7	97003298	24	1	383	917305408	INTERNAL PANELLING INSTA
PLATE 1.5X44X97 X5CRNI18-1	97015722	10	1	368	919010208	CRANE OPERATOR CABIN P
PLATE 1.5X456X541 DC01	97029382	3	1	661	917292408	TELESCOPIC SECT.5 PRE-AS
PLATE 1.5X551X299 DC01 RAL	97002609	23	1	383	917305408	INTERNAL PANELLING INSTA
PLATE 1.5X560X43 DC01 FE//	97091350	8	1	314	96034515	EXPANSION TANK PRE-ASS.
PLATE 1.5X691X50 X5CRNI18-1	97030182	2	1	714	967933408	LOCATION FIXTURE PRE-ASS.
PLATE 1.5X70X100 DC01 FE//	978842708	3	2	526	968063108	PRE-ASSEMBLY MOUNTING U
PLATE 1.5X72X538 X5CRNI18-1	97000469	15	1	383	917305408	INTERNAL PANELLING INSTA
PLATE 1.5X779X733 DC01 FE//	978606708	1	1	526	968063108	PRE-ASSEMBLY MOUNTING U
PLATE 1.5X832X41 DC01 RAL 7	97027494	65	1	384	917305408	INTERNAL PANELLING INSTA
PLATE 1.5X90X96 DC01 RAL 90	976167908	16	1	449	96036957	ELECTRIC ADD-ON PARTS CA
PLATE 1.5X95X40 DC01 RAL 90	97025127	35	3	393	966497908	FRONT WINDOW CPL.
PLATE 10X170X79 S355MC FE//	97053069	22	1	158	918731108	ASSEMBLY PARTS F.SLEWING

Description	Item	Pos.	Quantity	Page	Assembly	Description
PLATE 10X170X80 S355MC FE//	97030033	8	2	474	967928508	LOCKING
PLATE 10X443X155 S960QL	973258908	45	1	656	917292308	TELESCOPIC SECT.IV PRE-A
PLATE 10X470X158 S960QL	973253408	45	1	652	917292208	TELESCOPIC SECT.3 PRE-ASS
PLATE 10X477X155 S960QL	973258808	44	2	656	917292308	TELESCOPIC SECT.IV PRE-A
PLATE 10X498X162 S960QL	973246008	45	1	648	917292108	TELESCOPIC SECT.2 PRE-AS
PLATE 10X504X361 S960QL	973357908	54	1	639	917291908	PIVOT SECTION, PRE-ASSEMB
PLATE 10X50X350 S355MC	97050776	65	2	18	919617108	CRAWLER TRACK TRAVEL G
PLATE 10X523X163 S960QL F	973253308	44	2	652	917292208	TELESCOPIC SECT.3 PRE-ASS
PLATE 10X526X167 S960QL	972898508	45	1	644	917292008	TELESCOPIC SECTION 1 PRE
PLATE 10X527X161 S960QL F	973245908	44	2	648	917292108	TELESCOPIC SECT.2 PRE-AS
PLATE 10X542X412 S960QL	973357708	46	2	639	917291908	PIVOT SECTION, PRE-ASSEMB
PLATE 10X615X181 S960QL F	972898408	44	2	644	917292008	TELESCOPIC SECTION 1 PRE
PLATE 110X34 S315MC FE//ZN	979132008	84	1	662	917292408	TELESCOPIC SECT.5 PRE-AS
PLATE 110X34 S315MC FE//ZN	979132008	5	1	708	967321308	FIXING DEVICE 2.LIFT TOP
PLATE 15X105X290 S355MC FE	97031536	5	1	365	917259908	CRANE DRIVER CAB ADDITIO
PLATE 15X260X203 S355MC FE	97031535	4	1	365	917259908	CRANE DRIVER CAB ADDITIO
PLATE 15X30X75 S355MC	97051276	12	2	721	968728808	CONSOLE PRE-ASS.
PLATE 15X40X140 S690QL	956348108	24	2	731	917267508	TRANSPORT MOUNTING
PLATE 15X45X320 S690QL	956347808	11	2	731	917267508	TRANSPORT MOUNTING
PLATE 15X90X60 S355MC FE//	978361308	23	1	283	968026308	CLUTCH ACTUATOR
PLATE 192X126 DC01 FE//ZNNI	97037694	(2)	1	589	967784808	HYDR.AUXILIARY HOISTING
PLATE 196X63 S315MC FE//ZN	955668108	24	1	577	967969608	AUXILIARY HOISTING GEAR 2
PLATE 196X63 S315MC FE//ZN	955668108	(9)	1	577	967969608	AUXILIARY HOISTING GEAR 2
PLATE 1X130X30 DC01 FE//ZN	97031661	5	8	728	917413208	SELF-ERECT. AUX. HOIST GEA
PLATE 1X133X94 DC01 FE//ZN	97042769	19	16	30	917511508	CRAWLER CENTRE PART PRE
PLATE 1X176X176 X5CRNI18-1	974792608	(1)	1	429	96036790	SLEWING PLATFORM PANELLI
PLATE 1X176X176 X5CRNI18-1	974792608	(1)	1	429	96036790	SLEWING PLATFORM PANELLI
PLATE 1X196X130 X5CRNI18-1	97058414	(1)	1	429	96036790	SLEWING PLATFORM PANELLI
PLATE 1X234X43 DC01 FE//ZN	973246908	21	4	644	917292008	TELESCOPIC SECTION 1 PRE
PLATE 1X234X43 DC01 FE//ZN	973246908	21	4	648	917292108	TELESCOPIC SECT.2 PRE-AS
PLATE 1X234X43 DC01 FE//ZN	973246908	21	4	652	917292208	TELESCOPIC SECT.3 PRE-ASS
PLATE 1X234X43 DC01 FE//ZN	973246908	21	4	656	917292308	TELESCOPIC SECT.IV PRE-A
PLATE 1X234X43 DC01 FE//ZN	973246908	44	4	661	917292408	TELESCOPIC SECT.5 PRE-AS
PLATE 1X252X83 DC01 FE//ZN	97033889	21	1	275	919007708	DRIVE ASSEMBLY, PRE-ASSE
PLATE 1X285X126 DC01 RAL 9	977444308	17	1	417	918810308	CONTROL STAND
PLATE 1X285X126 DC01 RAL 9	977444408	18	1	417	918810308	CONTROL STAND
PLATE 1X40X140 DC01+ZE	956348608	45	1	731	917267508	TRANSPORT MOUNTING
PLATE 1X516X48 DC01 FE//ZN	97035164	38	8	17	919617108	CRAWLER TRACK TRAVEL G
PLATE 1X516X55 DC01 FE//ZN	97035163	37	8	17	919617108	CRAWLER TRACK TRAVEL G
PLATE 1X60X115 DC01 FE//ZN	97032839	8	32	116	968046208	ADD-ON PARTS
PLATE 1X65X94 DC01 FE//ZNNI	97042770	20	16	30	917511508	CRAWLER CENTRE PART PRE
PLATE 1X70X80 DC01 FE//ZNNI	953515508	9	1	323	917626608	FUEL TANK ADD-ON UNIT
PLATE 1X70X80 DC01 FE//ZNNI	953515508	10	8	332	917825508	OIL RESERVOIR, EXTENSION
PLATE 1X80X110 DC01 FE//ZN	970904808	8	8	134	919087608	ROTARY FEED THROUGH
PLATE 1X86X53 DC01 FE//ZNNI	957025308	24	4	644	917292008	TELESCOPIC SECTION 1 PRE
PLATE 1X86X53 DC01 FE//ZNNI	957025308	24	4	648	917292108	TELESCOPIC SECT.2 PRE-AS
PLATE 1X86X53 DC01 FE//ZNNI	957025308	24	4	652	917292208	TELESCOPIC SECT.3 PRE-ASS
PLATE 1X86X53 DC01 FE//ZNNI	957025308	24	4	656	917292308	TELESCOPIC SECT.IV PRE-A
PLATE 1X86X53 DC01 FE//ZNNI	957025308	46	4	661	917292408	TELESCOPIC SECT.5 PRE-AS
PLATE 1X90X60 DC01 FE//ZNNI	97032616	4	6	25	968019508	LIMIT SWITCH ADD-ON
PLATE 1x320x35 DC01+ZE	956348808	14	1	731	917267508	TRANSPORT MOUNTING
PLATE 2.5X130X28 DC01 RAL	979022608	7	2	394	965784408	ROOF WINDOW PRE-ASS.
PLATE 2.5X235X575 DC01 FE//	97100731	4	1	320	96023117	BATTERY BOX, PRE-ASSEMB
PLATE 2.5X71X196 DC01 RAL	97022452	53	1	449	96036957	ELECTRIC ADD-ON PARTS CA
PLATE 2.5X73X78 DC01 FE//ZN	97032370	48	1	70	919254308	CRAWLER SUPPORT PREASS
PLATE 2.5X73X78 DC01 FE//ZN	97032370	48	1	100	919254408	CRAWLER SUPPORT PREASS
PLATE 200X309 S355MC	972133308	10	1	639	917291908	PIVOT SECTION, PRE-ASSEMB
PLATE 20X375X135 S960QL	97032051	2	1	350	917259608	ROTATING PLATFORM LOCK
PLATE 20X375X135 S960QL	97034837	8	1	350	917259608	ROTATING PLATFORM LOCK
PLATE 20X45X230 S690QL	953608508	9	2	134	919087608	ROTARY FEED THROUGH

Description	Item	Pos.	Quantity	Page	Assembly	Description
PLATE 20X45X230 S690QL	953608508	17	2	731	917267508	TRANSPORT MOUNTING
PLATE 20X490X490 S690QL F	97061080	36	1	275	919007708	DRIVE ASSEMBLY, PRE-ASSE
PLATE 20X570X133 S355J2+N	97035737	13	6	70	919254308	CRAWLER SUPPORT PREASS
PLATE 20X570X133 S355J2+N	97035737	13	6	100	919254408	CRAWLER SUPPORT PREASS
PLATE 20X590X125 S355J2+N	97035748	15	1	70	919254308	CRAWLER SUPPORT PREASS
PLATE 20X590X125 S355J2+N	97035748	15	1	100	919254408	CRAWLER SUPPORT PREASS
PLATE 20X590X125 S355J2+N	97035749	16	1	70	919254308	CRAWLER SUPPORT PREASS
PLATE 20X590X125 S355J2+N	97035749	16	1	100	919254408	CRAWLER SUPPORT PREASS
PLATE 25X107X49 S690QL	97052637	9	4	121	919644008	HYDRAULIC SUPPORT
PLATE 25X202X279 S690QL SP	97030323	1	2	728	917413208	SELF-ERECT. AUX. HOIST GEA
PLATE 278X250 DC01 FE//ZNNI	97028172	12	1	661	917292408	TELESCOPIC SECT.5 PRE-AS
PLATE 2X100X210 DC01 FE//ZN	970537808	31	12	644	917292008	TELESCOPIC SECTION 1 PRE
PLATE 2X100X210 DC01 FE//ZN	970537808	31	18	648	917292108	TELESCOPIC SECT.2 PRE-AS
PLATE 2X100X210 DC01 FE//ZN	970537808	31	14	652	917292208	TELESCOPIC SECT.3 PRE-ASS
PLATE 2X100X210 DC01 FE//ZN	970537808	31	14	656	917292308	TELESCOPIC SECT.IV PRE-A
PLATE 2X100X210 DC01 FE//ZN	970537808	42	12	661	917292408	TELESCOPIC SECT.5 PRE-AS
PLATE 2X100X290 DC01 FE//ZN	97011478	26	2	17	919617108	CRAWLER TRACK TRAVEL G
PLATE 2X1225X659 ALMG3 H	97033140	15	1	439	969015908	SLEWING PLATFORM PANELLI
PLATE 2X1248X623 ALMG3 H	97033141	1	1	443	917610208	ADDITIONAL PARTS
PLATE 2X130X30 DC01 FE//ZN	97031660	4	8	728	917413208	SELF-ERECT. AUX. HOIST GEA
PLATE 2X130X89 ALMG3 H111	97052638	2	1	499	918731908	AIR FILTER UNIT
PLATE 2X138X117 DC01 FE//ZN	97059337	19	1	275	919007708	DRIVE ASSEMBLY, PRE-ASSE
PLATE 2X143X88 DC01 FE//ZN	97083880	1	1	525	926891108	GROUND RAIL
PLATE 2X143X92 X5CRNI18-10	97030562	3	1	715	967936408	WIND WARNING PREASSEMB
PLATE 2X145X62 DC01 FE//ZN	97031205	5	2	577	967969608	AUXILIARY HOISTING GEAR 2
PLATE 2X148X148 ALMG3 H11	97031272	2	1	80	967972308	COVER PRE-ASSY.
PLATE 2X148X148 ALMG3 H11	97031272	2	1	82	968270108	COVER PRE-ASSY.
PLATE 2X155X38 DC01 FE//ZN	971067708	10	1	705	917268408	BOOM NOSE
PLATE 2X155X38 DC01 FE//ZN	971067708	1	1	708	967321308	FIXING DEVICE 2.LIFT TOP
PLATE 2X156X137 DC01 RAL 7	97071962	15	1	375	916170808	CABLE INLET
PLATE 2X158X79 DC01 FE//ZN	97061320	9	1	275	919007708	DRIVE ASSEMBLY, PRE-ASSE
PLATE 2X160X196 DC01 FE//ZN	97034301	16	1	429	96036790	SLEWING PLATFORM PANELLI
PLATE 2X162X142 ALMG3 H11	976536208	5	1	526	968063108	PRE-ASSEMBLY MOUNTING U
PLATE 2X170X51 DC01 FE//ZN	97024781	19	1	390	916162508	WINDOW ASSEMBLY
PLATE 2X173X139 DC01 FE//ZN	97032982	18	1	275	919007708	DRIVE ASSEMBLY, PRE-ASSE
PLATE 2X177X240 DC01 FE//ZN	97006461	9	1	399	916163008	WIPERS INSTALLATION
PLATE 2X180X100 DC01 FE//ZN	97011112	74	1	137	919499408	CENTRAL BALLAST
PLATE 2X180X100 DC01 FE//ZN	97011113	75	1	137	919499408	CENTRAL BALLAST
PLATE 2X180X100 DC01 FE//ZN	97011114	76	1	137	919499408	CENTRAL BALLAST
PLATE 2X180X100 DC01 FE//ZN	97011115	77	1	137	919499408	CENTRAL BALLAST
PLATE 2X180X191 ALMG3 H11	975842108	1	1	434	964093408	COVER COMPL.
PLATE 2X190X18 DC01 FE//ZN	979294808	12	2	522	969256608	BASE ASSEMBLY
PLATE 2X191X185 X5CRNI18-1	97030307	1	1	716	967937608	OBSTRUCTION LIGHTS PREAS
PLATE 2X195X66 X5CRNI18-10	974742308	4	1	433	968923508	FLAP RIGHT PRE-ASS.
PLATE 2X198X248 ALMG3 H11	97038089	2	1	83	968274208	COVER PRE-ASSY.
PLATE 2X200X280 DC01 FE//ZN	97039974	63	4	18	919617108	CRAWLER TRACK TRAVEL G
PLATE 2X200X60 DC01 FE//ZN	97046465	40	4	121	919644008	HYDRAULIC SUPPORT
PLATE 2X2038X172 DC01 FE//	97031350	6	1	565	967980508	OIL COOLER, PRE-ASSEMBLE
PLATE 2X203X318 ALMG3 H11	97045975	2	1	84	968709108	COVER PRE-ASSY.
PLATE 2X210X85 DC01 FE//ZN	972908208	30	2	644	917292008	TELESCOPIC SECTION 1 PRE
PLATE 2X210X85 DC01 FE//ZN	972908208	30	4	648	917292108	TELESCOPIC SECT.2 PRE-AS
PLATE 2X210X85 DC01 FE//ZN	972908208	30	4	652	917292208	TELESCOPIC SECT.3 PRE-ASS
PLATE 2X210X85 DC01 FE//ZN	972908208	30	4	656	917292308	TELESCOPIC SECT.IV PRE-A
PLATE 2X210X85 DC01 FE//ZN	972908208	34	4	661	917292408	TELESCOPIC SECT.5 PRE-AS
PLATE 2X220X100 DC01 FE//ZN	974276208	90	1	640	917291908	PIVOT SECTION, PRE-ASSEMB
PLATE 2X227X109 DC01 FE//ZN	97005289	5	1	393	966497908	FRONT WINDOW CPL.
PLATE 2X231X192 DC01 RAL	97025080	24	1	614	96045237	EQUIPMENT CAMERA CAB
PLATE 2X236X50 X5CRNI18-10	974656608	7	1	441	969016008	FLAP LEFT FRONT PRE-ASS.
PLATE 2X244X449 ALMG3 H11	97031267	2	1	79	967972208	COVER PRE-ASSY.
PLATE 2X244X449 ALMG3 H11	97031267	2	1	102	968055808	COVER PRE-ASSY.

Description	Item	Pos.	Quantity	Page	Assembly	Description
PLATE 2X25X80 DC01 FE//ZNNI	97047274	28	2	352	917259708	MAIN HOIST GEAR
PLATE 2X290X100 DC01 FE//ZN	97037945	25	2	17	919617108	CRAWLER TRACK TRAVEL G
PLATE 2X290X22 DC01 FE//ZN	979724708	23	1	429	96036790	SLEWING PLATFORM PANELLI
PLATE 2X291X200 X5CRNI18-1	97008317	2	1	610	968290608	STAND
PLATE 2X291X200 X5CRNI18-1	97008317	1	1	613	968267208	STAND
PLATE 2X297X1030 DC01 FE//	97049819	10	1	429	96036790	SLEWING PLATFORM PANELLI
PLATE 2X300X125 DC01 FE//ZN	97045050	16	1	275	919007708	DRIVE ASSEMBLY, PRE-ASSE
PLATE 2X303X252 DC01 FE//ZN	97009056	13	1	639	917291908	PIVOT SECTION, PRE-ASSEMB
PLATE 2X361X79 DC01 FE//ZN	97072959	32	1	275	919007708	DRIVE ASSEMBLY, PRE-ASSE
PLATE 2X368X357 DC01 FE//ZN	97103093	2	1	21	96034894	PROTECTION PLATE CPL.
PLATE 2X368X357 DC01 FE//ZN	97103093	2	1	24	96034977	PROTECTION PLATE
PLATE 2X373X250 ALMG3 H11	97050650	6	1	497	96039740	ADDITIONAL PARTS CLADDIN
PLATE 2X377X579 X5CRNI18-1	97072923	(1)	1	275	919007708	DRIVE ASSEMBLY, PRE-ASSE
PLATE 2X381X148 DC01 FE//ZN	97003805	10	1	370	96015921	OPERATING ELEMENT INSTAL
PLATE 2X40X140 DC01+ZE	956348708	46	1	731	917267508	TRANSPORT MOUNTING
PLATE 2X431X420 ALMG3 H11	97049712	35	1	429	96036790	SLEWING PLATFORM PANELLI
PLATE 2X50X115 X5CRNI18-10	974657908	11	1	439	969015908	SLEWING PLATFORM PANELLI
PLATE 2X50X559 X5CRNI18-10	97016752	31	1	372	916177508	STEP CPL.
PLATE 2X516X48 DC01 FE//ZN	97031992	14	16	17	919617108	CRAWLER TRACK TRAVEL G
PLATE 2X516X55 DC01 FE//ZN	97031991	13	40	17	919617108	CRAWLER TRACK TRAVEL G
PLATE 2X550X297 DC01	97100598	1	1	320	96023117	BATTERY BOX, PRE-ASSEMB
PLATE 2X580X25 DC01	97127026	10	1	318	918955408	BATTERY BOX CPL.
PLATE 2X601X334 ALMG3 H11	97050960	10	1	280	96034631	RADIATOR, PRE-ASSEMBLED
PLATE 2X639X612 DC01	97031539	6	1	439	969015908	SLEWING PLATFORM PANELLI
PLATE 2X666X382 DC01	97092913	92	1	71	919254308	CRAWLER SUPPORT PREASS
PLATE 2X666X382 DC01	97094056	92	1	101	919254408	CRAWLER SUPPORT PREASS
PLATE 2X680X1160 ALMG3 H	97050648	2	1	497	96039740	ADDITIONAL PARTS CLADDIN
PLATE 2X700X115 DC01 FE//ZN	97025690	8	1	380	917304508	CRANE OPERATOR CABIN P
PLATE 2X704X353 DC01	970509808	56	1	639	917291908	PIVOT SECTION, PRE-ASSEMB
PLATE 2X70X80 DC01	953515408	8	3	323	917626608	FUEL TANK ADD-ON UNIT
PLATE 2X719X40 DC01 FE//ZN	97005273	4	1	393	966497908	FRONT WINDOW CPL.
PLATE 2X730X110 ALMG3 H11	97031642	7	32	17	919617108	CRAWLER TRACK TRAVEL G
PLATE 2X737X46 DC01 RAL 90	979022508	6	1	394	965784408	ROOF WINDOW PRE-ASS.
PLATE 2X771X357 ALMG3 H11	97050762	5	1	280	96034631	RADIATOR, PRE-ASSEMBLED
PLATE 2X779X198 ALMG3 H11	97059376	3	1	280	96034631	RADIATOR, PRE-ASSEMBLED
PLATE 2X77X96 DC01 FE//ZNNI	97031462	36	2	365	917259908	CRANE DRIVER CAB ADDITIO
PLATE 2X808X498 ALMG3 H11	97133336	3	1	497	96039740	ADDITIONAL PARTS CLADDIN
PLATE 2X810X132 DC01 RAL 7	97000470	14	1	383	917305408	INTERNAL PANELLING INSTA
PLATE 2X90X60 DC01 FE//ZNNI	97032617	5	8	25	968019508	LIMIT SWITCH ADD-ON
PLATE 2X90X60 DC01 FE//ZNNI	97104898	112	12	71	919254308	CRAWLER SUPPORT PREASS
PLATE 2X90X60 DC01 FE//ZNNI	97104898	113	12	101	919254408	CRAWLER SUPPORT PREASS
PLATE 2X98X168 ALMG3 H111	97031274	2	1	81	967972408	COVER PRE-ASSY.
PLATE 2X99X24 DC01 FE//ZNNI	979718908	22	2	429	96036790	SLEWING PLATFORM PANELLI
PLATE 2x230x225 DC01+ZE	970536208	13	10	648	917292108	TELESCOPIC SECT.2 PRE-AS
PLATE 2x230x225 DC01+ZE	970536208	13	10	652	917292208	TELESCOPIC SECT.3 PRE-ASS
PLATE 2x230x225 DC01+ZE	970536208	13	10	656	917292308	TELESCOPIC SECT.IV PRE-A
PLATE 2x230x225 DC01+ZE	970536208	35	10	661	917292408	TELESCOPIC SECT.5 PRE-AS
PLATE 2x320x35 DC01+ZE	956348908	15	1	731	917267508	TRANSPORT MOUNTING
PLATE 2x350x225 DC01+ZE	970545708	13	10	644	917292008	TELESCOPIC SECTION 1 PRE
PLATE 30X130X30 S355J2+N	97031659	3	2	728	917413208	SELF-ERECT. AUX. HOIST GEA
PLATE 30X210X140 S355J2+N	97033307	5	1	475	967978908	INTERLOCKING
PLATE 30X246X99 S355J2+N	97033309	6	1	475	967978908	INTERLOCKING
PLATE 30X370X50 S960QL FE/	972898708	50	2	639	917291908	PIVOT SECTION, PRE-ASSEMB
PLATE 30X370X50 S960QL FE/	972898708	54	2	644	917292008	TELESCOPIC SECTION 1 PRE
PLATE 35X96X20 S690QL	97031206	6	2	577	967969608	AUXILIARY HOISTING GEAR 2
PLATE 3X1039X407 DC01 FE//	97034193	8	1	737	917268208	LADDER ATTACHMENT
PLATE 3X105X91 X5CRNI18-10	97081505	8	2	369	967986308	BEARING INSTALLATION
PLATE 3X1101X716 DC01	97040643	1	1	85	968420608	STORAGE BOX
PLATE 3X120X95 DC01 FE//ZN	97050879	12	1	275	919007708	DRIVE ASSEMBLY, PRE-ASSE
PLATE 3X135X251 ALMG3 H1	97045292	5	1	385	966282308	PANELLING,LEFT

Description	Item	Pos.	Quantity	Page	Assembly	Description
PLATE 3X140X72 DC01 FE//ZN	97039936	24	2	275	919007708	DRIVE ASSEMBLY, PRE-ASSE
PLATE 3X150X90 S355MC FE//	979672708	18	1	158	918731108	ASSEMBLY PARTS F.SLEWING
PLATE 3X185X122 DC01 FE//ZN	97050881	10	1	275	919007708	DRIVE ASSEMBLY, PRE-ASSE
PLATE 3X190X80 DC01 FE//ZN	97038475	23	2	275	919007708	DRIVE ASSEMBLY, PRE-ASSE
PLATE 3X191X55 X5CRNI18-10	97031901	2	1	491	919372008	EXHAUST SYSTEM
PLATE 3X191X55 X5CRNI18-10	97059489	4	3	491	919372008	EXHAUST SYSTEM
PLATE 3X193X93 S355MC FE//	97081862	6	2	373	96025887	PEDAL CANTILEVER INSTALL
PLATE 3X195X183 DC01 FE//ZN	97034243	52	1	462	918759808	ADD HEATING SUPERSTRUCT
PLATE 3X231X267 DC01	97041755	14	1	85	968420608	STORAGE BOX
PLATE 3X234X43 DC01 FE//ZN	973246808	20	4	644	917292008	TELESCOPIC SECTION 1 PRE
PLATE 3X234X43 DC01 FE//ZN	973246808	20	4	648	917292108	TELESCOPIC SECT.2 PRE-AS
PLATE 3X234X43 DC01 FE//ZN	973246808	20	4	652	917292208	TELESCOPIC SECT.3 PRE-ASS
PLATE 3X234X43 DC01 FE//ZN	973246808	20	4	656	917292308	TELESCOPIC SECT.IV PRE-A
PLATE 3X234X43 DC01 FE//ZN	973246808	43	4	661	917292408	TELESCOPIC SECT.5 PRE-AS
PLATE 3X240X109 S355MC FE//	97132207	2	2	142	96045206	MECHANICAL AUXILIARIES
PLATE 3X26X26 DC01 FE//ZNNI	971974208	22	2	417	918810308	CONTROL STAND
PLATE 3X27X206 X5CRNI18-10	97053174	6	1	719	968811608	CROSS BEAM
PLATE 3X283X263 DC01 FE//ZN	97033925	51	1	462	918759808	ADD HEATING SUPERSTRUCT
PLATE 3X286X480 ALMG3 H11	97118618	30	1	87	96034962	GUIDE LEFT
PLATE 3X286X480 ALMG3 H11	97118618	30	1	104	96034980	GUIDE RIGHT
PLATE 3X286X61 X5CRNI18-10	97043049	24	4	30	917511508	CRAWLER CENTRE PART PRE
PLATE 3X295X159 S355MC FE//	974680008	2	2	373	96025887	PEDAL CANTILEVER INSTALL
PLATE 3X300X84 DC01 FE//ZN	97037936	13	1	158	918731108	ASSEMBLY PARTS F.SLEWING
PLATE 3X30X119 X5CRNI18-10	97026779	54	1	405	917304708	SLIDING DOOR INSTALLATION
PLATE 3X30X156 DC01 FE//ZN	97101894	11	1	275	919007708	DRIVE ASSEMBLY, PRE-ASSE
PLATE 3X324X319 DC01	97118534	10	1	328	96034872	RETAINER CPL.
PLATE 3X325X398 S355MC FE//	97119732	10	1	545	96035117	MECHANICAL AUXILIARIES
PLATE 3X349X278 DC01 FE//ZN	97038364	(1)	1	478	969763408	PIPEWORK AIR INSTALLATIO
PLATE 3X366X104 DC01 RAL 9	977444008	15	1	417	918810308	CONTROL STAND
PLATE 3X366X104 DC01 RAL 9	977444108	16	1	417	918810308	CONTROL STAND
PLATE 3X40X40 DC01 FE//ZNNI	971974108	21	4	417	918810308	CONTROL STAND
PLATE 3X487X107 ALMG3 H11	97121228	1	1	497	96039740	ADDITIONAL PARTS CLADDIN
PLATE 3X50X65 DC01 FE//ZNNI	953756608	23	1	577	967969608	AUXILIARY HOISTING GEAR 2
PLATE 3X514X788 DC01 FE//ZN	97034194	9	1	737	917268208	LADDER ATTACHMENT
PLATE 3X60X25 DC01 FE//ZNNI	97001250	8	2	396	916168308	AIR DUCT
PLATE 3X60X80 DC01 FE//ZNNI	973717208	27	1	275	919007708	DRIVE ASSEMBLY, PRE-ASSE
PLATE 3X63X94 DC01 FE//ZNNI	97033348	23	1	414	969085208	HEATING, PRE-ASSEMBLED
PLATE 3X646X519 S355MC FE//	97053103	40	1	275	919007708	DRIVE ASSEMBLY, PRE-ASSE
PLATE 3X678X272 DC01	97040644	2	1	85	968420608	STORAGE BOX
PLATE 3X70X105 S355MC FE//	97039576	11	2	116	968046208	ADD-ON PARTS
PLATE 3X70X222 DC01 FE//ZN	97031203	3	2	577	967969608	AUXILIARY HOISTING GEAR 2
PLATE 3X70X75 DC01 RAL 300	953756708	5	2	738	968090008	MOUNTING HOOK ROD
PLATE 3X75X145 DC01 FE//ZN	97006497	3	1	737	917268208	LADDER ATTACHMENT
PLATE 3X75X61 X5CRNI18-10	97000492	26	1	405	917304708	SLIDING DOOR INSTALLATION
PLATE 3X80X55 DC01	97040645	3	1	85	968420608	STORAGE BOX
PLATE 3X80X68 DC01 FE//ZNNI	973717308	25	1	275	919007708	DRIVE ASSEMBLY, PRE-ASSE
PLATE 3X86X53 DC01 FE//ZNNI	957025408	28	4	644	917292008	TELESCOPIC SECTION 1 PRE
PLATE 3X86X53 DC01 FE//ZNNI	957025408	28	4	648	917292108	TELESCOPIC SECT.2 PRE-AS
PLATE 3X86X53 DC01 FE//ZNNI	957025408	28	4	652	917292208	TELESCOPIC SECT.3 PRE-ASS
PLATE 3X86X53 DC01 FE//ZNNI	957025408	28	4	656	917292308	TELESCOPIC SECT.IV PRE-A
PLATE 3X86X53 DC01 FE//ZNNI	957025408	45	4	661	917292408	TELESCOPIC SECT.5 PRE-AS
PLATE 3X926X218 S355MC FE//	97053104	41	1	275	919007708	DRIVE ASSEMBLY, PRE-ASSE
PLATE 3X98X74 DC01 FE//ZNNI	97050880	17	2	275	919007708	DRIVE ASSEMBLY, PRE-ASSE
PLATE 4X100X83 X5CRNI18-10	97047603	3	1	483	918484108	UREA PLANT
PLATE 4X110X180 S315MC FE//	97077348	(4)	1	478	969763408	PIPEWORK AIR INSTALLATIO
PLATE 4X110X50 S315MC FE//	97048340	20	1	475	967978908	INTERLOCKING
PLATE 4X110X77 S315MC FE//	979717908	2	2	433	968923508	FLAP RIGHT PRE-ASS.
PLATE 4X115X122 S315MC FE//	975427508	(3)	1	478	969763408	PIPEWORK AIR INSTALLATIO
PLATE 4X116X148 S315MC FE//	97031342	10	1	474	967928508	LOCKING
PLATE 4X117X158 S315MC FE//	97050764	7	1	280	96034631	RADIATOR, PRE-ASSEMBLED

Description	Item	Pos.	Quantity	Page	Assembly	Description
PLATE 4X125X178 S315MC FE//	97037626	20	2	34	96045225	ELECTR.FOR CENTER SECTIO
PLATE 4X128X75 S315MC FE//	972934408	(1)	1	699	967785008	ADDNL.HYDR. FOLDING JIB
PLATE 4X130X144 S315MC FE//	97049834	15	1	429	96036790	SLEWING PLATFORM PANELLI
PLATE 4X130X200 ALMG3 H11	97031273	1	1	81	967972408	COVER PRE-ASSY.
PLATE 4X130X30 S315MC FE//	97031684	6	8	728	917413208	SELF-ERECT. AUX. HOIST GEA
PLATE 4X132X73 S315MC FE//	97041747	26	1	275	919007708	DRIVE ASSEMBLY, PRE-ASSE
PLATE 4X134X188 S315MC FE//	97049833	14	1	429	96036790	SLEWING PLATFORM PANELLI
PLATE 4X138X138 S315MC FE//	975208408	6	1	370	96015921	OPERATING ELEMENT INSTAL
PLATE 4X140X178 S315MC FE//	975418208	8	1	545	96035117	MECHANICAL AUXILIARIES
PLATE 4X140X178 S315MC FE//	975418208	(4)	1	589	967784808	HYDR.AUXILIARY HOISTING
PLATE 4X155X100 S315MC FE//	97053626	23	4	30	917511508	CRAWLER CENTRE PART PRE
PLATE 4X159X133 S315MC FE//	97047272	25	2	352	917259708	MAIN HOIST GEAR
PLATE 4X168X113 S315MC FE//	97033897	16	1	21	96034894	PROTECTION PLATE CPL.
PLATE 4X168X113 S315MC FE//	97033897	16	1	24	96034977	PROTECTION PLATE
PLATE 4X168X113 S315MC FE//	97033935	15	1	21	96034894	PROTECTION PLATE CPL.
PLATE 4X168X113 S315MC FE//	97033935	15	1	24	96034977	PROTECTION PLATE
PLATE 4X178X133 S315MC FE//	97039694	12	1	158	918731108	ASSEMBLY PARTS F.SLEWING
PLATE 4X180X143 S700MC	97033009	23	2	121	919644008	HYDRAULIC SUPPORT
PLATE 4X180X145 S700MC	97033010	24	2	121	919644008	HYDRAULIC SUPPORT
PLATE 4X180X180 ALMG3 H11	97031271	1	1	80	967972308	COVER PRE-ASSY.
PLATE 4X180X180 ALMG3 H11	97037975	1	1	82	968270108	COVER PRE-ASSY.
PLATE 4X180X40 S315MC FE//	97093426	15	1	87	96034962	GUIDE LEFT
PLATE 4X180X40 S315MC FE//	97093426	15	1	104	96034980	GUIDE RIGHT
PLATE 4X190X188 S315MC FE//	974272808	93	2	640	917291908	PIVOT SECTION, PRE-ASSEMB
PLATE 4X210X88 S315MC FE//	97015127	55	2	137	919499408	CENTRAL BALLAST
PLATE 4X2114X788 S315MC FE	97093430	1	1	21	96034894	PROTECTION PLATE CPL.
PLATE 4X2114X788 S315MC FE	97093430	1	1	24	96034977	PROTECTION PLATE
PLATE 4X215X208 S315MC FE//	97050763	6	1	280	96034631	RADIATOR, PRE-ASSEMBLED
PLATE 4X223X107 S315MC FE//	97093425	16	1	87	96034962	GUIDE LEFT
PLATE 4X223X107 S315MC FE//	97118621	16	1	104	96034980	GUIDE RIGHT
PLATE 4X230X280 ALMG3 H11	97038088	1	1	83	968274208	COVER PRE-ASSY.
PLATE 4X239X313 S315MC FE//	97093428	4	1	87	96034962	GUIDE LEFT
PLATE 4X239X313 S315MC FE//	97093428	4	1	104	96034980	GUIDE RIGHT
PLATE 4X240X188 S315MC FE//	97034296	12	1	429	96036790	SLEWING PLATFORM PANELLI
PLATE 4X250X190 S315MC FE//	953749408	4	1	661	917292408	TELESCOPIC SECT.5 PRE-AS
PLATE 4X255X278 X5CRNI18-1	97047477	3	2	494	96048826	EXHAUST SYSTEM PRE-ASSE
PLATE 4X260X173 S315MC FE//	97031570	8	1	439	969015908	SLEWING PLATFORM PANELLI
PLATE 4X263X50 S315MC FE//	97030037	9	1	474	967928508	LOCKING
PLATE 4X283X50 S315MC FE//	97042636	30	1	474	967928508	LOCKING
PLATE 4X288X139 S315MC FE//	97049782	13	1	429	96036790	SLEWING PLATFORM PANELLI
PLATE 4X290X230 S315MC FE//	953717608	74	1	640	917291908	PIVOT SECTION, PRE-ASSEMB
PLATE 4X30X82 X5CRNI18-10	97093827	5	4	494	96048826	EXHAUST SYSTEM PRE-ASSE
PLATE 4X32X32 ALMG3 H111	972353808	4	2	280	96034631	RADIATOR, PRE-ASSEMBLED
PLATE 4X347X222 S315MC FE//	97000389	6	1	399	916163008	WIPERS INSTALLATION
PLATE 4X348X241 S315MC FE//	97093429	3	1	21	96034894	PROTECTION PLATE CPL.
PLATE 4X348X241 S315MC FE//	97118611	3	1	24	96034977	PROTECTION PLATE
PLATE 4X350X235 ALMG3 H11	97045974	1	1	84	968709108	COVER PRE-ASSY.
PLATE 4X383X50 S315MC FE//	97097713	2	1	87	96034962	GUIDE LEFT
PLATE 4X383X50 S315MC FE//	97097713	2	1	104	96034980	GUIDE RIGHT
PLATE 4X386X404 S315MC FE//	97033143	18	1	439	969015908	SLEWING PLATFORM PANELLI
PLATE 4X396X88 S315MC FE//	97033250	56	2	137	919499408	CENTRAL BALLAST
PLATE 4X401X406 S315MC FE//	97033142	17	1	439	969015908	SLEWING PLATFORM PANELLI
PLATE 4X425X184 S315MC FE//	97051275	11	2	721	968728808	CONSOLE PRE-ASS.
PLATE 4X429X566 S315MC	97124562	1	1	545	96035117	MECHANICAL AUXILIARIES
PLATE 4X449X88 S315MC FE//	97033251	57	2	137	919499408	CENTRAL BALLAST
PLATE 4X450X40 S315MC FE//	97038560	55	2	17	919617108	CRAWLER TRACK TRAVEL G
PLATE 4X461X547 S315MC RA	97084642	7	1	483	918484108	UREA PLANT
PLATE 4X463X307 S315MC FE//	97093427	1	1	87	96034962	GUIDE LEFT
PLATE 4X463X307 S315MC FE//	97093427	1	1	104	96034980	GUIDE RIGHT
PLATE 4X48X29 S315MC RAL	97007597	60	4	384	917305408	INTERNAL PANELLING INSTA

Description	Item	Pos.	Quantity	Page	Assembly	Description
PLATE 4X491X110 S315MC FE//	971071608	43	4	639	917291908	PIVOT SECTION, PRE-ASSEMB
PLATE 4X491X110 S315MC FE//	971071608	61	4	645	917292008	TELESCOPIC SECTION 1 PRE
PLATE 4X491X110 S315MC FE//	971071608	61	4	648	917292108	TELESCOPIC SECT.2 PRE-AS
PLATE 4X491X110 S315MC FE//	971071608	61	4	652	917292208	TELESCOPIC SECT.3 PRE-ASS
PLATE 4X491X110 S315MC FE//	971071608	61	4	656	917292308	TELESCOPIC SECT.IV PRE-A
PLATE 4X499X309 S315MC FE//	97032133	21	4	30	917511508	CRAWLER CENTRE PART PRE
PLATE 4X518X425 S315MC RA	97084641	1	1	483	918484108	UREA PLANT
PLATE 4X519X204 S315MC FE//	97029040	50	1	464	96020359	ADDNL.HEATING, PRE-ASSE
PLATE 4X52X32 S315MC FE//	97024783	24	1	390	916162508	WINDOW ASSEMBLY
PLATE 4X55X180 S315MC FE//	954313608	11	1	545	96035117	MECHANICAL AUXILIARIES
PLATE 4X60X115 S315MC FE//	97032838	7	32	116	968046208	ADD-ON PARTS
PLATE 4X60X163 S315MC FE//	97045111	35	1	275	919007708	DRIVE ASSEMBLY, PRE-ASSE
PLATE 4X60X163 S315MC FE//	97045111	4	1	545	96035117	MECHANICAL AUXILIARIES
PLATE 4X60X50 S315MC FE//	975614108	20	1	275	919007708	DRIVE ASSEMBLY, PRE-ASSE
PLATE 4X62X134 S315MC	97132169	82	2	137	919499408	CENTRAL BALLAST
PLATE 4X644X199 S315MC FE//	97031349	5	1	565	967980508	OIL COOLER, PRE-ASSEMBLE
PLATE 4X668X480 ALMG3 H11	97031266	1	1	79	967972208	COVER PRE-ASSY.
PLATE 4X668X480 ALMG3 H11	97033100	1	1	102	968055808	COVER PRE-ASSY.
PLATE 4X701X174 S315MC FE//	97031351	4	1	565	967980508	OIL COOLER, PRE-ASSEMBLE
PLATE 4X713X228 X5CRNI18-1	97001318	(2)	1	372	916177508	STEP CPL.
PLATE 4X730X110 ALMG3 H11	97031641	6	32	17	919617108	CRAWLER TRACK TRAVEL G
PLATE 4X73X20 S315MC FE//	97033103	50	4	462	918759808	ADD HEATING SUPERSTRUCT
PLATE 4X74X219 S315MC FE//	97132168	81	2	137	919499408	CENTRAL BALLAST
PLATE 4X751X167 S315MC FE//	97031540	7	1	439	969015908	SLEWING PLATFORM PANELLI
PLATE 4X784X220 S315MC FE//	97031571	9	1	439	969015908	SLEWING PLATFORM PANELLI
PLATE 4X81X40 S315MC FE//	97053350	13	1	439	969015908	SLEWING PLATFORM PANELLI
PLATE 4X90X67 S315MC FE//	954113708	27	2	429	96036790	SLEWING PLATFORM PANELLI
PLATE 4X93X68 S315MC RAL	97006057	19	1	393	966497908	FRONT WINDOW CPL.
PLATE 4X95X262 S315MC FE//	97044721	1	1	574	918628408	AIR COND. UNIT SUPERSTRU
PLATE 4X965X279 ALMG3 H11	972357608	24	2	352	917259708	MAIN HOIST GEAR
PLATE 4x134x58 S315MC FE//	970837708	32	2	672	966134608	ADD-ON PARTS CYLINDER
PLATE 5X1098X60 S355MC	975302308	81	1	640	917291908	PIVOT SECTION, PRE-ASSEMB
PLATE 5X110X122 X5CRNI18-1	97008318	3	1	610	968290608	STAND
PLATE 5X110X122 X5CRNI18-1	97008318	2	1	613	968267208	STAND
PLATE 5X125X73 S960QL	973153908	68	2	662	917292408	TELESCOPIC SECT.5 PRE-AS
PLATE 5X160X160 S700MC	971050008	7	1	705	917268408	BOOM NOSE
PLATE 5X190X90 S355MC FE//	97034262	61	1	71	919254308	CRAWLER SUPPORT PREASS
PLATE 5X190X90 S355MC FE//	97034262	61	1	101	919254408	CRAWLER SUPPORT PREASS
PLATE 5X269X181 S355MC FE//	97032020	7	1	134	919087608	ROTARY FEED THROUGH
PLATE 5X280X200 S355MC FE//	97039973	62	2	18	919617108	CRAWLER TRACK TRAVEL G
PLATE 5X380X79 X5CRNI18-10	975683808	(4)	1	372	916177508	STEP CPL.
PLATE 5X380X79 X5CRNI18-10	975685808	(3)	1	372	916177508	STEP CPL.
PLATE 5X443X254 S355MC FE//	97104844	111	1	71	919254308	CRAWLER SUPPORT PREASS
PLATE 5X443X254 S355MC FE//	97104844	112	1	101	919254408	CRAWLER SUPPORT PREASS
PLATE 5X62X96 S960QL	954706408	10	1	644	917292008	TELESCOPIC SECTION 1 PRE
PLATE 5X62X96 S960QL	954706408	10	1	648	917292108	TELESCOPIC SECT.2 PRE-AS
PLATE 5X62X96 S960QL	954706408	10	1	652	917292208	TELESCOPIC SECT.3 PRE-ASS
PLATE 5X62X96 S960QL	954706408	10	1	656	917292308	TELESCOPIC SECT.IV PRE-A
PLATE 5X62X96 S960QL	954706408	27	1	661	917292408	TELESCOPIC SECT.5 PRE-AS
PLATE 5X649X337 S355MC FE//	97103683	101	2	71	919254308	CRAWLER SUPPORT PREASS
PLATE 5X649X337 S355MC FE//	97103683	101	2	101	919254408	CRAWLER SUPPORT PREASS
PLATE 5X70X130 S355MC FE//	97032691	12	72	111	917691008	FALL PROTECTION
PLATE 5X86X267 S355MC FE//	97103682	100	2	71	919254308	CRAWLER SUPPORT PREASS
PLATE 5X86X267 S355MC FE//	97103682	100	2	101	919254408	CRAWLER SUPPORT PREASS
PLATE 5X90X189 S355MC FE//	97061426	41	4	17	919617108	CRAWLER TRACK TRAVEL G
PLATE 6X125X73 S960QL	973154008	65	2	645	917292008	TELESCOPIC SECTION 1 PRE
PLATE 6X125X73 S960QL	973154008	65	2	649	917292108	TELESCOPIC SECT.2 PRE-AS
PLATE 6X125X73 S960QL	973154008	65	2	653	917292208	TELESCOPIC SECT.3 PRE-ASS
PLATE 6X125X73 S960QL	973154008	65	2	657	917292308	TELESCOPIC SECT.IV PRE-A
PLATE 6X125X73 S960QL	973154008	67	2	662	917292408	TELESCOPIC SECT.5 PRE-AS

Description	Item	Pos.	Quantity	Page	Assembly	Description
PLATE 6X312X90 S355MC FE//	97033021	4	2	352	917259708	MAIN HOIST GEAR
PLATE 6X519X80 S355MC	973336908	31	2	639	917291908	PIVOT SECTION, PRE-ASSEMB
PLATE 8X1054X560 S700MC	975221808	49	1	731	917267508	TRANSPORT MOUNTING
PLATE 8X110X70 S960QL FE/	971753708	53	4	639	917291908	PIVOT SECTION, PRE-ASSEMB
PLATE 8X110X70 S960QL FE/	971753708	34	4	644	917292008	TELESCOPIC SECTION 1 PRE
PLATE 8X110X70 S960QL FE/	971753708	34	4	648	917292108	TELESCOPIC SECT.2 PRE-AS
PLATE 8X110X70 S960QL FE/	971753708	34	4	652	917292208	TELESCOPIC SECT.3 PRE-ASS
PLATE 8X110X70 S960QL FE/	971753708	34	4	656	917292308	TELESCOPIC SECT.IV PRE-A
PLATE 8X25X160 S355MC FE//	952940908	5	2	433	968923508	FLAP RIGHT PRE-ASS.
PLATE 8X270X205 S700MC	97030303	5	2	625	967936908	COUNTERWEIGHT CPL.
PLATE 8X270X205 S700MC	97030304	6	2	625	967936908	COUNTERWEIGHT CPL.
PLATE 8X30X58 S355MC FE//	955974308	31	1	731	917267508	TRANSPORT MOUNTING
PLATE 8X70X182 S960QL	955552608	29	1	731	917267508	TRANSPORT MOUNTING
PLATE 8X82X290 S355MC FE//	97031537	6	1	365	917259908	CRANE DRIVER CAB ADDITIO
PLATE 8X84X108 S355MC FE//	956474508	23	2	352	917259708	MAIN HOIST GEAR
PLATE 8X84X108 S355MC FE//	956474508	4	2	577	967969608	AUXILIARY HOISTING GEAR 2
PLATE 8X88X270 S960QL FE/	970422908	38	2	639	917291908	PIVOT SECTION, PRE-ASSEMB
PLATE 8X88X270 S960QL FE/	970422908	40	2	644	917292008	TELESCOPIC SECTION 1 PRE
PLATE 8X88X270 S960QL FE/	970422908	40	2	648	917292108	TELESCOPIC SECT.2 PRE-AS
PLATE 8X88X270 S960QL FE/	970422908	40	2	652	917292208	TELESCOPIC SECT.3 PRE-ASS
PLATE 8X88X270 S960QL FE/	970422908	40	2	656	917292308	TELESCOPIC SECT.IV PRE-A
PLATE 8x240x240 S960QL	970491108	3	1	666	918807308	MECHANICAL EXTENSION SYS
PLATE FE//ZNNI8//CN//T0	968054808	5	2	352	917259708	MAIN HOIST GEAR
PLATE GLAS 315X178	10675116	(1)	1	458	917260408	MIRROR ATTACHM.AT SLEW.P
PLATE IDENTIFICATION NUMB	973567608	10	2	629	968068308	ASSEMBLY DEVICE
PLATE S315MC FE//ZNNI8//CN/	953696908	22	2	502	917261208	CENT. LUBRIC. SYSTEM SUP
PLATE S315MC FE//ZNNI8//CN/	970762808	9	1	545	96035117	MECHANICAL AUXILIARIES
PLATE S315MC FE//ZNNI8//CN/	970762808	(3)	1	589	967784808	HYDR.AUXILIARY HOISTING
PLATE STAHLBLECH	11083215	7	1	412	11083498	AIR CONDITIONING UNIT
PLATE WELDED	966363808	37	1	405	917304708	SLIDING DOOR INSTALLATION
PLATE WELDED FE//ZNNI8//C	966629308	1	1	373	96025887	PEDAL CANTILEVER INSTALL
PLATE WELDED FE//ZNNI8//C	967257808	39	2	417	918810308	CONTROL STAND
PLATE WELDED FE//ZNNI8//C	967775308	34	1	383	917305408	INTERNAL PANELLING INSTA
PLATE WELDED FE//ZNNI8//C	969302208	4	1	494	96048826	EXHAUST SYSTEM PRE-ASSE
PLATE WELDED FE//ZNNI8//FN/	966497808	2	1	393	966497908	FRONT WINDOW CPL.
PLATE WELDED RAL 9005,M,G	96022873	1	1	453	96022872	CONTROL PANEL ROOF
PLATE WELDED RAL 9005,M,G	965417108	17	1	449	96036957	ELECTRIC ADD-ON PARTS CA
PLATFORM HOLDING REAR R	967307008	26	1	372	916177508	STEP CPL.
PLATING FABRIKDATEN	916283508	40	1	9		LIEBHERR LTR 1220
PLUG	920381108	503	1	44	96045228	WIRING HARNESS
PLUG	927996308	508	1	510	96045385	WIRING HARNESS
PLUG	927996308	517	1	513	96037136	WIRING HARNESS
PLUG 10-POLIG	11690056	4	1	363	10802061	WINCH REVOLUTION TRANS
PLUG 12-POL	10491808	(2)	1	445	96036954	CABLE LIST DRIVER'S CABIN
PLUG 2	10492113	(1)	1	445	96036954	CABLE LIST DRIVER'S CABIN
PLUG 2-POL SW	11342255	511	1	514	96037137	WIRING HARNESS
PLUG 3-POL	6003168	516	1	514	96037137	WIRING HARNESS
PLUG 4-POL 13A	6003248	503	1	514	96037137	WIRING HARNESS
PLUG 4-POL SW	11342257	513	1	514	96037137	WIRING HARNESS
PLUG 4-POL VIOLETT	11342259	514	1	514	96037137	WIRING HARNESS
PLUG 6-POL	604508608	514	3	44	96045228	WIRING HARNESS
PLUG 6-POL	604508608	508	1	516	96037133	LEAD
PLUG 6-POL	604508608	506	2	617	96037132	LEAD
PLUG 8-POL	10046999	508	10	520	96045387	CABLES, BASIC CONSTRUCTI
PLUG 8-POL	10047000	515	10	520	96045387	CABLES, BASIC CONSTRUCTI
PLUG 8-POL	10047001	513	10	520	96045387	CABLES, BASIC CONSTRUCTI
PLUG 9-POL PVC	10301148	520	1	446	96036955	WIRING HARNESS
PLUG BASE 9-POLE	630122908	506	2	43	96045227	WIRING HARNESS
PLUG BASE 9-POLE	630122908	512	23	520	96045387	CABLES, BASIC CONSTRUCTI
PLUG BODY 3-POL	605012408	517	1	44	96045228	WIRING HARNESS

Description	Item	Pos.	Quantity	Page	Assembly	Description
PLUG BODY 4-POL	605613908	510	1	513	96037136	WIRING HARNESS
PLUG BUSHING 0,5-1,0MM2	7624353	761	2	447	96036955	WIRING HARNESS
PLUG BUSHING 0,75-1,0MM2 C	11000401	2253	3	515	96037137	WIRING HARNESS
PLUG BUSHING 0,75-2,0MM2 C	10100063	670	4	447	96036955	WIRING HARNESS
PLUG BUSHING 0,75-2,0MM2 C	10100063	670	11	513	96037136	WIRING HARNESS
PLUG BUSHING 0,75-2,0MM2 C	10100063	670	6	514	96037137	WIRING HARNESS
PLUG CONTACT CPL. 4 POL P	10874178	505	1	514	96037137	WIRING HARNESS
PLUG DIN 72585 4-POL POLY	692406308	505	1	510	96045385	WIRING HARNESS
PLUG DIN 72585 4-POL POLY	692406308	508	1	514	96037137	WIRING HARNESS
PLUG DIN 72585 7-POL POLY	692406708	507	1	510	96045385	WIRING HARNESS
PLUG M1	10476383	524	2	44	96045228	WIRING HARNESS
PLUG M1	10476383	(504)	1	711	917598408	ELECTRIC MEASURING & WAR
PLUG M8	514539308	12	1	297	10008308	CONNECTING PLATE
PLUG PLATE 1.5X449X175 DC0	97010811	6	1	522	969256608	BASE ASSEMBLY
PLUG PLATE 1.5X594X283 DC0	97010812	7	1	522	969256608	BASE ASSEMBLY
PLUG SHELL	11822050	522	1	446	96036955	WIRING HARNESS
PLUG SHELL 12-POL 13A TH.P	10412433	512	1	513	96037136	WIRING HARNESS
PLUG SHELL 14-POL	602336008	511	4	446	96036955	WIRING HARNESS
PLUG SHELL 14-POL	602336008	506	6	520	96045387	CABLES, BASIC CONSTRUCTI
PLUG SHELL 14-POL	602336508	3	6	525	926891108	GROUND RAIL
PLUG SHELL 18-POL	602300208	504	2	44	96045228	WIRING HARNESS
PLUG SHELL 18-POL	602300208	501	9	446	96036955	WIRING HARNESS
PLUG SHELL 18-POL	602300208	501	6	448	96036956	WIRING HARNESS
PLUG SHELL 18-POL	602300208	501	10	510	96045385	WIRING HARNESS
PLUG SHELL 18-POL	602300208	501	11	513	96037136	WIRING HARNESS
PLUG SHELL 18-POL	602300208	501	2	514	96037137	WIRING HARNESS
PLUG SHELL 18-POL	602300208	523	1	520	96045387	CABLES, BASIC CONSTRUCTI
PLUG SHELL 2 13A TH.PLAST	10342517	509	2	446	96036955	WIRING HARNESS
PLUG SHELL 2 13A TH.PLAST	10342517	509	3	513	96037136	WIRING HARNESS
PLUG SHELL 2 13A TH.PLAST	10342517	502	2	514	96037137	WIRING HARNESS
PLUG SHELL 2-POL	6004195	520	2	513	96037136	WIRING HARNESS
PLUG SHELL 2-POL 13A TH.P	10429638	530	1	513	96037136	WIRING HARNESS
PLUG SHELL 2-POLE 9,5A	602331808	509	2	448	96036956	WIRING HARNESS
PLUG SHELL 4-POL	602335908	514	1	43	96045227	WIRING HARNESS
PLUG SHELL 4-POL	602335908	515	4	446	96036955	WIRING HARNESS
PLUG SHELL 4-POL	602335908	511	1	448	96036956	WIRING HARNESS
PLUG SHELL 4-POL	602335908	516	4	520	96045387	CABLES, BASIC CONSTRUCTI
PLUG SHELL 62-POL PBT-GF2	10678453	503	1	513	96037136	WIRING HARNESS
PLUG SHELL 62-POL PBT-GF2	10678452	514	1	513	96037136	WIRING HARNESS
PLUG SHELL 8-POL	10021571	507	1	43	96045227	WIRING HARNESS
PLUG SHELL D-SUB METALL	10355170	505	2	446	96036955	WIRING HARNESS
PLUG SHELL D-SUB METALL	10355182	503	4	446	96036955	WIRING HARNESS
PLUG SHELL HP PBT-GF15	11000394	515	1	514	96037137	WIRING HARNESS
PLUG SHELL MCON MCP1,2	10813633	507	2	514	96037137	WIRING HARNESS
PLUG SOCKET BODY 3-POL	605212708	508	1	44	96045228	WIRING HARNESS
PLUG SOCKET BODY 3-POL	605212708	519	1	513	96037136	WIRING HARNESS
PLUG SOCKET BODY 4-POLE	605251608	502	1	44	96045228	WIRING HARNESS
PLUG SOCKET BODY 4-POLE	605251608	506	1	510	96045385	WIRING HARNESS
PLUG-IN CONNECTOR GE M8X	12101847	8	1	502	917261208	CENT. LUBRIC. SYSTEM SUP
PLUG-IN CONNECTOR GE M8X	12101847	4	1	586	921444108	CENTRAL LUBRICATING SYS
PLUG-IN CONNECTOR GERAD	11183029	2	12	130	11347500	DISTRIBUTION BLOCK
PLUG-IN SLEEVE E10-7	772002708	31	1	483	918484108	UREA PLANT
PLUG-IN SLEEVE E8-6 EDELST	10871759	36	2	483	918484108	UREA PLANT
PNEUMATIC LINES UPPER C	969763608	12	1	478	969763408	PIPEWORK AIR INSTALLATIO
POCKET KUNSTSTOFF	740300008	22	1	383	917305408	INTERNAL PANELLING INSTA
POIGNEE 118X18X43	10870376	3	2	378	968514508	INSTALLATION SWITCH CAB. C
POINTER 3X146X110 DC01 FE//	97033038	9	1	350	917259608	ROTATING PLATFORM LOCK
POLYAMID PIPE DIN 73378 6X1	10873149	27	50	127	917257108	CENTRALIZED LUBRICATION
POLYAMID PIPE DIN 73378 6X1	10873149	14	50	502	917261208	CENT. LUBRIC. SYSTEM SUP
POLYAMID PIPE DIN 73378 6X1	10873149	5	5	586	921444108	CENTRAL LUBRICATING SYS

Description	Item	Pos.	Quantity	Page	Assembly	Description
POST	96004280	10	4	623	917260608	COUNTERWEIGHT WITH CLAM
POUCH SOCKET 23-26 SPF	10040024	122	2	10		LIEBHERR LTR 1220
POWER TAKE-OFF ADD-ON	10125687	650	1	165	12856862	DIESEL ENGINE
POWER TAKE-OFF ADD-ON	10144036	652	1	165	12856862	DIESEL ENGINE
POWER TAKE-OFF FLANGE	939292301	10	1	357	939292201	PLANETARY GEARBOX
POWER UNIT SUPPORT ATT	10147687	12	1	160	12856862	DIESEL ENGINE
PRE-ASSEMBLY MOUNTING U	968063108	4	1	518	919503008	SWITCHBOX MOUNTING PART
PRECISION RESISTOR -40/+12	10449516	9	3	449	96036957	ELECTRIC ADD-ON PARTS CA
PREFEEDING PUMP	12873083	1	1	207	10149198	RK PRE-FEED PUMP
PREMOUNT.AXIAL FLOW FAN	963398008	35	1	449	96036957	ELECTRIC ADD-ON PARTS CA
PREMOUNT.AXIAL FLOW FAN	963398008	26	2	522	969256608	BASE ASSEMBLY
PREMOUNTED FUEL FILTER	96034868	1	1	326	919231108	FUEL FEED
PRESSURE ADAPTER FASTEN	10135434	220	1	210	10153151	HIGH PRESS.CONNECTOR W
PRESSURE CONTROL VALVE	10342823	20	1	546	11211756	CONTROL BLOCK
PRESSURE FILTER	510671508	165	2	538	96045351	HYDRAULICS UPPER CARRI
PRESSURE LIMITING VALVE	10280213	60	1	597	10038509	CONTROL BLOCK
PRESSURE LIMITING VALVE	10280214	70	1	597	10038509	CONTROL BLOCK
PRESSURE LIMITING VALVE	10489734	7	1	555	11341035	CONTROL BLOCK
PRESSURE LIMITING VALVE	10492431	11	1	281	10429930	GEAR WHEEL MOTOR
PRESSURE LIMITING VALVE	570427408	7	1	552	10332882	CONTROL BLOCK
PRESSURE LIMITING VALVE	571723708	6	1	552	10332882	CONTROL BLOCK
PRESSURE LIMITING VALVE	571723808	8	1	552	10332882	CONTROL BLOCK
PRESSURE LIMITING VALVE	571899408	(1)	1	294	11210795	VARIABLE PUMP
PRESSURE LIMITING VALVE	571910208	37	1	668	10876933	TELESCOPIC CYLINDER
PRESSURE LIMITING VALVE	10872307	1	1	487	969904608	PRESSURE RELIEF VALVE PR
PRESSURE LIMITING VALVE	511450208	150	1	693	967785408	ADDNL.HYDR. FOLDING JIB
PRESSURE LIMITING VALVE	11161570	168	1	538	96045351	HYDRAULICS UPPER CARRI
PRESSURE LIMITING VALVE	511456808	195	1	539	96045351	HYDRAULICS UPPER CARRI
PRESSURE LIMITING VALVE	511419608	198	1	539	96045351	HYDRAULICS UPPER CARRI
PRESSURE LIMITING VALVE	511433908	162	2	538	96045351	HYDRAULICS UPPER CARRI
PRESSURE RELIEF VALVE	571328408	12	2	128	11347526	ELECTRIC PUMP
PRESSURE RELIEF VALVE	571328408	14	1	504	10327065	ELECTRIC PUMP
PRESSURE RELIEF VALVE P	969904608	16	1	483	918484108	UREA PLANT
PRESSURE RELIEF VALVE pm	10152592	12	1	200	10129474	OIL COOLER, PRE-ASSEMBLE
PRESSURE SENSOR 0-400/400	10813738	60	7	538	96045351	HYDRAULICS UPPER CARRI
PRESSURE SENSOR 0-400/400	10813738	53	1	589	967784808	HYDR.AUXILIARY HOISTING
PRESSURE SENSOR 0-400/400	10813738	51	1	688	967784508	HYDR.F.TELESCOPIC BOOM
PRESSURE SENSOR 0-400/400	10816185	61	1	538	96045351	HYDRAULICS UPPER CARRI
PRESSURE SENSOR 0-750/750	10813739	62	2	538	96045351	HYDRAULICS UPPER CARRI
PRESSURE SPRING	11102038	17	1	670	571928508	CYLINDER HEAD CPL.
PRESSURE SPRING	510783008	9	1	561	511419608	PRESSURE LIMITING VALVE
PRESSURE SPRING	510797508	9	1	558	511433908	PRESSURE LIMITING VALVE
PRESSURE SPRING	511015108	4	1	558	511433908	PRESSURE LIMITING VALVE
PRESSURE SPRING	511015308	4	1	561	511419608	PRESSURE LIMITING VALVE
PRESSURE SPRING	511025508	10	2	58	11643183	CONTROL BLOCK
PRESSURE SPRING	511025508	10	2	61	11643184	CONTROL BLOCK
PRESSURE SPRING	7023659	3	1	301	10472208	ADJUSTMENT
PRESSURE SPRING 0,6X5,1X4	11340583	2	1	302	10871043	VARIABLE PUMP
PRESSURE SPRING 1,6X14,4X	12101506	25	2	26	968036408	LIMIT SWITCH, PRE-ASSEMB
PRESSURE SPRING 1,6X18,2	720009408	22	4	672	966134608	ADD-ON PARTS CYLINDER
PRESSURE SPRING 1,8X7,3X4	10176329	7	10	345	90025782	BRAKE SPRING SET
PRESSURE SPRING 15X133X	720014908	2	1	644	917292008	TELESCOPIC SECTION 1 PRE
PRESSURE SPRING 15X133X	720014908	2	1	648	917292108	TELESCOPIC SECT.2 PRE-AS
PRESSURE SPRING 15X133X	720014908	2	1	652	917292208	TELESCOPIC SECT.3 PRE-ASS
PRESSURE SPRING 15X133X	720014908	2	1	656	917292308	TELESCOPIC SECT.IV PRE-A
PRESSURE SPRING 15X133X	720014908	22	1	661	917292408	TELESCOPIC SECT.5 PRE-AS
PRESSURE SPRING 1X4,1X41,	10176330	8	10	345	90025782	BRAKE SPRING SET
PRESSURE SPRING 2,10X17,8	9886756	9	1	200	10129474	OIL COOLER, PRE-ASSEMBLE
PRESSURE SPRING 2X12X41,7	11067867	38	1	405	917304708	SLIDING DOOR INSTALLATION
PRESSURE SPRING 3,2X16,8	10129501	4	1	202	10152592	PRESSURE RELIEF VALVE

Description	Item	Pos.	Quantity	Page	Assembly	Description
PRESSURE SPRING 3X17X74,	11118160	6	1	171	10138450	FINAL CONTROL VALVE
PRESSURE SPRING 4,60X28,4	9074481	9	4	191	10149579	CYLINDER HEAD PRE-ASSY.
PRESSURE SPRING 4X25X41 E	11003426	5	1	459	966707708	MIRROR RETAINER PRE-ASS.
PRESSURE SPRING 6,3X80X14	720011408	4	1	350	917259608	ROTATING PLATFORM LOCK
PRESSURE SPRING 8X92X50 F	10297691	5	1	370	96015921	OPERATING ELEMENT INSTAL
PRESSURE SPRING DIN 2098	720008508	6	1	733	923285508	FOLDING BRACKET PRE-ASS.
PRESSURE SPRING EN10270-	720012608	34	1	731	917267508	TRANSPORT MOUNTING
PRESSURE SWITCH 0-20/300	10289536	53	1	538	96045351	HYDRAULICS UPPER CARRI
PRESSURE SWITCH 0-20/300	10289536	51	1	589	967784808	HYDR.AUXILIARY HOISTING
PRESSURE SWITCH 0-8/300	10220933	54	1	538	96045351	HYDRAULICS UPPER CARRI
PRESSURE SWITCH 0-8/300	10220933	52	1	589	967784808	HYDR.AUXILIARY HOISTING
PRESSURE SWITCH 1,5-26 BA	571489108	106	1	280	96034631	RADIATOR, PRE-ASSEMBLED
PRESSURE SWITCH 10-100/40	510676908	50	1	90	96035796	HYDR.TRAVEL DRIVE
PRESSURE SWITCH 10-100/40	510676908	50	1	107	96035792	HYDR.TRAVEL DRIVE
PRESSURE TRANSMITTER 0,5-	10100781	(1)	1	258	12583633	ENGINE CONTROL SENSORS
PRESSURE TRANSMITTER 0,5-	12907020	(1)	1	258	12583633	ENGINE CONTROL SENSORS
PRESSURE TRANSMITTER 0-1	12907001	(1)	1	258	12583633	ENGINE CONTROL SENSORS
PRESSURE TRANSMITTER C	9076550	11	1	258	12583633	ENGINE CONTROL SENSORS
PRESSURE TRANSMITTER CP	9076531	10	2	258	12583633	ENGINE CONTROL SENSORS
PRESSURE VALVE	10875076	6	1	546	11211756	CONTROL BLOCK
PRESSURE VALVE	10875077	21	1	546	11211756	CONTROL BLOCK
PRESSURE/TEMPERATURE S	12414685	739	1	485	11373478	REDUCTION AGENT PUMP
PRETENSIONING VALVE 25BA	511322808	152	4	124	968077208	HYDRAULIC SUPPORT
PROFIL CLAMP 137,6/K1	10494115	182	1	491	919372008	EXHAUST SYSTEM
PROFIL CLAMP 137,6/K1	10494115	182	1	494	96048826	EXHAUST SYSTEM PRE-ASSE
PROFIL CLAMP 163,0/K1	10494116	181	1	491	919372008	EXHAUST SYSTEM
PROFIL CLAMP 163,0/K1	10494116	181	1	494	96048826	EXHAUST SYSTEM PRE-ASSE
PROFIL CLAMP 328/K1 X5CrNi	10141051	30	1	495	11403708	SCR-ASSEMBLY
PROFILE 667X50X12 ALMGSI0.	97001317	25	1	372	916177508	STEP CPL.
PROFILE PACKING DIN 3869 1	10040984	(2)	1	258	12583633	ENGINE CONTROL SENSORS
PROFILE RING P-R8-L/S A2GS	477100208	3	1	316	96039022	CONNECTION PIECE
PROFILE RING P-R8-L/S A2GS	477100208	38	1	483	918484108	UREA PLANT
PROFILE RING PR10-S/L A3P	477100308	32	1	483	918484108	UREA PLANT
PROFILE RING PR22-L A3P	477102808	(2)	1	314	96034515	EXPANSION TANK PRE-ASS.
PROFILE RING PR6-S/L A3P	477101408	13	22	127	917257108	CENTRALIZED LUBRICATION
PROFILE SEALING	7373052	(5)	1	305	10871282	VARIABLE PUMP
PROPORTIONAL MAGNET	11161919	(27)	1	74	11182596	VARIABLE DISPLACEMENT MO
PROPORTIONAL MAGNET 24V	10471437	2	2	287	11690588	CONTROL UNIT
PROPORTIONAL MAGNET 24V	10471437	(5)	2	290	11182664	TWO-STAGE PUMP
PROPORTIONAL MAGNET 24V	10471437	(5)	2	290	11182664	TWO-STAGE PUMP
PROPORTIONAL MAGNET 24V	10471437	(2)	2	294	11210795	VARIABLE PUMP
PROPORTIONAL MAGNET 24V	571911708	20	1	311	10292815	REGULATOR ELEMENT
PROTECTING CAP	610701108	525	1	513	96037136	WIRING HARNESS
PROTECTING CAP 180°	11060618	519	3	514	96037137	WIRING HARNESS
PROTECTING CAP 180°	11491349	522	1	514	96037137	WIRING HARNESS
PROTECTING CAP JPT	10874331	529	1	447	96036955	WIRING HARNESS
PROTECTING CAP JPT	10874331	521	4	513	96037136	WIRING HARNESS
PROTECTING CAP JPT 2 POL	11647373	522	2	513	96037136	WIRING HARNESS
PROTECTING CAP LLD-PE	789000701	34	1	354	90208882	COMPACT ROPE WINCH
PROTECTING CAP M26X1,5	7013456	3	1	178	5004624	OIL DRAIN PLUG
PROTECTING CAP MCP BUC	10678458	504	2	513	96037136	WIRING HARNESS
PROTECTING CAP NETZW. R	11008530	2	1	457	966979108	SOCKET
PROTECTING CAP STECKER 4	602339608	516	3	44	96045228	WIRING HARNESS
PROTECTING CAP SW 24	779040801	18	2	380	917304508	CRANE OPERATOR CABIN P
PROTECTING CAP SW10	779020108	2	6	523	922648308	TERMINAL BOARD PRE-ASS.
PROTECTING SHEET CPL.	96004318	30	1	275	919007708	DRIVE ASSEMBLY, PRE-ASSE
PROTECTION GUARD 3X140X4	97032687	3	2	338	919369308	SLEWING GEAR
PROTECTION PLATE	96034977	10	1	17	919617108	CRAWLER TRACK TRAVEL G
PROTECTION PLATE CPL.	96034894	2	1	17	919617108	CRAWLER TRACK TRAVEL G
PROTECTION WELDED STRU	96032850	8	1	483	918484108	UREA PLANT

Description	Item	Pos.	Quantity	Page	Assembly	Description
PROTECTIVE COVER NICHT	12466377	738	1	485	11373478	REDUCTION AGENT PUMP
PROTECTIVE HOSE 30MM AL-	11118396	211	3.8	514	96037137	WIRING HARNESS
PROTECTIVE HOSE DN16XNO	10871063	(507)	1	711	917598408	ELECTRIC MEASURING & WAR
PROTECTIVE HOSE DN20 NO	10870635	71	1.5	509	96045384	CABLE LIST SLEWING PLATF
PROTECTIVE HOSE DN20 NO	10870635	13	1.7	616	96037130	EQUIPMENT CAMERA SLEW C
PROTECTIVE HOSE DN20 NO	10870635	13	1.5	618	96037131	EQUIPMENT CAMERA WINCHE
PROTECTIVE PADDING	520402808	3	1	143	919328608	TOOLS AND ACCESSORIES
PROXIMITY SWITCH BERUEHR	10097613	1	1	505	11002916	DISTRIBUTION BLOCK
PROXIMITY SWITCH BERUEHR	11003193	(10)	2	508	968128908	EL.ADD-ON SET-LIMIT SWITCH
PULL ROD	10099209	25	4	128	11347526	ELECTRIC PUMP
PULL ROD	10099209	28	4	504	10327065	ELECTRIC PUMP
PULL-BACK PLATE	570110008	7	1	347	570109008	DRIVING GEAR
PUMP COVER	11690587	4	1	289	10871017	VARIABLE PUMP
PUMP ELEMENT	10216340	13	1	504	10327065	ELECTRIC PUMP
PUMP ELEMENT	11001770	39	2	128	11347526	ELECTRIC PUMP
PUMP ELEMENT	774387508	11	1	504	10327065	ELECTRIC PUMP
PUMP HOUSING	10014693	4	1	128	11347526	ELECTRIC PUMP
PUMP HOUSING	10014693	4	1	504	10327065	ELECTRIC PUMP
PUMP MP41 SPF	591055408	2	2	400	966408908	WATER CONTAINER CPL
PUMP RETURN FLOW	774372808	10	1	502	917261208	CENT. LUBRIC. SYSTEM SUP
PUMP SHAFT Z=40 M=2,25	9077327	1	1	262	9077386	AUXILIARY DRIVE PRE-ASS.
PUMP SUPPORT	10873571	4	1	294	11210795	VARIABLE PUMP
PUSH BUTTON	11171271	33	1	419	10877138	OPERATOR SEAT
PUSH BUTTON	606143008	18	1	453	96022872	CONTROL PANEL ROOF
PUSH BUTTON	606143008	8	1	529	969061708	CARRIER PLATE, PRE-ASSE
PUSH-BUTTON CAP FLACH GR	606145108	11	1	529	969061708	CARRIER PLATE, PRE-ASSE
PUSH-BUTTON CAP FLACH K	606144408	17	1	453	96022872	CONTROL PANEL ROOF
QUICK ACTING COUPLING	790042708	9	1	143	919328608	TOOLS AND ACCESSORIES
QUICK RELEASE FITTING	12101183	40	1	21	96034894	PROTECTION PLATE CPL.
QUICK RELEASE FITTING	12101183	40	1	24	96034977	PROTECTION PLATE
QUICK RELEASE FITTING	12101576	40	1	87	96034962	GUIDE LEFT
QUICK RELEASE FITTING	12101576	40	1	104	96034980	GUIDE RIGHT
QUICK RELEASE PIN 12X115X8	11160586	22	4	121	919644008	HYDRAULIC SUPPORT
QUICK RELEASE PIN 12X90X4	10490116	32	2	116	968046208	ADD-ON PARTS
QUICK RELEASE PIN 20X171,	11320194	46	4	30	917511508	CRAWLER CENTRE PART PRE
QUICK RELEASE PIN 20X171,	11320194	21	1	474	967928508	LOCKING
QUICK RELEASE PIN 20X171,	11320194	11	1	475	967978908	INTERLOCKING
QUICK RELEASE PIN NIROST	704008508	10	2	25	968019508	LIMIT SWITCH ADD-ON
RADIAL FAN	11083445	45	1	412	11083498	AIR CONDITIONING UNIT
RADIAL PACKING SET DRIVE	11494585	(98)	1	294	11210795	VARIABLE PUMP
RADIATOR HOOD	968100408	10	1	431	96017704	RADIATOR HOOD CPL.
RADIATOR HOOD CPL.	96017704	1	1	429	96036790	SLEWING PLATFORM PANELLI
RADIATOR, PRE-ASSEMBLED	96034631	2	1	275	919007708	DRIVE ASSEMBLY, PRE-ASSE
RADIO PREPARATION UPPER	915432508	391	1	12		LIEBHERR LTR 1220
RAIL PAIR	10650489	70	1	419	10877138	OPERATOR SEAT
RAPID FIXING	704259608	57	1	405	917304708	SLIDING DOOR INSTALLATION
REAR PROFILE 820X125X72.6	97000517	32	1	405	917304708	SLIDING DOOR INSTALLATION
REAR VISION MIRROR UNIT 20	10286840	(1)	1	424	916049908	MIRROR ATTACHM.IN CRANE
REAR WINDOW ESG SPF	97000279	5	1	390	916162508	WINDOW ASSEMBLY
RECEPTACLE 2,8X0,3-1,5 VER	602203108	67	2	448	96036956	WIRING HARNESS
RECEPTACLE 4,8X1,5	602225914	703	2	448	96036956	WIRING HARNESS
RECEPTACLE 5X1,5-2,5	602339108	642	4	43	96045227	WIRING HARNESS
RECEPTACLE 6,3X0,5-1,0 VER	11080881	758	5	43	96045227	WIRING HARNESS
RECEPTACLE 6,3X0,5-1,0 VER	11080881	758	18	447	96036955	WIRING HARNESS
RECEPTACLE 6,3X0,5-1,0 VER	11080881	758	4	448	96036956	WIRING HARNESS
RECEPTACLE 6,3X0,5-1,0 VER	11080881	758	4	513	96037136	WIRING HARNESS
RECEPTACLE 6,3X0,5-1,5 VER	602207608	140	1	448	96036956	WIRING HARNESS
RECEPTACLE 6,3X1-2,5 TIN-P	602203408	72	6	43	96045227	WIRING HARNESS
RECEPTACLE 6,3X1-2,5 TIN-P	602203408	72	3	446	96036955	WIRING HARNESS
RECEPTACLE 6,3X1-2,5 TIN-P	602203408	72	4	448	96036956	WIRING HARNESS

Description	Item	Pos.	Quantity	Page	Assembly	Description
RECEPTACLE 9,5X1-2,5 CUSN	602208408	143	2	446	96036955	WIRING HARNESS
RECEPTACLE FOR TABS 0,5-1	602320508	62	13	448	96036956	WIRING HARNESS
RECEPTACLE FOR TABS 6,3X	602303308	134	2	44	96045228	WIRING HARNESS
RECEPTACLE FOR TABS 6,3X	602303308	134	2	446	96036955	WIRING HARNESS
RECEPTACLE FOR TABS 6,3X	602303308	134	2	448	96036956	WIRING HARNESS
RECEPTACLE FOR TABS 6,3X	602303308	134	6	510	96045385	WIRING HARNESS
REDUCER M20X1,5-M16X1,5 P	10475314	9	1	603	917368108	EL.COOLANT PREHEAT
REDUCER M25X1,5 M16X1,5 P	10044648	12	2	598	918462708	EXTERNAL FEED
REDUCTION AGENT INJECTO	10144093	12	1	483	918484108	UREA PLANT
REDUCTION AGENT PRESSU	12418622	19	1	483	918484108	UREA PLANT
REDUCTION AGENT PUMP A	11373478	11	1	483	918484108	UREA PLANT
REFRIGERANT 12KG FLASCH	7020440	100	1.6	574	918628408	AIR COND. UNIT SUPERSTRU
REGULATION HYDRAULIC	7023643	5	1	295	11210798	VARIABLE PUMP
REGULATION REPAIR KIT	10872672	998	1	387	11002447	BLIND
REGULATOR	10292801	3	1	305	10871282	VARIABLE PUMP
REGULATOR	10472196	3	1	295	11210798	VARIABLE PUMP
REGULATOR ELEMENT	10292815	5	1	310	10292801	REGULATOR
REGULATOR ELEMENT	10472202	3	1	298	10472196	REGULATOR
REGULATOR ELEMENT	571900808	2	1	298	10472196	REGULATOR
REGULATOR ELEMENT	571900808	2	1	310	10292801	REGULATOR
REINFORCED RUBBER HOSE	790042908	71	1	144	928569808	MAIN TOOLS
RELAY 24V/1W 26X26X24MM	630105408	10	1	518	919503008	SWITCHBOX MOUNTING PART
RELING	916162808	19	1	368	919010208	CRANE OPERATOR CABIN P
REMOTE CONTROL APPARA	11212256	100	1	40	968252908	BTB PROGRAMMED
REMOTE CONTROL TRANSMIT	11160970	(1)	1	453	96022872	CONTROL PANEL ROOF
REP.KIT CENTRY WIRING	967363808	999	1	455	10340105	WARNING LIGHT
REPAIR KIT	10650501	(998)	1	539	96045351	HYDRAULICS UPPER CARRI
REPAIR KIT	10650501	(998)	1	539	96045351	HYDRAULICS UPPER CARRI
REPAIR KIT	11003094	999	1	479	502657308	AIR DRYER
REPAIR KIT	571582108	1	1	226	5700161	AIR COMPRESSOR
REPAIR KIT	571582708	15	1	226	5700161	AIR COMPRESSOR
REPAIR KIT -E DF/LF	10035534	(2)	1	538	96045351	HYDRAULICS UPPER CARRI
REPAIR KIT HANDLE	12100622	1	1	387	11002447	BLIND
REPAIR KIT WATER HEATING	96004475	999	1	466	10876576	WATER HEATING SYSTEM
REPAIR SEGMENT 1-FACH	11658888	(997)	1	64	917436708	FLOOR SHEET COMPL.
REPAIR SET PRESSURE GOV	11003089	998	1	479	502657308	AIR DRYER
RETAINER CLIP 122,5/K1 St/Ino	10127984	2	1	219	10147364	AIR INTAKE ASSEMBLY
RETAINER CLIP 129	12222896	22	1	466	10876576	WATER HEATING SYSTEM
RETAINER CLIP 150/K1 Inox	10138820	3	1	232	10148215	THERMOSTAT HOUSING ASS
RETAINER CLIP 73/K1 St/Inox	10122841	2	1	234	10142742	COOLANT PIPE BEND ADD-ON
RETAINER CLIP 75/25	774209708	180	1	280	96034631	RADIATOR, PRE-ASSEMBLED
RETAINER CLIP 77/K1 St/Inox	10124798	5	2	220	10149677	CONNECTING LINE ADD-ON
RETAINER CPL.	10127689	2	1	252	10144227	CONTROL BOX ANNEXE
RETAINER CPL.	10143454	1	1	252	10144227	CONTROL BOX ANNEXE
RETAINER CPL. FE//ZNNI8//CN/	96034872	1	1	327	96034868	PREMOUNTED FUEL FILTER
RETAINER CPL. S235JR	10145371	2	1	257	10143707	CLAMP - ADD-ON UNIT
RETAINER CPL. S235JR	12978423	1	1	257	10143707	CLAMP - ADD-ON UNIT
RETAINER HOUSING 4-POL 19	602337608	514	1	520	96045387	CABLES, BASIC CONSTRUCTI
RETAINER PLATE 2X121X18 D	97010815	14	1	522	969256608	BASE ASSEMBLY
RETAINER PLATE 2X192X41 D	97010814	11	1	522	969256608	BASE ASSEMBLY
RETAINING DISK 100X55X6	927601301	6	1	357	939292201	PLANETARY GEARBOX
RETAINING DISK 125X55X6	927602801	41	1	357	939292201	PLANETARY GEARBOX
RETAINING DISK 125X55X6	927602801	31	1	359	90017588	PLANETARY CARRIER
RETAINING DISK 4X60X4	944134103	36	1	340	90008901	SLEWING GEAR DRIVE
RETAINING DISK 50X4	944303303	56	1	73	90028956	TRACTION DRIVE
RETAINING DISK 70	927531901	16	1	340	90008901	SLEWING GEAR DRIVE
RETAINING NUT	10423992	(1)	2	546	11211756	CONTROL BLOCK
RETAINING NUT	10663825	(1)	1	287	11690588	CONTROL UNIT
RETAINING NUT	10663825	1	1	310	10292801	REGULATOR
RETAINING NUT	10663825	(1)	2	311	10292815	REGULATOR ELEMENT

Description	Item	Pos.	Quantity	Page	Assembly	Description
RETAINING NUT M16X1	602042208	12	1	529	969061708	CARRIER PLATE, PRE-ASSE
RETAINING SPRING 3X55 VER	433102808	101	1	429	96036790	SLEWING PLATFORM PANELLI
RETAINING SPRING 3X55 VER	433102808	101	1	439	969015908	SLEWING PLATFORM PANELLI
RETAINING SPRING 3X55 VER	433102808	5	1	715	967936408	WIND WARNING PREASSEMB
RETAINING SPRING 4,5X98 IS	433100908	62	1	71	919254308	CRAWLER SUPPORT PREASS
RETAINING SPRING 4,5X98 IS	433100908	62	1	101	919254408	CRAWLER SUPPORT PREASS
RETAINING SPRING 4,5X98 IS	433100908	37	4	121	919644008	HYDRAULIC SUPPORT
RETAINING SPRING 4,5X98 IS	433100908	25	1	134	919087608	ROTARY FEED THROUGH
RETAINING SPRING 4,5X98 IS	433100908	11	4	623	917260608	COUNTERWEIGHT WITH CLAM
RETAINING SPRING 4,5X98 IS	433100908	24	3	705	917268408	BOOM NOSE
RETAINING SPRING 4,5X98 IS	433100908	44	1	731	917267508	TRANSPORT MOUNTING
RETAINING SPRING 4X68 ISO	433101208	49	1	70	919254308	CRAWLER SUPPORT PREASS
RETAINING SPRING 4X68 ISO	433101208	49	1	100	919254408	CRAWLER SUPPORT PREASS
RETAINING SPRING 4X68 ISO	433101208	10	2	575	917267108	AUXILIARY HOISTING GEAR 2
RETAINING SPRING 4X68 ISO	433101208	11	2	705	917268408	BOOM NOSE
RETAINING SPRING 4X68 ISO	433101208	2	1	708	967321308	FIXING DEVICE 2.LIFT TOP
RETAINING SPRING 4X68 ISO	433101208	13	2	728	917413208	SELF-ERECT. AUX. HOIST GEA
RETAINING SPRING 4X68 ISO	433101208	8	1	733	923285508	FOLDING BRACKET PRE-ASS.
RETAINING SPRING 5X122 IS	433102508	80	1	662	917292408	TELESCOPIC SECT.5 PRE-AS
RETAINING SPRING 5X122 IS	433102508	12	1	714	967933408	LOCATION FIXTURE PRE-ASS.
RETAINING SPRING DIN 2194	433105008	6	1	629	968068308	ASSEMBLY DEVICE
RETAINING SPRING DIN 2194	433105008	28	1	705	917268408	BOOM NOSE
RETAINING STRAP 25X795 PO	591063808	30	1	393	966497908	FRONT WINDOW CPL.
RETAINING STRIP 15X180X30	97039613	18	16	30	917511508	CRAWLER CENTRE PART PRE
REWORK ARMREST LEFT	96032222	5	1	417	918810308	CONTROL STAND
REWORK ARMREST RIGHT	96032223	6	1	417	918810308	CONTROL STAND
RIBBED HEX NUT M10 10	7380960	6	1	239	10142863	GENERATOR, PRE-ASSEMBLE
RIBBED HEX NUT M6 10	10003366	3	1	221	9078314	HEATING FLANGE ADD-ON
RIBBED TUBE ALU	10493045	168	2	478	969763408	PIPEWORK AIR INSTALLATIO
RING	570110708	5	14	348	570109508	DRIVING GEAR
RING BOLT DIN 580 M10X17 C	402600208	30	4	550	10413106	CONTROL BLOCK
RING BOLT DIN 580 M12 C15E	10179932	18	8	121	919644008	HYDRAULIC SUPPORT
RING BOLT DIN 580 M12 C15E	10179932	10	1	335	969050308	OIL TANK PRE-ASS.
RING FAN D=654	550639508	101	1	280	96034631	RADIATOR, PRE-ASSEMBLED
RK AGGREGATE SUPPORT P	11359503	1	1	170	10147687	POWER UNIT SUPPORT ATT
RK CRANKSHAFT SEAL 110 VO	10121952	1	1	186	10153583	CRANKSHAFT SEALING
RK CRANKSHAFT SEAL 115 H	10121335	2	1	186	10153583	CRANKSHAFT SEALING
RK CRANKSHAFT SEAL D934/	10141178	520	1	264	10148366	SEAL KIT DIESEL ENGINE
RK HIGH PRESSURE CONNEC	10141140	200	1	210	10153151	HIGH PRESS.CONNECTOR W
RK INJECTOR 950ML	10152874	200	1	209	10152867	INJECTOR WITH FASTENING
RK PRE-FEED PUMP	10149198	220	1	206	10146658	HIGH PRESSURE PUMP
RK VOLUME CONTROL VALVE	12490199	230	1	206	10146658	HIGH PRESSURE PUMP
ROCKER ARM BRACKET CPL.	10148438	81	4	161	12856862	DIESEL ENGINE
ROCKER ARM BRACKET PRE	11448005	1	1	193	10148438	ROCKER ARM BRACKET CPL.
ROCKER ARM BRACKET PRE	12549825	1	1	193	10148438	ROCKER ARM BRACKET CPL.
ROCKER ARM PRE-ASSY.	11448000	2	2	194	11448005	ROCKER ARM BRACKET PRE
ROCKER ARM SUPPORT	11448002	1	1	194	11448005	ROCKER ARM BRACKET PRE
ROD 18.0X700 E235+N	978361608	30	1	283	968026308	CLUTCH ACTUATOR
ROD 30.0X1724 S355J2C+C FE	97033302	1	1	475	967978908	INTERLOCKING
ROD 30.0X339 S355J2C+C FE//	97133544	3	2	87	96034962	GUIDE LEFT
ROD 30.0X339 S355J2C+C FE//	97133544	3	2	104	96034980	GUIDE RIGHT
ROD SEAL 160X168X11,5	7367566	3	1	78	10877686	TENSION JACK HYDR CPL
ROD ST.CONST.	964581908	5	4	121	919644008	HYDRAULIC SUPPORT
ROLLER 22X13 PA 12	97001109	6	2	408	966253908	WAGON
ROLLER 25X180 ALCUMGPB	97031463	37	1	365	917259908	CRANE DRIVER CAB ADDITIO
ROLLER 30X11 PA 12	97008171	5	1	408	966253908	WAGON
ROLLER 50.0X25 S355J2G3 FE	947868208	2	2	732	929582108	MOUNTING PRE-ASS.
ROLLER 50.0X25 S355J2G3 FE	947868208	3	1	735	923879808	CONSOLE PRE-ASS.
ROLLER BEARING 150X210X8	746506608	2	1	663	921456108	ROPE PULLEY CPL.
ROLLER BEARING 150X210X8	746506608	2	1	665	967771908	ROPE PULLEY CPL.

Description	Item	Pos.	Quantity	Page	Assembly	Description
ROLLER BEARING 150X210X8	746506608	2	1	725	925203408	ROPE PULLEY CPL.
ROLLER CAGE	927514301	16	38	357	939292201	PLANETARY GEARBOX
ROLLER CAGE	927514301	16	38	583	939294201	PLANETARY GEARBOX
ROLLER CARRIER WELDED	929591608	6	1	732	929582108	MOUNTING PRE-ASS.
ROLLER CARRIER WELDED	967771808	2	1	705	917268408	BOOM NOSE
ROLLER ORIFICE FE//ZNNI8//C	973774708	34	1	639	917291908	PIVOT SECTION, PRE-ASSEMB
ROLLER ORIFICE FE//ZNNI8//C	973774708	58	1	644	917292008	TELESCOPIC SECTION 1 PRE
ROLLER ORIFICE FE//ZNNI8//C	973774708	58	1	648	917292108	TELESCOPIC SECT.2 PRE-AS
ROLLER ORIFICE FE//ZNNI8//C	973774708	58	1	652	917292208	TELESCOPIC SECT.3 PRE-ASS
ROLLER ORIFICE FE//ZNNI8//C	973774708	58	1	656	917292308	TELESCOPIC SECT.IV PRE-A
ROLLER RD70X15 PA6G	939279608	20	1	721	968728808	CONSOLE PRE-ASS.
ROLLER SLEWING RING	917259408	117	1	9		LIEBHERR LTR 1220
ROLLER SLEWING RING 1792	90025640	1	1	336	917259408	ROLLER SLEWING RING
ROLLER TAPPET	10153536	1	2	198	9079870	CONTROL PARTS
ROLLING NOZZLE	10292013	28	8	383	917305408	INTERNAL PANELLING INSTA
ROOF COVERING COMPL.	965763608	9	1	383	917305408	INTERNAL PANELLING INSTA
ROOF WINDOW 10.28X941X74	979240608	1	1	394	965784408	ROOF WINDOW PRE-ASS.
ROOF WINDOW PRE-ASS.	965784408	4	1	390	916162508	WINDOW ASSEMBLY
ROPE 2 2,3KN EDELSTAHL	11160431	35	2	121	919644008	HYDRAULIC SUPPORT
ROPE 2 2,3KN EDELSTAHL	11160431	9	0.3	733	923285508	FOLDING BRACKET PRE-ASS.
ROPE 2 2,3KN EDELSTAHL	11160431	3	0.4	738	968090008	MOUNTING HOOK ROD
ROPE 6 0,59KN PERLON	773404508	6	1.6	630	925141508	HOSE GUIDE PRE-ASS.
ROPE 6 0,59KN PERLON	773404508	19	2.5	721	968728808	CONSOLE PRE-ASS.
ROPE CLAMP DIN 1142 22 VER	773913308	6	1	628	919028808	DISPATCH ASSY.MECH.PART
ROPE DRUM	939294001	1	1	579	90028852	COMPACT ROPE WINCH
ROPE DRUM D=490 SEIL=23	932916901	1	1	354	90208882	COMPACT ROPE WINCH
ROPE FIXING POINT	11347027	2	1	724	910836808	HOOK BLOCK
ROPE GUARD CPL	571716008	10	1	724	910836808	HOOK BLOCK
ROPE GUARD CPL	571716108	12	2	724	910836808	HOOK BLOCK
ROPE LENGTH INDICATOR 1	10802064	20	1	673	966473108	ENCODER BASE SECTION
ROPE PULLEY 437X12.5 S355J	97027358	1	1	665	967771908	ROPE PULLEY CPL.
ROPE PULLEY CPL.	967771908	78	7	662	917292408	TELESCOPIC SECT.5 PRE-AS
ROPE PULLEY CPL.	967771908	27	1	705	917268408	BOOM NOSE
ROPE PULLEY CPL. SPF	921456108	2	1	661	917292408	TELESCOPIC SECT.5 PRE-AS
ROPE PULLEY CPL. SPF	921456108	1	1	709	910040808	2nd NECK PULLEY INSTALLAT
ROPE PULLEY CPL. SPF	925203408	1	5	724	910836808	HOOK BLOCK
ROPE PULLEY D=572/506/210X	773953608	1	1	725	925203408	ROPE PULLEY CPL.
ROPE PULLEY RD508X63 PA6	288195608	1	1	663	921456108	ROPE PULLEY CPL.
ROPE SLING -5M PP SPF	773326508	3	1	736	917268108	TOOLS
ROPE SLING DIN EN 13414-3	773445108	14	3	628	919028808	DISPATCH ASSY.MECH.PART
ROPE SLING EN 13414-3 35.5T	10331368	2	1	722	917531708	BALLAST TRAVERSE
ROPE WITH ACCESSORIES 1	917259808	127	1	10		LIEBHERR LTR 1220
ROTARY ENCODER 360° LSB P	10802060	(11)	1	508	968128908	EL.ADD-ON SET-LIMIT SWITCH
ROTARY FEED THROUGH	919087608	30	1	9		LIEBHERR LTR 1220
ROTARY FEED THROUGH SPF	11182736	1	1	134	919087608	ROTARY FEED THROUGH
ROTARY SHAFT LIP SEAL BAB	710062601	63	2	357	939292201	PLANETARY GEARBOX
ROTARY SHAFT LIP SEAL BAB	710062601	63	2	583	939294201	PLANETARY GEARBOX
ROTARY SHAFT LIP SEAL DIN	710032508	19	1	355	932916901	ROPE DRUM
ROTARY SHAFT LIP SEAL DIN	710032508	22	1	581	939294001	ROPE DRUM
ROTARY SHAFT LIP SEAL DIN	10167462	64	2	340	90008901	SLEWING GEAR DRIVE
ROTARY SHAFT LIP SEAL DIN	10359142	450	1	285	97029921	DISTRIBUTOR GEARBOX
ROTARY SHAFT LIP SEAL DIN	710059301	11	1	340	90008901	SLEWING GEAR DRIVE
ROTARY SHAFT LIP SEAL DIN	710035001	440	1	285	97029921	DISTRIBUTOR GEARBOX
ROTARY SHAFT LIP SEAL DIN	710054601	11	1	357	939292201	PLANETARY GEARBOX
ROTARY SHAFT LIP SEAL DIN	710054601	11	1	583	939294201	PLANETARY GEARBOX
ROTATABLE BEAM	11347024	3	1	724	910836808	HOOK BLOCK
ROTATING BEACON 55W 24V	10470032	1	1	146	915731908	EL.COMP. DISPATCH ASSEM
ROTATING PLATFORM LOCK	917259608	121	1	9		LIEBHERR LTR 1220
ROTATIONAL SPEED SENSOR	12977971	(1)	1	258	12583633	ENGINE CONTROL SENSORS
ROTATIONAL SPEED SENSOR	12544505	20	2	258	12583633	ENGINE CONTROL SENSORS

Description	Item	Pos.	Quantity	Page	Assembly	Description
ROTOR	11171311	1	1	712	11482252	WIND VELOCITY TRANSMITTE
ROUND SLING DIN EN 1492-2	10280715	2	1	719	968811608	CROSS BEAM
RS CRANKSHAFT BEARING KP	10116939	1	1	184	9076457	SET MAIN BEARINGS
RS CYLINDER LOCK	571934608	60	1	670	571928508	CYLINDER HEAD CPL.
RS FLANGE	10145815	8	1	197	10138230	CAMSHAFT CPL.
RS FLANGE	10145815	8	1	197	10138230	CAMSHAFT CPL.
RS PRESSURE FILTER DF...33	10101384	(3)	1	538	96045351	HYDRAULICS UPPER CARRI
RS TELESCOPIC LOCK	571934508	50	1	670	571928508	CYLINDER HEAD CPL.
RUBBER BEARING 13,51/47,75	550640608	5	4	158	918731108	ASSEMBLY PARTS F.SLEWING
RUBBER BELLOWS	571912308	2	1	454	10343693	MASTER SWITCH
RUBBER BUFFER 19X9,6 PU	10354670	25	2	383	917305408	INTERNAL PANELLING INSTA
RUBBER BUFFER 32X32XM6	10472890	8	1	405	917304708	SLIDING DOOR INSTALLATION
RUBBER BUFFER 8,3/26X7,2 3	10116274	4	8	252	10144227	CONTROL BOX ANNEXE
RUBBER CONNECTION	10116310	24	1	238	10140729	EXHAUST TC MOUNTING
RUBBER CONNECTION	10129904	4	1	220	10149677	CONNECTING LINE ADD-ON
RUBBER CONNECTION 06-12	10126119	(16)	1	164	12856862	DIESEL ENGINE
RUBBER CONNECTION 12 X 18	9079603	7	1	182	10139112	OIL LINE PRE-ASSEMBLY
RUBBER CONNECTION 12 X 18	9079603	(4)	1	264	10148366	SEAL KIT DIESEL ENGINE
RUBBER CONNECTION 22X30	9273161	7	2	218	10145173	INTAKE STACK ASSEMBLY
RUBBER CONNECTION 25 X35	9271340	5	1	173	10126713	CRANKCASE BREATHER ASS
RUBBER CONNECTION GUMM	10126317	5	1	182	10139112	OIL LINE PRE-ASSEMBLY
RUBBER CONNECTION GUMM	10126317	(2)	1	264	10148366	SEAL KIT DIESEL ENGINE
RUBBER CONNECTION Rubbe	10126417	4	1	173	10126713	CRANKCASE BREATHER ASS
RUBBER CONNECTION Silicon	10128228	(7)	3	164	12856862	DIESEL ENGINE
RUBBER PLATE 1.5X185X45 E	979243608	4	2	394	965784408	ROOF WINDOW PRE-ASS.
RUBBER PLATE SBR M.GEW	973731008	323	2	539	96045351	HYDRAULICS UPPER CARRI
RUBBER RING X12	10133991	102	1	255	10151328	CABLE HARNESS MOUNTING
RUBBER RING X16	10123876	103	1	255	10151328	CABLE HARNESS MOUNTING
RUBBER RING X22	10123878	33	2	506	919410708	ELECTR. SYSTEM F.SLEWING
SAE FLANGE 11/2"	511502608	430	2	277	919007708	DRIVE ASSEMBLY, PRE-ASSE
SAE FLANGE CONNECTION G	474901708	515	1	540	96045351	HYDRAULICS UPPER CARRI
SAE FLANGE CONNECTION GF	510702408	504	1	540	96045351	HYDRAULICS UPPER CARRI
SAE FLANGE CONNECTION	474909008	517	1	540	96045351	HYDRAULICS UPPER CARRI
SAE FLANGE CONNECTION	474908108	508	2	540	96045351	HYDRAULICS UPPER CARRI
SAE FLANGE CONNECTION	474907608	501	1	540	96045351	HYDRAULICS UPPER CARRI
SAE FLANGE CONNECTION W	474906708	505	2	540	96045351	HYDRAULICS UPPER CARRI
SAE FLANGE CONNECTION	474907508	502	1	540	96045351	HYDRAULICS UPPER CARRI
SAE FLANGE CONNECTION	474906908	516	3	540	96045351	HYDRAULICS UPPER CARRI
SAE FLANGE CONNECTION	474906608	503	2	540	96045351	HYDRAULICS UPPER CARRI
SAE SEALING FLANGE SAE 1	511510008	500	1	540	96045351	HYDRAULICS UPPER CARRI
SAE-FLANGE HALF FHS 2 CR6	510598408	432	6	277	919007708	DRIVE ASSEMBLY, PRE-ASSE
SAFETY BUTTON	10470667	9	1	620	10040024	POUCH SOCKET
SAFETY ELEMENT	10294939	3	1	500	10871700	AIR FILTER
SAFETY HARNESS EN 361 IK	11007305	1	1	153	916959808	PERSONAL PROTECTION EQ
SAFETY JACKET EN ISO 2047	872101908	6	1	145	928620108	ACCESSORIES
SAFETY PLUG W HINGE-LID	571817208	6	1	620	10040024	POUCH SOCKET
SAFETY PLUG W HINGE-LID 5	10875869	34	4	121	919644008	HYDRAULIC SUPPORT
SAFETY PLUG W HINGE-LID 5	10875869	60	4	661	917292408	TELESCOPIC SECT.5 PRE-AS
SAFETY PLUG W HINGE-LID 5	10875869	7	1	708	967321308	FIXING DEVICE 2.LIFT TOP
SAFETY PLUG W HINGE-LID 5	10875869	(1)	2	724	910836808	HOOK BLOCK
SAFETY PLUG W HINGE-LID 6	10875870	51	4	17	919617108	CRAWLER TRACK TRAVEL G
SAFETY PLUG W HINGE-LID 6	10875870	35	1	365	917259908	CRANE DRIVER CAB ADDITIO
SAFETY TRAP	571716208	34	2	724	910836808	HOOK BLOCK
SASH LOCK	10650295	4	4	378	968514508	INSTALLATION SWITCH CAB. C
SCOOP WELDED	969089708	1	1	499	918731908	AIR FILTER UNIT
SCR-ASSEMBLY SCRONLY	11403708	101	1	494	96048826	EXHAUST SYSTEM PRE-ASSE
SCRAPER 160X175X9	7367567	4	1	78	10877686	TENSION JACK HYDR CPL
SCREENING	966980708	36	2	449	96036957	ELECTRIC ADD-ON PARTS CA
SCREW	570941408	2	1	696	511479408	LOAD HOLDING VALVE
SCREW 25X25X65 8.8 FE//ZNNI	956414208	21	4	672	966134608	ADD-ON PARTS CYLINDER

Description	Item	Pos.	Quantity	Page	Assembly	Description
SCREW 90x297 35NICRMOV12	970574508	11	1	648	917292108	TELESCOPIC SECT.2 PRE-AS
SCREW 90x349 35NICRMOV12	970545508	11	1	644	917292008	TELESCOPIC SECTION 1 PRE
SCREW CAP GPN 800 M14X1,	10021410	3	2	208	12489819	COVERING CAPS - KIT
SCREW CARABINER OVAL M.	10877382	2	2	664	96013575	HOIST LIM.SWITCH PLUMMET
SCREW COUPLING EMA3 M14	7406865	744	7	542	96045351	HYDRAULICS UPPER CARRI
SCREW COUPLING EMA3 M14	7406865	642	2	590	967784808	HYDR.AUXILIARY HOISTING
SCREW DIN 912 M8X25 12.9	570613877	9	4	226	5700161	AIR COMPRESSOR
SCREW LOCKING 10ML -50/+1	8655016	105	1	204	10142942	LUBE OIL FILTER ASSEMBLY
SCREW LOCKING 50ML FLASC	811205708	105	1	196	10120186	BALANCER ASSEMBLY
SCREW LOCKING 50ML FLASC	811205708	105	1	230	12418347	AIR COND. COMPRESSOR A
SCREW LOCKING 50ML FLASC	811205708	109	1	245	9079823	TRANSPORT DEVICE ATTACH
SCREW LOCKING 50ML FLASC	811205708	109	1	252	10144227	CONTROL BOX ANNEXE
SCREW LOCKING 50ML FLASC	811205708	105	1	261	10144036	POWER TAKE-OFF ADD-ON
SCREW M8X30 St Rm>800N/m	10141111	2	1	253	10144098	FASTENING CLAMP
SCREW PLUG	10324900	4	1	303	11692439	CONTROL VALVE
SCREW PLUG	10650014	49	1	668	10876933	TELESCOPIC CYLINDER
SCREW PLUG	11182678	53	1	668	10876933	TELESCOPIC CYLINDER
SCREW PLUG	11690057	3	1	363	10802061	WINCH REVOLUTION TRANS
SCREW PLUG	511025408	11	2	58	11643183	CONTROL BLOCK
SCREW PLUG	511025408	11	2	61	11643184	CONTROL BLOCK
SCREW PLUG	570579808	23	1	472	10877810	BALLAST EXTENSION RAM
SCREW PLUG	570579808	48	2	668	10876933	TELESCOPIC CYLINDER
SCREW PLUG 15 M20X 1,5 MS	602425008	17	1	36	96045226	SWITCH BOX COMPL.
SCREW PLUG 15 M20X 1,5 MS	602425008	197	4	685	968708708	TERMINAL BOX CPL.
SCREW PLUG DIN 906 M6X1 S	4980712	15	1	550	10413106	CONTROL BLOCK
SCREW PLUG DIN 906 M8X1 5.	514584908	26	1	294	11210795	VARIABLE PUMP
SCREW PLUG DIN 908 G1/4X1	518645408	55	1	668	10876933	TELESCOPIC CYLINDER
SCREW PLUG DIN 908 M12X1,	11626246	19	2	309	571907208	CONNECTING PLATE
SCREW PLUG DIN 908 M20X1,	12218194	10	1	128	11347526	ELECTRIC PUMP
SCREW PLUG DIN 908 M20X1,	12218194	12	1	504	10327065	ELECTRIC PUMP
SCREW PLUG DIN 908 M22X1,5	10878578	27	1	226	5700161	AIR COMPRESSOR
SCREW PLUG DIN 908 M26X1,5	4600232	29	3	226	5700161	AIR COMPRESSOR
SCREW PLUG G1/4X19	10470377	59	1	668	10876933	TELESCOPIC CYLINDER
SCREW PLUG M10X1	7372626	32	1	294	11210795	VARIABLE PUMP
SCREW PLUG M10X1	7372626	24	4	305	10871282	VARIABLE PUMP
SCREW PLUG M12 PA	11491897	(511)	1	711	917598408	ELECTRIC MEASURING & WAR
SCREW PLUG M12X1,5	7372624	(35)	1	294	11210795	VARIABLE PUMP
SCREW PLUG M14X1,5	10100429	21	2	294	11210795	VARIABLE PUMP
SCREW PLUG M16X1,5 MS	602424908	16	2	368	919010208	CRANE OPERATOR CABIN P
SCREW PLUG M16X1,5 MS	602424908	17	1	380	917304508	CRANE OPERATOR CABIN P
SCREW PLUG M18X1,5	10220419	23	3	294	11210795	VARIABLE PUMP
SCREW PLUG M22X1,5	10000515	20	1	294	11210795	VARIABLE PUMP
SCREW PLUG M25X1,5 MS	602425108	213	1	682	966291008	TERMINAL BOX
SCREW PLUG M26X1,5	560208508	27	2	305	10871282	VARIABLE PUMP
SCREW PLUG M27X2	570109408	11	2	346	510229408	HYDRO MOTOR
SCREW PLUG M30X1,5 11SMn	10137918	2	1	171	10138450	FINAL CONTROL VALVE
SCREW PLUG M30X1,5X40 ET	10152594	2	1	202	10152592	PRESSURE RELIEF VALVE
SCREW PLUG M32X1,5 MS	602425208	212	1	682	966291008	TERMINAL BOX
SCREW PLUG M33X2 ST Fe//Zn	409710601	67	4	73	90028956	TRACTION DRIVE
SCREW PLUG M33X2,00	10289931	39	1	294	11210795	VARIABLE PUMP
SCREW PLUG M8X1	7027497	(14)	4	294	11210795	VARIABLE PUMP
SCREW PLUG M8X1	7027497	20	2	297	10008308	CONNECTING PLATE
SCREW PLUG M8X1	7027497	53	1	298	10472196	REGULATOR
SCREW PLUG M8X1	7027497	20	2	309	571907208	CONNECTING PLATE
SCREW PLUG RD36X3 SPF	10466911	152	3	699	967785008	ADDNL.HYDR. FOLDING JIB
SCREW PLUG RD54X4 SPF	10466912	161	2	589	967784808	HYDR.AUXILIARY HOISTING
SCREW PLUG RD79X4 SPF	10466913	157	2	589	967784808	HYDR.AUXILIARY HOISTING
SCREW PLUG VSTI G1/4 CR6-F	7361553	8	3	546	11211756	CONTROL BLOCK
SCREW PLUG VSTI M10X1	7381638	12	1	220	10149677	CONNECTING LINE ADD-ON
SCREW PLUG VSTI M10X1	7381638	9	2	229	10145278	ACCESSORIES AIR COMPRES

Description	Item	Pos.	Quantity	Page	Assembly	Description
SCREW PLUG VSTI M10X1	7381638	10	2	247	10115829	FLYWHEEL HOUSING MOUNT
SCREW PLUG VSTI M10X1	7381638	8	1	263	9078301	LOCKING PIECES
SCREW PLUG VSTI M10X1 CR6	477510501	82	3	357	939292201	PLANETARY GEARBOX
SCREW PLUG VSTI M12X1,5 C	7363178	81	1	357	939292201	PLANETARY GEARBOX
SCREW PLUG VSTI M14X1,5	7380566	6	3	167	11389608	CRANKCASE CPL. WITH CYLIN
SCREW PLUG VSTI M14X1,5	7380566	7	1	212	10146791	FUEL FINE-FILTER ASSEMBLY
SCREW PLUG VSTI M14X1,5	7380566	4	1	218	10145173	INTAKE STACK ASSEMBLY
SCREW PLUG VSTI M14X1,5	7380566	20	1	238	10140729	EXHAUST TC MOUNTING
SCREW PLUG VSTI M16X1,5	7382203	3	1	213	10133928	CONSOLE FOR FILTER PRE-A
SCREW PLUG VSTI M16X1,5	7382203	15	2	261	10144036	POWER TAKE-OFF ADD-ON
SCREW PLUG VSTI M20X1,5 C	477511401	86	2	357	939292201	PLANETARY GEARBOX
SCREW PLUG VSTI M22X1,5 C	7380177	10	3	167	11389608	CRANKCASE CPL. WITH CYLIN
SCREW PLUG VSTI M22X1,5 C	7380177	14	1	248	10116110	LOCKING PIECES
SCREW PLUG VSTI M24X1,5	10041903	10	5	170	10147687	POWER UNIT SUPPORT ATT
SCREW PLUG VSTI M26X1,5 C	7381457	7	2	167	11389608	CRANKCASE CPL. WITH CYLIN
SCREW PLUG VSTI M26X1,5 C	7381457	21	1	238	10140729	EXHAUST TC MOUNTING
SCREW PLUG VSTI M30X1,5 S	7382204	11	1	200	10129474	OIL COOLER, PRE-ASSEMBLE
SCREW PLUG VSTI M33X2 CR6	10043136	16	1	170	10147687	POWER UNIT SUPPORT ATT
SCREW PLUG VSTI M33X2 CR6	10043136	6	1	195	11358102	CYLINDER HEAD COVER ASS
SCREW PLUG VSTI M38X1,5	7382202	1	1	259	10142747	LOCKING PIECES
SCREW PLUG VSTI M42X2 CR6	10285724	3	1	204	10142942	LUBE OIL FILTER ASSEMBLY
SCREW PLUG VSTI R1/2	10335593	23	1	546	11211756	CONTROL BLOCK
SCREW SOCKET	12211232	3	1	484	968570808	UREA TANK
SCREW STOPPER GPN 700 M1	7003652	4	1	208	12489819	COVERING CAPS - KIT
SCREW STOPPER GPN 700 M1	7011745	1	1	208	12489819	COVERING CAPS - KIT
SCREW UNF1 1/8"X12X130 12.	485501414	(2)	288	64	917436708	FLOOR SHEET COMPL.
SCREW-ON CONNECTION GE	7410455	663	4	52	96035801	HYDRAULIC EQUIPM.CENTER
SCREW-ON CONNECTION GE	7410455	625	1	90	96035796	HYDR.TRAVEL DRIVE
SCREW-ON CONNECTION GE	7410455	625	1	107	96035792	HYDR.TRAVEL DRIVE
SCREW-ON CONNECTION ISO	7018842	684	3	541	96045351	HYDRAULICS UPPER CARRI
SCREW-ON HINGE 25X25X50/	10871177	12	4	393	966497908	FRONT WINDOW CPL.
SCREW-ON HINGE 25X25X50/	10871177	9	2	394	965784408	ROOF WINDOW PRE-ASS.
SCREWDRIVER 10 CRV-VERNI	790032508	52	1	144	928569808	MAIN TOOLS
SCREWDRIVER 2 CRV-VERNI	790033208	53	1	144	928569808	MAIN TOOLS
SCREWDRIVER 3,5 CRV-VERNI	790032008	50	1	144	928569808	MAIN TOOLS
SCREWDRIVER 5,5 CRV-VERNI	790032308	51	1	144	928569808	MAIN TOOLS
SEAL	10135885	3	4	236	10140087	EXHAUST PIPE ASSEMBLY
SEAL	10135885	4101	1	265	10148366	SEAL KIT DIESEL ENGINE
SEAL	10144861	13	1	483	918484108	UREA PLANT
SEAL	10297876	2	1	303	11692439	CONTROL VALVE
SEAL	10815005	2	1	42	10450273	ANTENNA
SEAL	11826653	12	1	466	10876576	WATER HEATING SYSTEM
SEAL	11826653	(3)	1	466	10876576	WATER HEATING SYSTEM
SEAL	12565355	4	4	195	11358102	CYLINDER HEAD COVER ASS
SEAL	7011131	2	1	178	5004624	OIL DRAIN PLUG
SEAL	9144762	(3)	1	195	11358102	CYLINDER HEAD COVER ASS
SEAL	9273691	5	1	261	10144036	POWER TAKE-OFF ADD-ON
SEAL	9273691	6523	1	265	10148366	SEAL KIT DIESEL ENGINE
SEAL	9273691	6543	1	266	10148366	SEAL KIT DIESEL ENGINE
SEAL	9885529	(5)	1	260	10125687	POWER TAKE-OFF ADD-ON
SEAL	9885529	6502	1	265	10148366	SEAL KIT DIESEL ENGINE
SEAL 0,33 METALOSEAL 1	10126738	2	1	170	10147687	POWER UNIT SUPPORT ATT
SEAL 0,33 METALOSEAL 1	10137721	5	1	247	10115829	FLYWHEEL HOUSING MOUNT
SEAL 1	9079130	3	1	212	10146791	FUEL FINE-FILTER ASSEMBLY
SEAL 1	9079130	2011	1	264	10148366	SEAL KIT DIESEL ENGINE
SEAL 1,5 AFM 32/2	9268131	18	1	238	10140729	EXHAUST TC MOUNTING
SEAL 1.5X210X360 GUMMI	97083604	431	1	499	918731908	AIR FILTER UNIT
SEAL 1.5X721X86 EPDM	97005272	3	1	393	966497908	FRONT WINDOW CPL.
SEAL 120X60X 30 SCHWARZ	976094308	7	1	375	916170808	CABLE INLET
SEAL 25X14X4080 EPDM	97046043	18	1	390	916162508	WINDOW ASSEMBLY

Description	Item	Pos.	Quantity	Page	Assembly	Description
SEAL 25X892X720 EPDM	97033487	7	1	390	916162508	WINDOW ASSEMBLY
SEAL 2X148X84 EPDM	97005291	7	1	393	966497908	FRONT WINDOW CPL.
SEAL 2X225X107 EPDM	97005290	6	1	393	966497908	FRONT WINDOW CPL.
SEAL 2X86X28 EPDM	97012017	29	2	393	966497908	FRONT WINDOW CPL.
SEAL 2X94X39 EPDM	97005309	11	9	393	966497908	FRONT WINDOW CPL.
SEAL 439X120X5 POLYALEFIN	97012288	6	1	375	916170808	CABLE INLET
SEAL 4X322X62 EPDM 20SHOR	97005040	9	1	396	916168308	AIR DUCT
SEAL 4X407X85 EPDM 20SHOR	97005042	10	2	396	916168308	AIR DUCT
SEAL 645X786 EPDM	97007649	2	1	378	968514508	INSTALLATION SWITCH CAB. C
SEAL 721X43X 1.5 EPDM	97006055	18	1	393	966497908	FRONT WINDOW CPL.
SEAL 78X64 30	976193208	8	1	375	916170808	CABLE INLET
SEAL 7X182X51 POLYOLEFIN	97006874	32	6	383	917305408	INTERNAL PANELLING INSTA
SEAL 85.5X89X30 ZP-30 S	97071963	16	1	375	916170808	CABLE INLET
SEAL 90X97X5 POLYALEFIN	978172508	13	1	449	96036957	ELECTRIC ADD-ON PARTS CA
SEAL AFM 30	10117709	2	1	199	10129475	OIL COOLER ADD-ON
SEAL AFM 30	10128516	2	1	175	10132560	OIL SUMP WITH FASTENING
SEAL AFM 30	10128516	2	1	267	10141167	SEAL KIT OIL SUMP
SEAL DIN 71511 1,5X25X48 A	4980359	4	2	200	10129474	OIL COOLER, PRE-ASSEMBLE
SEAL KIT	10219620	999	1	282	10492431	PRESSURE LIMITING VALVE
SEAL KIT	10285695	999	1	547	11482347	DIRECTIONAL SOLENOID
SEAL KIT	10331946	998	1	282	10492431	PRESSURE LIMITING VALVE
SEAL KIT	10331947	800	1	281	10429930	GEAR WHEEL MOTOR
SEAL KIT	10342480	999	1	305	10871282	VARIABLE PUMP
SEAL KIT	10423993	(999)	1	546	11211756	CONTROL BLOCK
SEAL KIT	10424726	999	1	296	10663105	DRIVING GEAR
SEAL KIT	11004122	(999)	1	550	10413106	CONTROL BLOCK
SEAL KIT	11170384	(999)	1	668	10876933	TELESCOPIC CYLINDER
SEAL KIT	11494337	(98)	1	294	11210795	VARIABLE PUMP
SEAL KIT	11600280	(999)	1	286	11182708	VARIABLE PUMP
SEAL KIT	11643397	(999)	1	360	11182597	VARIABLE DISPLACEMENT MO
SEAL KIT	11691956	3	1	58	11643183	CONTROL BLOCK
SEAL KIT	11691956	3	1	61	11643184	CONTROL BLOCK
SEAL KIT	12101886	999	1	330	10878502	FUEL FILTER
SEAL KIT	12102278	(999)	1	76	11320954	GUIDE WHEEL UNIT
SEAL KIT	511043308	(999)	1	552	10332882	CONTROL BLOCK
SEAL KIT	571496708	999	1	734	512363708	HYDRO CYLINDER
SEAL KIT	571614608	(1)	1	668	10876933	TELESCOPIC CYLINDER
SEAL KIT	571840008	(999)	1	538	96045351	HYDRAULICS UPPER CARRI
SEAL KIT AGGREGATE CARR	10141157	120	1	264	10148366	SEAL KIT DIESEL ENGINE
SEAL KIT AIR INTAKE	11351430	2240	1	265	10148366	SEAL KIT DIESEL ENGINE
SEAL KIT BALLASTING CYLIN	12104276	999	1	472	10877810	BALLAST EXTENSION RAM
SEAL KIT CONNECTING BLOC	11220418	5	1	58	11643183	CONTROL BLOCK
SEAL KIT CONNECTING BLOC	11220418	5	1	61	11643184	CONTROL BLOCK
SEAL KIT CONNECTING LINE	11351425	2300	1	265	10148366	SEAL KIT DIESEL ENGINE
SEAL KIT CONTROL BLOCK	10491129	999	1	557	10449853	DIRECTIONAL CONTROL VALV
SEAL KIT COOLANT PIPE BEN	11351432	3820	1	265	10148366	SEAL KIT DIESEL ENGINE
SEAL KIT CRANKCASE BREAT	10141165	160	1	264	10148366	SEAL KIT DIESEL ENGINE
SEAL KIT CYCLE VALVE	11351427	4360	1	265	10148366	SEAL KIT DIESEL ENGINE
SEAL KIT CYLINDER	11621953	999	1	31	10870204	LATCHING ACTUATOR
SEAL KIT CYLINDER HEAD	571934708	999	1	670	571928508	CYLINDER HEAD CPL.
SEAL KIT DIESEL ENGINE	10148366	939	1	166	12856862	DIESEL ENGINE
SEAL KIT DIRECTIONAL VALV	10802253	(999)	1	538	96045351	HYDRAULICS UPPER CARRI
SEAL KIT DIRECTIONAL VALV	10871959	(999)	1	597	10038509	CONTROL BLOCK
SEAL KIT DIRECTIONAL VALV	11006275	999	1	553	571737808	DIRECTIONAL CONTROL VALV
SEAL KIT EXHAUST ADAPTER	11351426	4320	1	265	10148366	SEAL KIT DIESEL ENGINE
SEAL KIT F. OIL MOTOR	10872714	999	1	567	10872388	HYDRO MOTOR
SEAL KIT F.BRAKE	969997708	(999)	1	73	90028956	TRACTION DRIVE
SEAL KIT F.REGULATOR	10440976	999	1	298	10472196	REGULATOR
SEAL KIT F.REGULATOR	10663065	999	1	310	10292801	REGULATOR
SEAL KIT FLYWHEEL HOUSIN	11351428	5200	1	265	10148366	SEAL KIT DIESEL ENGINE

Description	Item	Pos.	Quantity	Page	Assembly	Description
SEAL KIT FUEL LINE	10141217	2120	1	264	10148366	SEAL KIT DIESEL ENGINE
SEAL KIT GEAR PUMP	10492710	999	1	291	11210201	GEAR PUMP
SEAL KIT GEAR PUMP	10492710	999	1	312	10870964	GEAR PUMP
SEAL KIT GEAR PUMP	11494341	999	1	313	10870965	GEAR PUMP
SEAL KIT GRUNDBLOCK	10684170	(999)	1	538	96045351	HYDRAULICS UPPER CARRI
SEAL KIT HIGH PRESS.CONN	10141216	(12)	1	210	10153151	HIGH PRESS.CONNECTOR W
SEAL KIT HIGH PRESS.CONN	10141216	210	1	210	10153151	HIGH PRESS.CONNECTOR W
SEAL KIT HIGH PRESSURE P	10141214	1710	1	264	10148366	SEAL KIT DIESEL ENGINE
SEAL KIT HIGH PRESSURE P	10152787	210	1	206	10146658	HIGH PRESSURE PUMP
SEAL KIT INJECTOR	10141215	210	1	209	10152867	INJECTOR WITH FASTENING
SEAL KIT INTAKE NOZZLE	11351429	2210	1	265	10148366	SEAL KIT DIESEL ENGINE
SEAL KIT LEAKAGE-OIL RET. L	11351500	2140	1	264	10148366	SEAL KIT DIESEL ENGINE
SEAL KIT LIMIT VALVE	10470385	(999)	1	552	10332882	CONTROL BLOCK
SEAL KIT LIMIT VALVE	10872098	(999)	1	597	10038509	CONTROL BLOCK
SEAL KIT LIMIT VALVE	10872098	(999)	1	597	10038509	CONTROL BLOCK
SEAL KIT LUBRICATING OIL P	11351510	1400	1	264	10148366	SEAL KIT DIESEL ENGINE
SEAL KIT OIL LINE	10141169	250	1	264	10148366	SEAL KIT DIESEL ENGINE
SEAL KIT OIL SUMP	10141167	200	1	264	10148366	SEAL KIT DIESEL ENGINE
SEAL KIT PREFEEDING PUMP	12424993	211	1	206	10146658	HIGH PRESSURE PUMP
SEAL KIT REGULATING VALVE	10488696	98	1	294	11210795	VARIABLE PUMP
SEAL KIT REGULATING VALVE	10663107	98	1	295	11210798	VARIABLE PUMP
SEAL KIT REGULATING VALVE	11690589	98	1	286	11182708	VARIABLE PUMP
SEAL KIT REGULATING VALVE	11690589	98	1	289	10871017	VARIABLE PUMP
SEAL KIT THERMOSTAT HOUS	11351503	3800	1	265	10148366	SEAL KIT DIESEL ENGINE
SEAL KIT TURBOCHARGER M	11351313	4300	1	265	10148366	SEAL KIT DIESEL ENGINE
SEAL KIT VITON	571187408	(999)	1	552	10332882	CONTROL BLOCK
SEAL KIT ZYLINDER HEAD CPL	10141181	800	4	264	10148366	SEAL KIT DIESEL ENGINE
SEAL S235JR	10118556	2	4	217	10147365	AIR INTAKE PIPE ASS.
SEAL S235JR	10118556	2201	4	264	10148366	SEAL KIT DIESEL ENGINE
SEAL X15CrNiSi20-	10125739	7	1	238	10140729	EXHAUST TC MOUNTING
SEAL XTREME PLUS	10125148	120	1	491	919372008	EXHAUST SYSTEM
SEAL-LOCK-SHOULDER NUT	7014529	47	1	294	11210795	VARIABLE PUMP
SEAL-LOCK-SHOULDER NUT M	7005071	11	1	299	571900808	REGULATOR ELEMENT
SEAL-LOCK-SHOULDER NUT M	7005071	11	1	300	10472202	REGULATOR ELEMENT
SEALANT 90G TUBE	8627609	112	1	177	10155227	OIL SUMP PRE-ASS.
SEALANT A80MR HYLOMAR	870002808	265	0.1	682	966291008	TERMINAL BOX
SEALING COMPOUND	10447539	99	1	504	10327065	ELECTRIC PUMP
SEALING COMPOUND 50ML T	811201314	108	1	262	9077386	AUXILIARY DRIVE PRE-ASS.
SEALING NUT M6	510753408	11	1	556	10489734	PRESSURE LIMITING VALVE
SEALING NUT M8	510741708	21	1	558	511433908	PRESSURE LIMITING VALVE
SEALING NUT M8	510741708	21	1	561	511419608	PRESSURE LIMITING VALVE
SEALING PLUG	10134753	3	1	216	10143825	INJECTION LINES
SEALING PLUG	11389287	3	1	216	10143825	INJECTION LINES
SEALING PLUG	11389287	2151	1	264	10148366	SEAL KIT DIESEL ENGINE
SEALING PLUG	738048003	2	1	357	939292201	PLANETARY GEARBOX
SEALING PLUG	7619068	4	1	500	10871700	AIR FILTER
SEALING PLUG 9	761081903	8	1	73	90028956	TRACTION DRIVE
SEALING PLUG 9	761081903	9	3	357	939292201	PLANETARY GEARBOX
SEALING PLUG GPN 735 M33	10465711	15	2	170	10147687	POWER UNIT SUPPORT ATT
SEALING PLUG LK 950	10030837	14	14	167	11389608	CRANKCASE CPL. WITH CYLIN
SEALING PLUG LK 950	10036325	8	1	194	11448005	ROCKER ARM BRACKET PRE
SEALING PLUG M 1-K	604508508	515	5	44	96045228	WIRING HARNESS
SEALING PLUG M 1-K	604508508	507	1	516	96037133	LEAD
SEALING PLUG M 1-K	604508508	503	2	617	96037132	LEAD
SEALING PLUG M 1-K	604508508	(503)	1	711	917598408	ELECTRIC MEASURING & WAR
SEALING PLUG M1-D	604512108	523	4	44	96045228	WIRING HARNESS
SEALING PLUG M1-D	604512108	502	1	140	96045205	WIRING HARNESS
SEALING PLUG M1-D	604512108	517	1	510	96045385	WIRING HARNESS
SEALING PLUG M1-D	604512108	505	1	516	96037133	LEAD
SEALING PLUG M1-D	604512108	504	1	617	96037132	LEAD

Description	Item	Pos.	Quantity	Page	Assembly	Description
SEALING PLUG M1-D	604512108	153	1	685	968708708	TERMINAL BOX CPL.
SEALING PLUG M1-D	604512108	(510)	1	711	917598408	ELECTRIC MEASURING & WAR
SEALING PROFILE	262183501	314	6.26	337	90025640	ROLLER SLEWING RING
SEALING PROFILE	979896308	2	1	37	966167808	COVER COMPL.
SEALING PROFILE 1,5-3X14,6	262106508	19	0.37	433	968923508	FLAP RIGHT PRE-ASS.
SEALING PROFILE 1-4X21,5X1	262105508	40	0.56	70	919254308	CRAWLER SUPPORT PREASS
SEALING PROFILE 1-4X21,5X1	262105508	40	0.56	100	919254408	CRAWLER SUPPORT PREASS
SEALING PROFILE NBR 70 483	262181001	315	6.29	337	90025640	ROLLER SLEWING RING
SEALING PROFILE NBR 70 483	262181001	316	6.24	337	90025640	ROLLER SLEWING RING
SEALING RING	571898008	443	1	277	919007708	DRIVE ASSEMBLY, PRE-ASSE
SEALING RING 10,7X16X1,5 St/	10011864	(5)	2	164	12856862	DIESEL ENGINE
SEALING RING 10,7X16X1,5 St/	10011864	5	15	215	10143342	LEAK OIL RETURN LINE
SEALING RING 10,7X16X1,5 St/	10011864	8	2	229	10145278	ACCESSORIES AIR COMPRES
SEALING RING 10,7X16X1,5 St/	10011864	8	2	261	10144036	POWER TAKE-OFF ADD-ON
SEALING RING 10,7X16X1,5 St/	10011864	6524	1	265	10148366	SEAL KIT DIESEL ENGINE
SEALING RING 10,7X16X1,5 St/	10011864	6541	2	265	10148366	SEAL KIT DIESEL ENGINE
SEALING RING 12,7X18X1,5 St/	10011865	7	2	215	10143342	LEAK OIL RETURN LINE
SEALING RING 12,7X18X1,5 St/	10011865	14	2	261	10144036	POWER TAKE-OFF ADD-ON
SEALING RING 12,7X18X1,5 St/	10011865	6526	1	265	10148366	SEAL KIT DIESEL ENGINE
SEALING RING 14,7X22X1,5 St/	10011866	11	3	215	10143342	LEAK OIL RETURN LINE
SEALING RING 14,7X22X1,5 St/	10011866	2	7	233	10148216	PIPELINE INSTALLATION
SEALING RING 14,7X22X1,5 St/	10011866	6	1	235	10142744	COOLING WATER AIR BLEED
SEALING RING 14,7X22X1,5 St/	10011866	3811	7	265	10148366	SEAL KIT DIESEL ENGINE
SEALING RING 14,7X22X1,5 St/	10011866	3872	1	265	10148366	SEAL KIT DIESEL ENGINE
SEALING RING 140X155X13	10802682	120	1	494	96048826	EXHAUST SYSTEM PRE-ASSE
SEALING RING 16,7X24X1,5 St/	10011867	9	2	214	10143341	FUEL LINES
SEALING RING 16,7X24X1,5 St/	10011867	4	8	229	10145278	ACCESSORIES AIR COMPRES
SEALING RING 18,7X26X1,5 St/	10011868	2	1	181	10130406	LEVEL SENSOR
SEALING RING 18,7X26X1,5 St/	10011868	15	10	214	10143341	FUEL LINES
SEALING RING 18,7X26X1,5 St/	10011868	221	1	264	10148366	SEAL KIT DIESEL ENGINE
SEALING RING 19,6X24,3X1,5	761022503	6	1	341	927554301	VENTILATION CONNECTING PI
SEALING RING 19,6X24,3X1,5	761022503	14	1	361	90200104	OIL-GAUGING INSTRUMENT
SEALING RING 19,6X24,3X1,5	761022503	14	1	585	90200103	OIL-GAUGING INSTRUMENT
SEALING RING 22,7X30X2 St/	10011869	3	2	224	9080294	AIR COMPRESSOR PRE-ASSY
SEALING RING 22,7X30X2 St/	10011869	12	1	261	10144036	POWER TAKE-OFF ADD-ON
SEALING RING 22,7X30X2 St/	10011869	6525	1	265	10148366	SEAL KIT DIESEL ENGINE
SEALING RING 26,7X34,93X2 S	10011870	5	2	218	10145173	INTAKE STACK ASSEMBLY
SEALING RING 26,7X34,93X2 S	10011870	27	1	238	10140729	EXHAUST TC MOUNTING
SEALING RING 26,7X34,93X2 S	10011870	222	1	264	10148366	SEAL KIT DIESEL ENGINE
SEALING RING 27X20X1,5 CU	10014697	9	3	128	11347526	ELECTRIC PUMP
SEALING RING 27X20X1,5 CU	10014697	10	3	504	10327065	ELECTRIC PUMP
SEALING RING 30,7X39X2 St/	10113731	3	1	202	10152592	PRESSURE RELIEF VALVE
SEALING RING 8,7X14X1 St/FP	10011871	22	2	215	10143342	LEAK OIL RETURN LINE
SEALING RING DIN 3869 20X1	761022903	2	2	361	90200104	OIL-GAUGING INSTRUMENT
SEALING RING DIN 3869 20X1	761022903	2	2	585	90200103	OIL-GAUGING INSTRUMENT
SEALING RING DIN 3869 21X1	7371651	(1)	1	539	96045351	HYDRAULICS UPPER CARRI
SEALING RING DIN 7603 A10X	710101408	7	4	378	968514508	INSTALLATION SWITCH CAB. C
SEALING RING DIN 7603 A12X	7101030	87	1	358	939292201	PLANETARY GEARBOX
SEALING RING DIN 7603 A14X	710102508	11	1	177	10155227	OIL SUMP PRE-ASS.
SEALING RING DIN 7603 A14X	710103008	7	1	414	969085208	HEATING, PRE-ASSEMBLED
SEALING RING DIN 7603 A14X	738122523	2	1	201	9078233	VALVE
SEALING RING DIN 7603 A14X	7381225	14	1	170	10147687	POWER UNIT SUPPORT ATT
SEALING RING DIN 7603 A16X	710103708	402	1	315	96034522	EQUALIZING RESERVOIR
SEALING RING DIN 7603 A18X	710104008	(23)	2	693	967785408	ADDNL.HYDR. FOLDING JIB
SEALING RING DIN 7603 A27X	710105908	29	1	361	90200104	OIL-GAUGING INSTRUMENT
SEALING RING DIN 7603 A30X	710106508	3	1	171	10138450	FINAL CONTROL VALVE
SEALING RING DIN 7603 A30X	710106508	5	3	177	10155227	OIL SUMP PRE-ASS.
SEALING RING DIN 7603 A30X	710106508	141	1	264	10148366	SEAL KIT DIESEL ENGINE
SEALING RING DIN 7603 A33X	7101022	306	2	589	967784808	HYDR.AUXILIARY HOISTING
SEALING RING DIN 7603 A38X	710107208	305	2	589	967784808	HYDR.AUXILIARY HOISTING

Description	Item	Pos.	Quantity	Page	Assembly	Description
SEALING RING DIN 7603 A52X	710107708	307	4	589	967784808	HYDR.AUXILIARY HOISTING
SEALING RING DIN 7603 A6,5	710100408	9	1	378	968514508	INSTALLATION SWITCH CAB. C
SEALING RING DIN 7603 A8X12	710100708	9	8	377	916162808	RELING
SEALING SET CONTROL UNIT	10471439	(98)	1	294	11210795	VARIABLE PUMP
SEALING SET OIL COOLER	10141182	1300	1	264	10148366	SEAL KIT DIESEL ENGINE
SEALING SET VALVE	10663092	(999)	1	550	10413106	CONTROL BLOCK
SEALING SET VALVE	10663097	(999)	1	550	10413106	CONTROL BLOCK
SEALING SET VALVE	10802870	(99)	1	124	968077208	HYDRAULIC SUPPORT
SEALING STRIP 40X4 NBR/SBR	11114455	43	4	483	918484108	UREA PLANT
SEALING TAPE	261101108	50	0.3	412	11083498	AIR CONDITIONING UNIT
SEALINGSET ROTARY TRANS	10873566	(23)	2	134	919087608	ROTARY FEED THROUGH
SEAT CPL.	12100570	55	1	419	10877138	OPERATOR SEAT
SECURING PIN FOR JPT PLUG	602338208	503	3	448	96036956	WIRING HARNESS
SECURING PIN FOR JPT PLUG	602338208	520	5	520	96045387	CABLES, BASIC CONSTRUCTI
SELF-ERECT. AUX. HOIST GEA	917413208	334	1	11		LIEBHERR LTR 1220
SENSOR CONTROL DEVICE NI	10144039	(154)	1	494	96048826	EXHAUST SYSTEM PRE-ASSE
SENSOR HOLDER 30X75X190	972261508	31	2	672	966134608	ADD-ON PARTS CYLINDER
SENSOR INSTALL.TELESCOP	966290708	30	1	672	966134608	ADD-ON PARTS CYLINDER
SENSOR LIFT TOP LIMIT SWI	966479308	1	1	706	918197708	EL.2 HOISTING LIMIT SWITCH
SENSOR PIPE	12898856	103	1	494	96048826	EXHAUST SYSTEM PRE-ASSE
SENSOR SPF	10876368	10	1	631	918802108	BALLAST MONITORING ENCO
SEPARATING RING	10114850	8	15	47	11346779	SLIP RING TRANSMITTER
SERRATED LOCK WASHER D	12102694	18	1	38	968054008	MOUNTING PLATE PRE-ASS.
SERRATED LOCK WASHER D	12102694	12	1	378	968514508	INSTALLATION SWITCH CAB. C
SERRATED LOCK WASHER D	12102694	4	12	523	922648308	TERMINAL BOARD PRE-ASS.
SERRATED LOCK WASHER D	425220708	43	4	449	96036957	ELECTRIC ADD-ON PARTS CA
SERRATED LOCK WASHER D	425220708	63	16	522	969256608	BASE ASSEMBLY
SERRATED LOCK WASHER D	425221108	60	1	522	969256608	BASE ASSEMBLY
SERVOMOTOR 0,0024KW24V	10287301	13	2	412	11083498	AIR CONDITIONING UNIT
SET MAIN BEARINGS	9076457	51	1	160	12856862	DIESEL ENGINE
SETTING ROD	7023664	2	1	301	10472208	ADJUSTMENT
SHACKLE 0,08T NG4 STAINLE	10300552	31	2	393	966497908	FRONT WINDOW CPL.
SHACKLE 12T SPF	10283201	6	1	721	968728808	CONSOLE PRE-ASS.
SHACKLE DIN 82101 0,25T NG0	773933508	3	1	630	925141508	HOSE GUIDE PRE-ASS.
SHACKLE DIN 82101 0,25T NG0	773933508	24	1	672	966134608	ADD-ON PARTS CYLINDER
SHACKLE DIN 82101 0,25T NG0	773933508	14	1	705	917268408	BOOM NOSE
SHAFT	11006491	11	1	675	10802064	ROPE LENGTH INDICATOR
SHAFT 50.0X1020 S355J2C+C	97030028	3	1	474	967928508	LOCKING
SHAFT SEAL	10335855	3	1	281	10429930	GEAR WHEEL MOTOR
SHAFT SEAL 35X52X6/5 FKM	7022315	20	1	302	10871043	VARIABLE PUMP
SHAFT SEAL 35X52X6/5 FKM	7022315	(14)	1	346	510229408	HYDRO MOTOR
SHAFT SEAL 35X52X6/5 FKM	7022315	14	1	347	570109008	DRIVING GEAR
SHAFT SEAL 55X70X7 FPM	571907608	38	1	307	10872488	DRIVING GEAR
SHAFT SEAL BAFSL 45X62X7	7021600	38	1	296	10663105	DRIVING GEAR
SHAPED HOSE-OIL NBR	973519308	253	1	276	919007708	DRIVE ASSEMBLY, PRE-ASSE
SHEET 126X24X1.5 EPDM 80	979142208	8	4	394	965784408	ROOF WINDOW PRE-ASS.
SHEET 15X30X50 PA6G	288176208	22	1	134	919087608	ROTARY FEED THROUGH
SHEET CPL. RAL 7037,SDGL,G	96028313	2	1	320	96023117	BATTERY BOX, PRE-ASSEMB
SHEET GASKET 150X158X0,10	10154459	2	1	169	10154458	CYLINDER
SHEET GASKET 7,6X15,8X1 VI	571082508	(1)	1	539	96045351	HYDRAULICS UPPER CARRI
SHEET GASKET 7X19X4 A2	429900308	7	12	85	968420608	STORAGE BOX
SHEET GASKET 8X22X4 -A2	429900608	376	4	499	918731908	AIR FILTER UNIT
SHEET GASKET VITON	571081908	(1)	1	699	967785008	ADDNL.HYDR. FOLDING JIB
SHEET GASKET VITON	571082408	(1)	1	699	967785008	ADDNL.HYDR. FOLDING JIB
SHEET METAL NUT M8 480H	12100332	8	4	318	918955408	BATTERY BOX CPL.
SHEET METAL NUT M8 480H	12100332	353	22	430	96036790	SLEWING PLATFORM PANELLI
SHEET METAL NUT M8 480H	12100332	352	17	439	969015908	SLEWING PLATFORM PANELLI
SHEET METAL NUT M8 480H	12100332	350	6	497	96039740	ADDITIONAL PARTS CLADDIN
SHEET S235JR	9275826	16	1	248	10116110	LOCKING PIECES
SHEET-METAL SCREW ISO 704	10875793	10	2	574	918628408	AIR COND. UNIT SUPERSTRU

Description	Item	Pos.	Quantity	Page	Assembly	Description
SHEET-METAL SCREW ISO 705	10876382	43	16	383	917305408	INTERNAL PANELLING INSTA
SHIELDING TIED BACK	965617208	995	6	447	96036955	WIRING HARNESS
SHIELDING TIED BACK	965617208	995	2	511	96045385	WIRING HARNESS
SHIM	511015508	17	2	558	511433908	PRESSURE LIMITING VALVE
SHIM	511015508	17	1	561	511419608	PRESSURE LIMITING VALVE
SHIM FE//ZNNI8//CN//T0	964984108	26	2	417	918810308	CONTROL STAND
SHIM RING	7369933	20	1	307	10872488	DRIVING GEAR
SHIM RING DIN 988 63X80X0,1	421000408	17	2	347	570109008	DRIVING GEAR
SHIM RING DIN 988 63X80X0,3	421000508	18	1	347	570109008	DRIVING GEAR
SHUT OFF DEVICE DN150-FL	11212467	2	1	335	969050308	OIL TANK PRE-ASS.
SHUTDOWN VALVE	571899508	(3)	1	294	11210795	VARIABLE PUMP
SHUTTLE VALVE	11691104	40	1	305	10871282	VARIABLE PUMP
SHUTTLE VALVE	571535008	9	1	555	11341035	CONTROL BLOCK
SHUTTLE VALVE 350BAR	571529508	8	2	555	11341035	CONTROL BLOCK
SIDE PANEL WELDED	968981408	1	1	280	96034631	RADIATOR, PRE-ASSEMBLED
SIDE PANEL WELDED	968981508	2	1	280	96034631	RADIATOR, PRE-ASSEMBLED
SIDE PLATE	11658586	8	2	724	910836808	HOOK BLOCK
SIDE STEP 1818X747X45	966269808	2	1	372	916177508	STEP CPL.
SIDE WINDOW LEFT 646.2X94X	97003560	2	1	390	916162508	WINDOW ASSEMBLY
SIDE WINDOW RIGHT 1252X12	97003561	3	1	390	916162508	WINDOW ASSEMBLY
SIEVE SLEEVE	570066308	5	1	94	502806508	EQUALIZING RESERVOIR
SIGN	11494432	(2)	1	128	11347526	ELECTRIC PUMP
SIGN	11494581	(3)	1	128	11347526	ELECTRIC PUMP
SIGN	553031008	2	1	574	918628408	AIR COND. UNIT SUPERSTRU
SIGN	971749908	2	2	150	917862808	LABELLING GREAT BRITAIN
SIGN	976540908	4	1	529	969061708	CARRIER PLATE, PRE-ASSE
SIGN	977667008	4	1	685	968708708	TERMINAL BOX CPL.
SIGN 100X184X0,1 KLEBEFOLI	11952500	1	2	155	919553608	ADDITIONAL SIGNAGE CALIF
SIGN 100X80 KLEBEFOLIE SP	97051193	(1)	1	623	917260608	COUNTERWEIGHT WITH CLAM
SIGN 108DBA/100X90 KLEBE	971693508	76	1	150	917862808	LABELLING GREAT BRITAIN
SIGN 120X80 KLEBEFOLIE SP	97037383	82	1	483	918484108	UREA PLANT
SIGN 158X33X1 AL-BL	97044048	157	2	51	96035801	HYDRAULIC EQUIPM.CENTER
SIGN 158X68 KLEBEFOLIE SP	97020380	(2)	3	623	917260608	COUNTERWEIGHT WITH CLAM
SIGN 160X100 KLEBEFOLIE SP	97067626	5	2	722	917531708	BALLAST TRAVERSE
SIGN 168X62 KLEBEFOLIE SP	978674808	63	12	150	917862808	LABELLING GREAT BRITAIN
SIGN 168X62 KLEBEFOLIE SP	978674808	(3)	2	623	917260608	COUNTERWEIGHT WITH CLAM
SIGN 168X88 KLEBEFOLIE SP	97009799	101	1	150	917862808	LABELLING GREAT BRITAIN
SIGN 168X88 KLEBEFOLIE SP	97011689	95	1	150	917862808	LABELLING GREAT BRITAIN
SIGN 168X88 KLEBEFOLIE SP	97011690	96	1	150	917862808	LABELLING GREAT BRITAIN
SIGN 168X88 KLEBEFOLIE SP	97036732	68	1	150	917862808	LABELLING GREAT BRITAIN
SIGN 168X88 KLEBEFOLIE SP	97037952	18	1	150	917862808	LABELLING GREAT BRITAIN
SIGN 168X88 KLEBEFOLIE SP	97043334	90	4	150	917862808	LABELLING GREAT BRITAIN
SIGN 168X88 KLEBEFOLIE SP	97043335	91	4	150	917862808	LABELLING GREAT BRITAIN
SIGN 168X88 KLEBEFOLIE SP	97043336	92	4	150	917862808	LABELLING GREAT BRITAIN
SIGN 168X88 KLEBEFOLIE SP	97060689	100	1	150	917862808	LABELLING GREAT BRITAIN
SIGN 168X88 KLEBEFOLIE SP	97067627	8	2	629	968068308	ASSEMBLY DEVICE
SIGN 168X88 KLEBEFOLIE SP	978674308	28	2	150	917862808	LABELLING GREAT BRITAIN
SIGN 168X88 KLEBEFOLIE SP	978867108	33	2	150	917862808	LABELLING GREAT BRITAIN
SIGN 168X88 KLEBEFOLIE SP	979383308	62	1	150	917862808	LABELLING GREAT BRITAIN
SIGN 1X75X45 ALUMINIUM	97038433	16	1	380	917304508	CRANE OPERATOR CABIN P
SIGN 1X80X80 KLEBEFOLIE SP	974150408	84	2	150	917862808	LABELLING GREAT BRITAIN
SIGN 1X80X80 KLEBEFOLIE SP	974150508	85	2	150	917862808	LABELLING GREAT BRITAIN
SIGN 1X80X80 KLEBEFOLIE SP	974150608	86	2	150	917862808	LABELLING GREAT BRITAIN
SIGN 1X80X80 KLEBEFOLIE SP	974150708	87	2	150	917862808	LABELLING GREAT BRITAIN
SIGN 208X88 KLEBEFOLIE SP	97016304	49	1	150	917862808	LABELLING GREAT BRITAIN
SIGN 208X88 KLEBEFOLIE SP	97016392	72	4	150	917862808	LABELLING GREAT BRITAIN
SIGN 208X88 KLEBEFOLIE SP	978673908	11	2	150	917862808	LABELLING GREAT BRITAIN
SIGN 208X88 KLEBEFOLIE SP	978674008	12	8	150	917862808	LABELLING GREAT BRITAIN
SIGN 208X88 KLEBEFOLIE SP	978674108	14	15	150	917862808	LABELLING GREAT BRITAIN
SIGN 208X88 KLEBEFOLIE SP	978674408	29	5	150	917862808	LABELLING GREAT BRITAIN

Description	Item	Pos.	Quantity	Page	Assembly	Description
SIGN 208X88 KLEBEFOLIE SP	978674508	31	1	150	917862808	LABELLING GREAT BRITAIN
SIGN 208X88 KLEBEFOLIE SP	978674608	32	1	150	917862808	LABELLING GREAT BRITAIN
SIGN 208X88 KLEBEFOLIE SP	978674908	64	1	150	917862808	LABELLING GREAT BRITAIN
SIGN 208X88 KLEBEFOLIE SP	978675008	66	8	150	917862808	LABELLING GREAT BRITAIN
SIGN 20X10 KLEBEFOLIE SPF	97064219	80	1	483	918484108	UREA PLANT
SIGN 20X10 KLEBEFOLIE SPF	97064220	81	1	483	918484108	UREA PLANT
SIGN 225X165 KLEBEFOLIE SP	971539808	1	1	740	919127808	SIGN TRANSPORT HOLDER
SIGN 4X228X100 S315MC FE//	975231708	6	1	63	918925508	CROSS BEAM CPL.
SIGN 6X107X237 G-ALSI12	772624608	1	1	147	916283508	PLATING
SIGN 70X184X0,1 KLEBEFOLIE	13187353	2	1	155	919553608	ADDITIONAL SIGNAGE CALIF
SIGN 75X45 ALUMINIUM	976955508	3	1	574	918628408	AIR COND. UNIT SUPERSTRU
SIGN 80-38X0 LEXAN	976917008	2	1	682	966291008	TERMINAL BOX
SIGN 85X55 SPF	97025520	(1)	1	705	917268408	BOOM NOSE
SIGN 88X450X0,1 FOLIE	10663718	9	2	724	910836808	HOOK BLOCK
SIGN EXTERNAL SUPPLY 110	918462408	417	1	12		LIEBHERR LTR 1220
SIGN PROJEKT TYP KLEBEFO	97067623	9	2	629	968068308	ASSEMBLY DEVICE
SIGN PROJEKT TYP KLEBEFO	97067623	4	2	722	917531708	BALLAST TRAVERSE
SIGN TRANSPORT HOLDER	919127808	421	1	12		LIEBHERR LTR 1220
SIGNAGE COUNTERWEIGHT	968992508	15	1	623	917260608	COUNTERWEIGHT WITH CLAM
SIGNS MASTNASE	967774608	100	1	705	917268408	BOOM NOSE
SILENCER	502661608	153	1	478	969763408	PIPEWORK AIR INSTALLATIO
SINGEL SEAL 1,0-1,5MM2	10014387	830	69	513	96037136	WIRING HARNESS
SINGEL SEAL 1,0-1,5MM2	10014387	830	6	515	96037137	WIRING HARNESS
SINGLE STRAND SEALING	602331508	804	9	515	96037137	WIRING HARNESS
SINGLE STRAND SEALING 1,2	602330808	802	12	45	96045228	WIRING HARNESS
SINGLE STRAND SEALING 1,2	602330808	802	2	447	96036955	WIRING HARNESS
SINGLE STRAND SEALING 1,2	602330808	802	14	513	96037136	WIRING HARNESS
SINGLE STRAND SEALING 1,2	602330808	802	4	515	96037137	WIRING HARNESS
SINGLE STRAND SEALING 1,4-	10424625	828	4	447	96036955	WIRING HARNESS
SINGLE STRAND SEALING 1,4-	10424625	828	2	511	96045385	WIRING HARNESS
SINGLE STRAND SEALING 1,4-	10424625	828	9	515	96037137	WIRING HARNESS
SINGLE STRAND SEALING 2	605619708	813	1	45	96045228	WIRING HARNESS
SINGLE STRAND SEALING 2	605619708	813	37	511	96045385	WIRING HARNESS
SINGLE STRAND SEALING 2	605619708	813	13	513	96037136	WIRING HARNESS
SINGLE STRAND SEALING 2,2-	602330508	801	6	513	96037136	WIRING HARNESS
SINGLE STRAND SEALING DIN	605619908	821	4	511	96045385	WIRING HARNESS
SINGLE STRAND SEALING DIN	605619808	816	3	511	96045385	WIRING HARNESS
SINGLE STRAND SEALING DIN	605619808	816	2	515	96037137	WIRING HARNESS
SINGLE-END SPANNER DIN 8	885132208	21	1	144	928569808	MAIN TOOLS
SINGLE-END SPANNER DIN 8	790004608	22	1	144	928569808	MAIN TOOLS
SIPHON PIPE SPF	970658608	250	1	269	918731408	DRIVE ASSEMBLY CPL.
SLEEVE	10815006	3	1	42	10450273	ANTENNA
SLEEVE	11493793	1	1	741	915037208	AUXILIARY REEVING CABLE, C
SLEEVE 108.0X196 S235JRH	97031480	30	2	70	919254308	CRAWLER SUPPORT PREASS
SLEEVE 108.0X196 S235JRH	97031480	30	2	100	919254408	CRAWLER SUPPORT PREASS
SLEEVE 12.0X6 E235+N FE//ZN	97032611	2	4	25	968019508	LIMIT SWITCH ADD-ON
SLEEVE 140.0X25 35NICRMOV	972140108	5	1	350	917259608	ROTATING PLATFORM LOCK
SLEEVE 18X12 PA 12	97012184	44	1	405	917304708	SLIDING DOOR INSTALLATION
SLEEVE 18X24 PA12	97001760	34	1	405	917304708	SLIDING DOOR INSTALLATION
SLEEVE 20.0X30 S355J2C+C	97031233	15	3	721	968728808	CONSOLE PRE-ASS.
SLEEVE 20.0X30 S355J2C+C	97031233	2	2	728	917413208	SELF-ERECT. AUX. HOIST GEA
SLEEVE 25.0X30 35NICRMOV	97114100	9	48	338	919369308	SLEWING GEAR
SLEEVE 25X15 PA 12	97001711	33	1	405	917304708	SLIDING DOOR INSTALLATION
SLEEVE 25X20 11SMN37 FE//	953873408	25	1	36	96045226	SWITCH BOX COMPL.
SLEEVE 25X20 11SMN37 FE//	953873408	20	16	111	917691008	FALL PROTECTION
SLEEVE 25X20 11SMN37 FE//	953873408	25	8	121	919644008	HYDRAULIC SUPPORT
SLEEVE 25X20 11SMN37 FE//	953873408	85	4	137	919499408	CENTRAL BALLAST
SLEEVE 25X20 11SMN37 FE//	953873408	12	4	142	96045206	MECHANICAL AUXILIARIES
SLEEVE 25X20 11SMN37 FE//	953873408	21	2	269	918731408	DRIVE ASSEMBLY CPL.
SLEEVE 25X20 11SMN37 FE//	953873408	14	6	275	919007708	DRIVE ASSEMBLY, PRE-ASSE

Description	Item	Pos.	Quantity	Page	Assembly	Description
SLEEVE 25X20 11SMN37 FE//	953873408	22	4	352	917259708	MAIN HOIST GEAR
SLEEVE 25X20 11SMN37 FE//	953873408	3	1	491	919372008	EXHAUST SYSTEM
SLEEVE 25X20 11SMN37 FE//	953873408	313	4	589	967784808	HYDR.AUXILIARY HOISTING
SLEEVE 32X30	955918008	25	2	672	966134608	ADD-ON PARTS CYLINDER
SLEEVE 33.0X19 FE//ZNNI8//C	978787708	16	4	34	96045225	ELECTR.FOR CENTER SECTIO
SLEEVE 33.0X19 FE//ZNNI8//C	978787708	38	6	70	919254308	CRAWLER SUPPORT PREASS
SLEEVE 33.0X19 FE//ZNNI8//C	978787708	38	6	100	919254408	CRAWLER SUPPORT PREASS
SLEEVE 33.0X19 FE//ZNNI8//C	978787708	25	3	127	917257108	CENTRALIZED LUBRICATION
SLEEVE 33.0X19 FE//ZNNI8//C	978787708	69	12	137	919499408	CENTRAL BALLAST
SLEEVE 33.0X19 FE//ZNNI8//C	978787708	15	12	158	918731108	ASSEMBLY PARTS F.SLEWING
SLEEVE 33.0X19 FE//ZNNI8//C	978787708	30	5	429	96036790	SLEWING PLATFORM PANELLI
SLEEVE 33.0X19 FE//ZNNI8//C	978787708	53	4	462	918759808	ADD HEATING SUPERSTRUCT
SLEEVE 33.0X19 FE//ZNNI8//C	978787708	(6)	6	478	969763408	PIPEWORK AIR INSTALLATIO
SLEEVE 33.0X19 FE//ZNNI8//C	978787708	45	2	483	918484108	UREA PLANT
SLEEVE 33.0X19 FE//ZNNI8//C	978787708	5	2	497	96039740	ADDITIONAL PARTS CLADDIN
SLEEVE 33.0X19 FE//ZNNI8//C	978787708	2	3	608	968210808	ADD-ON PARTS CAMERA
SLEEVE 60X45X33	927602501	60	1	357	939292201	PLANETARY GEARBOX
SLEEVE 65.0X248 E235+N	97100243	42	1	70	919254308	CRAWLER SUPPORT PREASS
SLEEVE 65.0X248 E235+N	97100243	42	1	100	919254408	CRAWLER SUPPORT PREASS
SLEEVE 70.0X120 S355J2G3	979443608	45	4	30	917511508	CRAWLER CENTRE PART PRE
SLEEVE CONTACT 0,2-0,5MM2	10335820	690	14	44	96045228	WIRING HARNESS
SLEEVE CONTACT 0,2-0,5MM2	10335820	690	52	447	96036955	WIRING HARNESS
SLEEVE CONTACT 0,2-0,5MM2	10335820	690	6	448	96036956	WIRING HARNESS
SLEEVE CONTACT 0,2-0,5MM2	10335820	690	29	511	96045385	WIRING HARNESS
SLEEVE CONTACT 0,2-0,5MM2	10335820	690	20	513	96037136	WIRING HARNESS
SLEEVE CONTACT 0,3-0,89MM	602332108	611	4	448	96036956	WIRING HARNESS
SLEEVE CONTACT 0,5-0,75MM	10424623	700	4	447	96036955	WIRING HARNESS
SLEEVE CONTACT 0,5-0,75MM	10424623	700	2	511	96045385	WIRING HARNESS
SLEEVE CONTACT 0,5-0,75M	10813644	754	9	515	96037137	WIRING HARNESS
SLEEVE CONTACT 0,5-1,0MM2	10493495	726	65	513	96037136	WIRING HARNESS
SLEEVE CONTACT 0,5-1,0MM2	10493495	726	4	515	96037137	WIRING HARNESS
SLEEVE CONTACT 0,5-1,0MM2	10800631	753	4	513	96037136	WIRING HARNESS
SLEEVE CONTACT 0,5-1,0MM2	11622989	789	4	515	96037137	WIRING HARNESS
SLEEVE CONTACT 0,5-1MM2	10877343	2258	25	447	96036955	WIRING HARNESS
SLEEVE CONTACT 0,50-1MM	10300946	717	4	515	96037137	WIRING HARNESS
SLEEVE CONTACT 0,5MM2	10875281	2238	6	447	96036955	WIRING HARNESS
SLEEVE CONTACT 0,5MM2 SIL	10493970	721	16	45	96045228	WIRING HARNESS
SLEEVE CONTACT 0,5MM2 SIL	10493970	(721)	4	711	917598408	ELECTRIC MEASURING & WAR
SLEEVE CONTACT 0,75-1,0MM	604519308	629	6	44	96045228	WIRING HARNESS
SLEEVE CONTACT 0,75-1,0MM	604519308	629	2	516	96037133	LEAD
SLEEVE CONTACT 0,75-1,0MM	604519308	629	2	617	96037132	LEAD
SLEEVE CONTACT 0,75-1,0M	11342253	788	9	515	96037137	WIRING HARNESS
SLEEVE CONTACT 0,75-1,5MM	6202434	96	4	44	96045228	WIRING HARNESS
SLEEVE CONTACT 0,75-1,5MM	6202434	96	2	510	96045385	WIRING HARNESS
SLEEVE CONTACT 0,75-1,5MM	6202434	96	2	512	96037136	WIRING HARNESS
SLEEVE CONTACT 1,0-1,5MM2	10493496	727	4	513	96037136	WIRING HARNESS
SLEEVE CONTACT 1,0-1,5MM2	10493496	727	2	515	96037137	WIRING HARNESS
SLEEVE CONTACT 1,0-2,5MM2	10493493	724	6	513	96037136	WIRING HARNESS
SLEEVE CONTACT 1,5MM2	604518808	636	2	510	96045385	WIRING HARNESS
SLEEVE CONTACT DIN 72585 0	602339508	647	4	510	96045385	WIRING HARNESS
SLEEVE CONTACT DIN 72585 0	602339408	643	3	510	96045385	WIRING HARNESS
SLEEVE CONTACT DIN 72585 0	602339408	643	2	514	96037137	WIRING HARNESS
SLEEVE D60/50X25	571819708	190	1	285	97029921	DISTRIBUTOR GEARBOX
SLEEVE PA6G	97030030	5	1	474	967928508	LOCKING
SLEEVE RD.32X41 X12CRNIS	955917908	26	4	672	966134608	ADD-ON PARTS CYLINDER
SLEEVE RD20X15 S355J2G3	941530008	15	4	134	919087608	ROTARY FEED THROUGH
SLEEVE RD40X50 42CRMO4+Q	956078908	22	1	70	919254308	CRAWLER SUPPORT PREASS
SLEEVE RD40X50 42CRMO4+Q	956078908	22	1	100	919254408	CRAWLER SUPPORT PREASS
SLEEVE RD40X50 42CRMO4+Q	956078908	5	2	332	917825508	OIL RESERVOIR, EXTENSION
SLEEVE X46Cr13	10152168	2	1	192	10149578	CYLINDER HEAD

Description	Item	Pos.	Quantity	Page	Assembly	Description
SLEWING GEAR	919369308	119	1	9		LIEBHERR LTR 1220
SLEWING GEAR DRIVE DAT 22	90008901	1	2	338	919369308	SLEWING GEAR
SLEWING PLATFORM PANELL	969015908	2	1	425	918731508	TURNTABLE PANELLING
SLEWING PLATFORM PANELL	96036790	1	1	425	918731508	TURNTABLE PANELLING
SLIDE BLOCK CPL.	10455144	15	1	419	10877138	OPERATOR SEAT
SLIDE PLATE 120X100X2090 P	97031639	4	8	17	919617108	CRAWLER TRACK TRAVEL G
SLIDE PLATE 15X120X450 PA6	97038559	54	2	17	919617108	CRAWLER TRACK TRAVEL G
SLIDE PLATE 15X90X358 SPF	971995508	79	2	640	917291908	PIVOT SECTION, PRE-ASSEMB
SLIDE PLATE 15X90X358 SPF	971995508	55	2	644	917292008	TELESCOPIC SECTION 1 PRE
SLIDE PLATE 15X90X358 SPF	971995508	55	2	648	917292108	TELESCOPIC SECT.2 PRE-AS
SLIDE PLATE 15X90X358 SPF	971995508	55	2	652	917292208	TELESCOPIC SECT.3 PRE-ASS
SLIDE PLATE 15X90X358 SPF	971995508	55	2	656	917292308	TELESCOPIC SECT.IV PRE-A
SLIDE PLATE 190X186X187 P	971063208	37	2	639	917291908	PIVOT SECTION, PRE-ASSEMB
SLIDE PLATE 190X186X187 P	971063208	41	2	644	917292008	TELESCOPIC SECTION 1 PRE
SLIDE PLATE 190X186X187 P	971063208	41	2	648	917292108	TELESCOPIC SECT.2 PRE-AS
SLIDE PLATE 190X186X187 P	971063208	41	2	652	917292208	TELESCOPIC SECT.3 PRE-ASS
SLIDE PLATE 190X186X187 P	971063208	41	2	656	917292308	TELESCOPIC SECT.IV PRE-A
SLIDE PLATE 20X60X980 PA6	973351308	80	2	640	917291908	PIVOT SECTION, PRE-ASSEMB
SLIDE PLATE 20X90X358 SPF	972898808	42	2	639	917291908	PIVOT SECTION, PRE-ASSEMB
SLIDE PLATE 20X90X358 SPF	972898808	56	2	644	917292008	TELESCOPIC SECTION 1 PRE
SLIDE PLATE 20X90X358 SPF	972898808	56	2	648	917292108	TELESCOPIC SECT.2 PRE-AS
SLIDE PLATE 20X90X358 SPF	972898808	56	2	652	917292208	TELESCOPIC SECT.3 PRE-ASS
SLIDE PLATE 20X90X358 SPF	972898808	56	2	656	917292308	TELESCOPIC SECT.IV PRE-A
SLIDE PLATE 30X50X380 PA6	972898208	45	33	639	917291908	PIVOT SECTION, PRE-ASSEMB
SLIDE PLATE 30X50X380 PA6	972898208	42	31	644	917292008	TELESCOPIC SECTION 1 PRE
SLIDE PLATE 30X50X380 PA6	972898208	42	29	648	917292108	TELESCOPIC SECT.2 PRE-AS
SLIDE PLATE 30X50X380 PA6	972898208	42	28	652	917292208	TELESCOPIC SECT.3 PRE-ASS
SLIDE PLATE 30X50X380 PA6	972898208	42	25	656	917292308	TELESCOPIC SECT.IV PRE-A
SLIDE PLATE 8X50X350 PA6G+	972898608	49	2	639	917291908	PIVOT SECTION, PRE-ASSEMB
SLIDE PLATE 8X50X350 PA6G+	972898608	53	2	644	917292008	TELESCOPIC SECTION 1 PRE
SLIDE SHEET 520X50X 13 CU	97043682	60	8	17	919617108	CRAWLER TRACK TRAVEL G
SLIDE SHEET 520X57X 18 CU	97043683	61	8	18	919617108	CRAWLER TRACK TRAVEL G
SLIDE SHEET 560X46X 35 CU	97049098	59	8	17	919617108	CRAWLER TRACK TRAVEL G
SLIDER 100x140x260 PA6G+OE	970456308	2	1	672	966134608	ADD-ON PARTS CYLINDER
SLIDER 110X56X30 PA6G	97032618	2	1	26	968036408	LIMIT SWITCH, PRE-ASSEMB
SLIDER 14X100X233 PA6G+OE	970537508	29	2	644	917292008	TELESCOPIC SECTION 1 PRE
SLIDER 14X100X233 PA6G+OE	970537508	29	2	648	917292108	TELESCOPIC SECT.2 PRE-AS
SLIDER 14X100X233 PA6G+OE	970537508	29	2	652	917292208	TELESCOPIC SECT.3 PRE-ASS
SLIDER 14X100X233 PA6G+OE	970537508	29	2	656	917292308	TELESCOPIC SECT.IV PRE-A
SLIDER 14X100X233 PA6G+OE	970537508	39	2	661	917292408	TELESCOPIC SECT.5 PRE-AS
SLIDER 150X130X70 CUZN25	97039611	16	8	30	917511508	CRAWLER CENTRE PART PRE
SLIDER 150X130X70 CUZN25	97039612	17	8	30	917511508	CRAWLER CENTRE PART PRE
SLIDER 15X100X231 PA6G+OE	973254708	67	2	653	917292208	TELESCOPIC SECT.3 PRE-ASS
SLIDER 15X100X231 PA6G+OE	973254708	67	2	657	917292308	TELESCOPIC SECT.IV PRE-A
SLIDER 15X100X231 PA6G+OE	973254708	71	2	662	917292408	TELESCOPIC SECT.5 PRE-AS
SLIDER 15X85X231 PA6G+OEL	972908108	14	2	644	917292008	TELESCOPIC SECTION 1 PRE
SLIDER 15X85X231 PA6G+OEL	972908108	14	2	648	917292108	TELESCOPIC SECT.2 PRE-AS
SLIDER 15X85X231 PA6G+OEL	972908108	14	2	652	917292208	TELESCOPIC SECT.3 PRE-ASS
SLIDER 15X85X231 PA6G+OEL	972908108	14	2	656	917292308	TELESCOPIC SECT.IV PRE-A
SLIDER 15X85X231 PA6G+OEL	972908108	48	2	661	917292408	TELESCOPIC SECT.5 PRE-AS
SLIDER 18X100X231 PA6G+OE	970537708	27	2	644	917292008	TELESCOPIC SECTION 1 PRE
SLIDER 18X100X231 PA6G+OE	970537708	27	2	648	917292108	TELESCOPIC SECT.2 PRE-AS
SLIDER 18X100X231 PA6G+OE	970537708	27	2	652	917292208	TELESCOPIC SECT.3 PRE-ASS
SLIDER 18X100X231 PA6G+OE	970537708	27	2	656	917292308	TELESCOPIC SECT.IV PRE-A
SLIDER 18X100X231 PA6G+OE	970537708	38	2	661	917292408	TELESCOPIC SECT.5 PRE-AS
SLIDER 19X85X231 PA6G+OEL	972908408	63	2	645	917292008	TELESCOPIC SECTION 1 PRE
SLIDER 19X85X231 PA6G+OEL	972908408	32	4	648	917292108	TELESCOPIC SECT.2 PRE-AS
SLIDER 19X85X231 PA6G+OEL	972908408	32	2	652	917292208	TELESCOPIC SECT.3 PRE-ASS
SLIDER 19X85X231 PA6G+OEL	972908408	32	2	656	917292308	TELESCOPIC SECT.IV PRE-A
SLIDER 19X85X231 PA6G+OEL	972908408	37	2	661	917292408	TELESCOPIC SECT.5 PRE-AS

Description	Item	Pos.	Quantity	Page	Assembly	Description
SLIDER 234X53X62 PA6G+OEL	970537108	26	2	644	917292008	TELESCOPIC SECTION 1 PRE
SLIDER 234X53X62 PA6G+OEL	970537108	26	2	648	917292108	TELESCOPIC SECT.2 PRE-AS
SLIDER 234X53X62 PA6G+OEL	970537108	26	2	652	917292208	TELESCOPIC SECT.3 PRE-ASS
SLIDER 234X53X62 PA6G+OEL	970537108	26	2	656	917292308	TELESCOPIC SECT.IV PRE-A
SLIDER 234X53X62 PA6G+OEL	970537108	41	2	661	917292408	TELESCOPIC SECT.5 PRE-AS
SLIDER 23X85X231 PA6G+OEL	972908308	32	2	644	917292008	TELESCOPIC SECTION 1 PRE
SLIDER 53X87X234 PA6G+OEL	970537008	25	2	644	917292008	TELESCOPIC SECTION 1 PRE
SLIDER 53X87X234 PA6G+OEL	970537008	25	2	648	917292108	TELESCOPIC SECT.2 PRE-AS
SLIDER 53X87X234 PA6G+OEL	970537008	25	2	652	917292208	TELESCOPIC SECT.3 PRE-ASS
SLIDER 53X87X234 PA6G+OEL	970537008	25	2	656	917292308	TELESCOPIC SECT.IV PRE-A
SLIDER 53X87X234 PA6G+OEL	970537008	40	2	661	917292408	TELESCOPIC SECT.5 PRE-AS
SLIDER 65X120X190 PA6G+OE	972997008	1	1	672	966134608	ADD-ON PARTS CYLINDER
SLIDER 84X261X468 PA6G+OE	973763408	3	1	672	966134608	ADD-ON PARTS CYLINDER
SLIDING DOOR INSTALLATION	917304708	133	1	10		LIEBHERR LTR 1220
SLINGING MEAN	917611508	299	1	11		LIEBHERR LTR 1220
SLIP RING 16A	11060087	14	8	681	10354493	CABLE REEL
SLIP RING 16A	11060088	140	8	681	10354493	CABLE REEL
SLIP RING 60X2 2,5²	10114843	7	21	47	11346779	SLIP RING TRANSMITTER
SLIP RING SET	571851008	21	1	675	10802064	ROPE LENGTH INDICATOR
SLIP RING TRANSMITTER 21X	11346779	5	1	34	96045225	ELECTR.FOR CENTER SECTIO
SLIP-ON TUBE	607226808	21	2	506	919410708	ELECTR. SYSTEM F.SLEWING
SLIPPER 65X340X450 GS-CK 4	308115114	7	4	70	919254308	CRAWLER SUPPORT PREASS
SLIPPER 65X340X450 GS-CK 4	308115114	7	4	100	919254408	CRAWLER SUPPORT PREASS
SLOTTED NUT DIN 1804 M80X	241047802	7	1	370	96015921	OPERATING ELEMENT INSTAL
SLOTTED NUT M38X1,5	570110108	9	1	347	570109008	DRIVING GEAR
SLOTTED NUT M70X2 C45	927530201	13	1	340	90008901	SLEWING GEAR DRIVE
SMALL HILL COVERING 65X2	979206708	8	1	383	917305408	INTERNAL PANELLING INSTA
SNAP HOOK DIN 5299 C 60X6-	744010208	38	2	731	917267508	TRANSPORT MOUNTING
SNAP LOCK ABS	10296157	(2)	3	429	96036790	SLEWING PLATFORM PANELLI
SNAP LOCK ABS	10296157	(2)	3	429	96036790	SLEWING PLATFORM PANELLI
SNAP LOCK ABS	10296157	(2)	3	429	96036790	SLEWING PLATFORM PANELLI
SNAP RING 45X1,75	429606201	62	1	357	939292201	PLANETARY GEARBOX
SNAP RING 52X2 FSt	4980482	7	2	188	10146367	PISTON CPL.
SNAP RING DIN 7993 16X1,6	11643655	10	1	301	10472208	ADJUSTMENT
SNAP SWITCH	571486808	29	1	47	11346779	SLIP RING TRANSMITTER
SNAP-IN LOCK NIROSTA	10010025	3	1	112	968038208	BEARING AHEAD LEFT SIDE
SNAP-IN LOCK NIROSTA	10010025	3	1	113	968038308	BEARING AHEAD RIGHT SIDE
SOCKET	10429057	3	1	601	915432508	RADIO PREPARATION UPPER
SOCKET 2 13A	10342518	525	1	446	96036955	WIRING HARNESS
SOCKET 2 13A	10342518	518	3	513	96037136	WIRING HARNESS
SOCKET 2 13A	10342518	512	3	514	96037137	WIRING HARNESS
SOCKET 3-POL	6205239	520	1	514	96037137	WIRING HARNESS
SOCKET 8-POL	11008529	1	1	457	966979108	SOCKET
SOCKET COMBINATION 3-POL	605215708	1	1	598	918462708	EXTERNAL FEED
SOCKET ETHERNET	966979108	52	1	449	96036957	ELECTRIC ADD-ON PARTS CA
SOCKET FOR SPANNER DIN	790028508	66	1	144	928569808	MAIN TOOLS
SOCKET FOR SPANNER SW46	8008673	10	1	143	919328608	TOOLS AND ACCESSORIES
SOCKET HEAD SCREW DIN 6	10875559	86	4	137	919499408	CENTRAL BALLAST
SOCKET HEAD SCREW DIN 6	10875559	38	6	417	918810308	CONTROL STAND
SOCKET HEAD SCREW DIN 6	10875561	33	20	644	917292008	TELESCOPIC SECTION 1 PRE
SOCKET HEAD SCREW DIN 6	10875561	33	20	648	917292108	TELESCOPIC SECT.2 PRE-AS
SOCKET HEAD SCREW DIN 6	10875561	33	20	652	917292208	TELESCOPIC SECT.3 PRE-ASS
SOCKET HEAD SCREW DIN 6	10875561	33	20	656	917292308	TELESCOPIC SECT.IV PRE-A
SOCKET HEAD SCREW DIN 6	10875561	36	12	661	917292408	TELESCOPIC SECT.5 PRE-AS
SOCKET HEAD SCREW DIN 69	571310608	113	4	71	919254308	CRAWLER SUPPORT PREASS
SOCKET HEAD SCREW DIN 69	571310608	114	4	101	919254408	CRAWLER SUPPORT PREASS
SOCKET HEAD SCREW DIN 7	4980927	9	3	197	10138230	CAMSHAFT CPL.
SOCKET HEAD SCREW DIN 7	4980927	9	3	197	10138230	CAMSHAFT CPL.
SOCKET HEAD SCREW DIN 79	10179392	18	4	17	919617108	CRAWLER TRACK TRAVEL G
SOCKET HEAD SCREW DIN 7	240122602	9	3	197	10138230	CAMSHAFT CPL.

Description	Item	Pos.	Quantity	Page	Assembly	Description
SOCKET HEAD SCREW DIN 7	240122602	9	3	197	10138230	CAMSHAFT CPL.
SOCKET HEAD SCREW DIN 79	10179393	17	1	616	96037130	EQUIPMENT CAMERA SLEW C
SOCKET HEAD SCREW DIN 79	10179393	17	1	618	96037131	EQUIPMENT CAMERA WINCHE
SOCKET HEAD SCREW DIN 79	10180175	332	8	277	919007708	DRIVE ASSEMBLY, PRE-ASSE
SOCKET HEAD SCREW DIN 79	12691559	(3)	4	305	10871282	VARIABLE PUMP
SOCKET HEAD SCREW DIN 79	12103956	20	2	26	968036408	LIMIT SWITCH, PRE-ASSEMB
SOCKET HEAD SCREW DIN 7	540511908	336	3	277	919007708	DRIVE ASSEMBLY, PRE-ASSE
SOCKET HEAD SCREW DIN 7	10876084	34	14	393	966497908	FRONT WINDOW CPL.
SOCKET HEAD SCREW DIN 7	12216054	104	4	71	919254308	CRAWLER SUPPORT PREASS
SOCKET HEAD SCREW DIN 7	12216054	105	4	101	919254408	CRAWLER SUPPORT PREASS
SOCKET HEAD SCREW DIN 7	12216054	99	9	645	917292008	TELESCOPIC SECTION 1 PRE
SOCKET HEAD SCREW DIN 7	12216054	99	9	649	917292108	TELESCOPIC SECT.2 PRE-AS
SOCKET HEAD SCREW DIN 7	12216054	99	9	653	917292208	TELESCOPIC SECT.3 PRE-ASS
SOCKET HEAD SCREW DIN 7	12216054	99	9	657	917292308	TELESCOPIC SECT.IV PRE-A
SOCKET HEAD SCREW DIN 7	12216056	64	12	645	917292008	TELESCOPIC SECTION 1 PRE
SOCKET HEAD SCREW DIN 7	12216056	64	12	649	917292108	TELESCOPIC SECT.2 PRE-AS
SOCKET HEAD SCREW DIN 7	12216056	64	12	653	917292208	TELESCOPIC SECT.3 PRE-ASS
SOCKET HEAD SCREW DIN 7	12216056	64	12	657	917292308	TELESCOPIC SECT.IV PRE-A
SOCKET HEAD SCREW DIN 7	12216056	33	20	661	917292408	TELESCOPIC SECT.5 PRE-AS
SOCKET HEAD SCREW DIN 84	510797708	22	1	558	511433908	PRESSURE LIMITING VALVE
SOCKET HEAD SCREW DIN 84	510797708	22	1	561	511419608	PRESSURE LIMITING VALVE
SOCKET HEAD SCREW DIN 91	404360408	27	4	550	10413106	CONTROL BLOCK
SOCKET HEAD SCREW DIN 91	404319708	25	4	305	10871282	VARIABLE PUMP
SOCKET HEAD SCREW DIN 91	10876394	320	4	539	96045351	HYDRAULICS UPPER CARRI
SOCKET HEAD SCREW DIN 91	10876394	11	8	546	11211756	CONTROL BLOCK
SOCKET HEAD SCREW ISO 12	10875564	47	2	522	969256608	BASE ASSEMBLY
SOCKET HEAD SCREW ISO 12	10875564	300	4	602	918377508	COOLING WATER PRE-HEATIN
SOCKET HEAD SCREW ISO 12	10875564	47	1	661	917292408	TELESCOPIC SECT.5 PRE-AS
SOCKET HEAD SCREW ISO 14	11600879	3	1	211	10135434	PRESSURE ADAPTER FASTEN
SOCKET HEAD SCREW ISO 1	12219491	3	1	209	10152867	INJECTOR WITH FASTENING
SOCKET HEAD SCREW ISO 47	10562617	317	2	276	919007708	DRIVE ASSEMBLY, PRE-ASSE
SOCKET HEAD SCREW ISO 47	12208101	319	2	276	919007708	DRIVE ASSEMBLY, PRE-ASSE
SOCKET HEAD SCREW ISO 4	11320344	71	12	357	939292201	PLANETARY GEARBOX
SOCKET HEAD SCREW ISO 4	11320344	71	12	583	939294201	PLANETARY GEARBOX
SOCKET HEAD SCREW ISO 47	10876074	320	2	276	919007708	DRIVE ASSEMBLY, PRE-ASSE
SOCKET HEAD SCREW ISO 4	12222407	20	16	121	919644008	HYDRAULIC SUPPORT
SOCKET HEAD SCREW ISO 4	12222407	312	2	276	919007708	DRIVE ASSEMBLY, PRE-ASSE
SOCKET HEAD SCREW ISO 4	12222407	301	2	280	96034631	RADIATOR, PRE-ASSEMBLED
SOCKET HEAD SCREW ISO 4	12219296	32	8	30	917511508	CRAWLER CENTRE PART PRE
SOCKET HEAD SCREW ISO 47	404293213	11	1	368	919010208	CRANE OPERATOR CABIN P
SOCKET HEAD SCREW ISO 47	10650720	2	2	260	10125687	POWER TAKE-OFF ADD-ON
SOCKET HEAD SCREW ISO 4	10415162	21	4	25	968019508	LIMIT SWITCH ADD-ON
SOCKET HEAD SCREW ISO 4	10415162	315	1	276	919007708	DRIVE ASSEMBLY, PRE-ASSE
SOCKET HEAD SCREW ISO 4	10415162	52	12	357	939292201	PLANETARY GEARBOX
SOCKET HEAD SCREW ISO 4	10415162	12	12	471	918956108	HYDRAULIC BALLASTING
SOCKET HEAD SCREW ISO 4	10415162	52	12	583	939294201	PLANETARY GEARBOX
SOCKET HEAD SCREW ISO 47	404230108	30	12	116	968046208	ADD-ON PARTS
SOCKET HEAD SCREW ISO 47	11002743	4	4	261	10144036	POWER TAKE-OFF ADD-ON
SOCKET HEAD SCREW ISO 4	10875571	58	2	71	919254308	CRAWLER SUPPORT PREASS
SOCKET HEAD SCREW ISO 4	10875571	58	2	101	919254408	CRAWLER SUPPORT PREASS
SOCKET HEAD SCREW ISO 4	10875571	6	6	350	917259608	ROTATING PLATFORM LOCK
SOCKET HEAD SCREW ISO 4	10875571	18	4	352	917259708	MAIN HOIST GEAR
SOCKET HEAD SCREW ISO 4	10875571	14	2	475	967978908	INTERLOCKING
SOCKET HEAD SCREW ISO 4	10875571	555	14	540	96045351	HYDRAULICS UPPER CARRI
SOCKET HEAD SCREW ISO 47	10468820	19	6	352	917259708	MAIN HOIST GEAR
SOCKET HEAD SCREW ISO 4	10875572	5	8	338	919369308	SLEWING GEAR
SOCKET HEAD SCREW ISO 4	10875572	23	8	644	917292008	TELESCOPIC SECTION 1 PRE
SOCKET HEAD SCREW ISO 4	10875572	23	8	648	917292108	TELESCOPIC SECT.2 PRE-AS
SOCKET HEAD SCREW ISO 4	10875572	23	8	652	917292208	TELESCOPIC SECT.3 PRE-ASS
SOCKET HEAD SCREW ISO 4	10875572	23	8	656	917292308	TELESCOPIC SECT.IV PRE-A

Description	Item	Pos.	Quantity	Page	Assembly	Description
SOCKET HEAD SCREW ISO 4	10875572	18	8	661	917292408	TELESCOPIC SECT.5 PRE-AS
SOCKET HEAD SCREW ISO 47	404309408	62	24	73	90028956	TRACTION DRIVE
SOCKET HEAD SCREW ISO 4	11657000	56	12	357	939292201	PLANETARY GEARBOX
SOCKET HEAD SCREW ISO 4	11657000	335	2	540	96045351	HYDRAULICS UPPER CARRI
SOCKET HEAD SCREW ISO 4	11657000	56	12	583	939294201	PLANETARY GEARBOX
SOCKET HEAD SCREW ISO 4	4001622	2	4	205	10150741	HIGH PRESSURE PUMP W.FAS
SOCKET HEAD SCREW ISO 4	240186402	23	4	550	10413106	CONTROL BLOCK
SOCKET HEAD SCREW ISO 4	240186402	29	4	550	10413106	CONTROL BLOCK
SOCKET HEAD SCREW ISO 4	12223034	25	1	581	939294001	ROPE DRUM
SOCKET HEAD SCREW ISO 4	11321144	7	15	247	10115829	FLYWHEEL HOUSING MOUNT
SOCKET HEAD SCREW ISO 47	4043006	5	2	193	10148438	ROCKER ARM BRACKET CPL.
SOCKET HEAD SCREW ISO 47	10875574	14	4	672	966134608	ADD-ON PARTS CYLINDER
SOCKET HEAD SCREW ISO 4	12223057	6	4	338	919369308	SLEWING GEAR
SOCKET HEAD SCREW ISO 4	12223057	2	2	611	968267108	ADD-ON PARTS CAMERA
SOCKET HEAD SCREW ISO 47	11321126	11	8	288	11631893	BEARING FLANGE
SOCKET HEAD SCREW ISO 47	404294613	17	4	372	916177508	STEP CPL.
SOCKET HEAD SCREW ISO 4	10875578	76	8	73	90028956	TRACTION DRIVE
SOCKET HEAD SCREW ISO 4	10875578	64	12	137	919499408	CENTRAL BALLAST
SOCKET HEAD SCREW ISO 4	4980012	6	2	247	10115829	FLYWHEEL HOUSING MOUNT
SOCKET HEAD SCREW ISO 4	10875565	92	8	73	90028956	TRACTION DRIVE
SOCKET HEAD SCREW ISO 4	10875565	77	8	357	939292201	PLANETARY GEARBOX
SOCKET HEAD SCREW ISO 4	10875565	20	8	474	967928508	LOCKING
SOCKET HEAD SCREW ISO 4	10875565	553	12	540	96045351	HYDRAULICS UPPER CARRI
SOCKET HEAD SCREW ISO 4	10875565	77	8	583	939294201	PLANETARY GEARBOX
SOCKET HEAD SCREW ISO 4	10875565	555	4	590	967784808	HYDR.AUXILIARY HOISTING
SOCKET HEAD SCREW ISO 4	4980257	12	12	197	10138230	CAMSHAFT CPL.
SOCKET HEAD SCREW ISO 47	404312108	338	4	540	96045351	HYDRAULICS UPPER CARRI
SOCKET HEAD SCREW ISO 4	11840140	50	8	116	968046208	ADD-ON PARTS
SOCKET HEAD SCREW ISO 4	11840140	33	14	121	919644008	HYDRAULIC SUPPORT
SOCKET HEAD SCREW ISO 4	11840140	39	4	639	917291908	PIVOT SECTION, PRE-ASSEMB
SOCKET HEAD SCREW ISO 4	11840140	46	4	644	917292008	TELESCOPIC SECTION 1 PRE
SOCKET HEAD SCREW ISO 4	11840140	46	4	648	917292108	TELESCOPIC SECT.2 PRE-AS
SOCKET HEAD SCREW ISO 4	11840140	46	4	652	917292208	TELESCOPIC SECT.3 PRE-ASS
SOCKET HEAD SCREW ISO 4	11840140	46	4	656	917292308	TELESCOPIC SECT.IV PRE-A
SOCKET HEAD SCREW ISO 4	11840140	10	7	672	966134608	ADD-ON PARTS CYLINDER
SOCKET HEAD SCREW ISO 4	10876374	31	48	17	919617108	CRAWLER TRACK TRAVEL G
SOCKET HEAD SCREW ISO 4	4902244	66	24	73	90028956	TRACTION DRIVE
SOCKET HEAD SCREW ISO 4	12100905	20	12	550	10413106	CONTROL BLOCK
SOCKET HEAD SCREW ISO 47	10353713	304	4	494	96048826	EXHAUST SYSTEM PRE-ASSE
SOCKET HEAD SCREW ISO 47	10663388	4	48	338	919369308	SLEWING GEAR
SOCKET HEAD SCREW ISO 4	10876373	552	32	51	96035801	HYDRAULIC EQUIPM.CENTER
SOCKET HEAD SCREW ISO 4	10876373	551	8	90	96035796	HYDR.TRAVEL DRIVE
SOCKET HEAD SCREW ISO 4	10876373	551	8	107	96035792	HYDR.TRAVEL DRIVE
SOCKET HEAD SCREW ISO 4	10876373	552	12	540	96045351	HYDRAULICS UPPER CARRI
SOCKET HEAD SCREW ISO 4	10876373	550	4	589	967784808	HYDR.AUXILIARY HOISTING
SOCKET HEAD SCREW ISO 4	10876373	550	12	688	967784508	HYDR.F.TELESCOPIC BOOM
SOCKET HEAD SCREW ISO 4	10878821	557	25	540	96045351	HYDRAULICS UPPER CARRI
SOCKET HEAD SCREW ISO 4	10001080	21	24	357	939292201	PLANETARY GEARBOX
SOCKET HEAD SCREW ISO 4	404318008	21	24	583	939294201	PLANETARY GEARBOX
SOCKET HEAD SCREW ISO 4	4042302	66	4	645	917292008	TELESCOPIC SECTION 1 PRE
SOCKET HEAD SCREW ISO 4	4042302	66	4	649	917292108	TELESCOPIC SECT.2 PRE-AS
SOCKET HEAD SCREW ISO 4	4042302	66	4	653	917292208	TELESCOPIC SECT.3 PRE-ASS
SOCKET HEAD SCREW ISO 4	4042302	66	4	657	917292308	TELESCOPIC SECT.IV PRE-A
SOCKET HEAD SCREW ISO 4	4042302	66	4	662	917292408	TELESCOPIC SECT.5 PRE-AS
SOCKET HEAD SCREW ISO 47	404317008	11	28	352	917259708	MAIN HOIST GEAR
SOCKET HEAD SCREW ISO 47	404317008	14	28	577	967969608	AUXILIARY HOISTING GEAR 2
SOCKET HEAD SCREW ISO 4	12224014	337	3	277	919007708	DRIVE ASSEMBLY, PRE-ASSE
SOCKET HEAD SCREW ISO 4	12224014	17	4	352	917259708	MAIN HOIST GEAR
SOCKET HEAD SCREW ISO 47	10001077	31	4	581	939294001	ROPE DRUM
SOCKET HEAD SCREW ISO 47	10001074	5	4	644	917292008	TELESCOPIC SECTION 1 PRE

Description	Item	Pos.	Quantity	Page	Assembly	Description
SOCKET HEAD SCREW ISO 47	10001074	5	4	648	917292108	TELESCOPIC SECT.2 PRE-AS
SOCKET HEAD SCREW ISO 47	10001074	5	4	652	917292208	TELESCOPIC SECT.3 PRE-ASS
SOCKET HEAD SCREW ISO 47	10001074	5	4	656	917292308	TELESCOPIC SECT.IV PRE-A
SOCKET HEAD SCREW ISO 47	10001074	29	4	661	917292408	TELESCOPIC SECT.5 PRE-AS
SOCKET HEAD SCREW ISO 4	12692012	15	32	17	919617108	CRAWLER TRACK TRAVEL G
SOCKET HEAD SCREW ISO 47	4000521	6	24	354	90208882	COMPACT ROPE WINCH
SOCKET HEAD SCREW ISO 4	10878829	13	4	335	969050308	OIL TANK PRE-ASS.
SOCKET HEAD SCREW ISO 4	12692008	10	4	737	917268208	LADDER ATTACHMENT
SOCKET HEAD SCREW ISO 47	404320908	11	12	73	90028956	TRACTION DRIVE
SOCKET HEAD SCREW ISO 4	12691987	14	4	335	969050308	OIL TANK PRE-ASS.
SOCKET HEAD SCREW ISO 47	10293537	23	1	70	919254308	CRAWLER SUPPORT PREASS
SOCKET HEAD SCREW ISO 47	10293537	23	1	100	919254408	CRAWLER SUPPORT PREASS
SOCKET HEAD SCREW ISO 4	10878580	34	14	17	919617108	CRAWLER TRACK TRAVEL G
SOCKET HEAD SCREW ISO 47	11691539	15	4	368	919010208	CRANE OPERATOR CABIN P
SOCKET HEAD SCREW ISO 47	11691539	36	8	417	918810308	CONTROL STAND
SOCKET HEAD SCREW ISO 47	11691539	89	1	640	917291908	PIVOT SECTION, PRE-ASSEMB
SOCKET HEAD SCREW ISO 47	10876395	7	4	58	11643183	CONTROL BLOCK
SOCKET HEAD SCREW ISO 47	10876395	15	4	58	11643183	CONTROL BLOCK
SOCKET HEAD SCREW ISO 47	10876395	15	4	61	11643184	CONTROL BLOCK
SOCKET HEAD SCREW ISO 47	10876395	45	16	522	969256608	BASE ASSEMBLY
SOCKET HEAD SCREW ISO 47	10875815	6	3	715	967936408	WIND WARNING PREASSEMB
SOCKET HEAD SCREW ISO 4	4901531	7	3	61	11643184	CONTROL BLOCK
SOCKET HEAD SCREW ISO 4	4901531	19	4	548	10342823	PRESSURE CONTROL VALVE
SOCKET HEAD SCREW ISO 47	11690042	10	2	410	917676208	HEATING CRANE DRIVER'S CA
SOCKET HEAD SCREW ISO 47	11690042	34	24	417	918810308	CONTROL STAND
SOCKET HEAD SCREW ISO 47	11690042	12	4	575	917267108	AUXILIARY HOISTING GEAR 2
SOCKET HEAD SCREW ISO 47	11690042	15	4	728	917413208	SELF-ERECT. AUX. HOIST GEA
SOCKET HEAD SCREW ISO 47	10875582	62	2	384	917305408	INTERNAL PANELLING INSTA
SOCKET HEAD SCREW ISO 47	10875582	4	4	598	918462708	EXTERNAL FEED
SOCKET HEAD SCREW ISO 47	10875582	3	4	600	917269408	CONSOLE AUX. REPLENISHIN
SOCKET HEAD SCREW ISO 47	10875582	4	2	600	917269408	CONSOLE AUX. REPLENISHIN
SOCKET HEAD SCREW ISO 47	10875583	47	4	296	10663105	DRIVING GEAR
SOCKET HEAD SCREW ISO 47	10875583	20	11	372	916177508	STEP CPL.
SOCKET HEAD SCREW ISO 47	10875584	18	4	34	96045225	ELECTR.FOR CENTER SECTIO
SOCKET HEAD SCREW ISO 47	10875584	63	1	384	917305408	INTERNAL PANELLING INSTA
SOCKET HEAD SCREW ISO 47	12204614	3	4	127	917257108	CENTRALIZED LUBRICATION
SOCKET HEAD SCREW ISO 47	12204614	3	5	325	968999708	FUEL TANK, PRE-ASSEMBLED
SOCKET HEAD SCREW ISO 47	12204614	4	4	502	917261208	CENT. LUBRIC. SYSTEM SUP
SOCKET HEAD SCREW ISO 47	12203070	37	2	412	11083498	AIR CONDITIONING UNIT
SOCKET HEAD SCREW ISO 47	404361208	9	16	546	11211756	CONTROL BLOCK
SOCKET HEAD SCREW ISO 47	404361208	4	4	548	10342823	PRESSURE CONTROL VALVE
SOCKET HEAD SCREW ISO 4	10181382	302	4	539	96045351	HYDRAULICS UPPER CARRI
SOCKET HEAD SCREW ISO 4	10181382	303	4	589	967784808	HYDR.AUXILIARY HOISTING
SOCKET HEAD SCREW ISO 47	12216217	40	4	417	918810308	CONTROL STAND
SOCKET HEAD SCREW ISO 47	404364108	10	4	546	11211756	CONTROL BLOCK
SOCKET HEAD SCREW ISO 47	11690044	10	3	362	966631008	ELECTRIC FOR WINCH 1
SOCKET HEAD SCREW ISO 47	11690044	33	6	365	917259908	CRANE DRIVER CAB ADDITIO
SOCKET HEAD SCREW ISO 47	11690044	300	2	499	918731908	AIR FILTER UNIT
SOCKET HEAD SCREW ISO 4	12100256	311	2	90	96035796	HYDR.TRAVEL DRIVE
SOCKET HEAD SCREW ISO 4	12100256	311	2	107	96035792	HYDR.TRAVEL DRIVE
SOCKET HEAD SCREW ISO 47	10875586	12	8	30	917511508	CRAWLER CENTRE PART PRE
SOCKET HEAD SCREW ISO 47	10875586	13	4	58	11643183	CONTROL BLOCK
SOCKET HEAD SCREW ISO 47	10875586	13	4	61	11643184	CONTROL BLOCK
SOCKET HEAD SCREW ISO 47	10875586	3	1	250	10127979	LOCKING PIECES
SOCKET HEAD SCREW ISO 47	10875586	(2)	1	258	12583633	ENGINE CONTROL SENSORS
SOCKET HEAD SCREW ISO 47	10875586	(3)	1	258	12583633	ENGINE CONTROL SENSORS
SOCKET HEAD SCREW ISO 47	10875586	14	2	394	965784408	ROOF WINDOW PRE-ASS.
SOCKET HEAD SCREW ISO 47	10875586	4	1	630	925141508	HOSE GUIDE PRE-ASS.
SOCKET HEAD SCREW ISO 4	404250914	51	1	405	917304708	SLIDING DOOR INSTALLATION
SOCKET HEAD SCREW ISO 4	12224196	316	2	539	96045351	HYDRAULICS UPPER CARRI

Description	Item	Pos.	Quantity	Page	Assembly	Description
SOCKET HEAD SCREW ISO 47	11140465	332	4	540	96045351	HYDRAULICS UPPER CARRI
SOCKET HEAD SCREW ISO 4	12225935	41	4	417	918810308	CONTROL STAND
SOCKET HEAD SCREW ISO 47	10875588	310	27	51	96035801	HYDRAULIC EQUIPM.CENTER
SOCKET HEAD SCREW ISO 47	10875588	6	3	128	11347526	ELECTRIC PUMP
SOCKET HEAD SCREW ISO 47	10875588	47	4	307	10872488	DRIVING GEAR
SOCKET HEAD SCREW ISO 47	10875588	(1)	2	368	919010208	CRANE OPERATOR CABIN P
SOCKET HEAD SCREW ISO 47	10875588	6	3	504	10327065	ELECTRIC PUMP
SOCKET HEAD SCREW ISO 47	10875588	329	2	539	96045351	HYDRAULICS UPPER CARRI
SOCKET HEAD SCREW ISO 47	10875588	309	2	589	967784808	HYDR.AUXILIARY HOISTING
SOCKET HEAD SCREW ISO 47	404291213	14	4	58	11643183	CONTROL BLOCK
SOCKET HEAD SCREW ISO 47	404291213	14	4	61	11643184	CONTROL BLOCK
SOCKET HEAD SCREW ISO 47	4901159	3	4	303	11692439	CONTROL VALVE
SOCKET HEAD SCREW ISO 47	11820284	23	2	372	916177508	STEP CPL.
SOCKET HEAD SCREW ISO 47	11820284	11	4	375	916170808	CABLE INLET
SOCKET HEAD SCREW ISO 47	11820284	307	6	478	969763408	PIPEWORK AIR INSTALLATIO
SOCKET HEAD SCREW ISO 47	11820284	73	4	640	917291908	PIVOT SECTION, PRE-ASSEMB
SOCKET HEAD SCREW ISO 47	11820284	34	4	672	966134608	ADD-ON PARTS CYLINDER
SOCKET HEAD SCREW ISO 47	10875590	31	4	320	96023117	BATTERY BOX, PRE-ASSEMB
SOCKET HEAD SCREW ISO 47	10875590	9	2	375	916170808	CABLE INLET
SOCKET HEAD SCREW ISO 4	12223035	30	4	597	10038509	CONTROL BLOCK
SOCKET HEAD SCREW ISO 47	10875591	316	20	51	96035801	HYDRAULIC EQUIPM.CENTER
SOCKET HEAD SCREW ISO 47	10875591	302	4	276	919007708	DRIVE ASSEMBLY, PRE-ASSE
SOCKET HEAD SCREW ISO 47	10875591	4	4	552	10332882	CONTROL BLOCK
SOCKET HEAD SCREW ISO 47	10875591	37	2	672	966134608	ADD-ON PARTS CYLINDER
SOCKET HEAD SCREW ISO 4	404230308	45	1	405	917304708	SLIDING DOOR INSTALLATION
SOCKET HEAD SCREW ISO 47	4002698	12	4	58	11643183	CONTROL BLOCK
SOCKET HEAD SCREW ISO 47	4002698	12	4	61	11643184	CONTROL BLOCK
SOCKET HEAD SCREW ISO 47	10875592	56	4	483	918484108	UREA PLANT
SOCKET HEAD SCREW ISO 47	12203634	311	22	51	96035801	HYDRAULIC EQUIPM.CENTER
SOCKET HEAD SCREW ISO 47	12203634	38	3	412	11083498	AIR CONDITIONING UNIT
SOCKET HEAD SCREW ISO 47	12203634	305	4	539	96045351	HYDRAULICS UPPER CARRI
SOCKET HEAD SCREW ISO 4	11088382	11	2	714	967933408	LOCATION FIXTURE PRE-ASS.
SOCKET HEAD SCREW ISO 47	12202784	31	2	21	96034894	PROTECTION PLATE CPL.
SOCKET HEAD SCREW ISO 47	12202784	31	2	24	96034977	PROTECTION PLATE
SOCKET HEAD SCREW ISO 47	12202784	54	4	483	918484108	UREA PLANT
SOCKET HEAD SCREW ISO 47	12202784	328	2	539	96045351	HYDRAULICS UPPER CARRI
SOCKET HEAD SCREW ISO 47	12202784	303	2	699	967785008	ADDNL.HYDR. FOLDING JIB
SOCKET HEAD SCREW ISO 47	10876361	327	2	539	96045351	HYDRAULICS UPPER CARRI
SOCKET HEAD SCREW ISO 47	12215338	326	6	539	96045351	HYDRAULICS UPPER CARRI
SOCKET HEAD SCREW ISO 4	10539468	301	4	494	96048826	EXHAUST SYSTEM PRE-ASSE
SOCKET HEAD SCREW ISO 47	12203635	312	2	90	96035796	HYDR.TRAVEL DRIVE
SOCKET HEAD SCREW ISO 47	12203635	312	2	107	96035792	HYDR.TRAVEL DRIVE
SOCKET HEAD SCREW ISO 4	10539471	325	4	539	96045351	HYDRAULICS UPPER CARRI
SOCKET HEAD SCREW ISO 47	10875593	6	1	407	966230508	GUIDE PRE-ASS.
SOCKET HEAD SCREW ISO 47	10875597	16	1	474	967928508	LOCKING
SOCKET HEAD SCREW ISO 47	10875597	29	4	672	966134608	ADD-ON PARTS CYLINDER
SOCKET HEAD SCREW ISO 47	10875598	7	2	346	510229408	HYDRO MOTOR
SOCKET HEAD SCREW ISO 47	10875598	22	5	372	916177508	STEP CPL.
SOCKET HEAD SCREW ISO 47	10875598	17	6	672	966134608	ADD-ON PARTS CYLINDER
SOCKET HEAD SCREW ISO 4	10007677	4	12	377	916162808	RELING
SOCKET HEAD SCREW ISO 4	240049702	7	5	196	10120186	BALANCER ASSEMBLY
SOCKET HEAD SCREW ISO 47	10875599	33	32	30	917511508	CRAWLER CENTRE PART PRE
SOCKET HEAD SCREW ISO 47	10875599	308	4	276	919007708	DRIVE ASSEMBLY, PRE-ASSE
SOCKET HEAD SCREW ISO 47	10875599	26	8	340	90008901	SLEWING GEAR DRIVE
SOCKET HEAD SCREW ISO 47	10875599	3	4	458	917260408	MIRROR ATTACHM.AT SLEW.P
SOCKET HEAD SCREW ISO 47	10875599	18	6	644	917292008	TELESCOPIC SECTION 1 PRE
SOCKET HEAD SCREW ISO 47	10875599	18	8	648	917292108	TELESCOPIC SECT.2 PRE-AS
SOCKET HEAD SCREW ISO 47	10875599	18	10	652	917292208	TELESCOPIC SECT.3 PRE-ASS
SOCKET HEAD SCREW ISO 47	10875599	18	10	656	917292308	TELESCOPIC SECT.IV PRE-A
SOCKET HEAD SCREW ISO 47	10875599	17	8	661	917292408	TELESCOPIC SECT.5 PRE-AS

Description	Item	Pos.	Quantity	Page	Assembly	Description
SOCKET HEAD SCREW ISO 4	10007205	5	12	377	916162808	RELING
SOCKET HEAD SCREW ISO 47	12208098	12	13	639	917291908	PIVOT SECTION, PRE-ASSEMB
SOCKET HEAD SCREW ISO 4	404230208	8	2	372	916177508	STEP CPL.
SOCKET HEAD SCREW ISO 47	11691424	26	2	207	10149198	RK PRE-FEED PUMP
SOCKET HEAD SCREW ISO 47	11691424	74	8	340	90008901	SLEWING GEAR DRIVE
SOCKET HEAD SCREW ISO 47	12202976	34	32	30	917511508	CRAWLER CENTRE PART PRE
SOCKET HEAD SCREW ISO 47	12202976	324	24	51	96035801	HYDRAULIC EQUIPM.CENTER
SOCKET HEAD SCREW ISO 47	4600335	84	12	73	90028956	TRACTION DRIVE
SOCKET HEAD SCREW ISO 47	12206699	50	5	298	10472196	REGULATOR
SOCKET HEAD SCREW ISO 47	12206699	50	5	310	10292801	REGULATOR
SOCKET HEAD SCREW ISO 47	12206699	3	4	552	10332882	CONTROL BLOCK
SOCKET HEAD SCREW ISO 47	10875601	10	4	346	510229408	HYDRO MOTOR
SOCKET HEAD SCREW ISO 47	10875601	4	1	424	916049908	MIRROR ATTACHM.IN CRANE
SOCKET HEAD SCREW ISO 47	10875570	61	2	384	917305408	INTERNAL PANELLING INSTA
SOCKET HEAD SCREW ISO 47	12201166	7	4	87	96034962	GUIDE LEFT
SOCKET HEAD SCREW ISO 47	12201166	7	4	104	96034980	GUIDE RIGHT
SOCKET HEAD SCREW ISO 47	12203451	22	1	355	932916901	ROPE DRUM
SOCKET HEAD SCREW ISO 47	12203451	41	2	672	966134608	ADD-ON PARTS CYLINDER
SOCKET HEAD SCREW ISO 47	12203167	336	2	540	96045351	HYDRAULICS UPPER CARRI
SOCKET HEAD SCREW ISO 47	12213825	86	10	340	90008901	SLEWING GEAR DRIVE
SOCKET HOUSING 2-POL	6001790	524	1	446	96036955	WIRING HARNESS
SOCKET HOUSING 2-POL	6001790	505	4	513	96037136	WIRING HARNESS
SOCKET PIN	96002833	4	1	705	917268408	BOOM NOSE
SOLDERING LUGS	11068607	(1)	10	675	10802064	ROPE LENGTH INDICATOR
SOLENOID VALVE	10343003	2	1	414	969085208	HEATING, PRE-ASSEMBLED
SOLENOID VALVE	10343003	5	1	462	918759808	ADD HEATING SUPERSTRUCT
SOLENOID VALVE	10876704	4	1	555	11341035	CONTROL BLOCK
SOLENOID VALVE	10876705	5	1	555	11341035	CONTROL BLOCK
SOUND PROOFING/SOUND I	968977308	24	1	429	96036790	SLEWING PLATFORM PANELLI
SPACER BOLT	11321016	11	4	724	910836808	HOOK BLOCK
SPACER PIECE 190X75X34 P	97001821	19	1	644	917292008	TELESCOPIC SECTION 1 PRE
SPACER PIECE 190X75X34 P	97001821	19	1	648	917292108	TELESCOPIC SECT.2 PRE-AS
SPACER PIECE 190X75X34 P	97001821	19	2	652	917292208	TELESCOPIC SECT.3 PRE-ASS
SPACER PIECE 190X75X34 P	97001821	19	2	656	917292308	TELESCOPIC SECT.IV PRE-A
SPACER PIECE 190X75X34 P	97001821	13	2	661	917292408	TELESCOPIC SECT.5 PRE-AS
SPACER PIECE PA6G	97040155	44	16	70	919254308	CRAWLER SUPPORT PREASS
SPACER PIECE PA6G	97040155	44	16	100	919254408	CRAWLER SUPPORT PREASS
SPACER RING	11181884	5	1	47	11346779	SLIP RING TRANSMITTER
SPARE ELEMENT OEL	10136799	1	1	174	10136798	CRANKCASE BREATHER
SPARE PARTS SET GRIFF	10873517	5	1	454	10343693	MASTER SWITCH
SPHERICAL BEARING	11691375	1	1	366	11214363	TILT CYLINDER
SPHERICAL KNOB DIN 319 C2	704006308	10	1	612	968993508	CAMERA HOLDER, PREMOU
SPHERICAL KNOB DIN 319 C40	704004208	7	1	733	923285508	FOLDING BRACKET PRE-ASS.
SPHERICAL WASHER DIN 631	10875863	36	1	731	917267508	TRANSPORT MOUNTING
SPHERICAL WASHER DIN 631	11622278	4	1	209	10152867	INJECTOR WITH FASTENING
SPHERICAL WASHER DIN 631	11622278	(2)	1	210	10153151	HIGH PRESS.CONNECTOR W
SPHERICAL WASHER DIN 631	11622278	2	1	211	10135434	PRESSURE ADAPTER FASTEN
SPLIT PIN ISO 1234 1,6X14 A2	10180340	13	1	372	916177508	STEP CPL.
SPLIT PIN ISO 1234 1,6X14 A2	10180340	4	1	715	967936408	WIND WARNING PREASSEMB
SPLIT PIN ISO 1234 10X100 St	10180377	7	2	471	918956108	HYDRAULIC BALLASTING
SPLIT PIN ISO 1234 10X80 St 4	10180375	47	8	30	917511508	CRAWLER CENTRE PART PRE
SPLIT PIN ISO 1234 13X125 St	10180381	30	2	17	919617108	CRAWLER TRACK TRAVEL G
SPLIT PIN ISO 1234 1X14 ST 4	10875872	12	1	372	916177508	STEP CPL.
SPLIT PIN ISO 1234 3,2X40 A4	10172636	47	4	70	919254308	CRAWLER SUPPORT PREASS
SPLIT PIN ISO 1234 3,2X40 A4	10172636	47	4	100	919254408	CRAWLER SUPPORT PREASS
SPLIT PIN ISO 1234 4X40 St 4	10180354	110	2	71	919254308	CRAWLER SUPPORT PREASS
SPLIT PIN ISO 1234 4X40 St 4	10180354	111	2	101	919254408	CRAWLER SUPPORT PREASS
SPLIT PIN ISO 1234 4X40 St 4	10180354	59	3	661	917292408	TELESCOPIC SECT.5 PRE-AS
SPLIT PIN ISO 1234 5X40 St 4	10180359	21	1	705	917268408	BOOM NOSE
SPLIT PIN ISO 1234 5X40 St 4	10180359	5	3	732	929582108	MOUNTING PRE-ASS.

Description	Item	Pos.	Quantity	Page	Assembly	Description
SPLIT PIN ISO 1234 5X40 St 4	10180359	5	1	735	923879808	CONSOLE PRE-ASS.
SPLIT PIN ISO 1234 6,3X40 St 4	10180363	33	2	639	917291908	PIVOT SECTION, PRE-ASSEMB
SPLIT PIN ISO 1234 6,3X50 St 4	10180364	12	1	733	923285508	FOLDING BRACKET PRE-ASS.
SPLIT PIN ISO 1234 6,3X63 St 4	10180365	23	1	705	917268408	BOOM NOSE
SPLIT PIN ISO 1234 8X100 St 4	10180373	10	1	721	968728808	CONSOLE PRE-ASS.
SPLIT PIN ISO 1234 8X63 ST 4	10875873	30	4	121	919644008	HYDRAULIC SUPPORT
SPLIT PIN ISO 1234 8X63 ST 4	10875873	24	2	134	919087608	ROTARY FEED THROUGH
SPLIT PIN ISO 1234 8X80 St 4	10180371	17	4	474	967928508	LOCKING
SPLIT PIN ISO 1234 8X80 St 4	10180371	9	2	625	967936908	COUNTERWEIGHT CPL.
SPLIT PIN ISO 1234 8X80 St 4	10180371	17	1	705	917268408	BOOM NOSE
SPONGE RUBBER 20X4 MOOS	262103108	30	0.064	417	918810308	CONTROL STAND
SPOOL	10000796	1	1	301	10472208	ADJUSTMENT
SPOUT	971565208	9	1	380	917304508	CRANE OPERATOR CABIN P
SPOUT 6,5/6,5/2 GUMMI	591055508	3	2	400	966408908	WATER CONTAINER CPL
SPRAY BOTTLE	10045118	100	1	675	10802064	ROPE LENGTH INDICATOR
SPRING CUP ABOVE 41Cr4	9074480	7	4	191	10149579	CYLINDER HEAD PRE-ASSY.
SPRING LOADED MULTI-DISC	10176328	80	1	340	90008901	SLEWING GEAR DRIVE
SPRING LOADED MULTI-DISC	502037001	80	1	73	90028956	TRACTION DRIVE
SPRING LOADED MULTI-DISC	502037201	70	1	357	939292201	PLANETARY GEARBOX
SPRING LOADED MULTI-DISC	502037201	70	1	583	939294201	PLANETARY GEARBOX
SPRING PLUG 3-3,5-62 480H	10875868	4	1	117	968331708	FUSE HOLDER
SPRING PLUG 4,5X4X78 A2K	433206208	2	2	738	968090008	MOUNTING HOOK ROD
SPRING PLUG 6 ZINC COATE	433206408	23	1	365	917259908	CRANE DRIVER CAB ADDITIO
SPRING SET	10490072	20	1	675	10802064	ROPE LENGTH INDICATOR
SPRING SUPPORT	510782508	3	1	561	511419608	PRESSURE LIMITING VALVE
SPRING SUPPORT	510797008	3	1	558	511433908	PRESSURE LIMITING VALVE
SPRING SUPPORT	570110808	6	1	348	570109508	DRIVING GEAR
SPRING SUPPORT	7023666	4	1	301	10472208	ADJUSTMENT
SPRING WASHER DIN 137 10	10411093	6	2	241	10219978	STARTER
SPRING WASHER DIN 137 10	10411093	6	2	243	11386644	STARTER PRE-ASSY.
SPRING WASHER DIN 137 6 X1	10411092	4	1	241	10219978	STARTER
SPRING WASHER DIN 137 6 X1	10411092	4	1	243	11386644	STARTER PRE-ASSY.
SPRING WASHER DIN 137 B 1	425050908	7	3	263	9078301	LOCKING PIECES
SPRING WASHER DIN 137 B 3	570824177	30	2	47	11346779	SLIP RING TRANSMITTER
SPRING WASHER DIN 137 B 6	425050608	47	11	47	11346779	SLIP RING TRANSMITTER
SPRING-LOADED PIN	510782808	6	1	561	511419608	PRESSURE LIMITING VALVE
SPRING-LOADED PIN	510797308	6	1	558	511433908	PRESSURE LIMITING VALVE
SPUR WHEEL D147/75X32	571819108	110	2	285	97029921	DISTRIBUTOR GEARBOX
STAIR 5-631X0,754M ALMG3 E	11213246	4	2	111	917691008	FALL PROTECTION
STAIR 5-631X0,754M ALMG3 E	11213247	5	2	111	917691008	FALL PROTECTION
STAND	968267208	1	1	612	968993508	CAMERA HOLDER, PREMOU
STAND	968290608	1	1	609	968994408	CAMERA HOLDER, PREMOU
STAR HANDLE SCREW	10443625	24	2	417	918810308	CONTROL STAND
STARTER 7.8KW 24V	10219978	1	1	240	10115539	STARTER INSTALLATION
STARTER INSTALLATION 7.8K	10115539	450	1	164	12856862	DIESEL ENGINE
STARTER PRE-ASSY. 7.8KW 24	11386644	1	1	240	10115539	STARTER INSTALLATION
STEP CPL.	916177508	3	1	368	919010208	CRANE OPERATOR CABIN P
STICKER	10663909	(1)	1	128	11347526	ELECTRIC PUMP
STICKER BEHAELTER 2,5KG	967421808	27	1	128	11347526	ELECTRIC PUMP
STICKER BEHAELTER 2,5KG	967421808	30	1	504	10327065	ELECTRIC PUMP
STOP BOLT 12-15-CK NIROST	11001935	110	1	283	968026308	CLUTCH ACTUATOR
STOP PLUG	511040408	(2)	3	538	96045351	HYDRAULICS UPPER CARRI
STOP PLUG D10,7 LD-PE	10678375	7	2	377	916162808	RELING
STOP PLUG D10,7 LD-PE	10678375	47	1	383	917305408	INTERNAL PANELLING INSTA
STOP PLUG VSTI M12X1,5 A3P	477704308	19	2	297	10008308	CONNECTING PLATE
STOP PLUG VSTI M12X1,5 A3P	477704308	600	1	478	969763408	PIPEWORK AIR INSTALLATIO
STOP PLUG VSTI1"ED A3P	477704608	13	2	325	968999708	FUEL TANK, PRE-ASSEMBLED
STOP PLUG VSTI1"ED A3P	477704608	34	1	550	10413106	CONTROL BLOCK
STOP PLUG VSTI1/2"ED A3P	477704208	12	1	325	968999708	FUEL TANK, PRE-ASSEMBLED
STOP PLUG VSTI1/2"ED A3P	477704208	26	2	472	10877810	BALLAST EXTENSION RAM

Description	Item	Pos.	Quantity	Page	Assembly	Description
STOP PLUG VSTI1/2"ED A3P	477704208	686	1	541	96045351	HYDRAULICS UPPER CARRI
STOP PLUG VSTI1/2"ED A3P	477704208	10	2	552	10332882	CONTROL BLOCK
STOP PLUG VSTI1/2"ED A3P	477704208	24	2	555	11341035	CONTROL BLOCK
STOP PLUG VSTI1/2"ED A3P	477704208	110	2	597	10038509	CONTROL BLOCK
STOP PLUG VSTI1/2"ED A3P	477704208	63	1	668	10876933	TELESCOPIC CYLINDER
STOP PLUG VSTI1/4"ED A3P	477704077	25	2	472	10877810	BALLAST EXTENSION RAM
STOP PLUG VSTI1/8"ED ST A3	510741508	32	1	550	10413106	CONTROL BLOCK
STOP PLUG VSTI1/8"ED ST A3	510741508	11	2	552	10332882	CONTROL BLOCK
STOP PLUG VSTI1/8"ED ST A3	510741508	21	5	555	11341035	CONTROL BLOCK
STOP PLUG VSTI11/4"ED A3P	477705408	31	1	550	10413106	CONTROL BLOCK
STOP PLUG VSTI3/4"ED A3P	477704708	741	2	542	96045351	HYDRAULICS UPPER CARRI
STOP PLUG VSTI3/4"ED A3P	477704708	100	2	597	10038509	CONTROL BLOCK
STOP PLUG VSTI3/8"ED A3P	477704108	617	2	540	96045351	HYDRAULICS UPPER CARRI
STOP PLUG VSTI3/8"ED A3P	477704108	13	4	552	10332882	CONTROL BLOCK
STOP PLUG VSTI3/8"ED A3P	477704108	23	4	555	11341035	CONTROL BLOCK
STOP PLUG VSTI3/8"ED A3P	477704108	620	1	590	967784808	HYDR.AUXILIARY HOISTING
STOP PLUG VSTI3/8"ED A3P	477704108	120	3	597	10038509	CONTROL BLOCK
STOP PLUG VSTIM14X1,5ED	477704908	724	4	541	96045351	HYDRAULICS UPPER CARRI
STOP PLUG VSTIM16X1,5ED	477704408	603	4	124	968077208	HYDRAULIC SUPPORT
STOP PLUG VSTIM16X1,5ED	477704408	402	2	314	96034515	EXPANSION TANK PRE-ASS.
STOP PLUG VSTIM16X1,5ED	477704408	401	1	315	96034522	EQUALIZING RESERVOIR
STOP PLUG VSTIM18X1,5ED	477705108	6	1	325	968999708	FUEL TANK, PRE-ASSEMBLED
STOP PLUG VSTIM22X1,5ED	477704508	639	2	478	969763408	PIPEWORK AIR INSTALLATIO
STOP PLUG VSTIM26X1,5ED	477705808	619	1	90	96035796	HYDR.TRAVEL DRIVE
STOP PLUG VSTIM26X1,5ED	477705808	619	1	107	96035792	HYDR.TRAVEL DRIVE
STOP PLUG VSTIM26X1,5ED	477705808	11	1	335	969050308	OIL TANK PRE-ASS.
STOP PLUG VSTIM26X1,5ED	477705808	28	1	361	90200104	OIL-GAUGING INSTRUMENT
STOP PLUG VSTIM33X2ED A3	477705208	730	1	542	96045351	HYDRAULICS UPPER CARRI
STOP PLUG VSTIM33X2ED A3	477705208	644	1	590	967784808	HYDR.AUXILIARY HOISTING
STOP PLUG VSTIM42X2ED A3	477704808	151	1	276	919007708	DRIVE ASSEMBLY, PRE-ASSE
STOPPER BUZ 28L A3C	477700808	794	2	542	96045351	HYDRAULICS UPPER CARRI
STOPPER PLUG	692404908	811	3	45	96045228	WIRING HARNESS
STOPPER PLUG	692404908	811	1	511	96045385	WIRING HARNESS
STOPPER PLUG	692404908	811	2	513	96037136	WIRING HARNESS
STOPPER PLUG 3,6MM SILIK	602331108	806	43	513	96037136	WIRING HARNESS
STOPPER PLUG 3,9-4,1MM SIL	10870403	844	1	515	96037137	WIRING HARNESS
STOPPER PLUG AMP JPT-SER	602329208	807	4	513	96037136	WIRING HARNESS
STOPPER PLUG BAUREIHE_M	604518908	812	25	45	96045228	WIRING HARNESS
STOPPER PLUG BAUREIHE_M	604518908	812	1	140	96045205	WIRING HARNESS
STOPPER PLUG BAUREIHE_M	604518908	812	5	511	96045385	WIRING HARNESS
STOPPER PLUG BAUREIHE_M	604518908	812	10	516	96037133	LEAD
STOPPER PLUG BAUREIHE_M	604518908	812	15	617	96037132	LEAD
STOPPER PLUG BAUREIHE_M	604518908	(812)	5	711	917598408	ELECTRIC MEASURING & WAR
STOPPER PLUG DEUTSCH GR	7368253	823	5	447	96036955	WIRING HARNESS
STOPPER PLUG DEUTSCH GR	7368253	823	3	513	96037136	WIRING HARNESS
STOPPER PLUG DEUTSCH GR	7368253	823	1	515	96037137	WIRING HARNESS
STOPPER PLUG DEUTSCH-ST	10800046	842	6	513	96037136	WIRING HARNESS
STOPPER PLUG DIN 72585 4	692405808	817	1	511	96045385	WIRING HARNESS
STOPPER PLUG DIN 72585 4	692405808	817	2	515	96037137	WIRING HARNESS
STOPPER PLUG DIN 72585 7	692405708	822	3	511	96045385	WIRING HARNESS
STOPPER PLUG MCON 1,23,5	10813642	836	1	515	96037137	WIRING HARNESS
STOPPER PLUG VSTI1/4"ED A3	477704008	847	1	543	96045351	HYDRAULICS UPPER CARRI
STOPPER PLUG VSTI1/4"ED A3	477704008	12	1	552	10332882	CONTROL BLOCK
STOPPER PLUG VSTI1/4"ED A3	477704008	22	4	555	11341035	CONTROL BLOCK
STORAGE BOX	968420608	65	1	71	919254308	CRAWLER SUPPORT PREASS
STORAGE BOX	968420608	65	1	101	919254408	CRAWLER SUPPORT PREASS
STRAINER FILTER	10346599	(1)	1	538	96045351	HYDRAULICS UPPER CARRI
SUBPLATE 2X275X250 DC01	97032989	1	1	38	968054008	MOUNTING PLATE PRE-ASS.
SUBSTRUCTURE	11171274	60	1	419	10877138	OPERATOR SEAT
SUCTION FLANGE	510146208	400	1	280	96034631	RADIATOR, PRE-ASSEMBLED

Description	Item	Pos.	Quantity	Page	Assembly	Description
SUCTION FLANGE	510146208	521	1	540	96045351	HYDRAULICS UPPER CARRI
SUCTION MODUL L=682,5 24V	12503120	2	1	484	968570808	UREA TANK
SUCTION PIPE OIL G-ALSI10M	97032261	3	1	335	969050308	OIL TANK PRE-ASS.
SUCTION PIPE OIL G-ALSI10M	97032263	203	1	276	919007708	DRIVE ASSEMBLY, PRE-ASSE
SUCTION PIPE OIL G-ALSI10M	97053616	202	1	276	919007708	DRIVE ASSEMBLY, PRE-ASSE
SUCTION PIPE OIL G-ALSI10M	97065544	207	1	276	919007708	DRIVE ASSEMBLY, PRE-ASSE
SUCTION PIPE OIL SPF	976388708	204	1	276	919007708	DRIVE ASSEMBLY, PRE-ASSE
SUN WHEEL Z=21 18CrNiMo7-	927601901	25	1	357	939292201	PLANETARY GEARBOX
SUN WHEEL Z=24 18CrNiMo7-	939251401	30	1	340	90008901	SLEWING GEAR DRIVE
SUN WHEEL Z=24 18CrNiMo7-	939251601	45	1	340	90008901	SLEWING GEAR DRIVE
SUN WHEEL Z=24 18CrNiMo7-	939251701	60	1	340	90008901	SLEWING GEAR DRIVE
SUN WHEEL Z=28 18CrNiMo7-	927602901	35	1	357	939292201	PLANETARY GEARBOX
SUN WHEEL Z=42 18CrNiMo7-	927608801	45	1	357	939292201	PLANETARY GEARBOX
SUPPORT CYLINDER 240/210-	11182950	1	4	121	919644008	HYDRAULIC SUPPORT
SUPPORT FLANGE	927745901	50	1	357	939292201	PLANETARY GEARBOX
SUPPORT FRAME RAL 7016 L	967986408	1	1	369	967986308	BEARING INSTALLATION
SUPPORT PLATE ST.CONST.	967996608	4	4	121	919644008	HYDRAULIC SUPPORT
SUPPORT TRESTLE FE//ZNNI8/	965255408	26	1	365	917259908	CRANE DRIVER CAB ADDITIO
SUPPORTING ARM T ZN O	968798308	1	1	494	96048826	EXHAUST SYSTEM PRE-ASSE
SUPPORTING BRACKET 3X206	97039156	16	2	111	917691008	FALL PROTECTION
SUPPORTING BRACKET 3X206	97039157	17	2	111	917691008	FALL PROTECTION
SUPPORTING RING	7367565	5	1	78	10877686	TENSION JACK HYDR CPL
SUPPORTING RING 17,5X20,9	571082808	(4)	1	539	96045351	HYDRAULICS UPPER CARRI
SUPPORTING RING 20X23,5X1	571082208	(4)	1	699	967785008	ADDNL.HYDR. FOLDING JIB
SUPPORTING RING 20X23,5X1	571082208	(3)	1	699	967785008	ADDNL.HYDR. FOLDING JIB
SUPPORTING RING 32X37,2X1	571077008	(3)	1	589	967784808	HYDR.AUXILIARY HOISTING
SUPPORTING WASHER DIN 9	422001001	47	3	357	939292201	PLANETARY GEARBOX
SURFACE SEALING 300ML KA	10354595	100	1	175	10132560	OIL SUMP WITH FASTENING
SURFACE SEALING 300ML KA	10354595	10	1	267	10141167	SEAL KIT OIL SUMP
SWITCH	11979975	24	1	419	10877138	OPERATOR SEAT
SWITCH BOX COMPL. S200	96045226	2	1	34	96045225	ELECTR.FOR CENTER SECTIO
SWITCH BOX WELDED RAL 7	968049608	1	1	36	96045226	SWITCH BOX COMPL.
SWITCH PANEL 21X75X160 P	972373708	96	2	653	917292208	TELESCOPIC SECT.3 PRE-ASS
SWITCH PANEL 21X75X160 P	972373708	96	2	657	917292308	TELESCOPIC SECT.IV PRE-A
SWITCH PANEL 21X75X160 P	972373708	81	2	662	917292408	TELESCOPIC SECT.5 PRE-AS
SWITCH PANEL 21X75X160 P	972392108	96	1	645	917292008	TELESCOPIC SECTION 1 PRE
SWITCH PANEL 21X75X160 P	972392108	96	1	649	917292108	TELESCOPIC SECT.2 PRE-AS
SWITCH PLATE 2X139X46 DC0	972373808	97	2	645	917292008	TELESCOPIC SECTION 1 PRE
SWITCH PLATE 2X139X46 DC0	972373808	97	2	649	917292108	TELESCOPIC SECT.2 PRE-AS
SWITCH PLATE 2X139X46 DC0	972373808	97	2	653	917292208	TELESCOPIC SECT.3 PRE-ASS
SWITCH PLATE 2X139X46 DC0	972373808	97	2	657	917292308	TELESCOPIC SECT.IV PRE-A
SWITCH PLATE 2X139X46 DC0	972373808	82	2	662	917292408	TELESCOPIC SECT.5 PRE-AS
SWITCHBOX MOUNTING PART	919503008	181	1	11		LIEBHERR LTR 1220
SWIVEL BOLT CLAMPING BA	11600236	42	2	483	918484108	UREA PLANT
SWIVEL ELBOW	591051008	22	2	399	916163008	WIPERS INSTALLATION
SWIVEL SCREW JOINT DG105	474234008	150	3	688	967784508	HYDR.F.TELESCOPIC BOOM
SWIVEL-JOINT ROLLER BEARI	540509008	17	1	355	932916901	ROPE DRUM
SWIVEL-JOINT ROLLER BEARI	540509008	20	1	581	939294001	ROPE DRUM
TALLOW-DROP SCREW 4X10 1	10875795	29	4	414	969085208	HEATING, PRE-ASSEMBLED
TALLOW-DROP SCREW 4X10 1	10875795	26	4	462	918759808	ADD HEATING SUPERSTRUCT
TALLOW-DROP SCREW K4X12	10019040	29	8	417	918810308	CONTROL STAND
TANK SENSOR L=1450 24V SP	10290070	2	1	325	968999708	FUEL TANK, PRE-ASSEMBLED
TAPER COLLET VKA 22L CR6-F	4772028	12	2	177	10155227	OIL SUMP PRE-ASS.
TAPERED ROLLER BEARING	10001107	16	1	302	10871043	VARIABLE PUMP
TAPERED ROLLER BEARING	10293775	10	1	347	570109008	DRIVING GEAR
TAPERED ROLLER BEARING	570951508	15	1	302	10871043	VARIABLE PUMP
TAPERED ROLLER BEARING	746221908	11	1	347	570109008	DRIVING GEAR
TAPERED SOCKET DIN 6319	10875862	37	1	731	917267508	TRANSPORT MOUNTING
TAPPET PUSH ROD	9079131	3	2	198	9079870	CONTROL PARTS
TEARDROP PLATE 1.5X442X1	979295008	(1)	1	529	969061708	CARRIER PLATE, PRE-ASSE

Description	Item	Pos.	Quantity	Page	Assembly	Description
TEE 20X20 L=90	10872612	4	1	414	969085208	HEATING, PRE-ASSEMBLED
TEE 20X20 L=90	10872612	25	1	464	96020359	ADDNL.HEATING, PRE-ASSE
TEE 30 G-ALMG TROWALPOLI	10285701	17	1	368	919010208	CRANE OPERATOR CABIN P
TEE REDUCER 20X10 L=80	11626529	21	2	483	918484108	UREA PLANT
TEFLON HOSE DN16 750 CR6	510500508	300	1	478	969763408	PIPEWORK AIR INSTALLATIO
TELESCOPIC BOOM CPL. SPF	918804808	201	1	11		LIEBHERR LTR 1220
TELESCOPIC CYLINDER 225/	10876933	1	1	666	918807308	MECHANICAL EXTENSION SYS
TELESCOPIC SECT.2 PRE-AS	917292108	3	1	634	918804808	TELESCOPIC BOOM CPL.
TELESCOPIC SECT.2 WELD.	917292808	1	1	648	917292108	TELESCOPIC SECT.2 PRE-AS
TELESCOPIC SECT.3 PRE-ASS	917292208	4	1	634	918804808	TELESCOPIC BOOM CPL.
TELESCOPIC SECT.3 WELD.C	917292908	1	1	652	917292208	TELESCOPIC SECT.3 PRE-ASS
TELESCOPIC SECT.4 WELD.	917293008	1	1	656	917292308	TELESCOPIC SECT.IV PRE-A
TELESCOPIC SECT.5 PRE-ASS	917292408	6	1	634	918804808	TELESCOPIC BOOM CPL.
TELESCOPIC SECT.5 WELD.C	917293108	1	1	661	917292408	TELESCOPIC SECT.5 PRE-AS
TELESCOPIC SECT.IV PRE-AS	917292308	5	1	634	918804808	TELESCOPIC BOOM CPL.
TELESCOPIC SECTION 1 PRE-	917292008	2	1	634	918804808	TELESCOPIC BOOM CPL.
TELESCOPIC SECTION 1 WEL	917292708	1	1	644	917292008	TELESCOPIC SECTION 1 PRE
TEMPERATURE PROBE CPL. -	10152036	2	1	258	12583633	ENGINE CONTROL SENSORS
TEMPERATURE PROBE CPL. -	13410342	1	2	258	12583633	ENGINE CONTROL SENSORS
TEMPERATURE SENSOR	10290126	23	1	466	10876576	WATER HEATING SYSTEM
TEMPERATURE SENSOR	10290126	(5)	1	466	10876576	WATER HEATING SYSTEM
TEMPERATURE SENSOR	10299987	(1)	1	599	917269308	CHARGER
TEMPERATURE SENSOR	11826650	21	1	466	10876576	WATER HEATING SYSTEM
TEMPERATURE SENSOR	11826650	(4)	1	466	10876576	WATER HEATING SYSTEM
TEMPERATURE SENSOR	966181208	8	1	506	919410708	ELECTR. SYSTEM F.SLEWING
TEMPERATURE SENSOR -30/+	691183108	65	1	538	96045351	HYDRAULICS UPPER CARRI
TEMPERATURE SENSOR -30°C	10424276	7	1	449	96036957	ELECTRIC ADD-ON PARTS CA
TEMPERATURE SENSOR -40°C	10493625	(1)	1	258	12583633	ENGINE CONTROL SENSORS
TEMPERATURE SENSOR -40°	11349182	(151)	2	494	96048826	EXHAUST SYSTEM PRE-ASSE
TEMPERATURE SENSOR -50/+	10800266	(150)	1	506	919410708	ELECTR. SYSTEM F.SLEWING
TENSION FLANGE 47X2220	10334488	100	1	429	96036790	SLEWING PLATFORM PANELLI
TENSION FLANGE 47X2220	10334488	100	1	439	969015908	SLEWING PLATFORM PANELLI
TENSION JACK HYDR CPL	10877686	2	1	76	11320954	GUIDE WHEEL UNIT
TENSION PIN 6H12X30 51CrV4	432310501	10	2	196	10120186	BALANCER ASSEMBLY
TERMINAL BOARD PRE-ASS.	922648308	23	1	522	969256608	BASE ASSEMBLY
TERMINAL BOX CPL. S930	968708708	1	1	684	968708608	ELECTR. FOR HEAD SECTION
TERMINAL BOX S900	966291008	5	1	678	966290908	ELECTRIC F.BASE SECTION
TERMINAL CLIP 40,5/39-42	553054208	6	1	462	918759808	ADD HEATING SUPERSTRUCT
TERMINAL CLIP 40,5/39-42	553054208	8	2	464	96020359	ADDNL.HEATING, PRE-ASSE
TERMINAL HOUSING DIN 7258	692406008	512	2	510	96045385	WIRING HARNESS
TERMINAL HOUSING DIN 7258	692406008	517	1	514	96037137	WIRING HARNESS
TERMINAL MARKER 0,2-2,5MM	602761608	502	2	520	96045387	CABLES, BASIC CONSTRUCTI
TERMINAL MARKER 0,2-2,5MM	602761608	5	2	524	967589508	TERMINAL STRIP
TERMINAL STRIP	967589508	24	1	522	969256608	BASE ASSEMBLY
TERMINAL/CLAMP	636107901	529	1	520	96045387	CABLES, BASIC CONSTRUCTI
TERMINAL/CLAMP	636107901	3	2	524	967589508	TERMINAL STRIP
TEST CONNECTION M22X1,5	502921408	641	1	478	969763408	PIPEWORK AIR INSTALLATIO
TEST POINT FITTING BMA3 6S	475601508	642	4	52	96035801	HYDRAULIC EQUIPM.CENTER
TEST POINT FITTING BMA3 6S	475601508	605	5	540	96045351	HYDRAULICS UPPER CARRI
TEST POINT FITTING BMA3 6S	475601508	609	1	590	967784808	HYDR.AUXILIARY HOISTING
TEST POINT FITTING EMA3 G1	475602608	675	9	541	96045351	HYDRAULICS UPPER CARRI
TEST POINT FITTING EMA3 M	475603208	632	3	541	96045351	HYDRAULICS UPPER CARRI
TEST POINT FITTING G1/4"	10430230	64	1	668	10876933	TELESCOPIC CYLINDER
TEST POINT FITTING VKA3 10	510629008	618	1	90	96035796	HYDR.TRAVEL DRIVE
TEST POINT FITTING VKA3 10	510629008	618	1	107	96035792	HYDR.TRAVEL DRIVE
TEST POINT FITTING VKA3 10	510629008	613	4	540	96045351	HYDRAULICS UPPER CARRI
TEST POINT FITTING VKA3 10	510629008	618	2	590	967784808	HYDR.AUXILIARY HOISTING
TEST POINT FITTING VKA3 10	510629008	613	1	688	967784508	HYDR.F.TELESCOPIC BOOM
THERMAL SWITCH BERUEHR	11080088	62	1	450	96036957	ELECTRIC ADD-ON PARTS CA
THERMO SAFETY VALVE 255	10326278	38	1	668	10876933	TELESCOPIC CYLINDER

Description	Item	Pos.	Quantity	Page	Assembly	Description
THERMO-VALVE pv=2BAR	11490271	4	1	566	11622561	OIL AIR COOLER
THERMOSTAT	10154798	2	1	232	10148215	THERMOSTAT HOUSING ASS
THERMOSTAT	571867708	44	1	412	11083498	AIR CONDITIONING UNIT
THERMOSTAT HOUSING ASS	10148215	380	1	163	12856862	DIESEL ENGINE
THIMBLE AND CLAMP	571851308	60	1	675	10802064	ROPE LENGTH INDICATOR
THREAD FORM SCREW DIN 7	12102051	20	4	417	918810308	CONTROL STAND
THREAD LOCK 50ML FLASCH	811208001	102	1	177	10155227	OIL SUMP PRE-ASS.
THREADED BUSHING	9079078	9	1	192	10149578	CYLINDER HEAD
THREADED CARRIER FE//ZNNI	963062208	25	1	429	96036790	SLEWING PLATFORM PANELLI
THREADED CARRIER FE//ZNNI	964307108	17	2	429	96036790	SLEWING PLATFORM PANELLI
THREADED CARRIER FE//ZNNI	964813808	15	1	275	919007708	DRIVE ASSEMBLY, PRE-ASSE
THREADED CARRIER FE//ZNNI	968655508	18	1	429	96036790	SLEWING PLATFORM PANELLI
THREADED CONNECTION PI	939599301	1	2	361	90200104	OIL-GAUGING INSTRUMENT
THREADED CONNECTION PI	939599301	1	2	585	90200103	OIL-GAUGING INSTRUMENT
THREADED ELBOW JOINT	12433377	204	2	539	96045351	HYDRAULICS UPPER CARRI
THREADED ELEMENT EDELST	97037948	5	1	612	968993508	CAMERA HOLDER, PREMOU
THREADED PIN 20X53X78 C45	97096918	2	2	417	918810308	CONTROL STAND
THREADED PIN 25.0X160 S35	97043051	13	8	30	917511508	CRAWLER CENTRE PART PRE
THREADED PIN 80.0X816 35N	97046349	2	1	721	968728808	CONSOLE PRE-ASS.
THREADED PIN DIN 976 M8X14	10332987	7	4	410	917676208	HEATING CRANE DRIVER'S CA
THREADED PLATE 10X180X30	97051989	38	1	365	917259908	CRANE DRIVER CAB ADDITIO
THREADED PLATE 10X70X20 S	97045388	27	2	352	917259708	MAIN HOIST GEAR
THREADED PLATE 10X80X170	97030032	7	2	474	967928508	LOCKING
THREADED PLATE 15X40X130	953147708	8	1	731	917267508	TRANSPORT MOUNTING
THREADED PLATE 20X185X45	979243508	3	1	394	965784408	ROOF WINDOW PRE-ASS.
THREADED PLATE 20X40X315	974911108	48	1	731	917267508	TRANSPORT MOUNTING
THREADED PLATE 6X20X40 S	97053770	7	2	737	917268208	LADDER ATTACHMENT
THREADED PLATE 8X110X35 S	97000276	4	1	405	917304708	SLIDING DOOR INSTALLATION
THREADED PLATE 8X20X60 S	953695308	18	2	21	96034894	PROTECTION PLATE CPL.
THREADED PLATE 8X20X60 S	953695308	18	2	24	96034977	PROTECTION PLATE
THREADED PLATE 8X20X60 S	953695308	9	4	320	96023117	BATTERY BOX, PRE-ASSEMB
THREADED PLATE 8X20X60 S	953695308	6	2	405	917304708	SLIDING DOOR INSTALLATION
THREADED PLATE 8X20X60 S	953695308	6	6	433	968923508	FLAP RIGHT PRE-ASS.
THREADED PLATE 8X20X60 S	953695308	4	4	441	969016008	FLAP LEFT FRONT PRE-ASS.
THREADED PLATE 8X70X20 S	97045387	26	6	352	917259708	MAIN HOIST GEAR
THREADED PLATE 8X98X60 S	97000277	5	1	405	917304708	SLIDING DOOR INSTALLATION
THREADED PLATE M6 PA6GF3	11004117	28	2	393	966497908	FRONT WINDOW CPL.
THREADED PLATE M8	704262608	22	2	320	96023117	BATTERY BOX, PRE-ASSEMB
THREADED ROD 5X0X0 X5CR	97038268	9	1	612	968993508	CAMERA HOLDER, PREMOU
THREE PHASE CURRENT GEN	10142606	1	1	239	10142863	GENERATOR, PRE-ASSEMBLE
THRUST BEARING	12103676	5	1	723	919007108	LOAD HOOK
THRUST PIECE	240191502	100	1	283	968026308	CLUTCH ACTUATOR
THRUST WASHER	571582308	4	1	226	5700161	AIR COMPRESSOR
THRUST WASHER	571582408	6	1	226	5700161	AIR COMPRESSOR
THRUST WASHER 112X138X3	10119927	3	2	185	10116939	RS CRANKSHAFT BEARING K
THRUST WASHER 112X138X3	10119928	4	2	185	10116939	RS CRANKSHAFT BEARING K
THRUST WASHER 200X7 GZ-	97032155	8	8	121	919644008	HYDRAULIC SUPPORT
THRUST WASHER 205	927602301	46	1	357	939292201	PLANETARY GEARBOX
THRUST WASHER 8X70X70 P	97028395	7	2	365	917259908	CRANE DRIVER CAB ADDITIO
TIGHT FIT SLEEVE 12X20X20 1	10134348	3	2	170	10147687	POWER UNIT SUPPORT ATT
TIGHT FIT SLEEVE 12X20X20 1	10134348	3	2	247	10115829	FLYWHEEL HOUSING MOUNT
TIGHT FIT SLEEVE 15,5X19,5	9177636	6	10	168	10154379	CRANKCASE PRE-ASSY.
TIGHT FIT SLEEVE 16X20X20 S	9074798	4	2	189	10149580	CYLINDER HEAD ASSEMBLY
TIGHTENING STRAP 206/206/	774211308	304	1	478	969763408	PIPEWORK AIR INSTALLATIO
TIGHTENING STRAP 240-280/	774210508	309	1	478	969763408	PIPEWORK AIR INSTALLATIO
TIGHTENING STRAP 260X735	774227708	310	1	478	969763408	PIPEWORK AIR INSTALLATIO
TILT CYLINDER 50/28-135 SPF	11214363	2	1	365	917259908	CRANE DRIVER CAB ADDITIO
TIME RELAY 10 H 24V	10876716	8	1	518	919503008	SWITCHBOX MOUNTING PART
TIME RELAY 60S 24V	10877999	3	1	518	919503008	SWITCHBOX MOUNTING PART
TIN M1	604508108	155	1	685	968708708	TERMINAL BOX CPL.

Description	Item	Pos.	Quantity	Page	Assembly	Description
TOGGLE GD-ZN	704255508	2	1	434	964093408	COVER COMPL.
TONGUE	570340077	5	4	378	968514508	INSTALLATION SWITCH CAB. C
TONGUE	704253708	5	5	79	967972208	COVER PRE-ASSY.
TONGUE	704253708	5	2	82	968270108	COVER PRE-ASSY.
TONGUE	704253708	5	2	83	968274208	COVER PRE-ASSY.
TONGUE	704253708	5	5	102	968055808	COVER PRE-ASSY.
TONGUE	704254008	9	1	85	968420608	STORAGE BOX
TONGUE	704256708	8	4	37	966167808	COVER COMPL.
TONGUE	704259308	3	1	434	964093408	COVER COMPL.
TONGUE 45X19 STAHL VERZ	704259008	5	2	80	967972308	COVER PRE-ASSY.
TONGUE 45X19 STAHL VERZ	704259008	5	2	81	967972408	COVER PRE-ASSY.
TONGUE 45X19 STAHL VERZ	704259008	5	2	84	968709108	COVER PRE-ASSY.
TONGUE 45X19 STAHL VERZ	704259008	15	1	320	96023117	BATTERY BOX, PRE-ASSEMB
TOOLING AGENT KANISTER5L	811203108	16	1	390	916162508	WINDOW ASSEMBLY
TOOLING AGENT KANISTER5L	811203108	49	1	405	917304708	SLIDING DOOR INSTALLATION
TOOLS	917268108	352	1	11		LIEBHERR LTR 1220
TOOLS AND ACCESSORIES	919328608	24	1	9		LIEBHERR LTR 1220
TOOTH LOCK WASHER 12X99/	938996501	90	1	340	90008901	SLEWING GEAR DRIVE
TOOTH LOCK WASHER DIN 6	425100408	24	4	518	919503008	SWITCHBOX MOUNTING PART
TOOTH LOCK WASHER DIN 6	425100508	269	2	685	968708708	TERMINAL BOX CPL.
TOOTHED BELT	11083453	1	1	412	11083498	AIR CONDITIONING UNIT
TOP HAT RAIL 35X27X7,3X1	602106708	1	0.135	524	967589508	TERMINAL STRIP
TOP HAT RAIL 35X27X7,3X1	602106708	10	0.245	682	966291008	TERMINAL BOX
TOP HAT RAIL 35X27X7,3X1	602106708	295	0.205	685	968708708	TERMINAL BOX CPL.
TORCH TIP	11826647	28	1	466	10876576	WATER HEATING SYSTEM
TORCH TIP	11826647	(8)	1	466	10876576	WATER HEATING SYSTEM
TOUCH CONTACT TRANSMITT	11100197	(3)	1	452	96030724	INSTRUMENT CLUSTER ELEC
TOUCH CONTACT TRANSMITT	606143208	16	1	453	96022872	CONTROL PANEL ROOF
TOUCH CONTACT TRANSMITT	606143408	5	1	529	969061708	CARRIER PLATE, PRE-ASSE
TOUCH CONTACT TRANSMITT	606144608	6	1	529	969061708	CARRIER PLATE, PRE-ASSE
TRACK GUIDE WELDMENT	968170308	12	3	70	919254308	CRAWLER SUPPORT PREASS
TRACK GUIDE WELDMENT	968170308	12	3	100	919254408	CRAWLER SUPPORT PREASS
TRACK GUIDE WELDMENT	968170708	14	1	70	919254308	CRAWLER SUPPORT PREASS
TRACK GUIDE WELDMENT	968170708	14	1	100	919254408	CRAWLER SUPPORT PREASS
TRACK ROLLER 250X250	11320962	6	13	70	919254308	CRAWLER SUPPORT PREASS
TRACK ROLLER 250X250	11320962	6	13	100	919254408	CRAWLER SUPPORT PREASS
TRACK WIDTH ADJUSTING CY	12102931	1	2	17	919617108	CRAWLER TRACK TRAVEL G
TRACTION DRIVE FAT 600P04	90028956	2	1	70	919254308	CRAWLER SUPPORT PREASS
TRACTION DRIVE FAT 600P04	90028956	2	1	100	919254408	CRAWLER SUPPORT PREASS
TRANSMISSION MOTOR 24V	10355140	2	1	128	11347526	ELECTRIC PUMP
TRANSMISSION MOTOR 24V	10355140	2	1	504	10327065	ELECTRIC PUMP
TRANSPONDER SPF	10354922	11	6	25	968019508	LIMIT SWITCH ADD-ON
TRANSPONDER SPF	11060128	57	2	450	96036957	ELECTRIC ADD-ON PARTS CA
TRANSPORT DEVICE ATTACH	10142864	481	1	165	12856862	DIESEL ENGINE
TRANSPORT DEVICE ATTACH	9079823	480	1	164	12856862	DIESEL ENGINE
TRANSPORT MOUNTING	917267508	350	1	11		LIEBHERR LTR 1220
TRANSPORTER CONSOLE S35	9078849	1	1	245	9079823	TRANSPORT DEVICE ATTACH
TRAVEL WHEEL	10342478	12	1	305	10871282	VARIABLE PUMP
TRAVERSE 20X61X37 S355J2+	979620608	7	4	494	96048826	EXHAUST SYSTEM PRE-ASSE
TRAVERSE 30X161X190 S690Q	955552508	20	1	731	917267508	TRANSPORT MOUNTING
TRAY RAL 7016 SPF	966241008	14	1	375	916170808	CABLE INLET
TREAD 1818X290X43 SPF	966270208	(1)	1	372	916177508	STEP CPL.
TREAD IN FRONT SPF	966270808	1	1	372	916177508	STEP CPL.
TRIP CAM	11181886	12	1	47	11346779	SLIP RING TRANSMITTER
TRIPLE PUMP A4VG+A11VO+	10871047	107	1	276	919007708	DRIVE ASSEMBLY, PRE-ASSE
TUBE	9080660	10	1	177	10155227	OIL SUMP PRE-ASS.
TUBE 100X33 ABS	97005143	4	1	385	966282308	PANELLING,LEFT
TUBE 12.0X1204 X5CRNI18-10	97047607	9	1	483	918484108	UREA PLANT
TUBE 15.0 X24 S355J2C+C FE//	971805708	19	4	417	918810308	CONTROL STAND
TUBE 16X2X70 E235+N VERZ	946104608	34	2	275	919007708	DRIVE ASSEMBLY, PRE-ASSE

Description	Item	Pos.	Quantity	Page	Assembly	Description
TUBE 18.0X622 X5CRNI18-10	97008549	1	1	459	966707708	MIRROR RETAINER PRE-ASS.
TUBE 1959X1553X30 X5CRNI18	975218508	1	2	377	916162808	RELING
TUBE 21,3X4X624 S355J2H FE//	953536608	7	1	661	917292408	TELESCOPIC SECT.5 PRE-AS
TUBE 21,3X4X700 S355J2H FE//	953536708	8	1	661	917292408	TELESCOPIC SECT.5 PRE-AS
TUBE 21.3X596 S355J2H FE//	973740408	73	1	662	917292408	TELESCOPIC SECT.5 PRE-AS
TUBE 22.0X319 X6CRNITI1810	97064857	(1)	1	314	96034515	EXPANSION TANK PRE-ASS.
TUBE 30/FLEXIBEL PAK	553159408	9	0.62	464	96020359	ADDNL.HEATING, PRE-ASSE
TUBE 3X0X0 X5CRNI18-10	97037947	4	1	613	968267208	STAND
TUBE 49X68X78 EPDM	97006624	4	1	399	916163008	WIPERS INSTALLATION
TUBE 6X1X1161 E235+N	97039388	774	4	55	96035803	PIPELINES CENTER PART
TUBE 6X1X1169 E235+N	97039389	775	4	55	96035803	PIPELINES CENTER PART
TUBE 6X1X132 E235+N	97039386	772	4	55	96035803	PIPELINES CENTER PART
TUBE 6X1X132 E235+N	97039387	773	4	55	96035803	PIPELINES CENTER PART
TUBE 8.0X80 X5CRNI18-10	97124033	1	1	316	96039022	CONNECTION PIECE
TUBE 85X27 ABS	97005144	3	1	386	966282408	PANELLING
TUBE EN 10305-4 22X1,5X107	10190120	5	1	585	90200103	OIL-GAUGING INSTRUMENT
TUBE LN 80 401 22X1.5X255 E	979323301	30	1	585	90200103	OIL-GAUGING INSTRUMENT
TUBE ST12 SPF	97087964	3	1	499	918731908	AIR FILTER UNIT
TUBING COIL 9	774383508	26	10	127	917257108	CENTRALIZED LUBRICATION
TURBOCHARGER HE300	10139626	1	1	238	10140729	EXHAUST TC MOUNTING
TURNLOCK ACTUATOR 1W	606144908	7	1	529	969061708	CARRIER PLATE, PRE-ASSE
TURNTABLE PANELLING	918731508	139	1	10		LIEBHERR LTR 1220
TWIN HOOK	11347028	30	1	724	910836808	HOOK BLOCK
TWIN MAGNET	10114441	8	1	58	11643183	CONTROL BLOCK
TWIN MAGNET	10114441	8	1	61	11643184	CONTROL BLOCK
TWO-STAGE PUMP A4VG+A4V	11182664	105	1	275	919007708	DRIVE ASSEMBLY, PRE-ASSE
TYRE INFLATING HOSE	520190408	67	1	144	928569808	MAIN TOOLS
U-PROFILE 1X1000X74 DC01	953714108	65	2	639	917291908	PIVOT SECTION, PRE-ASSEMB
U-PROFILE 1X1000X98 DC01	955927208	67	13	639	917291908	PIVOT SECTION, PRE-ASSEMB
U-PROFILE 1X500X74 DC01 FE	953713908	10	1	661	917292408	TELESCOPIC SECT.5 PRE-AS
U-PROFILE 1X500X89 DC01 FE	97042011	22	4	127	917257108	CENTRALIZED LUBRICATION
U-PROFILE 1X500X98 DC01 FE	956572408	63	2	639	917291908	PIVOT SECTION, PRE-ASSEMB
UNION PIECE RETOUCH	971774408	194	1	539	96045351	HYDRAULICS UPPER CARRI
UNIVERSAL INPUT-OUTPUT M	968253608	5	5	518	919503008	SWITCHBOX MOUNTING PART
UNIVERSAL PROTECTION GP	10145185	29	1	207	10149198	RK PRE-FEED PUMP
UREA CONTAINER 65L PE SP	11481413	1	1	484	968570808	UREA TANK
UREA PLANT	918484108	162	1	10		LIEBHERR LTR 1220
UREA SYSTEM AIR LINE STU	96011802	30	1	483	918484108	UREA PLANT
UREA TANK 73L/65L SPF	968570808	10	1	483	918484108	UREA PLANT
USIT RING U 14X19,5X1,5	570116908	405	1	314	96034515	EXPANSION TANK PRE-ASS.
USIT RING U 14X19,5X1,5	570116908	303	1	539	96045351	HYDRAULICS UPPER CARRI
V-RING 350 NBR,60 SHORE	710908701	12	1	357	939292201	PLANETARY GEARBOX
V-RIPPED BELT 8XPKX2152 EP	11482426	1	1	230	12418347	AIR COND. COMPRESSOR A
VALVE	10011832	13	1	170	10147687	POWER UNIT SUPPORT ATT
VALVE	10011832	1	1	201	9078233	VALVE
VALVE	7622478	16	1	412	11083498	AIR CONDITIONING UNIT
VALVE BLOCK 420BAR ZNNI	10877433	25	1	538	96045351	HYDRAULICS UPPER CARRI
VALVE BRIDGE	10119695	2	2	193	10148438	ROCKER ARM BRACKET CPL.
VALVE COLLET MK9	10004331	8	8	191	10149579	CYLINDER HEAD PRE-ASSY.
VALVE COLLET MK9	11357514	8	8	191	10149579	CYLINDER HEAD PRE-ASSY.
VALVE COVER 45 PA6.6	12101064	6	1	314	96034515	EXPANSION TANK PRE-ASS.
VALVE COVER 45 PA6.6	12101064	3	1	315	96034522	EQUALIZING RESERVOIR
VALVE M14X1,5	9078233	6	1	200	10129474	OIL COOLER, PRE-ASSEMBLE
VALVE SEAT	511015408	10	1	561	511419608	PRESSURE LIMITING VALVE
VALVE SEAT	570063208	10	1	558	511433908	PRESSURE LIMITING VALVE
VALVE STEM GUIDE	10139064	4	4	192	10149578	CYLINDER HEAD
VALVE STEM SEAL RING	10120334	5	4	191	10149579	CYLINDER HEAD PRE-ASSY.
VARIABLE DISPLACEMENT MO	11182596	3	1	70	919254308	CRAWLER SUPPORT PREASS
VARIABLE DISPLACEMENT MO	11182596	3	1	100	919254408	CRAWLER SUPPORT PREASS
VARIABLE DISPLACEMENT MO	11182597	2	1	352	917259708	MAIN HOIST GEAR

Description	Item	Pos.	Quantity	Page	Assembly	Description
VARIABLE DISPLACEMENT MO	11211058	9	1	577	967969608	AUXILIARY HOISTING GEAR 2
VARIABLE PUMP A10VNO SPF	10871043	3	1	292	10871047	TRIPLE PUMP
VARIABLE PUMP A11V0 SPF	11210798	2	1	292	10871047	TRIPLE PUMP
VARIABLE PUMP A11VLO SPF	10871282	108	1	276	919007708	DRIVE ASSEMBLY, PRE-ASSE
VARIABLE PUMP A4VG SPF	10871017	104	1	275	919007708	DRIVE ASSEMBLY, PRE-ASSE
VARIABLE PUMP A4VG SPF	11182708	103	1	275	919007708	DRIVE ASSEMBLY, PRE-ASSE
VARIABLE PUMP A4VG SPF	11210793	1	1	290	11182664	TWO-STAGE PUMP
VARIABLE PUMP A4VG SPF	11210794	2	1	290	11182664	TWO-STAGE PUMP
VARIABLE PUMP A4VG SPF	11210795	1	1	292	10871047	TRIPLE PUMP
VENTILATION	10292000	35	2	383	917305408	INTERNAL PANELLING INSTA
VENTILATION CONNECTING PI	927501901	2	1	341	927554301	VENTILATION CONNECTING PI
VENTILATION CONNECTING PI	927501901	13	1	361	90200104	OIL-GAUGING INSTRUMENT
VENTILATION CONNECTING PI	927501901	13	1	585	90200103	OIL-GAUGING INSTRUMENT
VENTILATION CONNECTING PI	927554301	77	1	340	90008901	SLEWING GEAR DRIVE
VENTILATION SCREW G1/2"X3	602501308	11	1	37	966167808	COVER COMPL.
VENTILATION SCREW G1/2"X3	602501308	18	1	681	10354493	CABLE REEL
VENTILATION SCREW M20X1,5	10488662	307	1	682	966291008	TERMINAL BOX
VENTILATION SCREW M20X1,5	10488662	293	1	685	968708708	TERMINAL BOX CPL.
VENTILATION TUBE	10292724	29	1	128	11347526	ELECTRIC PUMP
VENTILATION UNIT CR6-FREI	7002458	7	1	361	90200104	OIL-GAUGING INSTRUMENT
VENTILATION UNIT ST VERZ	721108801	7	1	585	90200103	OIL-GAUGING INSTRUMENT
VENTILATION VALVE	10097910	10	1	325	968999708	FUEL TANK, PRE-ASSEMBLED
VENTILATION VALVE	10493944	68	1	668	10876933	TELESCOPIC CYLINDER
VENTILATION VALVE	11622218	3	1	414	969085208	HEATING, PRE-ASSEMBLED
VENTILATION VALVE	11622218	29	2	464	96020359	ADDNL.HEATING, PRE-ASSE
VENTILATION VALVE	721114701	83	1	357	939292201	PLANETARY GEARBOX
VIBRATION DAMPER 60NR39	10287382	115	2	276	919007708	DRIVE ASSEMBLY, PRE-ASSE
VIBRATION DAMPER 72NR39	10875547	116	2	276	919007708	DRIVE ASSEMBLY, PRE-ASSE
VISCOSE DAMPER D934 L	10118526	8	1	187	10141974	CRANKSHAFT ADD-ON PARTS
VOLTAGE REGULATOR 24V 1	614020508	5	1	601	915432508	RADIO PREPARATION UPPER
WAGON	966253908	2	2	407	966230508	GUIDE PRE-ASS.
WAGON 68X64.5X33 G-ALSI7	97001102	1	1	408	966253908	WAGON
WARNING DESIGNATION DIN	11067612	1	0.54	152	917258108	HATCHING PLAN
WARNING DESIGNATION DIN 4	11067611	2	0.239	152	917258108	HATCHING PLAN
WARNING DESIGNATION DIN 4	11067611	3	0.689	152	917258108	HATCHING PLAN
WARNING DESIGNATION DIN 4	11067611	4	0.081	152	917258108	HATCHING PLAN
WARNING LIGHT 14W 13-36V	10340105	5	1	449	96036957	ELECTRIC ADD-ON PARTS CA
WARNING TRIANGLE 430X45	10044762	1	1	145	928620108	ACCESSORIES
WASHER	510782708	5	1	561	511419608	PRESSURE LIMITING VALVE
WASHER	510797208	5	1	558	511433908	PRESSURE LIMITING VALVE
WASHER	518614708	57	2	668	10876933	TELESCOPIC CYLINDER
WASHER	570109908	5	1	347	570109008	DRIVING GEAR
WASHER	591063508	63	1	450	96036957	ELECTRIC ADD-ON PARTS CA
WASHER	927742801	58	1	357	939292201	PLANETARY GEARBOX
WASHER 10,5X18,5X2 -	9076638	17	4	238	10140729	EXHAUST TC MOUNTING
WASHER 10X100X100 S355MC	97042598	6	2	471	918956108	HYDRAULIC BALLASTING
WASHER 20,2X25X3XA GUMMI	710207408	64	1	450	96036957	ELECTRIC ADD-ON PARTS CA
WASHER 2X154X154 DC01 FE//	971060108	8	3	644	917292008	TELESCOPIC SECTION 1 PRE
WASHER 2X154X154 DC01 FE//	971060108	8	2	648	917292108	TELESCOPIC SECT.2 PRE-AS
WASHER 2X154X154 DC01 FE//	971060108	8	3	652	917292208	TELESCOPIC SECT.3 PRE-ASS
WASHER 2X154X154 DC01 FE//	971060108	8	3	656	917292308	TELESCOPIC SECT.IV PRE-A
WASHER 2X154X154 DC01 FE//	971060108	20	3	661	917292408	TELESCOPIC SECT.5 PRE-AS
WASHER 34X45X1	9078522	6	2	194	11448005	ROCKER ARM BRACKET PRE
WASHER 3X21X21 DC01 FE//	973618208	8	2	280	96034631	RADIATOR, PRE-ASSEMBLED
WASHER 3X38X38 DC01 FE//	973485408	44	4	17	919617108	CRAWLER TRACK TRAVEL G
WASHER 3X54X54 X5CRNI18-1	97017499	36	16	17	919617108	CRAWLER TRACK TRAVEL G
WASHER 40X222X222 S960QL+	972908008	7	1	644	917292008	TELESCOPIC SECTION 1 PRE
WASHER 40X222X222 S960QL+	972908008	7	1	648	917292108	TELESCOPIC SECT.2 PRE-AS
WASHER 40X222X222 S960QL+	972908008	7	1	652	917292208	TELESCOPIC SECT.3 PRE-ASS
WASHER 40X222X222 S960QL+	972908008	7	1	656	917292308	TELESCOPIC SECT.IV PRE-A

Description	Item	Pos.	Quantity	Page	Assembly	Description
WASHER 40X222X222 S960QL+	972908008	65	1	662	917292408	TELESCOPIC SECT.5 PRE-AS
WASHER 4X100X100 S315MC	97008156	17	1	721	968728808	CONSOLE PRE-ASS.
WASHER 4X40X40 S315MC FE	940116008	67	4	71	919254308	CRAWLER SUPPORT PREASS
WASHER 4X40X40 S315MC FE	940116008	67	4	101	919254408	CRAWLER SUPPORT PREASS
WASHER 50.0x9 S355J2C+C FE	970689208	7	4	158	918731108	ASSEMBLY PARTS F.SLEWING
WASHER 50X5 S355J2C+C	970821508	9	4	158	918731108	ASSEMBLY PARTS F.SLEWING
WASHER 52,2X107X3 -S355J2G	10144311	11	1	187	10141974	CRANKSHAFT ADD-ON PARTS
WASHER 5X35X35 S355MC FE	97040355	21	8	365	917259908	CRANE DRIVER CAB ADDITIO
WASHER 5X40X40 S355MC FE	97040356	39	6	365	917259908	CRANE DRIVER CAB ADDITIO
WASHER 8,4X18X15 -	9177776	10	1	218	10145173	INTAKE STACK ASSEMBLY
WASHER 8,4X18X15 -	9177776	2	2	237	10144756	HEAT PROTECTION W.FASTEN
WASHER 85,2X139X9,5	931807501	5	1	340	90008901	SLEWING GEAR DRIVE
WASHER 8X65X65 S355MC FE	97038431	22	4	275	919007708	DRIVE ASSEMBLY, PRE-ASSE
WASHER A 10X20X2 200HV-St	10011658	24	1	449	96036957	ELECTRIC ADD-ON PARTS CA
WASHER AEHNL.ISO 7089 6 PA	420010405	48	16	30	917511508	CRAWLER CENTRE PART PRE
WASHER AEHNL.ISO 7089 8 P	10166990	17	6	87	96034962	GUIDE LEFT
WASHER AEHNL.ISO 7089 8 P	10166990	17	6	104	96034980	GUIDE RIGHT
WASHER DC01+ZE	956414308	20	4	672	966134608	ADD-ON PARTS CYLINDER
WASHER DIN 1440 100 ST VER	421104208	29	2	17	919617108	CRAWLER TRACK TRAVEL G
WASHER DIN 1440 60 -St FLZN	10179340	42	8	30	917511508	CRAWLER CENTRE PART PRE
WASHER DIN 1440 8 ST VERZ	421100608	333	14	540	96045351	HYDRAULICS UPPER CARRI
WASHER DIN 1441 21 ST FLZN	10875637	306	4	51	96035801	HYDRAULIC EQUIPM.CENTER
WASHER DIN 1441 26 -St FLZN	10179376	375	1	280	96034631	RADIATOR, PRE-ASSEMBLED
WASHER DIN 433 19 140HV A3	530609208	65	1	450	96036957	ELECTRIC ADD-ON PARTS CA
WASHER DIN 440 13,5 ST FLZ	10875639	24	2	87	96034962	GUIDE LEFT
WASHER DIN 440 13,5 ST FLZ	10875639	24	2	104	96034980	GUIDE RIGHT
WASHER DIN 440 6,6 -ST 480H	10875640	21	1	614	96045237	EQUIPMENT CAMERA CAB
WASHER DIN 6340 10,5 C35	421300208	14	8	134	919087608	ROTARY FEED THROUGH
WASHER DIN 6340 21 FLZN SP	10179985	305	8	51	96035801	HYDRAULIC EQUIPM.CENTER
WASHER DIN 7349 10,5 140HV	4902172	19	8	111	917691008	FALL PROTECTION
WASHER DIN 7349 10,5 200HV-	11658580	31	12	116	968046208	ADD-ON PARTS
WASHER DIN 7349 10,5 200HV-	11658580	77	1	256	10151329	WIRING HARNESS ASSEMBLY
WASHER DIN 7349 10,5 200HV-	11658580	3	6	318	918955408	BATTERY BOX CPL.
WASHER DIN 7349 10,5 200HV-	11658580	378	6	430	96036790	SLEWING PLATFORM PANELLI
WASHER DIN 7349 10,5 200HV-	11658580	380	15	439	969015908	SLEWING PLATFORM PANELLI
WASHER DIN 7349 10,5 200HV-	11658580	21	3	545	96035117	MECHANICAL AUXILIARIES
WASHER DIN 7349 10,5 200HV-	11658580	4	6	564	917261808	OIL COOLER INSTALLATION
WASHER DIN 7349 10,5 200HV-	11658580	10	12	565	967980508	OIL COOLER, PRE-ASSEMBLE
WASHER DIN 7349 10,5 200HV-	11658580	12	4	605	96037229	ADD-ON PARTS WORK FLOOD
WASHER DIN 7349 13 200HV F	10006370	25	4	87	96034962	GUIDE LEFT
WASHER DIN 7349 13 200HV F	10006370	25	4	104	96034980	GUIDE RIGHT
WASHER DIN 7349 13 200HV F	10006370	40	3	672	966134608	ADD-ON PARTS CYLINDER
WASHER DIN 7349 13 200HV F	10006370	6	1	717	917551608	ADD-ON PARTS
WASHER DIN 7349 17 200HV F	4600021	24	24	70	919254308	CRAWLER SUPPORT PREASS
WASHER DIN 7349 17 200HV F	4600021	24	24	100	919254408	CRAWLER SUPPORT PREASS
WASHER DIN 7349 17 200HV F	4600021	15	48	111	917691008	FALL PROTECTION
WASHER DIN 7349 17 200HV F	4600021	23	80	116	968046208	ADD-ON PARTS
WASHER DIN 7349 17 200HV F	4600021	41	8	639	917291908	PIVOT SECTION, PRE-ASSEMB
WASHER DIN 7349 17 200HV F	4600021	38	8	644	917292008	TELESCOPIC SECTION 1 PRE
WASHER DIN 7349 17 200HV F	4600021	38	8	648	917292108	TELESCOPIC SECT.2 PRE-AS
WASHER DIN 7349 17 200HV F	4600021	38	8	652	917292208	TELESCOPIC SECT.3 PRE-ASS
WASHER DIN 7349 17 200HV F	4600021	38	8	656	917292308	TELESCOPIC SECT.IV PRE-A
WASHER DIN 7349 17 200HV F	4600021	85	4	662	917292408	TELESCOPIC SECT.5 PRE-AS
WASHER DIN 7349 17 200HV F	4600021	42	4	731	917267508	TRANSPORT MOUNTING
WASHER DIN 7349 21 100HV F	4600604	30	3	134	919087608	ROTARY FEED THROUGH
WASHER DIN 7349 21 100HV F	4600604	4	3	323	917626608	FUEL TANK ADD-ON UNIT
WASHER DIN 7349 21 100HV F	4600604	7	1	332	917825508	OIL RESERVOIR, EXTENSION
WASHER DIN 7349 21 100HV F	4600604	13	10	731	917267508	TRANSPORT MOUNTING
WASHER DIN 7349 25 FLZN SP	12220085	4	2	332	917825508	OIL RESERVOIR, EXTENSION
WASHER DIN 7349 31 FLZN SP	12226080	53	2	17	919617108	CRAWLER TRACK TRAVEL G

Description	Item	Pos.	Quantity	Page	Assembly	Description
WASHER DIN 7349 31 FLZN SP	12226080	76	2	640	917291908	PIVOT SECTION, PRE-ASSEMB
WASHER DIN 7349 6 200HV-A2	10353667	7	2	719	968811608	CROSS BEAM
WASHER DIN 7349 6,4 200HV 4	11693878	319	2	51	96035801	HYDRAULIC EQUIPM.CENTER
WASHER DIN 7349 8,4 200HV 4	11840501	304	20	51	96035801	HYDRAULIC EQUIPM.CENTER
WASHER DIN 7349 8,4 200HV 4	11840501	377	3	430	96036790	SLEWING PLATFORM PANELLI
WASHER DIN 7349 8,4 200HV 4	11840501	5	4	458	917260408	MIRROR ATTACHM.AT SLEW.P
WASHER DIN 7349 8,4 200HV 4	11840501	23	1	474	967928508	LOCKING
WASHER DIN 7349 8,4 200HV 4	11840501	25	2	545	96035117	MECHANICAL AUXILIARIES
WASHER DIN 7349 8,4 200HV 4	11840501	14	8	565	967980508	OIL COOLER, PRE-ASSEMBLE
WASHER DIN 7349 8,4 200HV 4	11840501	29	12	577	967969608	AUXILIARY HOISTING GEAR 2
WASHER DIN 7349 8,4 200HV 4	11840501	300	2	595	969426308	AUX. HYDR. FOLDING JIB SP
WASHER DIN 7349 8,4 200HV 4	11840501	6	8	639	917291908	PIVOT SECTION, PRE-ASSEMB
WASHER DIN 7989-2 16 -ST F	10875866	10	2	731	917267508	TRANSPORT MOUNTING
WASHER DIN 7989-2 20 ST FLZ	12100254	21	2	721	968728808	CONSOLE PRE-ASS.
WASHER DIN 7989-2 A 10 100	12214460	380	14	277	919007708	DRIVE ASSEMBLY, PRE-ASSE
WASHER DIN 7989-2 A 10 100	12214460	23	2	464	96020359	ADDNL.HEATING, PRE-ASSE
WASHER EN 14399-6 16 300-3	421500201	27	8	121	919644008	HYDRAULIC SUPPORT
WASHER EN 14399-6 16 300-37	10180180	379	1	280	96034631	RADIATOR, PRE-ASSEMBLED
WASHER EN 14399-6 16 300-37	10180180	10	9	365	917259908	CRANE DRIVER CAB ADDITIO
WASHER EN 14399-6 20 300-3	4600222	26	2	70	919254308	CRAWLER SUPPORT PREASS
WASHER EN 14399-6 20 300-3	4600222	26	2	100	919254408	CRAWLER SUPPORT PREASS
WASHER EN 14399-6 20 300-3	4600222	383	4	277	919007708	DRIVE ASSEMBLY, PRE-ASSE
WASHER EN 14399-6 30 300-37	4900000	4	4	666	918807308	MECHANICAL EXTENSION SYS
WASHER ISO 7089 10 200HV-A	500917508	92	2	640	917291908	PIVOT SECTION, PRE-ASSEMB
WASHER ISO 7089 10 200HV-A	420001114	378	4	277	919007708	DRIVE ASSEMBLY, PRE-ASSE
WASHER ISO 7089 10 200HV-A	420001114	12	1	368	919010208	CRANE OPERATOR CABIN P
WASHER ISO 7089 10 300HV F	10289795	33	12	17	919617108	CRAWLER TRACK TRAVEL G
WASHER ISO 7089 10 300HV F	10289795	31	4	25	968019508	LIMIT SWITCH ADD-ON
WASHER ISO 7089 10 300HV F	10289795	40	6	30	917511508	CRAWLER CENTRE PART PRE
WASHER ISO 7089 10 300HV F	10289795	107	20	71	919254308	CRAWLER SUPPORT PREASS
WASHER ISO 7089 10 300HV F	10289795	108	20	101	919254408	CRAWLER SUPPORT PREASS
WASHER ISO 7089 10 300HV F	10289795	375	2	269	918731408	DRIVE ASSEMBLY CPL.
WASHER ISO 7089 10 300HV F	10289795	379	28	277	919007708	DRIVE ASSEMBLY, PRE-ASSE
WASHER ISO 7089 10 300HV F	10289795	378	2	280	96034631	RADIATOR, PRE-ASSEMBLED
WASHER ISO 7089 10 300HV F	10289795	16	8	335	969050308	OIL TANK PRE-ASS.
WASHER ISO 7089 10 300HV F	10289795	7	6	350	917259608	ROTATING PLATFORM LOCK
WASHER ISO 7089 10 300HV F	10289795	382	4	430	96036790	SLEWING PLATFORM PANELLI
WASHER ISO 7089 10 300HV F	10289795	377	8	494	96048826	EXHAUST SYSTEM PRE-ASSE
WASHER ISO 7089 10 300HV F	10289795	18	1	616	96037130	EQUIPMENT CAMERA SLEW C
WASHER ISO 7089 10 300HV F	10289795	18	1	618	96037131	EQUIPMENT CAMERA WINCHE
WASHER ISO 7089 10 300HV F	10289795	(10)	2	628	919028808	DISPATCH ASSY.MECH.PART
WASHER ISO 7089 12 200HV-A	10410178	6	4	112	968038208	BEARING AHEAD LEFT SIDE
WASHER ISO 7089 12 200HV-A	10410178	6	4	113	968038308	BEARING AHEAD RIGHT SIDE
WASHER ISO 7089 12 200HV-A	10410178	52	8	116	968046208	ADD-ON PARTS
WASHER ISO 7089 12 200HV-A	10410178	65	12	121	919644008	HYDRAULIC SUPPORT
WASHER ISO 7089 12 200HV-A	10410178	375	8	494	96048826	EXHAUST SYSTEM PRE-ASSE
WASHER ISO 7089 12 300HV F	10289804	19	4	17	919617108	CRAWLER TRACK TRAVEL G
WASHER ISO 7089 12 300HV F	10289804	8	17	247	10115829	FLYWHEEL HOUSING MOUNT
WASHER ISO 7089 12 300HV F	10289804	381	5	277	919007708	DRIVE ASSEMBLY, PRE-ASSE
WASHER ISO 7089 12 300HV F	10289804	7	4	338	919369308	SLEWING GEAR
WASHER ISO 7089 12 300HV F	10289804	13	4	365	917259908	CRANE DRIVER CAB ADDITIO
WASHER ISO 7089 12 300HV F	10289804	19	8	474	967928508	LOCKING
WASHER ISO 7089 12 300HV F	10289804	328	4	478	969763408	PIPEWORK AIR INSTALLATIO
WASHER ISO 7089 12 300HV F	10289804	375	4	491	919372008	EXHAUST SYSTEM
WASHER ISO 7089 12 300HV F	10289804	340	8	540	96045351	HYDRAULICS UPPER CARRI
WASHER ISO 7089 12 300HV F	10289804	3	2	611	968267108	ADD-ON PARTS CAMERA
WASHER ISO 7089 12 300HV F	10289804	22	16	639	917291908	PIVOT SECTION, PRE-ASSEMB
WASHER ISO 7089 12 300HV F	10289804	62	3	662	917292408	TELESCOPIC SECT.5 PRE-AS
WASHER ISO 7089 12 300HV F	10289804	13	8	672	966134608	ADD-ON PARTS CYLINDER
WASHER ISO 7089 12 300HV F	10289804	4	3	717	917551608	ADD-ON PARTS

Description	Item	Pos.	Quantity	Page	Assembly	Description
WASHER ISO 7089 12 300HV F	10289804	22	4	721	968728808	CONSOLE PRE-ASS.
WASHER ISO 7089 16 300HV F	10289806	57	32	17	919617108	CRAWLER TRACK TRAVEL G
WASHER ISO 7089 16 300HV F	10289806	85	16	71	919254308	CRAWLER SUPPORT PREASS
WASHER ISO 7089 16 300HV F	10289806	85	16	101	919254408	CRAWLER SUPPORT PREASS
WASHER ISO 7089 16 300HV F	10289806	377	4	269	918731408	DRIVE ASSEMBLY CPL.
WASHER ISO 7089 16 300HV F	10289806	382	18	277	919007708	DRIVE ASSEMBLY, PRE-ASSE
WASHER ISO 7089 16 300HV F	10289806	6	8	442	917260108	FALL PROTECTION
WASHER ISO 7089 16 300HV F	10289806	29	2	474	967928508	LOCKING
WASHER ISO 7089 16 300HV F	10289806	13	1	475	967978908	INTERLOCKING
WASHER ISO 7089 16 300HV F	10289806	47	2	731	917267508	TRANSPORT MOUNTING
WASHER ISO 7089 18 300HV F	10289807	46	4	70	919254308	CRAWLER SUPPORT PREASS
WASHER ISO 7089 18 300HV F	10289807	46	4	100	919254408	CRAWLER SUPPORT PREASS
WASHER ISO 7089 18 300HV F	10289807	27	2	672	966134608	ADD-ON PARTS CYLINDER
WASHER ISO 7089 20 200HV	420002101	88	2	73	90028956	TRACTION DRIVE
WASHER ISO 7089 20 200HV-A	10353689	17	4	335	969050308	OIL TANK PRE-ASS.
WASHER ISO 7089 20 300HV F	10289808	109	2	71	919254308	CRAWLER SUPPORT PREASS
WASHER ISO 7089 20 300HV F	10289808	110	2	101	919254408	CRAWLER SUPPORT PREASS
WASHER ISO 7089 20 300HV F	10289808	29	12	134	919087608	ROTARY FEED THROUGH
WASHER ISO 7089 20 300HV F	10289808	11	4	737	917268208	LADDER ATTACHMENT
WASHER ISO 7089 24 300HV F	10289810	28	4	70	919254308	CRAWLER SUPPORT PREASS
WASHER ISO 7089 24 300HV F	10289810	28	4	100	919254408	CRAWLER SUPPORT PREASS
WASHER ISO 7089 24 300HV F	10289810	380	1	280	96034631	RADIATOR, PRE-ASSEMBLED
WASHER ISO 7089 3 MS	420050108	268	2	685	968708708	TERMINAL BOX CPL.
WASHER ISO 7089 30 300HV F	10289811	77	2	640	917291908	PIVOT SECTION, PRE-ASSEMB
WASHER ISO 7089 4 200HV 4	10875645	9	2	390	916162508	WINDOW ASSEMBLY
WASHER ISO 7089 4 200HV 4	10875645	381	8	430	96036790	SLEWING PLATFORM PANELLI
WASHER ISO 7089 4 200HV 4	10875645	(2)	4	449	96036957	ELECTRIC ADD-ON PARTS CA
WASHER ISO 7089 4 200HV 4	10875645	42	4	449	96036957	ELECTRIC ADD-ON PARTS CA
WASHER ISO 7089 4 200HV 4	10875645	62	16	522	969256608	BASE ASSEMBLY
WASHER ISO 7089 4 200HV 4	10875645	8	3	715	967936408	WIND WARNING PREASSEMB
WASHER ISO 7089 5 -A2	10410193	66	2	483	918484108	UREA PLANT
WASHER ISO 7089 5 -A2	10410193	2	2	715	967936408	WIND WARNING PREASSEMB
WASHER ISO 7089 5 200HV 4	11140403	314	2	90	96035796	HYDR.TRAVEL DRIVE
WASHER ISO 7089 5 200HV 4	11140403	314	2	107	96035792	HYDR.TRAVEL DRIVE
WASHER ISO 7089 5 200HV 4	11140403	5	4	127	917257108	CENTRALIZED LUBRICATION
WASHER ISO 7089 5 200HV 4	11140403	20	6	320	96023117	BATTERY BOX, PRE-ASSEMB
WASHER ISO 7089 5 200HV 4	11140403	4	5	325	968999708	FUEL TANK, PRE-ASSEMBLED
WASHER ISO 7089 5 200HV 4	11140403	35	28	417	918810308	CONTROL STAND
WASHER ISO 7089 5 200HV 4	11140403	30	8	449	96036957	ELECTRIC ADD-ON PARTS CA
WASHER ISO 7089 5 200HV 4	11140403	6	4	502	917261208	CENT. LUBRIC. SYSTEM SUP
WASHER ISO 7089 5 200HV 4	11140403	11	4	575	917267108	AUXILIARY HOISTING GEAR 2
WASHER ISO 7089 5 200HV 4	11140403	6	1	714	967933408	LOCATION FIXTURE PRE-ASS.
WASHER ISO 7089 5 200HV 4	11140403	14	4	728	917413208	SELF-ERECT. AUX. HOIST GEA
WASHER ISO 7089 6 200HV ZN	10197771	10	12	21	96034894	PROTECTION PLATE CPL.
WASHER ISO 7089 6 200HV ZN	10197771	10	12	24	96034977	PROTECTION PLATE
WASHER ISO 7089 6 200HV ZN	10197771	14	2	37	966167808	COVER COMPL.
WASHER ISO 7089 6 200HV ZN	10197771	17	2	38	968054008	MOUNTING PLATE PRE-ASS.
WASHER ISO 7089 6 200HV ZN	10197771	312	45	51	96035801	HYDRAULIC EQUIPM.CENTER
WASHER ISO 7089 6 200HV ZN	10197771	33	2	134	919087608	ROTARY FEED THROUGH
WASHER ISO 7089 6 200HV ZN	10197771	384	2	277	919007708	DRIVE ASSEMBLY, PRE-ASSE
WASHER ISO 7089 6 200HV ZN	10197771	376	8	280	96034631	RADIATOR, PRE-ASSEMBLED
WASHER ISO 7089 6 200HV ZN	10197771	26	4	320	96023117	BATTERY BOX, PRE-ASSEMB
WASHER ISO 7089 6 200HV ZN	10197771	42	2	365	917259908	CRANE DRIVER CAB ADDITIO
WASHER ISO 7089 6 200HV ZN	10197771	50	3	383	917305408	INTERNAL PANELLING INSTA
WASHER ISO 7089 6 200HV ZN	10197771	18	4	396	916168308	AIR DUCT
WASHER ISO 7089 6 200HV ZN	10197771	42	4	417	918810308	CONTROL STAND
WASHER ISO 7089 6 200HV ZN	10197771	3	6	523	922648308	TERMINAL BOARD PRE-ASS.
WASHER ISO 7089 6 200HV ZN	10197771	4	4	525	926891108	GROUND RAIL
WASHER ISO 7089 6 200HV ZN	10197771	318	14	539	96045351	HYDRAULICS UPPER CARRI
WASHER ISO 7089 6 200HV ZN	10197771	12	2	574	918628408	AIR COND. UNIT SUPERSTRU

Description	Item	Pos.	Quantity	Page	Assembly	Description
WASHER ISO 7089 6 200HV ZN	10197771	311	2	589	967784808	HYDR.AUXILIARY HOISTING
WASHER ISO 7089 6 200HV ZN	10197771	28	2	609	968994408	CAMERA HOLDER, PREMOU
WASHER ISO 7089 6 200HV ZN	10197771	30	4	610	968290608	STAND
WASHER ISO 7089 6 200HV ZN	10197771	15	2	612	968993508	CAMERA HOLDER, PREMOU
WASHER ISO 7089 6 200HV ZN	10197771	30	4	613	968267208	STAND
WASHER ISO 7089 6 200HV ZN	10197771	67	2	645	917292008	TELESCOPIC SECTION 1 PRE
WASHER ISO 7089 6 200HV ZN	10197771	63	2	648	917292108	TELESCOPIC SECT.2 PRE-AS
WASHER ISO 7089 6 200HV ZN	10197771	63	2	652	917292208	TELESCOPIC SECT.3 PRE-ASS
WASHER ISO 7089 6 200HV ZN	10197771	63	2	656	917292308	TELESCOPIC SECT.IV PRE-A
WASHER ISO 7089 6 200HV ZN	10197771	3	2	683	966591508	LIMIT SWITCH ADD-ON
WASHER ISO 7089 6 200HV-A2	420060201	39	2	405	917304708	SLIDING DOOR INSTALLATION
WASHER ISO 7089 6 200HV-A4	420000414	8	2	85	968420608	STORAGE BOX
WASHER ISO 7089 8 200HV-A2	420060705	58	6	17	919617108	CRAWLER TRACK TRAVEL G
WASHER ISO 7089 8 200HV-A2	420060705	6	8	623	917260608	COUNTERWEIGHT WITH CLAM
WASHER ISO 7089 8 200HV-A2	420060705	5	6	716	967937608	OBSTRUCTION LIGHTS PREAS
WASHER ISO 7089 8 200HV-A4	420001014	68	8	483	918484108	UREA PLANT
WASHER ISO 7089 8 300HV 4	10289803	11	4	21	96034894	PROTECTION PLATE CPL.
WASHER ISO 7089 8 300HV 4	10289803	11	4	24	96034977	PROTECTION PLATE
WASHER ISO 7089 8 300HV 4	10289803	308	24	51	96035801	HYDRAULIC EQUIPM.CENTER
WASHER ISO 7089 8 300HV 4	10289803	17	1	85	968420608	STORAGE BOX
WASHER ISO 7089 8 300HV 4	10289803	8	7	87	96034962	GUIDE LEFT
WASHER ISO 7089 8 300HV 4	10289803	8	7	104	96034980	GUIDE RIGHT
WASHER ISO 7089 8 300HV 4	10289803	9	2	112	968038208	BEARING AHEAD LEFT SIDE
WASHER ISO 7089 8 300HV 4	10289803	9	2	113	968038308	BEARING AHEAD RIGHT SIDE
WASHER ISO 7089 8 300HV 4	10289803	8	2	127	917257108	CENTRALIZED LUBRICATION
WASHER ISO 7089 8 300HV 4	10289803	37	4	134	919087608	ROTARY FEED THROUGH
WASHER ISO 7089 8 300HV 4	10289803	377	44	277	919007708	DRIVE ASSEMBLY, PRE-ASSE
WASHER ISO 7089 8 300HV 4	10289803	377	28	280	96034631	RADIATOR, PRE-ASSEMBLED
WASHER ISO 7089 8 300HV 4	10289803	375	6	283	968026308	CLUTCH ACTUATOR
WASHER ISO 7089 8 300HV 4	10289803	375	6	326	919231108	FUEL FEED
WASHER ISO 7089 8 300HV 4	10289803	375	3	327	96034868	PREMOUNTED FUEL FILTER
WASHER ISO 7089 8 300HV 4	10289803	9	1	368	919010208	CRANE OPERATOR CABIN P
WASHER ISO 7089 8 300HV 4	10289803	28	4	372	916177508	STEP CPL.
WASHER ISO 7089 8 300HV 4	10289803	12	3	373	96025887	PEDAL CANTILEVER INSTALL
WASHER ISO 7089 8 300HV 4	10289803	64	4	384	917305408	INTERNAL PANELLING INSTA
WASHER ISO 7089 8 300HV 4	10289803	13	4	399	916163008	WIPERS INSTALLATION
WASHER ISO 7089 8 300HV 4	10289803	6	12	410	917676208	HEATING CRANE DRIVER'S CA
WASHER ISO 7089 8 300HV 4	10289803	28	7	414	969085208	HEATING, PRE-ASSEMBLED
WASHER ISO 7089 8 300HV 4	10289803	375	8	430	96036790	SLEWING PLATFORM PANELLI
WASHER ISO 7089 8 300HV 4	10289803	16	4	433	968923508	FLAP RIGHT PRE-ASS.
WASHER ISO 7089 8 300HV 4	10289803	12	4	441	969016008	FLAP LEFT FRONT PRE-ASS.
WASHER ISO 7089 8 300HV 4	10289803	23	21	462	918759808	ADD HEATING SUPERSTRUCT
WASHER ISO 7089 8 300HV 4	10289803	20	7	464	96020359	ADDNL.HEATING, PRE-ASSE
WASHER ISO 7089 8 300HV 4	10289803	28	4	474	967928508	LOCKING
WASHER ISO 7089 8 300HV 4	10289803	63	3	483	918484108	UREA PLANT
WASHER ISO 7089 8 300HV 4	10289803	375	6	499	918731908	AIR FILTER UNIT
WASHER ISO 7089 8 300HV 4	10289803	17	2	502	917261208	CENT. LUBRIC. SYSTEM SUP
WASHER ISO 7089 8 300HV 4	10289803	61	2	522	969256608	BASE ASSEMBLY
WASHER ISO 7089 8 300HV 4	10289803	13	4	525	926891108	GROUND RAIL
WASHER ISO 7089 8 300HV 4	10289803	12	4	565	967980508	OIL COOLER, PRE-ASSEMBLE
WASHER ISO 7089 8 300HV 4	10289803	6	4	600	917269408	CONSOLE AUX. REPLENISHIN
WASHER ISO 7089 8 300HV 4	10289803	16	2	639	917291908	PIVOT SECTION, PRE-ASSEMB
WASHER ISO 7089 8 300HV 4	10289803	17	2	644	917292008	TELESCOPIC SECTION 1 PRE
WASHER ISO 7089 8 300HV 4	10289803	17	2	648	917292108	TELESCOPIC SECT.2 PRE-AS
WASHER ISO 7089 8 300HV 4	10289803	17	4	652	917292208	TELESCOPIC SECT.3 PRE-ASS
WASHER ISO 7089 8 300HV 4	10289803	17	4	656	917292308	TELESCOPIC SECT.IV PRE-A
WASHER ISO 7089 8 300HV 4	10289803	64	10	662	917292408	TELESCOPIC SECT.5 PRE-AS
WASHER ISO 7089 8 300HV 4	10289803	28	4	731	917267508	TRANSPORT MOUNTING
WASHER ISO 7092 20 300HV F	11691327	10	4	475	967978908	INTERLOCKING
WASHER ISO 7092 20 300HV F	11691327	52	16	644	917292008	TELESCOPIC SECTION 1 PRE

Description	Item	Pos.	Quantity	Page	Assembly	Description
WASHER ISO 7092 20 300HV F	11691327	52	16	648	917292108	TELESCOPIC SECT.2 PRE-AS
WASHER ISO 7092 20 300HV F	11691327	52	16	652	917292208	TELESCOPIC SECT.3 PRE-ASS
WASHER ISO 7092 20 300HV F	11691327	52	16	656	917292308	TELESCOPIC SECT.IV PRE-A
WASHER ISO 7092 20 300HV F	11691327	52	16	661	917292408	TELESCOPIC SECT.5 PRE-AS
WASHER ISO 7092 6 200HV-A2	10035694	10	2	378	968514508	INSTALLATION SWITCH CAB. C
WASHER ISO 7092 6 200HV-A2	10035694	36	8	393	966497908	FRONT WINDOW CPL.
WASHER ISO 7092 8 200HV 4	10299679	41	64	30	917511508	CRAWLER CENTRE PART PRE
WASHER ISO 7092 8 200HV 4	10299679	18	6	672	966134608	ADD-ON PARTS CYLINDER
WASHER ISO 7093-1 10 300HV	11491889	21	4	352	917259708	MAIN HOIST GEAR
WASHER ISO 7093-1 10 300HV	11491889	377	4	439	969015908	SLEWING PLATFORM PANELLI
WASHER ISO 7093-1 10 300HV	11491889	312	4	539	96045351	HYDRAULICS UPPER CARRI
WASHER ISO 7093-1 10 300HV	11491889	30	4	577	967969608	AUXILIARY HOISTING GEAR 2
WASHER ISO 7093-1 10 300HV	11491889	26	16	639	917291908	PIVOT SECTION, PRE-ASSEMB
WASHER ISO 7093-1 10 A2	421802108	14	1	399	916163008	WIPERS INSTALLATION
WASHER ISO 7093-1 10 A2	421802108	7	1	407	966230508	GUIDE PRE-ASS.
WASHER ISO 7093-1 12 300HV	11182717	24	8	639	917291908	PIVOT SECTION, PRE-ASSEMB
WASHER ISO 7093-1 16 300HV	4000809	6	4	369	967986308	BEARING INSTALLATION
WASHER ISO 7093-1 16 300HV	4000809	19	8	639	917291908	PIVOT SECTION, PRE-ASSEMB
WASHER ISO 7093-1 20 300HV	4600328	49	4	17	919617108	CRAWLER TRACK TRAVEL G
WASHER ISO 7093-1 20 300HV	4600328	63	1	71	919254308	CRAWLER SUPPORT PREASS
WASHER ISO 7093-1 20 300HV	4600328	63	1	101	919254408	CRAWLER SUPPORT PREASS
WASHER ISO 7093-1 20 300HV	4600328	6	1	323	917626608	FUEL TANK ADD-ON UNIT
WASHER ISO 7093-1 20 300HV	4600328	8	1	332	917825508	OIL RESERVOIR, EXTENSION
WASHER ISO 7093-1 24 300HV	10179463	3	2	332	917825508	OIL RESERVOIR, EXTENSION
WASHER ISO 7093-1 4 200HV 4	10875642	87	1	640	917291908	PIVOT SECTION, PRE-ASSEMB
WASHER ISO 7093-1 4 200HV 4	10875642	69	1	662	917292408	TELESCOPIC SECT.5 PRE-AS
WASHER ISO 7093-1 5 200HV 4	10875643	309	4	539	96045351	HYDRAULICS UPPER CARRI
WASHER ISO 7093-1 6 200HV 4	10875648	376	5	277	919007708	DRIVE ASSEMBLY, PRE-ASSE
WASHER ISO 7093-1 6 200HV 4	10875648	34	6	365	917259908	CRANE DRIVER CAB ADDITIO
WASHER ISO 7093-1 6 200HV 4	10875648	11	4	394	965784408	ROOF WINDOW PRE-ASS.
WASHER ISO 7093-1 6 200HV 4	10875648	379	6	430	96036790	SLEWING PLATFORM PANELLI
WASHER ISO 7093-1 6 200HV 4	10875648	15	2	433	968923508	FLAP RIGHT PRE-ASS.
WASHER ISO 7093-1 6 200HV 4	10875648	309	10	439	969015908	SLEWING PLATFORM PANELLI
WASHER ISO 7093-1 6 200HV 4	10875648	62	12	483	918484108	UREA PLANT
WASHER ISO 7093-1 6 200HV 4	10875648	306	6	539	96045351	HYDRAULICS UPPER CARRI
WASHER ISO 7093-1 6 200HV 4	10875648	315	2	589	967784808	HYDR.AUXILIARY HOISTING
WASHER ISO 7093-1 6 200HV 4	10875648	52	2	639	917291908	PIVOT SECTION, PRE-ASSEMB
WASHER ISO 7093-1 6 200HV 4	10875648	305	2	699	967785008	ADDNL.HYDR. FOLDING JIB
WASHER ISO 7093-1 6 200HV-A	421801708	14	2	393	966497908	FRONT WINDOW CPL.
WASHER ISO 7093-1 6 200HV-A	421801708	4	2	407	966230508	GUIDE PRE-ASS.
WASHER ISO 7093-1 6 200HV-A	421801708	377	6	491	919372008	EXHAUST SYSTEM
WASHER ISO 7093-1 6 200HV-A	421801708	376	8	494	96048826	EXHAUST SYSTEM PRE-ASSE
WASHER ISO 7093-1 6 200HV-A	421801708	3	4	599	917269308	CHARGER
WASHER ISO 7093-1 6 200HV-A	10540500	35	2	47	11346779	SLIP RING TRANSMITTER
WASHER ISO 7093-1 6 200HV-A	10540500	34	4	116	968046208	ADD-ON PARTS
WASHER ISO 7093-1 6 200HV-A	10540500	40	4	405	917304708	SLIDING DOOR INSTALLATION
WASHER ISO 7093-1 6 200HV-A	10540500	8	1	714	967933408	LOCATION FIXTURE PRE-ASS.
WASHER ISO 7093-1 8 200HV 4	11140469	30	4	25	968019508	LIMIT SWITCH ADD-ON
WASHER ISO 7093-1 8 200HV 4	11140469	24	3	127	917257108	CENTRALIZED LUBRICATION
WASHER ISO 7093-1 8 200HV 4	11140469	21	2	158	918731108	ASSEMBLY PARTS F.SLEWING
WASHER ISO 7093-1 8 200HV 4	11140469	378	2	269	918731408	DRIVE ASSEMBLY CPL.
WASHER ISO 7093-1 8 200HV 4	11140469	16	4	352	917259708	MAIN HOIST GEAR
WASHER ISO 7093-1 8 200HV 4	11140469	29	2	365	917259908	CRANE DRIVER CAB ADDITIO
WASHER ISO 7093-1 8 200HV 4	11140469	(5)	4	372	916177508	STEP CPL.
WASHER ISO 7093-1 8 200HV 4	11140469	22	2	390	916162508	WINDOW ASSEMBLY
WASHER ISO 7093-1 8 200HV 4	11140469	380	7	430	96036790	SLEWING PLATFORM PANELLI
WASHER ISO 7093-1 8 200HV 4	11140469	18	4	433	968923508	FLAP RIGHT PRE-ASS.
WASHER ISO 7093-1 8 200HV 4	11140469	376	11	439	969015908	SLEWING PLATFORM PANELLI
WASHER ISO 7093-1 8 200HV 4	11140469	40	6	449	96036957	ELECTRIC ADD-ON PARTS CA
WASHER ISO 7093-1 8 200HV 4	11140469	27	4	462	918759808	ADD HEATING SUPERSTRUCT

Description	Item	Pos.	Quantity	Page	Assembly	Description
WASHER ISO 7093-1 8 200HV 4	11140469	64	8	483	918484108	UREA PLANT
WASHER ISO 7093-1 8 200HV 4	11140469	321	4	539	96045351	HYDRAULICS UPPER CARRI
WASHER ISO 7093-1 8 200HV 4	11140469	30	8	639	917291908	PIVOT SECTION, PRE-ASSEMB
WASHER ISO 7093-1 8 200HV 4	11140469	70	2	662	917292408	TELESCOPIC SECT.5 PRE-AS
WASHER ISO 7093-1 8 200HV 4	11140469	16	12	672	966134608	ADD-ON PARTS CYLINDER
WASHER ISO 7093-1 8 200HV 4	11140469	300	2	693	967785408	ADDNL.HYDR. FOLDING JIB
WASHER ISO 7093-1 8 200HV 4	11140469	307	2	699	967785008	ADDNL.HYDR. FOLDING JIB
WASHER ISO 7093-1 8 200HV-A	421861405	29	4	372	916177508	STEP CPL.
WASHER ISO 7093-1 8 200HV-A	421861405	376	3	491	919372008	EXHAUST SYSTEM
WASHER ISO 7093-1 8 200HV-A	10540510	21	4	405	917304708	SLIDING DOOR INSTALLATION
WASHER ISO 8738 50 160HV-St	10179408	18	4	474	967928508	LOCKING
WASHER ISO 8738 55 160HV-St	10179409	5	1	629	968068308	ASSEMBLY DEVICE
WASHER RD60X2 ALMG3 H11	948717708	19	4	121	919644008	HYDRAULIC SUPPORT
WASHER SPRING DIN 127 A 6	424000508	(12)	3	577	967969608	AUXILIARY HOISTING GEAR 2
WASHER SPRING DIN 128 A 5	12227697	19	6	320	96023117	BATTERY BOX, PRE-ASSEMB
WASHER SPRING DIN 7980 8 F	424100708	8	6	346	510229408	HYDRO MOTOR
WATER BASIN 505X126X100 P	97003164	1	1	400	966408908	WATER CONTAINER CPL
WATER CONTAINER CPL	966408908	1	1	399	916163008	WIPERS INSTALLATION
WATER DRAIN PLUG M12 PA6	602501208	10	2	36	96045226	SWITCH BOX COMPL.
WATER DRAIN PLUG M12 PA6	602501208	308	1	682	966291008	TERMINAL BOX
WATER DRAIN PLUG M12 PA6	602501208	292	1	685	968708708	TERMINAL BOX CPL.
WATER DRAIN VALVE 22BAR	502921908	151	2	478	969763408	PIPEWORK AIR INSTALLATIO
WATER HEATING SYSTEM 24	10876576	1	1	464	96020359	ADDNL.HEATING, PRE-ASSE
WATER HOSE DN4-RAUCLAIR-	11000710	17	1.3	399	916163008	WIPERS INSTALLATION
WATER HOSE DN4-RAUCLAIR-	11000710	18	2.8	399	916163008	WIPERS INSTALLATION
WATER LEVEL SENSOR L=50	10335960	450	1	314	96034515	EXPANSION TANK PRE-ASS.
WATER PUMP WITH FASTENIN	10142733	370	1	163	12856862	DIESEL ENGINE
WATER PUMP, PRE-ASSEMB	10150386	1	1	231	10142733	WATER PUMP WITH FASTENIN
WATER PUMP, PRE-ASSEMB	12863021	1	1	231	10142733	WATER PUMP WITH FASTENIN
WATER SENSOR 5V	11370365	3	1	330	10878502	FUEL FILTER
WATER VALVE NW12X2,5 NICH	11082158	17	2	483	918484108	UREA PLANT
WEARING RING AlSn20Cu	10133693	6	2	197	10138230	CAMSHAFT CPL.
WEARING RING AlSn20Cu	11348100	6	2	197	10138230	CAMSHAFT CPL.
WEARING RING M 40X1,5	9077612	3	1	262	9077386	AUXILIARY DRIVE PRE-ASS.
WEDGE LOCK WASHER NORD	7015814	50	2	405	917304708	SLIDING DOOR INSTALLATION
WEDGE SOCKET 23-25 GR.26	12101239	5	1	628	919028808	DISPATCH ASSY.MECH.PART
WEIGHT EN-GJS400-18 FE//ZN	10873379	1	1	664	96013575	HOIST LIM.SWITCH PLUMMET
WELD PLATE DIN 3015-1 L-AP	602015408	36	2	21	96034894	PROTECTION PLATE CPL.
WELD PLATE DIN 3015-1 L-AP	602015408	36	2	24	96034977	PROTECTION PLATE
WELD PLATE DIN 3015-1 L-AP	602015408	323	4	51	96035801	HYDRAULIC EQUIPM.CENTER
WELD PLATE DIN 3015-1 L-AP	10802205	33	1	21	96034894	PROTECTION PLATE CPL.
WELD PLATE DIN 3015-1 L-AP	10802205	33	1	24	96034977	PROTECTION PLATE
WELD PLATE DIN 3015-1 L-AP	10802205	322	2	51	96035801	HYDRAULIC EQUIPM.CENTER
WELD PLATE DIN 3015-1 L-AP	11008020	310	2	90	96035796	HYDR.TRAVEL DRIVE
WELD PLATE DIN 3015-1 L-AP	11008020	310	2	107	96035792	HYDR.TRAVEL DRIVE
WELDING SLEEVE M8X17 ST37	10412105	23	4	320	96023117	BATTERY BOX, PRE-ASSEMB
WHEATHER CAP 114,3 EDEL	12100105	105	1	491	919372008	EXHAUST SYSTEM
WHEEL NUT DIN 74361 M20X1,	520303308	10	1	226	5700161	AIR COMPRESSOR
WIDE ANGLE MIRROR 219X17	591069508	2	1	424	916049908	MIRROR ATTACHM.IN CRANE
WIDE ANGLE MIRROR 316X17	591070908	1	1	458	917260408	MIRROR ATTACHM.AT SLEW.P
WINCH REVOLUTION TRANS	10802061	5	1	362	966631008	ELECTRIC FOR WINCH 1
WINCH REVOLUTION TRANS	10802061	(5)	1	577	967969608	AUXILIARY HOISTING GEAR 2
WIND VELOCITY TRANSMITTE	11482252	2	1	711	917598408	ELECTRIC MEASURING & WAR
WIND WARNING PREASSEMB	967936408	2	1	713	968412508	MECH MEAS AND WARNING D
WINDOW	11110060	39	1	504	10327065	ELECTRIC PUMP
WINDOW ASSEMBLY SPF	916162508	2	1	380	917304508	CRANE OPERATOR CABIN P
WING SCREW DIN 316 M12X20	4600612	202	2	71	919254308	CRAWLER SUPPORT PREASS
WING SCREW DIN 316 M12X20	4600612	202	2	101	919254408	CRAWLER SUPPORT PREASS
WIPER ARM 650MM	10292014	3	1	399	916163008	WIPERS INSTALLATION
WIPER ARM 900MM	10292015	22	1	393	966497908	FRONT WINDOW CPL.

Description	Item	Pos.	Quantity	Page	Assembly	Description
WIPER BEARING ST	11001115	16	1	393	966497908	FRONT WINDOW CPL.
WIPER BLADE 1000	10292017	23	1	393	966497908	FRONT WINDOW CPL.
WIPER BLADE 700	10292016	5	1	399	916163008	WIPERS INSTALLATION
WIPER FRAME	10292018	7	1	399	916163008	WIPERS INSTALLATION
WIPER FRAME	10870968	8	1	399	916163008	WIPERS INSTALLATION
WIPER MOTOR 55NM 24V SPF	10292021	2	2	399	916163008	WIPERS INSTALLATION
WIPERS INSTALLATION	916163008	5	1	380	917304508	CRANE OPERATOR CABIN P
WIRE	7624238	17	4	307	10872488	DRIVING GEAR
WIRE HOSE CLAMP 70-75	11000902	14	2	396	916168308	AIR DUCT
WIRE HOSE CLAMP 79-85	11000903	13	6	396	916168308	AIR DUCT
WIRED END FERRULE DIN 46	602307808	114	8	44	96045228	WIRING HARNESS
WIRED END FERRULE DIN 46	602307808	114	4	510	96045385	WIRING HARNESS
WIRED END FERRULE DIN 462	602307908	85	10	510	96045385	WIRING HARNESS
WIRED END FERRULE DIN 46	602307708	86	2	44	96045228	WIRING HARNESS
WIRED END FERRULE DIN 46	602307708	86	74	510	96045385	WIRING HARNESS
WIRED END FERRULE DIN 46	602307708	86	26	512	96037136	WIRING HARNESS
WIRES TERMINAL BOX CPL. S	966354908	18	1	685	968708708	TERMINAL BOX CPL.
WIRING DUCT 80X40/2000 HAR	638109101	30	0.28	522	969256608	BASE ASSEMBLY
WIRING HARNESS ASSEMBLY	10151329	2	1	254	10151328	CABLE HARNESS MOUNTING
WIRING HARNESS ASSEMBLY	10151390	8	1	254	10151328	CABLE HARNESS MOUNTING
WIRING HARNESS W200	96045227	21	1	36	96045226	SWITCH BOX COMPL.
WIRING HARNESS W202	96045228	23	1	36	96045226	SWITCH BOX COMPL.
WIRING HARNESS W227	96045205	30	1	139	96045204	CABLE LIST
WIRING HARNESS W300	96036955	2	1	445	96036954	CABLE LIST DRIVER'S CABIN
WIRING HARNESS W301	967541908	3	1	445	96036954	CABLE LIST DRIVER'S CABIN
WIRING HARNESS W302	967542008	4	1	445	96036954	CABLE LIST DRIVER'S CABIN
WIRING HARNESS W310	96036956	7	1	445	96036954	CABLE LIST DRIVER'S CABIN
WIRING HARNESS W321	96043733	5	1	614	96045237	EQUIPMENT CAMERA CAB
WIRING HARNESS W346	96023876	(10)	1	449	96036957	ELECTRIC ADD-ON PARTS CA
WIRING HARNESS W500	96045385	50	1	509	96045384	CABLE LIST SLEWING PLATF
WIRING HARNESS W501	96037136	51	1	509	96045384	CABLE LIST SLEWING PLATF
WIRING HARNESS W522	966298408	(8)	1	577	967969608	AUXILIARY HOISTING GEAR 2
WIRING HARNESS W555	96037137	52	1	509	96045384	CABLE LIST SLEWING PLATF
WIRING HARNESS WRCAN	967709108	521	1	44	96045228	WIRING HARNESS
WOODRUFF KEY DIN 6888 3X5	570435508	18	1	281	10429930	GEAR WHEEL MOTOR
WORK LIGHT 20W 12-24V AL	10877828	6	1	449	96036957	ELECTRIC ADD-ON PARTS CA
WORK LIGHT 20W 12-24V AL	10877828	(10)	1	604	918989008	A-HEADLIGHT SLEWING PLA
WORK LIGHT 20W 12-24V AL	10877828	20	1	616	96037130	EQUIPMENT CAMERA SLEW C
WORK LIGHT 20W 12-24V AL	10877828	20	1	618	96037131	EQUIPMENT CAMERA WINCHE
WORK LIGHT 20W 12-24V AL	10877828	(4)	1	628	919028808	DISPATCH ASSY.MECH.PART
WORK LIGHT 50W 12-24V ALU	10872003	5	2	702	918124908	A-HEADL.SEARCHLIGHT PIVO
WRENCH SOCKET 1/2"-14WN	12103321	(2)	1	71	919254308	CRAWLER SUPPORT PREASS
WRENCH SOCKET SW1 11/16"	890020214	11	1	143	919328608	TOOLS AND ACCESSORIES

Bezeichnung	Artikel	Pos.	Menge	Seite	Baugruppe	Bezeichnung
2.NACKENROLLE EINBAU	910040808	363	1	11		LIEBHERR LTR 1220
A-SCHEINWERFER ANLENKST	918124908	321	1	11		LIEBHERR LTR 1220
A-SCHEINWERFER DREHBUE	918989008	438	1	12		LIEBHERR LTR 1220
ABDECKBLECH	11494286	41	2	724	910836808	HAKENFLASCHE
ABDECKBLECH VORM.	965021508	46	2	417	918810308	STEUERSTAND
ABDECKHAUBE	10451017	17	1	681	10354493	LEITUNGSTROMMEL
ABDECKKAPPE	11171306	2	1	712	11482252	WINDGESCHWINDIGKEITSGE
ABDECKKAPPE 112,7 PPA	10115832	7	1	177	10155227	OELWANNE VORM.
ABDECKKAPPE 36X22 PVC-S	10215892	9	1	459	966707708	SPIEGELHALTER VORM.
ABDECKKAPPE 700 M18X1,5 P	10129392	28	2	207	10149198	RS VORFOERDERPUMPE
ABDECKKAPPE 700 M18X1,5 P	10129392	2	2	208	12489819	ABDECKKAPPEN-KIT
ABDECKKAPPE POLYSTIC27-3	591570908	102	3	429	96036790	DREHBUEHNENVERKLEIDUN
ABDECKKAPPE POLYSTIC27-3	591570908	51	1	449	96036957	ELEKTRIK ANBAUTEILE KABIN
ABDECKKAPPE POLYSTIC27-3	591570908	6	1	453	96022872	ARMATURENBRETT DACH
ABDECKKAPPE POLYSTIC27-3	591570908	8	1	526	968063108	MONTAGEEINHEIT VORM.
ABDECKKAPPE PP	10129394	7	1	208	12489819	ABDECKKAPPEN-KIT
ABDECKKAPPEN-KIT	12489819	240	1	206	10146658	HOCHDRUCKPUMPE
ABDECKUNG	10650507	(2)	1	424	916049908	SPIEGELANBAU KRANFUEHR
ABDECKUNG	11005170	17	1	419	10877138	FAHRERSITZ
ABDECKUNG	11171270	32	1	419	10877138	FAHRERSITZ
ABDECKUNG 8X735X83 PE SC	97008572	13	1	390	916162508	SCHEIBEN EINBAU
ABDECKUNG KPL.	12103044	10	1	675	10802064	SEILLAENGENGEBER
ABDECKUNG KPL. SL 015	692600708	23	1	675	10802064	SEILLAENGENGEBER
ABDECKUNG MOLERIT T59	11008024	527	4	447	96036955	KABELSTRANG
ABDICHTPROFIL	979896308	2	1	37	966167808	DECKEL KPL.
ABDICHTPROFIL 1,5-3X14,6X1	262106508	19	0.37	433	968923508	KLAPPE VORM.RECHTS
ABGASANLAGE	919372008	163	1	10		LIEBHERR LTR 1220
ABGASANLAGE VORM.	96048826	1	1	491	919372008	ABGASANLAGE
ABGASMISCHROHR SCRONL	10148666	102	1	494	96048826	ABGASANLAGE VORM.
ABGASROHR 1.4301	97049719	102	1	491	919372008	ABGASANLAGE
ABGASROHR 1.4301	97049723	103	1	491	919372008	ABGASANLAGE
ABGASROHR 38/FLEXIBEL	553054108	7	1.995	462	918759808	ZUSATZHEIZUNG OW
ABGASROHR 38/FLEXIBEL	553054108	7	0.25	464	96020359	ZUSATZHEIZUNG VORM.
ABGASROHR ANBAU R-MOT	10140087	410	1	163	12856862	DIESELMOTOR
ABGASROHR R-MOTORXD934	10145524	1	1	236	10140087	ABGASROHR ANBAU
ABGASSCHALLDAEMPFER 116	553187208	5	1	464	96020359	ZUSATZHEIZUNG VORM.
ABGASSTUTZEN ANBAU R-M	12512627	432	1	164	12856862	DIESELMOTOR
ABGLAETTMITTEL KANISTER5	811203108	16	1	390	916162508	SCHEIBEN EINBAU
ABGLAETTMITTEL KANISTER5	811203108	49	1	405	917304708	SCHIEBETUER EINBAU
ABREISSSTOPFEN M8	514539308	12	1	297	10008308	ANSCHLUSSPLATTE
ABSCHALTVENTIL	571899508	(3)	1	294	11210795	VERSTELLPUMPE
ABSCHIRMUNG	966980708	36	2	449	96036957	ELEKTRIK ANBAUTEILE KABIN
ABSCHIRMUNG ZURUECKGEB	965617208	995	6	447	96036955	KABELSTRANG
ABSCHIRMUNG ZURUECKGEB	965617208	995	2	511	96045385	KABELSTRANG
ABSCHLUSSPLATTE	11643394	3	1	360	11182597	VERSTELLMOTOR
ABSCHLUSSPLATTE	11643394	3	1	578	11211058	VERSTELLMOTOR
ABSPERRORGAN DN150-FLAN	11212467	2	1	335	969050308	OELBEHAELTER VORM.
ABSTANDSBOLZEN M5X30 11	97028159	48	4	383	917305408	INNENVERKLEIDUNG EINBAU
ABSTANDSBOLZEN M6X30 ST	11001955	57	3	383	917305408	INNENVERKLEIDUNG EINBAU
ABSTANDSBOLZEN M6X50 S	10875447	58	2	383	917305408	INNENVERKLEIDUNG EINBAU
ABSTANDSRING	11181884	5	1	47	11346779	SCHLEIFRINGUEBERTRAGER
ABSTREIFER 160X175X9	7367567	4	1	78	10877686	SPANNER HYDR KPL
ABSTUETZPLATTE SCHWK.	967996608	4	4	121	919644008	HYDRAULISCHE ABSTUETZUN
ABSTUETZZYLINDER 240/210-	11182950	1	4	121	919644008	HYDRAULISCHE ABSTUETZUN
ABSTURZSICHERUNG	917260108	140	1	10		LIEBHERR LTR 1220
ABSTURZSICHERUNG	917691008	13	1	9		LIEBHERR LTR 1220
ABTRIEBSFLANSCH	939292301	10	1	357	939292201	PLANETENGETRIEBE
ABTRIEBSWELLE 135,9 18CrNi	90010683	10	1	340	90008901	DREHWERKANTRIEB
ACHSE 30.0X95 S355J2C+C FE	97011246	18	1	368	919010208	KRANFUEHRERKABINE VORM.
ACHSE RD150X120 S355J2H	946509308	6	1	705	917268408	MASTNASE

Bezeichnung	Artikel	Pos.	Menge	Seite	Baugruppe	Bezeichnung
ACHSE SCHWK.	923661808	5	1	661	917292408	TELESKOP 5 VORM.
ACHSE SCHWK.	923672408	6	1	661	917292408	TELESKOP 5 VORM.
ACHSHALTER 10X109X30 S35	973178808	11	6	471	918956108	HYDRAULISCHE BALLASTIER
ACHSHALTER 10X140X40 S35	942164608	8	2	17	919617108	RAUPENFAHRWERK KPL.
ACHSHALTER 12X222X222 S96	970591108	2	2	158	918731108	MONTAGETEILE DREHBUEHN
ACHSHALTER 12X270X220 S96	974925508	4	1	619	919617008	WIPPZYLINDER M.LAGERUNG
ACHSHALTER 15X260X217 S96	970598608	5	1	619	919617008	WIPPZYLINDER M.LAGERUNG
ACHSHALTER 8X30X60 S235J	931185608	15	3	365	917259908	KRANFUEHRERKABINE ANBA
ACHSHALTER LN 4/1 S235JR+	997040101	26	1	731	917267508	TRANSPORTHALTERUNG DKS
ADAPTER 18-POL SPF	660024508	29	1	518	919503008	EINBAUTEILE SCHALTSCHRAN
ADAPTER 19.0X17 S235JRC+C	97051324	66	1	450	96036957	ELEKTRIK ANBAUTEILE KABIN
ADAPTER 32X185X45 PAGF30	979243408	2	1	394	965784408	DACHSCHEIBE VORM.
ADAPTER M16-M10 ST.60-2K	972698608	29	4	275	919007708	ANTRIEBSAGGREGAT VORM.
ADAPTER RI11/2-EDX1 A3P	475502408	769	2	542	96045351	HYDRAULIK OBERWAGEN
ADAPTER RI11/4-EDX1/2 A3P	475501108	662	2	52	96035801	HYDRAULIK MITTELTEIL
ADAPTER RI11/4-EDX1/2 A3P	475501108	623	1	90	96035796	HYDR.FAHRANTRIEB
ADAPTER RI11/4-EDX1/2 A3P	475501108	623	1	107	96035792	HYDR.FAHRANTRIEB
ADAPTERRING	11007300	2	1	47	11346779	SCHLEIFRINGUEBERTRAGER
ADERENDHUELSE DIN 46228-	602307808	114	8	44	96045228	KABELSTRANG
ADERENDHUELSE DIN 46228-	602307808	114	4	510	96045385	KABELSTRANG
ADERENDHUELSE DIN 46228-1	602307908	85	10	510	96045385	KABELSTRANG
ADERENDHUELSE DIN 46228-	602307708	86	2	44	96045228	KABELSTRANG
ADERENDHUELSE DIN 46228-	602307708	86	74	510	96045385	KABELSTRANG
ADERENDHUELSE DIN 46228-	602307708	86	26	512	96037136	KABELSTRANG
AGGREGATETRAEGER ANBA	10147687	12	1	160	12856862	DIESELMOTOR
AGGREGATETRAEGER SCH	968918808	1	1	275	919007708	ANTRIEBSAGGREGAT VORM.
AGGREGATETRAEGER VORM	12835708	1	1	170	10147687	AGGREGATETRAEGER ANBA
AKTIVATOR 1000ML	870004108	23	1	390	916162508	SCHEIBEN EINBAU
AKTIVATOR 250ML DOSE	10815283	14	1	390	916162508	SCHEIBEN EINBAU
ANBAUTEILE ARBEITSSCHEI	96037229	10	1	604	918989008	A-SCHEINWERFER DREHBUE
ANBAUTEILE BTT	917618608	150	1	10		LIEBHERR LTR 1220
ANBAUTEILE KAMERA DB-HEC	968210808	1	1	606	918992008	KAMERAUEBERWACHUNG O
ANBAUTEILE KAMERA DB-WIN	968267108	2	1	606	918992008	KAMERAUEBERWACHUNG O
ANBAUTEILE LUFTPRESSER	10145278	334	1	163	12856862	DIESELMOTOR
ANBAUTEILE RAUPENTRAEGE	968046208	50	2	111	917691008	ABSTURZSICHERUNG
ANBAUTEILE TELE	917551608	286	1	11		LIEBHERR LTR 1220
ANBAUTEILE ZYLINDER	966134608	2	1	666	918807308	AUSSCHUBMECHANIK
ANLAUFRING AlSn20Cu	10133693	6	2	197	10138230	NOCKENWELLE KPL.
ANLAUFRING AlSn20Cu	11348100	6	2	197	10138230	NOCKENWELLE KPL.
ANLAUFRING M 40X1,5	9077612	3	1	262	9077386	NEBENABTRIEB VORM.
ANLAUFSCHEIBE	571582308	4	1	226	5700161	LUFTPRESSER
ANLAUFSCHEIBE	571582408	6	1	226	5700161	LUFTPRESSER
ANLAUFSCHEIBE 112X138X3	10119927	3	2	185	10116939	RS KURBELWELLENLAGERU
ANLAUFSCHEIBE 112X138X3	10119928	4	2	185	10116939	RS KURBELWELLENLAGERU
ANLAUFSCHEIBE 200X7 GZ-CU	97032155	8	8	121	919644008	HYDRAULISCHE ABSTUETZUN
ANLAUFSCHEIBE 205	927602301	46	1	357	939292201	PLANETENGETRIEBE
ANLAUFSCHEIBE 8X70X70 PA6	97028395	7	2	365	917259908	KRANFUEHRERKABINE ANBA
ANLENKSTUECK SCHWK. SPF	917292608	1	1	639	917291908	ANLENKSTUECK VORM.
ANLENKSTUECK VORM.	917291908	1	1	634	918804808	TELESKOPAUSLEGER KPL.
ANSAUGSTUTZEN ANBAU R-M	10145173	221	1	162	12856862	DIESELMOTOR
ANSAUGSTUTZEN R-MOTOR	11444999	1	1	218	10145173	ANSAUGSTUTZEN ANBAU
ANSCHLAG	11485426	3	1	302	10871043	VERSTELLPUMPE
ANSCHLAG 90X60X10 PA6G	97070985	102	4	71	919254308	RAUPENTRAEGER VORM.LI.
ANSCHLAG 90X60X10 PA6G	97070985	103	4	101	919254408	RAUPENTRAEGER VORM.RE.
ANSCHLAGMITTEL	917611508	299	1	11		LIEBHERR LTR 1220
ANSCHLAGSCHEIBE 16,5X75X	10875905	3	4	369	967986308	LAGERUNG EINBAU
ANSCHLAGSEIL -5M PP SPF	773326508	3	1	736	917268108	WERKZEUG KLAPPSPITZE
ANSCHLAGSEIL DIN EN 13414-	773445108	14	3	628	919028808	MECH.TEILE VERSANDMONT
ANSCHLAGSEIL EN 13414-3 35.	10331368	2	1	722	917531708	BALLASTTRAVERSE
ANSCHLUSSBLOCK	511055908	169	1	538	96045351	HYDRAULIK OBERWAGEN

Bezeichnung	Artikel	Pos.	Menge	Seite	Baugruppe	Bezeichnung
ANSCHLUSSFLANSCH	511057608	188	1	539	96045351	HYDRAULIK OBERWAGEN
ANSCHLUSSFLANSCH	511057608	172	1	589	967784808	HYDRAULIK HILFSHUBWERK
ANSCHLUSSKABEL	12102265	29	1	675	10802064	SEILLAENGENGEBER
ANSCHLUSSKABEL 2X0,75-1,5	10877798	12	1	446	96036955	KABELSTRANG
ANSCHLUSSKABEL 2X0,75-1,5	10877798	6	1	516	96037133	LEITUNG
ANSCHLUSSKABEL 2X0,75-1,5	10877798	6	1	617	96037132	LEITUNG
ANSCHLUSSKABEL 2X0,75-10	10877801	19	1	510	96045385	KABELSTRANG
ANSCHLUSSKABEL 2X0,75-10	10877801	372	1	510	96045385	KABELSTRANG
ANSCHLUSSKABEL 2X0,75-10	10877801	388	1	513	96037136	KABELSTRANG
ANSCHLUSSKABEL 2X0,75-10	10877801	389	1	513	96037136	KABELSTRANG
ANSCHLUSSKABEL 2X0,75-5M	10877800	371	1	510	96045385	KABELSTRANG
ANSCHLUSSPLATTE	10008308	2	1	295	11210798	VERSTELLPUMPE
ANSCHLUSSPLATTE	10873570	3	1	294	11210795	VERSTELLPUMPE
ANSCHLUSSPLATTE	11003841	16	1	681	10354493	LEITUNGSTROMMEL
ANSCHLUSSPLATTE	510629508	175	1	539	96045351	HYDRAULIK OBERWAGEN
ANSCHLUSSPLATTE	510629508	173	1	589	967784808	HYDRAULIK HILFSHUBWERK
ANSCHLUSSPLATTE	570109208	4	1	346	510229408	HYDROMOTOR
ANSCHLUSSPLATTE	571907208	2	1	305	10871282	VERSTELLPUMPE
ANSCHLUSSPLATTE DP1-10/3	511058308	196	1	539	96045351	HYDRAULIK OBERWAGEN
ANSCHLUSSSTECKER	12102524	20	2	58	11643183	STEUERBLOCK
ANSCHLUSSSTECKER AX	602337008	508	3	448	96036956	KABELSTRANG
ANSCHLUSSSTECKER AX	602337008	518	1	520	96045387	DRAEHTE GRUNDAUFBAU KPL
ANSCHLUSSSTUECK VORM.	10141790	217	1	162	12856862	DIESELMOTOR
ANSCHLUSSSTUTZEN 11SMnP	927586201	12	2	361	90200104	OELMESSEINRICHTUNG
ANSCHLUSSSTUTZEN 11SMnP	927586201	12	1	585	90200103	OELMESSEINRICHTUNG
ANSCHLUSSTRAEGER 42CrM	927745001	1	1	357	939292201	PLANETENGETRIEBE
ANSCHRAUBSCHARNIER 25X	10871177	12	4	393	966497908	FRONTSCHEIBE KPL.
ANSCHRAUBSCHARNIER 25X	10871177	9	2	394	965784408	DACHSCHEIBE VORM.
ANSCHWEISSPLATTE DIN 301	602015408	36	2	21	96034894	SCHUTZBLECH KPL.LI.
ANSCHWEISSPLATTE DIN 301	602015408	36	2	24	96034977	SCHUTZBLECH KPL.RE.
ANSCHWEISSPLATTE DIN 301	602015408	323	4	51	96035801	HYDRAULIK MITTELTEIL
ANSCHWEISSPLATTE DIN 301	10802205	33	1	21	96034894	SCHUTZBLECH KPL.LI.
ANSCHWEISSPLATTE DIN 301	10802205	33	1	24	96034977	SCHUTZBLECH KPL.RE.
ANSCHWEISSPLATTE DIN 301	10802205	322	2	51	96035801	HYDRAULIK MITTELTEIL
ANSCHWEISSPLATTE DIN 301	11008020	310	2	90	96035796	HYDR.FAHRANTRIEB
ANSCHWEISSPLATTE DIN 301	11008020	310	2	107	96035792	HYDR.FAHRANTRIEB
ANSTEUERGERAET	10471384	5	1	294	11210795	VERSTELLPUMPE
ANSTEUERGERAET	11690588	5	1	286	11182708	VERSTELLPUMPE
ANSTEUERGERAET	11690588	5	1	289	10871017	VERSTELLPUMPE
ANTENNE	10450273	4	1	41	966204108	ANTENNE KPL.
ANTENNE	10878172	1	1	633	12257818	AUTORADIO
ANTENNE AKTIV	12102817	11	1	449	96036957	ELEKTRIK ANBAUTEILE KABIN
ANTENNE KPL.	966204108	4	2	36	96045226	SCHALTKASTEN VORM.
ANTENNENKABEL 1,27-2M SEI	10876819	60	1	450	96036957	ELEKTRIK ANBAUTEILE KABIN
ANTENNENKABEL 1-4,850M	11114971	59	1	450	96036957	ELEKTRIK ANBAUTEILE KABIN
ANTENNENSTAB	10815004	1	1	42	10450273	ANTENNE
ANTIRUTSCHBELAG 1.6X25X	97037477	67	2	384	917305408	INNENVERKLEIDUNG EINBAU
ANTRIEB FUER HOCHDRUCK	11407917	180	1	162	12856862	DIESELMOTOR
ANTRIEBSAGGREGAT KPL.	918731408	105	1	9		LIEBHERR LTR 1220
ANTRIEBSAGGREGAT VORM.	919007708	1	1	269	918731408	ANTRIEBSAGGREGAT KPL.
ANTRIEBSFLANSCH EDELST	606012608	6	1	362	966631008	ELEKTRIK WINDE 1
ANTRIEBSFLANSCH EDELST	606012608	(6)	1	577	967969608	HILFSHUBWERK WINDE 2 VO
ANTRIEBSRAD 12XB9SX260,3	749056414	4	1	70	919254308	RAUPENTRAEGER VORM.LI.
ANTRIEBSRAD 12XB9SX260,3	749056414	4	1	100	919254408	RAUPENTRAEGER VORM.RE.
ANTRIEBSWELLE	927745101	5	1	357	939292201	PLANETENGETRIEBE
ARBEITSSCHEINWERFER 20W	10877828	6	1	449	96036957	ELEKTRIK ANBAUTEILE KABIN
ARBEITSSCHEINWERFER 20W	10877828	(10)	1	604	918989008	A-SCHEINWERFER DREHBUE
ARBEITSSCHEINWERFER 20W	10877828	20	1	616	96037130	AUSRUESTUNG KAMERA DRE
ARBEITSSCHEINWERFER 20W	10877828	20	1	618	96037131	AUSRUESTUNG KAMERA WIN
ARBEITSSCHEINWERFER 20W	10877828	(4)	1	628	919028808	MECH.TEILE VERSANDMONT

Bezeichnung	Artikel	Pos.	Menge	Seite	Baugruppe	Bezeichnung
ARBEITSSCHEINWERFER 50W	10872003	5	2	702	918124908	A-SCHEINWERFER ANLENKS
ARMATURENBRETT DACH	96022872	2	1	449	96036957	ELEKTRIK ANBAUTEILE KABIN
ARMATURENHALTER	10009700	57	1	412	11083498	HEIZKLIMAGERAET
ARMLEHNE 310ERGO	774119708	1	1	421	962282208	ARMLEHNE LINKS
ARMLEHNE 310ERGO	774119808	1	1	423	962282308	ARMLEHNE RECHTS
ARMLEHNE LINKS	962282208	1	1	420	96032222	NACHARBEIT ARMLEHNE LI.
ARMLEHNE RECHTS	962282308	1	1	422	96032223	NACHARBEIT ARMLEHNE RE.
ARMLEHNENAUFLAGE	971636608	2	1	421	962282208	ARMLEHNE LINKS
ARMLEHNENAUFLAGE	971636608	2	1	423	962282308	ARMLEHNE RECHTS
ASCHENBECHER KUNSTSTOF	10291997	33	1	383	917305408	INNENVERKLEIDUNG EINBAU
ATL-ANBAU	10140729	430	1	163	12856862	DIESELMOTOR
AUFFANGGURT EN 361 IK G 2	11007305	1	1	153	916959808	PERSOENLICHE SCHUTZAUS
AUFKLEBER	10663909	(1)	1	128	11347526	ELEKTROPUMPE
AUFKLEBER BEHAELTER 2,5K	967421808	27	1	128	11347526	ELEKTROPUMPE
AUFKLEBER BEHAELTER 2,5K	967421808	30	1	504	10327065	ELEKTROPUMPE
AUFLAGEBOCK FE//ZNNI8//CN/	965255408	26	1	365	917259908	KRANFUEHRERKABINE ANBA
AUFNAHME SCHWK. WARNEI	968410408	1	1	717	917551608	ANBAUTEILE
AUFNAHMEGEHAEUSE 4-POL	602337608	514	1	520	96045387	DRAEHTE GRUNDAUFBAU KPL
AUFSTECKROHR	607226808	21	2	506	919410708	EL.ANLAGE DREHBUEHNE
AUSGLEICHSBEHAELTER	570065908	1	1	94	502806508	AUSGLEICHSBEHAELTER
AUSGLEICHSBEHAELTER	96034522	3	1	269	918731408	ANTRIEBSAGGREGAT KPL.
AUSGLEICHSBEHAELTER 0,2L	502807308	(1)	1	589	967784808	HYDRAULIK HILFSHUBWERK
AUSGLEICHSBEHAELTER 1L	502806508	1	1	93	96028333	AUSGLEICHSBEHAELTER KPL
AUSGLEICHSBEHAELTER KPL	96028331	152	1	589	967784808	HYDRAULIK HILFSHUBWERK
AUSGLEICHSBEHAELTER KPL	96028333	161	1	90	96035796	HYDR.FAHRANTRIEB
AUSGLEICHSBEHAELTER KPL	96028333	161	1	107	96035792	HYDR.FAHRANTRIEB
AUSGLEICHSBEHAELTER SCH	96035739	1	1	315	96034522	AUSGLEICHSBEHAELTER
AUSGLEICHSBEHAELTER SCH	96035326	1	1	314	96034515	AUSGLEICHSBEHAELTER VO
AUSGLEICHSBEHAELTER VO	96034515	2	1	269	918731408	ANTRIEBSAGGREGAT KPL.
AUSGLEICHSBLECH FE//ZNNI	964984108	26	2	417	918810308	STEUERSTAND
AUSGLEICHSCHEIBE	511015508	17	2	558	511433908	DRUCKBEGRENZUNGSVENTI
AUSGLEICHSCHEIBE	511015508	17	1	561	511419608	DRUCKBEGRENZUNGSVENTI
AUSGLEICHSPLATTE	10115155	18	4	47	11346779	SCHLEIFRINGUEBERTRAGER
AUSGLEICHSPLATTE	10359124	20	2	47	11346779	SCHLEIFRINGUEBERTRAGER
AUSGLEICHWELLE VORM.	10152441	1	2	196	10120186	MASSENAUSGLEICH ANBAU
AUSLASSMODUL SCRONLY	11403694	20	1	495	11403708	SCR-BAUGRUPPE
AUSLASSVENTIL	10136751	4	2	191	10149579	ZYLINDERKOPF VORM.
AUSRUESTUNG KAMERA DRE	96037130	4	1	606	918992008	KAMERAUEBERWACHUNG O
AUSRUESTUNG KAMERA KAB	96045237	3	1	606	918992008	KAMERAUEBERWACHUNG O
AUSRUESTUNG KAMERA WIN	96037131	5	1	606	918992008	KAMERAUEBERWACHUNG O
AUSSCHUBMECHANIK	918807308	7	1	634	918804808	TELESKOPAUSLEGER KPL.
AUSSENGRIFF ZUG	11005987	4	1	406	966230408	SCHLIESSANLAGE
AUSSENLAMELLE	10175221	5	8	343	90025781	BREMSLAMELLENSATZ
AUSSENLAMELLE	737350603	(4)	9	73	90028956	FAHRANTRIEB
AUSSTROEMDUESE D=63 AB	10301409	30	2	383	917305408	INNENVERKLEIDUNG EINBAU
AUSSTROEMDUESE D=82 T=5	553193208	29	6	383	917305408	INNENVERKLEIDUNG EINBAU
AUTORADIO	12257818	1	1	632	916166208	AUTORADIO
AUTORADIO	916166208	199	1	11		LIEBHERR LTR 1220
AX.ZYL.ROLLENLAGER DIN 7	746607401	37	1	724	910836808	HAKENFLASCHE
AXIALLAGER	12103676	5	1	723	919007108	LASTHAKEN
AXIALLUEFTER 24V	10222682	1	1	456	963398008	AXIALLUEFTER VORM.OBEN
AXIALLUEFTER VORM.OBEN	963398008	35	1	449	96036957	ELEKTRIK ANBAUTEILE KABIN
AXIALLUEFTER VORM.OBEN	963398008	26	2	522	969256608	GRUNDAUFBAU
BALLAST DREHBUEHNE 4X10	917404508	147	1	10		LIEBHERR LTR 1220
BALLASTIERZYLINDER 240/15	10877810	1	2	471	918956108	HYDRAULISCHE BALLASTIER
BALLASTTRAVERSE 70T	917531708	304	1	11		LIEBHERR LTR 1220
BALLASTUEBERWACHUNG	919499508	23	1	9		LIEBHERR LTR 1220
BATTERIE 1.5V 16.5AH	613200608	3	10	145	928620108	ZUBEHOER
BATTERIE 12V 180AH	10664204	5	2	321	96023914	ELEKTRIK BATTERIEKASTEN
BATTERIEHAUPTSCHALTER	96023960	19	1	321	96023914	ELEKTRIK BATTERIEKASTEN

Bezeichnung	Artikel	Pos.	Menge	Seite	Baugruppe	Bezeichnung
BATTERIEKASTEN KPL.	918955408	107	1	9		LIEBHERR LTR 1220
BATTERIEKASTEN SCHWK. SP	96023028	3	1	320	96023117	BATTERIEKASTEN VORM.
BATTERIEKASTEN VORM.	96023117	1	1	318	918955408	BATTERIEKASTEN KPL.
BATTERIEKLEMME 15,9MM² V	613206608	21	2	321	96023914	ELEKTRIK BATTERIEKASTEN
BATTERIEKLEMME 17,5MM² V	613206508	22	2	321	96023914	ELEKTRIK BATTERIEKASTEN
BE- UND ENTLUEFTUNGSFILT	7002458	7	1	361	90200104	OELMESSEINRICHTUNG
BE- UND ENTLUEFTUNGSFIL	721108801	7	1	585	90200103	OELMESSEINRICHTUNG
BEARBEITUNG CAN- STUETZ	96014807	2998	2	447	96036955	KABELSTRANG
BEARBEITUNG CAN- STUETZ	96014807	2998	10	515	96037137	KABELSTRANG
BECHERHALTER	10291999	8	1	370	96015921	BEDIENELEMENTE EINBAU
BEDIENELEMENTE EINBAU	96015921	2	1	368	919010208	KRANFUEHRERKABINE VORM.
BEFESTIGUNG DRUCKROHR	10135434	220	1	210	10153151	DRUCKROHRSTUTZEN MIT BE
BEFESTIGUNGSBLECH	10142670	2	1	239	10142863	GENERATOR VORM.
BEFESTIGUNGSMATERIAL	10650403	49	1	419	10877138	FAHRERSITZ
BEFESTIGUNGSMATERIAL	11171275	65	1	419	10877138	FAHRERSITZ
BEFESTIGUNGSMUTTER	10423992	(1)	2	546	11211756	STEUERBLOCK
BEFESTIGUNGSMUTTER	10663825	(1)	1	287	11690588	ANSTEUERGERAET
BEFESTIGUNGSMUTTER	10663825	1	1	310	10292801	REGLER
BEFESTIGUNGSMUTTER	10663825	(1)	2	311	10292815	REGLERELEMENT
BEFESTIGUNGSMUTTER M16X	602042208	12	1	529	969061708	TRAEGERBLECH SICHERUNG
BEFESTIGUNGSSCHELLE	570066408	7	1	94	502806508	AUSGLEICHSBEHAELTER
BEFESTIGUNGSSCHELLE 34 E	10123304	1	1	253	10144098	BEFESTIGUNGSSCHELLE
BEFESTIGUNGSSCHELLE 34	10144098	6	2	252	10144227	STEUERGERAET ANBAU
BEHAELTER 2,5 KG	10038271	26	1	128	11347526	ELEKTROPUMPE
BEHAELTER 2,5 KG	10038271	29	1	504	10327065	ELEKTROPUMPE
BEHAELTERDECKEL	12102477	40	1	128	11347526	ELEKTROPUMPE
BEHAELTERDECKEL	12102477	34	1	504	10327065	ELEKTROPUMPE
BEHAELTERSTOPFEN	570066208	4	1	94	502806508	AUSGLEICHSBEHAELTER
BEHAELTERVERSCHRAUBUN	10878281	2	1	93	96028333	AUSGLEICHSBEHAELTER KPL
BEHAELTERVERSCHRAUBUN	10878281	(2)	1	589	967784808	HYDRAULIK HILFSHUBWERK
BELUEFTUNGSFILTER	510667308	6	2	335	969050308	OELBEHAELTER VORM.
BERUEHRUNGSSCHUTZ	968798408	2	1	494	96048826	ABGASANLAGE VORM.
BESCHILDERUNG FREMDEIN	918462408	417	1	12		LIEBHERR LTR 1220
BESCHILDERUNG GEGENGE	968992508	15	1	623	917260608	GEGENGEWICHT M.BEFESTIG
BESCHILDERUNG GROSSBRI	917862808	42	1	9		LIEBHERR LTR 1220
BESCHILDERUNG MASTNASE	967774608	100	1	705	917268408	MASTNASE
BESCHILDERUNG TRANSPO	919127808	421	1	12		LIEBHERR LTR 1220
BESCHRIFTUNG ADER	965622108	996	20	43	96045227	KABELSTRANG
BESCHRIFTUNG ADER	965622108	996	20	45	96045228	KABELSTRANG
BESCHRIFTUNG ADER	965622108	996	8	447	96036955	KABELSTRANG
BESCHRIFTUNG ADER	965622108	996	8	448	96036956	KABELSTRANG
BESCHRIFTUNG ADER	965622108	996	62	511	96045385	KABELSTRANG
BESCHRIFTUNG ADER	965622108	996	124	513	96037136	KABELSTRANG
BESCHRIFTUNG ADER	965622108	996	52	515	96037137	KABELSTRANG
BESCHRIFTUNG KABELBAUM	965622208	998	1	43	96045227	KABELSTRANG
BESCHRIFTUNG KABELBAUM	965622208	998	1	45	96045228	KABELSTRANG
BESCHRIFTUNG KABELBAUM	965622208	998	3	140	96045205	KABELSTRANG
BESCHRIFTUNG KABELBAUM	965622208	998	1	447	96036955	KABELSTRANG
BESCHRIFTUNG KABELBAUM	965622208	998	1	448	96036956	KABELSTRANG
BESCHRIFTUNG KABELBAUM	965622208	998	1	511	96045385	KABELSTRANG
BESCHRIFTUNG KABELBAUM	965622208	998	1	513	96037136	KABELSTRANG
BESCHRIFTUNG KABELBAUM	965622208	998	1	515	96037137	KABELSTRANG
BESCHRIFTUNG KABELBAUM	965622208	998	3	516	96037133	LEITUNG
BESCHRIFTUNG KABELBAUM	965622208	998	2	615	96043733	KABELSTRANG
BESCHRIFTUNG KABELBAUM	965622208	998	3	617	96037132	LEITUNG
BESCHRIFTUNG KABELBAUM	965622208	(998)	2	711	917598408	ELEKTRIK MESS-U.WARNEINR
BESTUECKUNGSMODUL 12PO	965547208	2	1	524	967589508	KLEMMENLEISTE
BETAETIGUNG	967978808	1	1	474	967928508	VERRIEGELUNG
BETAETIGUNGSDORN GD-ZN	704253408	7	4	37	966167808	DECKEL KPL.
BETAETIGUNGSDORN GD-ZN	704253408	4	5	79	967972208	DECKEL VORM.

Bezeichnung	Artikel	Pos.	Menge	Seite	Baugruppe	Bezeichnung
BETAETIGUNGSDORN GD-ZN	704253408	4	2	80	967972308	DECKEL VORM.
BETAETIGUNGSDORN GD-ZN	704253408	4	2	81	967972408	DECKEL VORM.
BETAETIGUNGSDORN GD-ZN	704253408	4	2	82	968270108	DECKEL VORM.
BETAETIGUNGSDORN GD-ZN	704253408	4	2	83	968274208	DECKEL VORM.
BETAETIGUNGSDORN GD-ZN	704253408	4	5	102	968055808	DECKEL VORM.
BETAETIGUNGSDORN GD-ZN	704253408	14	1	320	96023117	BATTERIEKASTEN VORM.
BETRIEBSSTUNDENZAEHLER	691798508	3	1	453	96022872	ARMATURENBRETT DACH
BEUTEL	11320720	(1)	1	153	916959808	PERSOENLICHE SCHUTZAUS
BEZEICHNUNGSSCHILD 20X8	602761408	12	10	525	926891108	VERTEILER MASSE
BEZEICHNUNGSSCHILD 70X4	10288121	300	1	40	968252908	BTB PROGRAMMIERT
BEZEICHNUNGSSCHILD 70X4	10288121	(980)	1	449	96036957	ELEKTRIK ANBAUTEILE KABIN
BEZEICHNUNGSSCHILD 70X4	10288121	(2)	1	453	96022872	ARMATURENBRETT DACH
BEZEICHNUNGSSCHILD 70X4	10288121	300	1	528	968253608	UNIVERSAL EIN-AUSGANGS
BEZEICHNUNGSSTREIFEN	602762908	7	1	524	967589508	KLEMMENLEISTE
BEZUG	12100617	(1)	1	419	10877138	FAHRERSITZ
BEZUG	12100619	(1)	1	419	10877138	FAHRERSITZ
BLECH	10142763	2	1	235	10142744	KUEHLWASSERENTLUEFTUN
BLECH	518565008	46	1	668	10876933	TELESKOPIERZYLINDER
BLECH	927530301	14	1	340	90008901	DREHWERKANTRIEB
BLECH 1.5X107X120 DC01 RA	97006876	37	1	383	917305408	INNENVERKLEIDUNG EINBAU
BLECH 1.5X110X178 DC01 FE//	97013718	(1)	1	449	96036957	ELEKTRIK ANBAUTEILE KABIN
BLECH 1.5X112X30 DC01 FE//	972940008	13	2	522	969256608	GRUNDAUFBAU
BLECH 1.5X114X70 DC01 FE//	97025882	8	1	522	969256608	GRUNDAUFBAU
BLECH 1.5X131X117 DC01 FE//	97002645	3	1	375	916170808	KABELEINFUEHRUNG
BLECH 1.5X156X117 DC01 FE//	97024733	14	1	518	919503008	EINBAUTEILE SCHALTSCHRAN
BLECH 1.5X170X50 DC01 FE//	976673908	27	4	365	917259908	KRANFUEHRERKABINE ANBA
BLECH 1.5X174X114 DC01 RAL	976094108	5	1	375	916170808	KABELEINFUEHRUNG
BLECH 1.5X219X129 DC01 FE//	97031454	32	1	365	917259908	KRANFUEHRERKABINE ANBA
BLECH 1.5X256X53 DC01 FE//	979294908	2	1	526	968063108	MONTAGEEINHEIT VORM.
BLECH 1.5X25X47 DC01 RAL 7	97006875	36	1	383	917305408	INNENVERKLEIDUNG EINBAU
BLECH 1.5X290X162 DC01 FE//	97000735	2	1	375	916170808	KABELEINFUEHRUNG
BLECH 1.5X322X156 DC01 RAL	97033190	40	1	365	917259908	KRANFUEHRERKABINE ANBA
BLECH 1.5X399X35 DC01 FE//	97017074	13	1	518	919503008	EINBAUTEILE SCHALTSCHRAN
BLECH 1.5X404X230 DC01 FE//	97032990	2	1	38	968054008	MONTAGEPLATTE VORM.
BLECH 1.5X436X90 DC01 RAL	97003298	24	1	383	917305408	INNENVERKLEIDUNG EINBAU
BLECH 1.5X44X97 X5CRNI18-1	97015722	10	1	368	919010208	KRANFUEHRERKABINE VORM.
BLECH 1.5X456X541 DC01	97029382	3	1	661	917292408	TELESKOP 5 VORM.
BLECH 1.5X551X299 DC01 RA	97002609	23	1	383	917305408	INNENVERKLEIDUNG EINBAU
BLECH 1.5X560X43 DC01 FE//	97091350	8	1	314	96034515	AUSGLEICHSBEHAELTER VO
BLECH 1.5X691X50 X5CRNI18	97030182	2	1	714	967933408	GRUNDHALTER VORM.
BLECH 1.5X70X100 DC01 FE//	978842708	3	2	526	968063108	MONTAGEEINHEIT VORM.
BLECH 1.5X72X538 X5CRNI18	97000469	15	1	383	917305408	INNENVERKLEIDUNG EINBAU
BLECH 1.5X779X733 DC01 FE//	978606708	1	1	526	968063108	MONTAGEEINHEIT VORM.
BLECH 1.5X832X41 DC01 RAL	97027494	65	1	384	917305408	INNENVERKLEIDUNG EINBAU
BLECH 1.5X90X96 DC01 RAL	976167908	16	1	449	96036957	ELEKTRIK ANBAUTEILE KABIN
BLECH 1.5X95X40 DC01 RAL	97025127	35	3	393	966497908	FRONTSCHEIBE KPL.
BLECH 10X170X79 S355MC FE	97053069	22	1	158	918731108	MONTAGETEILE DREHBUEHN
BLECH 10X170X80 S355MC FE	97030033	8	2	474	967928508	VERRIEGELUNG
BLECH 10X443X155 S960QL	973258908	45	1	656	917292308	TELESKOP 4 VORM.
BLECH 10X470X158 S960QL	973253408	45	1	652	917292208	TELESKOP 3 VORM.
BLECH 10X477X155 S960QL	973258808	44	2	656	917292308	TELESKOP 4 VORM.
BLECH 10X498X162 S960QL	973246008	45	1	648	917292108	TELESKOP 2 VORM.
BLECH 10X504X361 S960QL	973357908	54	1	639	917291908	ANLENKSTUECK VORM.
BLECH 10X50X350 S355MC	97050776	65	2	18	919617108	RAUPENFAHRWERK KPL.
BLECH 10X523X163 S960QL F	973253308	44	2	652	917292208	TELESKOP 3 VORM.
BLECH 10X526X167 S960QL	972898508	45	1	644	917292008	TELESKOP 1 VORM.
BLECH 10X527X161 S960QL F	973245908	44	2	648	917292108	TELESKOP 2 VORM.
BLECH 10X542X412 S960QL	973357708	46	2	639	917291908	ANLENKSTUECK VORM.
BLECH 10X615X181 S960QL F	972898408	44	2	644	917292008	TELESKOP 1 VORM.
BLECH 110X34 S315MC FE//ZN	979132008	84	1	662	917292408	TELESKOP 5 VORM.

Bezeichnung	Artikel	Pos.	Menge	Seite	Baugruppe	Bezeichnung
BLECH 110X34 S315MC FE//ZN	979132008	5	1	708	967321308	HALTERUNG 2.HUB OBEN
BLECH 15X105X290 S355MC	97031536	5	1	365	917259908	KRANFUEHRERKABINE ANBA
BLECH 15X260X203 S355MC	97031535	4	1	365	917259908	KRANFUEHRERKABINE ANBA
BLECH 15X30X75 S355MC	97051276	12	2	721	968728808	KONSOLE VORM.
BLECH 15X40X140 S690QL	956348108	24	2	731	917267508	TRANSPORTHALTERUNG DKS
BLECH 15X45X320 S690QL	956347808	11	2	731	917267508	TRANSPORTHALTERUNG DKS
BLECH 15X90X60 S355MC FE//	978361308	23	1	283	968026308	KUPPLUNGSSTELLER
BLECH 192X126 DC01 FE//ZNNI	97037694	(2)	1	589	967784808	HYDRAULIK HILFSHUBWERK
BLECH 196X63 S315MC FE//ZN	955668108	24	1	577	967969608	HILFSHUBWERK WINDE 2 VO
BLECH 196X63 S315MC FE//ZN	955668108	(9)	1	577	967969608	HILFSHUBWERK WINDE 2 VO
BLECH 1X130X30 DC01 FE//ZN	97031661	5	8	728	917413208	SELBSTMONTAGE HILFSHU
BLECH 1X133X94 DC01 FE//ZN	97042769	19	16	30	917511508	RAUPENMITTELTEIL VORM.
BLECH 1X176X176 X5CRNI18-1	974792608	(1)	1	429	96036790	DREHBUEHNENVERKLEIDUN
BLECH 1X176X176 X5CRNI18-1	974792608	(1)	1	429	96036790	DREHBUEHNENVERKLEIDUN
BLECH 1X196X130 X5CRNI18-1	97058414	(1)	1	429	96036790	DREHBUEHNENVERKLEIDUN
BLECH 1X234X43 DC01 FE//ZN	973246908	21	4	644	917292008	TELESKOP 1 VORM.
BLECH 1X234X43 DC01 FE//ZN	973246908	21	4	648	917292108	TELESKOP 2 VORM.
BLECH 1X234X43 DC01 FE//ZN	973246908	21	4	652	917292208	TELESKOP 3 VORM.
BLECH 1X234X43 DC01 FE//ZN	973246908	21	4	656	917292308	TELESKOP 4 VORM.
BLECH 1X234X43 DC01 FE//ZN	973246908	44	4	661	917292408	TELESKOP 5 VORM.
BLECH 1X252X83 DC01 FE//ZN	97033889	21	1	275	919007708	ANTRIEBSAGGREGAT VORM.
BLECH 1X285X126 DC01 RAL 9	977444308	17	1	417	918810308	STEUERSTAND
BLECH 1X285X126 DC01 RAL 9	977444408	18	1	417	918810308	STEUERSTAND
BLECH 1X40X140 DC01+ZE	956348608	45	1	731	917267508	TRANSPORTHALTERUNG DKS
BLECH 1X516X48 DC01 FE//ZN	97035164	38	8	17	919617108	RAUPENFAHRWERK KPL.
BLECH 1X516X55 DC01 FE//ZN	97035163	37	8	17	919617108	RAUPENFAHRWERK KPL.
BLECH 1X60X115 DC01 FE//ZN	97032839	8	32	116	968046208	ANBAUTEILE
BLECH 1X65X94 DC01 FE//ZN	97042770	20	16	30	917511508	RAUPENMITTELTEIL VORM.
BLECH 1X70X80 DC01 FE//ZN	953515508	9	1	323	917626608	KRAFTSTOFFBEHAELTER AN
BLECH 1X70X80 DC01 FE//ZN	953515508	10	8	332	917825508	OELBEHAELTER ANBAU
BLECH 1X80X110 DC01 FE//ZN	970904808	8	8	134	919087608	DREHDURCHFUEHRUNG
BLECH 1X86X53 DC01 FE//ZN	957025308	24	4	644	917292008	TELESKOP 1 VORM.
BLECH 1X86X53 DC01 FE//ZN	957025308	24	4	648	917292108	TELESKOP 2 VORM.
BLECH 1X86X53 DC01 FE//ZN	957025308	24	4	652	917292208	TELESKOP 3 VORM.
BLECH 1X86X53 DC01 FE//ZN	957025308	24	4	656	917292308	TELESKOP 4 VORM.
BLECH 1X86X53 DC01 FE//ZN	957025308	46	4	661	917292408	TELESKOP 5 VORM.
BLECH 1X90X60 DC01 FE//ZN	97032616	4	6	25	968019508	ENDSCHALTER ANBAU
BLECH 1x320x35 DC01+ZE	956348808	14	1	731	917267508	TRANSPORTHALTERUNG DKS
BLECH 2.5X130X28 DC01 RAL	979022608	7	2	394	965784408	DACHSCHEIBE VORM.
BLECH 2.5X235X575 DC01 FE//	97100731	4	1	320	96023117	BATTERIEKASTEN VORM.
BLECH 2.5X71X196 DC01 RAL	97022452	53	1	449	96036957	ELEKTRIK ANBAUTEILE KABIN
BLECH 2.5X73X78 DC01 FE//ZN	97032370	48	1	70	919254308	RAUPENTRAEGER VORM.LI.
BLECH 2.5X73X78 DC01 FE//ZN	97032370	48	1	100	919254408	RAUPENTRAEGER VORM.RE.
BLECH 200X309 S355MC	972133308	10	1	639	917291908	ANLENKSTUECK VORM.
BLECH 20X375X135 S960QL	97032051	2	1	350	917259608	DREHBUEHNENARRETIERUN
BLECH 20X375X135 S960QL	97034837	8	1	350	917259608	DREHBUEHNENARRETIERUN
BLECH 20X45X230 S690QL	953608508	9	2	134	919087608	DREHDURCHFUEHRUNG
BLECH 20X45X230 S690QL	953608508	17	2	731	917267508	TRANSPORTHALTERUNG DKS
BLECH 20X490X490 S690QL F	97061080	36	1	275	919007708	ANTRIEBSAGGREGAT VORM.
BLECH 20X570X133 S355J2+N	97035737	13	6	70	919254308	RAUPENTRAEGER VORM.LI.
BLECH 20X570X133 S355J2+N	97035737	13	6	100	919254408	RAUPENTRAEGER VORM.RE.
BLECH 20X590X125 S355J2+N	97035748	15	1	70	919254308	RAUPENTRAEGER VORM.LI.
BLECH 20X590X125 S355J2+N	97035748	15	1	100	919254408	RAUPENTRAEGER VORM.RE.
BLECH 20X590X125 S355J2+N	97035749	16	1	70	919254308	RAUPENTRAEGER VORM.LI.
BLECH 20X590X125 S355J2+N	97035749	16	1	100	919254408	RAUPENTRAEGER VORM.RE.
BLECH 25X107X49 S690QL	97052637	9	4	121	919644008	HYDRAULISCHE ABSTUETZUN
BLECH 25X202X279 S690QL SP	97030323	1	2	728	917413208	SELBSTMONTAGE HILFSHU
BLECH 278X250 DC01 FE//ZNNI	97028172	12	1	661	917292408	TELESKOP 5 VORM.
BLECH 2X100X210 DC01 FE//	970537808	31	12	644	917292008	TELESKOP 1 VORM.
BLECH 2X100X210 DC01 FE//	970537808	31	18	648	917292108	TELESKOP 2 VORM.

Bezeichnung	Artikel	Pos.	Menge	Seite	Baugruppe	Bezeichnung
BLECH 2X100X210 DC01 FE//	970537808	31	14	652	917292208	TELESKOP 3 VORM.
BLECH 2X100X210 DC01 FE//	970537808	31	14	656	917292308	TELESKOP 4 VORM.
BLECH 2X100X210 DC01 FE//	970537808	42	12	661	917292408	TELESKOP 5 VORM.
BLECH 2X100X290 DC01 FE//	97011478	26	2	17	919617108	RAUPENFAHRWERK KPL.
BLECH 2X1225X659 ALMG3 H	97033140	15	1	439	969015908	DREHBUEHNENVERKLEIDUN
BLECH 2X1248X623 ALMG3 H	97033141	1	1	443	917610208	ZUSATZTEILE
BLECH 2X130X30 DC01 FE//ZN	97031660	4	8	728	917413208	SELBSTMONTAGE HILFSHU
BLECH 2X130X89 ALMG3 H111	97052638	2	1	499	918731908	LUFTFILTERANLAGE
BLECH 2X138X117 DC01 FE//	97059337	19	1	275	919007708	ANTRIEBSAGGREGAT VORM.
BLECH 2X143X88 DC01 FE//ZN	97083880	1	1	525	926891108	VERTEILER MASSE
BLECH 2X143X92 X5CRNI18-1	97030562	3	1	715	967936408	WINDWARNUNG VORM.
BLECH 2X145X62 DC01 FE//ZN	97031205	5	2	577	967969608	HILFSHUBWERK WINDE 2 VO
BLECH 2X148X148 ALMG3 H11	97031272	2	1	80	967972308	DECKEL VORM.
BLECH 2X148X148 ALMG3 H11	97031272	2	1	82	968270108	DECKEL VORM.
BLECH 2X155X38 DC01 FE//ZN	971067708	10	1	705	917268408	MASTNASE
BLECH 2X155X38 DC01 FE//ZN	971067708	1	1	708	967321308	HALTERUNG 2.HUB OBEN
BLECH 2X156X137 DC01 RAL 7	97071962	15	1	375	916170808	KABELEINFUEHRUNG
BLECH 2X158X79 DC01 FE//ZN	97061320	9	1	275	919007708	ANTRIEBSAGGREGAT VORM.
BLECH 2X160X196 DC01 FE//	97034301	16	1	429	96036790	DREHBUEHNENVERKLEIDUN
BLECH 2X162X142 ALMG3 H11	976536208	5	1	526	968063108	MONTAGEEINHEIT VORM.
BLECH 2X170X51 DC01 FE//ZN	97024781	19	1	390	916162508	SCHEIBEN EINBAU
BLECH 2X173X139 DC01 FE//	97032982	18	1	275	919007708	ANTRIEBSAGGREGAT VORM.
BLECH 2X177X240 DC01 FE//	97006461	9	1	399	916163008	WISCHANLAGE EINBAU
BLECH 2X180X100 DC01 FE//	97011112	74	1	137	919499408	ZENTRALBALLAST
BLECH 2X180X100 DC01 FE//	97011113	75	1	137	919499408	ZENTRALBALLAST
BLECH 2X180X100 DC01 FE//	97011114	76	1	137	919499408	ZENTRALBALLAST
BLECH 2X180X100 DC01 FE//	97011115	77	1	137	919499408	ZENTRALBALLAST
BLECH 2X180X191 ALMG3 H11	975842108	1	1	434	964093408	DECKEL KPL.
BLECH 2X190X18 DC01 FE//ZN	979294808	12	2	522	969256608	GRUNDAUFBAU
BLECH 2X191X185 X5CRNI18-1	97030307	1	1	716	967937608	HINDERNISFEUER VORM.
BLECH 2X195X66 X5CRNI18-1	974742308	4	1	433	968923508	KLAPPE VORM.RECHTS
BLECH 2X198X248 ALMG3 H11	97038089	2	1	83	968274208	DECKEL VORM.
BLECH 2X200X280 DC01 FE//	97039974	63	4	18	919617108	RAUPENFAHRWERK KPL.
BLECH 2X200X60 DC01 FE//ZN	97046465	40	4	121	919644008	HYDRAULISCHE ABSTUETZUN
BLECH 2X2038X172 DC01 FE//	97031350	6	1	565	967980508	OELKUEHLER VORM.
BLECH 2X203X318 ALMG3 H11	97045975	2	1	84	968709108	DECKEL VORM.
BLECH 2X210X85 DC01 FE//ZN	972908208	30	2	644	917292008	TELESKOP 1 VORM.
BLECH 2X210X85 DC01 FE//ZN	972908208	30	4	648	917292108	TELESKOP 2 VORM.
BLECH 2X210X85 DC01 FE//ZN	972908208	30	4	652	917292208	TELESKOP 3 VORM.
BLECH 2X210X85 DC01 FE//ZN	972908208	30	4	656	917292308	TELESKOP 4 VORM.
BLECH 2X210X85 DC01 FE//ZN	972908208	34	4	661	917292408	TELESKOP 5 VORM.
BLECH 2X220X100 DC01 FE//	974276208	90	1	640	917291908	ANLENKSTUECK VORM.
BLECH 2X227X109 DC01 FE//	97005289	5	1	393	966497908	FRONTSCHEIBE KPL.
BLECH 2X231X192 DC01 RAL	97025080	24	1	614	96045237	AUSRUESTUNG KAMERA KAB
BLECH 2X236X50 X5CRNI18-1	974656608	7	1	441	969016008	KLAPPE VORM.VORN LINKS
BLECH 2X244X449 ALMG3 H11	97031267	2	1	79	967972208	DECKEL VORM.
BLECH 2X244X449 ALMG3 H11	97031267	2	1	102	968055808	DECKEL VORM.
BLECH 2X25X80 DC01 FE//ZN	97047274	28	2	352	917259708	HAUPTHUBWERK
BLECH 2X290X100 DC01 FE//	97037945	25	2	17	919617108	RAUPENFAHRWERK KPL.
BLECH 2X290X22 DC01 FE//ZN	979724708	23	1	429	96036790	DREHBUEHNENVERKLEIDUN
BLECH 2X291X200 X5CRNI18-1	97008317	2	1	610	968290608	STATIV
BLECH 2X291X200 X5CRNI18-1	97008317	1	1	613	968267208	STATIV
BLECH 2X297X1030 DC01 FE//	97049819	10	1	429	96036790	DREHBUEHNENVERKLEIDUN
BLECH 2X300X125 DC01 FE//	97045050	16	1	275	919007708	ANTRIEBSAGGREGAT VORM.
BLECH 2X303X252 DC01 FE//	97009056	13	1	639	917291908	ANLENKSTUECK VORM.
BLECH 2X361X79 DC01 FE//ZN	97072959	32	1	275	919007708	ANTRIEBSAGGREGAT VORM.
BLECH 2X368X357 DC01 FE//	97103093	2	1	21	96034894	SCHUTZBLECH KPL.LI.
BLECH 2X368X357 DC01 FE//	97103093	2	1	24	96034977	SCHUTZBLECH KPL.RE.
BLECH 2X373X250 ALMG3 H11	97050650	6	1	497	96039740	ZUSATZTEILE VERKLEIDUNG
BLECH 2X377X579 X5CRNI18-1	97072923	(1)	1	275	919007708	ANTRIEBSAGGREGAT VORM.

Bezeichnung	Artikel	Pos.	Menge	Seite	Baugruppe	Bezeichnung
BLECH 2X381X148 DC01 FE//	97003805	10	1	370	96015921	BEDIENELEMENTE EINBAU
BLECH 2X40X140 DC01+ZE	956348708	46	1	731	917267508	TRANSPORTHALTERUNG DKS
BLECH 2X431X420 ALMG3 H11	97049712	35	1	429	96036790	DREHBUEHNENVERKLEIDUN
BLECH 2X50X115 X5CRNI18-1	974657908	11	1	439	969015908	DREHBUEHNENVERKLEIDUN
BLECH 2X50X559 X5CRNI18-1	97016752	31	1	372	916177508	TRITT KPL.
BLECH 2X516X48 DC01 FE//ZN	97031992	14	16	17	919617108	RAUPENFAHRWERK KPL.
BLECH 2X516X55 DC01 FE//ZN	97031991	13	40	17	919617108	RAUPENFAHRWERK KPL.
BLECH 2X550X297 DC01	97100598	1	1	320	96023117	BATTERIEKASTEN VORM.
BLECH 2X580X25 DC01	97127026	10	1	318	918955408	BATTERIEKASTEN KPL.
BLECH 2X601X334 ALMG3 H11	97050960	10	1	280	96034631	KUEHLER VORM.
BLECH 2X639X612 DC01	97031539	6	1	439	969015908	DREHBUEHNENVERKLEIDUN
BLECH 2X666X382 DC01	97092913	92	1	71	919254308	RAUPENTRAEGER VORM.LI.
BLECH 2X666X382 DC01	97094056	92	1	101	919254408	RAUPENTRAEGER VORM.RE.
BLECH 2X680X1160 ALMG3 H	97050648	2	1	497	96039740	ZUSATZTEILE VERKLEIDUNG
BLECH 2X700X115 DC01 FE//	97025690	8	1	380	917304508	KRANFUEHRERKABINE VORM.
BLECH 2X704X353 DC01	970509808	56	1	639	917291908	ANLENKSTUECK VORM.
BLECH 2X70X80 DC01	953515408	8	3	323	917626608	KRAFTSTOFFBEHAELTER AN
BLECH 2X719X40 DC01 FE//ZN	97005273	4	1	393	966497908	FRONTSCHEIBE KPL.
BLECH 2X730X110 ALMG3 H11	97031642	7	32	17	919617108	RAUPENFAHRWERK KPL.
BLECH 2X737X46 DC01 RAL 90	979022508	6	1	394	965784408	DACHSCHEIBE VORM.
BLECH 2X771X357 ALMG3 H11	97050762	5	1	280	96034631	KUEHLER VORM.
BLECH 2X779X198 ALMG3 H11	97059376	3	1	280	96034631	KUEHLER VORM.
BLECH 2X77X96 DC01 FE//ZN	97031462	36	2	365	917259908	KRANFUEHRERKABINE ANBA
BLECH 2X808X498 ALMG3 H11	97133336	3	1	497	96039740	ZUSATZTEILE VERKLEIDUNG
BLECH 2X810X132 DC01 RAL 7	97000470	14	1	383	917305408	INNENVERKLEIDUNG EINBAU
BLECH 2X90X60 DC01 FE//ZN	97032617	5	8	25	968019508	ENDSCHALTER ANBAU
BLECH 2X90X60 DC01 FE//ZN	97104898	112	12	71	919254308	RAUPENTRAEGER VORM.LI.
BLECH 2X90X60 DC01 FE//ZN	97104898	113	12	101	919254408	RAUPENTRAEGER VORM.RE.
BLECH 2X98X168 ALMG3 H111	97031274	2	1	81	967972408	DECKEL VORM.
BLECH 2X99X24 DC01 FE//ZN	979718908	22	2	429	96036790	DREHBUEHNENVERKLEIDUN
BLECH 2x230x225 DC01+ZE	970536208	13	10	648	917292108	TELESKOP 2 VORM.
BLECH 2x230x225 DC01+ZE	970536208	13	10	652	917292208	TELESKOP 3 VORM.
BLECH 2x230x225 DC01+ZE	970536208	13	10	656	917292308	TELESKOP 4 VORM.
BLECH 2x230x225 DC01+ZE	970536208	35	10	661	917292408	TELESKOP 5 VORM.
BLECH 2x320x35 DC01+ZE	956348908	15	1	731	917267508	TRANSPORTHALTERUNG DKS
BLECH 2x350x225 DC01+ZE	970545708	13	10	644	917292008	TELESKOP 1 VORM.
BLECH 30X130X30 S355J2+N	97031659	3	2	728	917413208	SELBSTMONTAGE HILFSHU
BLECH 30X210X140 S355J2+N	97033307	5	1	475	967978908	VERRIEGELUNG VORM.
BLECH 30X246X99 S355J2+N	97033309	6	1	475	967978908	VERRIEGELUNG VORM.
BLECH 30X370X50 S960QL FE/	972898708	50	2	639	917291908	ANLENKSTUECK VORM.
BLECH 30X370X50 S960QL FE/	972898708	54	2	644	917292008	TELESKOP 1 VORM.
BLECH 35X96X20 S690QL	97031206	6	2	577	967969608	HILFSHUBWERK WINDE 2 VO
BLECH 3X1039X407 DC01 FE//	97034193	8	1	737	917268208	LEITER ANBAU
BLECH 3X105X91 X5CRNI18-1	97081505	8	2	369	967986308	LAGERUNG EINBAU
BLECH 3X1101X716 DC01	97040643	1	1	85	968420608	STAUKASTEN VORM.
BLECH 3X120X95 DC01 FE//ZN	97050879	12	1	275	919007708	ANTRIEBSAGGREGAT VORM.
BLECH 3X135X251 ALMG3 H1	97045292	5	1	385	966282308	VERKLEIDUNG LI.
BLECH 3X140X72 DC01 FE//ZN	97039936	24	2	275	919007708	ANTRIEBSAGGREGAT VORM.
BLECH 3X150X90 S355MC FE//	979672708	18	1	158	918731108	MONTAGETEILE DREHBUEHN
BLECH 3X185X122 DC01 FE//	97050881	10	1	275	919007708	ANTRIEBSAGGREGAT VORM.
BLECH 3X190X80 DC01 FE//ZN	97038475	23	2	275	919007708	ANTRIEBSAGGREGAT VORM.
BLECH 3X191X55 X5CRNI18-1	97031901	2	1	491	919372008	ABGASANLAGE
BLECH 3X191X55 X5CRNI18-1	97059489	4	3	491	919372008	ABGASANLAGE
BLECH 3X193X93 S355MC FE//	97081862	6	2	373	96025887	PEDALTRAEGER EINBAU
BLECH 3X195X183 DC01 FE//	97034243	52	1	462	918759808	ZUSATZHEIZUNG OW
BLECH 3X231X267 DC01	97041755	14	1	85	968420608	STAUKASTEN VORM.
BLECH 3X234X43 DC01 FE//ZN	973246808	20	4	644	917292008	TELESKOP 1 VORM.
BLECH 3X234X43 DC01 FE//ZN	973246808	20	4	648	917292108	TELESKOP 2 VORM.
BLECH 3X234X43 DC01 FE//ZN	973246808	20	4	652	917292208	TELESKOP 3 VORM.
BLECH 3X234X43 DC01 FE//ZN	973246808	20	4	656	917292308	TELESKOP 4 VORM.

Bezeichnung	Artikel	Pos.	Menge	Seite	Baugruppe	Bezeichnung
BLECH 3X234X43 DC01 FE//ZN	973246808	43	4	661	917292408	TELESKOP 5 VORM.
BLECH 3X240X109 S355MC FE	97132207	2	2	142	96045206	MECHANISCHE ANBAUTEILE
BLECH 3X26X26 DC01 FE//ZN	971974208	22	2	417	918810308	STEUERSTAND
BLECH 3X27X206 X5CRNI18-1	97053174	6	1	719	968811608	QUERTRAEGER
BLECH 3X283X263 DC01 FE//	97033925	51	1	462	918759808	ZUSATZHEIZUNG OW
BLECH 3X286X480 ALMG3 H11	97118618	30	1	87	96034962	FUEHRUNG LI.
BLECH 3X286X480 ALMG3 H11	97118618	30	1	104	96034980	FUEHRUNG RE.
BLECH 3X286X61 X5CRNI18-1	97043049	24	4	30	917511508	RAUPENMITTELTEIL VORM.
BLECH 3X295X159 S355MC FE	974680008	2	2	373	96025887	PEDALTRAEGER EINBAU
BLECH 3X300X84 DC01 FE//ZN	97037936	13	1	158	918731108	MONTAGETEILE DREHBUEHN
BLECH 3X30X119 X5CRNI18-1	97026779	54	1	405	917304708	SCHIEBETUER EINBAU
BLECH 3X30X156 DC01 FE//ZN	97101894	11	1	275	919007708	ANTRIEBSAGGREGAT VORM.
BLECH 3X324X319 DC01	97118534	10	1	328	96034872	HALTER KPL.
BLECH 3X325X398 S355MC FE	97119732	10	1	545	96035117	MECH.BEFESTIGUNGSTEILE
BLECH 3X349X278 DC01 FE//	97038364	(1)	1	478	969763408	VERROHRUNG DRUCKLUFTA
BLECH 3X366X104 DC01 RAL 9	977444008	15	1	417	918810308	STEUERSTAND
BLECH 3X366X104 DC01 RAL 9	977444108	16	1	417	918810308	STEUERSTAND
BLECH 3X40X40 DC01 FE//ZN	971974108	21	4	417	918810308	STEUERSTAND
BLECH 3X487X107 ALMG3 H11	97121228	1	1	497	96039740	ZUSATZTEILE VERKLEIDUNG
BLECH 3X50X65 DC01 FE//ZN	953756608	23	1	577	967969608	HILFSHUBWERK WINDE 2 VO
BLECH 3X514X788 DC01 FE//	97034194	9	1	737	917268208	LEITER ANBAU
BLECH 3X60X25 DC01 FE//ZN	97001250	8	2	396	916168308	LUFTFUEHRUNG
BLECH 3X60X80 DC01 FE//ZN	973717208	27	1	275	919007708	ANTRIEBSAGGREGAT VORM.
BLECH 3X63X94 DC01 FE//ZN	97033348	23	1	414	969085208	HEIZUNG VORM.
BLECH 3X646X519 S355MC FE	97053103	40	1	275	919007708	ANTRIEBSAGGREGAT VORM.
BLECH 3X678X272 DC01	97040644	2	1	85	968420608	STAUKASTEN VORM.
BLECH 3X70X105 S355MC FE//	97039576	11	2	116	968046208	ANBAUTEILE
BLECH 3X70X222 DC01 FE//ZN	97031203	3	2	577	967969608	HILFSHUBWERK WINDE 2 VO
BLECH 3X70X75 DC01 RAL 300	953756708	5	2	738	968090008	HAKENSTANGE ANBAU
BLECH 3X75X145 DC01 FE//ZN	97006497	3	1	737	917268208	LEITER ANBAU
BLECH 3X75X61 X5CRNI18-10	97000492	26	1	405	917304708	SCHIEBETUER EINBAU
BLECH 3X80X55 DC01	97040645	3	1	85	968420608	STAUKASTEN VORM.
BLECH 3X80X68 DC01 FE//ZN	973717308	25	1	275	919007708	ANTRIEBSAGGREGAT VORM.
BLECH 3X86X53 DC01 FE//ZN	957025408	28	4	644	917292008	TELESKOP 1 VORM.
BLECH 3X86X53 DC01 FE//ZN	957025408	28	4	648	917292108	TELESKOP 2 VORM.
BLECH 3X86X53 DC01 FE//ZN	957025408	28	4	652	917292208	TELESKOP 3 VORM.
BLECH 3X86X53 DC01 FE//ZN	957025408	28	4	656	917292308	TELESKOP 4 VORM.
BLECH 3X86X53 DC01 FE//ZN	957025408	45	4	661	917292408	TELESKOP 5 VORM.
BLECH 3X926X218 S355MC FE	97053104	41	1	275	919007708	ANTRIEBSAGGREGAT VORM.
BLECH 3X98X74 DC01 FE//ZN	97050880	17	2	275	919007708	ANTRIEBSAGGREGAT VORM.
BLECH 4X100X83 X5CRNI18-1	97047603	3	1	483	918484108	HARNSTOFFANLAGE
BLECH 4X110X180 S315MC FE	97077348	(4)	1	478	969763408	VERROHRUNG DRUCKLUFTA
BLECH 4X110X50 S315MC FE//	97048340	20	1	475	967978908	VERRIEGELUNG VORM.
BLECH 4X110X77 S315MC FE//	979717908	2	2	433	968923508	KLAPPE VORM.RECHTS
BLECH 4X115X122 S315MC FE	975427508	(3)	1	478	969763408	VERROHRUNG DRUCKLUFTA
BLECH 4X116X148 S315MC FE	97031342	10	1	474	967928508	VERRIEGELUNG
BLECH 4X117X158 S315MC FE	97050764	7	1	280	96034631	KUEHLER VORM.
BLECH 4X125X178 S315MC FE	97037626	20	2	34	96045225	ELEKTRIK MITTELSTUECK
BLECH 4X128X75 S315MC FE//	972934408	(1)	1	699	967785008	ZUSATZHYDRAULIK KLAPPSPI
BLECH 4X130X144 S315MC FE	97049834	15	1	429	96036790	DREHBUEHNENVERKLEIDUN
BLECH 4X130X200 ALMG3 H11	97031273	1	1	81	967972408	DECKEL VORM.
BLECH 4X130X30 S315MC FE//	97031684	6	8	728	917413208	SELBSTMONTAGE HILFSHU
BLECH 4X132X73 S315MC FE//	97041747	26	1	275	919007708	ANTRIEBSAGGREGAT VORM.
BLECH 4X134X188 S315MC FE	97049833	14	1	429	96036790	DREHBUEHNENVERKLEIDUN
BLECH 4X138X138 S315MC FE	975208408	6	1	370	96015921	BEDIENELEMENTE EINBAU
BLECH 4X140X178 S315MC FE	975418208	8	1	545	96035117	MECH.BEFESTIGUNGSTEILE
BLECH 4X140X178 S315MC FE	975418208	(4)	1	589	967784808	HYDRAULIK HILFSHUBWERK
BLECH 4X155X100 S315MC FE	97053626	23	4	30	917511508	RAUPENMITTELTEIL VORM.
BLECH 4X159X133 S315MC FE	97047272	25	2	352	917259708	HAUPTHUBWERK
BLECH 4X168X113 S315MC FE	97033897	16	1	21	96034894	SCHUTZBLECH KPL.LI.

Bezeichnung	Artikel	Pos.	Menge	Seite	Baugruppe	Bezeichnung
BLECH 4X168X113 S315MC FE	97033897	16	1	24	96034977	SCHUTZBLECH KPL.RE.
BLECH 4X168X113 S315MC FE	97033935	15	1	21	96034894	SCHUTZBLECH KPL.LI.
BLECH 4X168X113 S315MC FE	97033935	15	1	24	96034977	SCHUTZBLECH KPL.RE.
BLECH 4X178X133 S315MC FE	97039694	12	1	158	918731108	MONTAGETEILE DREHBUEHN
BLECH 4X180X143 S700MC	97033009	23	2	121	919644008	HYDRAULISCHE ABSTUETZUN
BLECH 4X180X145 S700MC	97033010	24	2	121	919644008	HYDRAULISCHE ABSTUETZUN
BLECH 4X180X180 ALMG3 H11	97031271	1	1	80	967972308	DECKEL VORM.
BLECH 4X180X180 ALMG3 H11	97037975	1	1	82	968270108	DECKEL VORM.
BLECH 4X180X40 S315MC FE//	97093426	15	1	87	96034962	FUEHRUNG LI.
BLECH 4X180X40 S315MC FE//	97093426	15	1	104	96034980	FUEHRUNG RE.
BLECH 4X190X188 S315MC FE	974272808	93	2	640	917291908	ANLENKSTUECK VORM.
BLECH 4X210X88 S315MC FE//	97015127	55	2	137	919499408	ZENTRALBALLAST
BLECH 4X2114X788 S315MC	97093430	1	1	21	96034894	SCHUTZBLECH KPL.LI.
BLECH 4X2114X788 S315MC	97093430	1	1	24	96034977	SCHUTZBLECH KPL.RE.
BLECH 4X215X208 S315MC FE	97050763	6	1	280	96034631	KUEHLER VORM.
BLECH 4X223X107 S315MC FE	97093425	16	1	87	96034962	FUEHRUNG LI.
BLECH 4X223X107 S315MC FE	97118621	16	1	104	96034980	FUEHRUNG RE.
BLECH 4X230X280 ALMG3 H11	97038088	1	1	83	968274208	DECKEL VORM.
BLECH 4X239X313 S315MC FE	97093428	4	1	87	96034962	FUEHRUNG LI.
BLECH 4X239X313 S315MC FE	97093428	4	1	104	96034980	FUEHRUNG RE.
BLECH 4X240X188 S315MC FE	97034296	12	1	429	96036790	DREHBUEHNENVERKLEIDUN
BLECH 4X250X190 S315MC FE	953749408	4	1	661	917292408	TELESKOP 5 VORM.
BLECH 4X255X278 X5CRNI18-1	97047477	3	2	494	96048826	ABGASANLAGE VORM.
BLECH 4X260X173 S315MC FE	97031570	8	1	439	969015908	DREHBUEHNENVERKLEIDUN
BLECH 4X263X50 S315MC FE//	97030037	9	1	474	967928508	VERRIEGELUNG
BLECH 4X283X50 S315MC FE//	97042636	30	1	474	967928508	VERRIEGELUNG
BLECH 4X288X139 S315MC FE	97049782	13	1	429	96036790	DREHBUEHNENVERKLEIDUN
BLECH 4X290X230 S315MC FE	953717608	74	1	640	917291908	ANLENKSTUECK VORM.
BLECH 4X30X82 X5CRNI18-10	97093827	5	4	494	96048826	ABGASANLAGE VORM.
BLECH 4X32X32 ALMG3 H111	972353808	4	2	280	96034631	KUEHLER VORM.
BLECH 4X347X222 S315MC FE	97000389	6	1	399	916163008	WISCHANLAGE EINBAU
BLECH 4X348X241 S315MC FE	97093429	3	1	21	96034894	SCHUTZBLECH KPL.LI.
BLECH 4X348X241 S315MC FE	97118611	3	1	24	96034977	SCHUTZBLECH KPL.RE.
BLECH 4X350X235 ALMG3 H11	97045974	1	1	84	968709108	DECKEL VORM.
BLECH 4X383X50 S315MC FE//	97097713	2	1	87	96034962	FUEHRUNG LI.
BLECH 4X383X50 S315MC FE//	97097713	2	1	104	96034980	FUEHRUNG RE.
BLECH 4X386X404 S315MC FE	97033143	18	1	439	969015908	DREHBUEHNENVERKLEIDUN
BLECH 4X396X88 S315MC FE//	97033250	56	2	137	919499408	ZENTRALBALLAST
BLECH 4X401X406 S315MC FE	97033142	17	1	439	969015908	DREHBUEHNENVERKLEIDUN
BLECH 4X425X184 S315MC FE	97051275	11	2	721	968728808	KONSOLE VORM.
BLECH 4X429X566 S315MC	97124562	1	1	545	96035117	MECH.BEFESTIGUNGSTEILE
BLECH 4X449X88 S315MC FE//	97033251	57	2	137	919499408	ZENTRALBALLAST
BLECH 4X450X40 S315MC FE//	97038560	55	2	17	919617108	RAUPENFAHRWERK KPL.
BLECH 4X461X547 S315MC RA	97084642	7	1	483	918484108	HARNSTOFFANLAGE
BLECH 4X463X307 S315MC FE	97093427	1	1	87	96034962	FUEHRUNG LI.
BLECH 4X463X307 S315MC FE	97093427	1	1	104	96034980	FUEHRUNG RE.
BLECH 4X48X29 S315MC RAL	97007597	60	4	384	917305408	INNENVERKLEIDUNG EINBAU
BLECH 4X491X110 S315MC FE	971071608	43	4	639	917291908	ANLENKSTUECK VORM.
BLECH 4X491X110 S315MC FE	971071608	61	4	645	917292008	TELESKOP 1 VORM.
BLECH 4X491X110 S315MC FE	971071608	61	4	648	917292108	TELESKOP 2 VORM.
BLECH 4X491X110 S315MC FE	971071608	61	4	652	917292208	TELESKOP 3 VORM.
BLECH 4X491X110 S315MC FE	971071608	61	4	656	917292308	TELESKOP 4 VORM.
BLECH 4X499X309 S315MC FE	97032133	21	4	30	917511508	RAUPENMITTELTEIL VORM.
BLECH 4X518X425 S315MC RA	97084641	1	1	483	918484108	HARNSTOFFANLAGE
BLECH 4X519X204 S315MC FE	97029040	50	1	464	96020359	ZUSATZHEIZUNG VORM.
BLECH 4X52X32 S315MC FE//	97024783	24	1	390	916162508	SCHEIBEN EINBAU
BLECH 4X55X180 S315MC FE//	954313608	11	1	545	96035117	MECH.BEFESTIGUNGSTEILE
BLECH 4X60X115 S315MC FE//	97032838	7	32	116	968046208	ANBAUTEILE
BLECH 4X60X163 S315MC FE//	97045111	35	1	275	919007708	ANTRIEBSAGGREGAT VORM.
BLECH 4X60X163 S315MC FE//	97045111	4	1	545	96035117	MECH.BEFESTIGUNGSTEILE

Bezeichnung	Artikel	Pos.	Menge	Seite	Baugruppe	Bezeichnung
BLECH 4X60X50 S315MC FE//	975614108	20	1	275	919007708	ANTRIEBSAGGREGAT VORM.
BLECH 4X62X134 S315MC	97132169	82	2	137	919499408	ZENTRALBALLAST
BLECH 4X644X199 S315MC FE	97031349	5	1	565	967980508	OELKUEHLER VORM.
BLECH 4X668X480 ALMG3 H11	97031266	1	1	79	967972208	DECKEL VORM.
BLECH 4X668X480 ALMG3 H11	97033100	1	1	102	968055808	DECKEL VORM.
BLECH 4X701X174 S315MC FE	97031351	4	1	565	967980508	OELKUEHLER VORM.
BLECH 4X713X228 X5CRNI18-1	97001318	(2)	1	372	916177508	TRITT KPL.
BLECH 4X730X110 ALMG3 H11	97031641	6	32	17	919617108	RAUPENFAHRWERK KPL.
BLECH 4X73X20 S315MC FE//	97033103	50	4	462	918759808	ZUSATZHEIZUNG OW
BLECH 4X74X219 S315MC FE//	97132168	81	2	137	919499408	ZENTRALBALLAST
BLECH 4X751X167 S315MC FE	97031540	7	1	439	969015908	DREHBUEHNENVERKLEIDUN
BLECH 4X784X220 S315MC FE	97031571	9	1	439	969015908	DREHBUEHNENVERKLEIDUN
BLECH 4X81X40 S315MC FE//	97053350	13	1	439	969015908	DREHBUEHNENVERKLEIDUN
BLECH 4X90X67 S315MC FE//	954113708	27	2	429	96036790	DREHBUEHNENVERKLEIDUN
BLECH 4X93X68 S315MC RAL	97006057	19	1	393	966497908	FRONTSCHEIBE KPL.
BLECH 4X95X262 S315MC FE//	97044721	1	1	574	918628408	KLIMAANLAGE OW
BLECH 4X965X279 ALMG3 H11	972357608	24	2	352	917259708	HAUPTHUBWERK
BLECH 4x134x58 S315MC FE//	970837708	32	2	672	966134608	ANBAUTEILE ZYLINDER
BLECH 5X1098X60 S355MC	975302308	81	1	640	917291908	ANLENKSTUECK VORM.
BLECH 5X110X122 X5CRNI18-1	97008318	3	1	610	968290608	STATIV
BLECH 5X110X122 X5CRNI18-1	97008318	2	1	613	968267208	STATIV
BLECH 5X125X73 S960QL	973153908	68	2	662	917292408	TELESKOP 5 VORM.
BLECH 5X160X160 S700MC	971050008	7	1	705	917268408	MASTNASE
BLECH 5X190X90 S355MC FE//	97034262	61	1	71	919254308	RAUPENTRAEGER VORM.LI.
BLECH 5X190X90 S355MC FE//	97034262	61	1	101	919254408	RAUPENTRAEGER VORM.RE.
BLECH 5X269X181 S355MC FE	97032020	7	1	134	919087608	DREHDURCHFUEHRUNG
BLECH 5X280X200 S355MC FE	97039973	62	2	18	919617108	RAUPENFAHRWERK KPL.
BLECH 5X380X79 X5CRNI18-1	975683808	(4)	1	372	916177508	TRITT KPL.
BLECH 5X380X79 X5CRNI18-1	975685808	(3)	1	372	916177508	TRITT KPL.
BLECH 5X443X254 S355MC FE	97104844	111	1	71	919254308	RAUPENTRAEGER VORM.LI.
BLECH 5X443X254 S355MC FE	97104844	112	1	101	919254408	RAUPENTRAEGER VORM.RE.
BLECH 5X62X96 S960QL	954706408	10	1	644	917292008	TELESKOP 1 VORM.
BLECH 5X62X96 S960QL	954706408	10	1	648	917292108	TELESKOP 2 VORM.
BLECH 5X62X96 S960QL	954706408	10	1	652	917292208	TELESKOP 3 VORM.
BLECH 5X62X96 S960QL	954706408	10	1	656	917292308	TELESKOP 4 VORM.
BLECH 5X62X96 S960QL	954706408	27	1	661	917292408	TELESKOP 5 VORM.
BLECH 5X649X337 S355MC FE	97103683	101	2	71	919254308	RAUPENTRAEGER VORM.LI.
BLECH 5X649X337 S355MC FE	97103683	101	2	101	919254408	RAUPENTRAEGER VORM.RE.
BLECH 5X70X130 S355MC FE//	97032691	12	72	111	917691008	ABSTURZSICHERUNG
BLECH 5X86X267 S355MC FE//	97103682	100	2	71	919254308	RAUPENTRAEGER VORM.LI.
BLECH 5X86X267 S355MC FE//	97103682	100	2	101	919254408	RAUPENTRAEGER VORM.RE.
BLECH 5X90X189 S355MC FE//	97061426	41	4	17	919617108	RAUPENFAHRWERK KPL.
BLECH 6X125X73 S960QL	973154008	65	2	645	917292008	TELESKOP 1 VORM.
BLECH 6X125X73 S960QL	973154008	65	2	649	917292108	TELESKOP 2 VORM.
BLECH 6X125X73 S960QL	973154008	65	2	653	917292208	TELESKOP 3 VORM.
BLECH 6X125X73 S960QL	973154008	65	2	657	917292308	TELESKOP 4 VORM.
BLECH 6X125X73 S960QL	973154008	67	2	662	917292408	TELESKOP 5 VORM.
BLECH 6X312X90 S355MC FE//	97033021	4	2	352	917259708	HAUPTHUBWERK
BLECH 6X519X80 S355MC	973336908	31	2	639	917291908	ANLENKSTUECK VORM.
BLECH 8X1054X560 S700MC	975221808	49	1	731	917267508	TRANSPORTHALTERUNG DKS
BLECH 8X110X70 S960QL FE/	971753708	53	4	639	917291908	ANLENKSTUECK VORM.
BLECH 8X110X70 S960QL FE/	971753708	34	4	644	917292008	TELESKOP 1 VORM.
BLECH 8X110X70 S960QL FE/	971753708	34	4	648	917292108	TELESKOP 2 VORM.
BLECH 8X110X70 S960QL FE/	971753708	34	4	652	917292208	TELESKOP 3 VORM.
BLECH 8X110X70 S960QL FE/	971753708	34	4	656	917292308	TELESKOP 4 VORM.
BLECH 8X25X160 S355MC FE//	952940908	5	2	433	968923508	KLAPPE VORM.RECHTS
BLECH 8X270X205 S700MC	97030303	5	2	625	967936908	GEGENGEWICHT KPL.
BLECH 8X270X205 S700MC	97030304	6	2	625	967936908	GEGENGEWICHT KPL.
BLECH 8X30X58 S355MC FE//	955974308	31	1	731	917267508	TRANSPORTHALTERUNG DKS
BLECH 8X70X182 S960QL	955552608	29	1	731	917267508	TRANSPORTHALTERUNG DKS

Bezeichnung	Artikel	Pos.	Menge	Seite	Baugruppe	Bezeichnung
BLECH 8X82X290 S355MC FE//	97031537	6	1	365	917259908	KRANFUEHRERKABINE ANBA
BLECH 8X84X108 S355MC FE//	956474508	23	2	352	917259708	HAUPTHUBWERK
BLECH 8X84X108 S355MC FE//	956474508	4	2	577	967969608	HILFSHUBWERK WINDE 2 VO
BLECH 8X88X270 S960QL FE/	970422908	38	2	639	917291908	ANLENKSTUECK VORM.
BLECH 8X88X270 S960QL FE/	970422908	40	2	644	917292008	TELESKOP 1 VORM.
BLECH 8X88X270 S960QL FE/	970422908	40	2	648	917292108	TELESKOP 2 VORM.
BLECH 8X88X270 S960QL FE/	970422908	40	2	652	917292208	TELESKOP 3 VORM.
BLECH 8X88X270 S960QL FE/	970422908	40	2	656	917292308	TELESKOP 4 VORM.
BLECH 8x240x240 S960QL	970491108	3	1	666	918807308	AUSSCHUBMECHANIK
BLECH KPL. RAL 7037,SDGL,G	96028313	2	1	320	96023117	BATTERIEKASTEN VORM.
BLECH S315MC FE//ZNNI8//CN/	953696908	22	2	502	917261208	ZENTRALSCHMIERANLAGE O
BLECH S315MC FE//ZNNI8//CN/	970762808	9	1	545	96035117	MECH.BEFESTIGUNGSTEILE
BLECH S315MC FE//ZNNI8//CN/	970762808	(3)	1	589	967784808	HYDRAULIK HILFSHUBWERK
BLECH SCHWK.	966363808	37	1	405	917304708	SCHIEBETUER EINBAU
BLECH SCHWK. FE//ZNNI8//CN/	966629308	1	1	373	96025887	PEDALTRAEGER EINBAU
BLECH SCHWK. FE//ZNNI8//CN/	967257808	39	2	417	918810308	STEUERSTAND
BLECH SCHWK. FE//ZNNI8//CN/	967775308	34	1	383	917305408	INNENVERKLEIDUNG EINBAU
BLECH SCHWK. FE//ZNNI8//CN/	969302208	4	1	494	96048826	ABGASANLAGE VORM.
BLECH SCHWK. FE//ZNNI8//FN/	966497808	2	1	393	966497908	FRONTSCHEIBE KPL.
BLECH SCHWK. RAL 9005,M,G	96022873	1	1	453	96022872	ARMATURENBRETT DACH
BLECH SCHWK. RAL 9005,M,G	965417108	17	1	449	96036957	ELEKTRIK ANBAUTEILE KABIN
BLECH STAHLBLECH	11083215	7	1	412	11083498	HEIZKLIMAGERAET
BLECHMUTTER M8 480H SPF	12100332	8	4	318	918955408	BATTERIEKASTEN KPL.
BLECHMUTTER M8 480H SPF	12100332	353	22	430	96036790	DREHBUEHNENVERKLEIDUN
BLECHMUTTER M8 480H SPF	12100332	352	17	439	969015908	DREHBUEHNENVERKLEIDUN
BLECHMUTTER M8 480H SPF	12100332	350	6	497	96039740	ZUSATZTEILE VERKLEIDUNG
BLECHSCHRAUBE ISO 7049 ST	10875793	10	2	574	918628408	KLIMAANLAGE OW
BLECHSCHRAUBE ISO 7050 ST	10876382	43	16	383	917305408	INNENVERKLEIDUNG EINBAU
BLENDE	10870472	69	1	450	96036957	ELEKTRIK ANBAUTEILE KABIN
BLENDE	10875953	3	1	703	10872003	ARBEITSSCHEINWERFER
BLINDABDECKUNG	11822051	33	1	449	96036957	ELEKTRIK ANBAUTEILE KABIN
BLINDNIET 4,0X10,5	704232308	75	12	522	969256608	GRUNDAUFBAU
BLINDNIET 4,0X10,5	704232308	10	6	526	968063108	MONTAGEEINHEIT VORM.
BLINDNIETMUTTER M10 K=1,5	12100265	13	1	380	917304508	KRANFUEHRERKABINE VORM.
BLINDNIETMUTTER M4 K=1,0-	413006208	13	4	368	919010208	KRANFUEHRERKABINE VORM.
BLINDNIETMUTTER M4 K=1,0-	413006208	(3)	16	522	969256608	GRUNDAUFBAU
BLINDNIETMUTTER M5 K=1,0-3	10042592	(2)	4	529	969061708	TRAEGERBLECH SICHERUNG
BLINDNIETMUTTER M6 K=1,5-	10042593	11	19	380	917304508	KRANFUEHRERKABINE VORM.
BLINDNIETMUTTER M6 K=1,5-	10042593	35	13	405	917304708	SCHIEBETUER EINBAU
BLINDNIETMUTTER M8 K=1,8-5	12100289	20	3	328	96034872	HALTER KPL.
BLINDNIETMUTTER M8 K=1,8-5	12100289	12	9	380	917304508	KRANFUEHRERKABINE VORM.
BLINDPLATTE	511497514	170	1	538	96045351	HYDRAULIK OBERWAGEN
BLINDSTECKER DT 2 POLIG	10353004	529	1	513	96037136	KABELSTRANG
BLINDSTOPFEN	692404908	811	3	45	96045228	KABELSTRANG
BLINDSTOPFEN	692404908	811	1	511	96045385	KABELSTRANG
BLINDSTOPFEN	692404908	811	2	513	96037136	KABELSTRANG
BLINDSTOPFEN 3,6MM SILIK	602331108	806	43	513	96037136	KABELSTRANG
BLINDSTOPFEN 3,9-4,1MM SIL	10870403	844	1	515	96037137	KABELSTRANG
BLINDSTOPFEN AMP JPT-SER	602329208	807	4	513	96037136	KABELSTRANG
BLINDSTOPFEN BAUREIHE_M	604518908	812	25	45	96045228	KABELSTRANG
BLINDSTOPFEN BAUREIHE_M	604518908	812	1	140	96045205	KABELSTRANG
BLINDSTOPFEN BAUREIHE_M	604518908	812	5	511	96045385	KABELSTRANG
BLINDSTOPFEN BAUREIHE_M	604518908	812	10	516	96037133	LEITUNG
BLINDSTOPFEN BAUREIHE_M	604518908	812	15	617	96037132	LEITUNG
BLINDSTOPFEN BAUREIHE_M	604518908	(812)	5	711	917598408	ELEKTRIK MESS-U.WARNEINR
BLINDSTOPFEN DEUTSCH GR	7368253	823	5	447	96036955	KABELSTRANG
BLINDSTOPFEN DEUTSCH GR	7368253	823	3	513	96037136	KABELSTRANG
BLINDSTOPFEN DEUTSCH GR	7368253	823	1	515	96037137	KABELSTRANG
BLINDSTOPFEN DEUTSCH-ST	10800046	842	6	513	96037136	KABELSTRANG
BLINDSTOPFEN DIN 72585 4	692405808	817	1	511	96045385	KABELSTRANG

Bezeichnung	Artikel	Pos.	Menge	Seite	Baugruppe	Bezeichnung
BLINDSTOPFEN DIN 72585 4	692405808	817	2	515	96037137	KABELSTRANG
BLINDSTOPFEN DIN 72585 7	692405708	822	3	511	96045385	KABELSTRANG
BLINDSTOPFEN MCON 1,23,5	10813642	836	1	515	96037137	KABELSTRANG
BLINDSTOPFEN VSTI1/4"ED A3	477704008	847	1	543	96045351	HYDRAULIK OBERWAGEN
BLINDSTOPFEN VSTI1/4"ED A3	477704008	12	1	552	10332882	STEUERBLOCK
BLINDSTOPFEN VSTI1/4"ED A3	477704008	22	4	555	11341035	STEUERBLOCK
BLOCKIERBUEGEL 23-26	12102104	10	1	620	10040024	TASCHENSCHLOSS
BODENBLECH SCHWK.	969132208	4	1	439	969015908	DREHBUEHNENVERKLEIDUN
BODENBLECH SCHWK. SPF	968933608	4	1	429	96036790	DREHBUEHNENVERKLEIDUN
BODENMATTE 227X798X849	97000467	11	1	383	917305408	INNENVERKLEIDUNG EINBAU
BODENMATTE 61X753X552 PU	97000466	10	1	383	917305408	INNENVERKLEIDUNG EINBAU
BODENPLATTE B9HDS 983593	10224095	(3)	72	64	917436708	BODENPLATTEN KPL.
BODENPLATTEN KPL. 1.0M	917436708	8	2	9		LIEBHERR LTR 1220
BOLZEN 100.0X178 35NICRM	97033306	4	2	475	967978908	VERRIEGELUNG VORM.
BOLZEN 105.0X230 35NICRM	97030027	2	1	474	967928508	VERRIEGELUNG
BOLZEN 105.0X452 35NICRM	97031481	31	2	70	919254308	RAUPENTRAEGER VORM.LI.
BOLZEN 105.0X452 35NICRM	97031481	31	2	100	919254408	RAUPENTRAEGER VORM.RE.
BOLZEN 110.0X170 35NICRM	97043050	11	4	30	917511508	RAUPENMITTELTEIL VORM.
BOLZEN 110.0X245 35NICRM	97039932	15	4	30	917511508	RAUPENMITTELTEIL VORM.
BOLZEN 110.0X277 35NICRM	97032012	17	2	17	919617108	RAUPENFAHRWERK KPL.
BOLZEN 110.0X451 35NICRM	97061385	39	4	17	919617108	RAUPENFAHRWERK KPL.
BOLZEN 160.0X326 35NICRM	97027202	6	1	644	917292008	TELESKOP 1 VORM.
BOLZEN 160.0X326 35NICRM	97027202	6	1	648	917292108	TELESKOP 2 VORM.
BOLZEN 160.0X326 35NICRM	97027202	6	1	652	917292208	TELESKOP 3 VORM.
BOLZEN 160.0X326 35NICRM	97027202	6	1	656	917292308	TELESKOP 4 VORM.
BOLZEN 160.0X326 35NICRM	97027202	21	1	661	917292408	TELESKOP 5 VORM.
BOLZEN 160.0X394 35NICRM	973411808	1	2	158	918731108	MONTAGETEILE DREHBUEHN
BOLZEN 170.0X255 35NICRM	97032979	3	1	619	919617008	WIPPZYLINDER M.LAGERUNG
BOLZEN 170.0X555 35NICRM	97032978	2	1	619	919617008	WIPPZYLINDER M.LAGERUNG
BOLZEN 18.0X410 S355J2C+C	97032409	45	2	70	919254308	RAUPENTRAEGER VORM.LI.
BOLZEN 18.0X410 S355J2C+C	97032409	45	2	100	919254408	RAUPENTRAEGER VORM.RE.
BOLZEN 22X11 1.4301	97001103	3	2	408	966253908	WAGEN
BOLZEN 22X57 1.4305	97001095	3	2	407	966230508	FUEHRUNG VORM.
BOLZEN 25.0X100 S355J2G3C+	97032647	2	2	112	968038208	LAGERUNG VORN LI.
BOLZEN 25.0X100 S355J2G3C+	97032647	2	2	113	968038308	LAGERUNG VORN RE.
BOLZEN 25.0X100 S355J2G3C+	97039420	1	1	117	968331708	SICHERUNGSHALTER
BOLZEN 25.0X131 35NICRMOV	978844908	15	1	474	967928508	VERRIEGELUNG
BOLZEN 25.0X50 42CRMO4+Q	974922808	15	4	372	916177508	TRITT KPL.
BOLZEN 25.0X52 S355J2G3C+	971973608	3	1	421	962282208	ARMLEHNE LINKS
BOLZEN 25.0X52 S355J2G3C+	971973608	3	1	423	962282308	ARMLEHNE RECHTS
BOLZEN 35.0X165 35NICRMOV	938865908	11	1	733	923285508	KLAPPKONSOLE VORM.
BOLZEN 35.0X65 35NICRMOV	97008063	18	1	365	917259908	KRANFUEHRERKABINE ANBA
BOLZEN 35.0X92 35NICRMOV	97032162	17	1	365	917259908	KRANFUEHRERKABINE ANBA
BOLZEN 39X18 1.4301	97007043	8	1	408	966253908	WAGEN
BOLZEN 40X60X50 S355J2C+C	451237208	10	2	134	919087608	DREHDURCHFUEHRUNG
BOLZEN 45.0X100 35NICRMOV	97031197	6	2	575	917267108	HILFSHUBWERK WINDE 2
BOLZEN 45.0X105 35NICRMOV	97032320	29	4	121	919644008	HYDRAULISCHE ABSTUETZUN
BOLZEN 45.0X121 35NICRMOV	97031434	30	1	365	917259908	KRANFUEHRERKABINE ANBA
BOLZEN 50.0X200 35NICRMOV	97070277	3	1	705	917268408	MASTNASE
BOLZEN 50.0X200 35NICRMOV	97070277	(1)	1	705	917268408	MASTNASE
BOLZEN 50.0X235 35NICRMOV	973626408	25	3	705	917268408	MASTNASE
BOLZEN 55.0X105 35NICRMOV	97031196	7	2	728	917413208	SELBSTMONTAGE HILFSHU
BOLZEN 55.0X158 35NICRMOV	939249808	5	1	705	917268408	MASTNASE
BOLZEN 55.0X280 35NICRMOV	971252308	8	2	625	967936908	GEGENGEWICHT KPL.
BOLZEN 65.0X155 35NICRMOV	97042167	7	1	629	968068308	MONTAGEVORRICHTUNG
BOLZEN 65.0X225 35NICRMOV	97033301	22	4	30	917511508	RAUPENMITTELTEIL VORM.
BOLZEN 70.0X190 35NICRMOV	97030039	10	6	471	918956108	HYDRAULISCHE BALLASTIER
BOLZEN 70.0X283 35NICRMOV	97032197	12	4	121	919644008	HYDRAULISCHE ABSTUETZUN
BOLZEN 70.0X390 35NICRMOV	97100242	41	1	70	919254308	RAUPENTRAEGER VORM.LI.
BOLZEN 70.0X390 35NICRMOV	97100242	41	1	100	919254408	RAUPENTRAEGER VORM.RE.

Bezeichnung	Artikel	Pos.	Menge	Seite	Baugruppe	Bezeichnung
BOLZEN 70.0X405 35NICRMOV	97030038	5	2	471	918956108	HYDRAULISCHE BALLASTIER
BOLZEN 85.0X200 35NICRMOV	97051278	14	1	721	968728808	KONSOLE VORM.
BOLZEN 85.0X350 35NICRMOV	97034096	3	1	350	917259608	DREHBUEHNENARRETIERUN
BOLZEN 90.0X415 35NICRMOV	97032383	52	1	70	919254308	RAUPENTRAEGER VORM.LI.
BOLZEN 90.0X415 35NICRMOV	97032383	52	1	100	919254408	RAUPENTRAEGER VORM.RE.
BOLZEN 90.0X785 35NICRMOV	97032093	10	4	121	919644008	HYDRAULISCHE ABSTUETZUN
BOLZEN DIN 1434 5X40X35 X	451000208	1	1	715	967936408	WINDWARNUNG VORM.
BOLZEN DIN 1435 20X50X43 42	10875669	4	3	732	929582108	HALTERUNG VORM.
BOLZEN DIN 1435 20X50X43 42	10875669	2	1	735	923879808	KONSOLE VORM.
BOLZEN DIN 1435 40X80X68 S3	451237508	11	1	134	919087608	DREHDURCHFUEHRUNG
BOLZEN DIN 1435 8X50X47 ST	451210308	11	1	372	916177508	TRITT KPL.
BOLZEN DIN 1436 25X55X45 42	451426608	43	1	731	917267508	TRANSPORTHALTERUNG DKS
BOLZEN DIN 1436 30X60X52 S	451430708	32	2	639	917291908	ANLENKSTUECK VORM.
BOLZEN DIN 1436 35X82X72 3	10027134	16	4	121	919644008	HYDRAULISCHE ABSTUETZUN
BOLZEN ISO 2340 B20X150X13	452551408	8	1	705	917268408	MASTNASE
BOLZEN ISO 2341 B30X95X85 3	453032708	14	1	365	917259908	KRANFUEHRERKABINE ANBA
BOLZEN ISO 2341 B45X110X98	453040908	15	2	577	967969608	HILFSHUBWERK WINDE 2 VO
BOLZEN ISO 2341 B6X25X22	10875678	10	1	372	916177508	TRITT KPL.
BOLZEN MIT GRIFF RAL 3020,	967850808	3	1	365	917259908	KRANFUEHRERKABINE ANBA
BOLZEN MIT KOPF 45.0X167 3	97036916	42	4	17	919617108	RAUPENFAHRWERK KPL.
BOLZEN RD100X193 35NICRM	951111408	28	2	17	919617108	RAUPENFAHRWERK KPL.
BOLZEN RD30X107 42CRMO4	956349008	4	1	733	923285508	KLAPPKONSOLE VORM.
BOLZEN RD35X71 35NICRMOV	944029908	25	1	731	917267508	TRANSPORTHALTERUNG DKS
BOLZEN RD49.5X58 42CRMO4	956349108	5	1	733	923285508	KLAPPKONSOLE VORM.
BOLZENHALTER 10X131X38 S	97028296	14	8	661	917292408	TELESKOP 5 VORM.
BOLZENZIEHER T ZN O	965921308	43	4	17	919617108	RAUPENFAHRWERK KPL.
BREMSBETAETIGUNGSEINHEI	502807501	(1)	1	357	939292201	PLANETENGETRIEBE
BREMSE-DICHTUNGSSATZ	939589601	(998)	1	357	939292201	PLANETENGETRIEBE
BREMSFEDERSATZ	90025782	970	1	340	90008901	DREHWERKANTRIEB
BREMSFEDERSATZ	939589701	(999)	1	357	939292201	PLANETENGETRIEBE
BREMSLAMELLENSATZ	90025781	960	1	340	90008901	DREHWERKANTRIEB
BREMSLAMELLENSATZ	939589501	(997)	1	357	939292201	PLANETENGETRIEBE
BREMSVENTILPATRONE 600B	11214357	(1)	1	121	919644008	HYDRAULISCHE ABSTUETZUN
BRENNER 24V	11826648	39	1	466	10876576	WASSERHEIZGERAET
BRENNER 24V	11826648	(9)	1	466	10876576	WASSERHEIZGERAET
BRENNERKOPF	11826647	28	1	466	10876576	WASSERHEIZGERAET
BRENNERKOPF	11826647	(8)	1	466	10876576	WASSERHEIZGERAET
BRENNSTOFFLEITUNG 5X1 PA	11626108	3	5	462	918759808	ZUSATZHEIZUNG OW
BRENNSTOFFLEITUNG 5X1 PA	11626108	4	1.65	462	918759808	ZUSATZHEIZUNG OW
BTB PROGRAMMIERT	968252908	5	1	38	968054008	MONTAGEPLATTE VORM.
BTB PROGRAMMIERT	968252908	6	2	518	919503008	EINBAUTEILE SCHALTSCHRAN
BTT PROGRAMMIERT BTTC	96033227	9	1	453	96022872	ARMATURENBRETT DACH
BUCHSE	10000794	5	1	301	10472208	VERSTELLUNG
BUCHSE	571582208	2	1	226	5700161	LUFTPRESSER
BUCHSE 14X14X5 PA6 SCHW	97094637	20	10	393	966497908	FRONTSCHEIBE KPL.
BUCHSE 16X12 1.4301	97002990	15	1	405	917304708	SCHIEBETUER EINBAU
BUCHSE 16X12 1.4301	97002990	47	4	417	918810308	STEUERSTAND
BUCHSE 16X195	970536608	15	2	644	917292008	TELESKOP 1 VORM.
BUCHSE 16X195	970536608	15	2	648	917292108	TELESKOP 2 VORM.
BUCHSE 16X195	970536608	15	2	652	917292208	TELESKOP 3 VORM.
BUCHSE 16X195	970536608	15	2	656	917292308	TELESKOP 4 VORM.
BUCHSE 16X195	970536608	32	2	661	917292408	TELESKOP 5 VORM.
BUCHSE 20x150x150 S960QL	970535808	9	1	644	917292008	TELESKOP 1 VORM.
BUCHSE 20x150x150 S960QL	970535808	9	1	648	917292108	TELESKOP 2 VORM.
BUCHSE 20x150x150 S960QL	970535808	9	1	652	917292208	TELESKOP 3 VORM.
BUCHSE 20x150x150 S960QL	970535808	9	1	656	917292308	TELESKOP 4 VORM.
BUCHSE 20x150x150 S960QL	970535808	24	1	661	917292408	TELESKOP 5 VORM.
BUCHSE 35.0X30 42CRMO4+Q	973998708	3	1	459	966707708	SPIEGELHALTER VORM.
BUCHSE 45.0X25 35NICRMOV	974925608	10	4	619	919617008	WIPPZYLINDER M.LAGERUNG
BUCHSE 45.0X30 35NICRMOV	972203808	9	3	619	919617008	WIPPZYLINDER M.LAGERUNG

Bezeichnung	Artikel	Pos.	Menge	Seite	Baugruppe	Bezeichnung
BUCHSE 45.0X32 35NICRMOV	97032692	10	8	116	968046208	ANBAUTEILE
BUCHSE 45.0X32 35NICRMOV	97032692	63	12	121	919644008	HYDRAULISCHE ABSTUETZUN
BUCHSE 45.0X32 35NICRMOV	97032692	63	16	137	919499408	ZENTRALBALLAST
BUCHSE 60.3X24 S355J2H FE//	970689108	6	8	158	918731108	MONTAGETEILE DREHBUEHN
BUCHSE RD20X7.5 X5CRNI18	97072035	26	4	390	916162508	SCHEIBEN EINBAU
BUCHSE RD40X27 35NICRMOV	953504308	4	6	158	918731108	MONTAGETEILE DREHBUEHN
BUCHSE RD50,25X20 PA6G	288154508	58	2	639	917291908	ANLENKSTUECK VORM.
BUCHSENGEHAEUSE 1-POL	11118242	504	1	448	96036956	KABELSTRANG
BUCHSENGEHAEUSE 2-POL	11060619	506	2	514	96037137	KABELSTRANG
BUCHSENGEHAEUSE 2-POL 5	10424622	512	2	446	96036955	KABELSTRANG
BUCHSENGEHAEUSE 2-POL 5	10424622	509	1	510	96045385	KABELSTRANG
BUCHSENGEHAEUSE 2-POL B	11342208	510	1	514	96037137	KABELSTRANG
BUCHSENGEHAEUSE 4-POL	11341840	509	1	514	96037137	KABELSTRANG
BUCHSENGEHAEUSE 8-POL 5	10875280	513	1	446	96036955	KABELSTRANG
BUCHSENKONTAKT 0,2-0,5MM	10335820	690	14	44	96045228	KABELSTRANG
BUCHSENKONTAKT 0,2-0,5MM	10335820	690	52	447	96036955	KABELSTRANG
BUCHSENKONTAKT 0,2-0,5MM	10335820	690	6	448	96036956	KABELSTRANG
BUCHSENKONTAKT 0,2-0,5MM	10335820	690	29	511	96045385	KABELSTRANG
BUCHSENKONTAKT 0,2-0,5MM	10335820	690	20	513	96037136	KABELSTRANG
BUCHSENKONTAKT 0,3-0,89	602332108	611	4	448	96036956	KABELSTRANG
BUCHSENKONTAKT 0,5-0,75	10424623	700	4	447	96036955	KABELSTRANG
BUCHSENKONTAKT 0,5-0,75	10424623	700	2	511	96045385	KABELSTRANG
BUCHSENKONTAKT 0,5-0,75M	10813644	754	9	515	96037137	KABELSTRANG
BUCHSENKONTAKT 0,5-1,0M	10493495	726	65	513	96037136	KABELSTRANG
BUCHSENKONTAKT 0,5-1,0M	10493495	726	4	515	96037137	KABELSTRANG
BUCHSENKONTAKT 0,5-1,0M	10800631	753	4	513	96037136	KABELSTRANG
BUCHSENKONTAKT 0,5-1,0M	11622989	789	4	515	96037137	KABELSTRANG
BUCHSENKONTAKT 0,5-1MM2	10877343	2258	25	447	96036955	KABELSTRANG
BUCHSENKONTAKT 0,50-1MM	10300946	717	4	515	96037137	KABELSTRANG
BUCHSENKONTAKT 0,5MM2	10875281	2238	6	447	96036955	KABELSTRANG
BUCHSENKONTAKT 0,5MM2 S	10493970	721	16	45	96045228	KABELSTRANG
BUCHSENKONTAKT 0,5MM2 S	10493970	(721)	4	711	917598408	ELEKTRIK MESS-U.WARNEINR
BUCHSENKONTAKT 0,75-1,0	604519308	629	6	44	96045228	KABELSTRANG
BUCHSENKONTAKT 0,75-1,0	604519308	629	2	516	96037133	LEITUNG
BUCHSENKONTAKT 0,75-1,0	604519308	629	2	617	96037132	LEITUNG
BUCHSENKONTAKT 0,75-1,0M	11342253	788	9	515	96037137	KABELSTRANG
BUCHSENKONTAKT 0,75-1,5	6202434	96	4	44	96045228	KABELSTRANG
BUCHSENKONTAKT 0,75-1,5	6202434	96	2	510	96045385	KABELSTRANG
BUCHSENKONTAKT 0,75-1,5	6202434	96	2	512	96037136	KABELSTRANG
BUCHSENKONTAKT 1,0-1,5M	10493496	727	4	513	96037136	KABELSTRANG
BUCHSENKONTAKT 1,0-1,5M	10493496	727	2	515	96037137	KABELSTRANG
BUCHSENKONTAKT 1,0-2,5M	10493493	724	6	513	96037136	KABELSTRANG
BUCHSENKONTAKT 1,5MM2	604518808	636	2	510	96045385	KABELSTRANG
BUCHSENKONTAKT DIN 72585	602339508	647	4	510	96045385	KABELSTRANG
BUCHSENKONTAKT DIN 72585	602339408	643	3	510	96045385	KABELSTRANG
BUCHSENKONTAKT DIN 72585	602339408	643	2	514	96037137	KABELSTRANG
BUCHSENSTECKER 15-POLE	10024744	502	2	446	96036955	KABELSTRANG
BUCHSENSTECKER 25-POLE	602322708	504	1	446	96036955	KABELSTRANG
BUCHSENSTECKER 9-POLE	602338608	509	1	520	96045387	DRAEHTE GRUNDAUFBAU KPL
BUCHSENTRAEGER 6-POL 16	604526508	506	5	44	96045228	KABELSTRANG
BUCHSENTRAEGER 6-POL 16	604526508	510	1	510	96045385	KABELSTRANG
BUCHSENTRAEGER 6-POL 16	604526508	502	1	516	96037133	LEITUNG
BUCHSENTRAEGER 6-POL 16	604526508	502	1	617	96037132	LEITUNG
BUCHSENTRAEGER 6-POL 16	604526508	(502)	1	711	917598408	ELEKTRIK MESS-U.WARNEINR
BUEGEL	11171276	(71)	1	419	10877138	FAHRERSITZ
BUEGEL 10 ST	10216529	21	1	574	918628408	KLIMAANLAGE OW
BUEGELSCHELLE 132 X5CRNI	11963742	183	1	494	96048826	ABGASANLAGE VORM.
BUNDBOLZEN	571430208	2	1	620	10040024	TASCHENSCHLOSS
BUNDLAGER 18X12X12 SINT	10424489	2	2	408	966253908	WAGEN
BUNDLAGER 45X50X25 G-Cu	9888448	(2)	2	262	9077386	NEBENABTRIEB VORM.

Bezeichnung	Artikel	Pos.	Menge	Seite	Baugruppe	Bezeichnung
BUNDMUTTER M10X1,5	7361602	22	2	305	10871282	VERSTELLPUMPE
BUSLEITUNG 2 X 0,5	11840113	7	0.3	43	96045227	KABELSTRANG
BUSLEITUNG 2 X 0,5	11840113	8	0.4	43	96045227	KABELSTRANG
BUSLEITUNG 2 X 0,5	11840113	9	0.45	43	96045227	KABELSTRANG
BUSLEITUNG 2 X 0,5	11840113	7	1.63	44	96045228	KABELSTRANG
BUSLEITUNG 2 X 0,5	11840113	8	4.66	44	96045228	KABELSTRANG
BUSLEITUNG 2 X 0,5	11840113	15	4.46	446	96036955	KABELSTRANG
BUSLEITUNG 2 X 0,5	11840113	16	4.38	446	96036955	KABELSTRANG
BUSLEITUNG 2 X 0,5	11840113	17	4.38	446	96036955	KABELSTRANG
BUSLEITUNG 2 X 0,5	11840113	18	0.17	446	96036955	KABELSTRANG
BUSLEITUNG 2 X 0,5	11840113	374	6.27	512	96037136	KABELSTRANG
BUSLEITUNG 2 X 0,5	11840113	375	6.27	512	96037136	KABELSTRANG
BUSLEITUNG 2 X 0,5	11840113	376	6.27	512	96037136	KABELSTRANG
BUSLEITUNG 2 X 0,5	11840113	5	5.68	514	96037137	KABELSTRANG
BUSLEITUNG 2 X 0,5	11840113	6	0.17	514	96037137	KABELSTRANG
BUSLEITUNG 2 X 0,5	11840113	7	8.81	514	96037137	KABELSTRANG
BUSLEITUNG 2 X 0,5	11840113	8	0.17	514	96037137	KABELSTRANG
BUSLEITUNG 2 X 0,5	11840113	9	3.16	514	96037137	KABELSTRANG
BUSLEITUNG 2 X 0,5	11840113	10	0.17	514	96037137	KABELSTRANG
BUSLEITUNG 2 X 0,5	11840113	11	3.16	514	96037137	KABELSTRANG
BUSLEITUNG 2 X 0,5	11840113	12	0.17	514	96037137	KABELSTRANG
BUSLEITUNG 2 X 0,5	11840113	13	8.06	514	96037137	KABELSTRANG
BUSLEITUNG 2 X 0,5	11840113	14	0.17	514	96037137	KABELSTRANG
BUSLEITUNG 2 X 0,5	11840113	15	0.18	514	96037137	KABELSTRANG
BUSLEITUNG 4 X 1 SPF	600345208	377	6.27	512	96037136	KABELSTRANG
BUTZEN BUZ 28L A3C	477700808	794	2	542	96045351	HYDRAULIK OBERWAGEN
CLIP 23 ST	10216534	22	2	574	918628408	KLIMAANLAGE OW
CRIMPKONTAKT 0,2-0,56MM2	602322808	615	55	447	96036955	KABELSTRANG
DACHSCHEIBE 10.28X941X740	979240608	1	1	394	965784408	DACHSCHEIBE VORM.
DACHSCHEIBE VORM.	965784408	4	1	390	916162508	SCHEIBEN EINBAU
DACHVERKLEIDUNG KPL.	965763608	9	1	383	917305408	INNENVERKLEIDUNG EINBAU
DAEMMMATTE 10X455X110 E	97038836	15	1	410	917676208	HEIZUNG KRANFUEHRERKAB
DAEMMMATTE 13X115X179 ZP	97038834	13	1	410	917676208	HEIZUNG KRANFUEHRERKAB
DAEMMMATTE 20X115X199 ZP	97038835	14	1	410	917676208	HEIZUNG KRANFUEHRERKAB
DAEMMMATTE 20X630X440 ME	97050672	12	1	435	968977308	SCHALLDAEMMUNG
DAEMMMATTE 20X630X440 ME	97055971	8	1	435	968977308	SCHALLDAEMMUNG
DAEMMMATTE 40X1055X750 P	97034281	101	1	431	96017704	KUEHLERHAUBE KPL.
DAEMMMATTE 40X310X235 P	97050671	7	1	435	968977308	SCHALLDAEMMUNG
DAEMMMATTE 40X422X93 E30	97038833	12	1	410	917676208	HEIZUNG KRANFUEHRERKAB
DAEMMMATTE 40X720X590 P	97034322	3	1	435	968977308	SCHALLDAEMMUNG
DAEMMMATTE 40X720X695 P	97050669	5	1	435	968977308	SCHALLDAEMMUNG
DAEMMMATTE 40X740X370 P	973767608	102	1	431	96017704	KUEHLERHAUBE KPL.
DAEMMMATTE 40X775X1064 P	97034282	103	1	431	96017704	KUEHLERHAUBE KPL.
DAEMMMATTE 50X60X182 E30	97038837	16	1	410	917676208	HEIZUNG KRANFUEHRERKAB
DAEMMMATTE 50X78X235 E30	97038838	17	1	410	917676208	HEIZUNG KRANFUEHRERKAB
DAEMMSTOFF 20X20X2000 PU	10425409	175	1	499	918731908	LUFTFILTERANLAGE
DAEMPFER	10650488	66	1	419	10877138	FAHRERSITZ
DAEMPFUNGSKOLBEN	510782908	7	1	561	511419608	DRUCKBEGRENZUNGSVENTI
DAEMPFUNGSKOLBEN	510797408	7	1	558	511433908	DRUCKBEGRENZUNGSVENTI
DATENLEITUNG 2 X 1 FEP SP	12100217	5	0.4	43	96045227	KABELSTRANG
DATENLEITUNG 2 X 1 FEP SP	12100217	6	0.4	43	96045227	KABELSTRANG
DATENLEITUNG 2 X 1 FEP SP	12100217	9	3	448	96036956	KABELSTRANG
DATENLEITUNG 2 X 1 FEP SP	12100217	10	3	448	96036956	KABELSTRANG
DATENLEITUNG 2 X 1 FEP SP	12100217	15	6.27	512	96037136	KABELSTRANG
DATENLEITUNG 2 X 1 FEP SP	12100217	16	7.72	512	96037136	KABELSTRANG
DATENLEITUNG 2 X 1 FEP SP	12100217	17	4.27	512	96037136	KABELSTRANG
DATENLEITUNG 2 X 1 FEP SP	12100217	18	2.02	512	96037136	KABELSTRANG
DATENLEITUNG 2 X 1 FEP SP	12100217	19	1.3	512	96037136	KABELSTRANG
DATENLEITUNG 2 X 1 FEP SP	12100217	379	6.27	512	96037136	KABELSTRANG
DATENLEITUNG 2 X 1 FEP SP	12100217	380	6.27	512	96037136	KABELSTRANG

Bezeichnung	Artikel	Pos.	Menge	Seite	Baugruppe	Bezeichnung
DATENLEITUNG 2 X 1 FEP SP	12100217	381	6.27	512	96037136	KABELSTRANG
DATENLEITUNG 2 X 1 FEP SP	12100217	383	6.27	512	96037136	KABELSTRANG
DATENLEITUNG 2 X 1 FEP SP	12100217	17	4.8	514	96037137	KABELSTRANG
DATENLEITUNG 2 X 1 FEP SP	12100217	19	4.7	514	96037137	KABELSTRANG
DATENLEITUNG 2 X 1 FEP SP	12100217	371	4.7	514	96037137	KABELSTRANG
DATENLEITUNG 2 X 1 FEP SP	12100217	372	6.4	514	96037137	KABELSTRANG
DATENLEITUNG 2 X 1 FEP SP	12100217	373	6.4	514	96037137	KABELSTRANG
DATENLEITUNG 2 X 1 FEP SP	12100217	374	6.4	514	96037137	KABELSTRANG
DATENLEITUNG 2 X 1,5 FEP	12100216	378	6.27	512	96037136	KABELSTRANG
DATENLEITUNG 2 X 1,5 FEP	12100216	16	4.8	514	96037137	KABELSTRANG
DATENLEITUNG 2 X 2,5 FEP	12100214	371	6.27	512	96037136	KABELSTRANG
DATENLEITUNG 2 X 2,5 FEP	12100214	372	6.27	512	96037136	KABELSTRANG
DATENLEITUNG 2 X 2,5 FEP	12100214	373	6.27	512	96037136	KABELSTRANG
DATENLEITUNG 3 X 1 FEP SP	12100215	10	4.32	512	96037136	KABELSTRANG
DATENLEITUNG 3 X 1 FEP SP	12100215	12	6.27	512	96037136	KABELSTRANG
DATENLEITUNG 3 X 1 FEP SP	12100215	13	6.27	512	96037136	KABELSTRANG
DATENLEITUNG 3 X 1 FEP SP	12100215	14	6.27	512	96037136	KABELSTRANG
DATENLEITUNG 3 X 1 FEP SP	12100215	384	6.27	512	96037136	KABELSTRANG
DATENLEITUNG 3 X 1 FEP SP	12100215	386	6.27	513	96037136	KABELSTRANG
DATENLEITUNG 3 X 1 FEP SP	12100215	18	4.8	514	96037137	KABELSTRANG
DATENLEITUNG 3 X 1 FEP SP	12100215	375	6.6	514	96037137	KABELSTRANG
DATENLOGGER LDL2 DIGITAL	10340438	6	1	526	968063108	MONTAGEEINHEIT VORM.
DECKBLECH SCHWK.	969016108	3	1	439	969015908	DREHBUEHNENVERKLEIDUN
DECKBLECH SCHWK. SPF	968928808	3	1	429	96036790	DREHBUEHNENVERKLEIDUN
DECKEL	10122319	1	1	263	9078301	VERSCHLUSSTEILE
DECKEL	10286353	296	1	685	968708708	KLEMMKASTEN KPL.
DECKEL	10297241	5	1	500	10871700	LUFTFILTER
DECKEL	10331026	61	1	450	96036957	ELEKTRIK ANBAUTEILE KABIN
DECKEL	10663059	7	1	305	10871282	VERSTELLPUMPE
DECKEL	11368890	9	1	330	10878502	KRAFTSTOFFFILTER
DECKEL	602761708	6	1	524	967589508	KLEMMENLEISTE
DECKEL	636109301	4	1	524	967589508	KLEMMENLEISTE
DECKEL	9178294	(6)	1	260	10125687	NEBENABTRIEB ANBAU
DECKEL	9273690	6	1	261	10144036	NEBENABTRIEB ANBAU
DECKEL 10X220X220 ALMG3	972272908	4	1	335	969050308	OELBEHAELTER VORM.
DECKEL 25X300X300 PA6G	973077908	11	3	639	917291908	ANLENKSTUECK VORM.
DECKEL 289X289X12 PA6G	97027203	62	3	645	917292008	TELESKOP 1 VORM.
DECKEL 289X289X12 PA6G	97027203	62	3	648	917292108	TELESKOP 2 VORM.
DECKEL 289X289X12 PA6G	97027203	62	3	652	917292208	TELESKOP 3 VORM.
DECKEL 289X289X12 PA6G	97027203	62	3	656	917292308	TELESKOP 4 VORM.
DECKEL 4X1260X860 ALMG3 H	97031860	10	1	30	917511508	RAUPENMITTELTEIL VORM.
DECKEL 4x83x84 S315MC FE//	970477608	8	2	672	966134608	ANBAUTEILE ZYLINDER
DECKEL 635X575X95 ABS	97007030	2	1	410	917676208	HEIZUNG KRANFUEHRERKAB
DECKEL Al Rm>200N/m	10127967	1	1	250	10127979	VERSCHLUSSTEILE
DECKEL EN AC-Al Si8	10124116	1	1	244	10115664	VERSCHLUSSTEILE
DECKEL GEKLEBT	966189708	1	1	37	966167808	DECKEL KPL.
DECKEL KPL	10551191	41	1	21	96034894	SCHUTZBLECH KPL.LI.
DECKEL KPL	10551191	41	1	24	96034977	SCHUTZBLECH KPL.RE.
DECKEL KPL.	963544508	26	3	429	96036790	DREHBUEHNENVERKLEIDUN
DECKEL KPL.	963544508	4	1	497	96039740	ZUSATZTEILE VERKLEIDUNG
DECKEL KPL.	963949708	39	1	429	96036790	DREHBUEHNENVERKLEIDUN
DECKEL KPL.	964093408	9	1	429	96036790	DREHBUEHNENVERKLEIDUN
DECKEL KPL.	966167808	2	1	36	96045226	SCHALTKASTEN VORM.
DECKEL KPL.	969493508	19	1	429	96036790	DREHBUEHNENVERKLEIDUN
DECKEL RD190X6 S355MC FE//	935508808	52	8	17	919617108	RAUPENFAHRWERK KPL.
DECKEL RD330X27 PA6G	972144708	8	1	639	917291908	ANLENKSTUECK VORM.
DECKEL S235JR	10117094	10	1	248	10116110	VERSCHLUSSTEILE
DECKEL SCHWK.	96029256	3	1	639	917291908	ANLENKSTUECK VORM.
DECKEL SCHWK. RAL 7016,SD	968075708	1	1	378	968514508	SCHALTSCHRANKDECKEL EIN
DECKEL SCHWK. SPF	969002508	7	1	429	96036790	DREHBUEHNENVERKLEIDUN

Bezeichnung	Artikel	Pos.	Menge	Seite	Baugruppe	Bezeichnung
DECKEL VORM.	967972208	9	1	70	919254308	RAUPENTRAEGER VORM.LI.
DECKEL VORM.	967972308	10	1	70	919254308	RAUPENTRAEGER VORM.LI.
DECKEL VORM.	967972308	10	1	100	919254408	RAUPENTRAEGER VORM.RE.
DECKEL VORM.	967972408	11	4	70	919254308	RAUPENTRAEGER VORM.LI.
DECKEL VORM.	967972408	11	4	100	919254408	RAUPENTRAEGER VORM.RE.
DECKEL VORM.	968055808	9	1	100	919254408	RAUPENTRAEGER VORM.RE.
DECKEL VORM.	968270108	29	1	70	919254308	RAUPENTRAEGER VORM.LI.
DECKEL VORM.	968270108	29	1	100	919254408	RAUPENTRAEGER VORM.RE.
DECKEL VORM.	968274208	33	1	70	919254308	RAUPENTRAEGER VORM.LI.
DECKEL VORM.	968274208	33	1	100	919254408	RAUPENTRAEGER VORM.RE.
DECKEL VORM.	968709108	34	1	70	919254308	RAUPENTRAEGER VORM.LI.
DECKEL VORM.	968709108	34	1	100	919254408	RAUPENTRAEGER VORM.RE.
DECKPLATTE DIN 3015-1 L-DP	7005053	314	10	51	96035801	HYDRAULIK MITTELTEIL
DECKPLATTE DIN 3015-1 L-DP	7008583	320	2	51	96035801	HYDRAULIK MITTELTEIL
DECKPLATTE DIN 3015-1 L-DP	7008583	331	1	540	96045351	HYDRAULIK OBERWAGEN
DECKPLATTE DIN 3015-1 L-DP	5005219	317	7	539	96045351	HYDRAULIK OBERWAGEN
DECKPLATTE DIN 3015-1 L-DP	12102954	308	2	90	96035796	HYDR.FAHRANTRIEB
DECKPLATTE DIN 3015-1 L-DP	12102954	308	2	107	96035792	HYDR.FAHRANTRIEB
DECKPLATTE DIN 3015-2 S-DP-	5005525	324	4	478	969763408	VERROHRUNG DRUCKLUFTA
DECKPLATTE DIN 3015-3 Z-DP	7362606	300	13	699	967785008	ZUSATZHYDRAULIK KLAPPSPI
DEHNSCHRAUBE 55.0X152 3	970611208	3	72	336	917259408	ROLLENDREHVERBINDUNG
DEHNSCHRAUBE M30X145 10.	970447008	2	62	336	917259408	ROLLENDREHVERBINDUNG
DEICHSEL SCHWK.	961727008	5	1	134	919087608	DREHDURCHFUEHRUNG
DICHTBAND	261101108	50	0.3	412	11083498	HEIZKLIMAGERAET
DICHTKANTENRING	10303270	17	3	297	10008308	ANSCHLUSSPLATTE
DICHTKANTENRING	10303270	17	3	309	571907208	ANSCHLUSSPLATTE
DICHTMITTEL A80MR HYLOMA	870002808	265	0.1	682	966291008	KLEMMKASTEN
DICHTMUTTER M6	510753408	11	1	556	10489734	DRUCKBEGRENZUNGSVENTI
DICHTMUTTER M8	510741708	21	1	558	511433908	DRUCKBEGRENZUNGSVENTI
DICHTMUTTER M8	510741708	21	1	561	511419608	DRUCKBEGRENZUNGSVENTI
DICHTPROFIL	262183501	314	6.26	337	90025640	ROLLENDREHVERBINDUNG
DICHTPROFIL 1-4X21,5X10	262105508	40	0.56	70	919254308	RAUPENTRAEGER VORM.LI.
DICHTPROFIL 1-4X21,5X10	262105508	40	0.56	100	919254408	RAUPENTRAEGER VORM.RE.
DICHTPROFIL NBR 70 4833	262181001	315	6.29	337	90025640	ROLLENDREHVERBINDUNG
DICHTPROFIL NBR 70 4833	262181001	316	6.24	337	90025640	ROLLENDREHVERBINDUNG
DICHTRING	571898008	443	1	277	919007708	ANTRIEBSAGGREGAT VORM.
DICHTRING 10,7X16X1,5 St/FP	10011864	(5)	2	164	12856862	DIESELMOTOR
DICHTRING 10,7X16X1,5 St/FP	10011864	5	15	215	10143342	LECKOELRUECKLAUF
DICHTRING 10,7X16X1,5 St/FP	10011864	8	2	229	10145278	ANBAUTEILE LUFTPRESSER
DICHTRING 10,7X16X1,5 St/FP	10011864	8	2	261	10144036	NEBENABTRIEB ANBAU
DICHTRING 10,7X16X1,5 St/FP	10011864	6524	1	265	10148366	DS DIESELMOTOR
DICHTRING 10,7X16X1,5 St/FP	10011864	6541	2	265	10148366	DS DIESELMOTOR
DICHTRING 12,7X18X1,5 St/FP	10011865	7	2	215	10143342	LECKOELRUECKLAUF
DICHTRING 12,7X18X1,5 St/FP	10011865	14	2	261	10144036	NEBENABTRIEB ANBAU
DICHTRING 12,7X18X1,5 St/FP	10011865	6526	1	265	10148366	DS DIESELMOTOR
DICHTRING 14,7X22X1,5 St/FP	10011866	11	3	215	10143342	LECKOELRUECKLAUF
DICHTRING 14,7X22X1,5 St/FP	10011866	2	7	233	10148216	ROHRLEITUNG ANBAU
DICHTRING 14,7X22X1,5 St/FP	10011866	6	1	235	10142744	KUEHLWASSERENTLUEFTUN
DICHTRING 14,7X22X1,5 St/FP	10011866	3811	7	265	10148366	DS DIESELMOTOR
DICHTRING 14,7X22X1,5 St/FP	10011866	3872	1	265	10148366	DS DIESELMOTOR
DICHTRING 140X155X13	10802682	120	1	494	96048826	ABGASANLAGE VORM.
DICHTRING 16,7X24X1,5 St/FP	10011867	9	2	214	10143341	KRAFTSTOFFLEITUNGEN
DICHTRING 16,7X24X1,5 St/FP	10011867	4	8	229	10145278	ANBAUTEILE LUFTPRESSER
DICHTRING 18,7X26X1,5 St/FP	10011868	2	1	181	10130406	NIVEAUGEBER
DICHTRING 18,7X26X1,5 St/FP	10011868	15	10	214	10143341	KRAFTSTOFFLEITUNGEN
DICHTRING 18,7X26X1,5 St/FP	10011868	221	1	264	10148366	DS DIESELMOTOR
DICHTRING 19,6X24,3X1,5	761022503	6	1	341	927554301	ENTLUEFTUNGSSTUTZEN
DICHTRING 19,6X24,3X1,5	761022503	14	1	361	90200104	OELMESSEINRICHTUNG
DICHTRING 19,6X24,3X1,5	761022503	14	1	585	90200103	OELMESSEINRICHTUNG
DICHTRING 22,7X30X2 St/FPM1	10011869	3	2	224	9080294	LUFTPRESSER VORM.

Bezeichnung	Artikel	Pos.	Menge	Seite	Baugruppe	Bezeichnung
DICHTRING 22,7X30X2 St/FPM1	10011869	12	1	261	10144036	NEBENABTRIEB ANBAU
DICHTRING 22,7X30X2 St/FPM1	10011869	6525	1	265	10148366	DS DIESELMOTOR
DICHTRING 26,7X34,93X2 St/FP	10011870	5	2	218	10145173	ANSAUGSTUTZEN ANBAU
DICHTRING 26,7X34,93X2 St/FP	10011870	27	1	238	10140729	ATL-ANBAU
DICHTRING 26,7X34,93X2 St/FP	10011870	222	1	264	10148366	DS DIESELMOTOR
DICHTRING 27X20X1,5 CU	10014697	9	3	128	11347526	ELEKTROPUMPE
DICHTRING 27X20X1,5 CU	10014697	10	3	504	10327065	ELEKTROPUMPE
DICHTRING 30,7X39X2 St/FPM1	10113731	3	1	202	10152592	UEBERDRUCKVENTIL
DICHTRING 8,7X14X1 St/FPM1	10011871	22	2	215	10143342	LECKOELRUECKLAUF
DICHTRING DIN 3869 20X17,8	761022903	2	2	361	90200104	OELMESSEINRICHTUNG
DICHTRING DIN 3869 20X17,8	761022903	2	2	585	90200103	OELMESSEINRICHTUNG
DICHTRING DIN 3869 21X18,5	7371651	(1)	1	539	96045351	HYDRAULIK OBERWAGEN
DICHTRING DIN 7603 A10X16	710101408	7	4	378	968514508	SCHALTSCHRANKDECKEL EIN
DICHTRING DIN 7603 A12X15,5	7101030	87	1	358	939292201	PLANETENGETRIEBE
DICHTRING DIN 7603 A14X18	710102508	11	1	177	10155227	OELWANNE VORM.
DICHTRING DIN 7603 A14X20	710103008	7	1	414	969085208	HEIZUNG VORM.
DICHTRING DIN 7603 A14X20	738122523	2	1	201	9078233	VENTIL
DICHTRING DIN 7603 A14X20	7381225	14	1	170	10147687	AGGREGATETRAEGER ANBA
DICHTRING DIN 7603 A16X22	710103708	402	1	315	96034522	AUSGLEICHSBEHAELTER
DICHTRING DIN 7603 A18X22	710104008	(23)	2	693	967785408	ZUSATZHYDRAULIK KLAPPSPI
DICHTRING DIN 7603 A27X32	710105908	29	1	361	90200104	OELMESSEINRICHTUNG
DICHTRING DIN 7603 A30X36	710106508	3	1	171	10138450	ENDREGELVENTIL
DICHTRING DIN 7603 A30X36	710106508	5	3	177	10155227	OELWANNE VORM.
DICHTRING DIN 7603 A30X36	710106508	141	1	264	10148366	DS DIESELMOTOR
DICHTRING DIN 7603 A33X39	7101022	306	2	589	967784808	HYDRAULIK HILFSHUBWERK
DICHTRING DIN 7603 A38X44	710107208	305	2	589	967784808	HYDRAULIK HILFSHUBWERK
DICHTRING DIN 7603 A52X60	710107708	307	4	589	967784808	HYDRAULIK HILFSHUBWERK
DICHTRING DIN 7603 A6,5X9,5	710100408	9	1	378	968514508	SCHALTSCHRANKDECKEL EIN
DICHTRING DIN 7603 A8X12X1	710100708	9	8	377	916162808	RELING
DICHTSATZ	10219620	999	1	282	10492431	DRUCKBEGRENZUNGSVENTI
DICHTSATZ	10285695	999	1	547	11482347	WEGEMAGNETVENTIL
DICHTSATZ	10331946	998	1	282	10492431	DRUCKBEGRENZUNGSVENTI
DICHTSATZ	10342480	999	1	305	10871282	VERSTELLPUMPE
DICHTSATZ	10423993	(999)	1	546	11211756	STEUERBLOCK
DICHTSATZ	10424726	999	1	296	10663105	TRIEBWERK
DICHTSATZ	11004122	(999)	1	550	10413106	STEUERBLOCK
DICHTSATZ	11170384	(999)	1	668	10876933	TELESKOPIERZYLINDER
DICHTSATZ	11494337	(98)	1	294	11210795	VERSTELLPUMPE
DICHTSATZ	11600280	(999)	1	286	11182708	VERSTELLPUMPE
DICHTSATZ	11643397	(999)	1	360	11182597	VERSTELLMOTOR
DICHTSATZ	11691956	3	1	58	11643183	STEUERBLOCK
DICHTSATZ	11691956	3	1	61	11643184	STEUERBLOCK
DICHTSATZ	12101886	999	1	330	10878502	KRAFTSTOFFFILTER
DICHTSATZ	12102278	(999)	1	76	11320954	LEITRADEINHEIT
DICHTSATZ	511043308	(999)	1	552	10332882	STEUERBLOCK
DICHTSATZ	571496708	999	1	734	512363708	HYDROZYLINDER
DICHTSATZ	571614608	(1)	1	668	10876933	TELESKOPIERZYLINDER
DICHTSATZ	571840008	(999)	1	538	96045351	HYDRAULIK OBERWAGEN
DICHTSATZ GRUNDBLOCK	10684170	(999)	1	538	96045351	HYDRAULIK OBERWAGEN
DICHTSATZ VITON	571187408	(999)	1	552	10332882	STEUERBLOCK
DICHTSCHEIBE 150X158X0,10	10154459	2	1	169	10154458	ZYLINDER
DICHTSCHEIBE 7,6X15,8X1 VI	571082508	(1)	1	539	96045351	HYDRAULIK OBERWAGEN
DICHTSCHEIBE 7X19X4 A2	429900308	7	12	85	968420608	STAUKASTEN VORM.
DICHTSCHEIBE 8X22X4 -A2	429900608	376	4	499	918731908	LUFTFILTERANLAGE
DICHTSCHEIBE VITON	571081908	(1)	1	699	967785008	ZUSATZHYDRAULIK KLAPPSPI
DICHTSCHEIBE VITON	571082408	(1)	1	699	967785008	ZUSATZHYDRAULIK KLAPPSPI
DICHTSTOPFEN	10134753	3	1	216	10143825	EINSPRITZLEITUNGEN
DICHTSTOPFEN	11389287	3	1	216	10143825	EINSPRITZLEITUNGEN
DICHTSTOPFEN	11389287	2151	1	264	10148366	DS DIESELMOTOR
DICHTSTOPFEN	738048003	2	1	357	939292201	PLANETENGETRIEBE

Bezeichnung	Artikel	Pos.	Menge	Seite	Baugruppe	Bezeichnung
DICHTSTOPFEN 9	761081903	8	1	73	90028956	FAHRANTRIEB
DICHTSTOPFEN 9	761081903	9	3	357	939292201	PLANETENGETRIEBE
DICHTSTOPFEN GPN 735 M33	10465711	15	2	170	10147687	AGGREGATETRAEGER ANBA
DICHTSTOPFEN LK 950	10030837	14	14	167	11389608	KURBELGEHAEUSE KPL. MIT
DICHTSTOPFEN LK 950	10036325	8	1	194	11448005	KIPPHEBELBOCK VORM.
DICHTSTREIFEN 40X4 NBR/S	11114455	43	4	483	918484108	HARNSTOFFANLAGE
DICHTUNG	10135885	3	4	236	10140087	ABGASROHR ANBAU
DICHTUNG	10135885	4101	1	265	10148366	DS DIESELMOTOR
DICHTUNG	10144861	13	1	483	918484108	HARNSTOFFANLAGE
DICHTUNG	10297876	2	1	303	11692439	STEUERVENTIL
DICHTUNG	10815005	2	1	42	10450273	ANTENNE
DICHTUNG	11826653	12	1	466	10876576	WASSERHEIZGERAET
DICHTUNG	11826653	(3)	1	466	10876576	WASSERHEIZGERAET
DICHTUNG	12565355	4	4	195	11358102	ZYLINDERKOPFDECKEL ANBA
DICHTUNG	7011131	2	1	178	5004624	OELABLASSSCHRAUBE
DICHTUNG	9144762	(3)	1	195	11358102	ZYLINDERKOPFDECKEL ANBA
DICHTUNG	9273691	5	1	261	10144036	NEBENABTRIEB ANBAU
DICHTUNG	9273691	6523	1	265	10148366	DS DIESELMOTOR
DICHTUNG	9273691	6543	1	266	10148366	DS DIESELMOTOR
DICHTUNG	9885529	(5)	1	260	10125687	NEBENABTRIEB ANBAU
DICHTUNG	9885529	6502	1	265	10148366	DS DIESELMOTOR
DICHTUNG 0,33 METALOSEAL	10126738	2	1	170	10147687	AGGREGATETRAEGER ANBA
DICHTUNG 0,33 METALOSEAL	10137721	5	1	247	10115829	SCHWUNGRADGEHAEUSE AN
DICHTUNG 1	9079130	3	1	212	10146791	KRAFTSTOFF-FEINFILTERAN
DICHTUNG 1	9079130	2011	1	264	10148366	DS DIESELMOTOR
DICHTUNG 1,5 AFM 32/2	9268131	18	1	238	10140729	ATL-ANBAU
DICHTUNG 1.5X210X360 GU	97083604	431	1	499	918731908	LUFTFILTERANLAGE
DICHTUNG 1.5X721X86 EPDM	97005272	3	1	393	966497908	FRONTSCHEIBE KPL.
DICHTUNG 120X60X 30 SCHW	976094308	7	1	375	916170808	KABELEINFUEHRUNG
DICHTUNG 25X14X4080 EPDM	97046043	18	1	390	916162508	SCHEIBEN EINBAU
DICHTUNG 25X892X720 EPDM	97033487	7	1	390	916162508	SCHEIBEN EINBAU
DICHTUNG 2X148X84 EPDM	97005291	7	1	393	966497908	FRONTSCHEIBE KPL.
DICHTUNG 2X225X107 EPDM	97005290	6	1	393	966497908	FRONTSCHEIBE KPL.
DICHTUNG 2X86X28 EPDM	97012017	29	2	393	966497908	FRONTSCHEIBE KPL.
DICHTUNG 2X94X39 EPDM	97005309	11	9	393	966497908	FRONTSCHEIBE KPL.
DICHTUNG 439X120X5 POLYA	97012288	6	1	375	916170808	KABELEINFUEHRUNG
DICHTUNG 4X322X62 EPDM 20	97005040	9	1	396	916168308	LUFTFUEHRUNG
DICHTUNG 4X407X85 EPDM 20	97005042	10	2	396	916168308	LUFTFUEHRUNG
DICHTUNG 645X786 EPDM	97007649	2	1	378	968514508	SCHALTSCHRANKDECKEL EIN
DICHTUNG 721X43X 1.5 EPDM	97006055	18	1	393	966497908	FRONTSCHEIBE KPL.
DICHTUNG 78X64 30	976193208	8	1	375	916170808	KABELEINFUEHRUNG
DICHTUNG 7X182X51 POLYO	97006874	32	6	383	917305408	INNENVERKLEIDUNG EINBAU
DICHTUNG 85.5X89X30 ZP-30	97071963	16	1	375	916170808	KABELEINFUEHRUNG
DICHTUNG 90X97X5 POLYALE	978172508	13	1	449	96036957	ELEKTRIK ANBAUTEILE KABIN
DICHTUNG AFM 30	10117709	2	1	199	10129475	OELKUEHLER ANBAU
DICHTUNG AFM 30	10128516	2	1	175	10132560	OELWANNE MIT BEFEST.
DICHTUNG AFM 30	10128516	2	1	267	10141167	DS OELWANNE
DICHTUNG DIN 71511 1,5X25X	4980359	4	2	200	10129474	OELKUEHLER VORM.
DICHTUNG S235JR	10118556	2	4	217	10147365	LUFTANSAUGROHR ANBAU
DICHTUNG S235JR	10118556	2201	4	264	10148366	DS DIESELMOTOR
DICHTUNG X15CrNiSi20-	10125739	7	1	238	10140729	ATL-ANBAU
DICHTUNG XTREME PLUS	10125148	120	1	491	919372008	ABGASANLAGE
DICHTUNGSMASSE	10447539	99	1	504	10327065	ELEKTROPUMPE
DICHTUNGSMASSE 50ML TUB	811201314	108	1	262	9077386	NEBENABTRIEB VORM.
DICHTUNGSMITTEL 90G TUBE	8627609	112	1	177	10155227	OELWANNE VORM.
DICHTUNGSMUTTER M6	7361600	18	1	311	10292815	REGLERELEMENT
DICHTUNGSSATZ	10331947	800	1	281	10429930	ZAHNRADMOTOR
DIESELMOTOR D944 A7-04 SP	12856862	1	1	159	919371808	DIESELMOTOR KAUFTEIL
DIESELMOTOR KAUFTEIL	919371808	104	1	9		LIEBHERR LTR 1220
DIODENBAUSTEIN PBTP-GF20	10440553	11	1	518	919503008	EINBAUTEILE SCHALTSCHRAN

Bezeichnung	Artikel	Pos.	Menge	Seite	Baugruppe	Bezeichnung
DISTANZBLECH 1X60X120 DC0	97033390	25	4	116	968046208	ANBAUTEILE
DISTANZBLECH 8X60X120 S35	97033383	24	4	116	968046208	ANBAUTEILE
DISTANZBOLZEN	11321016	11	4	724	910836808	HAKENFLASCHE
DISTANZHUELSE 10X6,2X10 P	10354375	56	1	383	917305408	INNENVERKLEIDUNG EINBAU
DISTANZHUELSE 11X18X10 St	10117226	117	4	276	919007708	ANTRIEBSAGGREGAT VORM.
DISTANZHUELSE 11X20X25 42	10138657	7	14	236	10140087	ABGASROHR ANBAU
DISTANZHUELSE 11X24X10,5	9076588	90	1	254	10151328	KABELBAUM ANBAU
DISTANZHUELSE 15X6,3X25 P	10441664	55	1	383	917305408	INNENVERKLEIDUNG EINBAU
DISTANZHUELSE 15X6,3X25 P	10441664	4	2	719	968811608	QUERTRAEGER
DISTANZHUELSE 18.0X26 E23	97047984	13	1	275	919007708	ANTRIEBSAGGREGAT VORM.
DISTANZHUELSE 30.0 X0 42C	952177008	20	2	269	918731408	ANTRIEBSAGGREGAT KPL.
DISTANZHUELSE 30.0 X0 42C	952177008	31	5	275	919007708	ANTRIEBSAGGREGAT VORM.
DISTANZHUELSE 35.0X40 35N	970780908	3	2	323	917626608	KRAFTSTOFFBEHAELTER AN
DISTANZHUELSE 8,5X18X10 11	9132577	93	1	254	10151328	KABELBAUM ANBAU
DISTANZHUELSE 9X15X30 42	12843150	5	1	209	10152867	INJEKTOR MIT BEFEST.
DISTANZPLATTE 15X100X379	973258608	39	1	656	917292308	TELESKOP 4 VORM.
DISTANZPLATTE 15X103X408	973057708	39	1	652	917292208	TELESKOP 3 VORM.
DISTANZPLATTE 15X105X429	973245708	39	1	648	917292108	TELESKOP 2 VORM.
DISTANZPLATTE 15X110X465	972898108	39	1	644	917292008	TELESKOP 1 VORM.
DISTANZPLATTE 15X113X449	973258708	43	2	656	917292308	TELESKOP 4 VORM.
DISTANZPLATTE 15X113X492	973358008	55	1	639	917291908	ANLENKSTUECK VORM.
DISTANZPLATTE 15X119X497	973245808	43	2	648	917292108	TELESKOP 2 VORM.
DISTANZPLATTE 15X121X498	973253208	43	2	652	917292208	TELESKOP 3 VORM.
DISTANZPLATTE 15X138X592	972898308	43	2	644	917292008	TELESKOP 1 VORM.
DISTANZPLATTE 15X141X621	973357808	47	2	639	917291908	ANLENKSTUECK VORM.
DISTANZPLATTE 60X37X730 P	97031640	5	16	17	919617108	RAUPENFAHRWERK KPL.
DISTANZROHR 159.0X12 S355	971095808	9	2	705	917268408	MASTNASE
DISTANZROHR 8.0X30 E235+N	97051280	16	4	721	968728808	KONSOLE VORM.
DISTANZROHR RD159X4,5X22	953536408	2	1	709	910040808	2.NACKENROLLE EINBAU
DISTANZROHR RD159X4,5X36	955581808	25	1	661	917292408	TELESKOP 5 VORM.
DISTANZROHR RD159X4,5X65	953536508	3	1	709	910040808	2.NACKENROLLE EINBAU
DISTANZSCHEIBE RD.164X3 P	97037959	4	1	612	968993508	KAMERAHALTER VORM.
DISTANZSTUECK 190X75X34 P	97001821	19	1	644	917292008	TELESKOP 1 VORM.
DISTANZSTUECK 190X75X34 P	97001821	19	1	648	917292108	TELESKOP 2 VORM.
DISTANZSTUECK 190X75X34 P	97001821	19	2	652	917292208	TELESKOP 3 VORM.
DISTANZSTUECK 190X75X34 P	97001821	19	2	656	917292308	TELESKOP 4 VORM.
DISTANZSTUECK 190X75X34 P	97001821	13	2	661	917292408	TELESKOP 5 VORM.
DISTANZSTUECK PA6G	97040155	44	16	70	919254308	RAUPENTRAEGER VORM.LI.
DISTANZSTUECK PA6G	97040155	44	16	100	919254408	RAUPENTRAEGER VORM.RE.
DOPPELABREISSSTOPFEN	7012971	(13)	2	294	11210795	VERSTELLPUMPE
DOPPELABREISSSTOPFEN	7012971	12	1	309	571907208	ANSCHLUSSPLATTE
DOPPELABREISSSTOPFEN	7022127	(11)	1	294	11210795	VERSTELLPUMPE
DOPPELABREISSSTOPFEN	7022127	11	4	297	10008308	ANSCHLUSSPLATTE
DOPPELABREISSSTOPFEN	7022127	52	7	298	10472196	REGLER
DOPPELABREISSSTOPFEN	7022127	11	6	309	571907208	ANSCHLUSSPLATTE
DOPPELABREISSSTOPFEN	7022127	52	5	310	10292801	REGLER
DOPPELFEDERKONTAKT 0,5-1	6001703	2267	6	511	96045385	KABELSTRANG
DOPPELHAKEN	11347028	30	1	724	910836808	HAKENFLASCHE
DOPPELHOHLSCHRAUBE 6-6-	12210029	12	1	215	10143342	LECKOELRUECKLAUF
DOPPELMAULSCHLUESSEL D	790003908	20	1	144	928569808	GRUNDWERKZEUG
DOPPELMAULSCHLUESSEL D	790003308	11	1	144	928569808	GRUNDWERKZEUG
DOPPELMAULSCHLUESSEL D	790002208	12	1	144	928569808	GRUNDWERKZEUG
DOPPELMAULSCHLUESSEL D	790002408	13	1	144	928569808	GRUNDWERKZEUG
DOPPELMAULSCHLUESSEL D	790003608	15	1	144	928569808	GRUNDWERKZEUG
DOPPELMAULSCHLUESSEL D	790002508	16	1	144	928569808	GRUNDWERKZEUG
DOPPELMAULSCHLUESSEL D	790002608	17	1	144	928569808	GRUNDWERKZEUG
DOPPELMAULSCHLUESSEL D	790002808	18	1	144	928569808	GRUNDWERKZEUG
DOPPELMAULSCHLUESSEL D	790002908	19	1	144	928569808	GRUNDWERKZEUG
DOPPELMAULSCHLUESSEL DI	790001708	10	1	144	928569808	GRUNDWERKZEUG
DOPPELMAULSCHLUESSEL	10652772	14	1	144	928569808	GRUNDWERKZEUG

Bezeichnung	Artikel	Pos.	Menge	Seite	Baugruppe	Bezeichnung
DOPPELSTECKDOSE 2-POL	10875121	19	1	446	96036955	KABELSTRANG
DORNNIET 4X10,3	704207608	9	20	529	969061708	TRAEGERBLECH SICHERUNG
DORNNIET 4X15	704207708	200	4	150	917862808	BESCHILDERUNG GROSSBRI
DOSE M1	604508108	155	1	685	968708708	KLEMMKASTEN KPL.
DOSIERPUMPE DP42	11110051	2	1	462	918759808	ZUSATZHEIZUNG OW
DRAEHTE GRUNDAUFBAU KP	96045387	1	1	519	96045386	GRUNDAUFBAU KPL.
DRAEHTE GRUNDAUFBAU V	96045388	2	1	520	96045387	DRAEHTE GRUNDAUFBAU KPL
DRAEHTE KLEMMKASTEN KP	966354908	18	1	685	968708708	KLEMMKASTEN KPL.
DRAHT	7624238	17	4	307	10872488	TRIEBWERK
DRAHTSCHLAUCHKLEMME 70	11000902	14	2	396	916168308	LUFTFUEHRUNG
DRAHTSCHLAUCHKLEMME 79	11000903	13	6	396	916168308	LUFTFUEHRUNG
DREHBUEHNENARRETIERUN	917259608	121	1	9		LIEBHERR LTR 1220
DREHBUEHNENVERKLEIDUN	918731508	139	1	10		LIEBHERR LTR 1220
DREHBUEHNENVERKLEIDUN	969015908	2	1	425	918731508	DREHBUEHNENVERKLEIDUN
DREHBUEHNENVERKLEIDUN	96036790	1	1	425	918731508	DREHBUEHNENVERKLEIDUN
DREHDURCHFUEHRUNG	919087608	30	1	9		LIEBHERR LTR 1220
DREHDURCHFUEHRUNG SPF	11182736	1	1	134	919087608	DREHDURCHFUEHRUNG
DREHFALLENSCHLOSS LINKS	11005985	1	1	406	966230408	SCHLIESSANLAGE
DREHGEBER 360° LSB PL:E SP	10802060	(11)	1	508	968128908	EL.GEBER U.ENDSCHALTER
DREHSCHLOSSBETAETIGER 1	606144908	7	1	529	969061708	TRAEGERBLECH SICHERUNG
DREHSTROMGENERATOR 5.0	10142606	1	1	239	10142863	GENERATOR VORM.
DREHVERSCHRAUBUNG DG1	474234008	150	3	688	967784508	HYDRAULIK TELE
DREHWERK	919369308	119	1	9		LIEBHERR LTR 1220
DREHWERKANTRIEB DAT 225/	90008901	1	2	338	919369308	DREHWERK
DREHZAHLGEBER 10-10000H	12977971	(1)	1	258	12583633	MOTORREGELUNGSENSORIK
DREHZAHLGEBER KPL. 10-10	12544505	20	2	258	12583633	MOTORREGELUNGSENSORIK
DREIFACHPUMPE A4VG+A11V	10871047	107	1	276	919007708	ANTRIEBSAGGREGAT VORM.
DRUCK-/TEMPERATUR SENSO	12414685	739	1	485	11373478	REDUKTIONSMITTELPUMPE
DRUCKAUFNEHMER 0-400/400	10813738	60	7	538	96045351	HYDRAULIK OBERWAGEN
DRUCKAUFNEHMER 0-400/400	10813738	53	1	589	967784808	HYDRAULIK HILFSHUBWERK
DRUCKAUFNEHMER 0-400/400	10813738	51	1	688	967784508	HYDRAULIK TELE
DRUCKAUFNEHMER 0-400/400	10816185	61	1	538	96045351	HYDRAULIK OBERWAGEN
DRUCKAUFNEHMER 0-750/750	10813739	62	2	538	96045351	HYDRAULIK OBERWAGEN
DRUCKBEGRENZUNGSVENTI	10280213	60	1	597	10038509	STEUERBLOCK
DRUCKBEGRENZUNGSVENTI	10280214	70	1	597	10038509	STEUERBLOCK
DRUCKBEGRENZUNGSVENTI	10489734	7	1	555	11341035	STEUERBLOCK
DRUCKBEGRENZUNGSVENTI	10492431	11	1	281	10429930	ZAHNRADMOTOR
DRUCKBEGRENZUNGSVENTI	570427408	7	1	552	10332882	STEUERBLOCK
DRUCKBEGRENZUNGSVENTI	571723708	6	1	552	10332882	STEUERBLOCK
DRUCKBEGRENZUNGSVENTI	571723808	8	1	552	10332882	STEUERBLOCK
DRUCKBEGRENZUNGSVENTI	571899408	(1)	1	294	11210795	VERSTELLPUMPE
DRUCKBEGRENZUNGSVENTI	571910208	37	1	668	10876933	TELESKOPIERZYLINDER
DRUCKBEGRENZUNGSVENTI	10872307	1	1	487	969904608	DRUCKBEGRENZUNGSVENTI
DRUCKBEGRENZUNGSVENTI	969904608	16	1	483	918484108	HARNSTOFFANLAGE
DRUCKBEGRENZUNGSVENTI	511450208	150	1	693	967785408	ZUSATZHYDRAULIK KLAPPSPI
DRUCKBEGRENZUNGSVENTI	11161570	168	1	538	96045351	HYDRAULIK OBERWAGEN
DRUCKBEGRENZUNGSVENTI	511456808	195	1	539	96045351	HYDRAULIK OBERWAGEN
DRUCKBEGRENZUNGSVENTI	511419608	198	1	539	96045351	HYDRAULIK OBERWAGEN
DRUCKBEGRENZUNGSVENTI	511433908	162	2	538	96045351	HYDRAULIK OBERWAGEN
DRUCKFEDER	11102038	17	1	670	571928508	ZYLINDERKOPF KPL.
DRUCKFEDER	510783008	9	1	561	511419608	DRUCKBEGRENZUNGSVENTI
DRUCKFEDER	510797508	9	1	558	511433908	DRUCKBEGRENZUNGSVENTI
DRUCKFEDER	511015108	4	1	558	511433908	DRUCKBEGRENZUNGSVENTI
DRUCKFEDER	511015308	4	1	561	511419608	DRUCKBEGRENZUNGSVENTI
DRUCKFEDER	511025508	10	2	58	11643183	STEUERBLOCK
DRUCKFEDER	511025508	10	2	61	11643184	STEUERBLOCK
DRUCKFEDER	7023659	3	1	301	10472208	VERSTELLUNG
DRUCKFEDER 0,6X5,1X4	11340583	2	1	302	10871043	VERSTELLPUMPE
DRUCKFEDER 1,6X14,4X59,3 E	12101506	25	2	26	968036408	ENDSCHALTER VORM.
DRUCKFEDER 1,6X18,2X44	720009408	22	4	672	966134608	ANBAUTEILE ZYLINDER

Bezeichnung	Artikel	Pos.	Menge	Seite	Baugruppe	Bezeichnung
DRUCKFEDER 1,8X7,3X40,5	10176329	7	10	345	90025782	BREMSFEDERSATZ
DRUCKFEDER 15X133X223 SP	720014908	2	1	644	917292008	TELESKOP 1 VORM.
DRUCKFEDER 15X133X223 SP	720014908	2	1	648	917292108	TELESKOP 2 VORM.
DRUCKFEDER 15X133X223 SP	720014908	2	1	652	917292208	TELESKOP 3 VORM.
DRUCKFEDER 15X133X223 SP	720014908	2	1	656	917292308	TELESKOP 4 VORM.
DRUCKFEDER 15X133X223 SP	720014908	22	1	661	917292408	TELESKOP 5 VORM.
DRUCKFEDER 1X4,1X41,3	10176330	8	10	345	90025782	BREMSFEDERSATZ
DRUCKFEDER 2,10X17,80X75,0	9886756	9	1	200	10129474	OELKUEHLER VORM.
DRUCKFEDER 2X12X41,73 EN	11067867	38	1	405	917304708	SCHIEBETUER EINBAU
DRUCKFEDER 3,2X16,8X100,7	10129501	4	1	202	10152592	UEBERDRUCKVENTIL
DRUCKFEDER 3X17X74,67 O	11118160	6	1	171	10138450	ENDREGELVENTIL
DRUCKFEDER 4,60X28,40X62,7	9074481	9	4	191	10149579	ZYLINDERKOPF VORM.
DRUCKFEDER 4X25X41 EN 10	11003426	5	1	459	966707708	SPIEGELHALTER VORM.
DRUCKFEDER 6,3X80X145	720011408	4	1	350	917259608	DREHBUEHNENARRETIERUN
DRUCKFEDER 8X92X50 FED	10297691	5	1	370	96015921	BEDIENELEMENTE EINBAU
DRUCKFEDER DIN 2098 2X16	720008508	6	1	733	923285508	KLAPPKONSOLE VORM.
DRUCKFEDER EN10270-3	720012608	34	1	731	917267508	TRANSPORTHALTERUNG DKS
DRUCKFILTER	510671508	165	2	538	96045351	HYDRAULIK OBERWAGEN
DRUCKGEBER 0,5-4,5 BAR	10100781	(1)	1	258	12583633	MOTORREGELUNGSENSORIK
DRUCKGEBER 0,5-4,5 BAR	12907020	(1)	1	258	12583633	MOTORREGELUNGSENSORIK
DRUCKGEBER 0-10 BAR	12907001	(1)	1	258	12583633	MOTORREGELUNGSENSORIK
DRUCKGEBER KPL. 0,5-4,5 BA	9076550	11	1	258	12583633	MOTORREGELUNGSENSORIK
DRUCKGEBER KPL. 0-10 BAR	9076531	10	2	258	12583633	MOTORREGELUNGSENSORIK
DRUCKLUFTANLAGE OW	917676308	155	1	10		LIEBHERR LTR 1220
DRUCKREGELVENTIL SPF	10342823	20	1	546	11211756	STEUERBLOCK
DRUCKRING	502923708	46	2	449	96036957	ELEKTRIK ANBAUTEILE KABIN
DRUCKRING DR/R22X27	502932508	9	1	325	968999708	KRAFTSTOFFBEHAELTER VO
DRUCKRING DR/R26X31	502932808	312	1	478	969763408	VERROHRUNG DRUCKLUFTA
DRUCKROHRSTUTZEN MIT BE	10153151	191	4	162	12856862	DIESELMOTOR
DRUCKSCHALTER 0-20/300BA	10289536	53	1	538	96045351	HYDRAULIK OBERWAGEN
DRUCKSCHALTER 0-20/300BA	10289536	51	1	589	967784808	HYDRAULIK HILFSHUBWERK
DRUCKSCHALTER 0-8/300 BA	10220933	54	1	538	96045351	HYDRAULIK OBERWAGEN
DRUCKSCHALTER 0-8/300 BA	10220933	52	1	589	967784808	HYDRAULIK HILFSHUBWERK
DRUCKSCHALTER 1,5-26 BAR	571489108	106	1	280	96034631	KUEHLER VORM.
DRUCKSCHALTER 10-100/400	510676908	50	1	90	96035796	HYDR.FAHRANTRIEB
DRUCKSCHALTER 10-100/400	510676908	50	1	107	96035792	HYDR.FAHRANTRIEB
DRUCKSTUECK	240191502	100	1	283	968026308	KUPPLUNGSSTELLER
DRUCKTASTE	606143008	18	1	453	96022872	ARMATURENBRETT DACH
DRUCKTASTE	606143008	8	1	529	969061708	TRAEGERBLECH SICHERUNG
DRUCKTASTER	11171271	33	1	419	10877138	FAHRERSITZ
DRUCKVENTIL	10875076	6	1	546	11211756	STEUERBLOCK
DRUCKVENTIL	10875077	21	1	546	11211756	STEUERBLOCK
DS ABGASSTUTZEN	11351426	4320	1	265	10148366	DS DIESELMOTOR
DS ABSTUETZZYLINDER	10878366	(999)	1	121	919644008	HYDRAULISCHE ABSTUETZUN
DS AGGREGATETRAEGER	10141157	120	1	264	10148366	DS DIESELMOTOR
DS ANSAUGSTUTZEN	11351429	2210	1	265	10148366	DS DIESELMOTOR
DS ANSCHLUSSBLOCK	11220418	5	1	58	11643183	STEUERBLOCK
DS ANSCHLUSSBLOCK	11220418	5	1	61	11643184	STEUERBLOCK
DS ANSCHLUSSPLATTE	10472219	999	1	297	10008308	ANSCHLUSSPLATTE
DS ANSCHLUSSPLATTE	10872487	999	1	309	571907208	ANSCHLUSSPLATTE
DS ANSTEUERGERAET	10471439	(98)	1	294	11210795	VERSTELLPUMPE
DS ATL-ANBAU	11351313	4300	1	265	10148366	DS DIESELMOTOR
DS BALLASTIERZYLINDER	12104276	999	1	472	10877810	BALLASTIERZYLINDER
DS BREMSE	969997708	(999)	1	73	90028956	FAHRANTRIEB
DS DIESELMOTOR	10148366	939	1	166	12856862	DIESELMOTOR
DS DREHDURCHFUEHRUNG	10873566	(23)	2	134	919087608	DREHDURCHFUEHRUNG
DS DRUCKBEGRENZUNGSV	10470385	(999)	1	552	10332882	STEUERBLOCK
DS DRUCKBEGRENZUNGSV	10872098	(999)	1	597	10038509	STEUERBLOCK
DS DRUCKBEGRENZUNGSV	10872098	(999)	1	597	10038509	STEUERBLOCK
DS DRUCKROHRSTUTZEN	10141216	(12)	1	210	10153151	DRUCKROHRSTUTZEN MIT BE

Bezeichnung	Artikel	Pos.	Menge	Seite	Baugruppe	Bezeichnung
DS DRUCKROHRSTUTZEN	10141216	210	1	210	10153151	DRUCKROHRSTUTZEN MIT BE
DS HOCHDRUCKPUMPE	10141214	1710	1	264	10148366	DS DIESELMOTOR
DS HOCHDRUCKPUMPE	10152787	210	1	206	10146658	HOCHDRUCKPUMPE
DS HYDROMOTOR	10872714	999	1	567	10872388	HYDROMOTOR
DS HYDROZYLINDER	10490901	(999)	1	350	917259608	DREHBUEHNENARRETIERUN
DS HYDROZYLINDER	10491695	999	1	366	11214363	KIPPZYLINDER
DS INJEKTOR	10141215	210	1	209	10152867	INJEKTOR MIT BEFEST.
DS KRAFTSTOFFLEITUNG	10141217	2120	1	264	10148366	DS DIESELMOTOR
DS KUEHLMITTELKRUEMMER	11351432	3820	1	265	10148366	DS DIESELMOTOR
DS KURBELGEHAEUSEENTL	10141165	160	1	264	10148366	DS DIESELMOTOR
DS LECKOELRUECKLAUF	11351500	2140	1	264	10148366	DS DIESELMOTOR
DS LUFTANSAUGUNG	11351430	2240	1	265	10148366	DS DIESELMOTOR
DS OELKUEHLER	10141182	1300	1	264	10148366	DS DIESELMOTOR
DS OELLEITUNG	10141169	250	1	264	10148366	DS DIESELMOTOR
DS OELWANNE	10141167	200	1	264	10148366	DS DIESELMOTOR
DS REGLER	10440976	999	1	298	10472196	REGLER
DS REGLER	10663065	999	1	310	10292801	REGLER
DS SCHMIEROELPUMPE	11351510	1400	1	264	10148366	DS DIESELMOTOR
DS SCHWUNGRADGEHAEUSE	11351428	5200	1	265	10148366	DS DIESELMOTOR
DS SENKBREMSVENTIL	10816799	(999)	1	538	96045351	HYDRAULIK OBERWAGEN
DS STEUERBLOCK	10491129	999	1	557	10449853	WEGEVENTIL
DS TAKTVENTIL	11351427	4360	1	265	10148366	DS DIESELMOTOR
DS TELESKOPZYLINDER	10878189	999	1	668	10876933	TELESKOPIERZYLINDER
DS THERMOSTATGEHAEUSE	11351503	3800	1	265	10148366	DS DIESELMOTOR
DS TRIEBWELLE	11494585	(98)	1	294	11210795	VERSTELLPUMPE
DS VENTIL	10663092	(999)	1	550	10413106	STEUERBLOCK
DS VENTIL	10663097	(999)	1	550	10413106	STEUERBLOCK
DS VENTIL	10802870	(99)	1	124	968077208	HYDRAULIK ABSTUETZUNG
DS VERBINDUNGSLEITUNG	11351425	2300	1	265	10148366	DS DIESELMOTOR
DS VERSTELLPUMPE	10488696	98	1	294	11210795	VERSTELLPUMPE
DS VERSTELLPUMPE	10663107	98	1	295	11210798	VERSTELLPUMPE
DS VERSTELLPUMPE	11690589	98	1	286	11182708	VERSTELLPUMPE
DS VERSTELLPUMPE	11690589	98	1	289	10871017	VERSTELLPUMPE
DS VORFOERDERPUMPE	12424993	211	1	206	10146658	HOCHDRUCKPUMPE
DS WEGEVENTIL	10802253	(999)	1	538	96045351	HYDRAULIK OBERWAGEN
DS WEGEVENTIL	10871959	(999)	1	597	10038509	STEUERBLOCK
DS WEGEVENTIL	11006275	999	1	553	571737808	WEGEVENTIL
DS ZAHNRADPUMPE	10492710	999	1	291	11210201	ZAHNRADPUMPE
DS ZAHNRADPUMPE	10492710	999	1	312	10870964	ZAHNRADPUMPE
DS ZAHNRADPUMPE	11494341	999	1	313	10870965	ZAHNRADPUMPE
DS ZYLINDER	11621953	999	1	31	10870204	VERRIEGELUNGSZYLINDER
DS ZYLINDERKOPF	571934708	999	1	670	571928508	ZYLINDERKOPF KPL.
DS ZYLINDERKOPF KPL.	10141181	800	4	264	10148366	DS DIESELMOTOR
DSF-RING 130X121,9X3,5	12478647	5	1	188	10146367	KOLBEN KPL.
DU-BUCHSE	708010008	3	2	732	929582108	HALTERUNG VORM.
DU-BUCHSE	708010008	4	1	735	923879808	KONSOLE VORM.
DU-BUCHSE	708011608	21	2	731	917267508	TRANSPORTHALTERUNG DKS
DUESE 0,5 M5X5	511044108	193	1	539	96045351	HYDRAULIK OBERWAGEN
DUESE 0,5 M5X9 MS	511062708	159	1	90	96035796	HYDR.FAHRANTRIEB
DUESE 0,5 M5X9 MS	511062708	159	1	107	96035792	HYDR.FAHRANTRIEB
DUESE 0,5 M5X9 MS	511062708	157	1	538	96045351	HYDRAULIK OBERWAGEN
DUESE 0,5 M5X9 MS	511062708	169	1	589	967784808	HYDRAULIK HILFSHUBWERK
DUESE 0,6 M5X9 CUZN39PB3	510746008	153	1	688	967784508	HYDRAULIK TELE
DUESE 0,8 M5X9	510754008	158	1	538	96045351	HYDRAULIK OBERWAGEN
DUESE 3,0 M10X10 MS	511059408	161	1	538	96045351	HYDRAULIK OBERWAGEN
DUESENSATZ PA	10815496	16	1	399	916163008	WISCHANLAGE EINBAU
DURCHFUEHRUNGSTUELLE	602701308	1	1	375	916170808	KABELEINFUEHRUNG
DURCHGANGSNIPPELBLOCK	774375108	6	2	127	917257108	ZENTRALSCHMIERUNG RAUP
DURCHGANGSNIPPELBLOCK	774375108	9	2	502	917261208	ZENTRALSCHMIERANLAGE O
EIN-/AUSGANGSMODUL LSB-	11213706	100	1	528	968253608	UNIVERSAL EIN-AUSGANGS

Bezeichnung	Artikel	Pos.	Menge	Seite	Baugruppe	Bezeichnung
EINBAUSTECKDOSE 2-POL	605203908	5	1	453	96022872	ARMATURENBRETT DACH
EINBAUSTECKDOSE 2-POL	605203908	3	1	529	969061708	TRAEGERBLECH SICHERUNG
EINBAUTEILE SCHALTSCHRAN	919503008	181	1	11		LIEBHERR LTR 1220
EINBAUVENTIL	10801534	7	1	550	10413106	STEUERBLOCK
EINBAUVENTIL	571415208	2	1	550	10413106	STEUERBLOCK
EINBAUVENTIL	571415208	11	1	550	10413106	STEUERBLOCK
EINFUELLDECKEL 42 PA	10815416	19	1	399	916163008	WISCHANLAGE EINBAU
EINLASSMODUL SCRONLY SP	10144031	10	1	495	11403708	SCR-BAUGRUPPE
EINLASSVENTIL	10144556	2	2	191	10149579	ZYLINDERKOPF VORM.
EINLEGEBRUECKE	602735508	39	47	518	919503008	EINBAUTEILE SCHALTSCHRAN
EINLEGETEIL 10X91X152 PA6	97032167	7	4	121	919644008	HYDRAULISCHE ABSTUETZUN
EINMAULSCHLUESSEL DIN 8	885132208	21	1	144	928569808	GRUNDWERKZEUG
EINMAULSCHLUESSEL DIN 8	790004608	22	1	144	928569808	GRUNDWERKZEUG
EINSCHRAUBSTUTZEN GE 38S	7410455	663	4	52	96035801	HYDRAULIK MITTELTEIL
EINSCHRAUBSTUTZEN GE 38S	7410455	625	1	90	96035796	HYDR.FAHRANTRIEB
EINSCHRAUBSTUTZEN GE 38S	7410455	625	1	107	96035792	HYDR.FAHRANTRIEB
EINSCHRAUBSTUTZEN ISO 8	7018842	684	3	541	96045351	HYDRAULIK OBERWAGEN
EINSCHRAUBVERSCHRAUBU	10476913	654	1	52	96035801	HYDRAULIK MITTELTEIL
EINSPRITZLEITUNG R-MOTOR	10143826	1	1	216	10143825	EINSPRITZLEITUNGEN
EINSPRITZLEITUNG R-MOTOR	10143827	2	3	216	10143825	EINSPRITZLEITUNGEN
EINSPRITZLEITUNGEN R-MOT	10143825	215	1	162	12856862	DIESELMOTOR
EINSTECKHUELSE E10-7	772002708	31	1	483	918484108	HARNSTOFFANLAGE
EINSTECKHUELSE E8-6 EDEL	10871759	36	2	483	918484108	HARNSTOFFANLAGE
EINSTELLSCHEIBE 8X74X74 S	97028396	8	1	365	917259908	KRANFUEHRERKABINE ANBA
EINSTELLSCHRAUBE M10X1	10012225	5	2	194	11448005	KIPPHEBELBOCK VORM.
EINWEISER ISO 8062-3DCTG6	972426708	49	4	644	917292008	TELESKOP 1 VORM.
EINWEISER ISO 8062-3DCTG6	972426708	49	4	648	917292108	TELESKOP 2 VORM.
EINWEISER ISO 8062-3DCTG6	972426708	49	4	652	917292208	TELESKOP 3 VORM.
EINWEISER ISO 8062-3DCTG6	972426708	49	4	656	917292308	TELESKOP 4 VORM.
EINWEISER ISO 8062-3DCTG6	972426708	49	4	661	917292408	TELESKOP 5 VORM.
EINZELADERABDICHTUNG	602331508	804	9	515	96037137	KABELSTRANG
EINZELADERABDICHTUNG 1,2	602330808	802	12	45	96045228	KABELSTRANG
EINZELADERABDICHTUNG 1,2	602330808	802	2	447	96036955	KABELSTRANG
EINZELADERABDICHTUNG 1,2	602330808	802	14	513	96037136	KABELSTRANG
EINZELADERABDICHTUNG 1,2	602330808	802	4	515	96037137	KABELSTRANG
EINZELADERABDICHTUNG 1,4-	10424625	828	4	447	96036955	KABELSTRANG
EINZELADERABDICHTUNG 1,4-	10424625	828	2	511	96045385	KABELSTRANG
EINZELADERABDICHTUNG 1,4-	10424625	828	9	515	96037137	KABELSTRANG
EINZELADERABDICHTUNG 2	605619708	813	1	45	96045228	KABELSTRANG
EINZELADERABDICHTUNG 2	605619708	813	37	511	96045385	KABELSTRANG
EINZELADERABDICHTUNG 2	605619708	813	13	513	96037136	KABELSTRANG
EINZELADERABDICHTUNG 2,2-	602330508	801	6	513	96037136	KABELSTRANG
EINZELADERABDICHTUNG DI	605619908	821	4	511	96045385	KABELSTRANG
EINZELADERABDICHTUNG DI	605619808	816	3	511	96045385	KABELSTRANG
EINZELADERABDICHTUNG DI	605619808	816	2	515	96037137	KABELSTRANG
EINZELDICHTUNG 1,0-1,5MM2	10014387	830	69	513	96037136	KABELSTRANG
EINZELDICHTUNG 1,0-1,5MM2	10014387	830	6	515	96037137	KABELSTRANG
EL.ANLAGE AUSLEGER	917262208	203	1	11		LIEBHERR LTR 1220
EL.ANLAGE DREHBUEHNE	919410708	179	1	10		LIEBHERR LTR 1220
EL.DREHBUEHNENARRETIER	966633508	18	1	508	968128908	EL.GEBER U.ENDSCHALTER
EL.GEBER U.ENDSCHALTER	968128908	11	1	506	919410708	EL.ANLAGE DREHBUEHNE
EL.KUEHLWASSERVORWAE	917368108	10	1	602	918377508	KUEHLWASSERVORWAERM
EL.TEILE VERSANDMONTAGE	915731908	39	2	9		LIEBHERR LTR 1220
ELASTOMEREINSATZ DIN 301	7363897	326	4	478	969763408	VERROHRUNG DRUCKLUFTA
ELEKTRIK 2.HUBENDSCHALTE	918197708	362	1	11		LIEBHERR LTR 1220
ELEKTRIK ANBAUTEILE	968929208	100	1	494	96048826	ABGASANLAGE VORM.
ELEKTRIK ANBAUTEILE KABIN	96036957	6	1	444	918731608	ELEKTRIK KRANFUEHRERKAB
ELEKTRIK ANLENKSTUECK	966290908	3	1	677	917262208	EL.ANLAGE AUSLEGER
ELEKTRIK ARBEITSSCHEINW	96028878	20	4	604	918989008	A-SCHEINWERFER DREHBUE
ELEKTRIK ARBEITSSCHEINW	96024265	20	1	628	919028808	MECH.TEILE VERSANDMONT

Bezeichnung	Artikel	Pos.	Menge	Seite	Baugruppe	Bezeichnung
ELEKTRIK ARMATURENKONS	96030724	1	1	449	96036957	ELEKTRIK ANBAUTEILE KABIN
ELEKTRIK AUSSCHUBMECHA	966361408	6	1	677	917262208	EL.ANLAGE AUSLEGER
ELEKTRIK BALLASTIERUNG	966633408	17	1	508	968128908	EL.GEBER U.ENDSCHALTER
ELEKTRIK BATTERIEKASTEN	96023914	100	1	318	918955408	BATTERIEKASTEN KPL.
ELEKTRIK DREHWERK	966720708	50	1	508	968128908	EL.GEBER U.ENDSCHALTER
ELEKTRIK DREHWERTGEBER	966633308	30	1	508	968128908	EL.GEBER U.ENDSCHALTER
ELEKTRIK KOPFSTUECK	968708608	4	1	677	917262208	EL.ANLAGE AUSLEGER
ELEKTRIK KRANFUEHRERKAB	918731608	143	1	10		LIEBHERR LTR 1220
ELEKTRIK MESS-U.WARNEIN	917598408	1	1	710	917379608	TRAEGER MESS-U.WARNEIN
ELEKTRIK MITTELSTUECK	96045225	1	1	32	919510708	ELEKTRIK RAUPE
ELEKTRIK RAUPE	919510708	2	1	27	919499308	RAUPENMITTELTEIL KPL.
ELEKTRIK VORBEREITUNG WI	968315808	18	1	589	967784808	HYDRAULIK HILFSHUBWERK
ELEKTRIK WINDE 1	966631008	100	1	352	917259708	HAUPTHUBWERK
ELEKTRIK WINDE 2	966298308	100	1	577	967969608	HILFSHUBWERK WINDE 2 VO
ELEKTRONIKEINHEIT	10650399	35	1	419	10877138	FAHRERSITZ
ELEKTROPUMPE	10327065	1	1	502	917261208	ZENTRALSCHMIERANLAGE O
ELEKTROPUMPE EP-1	11347526	1	1	127	917257108	ZENTRALSCHMIERUNG RAUP
ELEKTROZYLINDER 24V	10292008	4	1	372	916177508	TRITT KPL.
ENDGEHAEUSE DIN 72585 AP	692406008	512	2	510	96045385	KABELSTRANG
ENDGEHAEUSE DIN 72585 AP	692406008	517	1	514	96037137	KABELSTRANG
ENDKAPPE 34	553181108	6	1	464	96020359	ZUSATZHEIZUNG VORM.
ENDKAPPE 42,3	553174108	8	1	462	918759808	ZUSATZHEIZUNG OW
ENDREGELVENTIL pmax=4.5	10138450	14	1	160	12856862	DIESELMOTOR
ENDROHR X5CRNI18-10	969759208	104	1	491	919372008	ABGASANLAGE
ENDSCHALTER ANBAU	968019508	50	1	17	919617108	RAUPENFAHRWERK KPL.
ENDSCHALTER ANBAU AUSLE	965281408	10	1	506	919410708	EL.ANLAGE DREHBUEHNE
ENDSCHALTER ANBAU AUSL	966591508	10	1	678	966290908	ELEKTRIK ANLENKSTUECK
ENDSCHALTER AUSLEGER ST	966563508	8	1	683	966591508	ENDSCHALTER ANBAU
ENDSCHALTER TASTEND SPF	606053108	(11)	2	508	968128908	EL.GEBER U.ENDSCHALTER
ENDSCHALTER TASTEND SPF	606053108	(11)	2	508	968128908	EL.GEBER U.ENDSCHALTER
ENDSCHALTER TQ200-RFID	10678395	2	1	676	966200208	GEBER KOPFSTUECK
ENDSCHALTER TQ200-RFID	10678395	7	1	707	966479308	GEBER HUB OBEN ENDSCHAL
ENDSCHALTER VORM.	968036408	1	2	25	968019508	ENDSCHALTER ANBAU
ENDWINKEL	602794608	8	2	524	967589508	KLEMMENLEISTE
ENDWINKEL	602794608	297	2	685	968708708	KLEMMKASTEN KPL.
ENTLUEFTUNG	10292000	35	2	383	917305408	INNENVERKLEIDUNG EINBAU
ENTLUEFTUNGSROHR	10292724	29	1	128	11347526	ELEKTROPUMPE
ENTLUEFTUNGSSCHRAUBE G	602501308	11	1	37	966167808	DECKEL KPL.
ENTLUEFTUNGSSCHRAUBE G	602501308	18	1	681	10354493	LEITUNGSTROMMEL
ENTLUEFTUNGSSCHRAUBE M	10488662	307	1	682	966291008	KLEMMKASTEN
ENTLUEFTUNGSSCHRAUBE M	10488662	293	1	685	968708708	KLEMMKASTEN KPL.
ENTLUEFTUNGSSTUTZEN	927501901	2	1	341	927554301	ENTLUEFTUNGSSTUTZEN
ENTLUEFTUNGSSTUTZEN	927501901	13	1	361	90200104	OELMESSEINRICHTUNG
ENTLUEFTUNGSSTUTZEN	927501901	13	1	585	90200103	OELMESSEINRICHTUNG
ENTLUEFTUNGSSTUTZEN	927554301	77	1	340	90008901	DREHWERKANTRIEB
ENTLUEFTUNGSVENTIL	10097910	10	1	325	968999708	KRAFTSTOFFBEHAELTER VO
ENTLUEFTUNGSVENTIL	10493944	68	1	668	10876933	TELESKOPIERZYLINDER
ENTLUEFTUNGSVENTIL	11622218	3	1	414	969085208	HEIZUNG VORM.
ENTLUEFTUNGSVENTIL	11622218	29	2	464	96020359	ZUSATZHEIZUNG VORM.
ENTLUEFTUNGSVENTIL	721114701	83	1	357	939292201	PLANETENGETRIEBE
ENTNAHMEMODUL L=682,5 24	12503120	2	1	484	968570808	HARNSTOFFTANK
ENTWAESSERUNGSSTOPFEN	602501208	10	2	36	96045226	SCHALTKASTEN VORM.
ENTWAESSERUNGSSTOPFEN	602501208	308	1	682	966291008	KLEMMKASTEN
ENTWAESSERUNGSSTOPFEN	602501208	292	1	685	968708708	KLEMMKASTEN KPL.
ENTWAESSERUNGSVENTIL 22	502921908	151	2	478	969763408	VERROHRUNG DRUCKLUFTA
ERSATZELEMENT OEL	10136799	1	1	174	10136798	KURBELGEHAEUSEENTLUEFT
ERSATZTEILSATZ GRIFF	10873517	5	1	454	10343693	MEISTERSCHALTER
ES BOLZEN 8X16 FE/ZN8/CN/T	725111808	11	2	433	968923508	KLAPPE VORM.RECHTS
ES BOLZEN 8X16 FE/ZN8/CN/T	725111808	10	2	441	969016008	KLAPPE VORM.VORN LINKS
ETIKETTEN 10X90 POLYESTE	11007853	301	1	40	968252908	BTB PROGRAMMIERT

Bezeichnung	Artikel	Pos.	Menge	Seite	Baugruppe	Bezeichnung
ETIKETTEN 10X90 POLYESTE	11007853	(3)	1	453	96022872	ARMATURENBRETT DACH
ETIKETTEN 10X90 POLYESTE	11007853	301	1	528	968253608	UNIVERSAL EIN-AUSGANGS
FAECHERSCHEIBE DIN 6798 A	12102694	18	1	38	968054008	MONTAGEPLATTE VORM.
FAECHERSCHEIBE DIN 6798 A	12102694	12	1	378	968514508	SCHALTSCHRANKDECKEL EIN
FAECHERSCHEIBE DIN 6798 A	12102694	4	12	523	922648308	KLEMMBRETT VORM.
FAECHERSCHEIBE DIN 6798 J	425220708	43	4	449	96036957	ELEKTRIK ANBAUTEILE KABIN
FAECHERSCHEIBE DIN 6798 J	425220708	63	16	522	969256608	GRUNDAUFBAU
FAECHERSCHEIBE DIN 6798 J	425221108	60	1	522	969256608	GRUNDAUFBAU
FAEUSTEL DIN 6475 3000	790031108	61	1	144	928569808	GRUNDWERKZEUG
FAHRANTRIEB FAT 600P049	90028956	2	1	70	919254308	RAUPENTRAEGER VORM.LI.
FAHRANTRIEB FAT 600P049	90028956	2	1	100	919254408	RAUPENTRAEGER VORM.RE.
FAHRERSITZ 1030/880NTS	10877138	1	1	417	918810308	STEUERSTAND
FALTENBALG	571912308	2	1	454	10343693	MEISTERSCHALTER
FEDERBOLZEN	510782808	6	1	561	511419608	DRUCKBEGRENZUNGSVENTI
FEDERBOLZEN	510797308	6	1	558	511433908	DRUCKBEGRENZUNGSVENTI
FEDERDRUCKLAMELLENBRE	10176328	80	1	340	90008901	DREHWERKANTRIEB
FEDERDRUCKLAMELLENBRE	502037001	80	1	73	90028956	FAHRANTRIEB
FEDERDRUCKLAMELLENBRE	502037201	70	1	357	939292201	PLANETENGETRIEBE
FEDERDRUCKLAMELLENBRE	502037201	70	1	583	939294201	PLANETENGETRIEBE
FEDERRING DIN 127 A 6 FST	424000508	(12)	3	577	967969608	HILFSHUBWERK WINDE 2 VO
FEDERRING DIN 128 A 5 FST 4	12227697	19	6	320	96023117	BATTERIEKASTEN VORM.
FEDERRING DIN 7980 8 FST V	424100708	8	6	346	510229408	HYDROMOTOR
FEDERSATZ	10490072	20	1	675	10802064	SEILLAENGENGEBER
FEDERSCHEIBE DIN 137 10 X1	10411093	6	2	241	10219978	STARTER
FEDERSCHEIBE DIN 137 10 X1	10411093	6	2	243	11386644	STARTER VORM.
FEDERSCHEIBE DIN 137 6 X1	10411092	4	1	241	10219978	STARTER
FEDERSCHEIBE DIN 137 6 X1	10411092	4	1	243	11386644	STARTER VORM.
FEDERSCHEIBE DIN 137 B 10	425050908	7	3	263	9078301	VERSCHLUSSTEILE
FEDERSCHEIBE DIN 137 B 3 V	570824177	30	2	47	11346779	SCHLEIFRINGUEBERTRAGER
FEDERSCHEIBE DIN 137 B 6	425050608	47	11	47	11346779	SCHLEIFRINGUEBERTRAGER
FEDERSTECKER 3-3,5-62 480	10875868	4	1	117	968331708	SICHERUNGSHALTER
FEDERSTECKER 4,5X4X78 A2	433206208	2	2	738	968090008	HAKENSTANGE ANBAU
FEDERSTECKER 6 ZINC COA	433206408	23	1	365	917259908	KRANFUEHRERKABINE ANBA
FEDERTELLER	510782508	3	1	561	511419608	DRUCKBEGRENZUNGSVENTI
FEDERTELLER	510797008	3	1	558	511433908	DRUCKBEGRENZUNGSVENTI
FEDERTELLER	570110808	6	1	348	570109508	TRIEBWERK
FEDERTELLER	7023666	4	1	301	10472208	VERSTELLUNG
FEDERTELLER OBEN 41Cr4	9074480	7	4	191	10149579	ZYLINDERKOPF VORM.
FEINZAHNKNARRE DIN 3120-A	12103320	(1)	1	71	919254308	RAUPENTRAEGER VORM.LI.
FERNSTEUEREMPFAENGER	11212256	100	1	40	968252908	BTB PROGRAMMIERT
FERNSTEUERSENDER SPF	11160970	(1)	1	453	96022872	ARMATURENBRETT DACH
FERRIT KLAPPBAR	617000608	528	1	447	96036955	KABELSTRANG
FERRIT KLAPPBAR	617000608	512	1	448	96036956	KABELSTRANG
FETT CTK 668190 50KG	861303501	38	0.1	354	90208882	KOMPAKTSEILWINDE
FETT NBU 30 1KG DOSE	10285708	100	1	169	10154458	ZYLINDER
FETT NBU 30 1KG DOSE	10285708	100	1	170	10147687	AGGREGATETRAEGER ANBA
FETT NBU 30 1KG DOSE	10285708	100	1	196	10120186	MASSENAUSGLEICH ANBAU
FETT NBU 30 1KG DOSE	10285708	100	1	203	10148432	SCHMIEROELPUMPE MIT BE
FETT NBU 30 1KG DOSE	10285708	100	1	218	10145173	ANSAUGSTUTZEN ANBAU
FETT NBU 30 1KG DOSE	10285708	100	1	220	10149677	VERBINDUNGSLEITUNG ANBA
FETT NBU 30 1KG DOSE	10285708	100	1	223	10127566	LUFTPRESSER ANBAU
FETT NBU 30 1KG DOSE	10285708	100	1	231	10142733	WASSERPUMPE MIT BEFEST.
FETT NBU 30 1KG DOSE	10285708	100	1	232	10148215	THERMOSTATGEHAEUSE AN
FETT NBU 30 1KG DOSE	10285708	100	1	234	10142742	KUEHLMITTELKRUEMMER AN
FETT NBU 30 1KG DOSE	10285708	100	1	247	10115829	SCHWUNGRADGEHAEUSE AN
FETT NBU 30 1KG DOSE	10285708	100	1	250	10127979	VERSCHLUSSTEILE
FETT NBU 30 1KG DOSE	10285708	(100)	1	258	12583633	MOTORREGELUNGSENSORIK
FETT NBU 30 1KG DOSE	10285708	(100)	1	258	12583633	MOTORREGELUNGSENSORIK
FETT NBU 30 1KG DOSE	10285708	(100)	1	260	10125687	NEBENABTRIEB ANBAU
FETT NBU 30 1KG DOSE	10285708	100	1	262	9077386	NEBENABTRIEB VORM.

Bezeichnung	Artikel	Pos.	Menge	Seite	Baugruppe	Bezeichnung
FETT STABURAGS NBU 30 0.01	10282622	100	1	179	10121667	VERBINDUNGSSTUECK M.O-R
FETT STABURAGS NBU 30 0.01	10282622	100	1	197	10138230	NOCKENWELLE KPL.
FETT STABURAGS NBU 30 0.01	10282622	100	1	244	10115664	VERSCHLUSSTEILE
FEUERLOESCHER DIN EN 3	12101159	4	1	145	928620108	ZUBEHOER
FILTER	11083438	2	1	412	11083498	HEIZKLIMAGERAET
FILTER	12211223	(1)	1	484	968570808	HARNSTOFFTANK
FILTER SYNFASAN	11182242	66	1	384	917305408	INNENVERKLEIDUNG EINBAU
FILTEREINSATZ 1m³/min 10µm	510671808	(1)	1	335	969050308	OELBEHAELTER VORM.
FILTEREINSATZ OEL 10µm	10037616	(1)	1	538	96045351	HYDRAULIK OBERWAGEN
FILTEREINSATZ OEL 10µm	10037623	(1)	1	538	96045351	HYDRAULIK OBERWAGEN
FILTERKONSOLE	12455699	1	1	213	10133928	FILTERKONSOLE VORM.
FILTERKONSOLE VORM.	10133928	1	1	212	10146791	KRAFTSTOFF-FEINFILTERAN
FILTERPATRONE 0,005m³/min 2	510671108	158	1	90	96035796	HYDR.FAHRANTRIEB
FILTERPATRONE 0,005m³/min 2	510671108	158	1	107	96035792	HYDR.FAHRANTRIEB
FILTERPATRONE 0,005m³/min 2	510671108	156	2	538	96045351	HYDRAULIK OBERWAGEN
FILTERPATRONE 0,005m³/min 2	510671108	168	1	589	967784808	HYDRAULIK HILFSHUBWERK
FILTERPATRONE 0,005m³/min 2	510671108	154	1	688	967784508	HYDRAULIK TELE
FLACHDICHTRING 17,4X24X1,	710121114	6	2	76	11320954	LEITRADEINHEIT
FLACHDICHTUNG	704274908	10	4	37	966167808	DECKEL KPL.
FLACHKOPFSCHRAUBE ISO 7	408311208	23	4	518	919503008	EINBAUTEILE SCHALTSCHRAN
FLACHKOPFSCHRAUBE ISO 7	408400701	266	2	685	968708708	KLEMMKASTEN KPL.
FLACHKOPFSCHRAUBE ISO 70	12219804	39	4	412	11083498	HEIZKLIMAGERAET
FLACHKOPFSCHRAUBE ISO 7	408401901	41	4	449	96036957	ELEKTRIK ANBAUTEILE KABIN
FLACHKOPFSCHRAUBE ISO 70	11658059	9	4	370	96015921	BEDIENELEMENTE EINBAU
FLACHKOPFSCHRAUBE ISO 70	10876384	50	2	522	969256608	GRUNDAUFBAU
FLACHRUNDSCHRAUBE DIN	10181375	300	2	280	96034631	KUEHLER VORM.
FLACHRUNDSCHRAUBE DIN	10181375	20	4	609	968994408	KAMERAHALTER VORM.
FLACHRUNDSCHRAUBE DIN	10181375	11	4	612	968993508	KAMERAHALTER VORM.
FLACHSCHELLE 114,3 EDELST	10296644	183	2	491	919372008	ABGASANLAGE
FLACHSICHERUNGSEINSATZ	604007108	35	12	518	919503008	EINBAUTEILE SCHALTSCHRAN
FLACHSICHERUNGSEINSATZ	604007208	36	10	518	919503008	EINBAUTEILE SCHALTSCHRAN
FLACHSICHERUNGSEINSATZ	604007308	37	7	518	919503008	EINBAUTEILE SCHALTSCHRAN
FLACHSICHERUNGSEINSATZ	604007608	38	1	518	919503008	EINBAUTEILE SCHALTSCHRAN
FLACHSICHERUNGSEINSATZ	604007708	32	8	518	919503008	EINBAUTEILE SCHALTSCHRAN
FLACHSICHERUNGSEINSATZ	604006908	515	1	43	96045227	KABELSTRANG
FLACHSICHERUNGSEINSATZ	604006908	33	8	518	919503008	EINBAUTEILE SCHALTSCHRAN
FLACHSICHERUNGSEINSATZ	604007008	505	1	43	96045227	KABELSTRANG
FLACHSICHERUNGSEINSATZ	604007008	34	12	518	919503008	EINBAUTEILE SCHALTSCHRAN
FLACHSTECKER	602304808	2	2	456	963398008	AXIALLUEFTER VORM.OBEN
FLACHSTECKER 0,5-1,0MM2	10097470	671	2	513	96037136	KABELSTRANG
FLACHSTECKER 1,0-2,5MM2	602323208	120	21	43	96045227	KABELSTRANG
FLACHSTECKER 2,8X0,5-1 VER	602323508	124	34	43	96045227	KABELSTRANG
FLACHSTECKER 2,8X0,5-1 VER	602323508	124	6	446	96036955	KABELSTRANG
FLACHSTECKER 6,3X1-2,5 SN	602203908	75	2	43	96045227	KABELSTRANG
FLACHSTECKER 6,3X1-2,5 SN	602203908	75	2	446	96036955	KABELSTRANG
FLACHSTECKER 6,3X1-2,5 SN	602203908	75	3	512	96037136	KABELSTRANG
FLACHSTECKERGEHAEUSE 1	11067932	525	14	520	96045387	DRAEHTE GRUNDAUFBAU KPL
FLACHSTECKERGEHAEUSE 1	602323308	503	3	43	96045227	KABELSTRANG
FLACHSTECKERGEHAEUSE 1	602323308	505	53	520	96045387	DRAEHTE GRUNDAUFBAU KPL
FLACHSTECKERGEHAEUSE	602208908	511	1	513	96037136	KABELSTRANG
FLACHSTECKERGEHAEUSE	602305908	517	1	43	96045227	KABELSTRANG
FLACHSTECKERGEHAEUSE	602305908	523	1	446	96036955	KABELSTRANG
FLACHSTECKERGEHAEUSE	602305908	3	1	456	963398008	AXIALLUEFTER VORM.OBEN
FLACHSTECKERGEHAEUSE	602305908	503	1	520	96045387	DRAEHTE GRUNDAUFBAU KPL
FLACHSTECKERGEHAEUSE	602325608	524	2	520	96045387	DRAEHTE GRUNDAUFBAU KPL
FLACHSTECKHUELSE 0,5-1,5	602320508	62	13	448	96036956	KABELSTRANG
FLACHSTECKHUELSE 6,3X0,5-	602303308	134	2	44	96045228	KABELSTRANG
FLACHSTECKHUELSE 6,3X0,5-	602303308	134	2	446	96036955	KABELSTRANG
FLACHSTECKHUELSE 6,3X0,5-	602303308	134	2	448	96036956	KABELSTRANG
FLACHSTECKHUELSE 6,3X0,5-	602303308	134	6	510	96045385	KABELSTRANG

Bezeichnung	Artikel	Pos.	Menge	Seite	Baugruppe	Bezeichnung
FLAECHENDICHTUNG 300ML	10354595	100	1	175	10132560	OELWANNE MIT BEFEST.
FLAECHENDICHTUNG 300ML	10354595	10	1	267	10141167	DS OELWANNE
FLANSCH	12100075	1	1	681	10354493	LEITUNGSTROMMEL
FLANSCH	12400857	3	1	196	10120186	MASSENAUSGLEICH ANBAU
FLANSCH	927504701	23	1	581	939294001	SEILTROMMEL
FLANSCH 10X137X137 S355M	97032260	21	1	283	968026308	KUPPLUNGSSTELLER
FLANSCH 10X65X37 ALMG3 H	97057024	4	1	499	918731908	LUFTFILTERANLAGE
FLANSCH 25.0X16 9 42CRMO4	970003708	9	1	280	96034631	KUEHLER VORM.
FLANSCH VORM.	10152832	8	1	197	10138230	NOCKENWELLE KPL.
FLANSCH VORM.	10152832	8	1	197	10138230	NOCKENWELLE KPL.
FLANSCH VORM.	11348648	8	1	197	10138230	NOCKENWELLE KPL.
FLANSCH VORM.	12408221	2	1	196	10120186	MASSENAUSGLEICH ANBAU
FLANSCHARMATUR FLK40-35-	10871016	206	1	276	919007708	ANTRIEBSAGGREGAT VORM.
FLANSCHARMATUR SFL60-50	11491125	412	1	277	919007708	ANTRIEBSAGGREGAT VORM.
FLANSCHHAELFTE CR6-FREI	510586608	502	4	589	967784808	HYDRAULIK HILFSHUBWERK
FLANSCHHAELFTE SAE 1 6000	510586908	506	6	540	96045351	HYDRAULIK OBERWAGEN
FLANSCHHAELFTE SAE 1 6000	510586908	501	4	589	967784808	HYDRAULIK HILFSHUBWERK
FLANSCHSTUTZEN AFG 38S	511517808	500	8	51	96035801	HYDRAULIK MITTELTEIL
FLANSCHSTUTZEN AFG 38S	511517808	500	2	90	96035796	HYDR.FAHRANTRIEB
FLANSCHSTUTZEN AFG 38S	511517808	500	2	107	96035792	HYDR.FAHRANTRIEB
FLANSCHSTUTZEN AFG 38S	511517808	510	3	540	96045351	HYDRAULIK OBERWAGEN
FLANSCHSTUTZEN AFG 38S	511517808	500	3	688	967784508	HYDRAULIK TELE
FLANSCHVERSCHRAUBUNG	511518808	520	1	540	96045351	HYDRAULIK OBERWAGEN
FLANSCHVERSCHRAUBUNG 1	97053934	402	2	277	919007708	ANTRIEBSAGGREGAT VORM.
FLANSCHVERSCHRAUBUNG B	10030904	511	1	540	96045351	HYDRAULIK OBERWAGEN
FLANSCHVERSCHRAUBUNG C	510037408	513	1	540	96045351	HYDRAULIK OBERWAGEN
FLANSCHVERSCHRAUBUNG C	510133208	519	1	540	96045351	HYDRAULIK OBERWAGEN
FLEXROHR X5CRNI18-10 SPF	97124963	101	1	491	919372008	ABGASANLAGE
FLUEGELSCHRAUBE DIN 316	4600612	202	2	71	919254308	RAUPENTRAEGER VORM.LI.
FLUEGELSCHRAUBE DIN 316	4600612	202	2	101	919254408	RAUPENTRAEGER VORM.RE.
FORMSCHLAUCH DN20 X3.5 B	97042067	62	1	464	96020359	ZUSATZHEIZUNG VORM.
FORMSCHLAUCH DN20 X3.5 B	97042069	8	1	414	969085208	HEIZUNG VORM.
FORMSCHLAUCH DN20 X3.5 B	97042069	16	1	462	918759808	ZUSATZHEIZUNG OW
FORMSCHLAUCH DN20 X3.5 B	97042071	9	1	414	969085208	HEIZUNG VORM.
FORMSCHLAUCH DN20 X3.5 B	97046324	10	1	414	969085208	HEIZUNG VORM.
FORMSCHLAUCH DN20 X3.5 B	97046326	13	1	414	969085208	HEIZUNG VORM.
FORMSCHLAUCH DN20 X3.5 B	97046327	15	1	414	969085208	HEIZUNG VORM.
FORMSCHLAUCH DN20 X3.5 B	97046328	16	1	414	969085208	HEIZUNG VORM.
FORMSCHLAUCH DN20 X3.5 B	97050852	15	1	462	918759808	ZUSATZHEIZUNG OW
FORMSCHLAUCH DN20 X3.5 B	97050857	11	1	414	969085208	HEIZUNG VORM.
FORMSCHLAUCH DN20 X3.5 B	97060781	60	1	464	96020359	ZUSATZHEIZUNG VORM.
FORMSCHLAUCH DN20 X3.5 B	97060786	55	1	464	96020359	ZUSATZHEIZUNG VORM.
FORMSCHLAUCH OEL NBR	973519308	253	1	276	919007708	ANTRIEBSAGGREGAT VORM.
FORMTEIL 317-1397-000 SUR	605212808	519	3	44	96045228	KABELSTRANG
FORMTEIL 317-1397-000 SUR	605212808	514	1	510	96045385	KABELSTRANG
FORMTEIL 317-1397-000 SUR	605212808	523	2	513	96037136	KABELSTRANG
FREMDEINSPEISUNG 230V-1	918462708	381	1	12		LIEBHERR LTR 1220
FRONTHAUBE LI.	967982708	2	1	439	969015908	DREHBUEHNENVERKLEIDUN
FRONTSCHEIBE 6X735X1506	97003558	1	1	393	966497908	FRONTSCHEIBE KPL.
FRONTSCHEIBE KPL.	966497908	1	1	390	916162508	SCHEIBEN EINBAU
FUEHRUNG	962625708	9	1	672	966134608	ANBAUTEILE ZYLINDER
FUEHRUNG 180X70X 50 PA6G	97093433	6	1	87	96034962	FUEHRUNG LI.
FUEHRUNG 180X70X 50 PA6G	97093433	6	1	104	96034980	FUEHRUNG RE.
FUEHRUNG 30.0X235 S355J2	97033304	2	2	475	967978908	VERRIEGELUNG VORM.
FUEHRUNG 30.0X345 S355J2	97030029	4	1	474	967928508	VERRIEGELUNG
FUEHRUNG 30.0X388 S355J2	97033305	3	1	475	967978908	VERRIEGELUNG VORM.
FUEHRUNG 306X48X37 ENA	977430408	10	2	417	918810308	STEUERSTAND
FUEHRUNG 80.0X76 35NICRM	97008548	2	1	459	966707708	SPIEGELHALTER VORM.
FUEHRUNG LI.	96034962	200	1	71	919254308	RAUPENTRAEGER VORM.LI.
FUEHRUNG RE.	96034980	200	1	101	919254408	RAUPENTRAEGER VORM.RE.

Bezeichnung	Artikel	Pos.	Menge	Seite	Baugruppe	Bezeichnung
FUEHRUNG SCHWK. GLASPE	966230608	28	1	405	917304708	SCHIEBETUER EINBAU
FUEHRUNG VORM.	966230508	27	1	405	917304708	SCHIEBETUER EINBAU
FUEHRUNGSBAND 160X25	7367564	6	2	78	10877686	SPANNER HYDR KPL
FUEHRUNGSBUCHSE 50,1X8	10470371	7	1	668	10876933	TELESKOPIERZYLINDER
FUEHRUNGSROHR	9079532	2	1	180	10150934	OELMESSSTAB KPL.
FUEHRUNGSSCHIENE 5X138	97032836	5	3	116	968046208	ANBAUTEILE
FUEHRUNGSSCHIENE 5X138	97032837	6	3	116	968046208	ANBAUTEILE
FUEHRUNGSSTANGE 45.0X4	97037244	60	1	71	919254308	RAUPENTRAEGER VORM.LI.
FUEHRUNGSSTANGE 45.0X4	97037244	60	1	101	919254408	RAUPENTRAEGER VORM.RE.
FUEHRUNGSSTANGE 45.0X4	97036914	40	4	17	919617108	RAUPENFAHRWERK KPL.
FUNKVORBEREITUNG OW	915432508	391	1	12		LIEBHERR LTR 1220
FUSSTASTER KPL.	96023875	56	1	449	96036957	ELEKTRIK ANBAUTEILE KABIN
FUSSWIPPE SPF	10297310	54	2	449	96036957	ELEKTRIK ANBAUTEILE KABIN
GASFEDER 12X80-100N ST	10476211	6	2	390	916162508	SCHEIBEN EINBAU
GASFEDER 19X60-550N	591067008	23	1	417	918810308	STEUERSTAND
GASFEDER 23X251-550N ST	11003837	17	2	390	916162508	SCHEIBEN EINBAU
GASFEDER 23X265-500N	591061908	10	2	433	968923508	KLAPPE VORM.RECHTS
GASFEDER 23X265-750N	591065008	9	2	441	969016008	KLAPPE VORM.VORN LINKS
GASSENSOR 0X51-0X52 NICH	12412141	(152)	2	494	96048826	ABGASANLAGE VORM.
GASSENSOR NICHT LACKIERE	10144038	(153)	1	494	96048826	ABGASANLAGE VORM.
GEBER ANLENKSTUECK	966473108	9	1	634	918804808	TELESKOPAUSLEGER KPL.
GEBER BALLASTUEBERWACH	918802108	195	2	11		LIEBHERR LTR 1220
GEBER HUB OBEN ENDSCHAL	966479308	1	1	706	918197708	ELEKTRIK 2.HUBENDSCHALTE
GEBER KOPFSTUECK	966200208	10	1	634	918804808	TELESKOPAUSLEGER KPL.
GEBER SPF	10876368	10	1	631	918802108	GEBER BALLASTUEBERWACH
GEBERANBAU AUSSCHUBM	966290708	30	1	672	966134608	ANBAUTEILE ZYLINDER
GEGENGEWICHT KPL.	967936908	1	1	623	917260608	GEGENGEWICHT M.BEFESTIG
GEGENGEWICHT KPL. 2400X 2	967916508	31	2	626	917404508	BALLAST
GEGENGEWICHT KPL. 2400X 2	967916508	41	1	627	917404008	ZUSATZBALLAST
GEGENGEWICHT KPL. 2400X 2	967916808	30	2	626	917404508	BALLAST
GEGENGEWICHT KPL. 2400X 2	967916808	40	1	627	917404008	ZUSATZBALLAST
GEGENGEWICHT M.BEFESTIG	917260608	146	1	10		LIEBHERR LTR 1220
GEGENGEWICHT SCHWK. SP	967937508	1	1	625	967936908	GEGENGEWICHT KPL.
GEGENMUTTER M20x1,5 PA6	10036629	10	2	603	917368108	EL.KUEHLWASSERVORWAE
GEGENMUTTER M25X1,5 PO	10042696	13	2	598	918462708	FREMDEINSPEISUNG
GEGENMUTTER PG16 KUNST	602419608	9	1	598	918462708	FREMDEINSPEISUNG
GEHAEUSE	511015208	1	1	561	511419608	DRUCKBEGRENZUNGSVENTI
GEHAEUSE	570063108	1	1	558	511433908	DRUCKBEGRENZUNGSVENTI
GEHAEUSE	570109108	3	1	346	510229408	HYDROMOTOR
GEHAEUSE 12-POL	10099861	510	1	43	96045227	KABELSTRANG
GEHAEUSE 12-POL	10099861	506	1	513	96037136	KABELSTRANG
GEHAEUSE 15-POLE	10099863	512	1	43	96045227	KABELSTRANG
GEHAEUSE 15-POLE	10099863	510	7	520	96045387	DRAEHTE GRUNDAUFBAU KPL
GEHAEUSE 18-POL	10099864	502	3	448	96036956	KABELSTRANG
GEHAEUSE 18-POL	10099864	519	5	520	96045387	DRAEHTE GRUNDAUFBAU KPL
GEHAEUSE 21-POLE	10099856	501	2	43	96045227	KABELSTRANG
GEHAEUSE 21-POLE	10099856	521	9	520	96045387	DRAEHTE GRUNDAUFBAU KPL
GEHAEUSE 4-POL	602331308	507	4	446	96036955	KABELSTRANG
GEHAEUSE 4-POL	602331308	505	2	448	96036956	KABELSTRANG
GEHAEUSE 4-POL	602331308	501	1	516	96037133	LEITUNG
GEHAEUSE 4-POL	602331308	504	32	520	96045387	DRAEHTE GRUNDAUFBAU KPL
GEHAEUSE 4-POL	602331308	501	1	615	96043733	KABELSTRANG
GEHAEUSE 4-POL	602339308	507	3	44	96045228	KABELSTRANG
GEHAEUSE 6-POL	602325508	506	3	446	96036955	KABELSTRANG
GEHAEUSE 6-POL	602325508	510	1	448	96036956	KABELSTRANG
GEHAEUSE 6-POL	602325508	504	1	510	96045385	KABELSTRANG
GEHAEUSE 6-POL	602325508	526	2	520	96045387	DRAEHTE GRUNDAUFBAU KPL
GEHAEUSE 8-POL	602300508	514	1	446	96036955	KABELSTRANG
GEHAEUSE 8-POL	602300608	516	1	446	96036955	KABELSTRANG
GEHAEUSE 8-POL	602301408	501	1	44	96045228	KABELSTRANG

Bezeichnung	Artikel	Pos.	Menge	Seite	Baugruppe	Bezeichnung
GEHAEUSE 8-POL	602301408	507	2	520	96045387	DRAEHTE GRUNDAUFBAU KPL
GEHAEUSE 8-POL	602301408	502	1	615	96043733	KABELSTRANG
GEHAEUSE 9-POL	10099860	508	1	43	96045227	KABELSTRANG
GEHAEUSE 9-POL	10099860	527	2	520	96045387	DRAEHTE GRUNDAUFBAU KPL
GEHAEUSE GD-ZN SW GEPU	704253308	6	4	37	966167808	DECKEL KPL.
GEHAEUSE GD-ZN SW GEPU	704253308	3	5	79	967972208	DECKEL VORM.
GEHAEUSE GD-ZN SW GEPU	704253308	3	2	80	967972308	DECKEL VORM.
GEHAEUSE GD-ZN SW GEPU	704253308	3	2	81	967972408	DECKEL VORM.
GEHAEUSE GD-ZN SW GEPU	704253308	3	2	82	968270108	DECKEL VORM.
GEHAEUSE GD-ZN SW GEPU	704253308	3	2	83	968274208	DECKEL VORM.
GEHAEUSE GD-ZN SW GEPU	704253308	3	5	102	968055808	DECKEL VORM.
GEHAEUSE GD-ZN SW GEPU	704253308	13	1	320	96023117	BATTERIEKASTEN VORM.
GEHAEUSE PUR SPF	975850708	7	1	383	917305408	INNENVERKLEIDUNG EINBAU
GELENKBOLZENSCHELLE 33	12102925	180	2	494	96048826	ABGASANLAGE VORM.
GELENKBOLZENSCHELLE 33	12102925	184	1	494	96048826	ABGASANLAGE VORM.
GELENKBOLZENSPANNBAND	11600236	42	2	483	918484108	HARNSTOFFANLAGE
GELENKKOPF	11691377	2	1	366	11214363	KIPPZYLINDER
GELENKLAGER	11691375	1	1	366	11214363	KIPPZYLINDER
GELENKSTIFT	10475198	11	4	305	10871282	VERSTELLPUMPE
GENERATOR VORM. 4.32KW	10142863	440	1	164	12856862	DIESELMOTOR
GERAETESTECKDOSE 3-POL	605007908	505	3	44	96045228	KABELSTRANG
GERAETESTECKDOSE 3-POL	605007908	502	34	510	96045385	KABELSTRANG
GERAETESTECKDOSE 3-POL	605007908	502	13	513	96037136	KABELSTRANG
GERAETESTECKER DIN 43650	605006608	510	2	44	96045228	KABELSTRANG
GERAETESTECKER DIN 43650	605006608	503	3	510	96045385	KABELSTRANG
GERAEUSCHDAEMPFER	502661608	153	1	478	969763408	VERROHRUNG DRUCKLUFTA
GETRIEBEDECKEL	939251801	65	1	340	90008901	DREHWERKANTRIEB
GEWINDEANSCHLUSSSTUTZE	939599301	1	2	361	90200104	OELMESSEINRICHTUNG
GEWINDEANSCHLUSSSTUTZE	939599301	1	2	585	90200103	OELMESSEINRICHTUNG
GEWINDEBOLZEN 20X53X78	97096918	2	2	417	918810308	STEUERSTAND
GEWINDEBOLZEN 25.0X160 S	97043051	13	8	30	917511508	RAUPENMITTELTEIL VORM.
GEWINDEBOLZEN 80.0X816 3	97046349	2	1	721	968728808	KONSOLE VORM.
GEWINDEBOLZEN DIN 976 M	10332987	7	4	410	917676208	HEIZUNG KRANFUEHRERKAB
GEWINDEBUCHSE	9079078	9	1	192	10149578	ZYLINDERKOPF
GEWINDEFORMSCHRAUBE D	12102051	20	4	417	918810308	STEUERSTAND
GEWINDEGRIFF SCHWK. FE//	925642908	28	4	121	919644008	HYDRAULISCHE ABSTUETZUN
GEWINDEGRIFF SCHWK. FE//	925642908	18	1	721	968728808	KONSOLE VORM.
GEWINDEPLATTE 10X180X30	97051989	38	1	365	917259908	KRANFUEHRERKABINE ANBA
GEWINDEPLATTE 10X70X20 S	97045388	27	2	352	917259708	HAUPTHUBWERK
GEWINDEPLATTE 10X80X170	97030032	7	2	474	967928508	VERRIEGELUNG
GEWINDEPLATTE 15X40X130	953147708	8	1	731	917267508	TRANSPORTHALTERUNG DKS
GEWINDEPLATTE 20X185X45	979243508	3	1	394	965784408	DACHSCHEIBE VORM.
GEWINDEPLATTE 20X40X315	974911108	48	1	731	917267508	TRANSPORTHALTERUNG DKS
GEWINDEPLATTE 6X20X40 S	97053770	7	2	737	917268208	LEITER ANBAU
GEWINDEPLATTE 8X110X35 S	97000276	4	1	405	917304708	SCHIEBETUER EINBAU
GEWINDEPLATTE 8X20X60 S	953695308	18	2	21	96034894	SCHUTZBLECH KPL.LI.
GEWINDEPLATTE 8X20X60 S	953695308	18	2	24	96034977	SCHUTZBLECH KPL.RE.
GEWINDEPLATTE 8X20X60 S	953695308	9	4	320	96023117	BATTERIEKASTEN VORM.
GEWINDEPLATTE 8X20X60 S	953695308	6	2	405	917304708	SCHIEBETUER EINBAU
GEWINDEPLATTE 8X20X60 S	953695308	6	6	433	968923508	KLAPPE VORM.RECHTS
GEWINDEPLATTE 8X20X60 S	953695308	4	4	441	969016008	KLAPPE VORM.VORN LINKS
GEWINDEPLATTE 8X70X20 S	97045387	26	6	352	917259708	HAUPTHUBWERK
GEWINDEPLATTE 8X98X60 S	97000277	5	1	405	917304708	SCHIEBETUER EINBAU
GEWINDEPLATTE M6 PA6GF3	11004117	28	2	393	966497908	FRONTSCHEIBE KPL.
GEWINDEPLATTE M8	704262608	22	2	320	96023117	BATTERIEKASTEN VORM.
GEWINDESICHERUNG 50ML	811208001	102	1	177	10155227	OELWANNE VORM.
GEWINDESTANGE 5X0X0 X5	97038268	9	1	612	968993508	KAMERAHALTER VORM.
GEWINDESTIFT	570435308	39	1	668	10876933	TELESKOPIERZYLINDER
GEWINDESTIFT DIN 913 M10X	404402708	30	1	472	10877810	BALLASTIERZYLINDER
GEWINDESTIFT DIN 913 M10X	404402908	31	1	472	10877810	BALLASTIERZYLINDER

Bezeichnung	Artikel	Pos.	Menge	Seite	Baugruppe	Bezeichnung
GEWINDESTIFT DIN 913 M10X6	7623427	20	2	305	10871282	VERSTELLPUMPE
GEWINDESTIFT DIN 913 M12X2	404403608	9	2	472	10877810	BALLASTIERZYLINDER
GEWINDESTIFT DIN 913 M5X6	510762108	(301)	3	275	919007708	ANTRIEBSAGGREGAT VORM.
GEWINDESTIFT DIN 913 M6X25	404400508	16	1	405	917304708	SCHIEBETUER EINBAU
GEWINDESTIFT DIN 913 M6X25	404400508	5	1	696	511479408	LASTHALTEVENTIL
GEWINDESTIFT ISO 4026 M10X	10179470	4	1	421	962282208	ARMLEHNE LINKS
GEWINDESTIFT ISO 4026 M10X	10179470	4	1	423	962282308	ARMLEHNE RECHTS
GEWINDESTIFT ISO 4026 M12X	000608250	12	5	628	919028808	MECH.TEILE VERSANDMONT
GEWINDESTIFT ISO 4026 M20X	10875481	50	4	644	917292008	TELESKOP 1 VORM.
GEWINDESTIFT ISO 4026 M20X	10875481	50	4	648	917292108	TELESKOP 2 VORM.
GEWINDESTIFT ISO 4026 M20X	10875481	50	4	652	917292208	TELESKOP 3 VORM.
GEWINDESTIFT ISO 4026 M20X	10875481	50	4	656	917292308	TELESKOP 4 VORM.
GEWINDESTIFT ISO 4026 M20X	10875481	50	4	661	917292408	TELESKOP 5 VORM.
GEWINDESTIFT ISO 4026 M6X	12100613	3	1	420	96032222	NACHARBEIT ARMLEHNE LI.
GEWINDESTIFT ISO 4026 M6X	12100613	3	1	422	96032223	NACHARBEIT ARMLEHNE RE.
GEWINDESTIFT ISO 4026 M6X3	510753308	27	2	372	916177508	TRITT KPL.
GEWINDESTIFT ISO 4026 M8X	12100292	12	2	705	917268408	MASTNASE
GEWINDESTIFT ISO 4026 M8X	12100292	3	2	708	967321308	HALTERUNG 2.HUB OBEN
GEWINDESTIFT ISO 4028 M8X2	4901247	29	1	472	10877810	BALLASTIERZYLINDER
GEWINDESTIFT M6X50 A2-70	10450694	25	1	393	966497908	FRONTSCHEIBE KPL.
GEWINDESTIFT M6X50 A2-70	10450694	22	1	405	917304708	SCHIEBETUER EINBAU
GEWINDETEIL EDELSTAHL	97037948	5	1	612	968993508	KAMERAHALTER VORM.
GEWINDETRAEGER FE//ZNNI8/	963062208	25	1	429	96036790	DREHBUEHNENVERKLEIDUN
GEWINDETRAEGER FE//ZNNI8/	964307108	17	2	429	96036790	DREHBUEHNENVERKLEIDUN
GEWINDETRAEGER FE//ZNNI8/	964813808	15	1	275	919007708	ANTRIEBSAGGREGAT VORM.
GEWINDETRAEGER FE//ZNNI8/	968655508	18	1	429	96036790	DREHBUEHNENVERKLEIDUN
GITTERROST-P T725X564X30/	97053346	19	1	439	969015908	DREHBUEHNENVERKLEIDUN
GLASEINHEIT 203X154	10286840	(1)	1	424	916049908	SPIEGELANBAU KRANFUEHR
GLEICHSTROMGETRIEBEMO	10355140	2	1	128	11347526	ELEKTROPUMPE
GLEICHSTROMGETRIEBEMO	10355140	2	1	504	10327065	ELEKTROPUMPE
GLEITBLECH 520X50X 13 CU	97043682	60	8	17	919617108	RAUPENFAHRWERK KPL.
GLEITBLECH 520X57X 18 CU	97043683	61	8	18	919617108	RAUPENFAHRWERK KPL.
GLEITBLECH 560X46X 35 CU	97049098	59	8	17	919617108	RAUPENFAHRWERK KPL.
GLEITBLOCK 110X56X30 PA6	97032618	2	1	26	968036408	ENDSCHALTER VORM.
GLEITKLOTZ KPL.	10455144	15	1	419	10877138	FAHRERSITZ
GLEITLAGER 30X20 KUNSTST	10215893	4	1	459	966707708	SPIEGELHALTER VORM.
GLEITLAGERBUCHSE 30X34X	9889290	(2)	2	227	9072906	ZWISCHENRAD KPL.
GLEITPLATTE 120X100X2090 P	97031639	4	8	17	919617108	RAUPENFAHRWERK KPL.
GLEITPLATTE 15X120X450 PA6	97038559	54	2	17	919617108	RAUPENFAHRWERK KPL.
GLEITPLATTE 15X90X358 SPF	971995508	79	2	640	917291908	ANLENKSTUECK VORM.
GLEITPLATTE 15X90X358 SPF	971995508	55	2	644	917292008	TELESKOP 1 VORM.
GLEITPLATTE 15X90X358 SPF	971995508	55	2	648	917292108	TELESKOP 2 VORM.
GLEITPLATTE 15X90X358 SPF	971995508	55	2	652	917292208	TELESKOP 3 VORM.
GLEITPLATTE 15X90X358 SPF	971995508	55	2	656	917292308	TELESKOP 4 VORM.
GLEITPLATTE 190X186X187 P	971063208	37	2	639	917291908	ANLENKSTUECK VORM.
GLEITPLATTE 190X186X187 P	971063208	41	2	644	917292008	TELESKOP 1 VORM.
GLEITPLATTE 190X186X187 P	971063208	41	2	648	917292108	TELESKOP 2 VORM.
GLEITPLATTE 190X186X187 P	971063208	41	2	652	917292208	TELESKOP 3 VORM.
GLEITPLATTE 190X186X187 P	971063208	41	2	656	917292308	TELESKOP 4 VORM.
GLEITPLATTE 20X60X980 PA6	973351308	80	2	640	917291908	ANLENKSTUECK VORM.
GLEITPLATTE 20X90X358 SPF	972898808	42	2	639	917291908	ANLENKSTUECK VORM.
GLEITPLATTE 20X90X358 SPF	972898808	56	2	644	917292008	TELESKOP 1 VORM.
GLEITPLATTE 20X90X358 SPF	972898808	56	2	648	917292108	TELESKOP 2 VORM.
GLEITPLATTE 20X90X358 SPF	972898808	56	2	652	917292208	TELESKOP 3 VORM.
GLEITPLATTE 20X90X358 SPF	972898808	56	2	656	917292308	TELESKOP 4 VORM.
GLEITPLATTE 30X50X380 PA6	972898208	45	33	639	917291908	ANLENKSTUECK VORM.
GLEITPLATTE 30X50X380 PA6	972898208	42	31	644	917292008	TELESKOP 1 VORM.
GLEITPLATTE 30X50X380 PA6	972898208	42	29	648	917292108	TELESKOP 2 VORM.
GLEITPLATTE 30X50X380 PA6	972898208	42	28	652	917292208	TELESKOP 3 VORM.
GLEITPLATTE 30X50X380 PA6	972898208	42	25	656	917292308	TELESKOP 4 VORM.

Bezeichnung	Artikel	Pos.	Menge	Seite	Baugruppe	Bezeichnung
GLEITPLATTE 8X50X350 PA6	972898608	49	2	639	917291908	ANLENKSTUECK VORM.
GLEITPLATTE 8X50X350 PA6	972898608	53	2	644	917292008	TELESKOP 1 VORM.
GLEITSCHUH 65X340X450 GS-	308115114	7	4	70	919254308	RAUPENTRAEGER VORM.LI.
GLEITSCHUH 65X340X450 GS-	308115114	7	4	100	919254408	RAUPENTRAEGER VORM.RE.
GLEITSTUECK 100x140x260 P	970456308	2	1	672	966134608	ANBAUTEILE ZYLINDER
GLEITSTUECK 14X100X233 P	970537508	29	2	644	917292008	TELESKOP 1 VORM.
GLEITSTUECK 14X100X233 P	970537508	29	2	648	917292108	TELESKOP 2 VORM.
GLEITSTUECK 14X100X233 P	970537508	29	2	652	917292208	TELESKOP 3 VORM.
GLEITSTUECK 14X100X233 P	970537508	29	2	656	917292308	TELESKOP 4 VORM.
GLEITSTUECK 14X100X233 P	970537508	39	2	661	917292408	TELESKOP 5 VORM.
GLEITSTUECK 150X130X70 CU	97039611	16	8	30	917511508	RAUPENMITTELTEIL VORM.
GLEITSTUECK 150X130X70 CU	97039612	17	8	30	917511508	RAUPENMITTELTEIL VORM.
GLEITSTUECK 15X100X231 P	973254708	67	2	653	917292208	TELESKOP 3 VORM.
GLEITSTUECK 15X100X231 P	973254708	67	2	657	917292308	TELESKOP 4 VORM.
GLEITSTUECK 15X100X231 P	973254708	71	2	662	917292408	TELESKOP 5 VORM.
GLEITSTUECK 15X85X231 PA6	972908108	14	2	644	917292008	TELESKOP 1 VORM.
GLEITSTUECK 15X85X231 PA6	972908108	14	2	648	917292108	TELESKOP 2 VORM.
GLEITSTUECK 15X85X231 PA6	972908108	14	2	652	917292208	TELESKOP 3 VORM.
GLEITSTUECK 15X85X231 PA6	972908108	14	2	656	917292308	TELESKOP 4 VORM.
GLEITSTUECK 15X85X231 PA6	972908108	48	2	661	917292408	TELESKOP 5 VORM.
GLEITSTUECK 18X100X231 P	970537708	27	2	644	917292008	TELESKOP 1 VORM.
GLEITSTUECK 18X100X231 P	970537708	27	2	648	917292108	TELESKOP 2 VORM.
GLEITSTUECK 18X100X231 P	970537708	27	2	652	917292208	TELESKOP 3 VORM.
GLEITSTUECK 18X100X231 P	970537708	27	2	656	917292308	TELESKOP 4 VORM.
GLEITSTUECK 18X100X231 P	970537708	38	2	661	917292408	TELESKOP 5 VORM.
GLEITSTUECK 19X85X231 PA6	972908408	63	2	645	917292008	TELESKOP 1 VORM.
GLEITSTUECK 19X85X231 PA6	972908408	32	4	648	917292108	TELESKOP 2 VORM.
GLEITSTUECK 19X85X231 PA6	972908408	32	2	652	917292208	TELESKOP 3 VORM.
GLEITSTUECK 19X85X231 PA6	972908408	32	2	656	917292308	TELESKOP 4 VORM.
GLEITSTUECK 19X85X231 PA6	972908408	37	2	661	917292408	TELESKOP 5 VORM.
GLEITSTUECK 234X53X62 PA6	970537108	26	2	644	917292008	TELESKOP 1 VORM.
GLEITSTUECK 234X53X62 PA6	970537108	26	2	648	917292108	TELESKOP 2 VORM.
GLEITSTUECK 234X53X62 PA6	970537108	26	2	652	917292208	TELESKOP 3 VORM.
GLEITSTUECK 234X53X62 PA6	970537108	26	2	656	917292308	TELESKOP 4 VORM.
GLEITSTUECK 234X53X62 PA6	970537108	41	2	661	917292408	TELESKOP 5 VORM.
GLEITSTUECK 23X85X231 PA6	972908308	32	2	644	917292008	TELESKOP 1 VORM.
GLEITSTUECK 53X87X234 PA6	970537008	25	2	644	917292008	TELESKOP 1 VORM.
GLEITSTUECK 53X87X234 PA6	970537008	25	2	648	917292108	TELESKOP 2 VORM.
GLEITSTUECK 53X87X234 PA6	970537008	25	2	652	917292208	TELESKOP 3 VORM.
GLEITSTUECK 53X87X234 PA6	970537008	25	2	656	917292308	TELESKOP 4 VORM.
GLEITSTUECK 53X87X234 PA6	970537008	40	2	661	917292408	TELESKOP 5 VORM.
GLEITSTUECK 65X120X190 P	972997008	1	1	672	966134608	ANBAUTEILE ZYLINDER
GLEITSTUECK 84X261X468 P	973763408	3	1	672	966134608	ANBAUTEILE ZYLINDER
GLUEHLAMPE 1,2W 30V	607008708	13	1	453	96022872	ARMATURENBRETT DACH
GLUEHLAMPE DIN 49848 2,4W	607011108	(1)	2	145	928620108	ZUBEHOER
GLUEHLAMPE DIN 72601 70W	607023708	2	1	146	915731908	EL.TEILE VERSANDMONTAGE
GLUEHSTIFT	11826649	40	1	466	10876576	WASSERHEIZGERAET
GLUEHSTIFT	11826649	(10)	1	466	10876576	WASSERHEIZGERAET
GRIFF	12103434	(2)	1	419	10877138	FAHRERSITZ
GRIFF 4X110X245 S315MC	97100419	3	2	17	919617108	RAUPENFAHRWERK KPL.
GRIFF DIN 3122 A 3/4"	790026208	63	1	144	928569808	GRUNDWERKZEUG
GRIFF SCHWK. FE//ZNNI8//CN/	962963808	56	1	70	919254308	RAUPENTRAEGER VORM.LI.
GRIFF SCHWK. FE//ZNNI8//CN/	962963808	56	1	100	919254408	RAUPENTRAEGER VORM.RE.
GRIFF SCHWK. FE//ZNNI8//CN/	962963808	15	1	475	967978908	VERRIEGELUNG VORM.
GRIFF SCHWK. FE//ZNNI8//CN/	963557408	(2)	1	705	917268408	MASTNASE
GRIFF SCHWK. FE//ZNNI8//CN/	967969708	4	2	575	917267108	HILFSHUBWERK WINDE 2
GRIFF SCHWK. FE//ZNNI8//CN/	967969708	8	2	728	917413208	SELBSTMONTAGE HILFSHU
GRIFF ZN-DRUCKGUSS	10112569	(10)	1	539	96045351	HYDRAULIK OBERWAGEN
GRIFFADAPTION	11005983	3	1	406	966230408	SCHLIESSANLAGE
GRIFFKAPPE	571824708	1	1	454	10343693	MEISTERSCHALTER

Bezeichnung	Artikel	Pos.	Menge	Seite	Baugruppe	Bezeichnung
GRIFFMULDE X0 KUNSTSTOF	955500008	7	1	433	968923508	KLAPPE VORM.RECHTS
GRIFFSTANGE NIROSTA	10297396	22	1	474	967928508	VERRIEGELUNG
GRUNDAUFBAU	969256608	2	1	519	96045386	GRUNDAUFBAU KPL.
GRUNDAUFBAU KPL.	96045386	2	1	518	919503008	EINBAUTEILE SCHALTSCHRAN
GRUNDHALTER SCHWK.	968266508	1	1	714	967933408	GRUNDHALTER VORM.
GRUNDHALTER VORM.	967933408	1	1	713	968412508	MECHANIK MESS-U.WARNEI
GRUNDWERKZEUG	928569808	1	1	143	919328608	WERKZEUG M.ZUBEHOER
GSM-MODUL MC-MRH	10873838	26	1	518	919503008	EINBAUTEILE SCHALTSCHRAN
GUMMILAGER 13,51/47,75X19,	550640608	5	4	158	918731108	MONTAGETEILE DREHBUEHN
GUMMIMUFFE	10116310	24	1	238	10140729	ATL-ANBAU
GUMMIMUFFE	10129904	4	1	220	10149677	VERBINDUNGSLEITUNG ANBA
GUMMIMUFFE 06-12X45 SILI	10126119	(16)	1	164	12856862	DIESELMOTOR
GUMMIMUFFE 12 X 18 X 45 GU	9079603	7	1	182	10139112	OELLEITUNG VORM.
GUMMIMUFFE 12 X 18 X 45 GU	9079603	(4)	1	264	10148366	DS DIESELMOTOR
GUMMIMUFFE 22X30X65L.	9273161	7	2	218	10145173	ANSAUGSTUTZEN ANBAU
GUMMIMUFFE 25 X35/33X56 L.	9271340	5	1	173	10126713	KURBELGEHAEUSEENTLUEF
GUMMIMUFFE GUMMI	10126317	5	1	182	10139112	OELLEITUNG VORM.
GUMMIMUFFE GUMMI	10126317	(2)	1	264	10148366	DS DIESELMOTOR
GUMMIMUFFE Rubber	10126417	4	1	173	10126713	KURBELGEHAEUSEENTLUEF
GUMMIMUFFE Silicone	10128228	(7)	3	164	12856862	DIESELMOTOR
GUMMIPANZERSCHLAUCH 30	790042908	71	1	144	928569808	GRUNDWERKZEUG
GUMMIPLATTE 1.5X185X45 E	979243608	4	2	394	965784408	DACHSCHEIBE VORM.
GUMMIPLATTE SBR M.GEWEB	973731008	323	2	539	96045351	HYDRAULIK OBERWAGEN
GUMMIPUFFER 19X9,6 PU SC	10354670	25	2	383	917305408	INNENVERKLEIDUNG EINBAU
GUMMIPUFFER 32X32XM6 EL	10472890	8	1	405	917304708	SCHIEBETUER EINBAU
GUMMIPUFFER 8,3/26X7,2 30	10116274	4	8	252	10144227	STEUERGERAET ANBAU
GUMMIRING X12	10133991	102	1	255	10151328	KABELBAUM ANBAU
GUMMIRING X16	10123876	103	1	255	10151328	KABELBAUM ANBAU
GUMMIRING X22	10123878	33	2	506	919410708	EL.ANLAGE DREHBUEHNE
GURT	12100293	2	1	470	11212257	GURTTRAGESYSTEM
GURTTRAGESYSTEM LSB-BT	11212257	1	1	469	917618608	ANBAUTEILE
HAFTREINIGER 250ML	811205108	47	1	405	917304708	SCHIEBETUER EINBAU
HAKEN 50X358X150 S960QL+	97030305	7	2	625	967936908	GEGENGEWICHT KPL.
HAKENFLASCHE 125DM SPF	910836808	316	1	11		LIEBHERR LTR 1220
HAKENSTANGE ANBAU	968090008	2	1	736	917268108	WERKZEUG KLAPPSPITZE
HAKENSTANGE FE//ZNNI8//CN/	929529908	1	1	738	968090008	HAKENSTANGE ANBAU
HALBRUNDKOPFSCHRAUBE A	10875475	9	2	373	96025887	PEDALTRAEGER EINBAU
HALBRUNDKOPFSCHRAUBE	11160744	301	2	314	96034515	AUSGLEICHSBEHAELTER VO
HALBRUNDKOPFSCHRAUBE	11160744	13	3	405	917304708	SCHIEBETUER EINBAU
HALBRUNDKOPFSCHRAUBE	10028237	308	4	589	967784808	HYDRAULIK HILFSHUBWERK
HALBRUNDKOPFSCHRAUBE	10028237	4	1	714	967933408	GRUNDHALTER VORM.
HALBRUNDKOPFSCHRAUBE	10813359	83	8	137	919499408	ZENTRALBALLAST
HALBRUNDKOPFSCHRAUBE	10813359	(300)	2	275	919007708	ANTRIEBSAGGREGAT VORM.
HALBRUNDKOPFSCHRAUBE	10813359	43	7	405	917304708	SCHIEBETUER EINBAU
HALBRUNDKOPFSCHRAUBE	10813359	52	1	483	918484108	HARNSTOFFANLAGE
HALBRUNDKOPFSCHRAUBE	10475893	14	10	405	917304708	SCHIEBETUER EINBAU
HALBRUNDKOPFSCHRAUBE	10875468	13	8	134	919087608	DREHDURCHFUEHRUNG
HALBRUNDKOPFSCHRAUBE	10875468	302	1	314	96034515	AUSGLEICHSBEHAELTER VO
HALBRUNDKOPFSCHRAUBE	10875468	11	12	320	96023117	BATTERIEKASTEN VORM.
HALBRUNDKOPFSCHRAUBE	10875468	10	3	373	96025887	PEDALTRAEGER EINBAU
HALBRUNDKOPFSCHRAUBE	10875468	14	12	380	917304508	KRANFUEHRERKABINE VORM.
HALBRUNDKOPFSCHRAUBE	10875468	40	73	383	917305408	INNENVERKLEIDUNG EINBAU
HALBRUNDKOPFSCHRAUBE	10875468	23	6	399	916163008	WISCHANLAGE EINBAU
HALBRUNDKOPFSCHRAUBE	10875468	19	5	405	917304708	SCHIEBETUER EINBAU
HALBRUNDKOPFSCHRAUBE	10875468	22	7	449	96036957	ELEKTRIK ANBAUTEILE KABIN
HALBRUNDKOPFSCHRAUBE	10412851	17	4	21	96034894	SCHUTZBLECH KPL.LI.
HALBRUNDKOPFSCHRAUBE	10412851	17	4	24	96034977	SCHUTZBLECH KPL.RE.
HALBRUNDKOPFSCHRAUBE	10412851	10	6	375	916170808	KABELEINFUEHRUNG
HALBRUNDKOPFSCHRAUBE	10412851	8	1	378	968514508	SCHALTSCHRANKDECKEL EIN
HALBRUNDKOPFSCHRAUBE	10412851	12	4	405	917304708	SCHIEBETUER EINBAU

Bezeichnung	Artikel	Pos.	Menge	Seite	Baugruppe	Bezeichnung
HALBRUNDKOPFSCHRAUBE	10412851	300	10	429	96036790	DREHBUEHNENVERKLEIDUN
HALBRUNDKOPFSCHRAUBE	10412851	300	6	439	969015908	DREHBUEHNENVERKLEIDUN
HALBRUNDKOPFSCHRAUBE	10412851	303	6	491	919372008	ABGASANLAGE
HALBRUNDKOPFSCHRAUBE	10412851	2	4	599	917269308	LADEGERAET
HALBRUNDKOPFSCHRAUBE	10412851	7	1	714	967933408	GRUNDHALTER VORM.
HALBRUNDKOPFSCHRAUBE	10412852	30	8	30	917511508	RAUPENMITTELTEIL VORM.
HALBRUNDKOPFSCHRAUBE	10412852	5	14	85	968420608	STAUKASTEN VORM.
HALBRUNDKOPFSCHRAUBE	10412852	15	6	393	966497908	FRONTSCHEIBE KPL.
HALBRUNDKOPFSCHRAUBE	10412852	26	2	609	968994408	KAMERAHALTER VORM.
HALBRUNDKOPFSCHRAUBE	10412852	20	6	610	968290608	STATIV
HALBRUNDKOPFSCHRAUBE	10412852	13	2	612	968993508	KAMERAHALTER VORM.
HALBRUNDKOPFSCHRAUBE	10412852	20	6	613	968267208	STATIV
HALBRUNDKOPFSCHRAUBE	10412853	6	8	372	916177508	TRITT KPL.
HALBRUNDKOPFSCHRAUBE	10412853	41	1	405	917304708	SCHIEBETUER EINBAU
HALBRUNDKOPFSCHRAUBE	11161571	34	4	21	96034894	SCHUTZBLECH KPL.LI.
HALBRUNDKOPFSCHRAUBE	11161571	34	4	24	96034977	SCHUTZBLECH KPL.RE.
HALBRUNDKOPFSCHRAUBE A	10876082	201	2	71	919254308	RAUPENTRAEGER VORM.LI.
HALBRUNDKOPFSCHRAUBE A	10876082	201	2	101	919254408	RAUPENTRAEGER VORM.RE.
HALBRUNDKOPFSCHRAUBE A	10876082	11	4	142	96045206	MECHANISCHE ANBAUTEILE
HALBRUNDKOPFSCHRAUBE	10875485	20	3	21	96034894	SCHUTZBLECH KPL.LI.
HALBRUNDKOPFSCHRAUBE	10875485	20	3	24	96034977	SCHUTZBLECH KPL.RE.
HALBRUNDKOPFSCHRAUBE	10875485	15	4	34	96045225	ELEKTRIK MITTELSTUECK
HALBRUNDKOPFSCHRAUBE	10875485	14	16	121	919644008	HYDRAULISCHE ABSTUETZUN
HALBRUNDKOPFSCHRAUBE	10875485	23	3	127	917257108	ZENTRALSCHMIERUNG RAUP
HALBRUNDKOPFSCHRAUBE	10875485	28	4	158	918731108	MONTAGETEILE DREHBUEHN
HALBRUNDKOPFSCHRAUBE	10875485	305	6	276	919007708	ANTRIEBSAGGREGAT VORM.
HALBRUNDKOPFSCHRAUBE	10875485	15	6	380	917304508	KRANFUEHRERKABINE VORM.
HALBRUNDKOPFSCHRAUBE	10875485	303	13	429	96036790	DREHBUEHNENVERKLEIDUN
HALBRUNDKOPFSCHRAUBE	10875485	305	10	439	969015908	DREHBUEHNENVERKLEIDUN
HALBRUNDKOPFSCHRAUBE	10875485	(7)	6	478	969763408	VERROHRUNG DRUCKLUFTA
HALBRUNDKOPFSCHRAUBE	10875485	301	1	491	919372008	ABGASANLAGE
HALBRUNDKOPFSCHRAUBE	10875485	300	15	497	96039740	ZUSATZTEILE VERKLEIDUNG
HALBRUNDKOPFSCHRAUBE	10875485	303	2	499	918731908	LUFTFILTERANLAGE
HALBRUNDKOPFSCHRAUBE	10875485	28	7	545	96035117	MECH.BEFESTIGUNGSTEILE
HALBRUNDKOPFSCHRAUBE	10875485	312	5	589	967784808	HYDRAULIK HILFSHUBWERK
HALBRUNDKOPFSCHRAUBE	10875485	3	3	608	968210808	ANBAUTEILE KAMERA
HALBRUNDKOPFSCHRAUBE	10875471	10	4	142	96045206	MECHANISCHE ANBAUTEILE
HALBRUNDKOPFSCHRAUBE	10875471	13	2	394	965784408	DACHSCHEIBE VORM.
HALBRUNDKOPFSCHRAUBE	10875471	302	4	499	918731908	LUFTFILTERANLAGE
HALBRUNDKOPFSCHRAUBE	10876067	303	2	276	919007708	ANTRIEBSAGGREGAT VORM.
HALBRUNDKOPFSCHRAUBE	10875486	18	3	87	96034962	FUEHRUNG LI.
HALBRUNDKOPFSCHRAUBE	10875486	18	3	104	96034980	FUEHRUNG RE.
HALBRUNDKOPFSCHRAUBE	10875486	10	12	352	917259708	HAUPTHUBWERK
HALBRUNDKOPFSCHRAUBE	10875486	(6)	11	372	916177508	TRITT KPL.
HALBRUNDKOPFSCHRAUBE	10875486	308	4	439	969015908	DREHBUEHNENVERKLEIDUN
HALBRUNDKOPFSCHRAUBE	10875486	6	4	738	968090008	HAKENSTANGE ANBAU
HALBRUNDKOPFSCHRAUBE	10875017	32	4	449	96036957	ELEKTRIK ANBAUTEILE KABIN
HALBRUNDKOPFSCHRAUBE I	10875448	300	2	269	918731408	ANTRIEBSAGGREGAT KPL.
HALBRUNDKOPFSCHRAUBE I	10875448	7	3	373	96025887	PEDALTRAEGER EINBAU
HALBRUNDKOPFSCHRAUBE I	10875448	8	2	441	969016008	KLAPPE VORM.VORN LINKS
HALBRUNDKOPFSCHRAUBE	10875482	20	8	449	96036957	ELEKTRIK ANBAUTEILE KABIN
HALBRUNDKOPFSCHRAUBE	11835043	43	2	417	918810308	STEUERSTAND
HALBRUNDKOPFSCHRAUBE	11835043	317	8	429	96036790	DREHBUEHNENVERKLEIDUN
HALBRUNDKOPFSCHRAUBE	10875483	17	6	320	96023117	BATTERIEKASTEN VORM.
HALBRUNDKOPFSCHRAUBE	10875483	16	14	396	916168308	LUFTFUEHRUNG
HALBRUNDKOPFSCHRAUBE	10875483	26	2	399	916163008	WISCHANLAGE EINBAU
HALBRUNDKOPFSCHRAUBE	10875483	21	8	449	96036957	ELEKTRIK ANBAUTEILE KABIN
HALBRUNDKOPFSCHRAUBE I	12229337	11	14	373	96025887	PEDALTRAEGER EINBAU
HALBRUNDKOPFSCHRAUBE	10875474	38	16	383	917305408	INNENVERKLEIDUNG EINBAU
HALBRUNDKOPFSCHRAUBE	10875474	15	5	396	916168308	LUFTFUEHRUNG

Bezeichnung	Artikel	Pos.	Menge	Seite	Baugruppe	Bezeichnung
HALBRUNDKOPFSCHRAUBE	10875474	28	6	417	918810308	STEUERSTAND
HALBRUNDKOPFSCHRAUBE	10875474	18	18	449	96036957	ELEKTRIK ANBAUTEILE KABIN
HALBRUNDKOPFSCHRAUBE	10875474	25	4	614	96045237	AUSRUESTUNG KAMERA KAB
HALBRUNDKOPFSCHRAUBE I	11697855	12	4	370	96015921	BEDIENELEMENTE EINBAU
HALBRUNDKOPFSCHRAUBE I	11697855	27	7	390	916162508	SCHEIBEN EINBAU
HALBRUNDKOPFSCHRAUBE	10875488	300	3	276	919007708	ANTRIEBSAGGREGAT VORM.
HALBRUNDKOPFSCHRAUBE	10875488	300	6	283	968026308	KUPPLUNGSSTELLER
HALBRUNDKOPFSCHRAUBE	10875488	17	3	375	916170808	KABELEINFUEHRUNG
HALBRUNDKOPFSCHRAUBE	10875488	33	4	393	966497908	FRONTSCHEIBE KPL.
HALBRUNDKOPFSCHRAUBE	10874884	9	3	318	918955408	BATTERIEKASTEN KPL.
HALBRUNDKOPFSCHRAUBE	10874884	39	13	383	917305408	INNENVERKLEIDUNG EINBAU
HALBRUNDKOPFSCHRAUBE	10875469	41	10	383	917305408	INNENVERKLEIDUNG EINBAU
HALBRUNDKOPFSCHRAUBE	10875469	36	7	405	917304708	SCHIEBETUER EINBAU
HALBRUNDKOPFSCHRAUBE	10410198	13	2	375	916170808	KABELEINFUEHRUNG
HALBRUNDKOPFSCHRAUBE	10875470	42	2	383	917305408	INNENVERKLEIDUNG EINBAU
HALBRUNDKOPFSCHRAUBE	10353737	21	4	320	96023117	BATTERIEKASTEN VORM.
HALBRUNDKOPFSCHRAUBE I	10429635	7	1	368	919010208	KRANFUEHRERKABINE VORM.
HALBRUNDKOPFSCHRAUBE	408650608	11	4	318	918955408	BATTERIEKASTEN KPL.
HALBRUNDKOPFSCHRAUBE	408650608	2	2	716	967937608	HINDERNISFEUER VORM.
HALBRUNDKOPFSCHRAUBE	10301319	11	5	370	96015921	BEDIENELEMENTE EINBAU
HALBRUNDKOPFSCHRAUBE	10182032	310	2	283	968026308	KUPPLUNGSSTELLER
HALBRUNDKOPFSCHRAUBE I	12100221	26	1	36	96045226	SCHALTKASTEN VORM.
HALBRUNDKOPFSCHRAUBE I	12102696	27	24	17	919617108	RAUPENFAHRWERK KPL.
HALBRUNDKOPFSCHRAUBE I	12102696	19	4	34	96045225	ELEKTRIK MITTELSTUECK
HALBRUNDKOPFSCHRAUBE I	12102696	32	2	63	918925508	QUERTRAEGER KPL.
HALBRUNDKOPFSCHRAUBE I	12102696	39	4	70	919254308	RAUPENTRAEGER VORM.LI.
HALBRUNDKOPFSCHRAUBE I	12102696	39	4	100	919254408	RAUPENTRAEGER VORM.RE.
HALBRUNDKOPFSCHRAUBE I	12102696	21	8	127	917257108	ZENTRALSCHMIERUNG RAUP
HALBRUNDKOPFSCHRAUBE I	12102696	80	8	137	919499408	ZENTRALBALLAST
HALBRUNDKOPFSCHRAUBE I	12102696	11	6	158	918731108	MONTAGETEILE DREHBUEHN
HALBRUNDKOPFSCHRAUBE I	12102696	10	2	350	917259608	DREHBUEHNENARRETIERUN
HALBRUNDKOPFSCHRAUBE I	12102696	8	10	373	96025887	PEDALTRAEGER EINBAU
HALBRUNDKOPFSCHRAUBE I	12102696	21	4	502	917261208	ZENTRALSCHMIERANLAGE O
HALBRUNDKOPFSCHRAUBE I	12102696	307	2	539	96045351	HYDRAULIK OBERWAGEN
HALBRUNDKOPFSCHRAUBE I	12102696	29	4	545	96035117	MECH.BEFESTIGUNGSTEILE
HALBRUNDKOPFSCHRAUBE I	12102696	12	25	577	967969608	HILFSHUBWERK WINDE 2 VO
HALBRUNDKOPFSCHRAUBE I	12102696	14	73	639	917291908	ANLENKSTUECK VORM.
HALBRUNDKOPFSCHRAUBE I	12102696	56	17	661	917292408	TELESKOP 5 VORM.
HALBRUNDKOPFSCHRAUBE I	12102696	20	4	705	917268408	MASTNASE
HALBRUNDKOPFSCHRAUBE I	12102696	6	2	708	967321308	HALTERUNG 2.HUB OBEN
HALBSCHALE 80X25 PA6G +	97038484	16	2	134	919087608	DREHDURCHFUEHRUNG
HALTEGRIFF 215X25X59,2X16	10443309	59	1	384	917305408	INNENVERKLEIDUNG EINBAU
HALTEGURT 25X795 POLYES	591063808	30	1	393	966497908	FRONTSCHEIBE KPL.
HALTELEISTE 15X180X30 S35	97039613	18	16	30	917511508	RAUPENMITTELTEIL VORM.
HALTER	10145373	(15)	1	164	12856862	DIESELMOTOR
HALTER	10146789	2	1	212	10146791	KRAFTSTOFF-FEINFILTERAN
HALTER	591070408	29	2	158	918731108	MONTAGETEILE DREHBUEHN
HALTER	966253708	1	1	407	966230508	FUEHRUNG VORM.
HALTER 1.4308	975218608	2	6	377	916162808	RELING
HALTER 1.4308	975384508	3	6	377	916162808	RELING
HALTER 1.5X198X59 DC01 FE//	978608608	10	1	522	969256608	GRUNDAUFBAU
HALTER 40X30X175 PA6G+OE	97033902	19	1	21	96034894	SCHUTZBLECH KPL.LI.
HALTER 40X30X175 PA6G+OE	97033902	19	1	24	96034977	SCHUTZBLECH KPL.RE.
HALTER 40X80X40 G-ALMG3	979489508	3	1	424	916049908	SPIEGELANBAU KRANFUEHR
HALTER 44X88.5X40 G-ALSIM	97009160	7	2	380	917304508	KRANFUEHRERKABINE VORM.
HALTER 4X120X75 S315MC FE	971634008	33	1	672	966134608	ANBAUTEILE ZYLINDER
HALTER 4X173X175 X5CRNI18	97032840	2	1	117	968331708	SICHERUNGSHALTER
HALTER 4X337X245 S315MC	97047676	50	1	127	917257108	ZENTRALSCHMIERUNG RAUP
HALTER ANBAU	10143707	10	1	254	10151328	KABELBAUM ANBAU
HALTER DT/DTM	10041876	528	2	513	96037136	KABELSTRANG

Bezeichnung	Artikel	Pos.	Menge	Seite	Baugruppe	Bezeichnung
HALTER GX5CRNI19-10	97077297	33	1	275	919007708	ANTRIEBSAGGREGAT VORM.
HALTER GX5CRNI19-10	97077309	(2)	3	275	919007708	ANTRIEBSAGGREGAT VORM.
HALTER KPL.	10127689	2	1	252	10144227	STEUERGERAET ANBAU
HALTER KPL.	10143454	1	1	252	10144227	STEUERGERAET ANBAU
HALTER KPL. FE//ZNNI8//CN//T	96034872	1	1	327	96034868	KRAFTSTOFFFILTER VORM.
HALTER KPL. S235JR	10145371	2	1	257	10143707	HALTER ANBAU
HALTER KPL. S235JR	12978423	1	1	257	10143707	HALTER ANBAU
HALTER LINKS	967977708	2	1	564	917261808	OELKUEHLER EINBAU
HALTER MONITOR	10874763	20	1	614	96045237	AUSRUESTUNG KAMERA KAB
HALTER PA6MDGF30 SPF	97098446	1	2	142	96045206	MECHANISCHE ANBAUTEILE
HALTER RECHTS	969185608	3	1	564	917261808	OELKUEHLER EINBAU
HALTER S235JR	10150252	10	1	256	10151329	KABELSATZ ANBAU
HALTER S235JR	10150838	13	1	256	10151329	KABELSATZ ANBAU
HALTER S235JR	12429351	(2)	1	164	12856862	DIESELMOTOR
HALTER S235JR	9275178	91	1	254	10151328	KABELBAUM ANBAU
HALTER SCHWK.	966230708	29	1	405	917304708	SCHIEBETUER EINBAU
HALTER SCHWK.	966230808	30	1	405	917304708	SCHIEBETUER EINBAU
HALTER SCHWK. FE//ZNNI8//C	965426208	1	1	283	968026308	KUPPLUNGSSTELLER
HALTER SCHWK. FE//ZNNI8//C	968765608	25	4	30	917511508	RAUPENMITTELTEIL VORM.
HALTER X12CRNIS188	965371708	1	1	683	966591508	ENDSCHALTER ANBAU
HALTERBLECH 2X121X18 DC0	97010815	14	1	522	969256608	GRUNDAUFBAU
HALTERBLECH 2X192X41 DC0	97010814	11	1	522	969256608	GRUNDAUFBAU
HALTERING	11659651	(14)	1	124	968077208	HYDRAULIK ABSTUETZUNG
HALTERUNG 2.HUB OBEN	967321308	10	1	706	918197708	ELEKTRIK 2.HUBENDSCHALTE
HALTERUNG SCHWK.	929582208	1	1	732	929582108	HALTERUNG VORM.
HALTERUNG SCHWK. T ZN O	963556008	9	1	661	917292408	TELESKOP 5 VORM.
HALTERUNG VORM.	929582108	1	1	731	917267508	TRANSPORTHALTERUNG DKS
HALTESCHEIBE 100X55X6	927601301	6	1	357	939292201	PLANETENGETRIEBE
HALTESCHEIBE 125X55X6	927602801	41	1	357	939292201	PLANETENGETRIEBE
HALTESCHEIBE 125X55X6	927602801	31	1	359	90017588	PLANETENTRAEGER
HALTESCHEIBE 4X60X4	944134103	36	1	340	90008901	DREHWERKANTRIEB
HALTESCHEIBE 50X4	944303303	56	1	73	90028956	FAHRANTRIEB
HALTESCHEIBE 70	927531901	16	1	340	90008901	DREHWERKANTRIEB
HANDGRIFF	591066808	10	2	393	966497908	FRONTSCHEIBE KPL.
HANDGRIFF	591066808	5	1	394	965784408	DACHSCHEIBE VORM.
HANDGRIFF 212X53	12554272	6	1	441	969016008	KLAPPE VORM.VORN LINKS
HANDGRIFF KPL. DREH KUN	704232208	9	1	393	966497908	FRONTSCHEIBE KPL.
HANDHAMMER DIN 1041 800G	790030008	60	1	144	928569808	GRUNDWERKZEUG
HANDHEBELPRESSE	885602114	6	1	143	919328608	WERKZEUG M.ZUBEHOER
HANDHEBELPRESSE VERZ.	790042008	70	1	144	928569808	GRUNDWERKZEUG
HARNSTOFFANLAGE	918484108	162	1	10		LIEBHERR LTR 1220
HARNSTOFFBEHAELTER 65L P	11481413	1	1	484	968570808	HARNSTOFFTANK
HARNSTOFFTANK 73L/65L SP	968570808	10	1	483	918484108	HARNSTOFFANLAGE
HAUBE 180X350 GEWEBE RO	97042475	9	1	715	967936408	WINDWARNUNG VORM.
HAUBE 5X220X434 S355MC FE	97032619	6	2	25	968019508	ENDSCHALTER ANBAU
HAUBE LI. 4X585X711 S315MC	97066482	87	1	71	919254308	RAUPENTRAEGER VORM.LI.
HAUBE RE. 4X585X711 S315M	97066483	87	1	101	919254408	RAUPENTRAEGER VORM.RE.
HAUBENAUFLAGE	704229908	311	10	439	969015908	DREHBUEHNENVERKLEIDUN
HAUBENDECKEL	11181887	34	1	47	11346779	SCHLEIFRINGUEBERTRAGER
HAUPTFILTERELEMENT	10294938	2	1	500	10871700	LUFTFILTER
HAUPTHUBWERK	917259708	125	1	10		LIEBHERR LTR 1220
HAUPTLAGER 104/111/32	9073734	1	5	185	10116939	RS KURBELWELLENLAGERU
HAUPTLAGER 104/111/32 MIB	9075606	2	5	185	10116939	RS KURBELWELLENLAGERU
HEBEL	571430708	4	1	620	10040024	TASCHENSCHLOSS
HEBEL 30.0X285 S355J2C+C	97030031	6	1	474	967928508	VERRIEGELUNG
HEBEL SCHWK. FE//ZNNI8//CN/	965426308	2	1	283	968026308	KUPPLUNGSSTELLER
HEBEL VORM.	96050169	300	1	71	919254308	RAUPENTRAEGER VORM.LI.
HEBELVERSCHLUSS	11450420	8	2	433	968923508	KLAPPE VORM.RECHTS
HEBELVERSCHLUSS	11450420	5	2	441	969016008	KLAPPE VORM.VORN LINKS
HECKSCHEIBE ESG SPF	97000279	5	1	390	916162508	SCHEIBEN EINBAU

Bezeichnung	Artikel	Pos.	Menge	Seite	Baugruppe	Bezeichnung
HEIZELEMENT	10650387	(13)	1	419	10877138	FAHRERSITZ
HEIZFLANSCH ANBAU	9078314	260	1	162	12856862	DIESELMOTOR
HEIZFLANSCH VORM. 24V 1,9K	10299988	1	1	221	9078314	HEIZFLANSCH ANBAU
HEIZKLIMAGERAET	11083498	1	1	410	917676208	HEIZUNG KRANFUEHRERKAB
HEIZUNG	502651408	2	1	479	502657308	LUFTTROCKNER
HEIZUNG KRANFUEHRERKABI	917676208	134	1	10		LIEBHERR LTR 1220
HEIZUNG VORM.	969085208	20	1	410	917676208	HEIZUNG KRANFUEHRERKAB
HEIZUNGSSCHLAUCH 70/PRIM	553181208	12	0.25	396	916168308	LUFTFUEHRUNG
HILFSEINSCHERSEIL KPL. 16X	915037208	440	1	12		LIEBHERR LTR 1220
HILFSHUBSEIL M.ZUBEHOER	917267208	332	1	11		LIEBHERR LTR 1220
HILFSHUBWERK WINDE 2	917267108	330	1	11		LIEBHERR LTR 1220
HILFSHUBWERK WINDE 2 SCH	967969908	1	1	577	967969608	HILFSHUBWERK WINDE 2 VO
HILFSHUBWERK WINDE 2 VO	967969608	3	1	575	917267108	HILFSHUBWERK WINDE 2
HINDERNISFEUER 7,2W 19,2-	11482305	3	1	711	917598408	ELEKTRIK MESS-U.WARNEINR
HINDERNISFEUER VORM.	967937608	3	1	713	968412508	MECHANIK MESS-U.WARNEI
HINWEISSCHILD 120X80 KLE	97094940	107	1	150	917862808	BESCHILDERUNG GROSSBRI
HINWEISSCHILD 208X100 KLE	97131530	110	1	150	917862808	BESCHILDERUNG GROSSBRI
HINWEISSCHILD 23X12 KLEBE	97082749	1	1	739	918462408	BESCHILDERUNG FREMDEIN
HINWEISSCHILD 60X90 KLEBE	97135430	17	1	150	917862808	BESCHILDERUNG GROSSBRI
HINWEISSCHILD 60X90 KLEBE	97135431	19	1	150	917862808	BESCHILDERUNG GROSSBRI
HINWEISSCHILD 70X50 KLEBE	97133618	50	1	21	96034894	SCHUTZBLECH KPL.LI.
HINWEISSCHILD 70X50 KLEBE	97133617	50	1	24	96034977	SCHUTZBLECH KPL.RE.
HITZESCHUTZ MIT BEFESTIG	10144756	415	1	163	12856862	DIESELMOTOR
HITZESCHUTZBLECH	10144755	1	1	237	10144756	HITZESCHUTZ MIT BEFESTIG
HITZESCHUTZBLECH S355JR	11382888	10	1	220	10149677	VERBINDUNGSLEITUNG ANBA
HITZESCHUTZBLECH S355JR	12428325	10	1	220	10149677	VERBINDUNGSLEITUNG ANBA
HOCHDRUCKPUMPE MIT BEF	10150741	171	1	162	12856862	DIESELMOTOR
HOCHDRUCKPUMPE R-MOT	10146658	1	1	205	10150741	HOCHDRUCKPUMPE MIT BEFE
HOCHSTROMVERTEILER	10878680	(10)	1	321	96023914	ELEKTRIK BATTERIEKASTEN
HOEHENSICHERUNGSGERA	11007309	2	1	153	916959808	PERSOENLICHE SCHUTZAUS
HOEHENVERSTELLUNG	12102116	28	1	419	10877138	FAHRERSITZ
HOHLSCHLUESSEL	704271108	7	2	145	928620108	ZUBEHOER
HOHLSCHRAUBE 10X1X27 11S	9080466	3	3	233	10148216	ROHRLEITUNG ANBAU
HOHLSCHRAUBE 15-3-32	11443132	17	2	214	10143341	KRAFTSTOFFLEITUNGEN
HOHLSCHRAUBE DIN 74305 22	502940108	7	1	325	968999708	KRAFTSTOFFBEHAELTER VO
HOHLSCHRAUBE DIN 7643 10	12210013	17	1	215	10143342	LECKOELRUECKLAUF
HOHLSCHRAUBE DIN 7643 12	12210025	3	4	229	10145278	ANBAUTEILE LUFTPRESSER
HOHLSCHRAUBE DIN 7643 12-	11002995	2	1	214	10143341	KRAFTSTOFFLEITUNGEN
HOHLSCHRAUBE DIN 7643 15--	4981226	16	3	214	10143341	KRAFTSTOFFLEITUNGEN
HOHLSCHRAUBE DIN 7643 4-3	4789210	23	1	215	10143342	LECKOELRUECKLAUF
HOHLSCHRAUBE DIN 7643 6-3	12210010	(6)	1	164	12856862	DIESELMOTOR
HOHLSCHRAUBE DIN 7643 6-3	12210010	6	6	215	10143342	LECKOELRUECKLAUF
HOHLSCHRAUBE DIN 7643 6-3	12210010	7	1	229	10145278	ANBAUTEILE LUFTPRESSER
HOHLSCHRAUBE DIN 7643 6-3	12210010	10	1	261	10144036	NEBENABTRIEB ANBAU
HOHLSCHRAUBE DIN 7643 8-3	12210024	2	1	215	10143342	LECKOELRUECKLAUF
HOHLSCHRAUBE DIN 7643 8-3	12210024	13	1	261	10144036	NEBENABTRIEB ANBAU
HOHLSCHRAUBE M18X1,5 C	11493963	(15)	1	124	968077208	HYDRAULIK ABSTUETZUNG
HORN 24V	614003108	24	1	36	96045226	SCHALTKASTEN VORM.
HORN 24V	614003108	32	1	506	919410708	EL.ANLAGE DREHBUEHNE
HUBENDSCHALTER GEWICHT	96013575	63	1	662	917292408	TELESKOP 5 VORM.
HUBENDSCHALTER GEWICHT	96013575	2	1	726	917267208	HILFSHUBSEIL M.ZUBEHOER
HUBENDSCHALTERGEWICHT	10873379	1	1	664	96013575	HUBENDSCHALTER GEWICHT
HUBSEIL 23X280M -40°C SPF	773444090	1	1	726	917267208	HILFSHUBSEIL M.ZUBEHOER
HUBSEIL 23X350M -40°C SPF	10115128	1	1	621	917259808	SEIL F.WINDE 1
HUBSEILFUEHRUNG SCHWK.	962771108	20	1	639	917291908	ANLENKSTUECK VORM.
HUELSE	10815006	3	1	42	10450273	ANTENNE
HUELSE	11493793	1	1	741	915037208	HILFSEINSCHERSEIL KPL.
HUELSE 108.0X196 S235JRH	97031480	30	2	70	919254308	RAUPENTRAEGER VORM.LI.
HUELSE 108.0X196 S235JRH	97031480	30	2	100	919254408	RAUPENTRAEGER VORM.RE.
HUELSE 12.0X6 E235+N FE//ZN	97032611	2	4	25	968019508	ENDSCHALTER ANBAU

Bezeichnung	Artikel	Pos.	Menge	Seite	Baugruppe	Bezeichnung
HUELSE 18X12 PA 12	97012184	44	1	405	917304708	SCHIEBETUER EINBAU
HUELSE 18X24 PA12	97001760	34	1	405	917304708	SCHIEBETUER EINBAU
HUELSE 20.0X30 S355J2C+C	97031233	15	3	721	968728808	KONSOLE VORM.
HUELSE 20.0X30 S355J2C+C	97031233	2	2	728	917413208	SELBSTMONTAGE HILFSHU
HUELSE 25.0X30 35NICRMOV	97114100	9	48	338	919369308	DREHWERK
HUELSE 25X15 PA 12	97001711	33	1	405	917304708	SCHIEBETUER EINBAU
HUELSE 25X20 11SMN37 FE//	953873408	25	1	36	96045226	SCHALTKASTEN VORM.
HUELSE 25X20 11SMN37 FE//	953873408	20	16	111	917691008	ABSTURZSICHERUNG
HUELSE 25X20 11SMN37 FE//	953873408	25	8	121	919644008	HYDRAULISCHE ABSTUETZUN
HUELSE 25X20 11SMN37 FE//	953873408	85	4	137	919499408	ZENTRALBALLAST
HUELSE 25X20 11SMN37 FE//	953873408	12	4	142	96045206	MECHANISCHE ANBAUTEILE
HUELSE 25X20 11SMN37 FE//	953873408	21	2	269	918731408	ANTRIEBSAGGREGAT KPL.
HUELSE 25X20 11SMN37 FE//	953873408	14	6	275	919007708	ANTRIEBSAGGREGAT VORM.
HUELSE 25X20 11SMN37 FE//	953873408	22	4	352	917259708	HAUPTHUBWERK
HUELSE 25X20 11SMN37 FE//	953873408	3	1	491	919372008	ABGASANLAGE
HUELSE 25X20 11SMN37 FE//	953873408	313	4	589	967784808	HYDRAULIK HILFSHUBWERK
HUELSE 32X30	955918008	25	2	672	966134608	ANBAUTEILE ZYLINDER
HUELSE 33.0X19 FE//ZNNI8//C	978787708	16	4	34	96045225	ELEKTRIK MITTELSTUECK
HUELSE 33.0X19 FE//ZNNI8//C	978787708	38	6	70	919254308	RAUPENTRAEGER VORM.LI.
HUELSE 33.0X19 FE//ZNNI8//C	978787708	38	6	100	919254408	RAUPENTRAEGER VORM.RE.
HUELSE 33.0X19 FE//ZNNI8//C	978787708	25	3	127	917257108	ZENTRALSCHMIERUNG RAUP
HUELSE 33.0X19 FE//ZNNI8//C	978787708	69	12	137	919499408	ZENTRALBALLAST
HUELSE 33.0X19 FE//ZNNI8//C	978787708	15	12	158	918731108	MONTAGETEILE DREHBUEHN
HUELSE 33.0X19 FE//ZNNI8//C	978787708	30	5	429	96036790	DREHBUEHNENVERKLEIDUN
HUELSE 33.0X19 FE//ZNNI8//C	978787708	53	4	462	918759808	ZUSATZHEIZUNG OW
HUELSE 33.0X19 FE//ZNNI8//C	978787708	(6)	6	478	969763408	VERROHRUNG DRUCKLUFTA
HUELSE 33.0X19 FE//ZNNI8//C	978787708	45	2	483	918484108	HARNSTOFFANLAGE
HUELSE 33.0X19 FE//ZNNI8//C	978787708	5	2	497	96039740	ZUSATZTEILE VERKLEIDUNG
HUELSE 33.0X19 FE//ZNNI8//C	978787708	2	3	608	968210808	ANBAUTEILE KAMERA
HUELSE 65.0X248 E235+N	97100243	42	1	70	919254308	RAUPENTRAEGER VORM.LI.
HUELSE 65.0X248 E235+N	97100243	42	1	100	919254408	RAUPENTRAEGER VORM.RE.
HUELSE 70.0X120 S355J2G3	979443608	45	4	30	917511508	RAUPENMITTELTEIL VORM.
HUELSE PA6G	97030030	5	1	474	967928508	VERRIEGELUNG
HUELSE RD.32X41 X12CRNIS	955917908	26	4	672	966134608	ANBAUTEILE ZYLINDER
HUELSE RD20X15 S355J2G3	941530008	15	4	134	919087608	DREHDURCHFUEHRUNG
HUELSE RD40X50 42CRMO4+Q	956078908	22	1	70	919254308	RAUPENTRAEGER VORM.LI.
HUELSE RD40X50 42CRMO4+Q	956078908	22	1	100	919254408	RAUPENTRAEGER VORM.RE.
HUELSE RD40X50 42CRMO4+Q	956078908	5	2	332	917825508	OELBEHAELTER ANBAU
HUELSE X46Cr13	10152168	2	1	192	10149578	ZYLINDERKOPF
HUTMUTTER DIN 1587 M6 A2-7	10219361	12	4	394	965784408	DACHSCHEIBE VORM.
HUTMUTTER DIN 986 M4 A2-7	4002886	32	4	128	11347526	ELEKTROPUMPE
HUTMUTTER DIN 986 M4 A2-7	4002886	25	4	504	10327065	ELEKTROPUMPE
HUTMUTTER DIN 986 M6	691035008	36	2	47	11346779	SCHLEIFRINGUEBERTRAGER
HUTSCHIENE 35X27X7,3X1	602106708	1	0.135	524	967589508	KLEMMENLEISTE
HUTSCHIENE 35X27X7,3X1	602106708	10	0.245	682	966291008	KLEMMKASTEN
HUTSCHIENE 35X27X7,3X1	602106708	295	0.205	685	968708708	KLEMMKASTEN KPL.
HYDR.FAHRANTRIEB	919296408	4	1	95	919254208	RAUPENTRAEGER KPL.RE.
HYDR.FAHRANTRIEB	919296508	4	1	65	919254108	RAUPENTRAEGER KPL.LI.
HYDR.FAHRANTRIEB	96035792	4	1	105	919296408	HYDR.FAHRANTRIEB
HYDR.FAHRANTRIEB	96035796	4	1	88	919296508	HYDR.FAHRANTRIEB
HYDRAULIK	918732808	185	1	11		LIEBHERR LTR 1220
HYDRAULIK ABSTUETZUNG	917430308	100	1	121	919644008	HYDRAULISCHE ABSTUETZUN
HYDRAULIK ABSTUETZUNG	968077208	4	1	122	917430308	HYDRAULIK ABSTUETZUNG
HYDRAULIK HILFSHUBWERK	917267308	333	1	11		LIEBHERR LTR 1220
HYDRAULIK HILFSHUBWERK	967784808	4	1	587	917267308	HYDRAULIK HILFSHUBWERK
HYDRAULIK MITTELTEIL	919296608	3	1	27	919499308	RAUPENMITTELTEIL KPL.
HYDRAULIK MITTELTEIL	96035801	4	1	48	919296608	HYDRAULIK MITTELTEIL
HYDRAULIK OBERWAGEN	96045351	4	1	530	918732808	HYDRAULIK
HYDRAULIK TELE	917262408	217	1	11		LIEBHERR LTR 1220
HYDRAULIK TELE	967784508	4	1	686	917262408	HYDRAULIK TELE

Bezeichnung	Artikel	Pos.	Menge	Seite	Baugruppe	Bezeichnung
HYDRAULISCHE ABSTUETZUN	919644008	14	1	9		LIEBHERR LTR 1220
HYDRAULISCHE BALLASTIER	918956108	153	1	10		LIEBHERR LTR 1220
HYDROMOTOR	10872388	8	1	566	11622561	OEL-LUFTKUEHLER
HYDROMOTOR A2FM 23CM³/U	510229408	2	2	338	919369308	DREHWERK
HYDROZYLINDER 65/36-480 SP	512363708	4	1	731	917267508	TRANSPORTHALTERUNG DKS
HYDROZYLINDER 70/45-50 SP	10443748	1	1	350	917259608	DREHBUEHNENARRETIERUN
INBUSSCHLUESSEL DIN 911	790021208	34	1	144	928569808	GRUNDWERKZEUG
INBUSSCHLUESSEL DIN 911	790021308	35	1	144	928569808	GRUNDWERKZEUG
INBUSSCHLUESSEL DIN 911 4	790021608	30	1	144	928569808	GRUNDWERKZEUG
INBUSSCHLUESSEL DIN 911 5	790020008	31	1	144	928569808	GRUNDWERKZEUG
INBUSSCHLUESSEL DIN 911 6	790020108	32	1	144	928569808	GRUNDWERKZEUG
INBUSSCHLUESSEL DIN 911	790021008	33	1	144	928569808	GRUNDWERKZEUG
INDUKTIVSENSOR BERUEHR	10354584	10	1	26	968036408	ENDSCHALTER VORM.
INDUKTIVSENSOR BERUEHR	10354584	58	1	450	96036957	ELEKTRIK ANBAUTEILE KABIN
INDUKTIVSENSOR BERUEHR	10354584	(6)	6	672	966134608	ANBAUTEILE ZYLINDER
INDUKTIVSENSOR BERUEHR	10354584	(5)	1	683	966591508	ENDSCHALTER ANBAU
INDUKTIVSENSOR BERUEHR	692312708	(7)	2	672	966134608	ANBAUTEILE ZYLINDER
INJEKTOR LI2.7-20-SF-950	10147680	1	1	209	10152867	INJEKTOR MIT BEFEST.
INJEKTOR MIT BEFEST. LI2.7-	10152867	190	4	162	12856862	DIESELMOTOR
INNENGRIFF ZUG	11005984	2	1	406	966230408	SCHLIESSANLAGE
INNENLAMELLE	10175222	6	7	343	90025781	BREMSLAMELLENSATZ
INNENLAMELLE	737350503	(5)	8	73	90028956	FAHRANTRIEB
INNENLEUCHTE 6W 24V WEIS	10342854	8	2	449	96036957	ELEKTRIK ANBAUTEILE KABIN
INNENRAD Z=74	927745401	20	1	357	939292201	PLANETENGETRIEBE
INNENRAD Z=90 42CrMo4	927746101	55	1	357	939292201	PLANETENGETRIEBE
INNENRING 40X45X20	747404001	71	1	340	90008901	DREHWERKANTRIEB
INNENVERKLEIDUNG EINBAU	917305408	1	1	380	917304508	KRANFUEHRERKABINE VORM.
ISOLIERRING	691041708	6	37	47	11346779	SCHLEIFRINGUEBERTRAGER
ISOLIERSCHLAUCH DN10X0,6	11082604	204	4.29	44	96045228	KABELSTRANG
ISOLIERSCHLAUCH DN10X0,6	11082604	204	4.43	446	96036955	KABELSTRANG
ISOLIERSCHLAUCH DN10X0,6	11082604	204	0.73	448	96036956	KABELSTRANG
ISOLIERSCHLAUCH DN10X0,6	11082604	204	7.12	512	96037136	KABELSTRANG
ISOLIERSCHLAUCH DN12X0,6	11082605	205	1.63	446	96036955	KABELSTRANG
ISOLIERSCHLAUCH DN12X0,6	11082605	205	0.86	510	96045385	KABELSTRANG
ISOLIERSCHLAUCH DN12X0,6	11082605	205	1.33	512	96037136	KABELSTRANG
ISOLIERSCHLAUCH DN12X0,6	11082605	205	5.21	514	96037137	KABELSTRANG
ISOLIERSCHLAUCH DN12X0,8	11005151	284	5.59	514	96037137	KABELSTRANG
ISOLIERSCHLAUCH DN14X0,6	11082606	206	1.18	512	96037136	KABELSTRANG
ISOLIERSCHLAUCH DN14X0,8	603012608	11	1.5	602	918377508	KUEHLWASSERVORWAERM
ISOLIERSCHLAUCH DN18X0,8	11082608	208	0.28	512	96037136	KABELSTRANG
ISOLIERSCHLAUCH DN20X0,8	11082609	209	1.23	44	96045228	KABELSTRANG
ISOLIERSCHLAUCH DN4X0,5	11082601	4	0.28	456	963398008	AXIALLUEFTER VORM.OBEN
ISOLIERSCHLAUCH DN6X0,5	11082602	202	2.31	44	96045228	KABELSTRANG
ISOLIERSCHLAUCH DN6X0,5	11082602	15	0.04	394	965784408	DACHSCHEIBE VORM.
ISOLIERSCHLAUCH DN6X0,5	11082602	202	7.44	446	96036955	KABELSTRANG
ISOLIERSCHLAUCH DN6X0,5	11082602	202	5.94	448	96036956	KABELSTRANG
ISOLIERSCHLAUCH DN6X0,5	11082602	202	24.41	510	96045385	KABELSTRANG
ISOLIERSCHLAUCH DN6X0,5	11082602	202	14.02	512	96037136	KABELSTRANG
ISOLIERSCHLAUCH DN6X0,5	11082602	202	8.82	514	96037137	KABELSTRANG
ISOLIERSCHLAUCH DN6X0,5	11082602	202	2.1	615	96043733	KABELSTRANG
ISOLIERSCHLAUCH DN8X0,65	11082603	203	2.41	44	96045228	KABELSTRANG
ISOLIERSCHLAUCH DN8X0,65	11082603	203	2.2	446	96036955	KABELSTRANG
ISOLIERSCHLAUCH DN8X0,65	11082603	203	2.77	448	96036956	KABELSTRANG
ISOLIERSCHLAUCH DN8X0,65	11082603	203	2.14	510	96045385	KABELSTRANG
ISOLIERSCHLAUCH DN8X0,65	11082603	203	9.43	512	96037136	KABELSTRANG
ISOLIERSCHLAUCH DN8X0,65	11082603	203	5.23	514	96037137	KABELSTRANG
ISOLIERSCHLAUCH ISO 3302-	11006584	122	4	280	96034631	KUEHLER VORM.
ISOLIERSCHLAUCH ISO 3302-	11006584	60	3.5	435	968977308	SCHALLDAEMMUNG
KABEL	10097087	15	2	614	96045237	AUSRUESTUNG KAMERA KAB
KABEL 2X0,14+2X0,22-9M	10870643	69	1	509	96045384	KABELLISTE DREHBUEHNE

Bezeichnung	Artikel	Pos.	Menge	Seite	Baugruppe	Bezeichnung
KABEL 2X0,25-7M	10025227	68	1	509	96045384	KABELLISTE DREHBUEHNE
KABEL 2X0,34+1X0,14-4M	10097085	12	1	616	96037130	AUSRUESTUNG KAMERA DRE
KABELBAUM 3300MM	553186908	10	1	445	96036954	KABELLISTE KRANFUEHRERK
KABELBAUM ANBAU	10151328	580	1	165	12856862	DIESELMOTOR
KABELBAUM W700	10153987	1	1	254	10151328	KABELBAUM ANBAU
KABELBINDER 2,5X98-SCHWA	603202208	268	30	520	96045387	DRAEHTE GRUNDAUFBAU KPL
KABELBINDER 2,5X98-SCHWA	603202208	266	5	682	966291008	KLEMMKASTEN
KABELBINDER 3,6X140-SCH	603200308	261	2	44	96045228	KABELSTRANG
KABELBINDER 3,6X140-SCH	603200308	261	1	446	96036955	KABELSTRANG
KABELBINDER 3,6X140-SCH	603200308	261	20	448	96036956	KABELSTRANG
KABELBINDER 3,6X140-SCH	603200308	261	8	512	96037136	KABELSTRANG
KABELBINDER 3,6X140-SCH	603200308	261	1	514	96037137	KABELSTRANG
KABELBINDER 3,6X140-SCH	603200308	261	30	520	96045387	DRAEHTE GRUNDAUFBAU KPL
KABELBINDER 3,6X200-SCH	603200408	269	30	520	96045387	DRAEHTE GRUNDAUFBAU KPL
KABELBINDER 4,6X200-SCH	11691035	(40)	10	506	919410708	EL.ANLAGE DREHBUEHNE
KABELBINDER 4,6X200-SW/GR	11691013	97	2	254	10151328	KABELBAUM ANBAU
KABELBINDER 4,8X292-SCH	10874588	99	3	254	10151328	KABELBAUM ANBAU
KABELBINDER 4,8X292-SCH	10874588	100	8	256	10151329	KABELSATZ ANBAU
KABELBINDER 4,8X292-SCH	10874588	(10)	50	506	919410708	EL.ANLAGE DREHBUEHNE
KABELBINDER 4,8X292-SCH	10874588	20	4	682	966291008	KLEMMKASTEN
KABELBINDER 7,6X368-SCH	10874587	(20)	50	506	919410708	EL.ANLAGE DREHBUEHNE
KABELBINDER 7,6X380-SCHW	10870333	(30)	100	506	919410708	EL.ANLAGE DREHBUEHNE
KABELBINDERHALTER 8,1X-S	11492315	42	11	522	969256608	GRUNDAUFBAU
KABELDOSE M1	10476382	503	1	140	96045205	KABELSTRANG
KABELDOSE M11-Z	604505508	522	4	44	96045228	KABELSTRANG
KABELDOSE M11-Z	604505508	518	1	510	96045385	KABELSTRANG
KABELDOSE M11-Z	604505508	506	1	516	96037133	LEITUNG
KABELDOSE M11-Z	604505508	507	1	617	96037132	LEITUNG
KABELDOSE M11-Z	604505508	(509)	1	711	917598408	ELEKTRIK MESS-U.WARNEINR
KABELEINFUEHRUNG	916170808	5	1	368	919010208	KRANFUEHRERKABINE VORM.
KABELHALTER	720014408	(15)	1	577	967969608	HILFSHUBWERK WINDE 2 VO
KABELHALTER	720014408	18	4	705	917268408	MASTNASE
KABELHALTER 3x486x370 DC0	970456508	6	1	672	966134608	ANBAUTEILE ZYLINDER
KABELHALTER 3x697x370 DC0	970456608	7	1	672	966134608	ANBAUTEILE ZYLINDER
KABELHALTER DC01 FE//ZNNI	953650008	22	7	577	967969608	HILFSHUBWERK WINDE 2 VO
KABELHALTER DC01 FE//ZNNI	953650008	68	28	639	917291908	ANLENKSTUECK VORM.
KABELHALTER DC01 FE//ZNNI	953650008	57	12	661	917292408	TELESKOP 5 VORM.
KABELKANAL 40X120/2000	601407008	32	0.29	522	969256608	GRUNDAUFBAU
KABELKANAL 40X60/2000	601406408	4	0.3	526	968063108	MONTAGEEINHEIT VORM.
KABELLISTE	96045204	10	1	138	919499508	BALLASTUEBERWACHUNG
KABELLISTE DREHBUEHNE	96045384	12	1	506	919410708	EL.ANLAGE DREHBUEHNE
KABELLISTE KRANFUEHRERK	96036954	5	1	444	918731608	ELEKTRIK KRANFUEHRERKAB
KABELMARKER	923512208	500	18	43	96045227	KABELSTRANG
KABELMARKER	923512208	500	26	44	96045228	KABELSTRANG
KABELMARKER	923512208	500	3	140	96045205	KABELSTRANG
KABELMARKER	923512208	500	53	446	96036955	KABELSTRANG
KABELMARKER	923512208	500	29	448	96036956	KABELSTRANG
KABELMARKER	923512208	500	76	510	96045385	KABELSTRANG
KABELMARKER	923512208	500	58	513	96037136	KABELSTRANG
KABELMARKER	923512208	500	21	514	96037137	KABELSTRANG
KABELMARKER	923512208	500	4	516	96037133	LEITUNG
KABELMARKER	923512208	500	2	615	96043733	KABELSTRANG
KABELMARKER	923512208	500	4	617	96037132	LEITUNG
KABELMARKER	923512208	(500)	4	711	917598408	ELEKTRIK MESS-U.WARNEINR
KABELMUFFE 12/21/25 EDPM	602600808	12	2	375	916170808	KABELEINFUEHRUNG
KABELSATZ ANBAU	10151329	2	1	254	10151328	KABELBAUM ANBAU
KABELSATZ ANBAU	10151390	8	1	254	10151328	KABELBAUM ANBAU
KABELSATZ WL705	10151164	1	1	256	10151329	KABELSATZ ANBAU
KABELSCHLAUCH DN16X0,6	11124205	223	8.35	510	96045385	KABELSTRANG
KABELSCHLAUCH DN16X0,6	11124205	223	3.89	512	96037136	KABELSTRANG

Bezeichnung	Artikel	Pos.	Menge	Seite	Baugruppe	Bezeichnung
KABELSCHLAUCH DN20X0,6	11124207	224	0.83	446	96036955	KABELSTRANG
KABELSCHLAUCH DN20X0,6	11124207	224	0.53	448	96036956	KABELSTRANG
KABELSCHLAUCH DN20X0,6	11124207	224	0.93	510	96045385	KABELSTRANG
KABELSCHLAUCH DN25X0,6	11124208	225	0.33	446	96036955	KABELSTRANG
KABELSCHLAUCH DN25X0,6	11124208	225	0.43	448	96036956	KABELSTRANG
KABELSCHLAUCH DN25X0,6	11124208	225	2.91	510	96045385	KABELSTRANG
KABELSCHLAUCH DN25X0,6	11124208	225	1.46	512	96037136	KABELSTRANG
KABELSCHLAUCH DN25X0,6	11124208	225	2.53	514	96037137	KABELSTRANG
KABELSCHLAUCH DN30X0,6	11124209	226	0.35	44	96045228	KABELSTRANG
KABELSCHLAUCH DN30X0,6	11124209	226	0.93	510	96045385	KABELSTRANG
KABELSCHLAUCH DN30X0,6	11124209	226	2.91	512	96037136	KABELSTRANG
KABELSCHLAUCH DN30X0,6	11124209	226	4.53	514	96037137	KABELSTRANG
KABELSCHLAUCH DN35X0,6	11124210	227	2.26	446	96036955	KABELSTRANG
KABELSCHLAUCH DN35X0,6	11124210	227	0.88	448	96036956	KABELSTRANG
KABELSCHLAUCH DN35X0,6	11124210	227	2.86	510	96045385	KABELSTRANG
KABELSCHLAUCH DN40X0,6	11124211	228	1.23	512	96037136	KABELSTRANG
KABELSCHLAUCH DN40X0,6	11124211	228	1.32	520	96045387	DRAEHTE GRUNDAUFBAU KPL
KABELSCHLAUCH DN50X0,6	11124212	229	1.2	510	96045385	KABELSTRANG
KABELSCHLAUCH DN50X0,6	11124212	229	3.71	512	96037136	KABELSTRANG
KABELSCHLAUCH DN50X0,6	11124212	229	0.65	520	96045387	DRAEHTE GRUNDAUFBAU KPL
KABELSCHUH AEHNL.DIN 462	602305605	766	1	513	96037136	KABELSTRANG
KABELSCHUH DIN 46234 M12/	602217308	50	1	512	96037136	KABELSTRANG
KABELSCHUH DIN 46234 M6/10	602311508	55	1	512	96037136	KABELSTRANG
KABELSCHUH DIN 46234 M6/16	602205708	58	4	512	96037136	KABELSTRANG
KABELSCHUH DIN 46234 M8/16	602301708	106	1	512	96037136	KABELSTRANG
KABELSCHUH DIN 46234 M8/1	602311408	57	2	512	96037136	KABELSTRANG
KABELSCHUH DIN 46237 6/6m	602213308	39	1	43	96045227	KABELSTRANG
KABELSCHUH DIN 46237 M6/1	602217908	34	5	43	96045227	KABELSTRANG
KABELSCHUH DIN 46237 M6/1	602217908	34	1	446	96036955	KABELSTRANG
KABELSCHUH M6/16,8-26,7MM	602205808	111	1	512	96037136	KABELSTRANG
KABELSCHUH M6/16MM²	602217008	49	1	512	96037136	KABELSTRANG
KABELSTECKER 4-POL 90°	10324830	511	1	510	96045385	KABELSTRANG
KABELSTRANG W200	96045227	21	1	36	96045226	SCHALTKASTEN VORM.
KABELSTRANG W202	96045228	23	1	36	96045226	SCHALTKASTEN VORM.
KABELSTRANG W227	96045205	30	1	139	96045204	KABELLISTE
KABELSTRANG W300	96036955	2	1	445	96036954	KABELLISTE KRANFUEHRERK
KABELSTRANG W301	967541908	3	1	445	96036954	KABELLISTE KRANFUEHRERK
KABELSTRANG W302	967542008	4	1	445	96036954	KABELLISTE KRANFUEHRERK
KABELSTRANG W310	96036956	7	1	445	96036954	KABELLISTE KRANFUEHRERK
KABELSTRANG W321	96043733	5	1	614	96045237	AUSRUESTUNG KAMERA KAB
KABELSTRANG W346	96023876	(10)	1	449	96036957	ELEKTRIK ANBAUTEILE KABIN
KABELSTRANG W500	96045385	50	1	509	96045384	KABELLISTE DREHBUEHNE
KABELSTRANG W501	96037136	51	1	509	96045384	KABELLISTE DREHBUEHNE
KABELSTRANG W522	966298408	(8)	1	577	967969608	HILFSHUBWERK WINDE 2 VO
KABELSTRANG W555	96037137	52	1	509	96045384	KABELLISTE DREHBUEHNE
KABELSTRANG WRCAN	967709108	521	1	44	96045228	KABELSTRANG
KABELTUELLE 12,0-3,0/12/1,4	10872032	98	8	512	96037136	KABELSTRANG
KABELTUELLE 16,0-4,0/16/1,78	10872033	709	2	513	96037136	KABELSTRANG
KABELTUELLE 2,4-3,0/2,4/0,6 SI	10473048	708	2	447	96036955	KABELSTRANG
KABELTUELLE 2,4-3,0/2,4/0,6 SI	10473048	708	1	448	96036956	KABELSTRANG
KABELTUELLE 4-6	602704808	520	6	44	96045228	KABELSTRANG
KABELTUELLE 4-6	602704808	504	2	516	96037133	LEITUNG
KABELTUELLE 4-6	602704808	505	3	617	96037132	LEITUNG
KABELTUELLE 4-6	602704808	(508)	1	711	917598408	ELEKTRIK MESS-U.WARNEINR
KABELTUELLE 6-8	604508708	516	1	510	96045385	KABELSTRANG
KABELTUELLE 8-10	604509408	511	1	44	96045228	KABELSTRANG
KABELVERBINDER	602336408	2	1	525	926891108	VERTEILER MASSE
KABELVERSCHRAUBUNG M12	602424008	67	2	450	96036957	ELEKTRIK ANBAUTEILE KABIN
KABELVERSCHRAUBUNG M1	602441701	11	2	598	918462708	FREMDEINSPEISUNG
KABELVERSCHRAUBUNG M1	602441701	11	1	603	917368108	EL.KUEHLWASSERVORWAE

Bezeichnung	Artikel	Pos.	Menge	Seite	Baugruppe	Bezeichnung
KABELVERSCHRAUBUNG M1	602424108	14	2	36	96045226	SCHALTKASTEN VORM.
KABELVERSCHRAUBUNG M1	602424108	153	1	41	966204108	ANTENNE KPL.
KABELVERSCHRAUBUNG M1	602424108	527	4	44	96045228	KABELSTRANG
KABELVERSCHRAUBUNG M16	10428532	48	2	449	96036957	ELEKTRIK ANBAUTEILE KABIN
KABELVERSCHRAUBUNG M2	10216578	13	1	603	917368108	EL.KUEHLWASSERVORWAE
KABELVERSCHRAUBUNG M2	602441001	526	2	44	96045228	KABELSTRANG
KABELVERSCHRAUBUNG M2	602441001	505	1	140	96045205	KABELSTRANG
KABELVERSCHRAUBUNG M2	602441001	(505)	1	711	917598408	ELEKTRIK MESS-U.WARNEINR
KABELVERSCHRAUBUNG M25	602425808	3	1	681	10354493	LEITUNGSTROMMEL
KABELVERSCHRAUBUNG PG1	602422108	8	1	598	918462708	FREMDEINSPEISUNG
KABINENARM SCHWK. RAL 70	967985808	1	1	365	917259908	KRANFUEHRERKABINE ANBA
KAEFIGMUTTER M5 ST	10455281	27	6	417	918810308	STEUERSTAND
KAEFIGMUTTER M6	413002708	44	4	417	918810308	STEUERSTAND
KAEFIGMUTTER M6	413002808	53	1	383	917305408	INNENVERKLEIDUNG EINBAU
KAEFIGMUTTER M6 NIROSTA	10875857	75	4	640	917291908	ANLENKSTUECK VORM.
KAEFIGMUTTER M6 NIROSTA	10875857	2	2	683	966591508	ENDSCHALTER ANBAU
KAELTEMASCHINENOEL WA	11211803	101	0.18	574	918628408	KLIMAANLAGE OW
KAELTEMITTEL 12KG FLASCH	7020440	100	1.6	574	918628408	KLIMAANLAGE OW
KAMERA MC3100B-2 SPF	10024012	10	1	618	96037131	AUSRUESTUNG KAMERA WIN
KAMERA SPF	10097079	10	1	616	96037130	AUSRUESTUNG KAMERA DRE
KAMERAHALTER VORM.	968993508	1	1	611	968267108	ANBAUTEILE KAMERA
KAMERAHALTER VORM.	968994408	1	1	608	968210808	ANBAUTEILE KAMERA
KAMERAUEBERWACHUNG O	918992008	491	1	12		LIEBHERR LTR 1220
KANTENSCHUTZ 1-2X9,5X6,5	262103908	123	0.5	280	96034631	KUEHLER VORM.
KANTENSCHUTZ 1-2X9,5X6,5	262103908	8	1.6	320	96023117	BATTERIEKASTEN VORM.
KANTENSCHUTZ 1-2X9,5X6,5	262103908	(3)	0.4	429	96036790	DREHBUEHNENVERKLEIDUN
KANTENSCHUTZ 1-2X9,5X6,5	262103908	(3)	0.6	429	96036790	DREHBUEHNENVERKLEIDUN
KANTENSCHUTZ 1-2X9,5X6,5	262103908	12	0.66	439	969015908	DREHBUEHNENVERKLEIDUN
KANTENSCHUTZ 1-2X9,5X6,5	262103908	7	0.16	525	926891108	VERTEILER MASSE
KANTENSCHUTZ 1-2X9,5X6,5	262103908	11	0.2	610	968290608	STATIV
KANTENSCHUTZ 1-2X9,5X6,5	262103908	11	0.2	613	968267208	STATIV
KANTENSCHUTZ 4-6X15,8X11	262106608	7	0.54	442	917260108	ABSTURZSICHERUNG
KAPPE	571582808	30	1	226	5700161	LUFTPRESSER
KAPPE	591064408	8	1	459	966707708	SPIEGELHALTER VORM.
KARABINERHAKEN DIN 5299 C	744010208	38	2	731	917267508	TRANSPORTHALTERUNG DKS
KARTUSCHE	571352308	1	1	479	502657308	LUFTTROCKNER
KAUSCHE UND KLEMME	571851308	60	1	675	10802064	SEILLAENGENGEBER
KBA-RING 130X121,1X3,5	11351303	3	1	188	10146367	KOLBEN KPL.
KEGELPFANNE DIN 6319 19 4	10875862	37	1	731	917267508	TRANSPORTHALTERUNG DKS
KEGELROLLENLAGER	10001107	16	1	302	10871043	VERSTELLPUMPE
KEGELROLLENLAGER	10293775	10	1	347	570109008	TRIEBWERK
KEGELROLLENLAGER	570951508	15	1	302	10871043	VERSTELLPUMPE
KEGELROLLENLAGER DIN 720	746221908	11	1	347	570109008	TRIEBWERK
KEGELSCHMIERNIPPEL	11080392	15	1	504	10327065	ELEKTROPUMPE
KEGELSCHMIERNIPPEL DIN 71	7743242	16	2	644	917292008	TELESKOP 1 VORM.
KEGELSCHMIERNIPPEL DIN 71	7743242	16	2	648	917292108	TELESKOP 2 VORM.
KEGELSCHMIERNIPPEL DIN 71	7743242	16	2	652	917292208	TELESKOP 3 VORM.
KEGELSCHMIERNIPPEL DIN 71	7743242	16	2	656	917292308	TELESKOP 4 VORM.
KEGELSCHMIERNIPPEL DIN 71	7743242	30	2	661	917292408	TELESKOP 5 VORM.
KEGELSCHMIERNIPPEL DIN 71	571578608	2	1	131	774375108	DURCHGANGSNIPPELBLOCK
KEGELSCHMIERNIPPEL DIN 7	774301101	18	1	354	90208882	KOMPAKTSEILWINDE
KEGELSTOPFEN	779010901	80	1	357	939292201	PLANETENGETRIEBE
KEILENDKLEMME 23-25 GR.26	12101239	5	1	628	919028808	MECH.TEILE VERSANDMONT
KEILRIPPENRIEMEN 8XPKX215	11482426	1	1	230	12418347	KLIMAKOMPRESSOR ANBAU
KEILSICHERUNGSSCHEIBE	7015814	50	2	405	917304708	SCHIEBETUER EINBAU
KERBSTIFT DIN 1472 4X12	431100201	21	1	355	932916901	SEILTROMMEL
KERBSTIFT DIN 1472 4X12	431100201	24	1	581	939294001	SEILTROMMEL
KERBSTIFT DIN 1473 5X24	431204301	18	1	581	939294001	SEILTROMMEL
KERBSTIFT ISO 8740 3X20	431200501	91	3	340	90008901	DREHWERKANTRIEB
KETTE DIN 763 7X49 0.3t ST35	10663970	3	2	664	96013575	HUBENDSCHALTER GEWICHT

Bezeichnung	Artikel	Pos.	Menge	Seite	Baugruppe	Bezeichnung
KETTENFUEHRUNG SCHWK.	968170308	12	3	70	919254308	RAUPENTRAEGER VORM.LI.
KETTENFUEHRUNG SCHWK.	968170308	12	3	100	919254408	RAUPENTRAEGER VORM.RE.
KETTENFUEHRUNG SCHWK.	968170708	14	1	70	919254308	RAUPENTRAEGER VORM.LI.
KETTENFUEHRUNG SCHWK.	968170708	14	1	100	919254408	RAUPENTRAEGER VORM.RE.
KFZ-LEITUNG 0,5	10870538	344	18.2	446	96036955	KABELSTRANG
KFZ-LEITUNG 0,75	10870539	345	8.16	446	96036955	KABELSTRANG
KFZ-LEITUNG 0,75	10870539	345	7.7	448	96036956	KABELSTRANG
KFZ-LEITUNG 0,75	10870539	345	11.4	510	96045385	KABELSTRANG
KFZ-LEITUNG 0,75	10870539	345	34.5	514	96037137	KABELSTRANG
KFZ-LEITUNG 1,0	10870540	305	25.99	43	96045227	KABELSTRANG
KFZ-LEITUNG 1,0	10870540	305	36.53	44	96045228	KABELSTRANG
KFZ-LEITUNG 1,0	10870540	305	319.78	446	96036955	KABELSTRANG
KFZ-LEITUNG 1,0	10870540	305	160.31	448	96036956	KABELSTRANG
KFZ-LEITUNG 1,0	10870540	305	395.03	510	96045385	KABELSTRANG
KFZ-LEITUNG 1,0	10870540	305	427.54	512	96037136	KABELSTRANG
KFZ-LEITUNG 1,0	10870540	305	82.2	514	96037137	KABELSTRANG
KFZ-LEITUNG 1,0	10870540	305	6.6	615	96043733	KABELSTRANG
KFZ-LEITUNG 1,5	10870541	307	37.14	512	96037136	KABELSTRANG
KFZ-LEITUNG 16	600431208	328	8.85	512	96037136	KABELSTRANG
KFZ-LEITUNG 2,5	10870542	309	30.5	446	96036955	KABELSTRANG
KFZ-LEITUNG 2,5	10870542	309	18.45	448	96036956	KABELSTRANG
KFZ-LEITUNG 2,5	10870542	309	23.3	512	96037136	KABELSTRANG
KFZ-LEITUNG DIN 72551 10	600430108	322	5.1	512	96037136	KABELSTRANG
KFZ-LEITUNG DIN 72551 16	600431008	326	5.1	512	96037136	KABELSTRANG
KFZ-LEITUNG DIN 72551 25	600431408	330	7.55	512	96037136	KABELSTRANG
KIPPHEBEL VORM.	11448000	2	2	194	11448005	KIPPHEBELBOCK VORM.
KIPPHEBELBOCK	11448002	1	1	194	11448005	KIPPHEBELBOCK VORM.
KIPPHEBELBOCK KPL. NEIN	10148438	81	4	161	12856862	DIESELMOTOR
KIPPHEBELBOCK VORM.	11448005	1	1	193	10148438	KIPPHEBELBOCK KPL.
KIPPHEBELBOCK VORM.	12549825	1	1	193	10148438	KIPPHEBELBOCK KPL.
KIPPZYLINDER 50/28-135 SPF	11214363	2	1	365	917259908	KRANFUEHRERKABINE ANBA
KLAMMER	10875952	1	1	703	10872003	ARBEITSSCHEINWERFER
KLAMMER	6202909	100	1	314	96034515	AUSGLEICHSBEHAELTER VO
KLAMMER EMVFSK 1 FEDER	10424210	37	2	449	96036957	ELEKTRIK ANBAUTEILE KABIN
KLAMMER EMVSK 12	602042808	38	2	449	96036957	ELEKTRIK ANBAUTEILE KABIN
KLAMMER SURE-SEAL	605215508	518	2	44	96045228	KABELSTRANG
KLAMMER SURE-SEAL	605215508	515	1	510	96045385	KABELSTRANG
KLAMMER SURE-SEAL	605215508	524	2	513	96037136	KABELSTRANG
KLAMMER SURE-SEAL	605215508	77	1	662	917292408	TELESKOP 5 VORM.
KLAPPE GEKLEBT SPF	969007208	1	1	433	968923508	KLAPPE VORM.RECHTS
KLAPPE KPL.	969017908	1	1	441	969016008	KLAPPE VORM.VORN LINKS
KLAPPE VORM.RECHTS SPF	968923508	2	1	429	96036790	DREHBUEHNENVERKLEIDUN
KLAPPE VORM.VORN LINKS	969016008	1	1	439	969015908	DREHBUEHNENVERKLEIDUN
KLAPPGRIFF 118X18X43	10870376	3	2	378	968514508	SCHALTSCHRANKDECKEL EIN
KLAPPKONSOLE SCHWK. SPF	922849008	1	1	733	923285508	KLAPPKONSOLE VORM.
KLAPPKONSOLE VORM.	923285508	2	1	731	917267508	TRANSPORTHALTERUNG DKS
KLAPPTEIL SCHWK. SPF	96020727	2	1	733	923285508	KLAPPKONSOLE VORM.
KLAUE	11004031	10	1	734	512363708	HYDROZYLINDER
KLEBEFOLIE AUSSENGRIFF 2	97088496	56	1	405	917304708	SCHIEBETUER EINBAU
KLEBER 600ML FC-BEUTEL	811203308	15	1	390	916162508	SCHEIBEN EINBAU
KLEBER 600ML FC-BEUTEL	811203308	48	1	405	917304708	SCHIEBETUER EINBAU
KLEBSTOFF 10ML FLASCHE -5	8655032	104	1	167	11389608	KURBELGEHAEUSE KPL. MIT
KLEBSTOFF 250ML FLASCHE	8655023	104	1	192	10149578	ZYLINDERKOPF
KLEMMBAND 1-3X21X9,3 ZELL	262101308	68	0.04	384	917305408	INNENVERKLEIDUNG EINBAU
KLEMMBRETT 6XM6	604412408	1	1	523	922648308	KLEMMBRETT VORM.
KLEMMBRETT VORM.	922648308	23	1	522	969256608	GRUNDAUFBAU
KLEMME	636107901	529	1	520	96045387	DRAEHTE GRUNDAUFBAU KPL
KLEMME	636107901	3	2	524	967589508	KLEMMENLEISTE
KLEMMENLEISTE	967589508	24	1	522	969256608	GRUNDAUFBAU
KLEMMHAELFTE 216-16 PP	602000708	301	26	699	967785008	ZUSATZHYDRAULIK KLAPPSPI

Bezeichnung	Artikel	Pos.	Menge	Seite	Baugruppe	Bezeichnung
KLEMMHAELFTE DIN 3015-1 L	602007808	326	64	51	96035801	HYDRAULIK MITTELTEIL
KLEMMHAELFTE DIN 3015-1 L	7365090	37	4	21	96034894	SCHUTZBLECH KPL.LI.
KLEMMHAELFTE DIN 3015-1 L	7365090	37	4	24	96034977	SCHUTZBLECH KPL.RE.
KLEMMHAELFTE DIN 3015-1 L	7365090	309	62	51	96035801	HYDRAULIK MITTELTEIL
KLEMMHAELFTE DIN 3015-1 L	602007108	35	12	672	966134608	ANBAUTEILE ZYLINDER
KLEMMHAELFTE DIN 3015-1 L	602007408	41	8	483	918484108	HARNSTOFFANLAGE
KLEMMHAELFTE DIN 3015-1 L	7362946	71	4	640	917291908	ANLENKSTUECK VORM.
KLEMMHAELFTE DIN 3015-1 L	602002208	306	6	478	969763408	VERROHRUNG DRUCKLUFTA
KLEMMHAELFTE DIN 3015-1 L	602008308	29	2	320	96023117	BATTERIEKASTEN VORM.
KLEMMHAELFTE DIN 3015-1 L	602008408	315	14	51	96035801	HYDRAULIK MITTELTEIL
KLEMMHAELFTE DIN 3015-1 L	602008408	30	2	320	96023117	BATTERIEKASTEN VORM.
KLEMMHAELFTE DIN 3015-1 L	602008508	317	6	51	96035801	HYDRAULIK MITTELTEIL
KLEMMHAELFTE DIN 3015-1 L	7005052	30	3	21	96034894	SCHUTZBLECH KPL.LI.
KLEMMHAELFTE DIN 3015-1 L	7005052	30	3	24	96034977	SCHUTZBLECH KPL.RE.
KLEMMHAELFTE DIN 3015-1 L	7005052	72	4	640	917291908	ANLENKSTUECK VORM.
KLEMMHAELFTE DIN 3015-1 L	7005052	36	2	672	966134608	ANBAUTEILE ZYLINDER
KLEMMHAELFTE DIN 3015-1 L	7005052	10	3	714	967933408	GRUNDHALTER VORM.
KLEMMHAELFTE DIN 3015-1 L	602008808	35	2	21	96034894	SCHUTZBLECH KPL.LI.
KLEMMHAELFTE DIN 3015-1 L	602008808	35	2	24	96034977	SCHUTZBLECH KPL.RE.
KLEMMHAELFTE DIN 3015-1 L	602008808	321	4	51	96035801	HYDRAULIK MITTELTEIL
KLEMMHAELFTE DIN 3015-1 L	602008908	324	8	539	96045351	HYDRAULIK OBERWAGEN
KLEMMHAELFTE DIN 3015-1 L	602009008	304	2	699	967785008	ZUSATZHYDRAULIK KLAPPSPI
KLEMMHAELFTE DIN 3015-1 L	602009108	315	4	539	96045351	HYDRAULIK OBERWAGEN
KLEMMHAELFTE DIN 3015-1 L	602009208	319	14	539	96045351	HYDRAULIK OBERWAGEN
KLEMMHAELFTE DIN 3015-1 L	602010108	309	6	90	96035796	HYDR.FAHRANTRIEB
KLEMMHAELFTE DIN 3015-1 L	602010108	309	6	107	96035792	HYDR.FAHRANTRIEB
KLEMMHAELFTE L 3 R 22 AL	11160668	190	4	276	919007708	ANTRIEBSAGGREGAT VORM.
KLEMMHAELFTE S 4 E 64 PP	10492888	325	8	478	969763408	VERROHRUNG DRUCKLUFTA
KLEMMHEBEL M10X32 EDEL	11320604	8	2	612	968993508	KAMERAHALTER VORM.
KLEMMHEBEL M8 X10CRNIS18	11642508	10	2	609	968994408	KAMERAHALTER VORM.
KLEMMHEBEL M8 X10CRNIS18	11642508	7	2	612	968993508	KAMERAHALTER VORM.
KLEMMKASTEN KPL. S930	968708708	1	1	684	968708608	ELEKTRIK KOPFSTUECK
KLEMMKASTEN S900	966291008	5	1	678	966290908	ELEKTRIK ANLENKSTUECK
KLEMMPROFIL 1,5-4X25X13 E	11002218	3	2.22	410	917676208	HEIZUNG KRANFUEHRERKAB
KLEMMPROFIL 25,7X21,5 EPD	10876056	55	3.4	405	917304708	SCHIEBETUER EINBAU
KLEMMPROFIL 2X13,5X20 EP	10300600	11	4.2	405	917304708	SCHIEBETUER EINBAU
KLEMMPROFIL 40X1M PUR-H	7014524	8	1	21	96034894	SCHUTZBLECH KPL.LI.
KLEMMPROFIL 40X1M PUR-H	7014524	8	1	24	96034977	SCHUTZBLECH KPL.RE.
KLEMMPROFIL 40X1M PUR-H	7014524	7	3	565	967980508	OELKUEHLER VORM.
KLEMMRING	11355067	9	1	486	10144093	REDUKTIONSMITTELINJEKTO
KLEMMRING RD10X12 PA6G	288182508	35	1	462	918759808	ZUSATZHEIZUNG OW
KLEMMSCHELLE 40,5/39-42	553054208	6	1	462	918759808	ZUSATZHEIZUNG OW
KLEMMSCHELLE 40,5/39-42	553054208	8	2	464	96020359	ZUSATZHEIZUNG VORM.
KLEMMSTUECK 12 G20MN5 FE	380057108	205	6	276	919007708	ANTRIEBSAGGREGAT VORM.
KLEMMSTUECK 20X157X69 S	97055361	8	1	494	96048826	ABGASANLAGE VORM.
KLEMMSTUECK 24	927606901	30	1	581	939294001	SEILTROMMEL
KLEMMSTUECK PA6G+OEL	976873708	3	2	609	968994408	KAMERAHALTER VORM.
KLEMMSTUECK PA6G+OEL	976873708	6	2	612	968993508	KAMERAHALTER VORM.
KLIMAANLAGE OW	918628408	301	1	11		LIEBHERR LTR 1220
KLIMAKOMPRESSOR ANBAU	12418347	340	1	163	12856862	DIESELMOTOR
KLIMAKOMPRESSOR D=119-	10148036	2	1	230	12418347	KLIMAKOMPRESSOR ANBAU
KLINKE	11490010	31	1	734	512363708	HYDROZYLINDER
KNEBEL GD-ZN	704255508	2	1	434	964093408	DECKEL KPL.
KNEBELVORREIBER GD-ZN S	704278708	4	2	84	968709108	DECKEL VORM.
KNEBELVORREIBER GD-ZN S	704278708	10	1	85	968420608	STAUKASTEN VORM.
KNIESTUECK	570066108	3	1	94	502806508	AUSGLEICHSBEHAELTER
KNOTENKETTE DIN 5686 2,5	740001808	39	0.3	731	917267508	TRANSPORTHALTERUNG DKS
KOLBEN	10152593	1	1	202	10152592	UEBERDRUCKVENTIL
KOLBEN	570110608	4	7	348	570109508	TRIEBWERK
KOLBEN	571582608	13	1	226	5700161	LUFTPRESSER

Bezeichnung	Artikel	Pos.	Menge	Seite	Baugruppe	Bezeichnung
KOLBEN	9886591	8	1	200	10129474	OELKUEHLER VORM.
KOLBEN 31CrMoV9	10149655	1	1	171	10138450	ENDREGELVENTIL
KOLBEN KPL. R-MOTORX130	10146367	70	4	161	12856862	DIESELMOTOR
KOLBENKUEHLUNG	10142749	15	4	160	12856862	DIESELMOTOR
KOLBENKUEHLUNG VORM.	10151634	1	1	172	10142749	KOLBENKUEHLUNG
KOMBIKUEHLER	97118133	100	1	280	96034631	KUEHLER VORM.
KOMBIZANGE DIN 5244 180	790031508	62	1	144	928569808	GRUNDWERKZEUG
KOMPAKTSEILWINDE KSW 400	90028852	10	1	577	967969608	HILFSHUBWERK WINDE 2 VO
KOMPAKTSEILWINDE KSW 400	90208882	1	1	352	917259708	HAUPTHUBWERK
KONDENSATOR	10815368	104	1	280	96034631	KUEHLER VORM.
KONSOLE 4X1167X434 S315M	97060662	4	1	483	918484108	HARNSTOFFANLAGE
KONSOLE 4X163X242 S315MC	97058382	11	2	429	96036790	DREHBUEHNENVERKLEIDUN
KONSOLE 4X257X253 S315MC	97056391	7	1	545	96035117	MECH.BEFESTIGUNGSTEILE
KONSOLE 4X277X179 S315MC	97065229	42	1	275	919007708	ANTRIEBSAGGREGAT VORM.
KONSOLE 4X470X340 S315MC	97056389	6	1	545	96035117	MECH.BEFESTIGUNGSTEILE
KONSOLE FREMDEINSPEISUN	917269408	389	1	12		LIEBHERR LTR 1220
KONSOLE LINKS	968073008	2	1	442	917260108	ABSTURZSICHERUNG
KONSOLE LINKS SPF	967588308	3	1	417	918810308	STEUERSTAND
KONSOLE RECHTS	968072808	1	1	442	917260108	ABSTURZSICHERUNG
KONSOLE RECHTS FE//ZNNI8/	96036998	4	1	318	918955408	BATTERIEKASTEN KPL.
KONSOLE RECHTS SPF	967588408	4	1	417	918810308	STEUERSTAND
KONSOLE SCHWK.	923982608	1	1	735	923879808	KONSOLE VORM.
KONSOLE SCHWK.	925042108	3	1	731	917267508	TRANSPORTHALTERUNG DKS
KONSOLE SCHWK.	96000309	80	1	71	919254308	RAUPENTRAEGER VORM.LI.
KONSOLE SCHWK.	96000309	80	1	101	919254408	RAUPENTRAEGER VORM.RE.
KONSOLE SCHWK.	96000310	81	1	71	919254308	RAUPENTRAEGER VORM.LI.
KONSOLE SCHWK.	96000310	81	1	101	919254408	RAUPENTRAEGER VORM.RE.
KONSOLE SCHWK.	96000311	82	1	71	919254308	RAUPENTRAEGER VORM.LI.
KONSOLE SCHWK.	96000311	82	1	101	919254408	RAUPENTRAEGER VORM.RE.
KONSOLE SCHWK.	96000312	83	1	71	919254308	RAUPENTRAEGER VORM.LI.
KONSOLE SCHWK.	96000312	83	1	101	919254408	RAUPENTRAEGER VORM.RE.
KONSOLE SCHWK.	96036907	12	1	134	919087608	DREHDURCHFUEHRUNG
KONSOLE SCHWK.	96049688	2	2	121	919644008	HYDRAULISCHE ABSTUETZUN
KONSOLE SCHWK.	96049689	3	2	121	919644008	HYDRAULISCHE ABSTUETZUN
KONSOLE SCHWK.	967996008	9	2	17	919617108	RAUPENFAHRWERK KPL.
KONSOLE SCHWK.	968011508	4	1	134	919087608	DREHDURCHFUEHRUNG
KONSOLE SCHWK. FE//ZNNI8/	96021362	7	1	417	918810308	STEUERSTAND
KONSOLE SCHWK. FE//ZNNI8/	962947308	4	1	672	966134608	ANBAUTEILE ZYLINDER
KONSOLE SCHWK. FE//ZNNI8/	962947408	5	1	672	966134608	ANBAUTEILE ZYLINDER
KONSOLE SCHWK. FE//ZNNI8/	968014908	6	4	121	919644008	HYDRAULISCHE ABSTUETZUN
KONSOLE SCHWK. FE//ZNNI8/	969168408	11	8	121	919644008	HYDRAULISCHE ABSTUETZUN
KONSOLE SCHWK. RAL 7016,	969101808	1	1	414	969085208	HEIZUNG VORM.
KONSOLE SCHWK. RAL 9005	968729008	1	1	721	968728808	KONSOLE VORM.
KONSOLE SCHWK. RAL 9005	964843708	12	2	417	918810308	STEUERSTAND
KONSOLE SCHWK.LI. FE//ZNNI	96021363	8	1	417	918810308	STEUERSTAND
KONSOLE SCHWK.LI. FE//ZNNI	96037000	5	1	318	918955408	BATTERIEKASTEN KPL.
KONSOLE SCHWK.LI. RAL 900	964843808	13	1	417	918810308	STEUERSTAND
KONSOLE SCHWK.RE. FE//ZN	96021365	9	1	417	918810308	STEUERSTAND
KONSOLE SCHWK.RE. RAL 900	964843908	14	1	417	918810308	STEUERSTAND
KONSOLE VORM.	923879808	40	1	731	917267508	TRANSPORTHALTERUNG DKS
KONSOLE VORM.	968646408	2	1	600	917269408	KONSOLE FREMDEINSPEISUN
KONSOLE VORM.	968728808	1	1	719	968811608	QUERTRAEGER
KONSOLE VORM.	969431008	3	1	545	96035117	MECH.BEFESTIGUNGSTEILE
KONSOLE X5CrNi18-10	10149679	3	1	220	10149677	VERBINDUNGSLEITUNG ANBA
KONTAKT 0,5-1MM2	602300308	125	35	43	96045227	KABELSTRANG
KONTAKT 0,5-1MM2	602300308	125	19	44	96045228	KABELSTRANG
KONTAKT 0,5-1MM2	602300308	125	110	446	96036955	KABELSTRANG
KONTAKT 0,5-1MM2	602300308	125	118	448	96036956	KABELSTRANG
KONTAKT 0,5-1MM2	602300308	125	96	510	96045385	KABELSTRANG
KONTAKT 0,5-1MM2	602300308	125	92	512	96037136	KABELSTRANG

Bezeichnung	Artikel	Pos.	Menge	Seite	Baugruppe	Bezeichnung
KONTAKT 0,5-1MM2	602300308	125	27	514	96037137	KABELSTRANG
KONTAKT 0,5-1MM2	602300308	125	2	516	96037133	LEITUNG
KONTAKT 0,5-1MM2	602300308	125	6	615	96043733	KABELSTRANG
KONTAKT 0,5-1MM2	602329108	617	12	44	96045228	KABELSTRANG
KONTAKT 0,5-1MM2	602329108	617	8	513	96037136	KABELSTRANG
KONTAKT 1,0-2,5MM2	10877344	2259	5	447	96036955	KABELSTRANG
KONTAKT 1-2,5MM2	602300108	121	14	43	96045227	KABELSTRANG
KONTAKT 1-2,5MM2	602300108	121	1	44	96045228	KABELSTRANG
KONTAKT 1-2,5MM2	602300108	121	13	446	96036955	KABELSTRANG
KONTAKT 1-2,5MM2	602300108	121	27	448	96036956	KABELSTRANG
KONTAKT 1-2,5MM2	602300108	121	13	510	96045385	KABELSTRANG
KONTAKT 1-2,5MM2	602300108	121	21	512	96037136	KABELSTRANG
KONTAKT 1-2,5MM2	602300108	121	9	514	96037137	KABELSTRANG
KONTAKTSATZ	11659642	22	1	675	10802064	SEILLAENGENGEBER
KONTAKTSICHERUNGSSTIFT	10045101	509	1	43	96045227	KABELSTRANG
KONTAKTSICHERUNGSSTIFT	10045101	528	2	520	96045387	DRAEHTE GRUNDAUFBAU KPL
KONTAKTSICHERUNGSSTIFT J	10099866	511	1	43	96045227	KABELSTRANG
KONTAKTSICHERUNGSSTIFT J	10099866	507	1	513	96037136	KABELSTRANG
KONTAKTSICHERUNGSSTIFT	10099867	513	1	43	96045227	KABELSTRANG
KONTAKTSICHERUNGSSTIFT	10099867	511	7	520	96045387	DRAEHTE GRUNDAUFBAU KPL
KONTAKTSICHERUNGSSTIFT J	10099868	502	2	43	96045227	KABELSTRANG
KONTAKTSICHERUNGSSTIFT J	10099868	522	9	520	96045387	DRAEHTE GRUNDAUFBAU KPL
KONTAKTVERRIEGELUNG 2-	12693951	524	1	514	96037137	KABELSTRANG
KONTAKTVERRIEGELUNG 2-	7368241	526	1	447	96036955	KABELSTRANG
KONTAKTVERRIEGELUNG 2-	7368241	527	2	513	96037136	KABELSTRANG
KONTAKTVERRIEGELUNG 2-	7368241	523	2	514	96037137	KABELSTRANG
KONTAKTVERRIEGELUNG DT	10216772	513	1	513	96037136	KABELSTRANG
KONTAKTVERRIEGELUNG DT	10342519	510	2	446	96036955	KABELSTRANG
KONTAKTVERRIEGELUNG DT	10342519	526	3	513	96037136	KABELSTRANG
KONTAKTVERRIEGELUNG DT	10342519	518	2	514	96037137	KABELSTRANG
KONTAKTVERRIEGELUNG DT-	7368246	504	1	514	96037137	KABELSTRANG
KONTAKTVERRIEGELUNG DT-	6205242	521	1	514	96037137	KABELSTRANG
KONUSLAGER 70NR11	10291989	2	4	369	967986308	LAGERUNG EINBAU
KRAFTSTOFF-FEINFILTERAN	10146791	201	1	162	12856862	DIESELMOTOR
KRAFTSTOFFBEHAELTER AN	917626608	108	1	9		LIEBHERR LTR 1220
KRAFTSTOFFBEHAELTER SCH	969072608	1	1	325	968999708	KRAFTSTOFFBEHAELTER VO
KRAFTSTOFFBEHAELTER VO	968999708	1	1	323	917626608	KRAFTSTOFFBEHAELTER AN
KRAFTSTOFFFEINFILTER KRA	12820742	2	1	213	10133928	FILTERKONSOLE VORM.
KRAFTSTOFFFILTER	10878502	100	1	327	96034868	KRAFTSTOFFFILTER VORM.
KRAFTSTOFFFILTER	553174008	1	1	468	11110051	DOSIERPUMPE
KRAFTSTOFFFILTER VORM.	96034868	1	1	326	919231108	KRAFTSTOFFFOERDERUNG
KRAFTSTOFFFILTEREINSATZ	10149977	1	1	330	10878502	KRAFTSTOFFFILTER
KRAFTSTOFFFOERDERUNG	919231108	109	1	9		LIEBHERR LTR 1220
KRAFTSTOFFLEITUNG	9078935	4	1	215	10143342	LECKOELRUECKLAUF
KRAFTSTOFFLEITUNG 12X1	10143240	7	1	214	10143341	KRAFTSTOFFLEITUNGEN
KRAFTSTOFFLEITUNGEN	10143341	212	1	162	12856862	DIESELMOTOR
KRAFTSTOFFPUMPE	12101888	2	1	330	10878502	KRAFTSTOFFFILTER
KRAFTSTOFFSCHLAUCH DN4,	10815777	32	1	462	918759808	ZUSATZHEIZUNG OW
KRAFTSTOFFSCHLAUCH DN4,	10815777	15	1	464	96020359	ZUSATZHEIZUNG VORM.
KRAFTSTOFFSCHLAUCH DN4,	553191108	31	0.06	462	918759808	ZUSATZHEIZUNG OW
KRANFUEHRERKABINE ANBA	917259908	129	1	10		LIEBHERR LTR 1220
KRANFUEHRERKABINE KAUF	916165808	1	1	401	917304608	KRANFUEHRERKABINE ROH
KRANFUEHRERKABINE ROH	917304608	132	1	10		LIEBHERR LTR 1220
KRANFUEHRERKABINE VORM.	917304508	131	1	10		LIEBHERR LTR 1220
KRANFUEHRERKABINE VORM.	919010208	130	1	10		LIEBHERR LTR 1220
KREUZLASCHE	968498108	2	1	629	968068308	MONTAGEVORRICHTUNG
KREUZSCHL.SCHR.DREHER 2	790033208	53	1	144	928569808	GRUNDWERKZEUG
KRONENMUTTER DIN 935 M36	10179495	5	1	721	968728808	KONSOLE VORM.
KRUEMMER	10142671	1	1	234	10142742	KUEHLMITTELKRUEMMER AN
KUEHLER VORM.	96034631	2	1	275	919007708	ANTRIEBSAGGREGAT VORM.

Bezeichnung	Artikel	Pos.	Menge	Seite	Baugruppe	Bezeichnung
KUEHLERGRILL 820X730X80	96007145	2	1	628	919028808	MECH.TEILE VERSANDMONT
KUEHLERHAUBE	968100408	10	1	431	96017704	KUEHLERHAUBE KPL.
KUEHLERHAUBE KPL.	96017704	1	1	429	96036790	DREHBUEHNENVERKLEIDUN
KUEHLMITTELKRUEMMER AN	10142742	382	1	163	12856862	DIESELMOTOR
KUEHLWASSERENTLUEFTUN	10142744	387	1	163	12856862	DIESELMOTOR
KUEHLWASSERLEITUNG 12X1	10145177	1	1	229	10145278	ANBAUTEILE LUFTPRESSER
KUEHLWASSERLEITUNG 12X1	10145178	2	1	229	10145278	ANBAUTEILE LUFTPRESSER
KUEHLWASSERSCHLAUCH 55	97050894	251	1	276	919007708	ANTRIEBSAGGREGAT VORM.
KUEHLWASSERSCHLAUCH 55/	97050893	250	1	276	919007708	ANTRIEBSAGGREGAT VORM.
KUEHLWASSERSCHLAUCH D	11621770	12	0.06	414	969085208	HEIZUNG VORM.
KUEHLWASSERSCHLAUCH D	11621770	14	0.7	414	969085208	HEIZUNG VORM.
KUEHLWASSERSCHLAUCH D	11621770	14	0.1	462	918759808	ZUSATZHEIZUNG OW
KUEHLWASSERSCHLAUCH D	11621770	28	0.07	464	96020359	ZUSATZHEIZUNG VORM.
KUEHLWASSERVORWAERMU	918377508	401	1	12		LIEBHERR LTR 1220
KUGEL DIN 5401 3	610706308	6	1	696	511479408	LASTHALTEVENTIL
KUGEL DIN 5401 3,5	511036508	1	1	58	11643183	STEUERBLOCK
KUGEL DIN 5401 3,5	511036508	1	1	61	11643184	STEUERBLOCK
KUGEL DIN 5401 7	570862108	6	1	58	11643183	STEUERBLOCK
KUGEL DIN 5401 7	570862108	6	1	61	11643184	STEUERBLOCK
KUGEL DIN 5401 7,5	518512408	9	2	58	11643183	STEUERBLOCK
KUGEL DIN 5401 7,5	518512408	9	2	61	11643184	STEUERBLOCK
KUGELELEMENT PA6G SPF	975040308	4	1	370	96015921	BEDIENELEMENTE EINBAU
KUGELHAHN BKH12-L-10 A3C	510697608	178	1	539	96045351	HYDRAULIK OBERWAGEN
KUGELHAHN BKHU DN 10	571723608	5	1	552	10332882	STEUERBLOCK
KUGELHAHN DN20-G 3/4	10044661	101	1	327	96034868	KRAFTSTOFFFILTER VORM.
KUGELHAHNKOMBINATION D	510697708	179	1	539	96045351	HYDRAULIK OBERWAGEN
KUGELKNOPF DIN 319 C20XM5	704006308	10	1	612	968993508	KAMERAHALTER VORM.
KUGELKNOPF DIN 319 C40XM	704004208	7	1	733	923285508	KLAPPKONSOLE VORM.
KUGELSCHEIBE DIN 6319 17 4	10875863	36	1	731	917267508	TRANSPORTHALTERUNG DKS
KUGELSCHEIBE DIN 6319 C 8,	11622278	4	1	209	10152867	INJEKTOR MIT BEFEST.
KUGELSCHEIBE DIN 6319 C 8,	11622278	(2)	1	210	10153151	DRUCKROHRSTUTZEN MIT BE
KUGELSCHEIBE DIN 6319 C 8,	11622278	2	1	211	10135434	BEFESTIGUNG DRUCKROHR
KUGELSPERRBOLZEN 12X115	11160586	22	4	121	919644008	HYDRAULISCHE ABSTUETZUN
KUGELSPERRBOLZEN 12X90	10490116	32	2	116	968046208	ANBAUTEILE
KUGELSPERRBOLZEN 20X171,	11320194	46	4	30	917511508	RAUPENMITTELTEIL VORM.
KUGELSPERRBOLZEN 20X171,	11320194	21	1	474	967928508	VERRIEGELUNG
KUGELSPERRBOLZEN 20X171,	11320194	11	1	475	967978908	VERRIEGELUNG VORM.
KUGELSPERRBOLZEN NIROST	704008508	10	2	25	968019508	ENDSCHALTER ANBAU
KUNSTSTOFFROHR KPL.	96023299	(2331)	1	483	918484108	HARNSTOFFANLAGE
KUPFERPASTE 850g	10002552	132	1	238	10140729	ATL-ANBAU
KUPPLUNG	97066819	101	1	275	919007708	ANTRIEBSAGGREGAT VORM.
KUPPLUNG 16MnCrS5	12861845	25	1	207	10149198	RS VORFOERDERPUMPE
KUPPLUNGSDOSE 3-POL GER	605012708	7	1	598	918462708	FREMDEINSPEISUNG
KUPPLUNGSDOSE 4-POL 90°	680000708	5	1	446	96036955	KABELSTRANG
KUPPLUNGSDOSE 4-POL GER	680001708	12	1	510	96045385	KABELSTRANG
KUPPLUNGSDOSE 4-POL SPF	10678491	6	1	44	96045228	KABELSTRANG
KUPPLUNGSDOSE 4-POL SPF	10678491	13	1	510	96045385	KABELSTRANG
KUPPLUNGSDOSE 4-POL SPF	10678491	5	1	512	96037136	KABELSTRANG
KUPPLUNGSDOSE 4-POL SPF	10678491	6	1	512	96037136	KABELSTRANG
KUPPLUNGSDOSE 4-POL SPF	10678491	7	1	512	96037136	KABELSTRANG
KUPPLUNGSDOSE 4-POL SPF	10678491	8	1	512	96037136	KABELSTRANG
KUPPLUNGSDOSE 4-POL SPF	10678491	9	1	512	96037136	KABELSTRANG
KUPPLUNGSDOSE 4-POL SPF	10678494	10	1	510	96045385	KABELSTRANG
KUPPLUNGSDOSE 4-POL SPF	10871126	5	1	140	96045205	KABELSTRANG
KUPPLUNGSDOSE 4-POL SPF	10871126	375	1	510	96045385	KABELSTRANG
KUPPLUNGSDOSE 4-POL SPF	10871126	377	1	510	96045385	KABELSTRANG
KUPPLUNGSDOSE 4-POL SPF	10871127	376	1	510	96045385	KABELSTRANG
KUPPLUNGSDOSE 4-POL SPF	10871127	378	1	510	96045385	KABELSTRANG
KUPPLUNGSDOSE 4-POL SPF	10873383	6	1	140	96045205	KABELSTRANG
KUPPLUNGSDOSE 4-POL SPF	680001408	5	1	44	96045228	KABELSTRANG

Bezeichnung	Artikel	Pos.	Menge	Seite	Baugruppe	Bezeichnung
KUPPLUNGSDOSE 4-POL SPF	680001408	7	1	510	96045385	KABELSTRANG
KUPPLUNGSDOSE 4-POL SPF	680001408	8	1	510	96045385	KABELSTRANG
KUPPLUNGSDOSE 4-POL SPF	680001408	9	1	510	96045385	KABELSTRANG
KUPPLUNGSDOSE 4-POL SPF	680001408	14	1	510	96045385	KABELSTRANG
KUPPLUNGSDOSE 4-POL SPF	680001408	15	1	510	96045385	KABELSTRANG
KUPPLUNGSDOSE 4-POL SPF	680001408	16	1	510	96045385	KABELSTRANG
KUPPLUNGSDOSE 4-POL SPF	680001408	(6)	1	711	917598408	ELEKTRIK MESS-U.WARNEINR
KUPPLUNGSDOSE 4-POLE 90°	680000308	6	1	448	96036956	KABELSTRANG
KUPPLUNGSDOSE 4-POLE 90°	680000808	11	1	510	96045385	KABELSTRANG
KUPPLUNGSDOSE 4-POLE SP	680000008	6	1	446	96036955	KABELSTRANG
KUPPLUNGSDOSE 4-POLE SP	680000008	5	1	448	96036956	KABELSTRANG
KUPPLUNGSDOSE 4-POLE SP	680000008	7	1	448	96036956	KABELSTRANG
KUPPLUNGSDOSE 4-POLE SP	680000008	(7)	1	711	917598408	ELEKTRIK MESS-U.WARNEINR
KUPPLUNGSMUFFE	774372608	11	1	502	917261208	ZENTRALSCHMIERANLAGE O
KUPPLUNGSMUFFE	774372608	1	1	586	921444108	ZENTRALSCHMIERANLAGE
KUPPLUNGSMUFFE 3/8"-10L	10031989	155	1	699	967785008	ZUSATZHYDRAULIK KLAPPSPI
KUPPLUNGSMUFFE B2 12-L	511505808	176	2	539	96045351	HYDRAULIK OBERWAGEN
KUPPLUNGSMUFFE B3 16-S	511505908	151	3	699	967785008	ZUSATZHYDRAULIK KLAPPSPI
KUPPLUNGSMUFFE B6 22-L	511508208	162	1	589	967784808	HYDRAULIK HILFSHUBWERK
KUPPLUNGSMUFFE B6 25-S	510599608	158	1	589	967784808	HYDRAULIK HILFSHUBWERK
KUPPLUNGSMUFFE B8 38-S	511512208	153	2	589	967784808	HYDRAULIK HILFSHUBWERK
KUPPLUNGSSCHLUESSEL 9	966796408	100	1	143	919328608	WERKZEUG M.ZUBEHOER
KUPPLUNGSSTECKER	774372708	12	1	502	917261208	ZENTRALSCHMIERANLAGE O
KUPPLUNGSSTECKER	774372708	2	2	586	921444108	ZENTRALSCHMIERANLAGE
KUPPLUNGSSTECKER B2 10-L	511515008	151	2	688	967784508	HYDRAULIK TELE
KUPPLUNGSSTECKER B3 16-	511508608	153	3	699	967785008	ZUSATZHYDRAULIK KLAPPSPI
KUPPLUNGSSTECKER B6 22-L	511508108	163	1	589	967784808	HYDRAULIK HILFSHUBWERK
KUPPLUNGSSTECKER B6 25-	510599708	160	1	589	967784808	HYDRAULIK HILFSHUBWERK
KUPPLUNGSSTECKER B8 38-	511512308	155	2	589	967784808	HYDRAULIK HILFSHUBWERK
KUPPLUNGSSTELLER	968026308	7	1	275	919007708	ANTRIEBSAGGREGAT VORM.
KURBELGEHAEUSE KPL. MIT Z	11389608	10	1	160	12856862	DIESELMOTOR
KURBELGEHAEUSE VORM. R	10154379	1	1	167	11389608	KURBELGEHAEUSE KPL. MIT
KURBELGEHAEUSEENTLUEF	10126713	16	1	160	12856862	DIESELMOTOR
KURBELGEHAEUSEENTLUEFT	10136798	1	1	173	10126713	KURBELGEHAEUSEENTLUEF
KURBELWELLE MIT ZAHNRAD	10147438	50	1	160	12856862	DIESELMOTOR
KURBELWELLE R-MOTORXD9	10131177	1	1	183	10147438	KURBELWELLE MIT ZAHNRAD
KURBELWELLENANBAUTEILE	10141974	53	1	160	12856862	DIESELMOTOR
KURBELWELLENDICHTUNG	10153583	52	1	160	12856862	DIESELMOTOR
KURBELWELLENLAGERSATZ	9076457	51	1	160	12856862	DIESELMOTOR
L-RING 50X2	429612001	57	1	73	90028956	FAHRANTRIEB
LADEEINHEIT BTT SPF	10412777	10	1	453	96022872	ARMATURENBRETT DACH
LADEGERAET 110V	917269308	383	1	12		LIEBHERR LTR 1220
LADEGERAET 110V 24V8A SP	613301908	1	1	599	917269308	LADEGERAET
LADELUFTLEITUNG	10143612	1	1	220	10149677	VERBINDUNGSLEITUNG ANBA
LADELUFTLEITUNG	10143614	2	1	220	10149677	VERBINDUNGSLEITUNG ANBA
LADELUFTROHR DN85 STAHL	97050878	201	1	276	919007708	ANTRIEBSAGGREGAT VORM.
LADELUFTROHR G-ALST10MG	97055159	200	1	276	919007708	ANTRIEBSAGGREGAT VORM.
LADELUFTWELLSCHLAUCH	97032592	256	1	276	919007708	ANTRIEBSAGGREGAT VORM.
LAENGENGEBER	11170185	25	1	675	10802064	SEILLAENGENGEBER
LAENGENMESSKABEL 5 X 0,38	571841008	53	1	675	10802064	SEILLAENGENGEBER
LAGER 12X17X4,6	12209429	28	1	87	96034962	FUEHRUNG LI.
LAGER 12X17X4,6	12209429	28	1	104	96034980	FUEHRUNG RE.
LAGER FRONTWISCHANLAGE	97052119	8	1	393	966497908	FRONTSCHEIBE KPL.
LAGERABDECKRING 33117 AV	747258401	4	1	340	90008901	DREHWERKANTRIEB
LAGERABDECKRING 6219 JV	747272501	16	1	355	932916901	SEILTROMMEL
LAGERABDECKRING 6219 JV	747272501	19	1	581	939294001	SEILTROMMEL
LAGERAUFNAHME	11100949	13	1	47	11346779	SCHLEIFRINGUEBERTRAGER
LAGERBOCK 40x115x42	970365108	10	2	269	918731408	ANTRIEBSAGGREGAT KPL.
LAGERBUCHSE 60X65X28 GLY	9888259	12	6	168	10154379	KURBELGEHAEUSE VORM.
LAGERBUCHSE RD200X170 G	973357208	2	2	639	917291908	ANLENKSTUECK VORM.

Bezeichnung	Artikel	Pos.	Menge	Seite	Baugruppe	Bezeichnung
LAGERDECKEL 31CrMoV9	9072908	3	1	227	9072906	ZWISCHENRAD KPL.
LAGERFLANSCH	11631893	6	1	286	11182708	VERSTELLPUMPE
LAGERFLANSCH	11631893	6	1	289	10871017	VERSTELLPUMPE
LAGERFLANSCH EN-GJS-400-	939637901	15	1	355	932916901	SEILTROMMEL
LAGERGEHAEUSE VORM.	9077384	2	1	262	9077386	NEBENABTRIEB VORM.
LAGERPLATTE 100X195X230 P	970536108	12	2	648	917292108	TELESKOP 2 VORM.
LAGERPLATTE 100X195X230 P	970536108	12	2	652	917292208	TELESKOP 3 VORM.
LAGERPLATTE 100X195X230 P	970536108	12	2	656	917292308	TELESKOP 4 VORM.
LAGERPLATTE 100X195X230 P	970536108	31	2	661	917292408	TELESKOP 5 VORM.
LAGERPLATTE 100X195X350 P	970545608	12	2	644	917292008	TELESKOP 1 VORM.
LAGERRING	570109708	3	1	347	570109008	TRIEBWERK
LAGERRING	927745301	15	1	357	939292201	PLANETENGETRIEBE
LAGERRING	927745301	15	1	583	939294201	PLANETENGETRIEBE
LAGERUNG 6X129X209 S355M	97032646	1	2	112	968038208	LAGERUNG VORN LI.
LAGERUNG 6X129X209 S355M	97032646	1	2	113	968038308	LAGERUNG VORN RE.
LAGERUNG EINBAU	967986308	1	1	368	919010208	KRANFUEHRERKABINE VORM.
LAGERUNG SCHWK.	968052308	4	4	116	968046208	ANBAUTEILE
LAGERUNG VORN LI.	968038208	10	6	111	917691008	ABSTURZSICHERUNG
LAGERUNG VORN RE.	968038308	11	6	111	917691008	ABSTURZSICHERUNG
LAGERZAPFEN	11181885	9	1	47	11346779	SCHLEIFRINGUEBERTRAGER
LAMELLENSTOPFEN 28MM PE-	10678377	8	2	377	916162808	RELING
LAMELLENTRAEGER 100	927602601	65	1	357	939292201	PLANETENGETRIEBE
LAMELLENTRAEGER 51,6 42C	927716701	70	1	340	90008901	DREHWERKANTRIEB
LAMPENHALTER LI. 4X163X370	97126204	23	1	158	918731108	MONTAGETEILE DREHBUEHN
LAMPENHALTER RE. 4X163X3	97126205	24	1	158	918731108	MONTAGETEILE DREHBUEHN
LASCHE 4X40X20 S315MC FE//	978361008	24	1	283	968026308	KUPPLUNGSSTELLER
LASCHE 4X95X52 S315MC FE//	978554708	22	1	283	968026308	KUPPLUNGSSTELLER
LASTHAKEN 12.5E SPF	919007108	310	1	11		LIEBHERR LTR 1220
LASTHALTEVENTIL	511479408	151	1	693	967785408	ZUSATZHYDRAULIK KLAPPSPI
LASTHALTEVENTIL 400BAR SP	10218310	180	1	539	96045351	HYDRAULIK OBERWAGEN
LASTHALTEVENTILEINSATZ	11002678	7	1	696	511479408	LASTHALTEVENTIL
LAUFRAD	10342478	12	1	305	10871282	VERSTELLPUMPE
LAUFRING 60X45X33	927602501	60	1	357	939292201	PLANETENGETRIEBE
LAUFRING D60/50X25	571819708	190	1	285	97029921	VERTEILERGETRIEBE
LAUFROLLE 250X250	11320962	6	13	70	919254308	RAUPENTRAEGER VORM.LI.
LAUFROLLE 250X250	11320962	6	13	100	919254408	RAUPENTRAEGER VORM.RE.
LAUTSPRECHER 2,77V 86DBA	10489011	10	2	449	96036957	ELEKTRIK ANBAUTEILE KABIN
LECKOELRUECKLAUF	10143342	214	1	162	12856862	DIESELMOTOR
LEERGEHAEUSE 120X220X80	973188508	5	1	685	968708708	KLEMMKASTEN KPL.
LEERGEHAEUSE 160X260X90	975113508	1	1	682	966291008	KLEMMKASTEN
LEERGEHAEUSE 80.0X0 AL	979204408	5	1	41	966204108	ANTENNE KPL.
LEHRE 1.5X130X25 X5CRNI18	97126865	21	1	143	919328608	WERKZEUG M.ZUBEHOER
LEISTUNGSRELAIS 75A	11160723	22	2	522	969256608	GRUNDAUFBAU
LEITER ANBAU	917268208	1	1	736	917268108	WERKZEUG KLAPPSPITZE
LEITERHALTERUNG	10326792	2	1	737	917268208	LEITER ANBAU
LEITRADEINHEIT B9HDSX740	11320954	5	1	70	919254308	RAUPENTRAEGER VORM.LI.
LEITRADEINHEIT B9HDSX740	11320954	5	1	100	919254408	RAUPENTRAEGER VORM.RE.
LEITUNG	12104246	50	1	47	11346779	SCHLEIFRINGUEBERTRAGER
LEITUNG 15 X 0,34 TPE-U	10428544	10	4.367	446	96036955	KABELSTRANG
LEITUNG 15 X 0,34 TPE-U	10428544	11	4.367	446	96036955	KABELSTRANG
LEITUNG 2 X 0,5	10815830	11	4.96	44	96045228	KABELSTRANG
LEITUNG 2 X 0,5	10815830	12	4.96	44	96045228	KABELSTRANG
LEITUNG 2 X 0,5	10815830	13	4.16	44	96045228	KABELSTRANG
LEITUNG 2 X 0,5	10815830	14	4.16	44	96045228	KABELSTRANG
LEITUNG 2 X 1	11620017	15	2.63	44	96045228	KABELSTRANG
LEITUNG 2 X 1	11620017	9	3	446	96036955	KABELSTRANG
LEITUNG 2 X 1	11620017	13	0.4	446	96036955	KABELSTRANG
LEITUNG 2 X 1	11620017	5	9.93	516	96037133	LEITUNG
LEITUNG 2 X 1	11620017	5	4.06	617	96037132	LEITUNG
LEITUNG 2 X 1,5	11341599	18	5.83	510	96045385	KABELSTRANG

Bezeichnung	Artikel	Pos.	Menge	Seite	Baugruppe	Bezeichnung
LEITUNG 25 X 0,34 TPE-U	10428545	7	4.375	446	96036955	KABELSTRANG
LEITUNG 7 G 1	10871285	18	1.8	44	96045228	KABELSTRANG
LEITUNG W510	96006879	58	1	509	96045384	KABELLISTE DREHBUEHNE
LEITUNG W512	968314308	(1)	1	589	967784808	HYDRAULIK HILFSHUBWERK
LEITUNG W536	966394808	170	1	682	966291008	KLEMMKASTEN
LEITUNG W562	96037133	70	1	509	96045384	KABELLISTE DREHBUEHNE
LEITUNG W563	96037132	23	1	616	96037130	AUSRUESTUNG KAMERA DRE
LEITUNG W571	968401508	57	1	509	96045384	KABELLISTE DREHBUEHNE
LEITUNG W587	96037138	62	1	509	96045384	KABELLISTE DREHBUEHNE
LEITUNG W588	96022970	63	1	509	96045384	KABELLISTE DREHBUEHNE
LEITUNG W591	96023931	11	1	321	96023914	ELEKTRIK BATTERIEKASTEN
LEITUNG W592	96023932	14	1	321	96023914	ELEKTRIK BATTERIEKASTEN
LEITUNG W593	96023930	10	1	321	96023914	ELEKTRIK BATTERIEKASTEN
LEITUNG W620	968648508	10	1	599	917269308	LADEGERAET
LEITUNG W621	968648408	9	1	599	917269308	LADEGERAET
LEITUNG W682	967921908	20	1	603	917368108	EL.KUEHLWASSERVORWAE
LEITUNG W693	965751108	15	1	598	918462708	FREMDEINSPEISUNG
LEITUNG W694	965991908	10	1	600	917269408	KONSOLE FREMDEINSPEISUN
LEITUNG W900	966377308	120	1	682	966291008	KLEMMKASTEN
LEITUNG W901	965760208	12	1	702	918124908	A-SCHEINWERFER ANLENKS
LEITUNG W902	965760308	13	1	702	918124908	A-SCHEINWERFER ANLENKS
LEITUNG W903	969723508	11	1	702	918124908	A-SCHEINWERFER ANLENKS
LEITUNG W910	966393608	140	1	682	966291008	KLEMMKASTEN
LEITUNG W911	966395208	190	1	682	966291008	KLEMMKASTEN
LEITUNG W912	966354408	4	1	679	966354008	LEITUNGSTROMMEL KPL.
LEITUNG W912A	966354508	6	1	679	966354008	LEITUNGSTROMMEL KPL.
LEITUNG W916	966361508	(1)	1	677	917262208	EL.ANLAGE AUSLEGER
LEITUNG W917	966394008	130	1	682	966291008	KLEMMKASTEN
LEITUNG W921	966394208	160	1	682	966291008	KLEMMKASTEN
LEITUNG W930	966357008	120	1	685	968708708	KLEMMKASTEN KPL.
LEITUNG W931	966356908	13	1	706	918197708	ELEKTRIK 2.HUBENDSCHALTE
LEITUNG W932	966355308	110	1	685	968708708	KLEMMKASTEN KPL.
LEITUNG W933Y	969047708	1	1	711	917598408	ELEKTRIK MESS-U.WARNEINR
LEITUNGSDOSE	11450029	4	1	287	11690588	ANSTEUERGERAET
LEITUNGSDOSE	11450030	3	1	287	11690588	ANSTEUERGERAET
LEITUNGSDOSE	11450030	19	1	311	10292815	REGLERELEMENT
LEITUNGSFILTER	510674508	166	1	538	96045351	HYDRAULIK OBERWAGEN
LEITUNGSTROMMEL 50M 14-P	10354493	5	1	679	966354008	LEITUNGSTROMMEL KPL.
LEITUNGSTROMMEL KPL.	966354008	4	1	678	966290908	ELEKTRIK ANLENKSTUECK
LEITUNGSVERBINDER	5603876	517	1	446	96036955	KABELSTRANG
LEITUNGSVERBINDER	5603876	507	1	448	96036956	KABELSTRANG
LEITUNGSVERBINDER	5603876	517	1	520	96045387	DRAEHTE GRUNDAUFBAU KPL
LEUCHTMELDER	606143508	11	2	453	96022872	ARMATURENBRETT DACH
LICCON MONITOR LCD5C-A LS	10886525	(80)	1	449	96036957	ELEKTRIK ANBAUTEILE KABIN
LICCON MONITOR LSB-BSE LC	96033140	19	1	449	96036957	ELEKTRIK ANBAUTEILE KABIN
LICHTHAUBE	11346616	(1)	1	146	915731908	EL.TEILE VERSANDMONTAGE
LICHTSCHEIBE	10875969	2	1	703	10872003	ARBEITSSCHEINWERFER
LINEARGLEITFUEHRUNGSSYS	11007589	5	1	372	916177508	TRITT KPL.
LINSENKOPFSCHRAUBE 4X10	10875795	29	4	414	969085208	HEIZUNG VORM.
LINSENKOPFSCHRAUBE 4X10	10875795	26	4	462	918759808	ZUSATZHEIZUNG OW
LINSENKOPFSCHRAUBE K4X	10019040	29	8	417	918810308	STEUERSTAND
LINSENSCHRAUBE M4X12 10.	514525208	20	7	347	570109008	TRIEBWERK
LOCHBLECH	9080377	8	1	177	10155227	OELWANNE VORM.
LOETOESE	11068607	(1)	10	675	10802064	SEILLAENGENGEBER
LUEFTER	10650386	(11)	1	419	10877138	FAHRERSITZ
LUEFTER	12100177	(59)	1	419	10877138	FAHRERSITZ
LUEFTERFLUEGEL	10874640	10	1	566	11622561	OEL-LUFTKUEHLER
LUFTANSAUGROHR ANBAU R	10147365	220	1	162	12856862	DIESELMOTOR
LUFTANSAUGROHR R-MOTOR	11415774	1	1	217	10147365	LUFTANSAUGROHR ANBAU
LUFTANSAUGUNG ANBAU R-M	10147364	224	1	162	12856862	DIESELMOTOR

Bezeichnung	Artikel	Pos.	Menge	Seite	Baugruppe	Bezeichnung
LUFTBEHAELTER DIN 74281 4	502987108	166	1	478	969763408	VERROHRUNG DRUCKLUFTA
LUFTBEHAELTER EN 286-2 20L	502657708	167	1	478	969763408	VERROHRUNG DRUCKLUFTA
LUFTFILTER 18M³/MIN PP	10871700	100	1	499	918731908	LUFTFILTERANLAGE
LUFTFILTERANLAGE	918731908	165	1	10		LIEBHERR LTR 1220
LUFTFUEHRUNG	916168308	3	1	380	917304508	KRANFUEHRERKABINE VORM.
LUFTFUEHRUNG 128X523X170	97000437	2	1	396	916168308	LUFTFUEHRUNG
LUFTFUEHRUNG 152X627X339	97000438	3	1	396	916168308	LUFTFUEHRUNG
LUFTFUEHRUNG 81X233X419	97000436	1	1	396	916168308	LUFTFUEHRUNG
LUFTFUEHRUNG LI. 107X394	97000440	4	1	396	916168308	LUFTFUEHRUNG
LUFTFUEHRUNG LI. 113X705	97001699	2	1	385	966282308	VERKLEIDUNG LI.
LUFTFUEHRUNG LI. 144X143X	97001248	6	1	396	916168308	LUFTFUEHRUNG
LUFTFUEHRUNG RE. 100X71	97001700	2	1	386	966282408	VERKLEIDUNG RE.
LUFTFUEHRUNG RE. 109X391	97000442	5	1	396	916168308	LUFTFUEHRUNG
LUFTFUEHRUNG RE. 143X15	97001249	7	1	396	916168308	LUFTFUEHRUNG
LUFTFUEHRUNGSSCHLAUCH	97050548	251	1	499	918731908	LUFTFILTERANLAGE
LUFTHUTZE SCHWK.	969089708	1	1	499	918731908	LUFTFILTERANLAGE
LUFTLEITKANAL 39X75X227	97004696	3	1	385	966282308	VERKLEIDUNG LI.
LUFTLEITUNGEN HARNSTOFF	96011802	30	1	483	918484108	HARNSTOFFANLAGE
LUFTPRESSER	10650490	85	1	419	10877138	FAHRERSITZ
LUFTPRESSER 293CM3	5700161	1	1	224	9080294	LUFTPRESSER VORM.
LUFTPRESSER ANBAU	10127566	330	1	163	12856862	DIESELMOTOR
LUFTPRESSER VORM. 300CM	9080294	1	1	223	10127566	LUFTPRESSER ANBAU
LUFTTROCKNER	502657308	55	1	478	969763408	VERROHRUNG DRUCKLUFTA
M-RING 130X120,5X2,5 F14	12476138	4	1	188	10146367	KOLBEN KPL.
MAGNET	10280212	50	1	597	10038509	STEUERBLOCK
MAGNET 24V	10650092	2	1	548	10342823	DRUCKREGELVENTIL
MAGNET 24V	570633808	(1)	1	538	96045351	HYDRAULIK OBERWAGEN
MAGNET 24V	570633808	(1)	1	538	96045351	HYDRAULIK OBERWAGEN
MAGNET 24V	570827808	1	1	62	511444408	WEGEVENTIL
MAGNET 24V	571135508	(21)	1	688	967784508	HYDRAULIK TELE
MAGNET 28V	10291306	(1)	1	550	10413106	STEUERBLOCK
MAGNET 28V	10291306	(1)	1	550	10413106	STEUERBLOCK
MAGNET 28V	10291306	6	1	551	571415008	WEGEVENTIL
MAGNETSPULE	10564740	(1)	1	538	96045351	HYDRAULIK OBERWAGEN
MAGNETSPULE	11005244	1	1	557	10449853	WEGEVENTIL
MAGNETSPULE	12104171	(4)	3	538	96045351	HYDRAULIK OBERWAGEN
MAGNETSPULE 24V	10874134	1	1	547	11482347	WEGEMAGNETVENTIL
MAGNETSPULE 27V	12102117	1	1	553	571737808	WEGEVENTIL
MAGNETVENTIL	10343003	2	1	414	969085208	HEIZUNG VORM.
MAGNETVENTIL	10343003	5	1	462	918759808	ZUSATZHEIZUNG OW
MAGNETVENTIL	10876704	4	1	555	11341035	STEUERBLOCK
MAGNETVENTIL	10876705	5	1	555	11341035	STEUERBLOCK
MASSENAUSGLEICH ANBAU	10120186	90	1	161	12856862	DIESELMOTOR
MASSEVERBINDUNGSBLECH	9080911	4	1	221	9078314	HEIZFLANSCH ANBAU
MASTNASE	917268408	356	1	11		LIEBHERR LTR 1220
MASTNASE SCHWK.	961940008	1	1	705	917268408	MASTNASE
MECH.ANBAUTEILE SCHEINW	967970408	1	1	702	918124908	A-SCHEINWERFER ANLENKS
MECH.BEFESTIGUNGSTEILE	96035117	19	1	538	96045351	HYDRAULIK OBERWAGEN
MECH.BEFESTIGUNGSTEILE	962602108	19	1	699	967785008	ZUSATZHYDRAULIK KLAPPSPI
MECH.BEFESTIGUNGSTEILE	968083608	19	1	589	967784808	HYDRAULIK HILFSHUBWERK
MECH.BEFESTIGUNGSTEILE	969763908	19	1	478	969763408	VERROHRUNG DRUCKLUFTA
MECH.TEILE VERSANDMONT	919028808	175	1	10		LIEBHERR LTR 1220
MECHANIK MESS-U.WARNEIN	968412508	2	1	710	917379608	TRAEGER MESS-U.WARNEIN
MECHANISCHE ANBAUTEILE	96045206	30	1	138	919499508	BALLASTUEBERWACHUNG
MEGIPUFFER	726613008	25	4	639	917291908	ANLENKSTUECK VORM.
MEGIPUFFER	726617408	24	1	393	966497908	FRONTSCHEIBE KPL.
MEGIPUFFER	726617408	112	1	429	96036790	DREHBUEHNENVERKLEIDUN
MEGIPUFFER 20X15-M6 NR 55	726907308	111	1	429	96036790	DREHBUEHNENVERKLEIDUN
MEGIPUFFER 20X15-M6 NR 55	726907308	105	2	439	969015908	DREHBUEHNENVERKLEIDUN
MEGIPUFFER 30X17 M8 75°SH	10030440	15	1	85	968420608	STAUKASTEN VORM.

Bezeichnung	Artikel	Pos.	Menge	Seite	Baugruppe	Bezeichnung
MEGIPUFFER 30X17 M8 75°SH	10030440	9	1	405	917304708	SCHIEBETUER EINBAU
MEHRFACHDICHTEINSATZ M2	602421908	525	2	44	96045228	KABELSTRANG
MEHRFACHDICHTEINSATZ M2	602421908	504	1	140	96045205	KABELSTRANG
MEHRFACHDICHTEINSATZ SK	10333297	(506)	1	711	917598408	ELEKTRIK MESS-U.WARNEINR
MEHRZWECKLEITER 4X4-890	10877074	1	1	737	917268208	LEITER ANBAU
MEISTERSCHALTER LSB-AMS	10343693	4	2	449	96036957	ELEKTRIK ANBAUTEILE KABIN
MELDELEUCHTE 24V	10876030	34	1	449	96036957	ELEKTRIK ANBAUTEILE KABIN
MEMBRAN-DURCHFUEHRUN	602717308	124	1	280	96034631	KUEHLER VORM.
MEMBRAN-DURCHFUEHRUN	602717308	114	1	429	96036790	DREHBUEHNENVERKLEIDUN
MEMBRAN-DURCHFUEHRUN	602717308	106	1	439	969015908	DREHBUEHNENVERKLEIDUN
MEMBRANSPEICHER 0,7L 25	510644608	183	1	539	96045351	HYDRAULIK OBERWAGEN
MEMBRANSPEICHER 2L 10BA	510642508	182	1	539	96045351	HYDRAULIK OBERWAGEN
MEMBRANTUELLE 29/37/44	553027808	4	7	375	916170808	KABELEINFUEHRUNG
MEMBRANTUELLE 29/37/44	553027808	20	1	431	96017704	KUEHLERHAUBE KPL.
MESSANSCHLUSS BMA3 6S	475601508	642	4	52	96035801	HYDRAULIK MITTELTEIL
MESSANSCHLUSS BMA3 6S	475601508	605	5	540	96045351	HYDRAULIK OBERWAGEN
MESSANSCHLUSS BMA3 6S	475601508	609	1	590	967784808	HYDRAULIK HILFSHUBWERK
MESSANSCHLUSS EMA3 G1/4	475602608	675	9	541	96045351	HYDRAULIK OBERWAGEN
MESSANSCHLUSS EMA3 M12	475603208	632	3	541	96045351	HYDRAULIK OBERWAGEN
MESSANSCHLUSS G1/4"	10430230	64	1	668	10876933	TELESKOPIERZYLINDER
MESSANSCHLUSS VKA3 10LM	510629008	618	1	90	96035796	HYDR.FAHRANTRIEB
MESSANSCHLUSS VKA3 10LM	510629008	618	1	107	96035792	HYDR.FAHRANTRIEB
MESSANSCHLUSS VKA3 10LM	510629008	613	4	540	96045351	HYDRAULIK OBERWAGEN
MESSANSCHLUSS VKA3 10LM	510629008	618	2	590	967784808	HYDRAULIK HILFSHUBWERK
MESSANSCHLUSS VKA3 10LM	510629008	613	1	688	967784508	HYDRAULIK TELE
MESSERTRENNKLEMME 0,2-2	602761608	502	2	520	96045387	DRAEHTE GRUNDAUFBAU KPL
MESSERTRENNKLEMME 0,2-2	602761608	5	2	524	967589508	KLEMMENLEISTE
MESSSTUTZEN 12S M20X1,5 C	7409922	649	1	52	96035801	HYDRAULIK MITTELTEIL
MESSSTUTZEN DKO 10S M18	5607617	823	6	542	96045351	HYDRAULIK OBERWAGEN
MESSSTUTZEN DKO 10S M18	5607617	613	2	595	969426308	ZUSATZHYDRAULIK KLAPPSPI
MESSSTUTZEN NW 12	7409918	755	1	542	96045351	HYDRAULIK OBERWAGEN
MESSWIDERSTAND -40/+125°	10449516	9	3	449	96036957	ELEKTRIK ANBAUTEILE KABIN
MIKROPHON	11826513	2	1	633	12257818	AUTORADIO
MIKROSCHALTER	10335596	3	4	454	10343693	MEISTERSCHALTER
MITNEHMER	10014729	7	1	128	11347526	ELEKTROPUMPE
MITNEHMER	10014729	7	1	504	10327065	ELEKTROPUMPE
MITNEHMER	931549101	20	1	355	932916901	SEILTROMMEL
MITNEHMER SCHWK.	967996108	3	1	134	919087608	DREHDURCHFUEHRUNG
MITTELZAPFEN	570110508	3	1	348	570109508	TRIEBWERK
MONITOR TFT 7 800X480	10876638	10	1	614	96045237	AUSRUESTUNG KAMERA KAB
MONITORGEHAEUSE GEKLEB	963257908	2	1	370	96015921	BEDIENELEMENTE EINBAU
MONITORTRAEGER 162X765X	96015926	1	1	370	96015921	BEDIENELEMENTE EINBAU
MONTAGE-GEL 1KG DOSE	12694669	160	1	186	10153583	KURBELWELLENDICHTUNG
MONTAGEBLECH 1.5X753X899	978610208	(1)	1	522	969256608	GRUNDAUFBAU
MONTAGEBLECH VORM.	965461108	2	1	522	969256608	GRUNDAUFBAU
MONTAGEBOLZEN	10675205	16	1	675	10802064	SEILLAENGENGEBER
MONTAGEEINHEIT VORM.	968063108	4	1	518	919503008	EINBAUTEILE SCHALTSCHRAN
MONTAGEMATERIAL	968693208	30	1	506	919410708	EL.ANLAGE DREHBUEHNE
MONTAGEPLATTE 2X275X250	97032989	1	1	38	968054008	MONTAGEPLATTE VORM.
MONTAGEPLATTE VORM.	968054008	3	1	36	96045226	SCHALTKASTEN VORM.
MONTAGETEILE	11826654	27	1	466	10876576	WASSERHEIZGERAET
MONTAGETEILE DREHBUEHN	918731108	103	1	9		LIEBHERR LTR 1220
MONTAGEVORRICHTUNG LM	968068308	1	1	628	919028808	MECH.TEILE VERSANDMONT
MONTAGEVORRICHTUNG SCH	968010508	1	1	629	968068308	MONTAGEVORRICHTUNG
MONTAGEWERKZEUGKASTE	790045408	1	1	144	928569808	GRUNDWERKZEUG
MOOSGUMMI 20X4 MOOSGU	262103108	30	0.064	417	918810308	STEUERSTAND
MOTORAUFNAHME	10874902	9	1	566	11622561	OEL-LUFTKUEHLER
MOTORFLANSCH	927746301	75	1	357	939292201	PLANETENGETRIEBE
MOTORFLANSCH EN-GJL-250	938996401	85	1	340	90008901	DREHWERKANTRIEB
MOTORGEHAEUSE	10014692	3	1	128	11347526	ELEKTROPUMPE

Bezeichnung	Artikel	Pos.	Menge	Seite	Baugruppe	Bezeichnung
MOTORGEHAEUSE	10014692	3	1	504	10327065	ELEKTROPUMPE
MOTORGEHAEUSE	10493920	1	1	504	10327065	ELEKTROPUMPE
MOTORGEHAEUSE UNTEN	10675728	1	1	128	11347526	ELEKTROPUMPE
MOTORKONSOLE LI. G28MN6	97061150	5	1	275	919007708	ANTRIEBSAGGREGAT VORM.
MOTORKONSOLE RE. G28MN6	97061151	6	1	275	919007708	ANTRIEBSAGGREGAT VORM.
MOTORKONSOLE SCHWK.	968025208	3	1	275	919007708	ANTRIEBSAGGREGAT VORM.
MOTORKONSOLE SCHWK.	968025308	4	1	275	919007708	ANTRIEBSAGGREGAT VORM.
MOTORREGELUNGSENSORIK	12583633	581	1	165	12856862	DIESELMOTOR
MOTORSTEUERGERAET ECU	12869773	570	1	165	12856862	DIESELMOTOR
MUFFE 140.0X25 35NICRMOV	972140108	5	1	350	917259608	DREHBUEHNENARRETIERUN
MUTTER	10219618	1	1	282	10492431	DRUCKBEGRENZUNGSVENTI
MUTTER	7027459	(2)	1	538	96045351	HYDRAULIK OBERWAGEN
MUTTER CR6-FREI	571082308	(5)	1	699	967785008	ZUSATZHYDRAULIK KLAPPSPI
MUTTER M10X1,5 X5NiCrTi26-	10120639	6	3	238	10140729	ATL-ANBAU
MUTTER M54 CR6-FREI	571077208	(5)	1	589	967784808	HYDRAULIK HILFSHUBWERK
MUTTER M6X8	10878951	2	1	420	96032222	NACHARBEIT ARMLEHNE LI.
MUTTER M6X8	10878951	2	1	422	96032223	NACHARBEIT ARMLEHNE RE.
MUTTER UNF1 1/8X12 12	790202814	(1)	288	64	917436708	BODENPLATTEN KPL.
NACHARBEIT ARMLEHNE LI.	96032222	5	1	417	918810308	STEUERSTAND
NACHARBEIT ARMLEHNE RE.	96032223	6	1	417	918810308	STEUERSTAND
NACHRUESTSATZ	965356108	30	1	321	96023914	ELEKTRIK BATTERIEKASTEN
NAEHERUNGSSCHALTER BER	10097613	1	1	505	11002916	VERTEILERKOMBINATION
NAEHERUNGSSCHALTER BER	11003193	(10)	2	508	968128908	EL.GEBER U.ENDSCHALTER
NEBENABTRIEB ANBAU	10125687	650	1	165	12856862	DIESELMOTOR
NEBENABTRIEB ANBAU	10144036	652	1	165	12856862	DIESELMOTOR
NEBENABTRIEB VORM.	10125688	1	1	260	10125687	NEBENABTRIEB ANBAU
NEBENABTRIEB VORM.	9077386	1	1	261	10144036	NEBENABTRIEB ANBAU
NEIGUNGSGEBER +/-25° ALU	11001194	10	1	34	96045225	ELEKTRIK MITTELSTUECK
NIPPEL GA10-45°H32	97057512	20	1	574	918628408	KLIMAANLAGE OW
NIVEAUGEBER L=115 24V	10130406	22	1	160	12856862	DIESELMOTOR
NIVEAUGEBER L=115 24V	10816943	1	1	181	10130406	NIVEAUGEBER
NOCKENWELLE KPL. R-MOT	10138230	100	1	161	12856862	DIESELMOTOR
NOCKENWELLE R-MOTORXD	10125742	1	1	197	10138230	NOCKENWELLE KPL.
NOCKENWELLENBUCHSE	9132281	11	2	168	10154379	KURBELGEHAEUSE VORM.
NOCKENWELLENBUCHSE	9274859	10	5	168	10154379	KURBELGEHAEUSE VORM.
NOT-AUS TASTE	606144108	(2)	1	452	96030724	ELEKTRIK ARMATURENKONS
NOTAUS KRANFUEHRERKAB	967260908	4	1	452	96030724	ELEKTRIK ARMATURENKONS
NUTMUTTER DIN 1804 M80X2	241047802	7	1	370	96015921	BEDIENELEMENTE EINBAU
NUTMUTTER M38X1,5	570110108	9	1	347	570109008	TRIEBWERK
NUTMUTTER M70X2 C45	927530201	13	1	340	90008901	DREHWERKANTRIEB
NUTRING 160X168X11,5	7367566	3	1	78	10877686	SPANNER HYDR KPL
O-RING	10001111	21	1	302	10871043	VERSTELLPUMPE
O-RING 10,00X2,5 NBR90	10337381	(1)	2	552	10332882	STEUERBLOCK
O-RING 10,00X2,5 NBR90	10337381	7	1	559	510697608	KUGELHAHN
O-RING 10,8X1, 78 NEOPREN	5610999	32	2	574	918628408	KLIMAANLAGE OW
O-RING 100X5 FKM 70	11008055	2	1	218	10145173	ANSAUGSTUTZEN ANBAU
O-RING 10X2,2 NBR70	502933208	430	1	499	918731908	LUFTFILTERANLAGE
O-RING 125X2 VMQ 70	10002310	3	1	223	10127566	LUFTPRESSER ANBAU
O-RING 125X3 NBR70	726426008	447	3	277	919007708	ANTRIEBSAGGREGAT VORM.
O-RING 127,76X2,62 NBR 70	11003121	4	1	286	11182708	VERSTELLPUMPE
O-RING 12X2 NBR70	704274808	9	4	37	966167808	DECKEL KPL.
O-RING 12X2 NBR70	704274808	7	5	79	967972208	DECKEL VORM.
O-RING 12X2 NBR70	704274808	7	2	80	967972308	DECKEL VORM.
O-RING 12X2 NBR70	704274808	7	2	81	967972408	DECKEL VORM.
O-RING 12X2 NBR70	704274808	7	2	82	968270108	DECKEL VORM.
O-RING 12X2 NBR70	704274808	7	2	83	968274208	DECKEL VORM.
O-RING 12X2 NBR70	704274808	7	5	102	968055808	DECKEL VORM.
O-RING 12X2 NBR70	704274808	(8)	2	335	969050308	OELBEHAELTER VORM.
O-RING 132X3 NBR 70	7264141	470	1	285	97029921	VERTEILERGETRIEBE
O-RING 133,07X1,78 NBR 70	10099208	28	1	128	11347526	ELEKTROPUMPE

Bezeichnung	Artikel	Pos.	Menge	Seite	Baugruppe	Bezeichnung
O-RING 133,07X1,78 NBR 70	10099208	32	1	504	10327065	ELEKTROPUMPE
O-RING 135X3 NBR 70 SPF	726452801	5	1	128	11347526	ELEKTROPUMPE
O-RING 140X3 NBR70	570163708	5	1	504	10327065	ELEKTROPUMPE
O-RING 145 75 FKM 17939	10282774	4	2	169	10154458	ZYLINDER
O-RING 145 75 FKM 17939	10282774	401	8	264	10148366	DS DIESELMOTOR
O-RING 14X2 NBR70	726411508	47	2	449	96036957	ELEKTRIK ANBAUTEILE KABIN
O-RING 14X3 NBR70	726405608	10	12	377	916162808	RELING
O-RING 14X3 NBR70	726405608	78	6	583	939294201	PLANETENGETRIEBE
O-RING 15,4X2,1 NBR90	571141177	3	1	551	571415008	WEGEVENTIL
O-RING 15,50X2,00 FKM 80	10113975	(2)	1	258	12583633	MOTORREGELUNGSENSORIK
O-RING 150X3 NBR70	518578108	448	1	277	919007708	ANTRIEBSAGGREGAT VORM.
O-RING 15X3 NBR 70	726403401	78	6	357	939292201	PLANETENGETRIEBE
O-RING 160X3 NBR70	726204008	5	1	335	969050308	OELBEHAELTER VORM.
O-RING 165X3 FKM 70	726440001	73	1	340	90008901	DREHWERKANTRIEB
O-RING 16X2 NBR70	726407908	401	2	314	96034515	AUSGLEICHSBEHAELTER VO
O-RING 16X2 NBR70	726407908	(1)	1	327	96034868	KRAFTSTOFFFILTER VORM.
O-RING 16X2 NBR70	726407908	(9)	2	335	969050308	OELBEHAELTER VORM.
O-RING 175X3 NBR 70	726453601	24	1	340	90008901	DREHWERKANTRIEB
O-RING 175X3 NBR 70	726453601	79	1	357	939292201	PLANETENGETRIEBE
O-RING 17X2 FPM70	571082608	(2)	1	539	96045351	HYDRAULIK OBERWAGEN
O-RING 18X2,5 NBR70	726406908	(1)	1	540	96045351	HYDRAULIK OBERWAGEN
O-RING 192X4 SPF	11493868	37	1	70	919254308	RAUPENTRAEGER VORM.LI.
O-RING 192X4 SPF	11493868	37	1	100	919254408	RAUPENTRAEGER VORM.RE.
O-RING 195X3 NBR 70	761021703	76	1	357	939292201	PLANETENGETRIEBE
O-RING 195X3 NBR 70	761021703	76	1	583	939294201	PLANETENGETRIEBE
O-RING 19X1,5 NBR70	502624508	41	1	128	11347526	ELEKTROPUMPE
O-RING 19X2,5 FKM80	10219619	2	1	282	10492431	DRUCKBEGRENZUNGSVENTI
O-RING 20,3X2,4 NBR70	502932908	8	1	325	968999708	KRAFTSTOFFBEHAELTER VO
O-RING 200X3 NBR 70	726421501	480	3	285	97029921	VERTEILERGETRIEBE
O-RING 209,14X3,53 NBR70	10342479	26	1	305	10871282	VERSTELLPUMPE
O-RING 20X2 FPM70	571082008	(2)	1	699	967785008	ZUSATZHYDRAULIK KLAPPSPI
O-RING 20X2 FPM70	571082008	(2)	1	699	967785008	ZUSATZHYDRAULIK KLAPPSPI
O-RING 20X2 NBR90	510792708	8	2	559	510697608	KUGELHAHN
O-RING 20X4 NBR 70	726414901	69	1	340	90008901	DREHWERKANTRIEB
O-RING 21,30X2,4 V70GA	7381526	4	1	235	10142744	KUEHLWASSERENTLUEFTUN
O-RING 21,30X2,4 V70GA	7381526	3871	1	265	10148366	DS DIESELMOTOR
O-RING 22X1,5 FPM70	571082708	(3)	1	539	96045351	HYDRAULIK OBERWAGEN
O-RING 23,52X1,78 NBR90	514611808	4	1	58	11643183	STEUERBLOCK
O-RING 23,52X1,78 NBR90	514611808	4	1	61	11643184	STEUERBLOCK
O-RING 230X3 NBR70	726429008	482	1	285	97029921	VERTEILERGETRIEBE
O-RING 24X2,5 NBR70	502933508	449	1	277	919007708	ANTRIEBSAGGREGAT VORM.
O-RING 24X3 FKM 70	10217777	2	1	249	10128439	VERSCHLUSSTEILE
O-RING 24X3 FKM 70	10217777	5241	1	265	10148366	DS DIESELMOTOR
O-RING 26X1,5 FPM70	571082108	(3)	1	699	967785008	ZUSATZHYDRAULIK KLAPPSPI
O-RING 26X3 HNBR 70	10004261	9	1	170	10147687	AGGREGATETRAEGER ANBA
O-RING 26X3 HNBR 70	10004261	4	1	199	10129475	OELKUEHLER ANBAU
O-RING 280X3 NBR70	726417708	485	1	285	97029921	VERTEILERGETRIEBE
O-RING 300X3 NBR 70	502319101	51	1	357	939292201	PLANETENGETRIEBE
O-RING 300X3 NBR70	530032508	51	1	583	939294201	PLANETENGETRIEBE
O-RING 300X6 EPDM 70	726458401	13	1	357	939292201	PLANETENGETRIEBE
O-RING 30X2 NBR70	510787908	(3)	4	546	11211756	STEUERBLOCK
O-RING 32X3 FPM70	571076908	(2)	1	589	967784808	HYDRAULIK HILFSHUBWERK
O-RING 330X3 NBR 70	726429901	19	2	357	939292201	PLANETENGETRIEBE
O-RING 330X3 NBR 70	726429901	19	2	583	939294201	PLANETENGETRIEBE
O-RING 38X3 NBR 70	726455301	61	1	357	939292201	PLANETENGETRIEBE
O-RING 38X3 NBR90	726421108	61	1	583	939294201	PLANETENGETRIEBE
O-RING 40X3 FPM70	571077108	(4)	1	589	967784808	HYDRAULIK HILFSHUBWERK
O-RING 43X2 FKM 70	11066168	4	1	203	10148432	SCHMIEROELPUMPE MIT BE
O-RING 4X1 NBR90	510712308	3	1	696	511479408	LASTHALTEVENTIL
O-RING 530X5 NBR 70	761035303	59	2	73	90028956	FAHRANTRIEB

Bezeichnung	Artikel	Pos.	Menge	Seite	Baugruppe	Bezeichnung
O-RING 5X1 NBR70	553136608	2	2	58	11643183	STEUERBLOCK
O-RING 5X1 NBR70	553136608	2	2	61	11643184	STEUERBLOCK
O-RING 63,17X2,62 FKM 70 A,G	7380970	7	1	220	10149677	VERBINDUNGSLEITUNG ANBA
O-RING 63,17X2,62 FKM 70 A,G	7380970	451	1	277	919007708	ANTRIEBSAGGREGAT VORM.
O-RING 65X3 NBR70	726412308	450	2	277	919007708	ANTRIEBSAGGREGAT VORM.
O-RING 6X1 NBR90	570690608	33	1	504	10327065	ELEKTROPUMPE
O-RING 7,6X1,78 NEOPREN	10216678	31	4	574	918628408	KLIMAANLAGE OW
O-RING 85X2 HNBR 70	10218370	2	1	241	10219978	STARTER
O-RING 85X2 HNBR 70	10218370	2	1	243	11386644	STARTER VORM.
O-RING 88X3 ACM70	570979708	7	1	226	5700161	LUFTPRESSER
O-RING 8X1,5 FKM 70	11659846	27	1	207	10149198	RS VORFOERDERPUMPE
O-RING 8X2 NBR70	502652908	73	1	583	939294201	PLANETENGETRIEBE
O-RING 8X2 NBR90	10166157	73	1	357	939292201	PLANETENGETRIEBE
O-RING 94X3 NBR70	726433408	50	4	30	917511508	RAUPENMITTELTEIL VORM.
O-RING 98,02X3,53 FKM 70 M	10128671	1801	2	264	10148366	DS DIESELMOTOR
O-RING AEHNL.ISO 3601-1 25	10342770	3	1	192	10149578	ZYLINDERKOPF
O-RING ARP 568 10,52X1,83 NB	501243708	(1)	1	542	96045351	HYDRAULIK OBERWAGEN
O-RING ARP 568 10,52X1,83 NB	501243708	1	1	562	471030708	VERSCHRAUBUNG
O-RING ARP 568 10,82X1,78 NB	510718108	27	1	556	10489734	DRUCKBEGRENZUNGSVENTI
O-RING ARP 568 10,82X1,78 NB	510760408	32	1	412	11083498	HEIZKLIMAGERAET
O-RING ARP 568 10,82X1,78 NB	510760408	2	6	551	571415008	WEGEVENTIL
O-RING ARP 568 107,62X2,62	571233308	(5)	1	305	10871282	VERSTELLPUMPE
O-RING ARP 568 12,37X2,62 NB	510746108	1	1	560	10218310	LASTHALTEVENTIL
O-RING ARP 568 14X1,78 NBR9	515710608	31	1	412	11083498	HEIZKLIMAGERAET
O-RING ARP 568 18,72X2,62 NB	510738308	12	1	299	571900808	REGLERELEMENT
O-RING ARP 568 18,72X2,62 NB	510738308	12	1	300	10472202	REGLERELEMENT
O-RING ARP 568 202,79X3,53	571307708	10	1	288	11631893	LAGERFLANSCH
O-RING ARP 568 23,47X2,62 NB	510776608	14	1	311	10292815	REGLERELEMENT
O-RING ARP 568 23,47x2,62 NB	570322408	(1)	1	280	96034631	KUEHLER VORM.
O-RING ARP 568 23,47x2,62 NB	570322408	(1)	1	540	96045351	HYDRAULIK OBERWAGEN
O-RING ARP 568 23,52X1,78 N	570652308	25	1	556	10489734	DRUCKBEGRENZUNGSVENTI
O-RING ARP 568 25,07X2,62 NB	571058608	13	1	311	10292815	REGLERELEMENT
O-RING ARP 568 25X3,53 NBR7	511035108	(1)	1	540	96045351	HYDRAULIK OBERWAGEN
O-RING ARP 568 28,17X3,53 NB	501201708	440	1	277	919007708	ANTRIEBSAGGREGAT VORM.
O-RING ARP 568 32,92X3,53 NB	510587008	(1)	1	540	96045351	HYDRAULIK OBERWAGEN
O-RING ARP 568 32,92X3,53 NB	510587008	(1)	1	540	96045351	HYDRAULIK OBERWAGEN
O-RING ARP 568 32,92X3,53 NB	510587008	560	6	540	96045351	HYDRAULIK OBERWAGEN
O-RING ARP 568 32,92X3,53 NB	510587008	556	2	590	967784808	HYDRAULIK HILFSHUBWERK
O-RING ARP 568 37,69X3,53 NB	510586708	551	8	51	96035801	HYDRAULIK MITTELTEIL
O-RING ARP 568 37,69X3,53 NB	510586708	550	2	90	96035796	HYDR.FAHRANTRIEB
O-RING ARP 568 37,69X3,53 NB	510586708	550	2	107	96035792	HYDR.FAHRANTRIEB
O-RING ARP 568 37,69X3,53 NB	510586708	(1)	1	540	96045351	HYDRAULIK OBERWAGEN
O-RING ARP 568 37,69X3,53 NB	510586708	551	2	540	96045351	HYDRAULIK OBERWAGEN
O-RING ARP 568 37,69X3,53 NB	510586708	553	3	590	967784808	HYDRAULIK HILFSHUBWERK
O-RING ARP 568 37,69X3,53 NB	510586708	551	3	688	967784508	HYDRAULIK TELE
O-RING ARP 568 45,69X2,62 NB	514507808	16	1	297	10008308	ANSCHLUSSPLATTE
O-RING ARP 568 47,22X3,53 NB	510587908	(1)	1	277	919007708	ANTRIEBSAGGREGAT VORM.
O-RING ARP 568 50,47X2,62 NB	570054708	16	1	309	571907208	ANSCHLUSSPLATTE
O-RING ARP 568 56,74X3,53 NB	726421608	445	3	277	919007708	ANTRIEBSAGGREGAT VORM.
O-RING ARP 568 66,27X3,53 NB	518648508	6	1	346	510229408	HYDROMOTOR
O-RING ARP 568 72,62X3,53 NB	518629608	31	2	383	917305408	INNENVERKLEIDUNG EINBAU
O-RING ARP 568 75,87X2,62 NB	514530408	15	1	347	570109008	TRIEBWERK
O-RING ARP 568 82,14X3,53 NB	518623608	39	1	296	10663105	TRIEBWERK
O-RING ARP 568 9,19X2,62 NB	514589108	13	1	300	10472202	REGLERELEMENT
O-RING ARP 568 9,25X1,78 NB	510719008	26	1	556	10489734	DRUCKBEGRENZUNGSVENTI
O-RING ARP 568 9,25X1,78 NB	510738608	(1)	4	550	10413106	STEUERBLOCK
O-RING ARP 568 9,25X1,78 NB	510738608	(1)	4	550	10413106	STEUERBLOCK
O-RING ARP 568 98,02X3,53 NB	514613208	39	1	307	10872488	TRIEBWERK
O-RING DIN 3770 25X2,5 FPM7	726422308	313	1	478	969763408	VERROHRUNG DRUCKLUFTA
O-RING DIN 3771 101,20X3,53	7382158	6542	2	265	10148366	DS DIESELMOTOR

Bezeichnung	Artikel	Pos.	Menge	Seite	Baugruppe	Bezeichnung
O-RING DIN 3771 101,20X3,53	7380401	5	1	262	9077386	NEBENABTRIEB VORM.
O-RING DIN 3771 101,20X3,53	7380401	6522	1	265	10148366	DS DIESELMOTOR
O-RING DIN 3771 104,37X3,53	7380520	4	1	262	9077386	NEBENABTRIEB VORM.
O-RING DIN 3771 104,37X3,53	7380520	6521	1	265	10148366	DS DIESELMOTOR
O-RING DIN 3771 120X3 VMQ	9177948	2	1	263	9078301	VERSCHLUSSTEILE
O-RING DIN 3771 40,64X5,33 F	7381566	2	2	179	10121667	VERBINDUNGSSTUECK M.O-R
O-RING DIN 3771 44X3 NBR70	726405908	442	1	277	919007708	ANTRIEBSAGGREGAT VORM.
O-RING DIN 3771 59,92X3,53	7381779	7	2	170	10147687	AGGREGATETRAEGER ANBA
O-RING DIN 3771 7,00X1,5 FK	7381685	8	1	196	10120186	MASSENAUSGLEICH ANBAU
O-RING DIN 3771 7,00X1,5 FK	7381685	14	1	197	10138230	NOCKENWELLE KPL.
O-RING DIN 3771 7,00X1,5 FK	7381685	901	1	264	10148366	DS DIESELMOTOR
O-RING DIN 3771 7,00X1,5 FK	7381685	1001	1	264	10148366	DS DIESELMOTOR
O-RING DIN 3771 75,79X3,53 M	7009080	5	1	232	10148215	THERMOSTATGEHAEUSE AN
O-RING DIN 3771 94,50X3,00 F	10116255	1	1	222	10299988	HEIZFLANSCH VORM.
O-RING DIN 3771 98,02X3,53 H	7381995	4	1	244	10115664	VERSCHLUSSTEILE
O-RING DIN 3771 98,02X3,53 H	7381995	4521	1	265	10148366	DS DIESELMOTOR
O-RING ISO 3601-1 101,27X2,6	7380605	5	1	219	10147364	LUFTANSAUGUNG ANBAU
O-RING ISO 3601-1 101,27X2,6	7380605	452	1	277	919007708	ANTRIEBSAGGREGAT VORM.
O-RING ISO 3601-1 107,54X3,53	10002167	4	2	232	10148215	THERMOSTATGEHAEUSE AN
O-RING ISO 3601-1 12,37X2,62	7380935	2	1	222	10299988	HEIZFLANSCH VORM.
O-RING ISO 3601-1 132,94X3,53	7016016	(1)	1	231	10142733	WASSERPUMPE MIT BEFEST.
O-RING ISO 3601-1 132,94X3,53	7016016	(7)	1	231	10142733	WASSERPUMPE MIT BEFEST.
O-RING ISO 3601-1 132,94X3,53	7016016	7	1	231	10142733	WASSERPUMPE MIT BEFEST.
O-RING ISO 3601-1 17,17X1,78	7381103	2	1	250	10127979	VERSCHLUSSTEILE
O-RING ISO 3601-1 17,17X1,78	7381103	(2)	1	258	12583633	MOTORREGELUNGSENSORIK
O-RING ISO 3601-1 17,17X1,78	7381103	5261	1	265	10148366	DS DIESELMOTOR
O-RING ISO 3601-1 23,47X2,62	10130757	1911	4	264	10148366	DS DIESELMOTOR
O-RING ISO 3601-1 34,59X2,62	7382059	5	1	203	10148432	SCHMIEROELPUMPE MIT BE
O-RING ISO 3601-1 34,59X2,62	7380653	8	2	170	10147687	AGGREGATETRAEGER ANBA
O-RING ISO 3601-1 34,59X2,62	7380653	9	1	247	10115829	SCHWUNGRADGEHAEUSE AN
O-RING ISO 3601-1 55,25X2,62	7380083	3	1	234	10142742	KUEHLMITTELKRUEMMER AN
O-RING ISO 3601-1 85,32X3,53	7381361	(4)	2	260	10125687	NEBENABTRIEB ANBAU
O-RING ISO 3601-1 85,32X3,53	7381361	6501	2	265	10148366	DS DIESELMOTOR
O-RING ISO 3601-1 85,32X3,53	7381361	446	1	277	919007708	ANTRIEBSAGGREGAT VORM.
O-RING ISO 3601-1 9,25X1,78	7380574	5	4	548	10342823	DRUCKREGELVENTIL
O-RING ISO 3601-1 91,67X3,53	7380657	6561	1	266	10148366	DS DIESELMOTOR
O-RING NEOPRENE (W)	7411823	30	1	574	918628408	KLIMAANLAGE OW
OEL-LUFTKUEHLER	550628308	103	1	280	96034631	KUEHLER VORM.
OEL-LUFTKUEHLER SPF	11622561	1	1	565	967980508	OELKUEHLER VORM.
OELABLASSSCHLAUCH KPL. 1	10032297	68	1	144	928569808	GRUNDWERKZEUG
OELABLASSSCHRAUBE M 30	5004624	6	1	177	10155227	OELWANNE VORM.
OELABLASSSCHRAUBE M26X	789011908	150	2	276	919007708	ANTRIEBSAGGREGAT VORM.
OELABLASSSCHRAUBE M26X	789011908	8	1	335	969050308	OELBEHAELTER VORM.
OELBEHAELTER ANBAU	917825508	110	1	9		LIEBHERR LTR 1220
OELBEHAELTER SCHWK. AL	969050408	1	1	335	969050308	OELBEHAELTER VORM.
OELBEHAELTER VORM.	969050308	1	1	332	917825508	OELBEHAELTER ANBAU
OELFILTEREINSATZ OEL	10877167	71	1	668	10876933	TELESKOPIERZYLINDER
OELKUEHLER	10325001	3	1	200	10129474	OELKUEHLER VORM.
OELKUEHLER ANBAU	10129475	130	1	161	12856862	DIESELMOTOR
OELKUEHLER EINBAU	917261808	187	1	11		LIEBHERR LTR 1220
OELKUEHLER VORM.	10129474	1	1	199	10129475	OELKUEHLER ANBAU
OELKUEHLER VORM.	967980508	1	1	564	917261808	OELKUEHLER EINBAU
OELKUEHLERGEHAEUSE	10146722	1	1	200	10129474	OELKUEHLER VORM.
OELLEITUNG VORM. 10X1	10139112	25	1	160	12856862	DIESELMOTOR
OELMESSEINRICHTUNG	90200103	10	1	579	90028852	KOMPAKTSEILWINDE
OELMESSEINRICHTUNG	90200104	6	1	352	917259708	HAUPTHUBWERK
OELMESSEINRICHTUNG	90208884	50	1	354	90208882	KOMPAKTSEILWINDE
OELMESSSTAB 1 1/8"	927554401	1	1	341	927554301	ENTLUEFTUNGSSTUTZEN
OELMESSSTAB 1 1/8"	927610201	15	1	361	90200104	OELMESSEINRICHTUNG
OELMESSSTAB 1 1/8"	927610201	15	1	585	90200103	OELMESSEINRICHTUNG

Bezeichnung	Artikel	Pos.	Menge	Seite	Baugruppe	Bezeichnung
OELMESSSTAB KPL.	10150934	21	1	160	12856862	DIESELMOTOR
OELMESSSTAB MIT RING	10150935	1	1	180	10150934	OELMESSSTAB KPL.
OELRUECKLAUFLEITUNG 10X	10139111	1	1	182	10139112	OELLEITUNG VORM.
OELRUECKLAUFLEITUNG 22X	12847441	2	1	238	10140729	ATL-ANBAU
OELSTANDSAUGE G1" ALU	774320108	7	1	335	969050308	OELBEHAELTER VORM.
OELWANNE MIT BEFEST. R-M	10132560	20	1	160	12856862	DIESELMOTOR
OELWANNE VORM. R-MOTOR	10155227	1	1	176	10133837	OELWANNE VORM.
OELWANNE VORM. R-MOTOR	10133837	1	1	175	10132560	OELWANNE MIT BEFEST.
PASSFEDER DIN 6885 A 14X9	434018708	27	1	474	967928508	VERRIEGELUNG
PASSFEDER DIN 6885 A16X10	434022601	41	2	668	10876933	TELESKOPIERZYLINDER
PASSHUELSE 12X20X20 100Cr	10134348	3	2	170	10147687	AGGREGATETRAEGER ANBA
PASSHUELSE 12X20X20 100Cr	10134348	3	2	247	10115829	SCHWUNGRADGEHAEUSE AN
PASSHUELSE 15,5X19,5X24	9177636	6	10	168	10154379	KURBELGEHAEUSE VORM.
PASSHUELSE 16X20X20 S235J	9074798	4	2	189	10149580	ZYLINDERKOPF ANBAU
PASSSCHEIBE	7369933	20	1	307	10872488	TRIEBWERK
PASSSCHEIBE DIN 988 63X80X	421000408	17	2	347	570109008	TRIEBWERK
PASSSCHEIBE DIN 988 63X80X	421000508	18	1	347	570109008	TRIEBWERK
PATCHKABEL 4X2 AWG 26/7-5	10219462	6	2	445	96036954	KABELLISTE KRANFUEHRERK
PEDALGEBER 20° SPF	10343484	55	2	449	96036957	ELEKTRIK ANBAUTEILE KABIN
PEDALTRAEGER EINBAU	96025887	4	1	368	919010208	KRANFUEHRERKABINE VORM.
PERSOENLICHE SCHUTZAUSR	916959808	46	1	9		LIEBHERR LTR 1220
PFOSTEN	96004280	10	4	623	917260608	GEGENGEWICHT M.BEFESTIG
PILZKOPFBAND 25MM PS18	802102008	150	14	431	96017704	KUEHLERHAUBE KPL.
PILZKOPFBAND 25MM PS18	802102008	50	33.22	435	968977308	SCHALLDAEMMUNG
PLANETENGETRIEBE 3-STUFI	939292201	5	1	354	90208882	KOMPAKTSEILWINDE
PLANETENGETRIEBE 3-STUFI	939294201	5	1	579	90028852	KOMPAKTSEILWINDE
PLANETENRAD	927530801	40	3	340	90008901	DREHWERKANTRIEB
PLANETENRAD	927601401	7	5	357	939292201	PLANETENGETRIEBE
PLANETENRAD	927602101	32	3	359	90017588	PLANETENTRAEGER
PLANETENRAD	927608601	42	3	357	939292201	PLANETENGETRIEBE
PLANETENRAD	939251101	20	5	340	90008901	DREHWERKANTRIEB
PLANETENTRAEGER	90017588	700	1	358	939292201	PLANETENGETRIEBE
PLANETENTRAEGER 150 42C	939251501	35	1	340	90008901	DREHWERKANTRIEB
PLANETENTRAEGER 150 42C	939257301	50	1	340	90008901	DREHWERKANTRIEB
PLANETENTRAEGER 170 42Cr	939250301	15	1	340	90008901	DREHWERKANTRIEB
PLANETENTRAEGER 225 42Cr	927608501	40	1	357	939292201	PLANETENGETRIEBE
PLANETENTRAEGER 275 42C	927602001	30	1	359	90017588	PLANETENTRAEGER
PLATTE 126X24X1.5 EPDM 80	979142208	8	4	394	965784408	DACHSCHEIBE VORM.
PLATTE 15X30X50 PA6G	288176208	22	1	134	919087608	DREHDURCHFUEHRUNG
PLATTE S235JR	9275826	16	1	248	10116110	VERSCHLUSSTEILE
PLEUELLAGER 88/92/38	10145100	(2)	1	161	12856862	DIESELMOTOR
PLEUELLAGER 88/92/38	10145101	(3)	1	161	12856862	DIESELMOTOR
PLEUELLAGER 88/92/38 Glyco	9073699	(3)	1	161	12856862	DIESELMOTOR
PLEUELLAGER 88/92/38 MIBA	9075607	(2)	1	161	12856862	DIESELMOTOR
PLEUELSTANGE	571582508	11	1	226	5700161	LUFTPRESSER
PLEUELSTANGE R-MOTORX8	11348072	60	4	161	12856862	DIESELMOTOR
PNEUMATIKLEITUNGEN OW	969763608	12	1	478	969763408	VERROHRUNG DRUCKLUFTA
PODEST 50X1166X2200 STAHL	11346549	3	2	111	917691008	ABSTURZSICHERUNG
PODEST 50X1350X1610 STAHL	11346547	1	4	111	917691008	ABSTURZSICHERUNG
PODEST 50X1350X1610 T ZN	11346548	2	2	111	917691008	ABSTURZSICHERUNG
PODESTHALTERUNG HINTEN	967307008	26	1	372	916177508	TRITT KPL.
POLYAMIDROHR DIN 73378 6	10873149	27	50	127	917257108	ZENTRALSCHMIERUNG RAUP
POLYAMIDROHR DIN 73378 6	10873149	14	50	502	917261208	ZENTRALSCHMIERANLAGE O
POLYAMIDROHR DIN 73378 6	10873149	5	5	586	921444108	ZENTRALSCHMIERANLAGE
PRATZE 42CrMoS4+QT	10150144	1	1	211	10135434	BEFESTIGUNG DRUCKROHR
PRATZE 42CrMoS4+QT	11403994	2	1	209	10152867	INJEKTOR MIT BEFEST.
PRESSKLEMME 2 CU	11170565	36	8	121	919644008	HYDRAULISCHE ABSTUETZUN
PRESSKLEMME 2 CU	11170565	10	2	733	923285508	KLAPPKONSOLE VORM.
PRESSKLEMME 2 CU	11170565	4	4	738	968090008	HAKENSTANGE ANBAU
PROFIL 667X50X12 ALMGSI0.5	97001317	25	1	372	916177508	TRITT KPL.

Bezeichnung	Artikel	Pos.	Menge	Seite	Baugruppe	Bezeichnung
PROFIL HINTEN 820X125X72.6	97000517	32	1	405	917304708	SCHIEBETUER EINBAU
PROFIL VORN 803X122X44 1.4	97000516	31	1	405	917304708	SCHIEBETUER EINBAU
PROFILDICHTRING DIN 3869 1	10040984	(2)	1	258	12583633	MOTORREGELUNGSENSORIK
PROFILDICHTUNG	7373052	(5)	1	305	10871282	VERSTELLPUMPE
PROFILRING P-R8-L/S A2GS	477100208	3	1	316	96039022	STUTZEN KPL.
PROFILRING P-R8-L/S A2GS	477100208	38	1	483	918484108	HARNSTOFFANLAGE
PROFILRING PR10-S/L A3P	477100308	32	1	483	918484108	HARNSTOFFANLAGE
PROFILRING PR22-L A3P	477102808	(2)	1	314	96034515	AUSGLEICHSBEHAELTER VO
PROFILRING PR6-S/L A3P	477101408	13	22	127	917257108	ZENTRALSCHMIERUNG RAUP
PROFILSCHELLE 137,6/K1	10494115	182	1	491	919372008	ABGASANLAGE
PROFILSCHELLE 137,6/K1	10494115	182	1	494	96048826	ABGASANLAGE VORM.
PROFILSCHELLE 163,0/K1	10494116	181	1	491	919372008	ABGASANLAGE
PROFILSCHELLE 163,0/K1	10494116	181	1	494	96048826	ABGASANLAGE VORM.
PROFILSCHELLE 328/K1 X5Cr	10141051	30	1	495	11403708	SCR-BAUGRUPPE
PROPORTIONALMAGNET	11161919	(27)	1	74	11182596	VERSTELLMOTOR
PROPORTIONALMAGNET 24V	10471437	2	2	287	11690588	ANSTEUERGERAET
PROPORTIONALMAGNET 24V	10471437	(5)	2	290	11182664	ZWEIFACHPUMPE
PROPORTIONALMAGNET 24V	10471437	(5)	2	290	11182664	ZWEIFACHPUMPE
PROPORTIONALMAGNET 24V	10471437	(2)	2	294	11210795	VERSTELLPUMPE
PROPORTIONALMAGNET 24V	571911708	20	1	311	10292815	REGLERELEMENT
PRUEFANSCHLUSS M22X1,5	502921408	641	1	478	969763408	VERROHRUNG DRUCKLUFTA
PUFFER 30X20 GUMMI 50SH	97025484	121	4	280	96034631	KUEHLER VORM.
PUMPE MP41 SPF	591055408	2	2	400	966408908	WASSERBEHAELTER KPL.
PUMPENDECKEL	11690587	4	1	289	10871017	VERSTELLPUMPE
PUMPENELEMENT	10216340	13	1	504	10327065	ELEKTROPUMPE
PUMPENELEMENT	11001770	39	2	128	11347526	ELEKTROPUMPE
PUMPENELEMENT	774387508	11	1	504	10327065	ELEKTROPUMPE
PUMPENGEHAEUSE	10014693	4	1	128	11347526	ELEKTROPUMPE
PUMPENGEHAEUSE	10014693	4	1	504	10327065	ELEKTROPUMPE
PUMPENRUECKLAUF	774372808	10	1	502	917261208	ZENTRALSCHMIERANLAGE O
PUMPENTRAEGER	10873571	4	1	294	11210795	VERSTELLPUMPE
PUMPENWELLE Z=40 M=2,25	9077327	1	1	262	9077386	NEBENABTRIEB VORM.
QUERTRAEGER DEMONTAGE	968811608	1	1	718	917611508	ANSCHLAGMITTEL
QUERTRAEGER KPL.	918925508	6	2	9		LIEBHERR LTR 1220
QUERTRAEGER STAHLBAU	96023109	1	1	63	918925508	QUERTRAEGER KPL.
RADIALGEBLAESE	11083445	45	1	412	11083498	HEIZKLIMAGERAET
RADIALWELLENDICHTRING B	710062601	63	2	357	939292201	PLANETENGETRIEBE
RADIALWELLENDICHTRING B	710062601	63	2	583	939294201	PLANETENGETRIEBE
RADIALWELLENDICHTRING DI	710032508	19	1	355	932916901	SEILTROMMEL
RADIALWELLENDICHTRING DI	710032508	22	1	581	939294001	SEILTROMMEL
RADIALWELLENDICHTRING DI	10167462	64	2	340	90008901	DREHWERKANTRIEB
RADIALWELLENDICHTRING DI	10359142	450	1	285	97029921	VERTEILERGETRIEBE
RADIALWELLENDICHTRING D	710059301	11	1	340	90008901	DREHWERKANTRIEB
RADIALWELLENDICHTRING D	710035001	440	1	285	97029921	VERTEILERGETRIEBE
RADIALWELLENDICHTRING DI	710054601	11	1	357	939292201	PLANETENGETRIEBE
RADIALWELLENDICHTRING DI	710054601	11	1	583	939294201	PLANETENGETRIEBE
RADMUTTER DIN 74361 M20X	520303308	10	1	226	5700161	LUFTPRESSER
RAENDELKNOPF 21-M4 PA	10652206	8	2	390	916162508	SCHEIBEN EINBAU
RAENDELKNOPF PA	10800916	49	4	383	917305408	INNENVERKLEIDUNG EINBAU
RAENDELMUTTER	11342417	2	1	547	11482347	WEGEMAGNETVENTIL
RAENDELMUTTER	12103903	(18)	2	550	10413106	STEUERBLOCK
RAENDELSCHRAUBE M5X10	10449664	25	8	518	919503008	EINBAUTEILE SCHALTSCHRAN
RAHMEN RAL 9005 MATT	10875930	5	1	566	11622561	OEL-LUFTKUEHLER
RASTBOLZEN 12-15-CK NIRO	11001935	110	1	283	968026308	KUPPLUNGSSTELLER
RASTE	10492347	19	1	419	10877138	FAHRERSITZ
RASTRIEGEL NIROSTA	10010025	3	1	112	968038208	LAGERUNG VORN LI.
RASTRIEGEL NIROSTA	10010025	3	1	113	968038308	LAGERUNG VORN RE.
RAUPENFAHRWERK KPL.	919617108	2	1	9		LIEBHERR LTR 1220
RAUPENKETTE KPL.	11695999	1	1	64	917436708	BODENPLATTEN KPL.
RAUPENMITTELTEIL	917511608	1	1	30	917511508	RAUPENMITTELTEIL VORM.

Bezeichnung	Artikel	Pos.	Menge	Seite	Baugruppe	Bezeichnung
RAUPENMITTELTEIL KPL.	919499308	4	1	9		LIEBHERR LTR 1220
RAUPENMITTELTEIL VORM.	917511508	1	1	27	919499308	RAUPENMITTELTEIL KPL.
RAUPENTRAEGER KPL.LI.	919254108	10	1	9		LIEBHERR LTR 1220
RAUPENTRAEGER KPL.RE.	919254208	11	1	9		LIEBHERR LTR 1220
RAUPENTRAEGER STAHLBAU	96018230	1	1	70	919254308	RAUPENTRAEGER VORM.LI.
RAUPENTRAEGER STAHLBAU	96019396	1	1	100	919254408	RAUPENTRAEGER VORM.RE.
RAUPENTRAEGER VORM.LI.	919254308	1	1	65	919254108	RAUPENTRAEGER KPL.LI.
RAUPENTRAEGER VORM.RE.	919254408	1	1	95	919254208	RAUPENTRAEGER KPL.RE.
REDUKTIONSMITTEL-DRUCK	12418622	19	1	483	918484108	HARNSTOFFANLAGE
REDUKTIONSMITTELINJEKTO	10144093	12	1	483	918484108	HARNSTOFFANLAGE
REDUKTIONSMITTELPUMPE A	11373478	11	1	483	918484108	HARNSTOFFANLAGE
REDUZIERUNG M20X1,5-M16	10475314	9	1	603	917368108	EL.KUEHLWASSERVORWAE
REDUZIERUNG M25X1,5 M16	10044648	12	2	598	918462708	FREMDEINSPEISUNG
REGLER	10292801	3	1	305	10871282	VERSTELLPUMPE
REGLER	10472196	3	1	295	11210798	VERSTELLPUMPE
REGLERELEMENT	10292815	5	1	310	10292801	REGLER
REGLERELEMENT	10472202	3	1	298	10472196	REGLER
REGLERELEMENT	571900808	2	1	298	10472196	REGLER
REGLERELEMENT	571900808	2	1	310	10292801	REGLER
REIBPLATTE 3M TYP35	97116895	8	6	338	919369308	DREHWERK
REIBSCHEIBE	975529708	29	2	429	96036790	DREHBUEHNENVERKLEIDUN
REIFENFUELLSCHLAUCH	520190408	67	1	144	928569808	GRUNDWERKZEUG
RELAIS 24V/1W 26X26X24MM	630105408	10	1	518	919503008	EINBAUTEILE SCHALTSCHRAN
RELAISSTECKSOCKEL 9-POL	630122908	506	2	43	96045227	KABELSTRANG
RELAISSTECKSOCKEL 9-POL	630122908	512	23	520	96045387	DRAEHTE GRUNDAUFBAU KPL
RELING	916162808	19	1	368	919010208	KRANFUEHRERKABINE VORM.
REPARATURSATZ	10650501	(998)	1	539	96045351	HYDRAULIK OBERWAGEN
REPARATURSATZ	10650501	(998)	1	539	96045351	HYDRAULIK OBERWAGEN
REPARATURSATZ	11003094	999	1	479	502657308	LUFTTROCKNER
REPARATURSATZ	571582108	1	1	226	5700161	LUFTPRESSER
REPARATURSATZ	571582708	15	1	226	5700161	LUFTPRESSER
REPARATURSATZ -E DF/LF	10035534	(2)	1	538	96045351	HYDRAULIK OBERWAGEN
REPARATURSEGMENT 1-FAC	11658888	(997)	1	64	917436708	BODENPLATTEN KPL.
RIEGEL SCHWK.	966825408	10	1	405	917304708	SCHIEBETUER EINBAU
RIEGELKLEMME	602116008	14	4	368	919010208	KRANFUEHRERKABINE VORM.
RIEMENSCHEIBE 31.5X8PKX21	10146185	1	1	187	10141974	KURBELWELLENANBAUTEILE
RILLENKUGELLAGER	10114839	4	1	47	11346779	SCHLEIFRINGUEBERTRAGER
RILLENKUGELLAGER 50X65X7	10114838	10	1	47	11346779	SCHLEIFRINGUEBERTRAGER
RILLENKUGELLAGER DIN 625	745139101	66	1	340	90008901	DREHWERKANTRIEB
RILLENKUGELLAGER DIN 625	745129508	390	2	285	97029921	VERTEILERGETRIEBE
RILLENKUGELLAGER DIN 625	10169236	350	1	285	97029921	VERTEILERGETRIEBE
RILLENKUGELLAGER DIN 625	745159301	3	1	357	939292201	PLANETENGETRIEBE
RILLENKUGELLAGER DIN 625	745159301	3	1	583	939294201	PLANETENGETRIEBE
RILLENKUGELLAGER DIN 625	571819808	360	2	285	97029921	VERTEILERGETRIEBE
RILLENKUGELLAGER DIN 625	745145308	410	4	285	97029921	VERTEILERGETRIEBE
RILLENKUGELLAGER DIN 625	745165608	370	1	285	97029921	VERTEILERGETRIEBE
RILLENKUGELLAGER DIN 625	745129501	4	1	408	966253908	WAGEN
RILLENKUGELLAGER DIN 625	10294494	3	4	372	916177508	TRITT KPL.
RING	570110708	5	14	348	570109508	TRIEBWERK
RINGLUEFTER D=654	550639508	101	1	280	96034631	KUEHLER VORM.
RINGSCHRAUBE DIN 580 M10X	402600208	30	4	550	10413106	STEUERBLOCK
RINGSCHRAUBE DIN 580 M12	10179932	18	8	121	919644008	HYDRAULISCHE ABSTUETZUN
RINGSCHRAUBE DIN 580 M12	10179932	10	1	335	969050308	OELBEHAELTER VORM.
RIPPENROHR ALU	10493045	168	2	478	969763408	VERROHRUNG DRUCKLUFTA
ROHR	9080660	10	1	177	10155227	OELWANNE VORM.
ROHR 100X33 ABS	97005143	4	1	385	966282308	VERKLEIDUNG LI.
ROHR 12.0X1204 X5CRNI18-10	97047607	9	1	483	918484108	HARNSTOFFANLAGE
ROHR 15.0 X24 S355J2C+C FE	971805708	19	4	417	918810308	STEUERSTAND
ROHR 16X2X70 E235+N VERZ	946104608	34	2	275	919007708	ANTRIEBSAGGREGAT VORM.
ROHR 18.0X622 X5CRNI18-10	97008549	1	1	459	966707708	SPIEGELHALTER VORM.

Bezeichnung	Artikel	Pos.	Menge	Seite	Baugruppe	Bezeichnung
ROHR 1959X1553X30 X5CRNI	975218508	1	2	377	916162808	RELING
ROHR 21,3X4X624 S355J2H FE	953536608	7	1	661	917292408	TELESKOP 5 VORM.
ROHR 21,3X4X700 S355J2H FE	953536708	8	1	661	917292408	TELESKOP 5 VORM.
ROHR 21.3X596 S355J2H FE//	973740408	73	1	662	917292408	TELESKOP 5 VORM.
ROHR 22.0X319 X6CRNITI1810	97064857	(1)	1	314	96034515	AUSGLEICHSBEHAELTER VO
ROHR 30/FLEXIBEL PAK	553159408	9	0.62	464	96020359	ZUSATZHEIZUNG VORM.
ROHR 3X0X0 X5CRNI18-10	97037947	4	1	613	968267208	STATIV
ROHR 49X68X78 EPDM	97006624	4	1	399	916163008	WISCHANLAGE EINBAU
ROHR 6X1X1161 E235+N	97039388	774	4	55	96035803	ROHRLEITUNGEN MITTELTEIL
ROHR 6X1X1169 E235+N	97039389	775	4	55	96035803	ROHRLEITUNGEN MITTELTEIL
ROHR 6X1X132 E235+N	97039386	772	4	55	96035803	ROHRLEITUNGEN MITTELTEIL
ROHR 6X1X132 E235+N	97039387	773	4	55	96035803	ROHRLEITUNGEN MITTELTEIL
ROHR 8.0X80 X5CRNI18-10	97124033	1	1	316	96039022	STUTZEN KPL.
ROHR 85X27 ABS	97005144	3	1	386	966282408	VERKLEIDUNG RE.
ROHR EN 10305-4 22X1,5X107	10190120	5	1	585	90200103	OELMESSEINRICHTUNG
ROHR KPL.	968661408	404	2	277	919007708	ANTRIEBSAGGREGAT VORM.
ROHR KPL.	969939408	4	1	314	96034515	AUSGLEICHSBEHAELTER VO
ROHR KPL. 10X1,5X120	929802808	484	1	690	968187308	ROHRLEITUNGEN TELE
ROHR KPL. 10X1,5X137	929803108	488	1	690	968187308	ROHRLEITUNGEN TELE
ROHR KPL. 10X1,5X239	929802308	483	2	690	968187308	ROHRLEITUNGEN TELE
ROHR KPL. 10X1,5X278	929804608	489	1	690	968187308	ROHRLEITUNGEN TELE
ROHR KPL. 10X1,5X282	929806008	490	1	690	968187308	ROHRLEITUNGEN TELE
ROHR KPL. 10X1,5X407	929803008	486	1	690	968187308	ROHRLEITUNGEN TELE
ROHR KPL. 10X1,5X671	929802208	482	1	690	968187308	ROHRLEITUNGEN TELE
ROHR KPL. 10X1,5X853	929802108	481	1	690	968187308	ROHRLEITUNGEN TELE
ROHR KPL. 10X1.5	968155008	302	1	572	918956208	ROHRLEITUNGEN OBERWAGE
ROHR KPL. 10X1.5	968593808	722	2	55	96035803	ROHRLEITUNGEN MITTELTEIL
ROHR KPL. 10X1.5	968593908	723	2	55	96035803	ROHRLEITUNGEN MITTELTEIL
ROHR KPL. 10X1.5	968594008	724	2	55	96035803	ROHRLEITUNGEN MITTELTEIL
ROHR KPL. 10X1.5	968594108	725	2	55	96035803	ROHRLEITUNGEN MITTELTEIL
ROHR KPL. 10X1.5	969325008	247	1	572	918956208	ROHRLEITUNGEN OBERWAGE
ROHR KPL. 10X1.5	969325108	290	1	572	918956208	ROHRLEITUNGEN OBERWAGE
ROHR KPL. 10X1.5	969325208	291	1	572	918956208	ROHRLEITUNGEN OBERWAGE
ROHR KPL. 10X1.5	969438308	230	1	572	918956208	ROHRLEITUNGEN OBERWAGE
ROHR KPL. 12X1.5	96035909	709	1	55	96035803	ROHRLEITUNGEN MITTELTEIL
ROHR KPL. 12X1.5	96035913	729	1	55	96035803	ROHRLEITUNGEN MITTELTEIL
ROHR KPL. 12X1.5	96045839	(2)	1	275	919007708	ANTRIEBSAGGREGAT VORM.
ROHR KPL. 12X1.5	968167108	704	1	55	96035803	ROHRLEITUNGEN MITTELTEIL
ROHR KPL. 12X1.5	968168008	714	1	55	96035803	ROHRLEITUNGEN MITTELTEIL
ROHR KPL. 12X1.5	968168108	715	1	55	96035803	ROHRLEITUNGEN MITTELTEIL
ROHR KPL. 12X1.5	968168208	716	2	55	96035803	ROHRLEITUNGEN MITTELTEIL
ROHR KPL. 12X1.5	968168308	717	2	55	96035803	ROHRLEITUNGEN MITTELTEIL
ROHR KPL. 12X1.5	968168608	720	2	55	96035803	ROHRLEITUNGEN MITTELTEIL
ROHR KPL. 12X1.5	968168708	721	2	55	96035803	ROHRLEITUNGEN MITTELTEIL
ROHR KPL. 12X1.5	968168808	(760)	4	124	968077208	HYDRAULIK ABSTUETZUNG
ROHR KPL. 12X1.5	969325308	292	1	572	918956208	ROHRLEITUNGEN OBERWAGE
ROHR KPL. 16X2	969324808	245	1	572	918956208	ROHRLEITUNGEN OBERWAGE
ROHR KPL. 16X2X2361	962977708	496	2	701	968223408	ROHRLEITUNGEN KLAPPSPI
ROHR KPL. 16X2X2550	968201408	494	2	701	968223408	ROHRLEITUNGEN KLAPPSPI
ROHR KPL. 16X2X5360	962977608	495	2	701	968223408	ROHRLEITUNGEN KLAPPSPI
ROHR KPL. 18X1.5	968544708	(327)	1	478	969763408	VERROHRUNG DRUCKLUFTA
ROHR KPL. 18X1.5	969324908	246	1	572	918956208	ROHRLEITUNGEN OBERWAGE
ROHR KPL. 18X1.5	969978408	(328)	1	478	969763408	VERROHRUNG DRUCKLUFTA
ROHR KPL. 18X1.5	969979608	(326)	1	478	969763408	VERROHRUNG DRUCKLUFTA
ROHR KPL. 20X2.5	968158208	260	1	572	918956208	ROHRLEITUNGEN OBERWAGE
ROHR KPL. 20X2.5	968158508	265	1	572	918956208	ROHRLEITUNGEN OBERWAGE
ROHR KPL. 20X2.5	968168408	718	2	55	96035803	ROHRLEITUNGEN MITTELTEIL
ROHR KPL. 20X2.5	968168508	719	2	55	96035803	ROHRLEITUNGEN MITTELTEIL
ROHR KPL. 20X2.5	969165508	710	1	55	96035803	ROHRLEITUNGEN MITTELTEIL
ROHR KPL. 20X2.5	969165608	711	1	55	96035803	ROHRLEITUNGEN MITTELTEIL

Bezeichnung	Artikel	Pos.	Menge	Seite	Baugruppe	Bezeichnung
ROHR KPL. 22X2,5X245	968021408	25	1	585	90200103	OELMESSEINRICHTUNG
ROHR KPL. 22X2,5X307	968021508	10	1	361	90200104	OELMESSEINRICHTUNG
ROHR KPL. 22X2,5X357	968021608	25	1	361	90200104	OELMESSEINRICHTUNG
ROHR KPL. 22X2.5	96045838	(1)	1	275	919007708	ANTRIEBSAGGREGAT VORM.
ROHR KPL. 22X2.5	968156108	320	1	572	918956208	ROHRLEITUNGEN OBERWAGE
ROHR KPL. 22X2.5	968167808	712	1	55	96035803	ROHRLEITUNGEN MITTELTEIL
ROHR KPL. 22X2.5	968167908	713	1	55	96035803	ROHRLEITUNGEN MITTELTEIL
ROHR KPL. 22X2.5X229	968021308	10	1	585	90200103	OELMESSEINRICHTUNG
ROHR KPL. 25X3	969344508	200	1	572	918956208	ROHRLEITUNGEN OBERWAGE
ROHR KPL. 28X2	96035907	708	1	55	96035803	ROHRLEITUNGEN MITTELTEIL
ROHR KPL. 28X2	96035912	728	1	55	96035803	ROHRLEITUNGEN MITTELTEIL
ROHR KPL. 38X5	96035905	706	1	55	96035803	ROHRLEITUNGEN MITTELTEIL
ROHR KPL. 38X5	96035906	707	1	55	96035803	ROHRLEITUNGEN MITTELTEIL
ROHR KPL. 38X5	96035910	726	1	55	96035803	ROHRLEITUNGEN MITTELTEIL
ROHR KPL. 38X5	96035911	727	1	55	96035803	ROHRLEITUNGEN MITTELTEIL
ROHR KPL. 38X5	96035929	304	1	572	918956208	ROHRLEITUNGEN OBERWAGE
ROHR KPL. 38X5	968154808	300	1	572	918956208	ROHRLEITUNGEN OBERWAGE
ROHR KPL. 38X5	968154908	301	1	572	918956208	ROHRLEITUNGEN OBERWAGE
ROHR KPL. 38X5	968155108	303	1	572	918956208	ROHRLEITUNGEN OBERWAGE
ROHR KPL. 38X5	968158908	473	1	572	918956208	ROHRLEITUNGEN OBERWAGE
ROHR KPL. 38X5	968159008	474	1	572	918956208	ROHRLEITUNGEN OBERWAGE
ROHR KPL. 38X5	968159108	475	1	572	918956208	ROHRLEITUNGEN OBERWAGE
ROHR KPL. 38X5	968159308	477	1	572	918956208	ROHRLEITUNGEN OBERWAGE
ROHR KPL. 38X5	968162308	(250)	1	589	967784808	HYDRAULIK HILFSHUBWERK
ROHR KPL. 38X5	968162408	(251)	1	589	967784808	HYDRAULIK HILFSHUBWERK
ROHR KPL. 38X5	968166708	700	1	55	96035803	ROHRLEITUNGEN MITTELTEIL
ROHR KPL. 38X5	968166808	701	1	55	96035803	ROHRLEITUNGEN MITTELTEIL
ROHR KPL. 38X5	968166908	702	1	55	96035803	ROHRLEITUNGEN MITTELTEIL
ROHR KPL. 38X5	968167008	703	1	55	96035803	ROHRLEITUNGEN MITTELTEIL
ROHR KPL. 38X5	969438208	309	1	572	918956208	ROHRLEITUNGEN OBERWAGE
ROHR KPL. 38X5X619	966546008	480	3	690	968187308	ROHRLEITUNGEN TELE
ROHR KPL. 42X3	968159408	478	2	572	918956208	ROHRLEITUNGEN OBERWAGE
ROHR KPL. 42X3	968159508	479	1	572	918956208	ROHRLEITUNGEN OBERWAGE
ROHR KPL. 6X1	96035646	240	1	572	918956208	ROHRLEITUNGEN OBERWAGE
ROHR KPL. 6X1X239	922676808	(487)	1	693	967785408	ZUSATZHYDRAULIK KLAPPSPI
ROHR KPL. 6X1X327	968205108	770	4	55	96035803	ROHRLEITUNGEN MITTELTEIL
ROHR KPL. 6X1X327	968205208	771	4	55	96035803	ROHRLEITUNGEN MITTELTEIL
ROHR LN 80 401 22X1.5X255 E	979323301	30	1	585	90200103	OELMESSEINRICHTUNG
ROHR SCHWK.	963498508	79	1	662	917292408	TELESKOP 5 VORM.
ROHR SCHWK.	968011608	6	1	134	919087608	DREHDURCHFUEHRUNG
ROHR SCHWK. RAL 9005,M,G	966621108	12	1	383	917305408	INNENVERKLEIDUNG EINBAU
ROHR SCHWK. RAL 9005,M,GT	966620008	13	1	383	917305408	INNENVERKLEIDUNG EINBAU
ROHR SCHWK. SCHWARZ PUL	966513708	17	1	393	966497908	FRONTSCHEIBE KPL.
ROHR SCHWK. SCHWARZ PUL	966662508	6	1	368	919010208	KRANFUEHRERKABINE VORM.
ROHR ST12 SPF	97087964	3	1	499	918731908	LUFTFILTERANLAGE
ROHRLEITUNG	10143542	4	1	214	10143341	KRAFTSTOFFLEITUNGEN
ROHRLEITUNG	10143543	3	1	214	10143341	KRAFTSTOFFLEITUNGEN
ROHRLEITUNG 15X1,5	10130104	6	1	214	10143341	KRAFTSTOFFLEITUNGEN
ROHRLEITUNG 22X1,5	10140732	9	1	218	10145173	ANSAUGSTUTZEN ANBAU
ROHRLEITUNG 22X1,5	10145175	1	1	228	10145176	ROHRLEITUNG ANBAU
ROHRLEITUNG 6X1	10132170	3	1	215	10143342	LECKOELRUECKLAUF
ROHRLEITUNG 6X1	10133607	13	1	215	10143342	LECKOELRUECKLAUF
ROHRLEITUNG 6X1	10141846	8	1	215	10143342	LECKOELRUECKLAUF
ROHRLEITUNG 6X1	10145838	9	1	261	10144036	NEBENABTRIEB ANBAU
ROHRLEITUNG 6X1	11420632	(3)	1	164	12856862	DIESELMOTOR
ROHRLEITUNG 6X1	12429430	(4)	1	164	12856862	DIESELMOTOR
ROHRLEITUNG 8X1	10132180	19	1	215	10143342	LECKOELRUECKLAUF
ROHRLEITUNG 8X2	10143251	1	1	215	10143342	LECKOELRUECKLAUF
ROHRLEITUNG ANBAU	10145176	333	1	163	12856862	DIESELMOTOR
ROHRLEITUNG ANBAU	10148216	381	1	163	12856862	DIESELMOTOR

Bezeichnung	Artikel	Pos.	Menge	Seite	Baugruppe	Bezeichnung
ROHRLEITUNGEN ABSTUETZ	968078808	11	1	124	968077208	HYDRAULIK ABSTUETZUNG
ROHRLEITUNGEN ANTRIEBSA	968986008	8	1	275	919007708	ANTRIEBSAGGREGAT VORM.
ROHRLEITUNGEN DRUCKLUFT	969842808	11	1	478	969763408	VERROHRUNG DRUCKLUFTA
ROHRLEITUNGEN KLAPPSPI	927163908	11	1	693	967785408	ZUSATZHYDRAULIK KLAPPSPI
ROHRLEITUNGEN KLAPPSPI	968223408	11	1	699	967785008	ZUSATZHYDRAULIK KLAPPSPI
ROHRLEITUNGEN MITTELTEIL	96035803	11	1	51	96035801	HYDRAULIK MITTELTEIL
ROHRLEITUNGEN OBERWAGE	918956208	193	1	11		LIEBHERR LTR 1220
ROHRLEITUNGEN TELE	968187308	11	1	688	967784508	HYDRAULIK TELE
ROHRLEITUNGEN WINDE 2	968083808	11	1	589	967784808	HYDRAULIK HILFSHUBWERK
ROHRSCHELLE 33/20	774225008	18	1	464	96020359	ZUSATZHEIZUNG VORM.
ROHRSCHELLE 43/20	774221708	24	7	462	918759808	ZUSATZHEIZUNG OW
ROHRSCHELLENTEIL 26X50X3	97037153	300	6	51	96035801	HYDRAULIK MITTELTEIL
ROHRSCHELLENTEIL 26X50X3	97037154	301	6	51	96035801	HYDRAULIK MITTELTEIL
ROHRSTUTZEN GSCK45	97042155	6	1	414	969085208	HEIZUNG VORM.
ROHRSTUTZEN R1/4"	10014698	1	1	131	774375108	DURCHGANGSNIPPELBLOCK
ROHRUNTERLAGE	774215508	311	1	478	969763408	VERROHRUNG DRUCKLUFTA
ROHRWENDEL 9	774383508	26	10	127	917257108	ZENTRALSCHMIERUNG RAUP
ROLLE 22X13 PA 12	97001109	6	2	408	966253908	WAGEN
ROLLE 25X180 ALCUMGPB	97031463	37	1	365	917259908	KRANFUEHRERKABINE ANBA
ROLLE 30X11 PA 12	97008171	5	1	408	966253908	WAGEN
ROLLE 50.0X25 S355J2G3 FE//	947868208	2	2	732	929582108	HALTERUNG VORM.
ROLLE 50.0X25 S355J2G3 FE//	947868208	3	1	735	923879808	KONSOLE VORM.
ROLLE RD70X15 PA6G	939279608	20	1	721	968728808	KONSOLE VORM.
ROLLENDREHVERBINDUNG	917259408	117	1	9		LIEBHERR LTR 1220
ROLLENDREHVERBINDUNG 17	90025640	1	1	336	917259408	ROLLENDREHVERBINDUNG
ROLLENKAEFIG	927514301	16	38	357	939292201	PLANETENGETRIEBE
ROLLENKAEFIG	927514301	16	38	583	939294201	PLANETENGETRIEBE
ROLLENMUNDSTUECK FE//ZN	973774708	34	1	639	917291908	ANLENKSTUECK VORM.
ROLLENMUNDSTUECK FE//ZN	973774708	58	1	644	917292008	TELESKOP 1 VORM.
ROLLENMUNDSTUECK FE//ZN	973774708	58	1	648	917292108	TELESKOP 2 VORM.
ROLLENMUNDSTUECK FE//ZN	973774708	58	1	652	917292208	TELESKOP 3 VORM.
ROLLENMUNDSTUECK FE//ZN	973774708	58	1	656	917292308	TELESKOP 4 VORM.
ROLLENSTOESSEL	10153536	1	2	198	9079870	STEUERUNGSTEILE
ROLLENTRAEGER SCHWK.	929591608	6	1	732	929582108	HALTERUNG VORM.
ROLLENTRAEGER SCHWK.	967771808	2	1	705	917268408	MASTNASE
ROLLO	11002446	27	1	383	917305408	INNENVERKLEIDUNG EINBAU
ROLLO	11002447	26	1	383	917305408	INNENVERKLEIDUNG EINBAU
ROTOR	11171311	1	1	712	11482252	WINDGESCHWINDIGKEITSGE
RS AGGREGATETRAEGER VO	11359503	1	1	170	10147687	AGGREGATETRAEGER ANBA
RS DRUCKFILTER DF...330FG	10101384	(3)	1	538	96045351	HYDRAULIK OBERWAGEN
RS DRUCKREGLER	11003089	998	1	479	502657308	LUFTTROCKNER
RS DRUCKROHRSTUTZEN	10141140	200	1	210	10153151	DRUCKROHRSTUTZEN MIT BE
RS FLANSCH	10145815	8	1	197	10138230	NOCKENWELLE KPL.
RS FLANSCH	10145815	8	1	197	10138230	NOCKENWELLE KPL.
RS GRIFF	12100622	1	1	387	11002447	ROLLO
RS INJEKTOR 950ML	10152874	200	1	209	10152867	INJEKTOR MIT BEFEST.
RS KABELSATZ	967363808	999	1	455	10340105	WARNLEUCHTE
RS KURBELWELLENDICHTUN	10121952	1	1	186	10153583	KURBELWELLENDICHTUNG
RS KURBELWELLENDICHTU	10121335	2	1	186	10153583	KURBELWELLENDICHTUNG
RS KURBELWELLENDICHTU	10141178	520	1	264	10148366	DS DIESELMOTOR
RS KURBELWELLENLAGERUN	10116939	1	1	184	9076457	KURBELWELLENLAGERSATZ
RS SAUGDROSSELVENTIL	12490199	230	1	206	10146658	HOCHDRUCKPUMPE
RS TELESKOPVERRIEGELUN	571934508	50	1	670	571928508	ZYLINDERKOPF KPL.
RS VERSTELLUNG	10872672	998	1	387	11002447	ROLLO
RS VORFOERDERPUMPE	10149198	220	1	206	10146658	HOCHDRUCKPUMPE
RS WASSERHEIZGERAET	96004475	999	1	466	10876576	WASSERHEIZGERAET
RS ZYLINDERVERRIEGELUNG	571934608	60	1	670	571928508	ZYLINDERKOPF KPL.
RUECKENTEIL	10663466	1	1	419	10877138	FAHRERSITZ
RUECKFAHRWARNUNG 12-36	614009908	11	1	36	96045226	SCHALTKASTEN VORM.
RUECKSCHLAGVENTIL	10119971	4	1	182	10139112	OELLEITUNG VORM.

Bezeichnung	Artikel	Pos.	Menge	Seite	Baugruppe	Bezeichnung
RUECKSCHLAGVENTIL	10280215	80	1	597	10038509	STEUERBLOCK
RUECKSCHLAGVENTIL	10280216	90	1	597	10038509	STEUERBLOCK
RUECKSCHLAGVENTIL	10430042	9	1	552	10332882	STEUERBLOCK
RUECKSCHLAGVENTIL	10875075	5	1	546	11211756	STEUERBLOCK
RUECKSCHLAGVENTIL	11007219	3	6	505	11002916	VERTEILERKOMBINATION
RUECKSCHLAGVENTIL	11066829	3	1	74	11182596	VERSTELLMOTOR
RUECKSCHLAGVENTIL	570531308	11	1	555	11341035	STEUERBLOCK
RUECKSCHLAGVENTIL	570818008	10	1	555	11341035	STEUERBLOCK
RUECKSCHLAGVENTIL	591055608	10	2	399	916163008	WISCHANLAGE EINBAU
RUECKSCHLAGVENTIL	774378108	(1)	1	502	917261208	ZENTRALSCHMIERANLAGE O
RUECKSCHLAGVENTIL 2.5BAR	11839607	100	1	269	918731408	ANTRIEBSAGGREGAT KPL.
RUECKSCHLAGVENTIL 250B	511316708	171	1	538	96045351	HYDRAULIK OBERWAGEN
RUECKSCHLAGVENTIL 250B	511435108	172	1	538	96045351	HYDRAULIK OBERWAGEN
RUECKSCHLAGVENTIL 250B	511457808	9	3	335	969050308	OELBEHAELTER VORM.
RUECKSCHLAGVENTIL 250B	511476908	197	2	539	96045351	HYDRAULIK OBERWAGEN
RUECKSCHLAGVENTIL 250B	511481508	160	1	90	96035796	HYDR.FAHRANTRIEB
RUECKSCHLAGVENTIL 250B	511481508	160	1	107	96035792	HYDR.FAHRANTRIEB
RUECKSCHLAGVENTIL 250B	511481508	151	1	589	967784808	HYDRAULIK HILFSHUBWERK
RUECKSCHLAGVENTIL 400B	510413508	203	1	539	96045351	HYDRAULIK OBERWAGEN
RUECKSCHLAGVENTIL 400B	511311808	154	1	538	96045351	HYDRAULIK OBERWAGEN
RUECKSCHLAGVENTIL 400B	511311808	170	1	589	967784808	HYDRAULIK HILFSHUBWERK
RUECKSCHLAGVENTIL 400B	511431514	199	1	539	96045351	HYDRAULIK OBERWAGEN
RUECKSCHLAGVENTIL 400B	511460608	152	1	538	96045351	HYDRAULIK OBERWAGEN
RUECKSCHLAGVENTIL 400B	511460608	150	1	589	967784808	HYDRAULIK HILFSHUBWERK
RUECKSCHLAGVENTIL 400B	511493708	152	1	688	967784508	HYDRAULIK TELE
RUECKSCHLAGVENTIL 420B	510408708	153	1	538	96045351	HYDRAULIK OBERWAGEN
RUECKSCHLAGVENTIL 420B	510408708	171	1	589	967784808	HYDRAULIK HILFSHUBWERK
RUECKZUGPLATTE	570110008	7	1	347	570109008	TRIEBWERK
RUEHRFLUEGEL	10014712	27	1	504	10327065	ELEKTROPUMPE
RUEHRFLUEGEL	10664141	24	1	128	11347526	ELEKTROPUMPE
RUNDLAGER C50X30XM10	726905008	120	2	280	96034631	KUEHLER VORM.
RUNDLAGER C50X30XM10	726905008	8	4	565	967980508	OELKUEHLER VORM.
RUNDSCHLINGE DIN EN 1492-	10280715	2	1	719	968811608	QUERTRAEGER
RUNDUMKENNLEUCHTE 55W	10470032	1	1	146	915731908	EL.TEILE VERSANDMONTAGE
SAE-FLANSCH 11/2"	511502608	430	2	277	919007708	ANTRIEBSAGGREGAT VORM.
SAE-FLANSCHHAELFTE FHS 2	510598408	432	6	277	919007708	ANTRIEBSAGGREGAT VORM.
SAE-FLANSCHVERBINDUNG G	474901708	515	1	540	96045351	HYDRAULIK OBERWAGEN
SAE-FLANSCHVERBINDUNG	510702408	504	1	540	96045351	HYDRAULIK OBERWAGEN
SAE-FLANSCHVERBINDUNG	474909008	517	1	540	96045351	HYDRAULIK OBERWAGEN
SAE-FLANSCHVERBINDUNG	474908108	508	2	540	96045351	HYDRAULIK OBERWAGEN
SAE-FLANSCHVERBINDUNG	474907608	501	1	540	96045351	HYDRAULIK OBERWAGEN
SAE-FLANSCHVERBINDUNG W	474906708	505	2	540	96045351	HYDRAULIK OBERWAGEN
SAE-FLANSCHVERBINDUNG	474907508	502	1	540	96045351	HYDRAULIK OBERWAGEN
SAE-FLANSCHVERBINDUNG	474906908	516	3	540	96045351	HYDRAULIK OBERWAGEN
SAE-FLANSCHVERBINDUNG	474906608	503	2	540	96045351	HYDRAULIK OBERWAGEN
SAE-VERSCHLUSSFLANSCH	511510008	500	1	540	96045351	HYDRAULIK OBERWAGEN
SAMMELROHR 22L/10 A3CR6	10871151	200	1	539	96045351	HYDRAULIK OBERWAGEN
SAMMELROHR 42L/10 A3CR6F	10412850	202	1	539	96045351	HYDRAULIK OBERWAGEN
SAMMELROHR 42L/11 SPF	10871595	201	1	539	96045351	HYDRAULIK OBERWAGEN
SAUGFLANSCH	510146208	400	1	280	96034631	KUEHLER VORM.
SAUGFLANSCH	510146208	521	1	540	96045351	HYDRAULIK OBERWAGEN
SAUGROHR-OEL G-ALSI10MG	97032261	3	1	335	969050308	OELBEHAELTER VORM.
SAUGROHR-OEL G-ALSI10MG	97032263	203	1	276	919007708	ANTRIEBSAGGREGAT VORM.
SAUGROHR-OEL G-ALSI10MG	97053616	202	1	276	919007708	ANTRIEBSAGGREGAT VORM.
SAUGROHR-OEL G-ALSI10MG	97065544	207	1	276	919007708	ANTRIEBSAGGREGAT VORM.
SAUGROHR-OEL SPF	976388708	204	1	276	919007708	ANTRIEBSAGGREGAT VORM.
SAUGSCHLAUCH SPF	970658608	250	1	269	918731408	ANTRIEBSAGGREGAT KPL.
SAUGSTUTZEN 50.0X78 S355	953661008	400	1	277	919007708	ANTRIEBSAGGREGAT VORM.
SAUGSTUTZEN 82.5X87 S355	976490008	401	1	277	919007708	ANTRIEBSAGGREGAT VORM.
SCHAEKEL 0,08T NG4 STAINLE	10300552	31	2	393	966497908	FRONTSCHEIBE KPL.

Bezeichnung	Artikel	Pos.	Menge	Seite	Baugruppe	Bezeichnung
SCHAEKEL 12T SPF	10283201	6	1	721	968728808	KONSOLE VORM.
SCHAEKEL DIN 82101 0,25T N	773933508	3	1	630	925141508	SCHLAUCHFUEHRUNG VORM.
SCHAEKEL DIN 82101 0,25T N	773933508	24	1	672	966134608	ANBAUTEILE ZYLINDER
SCHAEKEL DIN 82101 0,25T N	773933508	14	1	705	917268408	MASTNASE
SCHALLDAEMMUNG	968977308	24	1	429	96036790	DREHBUEHNENVERKLEIDUN
SCHALTBLECH 2X139X46 DC0	972373808	97	2	645	917292008	TELESKOP 1 VORM.
SCHALTBLECH 2X139X46 DC0	972373808	97	2	649	917292108	TELESKOP 2 VORM.
SCHALTBLECH 2X139X46 DC0	972373808	97	2	653	917292208	TELESKOP 3 VORM.
SCHALTBLECH 2X139X46 DC0	972373808	97	2	657	917292308	TELESKOP 4 VORM.
SCHALTBLECH 2X139X46 DC0	972373808	82	2	662	917292408	TELESKOP 5 VORM.
SCHALTER	11979975	24	1	419	10877138	FAHRERSITZ
SCHALTKASTEN SCHWK. RAL	968049608	1	1	36	96045226	SCHALTKASTEN VORM.
SCHALTKASTEN VORM. S200	96045226	2	1	34	96045225	ELEKTRIK MITTELSTUECK
SCHALTLEISTE 21X75X160 P	972373708	96	2	653	917292208	TELESKOP 3 VORM.
SCHALTLEISTE 21X75X160 P	972373708	96	2	657	917292308	TELESKOP 4 VORM.
SCHALTLEISTE 21X75X160 P	972373708	81	2	662	917292408	TELESKOP 5 VORM.
SCHALTLEISTE 21X75X160 P	972392108	96	1	645	917292008	TELESKOP 1 VORM.
SCHALTLEISTE 21X75X160 P	972392108	96	1	649	917292108	TELESKOP 2 VORM.
SCHALTNOCKE	11181886	12	1	47	11346779	SCHLEIFRINGUEBERTRAGER
SCHALTSCHRANKDECKEL EIN	968514508	20	1	368	919010208	KRANFUEHRERKABINE VORM.
SCHARNIER 20X20X40/180° G	704258208	15	2	518	919503008	EINBAUTEILE SCHALTSCHRAN
SCHARNIER 20X20X40/180° G	704258208	40	4	522	969256608	GRUNDAUFBAU
SCHARNIER 35X35X50/180° N	10294684	4	2	85	968420608	STAUKASTEN VORM.
SCHARNIER 35X35X50/180° S	704228108	84	2	137	919499408	ZENTRALBALLAST
SCHARNIER 35X35X50/180° S	704228108	12	2	320	96023117	BATTERIEKASTEN VORM.
SCHARNIER 35X35X50/180° S	704228108	9	3	433	968923508	KLAPPE VORM.RECHTS
SCHARNIER 35X35X50/180° S	704228108	2	2	441	969016008	KLAPPE VORM.VORN LINKS
SCHARNIER 35X35X50/180° S	704228108	5	1	737	917268208	LEITER ANBAU
SCHEIBE	510782708	5	1	561	511419608	DRUCKBEGRENZUNGSVENTI
SCHEIBE	510797208	5	1	558	511433908	DRUCKBEGRENZUNGSVENTI
SCHEIBE	518614708	57	2	668	10876933	TELESKOPIERZYLINDER
SCHEIBE	570109908	5	1	347	570109008	TRIEBWERK
SCHEIBE	591063508	63	1	450	96036957	ELEKTRIK ANBAUTEILE KABIN
SCHEIBE	927742801	58	1	357	939292201	PLANETENGETRIEBE
SCHEIBE 10,5X18,5X2 -	9076638	17	4	238	10140729	ATL-ANBAU
SCHEIBE 10X100X100 S355MC	97042598	6	2	471	918956108	HYDRAULISCHE BALLASTIER
SCHEIBE 20,2X25X3XA GUMMI	710207408	64	1	450	96036957	ELEKTRIK ANBAUTEILE KABIN
SCHEIBE 2X154X154 DC01 FE//	971060108	8	3	644	917292008	TELESKOP 1 VORM.
SCHEIBE 2X154X154 DC01 FE//	971060108	8	2	648	917292108	TELESKOP 2 VORM.
SCHEIBE 2X154X154 DC01 FE//	971060108	8	3	652	917292208	TELESKOP 3 VORM.
SCHEIBE 2X154X154 DC01 FE//	971060108	8	3	656	917292308	TELESKOP 4 VORM.
SCHEIBE 2X154X154 DC01 FE//	971060108	20	3	661	917292408	TELESKOP 5 VORM.
SCHEIBE 34X45X1	9078522	6	2	194	11448005	KIPPHEBELBOCK VORM.
SCHEIBE 3X21X21 DC01 FE//	973618208	8	2	280	96034631	KUEHLER VORM.
SCHEIBE 3X38X38 DC01 FE//	973485408	44	4	17	919617108	RAUPENFAHRWERK KPL.
SCHEIBE 3X54X54 X5CRNI18-1	97017499	36	16	17	919617108	RAUPENFAHRWERK KPL.
SCHEIBE 40X222X222 S960QL+	972908008	7	1	644	917292008	TELESKOP 1 VORM.
SCHEIBE 40X222X222 S960QL+	972908008	7	1	648	917292108	TELESKOP 2 VORM.
SCHEIBE 40X222X222 S960QL+	972908008	7	1	652	917292208	TELESKOP 3 VORM.
SCHEIBE 40X222X222 S960QL+	972908008	7	1	656	917292308	TELESKOP 4 VORM.
SCHEIBE 40X222X222 S960QL+	972908008	65	1	662	917292408	TELESKOP 5 VORM.
SCHEIBE 4X100X100 S315MC	97008156	17	1	721	968728808	KONSOLE VORM.
SCHEIBE 4X40X40 S315MC FE	940116008	67	4	71	919254308	RAUPENTRAEGER VORM.LI.
SCHEIBE 4X40X40 S315MC FE	940116008	67	4	101	919254408	RAUPENTRAEGER VORM.RE.
SCHEIBE 50.0x9 S355J2C+C FE	970689208	7	4	158	918731108	MONTAGETEILE DREHBUEHN
SCHEIBE 50X5 S355J2C+C	970821508	9	4	158	918731108	MONTAGETEILE DREHBUEHN
SCHEIBE 52,2X107X3 -S355J2G	10144311	11	1	187	10141974	KURBELWELLENANBAUTEILE
SCHEIBE 5X35X35 S355MC FE	97040355	21	8	365	917259908	KRANFUEHRERKABINE ANBA
SCHEIBE 5X40X40 S355MC FE	97040356	39	6	365	917259908	KRANFUEHRERKABINE ANBA
SCHEIBE 8,4X18X15 -	9177776	10	1	218	10145173	ANSAUGSTUTZEN ANBAU

Bezeichnung	Artikel	Pos.	Menge	Seite	Baugruppe	Bezeichnung
SCHEIBE 8,4X18X15 -	9177776	2	2	237	10144756	HITZESCHUTZ MIT BEFESTIG
SCHEIBE 85,2X139X9,5	931807501	5	1	340	90008901	DREHWERKANTRIEB
SCHEIBE 8X65X65 S355MC FE	97038431	22	4	275	919007708	ANTRIEBSAGGREGAT VORM.
SCHEIBE A 10X20X2 200HV-St	10011658	24	1	449	96036957	ELEKTRIK ANBAUTEILE KABIN
SCHEIBE AEHNL.ISO 7089 6 PA	420010405	48	16	30	917511508	RAUPENMITTELTEIL VORM.
SCHEIBE AEHNL.ISO 7089 8 P	10166990	17	6	87	96034962	FUEHRUNG LI.
SCHEIBE AEHNL.ISO 7089 8 P	10166990	17	6	104	96034980	FUEHRUNG RE.
SCHEIBE DC01+ZE	956414308	20	4	672	966134608	ANBAUTEILE ZYLINDER
SCHEIBE DIN 1440 100 ST VER	421104208	29	2	17	919617108	RAUPENFAHRWERK KPL.
SCHEIBE DIN 1440 60 -St FLZN	10179340	42	8	30	917511508	RAUPENMITTELTEIL VORM.
SCHEIBE DIN 1440 8 ST VERZ	421100608	333	14	540	96045351	HYDRAULIK OBERWAGEN
SCHEIBE DIN 1441 21 ST FLZN	10875637	306	4	51	96035801	HYDRAULIK MITTELTEIL
SCHEIBE DIN 1441 26 -St FLZN	10179376	375	1	280	96034631	KUEHLER VORM.
SCHEIBE DIN 433 19 140HV A3	530609208	65	1	450	96036957	ELEKTRIK ANBAUTEILE KABIN
SCHEIBE DIN 440 13,5 ST FLZ	10875639	24	2	87	96034962	FUEHRUNG LI.
SCHEIBE DIN 440 13,5 ST FLZ	10875639	24	2	104	96034980	FUEHRUNG RE.
SCHEIBE DIN 440 6,6 -ST 480H	10875640	21	1	614	96045237	AUSRUESTUNG KAMERA KAB
SCHEIBE DIN 6340 10,5 C35	421300208	14	8	134	919087608	DREHDURCHFUEHRUNG
SCHEIBE DIN 6340 21 FLZN SP	10179985	305	8	51	96035801	HYDRAULIK MITTELTEIL
SCHEIBE DIN 7349 10,5 140HV	4902172	19	8	111	917691008	ABSTURZSICHERUNG
SCHEIBE DIN 7349 10,5 200HV-	11658580	31	12	116	968046208	ANBAUTEILE
SCHEIBE DIN 7349 10,5 200HV-	11658580	77	1	256	10151329	KABELSATZ ANBAU
SCHEIBE DIN 7349 10,5 200HV-	11658580	3	6	318	918955408	BATTERIEKASTEN KPL.
SCHEIBE DIN 7349 10,5 200HV-	11658580	378	6	430	96036790	DREHBUEHNENVERKLEIDUN
SCHEIBE DIN 7349 10,5 200HV-	11658580	380	15	439	969015908	DREHBUEHNENVERKLEIDUN
SCHEIBE DIN 7349 10,5 200HV-	11658580	21	3	545	96035117	MECH.BEFESTIGUNGSTEILE
SCHEIBE DIN 7349 10,5 200HV-	11658580	4	6	564	917261808	OELKUEHLER EINBAU
SCHEIBE DIN 7349 10,5 200HV-	11658580	10	12	565	967980508	OELKUEHLER VORM.
SCHEIBE DIN 7349 10,5 200HV-	11658580	12	4	605	96037229	ANBAUTEILE ARBEITSSCHEIN
SCHEIBE DIN 7349 13 200HV F	10006370	25	4	87	96034962	FUEHRUNG LI.
SCHEIBE DIN 7349 13 200HV F	10006370	25	4	104	96034980	FUEHRUNG RE.
SCHEIBE DIN 7349 13 200HV F	10006370	40	3	672	966134608	ANBAUTEILE ZYLINDER
SCHEIBE DIN 7349 13 200HV F	10006370	6	1	717	917551608	ANBAUTEILE
SCHEIBE DIN 7349 17 200HV F	4600021	24	24	70	919254308	RAUPENTRAEGER VORM.LI.
SCHEIBE DIN 7349 17 200HV F	4600021	24	24	100	919254408	RAUPENTRAEGER VORM.RE.
SCHEIBE DIN 7349 17 200HV F	4600021	15	48	111	917691008	ABSTURZSICHERUNG
SCHEIBE DIN 7349 17 200HV F	4600021	23	80	116	968046208	ANBAUTEILE
SCHEIBE DIN 7349 17 200HV F	4600021	41	8	639	917291908	ANLENKSTUECK VORM.
SCHEIBE DIN 7349 17 200HV F	4600021	38	8	644	917292008	TELESKOP 1 VORM.
SCHEIBE DIN 7349 17 200HV F	4600021	38	8	648	917292108	TELESKOP 2 VORM.
SCHEIBE DIN 7349 17 200HV F	4600021	38	8	652	917292208	TELESKOP 3 VORM.
SCHEIBE DIN 7349 17 200HV F	4600021	38	8	656	917292308	TELESKOP 4 VORM.
SCHEIBE DIN 7349 17 200HV F	4600021	85	4	662	917292408	TELESKOP 5 VORM.
SCHEIBE DIN 7349 17 200HV F	4600021	42	4	731	917267508	TRANSPORTHALTERUNG DKS
SCHEIBE DIN 7349 21 100HV F	4600604	30	3	134	919087608	DREHDURCHFUEHRUNG
SCHEIBE DIN 7349 21 100HV F	4600604	4	3	323	917626608	KRAFTSTOFFBEHAELTER AN
SCHEIBE DIN 7349 21 100HV F	4600604	7	1	332	917825508	OELBEHAELTER ANBAU
SCHEIBE DIN 7349 21 100HV F	4600604	13	10	731	917267508	TRANSPORTHALTERUNG DKS
SCHEIBE DIN 7349 25 FLZN SP	12220085	4	2	332	917825508	OELBEHAELTER ANBAU
SCHEIBE DIN 7349 31 FLZN SP	12226080	53	2	17	919617108	RAUPENFAHRWERK KPL.
SCHEIBE DIN 7349 31 FLZN SP	12226080	76	2	640	917291908	ANLENKSTUECK VORM.
SCHEIBE DIN 7349 6 200HV-A2	10353667	7	2	719	968811608	QUERTRAEGER
SCHEIBE DIN 7349 6,4 200HV 4	11693878	319	2	51	96035801	HYDRAULIK MITTELTEIL
SCHEIBE DIN 7349 8,4 200HV 4	11840501	304	20	51	96035801	HYDRAULIK MITTELTEIL
SCHEIBE DIN 7349 8,4 200HV 4	11840501	377	3	430	96036790	DREHBUEHNENVERKLEIDUN
SCHEIBE DIN 7349 8,4 200HV 4	11840501	5	4	458	917260408	SPIEGELANBAU DREHBUEHN
SCHEIBE DIN 7349 8,4 200HV 4	11840501	23	1	474	967928508	VERRIEGELUNG
SCHEIBE DIN 7349 8,4 200HV 4	11840501	25	2	545	96035117	MECH.BEFESTIGUNGSTEILE
SCHEIBE DIN 7349 8,4 200HV 4	11840501	14	8	565	967980508	OELKUEHLER VORM.
SCHEIBE DIN 7349 8,4 200HV 4	11840501	29	12	577	967969608	HILFSHUBWERK WINDE 2 VO

Bezeichnung	Artikel	Pos.	Menge	Seite	Baugruppe	Bezeichnung
SCHEIBE DIN 7349 8,4 200HV 4	11840501	300	2	595	969426308	ZUSATZHYDRAULIK KLAPPSPI
SCHEIBE DIN 7349 8,4 200HV 4	11840501	6	8	639	917291908	ANLENKSTUECK VORM.
SCHEIBE DIN 7989-2 16 -ST F	10875866	10	2	731	917267508	TRANSPORTHALTERUNG DKS
SCHEIBE DIN 7989-2 20 ST FLZ	12100254	21	2	721	968728808	KONSOLE VORM.
SCHEIBE DIN 7989-2 A 10 100	12214460	380	14	277	919007708	ANTRIEBSAGGREGAT VORM.
SCHEIBE DIN 7989-2 A 10 100	12214460	23	2	464	96020359	ZUSATZHEIZUNG VORM.
SCHEIBE EN 14399-6 16 300-3	421500201	27	8	121	919644008	HYDRAULISCHE ABSTUETZUN
SCHEIBE EN 14399-6 16 300-37	10180180	379	1	280	96034631	KUEHLER VORM.
SCHEIBE EN 14399-6 16 300-37	10180180	10	9	365	917259908	KRANFUEHRERKABINE ANBA
SCHEIBE EN 14399-6 20 300-3	4600222	26	2	70	919254308	RAUPENTRAEGER VORM.LI.
SCHEIBE EN 14399-6 20 300-3	4600222	26	2	100	919254408	RAUPENTRAEGER VORM.RE.
SCHEIBE EN 14399-6 20 300-3	4600222	383	4	277	919007708	ANTRIEBSAGGREGAT VORM.
SCHEIBE EN 14399-6 30 300-37	4900000	4	4	666	918807308	AUSSCHUBMECHANIK
SCHEIBE ISO 7089 10 200HV-A	500917508	92	2	640	917291908	ANLENKSTUECK VORM.
SCHEIBE ISO 7089 10 200HV-A	420001114	378	4	277	919007708	ANTRIEBSAGGREGAT VORM.
SCHEIBE ISO 7089 10 200HV-A	420001114	12	1	368	919010208	KRANFUEHRERKABINE VORM.
SCHEIBE ISO 7089 10 300HV F	10289795	33	12	17	919617108	RAUPENFAHRWERK KPL.
SCHEIBE ISO 7089 10 300HV F	10289795	31	4	25	968019508	ENDSCHALTER ANBAU
SCHEIBE ISO 7089 10 300HV F	10289795	40	6	30	917511508	RAUPENMITTELTEIL VORM.
SCHEIBE ISO 7089 10 300HV F	10289795	107	20	71	919254308	RAUPENTRAEGER VORM.LI.
SCHEIBE ISO 7089 10 300HV F	10289795	108	20	101	919254408	RAUPENTRAEGER VORM.RE.
SCHEIBE ISO 7089 10 300HV F	10289795	375	2	269	918731408	ANTRIEBSAGGREGAT KPL.
SCHEIBE ISO 7089 10 300HV F	10289795	379	28	277	919007708	ANTRIEBSAGGREGAT VORM.
SCHEIBE ISO 7089 10 300HV F	10289795	378	2	280	96034631	KUEHLER VORM.
SCHEIBE ISO 7089 10 300HV F	10289795	16	8	335	969050308	OELBEHAELTER VORM.
SCHEIBE ISO 7089 10 300HV F	10289795	7	6	350	917259608	DREHBUEHNENARRETIERUN
SCHEIBE ISO 7089 10 300HV F	10289795	382	4	430	96036790	DREHBUEHNENVERKLEIDUN
SCHEIBE ISO 7089 10 300HV F	10289795	377	8	494	96048826	ABGASANLAGE VORM.
SCHEIBE ISO 7089 10 300HV F	10289795	18	1	616	96037130	AUSRUESTUNG KAMERA DRE
SCHEIBE ISO 7089 10 300HV F	10289795	18	1	618	96037131	AUSRUESTUNG KAMERA WIN
SCHEIBE ISO 7089 10 300HV F	10289795	(10)	2	628	919028808	MECH.TEILE VERSANDMONT
SCHEIBE ISO 7089 12 200HV-A	10410178	6	4	112	968038208	LAGERUNG VORN LI.
SCHEIBE ISO 7089 12 200HV-A	10410178	6	4	113	968038308	LAGERUNG VORN RE.
SCHEIBE ISO 7089 12 200HV-A	10410178	52	8	116	968046208	ANBAUTEILE
SCHEIBE ISO 7089 12 200HV-A	10410178	65	12	121	919644008	HYDRAULISCHE ABSTUETZUN
SCHEIBE ISO 7089 12 200HV-A	10410178	375	8	494	96048826	ABGASANLAGE VORM.
SCHEIBE ISO 7089 12 300HV F	10289804	19	4	17	919617108	RAUPENFAHRWERK KPL.
SCHEIBE ISO 7089 12 300HV F	10289804	8	17	247	10115829	SCHWUNGRADGEHAEUSE AN
SCHEIBE ISO 7089 12 300HV F	10289804	381	5	277	919007708	ANTRIEBSAGGREGAT VORM.
SCHEIBE ISO 7089 12 300HV F	10289804	7	4	338	919369308	DREHWERK
SCHEIBE ISO 7089 12 300HV F	10289804	13	4	365	917259908	KRANFUEHRERKABINE ANBA
SCHEIBE ISO 7089 12 300HV F	10289804	19	8	474	967928508	VERRIEGELUNG
SCHEIBE ISO 7089 12 300HV F	10289804	328	4	478	969763408	VERROHRUNG DRUCKLUFTA
SCHEIBE ISO 7089 12 300HV F	10289804	375	4	491	919372008	ABGASANLAGE
SCHEIBE ISO 7089 12 300HV F	10289804	340	8	540	96045351	HYDRAULIK OBERWAGEN
SCHEIBE ISO 7089 12 300HV F	10289804	3	2	611	968267108	ANBAUTEILE KAMERA
SCHEIBE ISO 7089 12 300HV F	10289804	22	16	639	917291908	ANLENKSTUECK VORM.
SCHEIBE ISO 7089 12 300HV F	10289804	62	3	662	917292408	TELESKOP 5 VORM.
SCHEIBE ISO 7089 12 300HV F	10289804	13	8	672	966134608	ANBAUTEILE ZYLINDER
SCHEIBE ISO 7089 12 300HV F	10289804	4	3	717	917551608	ANBAUTEILE
SCHEIBE ISO 7089 12 300HV F	10289804	22	4	721	968728808	KONSOLE VORM.
SCHEIBE ISO 7089 16 300HV F	10289806	57	32	17	919617108	RAUPENFAHRWERK KPL.
SCHEIBE ISO 7089 16 300HV F	10289806	85	16	71	919254308	RAUPENTRAEGER VORM.LI.
SCHEIBE ISO 7089 16 300HV F	10289806	85	16	101	919254408	RAUPENTRAEGER VORM.RE.
SCHEIBE ISO 7089 16 300HV F	10289806	377	4	269	918731408	ANTRIEBSAGGREGAT KPL.
SCHEIBE ISO 7089 16 300HV F	10289806	382	18	277	919007708	ANTRIEBSAGGREGAT VORM.
SCHEIBE ISO 7089 16 300HV F	10289806	6	8	442	917260108	ABSTURZSICHERUNG
SCHEIBE ISO 7089 16 300HV F	10289806	29	2	474	967928508	VERRIEGELUNG
SCHEIBE ISO 7089 16 300HV F	10289806	13	1	475	967978908	VERRIEGELUNG VORM.
SCHEIBE ISO 7089 16 300HV F	10289806	47	2	731	917267508	TRANSPORTHALTERUNG DKS

Bezeichnung	Artikel	Pos.	Menge	Seite	Baugruppe	Bezeichnung
SCHEIBE ISO 7089 18 300HV F	10289807	46	4	70	919254308	RAUPENTRAEGER VORM.LI.
SCHEIBE ISO 7089 18 300HV F	10289807	46	4	100	919254408	RAUPENTRAEGER VORM.RE.
SCHEIBE ISO 7089 18 300HV F	10289807	27	2	672	966134608	ANBAUTEILE ZYLINDER
SCHEIBE ISO 7089 20 200HV	420002101	88	2	73	90028956	FAHRANTRIEB
SCHEIBE ISO 7089 20 200HV-A	10353689	17	4	335	969050308	OELBEHAELTER VORM.
SCHEIBE ISO 7089 20 300HV F	10289808	109	2	71	919254308	RAUPENTRAEGER VORM.LI.
SCHEIBE ISO 7089 20 300HV F	10289808	110	2	101	919254408	RAUPENTRAEGER VORM.RE.
SCHEIBE ISO 7089 20 300HV F	10289808	29	12	134	919087608	DREHDURCHFUEHRUNG
SCHEIBE ISO 7089 20 300HV F	10289808	11	4	737	917268208	LEITER ANBAU
SCHEIBE ISO 7089 24 300HV F	10289810	28	4	70	919254308	RAUPENTRAEGER VORM.LI.
SCHEIBE ISO 7089 24 300HV F	10289810	28	4	100	919254408	RAUPENTRAEGER VORM.RE.
SCHEIBE ISO 7089 24 300HV F	10289810	380	1	280	96034631	KUEHLER VORM.
SCHEIBE ISO 7089 3 MS	420050108	268	2	685	968708708	KLEMMKASTEN KPL.
SCHEIBE ISO 7089 30 300HV F	10289811	77	2	640	917291908	ANLENKSTUECK VORM.
SCHEIBE ISO 7089 4 200HV 4	10875645	9	2	390	916162508	SCHEIBEN EINBAU
SCHEIBE ISO 7089 4 200HV 4	10875645	381	8	430	96036790	DREHBUEHNENVERKLEIDUN
SCHEIBE ISO 7089 4 200HV 4	10875645	(2)	4	449	96036957	ELEKTRIK ANBAUTEILE KABIN
SCHEIBE ISO 7089 4 200HV 4	10875645	42	4	449	96036957	ELEKTRIK ANBAUTEILE KABIN
SCHEIBE ISO 7089 4 200HV 4	10875645	62	16	522	969256608	GRUNDAUFBAU
SCHEIBE ISO 7089 4 200HV 4	10875645	8	3	715	967936408	WINDWARNUNG VORM.
SCHEIBE ISO 7089 5 -A2	10410193	66	2	483	918484108	HARNSTOFFANLAGE
SCHEIBE ISO 7089 5 -A2	10410193	2	2	715	967936408	WINDWARNUNG VORM.
SCHEIBE ISO 7089 5 200HV 4	11140403	314	2	90	96035796	HYDR.FAHRANTRIEB
SCHEIBE ISO 7089 5 200HV 4	11140403	314	2	107	96035792	HYDR.FAHRANTRIEB
SCHEIBE ISO 7089 5 200HV 4	11140403	5	4	127	917257108	ZENTRALSCHMIERUNG RAUP
SCHEIBE ISO 7089 5 200HV 4	11140403	20	6	320	96023117	BATTERIEKASTEN VORM.
SCHEIBE ISO 7089 5 200HV 4	11140403	4	5	325	968999708	KRAFTSTOFFBEHAELTER VO
SCHEIBE ISO 7089 5 200HV 4	11140403	35	28	417	918810308	STEUERSTAND
SCHEIBE ISO 7089 5 200HV 4	11140403	30	8	449	96036957	ELEKTRIK ANBAUTEILE KABIN
SCHEIBE ISO 7089 5 200HV 4	11140403	6	4	502	917261208	ZENTRALSCHMIERANLAGE O
SCHEIBE ISO 7089 5 200HV 4	11140403	11	4	575	917267108	HILFSHUBWERK WINDE 2
SCHEIBE ISO 7089 5 200HV 4	11140403	6	1	714	967933408	GRUNDHALTER VORM.
SCHEIBE ISO 7089 5 200HV 4	11140403	14	4	728	917413208	SELBSTMONTAGE HILFSHU
SCHEIBE ISO 7089 6 200HV ZN	10197771	10	12	21	96034894	SCHUTZBLECH KPL.LI.
SCHEIBE ISO 7089 6 200HV ZN	10197771	10	12	24	96034977	SCHUTZBLECH KPL.RE.
SCHEIBE ISO 7089 6 200HV ZN	10197771	14	2	37	966167808	DECKEL KPL.
SCHEIBE ISO 7089 6 200HV ZN	10197771	17	2	38	968054008	MONTAGEPLATTE VORM.
SCHEIBE ISO 7089 6 200HV ZN	10197771	312	45	51	96035801	HYDRAULIK MITTELTEIL
SCHEIBE ISO 7089 6 200HV ZN	10197771	33	2	134	919087608	DREHDURCHFUEHRUNG
SCHEIBE ISO 7089 6 200HV ZN	10197771	384	2	277	919007708	ANTRIEBSAGGREGAT VORM.
SCHEIBE ISO 7089 6 200HV ZN	10197771	376	8	280	96034631	KUEHLER VORM.
SCHEIBE ISO 7089 6 200HV ZN	10197771	26	4	320	96023117	BATTERIEKASTEN VORM.
SCHEIBE ISO 7089 6 200HV ZN	10197771	42	2	365	917259908	KRANFUEHRERKABINE ANBA
SCHEIBE ISO 7089 6 200HV ZN	10197771	50	3	383	917305408	INNENVERKLEIDUNG EINBAU
SCHEIBE ISO 7089 6 200HV ZN	10197771	18	4	396	916168308	LUFTFUEHRUNG
SCHEIBE ISO 7089 6 200HV ZN	10197771	42	4	417	918810308	STEUERSTAND
SCHEIBE ISO 7089 6 200HV ZN	10197771	3	6	523	922648308	KLEMMBRETT VORM.
SCHEIBE ISO 7089 6 200HV ZN	10197771	4	4	525	926891108	VERTEILER MASSE
SCHEIBE ISO 7089 6 200HV ZN	10197771	318	14	539	96045351	HYDRAULIK OBERWAGEN
SCHEIBE ISO 7089 6 200HV ZN	10197771	12	2	574	918628408	KLIMAANLAGE OW
SCHEIBE ISO 7089 6 200HV ZN	10197771	311	2	589	967784808	HYDRAULIK HILFSHUBWERK
SCHEIBE ISO 7089 6 200HV ZN	10197771	28	2	609	968994408	KAMERAHALTER VORM.
SCHEIBE ISO 7089 6 200HV ZN	10197771	30	4	610	968290608	STATIV
SCHEIBE ISO 7089 6 200HV ZN	10197771	15	2	612	968993508	KAMERAHALTER VORM.
SCHEIBE ISO 7089 6 200HV ZN	10197771	30	4	613	968267208	STATIV
SCHEIBE ISO 7089 6 200HV ZN	10197771	67	2	645	917292008	TELESKOP 1 VORM.
SCHEIBE ISO 7089 6 200HV ZN	10197771	63	2	648	917292108	TELESKOP 2 VORM.
SCHEIBE ISO 7089 6 200HV ZN	10197771	63	2	652	917292208	TELESKOP 3 VORM.
SCHEIBE ISO 7089 6 200HV ZN	10197771	63	2	656	917292308	TELESKOP 4 VORM.
SCHEIBE ISO 7089 6 200HV ZN	10197771	3	2	683	966591508	ENDSCHALTER ANBAU

Bezeichnung	Artikel	Pos.	Menge	Seite	Baugruppe	Bezeichnung
SCHEIBE ISO 7089 6 200HV-A2	420060201	39	2	405	917304708	SCHIEBETUER EINBAU
SCHEIBE ISO 7089 6 200HV-A4	420000414	8	2	85	968420608	STAUKASTEN VORM.
SCHEIBE ISO 7089 8 200HV-A2	420060705	58	6	17	919617108	RAUPENFAHRWERK KPL.
SCHEIBE ISO 7089 8 200HV-A2	420060705	6	8	623	917260608	GEGENGEWICHT M.BEFESTIG
SCHEIBE ISO 7089 8 200HV-A2	420060705	5	6	716	967937608	HINDERNISFEUER VORM.
SCHEIBE ISO 7089 8 200HV-A4	420001014	68	8	483	918484108	HARNSTOFFANLAGE
SCHEIBE ISO 7089 8 300HV 4	10289803	11	4	21	96034894	SCHUTZBLECH KPL.LI.
SCHEIBE ISO 7089 8 300HV 4	10289803	11	4	24	96034977	SCHUTZBLECH KPL.RE.
SCHEIBE ISO 7089 8 300HV 4	10289803	308	24	51	96035801	HYDRAULIK MITTELTEIL
SCHEIBE ISO 7089 8 300HV 4	10289803	17	1	85	968420608	STAUKASTEN VORM.
SCHEIBE ISO 7089 8 300HV 4	10289803	8	7	87	96034962	FUEHRUNG LI.
SCHEIBE ISO 7089 8 300HV 4	10289803	8	7	104	96034980	FUEHRUNG RE.
SCHEIBE ISO 7089 8 300HV 4	10289803	9	2	112	968038208	LAGERUNG VORN LI.
SCHEIBE ISO 7089 8 300HV 4	10289803	9	2	113	968038308	LAGERUNG VORN RE.
SCHEIBE ISO 7089 8 300HV 4	10289803	8	2	127	917257108	ZENTRALSCHMIERUNG RAUP
SCHEIBE ISO 7089 8 300HV 4	10289803	37	4	134	919087608	DREHDURCHFUEHRUNG
SCHEIBE ISO 7089 8 300HV 4	10289803	377	44	277	919007708	ANTRIEBSAGGREGAT VORM.
SCHEIBE ISO 7089 8 300HV 4	10289803	377	28	280	96034631	KUEHLER VORM.
SCHEIBE ISO 7089 8 300HV 4	10289803	375	6	283	968026308	KUPPLUNGSSTELLER
SCHEIBE ISO 7089 8 300HV 4	10289803	375	6	326	919231108	KRAFTSTOFFFOERDERUNG
SCHEIBE ISO 7089 8 300HV 4	10289803	375	3	327	96034868	KRAFTSTOFFFILTER VORM.
SCHEIBE ISO 7089 8 300HV 4	10289803	9	1	368	919010208	KRANFUEHRERKABINE VORM.
SCHEIBE ISO 7089 8 300HV 4	10289803	28	4	372	916177508	TRITT KPL.
SCHEIBE ISO 7089 8 300HV 4	10289803	12	3	373	96025887	PEDALTRAEGER EINBAU
SCHEIBE ISO 7089 8 300HV 4	10289803	64	4	384	917305408	INNENVERKLEIDUNG EINBAU
SCHEIBE ISO 7089 8 300HV 4	10289803	13	4	399	916163008	WISCHANLAGE EINBAU
SCHEIBE ISO 7089 8 300HV 4	10289803	6	12	410	917676208	HEIZUNG KRANFUEHRERKAB
SCHEIBE ISO 7089 8 300HV 4	10289803	28	7	414	969085208	HEIZUNG VORM.
SCHEIBE ISO 7089 8 300HV 4	10289803	375	8	430	96036790	DREHBUEHNENVERKLEIDUN
SCHEIBE ISO 7089 8 300HV 4	10289803	16	4	433	968923508	KLAPPE VORM.RECHTS
SCHEIBE ISO 7089 8 300HV 4	10289803	12	4	441	969016008	KLAPPE VORM.VORN LINKS
SCHEIBE ISO 7089 8 300HV 4	10289803	23	21	462	918759808	ZUSATZHEIZUNG OW
SCHEIBE ISO 7089 8 300HV 4	10289803	20	7	464	96020359	ZUSATZHEIZUNG VORM.
SCHEIBE ISO 7089 8 300HV 4	10289803	28	4	474	967928508	VERRIEGELUNG
SCHEIBE ISO 7089 8 300HV 4	10289803	63	3	483	918484108	HARNSTOFFANLAGE
SCHEIBE ISO 7089 8 300HV 4	10289803	375	6	499	918731908	LUFTFILTERANLAGE
SCHEIBE ISO 7089 8 300HV 4	10289803	17	2	502	917261208	ZENTRALSCHMIERANLAGE O
SCHEIBE ISO 7089 8 300HV 4	10289803	61	2	522	969256608	GRUNDAUFBAU
SCHEIBE ISO 7089 8 300HV 4	10289803	13	4	525	926891108	VERTEILER MASSE
SCHEIBE ISO 7089 8 300HV 4	10289803	12	4	565	967980508	OELKUEHLER VORM.
SCHEIBE ISO 7089 8 300HV 4	10289803	6	4	600	917269408	KONSOLE FREMDEINSPEISUN
SCHEIBE ISO 7089 8 300HV 4	10289803	16	2	639	917291908	ANLENKSTUECK VORM.
SCHEIBE ISO 7089 8 300HV 4	10289803	17	2	644	917292008	TELESKOP 1 VORM.
SCHEIBE ISO 7089 8 300HV 4	10289803	17	2	648	917292108	TELESKOP 2 VORM.
SCHEIBE ISO 7089 8 300HV 4	10289803	17	4	652	917292208	TELESKOP 3 VORM.
SCHEIBE ISO 7089 8 300HV 4	10289803	17	4	656	917292308	TELESKOP 4 VORM.
SCHEIBE ISO 7089 8 300HV 4	10289803	64	10	662	917292408	TELESKOP 5 VORM.
SCHEIBE ISO 7089 8 300HV 4	10289803	28	4	731	917267508	TRANSPORTHALTERUNG DKS
SCHEIBE ISO 7092 20 300HV F	11691327	10	4	475	967978908	VERRIEGELUNG VORM.
SCHEIBE ISO 7092 20 300HV F	11691327	52	16	644	917292008	TELESKOP 1 VORM.
SCHEIBE ISO 7092 20 300HV F	11691327	52	16	648	917292108	TELESKOP 2 VORM.
SCHEIBE ISO 7092 20 300HV F	11691327	52	16	652	917292208	TELESKOP 3 VORM.
SCHEIBE ISO 7092 20 300HV F	11691327	52	16	656	917292308	TELESKOP 4 VORM.
SCHEIBE ISO 7092 20 300HV F	11691327	52	16	661	917292408	TELESKOP 5 VORM.
SCHEIBE ISO 7092 6 200HV-A2	10035694	10	2	378	968514508	SCHALTSCHRANKDECKEL EIN
SCHEIBE ISO 7092 6 200HV-A2	10035694	36	8	393	966497908	FRONTSCHEIBE KPL.
SCHEIBE ISO 7092 8 200HV 4	10299679	41	64	30	917511508	RAUPENMITTELTEIL VORM.
SCHEIBE ISO 7092 8 200HV 4	10299679	18	6	672	966134608	ANBAUTEILE ZYLINDER
SCHEIBE ISO 7093-1 10 300HV	11491889	21	4	352	917259708	HAUPTHUBWERK
SCHEIBE ISO 7093-1 10 300HV	11491889	377	4	439	969015908	DREHBUEHNENVERKLEIDUN

Bezeichnung	Artikel	Pos.	Menge	Seite	Baugruppe	Bezeichnung
SCHEIBE ISO 7093-1 10 300HV	11491889	312	4	539	96045351	HYDRAULIK OBERWAGEN
SCHEIBE ISO 7093-1 10 300HV	11491889	30	4	577	967969608	HILFSHUBWERK WINDE 2 VO
SCHEIBE ISO 7093-1 10 300HV	11491889	26	16	639	917291908	ANLENKSTUECK VORM.
SCHEIBE ISO 7093-1 10 A2	421802108	14	1	399	916163008	WISCHANLAGE EINBAU
SCHEIBE ISO 7093-1 10 A2	421802108	7	1	407	966230508	FUEHRUNG VORM.
SCHEIBE ISO 7093-1 12 300HV	11182717	24	8	639	917291908	ANLENKSTUECK VORM.
SCHEIBE ISO 7093-1 16 300HV	4000809	6	4	369	967986308	LAGERUNG EINBAU
SCHEIBE ISO 7093-1 16 300HV	4000809	19	8	639	917291908	ANLENKSTUECK VORM.
SCHEIBE ISO 7093-1 20 300HV	4600328	49	4	17	919617108	RAUPENFAHRWERK KPL.
SCHEIBE ISO 7093-1 20 300HV	4600328	63	1	71	919254308	RAUPENTRAEGER VORM.LI.
SCHEIBE ISO 7093-1 20 300HV	4600328	63	1	101	919254408	RAUPENTRAEGER VORM.RE.
SCHEIBE ISO 7093-1 20 300HV	4600328	6	1	323	917626608	KRAFTSTOFFBEHAELTER AN
SCHEIBE ISO 7093-1 20 300HV	4600328	8	1	332	917825508	OELBEHAELTER ANBAU
SCHEIBE ISO 7093-1 24 300HV	10179463	3	2	332	917825508	OELBEHAELTER ANBAU
SCHEIBE ISO 7093-1 4 200HV 4	10875642	87	1	640	917291908	ANLENKSTUECK VORM.
SCHEIBE ISO 7093-1 4 200HV 4	10875642	69	1	662	917292408	TELESKOP 5 VORM.
SCHEIBE ISO 7093-1 5 200HV 4	10875643	309	4	539	96045351	HYDRAULIK OBERWAGEN
SCHEIBE ISO 7093-1 6 200HV 4	10875648	376	5	277	919007708	ANTRIEBSAGGREGAT VORM.
SCHEIBE ISO 7093-1 6 200HV 4	10875648	34	6	365	917259908	KRANFUEHRERKABINE ANBA
SCHEIBE ISO 7093-1 6 200HV 4	10875648	11	4	394	965784408	DACHSCHEIBE VORM.
SCHEIBE ISO 7093-1 6 200HV 4	10875648	379	6	430	96036790	DREHBUEHNENVERKLEIDUN
SCHEIBE ISO 7093-1 6 200HV 4	10875648	15	2	433	968923508	KLAPPE VORM.RECHTS
SCHEIBE ISO 7093-1 6 200HV 4	10875648	309	10	439	969015908	DREHBUEHNENVERKLEIDUN
SCHEIBE ISO 7093-1 6 200HV 4	10875648	62	12	483	918484108	HARNSTOFFANLAGE
SCHEIBE ISO 7093-1 6 200HV 4	10875648	306	6	539	96045351	HYDRAULIK OBERWAGEN
SCHEIBE ISO 7093-1 6 200HV 4	10875648	315	2	589	967784808	HYDRAULIK HILFSHUBWERK
SCHEIBE ISO 7093-1 6 200HV 4	10875648	52	2	639	917291908	ANLENKSTUECK VORM.
SCHEIBE ISO 7093-1 6 200HV 4	10875648	305	2	699	967785008	ZUSATZHYDRAULIK KLAPPSPI
SCHEIBE ISO 7093-1 6 200HV-A	421801708	14	2	393	966497908	FRONTSCHEIBE KPL.
SCHEIBE ISO 7093-1 6 200HV-A	421801708	4	2	407	966230508	FUEHRUNG VORM.
SCHEIBE ISO 7093-1 6 200HV-A	421801708	377	6	491	919372008	ABGASANLAGE
SCHEIBE ISO 7093-1 6 200HV-A	421801708	376	8	494	96048826	ABGASANLAGE VORM.
SCHEIBE ISO 7093-1 6 200HV-A	421801708	3	4	599	917269308	LADEGERAET
SCHEIBE ISO 7093-1 6 200HV-A	10540500	35	2	47	11346779	SCHLEIFRINGUEBERTRAGER
SCHEIBE ISO 7093-1 6 200HV-A	10540500	34	4	116	968046208	ANBAUTEILE
SCHEIBE ISO 7093-1 6 200HV-A	10540500	40	4	405	917304708	SCHIEBETUER EINBAU
SCHEIBE ISO 7093-1 6 200HV-A	10540500	8	1	714	967933408	GRUNDHALTER VORM.
SCHEIBE ISO 7093-1 8 200HV 4	11140469	30	4	25	968019508	ENDSCHALTER ANBAU
SCHEIBE ISO 7093-1 8 200HV 4	11140469	24	3	127	917257108	ZENTRALSCHMIERUNG RAUP
SCHEIBE ISO 7093-1 8 200HV 4	11140469	21	2	158	918731108	MONTAGETEILE DREHBUEHN
SCHEIBE ISO 7093-1 8 200HV 4	11140469	378	2	269	918731408	ANTRIEBSAGGREGAT KPL.
SCHEIBE ISO 7093-1 8 200HV 4	11140469	16	4	352	917259708	HAUPTHUBWERK
SCHEIBE ISO 7093-1 8 200HV 4	11140469	29	2	365	917259908	KRANFUEHRERKABINE ANBA
SCHEIBE ISO 7093-1 8 200HV 4	11140469	(5)	4	372	916177508	TRITT KPL.
SCHEIBE ISO 7093-1 8 200HV 4	11140469	22	2	390	916162508	SCHEIBEN EINBAU
SCHEIBE ISO 7093-1 8 200HV 4	11140469	380	7	430	96036790	DREHBUEHNENVERKLEIDUN
SCHEIBE ISO 7093-1 8 200HV 4	11140469	18	4	433	968923508	KLAPPE VORM.RECHTS
SCHEIBE ISO 7093-1 8 200HV 4	11140469	376	11	439	969015908	DREHBUEHNENVERKLEIDUN
SCHEIBE ISO 7093-1 8 200HV 4	11140469	40	6	449	96036957	ELEKTRIK ANBAUTEILE KABIN
SCHEIBE ISO 7093-1 8 200HV 4	11140469	27	4	462	918759808	ZUSATZHEIZUNG OW
SCHEIBE ISO 7093-1 8 200HV 4	11140469	64	8	483	918484108	HARNSTOFFANLAGE
SCHEIBE ISO 7093-1 8 200HV 4	11140469	321	4	539	96045351	HYDRAULIK OBERWAGEN
SCHEIBE ISO 7093-1 8 200HV 4	11140469	30	8	639	917291908	ANLENKSTUECK VORM.
SCHEIBE ISO 7093-1 8 200HV 4	11140469	70	2	662	917292408	TELESKOP 5 VORM.
SCHEIBE ISO 7093-1 8 200HV 4	11140469	16	12	672	966134608	ANBAUTEILE ZYLINDER
SCHEIBE ISO 7093-1 8 200HV 4	11140469	300	2	693	967785408	ZUSATZHYDRAULIK KLAPPSPI
SCHEIBE ISO 7093-1 8 200HV 4	11140469	307	2	699	967785008	ZUSATZHYDRAULIK KLAPPSPI
SCHEIBE ISO 7093-1 8 200HV-A	421861405	29	4	372	916177508	TRITT KPL.
SCHEIBE ISO 7093-1 8 200HV-A	421861405	376	3	491	919372008	ABGASANLAGE
SCHEIBE ISO 7093-1 8 200HV-A	10540510	21	4	405	917304708	SCHIEBETUER EINBAU

Bezeichnung	Artikel	Pos.	Menge	Seite	Baugruppe	Bezeichnung
SCHEIBE ISO 8738 50 160HV-St	10179408	18	4	474	967928508	VERRIEGELUNG
SCHEIBE ISO 8738 55 160HV-St	10179409	5	1	629	968068308	MONTAGEVORRICHTUNG
SCHEIBE RD60X2 ALMG3 H11	948717708	19	4	121	919644008	HYDRAULISCHE ABSTUETZUN
SCHEIBEN EINBAU SPF	916162508	2	1	380	917304508	KRANFUEHRERKABINE VORM.
SCHEIBENBOLZEN	11658587	4	1	724	910836808	HAKENFLASCHE
SCHEIBENFEDER DIN 6888 3	570435508	18	1	281	10429930	ZAHNRADMOTOR
SCHELLE DIN 3016-1 10X12XD	7381679	3	1	714	967933408	GRUNDHALTER VORM.
SCHELLE DIN 3016-1 10X15X	7381770	32	6	254	10151328	KABELBAUM ANBAU
SCHELLE DIN 3016-1 10X20X	7381628	38	2	254	10151328	KABELBAUM ANBAU
SCHELLE DIN 3016-1 10X25X	7382092	2	2	182	10139112	OELLEITUNG VORM.
SCHELLE DIN 3016-1 10X25X	7382092	47	4	254	10151328	KABELBAUM ANBAU
SCHELLE DIN 3016-1 12X20X	7381629	39	5	254	10151328	KABELBAUM ANBAU
SCHELLE DIN 3016-1 16X20X	7382085	13	1	214	10143341	KRAFTSTOFFLEITUNGEN
SCHELLE DIN 3016-1 18X25X	7382086	39	1	256	10151329	KABELSATZ ANBAU
SCHELLE DIN 3016-1 22X20X	7381286	11	1	218	10145173	ANSAUGSTUTZEN ANBAU
SCHELLE DIN 3016-1 22X20X	7381630	13	1	218	10145173	ANSAUGSTUTZEN ANBAU
SCHELLE DIN 3016-1 22X20X	7381630	42	3	254	10151328	KABELBAUM ANBAU
SCHELLE DIN 3016-1 28X20XD	11481080	22	3	414	969085208	HEIZUNG VORM.
SCHELLE DIN 3016-1 28X20XD	11481080	25	1	462	918759808	ZUSATZHEIZUNG OW
SCHELLE DIN 3016-1 28X20XD	11481080	26	1	464	96020359	ZUSATZHEIZUNG VORM.
SCHELLE DIN 3016-1 6X15XD1	7381292	(9)	6	164	12856862	DIESELMOTOR
SCHELLE DIN 3016-1 6X15XD1	7381292	20	1	215	10143342	LECKOELRUECKLAUF
SCHELLE DIN 3016-1 6X20XA1	11000593	(10)	2	164	12856862	DIESELMOTOR
SCHELLE DIN 3016-1 6X20XD1	7382088	14	1	215	10143342	LECKOELRUECKLAUF
SCHELLE DIN 3016-1 8X15XD1	7381771	31	1	254	10151328	KABELBAUM ANBAU
SCHELLE DIN 3016-1 8X20XD1	7382090	37	4	254	10151328	KABELBAUM ANBAU
SCHELLE DIN 3017-1 16/12-20	4601105	6	1	182	10139112	OELLEITUNG VORM.
SCHELLE DIN 3017-1 16/12-20	4601105	(3)	4	264	10148366	DS DIESELMOTOR
SCHELLE G-ST-52 FE//ZN20//C	97039859	6	3	494	96048826	ABGASANLAGE VORM.
SCHENKELFEDER	571430508	5	1	620	10040024	TASCHENSCHLOSS
SCHENKELFEDER 2,5X13,5	571741908	19	1	734	512363708	HYDROZYLINDER
SCHIEBEKUPPLUNG	790042708	9	1	143	919328608	WERKZEUG M.ZUBEHOER
SCHIEBETUER EINBAU SPF	917304708	133	1	10		LIEBHERR LTR 1220
SCHIENENPAAR	10650489	70	1	419	10877138	FAHRERSITZ
SCHILD	11494432	(2)	1	128	11347526	ELEKTROPUMPE
SCHILD	11494581	(3)	1	128	11347526	ELEKTROPUMPE
SCHILD	553031008	2	1	574	918628408	KLIMAANLAGE OW
SCHILD	971749908	2	2	150	917862808	BESCHILDERUNG GROSSBRI
SCHILD	976540908	4	1	529	969061708	TRAEGERBLECH SICHERUNG
SCHILD	977667008	4	1	685	968708708	KLEMMKASTEN KPL.
SCHILD 100X184X0,1 KLEBEFO	11952500	1	2	155	919553608	ZUSATZBESCHILD.CALIFORN
SCHILD 100X80 KLEBEFOLIE	97051193	(1)	1	623	917260608	GEGENGEWICHT M.BEFESTIG
SCHILD 108DBA/100X90 KLEBE	971693508	76	1	150	917862808	BESCHILDERUNG GROSSBRI
SCHILD 120X80 KLEBEFOLIE	97037383	82	1	483	918484108	HARNSTOFFANLAGE
SCHILD 158X33X1 AL-BL	97044048	157	2	51	96035801	HYDRAULIK MITTELTEIL
SCHILD 158X68 KLEBEFOLIE	97020380	(2)	3	623	917260608	GEGENGEWICHT M.BEFESTIG
SCHILD 160X100 KLEBEFOLIE	97067626	5	2	722	917531708	BALLASTTRAVERSE
SCHILD 168X62 KLEBEFOLIE	978674808	63	12	150	917862808	BESCHILDERUNG GROSSBRI
SCHILD 168X62 KLEBEFOLIE	978674808	(3)	2	623	917260608	GEGENGEWICHT M.BEFESTIG
SCHILD 168X88 KLEBEFOLIE	97009799	101	1	150	917862808	BESCHILDERUNG GROSSBRI
SCHILD 168X88 KLEBEFOLIE	97011689	95	1	150	917862808	BESCHILDERUNG GROSSBRI
SCHILD 168X88 KLEBEFOLIE	97011690	96	1	150	917862808	BESCHILDERUNG GROSSBRI
SCHILD 168X88 KLEBEFOLIE	97036732	68	1	150	917862808	BESCHILDERUNG GROSSBRI
SCHILD 168X88 KLEBEFOLIE	97037952	18	1	150	917862808	BESCHILDERUNG GROSSBRI
SCHILD 168X88 KLEBEFOLIE	97043334	90	4	150	917862808	BESCHILDERUNG GROSSBRI
SCHILD 168X88 KLEBEFOLIE	97043335	91	4	150	917862808	BESCHILDERUNG GROSSBRI
SCHILD 168X88 KLEBEFOLIE	97043336	92	4	150	917862808	BESCHILDERUNG GROSSBRI
SCHILD 168X88 KLEBEFOLIE	97060689	100	1	150	917862808	BESCHILDERUNG GROSSBRI
SCHILD 168X88 KLEBEFOLIE	97067627	8	2	629	968068308	MONTAGEVORRICHTUNG
SCHILD 168X88 KLEBEFOLIE	978674308	28	2	150	917862808	BESCHILDERUNG GROSSBRI

Bezeichnung	Artikel	Pos.	Menge	Seite	Baugruppe	Bezeichnung
SCHILD 168X88 KLEBEFOLIE	978867108	33	2	150	917862808	BESCHILDERUNG GROSSBRI
SCHILD 168X88 KLEBEFOLIE	979383308	62	1	150	917862808	BESCHILDERUNG GROSSBRI
SCHILD 1X75X45 ALUMINIUM	97038433	16	1	380	917304508	KRANFUEHRERKABINE VORM.
SCHILD 1X80X80 KLEBEFOLIE	974150408	84	2	150	917862808	BESCHILDERUNG GROSSBRI
SCHILD 1X80X80 KLEBEFOLIE	974150508	85	2	150	917862808	BESCHILDERUNG GROSSBRI
SCHILD 1X80X80 KLEBEFOLIE	974150608	86	2	150	917862808	BESCHILDERUNG GROSSBRI
SCHILD 1X80X80 KLEBEFOLIE	974150708	87	2	150	917862808	BESCHILDERUNG GROSSBRI
SCHILD 208X88 KLEBEFOLIE	97016304	49	1	150	917862808	BESCHILDERUNG GROSSBRI
SCHILD 208X88 KLEBEFOLIE	97016392	72	4	150	917862808	BESCHILDERUNG GROSSBRI
SCHILD 208X88 KLEBEFOLIE	978673908	11	2	150	917862808	BESCHILDERUNG GROSSBRI
SCHILD 208X88 KLEBEFOLIE	978674008	12	8	150	917862808	BESCHILDERUNG GROSSBRI
SCHILD 208X88 KLEBEFOLIE	978674108	14	15	150	917862808	BESCHILDERUNG GROSSBRI
SCHILD 208X88 KLEBEFOLIE	978674408	29	5	150	917862808	BESCHILDERUNG GROSSBRI
SCHILD 208X88 KLEBEFOLIE	978674508	31	1	150	917862808	BESCHILDERUNG GROSSBRI
SCHILD 208X88 KLEBEFOLIE	978674608	32	1	150	917862808	BESCHILDERUNG GROSSBRI
SCHILD 208X88 KLEBEFOLIE	978674908	64	1	150	917862808	BESCHILDERUNG GROSSBRI
SCHILD 208X88 KLEBEFOLIE	978675008	66	8	150	917862808	BESCHILDERUNG GROSSBRI
SCHILD 20X10 KLEBEFOLIE SP	97064219	80	1	483	918484108	HARNSTOFFANLAGE
SCHILD 20X10 KLEBEFOLIE SP	97064220	81	1	483	918484108	HARNSTOFFANLAGE
SCHILD 225X165 KLEBEFOLIE	971539808	1	1	740	919127808	BESCHILDERUNG TRANSPOR
SCHILD 4X228X100 S315MC FE	975231708	6	1	63	918925508	QUERTRAEGER KPL.
SCHILD 6X107X237 G-ALSI12	772624608	1	1	147	916283508	ZUSATZBESCHILDERUNG
SCHILD 70X184X0,1 KLEBEFO	13187353	2	1	155	919553608	ZUSATZBESCHILD.CALIFORN
SCHILD 75X45 ALUMINIUM	976955508	3	1	574	918628408	KLIMAANLAGE OW
SCHILD 80-38X0 LEXAN	976917008	2	1	682	966291008	KLEMMKASTEN
SCHILD 85X55 SPF	97025520	(1)	1	705	917268408	MASTNASE
SCHILD 88X450X0,1 FOLIE	10663718	9	2	724	910836808	HAKENFLASCHE
SCHILD IDENTNR. IDENT-NR	973567608	10	2	629	968068308	MONTAGEVORRICHTUNG
SCHILD PROJEKT TYP KLEBE	97067623	9	2	629	968068308	MONTAGEVORRICHTUNG
SCHILD PROJEKT TYP KLEBE	97067623	4	2	722	917531708	BALLASTTRAVERSE
SCHLAUCH 100X180 EPDM	10872213	250	1	499	918731908	LUFTFILTERANLAGE
SCHLAUCH 85X200 SILIKON	551710608	252	1	276	919007708	ANTRIEBSAGGREGAT VORM.
SCHLAUCH DN16 500	510501008	301	2	478	969763408	VERROHRUNG DRUCKLUFTA
SCHLAUCH DN3,5-GU23725	591080608	28	0.25	399	916163008	WISCHANLAGE EINBAU
SCHLAUCH DN82-UNIE13 SC	11000901	11	2.15	396	916168308	LUFTFUEHRUNG
SCHLAUCH GESCHLITZT	97056998	341	5	540	96045351	HYDRAULIK OBERWAGEN
SCHLAUCH GESCHLITZT	97056998	304	1	595	969426308	ZUSATZHYDRAULIK KLAPPSPI
SCHLAUCH KPL.	924134808	332	1	570	918739608	SCHLAUCHLEITUNGEN OBER
SCHLAUCH KPL.	925185208	10	1	628	919028808	MECH.TEILE VERSANDMONT
SCHLAUCH KPL.	925185308	11	1	628	919028808	MECH.TEILE VERSANDMONT
SCHLAUCH KPL.	926315908	815	2	53	96035802	SCHLAUCHLEITUNGEN MITTE
SCHLAUCH KPL.	926561708	222	1	569	918739608	SCHLAUCHLEITUNGEN OBER
SCHLAUCH KPL.	928006008	356	1	570	918739608	SCHLAUCHLEITUNGEN OBER
SCHLAUCH KPL.	928720408	405	1	570	918739608	SCHLAUCHLEITUNGEN OBER
SCHLAUCH KPL.	96040432	254	2	569	918739608	SCHLAUCHLEITUNGEN OBER
SCHLAUCH KPL.	968144708	804	1	53	96035802	SCHLAUCHLEITUNGEN MITTE
SCHLAUCH KPL.	968351008	233	1	569	918739608	SCHLAUCHLEITUNGEN OBER
SCHLAUCH KPL.	969386508	315	1	569	918739608	SCHLAUCHLEITUNGEN OBER
SCHLAUCH KPL.	969386708	396	1	570	918739608	SCHLAUCHLEITUNGEN OBER
SCHLAUCH KPL.	969634308	230	1	569	918739608	SCHLAUCHLEITUNGEN OBER
SCHLAUCH KPL. 1SC 8X1360	968148808	(1449)	1	595	969426308	ZUSATZHYDRAULIK KLAPPSPI
SCHLAUCH KPL. 1SC 8X1400	969452208	326	1	569	918739608	SCHLAUCHLEITUNGEN OBER
SCHLAUCH KPL. 1SC 8X14100	962968908	1490	1	700	968223308	SCHLAUCHLEITUNGEN KLAP
SCHLAUCH KPL. 1SC 8X300	927637908	1255	1	592	968083708	SCHLAUCHLEITUNGEN HUBW
SCHLAUCH KPL. 1SC 8X330	965198708	354	1	570	918739608	SCHLAUCHLEITUNGEN OBER
SCHLAUCH KPL. 1SC 8X340	969634408	329	1	569	918739608	SCHLAUCHLEITUNGEN OBER
SCHLAUCH KPL. 1SC 8X360	926130108	202	1	569	918739608	SCHLAUCHLEITUNGEN OBER
SCHLAUCH KPL. 1SC 8X3600	96035632	203	1	569	918739608	SCHLAUCHLEITUNGEN OBER
SCHLAUCH KPL. 1SC 8X3700	927232508	1378	1	563	969347008	SCHLAUCHLEITUNGEN ZUSA
SCHLAUCH KPL. 1SC 8X4100	962956708	346	1	570	918739608	SCHLAUCHLEITUNGEN OBER

Bezeichnung	Artikel	Pos.	Menge	Seite	Baugruppe	Bezeichnung
SCHLAUCH KPL. 1SC 8X500	926098108	1377	1	563	969347008	SCHLAUCHLEITUNGEN ZUSA
SCHLAUCH KPL. 1SC 8X720	966861108	331	1	570	918739608	SCHLAUCHLEITUNGEN OBER
SCHLAUCH KPL. 1SC 8X960	926379108	1256	1	592	968083708	SCHLAUCHLEITUNGEN HUBW
SCHLAUCH KPL. 1SN 25X1240	967219908	373	1	570	918739608	SCHLAUCHLEITUNGEN OBER
SCHLAUCH KPL. 1SN 25X1300	968144308	807	1	53	96035802	SCHLAUCHLEITUNGEN MITTE
SCHLAUCH KPL. 1SN 25X1750	928033508	806	2	53	96035802	SCHLAUCHLEITUNGEN MITTE
SCHLAUCH KPL. 1SN 25X1900	968144208	805	1	53	96035802	SCHLAUCHLEITUNGEN MITTE
SCHLAUCH KPL. 1SN 25X3900	968351508	345	1	570	918739608	SCHLAUCHLEITUNGEN OBER
SCHLAUCH KPL. 1SN 25X640	927032108	224	1	569	918739608	SCHLAUCHLEITUNGEN OBER
SCHLAUCH KPL. 1SN 25X960	969634908	403	1	570	918739608	SCHLAUCHLEITUNGEN OBER
SCHLAUCH KPL. 1SN 32X2200	969634508	375	1	570	918739608	SCHLAUCHLEITUNGEN OBER
SCHLAUCH KPL. 1SN 32X3500	968148408	842	1	91	96035799	SCHLAUCHLEITUNGEN RAUP
SCHLAUCH KPL. 1SN 32X4250	96035892	832	1	108	96035798	SCHLAUCHLEITUNGEN RAUP
SCHLAUCH KPL. 2SN 10X1460	926555408	(881)	4	124	968077208	HYDRAULIK ABSTUETZUNG
SCHLAUCH KPL. 2SN 10X1500	929310208	(880)	4	124	968077208	HYDRAULIK ABSTUETZUNG
SCHLAUCH KPL. 2SN 10X1700	928865508	810	2	53	96035802	SCHLAUCHLEITUNGEN MITTE
SCHLAUCH KPL. 2SN 10X1900	968151308	305	1	569	918739608	SCHLAUCHLEITUNGEN OBER
SCHLAUCH KPL. 2SN 10X2900	929391108	318	1	569	918739608	SCHLAUCHLEITUNGEN OBER
SCHLAUCH KPL. 2SN 10X3000	928762308	317	1	569	918739608	SCHLAUCHLEITUNGEN OBER
SCHLAUCH KPL. 2SN 10X3550	96035894	843	1	91	96035799	SCHLAUCHLEITUNGEN RAUP
SCHLAUCH KPL. 2SN 10X400	921255408	483	1	689	968187108	SCHLAUCHLEITUNGEN TELE
SCHLAUCH KPL. 2SN 10X4050	96035893	833	1	108	96035798	SCHLAUCHLEITUNGEN RAUP
SCHLAUCH KPL. 2SN 12X1300	927613508	206	1	569	918739608	SCHLAUCHLEITUNGEN OBER
SCHLAUCH KPL. 2SN 12X1700	962255708	386	1	570	918739608	SCHLAUCHLEITUNGEN OBER
SCHLAUCH KPL. 2SN 12X1700	962255708	387	1	570	918739608	SCHLAUCHLEITUNGEN OBER
SCHLAUCH KPL. 2SN 12X2150	962969208	388	1	570	918739608	SCHLAUCHLEITUNGEN OBER
SCHLAUCH KPL. 2SN 12X2150	962969208	389	1	570	918739608	SCHLAUCHLEITUNGEN OBER
SCHLAUCH KPL. 2SN 12X3400	929331808	481	1	689	968187108	SCHLAUCHLEITUNGEN TELE
SCHLAUCH KPL. 2SN 12X3600	929753308	1491	1	700	968223308	SCHLAUCHLEITUNGEN KLAP
SCHLAUCH KPL. 2SN 12X370	96035635	207	1	569	918739608	SCHLAUCHLEITUNGEN OBER
SCHLAUCH KPL. 2SN 12X3700	963457808	334	1	570	918739608	SCHLAUCHLEITUNGEN OBER
SCHLAUCH KPL. 2SN 12X3800	961861508	1492	1	700	968223308	SCHLAUCHLEITUNGEN KLAP
SCHLAUCH KPL. 2SN 12X420	96035633	204	1	569	918739608	SCHLAUCHLEITUNGEN OBER
SCHLAUCH KPL. 2SN 12X760	964958008	1494	1	700	968223308	SCHLAUCHLEITUNGEN KLAP
SCHLAUCH KPL. 2SN 12X860	928765908	1493	1	700	968223308	SCHLAUCHLEITUNGEN KLAP
SCHLAUCH KPL. 2SN 16X250	969633908	229	1	569	918739608	SCHLAUCHLEITUNGEN OBER
SCHLAUCH KPL. 2SN 16X420	96034411	201	1	569	918739608	SCHLAUCHLEITUNGEN OBER
SCHLAUCH KPL. 2SN 16X4600	962440508	200	1	569	918739608	SCHLAUCHLEITUNGEN OBER
SCHLAUCH KPL. 2SN 20X280	969634108	221	1	569	918739608	SCHLAUCHLEITUNGEN OBER
SCHLAUCH KPL. 2SN 20X480	928037208	406	1	570	918739608	SCHLAUCHLEITUNGEN OBER
SCHLAUCH KPL. 2SN 6X13600	962968508	1488	1	694	968222808	SCHLAUCHLEITUNGEN KLAP
SCHLAUCH KPL. 2SN 6X13600	962968508	1489	1	694	968222808	SCHLAUCHLEITUNGEN KLAP
SCHLAUCH KPL. 2SN 6X220	966184308	400	1	570	918739608	SCHLAUCHLEITUNGEN OBER
SCHLAUCH KPL. 2SN 6X250	963562308	1263	1	592	968083708	SCHLAUCHLEITUNGEN HUBW
SCHLAUCH KPL. 2SN 6X3500	962968608	482	1	689	968187108	SCHLAUCHLEITUNGEN TELE
SCHLAUCH KPL. 2SN 6X500	968149808	1268	1	592	968083708	SCHLAUCHLEITUNGEN HUBW
SCHLAUCH KPL. 2SN 6X500	968350908	231	1	569	918739608	SCHLAUCHLEITUNGEN OBER
SCHLAUCH KPL. 2SN 6X540	923015608	1486	1	694	968222808	SCHLAUCHLEITUNGEN KLAP
SCHLAUCH KPL. 2SN 6X540	923015608	1487	1	694	968222808	SCHLAUCHLEITUNGEN KLAP
SCHLAUCH KPL. 2SN 6X780	968141708	1260	1	592	968083708	SCHLAUCHLEITUNGEN HUBW
SCHLAUCH KPL. 2SN 6X880	968151408	310	1	569	918739608	SCHLAUCHLEITUNGEN OBER
SCHLAUCH KPL. 2SN 8X1140	968351208	320	1	569	918739608	SCHLAUCHLEITUNGEN OBER
SCHLAUCH KPL. 2SN 8X1180	968599208	319	1	569	918739608	SCHLAUCHLEITUNGEN OBER
SCHLAUCH KPL. 2SN 8X2350	968152008	323	1	569	918739608	SCHLAUCHLEITUNGEN OBER
SCHLAUCH KPL. 2SN 8X2350	968152008	324	1	569	918739608	SCHLAUCHLEITUNGEN OBER
SCHLAUCH KPL. 2SN 8X2550	969633808	212	1	569	918739608	SCHLAUCHLEITUNGEN OBER
SCHLAUCH KPL. 2SN 8X320	968585908	802	4	53	96035802	SCHLAUCHLEITUNGEN MITTE
SCHLAUCH KPL. 2SN 8X400	928874708	801	4	53	96035802	SCHLAUCHLEITUNGEN MITTE
SCHLAUCH KPL. 2SN 8X600	928005808	316	1	569	918739608	SCHLAUCHLEITUNGEN OBER
SCHLAUCH KPL. 2SN 8X660	929312908	1379	1	563	969347008	SCHLAUCHLEITUNGEN ZUSA

Bezeichnung	Artikel	Pos.	Menge	Seite	Baugruppe	Bezeichnung
SCHLAUCH KPL. 2TE 10X1000	926465408	808	1	53	96035802	SCHLAUCHLEITUNGEN MITTE
SCHLAUCH KPL. 2TE 10X1060	926976308	835	1	91	96035799	SCHLAUCHLEITUNGEN RAUP
SCHLAUCH KPL. 2TE 10X1060	926976308	835	1	108	96035798	SCHLAUCHLEITUNGEN RAUP
SCHLAUCH KPL. 2TE 10X1200	926711908	350	1	570	918739608	SCHLAUCHLEITUNGEN OBER
SCHLAUCH KPL. 2TE 10X1220	928022908	364	1	570	918739608	SCHLAUCHLEITUNGEN OBER
SCHLAUCH KPL. 2TE 10X1240	96040431	370	1	570	918739608	SCHLAUCHLEITUNGEN OBER
SCHLAUCH KPL. 2TE 10X190	968152508	355	1	570	918739608	SCHLAUCHLEITUNGEN OBER
SCHLAUCH KPL. 2TE 10X1900	968139808	348	1	570	918739608	SCHLAUCHLEITUNGEN OBER
SCHLAUCH KPL. 2TE 10X1900	968144408	811	1	53	96035802	SCHLAUCHLEITUNGEN MITTE
SCHLAUCH KPL. 2TE 10X1950	926362908	325	1	569	918739608	SCHLAUCHLEITUNGEN OBER
SCHLAUCH KPL. 2TE 10X2150	926028808	330	1	569	918739608	SCHLAUCHLEITUNGEN OBER
SCHLAUCH KPL. 2TE 10X2150	967355108	215	1	569	918739608	SCHLAUCHLEITUNGEN OBER
SCHLAUCH KPL. 2TE 10X220	927294708	379	1	570	918739608	SCHLAUCHLEITUNGEN OBER
SCHLAUCH KPL. 2TE 10X260	962641808	378	1	570	918739608	SCHLAUCHLEITUNGEN OBER
SCHLAUCH KPL. 2TE 10X260	963703908	1258	1	592	968083708	SCHLAUCHLEITUNGEN HUBW
SCHLAUCH KPL. 2TE 10X2800	923016308	349	1	570	918739608	SCHLAUCHLEITUNGEN OBER
SCHLAUCH KPL. 2TE 10X360	928046908	313	1	569	918739608	SCHLAUCHLEITUNGEN OBER
SCHLAUCH KPL. 2TE 10X360	928046908	1257	1	592	968083708	SCHLAUCHLEITUNGEN HUBW
SCHLAUCH KPL. 2TE 10X380	920896108	1261	1	592	968083708	SCHLAUCHLEITUNGEN HUBW
SCHLAUCH KPL. 2TE 10X400	923016208	1254	1	592	968083708	SCHLAUCHLEITUNGEN HUBW
SCHLAUCH KPL. 2TE 10X490	965945408	353	1	570	918739608	SCHLAUCHLEITUNGEN OBER
SCHLAUCH KPL. 2TE 10X500	926041708	812	1	53	96035802	SCHLAUCHLEITUNGEN MITTE
SCHLAUCH KPL. 2TE 10X520	926610108	335	1	570	918739608	SCHLAUCHLEITUNGEN OBER
SCHLAUCH KPL. 2TE 10X580	926990808	402	1	570	918739608	SCHLAUCHLEITUNGEN OBER
SCHLAUCH KPL. 2TE 10X600	926120008	834	1	91	96035799	SCHLAUCHLEITUNGEN RAUP
SCHLAUCH KPL. 2TE 10X600	926120008	834	1	108	96035798	SCHLAUCHLEITUNGEN RAUP
SCHLAUCH KPL. 2TE 10X600	929752308	809	1	53	96035802	SCHLAUCHLEITUNGEN MITTE
SCHLAUCH KPL. 2TE 10X660	928024908	211	1	569	918739608	SCHLAUCHLEITUNGEN OBER
SCHLAUCH KPL. 2TE 10X700	928025108	1262	1	592	968083708	SCHLAUCHLEITUNGEN HUBW
SCHLAUCH KPL. 2TE 10X740	964273708	217	1	569	918739608	SCHLAUCHLEITUNGEN OBER
SCHLAUCH KPL. 2TE 10X800	926606608	214	1	569	918739608	SCHLAUCHLEITUNGEN OBER
SCHLAUCH KPL. 2TE 12X1000	926289108	351	1	570	918739608	SCHLAUCHLEITUNGEN OBER
SCHLAUCH KPL. 2TE 12X1900	969034108	(2393)	1	326	919231108	KRAFTSTOFFFOERDERUNG
SCHLAUCH KPL. 2TE 12X4100	928456608	(430)	1	478	969763408	VERROHRUNG DRUCKLUFTA
SCHLAUCH KPL. 2TE 12X6400	965946108	(2394)	1	326	919231108	KRAFTSTOFFFOERDERUNG
SCHLAUCH KPL. 2TE 12X650	96033235	(2395)	1	326	919231108	KRAFTSTOFFFOERDERUNG
SCHLAUCH KPL. 2TE 12X820	965159708	336	1	570	918739608	SCHLAUCHLEITUNGEN OBER
SCHLAUCH KPL. 2TE 16X1200	926041308	228	1	569	918739608	SCHLAUCHLEITUNGEN OBER
SCHLAUCH KPL. 2TE 16X180	96035634	205	1	569	918739608	SCHLAUCHLEITUNGEN OBER
SCHLAUCH KPL. 2TE 16X2800	96034858	(2391)	1	326	919231108	KRAFTSTOFFFOERDERUNG
SCHLAUCH KPL. 2TE 16X4700	920978208	(2390)	1	326	919231108	KRAFTSTOFFFOERDERUNG
SCHLAUCH KPL. 2TE 16X600	968148708	(1448)	1	595	969426308	ZUSATZHYDRAULIK KLAPPSPI
SCHLAUCH KPL. 2TE 16X760	968350608	213	1	569	918739608	SCHLAUCHLEITUNGEN OBER
SCHLAUCH KPL. 2TE 20X1000	928042908	369	1	570	918739608	SCHLAUCHLEITUNGEN OBER
SCHLAUCH KPL. 2TE 20X1020	968350008	1252	1	592	968083708	SCHLAUCHLEITUNGEN HUBW
SCHLAUCH KPL. 2TE 20X1100	968537008	225	1	569	918739608	SCHLAUCHLEITUNGEN OBER
SCHLAUCH KPL. 2TE 20X1460	966860008	1253	1	592	968083708	SCHLAUCHLEITUNGEN HUBW
SCHLAUCH KPL. 2TE 20X200	968150708	219	1	569	918739608	SCHLAUCHLEITUNGEN OBER
SCHLAUCH KPL. 2TE 20X200	968150708	234	1	569	918739608	SCHLAUCHLEITUNGEN OBER
SCHLAUCH KPL. 2TE 20X2500	926757108	372	1	570	918739608	SCHLAUCHLEITUNGEN OBER
SCHLAUCH KPL. 2TE 20X3100	968007308	357	1	570	918739608	SCHLAUCHLEITUNGEN OBER
SCHLAUCH KPL. 2TE 20X3600	928876208	358	1	570	918739608	SCHLAUCHLEITUNGEN OBER
SCHLAUCH KPL. 2TE 20X420	929742608	1383	1	592	968083708	SCHLAUCHLEITUNGEN HUBW
SCHLAUCH KPL. 2TE 20X440	927295708	218	1	569	918739608	SCHLAUCHLEITUNGEN OBER
SCHLAUCH KPL. 2TE 20X440	927295708	1266	1	592	968083708	SCHLAUCHLEITUNGEN HUBW
SCHLAUCH KPL. 2TE 20X540	967354708	1267	1	592	968083708	SCHLAUCHLEITUNGEN HUBW
SCHLAUCH KPL. 2TE 20X680	968350108	1382	1	592	968083708	SCHLAUCHLEITUNGEN HUBW
SCHLAUCH KPL. 2TE 20X760	968350708	226	1	569	918739608	SCHLAUCHLEITUNGEN OBER
SCHLAUCH KPL. 2TE 20X800	929631408	374	1	570	918739608	SCHLAUCHLEITUNGEN OBER
SCHLAUCH KPL. 2TE 20X800	965434608	352	1	570	918739608	SCHLAUCHLEITUNGEN OBER

Bezeichnung	Artikel	Pos.	Menge	Seite	Baugruppe	Bezeichnung
SCHLAUCH KPL. 2TE 20X960	966860408	367	1	570	918739608	SCHLAUCHLEITUNGEN OBER
SCHLAUCH KPL. 2TE 8X460	928023108	836	1	91	96035799	SCHLAUCHLEITUNGEN RAUP
SCHLAUCH KPL. 2TE 8X460	928023108	836	1	108	96035798	SCHLAUCHLEITUNGEN RAUP
SCHLAUCH KPL. 2TE 8X700	968143708	837	1	91	96035799	SCHLAUCHLEITUNGEN RAUP
SCHLAUCH KPL. 2TE 8X700	968143708	837	1	108	96035798	SCHLAUCHLEITUNGEN RAUP
SCHLAUCH KPL. 304 60X140	96040433	209	1	569	918739608	SCHLAUCHLEITUNGEN OBER
SCHLAUCH KPL. 4ST+ 31X260	968151208	302	1	569	918739608	SCHLAUCHLEITUNGEN OBER
SCHLAUCH KPL. 4ST+ 31X345	96035889	841	1	91	96035799	SCHLAUCHLEITUNGEN RAUP
SCHLAUCH KPL. 4ST+ 31X355	96035888	840	1	91	96035799	SCHLAUCHLEITUNGEN RAUP
SCHLAUCH KPL. 4ST+ 31X360	968349808	1374	1	563	969347008	SCHLAUCHLEITUNGEN ZUSA
SCHLAUCH KPL. 4ST+ 31X410	96035890	830	1	108	96035798	SCHLAUCHLEITUNGEN RAUP
SCHLAUCH KPL. 4ST+ 31X420	96035891	831	1	108	96035798	SCHLAUCHLEITUNGEN RAUP
SCHLAUCH KPL. 4ST+ 31X630	968351408	343	1	570	918739608	SCHLAUCHLEITUNGEN OBER
SCHLAUCH KPL. 4ST+ 31X880	967623008	300	1	569	918739608	SCHLAUCHLEITUNGEN OBER
SCHLAUCH KPL. 4ST+ 31X920	969572608	361	1	570	918739608	SCHLAUCHLEITUNGEN OBER
SCHLAUCH KPL. 4ST+ 31X940	968151108	301	1	569	918739608	SCHLAUCHLEITUNGEN OBER
SCHLAUCH KPL. 75X150	96040435	210	1	569	918739608	SCHLAUCHLEITUNGEN OBER
SCHLAUCH KPL. CARBURITE	96040434	255	1	569	918739608	SCHLAUCHLEITUNGEN OBER
SCHLAUCH KPL. CONTI KWS 1	969452108	2312	2	488	96011801	SCHLAUCHLEITUNGEN HARN
SCHLAUCH KPL. CONTI KWS	96014023	2456	1	317	96034533	SCHLAUCHLEITUNGEN ANTR
SCHLAUCH KPL. CONTI KWS	96023967	2455	1	317	96034533	SCHLAUCHLEITUNGEN ANTR
SCHLAUCH KPL. CONTI KWS	96032358	2457	1	317	96034533	SCHLAUCHLEITUNGEN ANTR
SCHLAUCH KPL. CONTI KWS 1	969384408	2314	1	488	96011801	SCHLAUCHLEITUNGEN HARN
SCHLAUCH KPL. CONTI KWS	96024954	2316	1	488	96011801	SCHLAUCHLEITUNGEN HARN
SCHLAUCH KPL. CONTI KWS	969574508	2310	1	488	96011801	SCHLAUCHLEITUNGEN HARN
SCHLAUCH KPL. CONTI KWS 1	96014733	2311	1	488	96011801	SCHLAUCHLEITUNGEN HARN
SCHLAUCH KPL. CONTI KWS 1	96014732	2313	1	488	96011801	SCHLAUCHLEITUNGEN HARN
SCHLAUCH KPL. CONTI KWS 1	96014734	2315	1	488	96011801	SCHLAUCHLEITUNGEN HARN
SCHLAUCH KPL. CONTI KWS	96020259	(2824)	1	410	917676208	HEIZUNG KRANFUEHRERKAB
SCHLAUCH KPL. CONTI KWS	96023301	2466	1	317	96034533	SCHLAUCHLEITUNGEN ANTR
SCHLAUCH KPL. CONTI KWS	96014060	2463	1	317	96034533	SCHLAUCHLEITUNGEN ANTR
SCHLAUCH KPL. CONTI KWS 2	96024886	(2823)	1	410	917676208	HEIZUNG KRANFUEHRERKAB
SCHLAUCH KPL. CONTI KWS 2	96034457	(1612)	1	275	919007708	ANTRIEBSAGGREGAT VORM.
SCHLAUCH KPL. CONTI KWS 2	96034535	2451	1	317	96034533	SCHLAUCHLEITUNGEN ANTR
SCHLAUCH KPL. CONTI KWS	96031888	2450	1	317	96034533	SCHLAUCHLEITUNGEN ANTR
SCHLAUCH KPL. CONTI KWS 8	96034540	2453	1	317	96034533	SCHLAUCHLEITUNGEN ANTR
SCHLAUCH KPL. GH001 10X1	969041408	(1102)	1	574	918628408	KLIMAANLAGE OW
SCHLAUCH KPL. GH001 13X5	964476008	(1100)	1	574	918628408	KLIMAANLAGE OW
SCHLAUCH KPL. GH001 8X116	969637808	(1103)	1	574	918628408	KLIMAANLAGE OW
SCHLAUCH KPL. GH001 8X670	969452608	(1101)	1	574	918628408	KLIMAANLAGE OW
SCHLAUCH KPL. GH425-10 16	924496108	813	2	53	96035802	SCHLAUCHLEITUNGEN MITTE
SCHLAUCH KPL. GH425-10 16	923853008	314	1	569	918739608	SCHLAUCHLEITUNGEN OBER
SCHLAUCH KPL. GH425-10 16	96035865	816	4	53	96035802	SCHLAUCHLEITUNGEN MITTE
SCHLAUCH KPL. GH425-10 16	923342808	333	1	570	918739608	SCHLAUCHLEITUNGEN OBER
SCHLAUCH KPL. GH425-10 16	920715608	800	12	53	96035802	SCHLAUCHLEITUNGEN MITTE
SCHLAUCH KPL. GH425-10 16	920715608	814	4	53	96035802	SCHLAUCHLEITUNGEN MITTE
SCHLAUCH KPL. GH425-10 16	921990108	342	1	570	918739608	SCHLAUCHLEITUNGEN OBER
SCHLAUCH KPL. GH425-10 16	969935008	341	1	570	918739608	SCHLAUCHLEITUNGEN OBER
SCHLAUCH KPL. GH425-10 16X	969633008	1375	1	563	969347008	SCHLAUCHLEITUNGEN ZUSA
SCHLAUCH KPL. GH425-10 16X	925686208	1376	1	563	969347008	SCHLAUCHLEITUNGEN ZUSA
SCHLAUCH KPL. GH425-10 16X	924741208	303	1	569	918739608	SCHLAUCHLEITUNGEN OBER
SCHLAUCH KPL. GH425-10 16X	924741208	304	1	569	918739608	SCHLAUCHLEITUNGEN OBER
SCHLAUCH KPL. GH425-12 19X	925352308	360	1	570	918739608	SCHLAUCHLEITUNGEN OBER
SCHLAUCH KPL. GH425-12 19X	922068108	368	1	570	918739608	SCHLAUCHLEITUNGEN OBER
SCHLAUCH KPL. GH425-12 19X	923702508	803	1	53	96035802	SCHLAUCHLEITUNGEN MITTE
SCHLAUCH KPL. GH425-8 12X1	963170408	308	1	569	918739608	SCHLAUCHLEITUNGEN OBER
SCHLAUCH KPL. GH425-8 12X1	923343608	309	1	569	918739608	SCHLAUCHLEITUNGEN OBER
SCHLAUCH KPL. GH425-8 12X1	923343408	(1447)	1	595	969426308	ZUSATZHYDRAULIK KLAPPSPI
SCHLAUCH KPL. GH425-8 12X1	966142408	306	1	569	918739608	SCHLAUCHLEITUNGEN OBER
SCHLAUCH KPL. GH425-8 12X2	924567508	(1445)	1	595	969426308	ZUSATZHYDRAULIK KLAPPSPI

Bezeichnung	Artikel	Pos.	Menge	Seite	Baugruppe	Bezeichnung
SCHLAUCH KPL. GH425-8 12X2	923087208	(1446)	1	595	969426308	ZUSATZHYDRAULIK KLAPPSPI
SCHLAUCH KPL. GH425-8 12X2	966350208	307	1	569	918739608	SCHLAUCHLEITUNGEN OBER
SCHLAUCH KPL. GH506 31X1	962913408	480	3	689	968187108	SCHLAUCHLEITUNGEN TELE
SCHLAUCH KPL. GH506-16 25	968150108	1385	1	592	968083708	SCHLAUCHLEITUNGEN HUBW
SCHLAUCH KPL. GH506-16 25	969634608	380	1	570	918739608	SCHLAUCHLEITUNGEN OBER
SCHLAUCH KPL. GH506-16 25	966145808	1270	1	592	968083708	SCHLAUCHLEITUNGEN HUBW
SCHLAUCH KPL. GH506-16 25	968150008	1384	1	592	968083708	SCHLAUCHLEITUNGEN HUBW
SCHLAUCH KPL. GH506-16 25	968149908	1269	1	592	968083708	SCHLAUCHLEITUNGEN HUBW
SCHLAUCH KPL. GH506-16 25	96040847	376	1	570	918739608	SCHLAUCHLEITUNGEN OBER
SCHLAUCH KPL. GH506-16 25	963926708	383	1	570	918739608	SCHLAUCHLEITUNGEN OBER
SCHLAUCH KPL. GH506-16 25	965155808	236	1	569	918739608	SCHLAUCHLEITUNGEN OBER
SCHLAUCH KPL. GH506-16 25	968351808	381	1	570	918739608	SCHLAUCHLEITUNGEN OBER
SCHLAUCH KPL. GH506-16 25	969634008	235	1	569	918739608	SCHLAUCHLEITUNGEN OBER
SCHLAUCH KPL. GH506-16 25	968349908	1251	1	592	968083708	SCHLAUCHLEITUNGEN HUBW
SCHLAUCH KPL. GH506-16 25	967618508	385	1	570	918739608	SCHLAUCHLEITUNGEN OBER
SCHLAUCH KPL. GH506-16 25X	969634708	382	1	570	918739608	SCHLAUCHLEITUNGEN OBER
SCHLAUCH KPL. GH506-16 25X	963337608	1372	1	563	969347008	SCHLAUCHLEITUNGEN ZUSA
SCHLAUCH KPL. GH506-16 25X	963171408	1373	1	563	969347008	SCHLAUCHLEITUNGEN ZUSA
SCHLAUCH KPL. GH506-16 25X	968352008	384	1	570	918739608	SCHLAUCHLEITUNGEN OBER
SCHLAUCH KPL. GH506-16 25X	968149608	1250	1	592	968083708	SCHLAUCHLEITUNGEN HUBW
SCHLAUCH KPL. GH663 38X1	965861108	340	3	570	918739608	SCHLAUCHLEITUNGEN OBER
SCHLAUCH KPL. GH663 38X2	966051108	339	1	570	918739608	SCHLAUCHLEITUNGEN OBER
SCHLAUCH KPL. GH663 38X3	968352108	377	1	570	918739608	SCHLAUCHLEITUNGEN OBER
SCHLAUCH KPL. GH663 38X70	968151808	321	1	569	918739608	SCHLAUCHLEITUNGEN OBER
SCHLAUCH KPL. GH663 38X82	968151908	322	1	569	918739608	SCHLAUCHLEITUNGEN OBER
SCHLAUCH KPL. HPC 4X1000	963560708	411	1	570	918739608	SCHLAUCHLEITUNGEN OBER
SCHLAUCH KPL. HPC 4X2850	968841908	890	1	53	96035802	SCHLAUCHLEITUNGEN MITTE
SCHLAUCH KPL. HPC 4X3800	922628908	410	1	570	918739608	SCHLAUCHLEITUNGEN OBER
SCHLAUCH KPL. HPC 4X4900	920983508	891	1	53	96035802	SCHLAUCHLEITUNGEN MITTE
SCHLAUCH KPL. KUNSTSTOF	96013988	2333	1	488	96011801	SCHLAUCHLEITUNGEN HARN
SCHLAUCH KPL. L6254.11 42X	96014317	844	1	91	96035799	SCHLAUCHLEITUNGEN RAUP
SCHLAUCH KPL. L6254.11 42X	96014317	829	1	108	96035798	SCHLAUCHLEITUNGEN RAUP
SCHLAUCHFUEHRUNG SCH	925143708	1	1	630	925141508	SCHLAUCHFUEHRUNG VORM.
SCHLAUCHFUEHRUNG VORM.	925141508	9	1	628	919028808	MECH.TEILE VERSANDMONT
SCHLAUCHLEITUNG	96050638	400	1	410	917676208	HEIZUNG KRANFUEHRERKAB
SCHLAUCHLEITUNG 4X600 E	10144270	18	1	483	918484108	HARNSTOFFANLAGE
SCHLAUCHLEITUNG X300	790042214	7	1	143	919328608	WERKZEUG M.ZUBEHOER
SCHLAUCHLEITUNG X300	790042914	8	1	143	919328608	WERKZEUG M.ZUBEHOER
SCHLAUCHLEITUNGEN ABST	968077308	10	1	124	968077208	HYDRAULIK ABSTUETZUNG
SCHLAUCHLEITUNGEN ANTR	96034533	290	1	269	918731408	ANTRIEBSAGGREGAT KPL.
SCHLAUCHLEITUNGEN DRU	969842608	10	1	478	969763408	VERROHRUNG DRUCKLUFTA
SCHLAUCHLEITUNGEN HAR	96011801	20	1	483	918484108	HARNSTOFFANLAGE
SCHLAUCHLEITUNGEN HUBW	968083708	10	1	589	967784808	HYDRAULIK HILFSHUBWERK
SCHLAUCHLEITUNGEN KLAP	968222808	10	1	693	967785408	ZUSATZHYDRAULIK KLAPPSPI
SCHLAUCHLEITUNGEN KLAP	968223308	10	1	699	967785008	ZUSATZHYDRAULIK KLAPPSPI
SCHLAUCHLEITUNGEN KLAP	969426408	10	1	595	969426308	ZUSATZHYDRAULIK KLAPPSPI
SCHLAUCHLEITUNGEN KLIMA	96018575	500	1	574	918628408	KLIMAANLAGE OW
SCHLAUCHLEITUNGEN KRAFT	96034873	2	1	326	919231108	KRAFTSTOFFFOERDERUNG
SCHLAUCHLEITUNGEN MITTE	96035802	10	1	51	96035801	HYDRAULIK MITTELTEIL
SCHLAUCHLEITUNGEN MOTO	96034456	50	1	275	919007708	ANTRIEBSAGGREGAT VORM.
SCHLAUCHLEITUNGEN OBER	918739608	191	1	11		LIEBHERR LTR 1220
SCHLAUCHLEITUNGEN RAUP	96035798	10	1	107	96035792	HYDR.FAHRANTRIEB
SCHLAUCHLEITUNGEN RAUP	96035799	10	1	90	96035796	HYDR.FAHRANTRIEB
SCHLAUCHLEITUNGEN TELE	968187108	10	1	688	967784508	HYDRAULIK TELE
SCHLAUCHLEITUNGEN ZUSAT	969347008	10	1	530	918732808	HYDRAULIK
SCHLAUCHNIPPEL	10142668	1	1	235	10142744	KUEHLWASSERENTLUEFTUN
SCHLAUCHNIPPEL 11SMn30+	10140969	5	1	235	10142744	KUEHLWASSERENTLUEFTUN
SCHLAUCHNIPPEL CE-0, H54	9140351	6	2	218	10145173	ANSAUGSTUTZEN ANBAU
SCHLAUCHNIPPEL CE-0, H54	9140351	26	1	238	10140729	ATL-ANBAU
SCHLAUCHSCHELLE 10/9,5-10,	553102308	30	5	462	918759808	ZUSATZHEIZUNG OW

Bezeichnung	Artikel	Pos.	Menge	Seite	Baugruppe	Bezeichnung
SCHLAUCHSCHELLE 10/9,5-10,	553102308	14	1	464	96020359	ZUSATZHEIZUNG VORM.
SCHLAUCHSCHELLE 115/113-	12102528	180	4	491	919372008	ABGASANLAGE
SCHLAUCHSCHELLE 120/110-	774217608	180	3	499	918731908	LUFTFILTERANLAGE
SCHLAUCHSCHELLE 140/130-	774209908	181	1	499	918731908	LUFTFILTERANLAGE
SCHLAUCHSCHELLE 169/167-	774227108	180	2	269	918731408	ANTRIEBSAGGREGAT KPL.
SCHLAUCHSCHELLE 19/17,8-	11162002	24	8	483	918484108	HARNSTOFFANLAGE
SCHLAUCHSCHELLE 21/16-27/	11118077	22	2	410	917676208	HEIZUNG KRANFUEHRERKAB
SCHLAUCHSCHELLE 21/16-27/	11118077	21	16	414	969085208	HEIZUNG VORM.
SCHLAUCHSCHELLE 21/16-27/	11118077	19	6	462	918759808	ZUSATZHEIZUNG OW
SCHLAUCHSCHELLE 21/16-27/	11118077	17	8	464	96020359	ZUSATZHEIZUNG VORM.
SCHLAUCHSCHELLE 21/16-27/	11118077	23	2	483	918484108	HARNSTOFFANLAGE
SCHLAUCHSCHELLE 26/20-32/	774215008	3	4	173	10126713	KURBELGEHAEUSEENTLUEF
SCHLAUCHSCHELLE 26/20-32/	774215008	8	4	218	10145173	ANSAUGSTUTZEN ANBAU
SCHLAUCHSCHELLE 26/20-32/	774215008	25	2	238	10140729	ATL-ANBAU
SCHLAUCHSCHELLE 32/25-40/	774208508	10	1	464	96020359	ZUSATZHEIZUNG VORM.
SCHLAUCHSCHELLE 45/30-45	10878445	20	2	399	916163008	WISCHANLAGE EINBAU
SCHLAUCHSCHELLE 50/40-60/	550838008	17	2	158	918731108	MONTAGETEILE DREHBUEHN
SCHLAUCHSCHELLE 50/40-60/	550838008	185	4	276	919007708	ANTRIEBSAGGREGAT VORM.
SCHLAUCHSCHELLE 60/50-70/	774208008	181	4	276	919007708	ANTRIEBSAGGREGAT VORM.
SCHLAUCHSCHELLE 70/60-80/	774214308	183	4	276	919007708	ANTRIEBSAGGREGAT VORM.
SCHLAUCHSCHELLE 80/70-90/	774206408	186	2	276	919007708	ANTRIEBSAGGREGAT VORM.
SCHLAUCHSCHELLE 86-91X25	774227908	180	1	276	919007708	ANTRIEBSAGGREGAT VORM.
SCHLAUCHSCHELLE 90/80-10	774218808	184	6	276	919007708	ANTRIEBSAGGREGAT VORM.
SCHLAUCHSCHELLE DIN 3017	5004929	6	2	220	10149677	VERBINDUNGSLEITUNG ANBA
SCHLAUCHSCHELLE DIN 3017-	10872024	307	1	90	96035796	HYDR.FAHRANTRIEB
SCHLAUCHSCHELLE DIN 3017-	10872024	307	1	107	96035792	HYDR.FAHRANTRIEB
SCHLAUCHSCHELLE DIN 3017-	10872024	302	1	589	967784808	HYDRAULIK HILFSHUBWERK
SCHLAUCHSCHELLE DIN 3017-	11005281	(8)	7	164	12856862	DIESELMOTOR
SCHLAUCHSCHELLE DIN 3017	4981029	6	4	182	10139112	OELLEITUNG VORM.
SCHLAUCHSCHUTZ DN44-65 S	10449843	300	5.2	124	968077208	HYDRAULIK ABSTUETZUNG
SCHLAUCHSCHUTZ SCHWK.	969444008	19	1	158	918731108	MONTAGETEILE DREHBUEHN
SCHLAUCHSCHUTZSPIRALE D	10870633	25	0.75	410	917676208	HEIZUNG KRANFUEHRERKAB
SCHLAUCHSCHUTZSPIRALE D	10870633	26	0.5	410	917676208	HEIZUNG KRANFUEHRERKAB
SCHLAUCHVERBINDUNGSSTU	10801609	22	2	483	918484108	HARNSTOFFANLAGE
SCHLAUCHVERSCHRAUBUNG	602440708	513	1	44	96045228	KABELSTRANG
SCHLEIFBUEGEL	691041608	19	21	47	11346779	SCHLEIFRINGUEBERTRAGER
SCHLEIFBUEGELHALTER	10359128	21	2	47	11346779	SCHLEIFRINGUEBERTRAGER
SCHLEIFBUEGELHALTER	691043108	17	35	47	11346779	SCHLEIFRINGUEBERTRAGER
SCHLEIFRING 16A	11060087	14	8	681	10354493	LEITUNGSTROMMEL
SCHLEIFRING 16A	11060088	140	8	681	10354493	LEITUNGSTROMMEL
SCHLEIFRING 60X2 2,5²	10114843	7	21	47	11346779	SCHLEIFRINGUEBERTRAGER
SCHLEIFRINGSATZ	571851008	21	1	675	10802064	SEILLAENGENGEBER
SCHLEIFRINGUEBERTRAGER	11346779	5	1	34	96045225	ELEKTRIK MITTELSTUECK
SCHLIESSANLAGE	966230408	25	1	405	917304708	SCHIEBETUER EINBAU
SCHLIESSBOLZEN 1.4305	97019129	52	1	405	917304708	SCHIEBETUER EINBAU
SCHLUESSEL	10873434	(1)	1	529	969061708	TRAEGERBLECH SICHERUNG
SCHMIERNIPPEL DIN 71412 C	774301808	21	8	121	919644008	HYDRAULISCHE ABSTUETZUN
SCHMIERNIPPEL M16X1.5	774351714	7	1	76	11320954	LEITRADEINHEIT
SCHMIERNIPPELKAPPE	10014701	16	1	504	10327065	ELEKTROPUMPE
SCHMIEROELFILTER ANBAU	10142942	150	1	161	12856862	DIESELMOTOR
SCHMIEROELLEITUNG 10X1	10140757	3	1	238	10140729	ATL-ANBAU
SCHMIEROELLEITUNG 6X1	9080310	5	1	229	10145278	ANBAUTEILE LUFTPRESSER
SCHMIEROELPUMPE B=41.4	12438990	1	1	203	10148432	SCHMIEROELPUMPE MIT BE
SCHMIEROELPUMPE MIT BEF	10148432	140	1	161	12856862	DIESELMOTOR
SCHNAPPSCHALTER	571486808	29	1	47	11346779	SCHLEIFRINGUEBERTRAGER
SCHNAPPVERSCHLUSS ABS	10296157	(2)	3	429	96036790	DREHBUEHNENVERKLEIDUN
SCHNAPPVERSCHLUSS ABS	10296157	(2)	3	429	96036790	DREHBUEHNENVERKLEIDUN
SCHNAPPVERSCHLUSS ABS	10296157	(2)	3	429	96036790	DREHBUEHNENVERKLEIDUN
SCHNELLBEFESTIGER	704259608	57	1	405	917304708	SCHIEBETUER EINBAU
SCHNELLVERSCHLUSSKUPPL	12101183	40	1	21	96034894	SCHUTZBLECH KPL.LI.

Bezeichnung	Artikel	Pos.	Menge	Seite	Baugruppe	Bezeichnung
SCHNELLVERSCHLUSSKUPPL	12101183	40	1	24	96034977	SCHUTZBLECH KPL.RE.
SCHNELLVERSCHLUSSKUPPL	12101576	40	1	87	96034962	FUEHRUNG LI.
SCHNELLVERSCHLUSSKUPPL	12101576	40	1	104	96034980	FUEHRUNG RE.
SCHOTTBLECH 4X480X167 S	97031538	5	1	439	969015908	DREHBUEHNENVERKLEIDUN
SCHOTTBLECH 4X553X352 S	97035511	(1)	1	589	967784808	HYDRAULIK HILFSHUBWERK
SCHRAFFURPLAN SPF	917258108	44	1	9		LIEBHERR LTR 1220
SCHRAUBE	570941408	2	1	696	511479408	LASTHALTEVENTIL
SCHRAUBE 25X25X65 8.8 FE//	956414208	21	4	672	966134608	ANBAUTEILE ZYLINDER
SCHRAUBE 90x297 35NICRM	970574508	11	1	648	917292108	TELESKOP 2 VORM.
SCHRAUBE 90x349 35NICRM	970545508	11	1	644	917292008	TELESKOP 1 VORM.
SCHRAUBE DIN 912 M8X25 12.	570613877	9	4	226	5700161	LUFTPRESSER
SCHRAUBE M8X30 St Rm>800	10141111	2	1	253	10144098	BEFESTIGUNGSSCHELLE
SCHRAUBE UNF1 1/8"X12X130	485501414	(2)	288	64	917436708	BODENPLATTEN KPL.
SCHRAUBENDREHER 10 CRV	790032508	52	1	144	928569808	GRUNDWERKZEUG
SCHRAUBENDREHER 3,5 CRV	790032008	50	1	144	928569808	GRUNDWERKZEUG
SCHRAUBENDREHER 5,5 CRV	790032308	51	1	144	928569808	GRUNDWERKZEUG
SCHRAUBENSICHERUNG 10M	8655016	105	1	204	10142942	SCHMIEROELFILTER ANBAU
SCHRAUBENSICHERUNG 50	811205708	105	1	196	10120186	MASSENAUSGLEICH ANBAU
SCHRAUBENSICHERUNG 50	811205708	105	1	230	12418347	KLIMAKOMPRESSOR ANBAU
SCHRAUBENSICHERUNG 50	811205708	109	1	245	9079823	TRANSPORTVORRICHTUNG
SCHRAUBENSICHERUNG 50	811205708	109	1	252	10144227	STEUERGERAET ANBAU
SCHRAUBENSICHERUNG 50	811205708	105	1	261	10144036	NEBENABTRIEB ANBAU
SCHRAUBKAPPE GPN 800 M1	10021410	3	2	208	12489819	ABDECKKAPPEN-KIT
SCHRAUBKARABINER OVAL	10877382	2	2	664	96013575	HUBENDSCHALTER GEWICHT
SCHRAUBKUPPLUNG EMA3 M	7406865	744	7	542	96045351	HYDRAULIK OBERWAGEN
SCHRAUBKUPPLUNG EMA3 M	7406865	642	2	590	967784808	HYDRAULIK HILFSHUBWERK
SCHRAUBSTOPFEN GPN 700	7003652	4	1	208	12489819	ABDECKKAPPEN-KIT
SCHRAUBSTOPFEN GPN 700	7011745	1	1	208	12489819	ABDECKKAPPEN-KIT
SCHRAUBSTUTZEN	12211232	3	1	484	968570808	HARNSTOFFTANK
SCHRUMPFSCHLAUCH 11,6/2	10441166	298	0.1	446	96036955	KABELSTRANG
SCHRUMPFSCHLAUCH 11,6/2	10441166	298	0.5	514	96037137	KABELSTRANG
SCHUTZ SCHWK.	96032850	8	1	483	918484108	HARNSTOFFANLAGE
SCHUTZBLECH 3X140X437 D	97032687	3	2	338	919369308	DREHWERK
SCHUTZBLECH KPL.	96004318	30	1	275	919007708	ANTRIEBSAGGREGAT VORM.
SCHUTZBLECH KPL.LI.	96034894	2	1	17	919617108	RAUPENFAHRWERK KPL.
SCHUTZBLECH KPL.RE.	96034977	10	1	17	919617108	RAUPENFAHRWERK KPL.
SCHUTZDECKEL NICHT LACK	12466377	738	1	485	11373478	REDUKTIONSMITTELPUMPE
SCHUTZGITTER	10872389	7	1	566	11622561	OEL-LUFTKUEHLER
SCHUTZGITTER PA	10222686	27	2	522	969256608	GRUNDAUFBAU
SCHUTZKAPPE	610701108	525	1	513	96037136	KABELSTRANG
SCHUTZKAPPE 180°	11060618	519	3	514	96037137	KABELSTRANG
SCHUTZKAPPE 180°	11491349	522	1	514	96037137	KABELSTRANG
SCHUTZKAPPE JPT	10874331	529	1	447	96036955	KABELSTRANG
SCHUTZKAPPE JPT	10874331	521	4	513	96037136	KABELSTRANG
SCHUTZKAPPE JPT 2 POL	11647373	522	2	513	96037136	KABELSTRANG
SCHUTZKAPPE LLD-PE	789000701	34	1	354	90208882	KOMPAKTSEILWINDE
SCHUTZKAPPE M26X1,5	7013456	3	1	178	5004624	OELABLASSSCHRAUBE
SCHUTZKAPPE MCP BUCHS	10678458	504	2	513	96037136	KABELSTRANG
SCHUTZKAPPE NETZW. RJ45/	11008530	2	1	457	966979108	STECKDOSE
SCHUTZKAPPE STECKER 4-P	602339608	516	3	44	96045228	KABELSTRANG
SCHUTZKAPPE SW 24	779040801	18	2	380	917304508	KRANFUEHRERKABINE VORM.
SCHUTZKAPPE SW10	779020108	2	6	523	922648308	KLEMMBRETT VORM.
SCHUTZPOLSTER	520402808	3	1	143	919328608	WERKZEUG M.ZUBEHOER
SCHUTZRING	10152974	3	1	186	10153583	KURBELWELLENDICHTUNG
SCHUTZSCHLAUCH 30MM AL-	11118396	211	3.8	514	96037137	KABELSTRANG
SCHUTZSCHLAUCH DN16XNO	10871063	(507)	1	711	917598408	ELEKTRIK MESS-U.WARNEINR
SCHUTZSCHLAUCH DN20 NO	10870635	71	1.5	509	96045384	KABELLISTE DREHBUEHNE
SCHUTZSCHLAUCH DN20 NO	10870635	13	1.7	616	96037130	AUSRUESTUNG KAMERA DRE
SCHUTZSCHLAUCH DN20 NO	10870635	13	1.5	618	96037131	AUSRUESTUNG KAMERA WIN
SCHWEISSBUCHSE M8X17 ST	10412105	23	4	320	96023117	BATTERIEKASTEN VORM.

Bezeichnung	Artikel	Pos.	Menge	Seite	Baugruppe	Bezeichnung
SCHWENKTRAVERSE	11347024	3	1	724	910836808	HAKENFLASCHE
SCHWERFOLIENMATTE 2X11	97051749	9	1	435	968977308	SCHALLDAEMMUNG
SCHWERFOLIENMATTE 2X390	97058386	10	1	435	968977308	SCHALLDAEMMUNG
SCHWERFOLIENMATTE 2X885	97058387	11	1	435	968977308	SCHALLDAEMMUNG
SCHWERSPANNSTIFT 6H12X	432310501	10	2	196	10120186	MASSENAUSGLEICH ANBAU
SCHWINGUNGSDAEMPFER 6	10287382	115	2	276	919007708	ANTRIEBSAGGREGAT VORM.
SCHWINGUNGSDAEMPFER 7	10875547	116	2	276	919007708	ANTRIEBSAGGREGAT VORM.
SCHWUNGRAD ANBAU SAE 1	9077238	530	1	165	12856862	DIESELMOTOR
SCHWUNGRAD VORM. SAE 1	12809567	1	1	251	9077238	SCHWUNGRAD ANBAU
SCHWUNGRADGEHAEUSE AN	10115829	520	1	165	12856862	DIESELMOTOR
SCHWUNGRADGEHAEUSE VO	10118148	1	1	247	10115829	SCHWUNGRADGEHAEUSE AN
SCR-BAUGRUPPE SCRONLY	11403708	101	1	494	96048826	ABGASANLAGE VORM.
SEAL-LOCK-BUNDMUTTER M1	7014529	47	1	294	11210795	VERSTELLPUMPE
SEAL-LOCK-BUNDMUTTER M8	7005071	11	1	299	571900808	REGLERELEMENT
SEAL-LOCK-BUNDMUTTER M8	7005071	11	1	300	10472202	REGLERELEMENT
SECHSKANTMUTTER AEHNL.	11004444	32	2	21	96034894	SCHUTZBLECH KPL.LI.
SECHSKANTMUTTER AEHNL.	11004444	32	2	24	96034977	SCHUTZBLECH KPL.RE.
SECHSKANTMUTTER AEHNL.	11004444	6	14	85	968420608	STAUKASTEN VORM.
SECHSKANTMUTTER AEHNL.	11004444	9	3	714	967933408	GRUNDHALTER VORM.
SECHSKANTMUTTER AEHNL.	11626393	350	4	494	96048826	ABGASANLAGE VORM.
SECHSKANTMUTTER AEHNL.	11113917	351	4	494	96048826	ABGASANLAGE VORM.
SECHSKANTMUTTER DIN 934	411514877	49	7	47	11346779	SCHLEIFRINGUEBERTRAGER
SECHSKANTMUTTER DIN 985	10197769	108	10	71	919254308	RAUPENTRAEGER VORM.LI.
SECHSKANTMUTTER DIN 985	10197769	109	10	101	919254408	RAUPENTRAEGER VORM.RE.
SECHSKANTMUTTER DIN 985	10197769	12	1	399	916163008	WISCHANLAGE EINBAU
SECHSKANTMUTTER DIN 985	10197769	19	1	616	96037130	AUSRUESTUNG KAMERA DRE
SECHSKANTMUTTER DIN 985	10197769	19	1	618	96037131	AUSRUESTUNG KAMERA WIN
SECHSKANTMUTTER DIN 985	10197769	(9)	1	628	919028808	MECH.TEILE VERSANDMONT
SECHSKANTMUTTER DIN 985	10197769	27	8	639	917291908	ANLENKSTUECK VORM.
SECHSKANTMUTTER DIN 985	10197769	25	3	721	968728808	KONSOLE VORM.
SECHSKANTMUTTER DIN 985	12218127	12	8	672	966134608	ANBAUTEILE ZYLINDER
SECHSKANTMUTTER DIN 985	10875607	329	4	478	969763408	VERROHRUNG DRUCKLUFTA
SECHSKANTMUTTER DIN 985	10875607	84	6	640	917291908	ANLENKSTUECK VORM.
SECHSKANTMUTTER DIN 985	10875609	14	8	30	917511508	RAUPENMITTELTEIL VORM.
SECHSKANTMUTTER DIN 985	10875609	5	4	369	967986308	LAGERUNG EINBAU
SECHSKANTMUTTER DIN 985	10875609	25	1	474	967928508	VERRIEGELUNG
SECHSKANTMUTTER DIN 985	10875609	18	4	639	917291908	ANLENKSTUECK VORM.
SECHSKANTMUTTER DIN 985	10875610	7	1	323	917626608	KRAFTSTOFFBEHAELTER AN
SECHSKANTMUTTER DIN 985	10875610	6	1	332	917825508	OELBEHAELTER ANBAU
SECHSKANTMUTTER DIN 985	10876399	26	4	449	96036957	ELEKTRIK ANBAUTEILE KABIN
SECHSKANTMUTTER DIN 985	10875611	88	1	640	917291908	ANLENKSTUECK VORM.
SECHSKANTMUTTER DIN 985	10875611	61	1	661	917292408	TELESKOP 5 VORM.
SECHSKANTMUTTER DIN 985	10875611	7	3	715	967936408	WINDWARNUNG VORM.
SECHSKANTMUTTER DIN 985	10301317	17	4	34	96045225	ELEKTRIK MITTELSTUECK
SECHSKANTMUTTER DIN 985	10301317	5	1	714	967933408	GRUNDHALTER VORM.
SECHSKANTMUTTER DIN 985	12102692	72	8	483	918484108	HARNSTOFFANLAGE
SECHSKANTMUTTER DIN 985	12102692	14	6	525	926891108	VERTEILER MASSE
SECHSKANTMUTTER DIN 985	12102692	304	14	539	96045351	HYDRAULIK OBERWAGEN
SECHSKANTMUTTER DIN 985	12102692	5	1	630	925141508	SCHLAUCHFUEHRUNG VORM.
SECHSKANTMUTTER DIN 985	12102692	306	2	699	967785008	ZUSATZHYDRAULIK KLAPPSPI
SECHSKANTMUTTER DIN 985	12102692	26	4	721	968728808	KONSOLE VORM.
SECHSKANTMUTTER DIN 985	411903008	49	8	30	917511508	RAUPENMITTELTEIL VORM.
SECHSKANTMUTTER DIN 985	411903008	11	1	378	968514508	SCHALTSCHRANKDECKEL EIN
SECHSKANTMUTTER DIN 985	411903008	23	4	405	917304708	SCHIEBETUER EINBAU
SECHSKANTMUTTER DIN 985	411903008	5	2	407	966230508	FUEHRUNG VORM.
SECHSKANTMUTTER DIN 985	411903008	4	4	599	917269308	LADEGERAET
SECHSKANTMUTTER DIN 985	411903008	27	2	609	968994408	KAMERAHALTER VORM.
SECHSKANTMUTTER DIN 985	411903008	25	4	610	968290608	STATIV
SECHSKANTMUTTER DIN 985	411903008	14	2	612	968993508	KAMERAHALTER VORM.
SECHSKANTMUTTER DIN 985	411903008	25	4	613	968267208	STATIV

Bezeichnung	Artikel	Pos.	Menge	Seite	Baugruppe	Bezeichnung
SECHSKANTMUTTER DIN 985	10876076	11	4	577	967969608	HILFSHUBWERK WINDE 2 VO
SECHSKANTMUTTER DIN 985	10875614	9	7	87	96034962	FUEHRUNG LI.
SECHSKANTMUTTER DIN 985	10875614	9	7	104	96034980	FUEHRUNG RE.
SECHSKANTMUTTER DIN 985	10875614	350	3	283	968026308	KUPPLUNGSSTELLER
SECHSKANTMUTTER DIN 985	10875614	(7)	11	372	916177508	TRITT KPL.
SECHSKANTMUTTER DIN 985	10875614	46	1	383	917305408	INNENVERKLEIDUNG EINBAU
SECHSKANTMUTTER DIN 985	10875614	5	4	410	917676208	HEIZUNG KRANFUEHRERKAB
SECHSKANTMUTTER DIN 985	10875614	25	1	414	969085208	HEIZUNG VORM.
SECHSKANTMUTTER DIN 985	10875614	5	1	424	916049908	SPIEGELANBAU KRANFUEHR
SECHSKANTMUTTER DIN 985	10875614	4	4	458	917260408	SPIEGELANBAU DREHBUEHN
SECHSKANTMUTTER DIN 985	10875614	20	8	462	918759808	ZUSATZHEIZUNG OW
SECHSKANTMUTTER DIN 985	10875614	32	1	464	96020359	ZUSATZHEIZUNG VORM.
SECHSKANTMUTTER DIN 985	10875614	25	2	609	968994408	KAMERAHALTER VORM.
SECHSKANTMUTTER DIN 985	10875614	12	2	612	968993508	KAMERAHALTER VORM.
SECHSKANTMUTTER DIN 985	411903108	9	6	372	916177508	TRITT KPL.
SECHSKANTMUTTER DIN 985	411903108	6	12	377	916162808	RELING
SECHSKANTMUTTER DIN 985	411903108	4	4	716	967937608	HINDERNISFEUER VORM.
SECHSKANTMUTTER EN 1661	10179265	4	3	219	10147364	LUFTANSAUGUNG ANBAU
SECHSKANTMUTTER EN 1661	10179265	4	3	240	10115539	STARTER ANBAU
SECHSKANTMUTTER EN 1661	11820285	11	2	220	10149677	VERBINDUNGSLEITUNG ANBA
SECHSKANTMUTTER EN 1661	11820285	78	1	254	10151328	KABELBAUM ANBAU
SECHSKANTMUTTER ISO 403	12102695	32	2	417	918810308	STEUERSTAND
SECHSKANTMUTTER ISO 403	12102695	352	5	430	96036790	DREHBUEHNENVERKLEIDUN
SECHSKANTMUTTER ISO 403	12102695	353	6	439	969015908	DREHBUEHNENVERKLEIDUN
SECHSKANTMUTTER ISO 403	12102695	23	2	545	96035117	MECH.BEFESTIGUNGSTEILE
SECHSKANTMUTTER ISO 403	12102695	6	7	564	917261808	OELKUEHLER EINBAU
SECHSKANTMUTTER ISO 403	12102695	28	2	639	917291908	ANLENKSTUECK VORM.
SECHSKANTMUTTER ISO 403	12102695	16	2	705	917268408	MASTNASE
SECHSKANTMUTTER ISO 4032	10875616	22	32	17	919617108	RAUPENFAHRWERK KPL.
SECHSKANTMUTTER ISO 4032	10875616	30	2	26	968036408	ENDSCHALTER VORM.
SECHSKANTMUTTER ISO 4032	10875616	35	3	70	919254308	RAUPENTRAEGER VORM.LI.
SECHSKANTMUTTER ISO 4032	10875616	35	3	100	919254408	RAUPENTRAEGER VORM.RE.
SECHSKANTMUTTER ISO 4032	10875616	34	1	134	919087608	DREHDURCHFUEHRUNG
SECHSKANTMUTTER ISO 4032	10875616	23	2	731	917267508	TRANSPORTHALTERUNG DKS
SECHSKANTMUTTER ISO 403	411514608	8	1	732	929582108	HALTERUNG VORM.
SECHSKANTMUTTER ISO 4032	10875617	47	4	17	919617108	RAUPENFAHRWERK KPL.
SECHSKANTMUTTER ISO 4032	10875617	43	4	30	917511508	RAUPENMITTELTEIL VORM.
SECHSKANTMUTTER ISO 4032	10875617	32	4	121	919644008	HYDRAULISCHE ABSTUETZUN
SECHSKANTMUTTER ISO 4032	10875617	17	1	475	967978908	VERRIEGELUNG VORM.
SECHSKANTMUTTER ISO 4032	10875617	19	4	672	966134608	ANBAUTEILE ZYLINDER
SECHSKANTMUTTER ISO 4032	10875617	6	9	731	917267508	TRANSPORTHALTERUNG DKS
SECHSKANTMUTTER ISO 4032	10875618	48	4	17	919617108	RAUPENFAHRWERK KPL.
SECHSKANTMUTTER ISO 4032	10875618	64	1	71	919254308	RAUPENTRAEGER VORM.LI.
SECHSKANTMUTTER ISO 4032	10875618	64	1	101	919254408	RAUPENTRAEGER VORM.RE.
SECHSKANTMUTTER ISO 4032	10875618	15	8	724	910836808	HAKENFLASCHE
SECHSKANTMUTTER ISO 4032	12226068	267	2	685	968708708	KLEMMKASTEN KPL.
SECHSKANTMUTTER ISO 403	10425689	4	1	629	968068308	MONTAGEVORRICHTUNG
SECHSKANTMUTTER ISO 403	10425689	9	4	721	968728808	KONSOLE VORM.
SECHSKANTMUTTER ISO 403	10875619	10	2	390	916162508	SCHEIBEN EINBAU
SECHSKANTMUTTER ISO 403	10875619	354	8	430	96036790	DREHBUEHNENVERKLEIDUN
SECHSKANTMUTTER ISO 403	10875620	4	4	127	917257108	ZENTRALSCHMIERUNG RAUP
SECHSKANTMUTTER ISO 403	10875620	18	6	320	96023117	BATTERIEKASTEN VORM.
SECHSKANTMUTTER ISO 403	10875620	5	4	502	917261208	ZENTRALSCHMIERANLAGE O
SECHSKANTMUTTER ISO 4032	10878117	73	2	483	918484108	HARNSTOFFANLAGE
SECHSKANTMUTTER ISO 4032	10299668	38	2	672	966134608	ANBAUTEILE ZYLINDER
SECHSKANTMUTTER ISO 403	10197764	13	2	37	966167808	DECKEL KPL.
SECHSKANTMUTTER ISO 403	10197764	16	2	38	968054008	MONTAGEPLATTE VORM.
SECHSKANTMUTTER ISO 403	10197764	48	12	47	11346779	SCHLEIFRINGUEBERTRAGER
SECHSKANTMUTTER ISO 403	10197764	23	2	134	919087608	DREHDURCHFUEHRUNG
SECHSKANTMUTTER ISO 403	10197764	350	6	277	919007708	ANTRIEBSAGGREGAT VORM.

Bezeichnung	Artikel	Pos.	Menge	Seite	Baugruppe	Bezeichnung
SECHSKANTMUTTER ISO 403	10197764	353	4	280	96034631	KUEHLER VORM.
SECHSKANTMUTTER ISO 403	10197764	27	4	320	96023117	BATTERIEKASTEN VORM.
SECHSKANTMUTTER ISO 403	10197764	51	2	383	917305408	INNENVERKLEIDUNG EINBAU
SECHSKANTMUTTER ISO 403	10197764	351	4	430	96036790	DREHBUEHNENVERKLEIDUN
SECHSKANTMUTTER ISO 403	10197764	350	11	439	969015908	DREHBUEHNENVERKLEIDUN
SECHSKANTMUTTER ISO 403	10197764	5	12	523	922648308	KLEMMBRETT VORM.
SECHSKANTMUTTER ISO 403	10197764	6	4	525	926891108	VERTEILER MASSE
SECHSKANTMUTTER ISO 403	10197764	310	2	589	967784808	HYDRAULIK HILFSHUBWERK
SECHSKANTMUTTER ISO 4032	411517114	350	6	491	919372008	ABGASANLAGE
SECHSKANTMUTTER ISO 403	10197760	350	7	429	96036790	DREHBUEHNENVERKLEIDUN
SECHSKANTMUTTER ISO 403	10197760	351	4	439	969015908	DREHBUEHNENVERKLEIDUN
SECHSKANTMUTTER ISO 403	10197760	10	4	525	926891108	VERTEILER MASSE
SECHSKANTMUTTER ISO 403	10197760	13	6	565	967980508	OELKUEHLER VORM.
SECHSKANTMUTTER ISO 403	11693875	8	2	112	968038208	LAGERUNG VORN LI.
SECHSKANTMUTTER ISO 403	11693875	8	2	113	968038308	LAGERUNG VORN RE.
SECHSKANTMUTTER ISO 403	11693875	9	2	127	917257108	ZENTRALSCHMIERUNG RAUP
SECHSKANTMUTTER ISO 403	11693875	351	17	277	919007708	ANTRIEBSAGGREGAT VORM.
SECHSKANTMUTTER ISO 403	11693875	354	2	280	96034631	KUEHLER VORM.
SECHSKANTMUTTER ISO 403	11693875	350	3	326	919231108	KRAFTSTOFFFOERDERUNG
SECHSKANTMUTTER ISO 403	11693875	25	2	365	917259908	KRANFUEHRERKABINE ANBA
SECHSKANTMUTTER ISO 403	11693875	27	2	399	916163008	WISCHANLAGE EINBAU
SECHSKANTMUTTER ISO 403	11693875	8	4	410	917676208	HEIZUNG KRANFUEHRERKAB
SECHSKANTMUTTER ISO 403	11693875	12	2	433	968923508	KLAPPE VORM.RECHTS
SECHSKANTMUTTER ISO 403	11693875	11	2	441	969016008	KLAPPE VORM.VORN LINKS
SECHSKANTMUTTER ISO 403	11693875	70	9	483	918484108	HARNSTOFFANLAGE
SECHSKANTMUTTER ISO 403	11693875	350	2	499	918731908	LUFTFILTERANLAGE
SECHSKANTMUTTER ISO 403	11693875	70	2	522	969256608	GRUNDAUFBAU
SECHSKANTMUTTER ISO 403	11693875	337	2	540	96045351	HYDRAULIK OBERWAGEN
SECHSKANTMUTTER ISO 403	11693875	22	2	545	96035117	MECH.BEFESTIGUNGSTEILE
SECHSKANTMUTTER ISO 403	11693875	7	4	600	917269408	KONSOLE FREMDEINSPEISUN
SECHSKANTMUTTER ISO 403	11693875	55	2	661	917292408	TELESKOP 5 VORM.
SECHSKANTMUTTER ISO 403	11693875	42	2	672	966134608	ANBAUTEILE ZYLINDER
SECHSKANTMUTTER ISO 403	11693875	4	2	708	967321308	HALTERUNG 2.HUB OBEN
SECHSKANTMUTTER ISO 4032	510737408	7	2	372	916177508	TRITT KPL.
SECHSKANTMUTTER ISO 403	10411095	5	2	241	10219978	STARTER
SECHSKANTMUTTER ISO 403	10411095	5	2	243	11386644	STARTER VORM.
SECHSKANTMUTTER ISO 403	10179943	355	1	283	968026308	KUPPLUNGSSTELLER
SECHSKANTMUTTER ISO 403	4635422	24	4	17	919617108	RAUPENFAHRWERK KPL.
SECHSKANTMUTTER ISO 403	511001708	9	2	410	917676208	HEIZUNG KRANFUEHRERKAB
SECHSKANTMUTTER ISO 403	511001708	21	5	518	919503008	EINBAUTEILE SCHALTSCHRAN
SECHSKANTMUTTER ISO 403	410120308	13	2	705	917268408	MASTNASE
SECHSKANTMUTTER ISO 7040	10875629	13	4	605	96037229	ANBAUTEILE ARBEITSSCHEIN
SECHSKANTMUTTER ISO 7040	10875629	22	4	644	917292008	TELESKOP 1 VORM.
SECHSKANTMUTTER ISO 7040	10875629	22	4	648	917292108	TELESKOP 2 VORM.
SECHSKANTMUTTER ISO 7040	10875629	22	4	652	917292208	TELESKOP 3 VORM.
SECHSKANTMUTTER ISO 7040	10875629	22	4	656	917292308	TELESKOP 4 VORM.
SECHSKANTMUTTER ISO 7040	10875629	19	4	661	917292408	TELESKOP 5 VORM.
SECHSKANTMUTTER ISO 7040	11840127	31	1	87	96034962	FUEHRUNG LI.
SECHSKANTMUTTER ISO 7040	11840127	31	1	104	96034980	FUEHRUNG RE.
SECHSKANTMUTTER ISO 7040	11840127	5	4	112	968038208	LAGERUNG VORN LI.
SECHSKANTMUTTER ISO 7040	11840127	5	4	113	968038308	LAGERUNG VORN RE.
SECHSKANTMUTTER ISO 7040	11840127	51	8	116	968046208	ANBAUTEILE
SECHSKANTMUTTER ISO 7040	11840127	66	12	121	919644008	HYDRAULISCHE ABSTUETZUN
SECHSKANTMUTTER ISO 7040	11840127	3	2	717	917551608	ANBAUTEILE
SECHSKANTMUTTER ISO 7040	11840127	24	3	721	968728808	KONSOLE VORM.
SECHSKANTMUTTER ISO 7040	10875859	14	24	111	917691008	ABSTURZSICHERUNG
SECHSKANTMUTTER ISO 7040	10875859	22	40	116	968046208	ANBAUTEILE
SECHSKANTMUTTER ISO 7040	10875859	30	2	731	917267508	TRANSPORTHALTERUNG DKS
SECHSKANTMUTTER ISO 7040	10875630	51	4	644	917292008	TELESKOP 1 VORM.
SECHSKANTMUTTER ISO 7040	10875630	51	4	648	917292108	TELESKOP 2 VORM.

Bezeichnung	Artikel	Pos.	Menge	Seite	Baugruppe	Bezeichnung
SECHSKANTMUTTER ISO 7040	10875630	51	4	652	917292208	TELESKOP 3 VORM.
SECHSKANTMUTTER ISO 7040	10875630	51	4	656	917292308	TELESKOP 4 VORM.
SECHSKANTMUTTER ISO 7040	10875630	51	4	661	917292408	TELESKOP 5 VORM.
SECHSKANTMUTTER ISO 7040	10415159	22	1	614	96045237	AUSRUESTUNG KAMERA KAB
SECHSKANTMUTTER ISO 704	11656734	35	4	116	968046208	ANBAUTEILE
SECHSKANTMUTTER ISO 704	11656734	36	2	639	917291908	ANLENKSTUECK VORM.
SECHSKANTMUTTER ISO 704	11656734	60	2	644	917292008	TELESKOP 1 VORM.
SECHSKANTMUTTER ISO 704	11656734	60	2	648	917292108	TELESKOP 2 VORM.
SECHSKANTMUTTER ISO 704	11656734	60	2	652	917292208	TELESKOP 3 VORM.
SECHSKANTMUTTER ISO 704	11656734	60	2	656	917292308	TELESKOP 4 VORM.
SECHSKANTMUTTER ISO 704	11656731	105	8	71	919254308	RAUPENTRAEGER VORM.LI.
SECHSKANTMUTTER ISO 704	11656731	106	8	101	919254408	RAUPENTRAEGER VORM.RE.
SECHSKANTMUTTER ISO 704	11656731	352	6	280	96034631	KUEHLER VORM.
SECHSKANTMUTTER ISO 7042	10814800	352	2	494	96048826	ABGASANLAGE VORM.
SECHSKANTMUTTER ISO 8673	10179115	53	1	405	917304708	SCHIEBETUER EINBAU
SECHSKANTMUTTER ISO 867	10875633	25	1	449	96036957	ELEKTRIK ANBAUTEILE KABIN
SECHSKANTMUTTER ISO 8675	10285016	4	2	112	968038208	LAGERUNG VORN LI.
SECHSKANTMUTTER ISO 8675	10285016	4	2	113	968038308	LAGERUNG VORN RE.
SECHSKANTMUTTER ISO 8675	10285016	360	2	283	968026308	KUPPLUNGSSTELLER
SECHSKANTMUTTER ISO 8675	411703308	3	1	366	11214363	KIPPZYLINDER
SECHSKANTMUTTER M10X1	10012557	3	2	194	11448005	KIPPHEBELBOCK VORM.
SECHSKANTMUTTER M16X1,5	602504108	15	2	36	96045226	SCHALTKASTEN VORM.
SECHSKANTMUTTER M20X1,5	602504208	18	1	36	96045226	SCHALTKASTEN VORM.
SECHSKANTMUTTER M40X1,	602504508	512	1	44	96045228	KABELSTRANG
SECHSKANTMUTTER M6 8	10411094	3	1	241	10219978	STARTER
SECHSKANTMUTTER M6 8	10411094	3	1	243	11386644	STARTER VORM.
SECHSKANTRIPPENMUTTER	7380960	6	1	239	10142863	GENERATOR VORM.
SECHSKANTRIPPENMUTTER	10003366	3	1	221	9078314	HEIZFLANSCH ANBAU
SECHSKANTSCHRAUBE DIN 6	10030519	14	2	238	10140729	ATL-ANBAU
SECHSKANTSCHRAUBE DIN 6	10009007	14	2	214	10143341	KRAFTSTOFFLEITUNGEN
SECHSKANTSCHRAUBE DIN 6	10009007	2	5	231	10142733	WASSERPUMPE MIT BEFEST.
SECHSKANTSCHRAUBE DIN 6	10009007	3	4	252	10144227	STEUERGERAET ANBAU
SECHSKANTSCHRAUBE DIN	11600960	(4)	6	197	10138230	NOCKENWELLE KPL.
SECHSKANTSCHRAUBE DIN 6	10005713	2	1	203	10148432	SCHMIEROELPUMPE MIT BE
SECHSKANTSCHRAUBE DIN 6	10016907	5	4	252	10144227	STEUERGERAET ANBAU
SECHSKANTSCHRAUBE DIN 6	11645138	3	2	203	10148432	SCHMIEROELPUMPE MIT BE
SECHSKANTSCHRAUBE EN 1	12207562	4	8	170	10147687	AGGREGATETRAEGER ANBA
SECHSKANTSCHRAUBE EN 16	12207559	5	1	239	10142863	GENERATOR VORM.
SECHSKANTSCHRAUBE EN 1	11656153	3	2	182	10139112	OELLEITUNG VORM.
SECHSKANTSCHRAUBE EN 1	11656153	68	3	254	10151328	KABELBAUM ANBAU
SECHSKANTSCHRAUBE EN 1	11656153	58	2	256	10151329	KABELSATZ ANBAU
SECHSKANTSCHRAUBE EN 16	10299564	3	2	239	10142863	GENERATOR VORM.
SECHSKANTSCHRAUBE EN 16	10299564	2	4	245	9079823	TRANSPORTVORRICHTUNG
SECHSKANTSCHRAUBE EN 1	11656155	3	3	244	10115664	VERSCHLUSSTEILE
SECHSKANTSCHRAUBE EN 1	11656155	69	1	254	10151328	KABELBAUM ANBAU
SECHSKANTSCHRAUBE EN 1	11643686	2	3	223	10127566	LUFTPRESSER ANBAU
SECHSKANTSCHRAUBE EN 1	11626068	5	6	230	12418347	KLIMAKOMPRESSOR ANBAU
SECHSKANTSCHRAUBE EN 16	10299585	6	1	170	10147687	AGGREGATETRAEGER ANBA
SECHSKANTSCHRAUBE EN 1	11656158	4	2	212	10146791	KRAFTSTOFF-FEINFILTERAN
SECHSKANTSCHRAUBE EN 1	11656158	3	4	217	10147365	LUFTANSAUGROHR ANBAU
SECHSKANTSCHRAUBE EN 1	11656158	7	2	230	12418347	KLIMAKOMPRESSOR ANBAU
SECHSKANTSCHRAUBE EN 16	10299589	5	9	170	10147687	AGGREGATETRAEGER ANBA
SECHSKANTSCHRAUBE EN 1	11656160	6	1	230	12418347	KLIMAKOMPRESSOR ANBAU
SECHSKANTSCHRAUBE EN 1	12208088	4	4	217	10147365	LUFTANSAUGROHR ANBAU
SECHSKANTSCHRAUBE EN 1	11631940	7	2	261	10144036	NEBENABTRIEB ANBAU
SECHSKANTSCHRAUBE EN 16	10299565	4	1	239	10142863	GENERATOR VORM.
SECHSKANTSCHRAUBE EN 1	11656452	9	1	177	10155227	OELWANNE VORM.
SECHSKANTSCHRAUBE EN 1	12207570	2	2	246	10142864	TRANSPORTVORRICHTUNG
SECHSKANTSCHRAUBE EN 1	10875503	10	6	38	968054008	MONTAGEPLATTE VORM.
SECHSKANTSCHRAUBE EN 1	10875503	20	28	518	919503008	EINBAUTEILE SCHALTSCHRAN

Bezeichnung	Artikel	Pos.	Menge	Seite	Baugruppe	Bezeichnung
SECHSKANTSCHRAUBE EN 1	10875503	48	18	522	969256608	GRUNDAUFBAU
SECHSKANTSCHRAUBE EN 1	10875503	11	6	526	968063108	MONTAGEEINHEIT VORM.
SECHSKANTSCHRAUBE EN 1	10875503	5	1	598	918462708	FREMDEINSPEISUNG
SECHSKANTSCHRAUBE EN 1	10875503	6	4	601	915432508	FUNKVORBEREITUNG OW
SECHSKANTSCHRAUBE EN 16	12207546	(12)	2	164	12856862	DIESELMOTOR
SECHSKANTSCHRAUBE EN 16	12207546	52	1	254	10151328	KABELBAUM ANBAU
SECHSKANTSCHRAUBE EN 16	12207546	42	1	256	10151329	KABELSATZ ANBAU
SECHSKANTSCHRAUBE EN 16	11840297	11	3	34	96045225	ELEKTRIK MITTELSTUECK
SECHSKANTSCHRAUBE EN 16	11840297	(13)	7	164	12856862	DIESELMOTOR
SECHSKANTSCHRAUBE EN 16	11840297	8	4	195	11358102	ZYLINDERKOPFDECKEL ANBA
SECHSKANTSCHRAUBE EN 16	11840297	21	1	215	10143342	LECKOELRUECKLAUF
SECHSKANTSCHRAUBE EN 16	11840297	54	7	254	10151328	KABELBAUM ANBAU
SECHSKANTSCHRAUBE EN 16	11840297	304	2	276	919007708	ANTRIEBSAGGREGAT VORM.
SECHSKANTSCHRAUBE EN 16	11840297	19	2	396	916168308	LUFTFUEHRUNG
SECHSKANTSCHRAUBE EN 16	11840297	24	4	399	916163008	WISCHANLAGE EINBAU
SECHSKANTSCHRAUBE EN 16	11840297	307	8	429	96036790	DREHBUEHNENVERKLEIDUN
SECHSKANTSCHRAUBE EN 16	12207548	2	4	221	9078314	HEIZFLANSCH ANBAU
SECHSKANTSCHRAUBE EN 16	12207548	301	2	429	96036790	DREHBUEHNENVERKLEIDUN
SECHSKANTSCHRAUBE EN 16	12207587	3	1	218	10145173	ANSAUGSTUTZEN ANBAU
SECHSKANTSCHRAUBE EN 16	11656991	39	6	449	96036957	ELEKTRIK ANBAUTEILE KABIN
SECHSKANTSCHRAUBE EN 16	11656992	(11)	2	164	12856862	DIESELMOTOR
SECHSKANTSCHRAUBE EN 16	11656992	(14)	1	164	12856862	DIESELMOTOR
SECHSKANTSCHRAUBE EN 16	11656992	15	1	215	10143342	LECKOELRUECKLAUF
SECHSKANTSCHRAUBE EN 16	11656992	11	4	248	10116110	VERSCHLUSSTEILE
SECHSKANTSCHRAUBE EN 16	11656992	60	2	254	10151328	KABELBAUM ANBAU
SECHSKANTSCHRAUBE EN 16	11656992	3	3	257	10143707	HALTER ANBAU
SECHSKANTSCHRAUBE EN 16	11657219	12	1	214	10143341	KRAFTSTOFFLEITUNGEN
SECHSKANTSCHRAUBE EN 16	11657219	14	1	218	10145173	ANSAUGSTUTZEN ANBAU
SECHSKANTSCHRAUBE EN 16	11657219	3	1	249	10128439	VERSCHLUSSTEILE
SECHSKANTSCHRAUBE EN 16	11657219	61	14	254	10151328	KABELBAUM ANBAU
SECHSKANTSCHRAUBE EN 16	11657219	51	2	256	10151329	KABELSATZ ANBAU
SECHSKANTSCHRAUBE EN 16	11657219	4	1	257	10143707	HALTER ANBAU
SECHSKANTSCHRAUBE EN 16	11657219	316	4	429	96036790	DREHBUEHNENVERKLEIDUN
SECHSKANTSCHRAUBE EN 16	11657219	5	4	600	917269408	KONSOLE FREMDEINSPEISUN
SECHSKANTSCHRAUBE EN 1	12215999	3	1	235	10142744	KUEHLWASSERENTLUEFTUN
SECHSKANTSCHRAUBE EN 16	11690637	308	2	429	96036790	DREHBUEHNENVERKLEIDUN
SECHSKANTSCHRAUBE EN 16	11690637	30	4	545	96035117	MECH.BEFESTIGUNGSTEILE
SECHSKANTSCHRAUBE EN 16	11826563	2	2	173	10126713	KURBELGEHAEUSEENTLUEF
SECHSKANTSCHRAUBE EN 16	11826563	6	4	212	10146791	KRAFTSTOFF-FEINFILTERAN
SECHSKANTSCHRAUBE EN 16	11826563	12	1	218	10145173	ANSAUGSTUTZEN ANBAU
SECHSKANTSCHRAUBE EN 16	11826563	63	1	254	10151328	KABELBAUM ANBAU
SECHSKANTSCHRAUBE EN 16	11826563	53	2	256	10151329	KABELSATZ ANBAU
SECHSKANTSCHRAUBE EN 1	10299604	3	14	199	10129475	OELKUEHLER ANBAU
SECHSKANTSCHRAUBE EN 16	11658660	8	2	220	10149677	VERBINDUNGSLEITUNG ANBA
SECHSKANTSCHRAUBE EN 16	11691686	5	4	200	10129474	OELKUEHLER VORM.
SECHSKANTSCHRAUBE EN 16	11691686	5	1	212	10146791	KRAFTSTOFF-FEINFILTERAN
SECHSKANTSCHRAUBE EN 16	12210060	3	28	175	10132560	OELWANNE MIT BEFEST.
SECHSKANTSCHRAUBE EN 16	10876385	7	20	195	11358102	ZYLINDERKOPFDECKEL ANBA
SECHSKANTSCHRAUBE ISO	10875796	318	2	276	919007708	ANTRIEBSAGGREGAT VORM.
SECHSKANTSCHRAUBE ISO	10878922	16	4	320	96023117	BATTERIEKASTEN VORM.
SECHSKANTSCHRAUBE ISO 4	11631860	314	2	276	919007708	ANTRIEBSAGGREGAT VORM.
SECHSKANTSCHRAUBE ISO	10875504	330	4	478	969763408	VERROHRUNG DRUCKLUFTA
SECHSKANTSCHRAUBE ISO	11656183	327	4	478	969763408	VERROHRUNG DRUCKLUFTA
SECHSKANTSCHRAUBE ISO	4601290	32	2	70	919254308	RAUPENTRAEGER VORM.LI.
SECHSKANTSCHRAUBE ISO	4601290	32	2	100	919254408	RAUPENTRAEGER VORM.RE.
SECHSKANTSCHRAUBE ISO 4	11651578	5	1	717	917551608	ANBAUTEILE
SECHSKANTSCHRAUBE ISO 4	11658891	29	3	721	968728808	KONSOLE VORM.
SECHSKANTSCHRAUBE ISO 4	11658890	4	1	227	9072906	ZWISCHENRAD KPL.
SECHSKANTSCHRAUBE ISO 4	10875507	8	4	158	918731108	MONTAGETEILE DREHBUEHN
SECHSKANTSCHRAUBE ISO 4	10875508	57	2	639	917291908	ANLENKSTUECK VORM.

Bezeichnung	Artikel	Pos.	Menge	Seite	Baugruppe	Bezeichnung
SECHSKANTSCHRAUBE ISO 4	10875509	43	1	70	919254308	RAUPENTRAEGER VORM.LI.
SECHSKANTSCHRAUBE ISO 4	10875509	43	1	100	919254408	RAUPENTRAEGER VORM.RE.
SECHSKANTSCHRAUBE ISO 4	11840139	330	4	276	919007708	ANTRIEBSAGGREGAT VORM.
SECHSKANTSCHRAUBE ISO 4	11840139	11	3	672	966134608	ANBAUTEILE ZYLINDER
SECHSKANTSCHRAUBE ISO 4	10878785	550	4	540	96045351	HYDRAULIK OBERWAGEN
SECHSKANTSCHRAUBE ISO 4	10878785	552	4	590	967784808	HYDRAULIK HILFSHUBWERK
SECHSKANTSCHRAUBE ISO	10875797	7	4	369	967986308	LAGERUNG EINBAU
SECHSKANTSCHRAUBE ISO	12223058	305	2	269	918731408	ANTRIEBSAGGREGAT KPL.
SECHSKANTSCHRAUBE ISO	12224045	46	1	17	919617108	RAUPENFAHRWERK KPL.
SECHSKANTSCHRAUBE ISO	10878582	45	3	17	919617108	RAUPENFAHRWERK KPL.
SECHSKANTSCHRAUBE ISO	10878582	35	4	30	917511508	RAUPENMITTELTEIL VORM.
SECHSKANTSCHRAUBE ISO 4	11642377	340	8	277	919007708	ANTRIEBSAGGREGAT VORM.
SECHSKANTSCHRAUBE ISO 4	10878687	20	32	116	968046208	ANBAUTEILE
SECHSKANTSCHRAUBE ISO 4	12224034	21	8	116	968046208	ANBAUTEILE
SECHSKANTSCHRAUBE ISO 4	10878688	13	24	111	917691008	ABSTURZSICHERUNG
SECHSKANTSCHRAUBE ISO 4	10178883	36	8	70	919254308	RAUPENTRAEGER VORM.LI.
SECHSKANTSCHRAUBE ISO 4	10178883	36	8	100	919254408	RAUPENTRAEGER VORM.RE.
SECHSKANTSCHRAUBE ISO 4	11656999	68	12	73	90028956	FAHRANTRIEB
SECHSKANTSCHRAUBE ISO 4	12219309	2	2	323	917626608	KRAFTSTOFFBEHAELTER AN
SECHSKANTSCHRAUBE ISO 4	4062145	18	68	70	919254308	RAUPENTRAEGER VORM.LI.
SECHSKANTSCHRAUBE ISO 4	4062145	18	68	100	919254408	RAUPENTRAEGER VORM.RE.
SECHSKANTSCHRAUBE ISO	10876069	2	2	332	917825508	OELBEHAELTER ANBAU
SECHSKANTSCHRAUBE ISO 4	11342133	19	24	70	919254308	RAUPENTRAEGER VORM.LI.
SECHSKANTSCHRAUBE ISO 4	11342133	19	24	100	919254408	RAUPENTRAEGER VORM.RE.
SECHSKANTSCHRAUBE ISO 4	406209008	20	24	70	919254308	RAUPENTRAEGER VORM.LI.
SECHSKANTSCHRAUBE ISO 4	406209008	20	24	100	919254408	RAUPENTRAEGER VORM.RE.
SECHSKANTSCHRAUBE ISO 4	406216008	5	4	666	918807308	AUSSCHUBMECHANIK
SECHSKANTSCHRAUBE ISO	12216183	5	2	719	968811608	QUERTRAEGER
SECHSKANTSCHRAUBE ISO 4	10876620	307	12	51	96035801	HYDRAULIK MITTELTEIL
SECHSKANTSCHRAUBE ISO 4	12217239	57	3	483	918484108	HARNSTOFFANLAGE
SECHSKANTSCHRAUBE ISO	11651580	306	1	283	968026308	KUPPLUNGSSTELLER
SECHSKANTSCHRAUBE ISO	11651580	21	4	439	969015908	DREHBUEHNENVERKLEIDUN
SECHSKANTSCHRAUBE ISO	12216193	59	2	483	918484108	HARNSTOFFANLAGE
SECHSKANTSCHRAUBE ISO 4	10021245	300	2	494	96048826	ABGASANLAGE VORM.
SECHSKANTSCHRAUBE ISO	12216195	300	3	327	96034868	KRAFTSTOFFFILTER VORM.
SECHSKANTSCHRAUBE ISO 4	12222989	12	4	352	917259708	HAUPTHUBWERK
SECHSKANTSCHRAUBE ISO 4	11652470	31	6	30	917511508	RAUPENMITTELTEIL VORM.
SECHSKANTSCHRAUBE ISO	10197730	66	4	71	919254308	RAUPENTRAEGER VORM.LI.
SECHSKANTSCHRAUBE ISO	10197730	66	4	101	919254408	RAUPENTRAEGER VORM.RE.
SECHSKANTSCHRAUBE ISO	10197730	18	8	111	917691008	ABSTURZSICHERUNG
SECHSKANTSCHRAUBE ISO	10197730	313	12	276	919007708	ANTRIEBSAGGREGAT VORM.
SECHSKANTSCHRAUBE ISO	10197730	4	16	369	967986308	LAGERUNG EINBAU
SECHSKANTSCHRAUBE ISO	10197730	314	1	429	96036790	DREHBUEHNENVERKLEIDUN
SECHSKANTSCHRAUBE ISO	10197730	23	1	449	96036957	ELEKTRIK ANBAUTEILE KABIN
SECHSKANTSCHRAUBE ISO	10197730	311	4	539	96045351	HYDRAULIK OBERWAGEN
SECHSKANTSCHRAUBE ISO	10197730	18	4	577	967969608	HILFSHUBWERK WINDE 2 VO
SECHSKANTSCHRAUBE ISO	10197730	(6)	1	628	919028808	MECH.TEILE VERSANDMONT
SECHSKANTSCHRAUBE ISO 4	12222996	304	7	439	969015908	DREHBUEHNENVERKLEIDUN
SECHSKANTSCHRAUBE ISO 4	12222996	20	3	545	96035117	MECH.BEFESTIGUNGSTEILE
SECHSKANTSCHRAUBE ISO 4	11631816	32	8	17	919617108	RAUPENFAHRWERK KPL.
SECHSKANTSCHRAUBE ISO 4	11631816	5	3	263	9078301	VERSCHLUSSTEILE
SECHSKANTSCHRAUBE ISO 4	11631816	2	6	318	918955408	BATTERIEKASTEN KPL.
SECHSKANTSCHRAUBE ISO 4	11631816	15	8	335	969050308	OELBEHAELTER VORM.
SECHSKANTSCHRAUBE ISO 4	11631816	318	4	429	96036790	DREHBUEHNENVERKLEIDUN
SECHSKANTSCHRAUBE ISO 4	11631816	379	4	439	969015908	DREHBUEHNENVERKLEIDUN
SECHSKANTSCHRAUBE ISO 4	11631816	302	2	494	96048826	ABGASANLAGE VORM.
SECHSKANTSCHRAUBE ISO 4	11631816	11	4	605	96037229	ANBAUTEILE ARBEITSSCHEIN
SECHSKANTSCHRAUBE ISO 4	11631816	91	2	640	917291908	ANLENKSTUECK VORM.
SECHSKANTSCHRAUBE ISO 4	4635031	24	2	545	96035117	MECH.BEFESTIGUNGSTEILE
SECHSKANTSCHRAUBE ISO 4	11642358	305	6	429	96036790	DREHBUEHNENVERKLEIDUN

Bezeichnung	Artikel	Pos.	Menge	Seite	Baugruppe	Bezeichnung
SECHSKANTSCHRAUBE ISO 4	11642358	310	2	439	969015908	DREHBUEHNENVERKLEIDUN
SECHSKANTSCHRAUBE ISO 4	11642358	303	2	494	96048826	ABGASANLAGE VORM.
SECHSKANTSCHRAUBE ISO 4	11642358	556	2	540	96045351	HYDRAULIK OBERWAGEN
SECHSKANTSCHRAUBE ISO 4	11642358	5	6	564	917261808	OELKUEHLER EINBAU
SECHSKANTSCHRAUBE ISO 4	11642358	13	4	577	967969608	HILFSHUBWERK WINDE 2 VO
SECHSKANTSCHRAUBE ISO 4	11642358	23	3	721	968728808	KONSOLE VORM.
SECHSKANTSCHRAUBE ISO	406601008	17	6	577	967969608	HILFSHUBWERK WINDE 2 VO
SECHSKANTSCHRAUBE ISO 4	11691328	106	10	71	919254308	RAUPENTRAEGER VORM.LI.
SECHSKANTSCHRAUBE ISO 4	11691328	107	10	101	919254408	RAUPENTRAEGER VORM.RE.
SECHSKANTSCHRAUBE ISO 4	11626706	21	4	134	919087608	DREHDURCHFUEHRUNG
SECHSKANTSCHRAUBE ISO 4	11626706	301	2	269	918731408	ANTRIEBSAGGREGAT KPL.
SECHSKANTSCHRAUBE ISO 4	11626706	316	24	276	919007708	ANTRIEBSAGGREGAT VORM.
SECHSKANTSCHRAUBE ISO 4	11626706	305	4	494	96048826	ABGASANLAGE VORM.
SECHSKANTSCHRAUBE ISO 4	11626706	15	1	705	917268408	MASTNASE
SECHSKANTSCHRAUBE ISO 4	11691682	82	4	640	917291908	ANLENKSTUECK VORM.
SECHSKANTSCHRAUBE ISO 4	11642355	31	2	417	918810308	STEUERSTAND
SECHSKANTSCHRAUBE ISO	10178901	21	32	17	919617108	RAUPENFAHRWERK KPL.
SECHSKANTSCHRAUBE ISO 4	11651006	339	8	540	96045351	HYDRAULIK OBERWAGEN
SECHSKANTSCHRAUBE ISO 4	11651006	74	3	662	917292408	TELESKOP 5 VORM.
SECHSKANTSCHRAUBE ISO 4	11658892	20	4	17	919617108	RAUPENFAHRWERK KPL.
SECHSKANTSCHRAUBE ISO 4	11658892	26	3	87	96034962	FUEHRUNG LI.
SECHSKANTSCHRAUBE ISO 4	11658892	26	3	104	96034980	FUEHRUNG RE.
SECHSKANTSCHRAUBE ISO 4	11658892	325	3	276	919007708	ANTRIEBSAGGREGAT VORM.
SECHSKANTSCHRAUBE ISO 4	11658892	48	2	644	917292008	TELESKOP 1 VORM.
SECHSKANTSCHRAUBE ISO 4	11658892	48	2	648	917292108	TELESKOP 2 VORM.
SECHSKANTSCHRAUBE ISO 4	11658892	48	2	652	917292208	TELESKOP 3 VORM.
SECHSKANTSCHRAUBE ISO 4	11658892	48	2	656	917292308	TELESKOP 4 VORM.
SECHSKANTSCHRAUBE ISO 4	11658892	28	4	721	968728808	KONSOLE VORM.
SECHSKANTSCHRAUBE ISO 4	12100096	326	8	276	919007708	ANTRIEBSAGGREGAT VORM.
SECHSKANTSCHRAUBE ISO 4	11631742	327	4	276	919007708	ANTRIEBSAGGREGAT VORM.
SECHSKANTSCHRAUBE ISO 4	11631742	300	4	491	919372008	ABGASANLAGE
SECHSKANTSCHRAUBE ISO 4	11631742	23	4	639	917291908	ANLENKSTUECK VORM.
SECHSKANTSCHRAUBE ISO 4	11642349	328	4	276	919007708	ANTRIEBSAGGREGAT VORM.
SECHSKANTSCHRAUBE ISO 4	11642349	83	4	640	917291908	ANLENKSTUECK VORM.
SECHSKANTSCHRAUBE ISO	11002727	12	5	365	917259908	KRANFUEHRERKABINE ANBA
SECHSKANTSCHRAUBE ISO 4	11645384	331	2	276	919007708	ANTRIEBSAGGREGAT VORM.
SECHSKANTSCHRAUBE ISO 4	11645384	554	12	540	96045351	HYDRAULIK OBERWAGEN
SECHSKANTSCHRAUBE ISO 4	11645384	554	4	590	967784808	HYDRAULIK HILFSHUBWERK
SECHSKANTSCHRAUBE ISO 4	11645386	35	1	134	919087608	DREHDURCHFUEHRUNG
SECHSKANTSCHRAUBE ISO 4	11645386	2	1	717	917551608	ANBAUTEILE
SECHSKANTSCHRAUBE ISO 4	11840136	27	1	87	96034962	FUEHRUNG LI.
SECHSKANTSCHRAUBE ISO 4	11840136	27	1	104	96034980	FUEHRUNG RE.
SECHSKANTSCHRAUBE ISO 4	11840136	329	1	276	919007708	ANTRIEBSAGGREGAT VORM.
SECHSKANTSCHRAUBE ISO 4	11840136	22	2	731	917267508	TRANSPORTHALTERUNG DKS
SECHSKANTSCHRAUBE ISO 4	10875517	10	4	728	917413208	SELBSTMONTAGE HILFSHU
SECHSKANTSCHRAUBE ISO 4	10878799	551	4	589	967784808	HYDRAULIK HILFSHUBWERK
SECHSKANTSCHRAUBE ISO 4	12213406	558	3	540	96045351	HYDRAULIK OBERWAGEN
SECHSKANTSCHRAUBE ISO	10875518	41	2	731	917267508	TRANSPORTHALTERUNG DKS
SECHSKANTSCHRAUBE ISO 4	12225311	16	2	731	917267508	TRANSPORTHALTERUNG DKS
SECHSKANTSCHRAUBE ISO	10179032	5	4	731	917267508	TRANSPORTHALTERUNG DKS
SECHSKANTSCHRAUBE ISO 4	4065240	335	2	277	919007708	ANTRIEBSAGGREGAT VORM.
SECHSKANTSCHRAUBE ISO 4	12100309	44	8	639	917291908	ANLENKSTUECK VORM.
SECHSKANTSCHRAUBE ISO 4	12100309	35	8	644	917292008	TELESKOP 1 VORM.
SECHSKANTSCHRAUBE ISO 4	12100309	35	8	648	917292108	TELESKOP 2 VORM.
SECHSKANTSCHRAUBE ISO 4	12100309	35	8	652	917292208	TELESKOP 3 VORM.
SECHSKANTSCHRAUBE ISO 4	12100309	35	8	656	917292308	TELESKOP 4 VORM.
SECHSKANTSCHRAUBE ISO 4	12214938	84	16	71	919254308	RAUPENTRAEGER VORM.LI.
SECHSKANTSCHRAUBE ISO 4	12214938	84	16	101	919254408	RAUPENTRAEGER VORM.RE.
SECHSKANTSCHRAUBE ISO 4	12214938	302	2	269	918731408	ANTRIEBSAGGREGAT KPL.
SECHSKANTSCHRAUBE ISO 4	12214938	5	8	442	917260108	ABSTURZSICHERUNG

Bezeichnung	Artikel	Pos.	Menge	Seite	Baugruppe	Bezeichnung
SECHSKANTSCHRAUBE ISO 4	10875519	66	4	18	919617108	RAUPENFAHRWERK KPL.
SECHSKANTSCHRAUBE ISO 4	10875519	17	22	70	919254308	RAUPENTRAEGER VORM.LI.
SECHSKANTSCHRAUBE ISO 4	10875519	17	22	100	919254408	RAUPENTRAEGER VORM.RE.
SECHSKANTSCHRAUBE ISO 4	10875519	17	4	639	917291908	ANLENKSTUECK VORM.
SECHSKANTSCHRAUBE ISO 4	12100310	40	4	639	917291908	ANLENKSTUECK VORM.
SECHSKANTSCHRAUBE ISO 4	12100310	36	4	644	917292008	TELESKOP 1 VORM.
SECHSKANTSCHRAUBE ISO 4	12100310	36	4	648	917292108	TELESKOP 2 VORM.
SECHSKANTSCHRAUBE ISO 4	12100310	36	4	652	917292208	TELESKOP 3 VORM.
SECHSKANTSCHRAUBE ISO 4	12100310	36	4	656	917292308	TELESKOP 4 VORM.
SECHSKANTSCHRAUBE ISO	406603108	3	6	158	918731108	MONTAGETEILE DREHBUEHN
SECHSKANTSCHRAUBE ISO	406603108	9	9	365	917259908	KRANFUEHRERKABINE ANBA
SECHSKANTSCHRAUBE ISO	406603108	7	3	619	919617008	WIPPZYLINDER M.LAGERUNG
SECHSKANTSCHRAUBE ISO 4	10875803	26	6	134	919087608	DREHDURCHFUEHRUNG
SECHSKANTSCHRAUBE ISO 4	10875803	16	4	577	967969608	HILFSHUBWERK WINDE 2 VO
SECHSKANTSCHRAUBE ISO 4	10875803	9	8	731	917267508	TRANSPORTHALTERUNG DKS
SECHSKANTSCHRAUBE ISO 4	10875520	25	24	70	919254308	RAUPENTRAEGER VORM.LI.
SECHSKANTSCHRAUBE ISO 4	10875520	25	24	100	919254408	RAUPENTRAEGER VORM.RE.
SECHSKANTSCHRAUBE ISO 4	12100283	48	14	639	917291908	ANLENKSTUECK VORM.
SECHSKANTSCHRAUBE ISO 4	12100283	37	14	644	917292008	TELESKOP 1 VORM.
SECHSKANTSCHRAUBE ISO 4	12100283	37	12	648	917292108	TELESKOP 2 VORM.
SECHSKANTSCHRAUBE ISO 4	12100283	37	12	652	917292208	TELESKOP 3 VORM.
SECHSKANTSCHRAUBE ISO 4	12100283	37	12	656	917292308	TELESKOP 4 VORM.
SECHSKANTSCHRAUBE ISO	406608908	338	6	277	919007708	ANTRIEBSAGGREGAT VORM.
SECHSKANTSCHRAUBE ISO 4	10875804	303	1	269	918731408	ANTRIEBSAGGREGAT KPL.
SECHSKANTSCHRAUBE ISO	406603408	7	1	732	929582108	HALTERUNG VORM.
SECHSKANTSCHRAUBE ISO 4	10875521	304	1	269	918731408	ANTRIEBSAGGREGAT KPL.
SECHSKANTSCHRAUBE ISO 4	12226910	301	5	276	919007708	ANTRIEBSAGGREGAT VORM.
SECHSKANTSCHRAUBE ISO 4	12223051	7	1	731	917267508	TRANSPORTHALTERUNG DKS
SECHSKANTSCHRAUBE ISO 4	10001467	31	4	121	919644008	HYDRAULISCHE ABSTUETZUN
SECHSKANTSCHRAUBE ISO	12225211	12	2	728	917413208	SELBSTMONTAGE HILFSHU
SECHSKANTSCHRAUBE ISO 4	12224035	87	2	73	90028956	FAHRANTRIEB
SECHSKANTSCHRAUBE ISO 4	4600199	27	3	134	919087608	DREHDURCHFUEHRUNG
SECHSKANTSCHRAUBE ISO 4	4065281	32	12	134	919087608	DREHDURCHFUEHRUNG
SECHSKANTSCHRAUBE ISO 4	10875805	345	4	277	919007708	ANTRIEBSAGGREGAT VORM.
SECHSKANTSCHRAUBE ISO 4	10875805	12	10	731	917267508	TRANSPORTHALTERUNG DKS
SECHSKANTSCHRAUBE ISO	406604208	27	2	70	919254308	RAUPENTRAEGER VORM.LI.
SECHSKANTSCHRAUBE ISO	406604208	27	2	100	919254408	RAUPENTRAEGER VORM.RE.
SECHSKANTSCHRAUBE ISO 4	10875422	5	1	323	917626608	KRAFTSTOFFBEHAELTER AN
SECHSKANTSCHRAUBE ISO 4	10875422	9	1	332	917825508	OELBEHAELTER ANBAU
SECHSKANTSCHRAUBE ISO	406605808	6	4	619	919617008	WIPPZYLINDER M.LAGERUNG
SECHSKANTSCHRAUBE ISO	4901595	21	4	70	919254308	RAUPENTRAEGER VORM.LI.
SECHSKANTSCHRAUBE ISO	4901595	21	4	100	919254408	RAUPENTRAEGER VORM.RE.
SECHSKANTSCHRAUBE ISO 4	406607008	3	1	629	968068308	MONTAGEVORRICHTUNG
SECHSKANTSCHRAUBE ISO 4	406607008	8	4	721	968728808	KONSOLE VORM.
SECHSKANTSCHRAUBE ISO 4	12228747	23	4	17	919617108	RAUPENFAHRWERK KPL.
SECHSKANTSCHRAUBE ISO	11690047	(3)	2	449	96036957	ELEKTRIK ANBAUTEILE KABIN
SECHSKANTSCHRAUBE ISO	12211444	(3)	2	705	917268408	MASTNASE
SECHSKANTSCHRAUBE ISO	11140402	37	8	417	918810308	STEUERSTAND
SECHSKANTSCHRAUBE ISO	11140402	310	4	539	96045351	HYDRAULIK OBERWAGEN
SECHSKANTSCHRAUBE ISO	11647548	313	2	90	96035796	HYDR.FAHRANTRIEB
SECHSKANTSCHRAUBE ISO	11647548	313	2	107	96035792	HYDR.FAHRANTRIEB
SECHSKANTSCHRAUBE ISO	4600871	11	4	38	968054008	MONTAGEPLATTE VORM.
SECHSKANTSCHRAUBE ISO	11642497	(302)	1	275	919007708	ANTRIEBSAGGREGAT VORM.
SECHSKANTSCHRAUBE ISO	11642497	41	2	365	917259908	KRANFUEHRERKABINE ANBA
SECHSKANTSCHRAUBE ISO	11642497	54	1	383	917305408	INNENVERKLEIDUNG EINBAU
SECHSKANTSCHRAUBE ISO	11642497	98	4	645	917292008	TELESKOP 1 VORM.
SECHSKANTSCHRAUBE ISO	11642497	98	4	649	917292108	TELESKOP 2 VORM.
SECHSKANTSCHRAUBE ISO	11642497	98	4	653	917292208	TELESKOP 3 VORM.
SECHSKANTSCHRAUBE ISO	11642497	98	4	657	917292308	TELESKOP 4 VORM.
SECHSKANTSCHRAUBE ISO	11642497	83	4	662	917292408	TELESKOP 5 VORM.

Bezeichnung	Artikel	Pos.	Menge	Seite	Baugruppe	Bezeichnung
SECHSKANTSCHRAUBE ISO	11692824	9	12	21	96034894	SCHUTZBLECH KPL.LI.
SECHSKANTSCHRAUBE ISO	11692824	9	12	24	96034977	SCHUTZBLECH KPL.RE.
SECHSKANTSCHRAUBE ISO	11692824	318	2	51	96035801	HYDRAULIK MITTELTEIL
SECHSKANTSCHRAUBE ISO	11692824	17	4	396	916168308	LUFTFUEHRUNG
SECHSKANTSCHRAUBE ISO	11692824	313	2	429	96036790	DREHBUEHNENVERKLEIDUN
SECHSKANTSCHRAUBE ISO	11692824	14	2	433	968923508	KLAPPE VORM.RECHTS
SECHSKANTSCHRAUBE ISO	11692824	308	6	539	96045351	HYDRAULIK OBERWAGEN
SECHSKANTSCHRAUBE ISO	11692824	314	2	589	967784808	HYDRAULIK HILFSHUBWERK
SECHSKANTSCHRAUBE ISO	11657360	302	4	280	96034631	KUEHLER VORM.
SECHSKANTSCHRAUBE ISO	11657360	11	2	574	918628408	KLIMAANLAGE OW
SECHSKANTSCHRAUBE ISO	11657360	(10)	3	577	967969608	HILFSHUBWERK WINDE 2 VO
SECHSKANTSCHRAUBE ISO 4	10001739	46	1	405	917304708	SCHIEBETUER EINBAU
SECHSKANTSCHRAUBE ISO 4	10001739	4	2	683	966591508	ENDSCHALTER ANBAU
SECHSKANTSCHRAUBE ISO	11644899	15	1	38	968054008	MONTAGEPLATTE VORM.
SECHSKANTSCHRAUBE ISO 4	4002860	32	4	47	11346779	SCHLEIFRINGUEBERTRAGER
SECHSKANTSCHRAUBE ISO 4	10197836	11	2	525	926891108	VERTEILER MASSE
SECHSKANTSCHRAUBE ISO 4	10197836	35	2	639	917291908	ANLENKSTUECK VORM.
SECHSKANTSCHRAUBE ISO 4	10197836	59	2	644	917292008	TELESKOP 1 VORM.
SECHSKANTSCHRAUBE ISO 4	10197836	59	2	648	917292108	TELESKOP 2 VORM.
SECHSKANTSCHRAUBE ISO 4	10197836	59	2	652	917292208	TELESKOP 3 VORM.
SECHSKANTSCHRAUBE ISO 4	10197836	59	2	656	917292308	TELESKOP 4 VORM.
SECHSKANTSCHRAUBE ISO	12216201	354	2	439	969015908	DREHBUEHNENVERKLEIDUN
SECHSKANTSCHRAUBE ISO	12216201	27	4	721	968728808	KONSOLE VORM.
SECHSKANTSCHRAUBE ISO	12216202	20	2	134	919087608	DREHDURCHFUEHRUNG
SECHSKANTSCHRAUBE ISO	10181340	39	4	47	11346779	SCHLEIFRINGUEBERTRAGER
SECHSKANTSCHRAUBE ISO 4	11007009	7	1	405	917304708	SCHIEBETUER EINBAU
SECHSKANTSCHRAUBE ISO	11690048	16	1	85	968420608	STAUKASTEN VORM.
SECHSKANTSCHRAUBE ISO	11690048	8	1	368	919010208	KRANFUEHRERKABINE VORM.
SECHSKANTSCHRAUBE ISO	11690048	14	2	372	916177508	TRITT KPL.
SECHSKANTSCHRAUBE ISO	11690048	27	2	414	969085208	HEIZUNG VORM.
SECHSKANTSCHRAUBE ISO	11690048	5	8	623	917260608	GEGENGEWICHT M.BEFESTIG
SECHSKANTSCHRAUBE ISO	11690048	54	2	661	917292408	TELESKOP 5 VORM.
SECHSKANTSCHRAUBE ISO	11690048	301	2	693	967785408	ZUSATZHYDRAULIK KLAPPSPI
SECHSKANTSCHRAUBE ISO 4	10299649	24	2	474	967928508	VERRIEGELUNG
SECHSKANTSCHRAUBE ISO	11651612	12	4	21	96034894	SCHUTZBLECH KPL.LI.
SECHSKANTSCHRAUBE ISO	11651612	12	4	24	96034977	SCHUTZBLECH KPL.RE.
SECHSKANTSCHRAUBE ISO	11651612	20	4	25	968019508	ENDSCHALTER ANBAU
SECHSKANTSCHRAUBE ISO	11651612	303	8	51	96035801	HYDRAULIK MITTELTEIL
SECHSKANTSCHRAUBE ISO	11651612	5	4	87	96034962	FUEHRUNG LI.
SECHSKANTSCHRAUBE ISO	11651612	5	4	104	96034980	FUEHRUNG RE.
SECHSKANTSCHRAUBE ISO	11651612	21	16	111	917691008	ABSTURZSICHERUNG
SECHSKANTSCHRAUBE ISO	11651612	26	8	121	919644008	HYDRAULISCHE ABSTUETZUN
SECHSKANTSCHRAUBE ISO	11651612	68	16	137	919499408	ZENTRALBALLAST
SECHSKANTSCHRAUBE ISO	11651612	16	8	158	918731108	MONTAGETEILE DREHBUEHN
SECHSKANTSCHRAUBE ISO	11651612	306	2	269	918731408	ANTRIEBSAGGREGAT KPL.
SECHSKANTSCHRAUBE ISO	11651612	304	18	280	96034631	KUEHLER VORM.
SECHSKANTSCHRAUBE ISO	11651612	15	4	352	917259708	HAUPTHUBWERK
SECHSKANTSCHRAUBE ISO	11651612	30	2	372	916177508	TRITT KPL.
SECHSKANTSCHRAUBE ISO	11651612	21	2	390	916162508	SCHEIBEN EINBAU
SECHSKANTSCHRAUBE ISO	11651612	11	4	410	917676208	HEIZUNG KRANFUEHRERKAB
SECHSKANTSCHRAUBE ISO	11651612	26	3	414	969085208	HEIZUNG VORM.
SECHSKANTSCHRAUBE ISO	11651612	312	2	429	96036790	DREHBUEHNENVERKLEIDUN
SECHSKANTSCHRAUBE ISO	11651612	22	5	462	918759808	ZUSATZHEIZUNG OW
SECHSKANTSCHRAUBE ISO	11651612	21	4	464	96020359	ZUSATZHEIZUNG VORM.
SECHSKANTSCHRAUBE ISO	11651612	22	2	475	967978908	VERRIEGELUNG VORM.
SECHSKANTSCHRAUBE ISO	11651612	58	3	483	918484108	HARNSTOFFANLAGE
SECHSKANTSCHRAUBE ISO	11651612	322	6	539	96045351	HYDRAULIK OBERWAGEN
SECHSKANTSCHRAUBE ISO	11651612	58	2	661	917292408	TELESKOP 5 VORM.
SECHSKANTSCHRAUBE ISO	11651612	15	6	672	966134608	ANBAUTEILE ZYLINDER
SECHSKANTSCHRAUBE ISO	11651612	27	2	731	917267508	TRANSPORTHALTERUNG DKS

Bezeichnung	Artikel	Pos.	Menge	Seite	Baugruppe	Bezeichnung
SECHSKANTSCHRAUBE ISO 4	406527808	24	4	405	917304708	SCHIEBETUER EINBAU
SECHSKANTSCHRAUBE ISO 4	406527808	302	3	491	919372008	ABGASANLAGE
SECHSKANTSCHRAUBE ISO	12216205	9	4	565	967980508	OELKUEHLER VORM.
SECHSKANTSCHRAUBE ISO	11651767	307	19	276	919007708	ANTRIEBSAGGREGAT VORM.
SECHSKANTSCHRAUBE ISO	11651767	303	4	280	96034631	KUEHLER VORM.
SECHSKANTSCHRAUBE ISO	11651767	300	3	326	919231108	KRAFTSTOFFFOERDERUNG
SECHSKANTSCHRAUBE ISO	11651767	13	3	373	96025887	PEDALTRAEGER EINBAU
SECHSKANTSCHRAUBE ISO	11651767	15	4	399	916163008	WISCHANLAGE EINBAU
SECHSKANTSCHRAUBE ISO	11651767	24	1	414	969085208	HEIZUNG VORM.
SECHSKANTSCHRAUBE ISO	11651767	310	2	429	96036790	DREHBUEHNENVERKLEIDUN
SECHSKANTSCHRAUBE ISO	11651767	17	4	433	968923508	KLAPPE VORM.RECHTS
SECHSKANTSCHRAUBE ISO	11651767	306	5	439	969015908	DREHBUEHNENVERKLEIDUN
SECHSKANTSCHRAUBE ISO	11651767	21	13	462	918759808	ZUSATZHEIZUNG OW
SECHSKANTSCHRAUBE ISO	11651767	31	1	464	96020359	ZUSATZHEIZUNG VORM.
SECHSKANTSCHRAUBE ISO	11651767	301	4	499	918731908	LUFTFILTERANLAGE
SECHSKANTSCHRAUBE ISO	11651767	52	1	522	969256608	GRUNDAUFBAU
SECHSKANTSCHRAUBE ISO	11651767	334	10	540	96045351	HYDRAULIK OBERWAGEN
SECHSKANTSCHRAUBE ISO	11651767	301	2	595	969426308	ZUSATZHYDRAULIK KLAPPSPI
SECHSKANTSCHRAUBE ISO	11651767	29	17	639	917291908	ANLENKSTUECK VORM.
SECHSKANTSCHRAUBE ISO	11651767	4	2	644	917292008	TELESKOP 1 VORM.
SECHSKANTSCHRAUBE ISO	11651767	4	2	648	917292108	TELESKOP 2 VORM.
SECHSKANTSCHRAUBE ISO	11651767	4	2	652	917292208	TELESKOP 3 VORM.
SECHSKANTSCHRAUBE ISO	11651767	4	2	656	917292308	TELESKOP 4 VORM.
SECHSKANTSCHRAUBE ISO	11651767	28	4	661	917292408	TELESKOP 5 VORM.
SECHSKANTSCHRAUBE ISO	11651767	32	2	731	917267508	TRANSPORTHALTERUNG DKS
SECHSKANTSCHRAUBE ISO 4	502618908	20	2	158	918731108	MONTAGETEILE DREHBUEHN
SECHSKANTSCHRAUBE ISO 4	10197831	7	2	127	917257108	ZENTRALSCHMIERUNG RAUP
SECHSKANTSCHRAUBE ISO 4	10197831	36	4	134	919087608	DREHDURCHFUEHRUNG
SECHSKANTSCHRAUBE ISO 4	10197831	311	2	276	919007708	ANTRIEBSAGGREGAT VORM.
SECHSKANTSCHRAUBE ISO 4	10197831	311	7	429	96036790	DREHBUEHNENVERKLEIDUN
SECHSKANTSCHRAUBE ISO 4	10197831	26	2	474	967928508	VERRIEGELUNG
SECHSKANTSCHRAUBE ISO 4	10197831	53	4	483	918484108	HARNSTOFFANLAGE
SECHSKANTSCHRAUBE ISO 4	10197831	20	2	502	917261208	ZENTRALSCHMIERANLAGE O
SECHSKANTSCHRAUBE ISO 4	10197831	8	2	525	926891108	VERTEILER MASSE
SECHSKANTSCHRAUBE ISO 4	10197831	15	10	565	967980508	OELKUEHLER VORM.
SECHSKANTSCHRAUBE ISO 4	10197831	15	2	639	917291908	ANLENKSTUECK VORM.
SECHSKANTSCHRAUBE ISO 4	10197831	76	2	662	917292408	TELESKOP 5 VORM.
SECHSKANTSCHRAUBE ISO 4	10197831	308	2	699	967785008	ZUSATZHYDRAULIK KLAPPSPI
SECHSKANTSCHRAUBE ISO 4	10197831	26	4	705	917268408	MASTNASE
SECHSKANTSCHRAUBE ISO 4	406590105	3	2	716	967937608	HINDERNISFEUER VORM.
SECHSKANTSCHRAUBE ISO 4	500411708	56	6	17	919617108	RAUPENFAHRWERK KPL.
SECHSKANTSCHRAUBE ISO	11826527	309	4	276	919007708	ANTRIEBSAGGREGAT VORM.
SECHSKANTSCHRAUBE ISO	11826527	305	4	280	96034631	KUEHLER VORM.
SECHSKANTSCHRAUBE ISO	11826527	305	2	283	968026308	KUPPLUNGSSTELLER
SECHSKANTSCHRAUBE ISO	11826527	24	2	365	917259908	KRANFUEHRERKABINE ANBA
SECHSKANTSCHRAUBE ISO	11826527	45	1	383	917305408	INNENVERKLEIDUNG EINBAU
SECHSKANTSCHRAUBE ISO	11826527	4	2	639	917291908	ANLENKSTUECK VORM.
SECHSKANTSCHRAUBE ISO	11692827	7	1	112	968038208	LAGERUNG VORN LI.
SECHSKANTSCHRAUBE ISO	11692827	7	1	113	968038308	LAGERUNG VORN RE.
SECHSKANTSCHRAUBE ISO	11692827	28	2	365	917259908	KRANFUEHRERKABINE ANBA
SECHSKANTSCHRAUBE ISO	11692827	22	1	464	96020359	ZUSATZHEIZUNG VORM.
SECHSKANTSCHRAUBE ISO	11692827	19	4	577	967969608	HILFSHUBWERK WINDE 2 VO
SECHSKANTSCHRAUBE ISO	11692827	302	13	699	967785008	ZUSATZHYDRAULIK KLAPPSPI
SECHSKANTSCHRAUBE ISO	11690046	11	2	661	917292408	TELESKOP 5 VORM.
SECHSKANTSCHRAUBE ISO	10875538	44	2	383	917305408	INNENVERKLEIDUNG EINBAU
SECHSKANTSCHRAUBE ISO 8	12216237	303	3	478	969763408	VERROHRUNG DRUCKLUFTA
SECHSKANTSCHRAUBE M5X1	10876387	12	6	36	96045226	SCHALTKASTEN VORM.
SECHSKANTSTIFTSCHLUESS	885166108	29	1	144	928569808	GRUNDWERKZEUG
SECHSRUNDSCHRAUBE M10X	10138656	4	14	236	10140087	ABGASROHR ANBAU
SECHSRUNDSCHRAUBE M14X	10139578	6	2	196	10120186	MASSENAUSGLEICH ANBAU

Bezeichnung	Artikel	Pos.	Menge	Seite	Baugruppe	Bezeichnung
SECHSRUNDSCHRAUBE M16	10125439	3	6	189	10149580	ZYLINDERKOPF ANBAU
SECHSRUNDSCHRAUBE M16	10118910	4	10	251	9077238	SCHWUNGRAD ANBAU
SECHSRUNDSCHRAUBE M16	10118912	10	6	187	10141974	KURBELWELLENANBAUTEILE
SECHSRUNDSCHRAUBE M18X	10130816	5	10	168	10154379	KURBELGEHAEUSE VORM.
SECHSRUNDSCHRAUBE M8X	10118695	9	3	220	10149677	VERBINDUNGSLEITUNG ANBA
SECHSRUNDSCHRAUBE M8X	10125702	3	2	237	10144756	HITZESCHUTZ MIT BEFESTIG
SEIL 2 2,3KN EDELSTAHL	11160431	35	2	121	919644008	HYDRAULISCHE ABSTUETZUN
SEIL 2 2,3KN EDELSTAHL	11160431	9	0.3	733	923285508	KLAPPKONSOLE VORM.
SEIL 2 2,3KN EDELSTAHL	11160431	3	0.4	738	968090008	HAKENSTANGE ANBAU
SEIL 6 0,59KN PERLON	773404508	6	1.6	630	925141508	SCHLAUCHFUEHRUNG VORM.
SEIL 6 0,59KN PERLON	773404508	19	2.5	721	968728808	KONSOLE VORM.
SEIL F.WINDE 1	917259808	127	1	10		LIEBHERR LTR 1220
SEILFESTPUNKT	11347027	2	1	724	910836808	HAKENFLASCHE
SEILKLEMME DIN 1142 22 VER	773913308	6	1	628	919028808	MECH.TEILE VERSANDMONT
SEILLAENGENGEBER 15M LSB	10802064	20	1	673	966473108	GEBER ANLENKSTUECK
SEILROLLE 437X12.5 S355J2+	97027358	1	1	665	967771908	SEILROLLE KPL.
SEILROLLE D=572/506/210X63	773953608	1	1	725	925203408	SEILROLLE KPL.
SEILROLLE KPL.	967771908	78	7	662	917292408	TELESKOP 5 VORM.
SEILROLLE KPL.	967771908	27	1	705	917268408	MASTNASE
SEILROLLE KPL. SPF	921456108	2	1	661	917292408	TELESKOP 5 VORM.
SEILROLLE KPL. SPF	921456108	1	1	709	910040808	2.NACKENROLLE EINBAU
SEILROLLE KPL. SPF	925203408	1	5	724	910836808	HAKENFLASCHE
SEILROLLE RD508X63 PA6G	288195608	1	1	663	921456108	SEILROLLE KPL.
SEILSCHUTZ KPL.	571716008	10	1	724	910836808	HAKENFLASCHE
SEILSCHUTZ KPL.	571716108	12	2	724	910836808	HAKENFLASCHE
SEILTROMMEL	939294001	1	1	579	90028852	KOMPAKTSEILWINDE
SEILTROMMEL D=490 SEIL=23	932916901	1	1	354	90208882	KOMPAKTSEILWINDE
SEITENBLECH	11658586	8	2	724	910836808	HAKENFLASCHE
SEITENBLECH SCHWK.	968981408	1	1	280	96034631	KUEHLER VORM.
SEITENBLECH SCHWK.	968981508	2	1	280	96034631	KUEHLER VORM.
SEITENSCHEIBE LI. 646.2X94X	97003560	2	1	390	916162508	SCHEIBEN EINBAU
SEITENSCHEIBE RE. 1252X12	97003561	3	1	390	916162508	SCHEIBEN EINBAU
SELBSTMONTAGE HILFSHU	917413208	334	1	11		LIEBHERR LTR 1220
SENKBREMSVENTIL	10326277	35	1	668	10876933	TELESKOPIERZYLINDER
SENKBREMSVENTIL	571413308	36	1	668	10876933	TELESKOPIERZYLINDER
SENKBREMSVENTIL SPF	10038474	150	1	538	96045351	HYDRAULIK OBERWAGEN
SENKSCHRAUBE AEHNL.ISO	12100589	45	4	417	918810308	STEUERSTAND
SENKSCHRAUBE AEHNL.ISO	12100589	13	12	433	968923508	KLAPPE VORM.RECHTS
SENKSCHRAUBE AEHNL.ISO	12100589	3	8	441	969016008	KLAPPE VORM.VORN LINKS
SENKSCHRAUBE DIN 7991 M1	10877246	15	16	661	917292408	TELESKOP 5 VORM.
SENKSCHRAUBE DIN 7991 M1	10179447	40	36	116	968046208	ANBAUTEILE
SENKSCHRAUBE DIN 7991 M	10876388	46	8	522	969256608	GRUNDAUFBAU
SENKSCHRAUBE DIN 7991 M5	408603508	33	4	417	918810308	STEUERSTAND
SENKSCHRAUBE DIN 7991 M	10875549	20	2	396	916168308	LUFTFUEHRUNG
SENKSCHRAUBE DIN 7991 M	10875550	16	8	518	919503008	EINBAUTEILE SCHALTSCHRAN
SENKSCHRAUBE DIN 7991 M	10875550	51	16	522	969256608	GRUNDAUFBAU
SENKSCHRAUBE DIN 7991 M	10875809	11	4	390	916162508	SCHEIBEN EINBAU
SENKSCHRAUBE DIN 7991 M	10875809	6	4	737	917268208	LEITER ANBAU
SENKSCHRAUBE DIN 7991 M	10875551	16	6	365	917259908	KRANFUEHRERKABINE ANBA
SENKSCHRAUBE DIN 7991 M	10875551	12	8	390	916162508	SCHEIBEN EINBAU
SENKSCHRAUBE DIN 7991 M	10875551	13	8	393	966497908	FRONTSCHEIBE KPL.
SENKSCHRAUBE DIN 7991 M	10875551	18	4	405	917304708	SCHIEBETUER EINBAU
SENKSCHRAUBE DIN 7991 M	11113906	33	4	116	968046208	ANBAUTEILE
SENKSCHRAUBE DIN 7991 M	10875552	17	16	121	919644008	HYDRAULISCHE ABSTUETZUN
SENKSCHRAUBE DIN 7991 M	10875552	51	6	639	917291908	ANLENKSTUECK VORM.
SENKSCHRAUBE DIN 7991 M	10875552	57	6	644	917292008	TELESKOP 1 VORM.
SENKSCHRAUBE DIN 7991 M	10875553	64	4	18	919617108	RAUPENFAHRWERK KPL.
SENKSCHRAUBE DIN 7991 M	10875553	3	3	47	11346779	SCHLEIFRINGUEBERTRAGER
SENKSCHRAUBE ISO 10642 M	12100586	10	8	625	967936908	GEGENGEWICHT KPL.
SENKSCHRAUBE ISO 10642 M	12100586	11	2	728	917413208	SELBSTMONTAGE HILFSHU

Bezeichnung	Artikel	Pos.	Menge	Seite	Baugruppe	Bezeichnung
SENKSCHRAUBE ISO 10642	10878064	16	56	17	919617108	RAUPENFAHRWERK KPL.
SENKSCHRAUBE ISO 10642	12100279	10	4	394	965784408	DACHSCHEIBE VORM.
SENKSCHRAUBE ISO 14581 M	12210040	4	3	186	10153583	KURBELWELLENDICHTUNG
SENKSCHRAUBE ISO 7047 M	12216233	12	12	335	969050308	OELBEHAELTER VORM.
SENKSCHRAUBE ISO 7047 M	12100291	3	4	628	919028808	MECH.TEILE VERSANDMONT
SENSORHALTER 30X75X190 P	972261508	31	2	672	966134608	ANBAUTEILE ZYLINDER
SENSORROHR	12898856	103	1	494	96048826	ABGASANLAGE VORM.
SENSORSTEUERGERAET NI	10144039	(154)	1	494	96048826	ABGASANLAGE VORM.
SICHELBLECH SCHWK.	967970008	2	2	577	967969608	HILFSHUBWERK WINDE 2 VO
SICHELBLECH SCHWK. FE//ZN	968054808	5	2	352	917259708	HAUPTHUBWERK
SICHERHEITSELEMENT	10294939	3	1	500	10871700	LUFTFILTER
SICHERHEITSKLAPPSTECKER	571817208	6	1	620	10040024	TASCHENSCHLOSS
SICHERHEITSKLAPPSTECKER	10875869	34	4	121	919644008	HYDRAULISCHE ABSTUETZUN
SICHERHEITSKLAPPSTECKER	10875869	60	4	661	917292408	TELESKOP 5 VORM.
SICHERHEITSKLAPPSTECKER	10875869	7	1	708	967321308	HALTERUNG 2.HUB OBEN
SICHERHEITSKLAPPSTECKER	10875869	(1)	2	724	910836808	HAKENFLASCHE
SICHERHEITSKLAPPSTECKER	10875870	51	4	17	919617108	RAUPENFAHRWERK KPL.
SICHERHEITSKLAPPSTECKER	10875870	35	1	365	917259908	KRANFUEHRERKABINE ANBA
SICHERHEITSWARNBLINKLEU	607106208	2	2	145	928620108	ZUBEHOER
SICHERUNG 50A 32V SPF	10023751	(20)	1	321	96023914	ELEKTRIK BATTERIEKASTEN
SICHERUNGSBOLZEN 30.0X2	97073453	103	2	71	919254308	RAUPENTRAEGER VORM.LI.
SICHERUNGSBOLZEN 30.0X2	97073453	104	2	101	919254408	RAUPENTRAEGER VORM.RE.
SICHERUNGSCLIP	11002524	1	2	470	11212257	GURTTRAGESYSTEM
SICHERUNGSCLIP FUER GRI	10678848	4	2	454	10343693	MEISTERSCHALTER
SICHERUNGSDOSE 6-POL, L	604501608	2	10	529	969061708	TRAEGERBLECH SICHERUNG
SICHERUNGSEINSATZ 100A D	10878143	(22)	1	321	96023914	ELEKTRIK BATTERIEKASTEN
SICHERUNGSEINSATZ 80A D	10878142	(21)	1	321	96023914	ELEKTRIK BATTERIEKASTEN
SICHERUNGSEINSATZ DIN 72	6905877	(1)	1	256	10151329	KABELSATZ ANBAU
SICHERUNGSFALLE	571716208	34	2	724	910836808	HAKENFLASCHE
SICHERUNGSFEDER 3X55 V	433102808	101	1	429	96036790	DREHBUEHNENVERKLEIDUN
SICHERUNGSFEDER 3X55 V	433102808	101	1	439	969015908	DREHBUEHNENVERKLEIDUN
SICHERUNGSFEDER 3X55 V	433102808	5	1	715	967936408	WINDWARNUNG VORM.
SICHERUNGSFEDER 4,5X98 IS	433100908	62	1	71	919254308	RAUPENTRAEGER VORM.LI.
SICHERUNGSFEDER 4,5X98 IS	433100908	62	1	101	919254408	RAUPENTRAEGER VORM.RE.
SICHERUNGSFEDER 4,5X98 IS	433100908	37	4	121	919644008	HYDRAULISCHE ABSTUETZUN
SICHERUNGSFEDER 4,5X98 IS	433100908	25	1	134	919087608	DREHDURCHFUEHRUNG
SICHERUNGSFEDER 4,5X98 IS	433100908	11	4	623	917260608	GEGENGEWICHT M.BEFESTIG
SICHERUNGSFEDER 4,5X98 IS	433100908	24	3	705	917268408	MASTNASE
SICHERUNGSFEDER 4,5X98 IS	433100908	44	1	731	917267508	TRANSPORTHALTERUNG DKS
SICHERUNGSFEDER 4X68 ISO	433101208	49	1	70	919254308	RAUPENTRAEGER VORM.LI.
SICHERUNGSFEDER 4X68 ISO	433101208	49	1	100	919254408	RAUPENTRAEGER VORM.RE.
SICHERUNGSFEDER 4X68 ISO	433101208	10	2	575	917267108	HILFSHUBWERK WINDE 2
SICHERUNGSFEDER 4X68 ISO	433101208	11	2	705	917268408	MASTNASE
SICHERUNGSFEDER 4X68 ISO	433101208	2	1	708	967321308	HALTERUNG 2.HUB OBEN
SICHERUNGSFEDER 4X68 ISO	433101208	13	2	728	917413208	SELBSTMONTAGE HILFSHU
SICHERUNGSFEDER 4X68 ISO	433101208	8	1	733	923285508	KLAPPKONSOLE VORM.
SICHERUNGSFEDER 5X122 IS	433102508	80	1	662	917292408	TELESKOP 5 VORM.
SICHERUNGSFEDER 5X122 IS	433102508	12	1	714	967933408	GRUNDHALTER VORM.
SICHERUNGSFEDER DIN 2194	433105008	6	1	629	968068308	MONTAGEVORRICHTUNG
SICHERUNGSFEDER DIN 2194	433105008	28	1	705	917268408	MASTNASE
SICHERUNGSHALTER RAUP	968331708	9	6	116	968046208	ANBAUTEILE
SICHERUNGSKNOPF	10470667	9	1	620	10040024	TASCHENSCHLOSS
SICHERUNGSRING	10356273	37	1	307	10872488	TRIEBWERK
SICHERUNGSRING DIN 471 21	10872700	3	2	663	921456108	SEILROLLE KPL.
SICHERUNGSRING DIN 471 21	10872700	3	2	725	925203408	SEILROLLE KPL.
SICHERUNGSRING DIN 471 21	428009008	3	2	665	967771908	SEILROLLE KPL.
SICHERUNGSRING DIN 471 22	463000003	41	3	340	90008901	DREHWERKANTRIEB
SICHERUNGSRING DIN 471 2	463000103	21	5	340	90008901	DREHWERKANTRIEB
SICHERUNGSRING DIN 471 2	463000103	43	3	357	939292201	PLANETENGETRIEBE
SICHERUNGSRING DIN 471 3	428011301	7	2	194	11448005	KIPPHEBELBOCK VORM.

Bezeichnung	Artikel	Pos.	Menge	Seite	Baugruppe	Bezeichnung
SICHERUNGSRING DIN 471 3	428002908	36	1	296	10663105	TRIEBWERK
SICHERUNGSRING DIN 471 3	10171579	29	2	305	10871282	VERSTELLPUMPE
SICHERUNGSRING DIN 471 3	10171579	92	1	340	90008901	DREHWERKANTRIEB
SICHERUNGSRING DIN 471 4	400208003	33	3	359	90017588	PLANETENTRAEGER
SICHERUNGSRING DIN 471 50	10875659	36	1	307	10872488	TRIEBWERK
SICHERUNGSRING DIN 471 5	10171585	52	1	73	90028956	FAHRANTRIEB
SICHERUNGSRING DIN 471 5	400093303	8	5	357	939292201	PLANETENGETRIEBE
SICHERUNGSRING DIN 471 8X	10450160	7	1	408	966253908	WAGEN
SICHERUNGSRING DIN 471 9	12100338	21	4	372	916177508	TRITT KPL.
SICHERUNGSRING DIN 472 1	4281019	12	1	583	939294201	PLANETENGETRIEBE
SICHERUNGSRING DIN 472 1	4281048	13	1	583	939294201	PLANETENGETRIEBE
SICHERUNGSRING DIN 472 17	428105908	18	1	355	932916901	SEILTROMMEL
SICHERUNGSRING DIN 472 17	428105908	21	1	581	939294001	SEILTROMMEL
SICHERUNGSRING DIN 472 3	428100708	5	1	281	10429930	ZAHNRADMOTOR
SICHERUNGSRING DIN 472 6	10171626	67	1	340	90008901	DREHWERKANTRIEB
SICHERUNGSRING DIN 472 7	10171628	14	1	47	11346779	SCHLEIFRINGUEBERTRAGER
SICHERUNGSRING DIN 472 8	428102508	12	1	347	570109008	TRIEBWERK
SICHERUNGSRING DIN 472 8	428102708	4	1	583	939294201	PLANETENGETRIEBE
SICHERUNGSRING DIN 472 8	10171631	4	1	357	939292201	PLANETENGETRIEBE
SICHERUNGSRING DIN 472 90	12100657	37	1	296	10663105	TRIEBWERK
SICHERUNGSSCHEIBE DIN 67	12210037	3	1	253	10144098	BEFESTIGUNGSSCHELLE
SICHERUNGSSCHEIBE VS 10	423901508	26	1	581	939294001	SEILTROMMEL
SICHERUNGSSCHEIBE VS 10	423901508	53	12	583	939294201	PLANETENGETRIEBE
SICHERUNGSSCHEIBE VS 10	4229913	53	12	357	939292201	PLANETENGETRIEBE
SICHERUNGSSCHEIBE VS 12	423911201	93	8	73	90028956	FAHRANTRIEB
SICHERUNGSSCHEIBE VS 20	423912001	69	12	73	90028956	FAHRANTRIEB
SICHERUNGSSCHEIBE VS 8	423910801	27	8	340	90008901	DREHWERKANTRIEB
SICHERUNGSSCHEIBE VS 8	423910801	75	8	340	90008901	DREHWERKANTRIEB
SICHERUNGSSCHRAUBE M1	10153538	2	2	198	9079870	STEUERUNGSTEILE
SICHERUNGSSTIFT FOR JPT P	602338208	503	3	448	96036956	KABELSTRANG
SICHERUNGSSTIFT FOR JPT P	602338208	520	5	520	96045387	DRAEHTE GRUNDAUFBAU KPL
SICHTFENSTER	11110060	39	1	504	10327065	ELEKTROPUMPE
SIEBFILTER	10346599	(1)	1	538	96045351	HYDRAULIK OBERWAGEN
SIEBHUELSE	570066308	5	1	94	502806508	AUSGLEICHSBEHAELTER
SITZTEIL KPL.	12100570	55	1	419	10877138	FAHRERSITZ
SONNENRAD Z=21 18CrNiMo7-	927601901	25	1	357	939292201	PLANETENGETRIEBE
SONNENRAD Z=24 18CrNiMo7-	939251401	30	1	340	90008901	DREHWERKANTRIEB
SONNENRAD Z=24 18CrNiMo7-	939251601	45	1	340	90008901	DREHWERKANTRIEB
SONNENRAD Z=24 18CrNiMo7-	939251701	60	1	340	90008901	DREHWERKANTRIEB
SONNENRAD Z=28 18CrNiMo7-	927602901	35	1	357	939292201	PLANETENGETRIEBE
SONNENRAD Z=42 18CrNiMo7-	927608801	45	1	357	939292201	PLANETENGETRIEBE
SORTIMENTKASTEN FLACHSI	10877437	8	1	145	928620108	ZUBEHOER
SPANNBAND 206/206/30 ST	774211308	304	1	478	969763408	VERROHRUNG DRUCKLUFTA
SPANNBAND 240-280/260/30 S	774210508	309	1	478	969763408	VERROHRUNG DRUCKLUFTA
SPANNBAND 260X735X30XSP	774227708	310	1	478	969763408	VERROHRUNG DRUCKLUFTA
SPANNER HYDR KPL	10877686	2	1	76	11320954	LEITRADEINHEIT
SPANNSCHELLE 122,5/K1 St/I	10127984	2	1	219	10147364	LUFTANSAUGUNG ANBAU
SPANNSCHELLE 129	12222896	22	1	466	10876576	WASSERHEIZGERAET
SPANNSCHELLE 150/K1 Inox	10138820	3	1	232	10148215	THERMOSTATGEHAEUSE AN
SPANNSCHELLE 73/K1 St/Inox	10122841	2	1	234	10142742	KUEHLMITTELKRUEMMER AN
SPANNSCHELLE 75/25	774209708	180	1	280	96034631	KUEHLER VORM.
SPANNSCHELLE 77/K1 St/Inox	10124798	5	2	220	10149677	VERBINDUNGSLEITUNG ANBA
SPANNSTIFT 3X10	10410651	31	1	294	11210795	VERSTELLPUMPE
SPANNSTIFT 3X10	10410651	28	2	305	10871282	VERSTELLPUMPE
SPANNSTIFT ISO 8752 12X50	432011808	13	4	625	967936908	GEGENGEWICHT KPL.
SPANNSTIFT ISO 8752 12X85 4	10875876	35	1	731	917267508	TRANSPORTHALTERUNG DKS
SPANNSTIFT ISO 8752 18X45 4	10876421	11	6	365	917259908	KRANFUEHRERKABINE ANBA
SPANNSTIFT ISO 8752 5X12 4	10875879	59	2	357	939292201	PLANETENGETRIEBE
SPANNSTIFT ISO 8752 5X28 4	12100669	6	1	459	966707708	SPIEGELHALTER VORM.
SPANNSTIFT ISO 8752 5X36 A	12102738	7	1	459	966707708	SPIEGELHALTER VORM.

Bezeichnung	Artikel	Pos.	Menge	Seite	Baugruppe	Bezeichnung
SPANNSTIFT ISO 8752 5X50 A	10663567	3	1	117	968331708	SICHERUNGSHALTER
SPANNSTIFT ISO 8752 6X10 ST	10875881	25	2	390	916162508	SCHEIBEN EINBAU
SPANNSTIFT ISO 8752 6X20 4	10876162	150	2	283	968026308	KUPPLUNGSSTELLER
SPANNSTIFT ISO 8752 6X20 4	10876162	43	2	365	917259908	KRANFUEHRERKABINE ANBA
SPANNSTIFT ISO 8752 6X30 S	243034002	10	2	196	10120186	MASSENAUSGLEICH ANBAU
SPANNSTIFT ISO 8752 6X40 4	12100674	5	2	507	965281408	ENDSCHALTER ANBAU
SPANNSTIFT ISO 8752 6X50 A	432006708	11	1	609	968994408	KAMERAHALTER VORM.
SPANNSTIFT ISO 8752 8X16 St	432008001	72	1	357	939292201	PLANETENGETRIEBE
SPANNSTIFT ISO 8752 8X40 St	4980376	5	1	183	10147438	KURBELWELLE MIT ZAHNRAD
SPANNSTIFT ISO 8752 A 8X16	432007908	72	1	583	939294201	PLANETENGETRIEBE
SPANNUNGSREGLER 24V 12V	614020508	5	1	601	915432508	FUNKVORBEREITUNG OW
SPANNVORRICHTUNG	10153374	4	1	230	12418347	KLIMAKOMPRESSOR ANBAU
SPIEGELANBAU DREHBUEHN	917260408	144	1	10		LIEBHERR LTR 1220
SPIEGELANBAU KRANFUEHRE	916049908	138	1	10		LIEBHERR LTR 1220
SPIEGELGLAS 315X178	10675116	(1)	1	458	917260408	SPIEGELANBAU DREHBUEHN
SPIEGELHALTER 28X2 ST.37.4	979320608	1	1	424	916049908	SPIEGELANBAU KRANFUEHR
SPIEGELHALTER VORM.	966707708	2	1	458	917260408	SPIEGELANBAU DREHBUEHN
SPIRALBLATTFEDER	10428198	12	3	681	10354493	LEITUNGSTROMMEL
SPLINT ISO 1234 1,6X14 A2	10180340	13	1	372	916177508	TRITT KPL.
SPLINT ISO 1234 1,6X14 A2	10180340	4	1	715	967936408	WINDWARNUNG VORM.
SPLINT ISO 1234 10X100 St 480	10180377	7	2	471	918956108	HYDRAULISCHE BALLASTIER
SPLINT ISO 1234 10X80 St 480	10180375	47	8	30	917511508	RAUPENMITTELTEIL VORM.
SPLINT ISO 1234 13X125 St 480	10180381	30	2	17	919617108	RAUPENFAHRWERK KPL.
SPLINT ISO 1234 1X14 ST 480	10875872	12	1	372	916177508	TRITT KPL.
SPLINT ISO 1234 3,2X40 A4	10172636	47	4	70	919254308	RAUPENTRAEGER VORM.LI.
SPLINT ISO 1234 3,2X40 A4	10172636	47	4	100	919254408	RAUPENTRAEGER VORM.RE.
SPLINT ISO 1234 4X40 St 480H	10180354	110	2	71	919254308	RAUPENTRAEGER VORM.LI.
SPLINT ISO 1234 4X40 St 480H	10180354	111	2	101	919254408	RAUPENTRAEGER VORM.RE.
SPLINT ISO 1234 4X40 St 480H	10180354	59	3	661	917292408	TELESKOP 5 VORM.
SPLINT ISO 1234 5X40 St 480H	10180359	21	1	705	917268408	MASTNASE
SPLINT ISO 1234 5X40 St 480H	10180359	5	3	732	929582108	HALTERUNG VORM.
SPLINT ISO 1234 5X40 St 480H	10180359	5	1	735	923879808	KONSOLE VORM.
SPLINT ISO 1234 6,3X40 St 480	10180363	33	2	639	917291908	ANLENKSTUECK VORM.
SPLINT ISO 1234 6,3X50 St 480	10180364	12	1	733	923285508	KLAPPKONSOLE VORM.
SPLINT ISO 1234 6,3X63 St 480	10180365	23	1	705	917268408	MASTNASE
SPLINT ISO 1234 8X100 St 480	10180373	10	1	721	968728808	KONSOLE VORM.
SPLINT ISO 1234 8X63 ST 480	10875873	30	4	121	919644008	HYDRAULISCHE ABSTUETZUN
SPLINT ISO 1234 8X63 ST 480	10875873	24	2	134	919087608	DREHDURCHFUEHRUNG
SPLINT ISO 1234 8X80 St 480H	10180371	17	4	474	967928508	VERRIEGELUNG
SPLINT ISO 1234 8X80 St 480H	10180371	9	2	625	967936908	GEGENGEWICHT KPL.
SPLINT ISO 1234 8X80 St 480H	10180371	17	1	705	917268408	MASTNASE
SPRENGRING 45X1,75	429606201	62	1	357	939292201	PLANETENGETRIEBE
SPRENGRING 52X2 FSt	4980482	7	2	188	10146367	KOLBEN KPL.
SPRENGRING DIN 7993 16X1,6	11643655	10	1	301	10472208	VERSTELLUNG
SPRITZE	10045118	100	1	675	10802064	SEILLAENGENGEBER
SPUEL + SPEISEDRUCKVENTI	10871726	5	1	74	11182596	VERSTELLMOTOR
SPURVERSTELLZYLINDER 250	12102931	1	2	17	919617108	RAUPENFAHRWERK KPL.
STANGE 18.0X700 E235+N	978361608	30	1	283	968026308	KUPPLUNGSSTELLER
STANGE 30.0X1724 S355J2C+	97033302	1	1	475	967978908	VERRIEGELUNG VORM.
STANGE 30.0X339 S355J2C+C	97133544	3	2	87	96034962	FUEHRUNG LI.
STANGE 30.0X339 S355J2C+C	97133544	3	2	104	96034980	FUEHRUNG RE.
STANGE SCHWK.	964581908	5	4	121	919644008	HYDRAULISCHE ABSTUETZUN
STARTER 7.8KW 24V	10219978	1	1	240	10115539	STARTER ANBAU
STARTER ANBAU 7.8KW 24V	10115539	450	1	164	12856862	DIESELMOTOR
STARTER VORM. 7.8KW 24V	11386644	1	1	240	10115539	STARTER ANBAU
STATIV	968267208	1	1	612	968993508	KAMERAHALTER VORM.
STATIV	968290608	1	1	609	968994408	KAMERAHALTER VORM.
STATIV SCHWK.	968267308	2	1	612	968993508	KAMERAHALTER VORM.
STATIV SCHWK.	968290708	1	1	610	968290608	STATIV
STATIVFUSS SCHWK.	968267408	3	1	612	968993508	KAMERAHALTER VORM.

Bezeichnung	Artikel	Pos.	Menge	Seite	Baugruppe	Bezeichnung
STATIVFUSS SCHWK.	968290908	2	1	609	968994408	KAMERAHALTER VORM.
STAUBKAPPE	11494567	513	3	510	96045385	KABELSTRANG
STAUBKAPPE	11494567	531	1	513	96037136	KABELSTRANG
STAUBKAPPE	518620608	70	1	668	10876933	TELESKOPIERZYLINDER
STAUBKAPPE POLYETHYLEN	704254808	12	4	37	966167808	DECKEL KPL.
STAUBKAPPE POLYETHYLEN	704254808	6	5	79	967972208	DECKEL VORM.
STAUBKAPPE POLYETHYLEN	704254808	6	2	80	967972308	DECKEL VORM.
STAUBKAPPE POLYETHYLEN	704254808	6	2	81	967972408	DECKEL VORM.
STAUBKAPPE POLYETHYLEN	704254808	6	2	82	968270108	DECKEL VORM.
STAUBKAPPE POLYETHYLEN	704254808	6	2	83	968274208	DECKEL VORM.
STAUBKAPPE POLYETHYLEN	704254808	6	5	102	968055808	DECKEL VORM.
STAUBSTECKER 3/8" SPF	10031987	154	1	699	967785008	ZUSATZHYDRAULIK KLAPPSPI
STAUKASTEN VORM.	968420608	65	1	71	919254308	RAUPENTRAEGER VORM.LI.
STAUKASTEN VORM.	968420608	65	1	101	919254408	RAUPENTRAEGER VORM.RE.
STECKANSCHLUSS WSV 6 M1	12101832	7	11	502	917261208	ZENTRALSCHMIERANLAGE O
STECKBOLZEN	96002833	4	1	705	917268408	MASTNASE
STECKDOSE	10429057	3	1	601	915432508	FUNKVORBEREITUNG OW
STECKDOSE 2 13A	10342518	525	1	446	96036955	KABELSTRANG
STECKDOSE 2 13A	10342518	518	3	513	96037136	KABELSTRANG
STECKDOSE 2 13A	10342518	512	3	514	96037137	KABELSTRANG
STECKDOSE 3-POL	6205239	520	1	514	96037137	KABELSTRANG
STECKDOSE 8-POL	11008529	1	1	457	966979108	STECKDOSE
STECKDOSE ETHERNET	966979108	52	1	449	96036957	ELEKTRIK ANBAUTEILE KABIN
STECKDOSENGEHAEUSE 2-	6001790	524	1	446	96036955	KABELSTRANG
STECKDOSENGEHAEUSE 2-	6001790	505	4	513	96037136	KABELSTRANG
STECKDOSENKOERPER 3-PO	605212708	508	1	44	96045228	KABELSTRANG
STECKDOSENKOERPER 3-PO	605212708	519	1	513	96037136	KABELSTRANG
STECKDOSENKOERPER 4-PO	605251608	502	1	44	96045228	KABELSTRANG
STECKDOSENKOERPER 4-PO	605251608	506	1	510	96045385	KABELSTRANG
STECKDOSENKOMBINATION	605215708	1	1	598	918462708	FREMDEINSPEISUNG
STECKER	920381108	503	1	44	96045228	KABELSTRANG
STECKER	927996308	508	1	510	96045385	KABELSTRANG
STECKER	927996308	517	1	513	96037136	KABELSTRANG
STECKER 10-POLIG	11690056	4	1	363	10802061	WINDENDREHGEBER
STECKER 12-POL	10491808	(2)	1	445	96036954	KABELLISTE KRANFUEHRERK
STECKER 2	10492113	(1)	1	445	96036954	KABELLISTE KRANFUEHRERK
STECKER 2-POL SW	11342255	511	1	514	96037137	KABELSTRANG
STECKER 3-POL	6003168	516	1	514	96037137	KABELSTRANG
STECKER 4-POL 13A	6003248	503	1	514	96037137	KABELSTRANG
STECKER 4-POL SW	11342257	513	1	514	96037137	KABELSTRANG
STECKER 4-POL VIOLETT	11342259	514	1	514	96037137	KABELSTRANG
STECKER 6-POL	604508608	514	3	44	96045228	KABELSTRANG
STECKER 6-POL	604508608	508	1	516	96037133	LEITUNG
STECKER 6-POL	604508608	506	2	617	96037132	LEITUNG
STECKER 8-POL	10046999	508	10	520	96045387	DRAEHTE GRUNDAUFBAU KPL
STECKER 8-POL	10047000	515	10	520	96045387	DRAEHTE GRUNDAUFBAU KPL
STECKER 8-POL	10047001	513	10	520	96045387	DRAEHTE GRUNDAUFBAU KPL
STECKER 9-POL PVC	10301148	520	1	446	96036955	KABELSTRANG
STECKER DIN 72585 4-POL PO	692406308	505	1	510	96045385	KABELSTRANG
STECKER DIN 72585 4-POL PO	692406308	508	1	514	96037137	KABELSTRANG
STECKER DIN 72585 7-POL PO	692406708	507	1	510	96045385	KABELSTRANG
STECKER FUER DIESELHEIZ	962196208	515	1	513	96037136	KABELSTRANG
STECKER KPL. 4 POL PA66	10874178	505	1	514	96037137	KABELSTRANG
STECKER M1	10476383	524	2	44	96045228	KABELSTRANG
STECKER M1	10476383	(504)	1	711	917598408	ELEKTRIK MESS-U.WARNEINR
STECKER SCHWK. FE//ZNNI8/	968014808	13	4	121	919644008	HYDRAULISCHE ABSTUETZUN
STECKERBLECH 1.5X449X175	97010811	6	1	522	969256608	GRUNDAUFBAU
STECKERBLECH 1.5X594X283	97010812	7	1	522	969256608	GRUNDAUFBAU
STECKERBUCHSE 0,5-1,0MM2	7624353	761	2	447	96036955	KABELSTRANG
STECKERBUCHSE 0,75-1,0M	11000401	2253	3	515	96037137	KABELSTRANG

Bezeichnung	Artikel	Pos.	Menge	Seite	Baugruppe	Bezeichnung
STECKERBUCHSE 0,75-2,0M	10100063	670	4	447	96036955	KABELSTRANG
STECKERBUCHSE 0,75-2,0M	10100063	670	11	513	96037136	KABELSTRANG
STECKERBUCHSE 0,75-2,0M	10100063	670	6	514	96037137	KABELSTRANG
STECKERGEHAEUSE	11822050	522	1	446	96036955	KABELSTRANG
STECKERGEHAEUSE 12-POL	10412433	512	1	513	96037136	KABELSTRANG
STECKERGEHAEUSE 14-POL	602336008	511	4	446	96036955	KABELSTRANG
STECKERGEHAEUSE 14-POL	602336008	506	6	520	96045387	DRAEHTE GRUNDAUFBAU KPL
STECKERGEHAEUSE 14-POL	602336508	3	6	525	926891108	VERTEILER MASSE
STECKERGEHAEUSE 18-POL	602300208	504	2	44	96045228	KABELSTRANG
STECKERGEHAEUSE 18-POL	602300208	501	9	446	96036955	KABELSTRANG
STECKERGEHAEUSE 18-POL	602300208	501	6	448	96036956	KABELSTRANG
STECKERGEHAEUSE 18-POL	602300208	501	10	510	96045385	KABELSTRANG
STECKERGEHAEUSE 18-POL	602300208	501	11	513	96037136	KABELSTRANG
STECKERGEHAEUSE 18-POL	602300208	501	2	514	96037137	KABELSTRANG
STECKERGEHAEUSE 18-POL	602300208	523	1	520	96045387	DRAEHTE GRUNDAUFBAU KPL
STECKERGEHAEUSE 2 13A TH	10342517	509	2	446	96036955	KABELSTRANG
STECKERGEHAEUSE 2 13A TH	10342517	509	3	513	96037136	KABELSTRANG
STECKERGEHAEUSE 2 13A TH	10342517	502	2	514	96037137	KABELSTRANG
STECKERGEHAEUSE 2-POL	6004195	520	2	513	96037136	KABELSTRANG
STECKERGEHAEUSE 2-POL 13	10429638	530	1	513	96037136	KABELSTRANG
STECKERGEHAEUSE 2-POLE 9	602331808	509	2	448	96036956	KABELSTRANG
STECKERGEHAEUSE 4-POL	602335908	514	1	43	96045227	KABELSTRANG
STECKERGEHAEUSE 4-POL	602335908	515	4	446	96036955	KABELSTRANG
STECKERGEHAEUSE 4-POL	602335908	511	1	448	96036956	KABELSTRANG
STECKERGEHAEUSE 4-POL	602335908	516	4	520	96045387	DRAEHTE GRUNDAUFBAU KPL
STECKERGEHAEUSE 62-POL P	10678453	503	1	513	96037136	KABELSTRANG
STECKERGEHAEUSE 62-POL P	10678452	514	1	513	96037136	KABELSTRANG
STECKERGEHAEUSE 8-POL	10021571	507	1	43	96045227	KABELSTRANG
STECKERGEHAEUSE D-SUB M	10355170	505	2	446	96036955	KABELSTRANG
STECKERGEHAEUSE D-SUB M	10355182	503	4	446	96036955	KABELSTRANG
STECKERGEHAEUSE HP PBT	11000394	515	1	514	96037137	KABELSTRANG
STECKERGEHAEUSE MCON M	10813633	507	2	514	96037137	KABELSTRANG
STECKERKOERPER 3-POL	605012408	517	1	44	96045228	KABELSTRANG
STECKERKOERPER 4-POL	605613908	510	1	513	96037136	KABELSTRANG
STECKERSTIFT 0,75-2,0MM2	10100062	669	2	447	96036955	KABELSTRANG
STECKERSTIFT 0,75-2,0MM2	10100062	669	4	513	96037136	KABELSTRANG
STECKHUELSE 2,8X0,3-1,5 V	602203108	67	2	448	96036956	KABELSTRANG
STECKHUELSE 4,8X1,5	602225914	703	2	448	96036956	KABELSTRANG
STECKHUELSE 5X1,5-2,5	602339108	642	4	43	96045227	KABELSTRANG
STECKHUELSE 6,3X0,5-1,0 V	11080881	758	5	43	96045227	KABELSTRANG
STECKHUELSE 6,3X0,5-1,0 V	11080881	758	18	447	96036955	KABELSTRANG
STECKHUELSE 6,3X0,5-1,0 V	11080881	758	4	448	96036956	KABELSTRANG
STECKHUELSE 6,3X0,5-1,0 V	11080881	758	4	513	96037136	KABELSTRANG
STECKHUELSE 6,3X0,5-1,5 V	602207608	140	1	448	96036956	KABELSTRANG
STECKHUELSE 6,3X1-2,5 TIN-P	602203408	72	6	43	96045227	KABELSTRANG
STECKHUELSE 6,3X1-2,5 TIN-P	602203408	72	3	446	96036955	KABELSTRANG
STECKHUELSE 6,3X1-2,5 TIN-P	602203408	72	4	448	96036956	KABELSTRANG
STECKHUELSE 9,5X1-2,5 CU	602208408	143	2	446	96036955	KABELSTRANG
STECKHUELSENGEHAEUSE	604501708	504	2	43	96045227	KABELSTRANG
STECKHUELSENGEHAEUSE 2-	602209708	516	1	43	96045227	KABELSTRANG
STECKHUELSENGEHAEUSE 2-	602209708	508	4	446	96036955	KABELSTRANG
STECKHUELSENGEHAEUSE 2-	602209708	506	2	448	96036956	KABELSTRANG
STECKHUELSENGEHAEUSE 2-	602209708	508	1	513	96037136	KABELSTRANG
STECKHUELSENGEHAEUSE 2-	602209708	501	5	520	96045387	DRAEHTE GRUNDAUFBAU KPL
STECKHUELSENGEHAEUSE	602208608	516	1	513	96037136	KABELSTRANG
STECKHUELSENGEHAEUSE	602319808	521	1	446	96036955	KABELSTRANG
STECKNUSS 1/2"-14WN	12103321	(2)	1	71	919254308	RAUPENTRAEGER VORM.LI.
STECKNUSS SW1 11/16"	890020214	11	1	143	919328608	WERKZEUG M.ZUBEHOER
STECKSCHLUESSELEINSATZ	790028508	66	1	144	928569808	GRUNDWERKZEUG
STECKSCHLUESSELEINSATZ	8008673	10	1	143	919328608	WERKZEUG M.ZUBEHOER

Bezeichnung	Artikel	Pos.	Menge	Seite	Baugruppe	Bezeichnung
STECKVERBINDER GE M8X1K	12101847	8	1	502	917261208	ZENTRALSCHMIERANLAGE O
STECKVERBINDER GE M8X1K	12101847	4	1	586	921444108	ZENTRALSCHMIERANLAGE
STECKVERBINDER GERADE	11183029	2	12	130	11347500	VERTEILERKOMBINATION
STELLMOTOR 0,0024KW24V	10287301	13	2	412	11083498	HEIZKLIMAGERAET
STELLSTANGE	7023664	2	1	301	10472208	VERSTELLUNG
STERNGRIFFSCHRAUBE	10443625	24	2	417	918810308	STEUERSTAND
STEUERBLOCK 315BAR SPF	12100860	26	1	538	96045351	HYDRAULIK OBERWAGEN
STEUERBLOCK 320BAR SPF	11211756	21	1	538	96045351	HYDRAULIK OBERWAGEN
STEUERBLOCK 330BAR SPF	10332882	24	1	538	96045351	HYDRAULIK OBERWAGEN
STEUERBLOCK 365BAR SPF	10413106	22	1	538	96045351	HYDRAULIK OBERWAGEN
STEUERBLOCK 380BAR SPF	11341035	27	1	538	96045351	HYDRAULIK OBERWAGEN
STEUERBLOCK 420BAR SPF	11643183	21	1	51	96035801	HYDRAULIK MITTELTEIL
STEUERBLOCK 420BAR SPF	11643184	22	1	51	96035801	HYDRAULIK MITTELTEIL
STEUERBLOCK SPF	10038509	21	1	595	969426308	ZUSATZHYDRAULIK KLAPPSPI
STEUERGERAET ANBAU	10144227	571	1	165	12856862	DIESELMOTOR
STEUERKOLBEN	10000796	1	1	301	10472208	VERSTELLUNG
STEUERLEITUNG 12 X 0,75 SP	600460808	5	6.6	510	96045385	KABELSTRANG
STEUERLEITUNG 4 X 0,5 SPF	600463908	9	3.13	44	96045228	KABELSTRANG
STEUERLEITUNG 4 X 0,5 SPF	600463908	10	2.63	44	96045228	KABELSTRANG
STEUERLEITUNG 4 X 0,5 SPF	600463908	16	6.06	44	96045228	KABELSTRANG
STEUERLEITUNG 4 X 0,5 SPF	600463908	17	6.06	44	96045228	KABELSTRANG
STEUERLEITUNG 5 X 0,5 SPF	600462908	(5)	1.46	711	917598408	ELEKTRIK MESS-U.WARNEINR
STEUERPLATTE	570110408	2	1	348	570109508	TRIEBWERK
STEUERSTAND	918810308	135	1	10		LIEBHERR LTR 1220
STEUERTEIL	11161917	4	1	74	11182596	VERSTELLMOTOR
STEUERTEIL	11161917	4	1	360	11182597	VERSTELLMOTOR
STEUERTEIL	11161917	4	1	578	11211058	VERSTELLMOTOR
STEUERUNGSTEILE	9079870	110	4	161	12856862	DIESELMOTOR
STEUERVENTIL	11692439	50	1	302	10871043	VERSTELLPUMPE
STICKSTOFFSPANNER KPL	10877685	3	1	76	11320954	LEITRADEINHEIT
STIFTKONTAKT 0,2-0,5MM2	10335819	689	4	447	96036955	KABELSTRANG
STIFTKONTAKT 0,2-0,5MM2	10335819	689	4	448	96036956	KABELSTRANG
STIFTKONTAKT 0,5-1,0MM2 C	7369458	740	6	515	96037137	KABELSTRANG
STIFTKONTAKT 0,5-1MM2MM2	10300944	715	2	447	96036955	KABELSTRANG
STIFTKONTAKT 0,5MM2 SILBE	10493972	719	16	44	96045228	KABELSTRANG
STIFTKONTAKT 0,5MM2 SILBE	10493972	719	6	140	96045205	KABELSTRANG
STIFTKONTAKT 0,5MM2 SILBE	10493972	(719)	2	711	917598408	ELEKTRIK MESS-U.WARNEINR
STIFTKONTAKT 0,75-1,5MM2	6202444	95	3	44	96045228	KABELSTRANG
STIFTKONTAKT 0,75-1,5MM2	6202444	95	1	510	96045385	KABELSTRANG
STIFTKONTAKT 0,75-1,5MM2	6202444	95	3	512	96037136	KABELSTRANG
STIFTKONTAKT 0,75-1MM2	604519208	628	2	516	96037133	LEITUNG
STIFTKONTAKT 0,75-1MM2	604519208	628	4	617	96037132	LEITUNG
STIFTKONTAKT 0,75-1MM2	604519208	(628)	2	711	917598408	ELEKTRIK MESS-U.WARNEINR
STIFTKONTAKT 1,5MM2	604519108	(637)	1	711	917598408	ELEKTRIK MESS-U.WARNEINR
STIFTSCHRAUBE DIN 835 M1	12210035	3	3	219	10147364	LUFTANSAUGUNG ANBAU
STIFTSCHRAUBE DIN 835 M1	10179459	3	3	240	10115539	STARTER ANBAU
STIFTSCHRAUBE DIN 939 M1	4981172	5	3	238	10140729	ATL-ANBAU
STIFTTRAEGER 6-POL 16A	604526608	509	4	44	96045228	KABELSTRANG
STIFTTRAEGER 6-POL 16A	604526608	501	1	140	96045205	KABELSTRANG
STIFTTRAEGER 6-POL 16A	604526608	503	1	516	96037133	LEITUNG
STIFTTRAEGER 6-POL 16A	604526608	501	2	617	96037132	LEITUNG
STIFTTRAEGER 6-POL 16A	604526608	(501)	1	711	917598408	ELEKTRIK MESS-U.WARNEINR
STIRNRAD D147/75X32	571819108	110	2	285	97029921	VERTEILERGETRIEBE
STOERANZEIGE	10429952	33	2	128	11347526	ELEKTROPUMPE
STOERANZEIGE	10429952	9	1	504	10327065	ELEKTROPUMPE
STOESSELSTANGE	9079131	3	2	198	9079870	STEUERUNGSTEILE
STOPFEN	511040408	(2)	3	538	96045351	HYDRAULIK OBERWAGEN
STOPFEN D10,7 LD-PE	10678375	7	2	377	916162808	RELING
STOPFEN D10,7 LD-PE	10678375	47	1	383	917305408	INNENVERKLEIDUNG EINBAU
STOPFEN VSTI M12X1,5 A3P	477704308	19	2	297	10008308	ANSCHLUSSPLATTE

Bezeichnung	Artikel	Pos.	Menge	Seite	Baugruppe	Bezeichnung
STOPFEN VSTI M12X1,5 A3P	477704308	600	1	478	969763408	VERROHRUNG DRUCKLUFTA
STOPFEN VSTI1"ED A3P	477704608	13	2	325	968999708	KRAFTSTOFFBEHAELTER VO
STOPFEN VSTI1"ED A3P	477704608	34	1	550	10413106	STEUERBLOCK
STOPFEN VSTI1/2"ED A3P	477704208	12	1	325	968999708	KRAFTSTOFFBEHAELTER VO
STOPFEN VSTI1/2"ED A3P	477704208	26	2	472	10877810	BALLASTIERZYLINDER
STOPFEN VSTI1/2"ED A3P	477704208	686	1	541	96045351	HYDRAULIK OBERWAGEN
STOPFEN VSTI1/2"ED A3P	477704208	10	2	552	10332882	STEUERBLOCK
STOPFEN VSTI1/2"ED A3P	477704208	24	2	555	11341035	STEUERBLOCK
STOPFEN VSTI1/2"ED A3P	477704208	110	2	597	10038509	STEUERBLOCK
STOPFEN VSTI1/2"ED A3P	477704208	63	1	668	10876933	TELESKOPIERZYLINDER
STOPFEN VSTI1/4"ED A3P	477704077	25	2	472	10877810	BALLASTIERZYLINDER
STOPFEN VSTI1/8"ED ST A3C	510741508	32	1	550	10413106	STEUERBLOCK
STOPFEN VSTI1/8"ED ST A3C	510741508	11	2	552	10332882	STEUERBLOCK
STOPFEN VSTI1/8"ED ST A3C	510741508	21	5	555	11341035	STEUERBLOCK
STOPFEN VSTI11/4"ED A3P	477705408	31	1	550	10413106	STEUERBLOCK
STOPFEN VSTI3/4"ED A3P	477704708	741	2	542	96045351	HYDRAULIK OBERWAGEN
STOPFEN VSTI3/4"ED A3P	477704708	100	2	597	10038509	STEUERBLOCK
STOPFEN VSTI3/8"ED A3P	477704108	617	2	540	96045351	HYDRAULIK OBERWAGEN
STOPFEN VSTI3/8"ED A3P	477704108	13	4	552	10332882	STEUERBLOCK
STOPFEN VSTI3/8"ED A3P	477704108	23	4	555	11341035	STEUERBLOCK
STOPFEN VSTI3/8"ED A3P	477704108	620	1	590	967784808	HYDRAULIK HILFSHUBWERK
STOPFEN VSTI3/8"ED A3P	477704108	120	3	597	10038509	STEUERBLOCK
STOPFEN VSTIM14X1,5ED A3	477704908	724	4	541	96045351	HYDRAULIK OBERWAGEN
STOPFEN VSTIM16X1,5ED A3	477704408	603	4	124	968077208	HYDRAULIK ABSTUETZUNG
STOPFEN VSTIM16X1,5ED A3	477704408	402	2	314	96034515	AUSGLEICHSBEHAELTER VO
STOPFEN VSTIM16X1,5ED A3	477704408	401	1	315	96034522	AUSGLEICHSBEHAELTER
STOPFEN VSTIM18X1,5ED A3	477705108	6	1	325	968999708	KRAFTSTOFFBEHAELTER VO
STOPFEN VSTIM22X1,5ED A3	477704508	639	2	478	969763408	VERROHRUNG DRUCKLUFTA
STOPFEN VSTIM26X1,5ED A3	477705808	619	1	90	96035796	HYDR.FAHRANTRIEB
STOPFEN VSTIM26X1,5ED A3	477705808	619	1	107	96035792	HYDR.FAHRANTRIEB
STOPFEN VSTIM26X1,5ED A3	477705808	11	1	335	969050308	OELBEHAELTER VORM.
STOPFEN VSTIM26X1,5ED A3	477705808	28	1	361	90200104	OELMESSEINRICHTUNG
STOPFEN VSTIM33X2ED A3P	477705208	730	1	542	96045351	HYDRAULIK OBERWAGEN
STOPFEN VSTIM33X2ED A3P	477705208	644	1	590	967784808	HYDRAULIK HILFSHUBWERK
STOPFEN VSTIM42X2ED A3P	477704808	151	1	276	919007708	ANTRIEBSAGGREGAT VORM.
STROMABNEHMER	10491892	15	8	681	10354493	LEITUNGSTROMMEL
STROMQUELLE LSB SPF	10027448	20	2	522	969256608	GRUNDAUFBAU
STROMTEILVENTIL 120L/MIN	511485408	164	1	538	96045351	HYDRAULIK OBERWAGEN
STUETZFLANSCH	927745901	50	1	357	939292201	PLANETENGETRIEBE
STUETZKONSOLE 3X206X185	97039156	16	2	111	917691008	ABSTURZSICHERUNG
STUETZKONSOLE 3X206X185	97039157	17	2	111	917691008	ABSTURZSICHERUNG
STUETZRING	7367565	5	1	78	10877686	SPANNER HYDR KPL
STUETZRING 17,5X20,9X1 PTF	571082808	(4)	1	539	96045351	HYDRAULIK OBERWAGEN
STUETZRING 20X23,5X1 PTFE	571082208	(4)	1	699	967785008	ZUSATZHYDRAULIK KLAPPSPI
STUETZRING 20X23,5X1 PTFE	571082208	(3)	1	699	967785008	ZUSATZHYDRAULIK KLAPPSPI
STUETZRING 32X37,2X1 PTFE	571077008	(3)	1	589	967784808	HYDRAULIK HILFSHUBWERK
STUETZSCHEIBE DIN 988 S 2	422001001	47	3	357	939292201	PLANETENGETRIEBE
STUTZEN	9273271	2	2	204	10142942	SCHMIEROELFILTER ANBAU
STUTZEN ISO 8434-1 GE 22L M	10295188	403	1	314	96034515	AUSGLEICHSBEHAELTER VO
STUTZEN ISO 8434-1 GE 22L M	10295188	737	6	542	96045351	HYDRAULIK OBERWAGEN
STUTZEN ISO 8434-1 GE 22L M	10295188	632	2	590	967784808	HYDRAULIK HILFSHUBWERK
STUTZEN KPL.	96035597	3	2	314	96034515	AUSGLEICHSBEHAELTER VO
STUTZEN KPL.	96039022	2	1	315	96034522	AUSGLEICHSBEHAELTER
T-REDUZIERSTUECK 20X10 L	11626529	21	2	483	918484108	HARNSTOFFANLAGE
T-STUECK 20X20 L=90	10872612	4	1	414	969085208	HEIZUNG VORM.
T-STUECK 20X20 L=90	10872612	25	1	464	96020359	ZUSATZHEIZUNG VORM.
T-STUECK 30 G-ALMG TROW	10285701	17	1	368	919010208	KRANFUEHRERKABINE VORM.
TAKTVENTIL 3.4BAR 8L/MIN 6	10149191	(1)	1	164	12856862	DIESELMOTOR
TAKTVENTIL 3.4BAR 8L/MIN 6	11420633	436	1	164	12856862	DIESELMOTOR
TANKSENSOR L=1450 24V SP	10290070	2	1	325	968999708	KRAFTSTOFFBEHAELTER VO

Bezeichnung	Artikel	Pos.	Menge	Seite	Baugruppe	Bezeichnung
TANKVERSCHLUSS 40	10870226	4	1	484	968570808	HARNSTOFFTANK
TASCHE KUNSTSTOFF	740300008	22	1	383	917305408	INNENVERKLEIDUNG EINBAU
TASCHENSCHLOSS 23-26 SPF	10040024	122	2	10		LIEBHERR LTR 1220
TASTATUREINHEIT LSB-TE PR	963792208	3	2	449	96036957	ELEKTRIK ANBAUTEILE KABIN
TASTATUREINHEIT SPF	10816196	2	1	452	96030724	ELEKTRIK ARMATURENKONS
TASTATUREINHEIT SPF	10874785	31	1	449	96036957	ELEKTRIK ANBAUTEILE KABIN
TASTE	606144008	15	2	453	96022872	ARMATURENBRETT DACH
TASTERKAPPE FLACH GRUE	606145108	11	1	529	969061708	TRAEGERBLECH SICHERUNG
TASTERKAPPE FLACH KLAR	606144408	17	1	453	96022872	ARMATURENBRETT DACH
TASTKONTAKTGEBER 1OE+1	11100197	(3)	1	452	96030724	ELEKTRIK ARMATURENKONS
TASTKONTAKTGEBER 1OE+1	606143208	16	1	453	96022872	ARMATURENBRETT DACH
TASTKONTAKTGEBER 1OE+1	606143408	5	1	529	969061708	TRAEGERBLECH SICHERUNG
TASTKONTAKTGEBER 2OE+2	606144608	6	1	529	969061708	TRAEGERBLECH SICHERUNG
TAUCHHEIZER 120V 1KW	10025057	1	1	602	918377508	KUEHLWASSERVORWAERM
TEFLONSCHLAUCH DN16 750	510500508	300	1	478	969763408	VERROHRUNG DRUCKLUFTA
TELESKOP 1 SCHWK. RAL 701	917292708	1	1	644	917292008	TELESKOP 1 VORM.
TELESKOP 1 VORM.	917292008	2	1	634	918804808	TELESKOPAUSLEGER KPL.
TELESKOP 2 SCHWK. RAL 701	917292808	1	1	648	917292108	TELESKOP 2 VORM.
TELESKOP 2 VORM.	917292108	3	1	634	918804808	TELESKOPAUSLEGER KPL.
TELESKOP 3 SCHWK. RAL 701	917292908	1	1	652	917292208	TELESKOP 3 VORM.
TELESKOP 3 VORM.	917292208	4	1	634	918804808	TELESKOPAUSLEGER KPL.
TELESKOP 4 SCHWK. RAL 701	917293008	1	1	656	917292308	TELESKOP 4 VORM.
TELESKOP 4 VORM.	917292308	5	1	634	918804808	TELESKOPAUSLEGER KPL.
TELESKOP 5 SCHWK. RAL 701	917293108	1	1	661	917292408	TELESKOP 5 VORM.
TELESKOP 5 VORM.	917292408	6	1	634	918804808	TELESKOPAUSLEGER KPL.
TELESKOPAUSLEGER KPL. SP	918804808	201	1	11		LIEBHERR LTR 1220
TELESKOPIERZYLINDER 225/	10876933	1	1	666	918807308	AUSSCHUBMECHANIK
TELLERBEFESTIGUNG	10100621	20	4	439	969015908	DREHBUEHNENVERKLEIDUN
TELLERFEDER	570110908	7	4	348	570109508	TRIEBWERK
TELLERFEDER 80X41X4	272012502	4	130	721	968728808	KONSOLE VORM.
TELLERFEDER DIN 2093 40X2	720801908	25	4	417	918810308	STEUERSTAND
TELLERFEDERSAEULE	570033608	11	1	307	10872488	TRIEBWERK
TEMPERATURFUEHLER	10290126	23	1	466	10876576	WASSERHEIZGERAET
TEMPERATURFUEHLER	10290126	(5)	1	466	10876576	WASSERHEIZGERAET
TEMPERATURFUEHLER	10299987	(1)	1	599	917269308	LADEGERAET
TEMPERATURFUEHLER	966181208	8	1	506	919410708	EL.ANLAGE DREHBUEHNE
TEMPERATURFUEHLER -30°C	10424276	7	1	449	96036957	ELEKTRIK ANBAUTEILE KABIN
TEMPERATURFUEHLER -40°C	10493625	(1)	1	258	12583633	MOTORREGELUNGSENSORIK
TEMPERATURFUEHLER -50/+	10800266	(150)	1	506	919410708	EL.ANLAGE DREHBUEHNE
TEMPERATURFUEHLER KPL. -	10152036	2	1	258	12583633	MOTORREGELUNGSENSORIK
TEMPERATURFUEHLER KPL. -	13410342	1	2	258	12583633	MOTORREGELUNGSENSORIK
TEMPERATURGEBER -30/+13	691183108	65	1	538	96045351	HYDRAULIK OBERWAGEN
TEMPERATURSENSOR	11826650	21	1	466	10876576	WASSERHEIZGERAET
TEMPERATURSENSOR	11826650	(4)	1	466	10876576	WASSERHEIZGERAET
TEMPERATURSENSOR -40°C	11349182	(151)	2	494	96048826	ABGASANLAGE VORM.
THERMOSCHALTER BERUEHR	11080088	62	1	450	96036957	ELEKTRIK ANBAUTEILE KABIN
THERMOSTAT	10154798	2	1	232	10148215	THERMOSTATGEHAEUSE AN
THERMOSTAT	571867708	44	1	412	11083498	HEIZKLIMAGERAET
THERMOSTATGEHAEUSE AN	10148215	380	1	163	12856862	DIESELMOTOR
THERMOUEBERDRUCKVENTIL	10326278	38	1	668	10876933	TELESKOPIERZYLINDER
THERMOVENTIL pv=2BAR	11490271	4	1	566	11622561	OEL-LUFTKUEHLER
TONNENLAGER DIN 635 20219	540509008	17	1	355	932916901	SEILTROMMEL
TONNENLAGER DIN 635 20219	540509008	20	1	581	939294001	SEILTROMMEL
TRAEGER MESS-U.WARNEINR	917379608	285	1	11		LIEBHERR LTR 1220
TRAEGER SCHWK.	968050708	1	2	116	968046208	ANBAUTEILE
TRAEGER SCHWK. T ZN O	968710308	2	2	116	968046208	ANBAUTEILE
TRAEGERBLECH 1.5X442X181	979295008	(1)	1	529	969061708	TRAEGERBLECH SICHERUNG
TRAEGERBLECH SICHERUN	969061708	12	1	518	919503008	EINBAUTEILE SCHALTSCHRAN
TRAEGERBLECH VORM.	965807808	1	1	529	969061708	TRAEGERBLECH SICHERUNG
TRAGARM SCHWK. T ZN O	968798308	1	1	494	96048826	ABGASANLAGE VORM.

Bezeichnung	Artikel	Pos.	Menge	Seite	Baugruppe	Bezeichnung
TRAGRAHMEN RAL 7016 LAC	967986408	1	1	369	967986308	LAGERUNG EINBAU
TRAGROLLE 80/5/20X700 GALV	749011408	47	1	656	917292308	TELESKOP 4 VORM.
TRAGROLLE 80/5/20X795 GALV	749010808	47	1	652	917292208	TELESKOP 3 VORM.
TRAGROLLE 80/5/20X850 GALV	749009408	47	1	648	917292108	TELESKOP 2 VORM.
TRAGROLLE 80/5/20X950 GALV	749010208	21	2	639	917291908	ANLENKSTUECK VORM.
TRAGROLLE 80/5/20X950 GALV	749010208	47	1	644	917292008	TELESKOP 1 VORM.
TRAGROLLE 90/7/40X1015 GA	749014908	3	1	352	917259708	HAUPTHUBWERK
TRAGROLLE 90/7/40X1015 GA	749014908	20	1	577	967969608	HILFSHUBWERK WINDE 2 VO
TRAGROLLE D8KX165	10877342	8	2	70	919254308	RAUPENTRAEGER VORM.LI.
TRAGROLLE D8KX165	10877342	8	2	100	919254408	RAUPENTRAEGER VORM.RE.
TRAGSCHIENE X0	954117308	24	1	320	96023117	BATTERIEKASTEN VORM.
TRAGSCHIENE X0	954128608	69	1	639	917291908	ANLENKSTUECK VORM.
TRAGSCHIENENMUTTER DIN 3	602018008	313	61	51	96035801	HYDRAULIK MITTELTEIL
TRAGSCHIENENMUTTER DIN 3	602018008	28	4	320	96023117	BATTERIEKASTEN VORM.
TRAGSCHIENENMUTTER DIN 3	602018008	308	6	478	969763408	VERROHRUNG DRUCKLUFTA
TRAGSCHIENENMUTTER DIN 3	602018008	330	2	539	96045351	HYDRAULIK OBERWAGEN
TRAGSCHIENENMUTTER DIN 3	602018008	70	4	640	917291908	ANLENKSTUECK VORM.
TRANSPONDER SPF	10354922	11	6	25	968019508	ENDSCHALTER ANBAU
TRANSPONDER SPF	11060128	57	2	450	96036957	ELEKTRIK ANBAUTEILE KABIN
TRANSPORTHALTERUNG DKS	917267508	350	1	11		LIEBHERR LTR 1220
TRANSPORTKONSOLE S355J0	9078849	1	1	245	9079823	TRANSPORTVORRICHTUNG
TRANSPORTVORRICHTUNG	10142864	481	1	165	12856862	DIESELMOTOR
TRANSPORTVORRICHTUNG	9079823	480	1	164	12856862	DIESELMOTOR
TRAVERSE 20X61X37 S355J2+	979620608	7	4	494	96048826	ABGASANLAGE VORM.
TRAVERSE 30X161X190 S690Q	955552508	20	1	731	917267508	TRANSPORTHALTERUNG DKS
TRAVERSE SCHWK. LMZ-70T	968497408	1	1	722	917531708	BALLASTTRAVERSE
TRENNRING	10114850	8	15	47	11346779	SCHLEIFRINGUEBERTRAGER
TREPPE 5-631X0,754M ALMG3	11213246	4	2	111	917691008	ABSTURZSICHERUNG
TREPPE 5-631X0,754M ALMG3	11213247	5	2	111	917691008	ABSTURZSICHERUNG
TRIEBWELLE	10663120	14	1	296	10663105	TRIEBWERK
TRIEBWELLE	570109608	2	1	347	570109008	TRIEBWERK
TRIEBWELLE	571907508	14	1	307	10872488	TRIEBWERK
TRIEBWERK	10663105	1	1	295	11210798	VERSTELLPUMPE
TRIEBWERK	10871713	1	1	294	11210795	VERSTELLPUMPE
TRIEBWERK	10872488	1	1	305	10871282	VERSTELLPUMPE
TRIEBWERK	11066818	2	1	74	11182596	VERSTELLMOTOR
TRIEBWERK	11643393	2	1	360	11182597	VERSTELLMOTOR
TRIEBWERK	11643393	2	1	578	11211058	VERSTELLMOTOR
TRIEBWERK	11690584	1	1	286	11182708	VERSTELLPUMPE
TRIEBWERK	11690584	1	1	289	10871017	VERSTELLPUMPE
TRIEBWERK	570109008	1	1	346	510229408	HYDROMOTOR
TRIEBWERK	570109508	1	1	347	570109008	TRIEBWERK
TRITT 1818X290X43 SPF	966270208	(1)	1	372	916177508	TRITT KPL.
TRITT KPL.	916177508	3	1	368	919010208	KRANFUEHRERKABINE VORM.
TRITT SEITLICH 1818X747X45	966269808	2	1	372	916177508	TRITT KPL.
TRITT VORN SPF	966270808	1	1	372	916177508	TRITT KPL.
TROCKNER	571489008	105	1	280	96034631	KUEHLER VORM.
TROMMELACHSE	12100076	2	1	681	10354493	LEITUNGSTROMMEL
TUELLE	971565208	9	1	380	917304508	KRANFUEHRERKABINE VORM.
TUELLE 6,5/6,5/2 GUMMI	591055508	3	2	400	966408908	WASSERBEHAELTER KPL.
TUERFESTSTELLER	704277508	113	2	429	96036790	DREHBUEHNENVERKLEIDUN
TUERKONTAKTSCHALTER	606020708	12	1	449	96036957	ELEKTRIK ANBAUTEILE KABIN
TUERSCHEIBE 4X1161X 950	97000274	2	1	405	917304708	SCHIEBETUER EINBAU
TUERVERKLEIDUNG 880X390	97000275	3	1	405	917304708	SCHIEBETUER EINBAU
TURBOLADER HE300	10139626	1	1	238	10140729	ATL-ANBAU
U-PROFIL 1X1000X74 DC01 FE	953714108	65	2	639	917291908	ANLENKSTUECK VORM.
U-PROFIL 1X1000X98 DC01 FE	955927208	67	13	639	917291908	ANLENKSTUECK VORM.
U-PROFIL 1X500X74 DC01 FE//	953713908	10	1	661	917292408	TELESKOP 5 VORM.
U-PROFIL 1X500X89 DC01 FE//	97042011	22	4	127	917257108	ZENTRALSCHMIERUNG RAUP
U-PROFIL 1X500X98 DC01 FE//	956572408	63	2	639	917291908	ANLENKSTUECK VORM.

Bezeichnung	Artikel	Pos.	Menge	Seite	Baugruppe	Bezeichnung
UEBERDRUCKVENTIL	571328408	12	2	128	11347526	ELEKTROPUMPE
UEBERDRUCKVENTIL	571328408	14	1	504	10327065	ELEKTROPUMPE
UEBERDRUCKVENTIL pmax=9	10152592	12	1	200	10129474	OELKUEHLER VORM.
UEBERHITZUNGSSCHUTZ	10290127	24	1	466	10876576	WASSERHEIZGERAET
UEBERHITZUNGSSCHUTZ	10290127	(6)	1	466	10876576	WASSERHEIZGERAET
UEBERWURFMUTTER AL6 A3	477401308	14	22	127	917257108	ZENTRALSCHMIERUNG RAUP
UEBERWURFMUTTER AL8 CR6	477401408	4	1	316	96039022	STUTZEN KPL.
UEBERWURFMUTTER AL8 CR6	477401408	37	1	462	918759808	ZUSATZHEIZUNG OW
UEBERWURFMUTTER AL8 CR6	477401408	37	1	483	918484108	HARNSTOFFANLAGE
UEBERWURFMUTTER DIN 38	477401508	33	1	483	918484108	HARNSTOFFANLAGE
UEBERWURFMUTTER DIN 38	477401608	660	2	541	96045351	HYDRAULIK OBERWAGEN
UEBERWURFMUTTER DIN 38	477402608	(3)	1	314	96034515	AUSGLEICHSBEHAELTER VO
UEBERWURFMUTTER DIN 38	477402608	849	1	543	96045351	HYDRAULIK OBERWAGEN
UEBERWURFMUTTER DIN 38	477401708	795	2	542	96045351	HYDRAULIK OBERWAGEN
UEBERWURFMUTTER DIN 38	477400308	679	2	541	96045351	HYDRAULIK OBERWAGEN
UEBERWURFMUTTER DIN 38	477400608	700	1	541	96045351	HYDRAULIK OBERWAGEN
UEBERWURFMUTTER UEMLL	11355720	10	1	486	10144093	REDUKTIONSMITTELINJEKTO
UMLENKROLLE	571851208	12	1	675	10802064	SEILLAENGENGEBER
UMLENKROLLE VORM.	10149360	3	2	230	12418347	KLIMAKOMPRESSOR ANBAU
UMWAELZPUMPE	11622224	20	1	414	969085208	HEIZUNG VORM.
UMWAELZPUMPE	11622224	26	1	466	10876576	WASSERHEIZGERAET
UMWAELZPUMPE	11622224	(7)	1	466	10876576	WASSERHEIZGERAET
UNIVERSAL EIN-AUSGANGS	968253608	5	5	518	919503008	EINBAUTEILE SCHALTSCHRAN
UNIVERSALSCHUTZ GPN 620	10145185	29	1	207	10149198	RS VORFOERDERPUMPE
UNTERBAU	11171274	60	1	419	10877138	FAHRERSITZ
UNTERLAGE 1X200X70 DC01	949361408	18	1	731	917267508	TRANSPORTHALTERUNG DKS
UNTERLAGE 2X200X70 DC01	949362208	19	1	731	917267508	TRANSPORTHALTERUNG DKS
UNTERLAGE 4X53X28 S315MC	97048341	21	1	475	967978908	VERRIEGELUNG VORM.
USIT-RING U 14X19,5X1,5	570116908	405	1	314	96034515	AUSGLEICHSBEHAELTER VO
USIT-RING U 14X19,5X1,5	570116908	303	1	539	96045351	HYDRAULIK OBERWAGEN
V-RING 350 NBR,60 SHORE	710908701	12	1	357	939292201	PLANETENGETRIEBE
VENTIL	10011832	13	1	170	10147687	AGGREGATETRAEGER ANBA
VENTIL	10011832	1	1	201	9078233	VENTIL
VENTIL	7622478	16	1	412	11083498	HEIZKLIMAGERAET
VENTIL M14X1,5	9078233	6	1	200	10129474	OELKUEHLER VORM.
VENTILBLOCK 420BAR ZNNI	10877433	25	1	538	96045351	HYDRAULIK OBERWAGEN
VENTILBRUECKE	10119695	2	2	193	10148438	KIPPHEBELBOCK KPL.
VENTILDECKEL 45 PA6.6	12101064	6	1	314	96034515	AUSGLEICHSBEHAELTER VO
VENTILDECKEL 45 PA6.6	12101064	3	1	315	96034522	AUSGLEICHSBEHAELTER
VENTILFUEHRUNG	10139064	4	4	192	10149578	ZYLINDERKOPF
VENTILKEGELSTUECK MK9	10004331	8	8	191	10149579	ZYLINDERKOPF VORM.
VENTILKEGELSTUECK MK9	11357514	8	8	191	10149579	ZYLINDERKOPF VORM.
VENTILSCHAFTDICHTRING	10120334	5	4	191	10149579	ZYLINDERKOPF VORM.
VENTILSITZ	511015408	10	1	561	511419608	DRUCKBEGRENZUNGSVENTI
VENTILSITZ	570063208	10	1	558	511433908	DRUCKBEGRENZUNGSVENTI
VENTILSITZRING AUSLASS PL	10128680	7	2	192	10149578	ZYLINDERKOPF
VENTILSITZRING EINLASS	10149739	6	2	192	10149578	ZYLINDERKOPF
VERBANDSKASTEN DIN 13164	789000308	5	1	145	928620108	ZUBEHOER
VERBINDER AL	11002980	10	1	610	968290608	STATIV
VERBINDER AL	11002980	10	1	613	968267208	STATIV
VERBINDUNGSKABEL 4M	11692299	4	1	42	10450273	ANTENNE
VERBINDUNGSLEITUNG 7X0,2	10472995	30	1	518	919503008	EINBAUTEILE SCHALTSCHRAN
VERBINDUNGSLEITUNG ANBA	10149677	230	1	162	12856862	DIESELMOTOR
VERBINDUNGSLEITUNG R-MO	10141549	1	1	219	10147364	LUFTANSAUGUNG ANBAU
VERBINDUNGSMITTEL EN 358	12102869	3	1	153	916959808	PERSOENLICHE SCHUTZAUS
VERBINDUNGSROHR 0	11000700	101	2	269	918731408	ANTRIEBSAGGREGAT KPL.
VERBINDUNGSROHR 0	11000700	21	2	410	917676208	HEIZUNG KRANFUEHRERKAB
VERBINDUNGSROHR 0	11000700	5	1	414	969085208	HEIZUNG VORM.
VERBINDUNGSROHR 0	11000700	11	1	462	918759808	ZUSATZHEIZUNG OW
VERBINDUNGSROHR 0	11000700	61	1	464	96020359	ZUSATZHEIZUNG VORM.

Bezeichnung	Artikel	Pos.	Menge	Seite	Baugruppe	Bezeichnung
VERBINDUNGSSTUECK Al Rm	10121666	1	1	179	10121667	VERBINDUNGSSTUECK M.O-R
VERBINDUNGSSTUECK M.O-R	10121667	4	1	175	10132560	OELWANNE MIT BEFEST.
VERBINDUNGSSTUECK M.O-R	10121667	1	1	267	10141167	DS OELWANNE
VERDAMPFER	10874825	15	1	412	11083498	HEIZKLIMAGERAET
VERDRAHTUNGSKANAL 80X4	638109101	30	0.28	522	969256608	GRUNDAUFBAU
VERKLEIDUNG A-SAEULE LI. 1	97002207	18	1	383	917305408	INNENVERKLEIDUNG EINBAU
VERKLEIDUNG A-SAEULE RE.	97002209	19	1	383	917305408	INNENVERKLEIDUNG EINBAU
VERKLEIDUNG ABLAGE 82X59	97001553	17	1	383	917305408	INNENVERKLEIDUNG EINBAU
VERKLEIDUNG HOLM LI. 84X1	97001015	3	1	383	917305408	INNENVERKLEIDUNG EINBAU
VERKLEIDUNG HOLM RE. 65X2	979206708	8	1	383	917305408	INNENVERKLEIDUNG EINBAU
VERKLEIDUNG LI.	966282308	1	1	383	917305408	INNENVERKLEIDUNG EINBAU
VERKLEIDUNG LI. 130X832X1	97001013	1	1	385	966282308	VERKLEIDUNG LI.
VERKLEIDUNG MONITORGEH	979207008	3	1	370	96015921	BEDIENELEMENTE EINBAU
VERKLEIDUNG OBEN RECHTS	97001589	4	1	383	917305408	INNENVERKLEIDUNG EINBAU
VERKLEIDUNG PEDALE 258X	97105652	3	1	373	96025887	PEDALTRAEGER EINBAU
VERKLEIDUNG PEDALE 315X	97089358	4	1	373	96025887	PEDALTRAEGER EINBAU
VERKLEIDUNG RE.	966282408	2	1	383	917305408	INNENVERKLEIDUNG EINBAU
VERKLEIDUNG RE. 120X526X	97138958	21	1	383	917305408	INNENVERKLEIDUNG EINBAU
VERKLEIDUNG RE. 127X1598	97001014	1	1	386	966282408	VERKLEIDUNG RE.
VERKLEIDUNG ROLLO 96X81	97001048	6	1	383	917305408	INNENVERKLEIDUNG EINBAU
VERKLEIDUNG RUECKWAND	97001404	5	1	383	917305408	INNENVERKLEIDUNG EINBAU
VERKLEIDUNG VORN 201X84	97006863	16	1	383	917305408	INNENVERKLEIDUNG EINBAU
VERKLEIDUNG ZWANGSENT	979206908	20	1	383	917305408	INNENVERKLEIDUNG EINBAU
VERLAENGERUNG B DIN 3123	790026408	65	1	144	928569808	GRUNDWERKZEUG
VERLAENGERUNG B DIN 3123	790026308	64	1	144	928569808	GRUNDWERKZEUG
VERLAENGERUNG M8X1	774374508	38	8	121	919644008	HYDRAULISCHE ABSTUETZUN
VERRIEGELUNG	967928508	2	1	471	918956108	HYDRAULISCHE BALLASTIER
VERRIEGELUNG VORM.	967978908	20	1	471	918956108	HYDRAULISCHE BALLASTIER
VERRIEGELUNGSZYLINDER 3	10870204	44	4	30	917511508	RAUPENMITTELTEIL VORM.
VERROHRUNG DRUCKLUFTA	969763408	4	1	476	917676308	DRUCKLUFTANLAGE OW
VERSCHLUSS HAKEN	704230208	25	2	320	96023117	BATTERIEKASTEN VORM.
VERSCHLUSSDECKEL 60	9144757	5	1	195	11358102	ZYLINDERKOPFDECKEL ANBA
VERSCHLUSSDECKEL DIN 443	12209779	2	4	167	11389608	KURBELGEHAEUSE KPL. MIT
VERSCHLUSSDECKEL DIN 443	12209781	10	3	192	10149578	ZYLINDERKOPF
VERSCHLUSSDECKEL DIN 443	12209783	3	7	167	11389608	KURBELGEHAEUSE KPL. MIT
VERSCHLUSSKAPPE	7619068	4	1	500	10871700	LUFTFILTER
VERSCHLUSSKAPPE M 1-K	604508508	515	5	44	96045228	KABELSTRANG
VERSCHLUSSKAPPE M 1-K	604508508	507	1	516	96037133	LEITUNG
VERSCHLUSSKAPPE M 1-K	604508508	503	2	617	96037132	LEITUNG
VERSCHLUSSKAPPE M 1-K	604508508	(503)	1	711	917598408	ELEKTRIK MESS-U.WARNEINR
VERSCHLUSSKAPPE M1-D	604512108	523	4	44	96045228	KABELSTRANG
VERSCHLUSSKAPPE M1-D	604512108	502	1	140	96045205	KABELSTRANG
VERSCHLUSSKAPPE M1-D	604512108	517	1	510	96045385	KABELSTRANG
VERSCHLUSSKAPPE M1-D	604512108	505	1	516	96037133	LEITUNG
VERSCHLUSSKAPPE M1-D	604512108	504	1	617	96037132	LEITUNG
VERSCHLUSSKAPPE M1-D	604512108	153	1	685	968708708	KLEMMKASTEN KPL.
VERSCHLUSSKAPPE M1-D	604512108	(510)	1	711	917598408	ELEKTRIK MESS-U.WARNEINR
VERSCHLUSSKEGEL VKA 22L	4772028	12	2	177	10155227	OELWANNE VORM.
VERSCHLUSSMUTTER RD32X	10466914	177	2	539	96045351	HYDRAULIK OBERWAGEN
VERSCHLUSSMUTTER RD36X	10466915	150	3	699	967785008	ZUSATZHYDRAULIK KLAPPSPI
VERSCHLUSSMUTTER RD54X	10466916	159	2	589	967784808	HYDRAULIK HILFSHUBWERK
VERSCHLUSSMUTTER RD79X	10466917	154	2	589	967784808	HYDRAULIK HILFSHUBWERK
VERSCHLUSSRING	10803065	14	1	346	510229408	HYDROMOTOR
VERSCHLUSSRING	570109808	4	1	347	570109008	TRIEBWERK
VERSCHLUSSSCHRAUBE	10324900	4	1	303	11692439	STEUERVENTIL
VERSCHLUSSSCHRAUBE	10650014	49	1	668	10876933	TELESKOPIERZYLINDER
VERSCHLUSSSCHRAUBE	11182678	53	1	668	10876933	TELESKOPIERZYLINDER
VERSCHLUSSSCHRAUBE	11690057	3	1	363	10802061	WINDENDREHGEBER
VERSCHLUSSSCHRAUBE	511025408	11	2	58	11643183	STEUERBLOCK
VERSCHLUSSSCHRAUBE	511025408	11	2	61	11643184	STEUERBLOCK

Bezeichnung	Artikel	Pos.	Menge	Seite	Baugruppe	Bezeichnung
VERSCHLUSSSCHRAUBE	570579808	23	1	472	10877810	BALLASTIERZYLINDER
VERSCHLUSSSCHRAUBE	570579808	48	2	668	10876933	TELESKOPIERZYLINDER
VERSCHLUSSSCHRAUBE 15	602425008	17	1	36	96045226	SCHALTKASTEN VORM.
VERSCHLUSSSCHRAUBE 15	602425008	197	4	685	968708708	KLEMMKASTEN KPL.
VERSCHLUSSSCHRAUBE DIN	4980712	15	1	550	10413106	STEUERBLOCK
VERSCHLUSSSCHRAUBE DIN	514584908	26	1	294	11210795	VERSTELLPUMPE
VERSCHLUSSSCHRAUBE DIN	518645408	55	1	668	10876933	TELESKOPIERZYLINDER
VERSCHLUSSSCHRAUBE DIN	11626246	19	2	309	571907208	ANSCHLUSSPLATTE
VERSCHLUSSSCHRAUBE DIN	12218194	10	1	128	11347526	ELEKTROPUMPE
VERSCHLUSSSCHRAUBE DIN	12218194	12	1	504	10327065	ELEKTROPUMPE
VERSCHLUSSSCHRAUBE DIN	10878578	27	1	226	5700161	LUFTPRESSER
VERSCHLUSSSCHRAUBE DIN	4600232	29	3	226	5700161	LUFTPRESSER
VERSCHLUSSSCHRAUBE G1/4	10470377	59	1	668	10876933	TELESKOPIERZYLINDER
VERSCHLUSSSCHRAUBE M1	7372626	32	1	294	11210795	VERSTELLPUMPE
VERSCHLUSSSCHRAUBE M1	7372626	24	4	305	10871282	VERSTELLPUMPE
VERSCHLUSSSCHRAUBE M12	11491897	(511)	1	711	917598408	ELEKTRIK MESS-U.WARNEINR
VERSCHLUSSSCHRAUBE M1	7372624	(35)	1	294	11210795	VERSTELLPUMPE
VERSCHLUSSSCHRAUBE M1	10100429	21	2	294	11210795	VERSTELLPUMPE
VERSCHLUSSSCHRAUBE M16	602424908	16	2	368	919010208	KRANFUEHRERKABINE VORM.
VERSCHLUSSSCHRAUBE M16	602424908	17	1	380	917304508	KRANFUEHRERKABINE VORM.
VERSCHLUSSSCHRAUBE M1	10220419	23	3	294	11210795	VERSTELLPUMPE
VERSCHLUSSSCHRAUBE M2	10000515	20	1	294	11210795	VERSTELLPUMPE
VERSCHLUSSSCHRAUBE M25	602425108	213	1	682	966291008	KLEMMKASTEN
VERSCHLUSSSCHRAUBE M2	560208508	27	2	305	10871282	VERSTELLPUMPE
VERSCHLUSSSCHRAUBE M2	570109408	11	2	346	510229408	HYDROMOTOR
VERSCHLUSSSCHRAUBE M30	10137918	2	1	171	10138450	ENDREGELVENTIL
VERSCHLUSSSCHRAUBE M30	10152594	2	1	202	10152592	UEBERDRUCKVENTIL
VERSCHLUSSSCHRAUBE M32	602425208	212	1	682	966291008	KLEMMKASTEN
VERSCHLUSSSCHRAUBE M33	409710601	67	4	73	90028956	FAHRANTRIEB
VERSCHLUSSSCHRAUBE M33	10289931	39	1	294	11210795	VERSTELLPUMPE
VERSCHLUSSSCHRAUBE M8X	7027497	(14)	4	294	11210795	VERSTELLPUMPE
VERSCHLUSSSCHRAUBE M8X	7027497	20	2	297	10008308	ANSCHLUSSPLATTE
VERSCHLUSSSCHRAUBE M8X	7027497	53	1	298	10472196	REGLER
VERSCHLUSSSCHRAUBE M8X	7027497	20	2	309	571907208	ANSCHLUSSPLATTE
VERSCHLUSSSCHRAUBE RD3	10466911	152	3	699	967785008	ZUSATZHYDRAULIK KLAPPSPI
VERSCHLUSSSCHRAUBE RD5	10466912	161	2	589	967784808	HYDRAULIK HILFSHUBWERK
VERSCHLUSSSCHRAUBE RD7	10466913	157	2	589	967784808	HYDRAULIK HILFSHUBWERK
VERSCHLUSSSCHRAUBE VST	7361553	8	3	546	11211756	STEUERBLOCK
VERSCHLUSSSCHRAUBE VST	7381638	12	1	220	10149677	VERBINDUNGSLEITUNG ANBA
VERSCHLUSSSCHRAUBE VST	7381638	9	2	229	10145278	ANBAUTEILE LUFTPRESSER
VERSCHLUSSSCHRAUBE VST	7381638	10	2	247	10115829	SCHWUNGRADGEHAEUSE AN
VERSCHLUSSSCHRAUBE VST	7381638	8	1	263	9078301	VERSCHLUSSTEILE
VERSCHLUSSSCHRAUBE VSTI	477510501	82	3	357	939292201	PLANETENGETRIEBE
VERSCHLUSSSCHRAUBE VSTI	7363178	81	1	357	939292201	PLANETENGETRIEBE
VERSCHLUSSSCHRAUBE VST	7380566	6	3	167	11389608	KURBELGEHAEUSE KPL. MIT
VERSCHLUSSSCHRAUBE VST	7380566	7	1	212	10146791	KRAFTSTOFF-FEINFILTERAN
VERSCHLUSSSCHRAUBE VST	7380566	4	1	218	10145173	ANSAUGSTUTZEN ANBAU
VERSCHLUSSSCHRAUBE VST	7380566	20	1	238	10140729	ATL-ANBAU
VERSCHLUSSSCHRAUBE VST	7382203	3	1	213	10133928	FILTERKONSOLE VORM.
VERSCHLUSSSCHRAUBE VST	7382203	15	2	261	10144036	NEBENABTRIEB ANBAU
VERSCHLUSSSCHRAUBE VSTI	477511401	86	2	357	939292201	PLANETENGETRIEBE
VERSCHLUSSSCHRAUBE VSTI	7380177	10	3	167	11389608	KURBELGEHAEUSE KPL. MIT
VERSCHLUSSSCHRAUBE VSTI	7380177	14	1	248	10116110	VERSCHLUSSTEILE
VERSCHLUSSSCHRAUBE VST	10041903	10	5	170	10147687	AGGREGATETRAEGER ANBA
VERSCHLUSSSCHRAUBE VSTI	7381457	7	2	167	11389608	KURBELGEHAEUSE KPL. MIT
VERSCHLUSSSCHRAUBE VSTI	7381457	21	1	238	10140729	ATL-ANBAU
VERSCHLUSSSCHRAUBE VSTI	7382204	11	1	200	10129474	OELKUEHLER VORM.
VERSCHLUSSSCHRAUBE VSTI	10043136	16	1	170	10147687	AGGREGATETRAEGER ANBA
VERSCHLUSSSCHRAUBE VSTI	10043136	6	1	195	11358102	ZYLINDERKOPFDECKEL ANBA
VERSCHLUSSSCHRAUBE VST	7382202	1	1	259	10142747	VERSCHLUSSTEILE

Bezeichnung	Artikel	Pos.	Menge	Seite	Baugruppe	Bezeichnung
VERSCHLUSSSCHRAUBE VSTI	10285724	3	1	204	10142942	SCHMIEROELFILTER ANBAU
VERSCHLUSSSCHRAUBE VSTI	10335593	23	1	546	11211756	STEUERBLOCK
VERSCHLUSSSTOPFEN	779012201	84	1	357	939292201	PLANETENGETRIEBE
VERSCHLUSSSTOPFEN GPN	779016201	88	1	340	90008901	DREHWERKANTRIEB
VERSCHLUSSSTOPFEN GPN 3	11698481	5	1	208	12489819	ABDECKKAPPEN-KIT
VERSCHLUSSSTOPFEN GPN 3	11835061	6	2	208	12489819	ABDECKKAPPEN-KIT
VERSCHLUSSSTOPFEN ISO 8	477700408	678	2	541	96045351	HYDRAULIK OBERWAGEN
VERSCHLUSSSTOPFEN ISO 8	477700508	659	2	541	96045351	HYDRAULIK OBERWAGEN
VERSCHLUSSSTOPFEN PE-L	7361205	10	10	380	917304508	KRANFUEHRERKABINE VORM.
VERSCHLUSSSTOPFEN PE-L	7361205	42	2	405	917304708	SCHIEBETUER EINBAU
VERSCHLUSSSTOPFEN PE-L	779016608	15	8	628	919028808	MECH.TEILE VERSANDMONT
VERSCHLUSSTEILE	10115664	452	1	164	12856862	DIESELMOTOR
VERSCHLUSSTEILE	10116110	521	1	165	12856862	DIESELMOTOR
VERSCHLUSSTEILE	10127979	526	1	165	12856862	DIESELMOTOR
VERSCHLUSSTEILE	10128439	524	1	165	12856862	DIESELMOTOR
VERSCHLUSSTEILE	10142747	630	1	165	12856862	DIESELMOTOR
VERSCHLUSSTEILE	9078301	654	1	166	12856862	DIESELMOTOR
VERSCHLUSSTEILE Al Rm>150	10128440	1	1	249	10128439	VERSCHLUSSTEILE
VERSCHMUTZUNGSANZEIGE	571356108	(4)	1	538	96045351	HYDRAULIK OBERWAGEN
VERSCHRAUBUNG	11081053	3	1	131	774375108	DURCHGANGSNIPPELBLOCK
VERSCHRAUBUNG	570066008	2	1	94	502806508	AUSGLEICHSBEHAELTER
VERSCHRAUBUNG	790065608	4	1	143	919328608	WERKZEUG M.ZUBEHOER
VERSCHRAUBUNG	790533908	5	2	143	919328608	WERKZEUG M.ZUBEHOER
VERSCHRAUBUNG	971581108	160	1	538	96045351	HYDRAULIK OBERWAGEN
VERSCHRAUBUNG BUZ 16S C	477701108	699	1	541	96045351	HYDRAULIK OBERWAGEN
VERSCHRAUBUNG BUZ 22L C	477700208	848	1	543	96045351	HYDRAULIK OBERWAGEN
VERSCHRAUBUNG BUZ 8 M14	10816958	400	1	494	96048826	ABGASANLAGE VORM.
VERSCHRAUBUNG E335	979374708	403	1	277	919007708	ANTRIEBSAGGREGAT VORM.
VERSCHRAUBUNG EGE 10L M	471903908	603	1	90	96035796	HYDR.FAHRANTRIEB
VERSCHRAUBUNG EGE 10L M	471903908	603	1	107	96035792	HYDR.FAHRANTRIEB
VERSCHRAUBUNG EGE 10S G	471900408	735	1	542	96045351	HYDRAULIK OBERWAGEN
VERSCHRAUBUNG EGE 12L G	471903808	667	1	541	96045351	HYDRAULIK OBERWAGEN
VERSCHRAUBUNG EGE 18L	10878394	400	1	327	96034868	KRAFTSTOFFFILTER VORM.
VERSCHRAUBUNG EGE 22L	471901408	661	1	541	96045351	HYDRAULIK OBERWAGEN
VERSCHRAUBUNG EGE 38S	10876353	626	1	90	96035796	HYDR.FAHRANTRIEB
VERSCHRAUBUNG EGE 38S	10876353	626	1	107	96035792	HYDR.FAHRANTRIEB
VERSCHRAUBUNG EGE 42L G	471903608	715	2	541	96045351	HYDRAULIK OBERWAGEN
VERSCHRAUBUNG EGESD10-	471901108	620	3	541	96045351	HYDRAULIK OBERWAGEN
VERSCHRAUBUNG EGESD10-	471901108	621	1	590	967784808	HYDRAULIK HILFSHUBWERK
VERSCHRAUBUNG EGESD12-	471902208	602	1	540	96045351	HYDRAULIK OBERWAGEN
VERSCHRAUBUNG EGESD12-	471901208	648	1	541	96045351	HYDRAULIK OBERWAGEN
VERSCHRAUBUNG EGESD12-	471901208	637	1	590	967784808	HYDRAULIK HILFSHUBWERK
VERSCHRAUBUNG EGESD12-	471900508	609	1	693	967785408	ZUSATZHYDRAULIK KLAPPSPI
VERSCHRAUBUNG EGESD16-	471900608	637	6	52	96035801	HYDRAULIK MITTELTEIL
VERSCHRAUBUNG EGESD18-	471901308	646	2	52	96035801	HYDRAULIK MITTELTEIL
VERSCHRAUBUNG EGESD22-	471902408	605	1	90	96035796	HYDR.FAHRANTRIEB
VERSCHRAUBUNG EGESD22-	471902408	605	1	107	96035792	HYDR.FAHRANTRIEB
VERSCHRAUBUNG EGESD25-	471900808	681	1	541	96045351	HYDRAULIK OBERWAGEN
VERSCHRAUBUNG EGESD6-	471900108	627	2	52	96035801	HYDRAULIK MITTELTEIL
VERSCHRAUBUNG EGESD6-	471900308	671	1	541	96045351	HYDRAULIK OBERWAGEN
VERSCHRAUBUNG EL 10L CR6	472330208	604	2	90	96035796	HYDR.FAHRANTRIEB
VERSCHRAUBUNG EL 10L CR6	472330208	604	2	107	96035792	HYDR.FAHRANTRIEB
VERSCHRAUBUNG EL 10L CR6	472330208	614	8	540	96045351	HYDRAULIK OBERWAGEN
VERSCHRAUBUNG EL 10L CR6	472330208	616	2	590	967784808	HYDRAULIK HILFSHUBWERK
VERSCHRAUBUNG EL 10L CR6	472330208	604	3	688	967784508	HYDRAULIK TELE
VERSCHRAUBUNG EL 12L M18	247128602	614	1	51	96035801	HYDRAULIK MITTELTEIL
VERSCHRAUBUNG EL 12L M18	247128602	609	1	90	96035796	HYDR.FAHRANTRIEB
VERSCHRAUBUNG EL 12L M18	247128602	609	1	107	96035792	HYDR.FAHRANTRIEB
VERSCHRAUBUNG EL 12L M18	247128602	639	8	541	96045351	HYDRAULIK OBERWAGEN
VERSCHRAUBUNG EL 12L M18	247128602	601	2	590	967784808	HYDRAULIK HILFSHUBWERK

Bezeichnung	Artikel	Pos.	Menge	Seite	Baugruppe	Bezeichnung
VERSCHRAUBUNG EL 12L M18	247128602	611	2	688	967784508	HYDRAULIK TELE
VERSCHRAUBUNG EL 12S C	7617461	619	1	51	96035801	HYDRAULIK MITTELTEIL
VERSCHRAUBUNG EL 12S C	7617461	602	4	124	968077208	HYDRAULIK ABSTUETZUNG
VERSCHRAUBUNG EL 12S C	7617461	605	1	693	967785408	ZUSATZHYDRAULIK KLAPPSPI
VERSCHRAUBUNG EL 15L CR6	472300414	841	1	543	96045351	HYDRAULIK OBERWAGEN
VERSCHRAUBUNG EL 16S C	7407098	656	5	541	96045351	HYDRAULIK OBERWAGEN
VERSCHRAUBUNG EL 18L CR6	247128502	842	1	543	96045351	HYDRAULIK OBERWAGEN
VERSCHRAUBUNG EL 20S C	7407107	822	2	542	96045351	HYDRAULIK OBERWAGEN
VERSCHRAUBUNG EL 22L CR6	247138602	790	2	542	96045351	HYDRAULIK OBERWAGEN
VERSCHRAUBUNG EL 22L CR6	247138602	600	3	590	967784808	HYDRAULIK HILFSHUBWERK
VERSCHRAUBUNG EL 25S C	7407118	808	2	542	96045351	HYDRAULIK OBERWAGEN
VERSCHRAUBUNG EL 25S C	7407118	610	1	590	967784808	HYDRAULIK HILFSHUBWERK
VERSCHRAUBUNG EL 28L CR6	7407120	814	2	542	96045351	HYDRAULIK OBERWAGEN
VERSCHRAUBUNG EL 42L A3	472332008	192	1	539	96045351	HYDRAULIK OBERWAGEN
VERSCHRAUBUNG EL 42L CR6	7367986	612	1	51	96035801	HYDRAULIK MITTELTEIL
VERSCHRAUBUNG EL 42L CR6	7367986	781	5	542	96045351	HYDRAULIK OBERWAGEN
VERSCHRAUBUNG EL 6S CR6	472331208	604	5	540	96045351	HYDRAULIK OBERWAGEN
VERSCHRAUBUNG EL 6S CR6	472331208	607	1	590	967784808	HYDRAULIK HILFSHUBWERK
VERSCHRAUBUNG ET 12L M18	247105602	620	1	52	96035801	HYDRAULIK MITTELTEIL
VERSCHRAUBUNG ET 12L M18	247105602	621	1	90	96035796	HYDR.FAHRANTRIEB
VERSCHRAUBUNG ET 12L M18	247105602	621	1	107	96035792	HYDR.FAHRANTRIEB
VERSCHRAUBUNG ET 12L M18	247105602	609	4	540	96045351	HYDRAULIK OBERWAGEN
VERSCHRAUBUNG ET 12L M18	247105602	638	1	590	967784808	HYDRAULIK HILFSHUBWERK
VERSCHRAUBUNG ET 12L M18	247105602	605	1	595	969426308	ZUSATZHYDRAULIK KLAPPSPI
VERSCHRAUBUNG ET 18L CR6	247108402	767	1	542	96045351	HYDRAULIK OBERWAGEN
VERSCHRAUBUNG ET 25S C	7367774	635	1	52	96035801	HYDRAULIK MITTELTEIL
VERSCHRAUBUNG ET 25S C	7367774	712	2	541	96045351	HYDRAULIK OBERWAGEN
VERSCHRAUBUNG ET 25S C	7367774	623	1	590	967784808	HYDRAULIK HILFSHUBWERK
VERSCHRAUBUNG ET 28L M36	7407122	633	1	52	96035801	HYDRAULIK MITTELTEIL
VERSCHRAUBUNG ET 28L M36	7407122	829	1	542	96045351	HYDRAULIK OBERWAGEN
VERSCHRAUBUNG EV 12L M18	10410305	601	5	540	96045351	HYDRAULIK OBERWAGEN
VERSCHRAUBUNG EV 22L M30	10410771	404	1	314	96034515	AUSGLEICHSBEHAELTER VO
VERSCHRAUBUNG EV 22L M30	10410771	835	2	543	96045351	HYDRAULIK OBERWAGEN
VERSCHRAUBUNG EV 42L M52	10651363	759	6	542	96045351	HYDRAULIK OBERWAGEN
VERSCHRAUBUNG EV16S M2	10410770	810	2	542	96045351	HYDRAULIK OBERWAGEN
VERSCHRAUBUNG EV16S M2	10410770	616	1	595	969426308	ZUSATZHYDRAULIK KLAPPSPI
VERSCHRAUBUNG EV38S M5	10467292	650	1	52	96035801	HYDRAULIK MITTELTEIL
VERSCHRAUBUNG EV38S M5	10467292	617	1	90	96035796	HYDR.FAHRANTRIEB
VERSCHRAUBUNG EV38S M5	10467292	617	1	107	96035792	HYDR.FAHRANTRIEB
VERSCHRAUBUNG EV38S M5	10467292	757	1	542	96045351	HYDRAULIK OBERWAGEN
VERSCHRAUBUNG EVL16-SR3	472004008	4	2	361	90200104	OELMESSEINRICHTUNG
VERSCHRAUBUNG EW 10L M	7403569	638	2	478	969763408	VERROHRUNG DRUCKLUFTA
VERSCHRAUBUNG EW 10L M	7403569	616	3	540	96045351	HYDRAULIK OBERWAGEN
VERSCHRAUBUNG EW 10L M	7403569	615	1	590	967784808	HYDRAULIK HILFSHUBWERK
VERSCHRAUBUNG EW 10L M	7403569	603	6	688	967784508	HYDRAULIK TELE
VERSCHRAUBUNG EW 10S C	7617268	659	2	52	96035801	HYDRAULIK MITTELTEIL
VERSCHRAUBUNG EW 10S C	7617268	805	2	542	96045351	HYDRAULIK OBERWAGEN
VERSCHRAUBUNG EW 12L M	247117702	616	1	51	96035801	HYDRAULIK MITTELTEIL
VERSCHRAUBUNG EW 12L M	247117702	612	2	90	96035796	HYDR.FAHRANTRIEB
VERSCHRAUBUNG EW 12L M	247117702	612	2	107	96035792	HYDR.FAHRANTRIEB
VERSCHRAUBUNG EW 12L M	247117702	607	15	540	96045351	HYDRAULIK OBERWAGEN
VERSCHRAUBUNG EW 12L M	247117702	609	1	688	967784508	HYDRAULIK TELE
VERSCHRAUBUNG EW 12S C	7617354	638	4	52	96035801	HYDRAULIK MITTELTEIL
VERSCHRAUBUNG EW 12S C	7617354	621	2	541	96045351	HYDRAULIK OBERWAGEN
VERSCHRAUBUNG EW 12S C	7617354	604	2	693	967785408	ZUSATZHYDRAULIK KLAPPSPI
VERSCHRAUBUNG EW 15L C	7615379	424	2	277	919007708	ANTRIEBSAGGREGAT VORM.
VERSCHRAUBUNG EW 15L C	7615379	648	1	478	969763408	VERROHRUNG DRUCKLUFTA
VERSCHRAUBUNG EW 15L C	7615379	833	2	543	96045351	HYDRAULIK OBERWAGEN
VERSCHRAUBUNG EW 16S C	7617460	641	2	52	96035801	HYDRAULIK MITTELTEIL
VERSCHRAUBUNG EW 16S C	7617460	658	11	541	96045351	HYDRAULIK OBERWAGEN

Bezeichnung	Artikel	Pos.	Menge	Seite	Baugruppe	Bezeichnung
VERSCHRAUBUNG EW 16S C	7617460	601	4	699	967785008	ZUSATZHYDRAULIK KLAPPSPI
VERSCHRAUBUNG EW 18L M	247108302	644	2	52	96035801	HYDRAULIK MITTELTEIL
VERSCHRAUBUNG EW 18L M	247108302	401	2	327	96034868	KRAFTSTOFFFILTER VORM.
VERSCHRAUBUNG EW 18L M	247108302	635	1	478	969763408	VERROHRUNG DRUCKLUFTA
VERSCHRAUBUNG EW 18L M	247108302	710	2	541	96045351	HYDRAULIK OBERWAGEN
VERSCHRAUBUNG EW 18L M	247108302	610	1	595	969426308	ZUSATZHYDRAULIK KLAPPSPI
VERSCHRAUBUNG EW 18L ST	10815664	633	3	478	969763408	VERROHRUNG DRUCKLUFTA
VERSCHRAUBUNG EW 20S M	7407108	640	2	52	96035801	HYDRAULIK MITTELTEIL
VERSCHRAUBUNG EW 20S M	7407108	635	1	541	96045351	HYDRAULIK OBERWAGEN
VERSCHRAUBUNG EW 22L C	247126202	2	1	228	10145176	ROHRLEITUNG ANBAU
VERSCHRAUBUNG EW 25S C	7407119	604	2	51	96035801	HYDRAULIK MITTELTEIL
VERSCHRAUBUNG EW 28L C	7617494	731	4	542	96045351	HYDRAULIK OBERWAGEN
VERSCHRAUBUNG EW 6L CR6	247021702	626	2	52	96035801	HYDRAULIK MITTELTEIL
VERSCHRAUBUNG EW 6L CR6	247021702	18	2	127	917257108	ZENTRALSCHMIERUNG RAUP
VERSCHRAUBUNG EW 6S M14	472531508	11	2	127	917257108	ZENTRALSCHMIERUNG RAUP
VERSCHRAUBUNG EW 6S M14	472531508	726	1	541	96045351	HYDRAULIK OBERWAGEN
VERSCHRAUBUNG EW 8L CR6	247021802	35	1	483	918484108	HARNSTOFFANLAGE
VERSCHRAUBUNG EWSD22-L	472530608	625	13	541	96045351	HYDRAULIK OBERWAGEN
VERSCHRAUBUNG EWSD22-L	472530608	643	3	590	967784808	HYDRAULIK HILFSHUBWERK
VERSCHRAUBUNG EWSD38-S	472531808	605	6	51	96035801	HYDRAULIK MITTELTEIL
VERSCHRAUBUNG EWSD38-S	472531808	602	2	90	96035796	HYDR.FAHRANTRIEB
VERSCHRAUBUNG EWSD38-S	472531808	602	2	107	96035792	HYDR.FAHRANTRIEB
VERSCHRAUBUNG EWSD38-S	472531808	653	5	541	96045351	HYDRAULIK OBERWAGEN
VERSCHRAUBUNG GE 10L M1	471030508	628	1	541	96045351	HYDRAULIK OBERWAGEN
VERSCHRAUBUNG GE 10L M1	471030508	624	1	590	967784808	HYDRAULIK HILFSHUBWERK
VERSCHRAUBUNG GE 10L M	7021521	2	1	487	969904608	DRUCKBEGRENZUNGSVENTI
VERSCHRAUBUNG GE 10L M	471039808	623	1	478	969763408	VERROHRUNG DRUCKLUFTA
VERSCHRAUBUNG GE 12 M1	11002988	5	1	214	10143341	KRAFTSTOFFLEITUNGEN
VERSCHRAUBUNG GE 12L G1	471034808	662	4	541	96045351	HYDRAULIK OBERWAGEN
VERSCHRAUBUNG GE 12L G1	471034808	605	4	688	967784508	HYDRAULIK TELE
VERSCHRAUBUNG GE 12L M	7405399	746	2	542	96045351	HYDRAULIK OBERWAGEN
VERSCHRAUBUNG GE 12L M	471039908	720	3	541	96045351	HYDRAULIK OBERWAGEN
VERSCHRAUBUNG GE 12S G1/	471032608	608	3	51	96035801	HYDRAULIK MITTELTEIL
VERSCHRAUBUNG GE 12S G1/	471032608	622	1	90	96035796	HYDR.FAHRANTRIEB
VERSCHRAUBUNG GE 12S G1/	471032608	622	1	107	96035792	HYDR.FAHRANTRIEB
VERSCHRAUBUNG GE 12S G1/	471032608	606	4	693	967785408	ZUSATZHYDRAULIK KLAPPSPI
VERSCHRAUBUNG GE 12S G3/	471032708	618	10	51	96035801	HYDRAULIK MITTELTEIL
VERSCHRAUBUNG GE 12S G3/	471032708	618	3	540	96045351	HYDRAULIK OBERWAGEN
VERSCHRAUBUNG GE 12S G3/	471032708	613	1	590	967784808	HYDRAULIK HILFSHUBWERK
VERSCHRAUBUNG GE 12S M	471032908	601	12	124	968077208	HYDRAULIK ABSTUETZUNG
VERSCHRAUBUNG GE 12S M	471032908	725	2	541	96045351	HYDRAULIK OBERWAGEN
VERSCHRAUBUNG GE 14,15,1	10813942	8	1	214	10143341	KRAFTSTOFFLEITUNGEN
VERSCHRAUBUNG GE 18L M	471031108	602	1	478	969763408	VERROHRUNG DRUCKLUFTA
VERSCHRAUBUNG GE 18L M	471031108	749	3	542	96045351	HYDRAULIK OBERWAGEN
VERSCHRAUBUNG GE 18L M2	10815662	644	4	478	969763408	VERROHRUNG DRUCKLUFTA
VERSCHRAUBUNG GE 20S G1/	7410451	745	1	542	96045351	HYDRAULIK OBERWAGEN
VERSCHRAUBUNG GE 22L M2	10036896	771	1	542	96045351	HYDRAULIK OBERWAGEN
VERSCHRAUBUNG GE 22L M2	471001308	3	2	361	90200104	OELMESSEINRICHTUNG
VERSCHRAUBUNG GE 28L G1	471031608	754	4	542	96045351	HYDRAULIK OBERWAGEN
VERSCHRAUBUNG GE 28L G3/	7410441	692	1	541	96045351	HYDRAULIK OBERWAGEN
VERSCHRAUBUNG GE 28L M	7403925	770	1	542	96045351	HYDRAULIK OBERWAGEN
VERSCHRAUBUNG GE 42L G1	471034708	610	1	51	96035801	HYDRAULIK MITTELTEIL
VERSCHRAUBUNG GE 42L G1	471034708	672	8	541	96045351	HYDRAULIK OBERWAGEN
VERSCHRAUBUNG GE 6 M10	10813933	9	1	215	10143342	LECKOELRUECKLAUF
VERSCHRAUBUNG GE 6S G1/4	471032108	3	3	586	921444108	ZENTRALSCHMIERANLAGE
VERSCHRAUBUNG GE 6S G1/4	471032108	640	1	590	967784808	HYDRAULIK HILFSHUBWERK
VERSCHRAUBUNG GE 6S G1/4	471032108	600	1	688	967784508	HYDRAULIK TELE
VERSCHRAUBUNG GE 8 M12	10813935	10	2	215	10143342	LECKOELRUECKLAUF
VERSCHRAUBUNG GE 8L M16	7618383	2	1	316	96039022	STUTZEN KPL.
VERSCHRAUBUNG GE 8L M18	471039308	36	1	462	918759808	ZUSATZHEIZUNG OW

Bezeichnung	Artikel	Pos.	Menge	Seite	Baugruppe	Bezeichnung
VERSCHRAUBUNG GE6-LM8X1	774374808	19	16	127	917257108	ZENTRALSCHMIERUNG RAUP
VERSCHRAUBUNG GEF.A M2	10493479	61	1	668	10876933	TELESKOPIERZYLINDER
VERSCHRAUBUNG GEO 8L M	10872598	3	1	487	969904608	DRUCKBEGRENZUNGSVENTI
VERSCHRAUBUNG GR 20/12S	475004108	747	1	542	96045351	HYDRAULIK OBERWAGEN
VERSCHRAUBUNG GR 20/16S	475033608	639	6	52	96035801	HYDRAULIK MITTELTEIL
VERSCHRAUBUNG GR 22/18L	475030708	643	2	52	96035801	HYDRAULIK MITTELTEIL
VERSCHRAUBUNG GZ 15L A3	470011208	840	1	543	96045351	HYDRAULIK OBERWAGEN
VERSCHRAUBUNG ISO 8434	482430314	639	2	590	967784808	HYDRAULIK HILFSHUBWERK
VERSCHRAUBUNG ISO 8434	482430314	607	1	688	967784508	HYDRAULIK TELE
VERSCHRAUBUNG ISO 8434	482431314	836	1	543	96045351	HYDRAULIK OBERWAGEN
VERSCHRAUBUNG ISO 8434	482431414	648	1	52	96035801	HYDRAULIK MITTELTEIL
VERSCHRAUBUNG ISO 8434	482431514	660	2	52	96035801	HYDRAULIK MITTELTEIL
VERSCHRAUBUNG ISO 8434	482431514	612	2	595	969426308	ZUSATZHYDRAULIK KLAPPSPI
VERSCHRAUBUNG ISO 8434	482431614	633	2	541	96045351	HYDRAULIK OBERWAGEN
VERSCHRAUBUNG ISO 8434	482430614	606	1	90	96035796	HYDR.FAHRANTRIEB
VERSCHRAUBUNG ISO 8434	482430614	606	1	107	96035792	HYDR.FAHRANTRIEB
VERSCHRAUBUNG ISO 8434	482430614	624	4	541	96045351	HYDRAULIK OBERWAGEN
VERSCHRAUBUNG ISO 8434	482430614	635	1	590	967784808	HYDRAULIK HILFSHUBWERK
VERSCHRAUBUNG ISO 8434	482431814	826	1	542	96045351	HYDRAULIK OBERWAGEN
VERSCHRAUBUNG ISO 8434	482431114	611	1	51	96035801	HYDRAULIK MITTELTEIL
VERSCHRAUBUNG ISO 8434	482530814	615	2	51	96035801	HYDRAULIK MITTELTEIL
VERSCHRAUBUNG ISO 8434	482530814	777	3	542	96045351	HYDRAULIK OBERWAGEN
VERSCHRAUBUNG ISO 8434 G	471004514	743	5	542	96045351	HYDRAULIK OBERWAGEN
VERSCHRAUBUNG ISO 8434	471008214	764	1	542	96045351	HYDRAULIK OBERWAGEN
VERSCHRAUBUNG ISO 8434-1	7362091	600	1	90	96035796	HYDR.FAHRANTRIEB
VERSCHRAUBUNG ISO 8434-1	7362091	600	1	107	96035792	HYDR.FAHRANTRIEB
VERSCHRAUBUNG ISO 8434-1	7362091	608	6	540	96045351	HYDRAULIK OBERWAGEN
VERSCHRAUBUNG ISO 8434-1	7362091	641	1	590	967784808	HYDRAULIK HILFSHUBWERK
VERSCHRAUBUNG ISO 8434-1	7362091	602	5	688	967784508	HYDRAULIK TELE
VERSCHRAUBUNG ISO 8434-1	471039708	605	1	478	969763408	VERROHRUNG DRUCKLUFTA
VERSCHRAUBUNG ISO 8434-1	471039708	619	5	541	96045351	HYDRAULIK OBERWAGEN
VERSCHRAUBUNG ISO 8434-1	471039708	614	1	590	967784808	HYDRAULIK HILFSHUBWERK
VERSCHRAUBUNG ISO 8434-1	4981235	3	1	180	10150934	OELMESSSTAB KPL.
VERSCHRAUBUNG ISO 8434-1	4981235	19	2	238	10140729	ATL-ANBAU
VERSCHRAUBUNG ISO 8434-1	471032808	655	8	52	96035801	HYDRAULIK MITTELTEIL
VERSCHRAUBUNG ISO 8434-1	471032808	651	3	541	96045351	HYDRAULIK OBERWAGEN
VERSCHRAUBUNG ISO 8434-1	471032808	608	1	693	967785408	ZUSATZHYDRAULIK KLAPPSPI
VERSCHRAUBUNG ISO 8434-1	471030708	650	5	541	96045351	HYDRAULIK OBERWAGEN
VERSCHRAUBUNG ISO 8434-1	7362515	3	1	228	10145176	ROHRLEITUNG ANBAU
VERSCHRAUBUNG ISO 8434-1	4981233	6	1	229	10145278	ANBAUTEILE LUFTPRESSER
VERSCHRAUBUNG NACHARB	971774408	194	1	539	96045351	HYDRAULIK OBERWAGEN
VERSCHRAUBUNG RED 18/15L	475435608	727	1	541	96045351	HYDRAULIK OBERWAGEN
VERSCHRAUBUNG RED 25/10	475432208	831	1	542	96045351	HYDRAULIK OBERWAGEN
VERSCHRAUBUNG RED 42/18L	475431708	845	1	543	96045351	HYDRAULIK OBERWAGEN
VERSCHRAUBUNG RED 42/22	475431608	789	2	542	96045351	HYDRAULIK OBERWAGEN
VERSCHRAUBUNG RED 42/28L	475431308	609	2	51	96035801	HYDRAULIK MITTELTEIL
VERSCHRAUBUNG RED 42/28L	475431308	674	2	541	96045351	HYDRAULIK OBERWAGEN
VERSCHRAUBUNG RED 42/35	475436708	803	1	542	96045351	HYDRAULIK OBERWAGEN
VERSCHRAUBUNG REDSD12/1	475431408	620	1	90	96035796	HYDR.FAHRANTRIEB
VERSCHRAUBUNG REDSD12/1	475431408	620	1	107	96035792	HYDR.FAHRANTRIEB
VERSCHRAUBUNG REDSD12/1	475431408	758	1	542	96045351	HYDRAULIK OBERWAGEN
VERSCHRAUBUNG REDSD12/1	475431408	610	4	688	967784508	HYDRAULIK TELE
VERSCHRAUBUNG REDSD12/1	475433408	610	1	693	967785408	ZUSATZHYDRAULIK KLAPPSPI
VERSCHRAUBUNG REDSD12/	475432908	603	4	693	967785408	ZUSATZHYDRAULIK KLAPPSPI
VERSCHRAUBUNG REDSD16/1	475433508	824	4	542	96045351	HYDRAULIK OBERWAGEN
VERSCHRAUBUNG REDSD16/1	475433508	614	2	595	969426308	ZUSATZHYDRAULIK KLAPPSPI
VERSCHRAUBUNG REDSD16/	475433108	661	2	52	96035801	HYDRAULIK MITTELTEIL
VERSCHRAUBUNG REDSD22/1	475430808	827	1	542	96045351	HYDRAULIK OBERWAGEN
VERSCHRAUBUNG REDSD22/1	475436108	610	1	90	96035796	HYDR.FAHRANTRIEB
VERSCHRAUBUNG REDSD22/1	475436108	610	1	107	96035792	HYDR.FAHRANTRIEB

Bezeichnung	Artikel	Pos.	Menge	Seite	Baugruppe	Bezeichnung
VERSCHRAUBUNG REDSD22/1	475436108	740	1	542	96045351	HYDRAULIK OBERWAGEN
VERSCHRAUBUNG REDSD22/1	475436108	611	1	590	967784808	HYDRAULIK HILFSHUBWERK
VERSCHRAUBUNG REDSD22/1	475435508	756	3	542	96045351	HYDRAULIK OBERWAGEN
VERSCHRAUBUNG REDSD28/1	475430908	819	1	542	96045351	HYDRAULIK OBERWAGEN
VERSCHRAUBUNG REDSD28/1	475430908	615	1	595	969426308	ZUSATZHYDRAULIK KLAPPSPI
VERSCHRAUBUNG REDSD28/2	475430508	647	2	52	96035801	HYDRAULIK MITTELTEIL
VERSCHRAUBUNG REDSD28/2	475430508	687	1	541	96045351	HYDRAULIK OBERWAGEN
VERSCHRAUBUNG REDSD35/2	475430408	632	3	52	96035801	HYDRAULIK MITTELTEIL
VERSCHRAUBUNG REDSD38/1	475434208	698	1	541	96045351	HYDRAULIK OBERWAGEN
VERSCHRAUBUNG REDSD38/	475408108	734	1	542	96045351	HYDRAULIK OBERWAGEN
VERSCHRAUBUNG REDSDN1	475432008	601	1	693	967785408	ZUSATZHYDRAULIK KLAPPSPI
VERSCHRAUBUNG REDSDN1	475430208	846	1	543	96045351	HYDRAULIK OBERWAGEN
VERSCHRAUBUNG REDSDN20	475432108	701	2	541	96045351	HYDRAULIK OBERWAGEN
VERSCHRAUBUNG REDSDN25	475433608	622	1	541	96045351	HYDRAULIK OBERWAGEN
VERSCHRAUBUNG REDSDN25	475433608	622	1	590	967784808	HYDRAULIK HILFSHUBWERK
VERSCHRAUBUNG REDSDN25	475432308	634	2	52	96035801	HYDRAULIK MITTELTEIL
VERSCHRAUBUNG REDSDN25	475432308	711	1	541	96045351	HYDRAULIK OBERWAGEN
VERSCHRAUBUNG REDSDN28	475435408	828	1	542	96045351	HYDRAULIK OBERWAGEN
VERSCHRAUBUNG REDSDN38	475435308	844	1	543	96045351	HYDRAULIK OBERWAGEN
VERSCHRAUBUNG REDSDN42	475407208	613	1	51	96035801	HYDRAULIK MITTELTEIL
VERSCHRAUBUNG REDSDN42	475407208	780	1	542	96045351	HYDRAULIK OBERWAGEN
VERSCHRAUBUNG RI M22X1,	7381363	4	2	224	9080294	LUFTPRESSER VORM.
VERSCHRAUBUNG RSWS10-	473230508	664	2	541	96045351	HYDRAULIK OBERWAGEN
VERSCHRAUBUNG RSWS10-	473210508	600	1	693	967785408	ZUSATZHYDRAULIK KLAPPSPI
VERSCHRAUBUNG RSWS10-	473231008	658	4	52	96035801	HYDRAULIK MITTELTEIL
VERSCHRAUBUNG RSWS10-	473231008	843	1	543	96045351	HYDRAULIK OBERWAGEN
VERSCHRAUBUNG RSWS22-	473331308	801	1	542	96045351	HYDRAULIK OBERWAGEN
VERSCHRAUBUNG RSWS6-SR	473230608	645	2	52	96035801	HYDRAULIK MITTELTEIL
VERSCHRAUBUNG S235JR	10145589	11	1	261	10144036	NEBENABTRIEB ANBAU
VERSCHRAUBUNG SNV10-L	470010108	612	1	688	967784508	HYDRAULIK TELE
VERSCHRAUBUNG SNV10-L	470010108	603	1	699	967785008	ZUSATZHYDRAULIK KLAPPSPI
VERSCHRAUBUNG SNV10-S	470010208	825	1	542	96045351	HYDRAULIK OBERWAGEN
VERSCHRAUBUNG SNV12-L	470011308	611	1	90	96035796	HYDR.FAHRANTRIEB
VERSCHRAUBUNG SNV12-L	470011308	611	1	107	96035792	HYDR.FAHRANTRIEB
VERSCHRAUBUNG SNV12-L	470011308	666	2	541	96045351	HYDRAULIK OBERWAGEN
VERSCHRAUBUNG SNV22-L	470010908	733	1	542	96045351	HYDRAULIK OBERWAGEN
VERSCHRAUBUNG SNV25-S	470011008	830	1	542	96045351	HYDRAULIK OBERWAGEN
VERSCHRAUBUNG SNV25-S	470011008	629	1	590	967784808	HYDRAULIK HILFSHUBWERK
VERSCHRAUBUNG SNV28-L	470010608	821	2	542	96045351	HYDRAULIK OBERWAGEN
VERSCHRAUBUNG SNV38-S	470010708	713	1	541	96045351	HYDRAULIK OBERWAGEN
VERSCHRAUBUNG SNV38-S	470010708	631	1	590	967784808	HYDRAULIK HILFSHUBWERK
VERSCHRAUBUNG SNV42-L	470011408	802	1	542	96045351	HYDRAULIK OBERWAGEN
VERSCHRAUBUNG SV 18L C	474030708	751	1	542	96045351	HYDRAULIK OBERWAGEN
VERSCHRAUBUNG SV 25S A3	474032808	636	1	52	96035801	HYDRAULIK MITTELTEIL
VERSCHRAUBUNG SV 25S A3	474032808	628	1	590	967784808	HYDRAULIK HILFSHUBWERK
VERSCHRAUBUNG T 10S A3C	470402208	657	4	52	96035801	HYDRAULIK MITTELTEIL
VERSCHRAUBUNG T 22L	470400708	8	1	361	90200104	OELMESSEINRICHTUNG
VERSCHRAUBUNG W 6L	470200108	17	14	127	917257108	ZENTRALSCHMIERUNG RAUP
VERSCHRAUBUNG WE 6LL M1	774373808	1	1	130	11347500	VERTEILERKOMBINATION
VERSCHRAUBUNG WE 6LL M1	774373808	2	1	505	11002916	VERTEILERKOMBINATION
VERSCHRAUBUNG WSV 20S	474232808	623	4	52	96035801	HYDRAULIK MITTELTEIL
VERSCHRAUBUNG XG10-L A3	470030308	608	1	688	967784508	HYDRAULIK TELE
VERSCHRAUBUNG XG10-S A3	470032408	669	3	541	96045351	HYDRAULIK OBERWAGEN
VERSCHRAUBUNG XG12-L A3	470030408	600	1	595	969426308	ZUSATZHYDRAULIK KLAPPSPI
VERSCHRAUBUNG XG16-S A3	470032708	670	1	541	96045351	HYDRAULIK OBERWAGEN
VERSCHRAUBUNG XG16-S A3	470032708	601	2	595	969426308	ZUSATZHYDRAULIK KLAPPSPI
VERSCHRAUBUNG XG38-S A3	470033108	627	1	90	96035796	HYDR.FAHRANTRIEB
VERSCHRAUBUNG XG38-S A3	470033108	627	1	107	96035792	HYDR.FAHRANTRIEB
VERSCHRAUBUNG XG42-L A3	470030908	804	1	542	96045351	HYDRAULIK OBERWAGEN
VERSCHRAUBUNG XG6-L A3P	470030108	15	10	127	917257108	ZENTRALSCHMIERUNG RAUP

Bezeichnung	Artikel	Pos.	Menge	Seite	Baugruppe	Bezeichnung
VERSCHRAUBUNG XGAI6-SR	470700208	606	5	540	96045351	HYDRAULIK OBERWAGEN
VERSCHRAUBUNG XGAI6-SR	470700208	608	1	590	967784808	HYDRAULIK HILFSHUBWERK
VERSCHRAUBUNG XGE10-LR	471039608	611	6	540	96045351	HYDRAULIK OBERWAGEN
VERSCHRAUBUNG XGE10-LR	471039608	625	1	590	967784808	HYDRAULIK HILFSHUBWERK
VERSCHRAUBUNG XGE12-LM	471039408	798	1	542	96045351	HYDRAULIK OBERWAGEN
VERSCHRAUBUNG XGE12-LR	471030808	617	1	51	96035801	HYDRAULIK MITTELTEIL
VERSCHRAUBUNG XGE12-LR	471030808	610	7	540	96045351	HYDRAULIK OBERWAGEN
VERSCHRAUBUNG XGE12-LR	471030808	612	2	590	967784808	HYDRAULIK HILFSHUBWERK
VERSCHRAUBUNG XGE12-LR	471035308	616	2	90	96035796	HYDR.FAHRANTRIEB
VERSCHRAUBUNG XGE12-LR	471035308	616	2	107	96035792	HYDR.FAHRANTRIEB
VERSCHRAUBUNG XGE12-LR	471035308	643	4	541	96045351	HYDRAULIK OBERWAGEN
VERSCHRAUBUNG XGE15-LM	471035508	11	2	325	968999708	KRAFTSTOFFBEHAELTER VO
VERSCHRAUBUNG XGE15-LM	471035508	636	2	478	969763408	VERROHRUNG DRUCKLUFTA
VERSCHRAUBUNG XGE15-LR	471031008	651	1	52	96035801	HYDRAULIK MITTELTEIL
VERSCHRAUBUNG XGE16-SR	471033208	657	13	541	96045351	HYDRAULIK OBERWAGEN
VERSCHRAUBUNG XGE16-SR	471033208	609	3	595	969426308	ZUSATZHYDRAULIK KLAPPSPI
VERSCHRAUBUNG XGE16-SR	471033208	601	1	688	967784508	HYDRAULIK TELE
VERSCHRAUBUNG XGE16-SR	471033208	600	2	699	967785008	ZUSATZHYDRAULIK KLAPPSPI
VERSCHRAUBUNG XGE16-SR	471033108	696	4	541	96045351	HYDRAULIK OBERWAGEN
VERSCHRAUBUNG XGE18-LM	476607608	634	1	478	969763408	VERROHRUNG DRUCKLUFTA
VERSCHRAUBUNG XGE18-LR	471031208	611	1	595	969426308	ZUSATZHYDRAULIK KLAPPSPI
VERSCHRAUBUNG XGE18-LR	471037508	402	3	327	96034868	KRAFTSTOFFFILTER VORM.
VERSCHRAUBUNG XGE20-SM	471033308	634	4	541	96045351	HYDRAULIK OBERWAGEN
VERSCHRAUBUNG XGE20-SM	471034308	425	2	277	919007708	ANTRIEBSAGGREGAT VORM.
VERSCHRAUBUNG XGE20-SR	471033408	607	28	51	96035801	HYDRAULIK MITTELTEIL
VERSCHRAUBUNG XGE20-SR	471033408	682	4	541	96045351	HYDRAULIK OBERWAGEN
VERSCHRAUBUNG XGE22-LM	471031308	600	4	540	96045351	HYDRAULIK OBERWAGEN
VERSCHRAUBUNG XGE22-LM	471031308	636	1	590	967784808	HYDRAULIK HILFSHUBWERK
VERSCHRAUBUNG XGE22-LR	471031408	683	4	541	96045351	HYDRAULIK OBERWAGEN
VERSCHRAUBUNG XGE25-SR	471033608	603	2	51	96035801	HYDRAULIK MITTELTEIL
VERSCHRAUBUNG XGE35-LR	471034508	602	3	51	96035801	HYDRAULIK MITTELTEIL
VERSCHRAUBUNG XGE35-LR	471034508	624	1	90	96035796	HYDR.FAHRANTRIEB
VERSCHRAUBUNG XGE35-LR	471034508	624	1	107	96035792	HYDR.FAHRANTRIEB
VERSCHRAUBUNG XGE6-LM-E	471030108	16	8	127	917257108	ZENTRALSCHMIERUNG RAUP
VERSCHRAUBUNG XGE6-LR-E	471030008	13	2	502	917261208	ZENTRALSCHMIERANLAGE O
VERSCHRAUBUNG XGE6-LR-E	471030008	607	1	693	967785408	ZUSATZHYDRAULIK KLAPPSPI
VERSCHRAUBUNG XGE8-SM-E	471032208	738	3	542	96045351	HYDRAULIK OBERWAGEN
VERSCHRAUBUNG XGE8-SM-E	471032208	634	1	590	967784808	HYDRAULIK HILFSHUBWERK
VERSCHRAUBUNG XGEV38-	471034408	606	9	51	96035801	HYDRAULIK MITTELTEIL
VERSCHRAUBUNG XGR12/6-L	475030108	625	2	52	96035801	HYDRAULIK MITTELTEIL
VERSCHRAUBUNG XGR15/12-	475031708	714	1	541	96045351	HYDRAULIK OBERWAGEN
VERSCHRAUBUNG XGR35/22-	475031208	607	1	90	96035796	HYDR.FAHRANTRIEB
VERSCHRAUBUNG XGR35/22-	475031208	607	1	107	96035792	HYDR.FAHRANTRIEB
VERSCHRAUBUNG XSV10-L A3	474030308	752	1	542	96045351	HYDRAULIK OBERWAGEN
VERSCHRAUBUNG XSV12-L A3	474000408	621	1	52	96035801	HYDRAULIK MITTELTEIL
VERSCHRAUBUNG XSV12-S	474032408	601	10	51	96035801	HYDRAULIK MITTELTEIL
VERSCHRAUBUNG XSV15-L A3	474030508	753	1	542	96045351	HYDRAULIK OBERWAGEN
VERSCHRAUBUNG XSV20-S	474032708	624	8	52	96035801	HYDRAULIK MITTELTEIL
VERSCHRAUBUNG XSV28-L	474001008	600	3	51	96035801	HYDRAULIK MITTELTEIL
VERSCHRAUBUNG XSV38-S	474033008	630	1	590	967784808	HYDRAULIK HILFSHUBWERK
VERSCHRAUBUNG XT10-L A3	470430308	606	1	688	967784508	HYDRAULIK TELE
VERSCHRAUBUNG XT20-S A3	470432608	702	1	541	96045351	HYDRAULIK OBERWAGEN
VERSCHRAUBUNG XT25-S A3	470432708	832	1	543	96045351	HYDRAULIK OBERWAGEN
VERSCHRAUBUNG XT38-S A3	470433008	791	1	542	96045351	HYDRAULIK OBERWAGEN
VERSCHRAUBUNG XW10-L A3	470230308	602	1	699	967785008	ZUSATZHYDRAULIK KLAPPSPI
VERSCHRAUBUNG XW18-L A3	470230608	645	1	478	969763408	VERROHRUNG DRUCKLUFTA
VERSCHRAUBUNG XW38-S A3	470233408	799	1	542	96045351	HYDRAULIK OBERWAGEN
VERSCHRAUBUNG XWSV12-L	474200408	601	1	90	96035796	HYDR.FAHRANTRIEB
VERSCHRAUBUNG XWSV12-L	474200408	601	1	107	96035792	HYDR.FAHRANTRIEB
VERSCHRAUBUNG XWSV18-L	474231508	649	1	478	969763408	VERROHRUNG DRUCKLUFTA

Bezeichnung	Artikel	Pos.	Menge	Seite	Baugruppe	Bezeichnung
VERSTELLMOTOR A6VE 170	11182596	3	1	70	919254308	RAUPENTRAEGER VORM.LI.
VERSTELLMOTOR A6VE 170	11182596	3	1	100	919254408	RAUPENTRAEGER VORM.RE.
VERSTELLMOTOR A6VM 150	11182597	2	1	352	917259708	HAUPTHUBWERK
VERSTELLMOTOR A6VM 150	11211058	9	1	577	967969608	HILFSHUBWERK WINDE 2 VO
VERSTELLPUMPE A10VNO SP	10871043	3	1	292	10871047	DREIFACHPUMPE
VERSTELLPUMPE A11V0 SPF	11210798	2	1	292	10871047	DREIFACHPUMPE
VERSTELLPUMPE A11VLO SP	10871282	108	1	276	919007708	ANTRIEBSAGGREGAT VORM.
VERSTELLPUMPE A4VG SPF	10871017	104	1	275	919007708	ANTRIEBSAGGREGAT VORM.
VERSTELLPUMPE A4VG SPF	11182708	103	1	275	919007708	ANTRIEBSAGGREGAT VORM.
VERSTELLPUMPE A4VG SPF	11210793	1	1	290	11182664	ZWEIFACHPUMPE
VERSTELLPUMPE A4VG SPF	11210794	2	1	290	11182664	ZWEIFACHPUMPE
VERSTELLPUMPE A4VG SPF	11210795	1	1	292	10871047	DREIFACHPUMPE
VERSTELLUNG	10326925	2	1	294	11210795	VERSTELLPUMPE
VERSTELLUNG	10472208	4	1	295	11210798	VERSTELLPUMPE
VERSTELLUNG	11690585	2	1	286	11182708	VERSTELLPUMPE
VERSTELLUNG	11690585	2	1	289	10871017	VERSTELLPUMPE
VERSTELLUNG HYDRAULISC	7023643	5	1	295	11210798	VERSTELLPUMPE
VERTEILER MASSE	926891108	25	1	522	969256608	GRUNDAUFBAU
VERTEILERBLOCK	12511916	1	1	214	10143341	KRAFTSTOFFLEITUNGEN
VERTEILERBLOCK G1 1/2 /8 C	11214049	156	4	51	96035801	HYDRAULIK MITTELTEIL
VERTEILERGETRIEBE SPF	97029921	100	1	275	919007708	ANTRIEBSAGGREGAT VORM.
VERTEILERKASTEN 65X94X57	11114556	1	1	603	917368108	EL.KUEHLWASSERVORWAE
VERTEILERKOMBINATION 3/6	11002916	2	1	502	917261208	ZENTRALSCHMIERANLAGE O
VERTEILERKOMBINATION 4/7	774387208	3	1	502	917261208	ZENTRALSCHMIERANLAGE O
VERTEILERKOMBINATION MX	11347500	2	2	127	917257108	ZENTRALSCHMIERUNG RAUP
VISKOSEDAEMPFER D934 L	10118526	8	1	187	10141974	KURBELWELLENANBAUTEILE
VORFOERDERPUMPE	12873083	1	1	207	10149198	RS VORFOERDERPUMPE
VORHAENGESCHLOSS	885252008	4	1	737	917268208	LEITER ANBAU
VORHAENGESCHLOSS ABUS	885251508	11	1	85	968420608	STAUKASTEN VORM.
VORHAENGESCHLOSS ABUS	885251508	2	1	144	928569808	GRUNDWERKZEUG
VORREIBER	10650295	4	4	378	968514508	SCHALTSCHRANKDECKEL EIN
VORSPANNVENTIL 25BAR	511322808	152	4	124	968077208	HYDRAULIK ABSTUETZUNG
WAELZLAGER 150X210X80	746506608	2	1	663	921456108	SEILROLLE KPL.
WAELZLAGER 150X210X80	746506608	2	1	665	967771908	SEILROLLE KPL.
WAELZLAGER 150X210X80	746506608	2	1	725	925203408	SEILROLLE KPL.
WAERMETAUSCHER ALU	10801858	14	1	412	11083498	HEIZKLIMAGERAET
WAGEN	966253908	2	2	407	966230508	FUEHRUNG VORM.
WAGEN 68X64.5X33 G-ALSI7	97001102	1	1	408	966253908	WAGEN
WALZENDUESE	10292013	28	8	383	917305408	INNENVERKLEIDUNG EINBAU
WANNE SCHWK. RAL 7016 SP	966241008	14	1	375	916170808	KABELEINFUEHRUNG
WARNDREIECK 430X45X30	10044762	1	1	145	928620108	ZUBEHOER
WARNLEUCHTE 14W 13-36V	10340105	5	1	449	96036957	ELEKTRIK ANBAUTEILE KABIN
WARNMARKIERUNG DIN 3071	11067612	1	0.54	152	917258108	SCHRAFFURPLAN
WARNMARKIERUNG DIN 48844	11067611	2	0.239	152	917258108	SCHRAFFURPLAN
WARNMARKIERUNG DIN 48844	11067611	3	0.689	152	917258108	SCHRAFFURPLAN
WARNMARKIERUNG DIN 48844	11067611	4	0.081	152	917258108	SCHRAFFURPLAN
WARNSCHILD UNFALLVERH	9412158	35	1	150	917862808	BESCHILDERUNG GROSSBRI
WARNWESTE EN ISO 20471	872101908	6	1	145	928620108	ZUBEHOER
WARTUNGSSCHALTER 0,05	11101017	101	1	499	918731908	LUFTFILTERANLAGE
WASSERBEHAELTER 505X126	97003164	1	1	400	966408908	WASSERBEHAELTER KPL.
WASSERBEHAELTER KPL.	966408908	1	1	399	916163008	WISCHANLAGE EINBAU
WASSERHEIZGERAET 24V	10876576	1	1	464	96020359	ZUSATZHEIZUNG VORM.
WASSERPUMPE MIT BEFEST.	10142733	370	1	163	12856862	DIESELMOTOR
WASSERPUMPE VORM. R-MO	10150386	1	1	231	10142733	WASSERPUMPE MIT BEFEST.
WASSERPUMPE VORM. R-MO	12863021	1	1	231	10142733	WASSERPUMPE MIT BEFEST.
WASSERSCHLAUCH DN4-RAU	11000710	17	1.3	399	916163008	WISCHANLAGE EINBAU
WASSERSCHLAUCH DN4-RAU	11000710	18	2.8	399	916163008	WISCHANLAGE EINBAU
WASSERSONDE 5V	11370365	3	1	330	10878502	KRAFTSTOFFFILTER
WASSERSTANDSSONDE L=50	10335960	450	1	314	96034515	AUSGLEICHSBEHAELTER VO
WASSERVENTIL NW12X2,5 NI	11082158	17	2	483	918484108	HARNSTOFFANLAGE

Bezeichnung	Artikel	Pos.	Menge	Seite	Baugruppe	Bezeichnung
WECHSELFILTER OEL 9µm	10297295	1	2	204	10142942	SCHMIEROELFILTER ANBAU
WECHSELVENTIL	11691104	40	1	305	10871282	VERSTELLPUMPE
WECHSELVENTIL	571535008	9	1	555	11341035	STEUERBLOCK
WECHSELVENTIL 350BAR	571529508	8	2	555	11341035	STEUERBLOCK
WECHSLERRELAIS 24V 10A SP	630121508	6	2	38	968054008	MONTAGEPLATTE VORM.
WECHSLERRELAIS 24V 10A SP	630121508	9	19	518	919503008	EINBAUTEILE SCHALTSCHRAN
WEGEMAGNETVENTIL	11482347	2	1	546	11211756	STEUERBLOCK
WEGESITZVENTIL 2/2	10280211	40	1	597	10038509	STEUERBLOCK
WEGEVENTIL	10280210	20	1	597	10038509	STEUERBLOCK
WEGEVENTIL	10801532	5	1	550	10413106	STEUERBLOCK
WEGEVENTIL	10801533	6	1	550	10413106	STEUERBLOCK
WEGEVENTIL	10801549	9	1	550	10413106	STEUERBLOCK
WEGEVENTIL	10801551	10	1	550	10413106	STEUERBLOCK
WEGEVENTIL	10872796	(1)	1	550	10413106	STEUERBLOCK
WEGEVENTIL	10874213	(1)	1	550	10413106	STEUERBLOCK
WEGEVENTIL	11004126	12	1	550	10413106	STEUERBLOCK
WEGEVENTIL	571415008	8	2	550	10413106	STEUERBLOCK
WEGEVENTIL 2/2 350BAR	511464108	55	1	538	96045351	HYDRAULIK OBERWAGEN
WEGEVENTIL 2/2 350BAR SPF	511320108	63	1	538	96045351	HYDRAULIK OBERWAGEN
WEGEVENTIL 3/2 320BAR	511493608	50	1	688	967784508	HYDRAULIK TELE
WEGEVENTIL 3/2 350BAR	511444408	50	1	51	96035801	HYDRAULIK MITTELTEIL
WEGEVENTIL 3/2 350BAR	511444408	52	1	538	96045351	HYDRAULIK OBERWAGEN
WEGEVENTIL 3/2 350BAR	511444408	50	1	589	967784808	HYDRAULIK HILFSHUBWERK
WEGEVENTIL 3/2 NG10-350BA	10449853	64	1	538	96045351	HYDRAULIK OBERWAGEN
WEGEVENTIL 4/2 NG10-320BA	571737808	2	1	552	10332882	STEUERBLOCK
WEGEVENTIL 4/2 NG6-350BAR	10652724	23	1	538	96045351	HYDRAULIK OBERWAGEN
WEGEVENTIL 4/2 NG6-350BAR	10652724	21	1	589	967784808	HYDRAULIK HILFSHUBWERK
WEGEVENTIL 4/3	10874849	4	2	546	11211756	STEUERBLOCK
WEGEVENTIL 4/3	10875074	3	3	546	11211756	STEUERBLOCK
WEITWINKELSPIEGEL 219X17	591069508	2	1	424	916049908	SPIEGELANBAU KRANFUEHR
WEITWINKELSPIEGEL 316X17	591070908	1	1	458	917260408	SPIEGELANBAU DREHBUEHN
WELLE	11006491	11	1	675	10802064	SEILLAENGENGEBER
WELLE 50.0X1020 S355J2C+C	97030028	3	1	474	967928508	VERRIEGELUNG
WELLENDICHTRING	10335855	3	1	281	10429930	ZAHNRADMOTOR
WELLENDICHTRING 35X52X6/	7022315	20	1	302	10871043	VERSTELLPUMPE
WELLENDICHTRING 35X52X6/	7022315	(14)	1	346	510229408	HYDROMOTOR
WELLENDICHTRING 35X52X6/	7022315	14	1	347	570109008	TRIEBWERK
WELLENDICHTRING 55X70X7	571907608	38	1	307	10872488	TRIEBWERK
WELLENDICHTRING BAFSL 45	7021600	38	1	296	10663105	TRIEBWERK
WELLROHR DN10 PA 6	10475426	160	3.4	41	966204108	ANTENNE KPL.
WERKZEUG KLAPPSPITZE	917268108	352	1	11		LIEBHERR LTR 1220
WERKZEUG M.ZUBEHOER	919328608	24	1	9		LIEBHERR LTR 1220
WETTERKAPPE 114,3 EDELST	12100105	105	1	491	919372008	ABGASANLAGE
WINDENDREHGEBER 655360	10802061	5	1	362	966631008	ELEKTRIK WINDE 1
WINDENDREHGEBER 655360	10802061	(5)	1	577	967969608	HILFSHUBWERK WINDE 2 VO
WINDGESCHWINDIGKEITSGE	11482252	2	1	711	917598408	ELEKTRIK MESS-U.WARNEINR
WINDWARNUNG VORM.	967936408	2	1	713	968412508	MECHANIK MESS-U.WARNEI
WINKEL	571687808	18	1	670	571928508	ZYLINDERKOPF KPL.
WINKEL 4X150X118 S315MC	97031752	4	4	623	917260608	GEGENGEWICHT M.BEFESTIG
WINKEL SCHWK. FE//ZNNI8//C	968036508	1	1	26	968036408	ENDSCHALTER VORM.
WINKELGEBER 360° LSB PL:D	10802057	10	1	673	966473108	GEBER ANLENKSTUECK
WINKELGEBER 360° LSB PL:D	10802057	1	1	676	966200208	GEBER KOPFSTUECK
WINKELSCHRAUBENDREHER	10043002	41	1	144	928569808	GRUNDWERKZEUG
WINKELSCHRAUBENDREHER	10471363	40	1	144	928569808	GRUNDWERKZEUG
WINKELSTUTZEN	591051008	22	2	399	916163008	WISCHANLAGE EINBAU
WINKELVERSCHRAUBUNG	12433377	204	2	539	96045351	HYDRAULIK OBERWAGEN
WIPPZYLINDER 400/370-3305	12102921	1	1	619	919617008	WIPPZYLINDER M.LAGERUNG
WIPPZYLINDER M.LAGERUNG	919617008	111	1	9		LIEBHERR LTR 1220
WISCHANLAGE EINBAU	916163008	5	1	380	917304508	KRANFUEHRERKABINE VORM.
WISCHERARM 650MM	10292014	3	1	399	916163008	WISCHANLAGE EINBAU

Bezeichnung	Artikel	Pos.	Menge	Seite	Baugruppe	Bezeichnung
WISCHERARM 900MM	10292015	22	1	393	966497908	FRONTSCHEIBE KPL.
WISCHERBLATT 1000	10292017	23	1	393	966497908	FRONTSCHEIBE KPL.
WISCHERBLATT 700	10292016	5	1	399	916163008	WISCHANLAGE EINBAU
WISCHERGESTAENGE	10292018	7	1	399	916163008	WISCHANLAGE EINBAU
WISCHERGESTAENGE	10870968	8	1	399	916163008	WISCHANLAGE EINBAU
WISCHERMOTOR 55NM 24V	10292021	2	2	399	916163008	WISCHANLAGE EINBAU
WISCHLAGER ST	11001115	16	1	393	966497908	FRONTSCHEIBE KPL.
ZAHNRAD	10133692	4	1	197	10138230	NOCKENWELLE KPL.
ZAHNRAD	10137602	(2)	1	197	10138230	NOCKENWELLE KPL.
ZAHNRAD	10139764	4	1	196	10120186	MASSENAUSGLEICH ANBAU
ZAHNRAD	10139765	5	1	196	10120186	MASSENAUSGLEICH ANBAU
ZAHNRAD	10872521	80	1	412	11083498	HEIZKLIMAGERAET
ZAHNRAD VORM.	10138447	3	1	197	10138230	NOCKENWELLE KPL.
ZAHNRAD VORM.	10145049	(1)	1	197	10138230	NOCKENWELLE KPL.
ZAHNRAD Z=36 M=2,5	9073343	2	1	224	9080294	LUFTPRESSER VORM.
ZAHNRAD Z=50 M=2,5	9072834	3	1	183	10147438	KURBELWELLE MIT ZAHNRAD
ZAHNRADMOTOR AZMF 16CM	10429930	102	1	280	96034631	KUEHLER VORM.
ZAHNRADPUMPE FP12	10870965	110	1	276	919007708	ANTRIEBSAGGREGAT VORM.
ZAHNRADPUMPE WP09 SPF	10870964	109	1	276	919007708	ANTRIEBSAGGREGAT VORM.
ZAHNRADPUMPE WP09 SPF	11210201	106	1	275	919007708	ANTRIEBSAGGREGAT VORM.
ZAHNRIEMEN	11083453	1	1	412	11083498	HEIZKLIMAGERAET
ZAHNSCHEIBE 12X99/17RD S	938996501	90	1	340	90008901	DREHWERKANTRIEB
ZAHNSCHEIBE DIN 6797 A 2,7	425100408	24	4	518	919503008	EINBAUTEILE SCHALTSCHRAN
ZAHNSCHEIBE DIN 6797 A 3,2	425100508	269	2	685	968708708	KLEMMKASTEN KPL.
ZEIGER 3X146X110 DC01 FE//	97033038	9	1	350	917259608	DREHBUEHNENARRETIERUN
ZEITRELAIS 10 H 24V	10876716	8	1	518	919503008	EINBAUTEILE SCHALTSCHRAN
ZEITRELAIS 60S 24V	10877999	3	1	518	919503008	EINBAUTEILE SCHALTSCHRAN
ZELLGUMMI 20X12 CR SCHW	262104308	5	1.08	37	966167808	DECKEL KPL.
ZELLGUMMI 6X3X10000 CELL	262108908	4	0.5	434	964093408	DECKEL KPL.
ZENTRALBALLAST	919499408	22	1	9		LIEBHERR LTR 1220
ZENTRALBALLAST SCHWK.	96045601	50	1	137	919499408	ZENTRALBALLAST
ZENTRALBALLAST SCHWK.	96045603	51	1	137	919499408	ZENTRALBALLAST
ZENTRALSCHMIERANLAGE	921444108	200	1	577	967969608	HILFSHUBWERK WINDE 2 VO
ZENTRALSCHMIERANLAGE O	917261208	169	1	10		LIEBHERR LTR 1220
ZENTRALSCHMIERUNG RAUP	917257108	20	1	9		LIEBHERR LTR 1220
ZENTRALSTECKER 4-POL	602225508	518	1	446	96036955	KABELSTRANG
ZENTRALSTECKER 6-POL	602225608	519	1	446	96036955	KABELSTRANG
ZENTRIERFLANSCH 42CrMo4+	10142170	2	1	187	10141974	KURBELWELLENANBAUTEILE
ZIEHPILZ 90.0X16 4 35NICRM	973292708	26	1	661	917292408	TELESKOP 5 VORM.
ZIEHPILZ 90.0X21 0 35NICRM	973259708	11	1	656	917292308	TELESKOP 4 VORM.
ZIEHPILZ 90.0X25 5 35NICRM	973253908	11	1	652	917292208	TELESKOP 3 VORM.
ZUBEHOER	928620108	2	1	143	919328608	WERKZEUG M.ZUBEHOER
ZUENDSTARTSCHALTER 3S	10335557	50	1	449	96036957	ELEKTRIK ANBAUTEILE KABIN
ZUGGURT 47X2220	10334488	100	1	429	96036790	DREHBUEHNENVERKLEIDUN
ZUGGURT 47X2220	10334488	100	1	439	969015908	DREHBUEHNENVERKLEIDUN
ZUGSTANGE	10099209	25	4	128	11347526	ELEKTROPUMPE
ZUGSTANGE	10099209	28	4	504	10327065	ELEKTROPUMPE
ZUNGE	570340077	5	4	378	968514508	SCHALTSCHRANKDECKEL EIN
ZUNGE	704253708	5	5	79	967972208	DECKEL VORM.
ZUNGE	704253708	5	2	82	968270108	DECKEL VORM.
ZUNGE	704253708	5	2	83	968274208	DECKEL VORM.
ZUNGE	704253708	5	5	102	968055808	DECKEL VORM.
ZUNGE	704254008	9	1	85	968420608	STAUKASTEN VORM.
ZUNGE	704256708	8	4	37	966167808	DECKEL KPL.
ZUNGE	704259308	3	1	434	964093408	DECKEL KPL.
ZUNGE 45X19 STAHL VERZ	704259008	5	2	80	967972308	DECKEL VORM.
ZUNGE 45X19 STAHL VERZ	704259008	5	2	81	967972408	DECKEL VORM.
ZUNGE 45X19 STAHL VERZ	704259008	5	2	84	968709108	DECKEL VORM.
ZUNGE 45X19 STAHL VERZ	704259008	15	1	320	96023117	BATTERIEKASTEN VORM.
ZURRGURT 0,35MX18MM	7621780	5	1	711	917598408	ELEKTRIK MESS-U.WARNEINR

Bezeichnung	Artikel	Pos.	Menge	Seite	Baugruppe	Bezeichnung
ZURRGURT 0,75MX18MM	10020520	120	4	276	919007708	ANTRIEBSAGGREGAT VORM.
ZURRGURT 1,25MX25MM PO	11492423	12	1	737	917268208	LEITER ANBAU
ZURRGURT 1MX35MM POLYTE	11481963	78	1	137	919499408	ZENTRALBALLAST
ZURRGURT 4MX35MM POLYTE	10491593	79	2	137	919499408	ZENTRALBALLAST
ZURRGURT EN 12195-2 6MX3	779034708	3	1	722	917531708	BALLASTTRAVERSE
ZUSATZBALLAST	917404008	148	1	10		LIEBHERR LTR 1220
ZUSATZBESCHILD.CALIFORN	919553608	78	1	9		LIEBHERR LTR 1220
ZUSATZBESCHILDERUNG FA	916283508	40	1	9		LIEBHERR LTR 1220
ZUSATZHEIZUNG OW	918759808	145	1	10		LIEBHERR LTR 1220
ZUSATZHEIZUNG VORM.	96020359	1	1	462	918759808	ZUSATZHEIZUNG OW
ZUSATZHYDRAULIK KLAPPSPI	917262508	229	1	11		LIEBHERR LTR 1220
ZUSATZHYDRAULIK KLAPPSPI	917265308	302	1	11		LIEBHERR LTR 1220
ZUSATZHYDRAULIK KLAPPSPI	967785008	4	1	697	917265308	ZUSATZHYDRAULIK KLAPPSPI
ZUSATZHYDRAULIK KLAPPSPI	967785408	4	1	691	917262508	ZUSATZHYDRAULIK KLAPPSPI
ZUSATZHYDRAULIK KLAPPSP	917966708	364	1	11		LIEBHERR LTR 1220
ZUSATZHYDRAULIK KLAPPSP	969426308	4	1	593	917966708	ZUSATZHYDRAULIK KLAPPSPI
ZUSATZTEILE DREHBUEHNV	917610208	141	1	10		LIEBHERR LTR 1220
ZUSATZTEILE STUFE IV	919371908	164	1	10		LIEBHERR LTR 1220
ZUSATZTEILE VERKLEIDUNG	96039740	1	1	496	919371908	ZUSATZTEILE STUFE IV
ZWEIFACHPUMPE A4VG+A4V	11182664	105	1	275	919007708	ANTRIEBSAGGREGAT VORM.
ZWILLINGSMAGNET	10114441	8	1	58	11643183	STEUERBLOCK
ZWILLINGSMAGNET	10114441	8	1	61	11643184	STEUERBLOCK
ZWISCHENPLATTENVENTIL	571414608	3	1	550	10413106	STEUERBLOCK
ZWISCHENPLATTENVENTIL	571562408	4	1	550	10413106	STEUERBLOCK
ZWISCHENRAD KPL.	9072906	331	1	163	12856862	DIESELMOTOR
ZWISCHENRAD VORM.	9072904	1	1	227	9072906	ZWISCHENRAD KPL.
ZWISCHENRADACHSE 42CrM	9072907	2	1	227	9072906	ZWISCHENRAD KPL.
ZWISCHENRING	10014730	8	1	128	11347526	ELEKTROPUMPE
ZWISCHENRING	10014730	8	1	504	10327065	ELEKTROPUMPE
ZWISCHENSTUECK 11SMnPb3	10132935	16	1	215	10143342	LECKOELRUECKLAUF
ZWOELFKANTSCHRAUBE M1	12475399	4	1	238	10140729	ATL-ANBAU
ZYLINDER	570110308	1	1	348	570109508	TRIEBWERK
ZYLINDER R-MOTORXD944/D9	10154458	80	4	167	11389608	KURBELGEHAEUSE KPL. MIT
ZYLINDERBUCHSE E2728-MO	10153973	1	1	169	10154458	ZYLINDER
ZYLINDERGRIFF	704004608	120	1	283	968026308	KUPPLUNGSSTELLER
ZYLINDERKOPF	7025732	23	1	226	5700161	LUFTPRESSER
ZYLINDERKOPF ANBAU R-MO	10149580	80	4	161	12856862	DIESELMOTOR
ZYLINDERKOPF KPL.	571928508	4	1	668	10876933	TELESKOPIERZYLINDER
ZYLINDERKOPF R-MOTOR	10145862	1	1	192	10149578	ZYLINDERKOPF
ZYLINDERKOPF R-MOTOR	10149578	1	1	191	10149579	ZYLINDERKOPF VORM.
ZYLINDERKOPF VORM. R-MO	10149579	1	1	189	10149580	ZYLINDERKOPF ANBAU
ZYLINDERKOPFDECKEL	10134698	3	1	195	11358102	ZYLINDERKOPFDECKEL ANBA
ZYLINDERKOPFDECKEL	10134750	1	2	195	11358102	ZYLINDERKOPFDECKEL ANBA
ZYLINDERKOPFDECKEL	12874086	2	1	195	11358102	ZYLINDERKOPFDECKEL ANBA
ZYLINDERKOPFDECKEL ANBA	11358102	82	1	161	12856862	DIESELMOTOR
ZYLINDERKOPFDICHTUNG	10133667	2	1	189	10149580	ZYLINDERKOPF ANBAU
ZYLINDERROLLE 14X14	747006101	17	114	357	939292201	PLANETENGETRIEBE
ZYLINDERROLLE 14X14	747006101	17	114	583	939294201	PLANETENGETRIEBE
ZYLINDERROLLE DIN 5402-1	747004501	3	78	73	90028956	FAHRANTRIEB
ZYLINDERROLLENLAGER	571899308	(31)	1	294	11210795	VERSTELLPUMPE
ZYLINDERROLLENLAGER	7023703	10	1	297	10008308	ANSCHLUSSPLATTE
ZYLINDERROLLENLAGER	7367374	31	1	296	10663105	TRIEBWERK
ZYLINDERROLLENLAGER 50X	571477908	31	1	307	10872488	TRIEBWERK
ZYLINDERROLLENLAGER DIN	500926208	430	2	285	97029921	VERTEILERGETRIEBE
ZYLINDERSCHRAUBE DIN 691	10875559	86	4	137	919499408	ZENTRALBALLAST
ZYLINDERSCHRAUBE DIN 691	10875559	38	6	417	918810308	STEUERSTAND
ZYLINDERSCHRAUBE DIN 691	10875561	33	20	644	917292008	TELESKOP 1 VORM.
ZYLINDERSCHRAUBE DIN 691	10875561	33	20	648	917292108	TELESKOP 2 VORM.
ZYLINDERSCHRAUBE DIN 691	10875561	33	20	652	917292208	TELESKOP 3 VORM.
ZYLINDERSCHRAUBE DIN 691	10875561	33	20	656	917292308	TELESKOP 4 VORM.

Bezeichnung	Artikel	Pos.	Menge	Seite	Baugruppe	Bezeichnung
ZYLINDERSCHRAUBE DIN 691	10875561	36	12	661	917292408	TELESKOP 5 VORM.
ZYLINDERSCHRAUBE DIN 69	571310608	113	4	71	919254308	RAUPENTRAEGER VORM.LI.
ZYLINDERSCHRAUBE DIN 69	571310608	114	4	101	919254408	RAUPENTRAEGER VORM.RE.
ZYLINDERSCHRAUBE DIN 798	4980927	9	3	197	10138230	NOCKENWELLE KPL.
ZYLINDERSCHRAUBE DIN 798	4980927	9	3	197	10138230	NOCKENWELLE KPL.
ZYLINDERSCHRAUBE DIN 79	10179392	18	4	17	919617108	RAUPENFAHRWERK KPL.
ZYLINDERSCHRAUBE DIN 798	240122602	9	3	197	10138230	NOCKENWELLE KPL.
ZYLINDERSCHRAUBE DIN 798	240122602	9	3	197	10138230	NOCKENWELLE KPL.
ZYLINDERSCHRAUBE DIN 79	10179393	17	1	616	96037130	AUSRUESTUNG KAMERA DRE
ZYLINDERSCHRAUBE DIN 79	10179393	17	1	618	96037131	AUSRUESTUNG KAMERA WIN
ZYLINDERSCHRAUBE DIN 79	10180175	332	8	277	919007708	ANTRIEBSAGGREGAT VORM.
ZYLINDERSCHRAUBE DIN 79	12691559	(3)	4	305	10871282	VERSTELLPUMPE
ZYLINDERSCHRAUBE DIN 79	12103956	20	2	26	968036408	ENDSCHALTER VORM.
ZYLINDERSCHRAUBE DIN 798	540511908	336	3	277	919007708	ANTRIEBSAGGREGAT VORM.
ZYLINDERSCHRAUBE DIN 798	10876084	34	14	393	966497908	FRONTSCHEIBE KPL.
ZYLINDERSCHRAUBE DIN 798	12216054	104	4	71	919254308	RAUPENTRAEGER VORM.LI.
ZYLINDERSCHRAUBE DIN 798	12216054	105	4	101	919254408	RAUPENTRAEGER VORM.RE.
ZYLINDERSCHRAUBE DIN 798	12216054	99	9	645	917292008	TELESKOP 1 VORM.
ZYLINDERSCHRAUBE DIN 798	12216054	99	9	649	917292108	TELESKOP 2 VORM.
ZYLINDERSCHRAUBE DIN 798	12216054	99	9	653	917292208	TELESKOP 3 VORM.
ZYLINDERSCHRAUBE DIN 798	12216054	99	9	657	917292308	TELESKOP 4 VORM.
ZYLINDERSCHRAUBE DIN 798	12216056	64	12	645	917292008	TELESKOP 1 VORM.
ZYLINDERSCHRAUBE DIN 798	12216056	64	12	649	917292108	TELESKOP 2 VORM.
ZYLINDERSCHRAUBE DIN 798	12216056	64	12	653	917292208	TELESKOP 3 VORM.
ZYLINDERSCHRAUBE DIN 798	12216056	64	12	657	917292308	TELESKOP 4 VORM.
ZYLINDERSCHRAUBE DIN 798	12216056	33	20	661	917292408	TELESKOP 5 VORM.
ZYLINDERSCHRAUBE DIN 84	510797708	22	1	558	511433908	DRUCKBEGRENZUNGSVENTI
ZYLINDERSCHRAUBE DIN 84	510797708	22	1	561	511419608	DRUCKBEGRENZUNGSVENTI
ZYLINDERSCHRAUBE DIN 912	404360408	27	4	550	10413106	STEUERBLOCK
ZYLINDERSCHRAUBE DIN 912	404319708	25	4	305	10871282	VERSTELLPUMPE
ZYLINDERSCHRAUBE DIN 912	10876394	320	4	539	96045351	HYDRAULIK OBERWAGEN
ZYLINDERSCHRAUBE DIN 912	10876394	11	8	546	11211756	STEUERBLOCK
ZYLINDERSCHRAUBE ISO 12	10875564	47	2	522	969256608	GRUNDAUFBAU
ZYLINDERSCHRAUBE ISO 12	10875564	300	4	602	918377508	KUEHLWASSERVORWAERM
ZYLINDERSCHRAUBE ISO 12	10875564	47	1	661	917292408	TELESKOP 5 VORM.
ZYLINDERSCHRAUBE ISO 14	11600879	3	1	211	10135434	BEFESTIGUNG DRUCKROHR
ZYLINDERSCHRAUBE ISO 145	12219491	3	1	209	10152867	INJEKTOR MIT BEFEST.
ZYLINDERSCHRAUBE ISO 47	10562617	317	2	276	919007708	ANTRIEBSAGGREGAT VORM.
ZYLINDERSCHRAUBE ISO 47	12208101	319	2	276	919007708	ANTRIEBSAGGREGAT VORM.
ZYLINDERSCHRAUBE ISO 476	11320344	71	12	357	939292201	PLANETENGETRIEBE
ZYLINDERSCHRAUBE ISO 476	11320344	71	12	583	939294201	PLANETENGETRIEBE
ZYLINDERSCHRAUBE ISO 47	10876074	320	2	276	919007708	ANTRIEBSAGGREGAT VORM.
ZYLINDERSCHRAUBE ISO 476	12222407	20	16	121	919644008	HYDRAULISCHE ABSTUETZUN
ZYLINDERSCHRAUBE ISO 476	12222407	312	2	276	919007708	ANTRIEBSAGGREGAT VORM.
ZYLINDERSCHRAUBE ISO 476	12222407	301	2	280	96034631	KUEHLER VORM.
ZYLINDERSCHRAUBE ISO 476	12219296	32	8	30	917511508	RAUPENMITTELTEIL VORM.
ZYLINDERSCHRAUBE ISO 47	404293213	11	1	368	919010208	KRANFUEHRERKABINE VORM.
ZYLINDERSCHRAUBE ISO 47	10650720	2	2	260	10125687	NEBENABTRIEB ANBAU
ZYLINDERSCHRAUBE ISO 476	10415162	21	4	25	968019508	ENDSCHALTER ANBAU
ZYLINDERSCHRAUBE ISO 476	10415162	315	1	276	919007708	ANTRIEBSAGGREGAT VORM.
ZYLINDERSCHRAUBE ISO 476	10415162	52	12	357	939292201	PLANETENGETRIEBE
ZYLINDERSCHRAUBE ISO 476	10415162	12	12	471	918956108	HYDRAULISCHE BALLASTIER
ZYLINDERSCHRAUBE ISO 476	10415162	52	12	583	939294201	PLANETENGETRIEBE
ZYLINDERSCHRAUBE ISO 47	404230108	30	12	116	968046208	ANBAUTEILE
ZYLINDERSCHRAUBE ISO 47	11002743	4	4	261	10144036	NEBENABTRIEB ANBAU
ZYLINDERSCHRAUBE ISO 476	10875571	58	2	71	919254308	RAUPENTRAEGER VORM.LI.
ZYLINDERSCHRAUBE ISO 476	10875571	58	2	101	919254408	RAUPENTRAEGER VORM.RE.
ZYLINDERSCHRAUBE ISO 476	10875571	6	6	350	917259608	DREHBUEHNENARRETIERUN
ZYLINDERSCHRAUBE ISO 476	10875571	18	4	352	917259708	HAUPTHUBWERK
ZYLINDERSCHRAUBE ISO 476	10875571	14	2	475	967978908	VERRIEGELUNG VORM.

Bezeichnung	Artikel	Pos.	Menge	Seite	Baugruppe	Bezeichnung
ZYLINDERSCHRAUBE ISO 476	10875571	555	14	540	96045351	HYDRAULIK OBERWAGEN
ZYLINDERSCHRAUBE ISO 47	10468820	19	6	352	917259708	HAUPTHUBWERK
ZYLINDERSCHRAUBE ISO 476	10875572	5	8	338	919369308	DREHWERK
ZYLINDERSCHRAUBE ISO 476	10875572	23	8	644	917292008	TELESKOP 1 VORM.
ZYLINDERSCHRAUBE ISO 476	10875572	23	8	648	917292108	TELESKOP 2 VORM.
ZYLINDERSCHRAUBE ISO 476	10875572	23	8	652	917292208	TELESKOP 3 VORM.
ZYLINDERSCHRAUBE ISO 476	10875572	23	8	656	917292308	TELESKOP 4 VORM.
ZYLINDERSCHRAUBE ISO 476	10875572	18	8	661	917292408	TELESKOP 5 VORM.
ZYLINDERSCHRAUBE ISO 47	404309408	62	24	73	90028956	FAHRANTRIEB
ZYLINDERSCHRAUBE ISO 476	11657000	56	12	357	939292201	PLANETENGETRIEBE
ZYLINDERSCHRAUBE ISO 476	11657000	335	2	540	96045351	HYDRAULIK OBERWAGEN
ZYLINDERSCHRAUBE ISO 476	11657000	56	12	583	939294201	PLANETENGETRIEBE
ZYLINDERSCHRAUBE ISO 476	4001622	2	4	205	10150741	HOCHDRUCKPUMPE MIT BEFE
ZYLINDERSCHRAUBE ISO 476	240186402	23	4	550	10413106	STEUERBLOCK
ZYLINDERSCHRAUBE ISO 476	240186402	29	4	550	10413106	STEUERBLOCK
ZYLINDERSCHRAUBE ISO 476	12223034	25	1	581	939294001	SEILTROMMEL
ZYLINDERSCHRAUBE ISO 476	11321144	7	15	247	10115829	SCHWUNGRADGEHAEUSE AN
ZYLINDERSCHRAUBE ISO 47	4043006	5	2	193	10148438	KIPPHEBELBOCK KPL.
ZYLINDERSCHRAUBE ISO 47	10875574	14	4	672	966134608	ANBAUTEILE ZYLINDER
ZYLINDERSCHRAUBE ISO 476	12223057	6	4	338	919369308	DREHWERK
ZYLINDERSCHRAUBE ISO 476	12223057	2	2	611	968267108	ANBAUTEILE KAMERA
ZYLINDERSCHRAUBE ISO 47	11321126	11	8	288	11631893	LAGERFLANSCH
ZYLINDERSCHRAUBE ISO 47	404294613	17	4	372	916177508	TRITT KPL.
ZYLINDERSCHRAUBE ISO 476	10875578	76	8	73	90028956	FAHRANTRIEB
ZYLINDERSCHRAUBE ISO 476	10875578	64	12	137	919499408	ZENTRALBALLAST
ZYLINDERSCHRAUBE ISO 476	4980012	6	2	247	10115829	SCHWUNGRADGEHAEUSE AN
ZYLINDERSCHRAUBE ISO 476	10875565	92	8	73	90028956	FAHRANTRIEB
ZYLINDERSCHRAUBE ISO 476	10875565	77	8	357	939292201	PLANETENGETRIEBE
ZYLINDERSCHRAUBE ISO 476	10875565	20	8	474	967928508	VERRIEGELUNG
ZYLINDERSCHRAUBE ISO 476	10875565	553	12	540	96045351	HYDRAULIK OBERWAGEN
ZYLINDERSCHRAUBE ISO 476	10875565	77	8	583	939294201	PLANETENGETRIEBE
ZYLINDERSCHRAUBE ISO 476	10875565	555	4	590	967784808	HYDRAULIK HILFSHUBWERK
ZYLINDERSCHRAUBE ISO 476	4980257	12	12	197	10138230	NOCKENWELLE KPL.
ZYLINDERSCHRAUBE ISO 47	404312108	338	4	540	96045351	HYDRAULIK OBERWAGEN
ZYLINDERSCHRAUBE ISO 476	11840140	50	8	116	968046208	ANBAUTEILE
ZYLINDERSCHRAUBE ISO 476	11840140	33	14	121	919644008	HYDRAULISCHE ABSTUETZUN
ZYLINDERSCHRAUBE ISO 476	11840140	39	4	639	917291908	ANLENKSTUECK VORM.
ZYLINDERSCHRAUBE ISO 476	11840140	46	4	644	917292008	TELESKOP 1 VORM.
ZYLINDERSCHRAUBE ISO 476	11840140	46	4	648	917292108	TELESKOP 2 VORM.
ZYLINDERSCHRAUBE ISO 476	11840140	46	4	652	917292208	TELESKOP 3 VORM.
ZYLINDERSCHRAUBE ISO 476	11840140	46	4	656	917292308	TELESKOP 4 VORM.
ZYLINDERSCHRAUBE ISO 476	11840140	10	7	672	966134608	ANBAUTEILE ZYLINDER
ZYLINDERSCHRAUBE ISO 476	10876374	31	48	17	919617108	RAUPENFAHRWERK KPL.
ZYLINDERSCHRAUBE ISO 476	4902244	66	24	73	90028956	FAHRANTRIEB
ZYLINDERSCHRAUBE ISO 476	12100905	20	12	550	10413106	STEUERBLOCK
ZYLINDERSCHRAUBE ISO 47	10353713	304	4	494	96048826	ABGASANLAGE VORM.
ZYLINDERSCHRAUBE ISO 47	10663388	4	48	338	919369308	DREHWERK
ZYLINDERSCHRAUBE ISO 476	10876373	552	32	51	96035801	HYDRAULIK MITTELTEIL
ZYLINDERSCHRAUBE ISO 476	10876373	551	8	90	96035796	HYDR.FAHRANTRIEB
ZYLINDERSCHRAUBE ISO 476	10876373	551	8	107	96035792	HYDR.FAHRANTRIEB
ZYLINDERSCHRAUBE ISO 476	10876373	552	12	540	96045351	HYDRAULIK OBERWAGEN
ZYLINDERSCHRAUBE ISO 476	10876373	550	4	589	967784808	HYDRAULIK HILFSHUBWERK
ZYLINDERSCHRAUBE ISO 476	10876373	550	12	688	967784508	HYDRAULIK TELE
ZYLINDERSCHRAUBE ISO 476	10878821	557	25	540	96045351	HYDRAULIK OBERWAGEN
ZYLINDERSCHRAUBE ISO 476	10001080	21	24	357	939292201	PLANETENGETRIEBE
ZYLINDERSCHRAUBE ISO 476	404318008	21	24	583	939294201	PLANETENGETRIEBE
ZYLINDERSCHRAUBE ISO 476	4042302	66	4	645	917292008	TELESKOP 1 VORM.
ZYLINDERSCHRAUBE ISO 476	4042302	66	4	649	917292108	TELESKOP 2 VORM.
ZYLINDERSCHRAUBE ISO 476	4042302	66	4	653	917292208	TELESKOP 3 VORM.
ZYLINDERSCHRAUBE ISO 476	4042302	66	4	657	917292308	TELESKOP 4 VORM.

Bezeichnung	Artikel	Pos.	Menge	Seite	Baugruppe	Bezeichnung
ZYLINDERSCHRAUBE ISO 476	4042302	66	4	662	917292408	TELESKOP 5 VORM.
ZYLINDERSCHRAUBE ISO 47	404317008	11	28	352	917259708	HAUPTHUBWERK
ZYLINDERSCHRAUBE ISO 47	404317008	14	28	577	967969608	HILFSHUBWERK WINDE 2 VO
ZYLINDERSCHRAUBE ISO 476	12224014	337	3	277	919007708	ANTRIEBSAGGREGAT VORM.
ZYLINDERSCHRAUBE ISO 476	12224014	17	4	352	917259708	HAUPTHUBWERK
ZYLINDERSCHRAUBE ISO 47	10001077	31	4	581	939294001	SEILTROMMEL
ZYLINDERSCHRAUBE ISO 47	10001074	5	4	644	917292008	TELESKOP 1 VORM.
ZYLINDERSCHRAUBE ISO 47	10001074	5	4	648	917292108	TELESKOP 2 VORM.
ZYLINDERSCHRAUBE ISO 47	10001074	5	4	652	917292208	TELESKOP 3 VORM.
ZYLINDERSCHRAUBE ISO 47	10001074	5	4	656	917292308	TELESKOP 4 VORM.
ZYLINDERSCHRAUBE ISO 47	10001074	29	4	661	917292408	TELESKOP 5 VORM.
ZYLINDERSCHRAUBE ISO 476	12692012	15	32	17	919617108	RAUPENFAHRWERK KPL.
ZYLINDERSCHRAUBE ISO 47	4000521	6	24	354	90208882	KOMPAKTSEILWINDE
ZYLINDERSCHRAUBE ISO 476	10878829	13	4	335	969050308	OELBEHAELTER VORM.
ZYLINDERSCHRAUBE ISO 476	12692008	10	4	737	917268208	LEITER ANBAU
ZYLINDERSCHRAUBE ISO 47	404320908	11	12	73	90028956	FAHRANTRIEB
ZYLINDERSCHRAUBE ISO 476	12691987	14	4	335	969050308	OELBEHAELTER VORM.
ZYLINDERSCHRAUBE ISO 47	10293537	23	1	70	919254308	RAUPENTRAEGER VORM.LI.
ZYLINDERSCHRAUBE ISO 47	10293537	23	1	100	919254408	RAUPENTRAEGER VORM.RE.
ZYLINDERSCHRAUBE ISO 476	10878580	34	14	17	919617108	RAUPENFAHRWERK KPL.
ZYLINDERSCHRAUBE ISO 47	11691539	15	4	368	919010208	KRANFUEHRERKABINE VORM.
ZYLINDERSCHRAUBE ISO 47	11691539	36	8	417	918810308	STEUERSTAND
ZYLINDERSCHRAUBE ISO 47	11691539	89	1	640	917291908	ANLENKSTUECK VORM.
ZYLINDERSCHRAUBE ISO 47	10876395	7	4	58	11643183	STEUERBLOCK
ZYLINDERSCHRAUBE ISO 47	10876395	15	4	58	11643183	STEUERBLOCK
ZYLINDERSCHRAUBE ISO 47	10876395	15	4	61	11643184	STEUERBLOCK
ZYLINDERSCHRAUBE ISO 47	10876395	45	16	522	969256608	GRUNDAUFBAU
ZYLINDERSCHRAUBE ISO 47	10875815	6	3	715	967936408	WINDWARNUNG VORM.
ZYLINDERSCHRAUBE ISO 476	4901531	7	3	61	11643184	STEUERBLOCK
ZYLINDERSCHRAUBE ISO 476	4901531	19	4	548	10342823	DRUCKREGELVENTIL
ZYLINDERSCHRAUBE ISO 47	11690042	10	2	410	917676208	HEIZUNG KRANFUEHRERKAB
ZYLINDERSCHRAUBE ISO 47	11690042	34	24	417	918810308	STEUERSTAND
ZYLINDERSCHRAUBE ISO 47	11690042	12	4	575	917267108	HILFSHUBWERK WINDE 2
ZYLINDERSCHRAUBE ISO 47	11690042	15	4	728	917413208	SELBSTMONTAGE HILFSHU
ZYLINDERSCHRAUBE ISO 47	10875582	62	2	384	917305408	INNENVERKLEIDUNG EINBAU
ZYLINDERSCHRAUBE ISO 47	10875582	4	4	598	918462708	FREMDEINSPEISUNG
ZYLINDERSCHRAUBE ISO 47	10875582	3	4	600	917269408	KONSOLE FREMDEINSPEISUN
ZYLINDERSCHRAUBE ISO 47	10875582	4	2	600	917269408	KONSOLE FREMDEINSPEISUN
ZYLINDERSCHRAUBE ISO 47	10875583	47	4	296	10663105	TRIEBWERK
ZYLINDERSCHRAUBE ISO 47	10875583	20	11	372	916177508	TRITT KPL.
ZYLINDERSCHRAUBE ISO 47	10875584	18	4	34	96045225	ELEKTRIK MITTELSTUECK
ZYLINDERSCHRAUBE ISO 47	10875584	63	1	384	917305408	INNENVERKLEIDUNG EINBAU
ZYLINDERSCHRAUBE ISO 47	12204614	3	4	127	917257108	ZENTRALSCHMIERUNG RAUP
ZYLINDERSCHRAUBE ISO 47	12204614	3	5	325	968999708	KRAFTSTOFFBEHAELTER VO
ZYLINDERSCHRAUBE ISO 47	12204614	4	4	502	917261208	ZENTRALSCHMIERANLAGE O
ZYLINDERSCHRAUBE ISO 47	12203070	37	2	412	11083498	HEIZKLIMAGERAET
ZYLINDERSCHRAUBE ISO 47	404361208	9	16	546	11211756	STEUERBLOCK
ZYLINDERSCHRAUBE ISO 47	404361208	4	4	548	10342823	DRUCKREGELVENTIL
ZYLINDERSCHRAUBE ISO 476	10181382	302	4	539	96045351	HYDRAULIK OBERWAGEN
ZYLINDERSCHRAUBE ISO 476	10181382	303	4	589	967784808	HYDRAULIK HILFSHUBWERK
ZYLINDERSCHRAUBE ISO 47	12216217	40	4	417	918810308	STEUERSTAND
ZYLINDERSCHRAUBE ISO 47	404364108	10	4	546	11211756	STEUERBLOCK
ZYLINDERSCHRAUBE ISO 47	11690044	10	3	362	966631008	ELEKTRIK WINDE 1
ZYLINDERSCHRAUBE ISO 47	11690044	33	6	365	917259908	KRANFUEHRERKABINE ANBA
ZYLINDERSCHRAUBE ISO 47	11690044	300	2	499	918731908	LUFTFILTERANLAGE
ZYLINDERSCHRAUBE ISO 476	12100256	311	2	90	96035796	HYDR.FAHRANTRIEB
ZYLINDERSCHRAUBE ISO 476	12100256	311	2	107	96035792	HYDR.FAHRANTRIEB
ZYLINDERSCHRAUBE ISO 47	10875586	12	8	30	917511508	RAUPENMITTELTEIL VORM.
ZYLINDERSCHRAUBE ISO 47	10875586	13	4	58	11643183	STEUERBLOCK
ZYLINDERSCHRAUBE ISO 47	10875586	13	4	61	11643184	STEUERBLOCK

Bezeichnung	Artikel	Pos.	Menge	Seite	Baugruppe	Bezeichnung
ZYLINDERSCHRAUBE ISO 47	10875586	3	1	250	10127979	VERSCHLUSSTEILE
ZYLINDERSCHRAUBE ISO 47	10875586	(2)	1	258	12583633	MOTORREGELUNGSENSORIK
ZYLINDERSCHRAUBE ISO 47	10875586	(3)	1	258	12583633	MOTORREGELUNGSENSORIK
ZYLINDERSCHRAUBE ISO 47	10875586	14	2	394	965784408	DACHSCHEIBE VORM.
ZYLINDERSCHRAUBE ISO 47	10875586	4	1	630	925141508	SCHLAUCHFUEHRUNG VORM.
ZYLINDERSCHRAUBE ISO 476	404250914	51	1	405	917304708	SCHIEBETUER EINBAU
ZYLINDERSCHRAUBE ISO 476	12224196	316	2	539	96045351	HYDRAULIK OBERWAGEN
ZYLINDERSCHRAUBE ISO 47	11140465	332	4	540	96045351	HYDRAULIK OBERWAGEN
ZYLINDERSCHRAUBE ISO 476	12225935	41	4	417	918810308	STEUERSTAND
ZYLINDERSCHRAUBE ISO 47	10875588	310	27	51	96035801	HYDRAULIK MITTELTEIL
ZYLINDERSCHRAUBE ISO 47	10875588	6	3	128	11347526	ELEKTROPUMPE
ZYLINDERSCHRAUBE ISO 47	10875588	47	4	307	10872488	TRIEBWERK
ZYLINDERSCHRAUBE ISO 47	10875588	(1)	2	368	919010208	KRANFUEHRERKABINE VORM.
ZYLINDERSCHRAUBE ISO 47	10875588	6	3	504	10327065	ELEKTROPUMPE
ZYLINDERSCHRAUBE ISO 47	10875588	329	2	539	96045351	HYDRAULIK OBERWAGEN
ZYLINDERSCHRAUBE ISO 47	10875588	309	2	589	967784808	HYDRAULIK HILFSHUBWERK
ZYLINDERSCHRAUBE ISO 47	404291213	14	4	58	11643183	STEUERBLOCK
ZYLINDERSCHRAUBE ISO 47	404291213	14	4	61	11643184	STEUERBLOCK
ZYLINDERSCHRAUBE ISO 47	4901159	3	4	303	11692439	STEUERVENTIL
ZYLINDERSCHRAUBE ISO 47	11820284	23	2	372	916177508	TRITT KPL.
ZYLINDERSCHRAUBE ISO 47	11820284	11	4	375	916170808	KABELEINFUEHRUNG
ZYLINDERSCHRAUBE ISO 47	11820284	307	6	478	969763408	VERROHRUNG DRUCKLUFTA
ZYLINDERSCHRAUBE ISO 47	11820284	73	4	640	917291908	ANLENKSTUECK VORM.
ZYLINDERSCHRAUBE ISO 47	11820284	34	4	672	966134608	ANBAUTEILE ZYLINDER
ZYLINDERSCHRAUBE ISO 47	10875590	31	4	320	96023117	BATTERIEKASTEN VORM.
ZYLINDERSCHRAUBE ISO 47	10875590	9	2	375	916170808	KABELEINFUEHRUNG
ZYLINDERSCHRAUBE ISO 476	12223035	30	4	597	10038509	STEUERBLOCK
ZYLINDERSCHRAUBE ISO 47	10875591	316	20	51	96035801	HYDRAULIK MITTELTEIL
ZYLINDERSCHRAUBE ISO 47	10875591	302	4	276	919007708	ANTRIEBSAGGREGAT VORM.
ZYLINDERSCHRAUBE ISO 47	10875591	4	4	552	10332882	STEUERBLOCK
ZYLINDERSCHRAUBE ISO 47	10875591	37	2	672	966134608	ANBAUTEILE ZYLINDER
ZYLINDERSCHRAUBE ISO 476	404230308	45	1	405	917304708	SCHIEBETUER EINBAU
ZYLINDERSCHRAUBE ISO 47	4002698	12	4	58	11643183	STEUERBLOCK
ZYLINDERSCHRAUBE ISO 47	4002698	12	4	61	11643184	STEUERBLOCK
ZYLINDERSCHRAUBE ISO 47	10875592	56	4	483	918484108	HARNSTOFFANLAGE
ZYLINDERSCHRAUBE ISO 47	12203634	311	22	51	96035801	HYDRAULIK MITTELTEIL
ZYLINDERSCHRAUBE ISO 47	12203634	38	3	412	11083498	HEIZKLIMAGERAET
ZYLINDERSCHRAUBE ISO 47	12203634	305	4	539	96045351	HYDRAULIK OBERWAGEN
ZYLINDERSCHRAUBE ISO 476	11088382	11	2	714	967933408	GRUNDHALTER VORM.
ZYLINDERSCHRAUBE ISO 47	12202784	31	2	21	96034894	SCHUTZBLECH KPL.LI.
ZYLINDERSCHRAUBE ISO 47	12202784	31	2	24	96034977	SCHUTZBLECH KPL.RE.
ZYLINDERSCHRAUBE ISO 47	12202784	54	4	483	918484108	HARNSTOFFANLAGE
ZYLINDERSCHRAUBE ISO 47	12202784	328	2	539	96045351	HYDRAULIK OBERWAGEN
ZYLINDERSCHRAUBE ISO 47	12202784	303	2	699	967785008	ZUSATZHYDRAULIK KLAPPSPI
ZYLINDERSCHRAUBE ISO 47	10876361	327	2	539	96045351	HYDRAULIK OBERWAGEN
ZYLINDERSCHRAUBE ISO 47	12215338	326	6	539	96045351	HYDRAULIK OBERWAGEN
ZYLINDERSCHRAUBE ISO 476	10539468	301	4	494	96048826	ABGASANLAGE VORM.
ZYLINDERSCHRAUBE ISO 47	12203635	312	2	90	96035796	HYDR.FAHRANTRIEB
ZYLINDERSCHRAUBE ISO 47	12203635	312	2	107	96035792	HYDR.FAHRANTRIEB
ZYLINDERSCHRAUBE ISO 476	10539471	325	4	539	96045351	HYDRAULIK OBERWAGEN
ZYLINDERSCHRAUBE ISO 47	10875593	6	1	407	966230508	FUEHRUNG VORM.
ZYLINDERSCHRAUBE ISO 47	10875597	16	1	474	967928508	VERRIEGELUNG
ZYLINDERSCHRAUBE ISO 47	10875597	29	4	672	966134608	ANBAUTEILE ZYLINDER
ZYLINDERSCHRAUBE ISO 47	10875598	7	2	346	510229408	HYDROMOTOR
ZYLINDERSCHRAUBE ISO 47	10875598	22	5	372	916177508	TRITT KPL.
ZYLINDERSCHRAUBE ISO 47	10875598	17	6	672	966134608	ANBAUTEILE ZYLINDER
ZYLINDERSCHRAUBE ISO 476	10007677	4	12	377	916162808	RELING
ZYLINDERSCHRAUBE ISO 476	240049702	7	5	196	10120186	MASSENAUSGLEICH ANBAU
ZYLINDERSCHRAUBE ISO 47	10875599	33	32	30	917511508	RAUPENMITTELTEIL VORM.
ZYLINDERSCHRAUBE ISO 47	10875599	308	4	276	919007708	ANTRIEBSAGGREGAT VORM.

Bezeichnung	Artikel	Pos.	Menge	Seite	Baugruppe	Bezeichnung
ZYLINDERSCHRAUBE ISO 47	10875599	26	8	340	90008901	DREHWERKANTRIEB
ZYLINDERSCHRAUBE ISO 47	10875599	3	4	458	917260408	SPIEGELANBAU DREHBUEHN
ZYLINDERSCHRAUBE ISO 47	10875599	18	6	644	917292008	TELESKOP 1 VORM.
ZYLINDERSCHRAUBE ISO 47	10875599	18	8	648	917292108	TELESKOP 2 VORM.
ZYLINDERSCHRAUBE ISO 47	10875599	18	10	652	917292208	TELESKOP 3 VORM.
ZYLINDERSCHRAUBE ISO 47	10875599	18	10	656	917292308	TELESKOP 4 VORM.
ZYLINDERSCHRAUBE ISO 47	10875599	17	8	661	917292408	TELESKOP 5 VORM.
ZYLINDERSCHRAUBE ISO 476	10007205	5	12	377	916162808	RELING
ZYLINDERSCHRAUBE ISO 47	12208098	12	13	639	917291908	ANLENKSTUECK VORM.
ZYLINDERSCHRAUBE ISO 476	404230208	8	2	372	916177508	TRITT KPL.
ZYLINDERSCHRAUBE ISO 47	11691424	26	2	207	10149198	RS VORFOERDERPUMPE
ZYLINDERSCHRAUBE ISO 47	11691424	74	8	340	90008901	DREHWERKANTRIEB
ZYLINDERSCHRAUBE ISO 47	12202976	34	32	30	917511508	RAUPENMITTELTEIL VORM.
ZYLINDERSCHRAUBE ISO 47	12202976	324	24	51	96035801	HYDRAULIK MITTELTEIL
ZYLINDERSCHRAUBE ISO 47	4600335	84	12	73	90028956	FAHRANTRIEB
ZYLINDERSCHRAUBE ISO 47	12206699	50	5	298	10472196	REGLER
ZYLINDERSCHRAUBE ISO 47	12206699	50	5	310	10292801	REGLER
ZYLINDERSCHRAUBE ISO 47	12206699	3	4	552	10332882	STEUERBLOCK
ZYLINDERSCHRAUBE ISO 47	10875601	10	4	346	510229408	HYDROMOTOR
ZYLINDERSCHRAUBE ISO 47	10875601	4	1	424	916049908	SPIEGELANBAU KRANFUEHR
ZYLINDERSCHRAUBE ISO 47	10875570	61	2	384	917305408	INNENVERKLEIDUNG EINBAU
ZYLINDERSCHRAUBE ISO 47	12201166	7	4	87	96034962	FUEHRUNG LI.
ZYLINDERSCHRAUBE ISO 47	12201166	7	4	104	96034980	FUEHRUNG RE.
ZYLINDERSCHRAUBE ISO 47	12203451	22	1	355	932916901	SEILTROMMEL
ZYLINDERSCHRAUBE ISO 47	12203451	41	2	672	966134608	ANBAUTEILE ZYLINDER
ZYLINDERSCHRAUBE ISO 47	12203167	336	2	540	96045351	HYDRAULIK OBERWAGEN
ZYLINDERSCHRAUBE ISO 47	12213825	86	10	340	90008901	DREHWERKANTRIEB
ZYLINDERSTIFT DIN 6325 10	430706808	13	2	309	571907208	ANSCHLUSSPLATTE
ZYLINDERSTIFT DIN 6325 10	430707208	8	2	472	10877810	BALLASTIERZYLINDER
ZYLINDERSTIFT DIN 6325 12	430709608	32	1	734	512363708	HYDROZYLINDER
ZYLINDERSTIFT DIN 6325 8M6	430704808	13	2	297	10008308	ANSCHLUSSPLATTE
ZYLINDERSTIFT ISO 2338 10M	430608708	86	8	71	919254308	RAUPENTRAEGER VORM.LI.
ZYLINDERSTIFT ISO 2338 10M	430608708	86	8	101	919254408	RAUPENTRAEGER VORM.RE.
ZYLINDERSTIFT ISO 2338 12H	430611008	3	1	644	917292008	TELESKOP 1 VORM.
ZYLINDERSTIFT ISO 2338 12H	430611008	3	1	648	917292108	TELESKOP 2 VORM.
ZYLINDERSTIFT ISO 2338 12H	430611008	3	1	652	917292208	TELESKOP 3 VORM.
ZYLINDERSTIFT ISO 2338 12H	430611008	3	1	656	917292308	TELESKOP 4 VORM.
ZYLINDERSTIFT ISO 2338 12H	430611008	23	1	661	917292408	TELESKOP 5 VORM.
ZYLINDERSTIFT ISO 2338 4M	570109308	5	1	346	510229408	HYDROMOTOR
ZYLINDERSTIFT ISO 8734 5M	514588908	14	1	297	10008308	ANSCHLUSSPLATTE
ZYLINDERSTIFT ISO 8734 6m	4980000	9	1	196	10120186	MASSENAUSGLEICH ANBAU
ZYLINDERSTIFT ISO 8734 6m	4980000	(5)	1	197	10138230	NOCKENWELLE KPL.
ZYLINDERSTIFT ISO 8734 6m	4980736	5	1	197	10138230	NOCKENWELLE KPL.